INFORMATION HANDOUT

For Contract No. 11-421604
At 11-SD-78-13.0/14.1

Identified by
Project ID 1115000142

ENCROACHMENT PERMITS

Example Right-Of-Way Permit, City of San Marcos

MATERIALS INFORMATION

Structural Section Recommendations

Geotechnical Design Report

Revised Hazardous Waste Review

Water availability letter dated February 1, 2016

Warranty Bond Form

Point Index Load/Discontinuity Spacing Index chart

Read me file for Cross Sections

Addendum #1 "Geotechnical Design Report State Route 78 Auxiliary Lane Project," dated September 30, 2016

REPLACED PER ADDENDUM NO. 1 DATED November 3, 2016

DEPARTMENT OF TRANSPORTATION

Business, Transportation and Housing Agency

Addendum #1

Serious drought.
Help save water!

To: Mr. Ed Hajj
Design Manager
District 11

Date: September 30, 2016

File: 11-SD-78-(PM) R12.91/R14.24
EA 11-421601
PID 1115000142

From: MIKE FORDHAM
Transportation Engineer
Office of Geotechnical Design-South, Branch-B

Subject: **Addendum #1 "Geotechnical Design Report State Route 78 Auxiliary Lane Project"**

Pursuant to your request, the Office of Geotechnical Design-South (OGDS) Branch-B has prepared this Addendum #1 for "Geotechnical Design Report (GDR) for State Route 78 Auxiliary Lane Project." This addendum documents changes to the GDR. A list of the changes to the GDR are listed below.

1. Retaining wall RW-740 was designed as a Caltrans Standard Plan Type 1A. The designs team has requested the retaining wall type be changed to a Caltrans Standard Plan Type 7B, due to the proximity of a local frontage road that could be effected by the temporary back cut of a Type 1A retaining wall. The evaluation of the Type 7B retaining wall is presented in Table 4 (Addendum).

Please ensure that this addendum is included in both the District and Structure Construction Resident Engineer (RE) Pending Files. OGDS Branch-B staff will be available for further assistance. Should you have any questions or comments regarding this report, please contact OGDS Branch-B.

Mike Fordham P.E.
Transportation Engineer (Civil)
(858) 467-3290

REGISTERED PROFESSIONAL ENGINEER
MICHAEL M. FORDHAM
C61341
EXP. 06/30/17
CIVIL
STATE OF CALIFORNIA

Brian Hinman P.E.
Senior Transportation Engineer (Civil)
(858) 467-4051

REGISTERED PROFESSIONAL ENGINEER
BRIAN K. HINMAN
No. 55654
Exp. 12/31/16
CIVIL
STATE OF CALIFORNIA

cc. Arturo Jacobo

Dave Evans

TABLE 4: SPREAD FOOTING DATA TABLE, STANDARD PLAN TYPE 7B RETAINING WALL

RW-740, H_{MAX}=14'

Begin Station	End Station	Design Height H (ft)	Minimum Footing Embedment Depth (ft)	Minimum Sub Excavation Depth Below footing** (ft)	Settlement Calculated at Net Bearing Pressure (in)	Total Permissible Settlement (in)	Loading Type	Effective Footing Width B' (ft)	Net Bearing Stress q'_o (ksf)	Permissible Net Contact Stress q_{pn} (ksf)	Gross Uniform Bearing Stress q_o (ksf)	Factored Gross Nominal Bearing Resistance q_r (ksf)
10+00.00 "W740"	10+32.00 "W740"	12	2	N/A	<1.0	1.0	Service I	7.1	0.8	2.9	N/A	N/A
							Strength Ia	6.2	N/A	N/A	1.8	4.9
							Strength Ib	5.0	N/A	N/A	1.8	4.5
							Extreme I	5.0	N/A	N/A	1.7	11.3
							Extreme II	3.3	N/A	N/A	2.7	9.7
10+32.00 "W740"	10+48.00 "W740"	14	2	N/A	<1.0	1.0	Service I	8.9	0.7	3.1	N/A	N/A
							Strength Ia	8.0	N/A	N/A	1.8	4.0
							Strength Ib	6.6	N/A	N/A	1.7	5.1
							Extreme I	6.3	N/A	N/A	1.8	12.5
							Extreme II	6.0	N/A	N/A	1.7	12.2
10+48.00 "W740"	11+36.00 "W740"	12	2	N/A	<1.0	1.0	Service I	7.1	0.8	2.9	N/A	N/A
							Strength Ia	6.2	N/A	N/A	1.8	4.9
							Strength Ib	5.0	N/A	N/A	1.7	4.5
							Extreme I	5.0	N/A	N/A	1.8	11.3
							Extreme II	3.3	N/A	N/A	1.7	9.7
11+36.00 "W740"	12+32.00 "W740"	10	2	N/A	<1.0	1.0	Service I	7.6	0.5	3.0	N/A	N/A
							Strength Ia	7.0	N/A	N/A	1.4	3.9
							Strength Ib	6.0	N/A	N/A	1.3	4.8
							Extreme I	6.2	N/A	N/A	1.2	12.4
							Extreme II	3.2	N/A	N/A	2.4	9.6
12+32.00 "W740"	12+44.89 "W740"	8	2	N/A	<1.0	1.0	Service I	8.1	0.4	3.0	N/A	N/A
							Strength Ia	7.6	N/A	N/A	1.2	4.0
							Strength Ib	6.9	N/A	N/A	1.0	3.8
							Extreme I	7.1	N/A	N/A	0.9	9.8
							Extreme II	2.9	N/A	N/A	2.3	9.3

** Over excavation is measured from the bottom elevation of footing.

DIST	COUNTY	ROUTE	POST MILES TOTAL PROJECT	SHEET No.	TOTAL SHEETS

REGISTERED CIVIL ENGINEER DATE

PLANS APPROVAL DATE

REGISTERED PROFESSIONAL ENGINEER No. EXP. CIVIL STATE OF CALIFORNIA

The State of California or its officers or agents shall not be responsible for the accuracy or completeness of scanned copies of this plan sheet.

The Registered Civil Engineer for the project is responsible for the selection and proper application of the component design and any modifications shown.

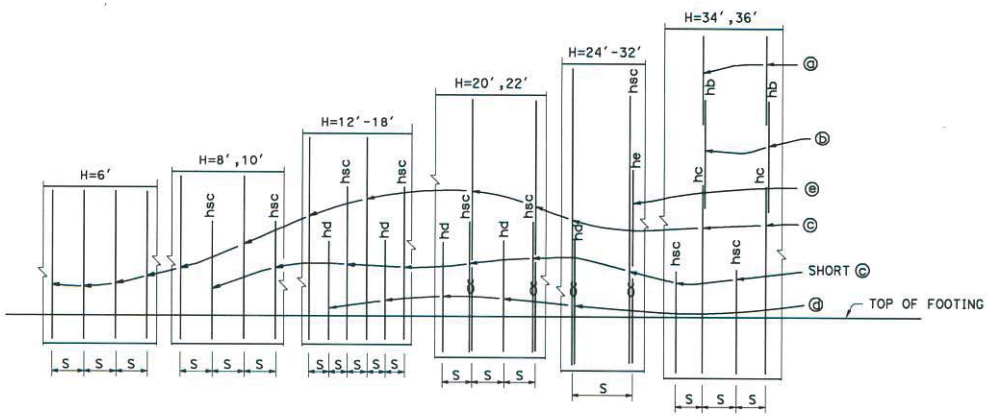

ELEVATION

NO SCALE

NOTE:

"hb", "hsc", "hc", "hd" and "he" above bars indicate distance from top of footing to upper end of the bars, see table.

DESIGN DATA

Design: AASHTO LRFD Bridge Design Specifications, 4th edition with California Amendments

LS: Varied surcharge on level ground surface

CT: 54 kip maximum traffic impact loading evenly distributed over 10 feet at top of the barrier and 1:1 distribution down and outward

EQE: Mononabe-Okabe Method
K_h = 0.2
K_v = 0.0

Soil: ϕ = 34°
γ = 120 pcf

Reinforced Concrete: f'c = 3600 psi
fy = 60,000 psi

Load Combinations and Limit States

Service I $Q=1.00DC+1.00EV+1.00EH+1.00LS+Td$

Strength I $Q=\alpha DC+\beta EV+1.50EH+1.75LS+Td$

Extreme I $Q=1.00DC+1.00EV+1.00EH+1.00EQD+1.00EQE+Td$

Extreme II $Q=1.00DC+1.00EV+1.00EH+1.00CT+Td$

Where:
- Q: Force Effects
- α: 1.25 or 0.90, Which ever Controls Design
- β: 1.35 or 1.00, Which ever Controls Design
- DC: Dead Load of Structure Components
- EV: Vertical Earth Fill Pressure
- LS: Live Load Surcharge
- EQE: Seismic Earth Pressure
- EQD: Soil and Structure Components Inertia. Soil inertia ignored for stem design
- CT: Vehicular Collision Force
- Td: Anchor Design Load

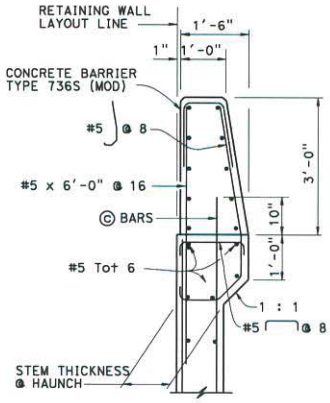

DETAIL A - WITH HAUNCH

¾ = 1'-0"

For Details not shown, see "DETAIL A - WITHOUT HAUNCH"

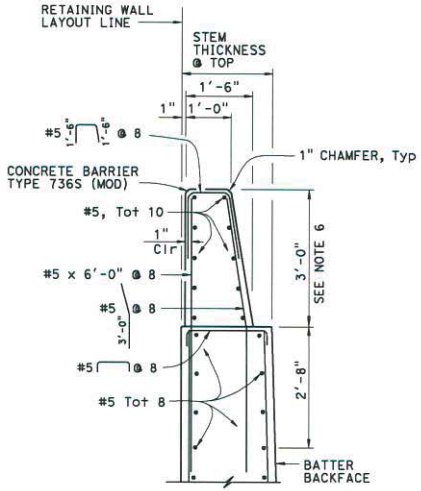

DETAIL A - WITHOUT HAUNCH

¾ = 1'-0"

NOTES:

1. For Retaining wall Architectural finish or texture see Details elsewhere in Project Plans.
2. For details not shown and drainage notes, see B3-5. Substitution of geocomposite drain for pervious backfill material is not permitted.
3. Footing cover, 2'-0" minimum.
4. For H=6' through 10', extend ⓒ bars into Barrier for stem with haunch.
5. Shift ⓒ bars, ⓓ bars and ⓔ bars as required to clear formed hole for ground anchor.
6. Dimensions may vary with roadway cross slope and with certain thickness of surfacing. See Project Plans.
7. Footing is designed to resist 1.33 Td assuming the maximum anchor spacing shown in the table.
8. Provide #6 @ 12" X 16'-0" ⓖ bar over a distance of 8'-0" measured from all expansion joints begin wall and end wall locations. For H≤14' hook ⓖ bar into footing and reduce bar length as needed to maintain Min Clr cover.

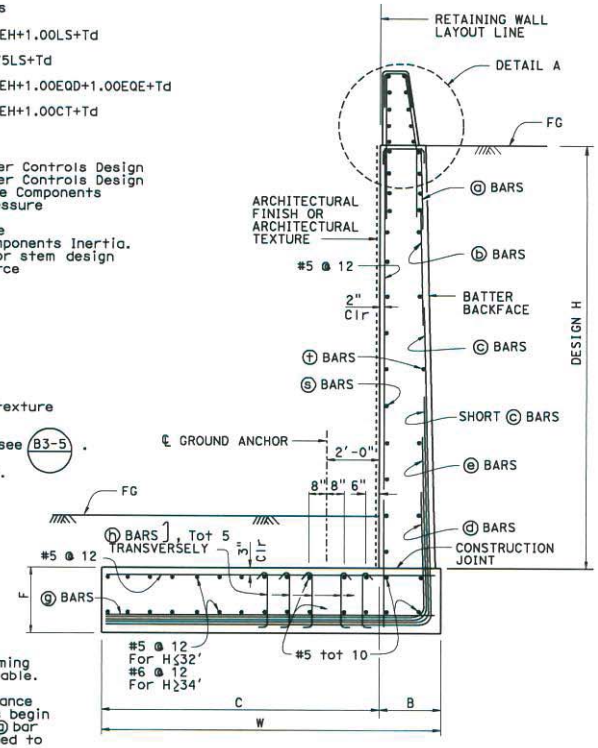

SPREAD FOOTING SECTION

NO SCALE

BRIDGE STANDARD DETAILS		
xs14-375-1 (FILE NO.)	October 2014 (APPROVAL DATE)	*The components of the Bridge Standard Details have been prepared under the responsible charge of the Technical Owner, a Registered civil engineer in the State of California*

Refer to: http://www.dot.ca.gov/hq/esc/techpubs/manual/bridgemanuals/bridge-standard-detail-sheets/index.html

FILE => xs14-375-1.dgn
USERNAME => s136236 TIME PLOTTED => 10:46 DATE PLOTTED => 18-JUL-2016

ORIGINAL SCALE IN INCHES FOR REDUCED PLANS 0 1 2 3

STATE OF **CALIFORNIA** DEPARTMENT OF TRANSPORTATION

DIVISION OF ENGINEERING SERVICES

BRIDGE NO. POST MILE

UNIT: PROJECT NUMBER & PHASE: CONTRACT NO.:

RETAINING WALL TYPE 7B - DETAILS No. 1

DISREGARD PRINTS BEARING EARLIER REVISION DATES

REVISION DATES 6-19-14 8-8-14 8-26-15 7-18-16 SHEET OF

DIST	COUNTY	ROUTE	POST MILES TOTAL PROJECT	SHEET No.	TOTAL SHEETS

REGISTERED CIVIL ENGINEER DATE

PLANS APPROVAL DATE

REGISTERED PROFESSIONAL ENGINEER No. EXP. CIVIL STATE OF CALIFORNIA

The State of California or its officers or agents shall not be responsible for the accuracy or completeness of scanned copies of this plan sheet.

The Registered Civil Engineer for the project is responsible for the selection and proper application of the component design and any modifications shown.

TABLE OF WALL DIMENSIONS, REINFORCING STEEL AND BEARING STRESS DATA

DESIGN H	STEM WITH HAUNCH			STEM WITHOUT HAUNCH												
	6'	8'	10'	12'	14'	16'	18'	20'	22'	24'	26'	28'	30'	32'	34'	36'
W	8'-3"	8'-3"	8'-3"	8'-3"	10'-0"	8'-3"	8'-6"	9'-0"	10'-0"	10'-9"	11'-9"	12'-6"	13'-6"	14'-6"	15'-6"	16'-0"
C	7'-0"	7'-0"	6'-9"	6'-6"	8'-3"	6'-6"	6'-6"	6'-9"	7'-6"	8'-0"	9'-0"	9'-0"	9'-9"	10'-6"	11'-6"	11'-9"
B	1'-3"	1'-3"	1'-6"	1'-9"	1'-9"	1'-9"	2'-0"	2'-0"	2'-6"	2'-9"	2'-9"	3'-6"	3'-9"	4'-0"	4'-0"	4'-3"
F	1'-9"	1'-9"	1'-9"	1'-9"	2'-0"	2'-4"	2'-6"	2'-6"	2'-9"	2'-9"	3'-0"	3'-3"	3'-6"	3'-9"	3'-9"	4'-0"
STEM THICKNESS AT TOP				1'-7"	1'-7"	1'-7"	1'-9"	1'-9"	1'-9"	2'-0"	2'-0"	2'-0"	2'-3"	2'-3"	2'-3"	2'-6"
STEM THICKNESS AT HAUNCH	1'-0"	1'-0"	1'-3"													
BATTER	0	0	0	0	0	0	0	0	1/4:12	1/4:12	1/4:12	1/2:12	1/2:12	1/2:12	1/2:12	1/2:12
S	0'-9"	0'-9"	0'-9"	0'-6"	0'-5 2/3"	0'-5"	0'-4 1/3"	0'-8"	0'-7 1/2"	0'-9"	0'-7 1/2"	0'-8"	0'-7"	0'-6"	0'-6"	0'-5 1/2"
ⓐ BARS															#5	#5
ⓑ BARS															#8	#7
hb															28'-3"	29'-0"
ⓒ BARS	#6	#6	#6	#5	#5	#5	#5	#5 ⓧ	#5 ⓧ	#5	#5	#5	#5	#5	#11	#11
hsc		7'-10"	9'-10"	11'-10"	13'-10"	13'-6"	11'-6"	17'-3"	16'-3"	20'-0"	18'-9"	20'-6"	21'-6"	23'-0"	17'-0"	17'-9"
hc															22'-0"	25'-0"
ⓓ BARS				#5	#7	#7	#7	#10	#10	#7	#7	#7	#7	#7		
hd				3'-3"	5'-6"	6'-0"	6'-6"	11'-3"	12'-0"	13'-0"	16'-6"	16'-0"	17'-0"	19'-3"		
ⓔ BARS										#10	#10	#11	#11	#11		
he										12'-9"	13'-6"	14'-0"	12'-3"	16'-6"		
ⓖ BARS						#5 @ 15	#5 @ 13	#5 @ 16	#6 @ 15	#7 @ 18	#5 @ 15	#8 @ 16	#7 @ 14	#7 @ 12	#5 @ 6	#5 @ 5 1/2
BARS BUNDLED WITH ⓖ in ftg						SHORT ⓒ	SHORT ⓒ	ⓓ	ⓓ	SHORT ⓒ & ⓔ	SHORT ⓒ & ⓔ	SHORT ⓒ & ⓔ	SHORT ⓒ & ⓔ	SHORT ⓒ & ⓔ	ⓒ & SHORT ⓒ	ⓒ & SHORT ⓒ
ⓗ BARS															#5 @ 24	#5 @ 11
ⓢ BARS	#4 @ 12	#4 @ 12	#5 @ 15	#5 @ 12	#5 @ 12	#5 @ 12	#5 @ 12	#5 @ 12	#6 @ 12	#6 @ 12	#6 @ 12	#6 @ 12	#7 @ 12	#7 @ 12	#7 @ 12	#7 @ 12
ⓣ BARS	#4 @ 12	#4 @ 12	#4 @ 12	#4 @ 12	#4 @ 12	#4 @ 12	#4 @ 12	#4 @ 12	#4 @ 12	#4 @ 12	#5 @ 12	#5 @ 12	#5 @ 12	#5 @ 12	#5 @ 12	#5 @ 12
Td (KIPS/FT)	0	0	0	0	0	3	6.75	9.75	11.25	12.75	13.5	18.75	19.5	21.75	21.75	26.25
To (KIPS/FT)	0	0	0	0	0	*	*	*	*	*	*	*	*	*	*	*
Tp = Larger of 1.33 Td & 1.25 To (KIPS/FT)	0	0	0	0	0	*	*	*	*	*	*	*	*	*	*	*
MAX. ANCHOR SPACING						10'-6"	10'-6"	8'-3"	6'-3"	7'-9"	7'-3"	7'-0"	6'-9"	6'-0"	6'-0"	5'-0"
SER I: B'(ft), q'_0 (ksf)	8.6, 0.3	8.1, 0.4	7.6, 0.5	7.1, 0.8	8.9, 0.7	5.8, 1.9	6.1, 2.7	6.5, 3.3	7.1, 3.5	7.8, 3.7	8.7, 3.6	9.1, 4.5	10.0, 4.5	10.7, 4.6	11.6, 4.5	12.1, 5.0
STR Ia: B'(ft), q_0(ksf)	8.3, 1.0	7.6, 1.2	7.0, 1.4	6.2, 1.8	8.0, 1.8	4.7, 3.8	4.9, 4.9	5.2, 5.7	5.8, 6.3	6.2, 6.4	6.7, 6.4	7.3, 7.6	8.1, 7.6	8.6, 7.9	9.4, 7.7	9.8, 8.6
STR, Ib: B'(ft), q_0(ksf)	7.8, 0.8	6.9, 1.0	6.0, 1.3	5.0, 1.8	6.6, 1.7	3.4, 4.4	3.8, 5.4	4.1, 6.1	4.6, 6.4	5.0, 6.9	5.2, 7.1	5.9, 8.2	6.6, 8.1	7.0, 8.5	7.6, 8.3	8.0, 9.1
Ext I: B'(ft), q_0(ksf)	7.9, 0.8	7.1, 0.9	6.2, 1.2	5.0, 1.7	6.3, 1.8	2.8, 5.2	2.9, 7.1	3.2, 8.3	3.5, 9.3	3.6, 9.6	4.6, 11.3	4.3, 11.5	4.6, 11.7	4.9, 12.4	5.2, 12.2	5.3, 13.8
Ext II: B'(ft), q_0(ksf)	2.8, 2.0	2.9, 2.3	3.2, 2.4	3.3, 2.7	6.0, 1.7	3.8, 3.6	4.7, 4.1	5.6, 4.5	6.5, 4.5	7.4, 4.5	8.8, 5.1	9.0, 5.1	10.1, 5.1	10.9, 5.2	11.9, 4.9	12.4, 5.4

NOTE:

ⓗ Bar spacing shown is along the length of the retaining wall.
* denotes values to be determined by designer, and this note is removed afterwards.

LEGEND:

SER: service limit state
STR: strength limit state
EXT: extreme event limit state
B': effective footing width (ft)
q_0: net bearing stress (ksf)
q'_0: gross uniform bearing stress (ksf)
ⓧ: 2 bar bundle
To: Anchor Lockoff Load
Tp: Anchor Factored Test Load

BRIDGE STANDARD DETAILS

xs14-375-2 (FILE NO.) | October 2014 (APPROVAL DATE) | *The components of the Bridge Standard Details have been prepared under the responsible charge of the Technical Owner, a registered civil engineer in the State of California*

Refer to: http://www.dot.ca.gov/hq/esc/techpubs/manual/bridgemanuals/bridge-standard-detail-sheets/index.html

FILE => $REQUEST
USERNAME => $USER TIME PLOTTED => $TIME DATE PLOTTED => $DATE

ORIGINAL SCALE IN INCHES FOR REDUCED PLANS 0 1 2 3

STATE OF CALIFORNIA
DEPARTMENT OF TRANSPORTATION

DIVISION OF ENGINEERING SERVICES

BRIDGE NO.
POST MILE

RETAINING WALL TYPE 7B - DETAILS No. 2

UNIT:
PROJECT NUMBER & PHASE: CONTRACT NO.:

DISREGARD PRINTS BEARING EARLIER REVISION DATES → 5-29-14 8-8-14 1-16-15

REVISION DATES | SHEET | OF