| Dist | COUNTY | ROUTE | POST MILES TOTAL PROJECT | SHEET No. | TOTAL SHEETS |
|---|---|---|---|---|---|
| 11 | Imp | 8 | R90.0/R96.8 | 101 | 209 |

Dylan Moore 05-04-15
REGISTERED CIVIL ENGINEER DATE

08-31-15
PLANS APPROVAL DATE

REGISTERED PROFESSIONAL ENGINEER
DYLAN S. MOORE
No. 74711
Exp. 12-31-15
CIVIL
STATE OF CALIFORNIA

THE STATE OF CALIFORNIA OR ITS OFFICERS OR AGENTS SHALL NOT BE RESPONSIBLE FOR THE ACCURACY OR COMPLETENESS OF SCANNED COPIES OF THIS PLAN SHEET.

**NOTE:**

FOR ACCURATE RIGHT OF WAY DATA, CONTACT
RIGHT OF WAY ENGINEERING AT THE DISTRICT OFFICE.

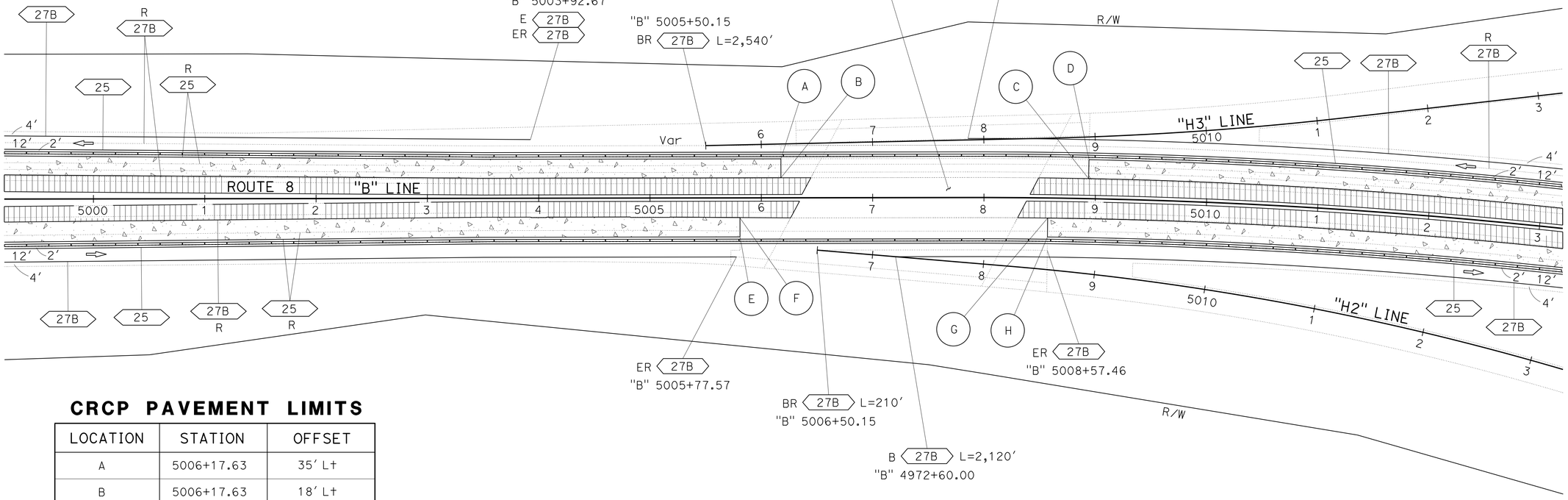


## CRCP PAVEMENT LIMITS

| LOCATION | STATION | OFFSET |
|---|---|---|
| A | 5006+17.63 | 35′ Lt |
| B | 5006+17.63 | 18′ Lt |
| C | 5008+93.67 | 18′ Lt |
| D | 5008+93.67 | 35′ Lt |
| E | 5005+80.78 | 35′ Rt |
| F | 5005+80.78 | 18′ Rt |
| G | 5008+57.46 | 18′ Rt |
| H | 5008+57.46 | 35′ Rt |

## STAGE 6

*APPROVED FOR STAGE CONSTRUCTION WORK ONLY*

# STAGE CONSTRUCTION

SCALE: 1′ = 50′

**SC-52**

CALCULATED-DESIGNED BY: BRIAN McNAIR
CHECKED BY: MICHAEL OREIRO
FUNCTIONAL SUPERVISOR: NICOLA BERNARD
REVISED BY / DATE REVISED

STATE OF CALIFORNIA - DEPARTMENT OF TRANSPORTATION
Caltrans
TRADE CORRIDOR IMPROVEMENT FUND

LAST REVISION: DATE PLOTTED => 03-SEP-2015
TIME PLOTTED => 14:05
08-14-15

BORDER LAST REVISED 7/2/2010
USERNAME => s127400
DGN FILE => 1114000006ma052.dgn
RELATIVE BORDER SCALE IS IN INCHES 0 1 2 3
UNIT 2774
PROJECT NUMBER & PHASE 11140000061

| Dist | COUNTY | ROUTE | POST MILES TOTAL PROJECT | SHEET No. | TOTAL SHEETS |
|---|---|---|---|---|---|
| 11 | Imp | 8 | R90.0/R96.8 | 102 | 209 |

Dylan Moore 05-04-15
REGISTERED CIVIL ENGINEER DATE

08-31-15
PLANS APPROVAL DATE

REGISTERED PROFESSIONAL ENGINEER
DYLAN S. MOORE
No. 74711
Exp. 12-31-15
CIVIL
STATE OF CALIFORNIA

THE STATE OF CALIFORNIA OR ITS OFFICERS OR AGENTS SHALL NOT BE RESPONSIBLE FOR THE ACCURACY OR COMPLETENESS OF SCANNED COPIES OF THIS PLAN SHEET.

NOTE:

FOR ACCURATE RIGHT OF WAY DATA, CONTACT
RIGHT OF WAY ENGINEERING AT THE DISTRICT OFFICE.

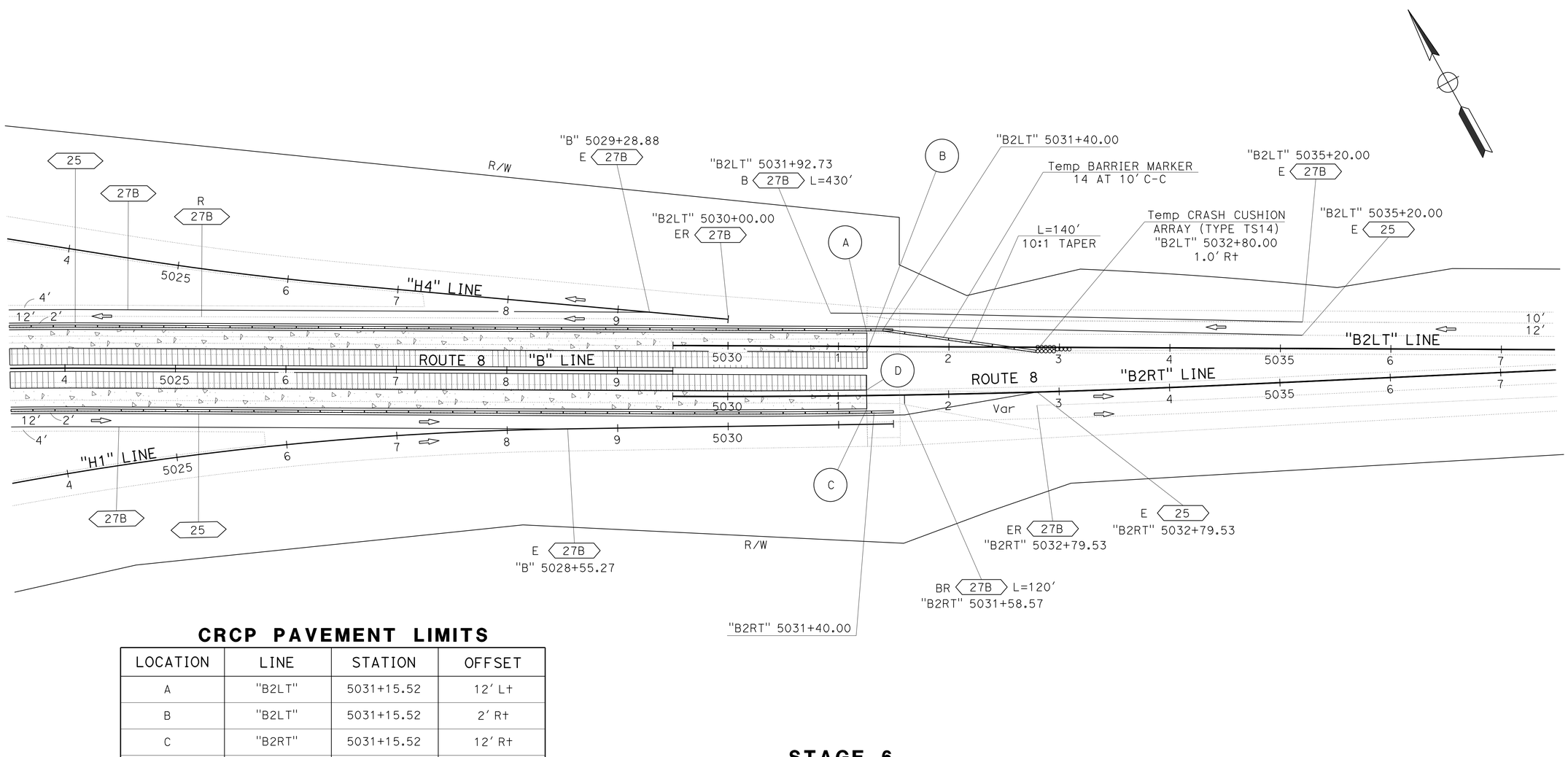


## CRCP PAVEMENT LIMITS

| LOCATION | LINE | STATION | OFFSET |
|---|---|---|---|
| A | "B2LT" | 5031+15.52 | 12' L+ |
| B | "B2LT" | 5031+15.52 | 2' R+ |
| C | "B2RT" | 5031+15.52 | 12' R+ |
| D | "B2RT" | 5031+15.52 | 2' L+ |

**STAGE 6**

(LOCATION 'D')

*APPROVED FOR STAGE CONSTRUCTION AND TRAFFIC HANDLING WORK ONLY*

# STAGE CONSTRUCTION

SCALE: 1' = 50'

**SC-53**

STATE OF CALIFORNIA - DEPARTMENT OF TRANSPORTATION
Caltrans®
TRADE CORRIDOR IMPROVEMENT FUND

FUNCTIONAL SUPERVISOR: NICOLA BERNARD

CALCULATED-DESIGNED BY: BRIAN McNAIR
CHECKED BY: MICHAEL OREIRO

REVISED BY | DATE REVISED

LAST REVISION | DATE PLOTTED => 03-SEP-2015
08-14-15 | TIME PLOTTED => 14:05

BORDER LAST REVISED 7/2/2010

USERNAME => s127400
DGN FILE => 1114000006ma053.dgn

RELATIVE BORDER SCALE IS IN INCHES 0 1 2 3

UNIT 2774

PROJECT NUMBER & PHASE 11140000061

| Dist | COUNTY | ROUTE | POST MILES TOTAL PROJECT | SHEET No. | TOTAL SHEETS |
|---|---|---|---|---|---|
| 11 | Imp | 8 | R90.0/R96.8 | 103 | 209 |

05-04-15
REGISTERED CIVIL ENGINEER DATE

08-31-15
PLANS APPROVAL DATE

REGISTERED PROFESSIONAL ENGINEER
DYLAN S. MOORE
No. 74711
Exp. 12-31-15
CIVIL
STATE OF CALIFORNIA

THE STATE OF CALIFORNIA OR ITS OFFICERS OR AGENTS SHALL NOT BE RESPONSIBLE FOR THE ACCURACY OR COMPLETENESS OF SCANNED COPIES OF THIS PLAN SHEET.

## LOCATIONS:

STAGE 1 (LOCATION 'A') EASTBOUND
"B" 4608+27.18 TO "B" 4660+27.18
STAGE 1 (LOCATION 'B') EASTBOUND
"B" 4820+00 TO "B" 4872+00
STAGE 1 (LOCATION 'C') EASTBOUND
"B" 4924+00 TO "B" 4976+00
STAGE 1 (LOCATION 'D') WESTBOUND
"B" 5036+00 TO "B" 5088+00
STAGE 3 (LOCATION 'D') WESTBOUND
"B" 5036+00 TO "B" 5088+00
STAGE 6 (LOCATION 'C') WESTBOUND
"B" 4924+00 TO "B" 4976+00

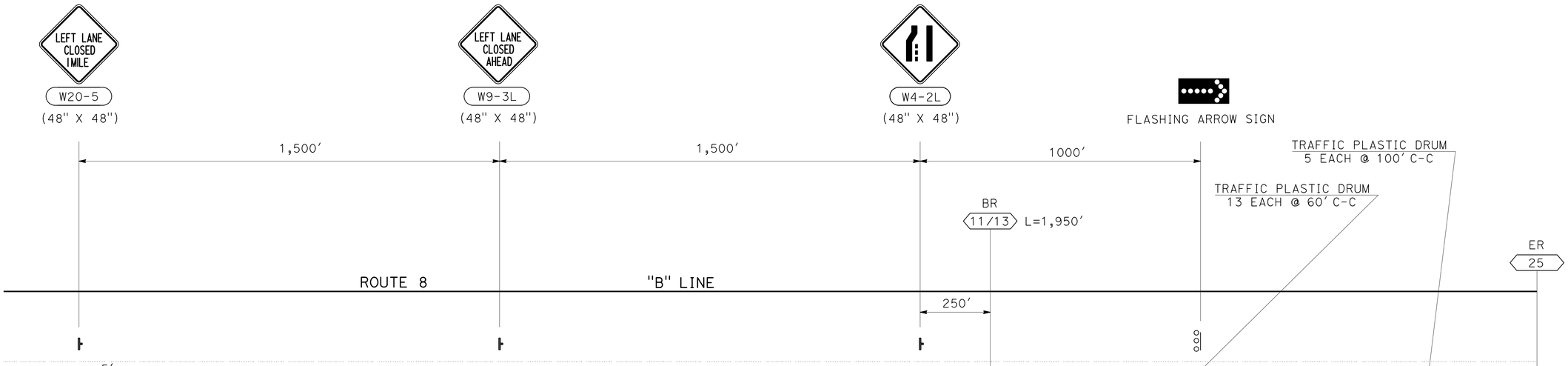


## LEFT LANE DROP

EASTBOUND OR WESTBOUND

## STAGE CONSTRUCTION DETAILS

NO SCALE

**SCD-1**

BRIAN McNAIR — DESIGNED BY
MICHAEL ORELIRO — CALCULATED-
CHECKED BY
REVISED BY
DATE REVISED
NICOLA BERNARD — FUNCTIONAL SUPERVISOR

STATE OF CALIFORNIA - DEPARTMENT OF TRANSPORTATION
Caltrans
TRADE CORRIDOR IMPROVEMENT FUND

LAST REVISION | DATE PLOTTED => 03-SEP-2015
08-14-15 | TIME PLOTTED => 14:05

| Dist | COUNTY | ROUTE | POST MILES TOTAL PROJECT | SHEET No. | TOTAL SHEETS |
|---|---|---|---|---|---|
| 11 | Imp | 8 | R90.0/R96.8 | 104 | 209 |

REGISTERED CIVIL ENGINEER — 05-04-15 DATE

08-31-15
PLANS APPROVAL DATE

DYLAN S. MOORE No. 74711 Exp. 12-31-15 CIVIL — REGISTERED PROFESSIONAL ENGINEER — STATE OF CALIFORNIA

THE STATE OF CALIFORNIA OR ITS OFFICERS OR AGENTS SHALL NOT BE RESPONSIBLE FOR THE ACCURACY OR COMPLETENESS OF SCANNED COPIES OF THIS PLAN SHEET.

**NOTE:**

1. NOT TO BE USED IN CONJUNCTION WITH TEMPORARY RAILING (TYPE K).

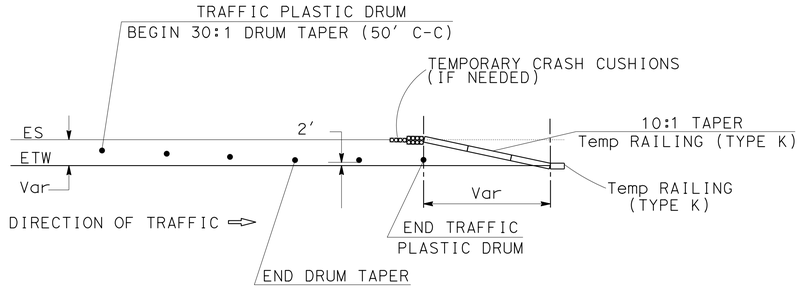


## TYPICAL PLACEMENT OF TRAFFIC PLASTIC DRUM

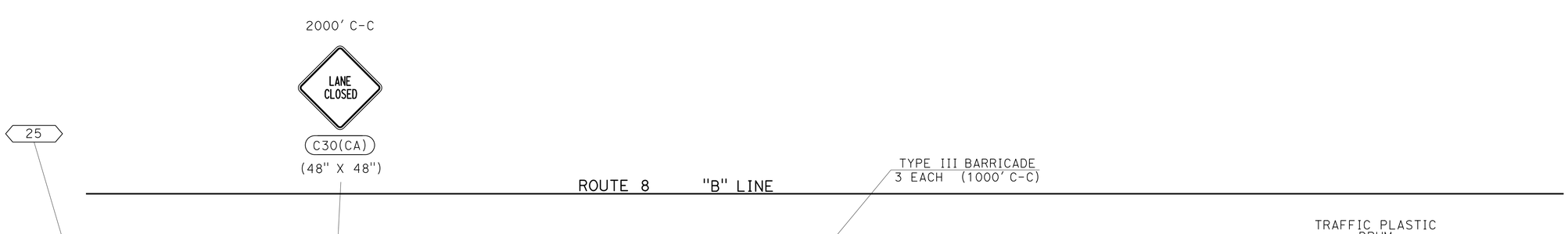


## LEFT LANE CLOSED

EASTBOUND OR WESTBOUND

SEE NOTE 1

## STAGE CONSTRUCTION DETAILS

NO SCALE

**SCD-2**

STATE OF CALIFORNIA - DEPARTMENT OF TRANSPORTATION
Caltrans®
TRADE CORRIDOR IMPROVEMENT FUND

FUNCTIONAL SUPERVISOR: NICOLA BERNARD

CALCULATED-DESIGNED BY: BRIAN McNAIR

CHECKED BY: MICHAEL OREIRO

REVISED BY | DATE REVISED

LAST REVISION 08-14-15 | DATE PLOTTED => 03-SEP-2015 | TIME PLOTTED => 14:05

BORDER LAST REVISED 7/2/2010 | USERNAME => s127400 | DGN FILE => 1114000006mb002.dgn | RELATIVE BORDER SCALE IS IN INCHES 0 1 2 3 | UNIT 2774 | PROJECT NUMBER & PHASE 11140000061

| Dist | COUNTY | ROUTE | POST MILES TOTAL PROJECT | SHEET No. | TOTAL SHEETS |
|---|---|---|---|---|---|
| 11 | Imp | 8 | R90.0/R96.8 | 105 | 209 |

REGISTERED CIVIL ENGINEER — 05-04-15 DATE

08-31-15
PLANS APPROVAL DATE

DYLAN S. MOORE No. 74711 Exp. 12-31-15 CIVIL — REGISTERED PROFESSIONAL ENGINEER — STATE OF CALIFORNIA

THE STATE OF CALIFORNIA OR ITS OFFICERS OR AGENTS SHALL NOT BE RESPONSIBLE FOR THE ACCURACY OR COMPLETENESS OF SCANNED COPIES OF THIS PLAN SHEET.

**NOTE:**

1. MATCH EXISTING MEDIAN PROFILE, EXACT LOCATIONS AND LENGTH TO BE DETERMINED BY THE ENGINEER.

**LEGEND:**

HMA (TYPE A)

CULVERT SLURRY-CEMENT BACKFILL

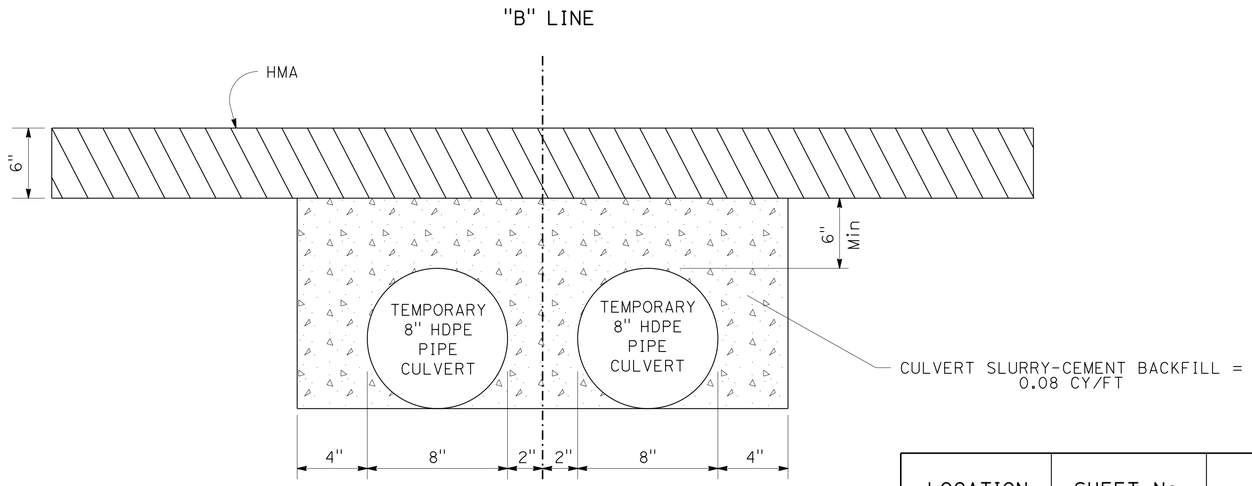


**SECTION A-A**
NO SCALE

| LOCATION | SHEET No. | STATION LIMITS | INSTALLATION | REMOVAL |
|---|---|---|---|---|
| A | SC-8 | "B" 4667+00.72 TO "B" 4669+42.52 | STAGE 1 | STAGE 7 |
| B | SC-10 | "B" 4878+85.93 TO "B" 4881+14.07 | STAGE 1 | STAGE 7 |
| C | SC-12 | "B" 4982+41.29 TO "B" 4984+60.39 | STAGE 1 | STAGE 7 |

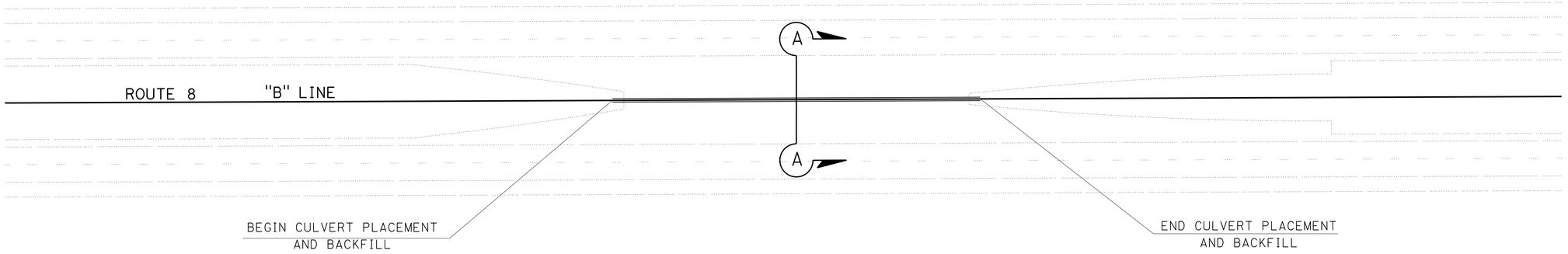


**TEMPORARY DRAINAGE**
LOCATION "A", "B", "C"

**STAGE CONSTRUCTION DETAILS**

NO SCALE

**SCD-3**

REVISED BY | DATE REVISED
BRIAN McNAIR | MICHAEL OREIRO
CALCULATED-DESIGNED BY | CHECKED BY
FUNCTIONAL SUPERVISOR: NICOLA BERNARD

STATE OF CALIFORNIA - DEPARTMENT OF TRANSPORTATION
Caltrans®
TRADE CORRIDOR IMPROVEMENT FUND

LAST REVISION | DATE PLOTTED => 03-SEP-2015
08-14-15 | TIME PLOTTED => 14:05

| Dist | COUNTY | ROUTE | POST MILES TOTAL PROJECT | SHEET No. | TOTAL SHEETS |
|---|---|---|---|---|---|
| 11 | Imp | 8 | R90.0/R96.8 | 106 | 209 |

Dylan Moore 05-04-15
REGISTERED CIVIL ENGINEER DATE

08-31-15
PLANS APPROVAL DATE

REGISTERED PROFESSIONAL ENGINEER
DYLAN S. MOORE
No. 74711
Exp. 12-31-15
CIVIL
STATE OF CALIFORNIA

THE STATE OF CALIFORNIA OR ITS OFFICERS OR AGENTS SHALL NOT BE RESPONSIBLE FOR THE ACCURACY OR COMPLETENESS OF SCANNED COPIES OF THIS PLAN SHEET.

## LOCATIONS:

STAGE 2 (LOCATION 'D') WESTBOUND
"B" 5036+00 TO "B" 5088+00
STAGE 6 (LOCATION 'D') WESTBOUND
"B" 5036+00 TO "B" 5088+00

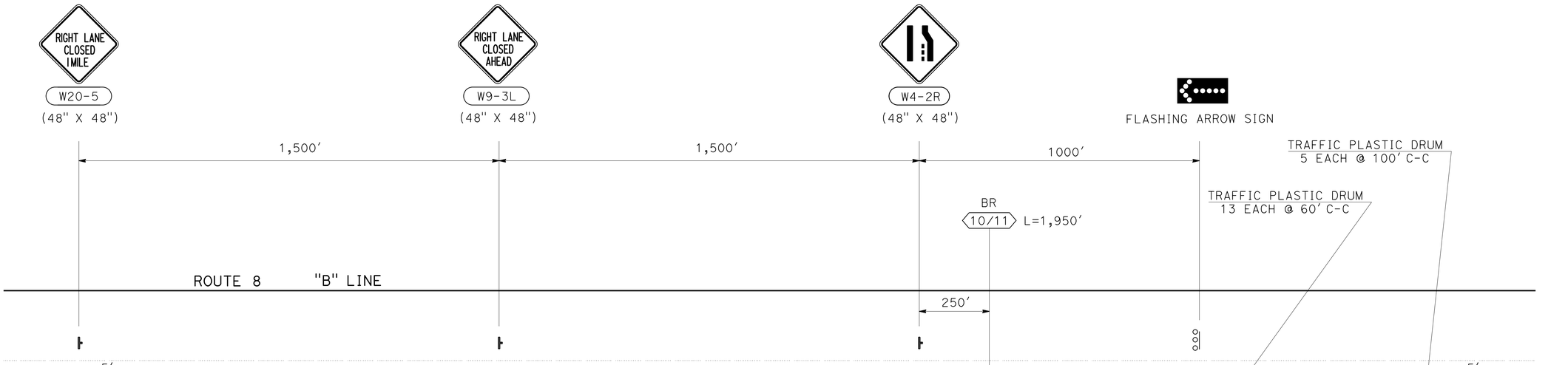


## RIGHT LANE DROP
EASTBOUND OR WESTBOUND

## STAGE CONSTRUCTION DETAILS
NO SCALE

**SCD-4**

BRIAN McNAIR — CALCULATED-DESIGNED BY
MICHAEL OREIRO — CHECKED BY
REVISED BY
DATE REVISED
FUNCTIONAL SUPERVISOR: NICOLA BERNARD
STATE OF CALIFORNIA - DEPARTMENT OF TRANSPORTATION
Caltrans
TRADE CORRIDOR IMPROVEMENT FUND

LAST REVISION | DATE PLOTTED => 03-SEP-2015
08-14-15 | TIME PLOTTED => 14:05

| Dist | COUNTY | ROUTE | POST MILES TOTAL PROJECT | SHEET No. | TOTAL SHEETS |
|---|---|---|---|---|---|
| 11 | Imp | 8 | R90.0/R96.8 | 107 | 209 |

Dylan Moore 05-04-15
REGISTERED CIVIL ENGINEER DATE

08-31-15
PLANS APPROVAL DATE

REGISTERED PROFESSIONAL ENGINEER
DYLAN S. MOORE
No. 74711
Exp. 12-31-15
CIVIL
STATE OF CALIFORNIA

THE STATE OF CALIFORNIA OR ITS OFFICERS OR AGENTS SHALL NOT BE RESPONSIBLE FOR THE ACCURACY OR COMPLETENESS OF SCANNED COPIES OF THIS PLAN SHEET.

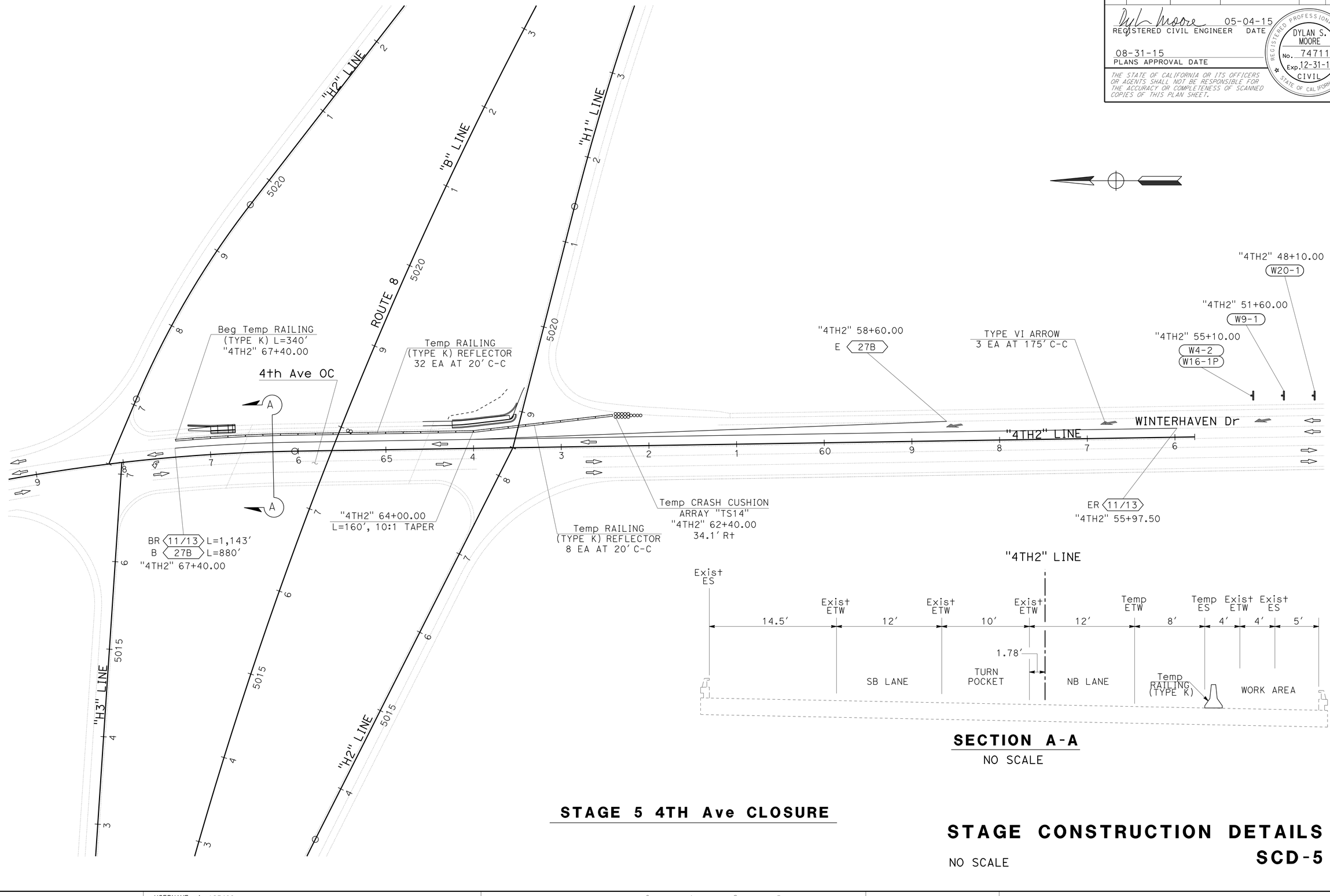





**SECTION A-A**
NO SCALE

**STAGE 5 4TH Ave CLOSURE**

# STAGE CONSTRUCTION DETAILS

NO SCALE

**SCD-5**

STATE OF CALIFORNIA - DEPARTMENT OF TRANSPORTATION
Caltrans®
**TRADE CORRIDOR IMPROVEMENT FUND**

FUNCTIONAL SUPERVISOR: NICOLA BERNARD

CALCULATED-DESIGNED BY
CHECKED BY

REVISED BY
DATE REVISED

LAST REVISION | DATE PLOTTED => 03-SEP-2015
08-04-15 | TIME PLOTTED => 14:05

BORDER LAST REVISED 7/2/2010

USERNAME => s127400
DGN FILE => 1114000006mb005.dgn

RELATIVE BORDER SCALE IS IN INCHES 0 1 2 3

UNIT 2774

PROJECT NUMBER & PHASE 11140000061

| Dist | COUNTY | ROUTE | POST MILES TOTAL PROJECT | SHEET No. | TOTAL SHEETS |
|---|---|---|---|---|---|
| 11 | Imp | 8 | R90.0/R96.8 | 108 | 209 |

REGISTERED CIVIL ENGINEER — DATE: 05-04-15

08-31-15
PLANS APPROVAL DATE

DYLAN S. MOORE No. 74711 Exp. 12-31-15 CIVIL — REGISTERED PROFESSIONAL ENGINEER — STATE OF CALIFORNIA

*THE STATE OF CALIFORNIA OR ITS OFFICERS OR AGENTS SHALL NOT BE RESPONSIBLE FOR THE ACCURACY OR COMPLETENESS OF SCANNED COPIES OF THIS PLAN SHEET.*

# TEMPORARY BRIDGE COLUMN PROTECTION

| STAGE | LOCATION | REMARKS |
|---|---|---|
| 2 | Rte 186 BRIDGE COLUMN | TEMPORARY EB PROTECTION |
| | SEMINOLE Rd BRIDGE COLUMN | TEMPORARY EB PROTECTION |
| 3 | WINTERHAVEN Dr BRIDGE COLUMN | TEMPORARY EB PROTECTION |
| 4 | WINTERHAVEN Dr BRIDGE COLUMN | TEMPORARY WB PROTECTION |
| 5 | SEMINOLE Rd BRIDGE COLUMN | TEMPORARY WB PROTECTION |
| | Rte 186 BRIDGE COLUMN | TEMPORARY WB PROTECTION |

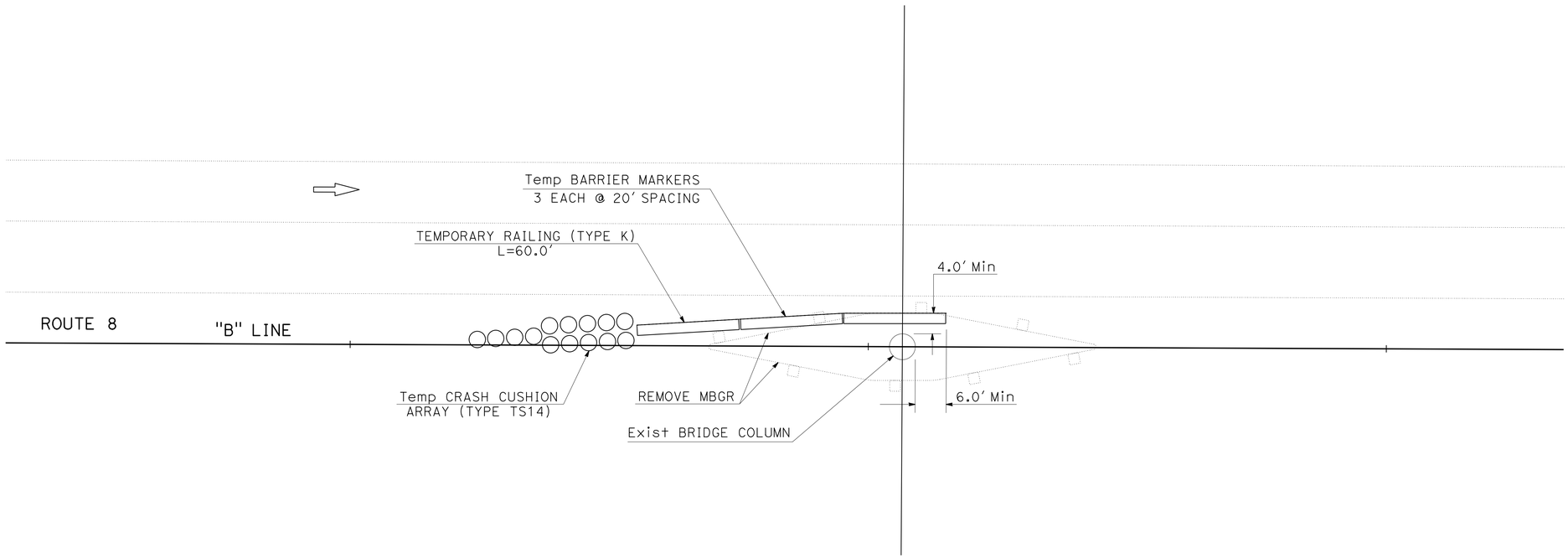


## TEMPORARY BRIDGE COLUMN PROTECTION

TEMPORARY EASTBOUND AND TEMPORARY WESTBOUND

## STAGE CONSTRUCTION DETAILS

NO SCALE

**SCD-6**

REVISED BY | DATE REVISED

BRIAN McNAIR | MICHAEL OREIRO

CALCULATED-DESIGNED BY | CHECKED BY

FUNCTIONAL SUPERVISOR: NICOLA BERNARD

STATE OF CALIFORNIA - DEPARTMENT OF TRANSPORTATION

Caltrans®

TRADE CORRIDOR IMPROVEMENT FUND

LAST REVISION | DATE PLOTTED => 03-SEP-2015 | TIME PLOTTED => 14:05 | 08-04-15

BORDER LAST REVISED 7/2/2010

USERNAME => s127400
DGN FILE => 1114000006mb006.dgn

RELATIVE BORDER SCALE IS IN INCHES 0 1 2 3

UNIT 2774

PROJECT NUMBER & PHASE 11140000061

| Dist | COUNTY | ROUTE | POST MILES TOTAL PROJECT | SHEET No. | TOTAL SHEETS |
|---|---|---|---|---|---|
| 11 | Imp | 8 | R90.0/R96.8 | 109 | 209 |

Dylan Moore 05-04-15
REGISTERED CIVIL ENGINEER DATE

08-31-15
PLANS APPROVAL DATE

REGISTERED PROFESSIONAL ENGINEER
DYLAN S. MOORE
No. 74711
Exp. 12-31-15
CIVIL
STATE OF CALIFORNIA

THE STATE OF CALIFORNIA OR ITS OFFICERS OR AGENTS SHALL NOT BE RESPONSIBLE FOR THE ACCURACY OR COMPLETENESS OF SCANNED COPIES OF THIS PLAN SHEET.

## STAGE CONSTRUCTION EARTHWORK

| STAGE | SHEET No. | LOCATION | ROADWAY EXCAVATION (CY) * | EMBANKMENT (N) (CY) * | REMARKS |
|---|---|---|---|---|---|
| 1 | SC-8 TO 9 | "B" 4672+10.00 TO "B" 4724+23.62 | 2,607 | 942 | INSTALL WB Temp WIDENING |
| | SC-9 TO 10 | "B" 4728+56.71 TO "B" 4873+15.80 | 7,230 | 2,611 | INSTALL WB Temp WIDENING |
| | SC-11 TO 12 | "B" 4886+84.20 TO "B" 4976+65.80 | 4,491 | 1,622 | INSTALL WB Temp WIDENING |
| | SC-13 TO 14 | "B" 4989+49.52 TO "B" 5006+35.39 | 1,685 | 609 | INSTALL EB/WB Temp WIDENING |
| | SC-14 TO 16 | "B" 5008+39.76 TO "B" 5031+15.52 | 2,276 | 822 | INSTALL EB/WB Temp WIDENING |
| | SC-8 | LOCATION 'A' CROSSOVER | 1,082 | 157 | INSTALL CROSSOVER |
| | SC-10 | LOCATION 'B' CROSSOVER | 1,678 | 143 | INSTALL CROSSOVER |
| | SC-12 | LOCATION 'C' CROSSOVER | 1,563 | 134 | INSTALL CROSSOVER |
| | SC-9 | "B" 4720+00.00 TO "B" 4721+50.00 | 28 | | OUTSIDE SHOULDER REBUILD |
| | SC-9 | "B" 4722+50.00 TO "B" 4724+20.00 | 32 | | OUTSIDE SHOULDER REBUILD |
| | SC-9 | "B" 4728+60.00 TO "B" 4733+00.00 | 82 | | OUTSIDE SHOULDER REBUILD |
| 2 | SC-17 TO 19 | "B" 4672+10.00 TO "B" 4724+10.90 | 1,229 | 940 | INSTALL EB Temp WIDENING |
| | SC-19 TO 20 | "B" 4728+62.74 TO "B" 4873+15.80 | 3,413 | 2,610 | INSTALL EB Temp WIDENING |
| 3 | SC-28 TO 31 | "B" 4886+84.20 TO "B" 4976+65.80 | 2,121 | 1,622 | INSTALL EB Temp WIDENING |
| 4 | SC-35 TO 38 | "B" 4886+84.20 TO "B" 4976+65.80 | 2,629 | 1,622 | REMOVE WB Temp WIDENING |
| 5 | SC-40 TO 43 | "B" 4672+10.00 TO "B" 4724+23.62 | 1,526 | 942 | REMOVE WB Temp WIDENING |
| | SC-43 TO 44 | "B" 4728+56.71 TO "B" 4873+15.80 | 4,231 | 2,611 | REMOVE WB Temp WIDENING |
| 6 | | "B" 4672+90.00 TO "B" 4724+10.90 | 1,140 | 261 | REMOVE EB Temp WIDENING |
| | | "B" 4728+62.74 TO "B" 4875+35.74 | 3,267 | 748 | REMOVE EB Temp WIDENING |
| | SC-51 | "B" 4886+84.20 TO "B" 4976+65.80 | 2,000 | 458 | REMOVE EB Temp WIDENING |
| | SC-52 | "B" 4989+49.52 TO "B" 5006+35.39 | 751 | 173 | REMOVE EB/WB Temp WIDENING |
| | SC-52 TO 53 | "B" 5008+39.76 TO "B" 5031+15.52 | 1,014 | 232 | REMOVE EB/WB Temp WIDENING |
| 7 | | LOCATION 'A' CROSSOVER | 1,356 | 12 | REMOVE CROSSOVER |
| | | LOCATION 'B' CROSSOVER | 1,570 | 22 | REMOVE CROSSOVER |
| | | LOCATION 'C' CROSSOVER | 1,444 | 20 | REMOVE CROSSOVER |
| | | TOTAL | 50,445 | 19,313 | |

* SEE ROADWAY QUANTITY SHEETS FOR ADDITIONAL QUANTITIES
(N)-NOT A SEPARATE PAY ITEM, FOR INFORMATION ONLY

## CONSTRUCTION AREA SIGNS

| SHEET No. | CODE | PANEL SIZE | No. OF POST AND SIZE | No. OF SIGNS |
|---|---|---|---|---|
| SC-17, 28, 38, 45 | W1-4L | 48" X 48" | 1 - 6" X 6" (S) | 4 |
| | W13-1P (50 MPH) | 30" X 30" | | 4 |
| SC-21, 32, 35, 40 | W1-4R | 48" X 48" | 1 - 6" X 6" (S) | 4 |
| | W13-1P (50 MPH) | 30" X 30" | | 4 |
| SCD-1 | W-20-5 (L) | 48" X 48" | 1 - 6" X 6" (S) | 4 |
| SCD-1 | C-20 (CA) L | 48" X 48" | 1 - 6" X 6" (S) | 4 |
| SCD-1 | W4-2L | 48" X 48" | 1 - 6" X 6" (S) | 4 |
| SCD-1 | ARROW BOARD (R) | | | 4 |
| SCD-4 | W-20-5 (R) | 48" X 48" | 1 - 6" X 6" (S) | 1 |
| SCD-4 | C-20 (CA) R | 48" X 48" | 1 - 6" X 6" (S) | 1 |
| SCD-4 | W4-2R | 48" X 48" | 1 - 6" X 6" (S) | 1 |
| SCD-4 | ARROW BOARD (L) | | | 1 |
| SCD-2 | C30 (CA) | 48" X 48" | PORTABLE | 34 |
| SC-17, 28, 38, 44 | R8-4 | 48" X 36" | 1 - 6" X 6" (S) | 4 |
| SC-21, 32, 35, 40 | R8-4 | 48" X 36" | 1 - 6" X 6" (S) | 4 |
| SCD-5 | W4-2R | 48" X 48" | 1 - 6" X 6" (S) | 1 |
| | W16-1P | 18" X 24" | | |
| SCD-5 | W9-1 | 48" X 48" | 1 - 6" X 6" (S) | 1 |
| SCD-5 | W20-1 | 48" X 48" | 1 - 6" X 6" (S) | 1 |
| | | | TOTAL | 81 |

NOTE:
1. SEE CONSTRUCTION AREA SIGN AND TRAFFIC HANDLING QUANTITY SHEETS FOR ADDITIONAL CONSTRUCTION AREA SIGN QUANTITIES.

(S) STATIONARY SIGN

## STAGE CONSTRUCTION TEMPORARY STRUCTURAL SECTION

| STAGE | SHEET No. | LOCATION | HOT MIX ASPHALT (TYPE A) (TON) * | CLASS 2 AB (CY) * | COLD PLANE ASPHALT CONCRETE PAVEMENT (SQYD) | REMOVE ASPHALT CONCRETE PAVEMENT (CY) | REMARKS |
|---|---|---|---|---|---|---|---|
| 1 | SC-8 TO 9 | "B" 4672+10.00 TO "B" 4724+23.62 | 1,956 | 1,931 | | 483 | WB Temp WIDENING (AC TO BE REMOVED IN STAGE 4) |
| | SC-9 TO 10 | "B" 4728+56.71 TO "B" 4873+15.80 | 5,424 | 5,356 | | 1,339 | WB Temp WIDENING (AC TO BE REMOVED IN STAGE 5) |
| | SC-11 TO 12 | "B" 4886+84.20 TO "B" 4976+65.80 | 3,369 | 3,327 | | 832 | WB Temp WIDENING (AC TO BE REMOVED IN STAGE 5) |
| | SC-13 TO 14 | "B" 4989+49.52 TO "B" 5006+47.21 | 637 | 629 | | 158 | WB Temp WIDENING (AC TO BE REMOVED IN STAGE 6) |
| | SC-14 TO 16 | "B" 5008+41.34 TO "B" 5031+15.52 | 854 | 843 | | 211 | WB Temp WIDENING (AC TO BE REMOVED IN STAGE 6) |
| 2 | SC-17 TO 19 | "B" 4672+10.00 TO "B" 4724+12.85 | 976 | 964 | | 482 | EB Temp WIDENING (AC TO BE REMOVED IN STAGE 6) |
| | SC-19 TO 20 | "B" 4728+59.90 TO "B" 4873+15.80 | 2,712 | 2,678 | | 1,339 | EB Temp WIDENING (AC TO BE REMOVED IN STAGE 6) |
| 3 | SC-28 TO 31 | "B" 4886+84.20 TO "B" 4976+65.80 | 1,685 | 1,664 | | 832 | EB Temp WIDENING (AC TO BE REMOVED IN STAGE 6) |
| 1 | SC-13 TO 14 | "B" 4989+49.52 TO "B" 5006+23.61 | 628 | 621 | | 156 | EB Temp WIDENING (AC TO BE REMOVED IN STAGE 6) |
| | SC-14 TO 16 | "B" 5008+27.76 TO "B" 5031+15.52 | 859 | 848 | | 212 | EB Temp WIDENING (AC TO BE REMOVED IN STAGE 6) |
| 1 | SC-9 | "B" 4720+00.00 TO "B" 4721+50.00 | 57 | | | | OUTSIDE SHOULDER REBUILD |
| | SC-9 | "B" 4722+50.00 TO "B" 4724+20.00 | 64 | | | | OUTSIDE SHOULDER REBUILD |
| | SC-9 | "B" 4728+60.00 TO "B" 4733+00.00 | 166 | | | | OUTSIDE SHOULDER REBUILD |
| 1 | SC-8 | LOCATION 'A' CROSSOVER | 1,624 | 1,603 | | 802 | CROSSOVER (AC TO BE REMOVED IN STAGE 6) |
| | SC-10 | LOCATION 'B' CROSSOVER | 2,306 | 2,277 | | 1,139 | CROSSOVER (AC TO BE REMOVED IN STAGE 6) |
| | SC-12 | LOCATION 'C' CROSSOVER | 2,142 | 2,115 | | 1,058 | CROSSOVER (AC TO BE REMOVED IN STAGE 6) |
| 7 | | "B" 4663+27.73 TO "B" 4672+10.00 | | | 980 | | INSIDE SHOULDER GRINDING |
| | | TOTAL | 25,459 | 24,856 | 980 | 9,043 | |

* SEE ROADWAY QUANTITY SHEETS FOR ADDITIONAL QUANTITIES
(N)-NOT A SEPARATE PAY ITEM, FOR INFORMATION ONLY

# STAGE CONSTRUCTION QUANTITIES
# SCQ-1

REVISED BY | DATE REVISED
BRIAN McNAIR | OLIVER ASIS
CALCULATED-DESIGNED BY | CHECKED BY
FUNCTIONAL SUPERVISOR: NICOLA BERNARD

STATE OF CALIFORNIA - DEPARTMENT OF TRANSPORTATION
Caltrans®
TRADE CORRIDOR IMPROVEMENT FUND

LAST REVISION | DATE PLOTTED => 03-SEP-2015
08-04-15 | TIME PLOTTED => 14:05

BORDER LAST REVISED 7/2/2010 | USERNAME => s127400 | DGN FILE => 1114000006mc001.dgn | RELATIVE BORDER SCALE IS IN INCHES 0 1 2 3 | UNIT 2774 | PROJECT NUMBER & PHASE | 11140000061

| Dist | COUNTY | ROUTE | POST MILES TOTAL PROJECT | SHEET No. | TOTAL SHEETS |
|---|---|---|---|---|---|
| 11 | Imp | 8 | R90.0/R96.8 | 110 | 209 |

REGISTERED CIVIL ENGINEER — DATE: 05-04-15

PLANS APPROVAL DATE: 08-31-15

REGISTERED PROFESSIONAL ENGINEER — DYLAN S. MOORE No. 74711 Exp. 12-31-15 CIVIL — STATE OF CALIFORNIA

THE STATE OF CALIFORNIA OR ITS OFFICERS OR AGENTS SHALL NOT BE RESPONSIBLE FOR THE ACCURACY OR COMPLETENESS OF SCANNED COPIES OF THIS PLAN SHEET.

## STAGE CONSTRUCTION PAVEMENT DELINEATION REMOVALS

| STAGE | SHEET | DETAIL No. | REMOVE PAINTED TRAFFIC STRIPE | REMOVE PAVEMENT MARKER (N) | REMARKS |
|---|---|---|---|---|---|
| | | | LF | EA | |
| 1 TO 7 | N/A | | 3,024 | | TYPE VI ARROWS (24 @ 42 SF [126 LF] EACH) |
| 1 | SC-8 | 25 | 150 | 4 | WB @ LOCATION 'A' |
| | SC-8 | 25 | 1,400 | 30 | EB @ LOCATION 'A' |
| | SC-8 | 11/13 | 9,356 | 3,900 | WB @ LOCATION 'A' TO COLORADO RIVER BRIDGE |
| | SC-8 | 11/13 | 350 | 150 | EB @ LOCATION 'A' |
| | SC-9 | 27B | 150 | | WB @ ALL AMERICAN CANAL |
| | SC-9 | 27B | 20 | | WB @ ALL AMERICAN CANAL |
| | SC-9 | 27B | 1,035 | | WB @ ALL AMERICAN CANAL |
| | SC-9 | 25 | 435 | 10 | EB @ ALL AMERICAN CANAL |
| | SC-10 | 25 | 1,620 | 34 | EB @ LOCATION 'B' |
| | SC-10 | 11/13 | 405 | 170 | EB @ LOCATION 'B' |
| | SC-12 | 25 | 750 | 16 | EB @ LOCATION 'C' |
| | SC-12 | 11/13 | 1,398 | 585 | EB @ LOCATION 'C' TO COLORADO RIVER BRIDGE |
| 2 | SC-17 | 25 | 1,185 | 25 | EB @ LOCATION 'A' |
| | SC-17 | 27B | 1,185 | | EB @ LOCATION 'A' |
| | SC-21 | 25 | 820 | 18 | EB @ LOCATION 'B' |
| | SC-21 | 27B | 820 | | EB @ LOCATION 'B' |
| | SC-22 | 27B | 1,240 | | WB @ LOCATION 'C' |
| | SC-22 | 25 | 1,240 | 26 | WB @ LOCATION 'C' |
| | SC-24 | 27B | 475 | | WB @ COLORADO RIVER BRIDGE |
| | SC-24 | 25 | 475 | 10 | WB @ COLORADO RIVER BRIDGE |
| | SC-24 | 25 | 475 | 10 | WB @ COLORADO RIVER BRIDGE |
| 3 | SC-25 | 25 | 21,815 | 455 | WB @ LOCATION 'A' TO LOCATION 'B' |
| | SC-25 | 25 | 22,800 | 475 | EB @ LOCATION 'A' TO LOCATION 'B' |
| | SC-25 | 27B | 22,800 | | EB @ LOCATION 'A' TO LOCATION 'B' |
| | SC-26 | 27B | 430 | | EB @ ALL AMERICAN CANAL |
| | SC-26 | 11/13 | 108 | 45 | EB @ ALL AMERICAN CANAL |
| | SC-31 | 27B | 1,240 | | WB @ LOCATION 'C' |
| | SC-31 | 25 | 1,240 | 26 | WB @ LOCATION 'C' |
| | SC-32 | 25 | 545 | 12 | EB @ LOCATION 'C' |
| | SC-32 | 27B | 545 | | EB @ LOCATION 'C' |
| | SC-33 | 27B | 475 | | WB @ COLORADO RIVER BRIDGE |
| | SC-33 | 25 | 755 | 16 | WB @ COLORADO RIVER BRIDGE |
| 4 | SC-34 | 25 | 420 | 9 | EB @ LOCATION 'B' |
| | SC-34 | 27B | 420 | | EB @ LOCATION 'B' |
| | SC-35 | 27B | 545 | | WB @ LOCATION 'B' |
| | SC-35 | 25 | 545 | 12 | WB @ LOCATION 'B' |
| | SC-35 | 25 | 705 | 15 | EB @ LOCATION 'B' |
| | SC-35 | 27B | 940 | | EB @ LOCATION 'B' |
| | SC-38 | 27B | 940 | | EB @ LOCATION 'C' |
| | SC-38 | 25 | 705 | 15 | EB @ LOCATION 'C' |
| | SC-38 | 27B | 545 | | WB @ LOCATION 'C' |
| | SC-38 | 25 | 545 | 12 | WB @ LOCATION 'C' |
| | SC-38 | 25 | 545 | 12 | EB @ LOCATION 'C' |
| | SC-38 | 27B | 545 | | EB @ LOCATION 'C' |
| 5 | SC-39 | 27B | 1,030 | | WB @ LOCATION 'A' |
| | SC-39 | 25 | 1,030 | 22 | WB @ LOCATION 'A' |
| | SC-44 | 27B | 11,070 | | WB @ LOCATION 'B' TO LOCATION 'C' |
| | SC-44 | 25 | 11,160 | 233 | WB @ LOCATION 'B' TO LOCATION 'C' |
| | SC-46 | 25 | 1,090 | 23 | EB @ LOCATION 'B' |
| | SC-46 | 27B | 1,090 | | EB @ LOCATION 'B' |
| | SCD-5 | 11/13 | 286 | 123 | 4TH AVENUE SIDEWALK WORK |
| 6 | N/A | 25 | 21,405 | 446 | EB @ LOCATION 'A' TO LOCATION 'B' |
| | N/A | 25 | 20,950 | 437 | WB @ LOCATION 'A' TO LOCATION 'B' |
| | N/A | 27B | 1,050 | | WB @ ALL AMERICAN CANAL |
| | SC-51 | 25 | 1,200 | 25 | EB @ LOCATION 'C' |
| | SC-51 | 27B | 1,200 | | EB @ LOCATION 'C' |
| | SC-51 | 27B | 2,545 | | WB @ LOCATION 'C' TO 4TH Ave ON-RAMP |
| | SC-51 | 25 | 620 | 13 | WB @ LOCATION 'C' |
| SUBTOTAL (1) | | | 183,887 | 7,414 | |

NOTE:
(N)-NOT A SEPARATE PAY ITEM, FOR INFORMATION ONLY.

## STAGE CONSTRUCTION PAVEMENT DELINEATION REMOVALS

| STAGE | SHEET | DETAIL No. | REMOVE PAINTED TRAFFIC STRIPE | REMOVE PAVEMENT MARKER (N) | REMARKS |
|---|---|---|---|---|---|
| | | | LF | EA | |
| 6 | SC-52 | 27B | 2,470 | | WB @ CALIFORNIA WASTEWAY TO 4TH Ave OFF-RAMP |
| | SC-52 | 27B | 210 | | EB @ CALIFORNIA WASTEWAY |
| | SC-53 | 27B | 120 | | EB @ COLORADO RIVER BRIDGE |
| 7 | N/A | 27B | 2,545 | | WB @ LOCATION 'C' TO CALIFORNIA WASTEWAY |
| | N/A | 25 | 5,805 | 121 | WB @ LOCATION 'C' TO COLORADO RIVER BRIDGE |
| | N/A | 25 | 5,420 | 113 | EB @ LOCATION 'C' TO COLORADO RIVER BRIDGE |
| | N/A | 27B | 2,730 | | EB @ LOCATION 'C' TO CALIFORNIA WASTEWAY |
| | N/A | 27B | 2,160 | | WB @ CALIFORNIA WASTEWAY TO 4TH Ave OFF-RAMP |
| | N/A | 27B | 2,120 | | EB @ CALIFORNIA WASTEWAY TO 4TH Ave ON-RAMP |
| | N/A | 27B | 430 | | WB @ 4TH Ave OFF-RAMP TO COLORADO RIVER BRIDGE |
| SUBTOTAL (2) | | | 24,010 | 234 | |
| SUBTOTAL (1) | | | 183,887 | 7,414 | |
| TOTAL | | | 207,897 | 7,648 | |

NOTE:
(N)-NOT A SEPARATE PAY ITEM, FOR INFORMATION ONLY.

## STAGE CONSTRUCTION SPECIAL PAVEMENT DELINEATION REMOVALS

| STAGE | SHEET | DETAIL No. | REMOVE YELLOW PAINTED TRAFFIC STRIPE (HAZARDOUS WASTE) | REMOVE PAVEMENT MARKER (N) | REMARKS |
|---|---|---|---|---|---|
| | | | LF | EA | |
| 1 | SCD-1 | 25 | 1,200 | 50 | EB LEFT LANE DROP (LOCATION 'A') |
| | SC-8 | 25 | 1,400 | 59 | EB (LOCATION 'A') |
| | SCD-1 | 25 | 1,200 | 50 | EB LEFT LANE DROP (LOCATION 'B') |
| | SC-10 | 25 | 1,620 | 68 | EB (LOCATION 'B') |
| | SCD-1 | 25 | 1,200 | 50 | EB LEFT LANE DROP (LOCATION 'C') |
| | SC-12 | 25 | 750 | 32 | EB (LOCATION 'C') |
| | SCD-1 | 25 | 1,200 | 50 | WB LEFT LANE DROP (LOCATION 'D') |
| TOTAL | | | 8,570 | | |

NOTE:
(N)-NOT A SEPARATE PAY ITEM, FOR INFORMATION ONLY.

## STAGE CONSTRUCTION QUANTITIES

## SCQ-2

REVISED BY | DATE REVISED
BRIAN McNAIR | OLIVER ASIS
CALCULATED-DESIGNED BY | CHECKED BY
FUNCTIONAL SUPERVISOR: NICOLA BERNARD

STATE OF CALIFORNIA - DEPARTMENT OF TRANSPORTATION
Caltrans®
TRADE CORRIDOR IMPROVEMENT FUND

LAST REVISION | DATE PLOTTED => 03-SEP-2015
08-04-15 | TIME PLOTTED => 14:05

BORDER LAST REVISED 7/2/2010 | USERNAME => s127400 | DGN FILE => 1114000006mc002.dgn | RELATIVE BORDER SCALE IS IN INCHES 0 1 2 3 | UNIT 2774 | PROJECT NUMBER & PHASE 11140000061

# STAGE CONSTRUCTION PAVEMENT DELINEATION (MORE THAN 180 DAYS)

| STAGE | SHEET | DETAIL No. | PAVEMENT MARKER (EA) NON-REFLECTIVE * TYPE A WHITE | RETROREFLECTIVE * TYPE G CLEAR | RETROREFLECTIVE * TYPE H YELLOW | RETROREFLECTIVE * TYPE D YELLOW | PAINT TRAFFIC STRIPE (2 COAT) LF | REMARKS |
|---|---|---|---|---|---|---|---|---|
| 1 | SC-8 | 25 | | | 30 | | 1,400 | EB @ LOCATION 'A' |
| | SC-8 | 25 | | | 780 | | 37,425 | WB @ LOCATION 'A' |
| | SC-9 | 27B | | | | | 150 | WB @ ALL AMERICAN CANAL |
| | SC-9 | 27B | | | | | 1,035 | WB @ ALL AMERICAN CANAL |
| | SC-10 | 25 | | | 34 | | 1,620 | EB @ LOCATION 'B' |
| | SC-12 | 25 | | | 117 | | 5,590 | EB @ LOCATION 'C' |
| 2 | SC-17 | 25 | | | 475 | | 22,800 | EB @ LOCATION 'A' TO LOCATION 'B' |
| | SC-17 | 27B | | | | | 22,800 | EB @ LOCATION 'A' TO LOCATION 'B' |
| | SC-22 | 27B | | | | | 6,500 | WB @ LOCATION 'C' TO COLORADO RIVER BRIDGE |
| | SC-22 | 25 | | | 136 | | 6,500 | WB @ LOCATION 'C' TO COLORADO RIVER BRIDGE |
| 3 | SC-25 | 11/13 | 1,820 | 455 | | | 21,815 | WB @ LOCATION 'A' TO LOCATION 'B' |
| | SC-25 | 25 | | | 455 | | 21,820 | WB @ LOCATION 'A' TO LOCATION 'B' |
| | SC-25 | 25 | | | 685 | | 32,850 | EB @ LOCATION 'A' TO LOCATION 'B' |
| | SC-25 | 27B | | | | | 3,795 | EB @ LOCATION 'A' TO ROUTE 186 OFF-RAMP |
| | N/A | 27B | | | | | 2,290 | EB @ ROUTE 186 OFF-RAMP TO ROUTE 186 ON-RAMP |
| | SC-26 | 27B | | | | | 15,425 | EB @ ROUTE 186 ON-RAMP TO LOCATION 'B' |
| | SC-28 | 27B | | | | | 11,450 | EB @ LOCATION 'B' TO LOCATION 'C' |
| | SC-31 | 27B | | | | | 5,905 | WB @ LOCATION 'B' TO LOCATION 'C' |
| | SC-31 | 25 | | | 136 | | 6,500 | WB @ LOCATION 'B' TO LOCATION 'C' |
| | SC-33 | 25 | | | 1 | | 25 | WB @ 4TH Ave |
| | SC-33 | 27B | | | | | 475 | WB @ 4TH Ave TO COLORADO RIVER BRIDGE |
| 4 | SC-35 | 27B | | | | | 11,450 | WB @ LOCATION 'B' TO LOCATION 'C' |
| | SC-35 | 25 | | | 239 | | 11,450 | WB @ LOCATION 'B' TO LOCATION 'C' |
| | SC-35 | 25 | | | 239 | | 11,440 | EB @ LOCATION 'B' TO LOCATION 'C' |
| | SC-35 | 27B | | | | | 4,765 | EB @ LOCATION 'B' TO WINTERHAVEN Dr OFF-RAMP |
| | SC-36 | 27B | | | | | 2,485 | EB @ WINTERHAVEN Dr OFF-RAMP TO WINTERHAVEN Dr ON-RAMP |
| | SC-37 | 27B | | | | | 3,550 | EB @ WINTERHAVEN Dr ON-RAMP TO LOCATION 'C' |
| 5 | SC-39 | 27B | | | | | 32,730 | WB @ LOCATION 'A' TO LOCATION 'C' |
| | SC-39 | 25 | | | 682 | | 32,730 | WB @ LOCATION 'A' TO LOCATION 'C' |
| | SC-46 | 25 | | | 126 | | 6,015 | EB @ LOCATION 'C' TO COLORADO RIVER BRIDGE |
| | SC-46 | 27B | | | | | 6,015 | EB @ LOCATION 'C' TO COLORADO RIVER BRIDGE |
| | SCD-5 | 27B | | | | | 880 | 4TH AVENUE SIDEWALK WORK |
| 6 | N/A | 25 | | | 654 | | 31,380 | EB @ LOCATION 'A' TO LOCATION 'C' |
| | N/A | 11/13 | 2,616 | 654 | | | 31,380 | EB @ LOCATION 'A' TO LOCATION 'C' |
| | N/A | 27B | | | | | 3,160 | WB @ LOCATION 'A' TO ROUTE 186 ON-RAMP |
| | N/A | 11/13 | 2,584 | 646 | | | 30,965 | WB @ LOCATION 'A' TO LOCATION 'C' |
| | N/A | 25 | | | 646 | | 30,965 | WB @ LOCATION 'A' TO LOCATION 'C' |
| | N/A | 27B | | | | | 2,200 | WB @ ROUTE 186 ON-RAMP TO ROUTE 186 OFF-RAMP |
| | N/A | 27B | | | | | 19,360 | WB @ ROUTE 186 OFF-RAMP TO WINTERHAVEN Dr ON-RAMP |
| | N/A | 27B | | | | | 2,420 | WB @ WINTERHAVEN Dr ON-RAMP TO WINTERHAVEN Dr OFF-RAMP |
| | N/A | 27B | | | | | 2,355 | WB @ WINTERHAVEN Dr OFF-RAMP TO LOCATION 'C' |
| | SC-51 | 27B | | | | | 3,245 | WB @ LOCATION 'C' TO 4TH Ave ON-RAMP |
| | SC-51 | 11/13 | | 13 | | | 580 | WB @ LOCATION 'C' |
| | SC-51 | 25 | | | 134 | | 6,385 | WB @ LOCATION 'C' TO COLORADO RIVER BRIDGE |
| | SC-51 | 25 | | | 126 | | 6,010 | EB @ LOCATION 'C' TO COLORADO RIVER BRIDGE |
| | SC-51 | 27B | | | | | 3,320 | EB @ LOCATION 'C' TO 4TH Ave OFF-RAMP |
| | SC-52 | 27B | | | | | 2,160 | WB @ 4TH Ave ON-RAMP TO 4TH Ave OFF-RAMP |
| | SC-52 | 27B | | | | | 2,120 | EB @ 4TH Ave OFF-RAMP TO 4TH Ave ON-RAMP |
| | SC-53 | 27B | | | | | 430 | WB @ 4TH Ave OFF-RAMP TO COLORADO RIVER BRIDGE |
| 7 | N/A | 27B | | | | | 2,215 | WB @ LOCATION 'C' TO CALIFORNIA WASTEWAY |
| | N/A | 11/13 | | 129 | | | 6,165 | WB @ LOCATION 'C' TO COLORADO RIVER BRIDGE |
| | N/A | 25 | | | 129 | | 6,160 | WB @ LOCATION 'C' TO COLORADO RIVER BRIDGE |
| | N/A | 25 | | | 138 | | 6,615 | EB @ LOCATION 'C' TO COLORADO RIVER BRIDGE |
| | N/A | 11/13 | | 126 | | | 6,020 | EB @ LOCATION 'C' TO COLORADO RIVER BRIDGE |
| | N/A | 27B | | | | | 2,500 | EB @ LOCATION 'C' TO CALIFORNIA WASTEWAY |
| | N/A | 27B | | | | | 2,470 | WB @ CALIFORNIA WASTEWAY TO 4TH Ave OFF-RAMP |
| | N/A | 27B | | | | | 2,465 | EB @ CALIFORNIA WASTEWAY TO 4TH Ave ON-RAMP |
| | N/A | 27B | | | | | 725 | WB @ 4TH Ave OFF-RAMP TO COLORADO RIVER BRIDGE |
| SUBTOTAL | | | 7,020 | 2,023 | 5,962 | | 565,450 | |
| TOTAL | | | 7,020 | | 7,985 | | 565,450 | |

* SEE PAVEMENT DELINEATION QUANTITIES FOR ADDITIONAL QUANTITIES

| STAGE | SHEET | DETAIL No. | PAINT PAVEMENT MARKING (2 COAT) SQFT | REMARKS |
|---|---|---|---|---|
| 1 | SCD-1 | ARROW | 126 | EB @ LOCATION 'A' (TYPE VI ARROW X 3) |
| 1 | SCD-1 | ARROW | 126 | EB @ LOCATION 'B' (TYPE VI ARROW X 3) |
| 1 | SCD-1 | ARROW | 126 | EB @ LOCATION 'C' (TYPE VI ARROW X 3) |
| 1 | SCD-1 | ARROW | 126 | WB @ LOCATION 'D' (TYPE VI ARROW X 3) |
| 2 | SCD-4 | ARROW | 126 | WB @ LOCATION 'D' (TYPE VI ARROW X 3) |
| 3 | SCD-1 | ARROW | 126 | WB @ LOCATION 'D' (TYPE VI ARROW X 3) |
| 6 | SCD-1 | ARROW | 126 | WB @ LOCATION 'C' (TYPE VI ARROW X 3) |
| 6 | SCD-4 | ARROW | 126 | WB @ LOCATION 'D' (TYPE VI ARROW X 3) |
| TOTAL | | | 1,008 | |

| Dist | COUNTY | ROUTE | POST MILES TOTAL PROJECT | SHEET No. | TOTAL SHEETS |
|---|---|---|---|---|---|
| 11 | Imp | 8 | R90.0/R96.8 | 111 | 209 |

Dylan Moore 05-04-15
REGISTERED CIVIL ENGINEER DATE

08-31-15
PLANS APPROVAL DATE

REGISTERED PROFESSIONAL ENGINEER — DYLAN S. MOORE No. 74711 Exp. 12-31-15 CIVIL — STATE OF CALIFORNIA

THE STATE OF CALIFORNIA OR ITS OFFICERS OR AGENTS SHALL NOT BE RESPONSIBLE FOR THE ACCURACY OR COMPLETENESS OF SCANNED COPIES OF THIS PLAN SHEET.

## STAGE CONSTRUCTION QUANTITIES

## SCQ-3

REVISED BY | DATE REVISED

BRIAN McNAIR | OLIVER ASIS

CALCULATED-DESIGNED BY | CHECKED BY

FUNCTIONAL SUPERVISOR: NICOLA BERNARD

STATE OF CALIFORNIA - DEPARTMENT OF TRANSPORTATION
Caltrans®
TRADE CORRIDOR IMPROVEMENT FUND

LAST REVISION | DATE PLOTTED => 03-SEP-2015 | TIME PLOTTED => 14:05
08-04-15

BORDER LAST REVISED 7/2/2010

USERNAME => s127400
DGN FILE => 1114000006mc003.dgn

RELATIVE BORDER SCALE IS IN INCHES 0 1 2 3

UNIT 2774 | PROJECT NUMBER & PHASE | 11140000061

# RESET ROADSIDE SIGN

| LINE | LOCATION | DIRECTION | | SIDE | | SIGN CODE | RESET ROADSIDE SIGN | REMOVED IN STAGE (N) | RESET IN STAGE (N) |
|---|---|---|---|---|---|---|---|---|---|
| | | EB | WB | R† | L† | | EA | | |
| "B" | 4662+36 | X | | X | | R2-1 (CA) | 1 | 2 | 6 |
| | | | | | | R48-1 (CA) | 1 | | |
| "B" | 4669+87 | X | | X | | R6-4 (CA) | 1 | 2 | 3 |
| "B" | 4670+55 | | X | | X | G83-1 (CA) | 1 | 5 | 6 |
| | | | | | | W3-4 (CA) | 1 | | |
| "B" | 4678+92 | | X | | X | G20-1 (CA) | 1 | 5 | 6 |
| "B" | 4685+55 | | X | | X | SPECIAL SIGN | 1 | | |
| "B" | 4688+43 | X | | X | | G86-5 (CA) | 1 | 2 | 3 |
| | | | | | | G28-2 (CA) | 1 | | |
| "B" | 4688+49 | X | | X | | R8-4 | 1 | 2 | 3 |
| "B" | 4691+50 | | X | | X | M3-4 | 1 | 5 | 6 |
| | | | | | | G27-2 (CA) | 1 | | |
| "B" | 4694+54 | X | | X | | G85-1 | 1 | 2 | 3 |
| | | | | | | G66-56 (CA) | 1 | | |
| | | | | | | M6-2 Blue | 1 | | |
| "B" | 4694+54 | | X | | X | D8-1 | 1 | 5 | 6 |
| | | | | | | G66-57 (CA) | 1 | | |
| "B" | 4699+49 | X | | X | | R44B (CA) | 1 | 2 | 3 |
| "B" | 4702+47 | X | | X | | G84-3 (CA) | 1 | 2 | 3 |
| "B" | 4703+00 | X | | X | | R5-10a | 1 | 2 | 3 |
| "B" | 4706+49 | | X | | X | W4-1 | 1 | 5 | 6 |
| "B" | 4716+41 | X | | X | | W4-1 | 1 | 2 | 3 |
| "B" | 4718+52 | | X | | X | G84-3 (CA) | 1 | 5 | 6 |
| "B" | 4723+38 | | X | | X | G66-56 (CA) | 1 | 5 | 6 |
| | | | | | | M6-2 | 1 | | |
| | | | | | | G11-7 (CA) | 1 | | |
| "B" | 4724+17 | | X | | X | G85-1 (CA) | 1 | 5 | 6 |
| "B" | 4724+27 | X | | X | | G11-5 (CA) | 1 | 2 | 3 |
| | | | | | | G11-7 (CA) | 1 | | |
| "B" | 4728+59 | | X | | X | G11-5 (CA) | 1 | 5 | 6 |
| "B" | 4729+22 | X | | X | | M3-2 | 1 | | |
| | | | | | | G27-2 (CA) | 1 | 2 | 3 |
| "B" | 4731+65 | X | | X | | R8-4 | 1 | 2 | 3 |
| "B" | 4746+52 | | X | | X | G86-5 (CA) | 1 | 5 | 6 |
| | | | | | | G28-2 (CA) | 1 | | |
| "B" | 4753+10 | | X | | X | SPECIAL SIGN | 1 | 5 | 6 |
| "B" | 4758+25 | X | | X | | G5 (CA) | 1 | 2 | 3 |
| "B" | 4760+26 | | X | | X | SPECIAL SIGN | 1 | 5 | 6 |
| "B" | 4766+86 | | X | | X | SPECIAL SIGN | 1 | 5 | 6 |
| "B" | 4775+40 | | X | | X | G20-5(CA) | 1 | 5 | 6 |
| "B" | 4846+20 | | X | | X | R6-4 (CA) | 1 | 4 | 6 |
| "B" | 4870+78 | X | | X | | G83-4 (CA) | 1 | 2 | 6 |
| "B" | 4888+42 | | X | | X | R47A (CA) | 1 | 4 | 5 |

(N)-NOT A SEPARATE PAY ITEM, FOR INFORMATION ONLY

| LINE | LOCATION | DIRECTION | | SIDE | | SIGN CODE | RESET ROADSIDE SIGN | REMOVED IN STAGE (N) | RESET IN STAGE (N) |
|---|---|---|---|---|---|---|---|---|---|
| | | EB | WB | R† | L† | | EA | | |
| "B" | 4903+85 | | X | | X | R6-3 (CA) | 1 | 4 | 5 |
| "B" | 4907+98 | X | | X | | G86-5 (CA) | 1 | 3 | 4 |
| | | | | | | D9-3a | 1 | | |
| | | | | | | D9-11 | 1 | | |
| | | | | | | D9-8 | 1 | | |
| | | | | | | G81-52 (CA) | 1 | | |
| "B" | 4908+57 | | X | | X | R8-4 | 1 | 4 | 5 |
| "B" | 4911+46 | | X | | X | R2-1 | 1 | 4 | 5 |
| | | | | | | R48-1 (CA) | 1 | | |
| "B" | 4911+50 | X | | X | | R2-1 | 1 | 3 | 4 |
| | | | | | | R48-1 (CA) | 1 | | |
| "B" | 4913+58 | X | | X | | M1-6 | 1 | 3 | 4 |
| | | | | | | G58 (CA) | 1 | | |
| "B" | 4916+33 | | X | | X | G27-2 (CA) | 1 | 4 | 5 |
| | | | | | | M3-4 | 1 | | |
| "B" | 4916+69 | X | | X | | S32 (CA) | 1 | 3 | 4 |
| | | | | | | S32-1 (CA) | 1 | | |
| "B" | 4918+88 | X | | X | | R6-4 (CA) | 1 | 3 | 4 |
| "B" | 4922+54 | X | | X | | G85-10 (CA) | 1 | 3 | 4 |
| "B" | 4926+60 | X | | X | | G84-3 (CA) | 1 | 3 | 4 |
| "B" | 4929+50 | | X | | X | W4-1 | 1 | 4 | 5 |
| "B" | 4936+16 | | X | | X | G11-7 (CA) | 1 | 4 | 5 |
| "B" | 4941+70 | X | | X | | W4-1 | 1 | 3 | 4 |
| "B" | 4943+43 | | X | | X | G84-3 (CA) | 1 | 4 | 5 |
| "B" | 4948+00 | | X | | X | G85-10 (CA) | 1 | 4 | 5 |
| | | | | | | D9-3a | 1 | | |
| "B" | 4953+57 | X | | X | | G27-2 (CA) | 1 | 3 | 4 |
| | | | | | | M3-2 | 1 | | |
| "B" | 4962+00 | | X | | X | M1-6 | 1 | 4 | 5 |
| | | | | | | G58 (CA) Blue | 1 | | |
| "B" | 4966+00 | | X | | X | R48-2 (CA) | 1 | 4 | 5 |
| "B" | 4967+36 | | X | | X | R8-4 | 1 | 4 | 5 |
| "B" | 4968+47 | X | | X | | SPECIAL SIGN | 1 | 3 | 4 |
| "B" | 4972+79 | | X | | X | G83-4 (CA) | 1 | 4 | 5 |
| "B" | 4973+59 | X | | X | | G87 (CA) | 1 | 3 | 4 |
| | | | | | | D9-7 | 1 | | |
| | | | | | | D9-8 | 1 | | |
| | | | | | | D9-9 | 1 | | |
| | | | | | | D9-3a | 1 | | |
| | | | | | | D9-3 | 1 | | |
| | | | | | | SG42-10 (CA) | 1 | | |
| "B" | 4983+35 | X | | X | | G70-2 (CA) | 1 | 3 | 4 |
| | | | | | | G86-11 (CA) | 1 | | |
| SUBTOTAL (SCQ-4) | | | | | | | 86 | | |

# STAGE CONSTRUCTION QUANTITIES

# SCQ-4

| Dist | COUNTY | ROUTE | POST MILES TOTAL PROJECT | SHEET No. | TOTAL SHEETS |
|---|---|---|---|---|---|
| 11 | Imp | 8 | R90.0/R96.8 | 112 | 209 |

Dylan Moore 05-04-15
REGISTERED CIVIL ENGINEER DATE

08-31-15
PLANS APPROVAL DATE

REGISTERED PROFESSIONAL ENGINEER
DYLAN S. MOORE
No. 74711
Exp. 12-31-15
CIVIL
STATE OF CALIFORNIA

THE STATE OF CALIFORNIA OR ITS OFFICERS OR AGENTS SHALL NOT BE RESPONSIBLE FOR THE ACCURACY OR COMPLETENESS OF SCANNED COPIES OF THIS PLAN SHEET.

REVISED BY | DATE REVISED
OLIVER ASIS | BRIAN McNAIR
CALCULATED-DESIGNED BY | CHECKED BY
FUNCTIONAL SUPERVISOR: NICOLA BERNARD

STATE OF CALIFORNIA - DEPARTMENT OF TRANSPORTATION
Caltrans®
TRADE CORRIDOR IMPROVEMENT FUND

LAST REVISION 08-04-15
DATE PLOTTED => 03-SEP-2015
TIME PLOTTED => 14:05

BORDER LAST REVISED 7/2/2010
USERNAME => s127400
DGN FILE => 1114000006mc004.dgn
RELATIVE BORDER SCALE IS IN INCHES 0 1 2 3
UNIT 2774
PROJECT NUMBER & PHASE 11140000061

# RESET ROADSIDE SIGN

| LINE | LOCATION | DIRECTION | | SIDE | | SIGN CODE | RESET ROADSIDE SIGN | REMOVED IN STAGE (N) | RESET IN STAGE (N) |
|---|---|---|---|---|---|---|---|---|---|
| | | EB | WB | R† | L† | | EA | | |
| "B" | 4983+35 | X | | X | | G81-24 (CA) | 1 | 3 | 6 |
| "B" | 4989+00 | X | | X | | G13-2 (CA) | 1 | 5 | 6 |
| | | | | | | G10 (CA) | 1 | | |
| "B" | 4992+00 | | X | | X | R6-3 (CA) | 1 | 2 | 6 |
| | | | | | | R49-1 (CA) | 1 | | |
| "B" | 4994+35 | X | | X | | G86-12 (CA) | 1 | 5 | 6 |
| | | | | | | G76 (CA) | 1 | | |
| "B" | 4994+53 | | X | | X | SPECIAL SIGN | 1 | 2 | 6 |
| "B" | 4998+65 | | X | | X | G27-2 (CA) | 1 | 2 | 6 |
| | | | | | | M3-4 | 1 | | |
| "B" | 5000+50 | | X | | X | R2-1 | 1 | 2 | 6 |
| | | | | | | R48-1 | 1 | | |
| "B" | 5003+00 | | X | | X | SPECIAL SIGN | 1 | 2 | 6 |
| "B" | 5004+92 | | X | | X | SR15a (CA) | 1 | 2 | 6 |
| "B" | 5005+75 | | X | X | | SR15a (CA) | 1 | 1 | 6 |
| "B" | 5005+93 | X | | X | | G11-5 (CA) | 1 | 5 | 6 |
| "B" | 5009+00 | | X | | X | G11-5 (CA) | 1 | 2 | 6 |
| "B" | 5009+46 | X | | X | | G84-3 (CA) | 1 | 5 | 6 |
| "B" | 5012+07 | | X | | X | W4-1 | 1 | 2 | 6 |
| "B" | 5013+83 | | X | | X | R6-4 (CA) | 1 | 2 | 6 |
| | | | | | | R48-1 (CA) | 1 | | |
| "B" | 5016+48 | | X | | X | S32 (CA) | 1 | 2 | 6 |
| | | | | | | S32-1 (CA) | 1 | | |
| "B" | 5018+77 | | X | | X | G10B (CA) | 1 | 2 | 6 |
| | | | | | | S17 (CA) | 1 | | |
| "B" | 5024+27 | X | | X | | W4-1 | 1 | 5 | 6 |
| "B" | 5025+00 | | X | | X | R6-3 (CA) | 1 | 2 | 6 |
| | | | | | | R48-1 (CA) | 1 | | |
| "B" | 5027+17 | | X | | X | G84-3 (CA) | 1 | 2 | 6 |
| "B" | 5028+39 | X | | X | | M3-2 BLUE | 1 | 5 | 6 |
| | | | | | | G27-2 (CA) | 1 | | |
| "B" | 5031+19 | X | | X | | I-3 | 1 | 5 | 6 |
| "B" | 5031+29 | | X | X | | R2-1 | 1 | 1 | 6 |
| | | | | | | R48-1 (CA) | 1 | | |
| | | NB | SB | R† | L† | | | | |
| "4TH" | 63+55.15 | X | | X | | G92 (CA) | 1 | 5 | 5 |
| | | | | | | G27-2 (CA) | 1 | | |
| | | | | | | M3-2 (BLUE) | 1 | | |
| | | | | | | M6-2a (BLUE) | 1 | | |
| "4TH" | 66+70.54 | X | | X | | G78-1 (CA) | 1 | 5 | 5 |
| "4TH" | 67+23.51 | X | | X | | R3-3 | 1 | 5 | 5 |
| | | | | | | SUB-TOTAL (SCQ-5) | 40 | | |
| | | | | | | SUB-TOTAL (SCQ-4) | 86 | | |
| | | | | | | TOTAL | 126 | | |

(N)-NOT A SEPARATE PAY ITEM, FOR INFORMATION ONLY

# STAGE CONSTRUCTION TEMPORARY DRAINAGE

| STAGE | SHEET No. | LOCATION | TEMPORARY 8" CORRUGATED HIGH DENSITY POLYETHYLENE PIPE CONDUIT (LF) | CULVERT SLURRY-CEMENT BACKFILL (CY) |
|---|---|---|---|---|
| 1 | SCD-3 | "B" 4667+00.72 TO "B" 4669+42.52 | 484 | 38.72 |
| 1 | SCD-3 | "B" 4878+85.93 TO "B" 4881+14.07 | 458 | 36.64 |
| 1 | SCD-3 | "B" 4982+41.29 TO "B" 4984+60.39 | 440 | 35.20 |
| | | TOTAL | 1,382 | 110.56 |

| Dist | COUNTY | ROUTE | POST MILES TOTAL PROJECT | SHEET No. | TOTAL SHEETS |
|---|---|---|---|---|---|
| 11 | Imp | 8 | R90.0/R96.8 | 113 | 209 |

Dylan Moore 05-04-15
REGISTERED CIVIL ENGINEER DATE

08-31-15
PLANS APPROVAL DATE

REGISTERED PROFESSIONAL ENGINEER
DYLAN S. MOORE
No. 74711
Exp. 12-31-15
CIVIL
STATE OF CALIFORNIA

THE STATE OF CALIFORNIA OR ITS OFFICERS OR AGENTS SHALL NOT BE RESPONSIBLE FOR THE ACCURACY OR COMPLETENESS OF SCANNED COPIES OF THIS PLAN SHEET.

REVISED BY
DATE REVISED
OLIVER ASIS
BRIAN McNAIR
CALCULATED-DESIGNED BY
CHECKED BY
FUNCTIONAL SUPERVISOR
NICOLA BERNARD
STATE OF CALIFORNIA - DEPARTMENT OF TRANSPORTATION
Caltrans
TRADE CORRIDOR IMPROVEMENT FUND

# STAGE CONSTRUCTION QUANTITIES

# SCQ-5

LAST REVISION | DATE PLOTTED => 03-SEP-2015
08-04-15 | TIME PLOTTED => 14:05

BORDER LAST REVISED 7/2/2010
USERNAME => s127400
DGN FILE => 1114000006mc005.dgn
RELATIVE BORDER SCALE IS IN INCHES 0 1 2 3
UNIT 2774
PROJECT NUMBER & PHASE 11140000061

| Dist | COUNTY | ROUTE | POST MILES TOTAL PROJECT | SHEET No. | TOTAL SHEETS |
|---|---|---|---|---|---|
| 11 | Imp | 8 | R90.0/R96.8 | 114 | 209 |

Dylan Moore 05-04-15
REGISTERED CIVIL ENGINEER DATE

08-31-15
PLANS APPROVAL DATE

REGISTERED PROFESSIONAL ENGINEER
DYLAN S. MOORE
No. 74711
Exp. 12-31-15
CIVIL
STATE OF CALIFORNIA

THE STATE OF CALIFORNIA OR ITS OFFICERS OR AGENTS SHALL NOT BE RESPONSIBLE FOR THE ACCURACY OR COMPLETENESS OF SCANNED COPIES OF THIS PLAN SHEET.

# STAGE CONSTRUCTION TEMPORARY TRAFFIC ITEMS

| STAGE | SHEET No. | TRAFFIC PLASTIC DRUM (EA) | TEMPORARY CRASH CUSHION MODULE (EA) | TYPE III BARRICADE (EA) | TEMPORARY RAILING (TYPE K) (LF) | TEMPORARY BARRIER MARKERS (N) (EA) | LOCATION |
|---|---|---|---|---|---|---|---|
| 1, 3, 6 | SCD-1 | 108 | | | | | LEFT LANE DROPS |
| 2, 6 | SCD-4 | 36 | | | | | RIGHT LANE DROPS |
| 5 | SCD-2 | 89 | | 27 | | | LEFT LANE CLOSURE, WB @ LOCATION 'B' TO LOCATION 'C' |
| 2 TO 5 | SCD-6 | | 84 | | 360 | 36 | BRIDGE COLUMN PROTECTION |
| 1 | SC-8 | | | | 36,880 | 1,844 | WB @ LOCATION 'A' TO COLORADO RIVER BRIDGE |
| | SC-8 | | 14 | | 1,420 | 71 | EB @ LOCATION 'A' |
| | SC-10 | | | | 1,640 | 82 | EB @ LOCATION 'B' |
| | SC-12 | | | | 5,700 | 285 | EB @ LOCATION 'B' TO COLORADO RIVER BRIDGE |
| | SC-15 | | 16 | | 220 | 22 | WB @ 4TH Ave BRIDGE COLUMN |
| | SC-15 | | 16 | | 220 | 22 | EB @ 4TH Ave BRIDGE COLUMN |
| | SC-16 | | 14 | | 140 | 14 | WB @ LOCATION 'D' |
| 2 | SC-17 | 13 | 14 | | 1,360 | 136 | EB @ LOCATION 'A' |
| | SC-19 | 6 | 14 | | 140 | 14 | EB @ ALL AMERICAN CANAL |
| | SC-20 | 6 | | | | | EB @ LOCATION 'B' |
| | SC-21 | 7 | 14 | 3 | 960 | 96 | EB @ LOCATION 'B' |
| | SC-22 | 6 | 14 | | 140 | 14 | EB @ LOCATION 'C' |
| | SC-23 | 6 | 14 | | 140 | 14 | WB @ CALIFORNIA WASTEWAY |
| | SC-24 | | 14 | | 140 | 14 | WB @ COLORADO RIVER BRIDGE |
| 3 | SC-25 | | 14 | | 21,400 | 1,070 | EB @ LOCATION 'A' TO LOCATION 'B' |
| | SC-27 | 13 | 14 | | 1,180 | 118 | EB @ LOCATION 'B' |
| | SC-31 | | | | 1,200 | 60 | EB @ LOCATION 'C' |
| | SC-32 | 7 | 14 | | 1,020 | 102 | WB @ LOCATION 'C' |
| | SC-32 | 6 | 14 | 3 | 140 | 14 | WB @ LOCATION 'C' |
| | SC-33 | | 14 | | 140 | 14 | WB @ LOCATION 'D' |
| 4 | SC-34 | | 14 | | 140 | 14 | WB @ LOCATION 'B' |
| | SC-34 | | | | 11,700 | 585 | EB @ LOCATION 'B' TO LOCATION 'C' |
| | SC-35 | 13 | 14 | 3 | 1,020 | 102 | WB @ LOCATION 'B' |
| | SC-38 | 13 | 14 | | 1,020 | 102 | WB @ LOCATION 'C' |
| 5 | SC-39 | 7 | 14 | 3 | 1,100 | 110 | WB @ LOCATION 'A' |
| | SC-40 | 6 | | | | | WB @ LOCATION 'A' |
| | SC-43 | 6 | 14 | | 140 | 14 | WB @ ALL AMERICAN CANAL |
| | SC-44 | 7 | 14 | | 1,780 | 178 | WB @ LOCATION 'B' |
| | SC-45 | 6 | | | | | WB @ LOCATION 'B' |
| | SC-46 | 6 | | | 1,700 | 85 | WB @ LOCATION 'C' |
| | SC-46 | | 14 | | 140 | 14 | EB @ LOCATION 'C' |
| | SC-48 | 6 | 14 | | 140 | 14 | EB @ CALIFORNIA WASTEWAY |
| | SC-50 | 6 | 14 | | 140 | 14 | EB @ LOCATION 'D' |
| | SCD-5 | | 14 | | 340 | 32 | 4TH AVENUE SIDEWALK WORK |
| 6 | SC-51 | 6 | 14 | | 5,000 | 250 | WB @ LOCATION 'C' TO COLORADO RIVER BRIDGE |
| | SC-51 | | 14 | | 4,980 | 249 | EB @ LOCATION 'C' TO COLORADO RIVER BRIDGE |
| | SC-53 | | 14 | | 140 | 14 | WB @ LOCATION 'D' |
| TOTAL | | 385 | 480 | 39 | 104,020 | 5,819 | |

(N)-NOT A SEPARATE PAY ITEM, FOR INFORMATION ONLY

# STAGE CONSTRUCTION QUANTITIES

## SCQ-6

REVISED BY | DATE REVISED
BRIAN McNAIR | OLIVER ASIS
CALCULATED-DESIGNED BY | CHECKED BY
FUNCTIONAL SUPERVISOR
NICOLA BERNARD

STATE OF CALIFORNIA - DEPARTMENT OF TRANSPORTATION
Caltrans®
TRADE CORRIDOR IMPROVEMENT FUND

LAST REVISION | DATE PLOTTED => 03-SEP-2015
08-04-15 | TIME PLOTTED => 14:05

BORDER LAST REVISED 7/2/2010
USERNAME => s127400
DGN FILE => 1114000006mc006.dgn
RELATIVE BORDER SCALE IS IN INCHES 0 1 2 3
UNIT 2774
PROJECT NUMBER & PHASE 11140000061

| Dist | COUNTY | ROUTE | POST MILES TOTAL PROJECT | SHEET No. | TOTAL SHEETS |
|---|---|---|---|---|---|
| 11 | Imp | 8 | R90.0/R96.8 | 115 | 209 |

REGISTERED CIVIL ENGINEER — 05-04-15 DATE

08-31-15
PLANS APPROVAL DATE

DYLAN S. MOORE No. 74711 Exp. 12-31-15 CIVIL — REGISTERED PROFESSIONAL ENGINEER — STATE OF CALIFORNIA

THE STATE OF CALIFORNIA OR ITS OFFICERS OR AGENTS SHALL NOT BE RESPONSIBLE FOR THE ACCURACY OR COMPLETENESS OF SCANNED COPIES OF THIS PLAN SHEET.

## NOTES:

1. EXACT LOCATION OF CONSTRUCTION AREA SIGNS WILL BE DETERMINED BY THE ENGINEER.
2. PORTABLE CHANGEABLE MESSAGE SIGNS TO BE PLACED AS REQUIRED BY LANE CLOSURE CHARTS AND AT THE DISCRETION OF THE ENGINEER.

## LEGEND:

- ⇨ DIRECTION OF TRAVEL
- ⊢ CONSTRUCTION AREA SIGNS
- CAPS CAPITAL LETTERS
- SPCL SPECIAL CONSTRUCTION AREA SIGN

### SIGN #1

SPCL-1 8" Caps

186 USE
WINTERHAVEN DR

72" × 72"

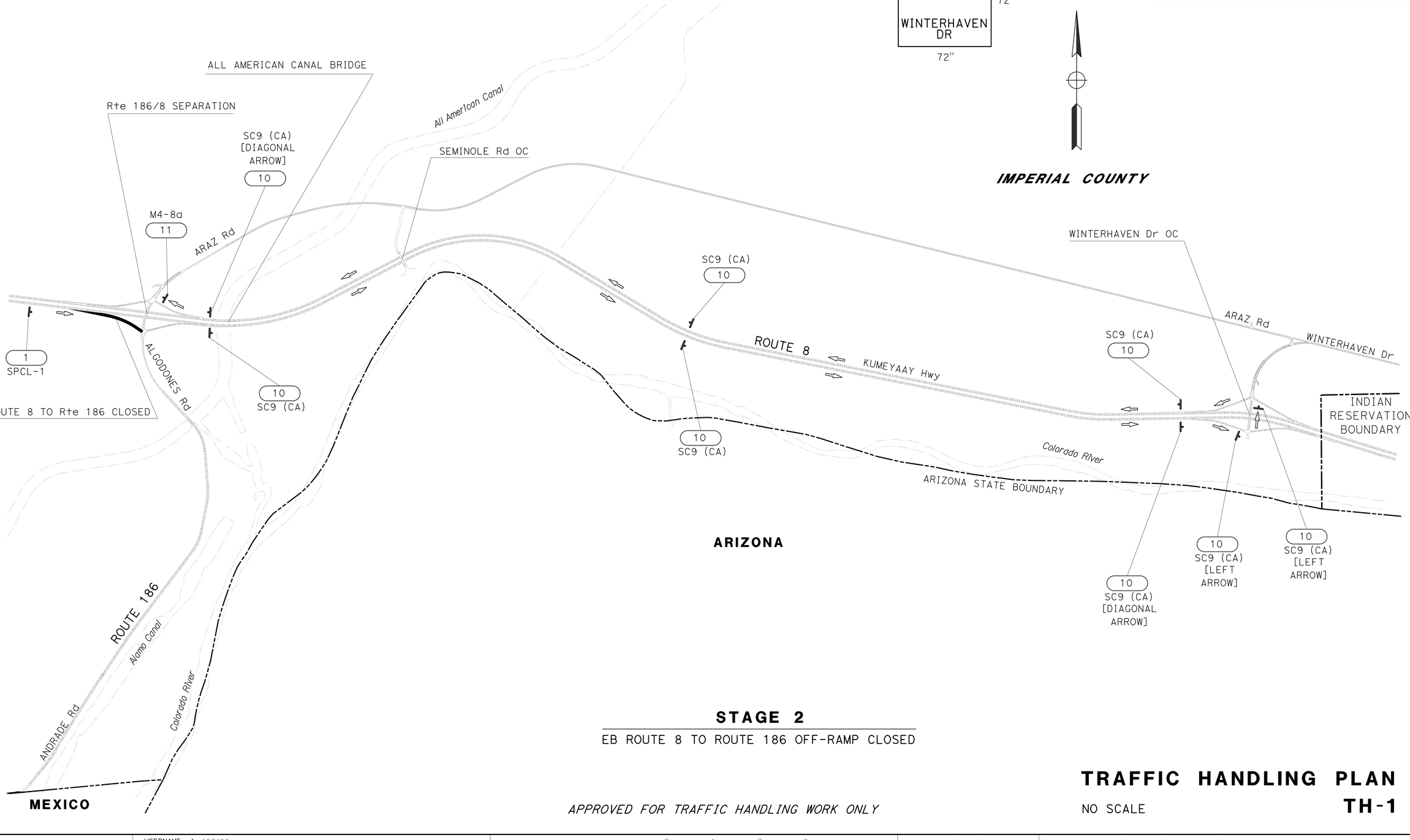


## STAGE 2

EB ROUTE 8 TO ROUTE 186 OFF-RAMP CLOSED

*APPROVED FOR TRAFFIC HANDLING WORK ONLY*

# TRAFFIC HANDLING PLAN

NO SCALE

**TH-1**

STATE OF CALIFORNIA - DEPARTMENT OF TRANSPORTATION
Caltrans®
TRADE CORRIDOR IMPROVEMENT FUND

FUNCTIONAL SUPERVISOR: NICOLA BERNARD
CALCULATED-DESIGNED BY: BRIAN McNAIR
CHECKED BY: MICHAEL OREIRO
REVISED BY
DATE REVISED

LAST REVISION | DATE PLOTTED => 03-SEP-2015
08-04-15 | TIME PLOTTED => 14:06

BORDER LAST REVISED 7/2/2010
USERNAME => s127400
DGN FILE => 1114000006md001.dgn
RELATIVE BORDER SCALE IS IN INCHES 0 1 2 3
UNIT 2774
PROJECT NUMBER & PHASE 11140000061

| Dist | COUNTY | ROUTE | POST MILES TOTAL PROJECT | SHEET No. | TOTAL SHEETS |
|---|---|---|---|---|---|
| 11 | Imp | 8 | R90.0/R96.8 | 116 | 209 |

REGISTERED CIVIL ENGINEER 05-04-15 DATE

08-31-15
PLANS APPROVAL DATE

REGISTERED PROFESSIONAL ENGINEER DYLAN S. MOORE No. 74711 Exp. 12-31-15 CIVIL STATE OF CALIFORNIA

*THE STATE OF CALIFORNIA OR ITS OFFICERS OR AGENTS SHALL NOT BE RESPONSIBLE FOR THE ACCURACY OR COMPLETENESS OF SCANNED COPIES OF THIS PLAN SHEET.*

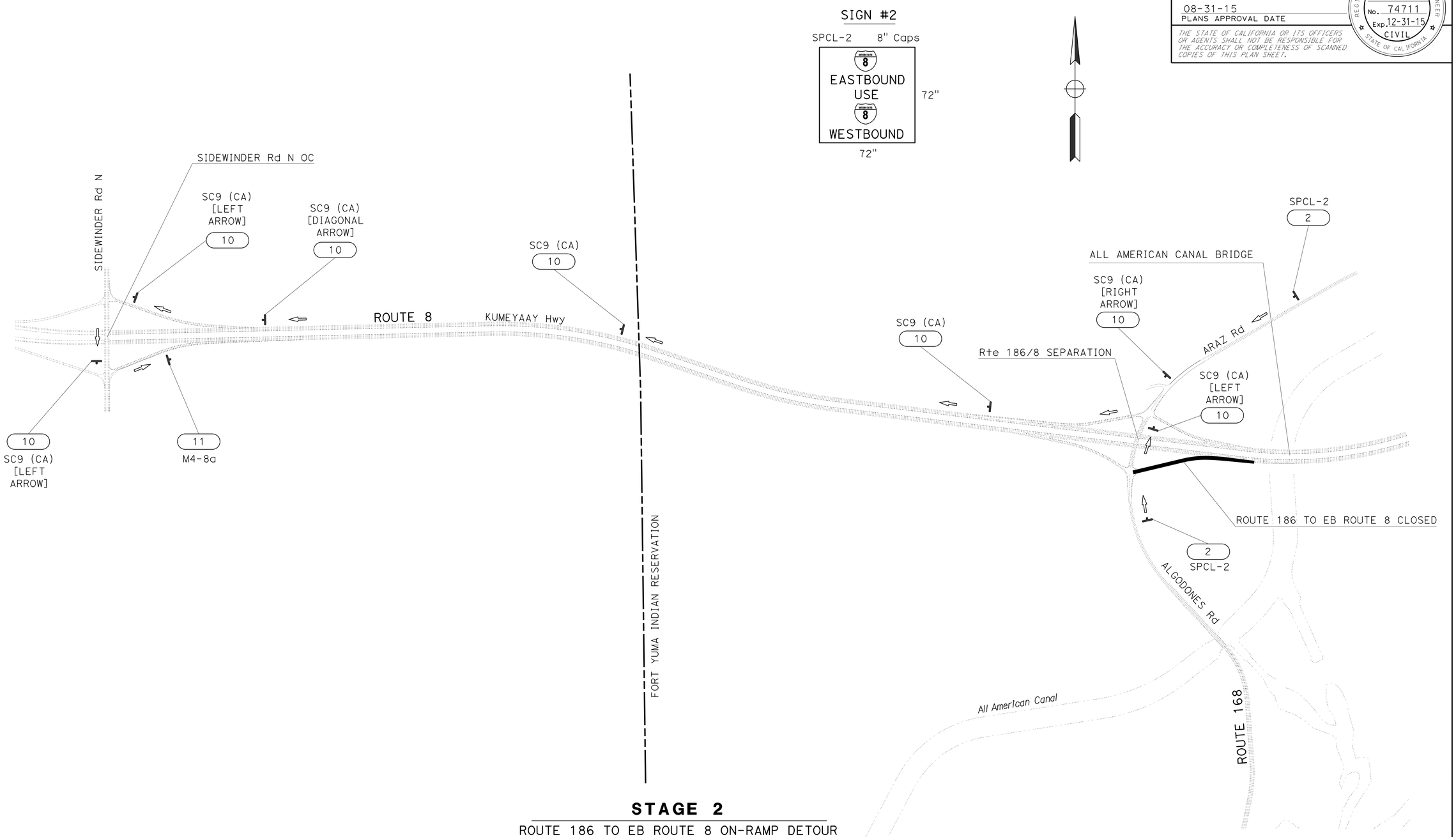


## STAGE 2

ROUTE 186 TO EB ROUTE 8 ON-RAMP DETOUR

*APPROVED FOR TRAFFIC HANDLING WORK ONLY*

# TRAFFIC HANDLING PLAN

NO SCALE

**TH-2**

STATE OF CALIFORNIA - DEPARTMENT OF TRANSPORTATION
Caltrans
TRADE CORRIDOR IMPROVEMENT FUND

FUNCTIONAL SUPERVISOR: NICOLA BERNARD
CALCULATED-DESIGNED BY: BRIAN McNAIR
CHECKED BY: MICHAEL OREIRO
REVISED BY
DATE REVISED

LAST REVISION 08-05-15
DATE PLOTTED => 03-SEP-2015
TIME PLOTTED => 14:06

| Dist | COUNTY | ROUTE | POST MILES TOTAL PROJECT | SHEET No. | TOTAL SHEETS |
|---|---|---|---|---|---|
| 11 | Imp | 8 | R90.0/R96.8 | 117 | 209 |

Dylan Moore 05-04-15
REGISTERED CIVIL ENGINEER DATE

08-31-15
PLANS APPROVAL DATE

REGISTERED PROFESSIONAL ENGINEER
DYLAN S. MOORE
No. 74711
Exp. 12-31-15
CIVIL
STATE OF CALIFORNIA

THE STATE OF CALIFORNIA OR ITS OFFICERS OR AGENTS SHALL NOT BE RESPONSIBLE FOR THE ACCURACY OR COMPLETENESS OF SCANNED COPIES OF THIS PLAN SHEET.

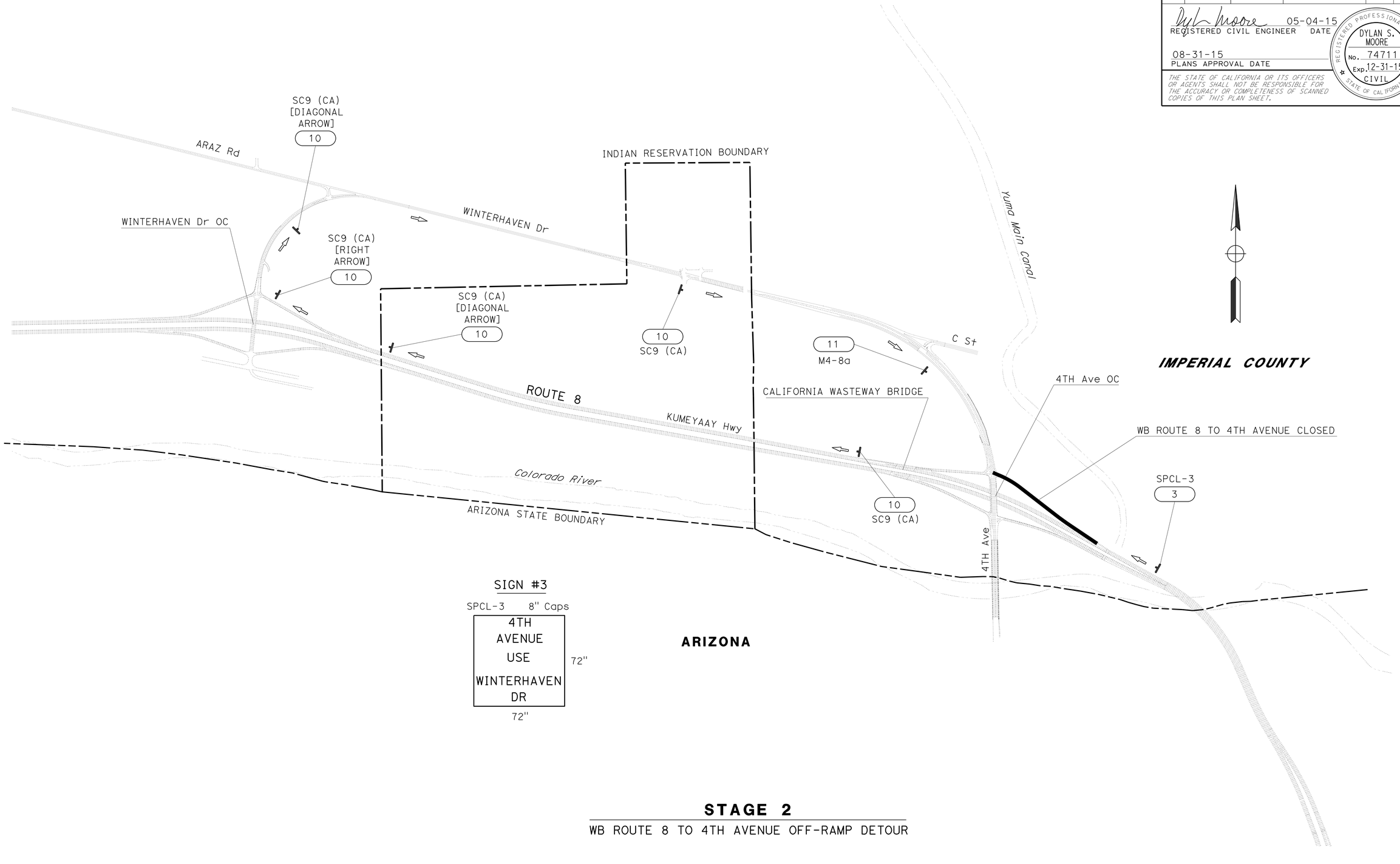


SIGN #3

SPCL-3 8" Caps

| |
|---|
| 4TH AVENUE USE WINTERHAVEN DR |

72" (height) × 72" (width)

## STAGE 2

WB ROUTE 8 TO 4TH AVENUE OFF-RAMP DETOUR

*APPROVED FOR TRAFFIC HANDLING WORK ONLY*

# TRAFFIC HANDLING PLAN

NO SCALE

**TH-3**

STATE OF CALIFORNIA - DEPARTMENT OF TRANSPORTATION
Caltrans
TRADE CORRIDOR IMPROVEMENT FUND

FUNCTIONAL SUPERVISOR: NICOLA BERNARD

CALCULATED-DESIGNED BY: BRIAN McNAIR
CHECKED BY: MICHAEL OREIRO

REVISED BY | DATE REVISED

LAST REVISION | DATE PLOTTED => 03-SEP-2015 | TIME PLOTTED => 14:06 | 08-05-15

BORDER LAST REVISED 7/2/2010

USERNAME => s127400
DGN FILE => 1114000006md003.dgn

RELATIVE BORDER SCALE IS IN INCHES 0 1 2 3

UNIT 2774

PROJECT NUMBER & PHASE 11140000061

| Dist | COUNTY | ROUTE | POST MILES TOTAL PROJECT | SHEET No. | TOTAL SHEETS |
|---|---|---|---|---|---|
| 11 | Imp | 8 | R90.0/R96.8 | 118 | 209 |

Dylan Moore 05-04-15
REGISTERED CIVIL ENGINEER DATE

08-31-15
PLANS APPROVAL DATE

REGISTERED PROFESSIONAL ENGINEER
DYLAN S. MOORE
No. 74711
Exp. 12-31-15
CIVIL
STATE OF CALIFORNIA

THE STATE OF CALIFORNIA OR ITS OFFICERS OR AGENTS SHALL NOT BE RESPONSIBLE FOR THE ACCURACY OR COMPLETENESS OF SCANNED COPIES OF THIS PLAN SHEET.

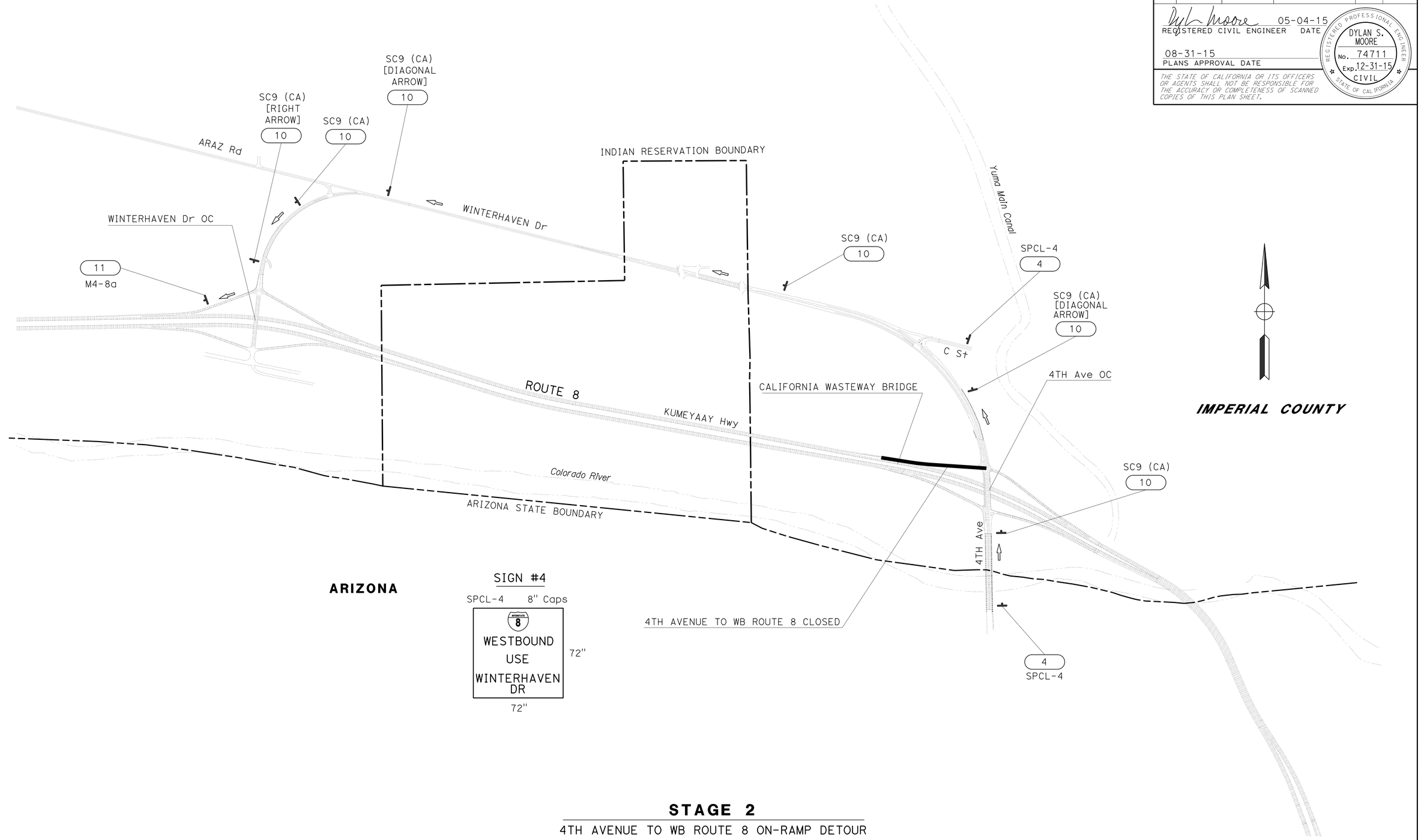


IMPERIAL COUNTY

## STAGE 2

4TH AVENUE TO WB ROUTE 8 ON-RAMP DETOUR

*APPROVED FOR TRAFFIC HANDLING WORK ONLY*

# TRAFFIC HANDLING PLAN

NO SCALE

**TH-4**

STATE OF CALIFORNIA - DEPARTMENT OF TRANSPORTATION
Caltrans
TRADE CORRIDOR IMPROVEMENT FUND

FUNCTIONAL SUPERVISOR: NICOLA BERNARD
CALCULATED-DESIGNED BY: BRIAN McNAIR
CHECKED BY: MICHAEL ORELIRO
REVISED BY
DATE REVISED

LAST REVISION
DATE PLOTTED => 03-SEP-2015
TIME PLOTTED => 14:06
08-05-15

BORDER LAST REVISED 7/2/2010
USERNAME => s127400
DGN FILE => 1114000006md004.dgn
RELATIVE BORDER SCALE IS IN INCHES 0 1 2 3
UNIT 2774
PROJECT NUMBER & PHASE 11140000061

| Dist | COUNTY | ROUTE | POST MILES TOTAL PROJECT | SHEET No. | TOTAL SHEETS |
|---|---|---|---|---|---|
| 11 | Imp | 8 | R90.0/R96.8 | 119 | 209 |

Dylan Moore 05-04-15
REGISTERED CIVIL ENGINEER DATE

08-31-15
PLANS APPROVAL DATE

REGISTERED PROFESSIONAL ENGINEER
DYLAN S. MOORE
No. 74711
Exp. 12-31-15
CIVIL
STATE OF CALIFORNIA

THE STATE OF CALIFORNIA OR ITS OFFICERS OR AGENTS SHALL NOT BE RESPONSIBLE FOR THE ACCURACY OR COMPLETENESS OF SCANNED COPIES OF THIS PLAN SHEET.

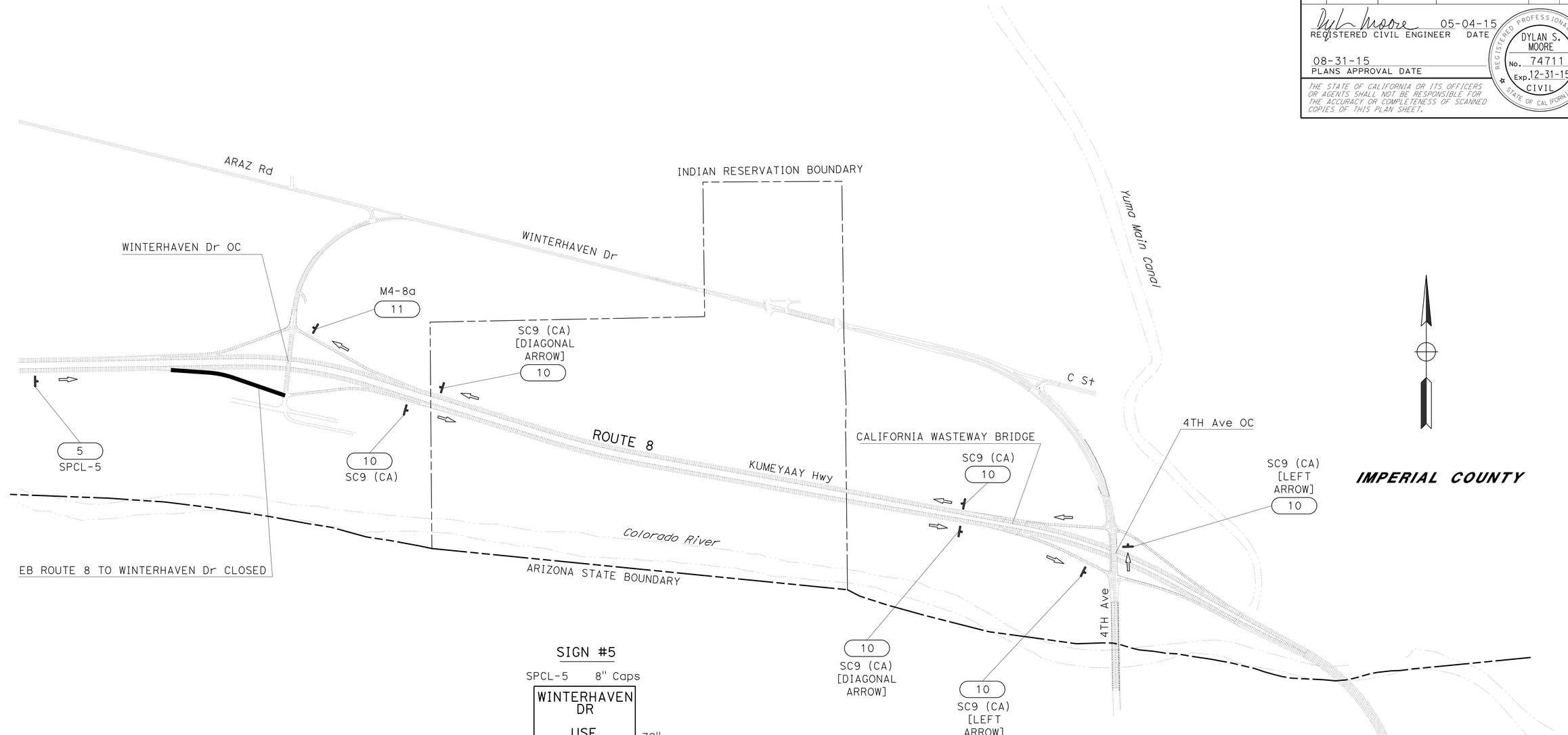


SIGN #5

SPCL-5 8" Caps

WINTERHAVEN DR
USE
4TH AVENUE

72"

72"

## STAGE 3

EB ROUTE 8 TO WINTERHAVEN Dr OFF-RAMP DETOUR

*APPROVED FOR TRAFFIC HANDLING WORK ONLY*

# TRAFFIC HANDLING PLAN

NO SCALE

**TH-5**

LAST REVISION DATE PLOTTED => 03-SEP-2015
08-05-15 TIME PLOTTED => 14:06

STATE OF CALIFORNIA - DEPARTMENT OF TRANSPORTATION
Caltrans®
TRADE CORRIDOR IMPROVEMENT FUND

FUNCTIONAL SUPERVISOR: NICOLA BERNARD

CALCULATED-DESIGNED BY: BRIAN McNAIR
CHECKED BY: MICHAEL OREIRO

REVISED BY | DATE REVISED

BORDER LAST REVISED 7/2/2010

USERNAME => s127400
DGN FILE => 1114000006md005.dgn

RELATIVE BORDER SCALE IS IN INCHES 0 1 2 3

UNIT 2774

PROJECT NUMBER & PHASE 11140000061

| Dist | COUNTY | ROUTE | POST MILES TOTAL PROJECT | SHEET No. | TOTAL SHEETS |
|---|---|---|---|---|---|
| 11 | Imp | 8 | R90.0/R96.8 | 120 | 209 |

Dylan Moore 05-04-15
REGISTERED CIVIL ENGINEER DATE

08-31-15
PLANS APPROVAL DATE

REGISTERED PROFESSIONAL ENGINEER
DYLAN S. MOORE
No. 74711
Exp. 12-31-15
CIVIL
STATE OF CALIFORNIA

THE STATE OF CALIFORNIA OR ITS OFFICERS OR AGENTS SHALL NOT BE RESPONSIBLE FOR THE ACCURACY OR COMPLETENESS OF SCANNED COPIES OF THIS PLAN SHEET.

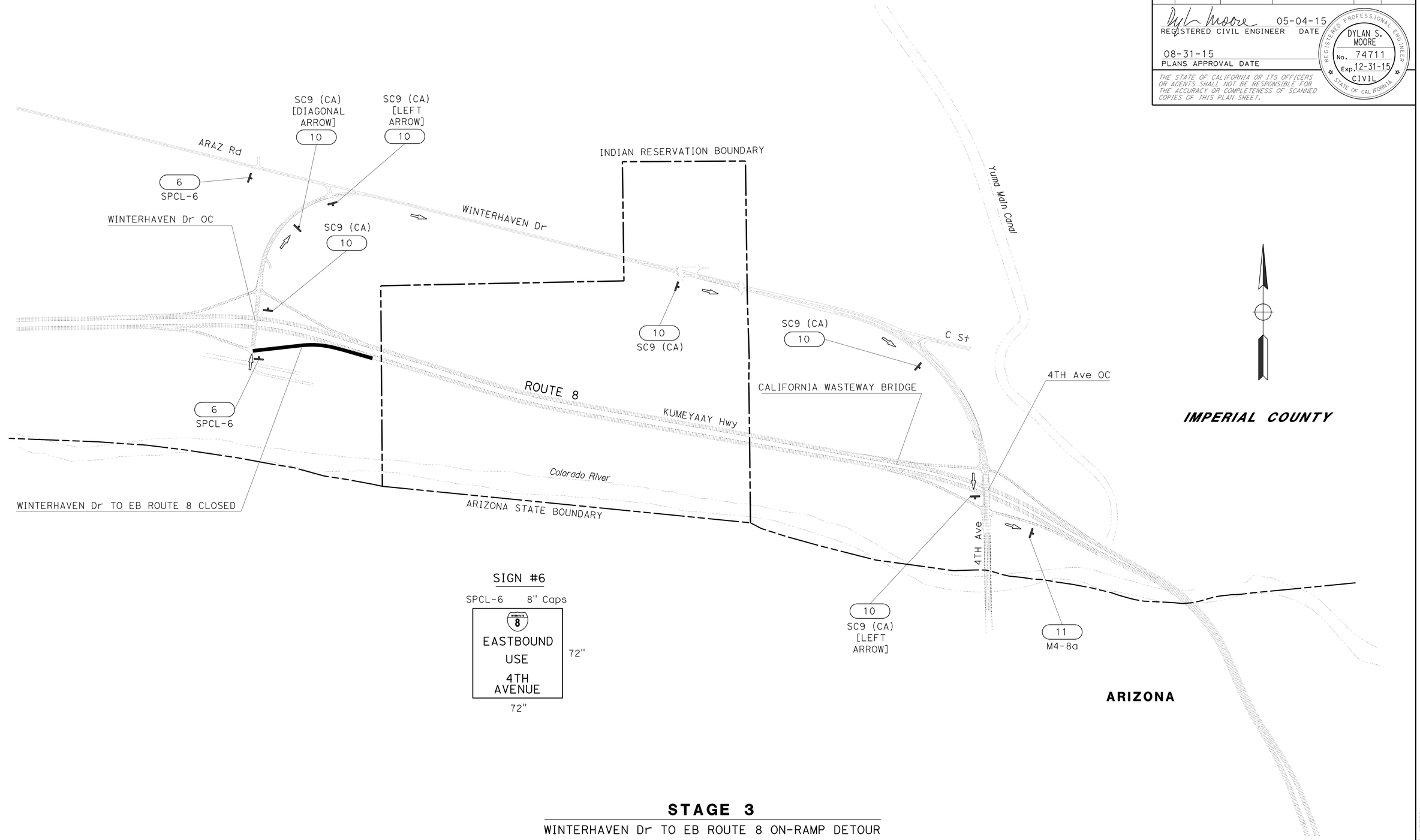


SIGN #6

SPCL-6 8" Caps




## STAGE 3

WINTERHAVEN Dr TO EB ROUTE 8 ON-RAMP DETOUR

*APPROVED FOR TRAFFIC HANDLING WORK ONLY*

# TRAFFIC HANDLING PLAN

NO SCALE

**TH-6**

STATE OF CALIFORNIA - DEPARTMENT OF TRANSPORTATION
Caltrans
TRADE CORRIDOR IMPROVEMENT FUND

FUNCTIONAL SUPERVISOR: NICOLA BERNARD

CALCULATED-DESIGNED BY: BRIAN McNAIR
CHECKED BY: MICHAEL ORELIRO

REVISED BY | DATE REVISED

LAST REVISION | DATE PLOTTED => 03-SEP-2015
08-05-15 | TIME PLOTTED => 14:06

BORDER LAST REVISED 7/2/2010

USERNAME => s127400
DGN FILE => 1114000006md006.dgn

RELATIVE BORDER SCALE IS IN INCHES 0 1 2 3

UNIT 2774

PROJECT NUMBER & PHASE 11140000061

| Dist | COUNTY | ROUTE | POST MILES TOTAL PROJECT | SHEET No. | TOTAL SHEETS |
|---|---|---|---|---|---|
| 11 | Imp | 8 | R90.0/R96.8 | 121 | 209 |

Dylan Moore 05-04-15
REGISTERED CIVIL ENGINEER DATE

08-31-15
PLANS APPROVAL DATE

REGISTERED PROFESSIONAL ENGINEER
DYLAN S. MOORE
No. 74711
Exp. 12-31-15
CIVIL
STATE OF CALIFORNIA

THE STATE OF CALIFORNIA OR ITS OFFICERS OR AGENTS SHALL NOT BE RESPONSIBLE FOR THE ACCURACY OR COMPLETENESS OF SCANNED COPIES OF THIS PLAN SHEET.

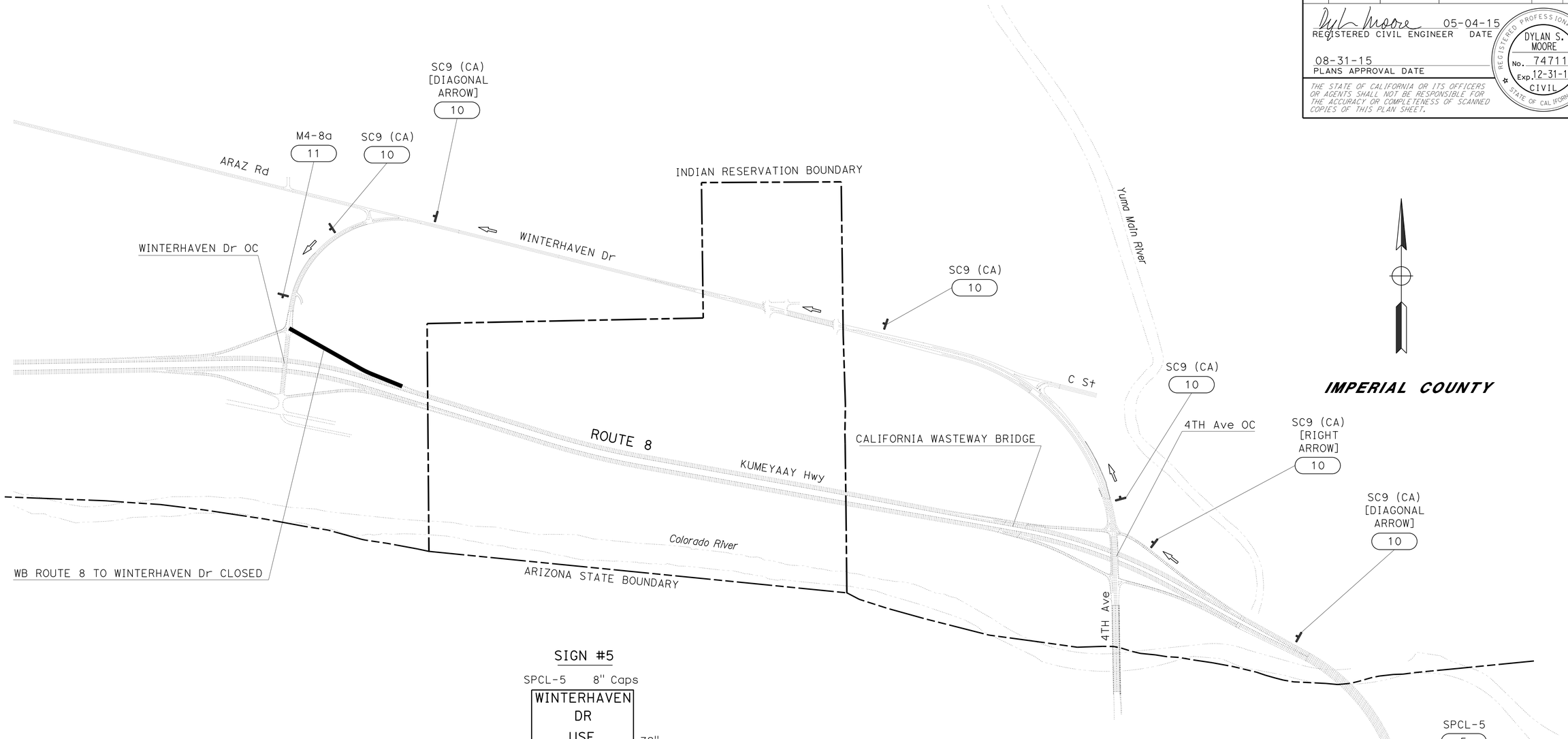


SIGN #5

SPCL-5 8" Caps

| |
|---|
| WINTERHAVEN DR |
| USE |
| 4TH AVENUE |

72" (height) × 72" (width)

## STAGE 4

WB ROUTE 8 TO WINTERHAVEN Dr OFF-RAMP DETOUR

*APPROVED FOR TRAFFIC HANDLING WORK ONLY*

# TRAFFIC HANDLING PLAN

NO SCALE

**TH-7**

STATE OF CALIFORNIA - DEPARTMENT OF TRANSPORTATION
Caltrans®
TRADE CORRIDOR IMPROVEMENT FUND

FUNCTIONAL SUPERVISOR: NICOLA BERNARD
CALCULATED-DESIGNED BY: BRIAN McNAIR
CHECKED BY: MICHAEL OREIRO

| REVISED BY | DATE REVISED |
|---|---|

LAST REVISION: DATE PLOTTED => 03-SEP-2015
08-05-15 TIME PLOTTED => 14:06

BORDER LAST REVISED 7/2/2010

USERNAME => s127400
DGN FILE => 1114000006md007.dgn

RELATIVE BORDER SCALE IS IN INCHES 0 1 2 3

UNIT 2774

PROJECT NUMBER & PHASE 11140000061

| Dist | COUNTY | ROUTE | POST MILES TOTAL PROJECT | SHEET No. | TOTAL SHEETS |
|---|---|---|---|---|---|
| 11 | Imp | 8 | R90.0/R96.8 | 122 | 209 |

Dylan Moore 05-04-15
REGISTERED CIVIL ENGINEER DATE

08-31-15
PLANS APPROVAL DATE

DYLAN S. MOORE No. 74711 Exp. 12-31-15 CIVIL — REGISTERED PROFESSIONAL ENGINEER — STATE OF CALIFORNIA

THE STATE OF CALIFORNIA OR ITS OFFICERS OR AGENTS SHALL NOT BE RESPONSIBLE FOR THE ACCURACY OR COMPLETENESS OF SCANNED COPIES OF THIS PLAN SHEET.

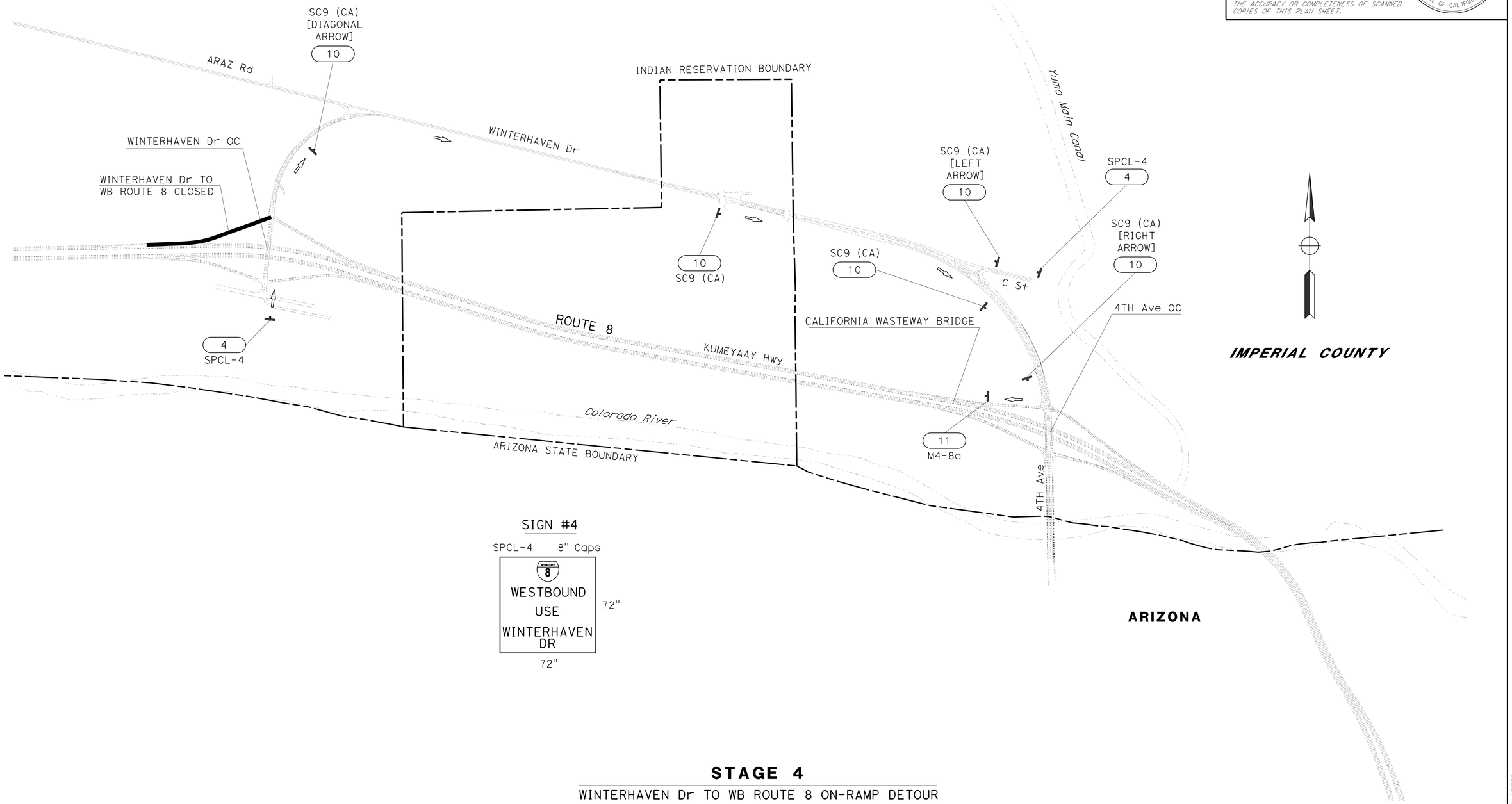


SIGN #4

SPCL-4 8" Caps




## STAGE 4

WINTERHAVEN Dr TO WB ROUTE 8 ON-RAMP DETOUR

*APPROVED FOR TRAFFIC HANDLING WORK ONLY*

# TRAFFIC HANDLING PLAN

NO SCALE

**TH-8**

STATE OF CALIFORNIA - DEPARTMENT OF TRANSPORTATION
Caltrans®
**TRADE CORRIDOR IMPROVEMENT FUND**

FUNCTIONAL SUPERVISOR: NICOLA BERNARD

CALCULATED-DESIGNED BY: BRIAN McNAIR

CHECKED BY: MICHAEL OREIRO

| REVISED BY | DATE REVISED |
|---|---|
| | |

LAST REVISION | DATE PLOTTED => 03-SEP-2015
08-06-15 | TIME PLOTTED => 14:06

BORDER LAST REVISED 7/2/2010

USERNAME => s127400
DGN FILE => 1114000006md008.dgn

RELATIVE BORDER SCALE IS IN INCHES 0 1 2 3

UNIT 2774

PROJECT NUMBER & PHASE 11140000061

| Dist | COUNTY | ROUTE | POST MILES TOTAL PROJECT | SHEET No. | TOTAL SHEETS |
|---|---|---|---|---|---|
| 11 | Imp | 8 | R90.0/R96.8 | 123 | 209 |

Dylan Moore 05-04-15
REGISTERED CIVIL ENGINEER DATE

08-31-15
PLANS APPROVAL DATE

REGISTERED PROFESSIONAL ENGINEER DYLAN S. MOORE No. 74711 Exp. 12-31-15 CIVIL STATE OF CALIFORNIA

*THE STATE OF CALIFORNIA OR ITS OFFICERS OR AGENTS SHALL NOT BE RESPONSIBLE FOR THE ACCURACY OR COMPLETENESS OF SCANNED COPIES OF THIS PLAN SHEET.*

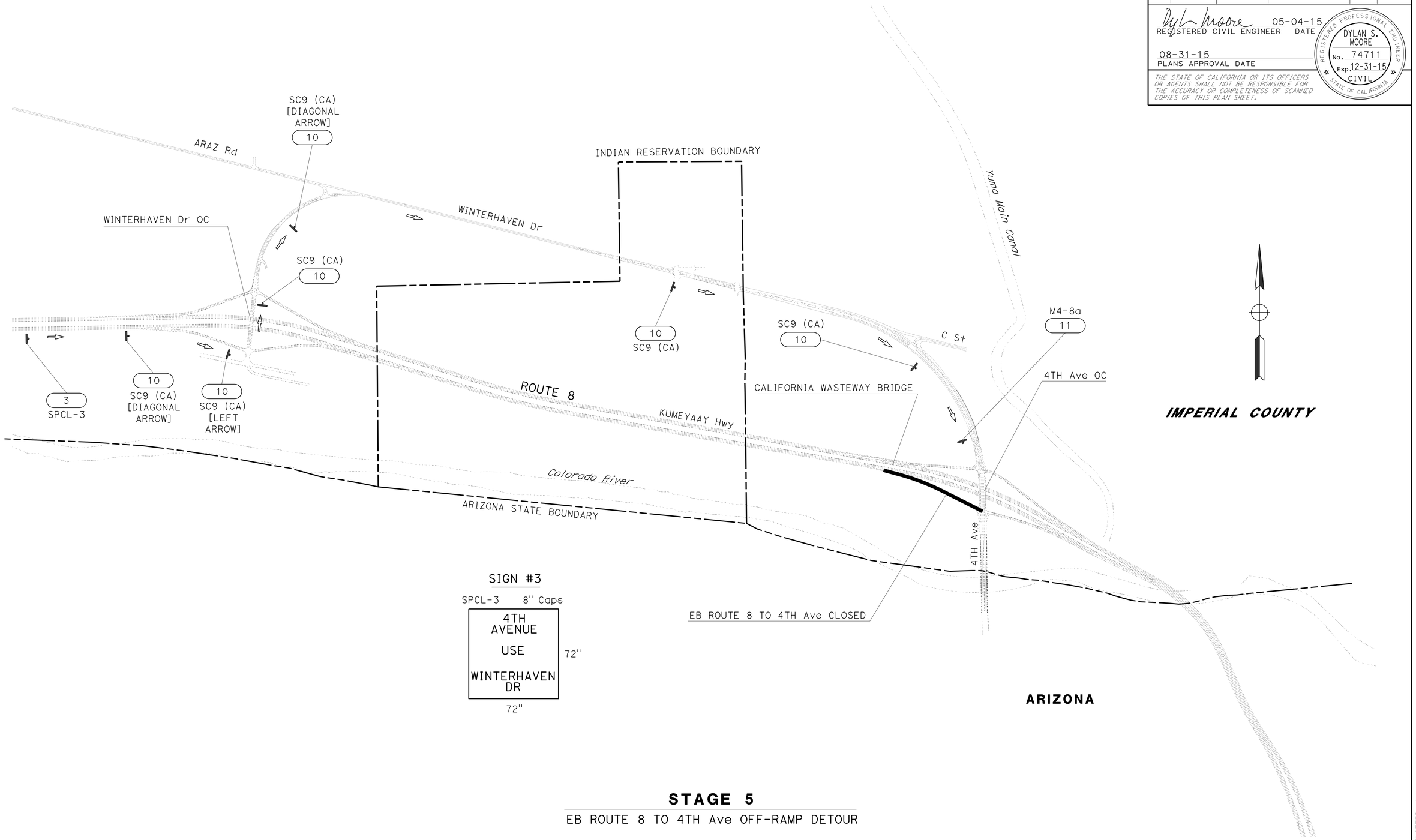


## STAGE 5

EB ROUTE 8 TO 4TH Ave OFF-RAMP DETOUR

*APPROVED FOR TRAFFIC HANDLING WORK ONLY*

# TRAFFIC HANDLING PLAN

NO SCALE

**TH-9**

STATE OF CALIFORNIA - DEPARTMENT OF TRANSPORTATION
Caltrans® TRADE CORRIDOR IMPROVEMENT FUND

FUNCTIONAL SUPERVISOR: NICOLA BERNARD
CALCULATED-DESIGNED BY: BRIAN McNAIR
CHECKED BY: MICHAEL OREIRO
REVISED BY
DATE REVISED

LAST REVISION 08-06-15
DATE PLOTTED => 03-SEP-2015
TIME PLOTTED => 14:06

| Dist | COUNTY | ROUTE | POST MILES TOTAL PROJECT | SHEET No. | TOTAL SHEETS |
|---|---|---|---|---|---|
| 11 | Imp | 8 | R90.0/R96.8 | 124 | 209 |

Dylan Moore 05-04-15
REGISTERED CIVIL ENGINEER DATE

08-31-15
PLANS APPROVAL DATE

REGISTERED PROFESSIONAL ENGINEER
DYLAN S. MOORE
No. 74711
Exp. 12-31-15
CIVIL
STATE OF CALIFORNIA

THE STATE OF CALIFORNIA OR ITS OFFICERS OR AGENTS SHALL NOT BE RESPONSIBLE FOR THE ACCURACY OR COMPLETENESS OF SCANNED COPIES OF THIS PLAN SHEET.

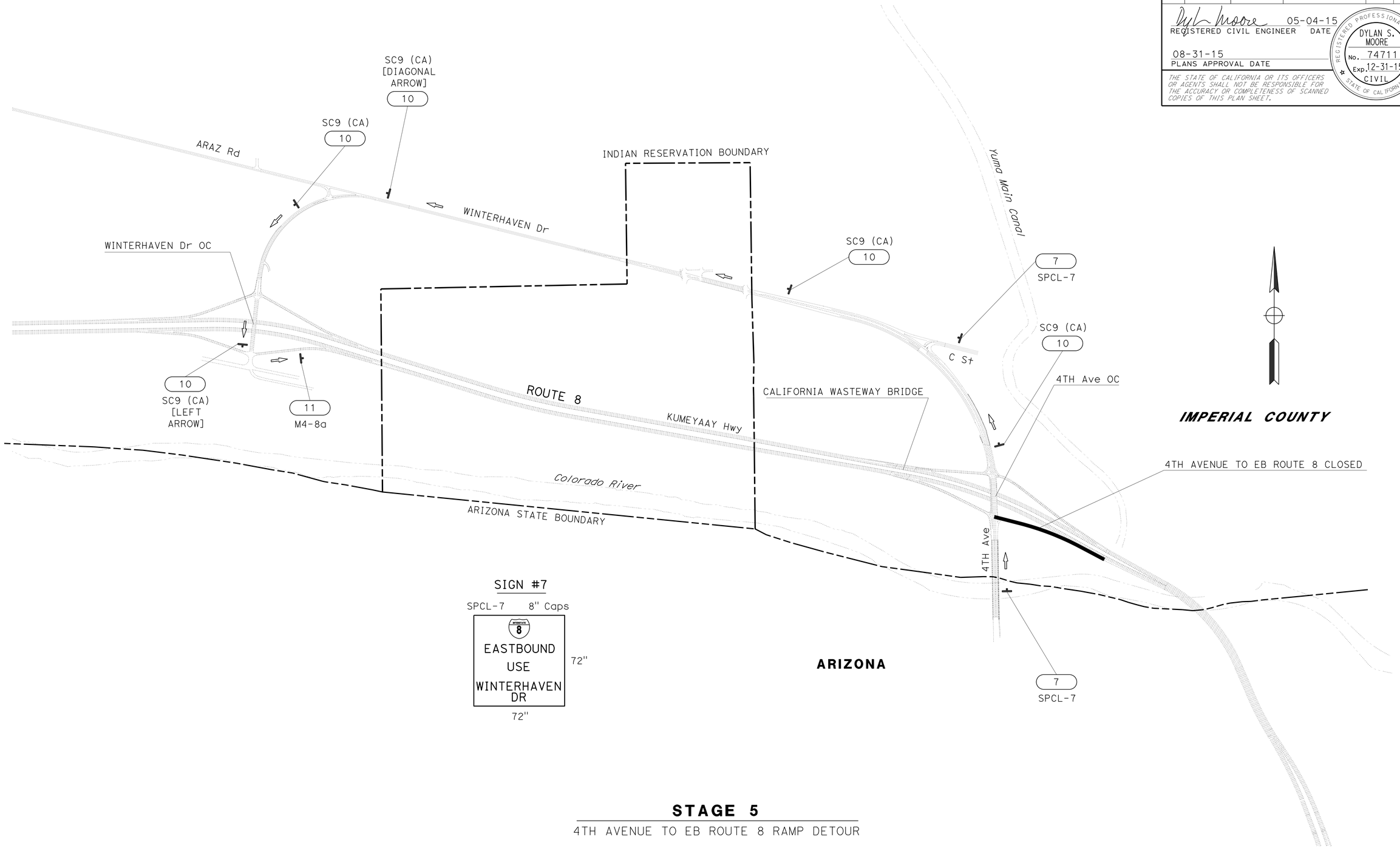


IMPERIAL COUNTY

SIGN #7

SPCL-7 8" Caps




72" 72"

## STAGE 5

4TH AVENUE TO EB ROUTE 8 RAMP DETOUR

*APPROVED FOR TRAFFIC HANDLING WORK ONLY*

# TRAFFIC HANDLING PLAN

NO SCALE

**TH-10**

STATE OF CALIFORNIA - DEPARTMENT OF TRANSPORTATION
Caltrans®
**TRADE CORRIDOR IMPROVEMENT FUND**

FUNCTIONAL SUPERVISOR: NICOLA BERNARD

CALCULATED-DESIGNED BY: BRIAN McNAIR
CHECKED BY: MICHAEL OREIRO

| REVISED BY | DATE REVISED |
|---|---|
| | |

LAST REVISION | DATE PLOTTED => 03-SEP-2015
08-06-15 | TIME PLOTTED => 14:06

BORDER LAST REVISED 7/2/2010

USERNAME => s127400
DGN FILE => 1114000006md010.dgn

RELATIVE BORDER SCALE IS IN INCHES 0 1 2 3

UNIT 2774

PROJECT NUMBER & PHASE 11140000061

| Dist | COUNTY | ROUTE | POST MILES TOTAL PROJECT | SHEET No. | TOTAL SHEETS |
|---|---|---|---|---|---|
| 11 | Imp | 8 | R90.0/R96.8 | 125 | 209 |

Dylan Moore 05-04-15
REGISTERED CIVIL ENGINEER DATE

08-31-15
PLANS APPROVAL DATE

REGISTERED PROFESSIONAL ENGINEER
DYLAN S. MOORE
No. 74711
Exp. 12-31-15
CIVIL
STATE OF CALIFORNIA

THE STATE OF CALIFORNIA OR ITS OFFICERS OR AGENTS SHALL NOT BE RESPONSIBLE FOR THE ACCURACY OR COMPLETENESS OF SCANNED COPIES OF THIS PLAN SHEET.

SIGN #8

SPCL-8 8" Caps

186 USE

SIDEWINDER RD

72" × 72"

IMPERIAL COUNTY

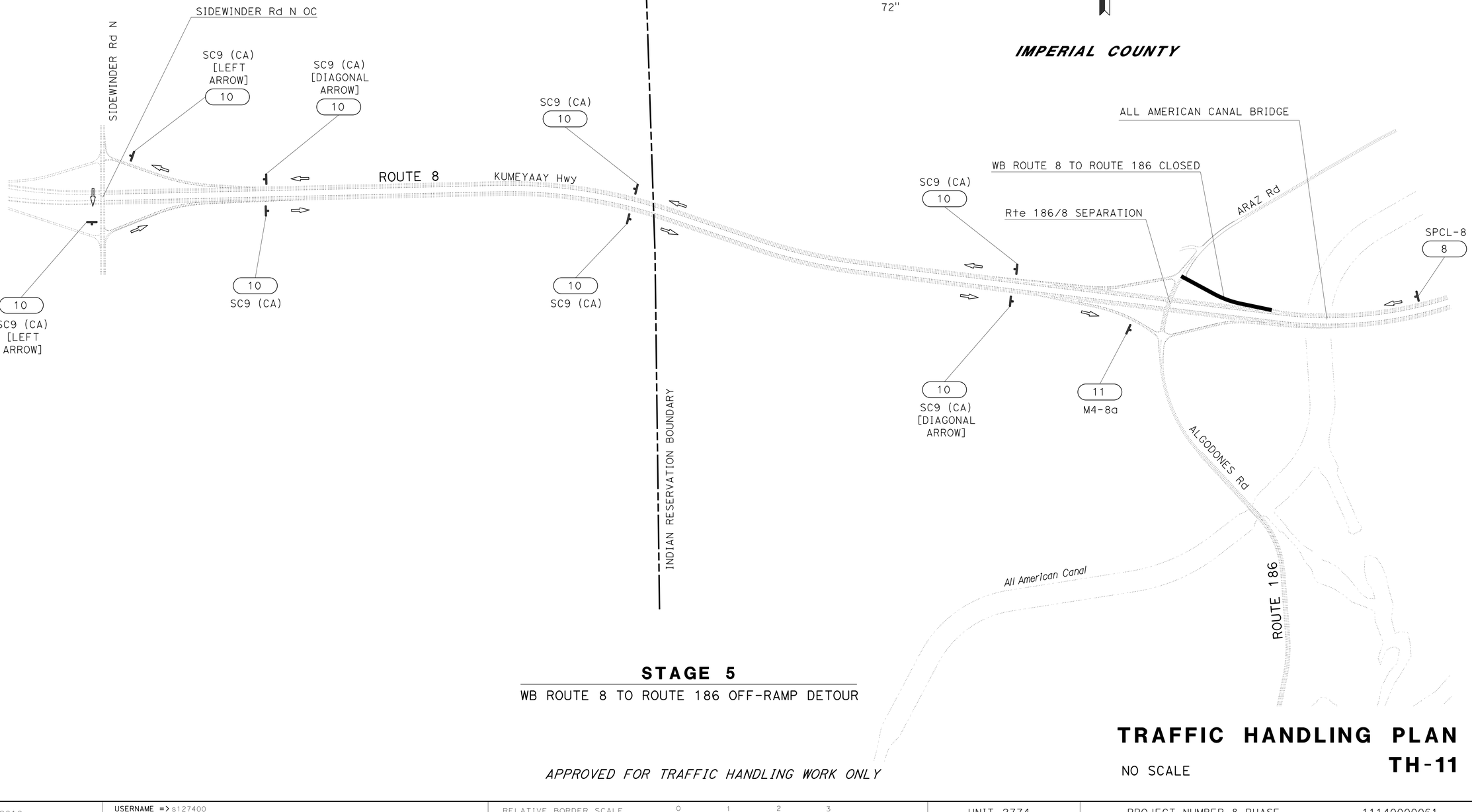


## STAGE 5

WB ROUTE 8 TO ROUTE 186 OFF-RAMP DETOUR

*APPROVED FOR TRAFFIC HANDLING WORK ONLY*

# TRAFFIC HANDLING PLAN

NO SCALE

**TH-11**

STATE OF CALIFORNIA - DEPARTMENT OF TRANSPORTATION
Caltrans®
TRADE CORRIDOR IMPROVEMENT FUND

FUNCTIONAL SUPERVISOR: NICOLA BERNARD

CALCULATED-DESIGNED BY: BRIAN McNAIR
CHECKED BY: MICHAEL ORELIRO

REVISED BY | DATE REVISED

LAST REVISION | DATE PLOTTED => 03-SEP-2015
08-06-15 | TIME PLOTTED => 14:06

BORDER LAST REVISED 7/2/2010

USERNAME => s127400
DGN FILE => 1114000006md011.dgn

RELATIVE BORDER SCALE IS IN INCHES 0 1 2 3

UNIT 2774

PROJECT NUMBER & PHASE 11140000061

| Dist | COUNTY | ROUTE | POST MILES TOTAL PROJECT | SHEET No. | TOTAL SHEETS |
|---|---|---|---|---|---|
| 11 | Imp | 8 | R90.0/R96.8 | 126 | 209 |

REGISTERED CIVIL ENGINEER 05-04-15 DATE

08-31-15
PLANS APPROVAL DATE

REGISTERED PROFESSIONAL ENGINEER DYLAN S. MOORE No. 74711 Exp. 12-31-15 CIVIL STATE OF CALIFORNIA

*THE STATE OF CALIFORNIA OR ITS OFFICERS OR AGENTS SHALL NOT BE RESPONSIBLE FOR THE ACCURACY OR COMPLETENESS OF SCANNED COPIES OF THIS PLAN SHEET.*

NOTES:

1. EXACT LOCATION OF CONSTRUCTION AREA SIGNS WILL BE DETERMINED BY THE ENGINEER.
2. PORTABLE CHANGEABLE MESSAGE SIGNS TO BE PLACED AS REQUIRED BY LANE CLOSURE CHARTS AND AT THE DISCRETION OF THE ENGINEER.

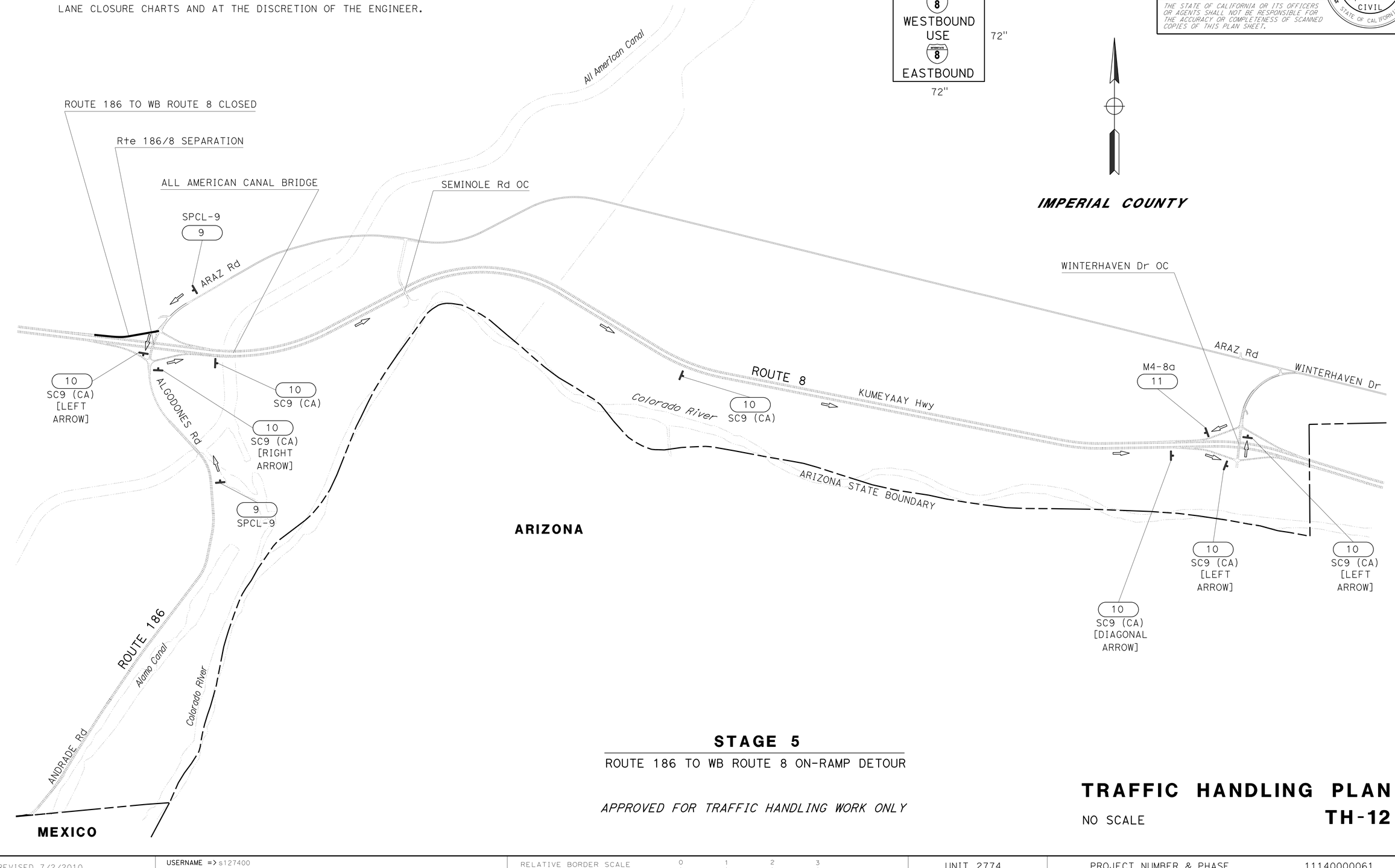


**STAGE 5**

ROUTE 186 TO WB ROUTE 8 ON-RAMP DETOUR

*APPROVED FOR TRAFFIC HANDLING WORK ONLY*

# TRAFFIC HANDLING PLAN

NO SCALE

**TH-12**

STATE OF CALIFORNIA - DEPARTMENT OF TRANSPORTATION
Caltrans® TRADE CORRIDOR IMPROVEMENT FUND

FUNCTIONAL SUPERVISOR: NICOLA BERNARD
CALCULATED-DESIGNED BY: BRIAN McNAIR
CHECKED BY: MICHAEL OREIRO
REVISED BY
DATE REVISED

LAST REVISION 08-06-15
DATE PLOTTED => 03-SEP-2015
TIME PLOTTED => 14:06

| Dist | COUNTY | ROUTE | POST MILES TOTAL PROJECT | SHEET No. | TOTAL SHEETS |
|---|---|---|---|---|---|
| 11 | Imp | 8 | R90.0/R96.8 | 127 | 209 |

05-04-15
REGISTERED CIVIL ENGINEER DATE

08-31-15
PLANS APPROVAL DATE

DYLAN S. MOORE No. 74711 Exp. 12-31-15 CIVIL — REGISTERED PROFESSIONAL ENGINEER — STATE OF CALIFORNIA

THE STATE OF CALIFORNIA OR ITS OFFICERS OR AGENTS SHALL NOT BE RESPONSIBLE FOR THE ACCURACY OR COMPLETENESS OF SCANNED COPIES OF THIS PLAN SHEET.

SIGN #12

SPCL-10 4" Caps AND NUMBER

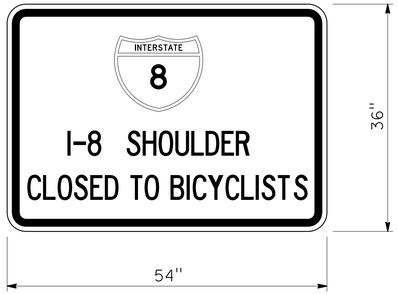


SIGN #13

SPCL-11 6"/4" Caps

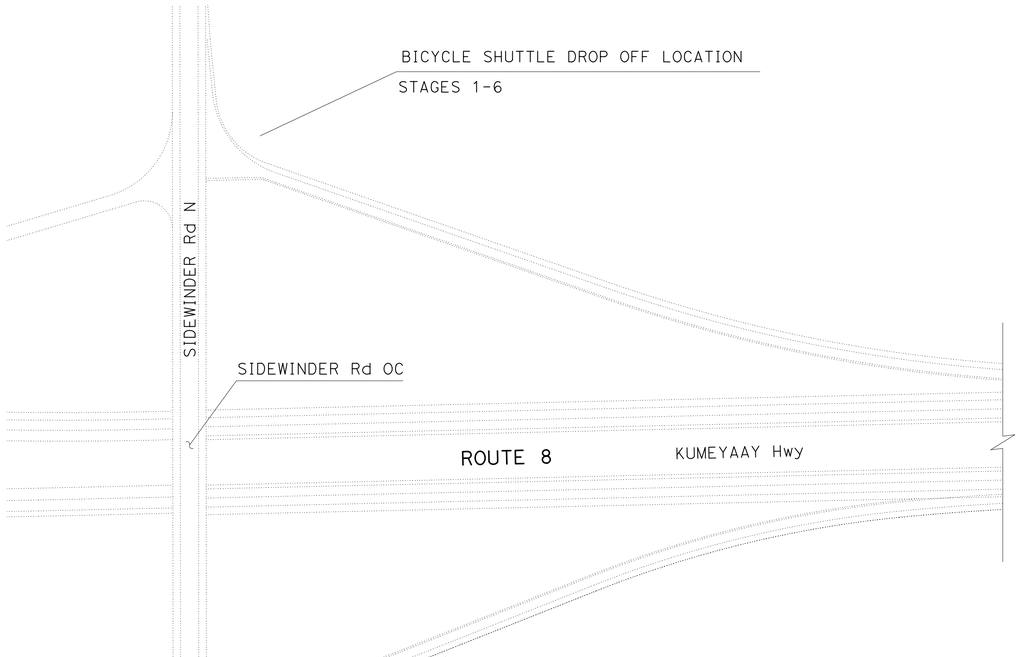


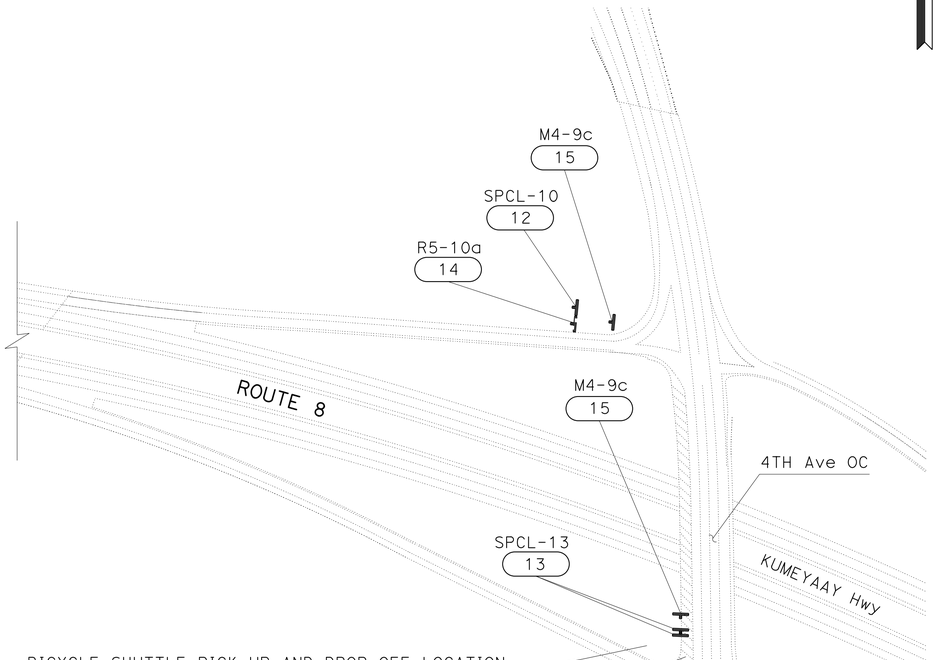


## BICYCLE SHUTTLE

*APPROVED FOR TRAFFIC HANDLING WORK ONLY*

# TRAFFIC HANDLING PLAN

NO SCALE

**TH-13**

STATE OF CALIFORNIA - DEPARTMENT OF TRANSPORTATION
TRADE CORRIDOR IMPROVEMENT FUND

FUNCTIONAL SUPERVISOR: NICOLA BERNARD
CALCULATED-DESIGNED BY: BRIAN McNAIR
CHECKED BY: MICHAEL OREIRO
REVISED BY / DATE REVISED

LAST REVISION 08-06-15
DATE PLOTTED => 03-SEP-2015
TIME PLOTTED => 14:06

BORDER LAST REVISED 7/2/2010
USERNAME => s127400
DGN FILE => 1114000006md013.dgn
RELATIVE BORDER SCALE IS IN INCHES 0 1 2 3
UNIT 2774
PROJECT NUMBER & PHASE 11140000061

| Dist | COUNTY | ROUTE | POST MILES TOTAL PROJECT | SHEET No. | TOTAL SHEETS |
|---|---|---|---|---|---|
| 11 | Imp | 8 | R90.0/R96.8 | 128 | 209 |

REGISTERED CIVIL ENGINEER — 05-04-15 DATE

08-31-15
PLANS APPROVAL DATE

REGISTERED PROFESSIONAL ENGINEER
DYLAN S. MOORE
No. 74711
Exp. 12-31-15
CIVIL
STATE OF CALIFORNIA

THE STATE OF CALIFORNIA OR ITS OFFICERS OR AGENTS SHALL NOT BE RESPONSIBLE FOR THE ACCURACY OR COMPLETENESS OF SCANNED COPIES OF THIS PLAN SHEET.

## CONSTRUCTION AREA SIGNS

| SIGN | SHEET No. | CODE | PANEL SIZE | No. OF POST AND SIZE | No. OF SIGNS |
|---|---|---|---|---|---|
| 1 | TH-1 | SPCL-1 | 72" X 72" | 1 - 6" X 6" (S) | 1 |
| 2 | TH-2 | SPCL-2 | 72" X 72" | 1 - 6" X 6" (S) | 2 |
| 3 | TH-3 & 9 | SPCL-3 | 72" X 72" | 1 - 6" X 6" (S) | 2 |
| 4 | TH-4 & 8 | SPCL-4 | 72" X 72" | 1 - 6" X 6" (S) | 3 |
| 5 | TH-5 & 7 | SPCL-5 | 72" X 72" | 1 - 6" X 6" (S) | 2 |
| 6 | TH-6 | SPCL-6 | 72" X 72" | 1 - 6" X 6" (S) | 2 |
| 7 | TH-10 | SPCL-7 | 72" X 72" | 1 - 6" X 6" (S) | 1 |
| 8 | TH-11 | SPCL-8 | 72" X 72" | 1 - 6" X 6" (S) | 1 |
| 9 | TH-12 | SPCL-9 | 72" X 72" | 1 - 6" X 6" (S) | 2 |
| 10 | TH-1 THROUGH TH-12 | SC9 (CA) | 36" X 36" | 1 - 6" X 6" (S) | 75 |
| 11 | TH-1 THROUGH TH-12 | M4-8a | 24" X 18" | 1 - 6" X 6" (S) | 12 |
| 12 | TH-13 | SPCL-10 | 42" X 30" | 1 - 6" X 6" (S) | 2 |
| 13 | TH-13 | SPCL-11 | 54" X 30" | 1 - 6" X 6" (S) | 2 |
| 14 | TH-13 | R5-10a | 30" X 36" | 1 - 6" X 6" (S) | 2 |
| 15 | TH-13 | M4-9c | 30" X 24" | 1 - 6" X 6" (S) | 3 |
| | | | | | |
| | | | | TOTAL | 112 |

NOTES:

1. SEE CONSTRUCTION AREA SIGN AND STAGE CONSTRUCTION QUANTITY SHEETS FOR ADDITIONAL CONSTRUCTION AREA SIGN QUANTITIES.

(S) STATIONARY SIGN

# TRAFFIC HANDLING QUANTITIES

# THQ-1

REVISED BY | DATE REVISED
BRIAN McNAIR | MICHAEL OREIRO
CALCULATED-DESIGNED BY | CHECKED BY
FUNCTIONAL SUPERVISOR
NICOLA BERNARD
STATE OF CALIFORNIA - DEPARTMENT OF TRANSPORTATION
Caltrans®
TRADE CORRIDOR IMPROVEMENT FUND

LAST REVISION | DATE PLOTTED => 03-SEP-2015
08-06-15 | TIME PLOTTED => 14:06

BORDER LAST REVISED 7/2/2010
USERNAME => s127400
DGN FILE => 1114000006mf001.dgn
RELATIVE BORDER SCALE IS IN INCHES 0 1 2 3
UNIT 2774
PROJECT NUMBER & PHASE 11140000061

| Dist | COUNTY | ROUTE | POST MILES TOTAL PROJECT | SHEET No. | TOTAL SHEETS |
|---|---|---|---|---|---|
| 11 | Imp | 8 | R90.0/R96.8 | 129 | 209 |

REGISTERED CIVIL ENGINEER — DATE: 05-04-15

DYLAN S. MOORE No. 74711 Exp. 12-31-15 CIVIL — REGISTERED PROFESSIONAL ENGINEER — STATE OF CALIFORNIA

08-31-15
PLANS APPROVAL DATE

THE STATE OF CALIFORNIA OR ITS OFFICERS OR AGENTS SHALL NOT BE RESPONSIBLE FOR THE ACCURACY OR COMPLETENESS OF SCANNED COPIES OF THIS PLAN SHEET.

LEGEND:

LINES:

- 6" OR 8" WHITE THERMOPLASTIC STRIPE
- 4" OR 6" YELLOW THERMOPLASTIC STRIPE
- 3" BLACK PAINT STRIPE
- DIRECTION OF TRAVEL

## LANELINES

(MULTILANE HIGHWAYS)

DETAIL 11/13 (6 Mod)

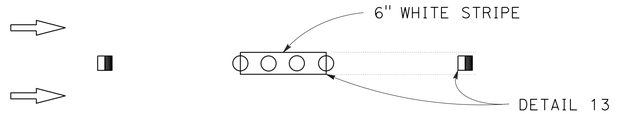


DETAIL 11/14 (6 Mod)

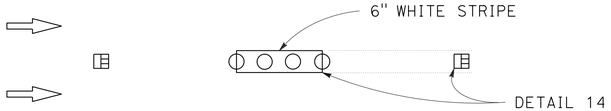


## LEFT EDGELINES

(DIVIDED HIGHWAYS)

DETAIL 25 (6 Mod BLACK)

## RIGHT EDGELINES

DETAIL 27B (6 Mod BLACK)

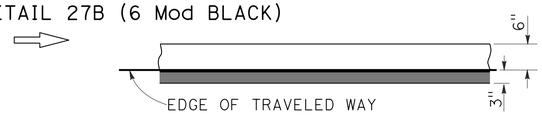


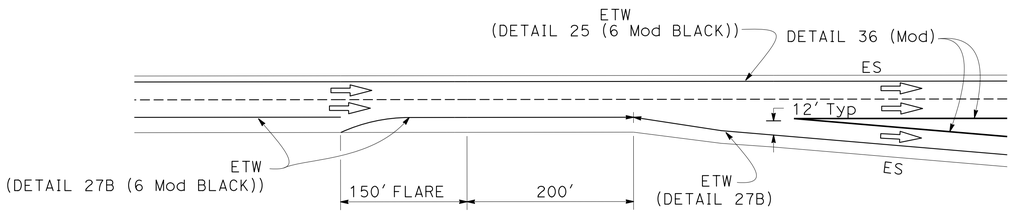


## RIGHT EDGELINE FLARE DETAIL

[FOR USE ON ALL EXIT RAMPS EXCEPT WHERE LANE(S) TRAP OFF]

## EXIT RAMP NEUTRAL AREA (GORE) TREATMENT

DETAIL 36 (Mod)

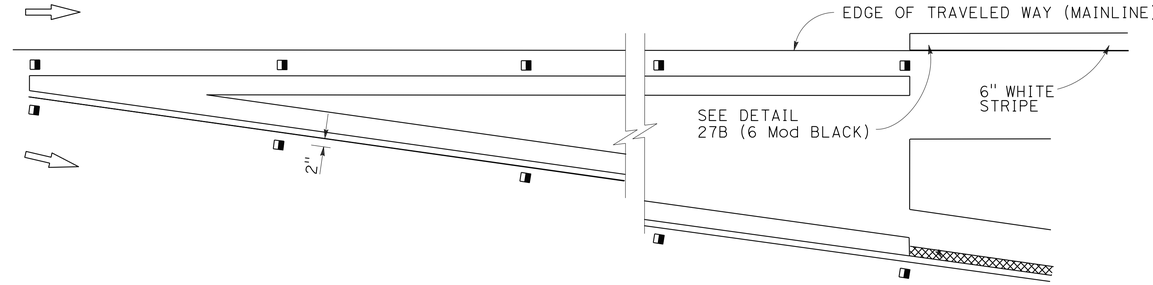


## ENTRANCE RAMP NEUTRAL AREA (MERGE) TREATMENT

DETAIL 36A (Mod)

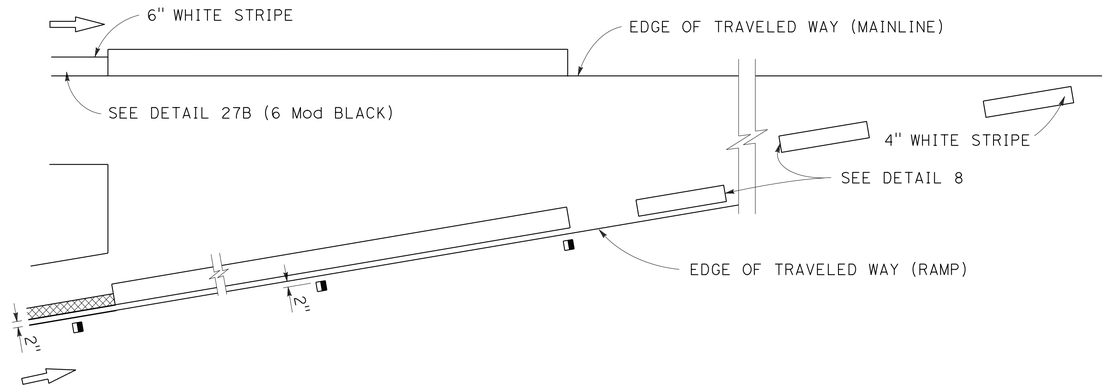


# PAVEMENT DELINEATION DETAILS

NO SCALE

**PDD-1**

STATE OF CALIFORNIA - DEPARTMENT OF TRANSPORTATION
Caltrans®
TRADE CORRIDOR IMPROVEMENT FUND

| REVISED BY | DATE REVISED |
|---|---|
| SIRAJUL RONI | JOEL SIMS |

| CALCULATED-DESIGNED BY | CHECKED BY |
|---|---|

FUNCTIONAL SUPERVISOR: NICOLA BERNARD

LAST REVISION 08-06-15
DATE PLOTTED => 03-SEP-2015
TIME PLOTTED => 14:06

| Dist | COUNTY | ROUTE | POST MILES TOTAL PROJECT | SHEET No. | TOTAL SHEETS |
|---|---|---|---|---|---|
| 11 | Imp | 8 | R90.0/R96.8 | 130 | 209 |

Dylan Moore 05-04-15
REGISTERED CIVIL ENGINEER DATE

08-31-15
PLANS APPROVAL DATE

REGISTERED PROFESSIONAL ENGINEER
DYLAN S. MOORE
No. 74711
Exp. 12-31-15
CIVIL
STATE OF CALIFORNIA

THE STATE OF CALIFORNIA OR ITS OFFICERS OR AGENTS SHALL NOT BE RESPONSIBLE FOR THE ACCURACY OR COMPLETENESS OF SCANNED COPIES OF THIS PLAN SHEET.

**NOTES:**

1. BEGIN AT "B" 4669+80 AND CONTINUE EVERY ONE MILE THEREAFTER (7 EACH).

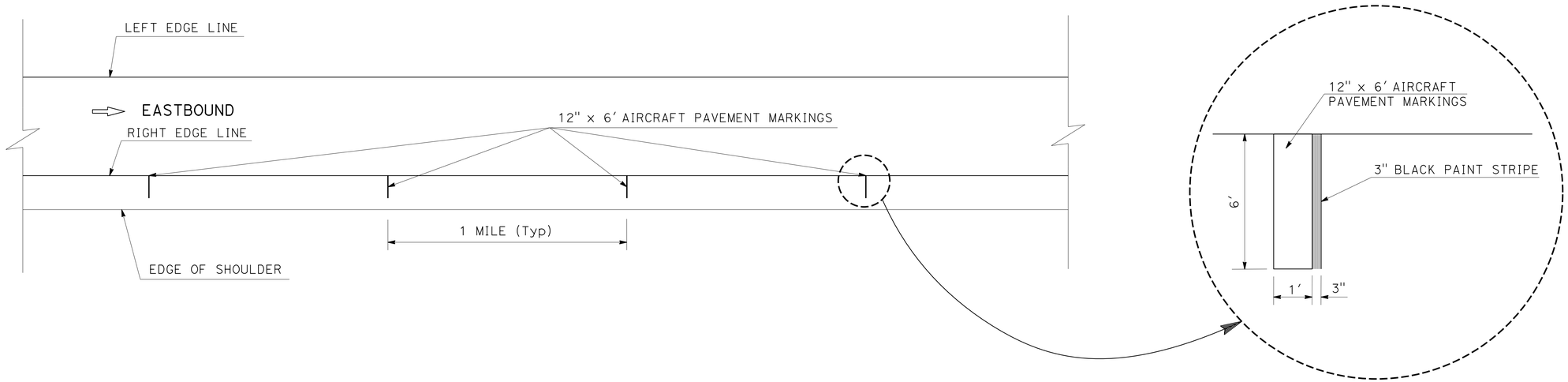


## 12" AIRCRAFT PAVEMENT MARKING

## PAVEMENT DELINEATION DETAILS

NO SCALE

**PDD-2**

STATE OF CALIFORNIA - DEPARTMENT OF TRANSPORTATION
Caltrans®
TRADE CORRIDOR IMPROVEMENT FUND

FUNCTIONAL SUPERVISOR: NICOLA BERNARD
CALCULATED-DESIGNED BY: SIRAJUL RONI
CHECKED BY: JOEL SIMS
REVISED BY
DATE REVISED

LAST REVISION DATE PLOTTED => 03-SEP-2015
08-06-15 TIME PLOTTED => 14:06

BORDER LAST REVISED 7/2/2010

USERNAME => s127400
DGN FILE => 1114000006nb002.dgn

RELATIVE BORDER SCALE IS IN INCHES 0 1 2 3

UNIT 2774

PROJECT NUMBER & PHASE 11140000061

| Dist | COUNTY | ROUTE | POST MILES TOTAL PROJECT | SHEET No. | TOTAL SHEETS |
|---|---|---|---|---|---|
| 11 | Imp | 8 | R90.0/R96.8 | 131 | 209 |

05-04-15
REGISTERED CIVIL ENGINEER DATE

08-31-15
PLANS APPROVAL DATE

DYLAN S. MOORE No. 74711 Exp. 12-31-15 CIVIL — REGISTERED PROFESSIONAL ENGINEER — STATE OF CALIFORNIA

THE STATE OF CALIFORNIA OR ITS OFFICERS OR AGENTS SHALL NOT BE RESPONSIBLE FOR THE ACCURACY OR COMPLETENESS OF SCANNED COPIES OF THIS PLAN SHEET.

# PAVEMENT DELINEATION QUANTITIES

| DESCRIPTION | DETAIL No. | PAVEMENT MARKER SUMMARY | | | TRAFFIC STRIPE SUMMARY | | | | | |
|---|---|---|---|---|---|---|---|---|---|---|
| | | NON-REFLECTIVE (EA) | RETROREFLECTIVE (EA) | | THERMOPLASTIC (ENHANCED WET NIGHT VISIBILITY) (LF) | | | | | PAINT (1-COAT) (LF) |
| | | TYPE A | TYPE G | TYPE H | 4" (SOLID) | 6" (SOLID) | 8" (SOLID) | 4" (BROKEN 17'-7') | 6" (BROKEN 36'-12') | 3" BLACK |
| EAST BOUND Rte 8 "B" LINE | 11/13 | 2,993 | 749 | | | | | | 35,915 | |
| | 25 (6 Mod BLACK) | | | 749 | | 35,915 | | | | 35,915 |
| | 27B (6 Mod BLACK) | | | | | 34,302 | | | | 34,302 |
| WEST BOUND Rte 8 "B" LINE | 11/13 | 2,993 | 749 | | | | | | 35,915 | |
| | 25 (6 Mod BLACK) | | | 749 | | 35,915 | | | | 35,915 |
| | 27B (6 Mod BLACK) | | | | | 34,436 | | | | 34,436 |
| EB OFF-RAMP TO Rte 186 "A2" LINE | 25A | | | 38 | 889 | | | | | |
| | 27B | | | | 1,161 | | | | | |
| | 36 (Mod) | | 26 | | | | 544 | | | |
| EB ON-RAMP FROM Rte 186 "A1" LINE | 8 | | | | | | | 320 | | |
| | 25A | | | 31 | 726 | | | | | |
| | 27B | | | | 1,289 | | | | | |
| | 36A (Mod) | | 11 | | | | 243 | | | |
| WB ON-RAMP FROM Rte 186 "A3" LINE | 8 | | | | | | | 364 | | |
| | 25A | | | 32 | 740 | | | | | |
| | 27B | | | | 1,268 | | | | | |
| | 36A (Mod) | | 8 | | | | 164 | | | |
| WB OFF-RAMP TO Rte 186 "A4" LINE | 25A | | | 30 | 691 | | | | | |
| | 27B | | | | 959 | | | | | |
| | 36 (Mod) | | 26 | | | | 536 | | | |
| EB OFF-RAMP TO WINTERHAVEN Dr "C2" LINE | 25A | | | 37 | 860 | | | | | |
| | 27B | | | | 1,137 | | | | | |
| | 36 (Mod) | | 26 | | | | 554 | | | |
| EB ON-RAMP FROM WINTERHAVEN Dr "C1" LINE | 8 | | | | | | | 277 | | |
| | 25A | | | 34 | 793 | | | | | |
| | 27B | | | | 1,325 | | | | | |
| | 36A (Mod) | | 12 | | | | 255 | | | |
| WB ON-RAMP FROM WINTERHAVEN Dr "C3" LINE | 8 | | | | | | | 300 | | |
| | 25A | | | 33 | 769 | | | | | |
| | 27B | | | | 1,319 | | | | | |
| | 36A (Mod) | | 11 | | | | 250 | | | |
| WB OFF-RAMP TO WINTERHAVEN Dr "C4" LINE | 25A | | | 39 | 903 | | | | | |
| | 27B | | | | 1,206 | | | | | |
| | 36 (Mod) | | 16 | | | | 606 | | | |
| EB OFF-RAMP TO FOURTH Ave "H2" LINE | 25A | | | 37 | 862 | | | | | |
| | 27B | | | | 1,150 | | | | | |
| | 36 (Mod) | | 14 | | | | 576 | | | |
| SUBTOTAL | | 5,986 | 3,457 | | 18,047 | 140,568 | 3,728 | 1,261 | 71,830 | 140,568 |

STATE OF CALIFORNIA - DEPARTMENT OF TRANSPORTATION
Caltrans®
TRADE CORRIDOR IMPROVEMENT FUND

FUNCTIONAL SUPERVISOR: NICOLA BERNARD
CALCULATED-DESIGNED BY: SIRAJUL RONI
CHECKED BY: JOEL SIMS
REVISED BY
DATE REVISED

PAVEMENT DELINEATION QUANTITIES
PDQ-1

LAST REVISION: DATE PLOTTED => 03-SEP-2015; TIME PLOTTED => 14:06
08-06-15

BORDER LAST REVISED 7/2/2010
USERNAME => s127400
DGN FILE => 1114000006nc001.dgn
RELATIVE BORDER SCALE IS IN INCHES 0 1 2 3
UNIT 2774
PROJECT NUMBER & PHASE 11140000061

| Dist | COUNTY | ROUTE | POST MILES TOTAL PROJECT | SHEET No. | TOTAL SHEETS |
|---|---|---|---|---|---|
| 11 | Imp | 8 | R90.0/R96.8 | 132 | 209 |

05-04-15
REGISTERED CIVIL ENGINEER DATE

08-31-15
PLANS APPROVAL DATE

REGISTERED PROFESSIONAL ENGINEER
DYLAN S. MOORE
No. 74711
Exp. 12-31-15
CIVIL
STATE OF CALIFORNIA

THE STATE OF CALIFORNIA OR ITS OFFICERS OR AGENTS SHALL NOT BE RESPONSIBLE FOR THE ACCURACY OR COMPLETENESS OF SCANNED COPIES OF THIS PLAN SHEET.

# PAVEMENT DELINEATION QUANTITIES

| DESCRIPTION | DETAIL No. | PAVEMENT MARKER SUMMARY | | | TRAFFIC STRIPE SUMMARY | | | | | |
|---|---|---|---|---|---|---|---|---|---|---|
| | | NON-REFLECTIVE * | RETROREFLECTIVE * | | THERMOPLASTIC (ENHANCED WET NIGHT VISIBILITY) (LF) | | | | | PAINT (1-COAT) (LF) |
| | | (EA) | (EA) | | 4" (SOLID) | 6" (SOLID) | 8" (SOLID) | 4" (BROKEN 17'-7') | 6" (BROKEN 36'-12') | 3" BLACK |
| | | TYPE A | TYPE G | TYPE H | | | | | | |
| EB ON-RAMP | 8 | | | | | | | 293 | | |
| FROM FOURTH Ave | 25A | | | 30 | 696 | | | | | |
| "H1" LINE | 27B | | | | 1,267 | | | | | |
| | 36A (Mod) | | 13 | | | | 278 | | | |
| | | | | | | | | | | |
| WB ON-RAMP | 8 | | | | | | | 280 | | |
| FROM FOURTH Ave | 25A | | | 28 | 637 | | | | | |
| "H3" LINE | 27B | | | | 1,134 | | | | | |
| | 36A (Mod) | | 10 | | | | 217 | | | |
| | | | | | | | | | | |
| WB OFF-RAMP | 25A | | | 46 | 1,073 | | | | | |
| TO FOURTH Ave | 27B | | | | 1,350 | | | | | |
| "H4" LINE | 36 (Mod) | | 14 | | | | 554 | | | |
| | | | | | | | | | | |
| CURB RAMP AND | | | | | | | | | | |
| SIDEWALK / 4TH Ave | 27B | | | | 67 | | | | | |
| "CR1" LINE | | | | | | | | | | |
| | | | | | | | | | | |
| CURB RAMP AND | | | | | | | | | | |
| SIDEWALK / 4TH Ave | 27B | | | | 70 | | | | | |
| "CR2" LINE | | | | | | | | | | |
| | | | | | | | | | | |
| BLACK STRIPE FOR | SEE | | | | | | | | | |
| AIRCRAFT MARKING / | PAVEMENT | | | | | | | | | 42 |
| EB FROM 4669+84 | DELINEATION | | | | | | | | | |
| TO 4988+91 "B" LINE | DETAILS | | | | | | | | | |
| SUBTOTAL | | 0 | 141 | | 6,294 | 0 | 1,049 | 573 | 0 | 42 |
| SUBTOTAL (PDQ-1) | | 5,986 | 3,457 | | 18,047 | 140,568 | 3,728 | 1,261 | 71,830 | 140,568 |
| TOTALS | | 5,986 | 3,598 | | 24,341 | 140,568 | 4,777 | 1,834 | 71,830 | 140,610 |

* SEE STAGE CONSTRUCTION QUANTITIES FOR ADDITIONAL QUANTITIES.

## PAVEMENT DELINEATION QUANTITIES
## PDQ-2

REVISED BY | DATE REVISED
SIRAJUL RONI | JOEL SIMS
CALCULATED-DESIGNED BY | CHECKED BY
FUNCTIONAL SUPERVISOR: NICOLA BERNARD
STATE OF CALIFORNIA - DEPARTMENT OF TRANSPORTATION
Caltrans®
TRADE CORRIDOR IMPROVEMENT FUND

LAST REVISION 08-06-15
DATE PLOTTED => 03-SEP-2015
TIME PLOTTED => 14:06

BORDER LAST REVISED 7/2/2010
USERNAME => s127400
DGN FILE => 1114000006nc002.dgn
RELATIVE BORDER SCALE IS IN INCHES 0 1 2 3
UNIT 2774
PROJECT NUMBER & PHASE 11140000061

| Dist | COUNTY | ROUTE | POST MILES TOTAL PROJECT | SHEET No. | TOTAL SHEETS |
|---|---|---|---|---|---|
| 11 | Imp | 8 | R90.0/R96.8 | 133 | 209 |

Dylan Moore 05-04-15
REGISTERED CIVIL ENGINEER DATE

08-31-15
PLANS APPROVAL DATE

REGISTERED PROFESSIONAL ENGINEER
DYLAN S. MOORE
No. 74711
Exp. 12-31-15
CIVIL
STATE OF CALIFORNIA

THE STATE OF CALIFORNIA OR ITS OFFICERS OR AGENTS SHALL NOT BE RESPONSIBLE FOR THE ACCURACY OR COMPLETENESS OF SCANNED COPIES OF THIS PLAN SHEET.

# PAVEMENT MARKING QUANTITIES

| LOCATION | THERMOPLASTIC PAVEMENT MARKING (ENHANCED WET NIGHT VISIBILITY) | | REMARKS |
|---|---|---|---|
| | DESCRIPTION | (SQFT) | |
| ROUTE 186/ 8 SEPARATION (EB OFF-RAMP) | TYPE V ARROW | 66 | * |
| | TYPE V ARROW | 33 | ** |
| | LIMIT LINE | 23 | * |
| | "STOP" (EB) | 44 | * |
| | "AHEAD" (EB) | 31 | * |
| | "YIELD" (SB) | 24 | * |
| ROUTE 186/ 8 SEPARATION (EB ON-RAMP) | TYPE I 24'-0" ARROW | 62 | *** |
| ROUTE 186/ 8 SEPARATION (WB OFF-RAMP) | TYPE V ARROW | 66 | * |
| | TYPE V ARROW | 33 | ** |
| | LIMIT LINE | 23 | * |
| | "STOP" (WB) | 44 | * |
| | "AHEAD" (WB) | 31 | * |
| | "YIELD" (NB) | 24 | * |
| ROUTE 186/ 8 SEPARATION (WB ON-RAMP) | TYPE I 24'-0" ARROW | 62 | *** |
| | TYPE I 10'-0" ARROW | 28 | * |
| | "STOP" (SB) | 66 | * |
| | LIMIT LINE | 48 | * |
| WINTERHAVEN Dr OC (EB OFF-RAMP) | TYPE V ARROW | 66 | * |
| | TYPE V ARROW | 33 | ** |
| | LIMIT LINE | 32 | * |
| | "STOP" (EB) | 66 | * |
| | "AHEAD" (EB) | 31 | * |
| WINTERHAVEN Dr OC (EB ON-RAMP) | TYPE I 24'-0" ARROW | 31 | *** |
| WINTERHAVEN Dr OC (WB OFF-RAMP) | TYPE V ARROW | 66 | * |
| | TYPE V ARROW | 33 | ** |
| | "STOP" (WB) | 44 | * |
| | "AHEAD" (WB) | 31 | * |
| | "YIELD" (NB) | 24 | * |
| | LIMIT LINE | 30 | * |
| WINTERHAVEN Dr OC (WB ON-RAMP) | TYPE I 24'-0" ARROW | 62 | *** |
| FOURTH Ave OC (EB OFF-RAMP) | TYPE V ARROW | 99 | ** |
| | LIMIT LINE | 12 | * |
| | "STOP" (EB) | 44 | * |
| | "AHEAD" (EB) | 31 | * |
| FOURTH Ave OC (EB ON-RAMP) | TYPE I 24'-0" ARROW | 62 | * |
| FOURTH Ave OC (WB OFF-RAMP) | TYPE V ARROW | 99 | * |
| | "STOP" (WB) | 44 | * |
| | "AHEAD" (WB) | 31 | * |
| | "YIELD" (NB) | 24 | * |
| | LIMIT LINE | 15 | * |
| FOURTH Ave OC (WB ON-RAMP) | TYPE I 24'-0" ARROW | 62 | * |
| ROUTE 8: EB "B" RIGHT EDGE OF PAVEMENT FROM 4669+84 TO 4988+91 (7 LOCATIONS) | 12" AIRCRAFT PAVEMENT MARKING | 42 | |
| | TOTAL | 1,822 | |

NOTES:

* = REPLACE IN KIND
** = REPLACE TYPE II (B) ARROW
*** = REPLACE TYPE I 18'-0" ARROW

## PAVEMENT DELINEATION QUANTITIES

PDQ-3

REVISED BY | DATE REVISED
RADHIKA MOTHKURI | 08-06-15
CALCULATED-DESIGNED BY
DYLAN MOORE
CHECKED BY
FUNCTIONAL SUPERVISOR
NICOLA BERNARD
STATE OF CALIFORNIA - DEPARTMENT OF TRANSPORTATION
Caltrans
TRADE CORRIDOR IMPROVEMENT FUND

LAST REVISION | DATE PLOTTED => 03-SEP-2015
08-06-15 | TIME PLOTTED => 14:06

BORDER LAST REVISED 7/2/2010
USERNAME => s127400
DGN FILE => 1114000006nc003.dgn
RELATIVE BORDER SCALE IS IN INCHES 0 1 2 3
UNIT 2774
PROJECT NUMBER & PHASE 11140000061

| Dist | COUNTY | ROUTE | POST MILES TOTAL PROJECT | SHEET No. | TOTAL SHEETS |
|---|---|---|---|---|---|
| 11 | Imp | 8 | R90.0/R96.8 | 134 | 209 |

REGISTERED CIVIL ENGINEER — 05-04-15 DATE

08-31-15
PLANS APPROVAL DATE

DYLAN S. MOORE No. 74711 Exp. 12-31-15 CIVIL — REGISTERED PROFESSIONAL ENGINEER — STATE OF CALIFORNIA

THE STATE OF CALIFORNIA OR ITS OFFICERS OR AGENTS SHALL NOT BE RESPONSIBLE FOR THE ACCURACY OR COMPLETENESS OF SCANNED COPIES OF THIS PLAN SHEET.

# ROADWAY QUANTITIES

| LOCATION | | | | | LENGTH (N) | WIDTH (N) | | | DEPTH (N) | | | | | CONTINUOUSLY REINFORCED CONCRETE PAVEMENT | * HOT MIX ASPHALT (TYPE A) | * CLASS 2 AB | * ROADWAY EXCAVATION | LEAN CONCRETE BASE | CONCRETE BARRIER (TYPE 60) | REMARKS |
|---|---|---|---|---|---|---|---|---|---|---|---|---|---|---|---|---|---|---|---|---|
| | | | | | | LANE | OUTSIDE SHOULDER | INSIDE SHOULDER | CRCP | HMA | CLASS 2 (LANES) | CLASS 2 (SHOULDERS) | LEAN CONCRETE BASE | | | | | | | |
| LINE | STATION BEGIN | STATION END | SIDE L† | SIDE R† | LF | LF | LF | LF | LF | LF | LF | LF | LF | CY | TON | CY | CY | CY | LF | |
| "B" | 4672+10.00 | 4672+90.00 | X | | 80.00 | 24 | 10 | 5 | Var | 0.25 | 0.6 | 0.6 | 1 | 122 | 58 | 69 | 318 | 97.0 | | SEE REVISED Std PLAN P32A |
| "B" | 4672+90.00 | 4693+92.55 | X | | 2102.55 | 24 | 10 | 5 | 0.90 | 0.25 | 0.25 | 0.25 | | 2,733 | 1,519 | 195 | 3,687 | | | |
| "B" | 4693+92.55 | 4704+96.86 | X | | 1104.31 | 24 | 2 | 5 | 0.90 | 0.25 | 0.25 | 0.25 | | 1,141 | 634 | 20 | 1,479 | | | |
| "B" | 4704+96.86 | 4718+78.89 | X | | 1382.03 | 24 | 10 | 5 | 0.90 | 0.25 | 0.25 | 0.25 | | 1,797 | 998 | 128 | 2,424 | | | |
| "B" | 4718+78.89 | 4723+29.49 | X | | 450.60 | 24 | 2 | 5 | 0.90 | 0.25 | 0.25 | 0.25 | | 466 | 259 | 8 | 603 | | | |
| "B" | 4723+29.49 | 4724+11.18 | X | | 81.69 | 24 | 2 | 5 | Var | 0.25 | 0.6 | 0.6 | 1 | 97 | 46 | 55 | 253 | 77.0 | | SEE REVISED Std PLAN P32A & BRIDGE PLANS |
| "B" | 4728+69.13 | 4729+51.40 | X | | 82.27 | 24 | 10 | 5 | Var | 0.25 | 0.6 | 0.6 | 1 | 122 | 58 | 69 | 318 | 97.0 | | SEE REVISED Std PLAN P32A & BRIDGE PLANS |
| "B" | 4729+51.40 | 4735+64.03 | X | | 612.63 | 24 | 10 | 5 | 0.90 | 0.25 | 0.25 | 0.25 | | 796 | 442 | 57 | 1,074 | | | |
| "B" | 4735+64.03 | 4754+70.00 | X | | 1905.97 | 24 | 10.67 | 5 | 0.90 | 0.25 | 0.25 | 0.25 | | 2,520 | 1,400 | 188 | 3,433 | | | INCLUDES DIKE REMOVAL |
| "B" | 4754+70.00 | 4915+84.70 | X | | 16114.70 | 24 | 10 | 5 | 0.90 | 0.25 | 0.25 | 0.25 | | 20,949 | 11,638 | 1,492 | 28,260 | | | |
| "B" | 4915+84.70 | 4916+93.68 | X | | 108.98 | 24 | 10.67 | 5 | 0.90 | 0.25 | 0.25 | 0.25 | | 144 | 80 | 11 | 196 | | | INCLUDES DIKE REMOVAL |
| "B" | 4916+93.68 | 4927+97.80 | X | | 1104.12 | 24 | 2 | 5 | 0.90 | 0.25 | 0.25 | 0.25 | | 1,141 | 634 | 20 | 1,478 | | | |
| "B" | 4927+97.80 | 4943+47.36 | X | | 1549.56 | 24 | 10 | 5 | 0.90 | 0.25 | 0.25 | 0.25 | | 2,014 | 1,119 | 143 | 2,717 | | | |
| "B" | 4943+47.36 | 4948+45.22 | X | | 497.86 | 24 | 2 | 5 | 0.90 | 0.25 | 0.25 | 0.25 | | 514 | 286 | 9 | 667 | | | |
| "B" | 4948+45.22 | 4951+40.28 | X | | 295.06 | 24 | 10.67 | 5 | 0.90 | 0.25 | 0.25 | 0.25 | | 390 | 217 | 29 | 532 | | | INCLUDES DIKE REMOVAL |
| "B" | 4951+40.28 | 5001+00.00 | X | | 4959.72 | 24 | 10 | 5 | 0.90 | 0.25 | 0.25 | 0.25 | | 6,448 | 3,582 | 459 | 8,698 | | | |
| "B" | 5001+00.00 | 5005+34.50 | X | | 434.50 | 24 | 14.9 | 5 | 0.90 | 0.25 | 0.25 | 0.25 | | 636 | 353 | 60 | 872 | | | CRCP TAPER, SEE Const DETAILS |
| "B" | 5005+34.50 | 5006+14.50 | X | | 80.00 | 24 | 20.51 | 5 | Var | 0.25 | 0.6 | 0.6 | 1 | 154 | 73 | 88 | 403 | 123.0 | | SEE REVISED Std PLAN P32A & BRIDGE PLANS |
| "B" | 5009+08.41 | 5009+90.40 | X | | 81.99 | 24 | 2 | 5 | Var | 0.25 | 0.6 | 0.6 | 1 | 97 | 46 | 55 | 253 | 77.0 | | SEE REVISED Std PLAN P32A & BRIDGE PLANS |
| "B" | 5009+90.40 | 5010+44.46 | X | | 54.06 | 24 | 2 | 5 | 0.90 | 0.25 | 0.25 | 0.25 | | 56 | 31 | 55 | 126 | | | |
| "B" | 5010+44.46 | 5027+25.16 | X | | 1680.70 | 24 | 10 | 5 | 0.90 | 0.25 | 0.25 | 0.25 | | 2,185 | 1,214 | 156 | 2,947 | | | |
| "B" | 5027+25.16 | 5029+50.24 | X | | 225.08 | 24 | 2 | 5 | 0.90 | 0.25 | 0.25 | 0.25 | | 233 | 129 | 4 | 301 | | | |
| "B2LT" | 5029+50.24 | 5030+45.79 | X | | 95.55 | 24 | 2 | 5 | 0.90 | 0.25 | 0.25 | 0.25 | | 99 | 55 | 2 | 128 | | | |
| "B2LT" | 5030+45.79 | 5031+25.79 | X | | 80.00 | 24 | 2 | 5 | Var | 0.25 | 0.6 | 0.6 | 1 | 97 | 46 | 55 | 253 | 77.0 | | SEE REVISED Std PLAN P32A & BRIDGE PLANS |
| "B" | 4672+10.00 | 4672+90.00 | | X | 80.00 | 24 | 10 | 5 | Var | 0.25 | 0.6 | 0.6 | 1 | 122 | 58 | 69 | 318 | 97.0 | | SEE REVISED Std PLAN P32A & BRIDGE PLANS |
| "B" | 4672+90.00 | 4694+60.87 | | X | 2170.87 | 24 | 10 | 5 | 0.90 | 0.25 | 0.25 | 0.25 | | 2,822 | 1,568 | 302 | 3,908 | | | |
| "B" | 4694+60.87 | 4697+71.08 | | X | 310.21 | 24 | 10.67 | 5 | 0.90 | 0.25 | 0.25 | 0.25 | | 410 | 228 | 45 | 573 | | | INCLUDES DIKE REMOVAL |
| "B" | 4697+71.08 | 4702+21.55 | | X | 450.47 | 24 | 2 | 5 | 0.90 | 0.25 | 0.25 | 0.25 | | 465 | 259 | 29 | 624 | | | |
| "B" | 4702+21.55 | 4717+88.99 | | X | 1567.44 | 24 | 10 | 5 | 0.90 | 0.25 | 0.25 | 0.25 | | 2,038 | 1,132 | 218 | 2,821 | | | |
| "B" | 4717+88.99 | 4723+31.28 | | X | 542.29 | 24 | 2 | 5 | 0.90 | 0.25 | 0.25 | 0.25 | | 560 | 311 | 35 | 751 | | | |
| "B" | 4723+31.28 | 4724+12.85 | | X | 81.57 | 24 | 2 | 5 | Var | 0.25 | 0.6 | 0.6 | 1 | 97 | 46 | 55 | 253 | 77.0 | | SEE REVISED Std PLAN P32A & BRIDGE PLANS |
| "B" | 4728+59.90 | 4729+42.28 | | X | 82.38 | 24 | 10 | 5 | Var | 0.25 | 0.6 | 0.6 | 1 | 122 | 58 | 69 | 318 | 97.0 | | SEE REVISED Std PLAN P32A & BRIDGE PLANS |
| "B" | 4729+42.28 | 4747+00.00 | | X | 1757.72 | 24 | 10 | 5 | 0.90 | 0.25 | 0.25 | 0.25 | | 2,285 | 1,269 | 244 | 3,164 | | | |
| | | | | | SUBTOTAL (Q-1) | | | | | | | | | 53,872 | 29,846 | 4,493 | 74,150 | 819 | 0 | |

(N) - NOT A SEPARATE PAY ITEM, FOR INFORMATION ONLY

* SEE ROADWAY QUANTITIES (RAMPS) TABLE AND STAGE CONSTRUCTION QUANTITY SHEETS FOR ADDITIONAL QUANTITIES.

## SUMMARY OF QUANTITIES

## Q-1

REVISED BY | DATE REVISED

RADHIKA MOTHKURI | JOHN HANSON

CALCULATED-DESIGNED BY | CHECKED BY

FUNCTIONAL SUPERVISOR: NICOLA BERNARD

STATE OF CALIFORNIA - DEPARTMENT OF TRANSPORTATION

Caltrans®

TRADE CORRIDOR IMPROVEMENT FUND

LAST REVISION | DATE PLOTTED => 03-SEP-2015 | TIME PLOTTED => 14:06 | 08-06-15

BORDER LAST REVISED 7/2/2010 | USERNAME => s127400 | DGN FILE => 1114000006pa001.dgn | RELATIVE BORDER SCALE IS IN INCHES 0 1 2 3 | UNIT 2774 | PROJECT NUMBER & PHASE 11140000061

| Dist | COUNTY | ROUTE | POST MILES TOTAL PROJECT | SHEET No. | TOTAL SHEETS |
|---|---|---|---|---|---|
| 11 | Imp | 8 | R90.0/R96.8 | 135 | 209 |

Dylan Moore 05-04-15
REGISTERED CIVIL ENGINEER DATE

08-31-15
PLANS APPROVAL DATE

REGISTERED PROFESSIONAL ENGINEER
DYLAN S. MOORE
No. 74711
Exp. 12-31-15
CIVIL
STATE OF CALIFORNIA

THE STATE OF CALIFORNIA OR ITS OFFICERS OR AGENTS SHALL NOT BE RESPONSIBLE FOR THE ACCURACY OR COMPLETENESS OF SCANNED COPIES OF THIS PLAN SHEET.

# ROADWAY QUANTITIES

| LOCATION | | | | | LENGTH (N) | WIDTH (N) | | | DEPTH (N) | | | | | CONTINUOUSLY REINFORCED CONCRETE PAVEMENT | HOT MIX ASPHALT (TYPE A) * | CLASS 2 AB * | ROADWAY EXCAVATION * | LEAN CONCRETE BASE | CONCRETE BARRIER (TYPE 60) | REMARKS |
|---|---|---|---|---|---|---|---|---|---|---|---|---|---|---|---|---|---|---|---|---|
| LINE | STATION LIMITS BEGIN | STATION LIMITS END | SIDE L† | SIDE R† | LF | LANE | OUTSIDE SHOULDER | INSIDE SHOULDER | CRCP | HMA | CLASS 2 (LANES) | CLASS 2 (SHOULDERS) | LEAN CONCRETE BASE | CY | TON | CY | CY | CY | LF | |
| "B" | 4747+00.00 | 4753+50.00 | | X | 650.00 | 24 | 10.67 | 5 | 0.90 | 0.25 | 0.25 | 0.25 | | 860 | 478 | 94 | 1,201 | | | INCLUDES DIKE REMOVAL |
| "B" | 4753+50.00 | 4917+63.71 | | X | 16413.71 | 24 | 10 | 5 | 0.90 | 0.25 | 0.25 | 0.25 | | 21,338 | 11,854 | 2,280 | 29,545 | | | |
| "B" | 4917+63.71 | 4921+27.80 | | X | 364.09 | 24 | 10.67 | 5 | 0.90 | 0.25 | 0.25 | 0.25 | | 481 | 267 | 53 | 673 | | | INCLUDES DIKE REMOVAL |
| "B" | 4921+27.80 | 4926+24.67 | | X | 496.87 | 24 | 2 | 5 | 0.90 | 0.25 | 0.25 | 0.25 | | 513 | 285 | 32 | 688 | | | |
| "B" | 4926+24.67 | 4943+17.28 | | X | 1692.61 | 24 | 10 | 5 | 0.90 | 0.25 | 0.25 | 0.25 | | 2,200 | 1,222 | 235 | 3,047 | | | |
| "B" | 4943+17.28 | 4954+50.23 | | X | 1132.95 | 24 | 2 | 5 | 0.90 | 0.25 | 0.25 | 0.25 | | 1,171 | 650 | 73 | 1,569 | | | |
| "B" | 4954+50.23 | 4959+59.38 | | X | 509.15 | 24 | 10.67 | 5 | 0.90 | 0.25 | 0.25 | 0.25 | | 673 | 374 | 74 | 941 | | | INCLUDES DIKE REMOVAL |
| "B" | 4959+59.38 | 5004+50.00 | | X | 4490.62 | 24 | 10 | 5 | 0.90 | 0.25 | 0.25 | 0.25 | | 5,838 | 3,243 | 624 | 8,083 | | | |
| "B" | 5004+50.00 | 5004+89.76 | | X | 39.76 | 24 | 11.2 | 5 | 0.90 | 0.25 | 0.25 | 0.25 | | 53 | 30 | 6 | 74 | | | CRCP TAPER, SEE Const DETAILS |
| "B" | 5004+89.76 | 5005+73.33 | | X | 83.57 | 24 | 12.46 | 5 | Var | 0.25 | 0.6 | 0.6 | 1 | 129 | 61 | 74 | 338 | 103.0 | | SEE REVISED Std PLAN P32A & BRIDGE PLANS |
| "B" | 5008+60.37 | 5009+40.37 | | X | 80.00 | 24 | 2 | 5 | Var | 0.25 | 0.6 | 0.6 | 1 | 97 | 46 | 55 | 253 | 77.0 | | SEE REVISED Std PLAN P32A & BRIDGE PLANS |
| "B" | 5009+40.37 | 5025+80.56 | | X | 1640.19 | 24 | 10 | 5 | 0.90 | 0.25 | 0.25 | 0.25 | | 2,132 | 1,185 | 228 | 2,952 | | | |
| "B" | 5025+80.56 | 5029+50.24 | | X | 369.68 | 24 | 2 | 5 | 0.90 | 0.25 | 0.25 | 0.25 | | 382 | 212 | 24 | 512 | | | |
| "B2RT" | 5029+50.24 | 5030+45.75 | | X | 95.51 | 24 | 2 | 5 | 0.90 | 0.25 | 0.25 | 0.25 | | 99 | 55 | 6 | 132 | | | |
| "B2RT" | 5030+45.75 | 5031+25.84 | | X | 80.09 | 24 | 2 | 5 | 0.90 | 0.25 | 0.6 | 0.6 | 1 | 97 | 46 | 55 | 253 | 77.0 | | SEE REVISED Std PLAN P32A |
| "4TH2" | 63+50.79 | 64+24.09 | | X | | | | | | | | | | | 4 | 4 | 17 | | 91 | SEE Const DETAILS |
| "4TH2" | 66+70.54 | 67+30.00 | | X | | | | | | | | | | | 6 | 2 | 8 | | 53 | SEE Const DETAILS |
| | | | | | | | | | | | | | SUB-TOTAL (Q-2) | 36,063 | 20,018 | 3,919 | 50,286 | 257 | 144 | |
| | | | | | | | | | | | | | SUB-TOTAL (Q-1) | 53,872 | 29,846 | 4,493 | 74,150 | 819 | 0 | |
| | | | | | | | | | | | | | TOTAL | 89,935 | 49,864 | 8,412 | 124,436 | 1,076 | 144 | |

(N) - NOT A SEPARATE PAY ITEM, FOR INFORMATION ONLY
* SEE ROADWAY QUANTITIES (RAMPS) TABLE AND STAGE CONSTRUCTION QUANTITY SHEETS FOR ADDITIONAL QUANTITIES.

## SUMMARY OF QUANTITIES
## Q-2

REVISED BY | DATE REVISED
CALCULATED-DESIGNED BY: RADHIKA MOTHKURI
CHECKED BY: JOHN HANSON
FUNCTIONAL SUPERVISOR: NICOLA BERNARD
STATE OF CALIFORNIA - DEPARTMENT OF TRANSPORTATION
Caltrans®
TRADE CORRIDOR IMPROVEMENT FUND

LAST REVISION 08-06-15 | DATE PLOTTED => 03-SEP-2015 | TIME PLOTTED => 14:06

BORDER LAST REVISED 7/2/2010 | USERNAME => s127400 | DGN FILE => 1114000006pa002.dgn | RELATIVE BORDER SCALE IS IN INCHES 0 1 2 3 | UNIT 2774 | PROJECT NUMBER & PHASE 11140000061

| Dist | COUNTY | ROUTE | POST MILES TOTAL PROJECT | SHEET No. | TOTAL SHEETS |
|---|---|---|---|---|---|
| 11 | Imp | 8 | R90.0/R96.8 | 136 | 209 |

Dylan Moore 05-04-15
REGISTERED CIVIL ENGINEER DATE

08-31-15
PLANS APPROVAL DATE

REGISTERED PROFESSIONAL ENGINEER — DYLAN S. MOORE No. 74711 Exp. 12-31-15 CIVIL — STATE OF CALIFORNIA

THE STATE OF CALIFORNIA OR ITS OFFICERS OR AGENTS SHALL NOT BE RESPONSIBLE FOR THE ACCURACY OR COMPLETENESS OF SCANNED COPIES OF THIS PLAN SHEET.

## DOWNDRAIN QUANTITIES

| LOCATION | | | | REMOVE DOWNDRAIN (EA) | 12" CORRUGATED STEEL PIPE DOWNDRAIN (0.079" THICK) | REMARKS |
|---|---|---|---|---|---|---|
| LINE | STATION | SIDE L† | SIDE R† | EA | LF | |
| "B" | 4917+95.00 | X | | 1 | 30 | WB ROUTE 8 |
| "B" | 4918+85.00 | | X | 1 | 10 | EB ROUTE 8 |
| "B" | 4951+04.00 | X | | 1 | 20 | WB ROUTE 8 |
| "B" | 4954+50.80 | | X | 1 | 34 | EB ROUTE 8 |
| "C2" | 4928+24.00 | | X | 1 | 45 | EB OFF-RAMP |
| "C1" | 4941+78.00 | | X | 1 | 45 | EB ON-RAMP |
| "C1" | 4943+32.00 | | X | 1 | 21 | EB ON-RAMP |
| "C4" | 4944+61.00 | X | | 1 | 18 | WB OFF-RAMP |
| "C3" | 4927+76.00 | X | | 1 | 17 | WB ON-RAMP |
| "H2" | 5010+50.00 | | X | 1 | 38 | EB OFF-RAMP |
| "H1" | 5024+50.00 | | X | 1 | 53 | EB ON-RAMP |
| "H3" | 5012+00.00 | X | | 1 | 28 | WB ON-RAMP |
| "H4" | 5024+80.00 | X | | 1 | 32 | WB OFF-RAMP |
| TOTAL | | | | 13 | 391 | |

## OVERSIDE DRAIN QUANTITIES

| LOCATION | | | | REMOVE ASPHALT CONCRETE OVERSIDE DRAIN (EA) | PLACE HOT MIX ASPHALT (MISCELLANEOUS AREA) | | | | MINOR HOT MIX ASPHALT * | REMARKS |
|---|---|---|---|---|---|---|---|---|---|---|
| LINE | STATION | SIDE L† | SIDE R† | EA | GUTTER SQYD | DITCH LENGTH (N) LF | DITCH WIDTH (N) LF | DITCH SQYD | TON | |
| "A3" | 4699+87.00 | X | | 1 | 5.90 | 15 | 3.3 | 5.50 | 0.95 | WB ON-RAMP FROM ROUTE 186 |
| "A3" | 4705+48.00 | X | | 1 | 5.90 | 20 | 3.3 | 7.33 | 1.10 | WB ON-RAMP FROM ROUTE 186 |
| "A2" | 4701+83.00 | | X | 1 | 5.90 | 20 | 3.3 | 7.33 | 1.10 | EB OFF-RAMP TO ROUTE 186 |
| "A2" | 4708+13.00 | | X | 1 | 5.90 | 18 | 3.3 | 6.60 | 1.04 | EB OFF-RAMP TO ROUTE 186 |
| "A1" | 4711+86.00 | | X | 1 | 5.90 | 17 | 3.3 | 6.23 | 1.01 | EB ON RAMP TO ROUTE 186 |
| "A4" | 4716+26.00 | X | | 1 | 5.90 | 15 | 3.3 | 5.50 | 0.95 | WB OFF-RAMP TO ROUTE 186 |
| "B" | 4753+63.00 | | X | 1 | 7.04 | 30 | 3.3 | 11.00 | 1.50 | OVERSIDE DRAIN/EB ROUTE 8 |
| "B" | 4754+25.00 | X | | 1 | 7.04 | 30 | 3.3 | 11.00 | 1.50 | OVERSIDE DRAIN/WB ROUTE 8 |
| SUBTOTAL | | | | 8 | 49.48 | | | 60.49 | 9.15 | |
| TOTAL | | | | 8 | 109.97 | | | | 9.15 | |

(N) - NOT A SEPARATE PAY ITEM, FOR INFORMATION ONLY
* SEE DIKE QUANTITIES FOR ADDITIONAL QUANTITIES.

## JOINT SEAL (PREFORMED COMPRESSION)

| LOCATION | | | | | | JOINT SEAL (PREFORMED COMPRESSION) |
|---|---|---|---|---|---|---|
| LINE | STATION LIMITS BEGIN | STATION LIMITS END | DIRECTION EB | DIRECTION WB | SIDE INSIDE ETW | SIDE OUTSIDE ETW | LF |
| "B" | 4672+10.00 | 4724+11.28 | X | | X | | 5,201 |
| "B" | 4672+10.00 | 4724+12.75 | X | | | X | 5,203 |
| "B" | 4728+32.45 | 5005+73.33 | X | | X | | 27,741 |
| "B" | 4728+30.36 | 5005+69.71 | X | | | X | 27,739 |
| "B" | 5008+60.37 | 5029+50.24 | X | | X | | 2,090 |
| "B" | 5008+60.37 | 5029+50.24 | X | | | X | 2,090 |
| "B2RT" | 5029+50.24 | 5031+25.77 | X | | X | | 176 |
| "B2RT" | 5029+50.24 | 5031+25.83 | X | | | X | 176 |
| "B" | 4672+10.00 | 4724+10.91 | | X | X | | 5,201 |
| "B" | 4672+10.00 | 4724+09.60 | | X | | X | 5,200 |
| "B" | 4728+69.13 | 5006+14.50 | | X | X | | 27,745 |
| "B" | 4728+70.81 | 5006+14.50 | | X | | X | 27,744 |
| "B" | 5009+10.08 | 5029+50.24 | | X | X | | 2,040 |
| "B" | 5009+08.54 | 5029+50.24 | | X | | X | 2,042 |
| "B2LT" | 5029+50.24 | 5031+25.77 | | X | X | | 176 |
| "B2LT" | 5029+50.24 | 5031+25.71 | | X | | X | 176 |
| | | | | | | TOTAL | 140,740 |

# SUMMARY OF QUANTITIES

# Q-3

STATE OF CALIFORNIA - DEPARTMENT OF TRANSPORTATION
Caltrans®
TRADE CORRIDOR IMPROVEMENT FUND

FUNCTIONAL SUPERVISOR: NICOLA BERNARD
CALCULATED-DESIGNED BY: RADHIKA MOTHKHURI
CHECKED BY: JOHN HANSON
REVISED BY
DATE REVISED

LAST REVISION DATE PLOTTED => 03-SEP-2015
08-06-15 TIME PLOTTED => 14:06

| Dist | COUNTY | ROUTE | POST MILES TOTAL PROJECT | SHEET No. | TOTAL SHEETS |
|---|---|---|---|---|---|
| 11 | Imp | 8 | R90.0/R96.8 | 137 | 209 |

Dylan Moore 05-04-15
REGISTERED CIVIL ENGINEER DATE

08-31-15
PLANS APPROVAL DATE

REGISTERED PROFESSIONAL ENGINEER — DYLAN S. MOORE No. 74711 Exp. 12-31-15 CIVIL — STATE OF CALIFORNIA

THE STATE OF CALIFORNIA OR ITS OFFICERS OR AGENTS SHALL NOT BE RESPONSIBLE FOR THE ACCURACY OR COMPLETENESS OF SCANNED COPIES OF THIS PLAN SHEET.

## CRCP TERMINAL JOINTS

| LOCATION | | | | CONTINUOUSLY REINFORCED CONCRETE PAVEMENT (TERMINAL JOINT TYPE D) (N) | CONTINUOUSLY REINFORCED CONCRETE PAVEMENT (TERMINAL JOINT TYPE E) (N) | CONTINUOUSLY REINFORCED CONCRETE PAVEMENT (EXPANSION JOINT TYPE WF) (N) | CONTINUOUSLY REINFORCED CONCRETE PAVEMENT (WIDE FLANGE BEAM TERMINAL) (N) | JOINT SEAL (TYPE A) | JOINT SEAL (MR 2") |
|---|---|---|---|---|---|---|---|---|---|
| LINE | STATION | SIDE L+ | SIDE R+ | LF | LF | LF | LF | LF | LF |
| "B" | 4672+10.00 | X | | 39 | | | | | |
| "B" | 4672+45.00 | X | | | | 39 | | | 39 |
| "B" | 4672+65.00 | X | | | | | 39 | 39 | |
| "B" | 4723+54.49 | X | | | | | 31 | 31 | |
| "B" | 4723+74.49 | X | | | | 31 | | | 31 |
| "B" | 4724+09.49 | X | | | 31 | | | | |
| "B" | 4728+71.40 | X | | | 39 | | | | |
| "B" | 4729+06.40 | X | | | | 39 | | | 39 |
| "B" | 4729+26.40 | X | | | | | 39 | 39 | |
| "B" | 5005+59.50 | X | | | | | 49 | 49 | |
| "B" | 5005+79.50 | X | | | | 50 | | | 50 |
| "B" | 5006+14.50 | X | | | 50 | | | | |
| "B" | 5009+10.40 | X | | | 31 | | | | |
| "B" | 5009+45.40 | X | | | | 31 | | | 31 |
| "B" | 5009+65.40 | X | | | | | 31 | 31 | |
| "B" | 5030+70.79 | X | | | | | 31 | 31 | |
| "B" | 5030+90.79 | X | | | | 31 | | | 31 |
| "B" | 5031+25.79 | X | | 31 | | | | | |
| "B" | 4672+10.00 | | X | 39 | | | | | |
| "B" | 4672+45.00 | | X | | | 39 | | | 39 |
| "B" | 4672+65.00 | | X | | | | 39 | 39 | |
| "B" | 4723+56.28 | | X | | | | 31 | 31 | |
| "B" | 4723+76.28 | | X | | | 31 | | | 31 |
| "B" | 4724+12.85 | | X | | 31 | | | | |
| "B" | 4728+69.13 | | X | | 39 | | | | |
| "B" | 4729+06.40 | | X | | | 39 | | | 39 |
| "B" | 4729+26.40 | | X | | | | 39 | 39 | |
| "B" | 5005+14.76 | | X | | | | 49 | 49 | |
| "B" | 5005+34.76 | | X | | | 50 | | | 50 |
| "B" | 5005+73.33 | | X | | 50 | | | | |
| "B" | 5008+60.37 | | X | | 31 | | | | |
| "B" | 5008+95.37 | | X | | | 31 | | | 31 |
| "B" | 5009+15.37 | | X | | | | 31 | 31 | |
| "B" | 5030+70.75 | | X | | | | 31 | 31 | |
| "B" | 5030+90.75 | | X | | | 31 | | | 31 |
| "B" | 5031+25.84 | | X | 31 | | | | | |
| TOTAL | | | | | | | | 440 | 442 |

(N) - NOT A SEPARATE PAY ITEM, FOR INFORMATION ONLY

## EXISTING CALL BOXES TO BE RELOCATED BY OTHERS

| LINE | STATION | DIRECTION EB | DIRECTION WB | CALL BOX ID | RELOCATE BOXES (N) EA |
|---|---|---|---|---|---|
| "B" | 4779+15 | X | | 8-920 | 1 |
| "B" | 4883+30 | X | | 8-940 | 1 |
| "B" | 4889+05 | X | | 8-960 | 1 |
| "B" | 4673+50 | | X | 8-901 | 1 |
| "B" | 4779+00 | | X | 8-921 | 1 |
| "B" | 4883+30 | | X | 8-941 | 1 |
| "B" | 4984+25 | | X | 8-961 | 1 |
| | | | | TOTAL | 7 |

## SHOULDER RUMBLE STRIP (CONCRETE PAVEMENT, GROUND-IN INDENTATIONS)

| LOCATION LINE | LOCATION STATION LIMITS | | SIDE L+ | SIDE R+ | INSIDE SHOULDER STA | OUTSIDE SHOULDER STA |
|---|---|---|---|---|---|---|
| "B" | 4672+10.00 | 4693+92.55 | X | | 21.8 | 21.8 |
| "B" | 4693+92.55 | 4704+96.86 | X | | 11.0 | - |
| "B" | 4704+96.86 | 4718+78.89 | X | | 13.8 | 13.8 |
| "B" | 4718+78.89 | 4724+09.49 | X | | 5.3 | - |
| "B" | 4728+71.40 | 4916+93.68 | X | | 188.2 | 188.2 |
| "B" | 4916+93.68 | 4927+97.80 | X | | 11.0 | - |
| "B" | 4927+97.80 | 4943+47.36 | X | | 15.5 | 15.5 |
| "B" | 4943+47.36 | 4948+45.22 | X | | 5.0 | - |
| "B" | 4948+45.22 | 5001+00.00 | X | | 52.5 | 52.5 |
| "B" | 5001+00.00 | 5006+17.63 | X | | 5.2 | - |
| "B" | 5008+93.67 | 5010+44.46 | X | | 1.5 | - |
| "B" | 5010+44.46 | 5027+36.65 | X | | 16.9 | 16.9 |
| "B" | 5027+36.65 | 5031+25.71 | X | | 3.9 | - |
| "B" | 4672+10.00 | 4697+71.08 | | X | 25.6 | 25.6 |
| "B" | 4697+71.08 | 4702+21.55 | | X | 4.5 | - |
| "B" | 4702+21.55 | 4717+88.99 | | X | 15.7 | 15.7 |
| "B" | 4717+88.99 | 4724+11.28 | | X | 6.2 | - |
| "B" | 4728+59.90 | 4921+27.80 | | X | 192.7 | 192.7 |
| "B" | 4921+27.80 | 4926+24.67 | | X | 5.0 | - |
| "B" | 4926+24.67 | 4943+17.28 | | X | 16.9 | 16.9 |
| "B" | 4943+17.28 | 4954+50.23 | | X | 11.3 | - |
| "B" | 4954+50.23 | 5005+80.78 | | X | 51.3 | 51.3 |
| "B" | 5008+57.46 | 5009+35.34 | | X | 0.8 | - |
| "B" | 5009+35.34 | 5025+80.56 | | X | 16.5 | 16.5 |
| "B" | 5025+80.56 | 5031+25.75 | | X | 5.5 | - |
| | | SUBTOTAL | | | 703.6 | 627.4 |
| | | TOTAL | | | 1,331.0 | |

## DETECTABLE WARNING SURFACE

| DESCRIPTION | SQFT |
|---|---|
| FROM SHEET C-11 | 15.0 |
| GRAND TOTAL | 15.0 |

## DELINEATORS (CLASS 1)

| LOCATION LINE | STATION LIMITS BEGIN | STATION LIMITS END | DIRECTION EB | DIRECTION WB | SIDE R+ | SIDE L+ | DELINEATORS (CLASS 1) EA TYPE F | EA TYPE G |
|---|---|---|---|---|---|---|---|---|
| "B" | 4694+50 | 4724+12 | X | | X | | 13 | 6 |
| "B" | 4917+64 | 4954+50 | X | | X | | 16 | 6 |
| "B" | 5001+50 | 5031+25 | X | | X | | 13 | 3 |
| "B" | 4693+92 | 4724+09 | | X | X | | 17 | 5 |
| "B" | 4916+94 | 4951+40 | | X | X | | 15 | 2 |
| "B" | 5001+00 | 5031+25 | | X | X | | 28 | 6 |
| | | | | | | TOTAL | 130 | |

## MINOR CONCRETE

| LOCATION LINE | STATION LIMITS BEGIN | STATION LIMITS END | MINOR CONCRETE (MISCELLANEOUS CONSTRUCTION) CY | REMARKS |
|---|---|---|---|---|
| "CR1" | 9+33.79 | 10+07.85 | 4.5 | CURB AND GUTTER |
| "CR1" | 9+33.79 | 10+07.85 | 3.8 | SIDEWALK |
| "CR2" | 10+00.00 | 10+28.00 | 1.7 | CURB AND GUTTER |
| "CR2" | 10+00.00 | 10+28.00 | 1.5 | SIDEWALK |
| | | TOTAL | 11.5 | |

## SUMMARY OF QUANTITIES

Q-4

CALCULATED-DESIGNED BY: RADHIKA MOTHKURI
CHECKED BY: DYLAN MOORE
REVISED BY
DATE REVISED
FUNCTIONAL SUPERVISOR: NICOLA BERNARD

STATE OF CALIFORNIA - DEPARTMENT OF TRANSPORTATION
TRADE CORRIDOR IMPROVEMENT FUND

LAST REVISION | DATE PLOTTED => 03-SEP-2015 | TIME PLOTTED => 14:06 | 08-06-15

BORDER LAST REVISED 7/2/2010 | USERNAME => s127400 | DGN FILE => 1114000006pa004.dgn | RELATIVE BORDER SCALE IS IN INCHES 0 1 2 3 | UNIT 2774 | PROJECT NUMBER & PHASE 11140000061

| Dist | COUNTY | ROUTE | POST MILES TOTAL PROJECT | SHEET No. | TOTAL SHEETS |
|---|---|---|---|---|---|
| 11 | Imp | 8 | R90.0/R96.8 | 138 | 209 |

05-04-15
REGISTERED CIVIL ENGINEER DATE

08-31-15
PLANS APPROVAL DATE

REGISTERED PROFESSIONAL ENGINEER
DYLAN S. MOORE
No. 74711
Exp. 12-31-15
CIVIL
STATE OF CALIFORNIA

THE STATE OF CALIFORNIA OR ITS OFFICERS OR AGENTS SHALL NOT BE RESPONSIBLE FOR THE ACCURACY OR COMPLETENESS OF SCANNED COPIES OF THIS PLAN SHEET.

# MIDWEST GUARDRAIL SYSTEM

| MGS No. (#) | LOCATION | DIRECTION | LAYOUT | MIDWEST GUARDRAIL SYSTEM | DOUBLE MIDWEST GUARDRAIL SYSTEM (WOOD POST) | MINOR CONCRETE (MINOR STRUCTURE) | TRANSITION RAILING (TYPE WB-31) | END ANCHOR ASSEMBLY (TYPE SFT) | ALTERNATIVE MEDIAN CRASH CUSHION SYSTEM | ALTERNATIVE IN-LINE TERMINAL SYSTEM | ALTERNATIVE FLARED TERMINAL SYSTEM | RAIL TENSIONING ASSEMBLY | GUARD RAILING DELINEATOR TYPE F | GUARD RAILING DELINEATOR TYPE G | REMOVE GUARDRAIL | TREATED WOOD WASTE | REMOVE METAL RAILING | REMARKS |
|---|---|---|---|---|---|---|---|---|---|---|---|---|---|---|---|---|---|---|
| | | | (N) | LF | LF | CY | EA | EA | EA | EA | EA | EA | EA | EA | LF | LB | LF | |
| 1 | ROUTE 186/ 8 SEPARATION (PM R90.74) | EB | 14A | 25.0 | 37.5 | | | 1 | 1 | | | 1 | | | | | | |
| | | WB | 14A | 25.0 | 37.5 | | | 1 | 1 | | | 1 | | | | | | |
| | | EB/WB | | | | | | | | | | | | | 150.0 | 1,500 | | INCLUDES END TREATMENT |
| 2 | ALL AMERICAN CANAL (PM R91.03) | EB-R† | 12B | 50.0 | | 1.1 | 1 | | | | 1 | | 2 | | | | | 4723+78.42 TO 4724+28.42 "B" |
| | | EB-R† | | | | | | | | | | | | | 75.0 | 750.0 | | |
| 3 | ALL AMERICAN CANAL (PM R91.03) | EB-L† | 12E | 62.5 | 112.5 | 1.1 | 1 | | 1 | | | 1 | | 8 | | | | 4724+25.39 TO 4726+00.39 "B" |
| | | EB-L† | | | | | | | | | | | | | 87.5 | 875 | | |
| 4 | ALL AMERICAN CANAL (PM R91.03) | WB-L† | 12B | 37.5 | | 1.1 | 1 | | | | 1 | | 2 | | | | | 4728+58.48 TO 4728+95.98 B" |
| | | WB-L† | | | | | | | | | | | | | 62.5 | 625 | | |
| 5 | ALL AMERICAN CANAL (PM R91.03) | WB-R† | 12E | 62.5 | 125.0 | 1.1 | 1 | | 1 | | | 1 | | 8 | | | | 4728+54.62 TO 4730+29.62 "B" |
| | | WB-R† | | | | | | | | | | | | | 87.5 | 875 | | |
| 6 | SEMINOLE Rd OC (PM R91.73) | EB | 14A | 25.0 | 37.5 | | | 1 | 1 | | | 1 | | | | | | |
| | | WB | 14A | 25.0 | 37.5 | | | 1 | 1 | | | 1 | | | | | | |
| | | EB/WB | | | | | | | | | | | | | 150.0 | 1,500 | | INCLUDES END TREATMENT |
| 7 | WINTERHAVEN Dr OC (PM R94.98) | EB | 14A | 25.0 | 37.5 | | | 1 | 1 | | | 1 | | | | | | |
| | | WB | 14A | 25.0 | 37.5 | | | 1 | 1 | | | 1 | | | | | | |
| | | EB/WB | | | | | | | | | | | | | 150.0 | 1,500 | | INCLUDES END TREATMENT |
| 8 | CALIFORNIA WASTEWAY (PM R96.35) | EB-R† | 12B | 25.0 | | 1.1 | 1 | | | | 1 | | 2 | | | | | 5005+38.42 TO 5005+88.42 "B" |
| | | EB-R† | | | | | | | | | | | | | 75.0 | 750 | | |
| 9 | CALIFORNIA WASTEWAY (PM R96.35) | EB-L† | 12E | 25.0 | 62.5 | 1.1 | 1 | | 1 | | | 1 | | 4 | | | | 5006+16.23 TO 5007+16.23 "B" |
| | | EB-L† | | | | | | | | | | | | | 100.0 | 1,000 | | |
| 10 | CALIFORNIA WASTEWAY (PM R96.35) | WB-L† | 12B | 12.5 | | 1.1 | 1 | | | | 1 | | 2 | | | | | 5008+92.97 TO 5009+30.47 "B" |
| | | WB-L† | | | | | | | | | | | | | 62.5 | 625 | | |
| 11 | CALIFORNIA WASTEWAY (PM R96.35) | WB-R† | 12E | 25.0 | 50.0 | 1.1 | 1 | | 1 | | | 1 | | 3 | | | | 5008+93.51 TO 5009+31.01 "B" |
| | | WB-R† | | | | | | | | | | | | | 100.0 | 1,000 | | |
| 12 | FOURTH Ave OC (PM R96.55) | EB | 14A | 62.5 | 37.5 | | | 1 | 1 | | | 1 | | | | | | |
| | | WB | 14A | 62.5 | 37.5 | | | 1 | 1 | | | 1 | | | | | | |
| | | EB/WB | | | | | | | | | | | | | 250 | 2,500 | | |
| | | NB | | | | | | | | | | | | | | | 72 | 63+55.59 TO 64+24.09 "4TH2" |
| | | NB | | | | | | | | | | | | | | | 52 | 66+70.70 TO 67+18.30 "4TH2" |
| 13 | COLORADO RIVER VIADUCT (PM R96.78) | EB-R† | 12B | 112.5 | | 0.9 | 1 | | | | 1 | | 6 | | | | | 5029+91.76 TO 5031+29.26 "B2RT" |
| | | EB-R† | | | | | | | | | | | | | 200 | 2,000 | | |
| 14 | COLORADO RIVER VIADUCT (PM R96.78) | EB-L† | 12E | 25.0 | 50.0 | 0.9 | 1 | | 1 | | | 1 | | 4 | | | | 5030+41.35 TO 5031+41.35 "B2RT" |
| | | EB-L† | | | | | | | | | | | | | 150.0 | 1,500 | | |
| 15 | COLORADO RIVER VIADUCT (PM R96.78) | WB-L† | 12A | 37.5 | | 0.9 | 1 | | | | | | 1 | | | | | 5031+00.17 TO 5031+37.67 "B2LT" |
| | | WB-L† | | | | | | | | 1 | | | | | 62.5 | 625 | | |
| | | TOTALS | | 750.0 | 700.0 | 11.5 | 11 | 8 | 13 | 1 | 5 | 13 | 42 | | 1,762.5 | 17,625 | 124 | |

# SUMMARY OF QUANTITIES
## Q-5

CALCULATED-DESIGNED BY: RADHIKA MOTHKURI
CHECKED BY: DYLAN MOORE
REVISED BY
DATE REVISED
FUNCTIONAL SUPERVISOR: NICOLA BERNARD

STATE OF CALIFORNIA - DEPARTMENT OF TRANSPORTATION
Caltrans
TRADE CORRIDOR IMPROVEMENT FUND

LAST REVISION | DATE PLOTTED => 03-SEP-2015
08-06-15 | TIME PLOTTED => 14:06

BORDER LAST REVISED 7/2/2010
USERNAME => s127400
DGN FILE => 1114000006pa005.dgn
RELATIVE BORDER SCALE IS IN INCHES 0 1 2 3
UNIT 2774
PROJECT NUMBER & PHASE 11140000061

| Dist | COUNTY | ROUTE | POST MILES TOTAL PROJECT | SHEET No. | TOTAL SHEETS |
|---|---|---|---|---|---|
| 11 | Imp | 8 | R90.0/R96.8 | 139 | 209 |

05-04-15
REGISTERED CIVIL ENGINEER DATE

08-31-15
PLANS APPROVAL DATE

REGISTERED PROFESSIONAL ENGINEER
DYLAN S. MOORE
No. 74711
Exp. 12-31-15
CIVIL
STATE OF CALIFORNIA

THE STATE OF CALIFORNIA OR ITS OFFICERS OR AGENTS SHALL NOT BE RESPONSIBLE FOR THE ACCURACY OR COMPLETENESS OF SCANNED COPIES OF THIS PLAN SHEET.

# DIKE QUANTITIES

| LINE | STATION BEGIN | STATION END | SIDE L† | SIDE R† | TYPE C | TYPE E | TYPE F | PLACE HOT MIX ASPHALT DIKE (TYPE C) LF | PLACE HOT MIX ASPHALT DIKE (TYPE E) LF | PLACE HOT MIX ASPHALT DIKE (TYPE F) LF | MINOR HOT MIX ASPHALT * TON | ASPHALTIC EMULSION (FOG SEAL COAT) ** TON | EMBANKMENT (N) CY | REMARKS |
|---|---|---|---|---|---|---|---|---|---|---|---|---|---|---|
| "B" | 4694+60.87 | 4699+49.19 | | X | | X | | | 488 | | 14.89 | 0.017 | 16.1 | EB ROUTE 8 |
| "B" | 4747+00.00 | 4753+50.00 | | X | | X | | | 650 | | 19.83 | 0.023 | 21.5 | EB ROUTE 8 |
| "B" | 4917+63.71 | 4923+50.05 | | X | | X | | | 586 | | 17.88 | 0.021 | 19.3 | EB ROUTE 8 |
| "B" | 4948+50.05 | 4959+59.38 | | X | | X | | | 1,109 | | 33.83 | 0.039 | 36.6 | EB ROUTE 8 |
| "B" | 5004+75.92 | 5005+38.42 | | X | X | | | 63 | | | 0.48 | 0.002 | | EB ROUTE 8 |
| "B" | 5005+41.05 | 5005+91.42 | | X | | | X | | | 50 | 0.66 | 0.002 | | EB ROUTE 8 |
| "B" | 4695+33.40 | 4699+49.19 | X | | | X | | | 416 | | 12.68 | 0.015 | 13.7 | WB ROUTE 8 |
| "B" | 4735+64.03 | 4754+70.00 | X | | | X | | | 1,906 | | 58.13 | 0.067 | 62.9 | WB ROUTE 8 |
| "B" | 4915+84.70 | 4922+50.05 | X | | | X | | | 665 | | 20.29 | 0.023 | 22.0 | WB ROUTE 8 |
| "B" | 4946+50.05 | 4951+40.28 | X | | | X | | | 490 | | 14.95 | 0.017 | 16.2 | WB ROUTE 8 |
| "B2LT" | 5030+00.15 | 5030+37.67 | X | | | X | | | 38 | | 1.14 | 0.001 | 1.2 | WB ROUTE 8 |
| "B2LT" | 5030+37.67 | 5031+00.17 | X | | X | | | | 63 | | 1.09 | 0.002 | 2.1 | WB ROUTE 8 |
| "B2LT" | 5031+00.17 | 5031+37.67 | X | | | | X | | 38 | | 0.87 | 0.001 | 1.2 | WB ROUTE 8 |
| "A1" | 4710+45.00 | 4714+90.00 | | X | | X | | | 445 | | 17.98 | 0.016 | 14.7 | EB ON-RAMP/ROUTE 186 |
| "A1" | 4710+45.00 | 4711+50.00 | X | | | X | | | 105 | | 4.24 | 0.004 | 3.5 | EB ON-RAMP/ROUTE 186 |
| "A2" | 4699+49.19 | 4703+98.00 | | X | | X | | | 449 | | 18.13 | 0.016 | 14.8 | EB OFF-RAMP/ROUTE 186 |
| "A2" | 4708+00.00 | 4711+34.00 | | X | | X | | | 334 | | 13.49 | 0.012 | 11.0 | EB OFF-RAMP/ROUTE 186 |
| "A3" | 4699+49.19 | 4711+10.00 | X | | | X | | | 1,161 | | 46.90 | 0.041 | 38.3 | WB ON-RAMP/ROUTE 186 |
| "A4" | 4711+72.00 | 4712+60.00 | | X | | X | | | 88 | | 3.56 | 0.003 | 2.9 | WB OFF-RAMP/ROUTE 186 |
| "A4" | 4712+20.00 | 4716+50.00 | X | | | X | | | 430 | | 17.37 | 0.015 | 14.2 | WB OFF-RAMP/ROUTE 186 |
| "C1" | 4935+06.00 | 4935+80.00 | X | | | X | | | 74 | | 2.99 | 0.003 | 2.4 | EB ON-RAMP/WINTERHAVEN Dr |
| "C1" | 4935+06.00 | 4948+50.05 | | X | | X | | | 1,344 | | 54.30 | 0.047 | 44.4 | EB ON-RAMP/WINTERHAVEN Dr |
| "C2" | 4923+50.05 | 4935+02.00 | | X | | X | | | 1,152 | | 46.54 | 0.002 | 38.0 | EB OFF-RAMP/WINTERHAVEN Dr |
| "C2" | 4934+10.00 | 4935+02.00 | X | | | X | | | 92 | | 3.72 | 0.011 | 3.0 | EB OFF-RAMP/WINTERHAVEN Dr |
| "C3" | 4922+50.05 | 4935+81.00 | X | | | X | | | 1,331 | | 53.77 | 0.011 | 43.9 | WB ON-RAMP/WINTERHAVEN Dr |
| "C3" | 4934+90.00 | 4935+81.00 | X | | | X | | | 91 | | 3.68 | 0.002 | 3.0 | WB ON -RAMP/WINTERHAVEN Dr |
| "C4" | 4934+15.66 | 4935+20.00 | | X | | X | | | 104 | | 4.22 | 0.004 | 3.4 | WB OFF-RAMP/WINTERHAVEN Dr |
| "C4" | 4934+15.66 | 4946+50.05 | X | | | X | | | 1,234 | | 49.87 | 0.044 | 40.7 | WB OFF-RAMP/WINTERHAVEN Dr |
| "H1" | 5018+57.00 | 5029+29.23 | | X | | X | | | 1,072 | | 43.32 | 0.038 | 35.4 | EB ON-RAMP/4TH Ave |
| "H1" | 5029+29.23 | 5029+91.73 | | X | X | | | 63 | | | 1.09 | 0.002 | | EB ON-RAMP/4TH Ave |
| "H1" | 5029+91.73 | 5030+29.23 | | X | | | X | | | 38 | 0.87 | 0.001 | | EB ON-RAMP/4TH Ave |
| "H2" | 5008+10.00 | 5018+35.00 | | X | | X | | | 1,025 | | 41.41 | 0.002 | 33.8 | EB OFF-RAMP/4TH Ave |
| "H2" | 5017+00.00 | 5018+35.00 | X | | | X | | | 135 | | 5.45 | 0.011 | 4.5 | EB OFF-RAMP/4TH Ave |
| "H3" | 5008+96.51 | 5009+31.01 | X | | X | | | | 35 | | 1.39 | 0.011 | 1.1 | WB ON-RAMP/4TH Ave |
| "H3" | 5009+31.01 | 5009+93.51 | X | | | | X | | 63 | | 2.53 | 0.011 | 2.1 | WB ON-RAMP/4TH Ave |
| "H3" | 5009+93.51 | 5017+13.00 | X | | | X | | | 719 | | 29.07 | 0.025 | 23.7 | WB ON-RAMP/4TH Ave |
| "H3" | 5016+00.00 | 5017+13.00 | | X | | X | | | 113 | | 4.57 | 0.004 | 3.7 | WB ON-RAMP/4TH Ave |
| "H4" | 5016+26.00 | 5030+00.15 | X | | | X | | | 1,374 | | 55.52 | 0.002 | 45.3 | WB OFF-RAMP/4TH Ave |
| | | | | | | | TOTAL | 126 | 19,419 | 88 | 722.70 | 0.568 | | |

* SEE OVERSIDE DRAIN QUANTITIES TABLE FOR ADDITIONAL QUANTITIES.
** SEE ROADWAY QUANTITIES (RAMPS) TABLE FOR ADDITIONAL QUANTITIES.

# SUMMARY OF QUANTITIES
## Q-6

REVISED BY | DATE REVISED
CALCULATED-DESIGNED BY: SIRAJUL RONI
CHECKED BY: DYLAN MOORE
FUNCTIONAL SUPERVISOR: NICOLA BERNARD
STATE OF CALIFORNIA - DEPARTMENT OF TRANSPORTATION
Caltrans®
TRADE CORRIDOR IMPROVEMENT FUND

LAST REVISION DATE PLOTTED => 03-SEP-2015
08-07-15 TIME PLOTTED => 14:06

| Dist | COUNTY | ROUTE | POST MILES TOTAL PROJECT | SHEET No. | TOTAL SHEETS |
|---|---|---|---|---|---|
| 11 | Imp | 8 | R90.0/R96.8 | 140 | 209 |

05-04-15
REGISTERED CIVIL ENGINEER DATE

08-31-15
PLANS APPROVAL DATE

REGISTERED PROFESSIONAL ENGINEER
DYLAN S. MOORE
No. 74711
Exp. 12-31-15
CIVIL
STATE OF CALIFORNIA

THE STATE OF CALIFORNIA OR ITS OFFICERS OR AGENTS SHALL NOT BE RESPONSIBLE FOR THE ACCURACY OR COMPLETENESS OF SCANNED COPIES OF THIS PLAN SHEET.

# ROADWAY QUANTITIES (RAMPS)

| LOCATION | | | LENGTH (N) | WIDTH (N) | | | TOTAL AREA (N) (LANE +Shld + GORE) | DEPTH (N) | | | | | HOT MIX ASPHALT (TYPE A) * | RUBBERIZED HOT MIX ASPHALT (GAP GRADED) | CLASS 2 AB * | ROADWAY EXCAVATION * | CLASS 4 AS | TACK COAT | AREA (N) (FOG SEAL COAT) | ASPHALTIC EMULSION ** (FOG SEAL COAT) | REMARKS |
|---|---|---|---|---|---|---|---|---|---|---|---|---|---|---|---|---|---|---|---|---|---|
| | STATION | LIMITS | | LANE | OUTSIDE SHOULDER | INSIDE SHOULDER | | HMA-A | RHMA-G | CLASS 2 AB (LANES) | CLASS 2 AB (SHOULDERS) | CLASS 4 AS | | | | | | | | | |
| LINE | BEGIN | END | LF | LF | LF | LF | SQFT | LF | LF | LF | LF | LF | TON | TON | CY | CY | CY | TON | SQYD | TON | |
| "A1" | 4710+68.30 | 4714+75.00 | 406.70 | 12 | 8 | 2 | 12,692.56 | 0.15 | 0.15 | | | | 99 | 99 | | 105 | | 0.35 | 868.02 | 0.22 | EB ON-RAMP/ROUTE 186 |
| "A1" | 4714+75.00 | 4718+10.00 | 335.00 | 12 | 8 | 2 | 7370.00 | 0.35 | 0.15 | 1.1 | 1.1 | 0.75 | 191 | 82 | 300 | 646 | 205 | 0.20 | 372.22 | 0.09 | EB ON-RAMP/ROUTE 186 |
| "A1" | 4718+10.00 | 4723+49.19 | 539.19 | 12 | 8 | 2 | 13,912.90 | 0.15 | 0.15 | | | | 132 | 132 | | 139 | | 0.39 | 826.96 | 0.21 | EB ON-RAMP/ROUTE 186 |
| "B" | 4723+49.19 | 4724+12.85 | 63.66 | 4.25 | 8 | | 1,222.52 | 0.15 | 0.15 | | | | 9 | 9 | | 9 | | 0.03 | 105.77 | 0.03 | WB ON-RAMP/ROUTE 186 |
| "B" | 4697+71.08 | 4699+49.19 | 178.11 | 4.75 | 8 | | 2,078.80 | 0.15 | 0.15 | | | | 25 | 25 | | 28 | | 0.06 | 136.98 | 0.03 | EB OFF-RAMP/ROUTE 186 |
| "A2" | 4699+49.19 | 4711+21.00 | 1171.81 | 12 | 8 | 2 | 29,939.37 | 0.15 | 0.15 | | | | 286 | 286 | | 302 | | 0.83 | 1,764.18 | 0.44 | EB OFF-RAMP/ROUTE 186 |
| "B" | 4693+92.55 | 4699+49.19 | 556.64 | 4.25 | 8 | | 6,616.60 | 0.15 | 0.15 | | | | 76 | 76 | | 83 | | 0.18 | 472.32 | 0.12 | WB ON-RAMP/ROUTE 186 |
| "A3" | 4699+49.19 | 4712+10.00 | 1260.81 | 12 | 8 | 2 | 31,646.99 | 0.15 | 0.15 | | | | 308 | 308 | | 325 | | 0.88 | 1,835.25 | 0.46 | WB ON-RAMP/ROUTE 186 |
| "A4" | 4711+87.04 | 4716+00.00 | 412.96 | 12 | 8 | 2 | 10,749.95 | 0.15 | 0.15 | | | | 101 | 101 | | 106 | | 0.30 | 643.83 | 0.16 | WB OFF-RAMP/ROUTE 186 |
| "A4" | 4716+00.00 | 4719+00.00 | 300.00 | 12 | 8 | 2 | 6600.00 | 0.35 | 0.15 | 1.1 | 1.1 | 0.75 | 171 | 73 | 269 | 578 | 183 | 0.18 | 333.33 | 0.08 | WB OFF-RAMP/ROUTE 186 |
| "A4" | 4719+00.00 | 4721+49.19 | 249.19 | 12 | 8 | 2 | 7,480.30 | 0.15 | 0.15 | | | | 61 | 61 | | 64 | | 0.21 | 498.89 | 0.12 | WB OFF-RAMP/ROUTE 186 |
| "B" | 4721+49.19 | 4724+09.49 | 260.30 | 5.25 | 8 | | 3,089.97 | 0.15 | 0.15 | | | | 38 | 38 | | 42 | | 0.09 | 191.49 | 0.05 | EB OFF-RAMP/WINTERHAVEN Dr |
| "C1" | 4935+18.41 | 4948+50.05 | 1331.64 | 12 | 8 | 2 | 30,976.97 | 0.15 | 0.15 | | | | 326 | 326 | | 343 | | 0.86 | 1,666.37 | 0.42 | EB ON-RAMP/WINTERHAVEN Dr |
| "B" | 4948+50.05 | 4954+50.23 | 600.18 | 4 | 8 | | 6,874.31 | 0.15 | 0.15 | | | | 80 | 80 | | 88 | | 0.19 | 497.07 | 0.12 | EB ON-RAMP/WINTERHAVEN Dr |
| "B" | 4921+27.80 | 4923+50.05 | 222.25 | 5.25 | 8 | | 2,539.68 | 0.15 | 0.15 | | | | 33 | 33 | | 36 | | 0.07 | 152.54 | 0.04 | EB OFF-RAMP/WINTERHAVEN Dr |
| "C2" | 4923+50.05 | 4934+88.50 | 1138.45 | 12 | 8 | 2 | 28,198.78 | 0.15 | 0.15 | | | | 278 | 278 | | 293 | | 0.78 | 1,615.26 | 0.40 | EB OFF-RAMP/WINTERHAVEN Dr |
| "B" | 4916+93.68 | 4922+50.05 | 556.37 | 4.25 | 8 | | 6,342.01 | 0.15 | 0.15 | | | | 76 | 76 | | 83 | | 0.18 | 441.94 | 0.11 | WB ON-RAMP/WINTERHAVEN Dr |
| "C3" | 4922+50.05 | 4935+60.00 | 1309.95 | 12 | 8 | 2 | 31,777.34 | 0.15 | 0.15 | | | | 320 | 320 | | 337 | | 0.88 | 1,784.22 | 0.45 | WB ON-RAMP/WINTERHAVEN Dr |
| "C4" | 4934+37.66 | 4946+50.05 | 1212.39 | 12 | 8 | 2 | 30,868.37 | 0.15 | 0.15 | | | | 296 | 296 | | 312 | | 0.86 | 1,813.30 | 0.45 | WB OFF-RAMP/WINTERHAVEN Dr |
| "B" | 4946+50.05 | 4948+45.22 | 195.17 | 4.50 | 8 | | 2,063.86 | 0.15 | 0.15 | | | | 27 | 27 | | 30 | | 0.06 | 131.73 | 0.03 | WB OFF-RAMP/WINTERHAVEN Dr |
| "H1" | 5018+82.31 | 5031+25.84 | 1243.53 | 12 | 8 | 2 | 31,835.17 | 0.15 | 0.15 | | | | 304 | 304 | | 320 | | 0.88 | 1,879.20 | 0.47 | EB ON-RAMP/FOUTH Ave |
| "H2" | 5009+25.79 | 5018+05.72 | 879.93 | 12 | 8 | 2 | 25,315.60 | 0.15 | 0.15 | | | | 215 | 215 | | 227 | | 0.70 | 1,639.60 | 0.41 | EB OFF-RAMP/FOUTH Ave |
| "H3" | 5008+93.67 | 5016+78.38 | 784.71 | 12 | 8 | 2 | 19,768.48 | 0.15 | 0.15 | | | | 192 | 192 | | 202 | | 0.55 | 1,150.22 | 0.29 | WB ON-RAMP/FOUTH Ave |
| "H4" | 5016+68.62 | 5030+00.15 | 1331.53 | 12 | 8 | 2 | 31,853.23 | 0.15 | 0.15 | | | | 325 | 325 | | 343 | | 0.88 | 1,763.87 | 0.44 | WB OFF-RAMP/FOUTH Ave |
| "B2LT" | 5030+00.15 | 5031+25.71 | 125.56 | 5.25 | 8 | | 2,775.00 | 0.15 | 0.15 | | | | 18 | 18 | | 20 | | 0.08 | 235.09 | 0.06 | WB OFF-RAMP/FOUTH Ave |
| | | | | | | | | | | | | TOTAL | 3,987 | 3,780 | 569 | 5,061 | 388 | 10.67 | | 5.70 | |

(N) - NOT A SEPARATE PAY ITEM, FOR INFORMATION ONLY

* SEE ROADWAY QUANTITIES AND STAGE CONSTRUCTION QUANTITIES FOR ADDITIONAL QUANTITIES.

** SEE DIKE QUANTITIES FOR ADDITIONAL QUANTITIES.

# SUMMARY OF QUANTITIES

# Q-7

REVISED BY | DATE REVISED
SIRAJUL RONI | DYLAN MOORE
CALCULATED-DESIGNED BY | CHECKED BY
FUNCTIONAL SUPERVISOR: NICOLA BERNARD
STATE OF CALIFORNIA - DEPARTMENT OF TRANSPORTATION
Caltrans®
TRADE CORRIDOR IMPROVEMENT FUND

LAST REVISION | DATE PLOTTED => 03-SEP-2015
08-07-15 | TIME PLOTTED => 14:06

| Dist | COUNTY | ROUTE | POST MILES TOTAL PROJECT | SHEET No. | TOTAL SHEETS |
|---|---|---|---|---|---|
| 11 | Imp | 8 | R90.0/R96.8 | 141 | 209 |

07-23-15
REGISTERED ELECTRICAL ENGINEER DATE

08-31-15
PLANS APPROVAL DATE

DANNY D. McCLURE No. 16074 Exp. 12-31-15 ELECTRICAL — REGISTERED PROFESSIONAL ENGINEER — STATE OF CALIFORNIA

THE STATE OF CALIFORNIA OR ITS OFFICERS OR AGENTS SHALL NOT BE RESPONSIBLE FOR THE ACCURACY OR COMPLETENESS OF SCANNED COPIES OF THIS PLAN SHEET.

## LEGEND:

IID = IMPERIAL IRRIGATION DISTRICT

N △ C = NO CHANGE

## CONDUIT NOTES (TSO):

△1 - 2" C, 2 #6 (L+g CKT 1), 2 #8 (TMS 1).

△2 - 2" C, 2 #6 (L+g CKT 1).

△3 - 2" C, 2 #8 (TMS 1).

## LEGEND AND NOTES (TSO):

1 - RC EXISTING TYPE A SERVICE.

2 - RC EXISTING SERVICE POLE.

3 - INSTALLED BY PLAN SHEET E-10.

4 - CONTACT IID FOR THE REMOVAL OF OVERHEAD CONDUCTORS.

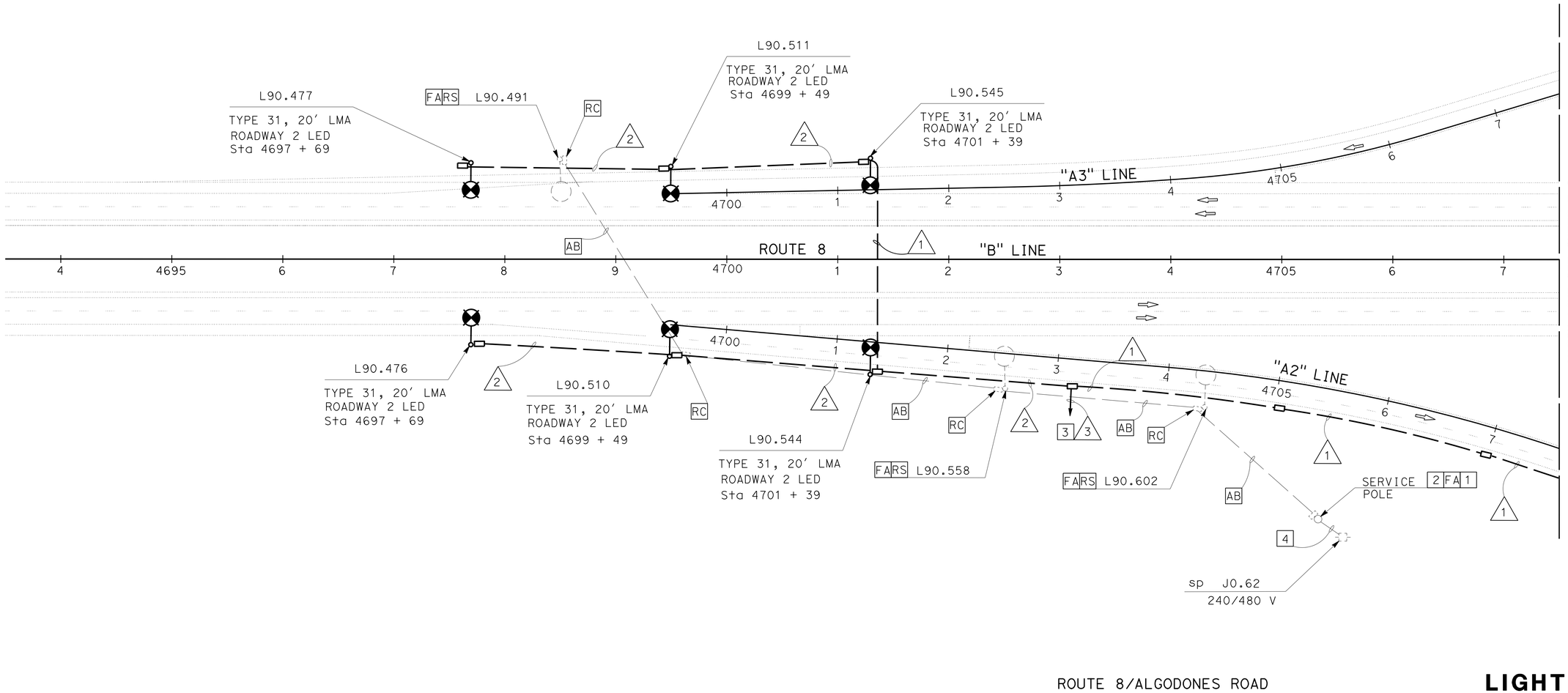


ROUTE 8/ALGODONES ROAD

# LIGHTING

E-1

*APPROVED FOR ELECTRICAL WORK ONLY*

SCALE: 1" = 50'

STATE OF CALIFORNIA - DEPARTMENT OF TRANSPORTATION
Caltrans® TRAFFIC ELECTRICAL

FUNCTIONAL SUPERVISOR: RAJPREET SINGH
CALCULATED-DESIGNED BY: DANNY MCCLURE
CHECKED BY: HECTOR SANTAMARIA
REVISED BY
DATE REVISED

LAST REVISION 09-01-15
DATE PLOTTED => 03-SEP-2015
TIME PLOTTED => 14:06

BORDER LAST REVISED 7/2/2010
USERNAME => s127400
DGN FILE => 1114000006ua001.dgn
RELATIVE BORDER SCALE IS IN INCHES 0 1 2 3
UNIT 2833
PROJECT NUMBER & PHASE 11140000061

| Dist | COUNTY | ROUTE | POST MILES TOTAL PROJECT | SHEET No. | TOTAL SHEETS |
|---|---|---|---|---|---|
| 11 | Imp | 8 | R90.0/R96.8 | 142 | 209 |

REGISTERED ELECTRICAL ENGINEER — DATE 07-23-15

DANNY D. McCLURE No. 16074 Exp. 12-31-15 ELECTRICAL — REGISTERED PROFESSIONAL ENGINEER — STATE OF CALIFORNIA

08-31-15
PLANS APPROVAL DATE

THE STATE OF CALIFORNIA OR ITS OFFICERS OR AGENTS SHALL NOT BE RESPONSIBLE FOR THE ACCURACY OR COMPLETENESS OF SCANNED COPIES OF THIS PLAN SHEET.

## LEGEND AND NOTES (TSO):

[1] - [RS] EXISTING TYPE III CABINET AND INSTALL NEW TYPE III CABINET. CONNECT CONDUCTORS AS NECESSARY.

[2] - SEE WIRING DIAGRAM "M" ON SHEET E-3.

[3] - INSTALLED BY PLAN SHEET E-11.

[4] - DUAL PEU REQUIRED.

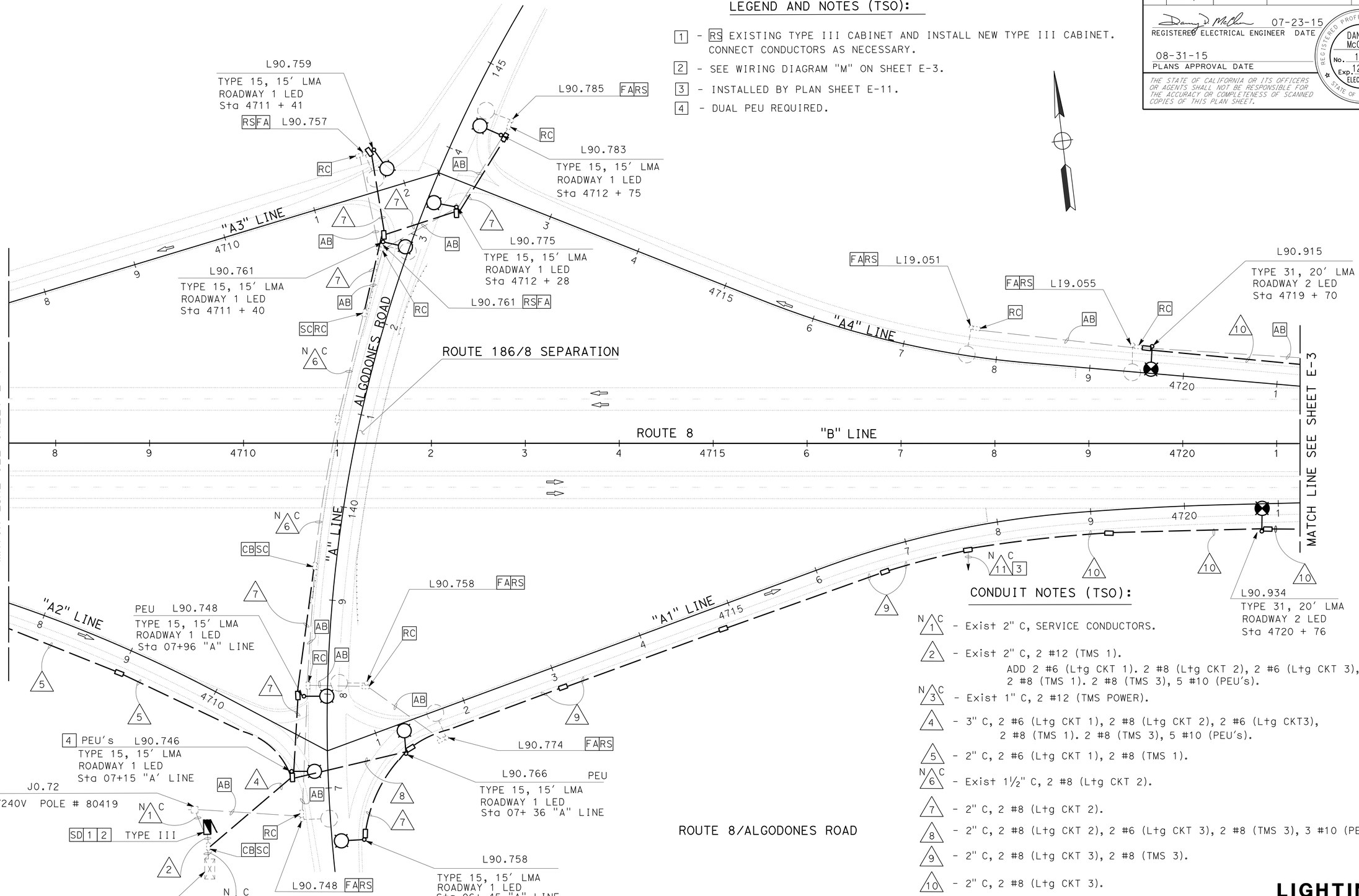


ROUTE 8/ALGODONES ROAD

*APPROVED FOR ELECTRICAL WORK ONLY*

## CONDUIT NOTES (TSO):

NC 1 - Exist 2" C, SERVICE CONDUCTORS.

2 - Exist 2" C, 2 #12 (TMS 1).
ADD 2 #6 (Ltg CKT 1). 2 #8 (Ltg CKT 2), 2 #6 (Ltg CKT 3), 2 #8 (TMS 1). 2 #8 (TMS 3), 5 #10 (PEU's).

NC 3 - Exist 1" C, 2 #12 (TMS POWER).

4 - 3" C, 2 #6 (Ltg CKT 1), 2 #8 (Ltg CKT 2), 2 #6 (Ltg CKT3), 2 #8 (TMS 1). 2 #8 (TMS 3), 5 #10 (PEU's).

5 - 2" C, 2 #6 (Ltg CKT 1), 2 #8 (TMS 1).

NC 6 - Exist 1½" C, 2 #8 (Ltg CKT 2).

7 - 2" C, 2 #8 (Ltg CKT 2).

8 - 2" C, 2 #8 (Ltg CKT 2), 2 #6 (Ltg CKT 3), 2 #8 (TMS 3), 3 #10 (PEU).

9 - 2" C, 2 #8 (Ltg CKT 3), 2 #8 (TMS 3).

10 - 2" C, 2 #8 (Ltg CKT 3).

NC 11 - Exist 2" C, 2 #8 (TMS 3).

# LIGHTING

SCALE: 1" = 50'

**E-2**

LAST REVISION DATE PLOTTED => 03-SEP-2015
09-02-15 TIME PLOTTED => 14:06

STATE OF CALIFORNIA - DEPARTMENT OF TRANSPORTATION
Caltrans® TRAFFIC ELECTRICAL

FUNCTIONAL SUPERVISOR: RAJPREET SINGH
CALCULATED-DESIGNED BY: HECTOR SANTAMARIA
CHECKED BY: DANNY MCCLURE
REVISED BY / DATE REVISED

BORDER LAST REVISED 7/2/2010 | USERNAME => s127400 | DGN FILE => 1114000006ua002.dgn | RELATIVE BORDER SCALE IS IN INCHES 0 1 2 3 | UNIT 2833 | PROJECT NUMBER & PHASE 11140000061

| Dist | COUNTY | ROUTE | POST MILES TOTAL PROJECT | SHEET No. | TOTAL SHEETS |
|---|---|---|---|---|---|
| 11 | Imp | 8 | R90.0/R96.8 | 143 | 209 |

07-23-15
REGISTERED ELECTRICAL ENGINEER DATE

08-31-15
PLANS APPROVAL DATE

REGISTERED PROFESSIONAL ENGINEER
DANNY D. McCLURE
No. 16074
Exp. 12-31-15
ELECTRICAL
STATE OF CALIFORNIA

THE STATE OF CALIFORNIA OR ITS OFFICERS OR AGENTS SHALL NOT BE RESPONSIBLE FOR THE ACCURACY OR COMPLETENESS OF SCANNED COPIES OF THIS PLAN SHEET.

## CONDUIT NOTES (TSO):

△1 - 2" C, 2 #6 (L+g CKT 3).

## LEGEND AND NOTES (TSO):

1 - RC EXISTING TYPE A SERVICE.
2 - RC EXISTING SERVICE POLE.
3 - CONTACT IID FOR REMOVAL OF OVERHEAD CONDUCTORS.

## CIRCUIT BREAKERS

MAIN 2P-100 A
A-SP-15 A
B, C } 2P-30 A
D, E } 2P-30 A
F, G } 2P-30 A
H -SP-20 A
I -SP-20 A
J -SP-20 A

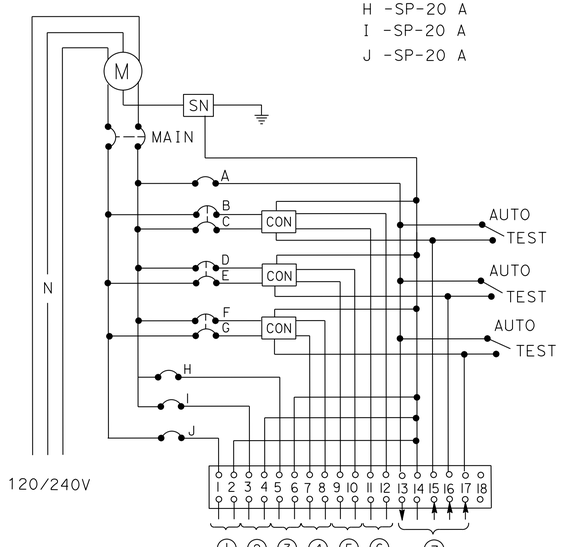


## WIRING DIAGRAM "M" J0.72

(TYPE III-BR EQUIPMENT ENCLOSURE
SEE Std PLANS ES-2C & ES-2E)

① - TMS 1
② - TMS 2
③ - TMS 3
④ - HIGHWAY L+g (CKT 1)
⑤ - HIGHWAY LTG (CKT 2)
⑥ - HIGHWAY LTG (CKT 3)
⑦ - PEU

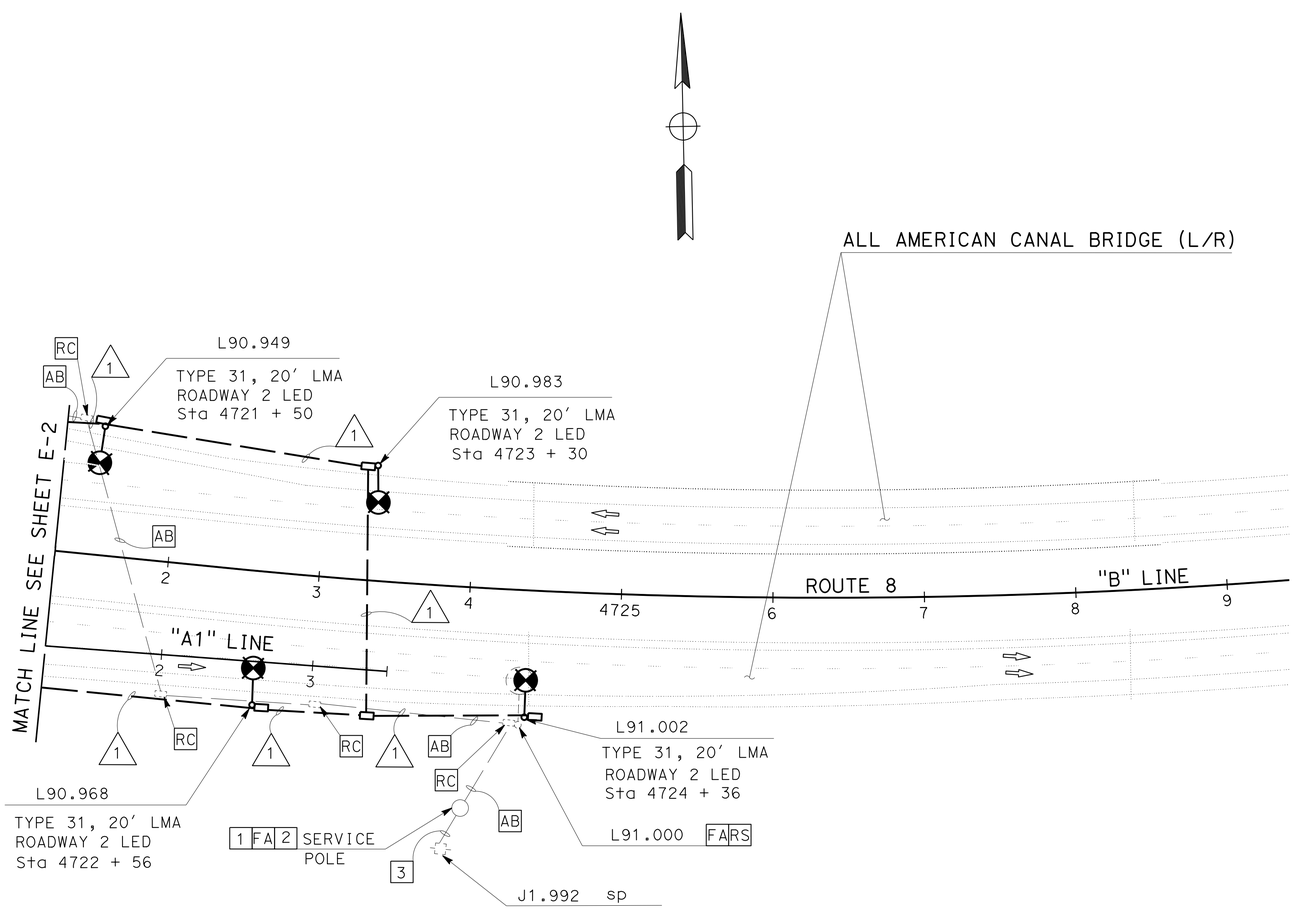


ROUTE 8/ALGODONES ROAD

*APPROVED FOR ELECTRICAL WORK ONLY*

SCALE: 1" = 50'

**LIGHTING**

**E-3**

STATE OF CALIFORNIA - DEPARTMENT OF TRANSPORTATION
Caltrans® TRAFFIC ELECTRICAL
FUNCTIONAL SUPERVISOR: RAJPREET SINGH
CALCULATED-DESIGNED BY: DANNY MCCLURE
CHECKED BY: HECTOR SANTAMARIA
REVISED BY
DATE REVISED

LAST REVISION | DATE PLOTTED => 03-SEP-2015
09-02-15 | TIME PLOTTED => 14:06

BORDER LAST REVISED 7/2/2010
USERNAME => s127400
DGN FILE => 1114000006ua003.dgn
RELATIVE BORDER SCALE IS IN INCHES 0 1 2 3
UNIT 2833
PROJECT NUMBER & PHASE 11140000061

| Dist | COUNTY | ROUTE | POST MILES TOTAL PROJECT | SHEET No. | TOTAL SHEETS |
|---|---|---|---|---|---|
| 11 | Imp | 8 | R90.0/96.8 | 144 | 209 |

07-23-15
REGISTERED ELECTRICAL ENGINEER DATE

DANNY D. McCLURE No. 16074 Exp. 12-31-15 ELECTRICAL
REGISTERED PROFESSIONAL ENGINEER — STATE OF CALIFORNIA

08-31-15
PLANS APPROVAL DATE

THE STATE OF CALIFORNIA OR ITS OFFICERS OR AGENTS SHALL NOT BE RESPONSIBLE FOR THE ACCURACY OR COMPLETENESS OF SCANNED COPIES OF THIS PLAN SHEET.

## CONDUIT NOTES (TSO):

1 - 2" C, 2 #6 (L+g CKT 1).

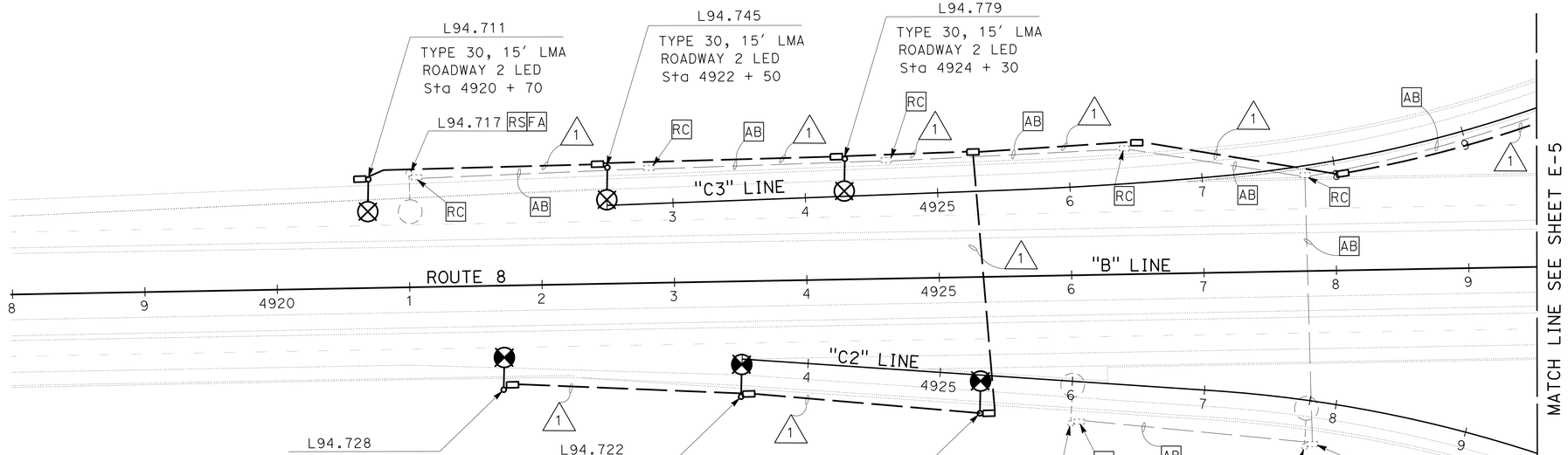


ROUTE 8/WINTERHAVEN DRIVE

# LIGHTING AND SIGN ILLUMINATION
## LOCATION 1

*APPROVED FOR ELECTRICAL WORK ONLY*

SCALE: 1" = 50′

**E-4**

DATE REVISED | REVISED BY
CALCULATED-DESIGNED BY: DANNY McCLURE
CHECKED BY: ANTONIO A. RODRIGUEZ
FUNCTIONAL SUPERVISOR: RAJPREET SINGH

STATE OF CALIFORNIA - DEPARTMENT OF TRANSPORTATION
Caltrans® TRAFFIC ELECTRICAL

LAST REVISION | DATE PLOTTED => 03-SEP-2015
09-02-15 | TIME PLOTTED => 14:06

| Dist | COUNTY | ROUTE | POST MILES TOTAL PROJECT | SHEET No. | TOTAL SHEETS |
|---|---|---|---|---|---|
| 11 | Imp | 8 | R90.0/R96.8 | 145 | 209 |

Danny D. McClure 07-23-15
REGISTERED ELECTRICAL ENGINEER DATE

08-31-15
PLANS APPROVAL DATE

REGISTERED PROFESSIONAL ENGINEER — DANNY D. McCLURE No. 16074 Exp. 12-31-15 ELECTRICAL — STATE OF CALIFORNIA

THE STATE OF CALIFORNIA OR ITS OFFICERS OR AGENTS SHALL NOT BE RESPONSIBLE FOR THE ACCURACY OR COMPLETENESS OF SCANNED COPIES OF THIS PLAN SHEET.

## CONDUIT NOTES (TSO):

1. - 2" C, CONDUCTORS BY IID.
2. - 2" C, 2 #6 (Ltg CKT 1), 2 #8 (Ltg CKT 2), 2 #6 (Ltg CKT 3), 5 #14 (PEU's).
3. - 2" C, 2 #6 (Ltg CKT 1), 2 #8 (Ltg CKT 2), 2 #6 (Ltg CKT 3), 3 #14 (PEU's).
4. - 2" C, 2 #6 (CKT 1).
5. - 2" C, 2 #8 (CKT 2).
6. NC - Exist 1½" C, 2 #8 (Ltg CKT 2), 2 #8 (SIGN).
7. NC - Exist 1½" C, 2 #8 (SIGN).
8. NC - Exist 1½" C, 2 #8 (Ltg CKT 2).
9. - 2" C, 2 #8 (Ltg CKT 2), 2 #6 (Ltg CKT 3).
10. - 2" C, 2 #6 (Ltg CKT 3).

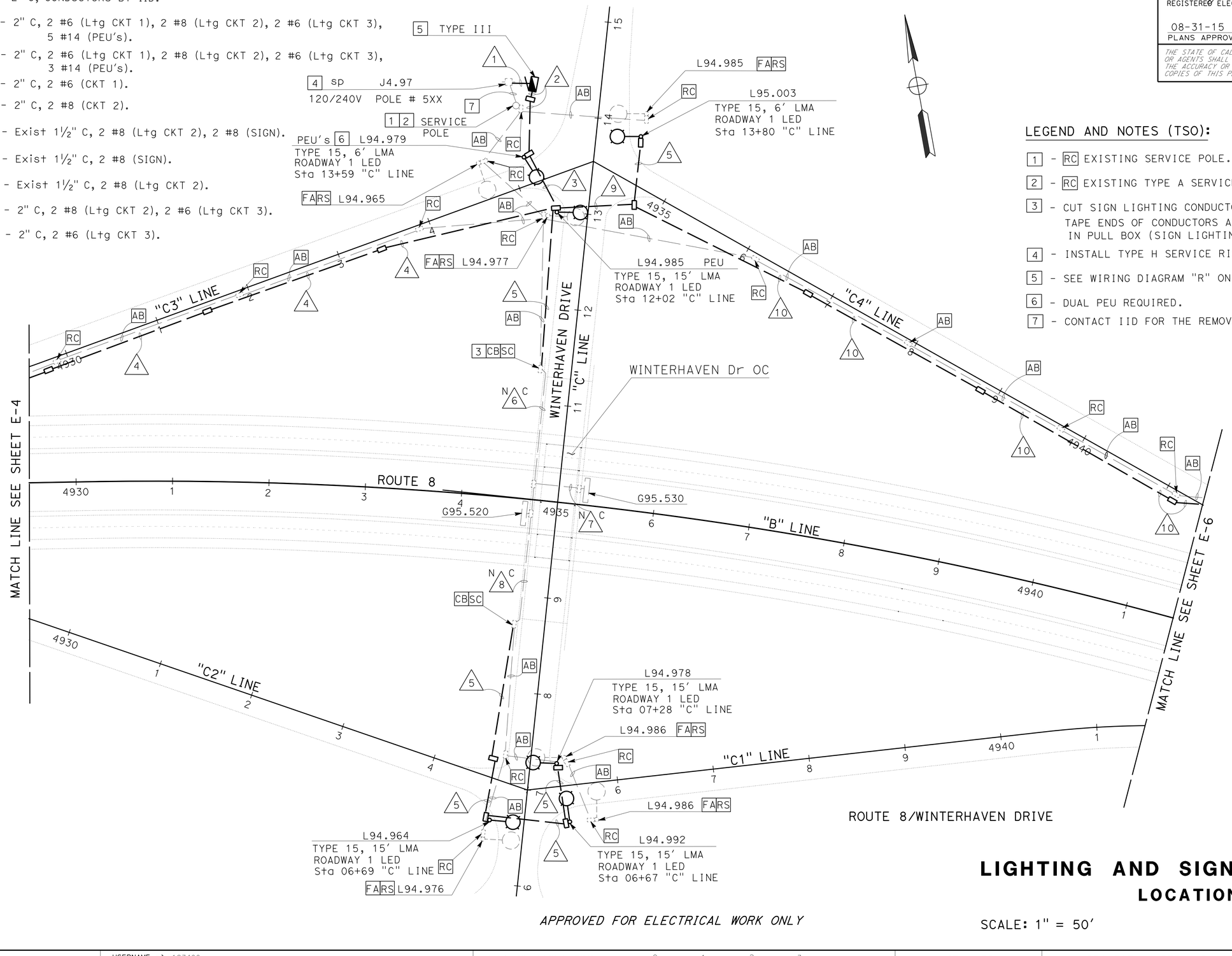


## LEGEND AND NOTES (TSO):

1. - RC EXISTING SERVICE POLE.
2. - RC EXISTING TYPE A SERVICE.
3. - CUT SIGN LIGHTING CONDUCTORS. TAPE ENDS OF CONDUCTORS AND LEAVE IN PULL BOX (SIGN LIGHTING OFF).
4. - INSTALL TYPE H SERVICE RISER PER IID REQUIREMENTS.
5. - SEE WIRING DIAGRAM "R" ON SHEET E-6.
6. - DUAL PEU REQUIRED.
7. - CONTACT IID FOR THE REMOVAL OF OVERHEAD CONDUCTORS.

*APPROVED FOR ELECTRICAL WORK ONLY*

# LIGHTING AND SIGN ILLUMINATION
## LOCATION 1

SCALE: 1" = 50'

**E-5**

| REVISED BY | DATE REVISED |
|---|---|
| | |

CALCULATED-DESIGNED BY
DANNY McCLURE
CHECKED BY
ANTONIO A. RODRIGUEZ
FUNCTIONAL SUPERVISOR
RAJPREET SINGH

STATE OF CALIFORNIA - DEPARTMENT OF TRANSPORTATION
Caltrans® TRAFFIC ELECTRICAL

LAST REVISION | DATE PLOTTED => 03-SEP-2015
09-02-15 | TIME PLOTTED => 14:24

| Dist | COUNTY | ROUTE | POST MILES TOTAL PROJECT | SHEET No. | TOTAL SHEETS |
|---|---|---|---|---|---|
| 11 | Imp | 8 | R90.0/R96.8 | 146 | 209 |

Danny D. McClure 07-23-15
REGISTERED ELECTRICAL ENGINEER DATE

08-31-15
PLANS APPROVAL DATE

REGISTERED PROFESSIONAL ENGINEER
DANNY D. McCLURE
No. 16074
Exp. 12-31-15
ELECTRICAL
STATE OF CALIFORNIA

*THE STATE OF CALIFORNIA OR ITS OFFICERS OR AGENTS SHALL NOT BE RESPONSIBLE FOR THE ACCURACY OR COMPLETENESS OF SCANNED COPIES OF THIS PLAN SHEET.*

## CONDUIT NOTES (TSO):

△1 - 2" C, 2 #6 (L+g CKT 3).

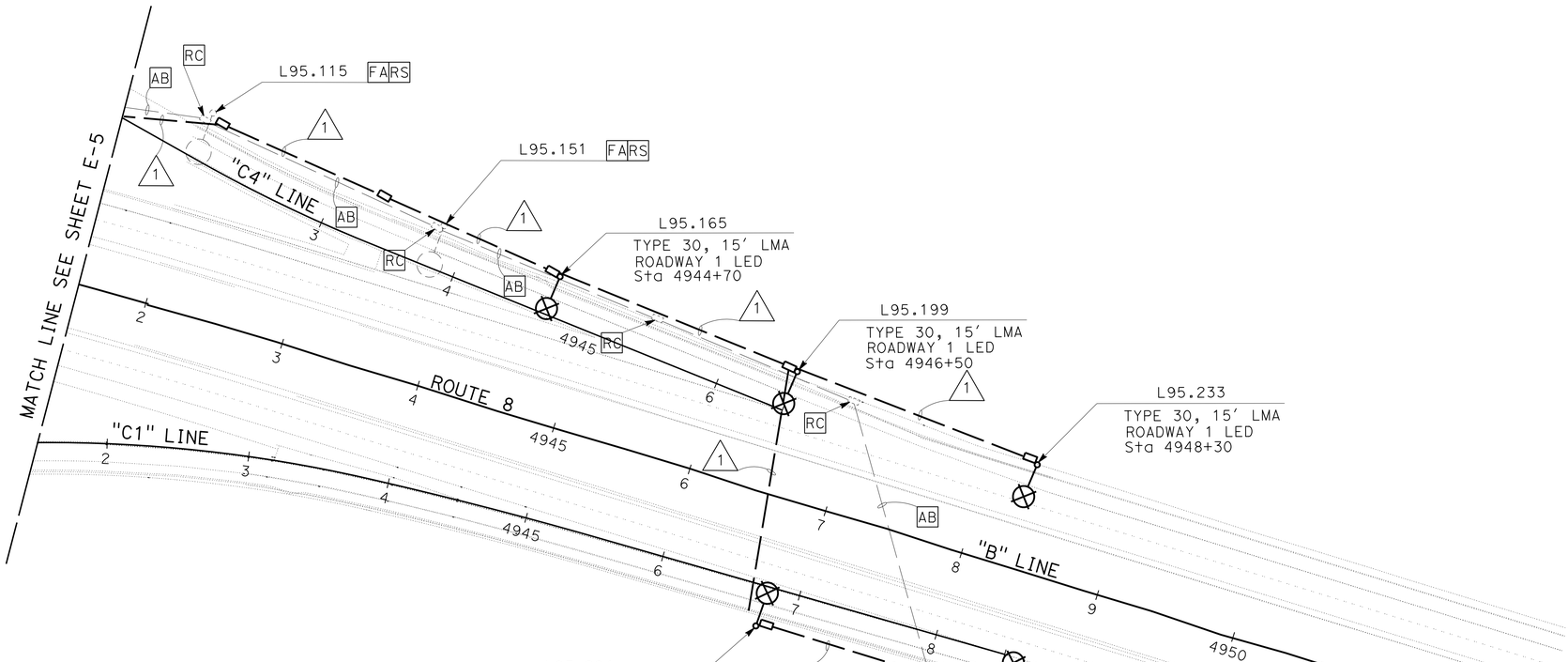


ROUTE 8/WINTERHAVEN DRIVE

## CIRCUIT BREAKERS

MAIN 2P-100 A
A-SP-15 A
B, C } 2P-30 A
D, E } 2P-30 A
F, G } 2P-30 A
H-SP-30 A

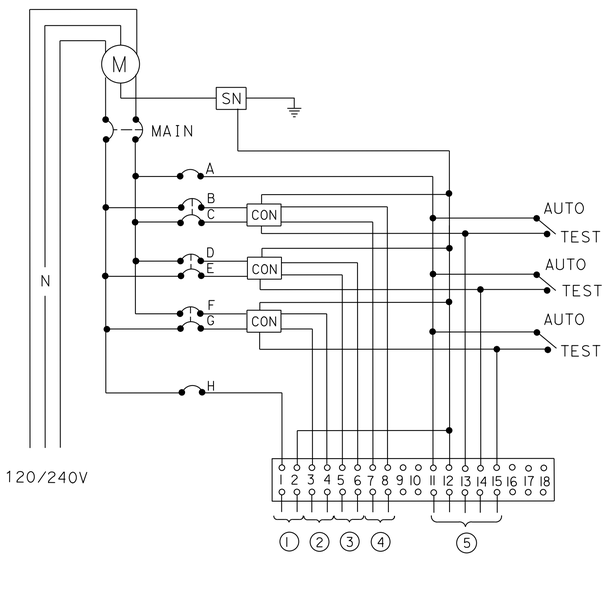


## WIRING DIAGRAM "R" J4.97

(TYPE III-BR EQUIPMENT ENCLOSURE
SEE Std PLANS ES-2C & ES-2E)

① - SPARE
② - HIGHWAY L+g (CKT 1)
③ - HIGHWAY LTG (CKT 2)
④ - HIGHWAY LTG (CKT 3)
⑤ - PEU

*APPROVED FOR ELECTRICAL WORK ONLY*

# LIGHTING AND SIGN ILLUMINATION
## LOCATION 1

SCALE: 1" = 50'

**E-6**

STATE OF CALIFORNIA - DEPARTMENT OF TRANSPORTATION
Caltrans® TRAFFIC ELECTRICAL
FUNCTIONAL SUPERVISOR: RAJPREET SINGH
CALCULATED-DESIGNED BY: DANNY McCLURE
CHECKED BY: ANTONIO A. RODRIGUEZ
REVISED BY
DATE REVISED

LAST REVISION DATE PLOTTED => 03-SEP-2015
09-02-15 TIME PLOTTED => 14:06

BORDER LAST REVISED 7/2/2010
USERNAME => s127400
DGN FILE => 1114000006ua006.dgn
RELATIVE BORDER SCALE IS IN INCHES 0 1 2 3
UNIT 2833
PROJECT NUMBER & PHASE 11140000061

| Dist | COUNTY | ROUTE | POST MILES TOTAL PROJECT | SHEET No. | TOTAL SHEETS |
|---|---|---|---|---|---|
| 11 | Imp | 8 | R90.0/R96.8 | 147 | 209 |

Danny D. McClure 07-23-15
REGISTERED ELECTRICAL ENGINEER DATE

08-31-15
PLANS APPROVAL DATE

REGISTERED PROFESSIONAL ENGINEER
DANNY D. McCLURE
No. 16074
Exp. 12-31-15
ELECTRICAL
STATE OF CALIFORNIA

THE STATE OF CALIFORNIA OR ITS OFFICERS OR AGENTS SHALL NOT BE RESPONSIBLE FOR THE ACCURACY OR COMPLETENESS OF SCANNED COPIES OF THIS PLAN SHEET.

## CONDUIT NOTES (TSO):

1 - 2" C, 2 #6 (Ltg CKT 1).

2 - Exist 1½" C, 2 #8 (Ltg CKT 1), 2 #8 (SIGN).

## LEGEND AND NOTES (TSO):

1 - RC EXISTING SERVICE POLE.

2 - RC EXISTING TYPE A SERVICE.

3 - CUT SIGN LIGHTING CONDUCTORS. TAPE ENDS OF CONDUCTORS AND LEAVE IN PULL BOX (SIGN LIGHTING OFF).

4 - CONTACT IID FOR THE REMOVAL OF OVERHEAD CONDUCTORS.

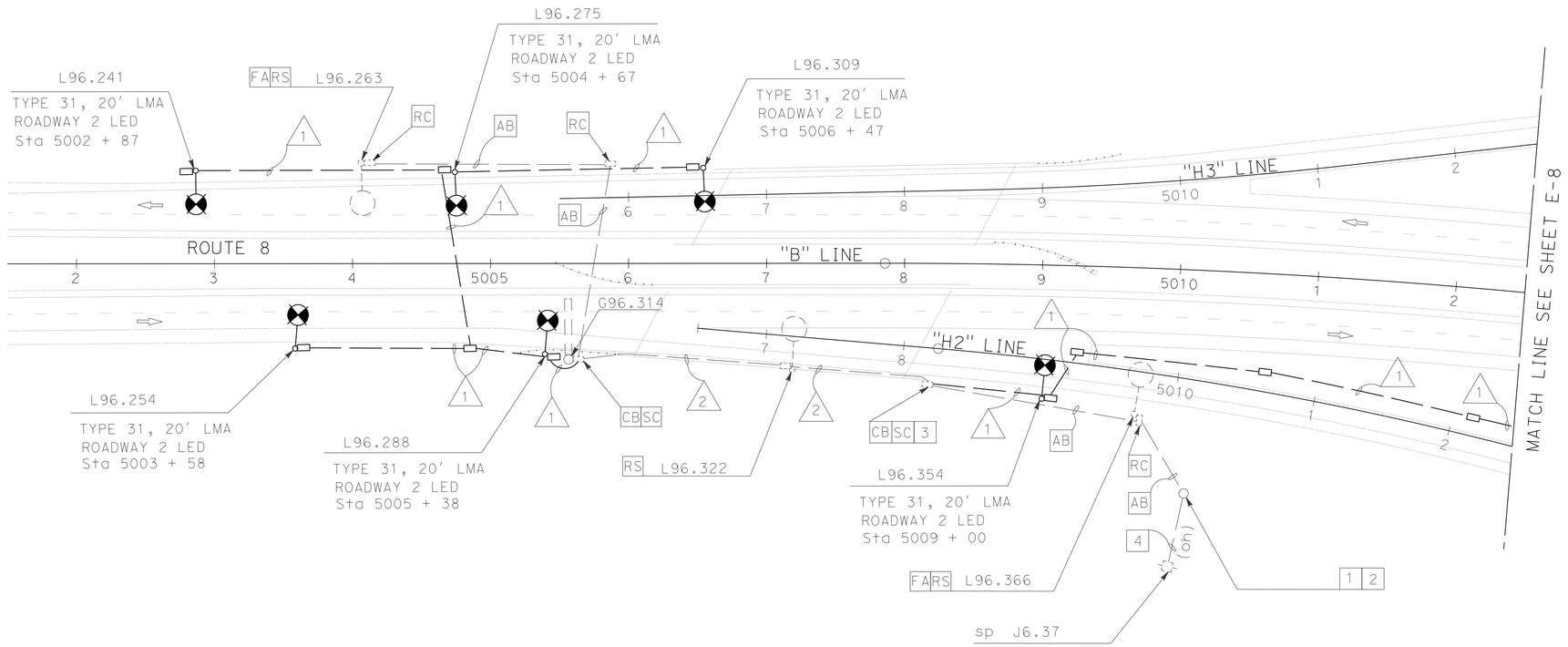


ROUTE 8/FOURTH AVENUE

*APPROVED FOR ELECTRICAL WORK ONLY*

# LIGHTING AND SIGN ILLUMINATION
## LOCATION 2

SCALE: 1"= 50'

E-7

REVISED BY | DATE REVISED
DANNY MCCLURE | HECTOR SANTAMARIA
CALCULATED-DESIGNED BY | CHECKED BY
FUNCTIONAL SUPERVISOR | RAJPREET SINGH
STATE OF CALIFORNIA - DEPARTMENT OF TRANSPORTATION
Caltrans® TRAFFIC ELECTRICAL

LAST REVISION | DATE PLOTTED => 08-SEP-2015
09-02-15 | TIME PLOTTED => 08:29

BORDER LAST REVISED 7/2/2010 | USERNAME => s127400 | DGN FILE => 1114000006ua007.dgn | RELATIVE BORDER SCALE IS IN INCHES 0 1 2 3 | UNIT 2833 | PROJECT NUMBER & PHASE 11140000061

| Dist | COUNTY | ROUTE | POST MILES TOTAL PROJECT | SHEET No. | TOTAL SHEETS |
|---|---|---|---|---|---|
| 11 | Imp | 8 | R90.0/R96.8 | 148 | 209 |

07-23-15
REGISTERED ELECTRICAL ENGINEER DATE

08-31-15
PLANS APPROVAL DATE

REGISTERED PROFESSIONAL ENGINEER
DANNY D. McCLURE
No. 16074
Exp. 12-31-15
ELECTRICAL
STATE OF CALIFORNIA

THE STATE OF CALIFORNIA OR ITS OFFICERS OR AGENTS SHALL NOT BE RESPONSIBLE FOR THE ACCURACY OR COMPLETENESS OF SCANNED COPIES OF THIS PLAN SHEET.

## CONDUIT NOTES (TSO):

N C 1 - Exist 2" C, TELEPHONE SERVICE CONDUCTORS.

N C 2 - Exist 2" C, SERVICE CONDUCTORS.

3 - 3" C, 2 #6 (Ltg CKT 1), 2 #8 (Ltg CKT 2), 2 #6 (Ltg CKT3). 6 #10 (PEU), 2 #8 (SIGN), 2 #10 (TMS 2).

4 - 2" C, 2 #6 (Ltg CKT 1), 2 #8 (Ltg CKT 2), 2 #6 (Ltg CKT3). 6 #10 (PEU).

5 - 2" C, 2 #6 (Ltg CKT 2), 2 #8 (SIGN).

N C 6 - Exist 1½" C, 2 #8 (Ltg CKT 2), 2 #8 (SIGN).

N C 7 - Exist 1½" C, 2 #8 (Ltg CKT 2).

8 - 2" C, 2 #8 (Ltg CKT 2).

9 - 2" C, 2 #8 (Ltg CKT 2), 2 #6 (Ltg CKT3), 4 #10 (PEU's).

10 - 2" C, 2 #8 (Ltg CKT 2), 2 #6 (CKT 3).

11 - 2" C, 2 #6 (CKT 3).

12 - 2" C, 2 #6 (CKT 1).

N C 13 - Exist 2" C, 1 DLC.

14 - Exist 1½" C, 2 #8 (SIGN).

N C 15 - Exist 1½" C, 2 #8 (TMS 2).

16 - 2" C, 2 #8 (TMS 1), 2 #8 (TMS 3).

17 - 2" C, 2 #10 (TMS 2).

TYPE "G" U96.542
ENCLOSURE CABINET

SD 1 2 TYPE III

DETAIL "C"
NO SCALE

WINTERHAVEN Dr

L96.481
TYPE 15, 6' LMA
ROADWAY 1 LED
Sta 69+18 "H" LINE

L96.479 FARS

L96.459
TYPE 15, 15' LMA
ROADWAY 1 LED
Sta 68+10 "H" LINE

FARS L96.553

L96.475
TYPE 15, 15' LMA
ROADWAY 1 LED
Sta 67+63 "H" LINE

FARS L96.521

L96.489
TYPE 15, 15' LMA
ROADWAY 1 LED
Sta 67+39 "H" LINE

G96.549

G96.544

G9.079

4TH Ave OC

"H3" LINE

"H2" LINE

"H" LINE

"B" LINE

"H1" LINE

ROUTE 8

MATCH LINE SEE SHEET E-7

MATCH LINE SEE SHEET E-9

SEE DETAIL "C" ON THIS SHEET

LI9.018 FARS

L96.566
TYPE 15, 10' LMA
ROADWAY 1 LED
Sta 63+93 "H" LINE

L96.586 FARS

L96.532
TYPE 15, 15' LMA
ROADWAY 1 LED
Sta 63+40 "H" LINE

5 PEU's L96.500
TYPE 15, 15' LMA
ROADWAY 1 LED
Sta 63+90 "H" LINE

SERVICE POLE

sp J6.54
120/240V POLE # 552

TSP J6.54-T
PACBELL

5 PEU's L96.508
TYPE 15, 10' LMA
ROADWAY 1 LED
Sta 63+00 "H" LINE

FARS L96.560

L96.520
TYPE 15-SB, 10' LMA
ROADWAY 1 LED
Sta 01+40

FARS L96.570

ROUTE 8/FOURTH AVENUE

*APPROVED FOR ELECTRICAL WORK ONLY*

## LEGEND AND NOTES (TSO):

1 - RS EXISTING TYPE III SERVICE CABINET. RC TYPE III FOUNDATION. INSTALL NEW TYPE III SERVICE CABINET CONNECT CONDUCTORS AS NECESSARY.

2 - SEE WIRING DIAGRAM "D" ON SHEET E-14.

3 - OVERHEAD CONDUCTORS (POWER SERVICE).

4 - OVERHEAD CONDUCTORS (TELEPHONE SERVICE).

5 - DUAL PEU REQUIRED.

6 - INSTALLED BY PLAN SHEET E-13.

# LIGHTING AND SIGN ILLUMINATION
## LOCATION 2

SCALE: 1" = 50'

**E-8**

DANNY MCCLURE | REVISED BY
HECTOR SANTAMARIA | DATE REVISED
CALCULATED-
DESIGNED BY
CHECKED BY
FUNCTIONAL SUPERVISOR
RAJPREET SINGH

STATE OF CALIFORNIA - DEPARTMENT OF TRANSPORTATION
TRAFFIC ELECTRICAL

LAST REVISION 09-02-15
DATE PLOTTED => 03-SEP-2015
TIME PLOTTED => 14:06

BORDER LAST REVISED 7/2/2010
USERNAME => s127400
DGN FILE => 1114000006ua008.dgn
RELATIVE BORDER SCALE IS IN INCHES 0 1 2 3
UNIT 2833
PROJECT NUMBER & PHASE 11140000061

| Dist | COUNTY | ROUTE | POST MILES TOTAL PROJECT | SHEET No. | TOTAL SHEETS |
|---|---|---|---|---|---|
| 11 | Imp | 8 | R90.0/R96.8 | 149 | 209 |

Danny D. McClure 07-23-15
REGISTERED ELECTRICAL ENGINEER DATE

08-31-15
PLANS APPROVAL DATE

DANNY D. McCLURE No. 16074 Exp. 12-31-15 ELECTRICAL — REGISTERED PROFESSIONAL ENGINEER — STATE OF CALIFORNIA

THE STATE OF CALIFORNIA OR ITS OFFICERS OR AGENTS SHALL NOT BE RESPONSIBLE FOR THE ACCURACY OR COMPLETENESS OF SCANNED COPIES OF THIS PLAN SHEET.

## CONDUIT NOTES (TSO):

△1 - 2" C, 2 #6 (L+g CKT 3).

△2 - 2" C, PT.

## LEGEND AND NOTES (TSO):

[1] - RC TYPE A SERVICE.

[2] - CONTACT IID FOR THE REMOVAL OF THE OVERHEAD CONDUCTORS.

[3] - [RC] SERVICE POLE.

[4] - CUT SIGN LIGHTING CONDUCTORS. TAPE ENDS OF CONDUCTORS AND LEAVE IN PULL BOX (SIGN LIGHTING OFF).

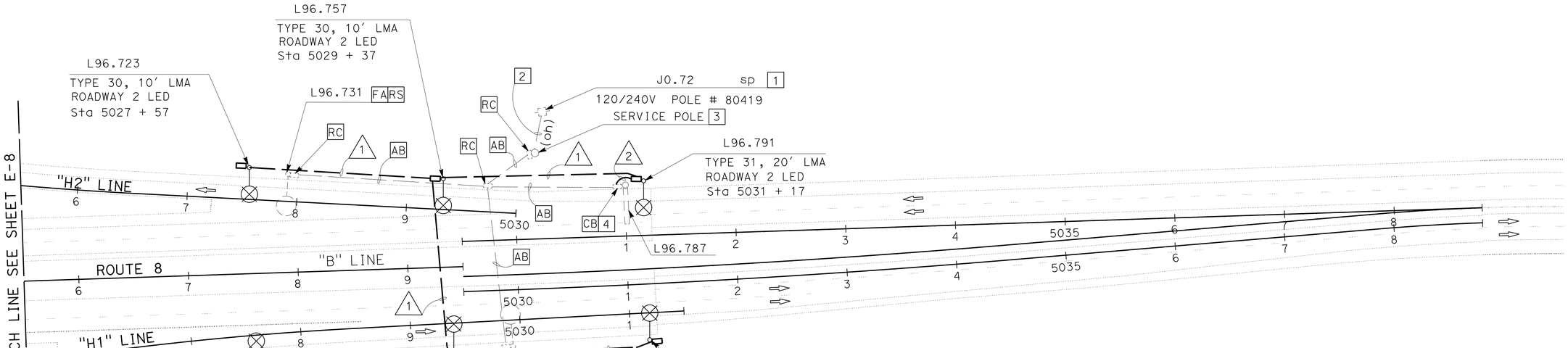


ROUTE 8/FOURTH AVENUE

# LIGHTING AND SIGN ILLUMINATION
## LOCATION 2

*APPROVED FOR ELECTRICAL WORK ONLY*

SCALE: 1" = 50'

**E-9**

STATE OF CALIFORNIA - DEPARTMENT OF TRANSPORTATION
Caltrans® TRAFFIC ELECTRICAL

FUNCTIONAL SUPERVISOR: RAJPREET SINGH

CALCULATED-DESIGNED BY: DANNY MCCLURE
CHECKED BY: HECTOR SANTAMARIA
REVISED BY
DATE REVISED

LAST REVISION DATE PLOTTED => 03-SEP-2015
09-02-15 TIME PLOTTED => 14:06

BORDER LAST REVISED 7/2/2010

USERNAME => s127400
DGN FILE => 1114000006ua009.dgn

RELATIVE BORDER SCALE IS IN INCHES 0 1 2 3

UNIT 2833

PROJECT NUMBER & PHASE 11140000061

| Dist | COUNTY | ROUTE | POST MILES TOTAL PROJECT | SHEET No. | TOTAL SHEETS |
|---|---|---|---|---|---|
| 11 | Imp | 8 | R90.0/R96.8 | 150 | 209 |

REGISTERED ELECTRICAL ENGINEER — 07-23-15 DATE

REGISTERED PROFESSIONAL ENGINEER — DANNY D. McCLURE No. 16074 Exp. 12-31-15 ELECTRICAL — STATE OF CALIFORNIA

08-31-15
PLANS APPROVAL DATE

*THE STATE OF CALIFORNIA OR ITS OFFICERS OR AGENTS SHALL NOT BE RESPONSIBLE FOR THE ACCURACY OR COMPLETENESS OF SCANNED COPIES OF THIS PLAN SHEET.*

## CONDUIT NOTES (TSO):

1 - 2" C, 1 SIC (TMS 1).

2 - 2" C, 2 #6 (TMS 1).

3 - 2" C, 6 DLC, 12 SENSOR CABLES.

4 - 2" C, 5 DLC, 10 SENSOR CABLES.

5 - 2" C, 4 DLC, 8 SENSOR CABLES.

6 - 2" C, 3 DLC, 6 SENSOR CABLES.

7 - 2" C, 2 DLC, 4 SENSOR CABLES.

N C 8 - 2" C, 2 #6 (Ltg CKT 1), 2 #8 (TMS 1).

N C 9 - 2" C, 2 #6 (Ltg CKT 1).

## LEGEND AND NOTES (TSO):

[1] - INSTALLED BY PLAN SHEET E-1.

[2] - DEPARTMENT FURNISHED TYPE 334 CABINET.

[3] - PLACE CONDUIT IN THE SAME TRENCH AS LIGHTING CONDUIT SEE SHEET E-1.

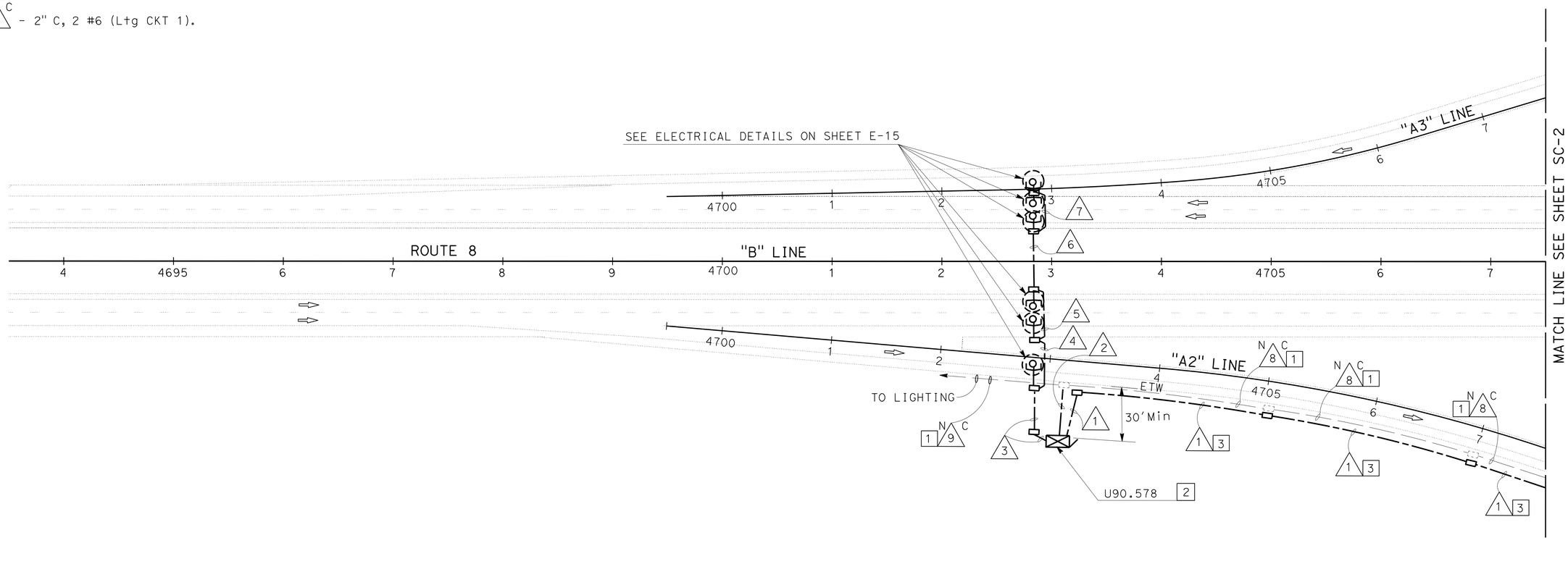


ROUTE 8/ALGODONES ROAD

*APPROVED FOR ELECTRICAL WORK ONLY*

# TRAFFIC MONITORING STATION
## LOCATION 1

SCALE: 1"= 50'

**E-10**

DANNY MCCLURE — CALCULATED-DESIGNED BY
HECTOR SANTAMARIA — CHECKED BY
REVISED BY — DATE REVISED
FUNCTIONAL SUPERVISOR: RAJPREET SINGH

STATE OF CALIFORNIA - DEPARTMENT OF TRANSPORTATION
Caltrans® TRAFFIC ELECTRICAL

LAST REVISION — DATE PLOTTED => 03-SEP-2015
09-02-15 — TIME PLOTTED => 14:06

BORDER LAST REVISED 7/2/2010 | USERNAME => s127400 | DGN FILE => 1114000006ua010.dgn | RELATIVE BORDER SCALE IS IN INCHES 0 1 2 3 | UNIT 2833 | PROJECT NUMBER & PHASE 11140000061

| Dist | COUNTY | ROUTE | POST MILES TOTAL PROJECT | SHEET No. | TOTAL SHEETS |
|---|---|---|---|---|---|
| 11 | Imp | 8 | R90.0/R96.8 | 151 | 209 |

07-23-15
REGISTERED ELECTRICAL ENGINEER DATE

08-31-15
PLANS APPROVAL DATE

DANNY D. McCLURE No. 16074 Exp. 12-31-15 ELECTRICAL — REGISTERED PROFESSIONAL ENGINEER — STATE OF CALIFORNIA

THE STATE OF CALIFORNIA OR ITS OFFICERS OR AGENTS SHALL NOT BE RESPONSIBLE FOR THE ACCURACY OR COMPLETENESS OF SCANNED COPIES OF THIS PLAN SHEET.

## CONDUIT NOTES (TSO):

N 1 C - Exist 2" C, SERVICE CONDUCTORS.

N 2 C - Exist 2" C, 2 #12 (TMS 1).
2 #6 (Ltg CKT 1). 2 #8 (Ltg CKT 2), 2 #6 (Ltg CKT 3), 2 #8 (TMS 1). 2 #8 (TMS 3), 5 #10 (PEU's).

N 3 C - Exist 1" C, 2 #12 (TMS POWER).

N 4 C - Exist 3" C, 2 #6 (Ltg CKT 1), 2 #8 (Ltg CKT 2), 2 #6 (Ltg CKT3), 2 #8 (TMS 1). 2 #8 (TMS 3), 5 #10 (PEU's).

N 5 C - Exist 2" C, 2 #6 (Ltg CKT 1), 2 #8 (TMS 1).

N 6 C - Exist 2" C, 2 #8 (Ltg CKT 2), 2 #6 (Ltg CKT 3), 2 #8 (TMS 3).

N 7 C - Exist 2" C, 2 #8 (Ltg CKT 3), 2 #8 (TMS 3).

N 8 C - Exist 2" C, 2 #8 (Ltg CKT 3).

9 - 2" C, 2 #8 (TMS 3).

N 10 C - Exist 2" C, TELEPHONE SERVICE.

11 - Exist 2" C, 1 SIC (TELEPHONE).
ADD 1 SIC (TMS 1), 1 SIC (TMS 3),

N 12 C - Exist 2" C, 2 DLC.

13 - 2" C, 1 SIC (TMS 1), 1 SIC (TMS 3).

14 - 2" C, 1 SIC (TMS 1).

15 - 2" C, 1 SIC (TMS 3).

16 - 2" C, 2 DLC, 4 SENSOR CABLES.

17 - 2" C, 1 DLC, 2 SENSOR CABLES.

N 18 C - Exist 2" C, 2 #8 (TMS 2).

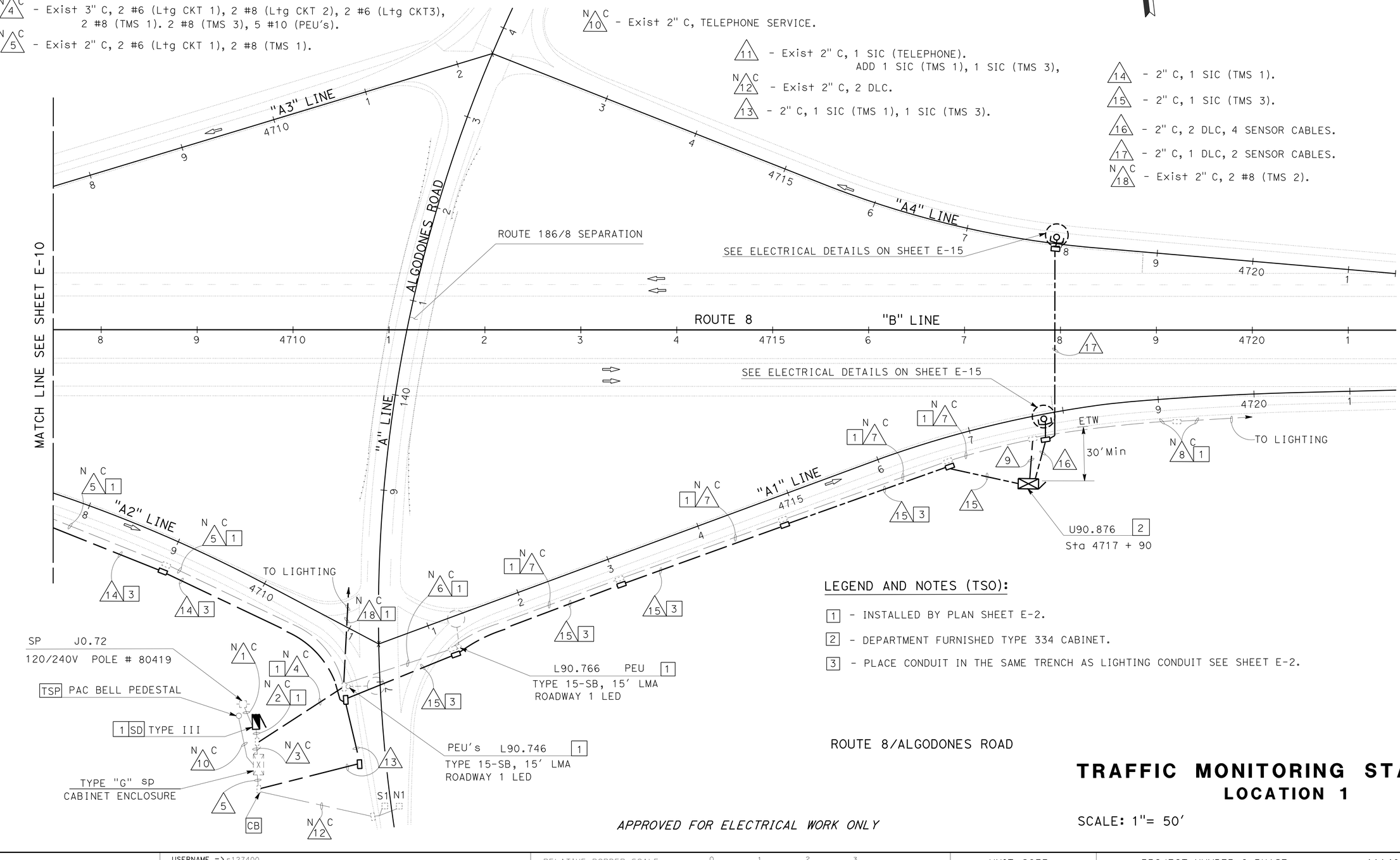


## LEGEND AND NOTES (TSO):

1 - INSTALLED BY PLAN SHEET E-2.

2 - DEPARTMENT FURNISHED TYPE 334 CABINET.

3 - PLACE CONDUIT IN THE SAME TRENCH AS LIGHTING CONDUIT SEE SHEET E-2.

ROUTE 8/ALGODONES ROAD

# TRAFFIC MONITORING STATION
## LOCATION 1

SCALE: 1"= 50'

**E-11**

*APPROVED FOR ELECTRICAL WORK ONLY*

STATE OF CALIFORNIA - DEPARTMENT OF TRANSPORTATION
Caltrans® TRAFFIC ELECTRICAL

FUNCTIONAL SUPERVISOR: RAJPREET SINGH
CALCULATED-DESIGNED BY: DANNY MCCLURE
CHECKED BY: HECTOR SANTAMARIA
REVISED BY
DATE REVISED

LAST REVISION DATE PLOTTED => 03-SEP-2015
09-02-15 TIME PLOTTED => 14:06

| Dist | COUNTY | ROUTE | POST MILES TOTAL PROJECT | SHEET No. | TOTAL SHEETS |
|---|---|---|---|---|---|
| 11 | Imp | 8 | R90.0/R96.8 | 152 | 209 |

07-23-15
REGISTERED ELECTRICAL ENGINEER DATE

08-31-15
PLANS APPROVAL DATE

REGISTERED PROFESSIONAL ENGINEER
DANNY D. McCLURE
No. 16074
Exp. 12-31-15
ELECTRICAL
STATE OF CALIFORNIA

THE STATE OF CALIFORNIA OR ITS OFFICERS OR AGENTS SHALL NOT BE RESPONSIBLE FOR THE ACCURACY OR COMPLETENESS OF SCANNED COPIES OF THIS PLAN SHEET.

## CONDUIT NOTES (TSO):

1 - 2" C, 2 DLC, 4 SENSOR CABLES.

2 - 2" C, 1 DLC, 2 SENSOR CABLES.

3 - 2" C, 2 #8 (TMS 1).

4 - 2" C, 1 SIC (TMS 1).

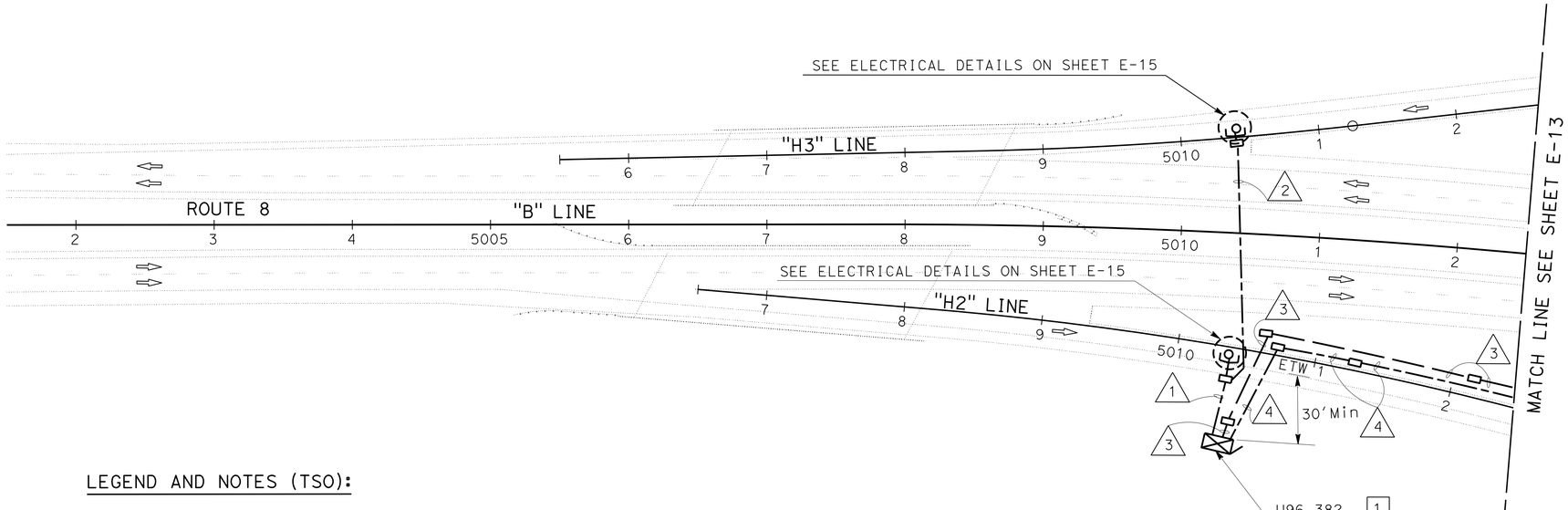


## LEGEND AND NOTES (TSO):

[1] - DEPARTMENT FURNISHED TYPE 334 CABINET.

ROUTE 8/FOURTH AVENUE

# TRAFFIC MONITORING STATION
## LOCATION 2

*APPROVED FOR ELECTRICAL WORK ONLY*

SCALE: 1"= 50'

**E-12**

CALCULATED-DESIGNED BY
DANNY MCCLURE
CHECKED BY
HECTOR SANTAMARIA
FUNCTIONAL SUPERVISOR
RAJPREET SINGH
REVISED BY
DATE REVISED

STATE OF CALIFORNIA - DEPARTMENT OF TRANSPORTATION
Caltrans® TRAFFIC ELECTRICAL

LAST REVISION DATE PLOTTED => 03-SEP-2015
09-02-15 TIME PLOTTED => 14:06

BORDER LAST REVISED 7/2/2010
USERNAME => s127400
DGN FILE => 1114000006ua012.dgn
RELATIVE BORDER SCALE IS IN INCHES 0 1 2 3
UNIT 2833
PROJECT NUMBER & PHASE 11140000061

| Dist | COUNTY | ROUTE | POST MILES TOTAL PROJECT | SHEET No. | TOTAL SHEETS |
|---|---|---|---|---|---|
| 11 | Imp | 8 | R90.0/R96.8 | 153 | 209 |

07-23-15
REGISTERED ELECTRICAL ENGINEER DATE

DANNY D. McCLURE No. 16074 Exp. 12-31-15 ELECTRICAL — REGISTERED PROFESSIONAL ENGINEER — STATE OF CALIFORNIA

08-31-15
PLANS APPROVAL DATE

*THE STATE OF CALIFORNIA OR ITS OFFICERS OR AGENTS SHALL NOT BE RESPONSIBLE FOR THE ACCURACY OR COMPLETENESS OF SCANNED COPIES OF THIS PLAN SHEET.*

## CONDUIT NOTES (TSO):

N C 1 - Exist 3" C, 2 #6 (Ltg CKT 1), 2 #8 (Ltg CKT 2), 2 #6 (Ltg CKT3). 6 #10 (PEU), 2 #8 (SIGN), 2 #10 (TMS 2).

2 - 2" C, 2 #6 (TMS 1), 2 #6 (TMS 3).

3 - 2" C, 2 #6 (TMS 1).

4 - 2" C, 2 #6 (TMS 3).

5 - Exist 2" C, 1 DLC.
RC 1 DLC. ADD 1 SIC (TMS1), 1 SIC (TMS 2).

6 - 2" C, 1 SIC (TMS 1).

7 - 2" C, 1 SIC (TMS 3).

N C 8 - Exist 2" C, TELEPHONE SERVICE CONDUCTORS.

N C 9 - Exist 2" C, SERVICE CONDUCTORS.

N C 10 - Exist 2" C, 2 #6 (Ltg CKT 1), 2 #8 (Ltg CKT 2), 2 #6 (Ltg CKT3). 6 #10 (PEU).

N C 11 - Exist 2" C, 2 #10 (TMS 2).

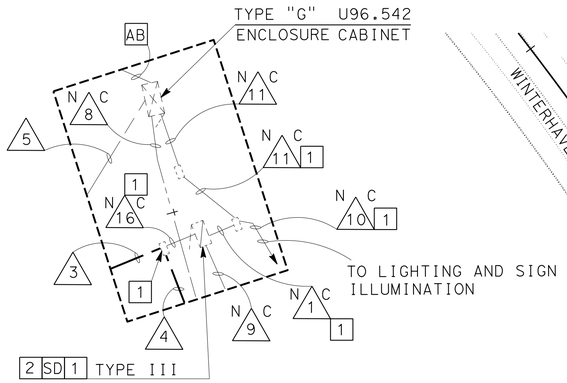


DETAIL "U"
NO SCALE

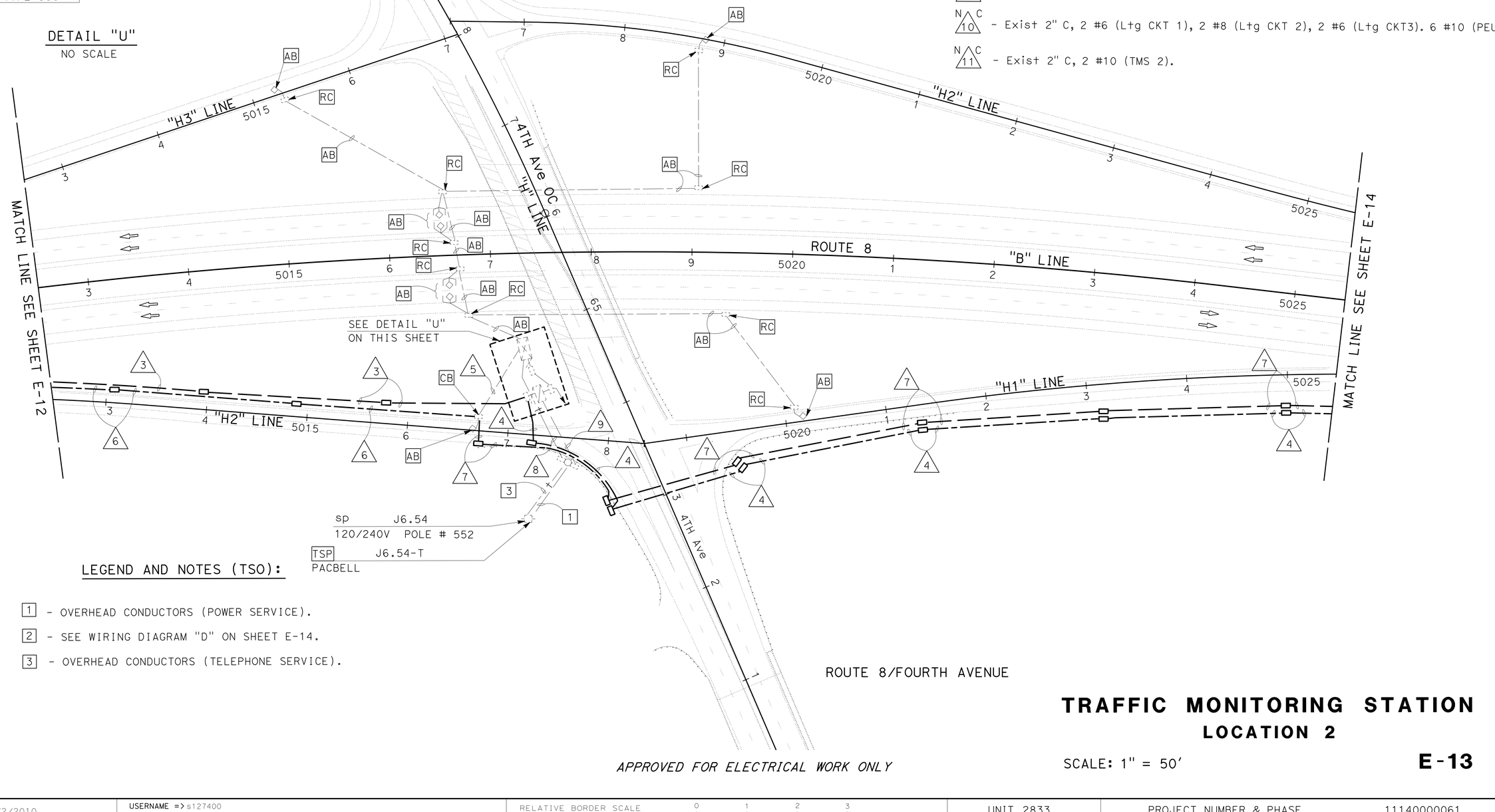


## LEGEND AND NOTES (TSO):

1 - OVERHEAD CONDUCTORS (POWER SERVICE).

2 - SEE WIRING DIAGRAM "D" ON SHEET E-14.

3 - OVERHEAD CONDUCTORS (TELEPHONE SERVICE).

*APPROVED FOR ELECTRICAL WORK ONLY*

# TRAFFIC MONITORING STATION
## LOCATION 2

SCALE: 1" = 50'

**E-13**

STATE OF CALIFORNIA - DEPARTMENT OF TRANSPORTATION
Caltrans® TRAFFIC ELECTRICAL
FUNCTIONAL SUPERVISOR: RAJPREET SINGH
CALCULATED-DESIGNED BY: DANNY MCCLURE
CHECKED BY: HECTOR SANTAMARIA
REVISED BY | DATE REVISED

LAST REVISION | DATE PLOTTED => 03-SEP-2015
09-02-15 | TIME PLOTTED => 14:06

BORDER LAST REVISED 7/2/2010 | USERNAME => s127400 | DGN FILE => 1114000006ua013.dgn | RELATIVE BORDER SCALE IS IN INCHES 0 1 2 3 | UNIT 2833 | PROJECT NUMBER & PHASE 11140000061

| Dist | COUNTY | ROUTE | POST MILES TOTAL PROJECT | SHEET No. | TOTAL SHEETS |
|---|---|---|---|---|---|
| 11 | Imp | 8 | R90.0/R96.8 | 154 | 209 |

Danny D. McClure 07-23-15
REGISTERED ELECTRICAL ENGINEER DATE

08-31-15
PLANS APPROVAL DATE

REGISTERED PROFESSIONAL ENGINEER — DANNY D. McCLURE — No. 16074 — Exp. 12-31-15 — ELECTRICAL — STATE OF CALIFORNIA

THE STATE OF CALIFORNIA OR ITS OFFICERS OR AGENTS SHALL NOT BE RESPONSIBLE FOR THE ACCURACY OR COMPLETENESS OF SCANNED COPIES OF THIS PLAN SHEET.

## CONDUIT NOTES (TSO):

1. - 2" C, 2 #8 (TMS 3).
2. - 2" C, 1 SIC (TMS 3).
3. - 2" C, 6 DLC, 12 SENSOR CABLES.
4. - 2" C, 5 DLC, 10 SENSOR CABLES.
5. - 2" C, 4 DLC, 8 SENSOR CABLES.
6. - 2" C, 3 DLC, 6 SENSOR CABLES.
7. - 2" C, 2 DLC, 4 SENSOR CABLES.

## LEGEND AND NOTES (TSO):

[1] - DEPARTMENT FURNISHED TYPE 334 CABINET.

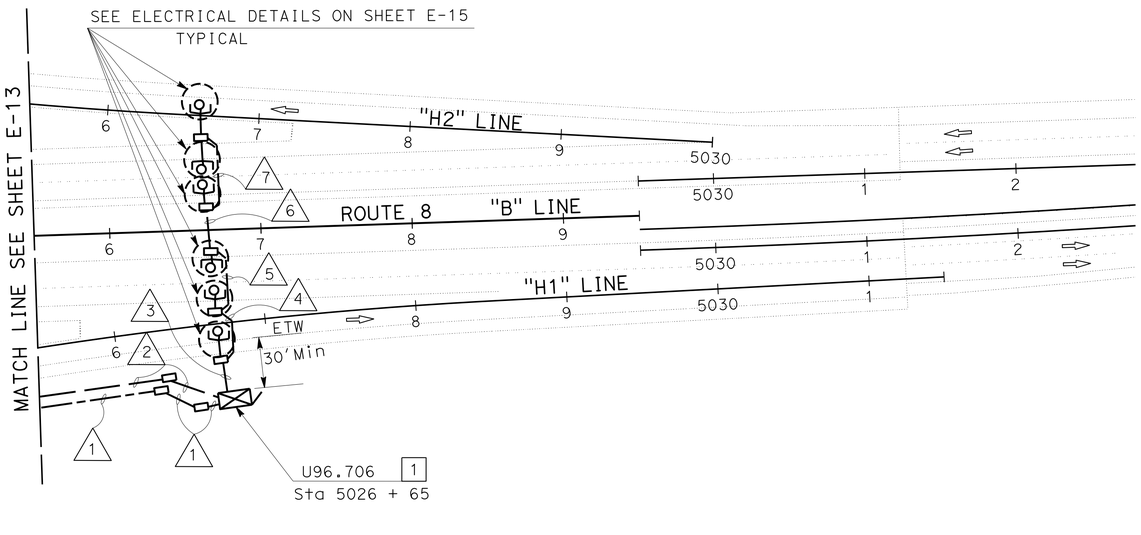


## CIRCUIT BREAKERS

MAIN 2P-100 A
A-SP-15 A
B, C } 2P-30 A
D, E } 2P-30 A
F, G } 2P-30 A
H, I } 2P-30 A
J -SP-15 A
K -SP-15 A
L -SP-15 A

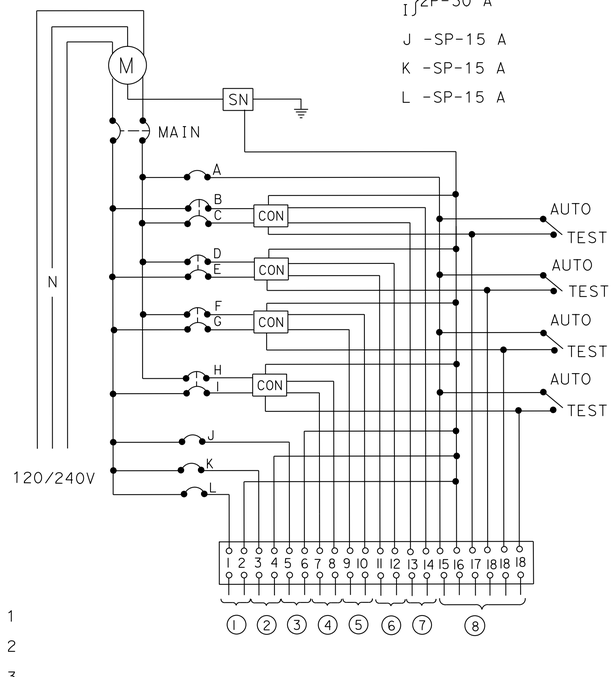


① - TMS 1
② - TMS 2
③ - TMS 3
④ - SIGN Ltg
⑤ - HIGHWAY Ltg (CKT 1)
⑥ - HIGHWAY LTG (CKT 2)
⑦ - HIGHWAY LTG (CKT 3)
⑧ - PEU's

WIRING DIAGRAM "D" J6.54
(TYPE III-CF EQUIPMENT ENCLOSURE
SEE Std PLANS ES-2C & ES-2F)

ROUTE 8/FOURTH AVENUE

# TRAFFIC MONITORING STATION
## LOCATION 2

*APPROVED FOR ELECTRICAL WORK ONLY*

SCALE: 1" = 50'

**E-14**

STATE OF CALIFORNIA - DEPARTMENT OF TRANSPORTATION
Caltrans® TRAFFIC ELECTRICAL
FUNCTIONAL SUPERVISOR: RAJPREET SINGH
CALCULATED-DESIGNED BY: DANNY MCCLURE
CHECKED BY: HECTOR SANTAMARIA
REVISED BY | DATE REVISED

LAST REVISION | DATE PLOTTED => 03-SEP-2015 | TIME PLOTTED => 14:06
09-02-15

BORDER LAST REVISED 7/2/2010 | USERNAME => s127400 | DGN FILE => 1114000006ua014.dgn | RELATIVE BORDER SCALE IS IN INCHES 0 1 2 3 | UNIT 2833 | PROJECT NUMBER & PHASE 11140000061

| Dist | COUNTY | ROUTE | POST MILES TOTAL PROJECT | SHEET No. | TOTAL SHEETS |
|---|---|---|---|---|---|
| 11 | Imp | 8 | R90.0/R96.8 | 155 | 209 |

REGISTERED ELECTRICAL ENGINEER — 07-23-15 DATE

08-31-15
PLANS APPROVAL DATE

REGISTERED PROFESSIONAL ENGINEER — DANNY D. McCLURE No. 16074 Exp. 12-31-15 ELECTRICAL — STATE OF CALIFORNIA

THE STATE OF CALIFORNIA OR ITS OFFICERS OR AGENTS SHALL NOT BE RESPONSIBLE FOR THE ACCURACY OR COMPLETENESS OF SCANNED COPIES OF THIS PLAN SHEET.

NOTES:

1 - PLACE 2" DUCT TAPE ALONG THE EDGE OF SAW CUT BEFORE POURING EPOXY SEALANT. LEVEL EPOXY SEALANT TO FINISHED ROAD SURFACE. WAIT 5 MINUTES AND REMOVE DUCT TAPE.

| FIRST SENSOR TRANSMISSION CABLE | LOOP DLC | SECOND SENSOR TRANSMISSION CABLE |
|---|---|---|
| 1-W-1 | 1-W-1 | 1-W-2 |

PIEZO SENSOR IDENTIFICATION

DIRECTION OF TRAVEL ( TYPICAL) →

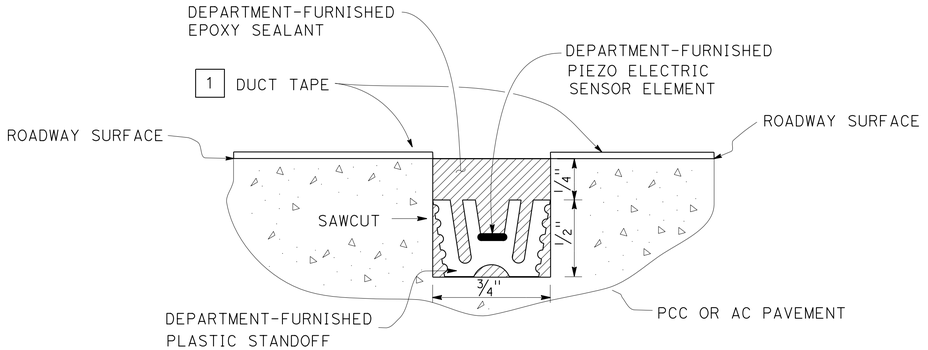


SECTION B-B

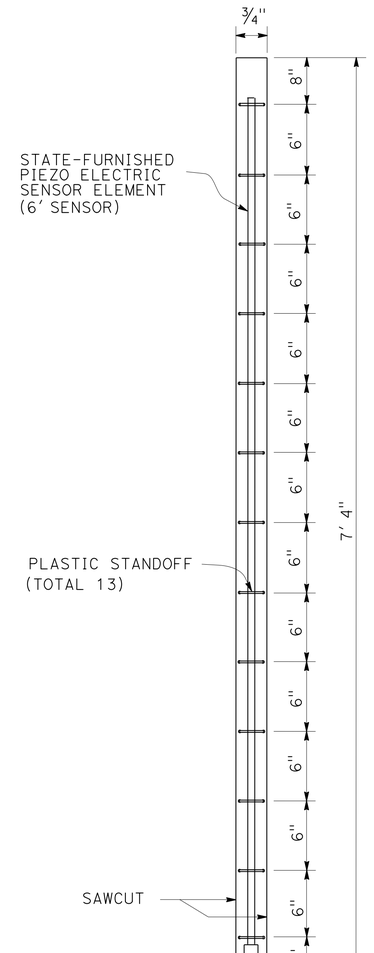


DETAIL "M"

SENSOR INSTALLATION

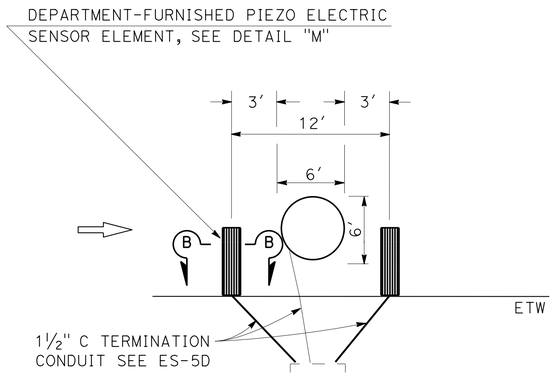


SENSOR PLACEMENT

TYPICAL

## PIEZO ELECTRIC SENSOR INSTALLATION DETAILS

*APPROVED FOR ELECTRICAL WORK ONLY*

## TRAFFIC MONITORING STATION (ELECTRICAL DETAILS)

NO SCALE

**E-15**

STATE OF CALIFORNIA - DEPARTMENT OF TRANSPORTATION
Caltrans® TRAFFIC ELECTRICAL

| CALCULATED-DESIGNED BY | CHECKED BY | FUNCTIONAL SUPERVISOR | REVISED BY | DATE REVISED |
|---|---|---|---|---|
| DANNY MCCLURE | HECTOR SANTAMARIA | RAJPREET SINGH | | |

LAST REVISION DATE PLOTTED => 03-SEP-2015
09-02-15 TIME PLOTTED => 14:06

BORDER LAST REVISED 7/2/2010 | USERNAME => s127400 | DGN FILE => 1114000006ua015.dgn | RELATIVE BORDER SCALE IS IN INCHES 0 1 2 3 | UNIT 2833 | PROJECT NUMBER & PHASE 11140000061

## M

| | |
|---|---|
| Maint | MAINTENANCE |
| Max | MAXIMUM |
| MB | METAL BEAM |
| MBB | METAL BEAM BARRIER |
| MBGR | METAL BEAM GUARD RAILING |
| Med | MEDIAN |
| MGS | MIDWEST GUARDRAIL SYSTEM |
| MH | MANHOLE |
| Min | MINIMUM |
| Misc | MISCELLANEOUS |
| Misc I & S | MISCELLANEOUS IRON AND STEEL |
| Mkr | MARKER |
| Mod | MODIFIED,<br>MODIFY |
| Mon | MONUMENT |
| MP | METAL PLATE |
| MPGR | METAL PLATE GUARD RAILING |
| MR | MOVEMENT RATING |
| MSE | MECHANICALLY STABILIZED EMBANKMENT |
| Mt | MOUNTAIN, MOUNT |
| Mtl | MATERIAL |
| MVP | MAINTENANCE VEHICLE PULLOUT |

## N

| | |
|---|---|
| N | NORTH |
| NB | NORTHBOUND |
| No. | NUMBER (MUST HAVE PERIOD) |
| Nos. | NUMBERS (MUST HAVE PERIOD) |
| NPS | NOMINAL PIPE SIZE |
| NS | NEAR SIDE |
| NSP | NEW STANDARD PLAN |
| NTS | NOT TO SCALE |

## O

| | |
|---|---|
| Oblr | OBLITERATE |
| OC | OVERCROSSING |
| OD | OUTSIDE DIAMETER |
| OF | OUTSIDE FACE |
| OG | ORIGINAL GROUND |
| OGAC | OPEN GRADED ASPHALT CONCRETE |
| OGFC | OPEN GRADED FRICTION COURSE |
| OH | OVERHEAD |
| OHWM | ORDINARY HIGH WATER MARK |
| O-O | OUT TO OUT |
| Opp | OPPOSITE |
| OSD | OVERSIDE DRAIN |

## P

| | |
|---|---|
| P | PAGE |
| PAP | PERFORATED ALUMINUM PIPE |
| PB | PULL BOX |
| PC | POINT OF CURVATURE,<br>PRECAST |
| PCC | POINT OF COMPOUND CURVE,<br>PORTLAND CEMENT CONCRETE |
| PCMS | PORTABLE CHANGEABLE MESSAGE SIGN |
| PCP | PERFORATED CONCRETE PIPE,<br>PRESTRESSED CONCRETE PIPE |
| PCVC | POINT OF COMPOUND VERTICAL CURVE |
| PEC | PERMIT TO ENTER AND CONSTRUCT |
| Ped | PEDESTRIAN |
| Ped OC | PEDESTRIAN OVERCROSSING |
| Ped UC | PEDESTRIAN UNDERCROSSING |
| Perm Mtl | PERMEABLE MATERIAL |

## P continued

| | |
|---|---|
| PG | PROFILE GRADE |
| PI | POINT OF INTERSECTION |
| PJP | PARTIAL JOINT PENETRATION |
| Pkwy | PARKWAY |
| ℄,PL | PLATE |
| P/L | PROPERTY LINE |
| PM | POST MILE,<br>TIME FROM NOON TO MIDNIGHT |
| PN | PAVING NOTCH |
| POC | POINT OF HORIZONTAL CURVE |
| POT | POINT OF TANGENT |
| POVC | POINT OF VERTICAL CURVE |
| PP | PIPE PILE,<br>PLASTIC PIPE,<br>POWER POLE |
| PPL | PREFORMED PERMEABLE LINER |
| PPP | PERFORATED PLASTIC PIPE |
| PRC | POINT OF REVERSE CURVE |
| PRF | PAVEMENT REINFORCING FABRIC |
| PRVC | POINT OF REVERSE VERTICAL CURVE |
| PS&E | PLANS, SPECIFICATIONS AND ESTIMATES |
| PS, P/S | PRESTRESSED |
| PSP | PERFORATED STEEL PIPE |
| PT | POINT OF TANGENCY |
| PVC | POLYVINYL CHLORIDE |
| Pvmt | PAVEMENT |

## Q

| | |
|---|---|
| Qty | QUANTITY |

## R

| | |
|---|---|
| R | RADIUS |
| R & D | REMOVE AND DISPOSE |
| R & S | REMOVE AND SALVAGE |
| R/C | RATE OF CHANGE |
| RCA | REINFORCED CONCRETE ARCH |
| RCB | REINFORCED CONCRETE BOX |
| RCP | REINFORCED CONCRETE PIPE |
| RCPA | REINFORCED CONCRETE PIPE ARCH |
| Rd | ROAD |
| Reinf | REINFORCED,<br>REINFORCEMENT,<br>REINFORCING |
| Rel | RELOCATE |
| Repl | REPLACEMENT |
| Ret | RETAINING |
| Rev | REVISED, REVISION |
| Rdwy | ROADWAY |
| RHMA | RUBBERIZED HOT MIX ASPHALT |
| Riv | RIVER |
| RM | ROAD-MIXED |
| RP | RADIUS POINT,<br>REFERENCE POINT |
| RR | RAILROAD |
| RSP | ROCK SLOPE PROTECTION,<br>REVISED STANDARD PLAN |
| Rt | RIGHT |
| Rte | ROUTE |
| RW | REDWOOD,<br>RETAINING WALL |
| R/W | RIGHT OF WAY |
| Rwy | RAILWAY |

## S

| | |
|---|---|
| S | SOUTH,<br>SUPPLEMENT |
| SAE | STRUCTURE APPROACH EMBANKMENT |
| Salv | SALVAGE |
| SAPP | STRUCTURAL ALUMINUM PLATE PIPE |
| SB | SOUTHBOUND |
| SC | SAND CUSHION |
| SCSP | SLOTTED CORRUGATED STEEL PIPE |
| SD | STORM DRAIN |
| Sec | SECOND,<br>SECTION |
| Sep | SEPARATION |
| SG | SUBGRADE |
| Shld | SHOULDER |
| Sht | SHEET |
| Sim | SIMILAR |
| ℄ | STATION LINE |
| SM | SELECTED MATERIAL |
| Spec | SPECIAL,<br>SPECIFICATIONS |
| SPP | SLOTTED PLASTIC PIPE |
| SS | SLOPE STAKE |
| SSBM | STRAP AND SADDLE BRACKET METHOD |
| SSD | STRUCTURAL SECTION DRAIN |
| SSPA | STRUCTURAL STEEL PLATE ARCH |
| SSPP | STRUCTURAL STEEL PLATE PIPE |
| SSPPA | STRUCTURAL STEEL PLATE PIPE ARCH |
| SSRP | STEEL SPIRAL RIB PIPE |
| St | STREET |
| Sta | STATION |
| STBB | SINGLE THRIE BEAM BARRIER |
| Std | STANDARD |
| Str | STRUCTURE |
| Surf | SURFACING |
| SW | SIDEWALK,<br>SOUND WALL |
| Swr | SEWER |
| Sym | SYMMETRICAL |
| S4S | SURFACE 4 SIDES |

## T

| | |
|---|---|
| T | SEMI-TANGENT |
| Tan | TANGENT |
| TBB | THRIE BEAM BARRIER |
| Tbr | TIMBER |
| TC | TOP OF CURB |
| TCB | TRAFFIC CONTROL BOX |
| TCE | TEMPORARY CONSTRUCTION EASEMENT |
| Tel | TELEPHONE |
| Temp | TEMPORARY |
| TG | TOP OF GRADE |
| Tot | TOTAL |
| TP | TELEPHONE POLE |
| TPB | TREATED PERMEABLE BASE |
| TPM | TREATED PERMEABLE MATERIAL |
| Trans | TRANSITION |

## T continued

| | |
|---|---|
| TS | TRANSVERSE,<br>TRAFFIC SIGNAL,<br>TUBULAR STEEL |
| Typ | TYPICAL |

## U

| | |
|---|---|
| UC | UNDERCROSSING |
| UD | UNDERDRAIN |
| UG | UNDERGROUND |
| UON | UNLESS OTHERWISE NOTED |
| UP | UNDERPASS |

## V

| | |
|---|---|
| V | VALVE,<br>DESIGN SPEED |
| Var | VARIABLE,<br>VARIES |
| VC | VERTICAL CURVE |
| VCP | VITRIFIED CLAY PIPE |
| Vert | VERTICAL |
| Via | VIADUCT |
| Vol | VOLUME |

## W

| | |
|---|---|
| W | WEST,<br>WIDTH |
| WB | WESTBOUND |
| WH | WEEP HOLE |
| WM | WIRE MESH |
| WS | WATER SURFACE |
| WSP | WELDED STEEL PIPE |
| Wt | WEIGHT |
| WV | WATER VALVE |
| WW | WINGWALL |
| WWLOL | WINGWALL LAYOUT LINE |

## X

| | |
|---|---|
| X Sec | CROSS SECTION |
| Xing | CROSSING |

## Y

| | |
|---|---|
| Yr | YEAR |
| Yrs | YEARS |

| Dist | COUNTY | ROUTE | POST MILES TOTAL PROJECT | SHEET No. | TOTAL SHEETS |
|---|---|---|---|---|---|
| 11 | Imp | 8 | R90.0/R96.8 | 156 | 209 |

Grace M. Tsushima
REGISTERED CIVIL ENGINEER

July 19, 2013
PLANS APPROVAL DATE

REGISTERED PROFESSIONAL ENGINEER — Grace M. Tsushima — No. C49814 — Exp. 9-30-14 — CIVIL — STATE OF CALIFORNIA

THE STATE OF CALIFORNIA OR ITS OFFICERS OR AGENTS SHALL NOT BE RESPONSIBLE FOR THE ACCURACY OR COMPLETENESS OF SCANNED COPIES OF THIS PLAN SHEET.

TO ACCOMPANY PLANS DATED 08-31-15

### UNIT OF MEASUREMENT SYMBOLS:

Some of the symbols used in the project plan quantity tables and in the Bid Item List are:

TABLE A

| SYMBOL USED | DEFINITIONS |
|---|---|
| ACRE | ACRE |
| CF | CUBIC FOOT |
| CY | CUBIC YARD |
| EA | EACH |
| GAL | GALLON |
| LB | POUND |
| LF | LINEAR FOOT |
| SQFT | SQUARE FOOT |
| SQYD | SQUARE YARD |
| STA | 100 FEET |
| TAB | TABLET |
| TON | 2,000 POUNDS |

Some of the symbols used in the plans other than in the project plan quantity tables are:

TABLE B

| SYMBOL USED | DEFINITIONS |
|---|---|
| ksi | KIPS PER SQUARE INCH |
| ksf | KIPS PER SQUARE FOOT |
| psi | POUNDS PER SQUARE INCH |
| psf | POUNDS PER SQUARE FOOT |
| $lb/ft^3$, pcf | POUNDS PER CUBIC FOOT |
| tsf | TONS PER SQUARE FOOT |
| mph, MPH * | MILES PER HOUR |
| ø | NOMINAL DIAMETER |
| oz | OUNCE |
| lb | POUND |
| kip | 1,000 POUNDS |
| cal | CALORIE |
| ft | FOOT OR FEET |
| gal | GALLON |

* For use on a sign panel only

STATE OF CALIFORNIA
DEPARTMENT OF TRANSPORTATION

# ABBREVIATIONS (SHEET 2 OF 2)

NO SCALE

RSP A10B DATED JULY 19, 2013 SUPERSEDES STANDARD PLAN A10B DATED MAY 20, 2011 - PAGE 2 OF THE STANDARD PLANS BOOK DATED 2010.

**REVISED STANDARD PLAN RSP A10B**

2010 REVISED STANDARD PLAN RSP A10B

6-7-13

| Dist | COUNTY | ROUTE | POST MILES TOTAL PROJECT | SHEET No. | TOTAL SHEETS |
|---|---|---|---|---|---|
| 11 | Imp | 8 | R90.0/R96.8 | 157 | 209 |

Roberta L. McLaughlin
REGISTERED CIVIL ENGINEER

July 19, 2013
PLANS APPROVAL DATE

REGISTERED PROFESSIONAL ENGINEER
Roberta L. McLaughlin
No. C40375
Exp. 3-31-15
CIVIL
STATE OF CALIFORNIA

THE STATE OF CALIFORNIA OR ITS OFFICERS OR AGENTS SHALL NOT BE RESPONSIBLE FOR THE ACCURACY OR COMPLETENESS OF SCANNED COPIES OF THIS PLAN SHEET.

TO ACCOMPANY PLANS DATED 08-31-15

## EXIT RAMP NEUTRAL AREA (GORE) TREATMENT

DETAIL 36

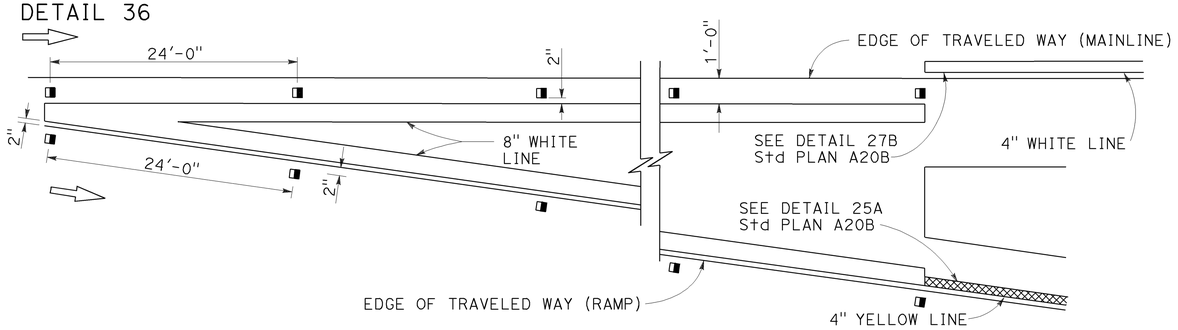


## ENTRANCE RAMP NEUTRAL AREA (MERGE) TREATMENT

DETAIL 36A

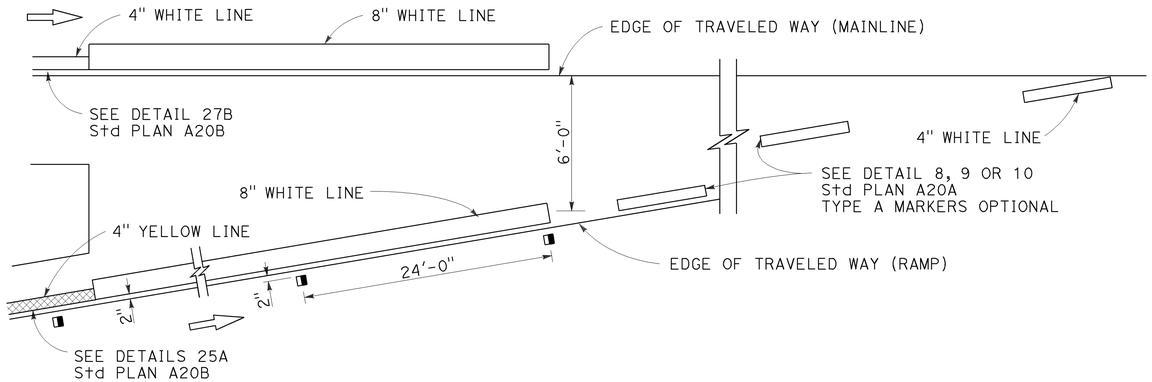


## ENTRANCE RAMP NEUTRAL AREA (ACCELERATION LANE) TREATMENT

DETAIL 36B

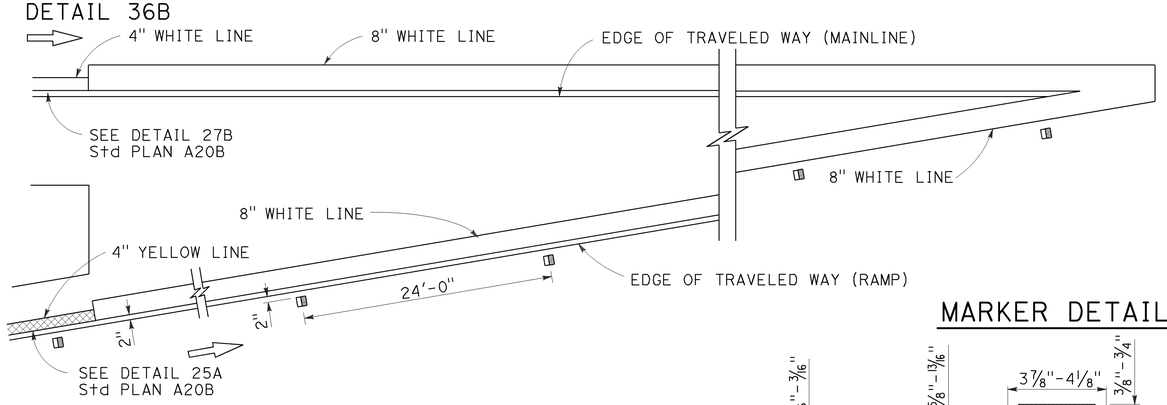


## LANE DROP AT EXIT RAMPS

DETAIL 37

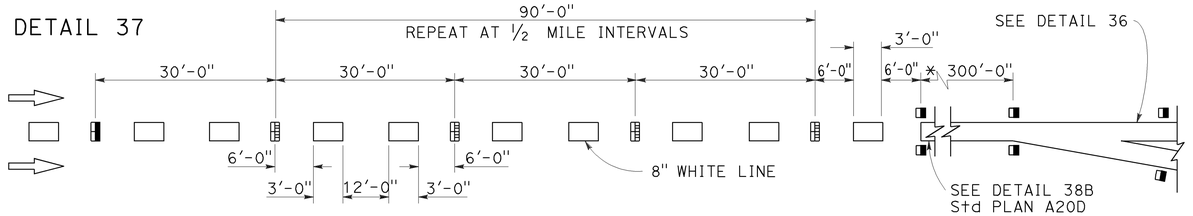


DETAIL 37A

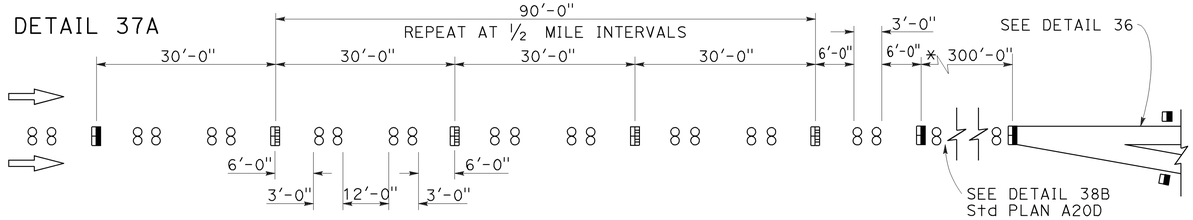


* The solid channelizing line shown may be omitted on short auxiliary lanes where weaving length is critical.

## LANE DROP AT INTERSECTIONS

DETAIL 37B

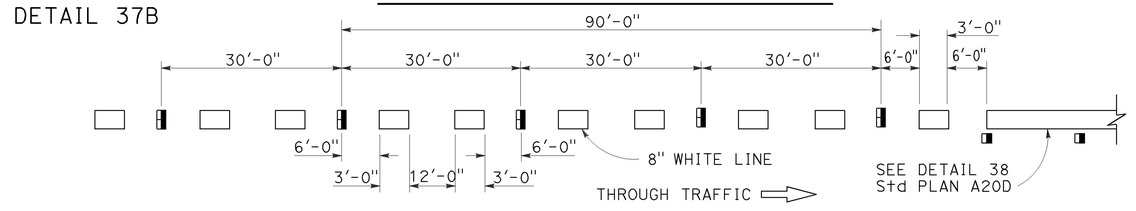


DETAIL 37C

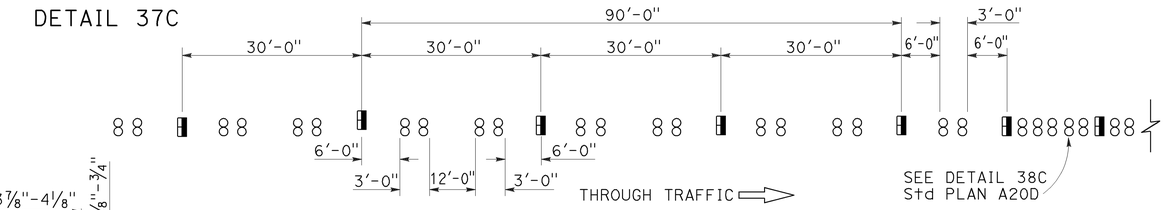


## MARKER DETAILS

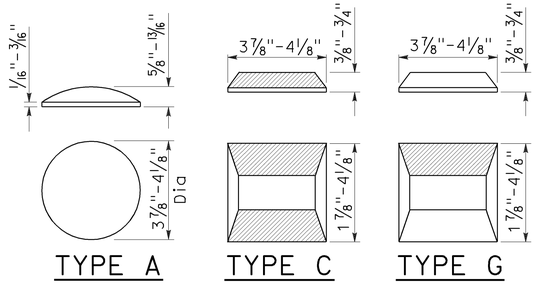


LEGEND:

MARKERS

- ○ TYPE A WHITE NON-REFLECTIVE
- ▣ TYPE C RED-CLEAR RETROREFLECTIVE
- ◨ TYPE G ONE-WAY CLEAR RETROREFLECTIVE

STATE OF CALIFORNIA
DEPARTMENT OF TRANSPORTATION

# PAVEMENT MARKERS AND TRAFFIC LINE TYPICAL DETAILS

NO SCALE

RSP A20C DATED JULY 19, 2013 SUPERSEDES STANDARD PLAN A20C
DATED MAY 20, 2011 - PAGE 11 OF THE STANDARD PLANS BOOK DATED 2010.

**REVISED STANDARD PLAN RSP A20C**

**2010 REVISED STANDARD PLAN RSP A20C**

4-29-13

| Dist | COUNTY | ROUTE | POST MILES TOTAL PROJECT | SHEET No. | TOTAL SHEETS |
|---|---|---|---|---|---|
| 11 | Imp | 8 | R90.0/R96.8 | 158 | 209 |

Roberta L. McLaughlin
REGISTERED CIVIL ENGINEER

April 20, 2012
PLANS APPROVAL DATE

REGISTERED PROFESSIONAL ENGINEER
Roberta L. McLaughlin
No. C40375
Exp. 3-31-13
CIVIL
STATE OF CALIFORNIA

THE STATE OF CALIFORNIA OR ITS OFFICERS OR AGENTS SHALL NOT BE RESPONSIBLE FOR THE ACCURACY OR COMPLETENESS OF SCANNED COPIES OF THIS PLAN SHEET.

TO ACCOMPANY PLANS DATED 08-31-15

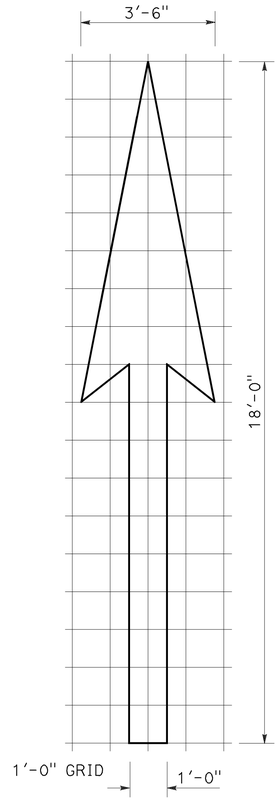


A=25 ft²

## TYPE I 18'-0" ARROW

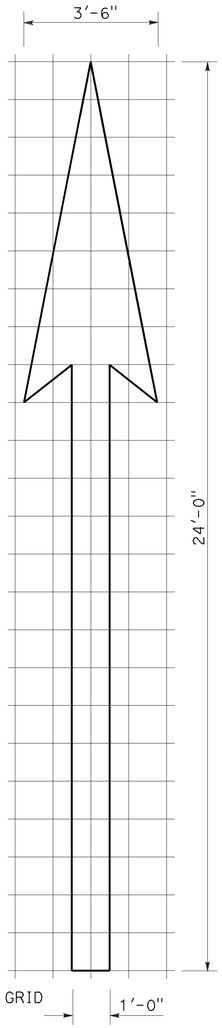


A=31 ft²

## TYPE I 24'-0" ARROW

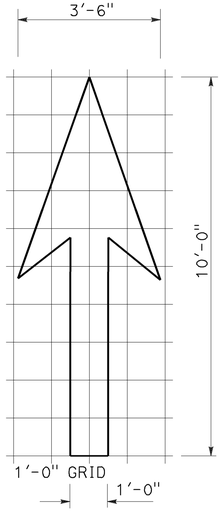


A=14 ft²

## TYPE I 10'-0" ARROW

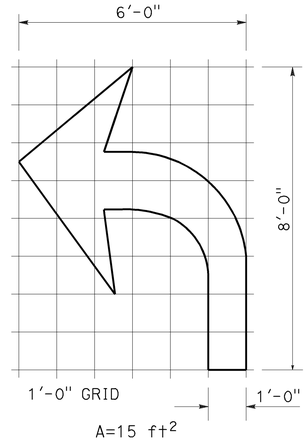


A=15 ft²

## TYPE IV (L) ARROW

(For Type IV (R) arrow, use mirror image)

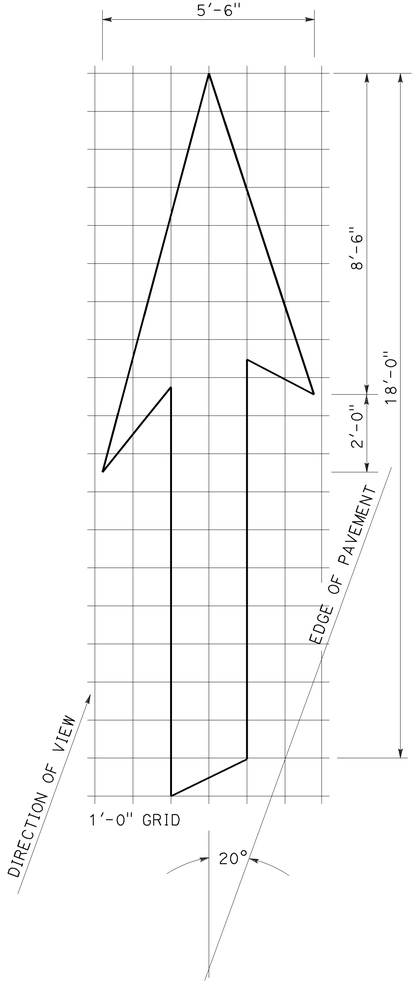


A=42 ft²

## TYPE VI ARROW

Right lane drop arrow (For left lane, use mirror image)

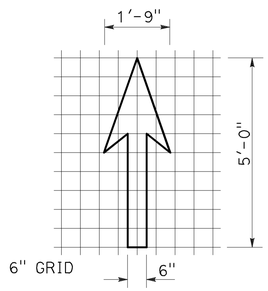


A=3.5 ft²

## BIKE LANE ARROW

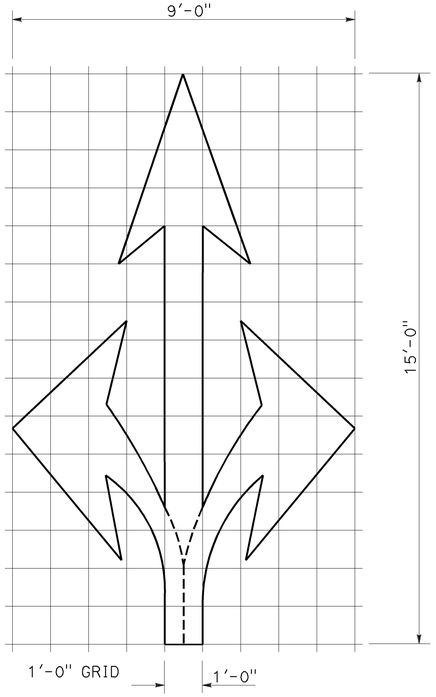


A=36 ft²

## TYPE VIII ARROW

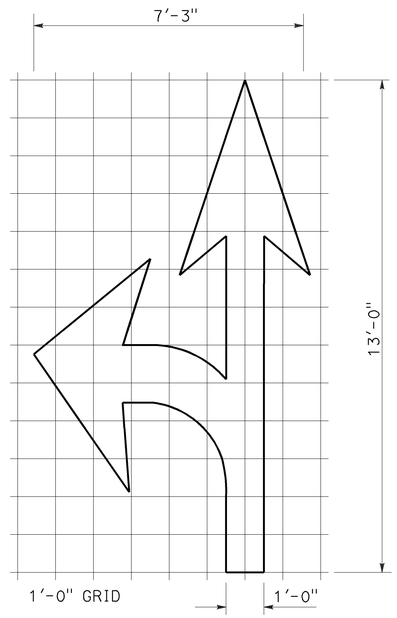


A=27 ft²

## TYPE VII (L) ARROW

(For Type VII (R) arrow, use mirror image)

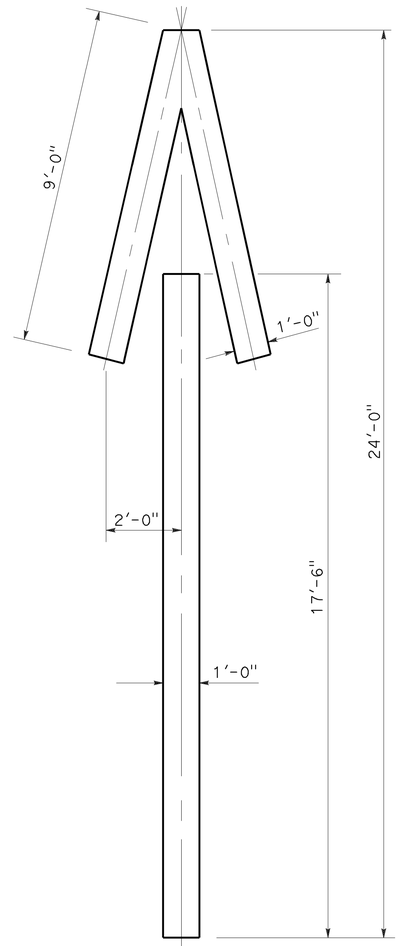


A=33 ft²

## TYPE V ARROW

NOTE:
Minor variations in dimensions may be accepted by the Engineer.

STATE OF CALIFORNIA
DEPARTMENT OF TRANSPORTATION

# PAVEMENT MARKINGS ARROWS

NO SCALE

RSP A24A DATED APRIL 20, 2012 SUPERSEDES STANDARD PLAN A24A DATED MAY 20, 2011 - PAGE 13 OF THE STANDARD PLANS BOOK DATED 2010.

**REVISED STANDARD PLAN RSP A24A**

**2010 REVISED STANDARD PLAN RSP A24A**

3-14-12

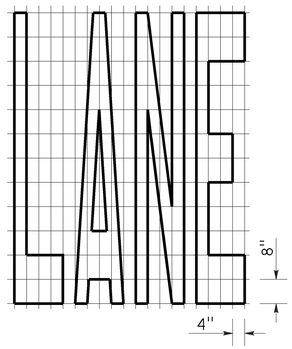


A=24 ft²

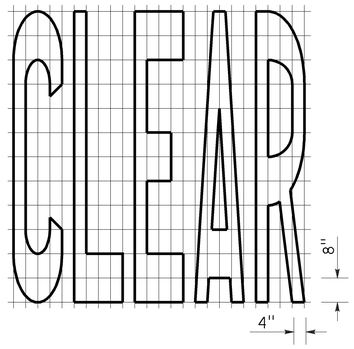


A=27 ft²

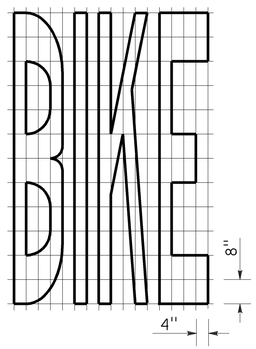


A=21 ft²

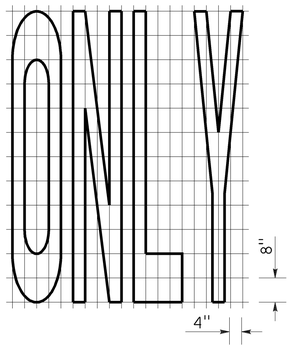


A=22 ft²

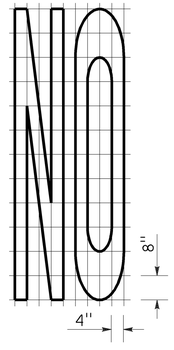


A=14 ft²

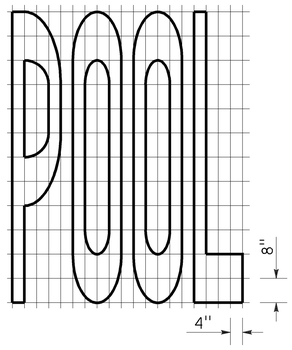


A=23 ft²

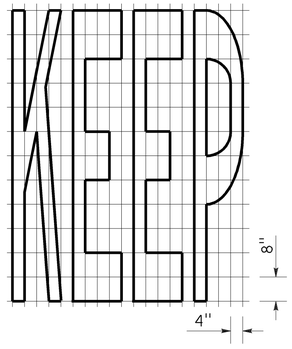


A=24 ft²

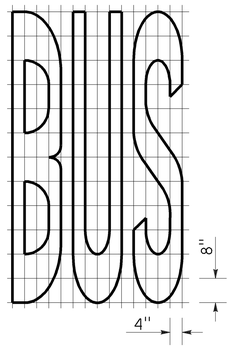


A=20 ft²

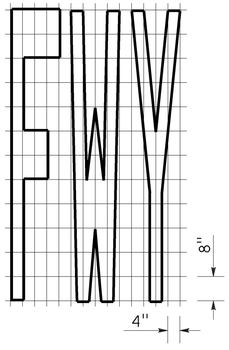


A=16 ft²

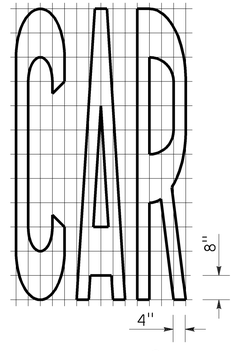


A=17 ft²

| Dist | COUNTY | ROUTE | POST MILES TOTAL PROJECT | SHEET No. | TOTAL SHEETS |
|---|---|---|---|---|---|
| 11 | Imp | 8 | R90.0/R96.8 | 159 | 209 |

Roberta L. McLaughlin
REGISTERED CIVIL ENGINEER

July 20, 2012
PLANS APPROVAL DATE

REGISTERED PROFESSIONAL ENGINEER
Roberta L. McLaughlin
No. C40375
Exp. 3-31-13
CIVIL
STATE OF CALIFORNIA

THE STATE OF CALIFORNIA OR ITS OFFICERS OR AGENTS SHALL NOT BE RESPONSIBLE FOR THE ACCURACY OR COMPLETENESS OF SCANNED COPIES OF THIS PLAN SHEET.

TO ACCOMPANY PLANS DATED 08-31-15

| WORD MARKINGS | | | |
|---|---|---|---|
| ITEM | ft² | ITEM | ft² |
| LANE | 24 | NO | 14 |
| POOL | 23 | BIKE | 21 |
| CAR | 17 | BUS | 20 |
| CLEAR | 27 | ONLY | 22 |
| KEEP | 24 | FWY | 16 |

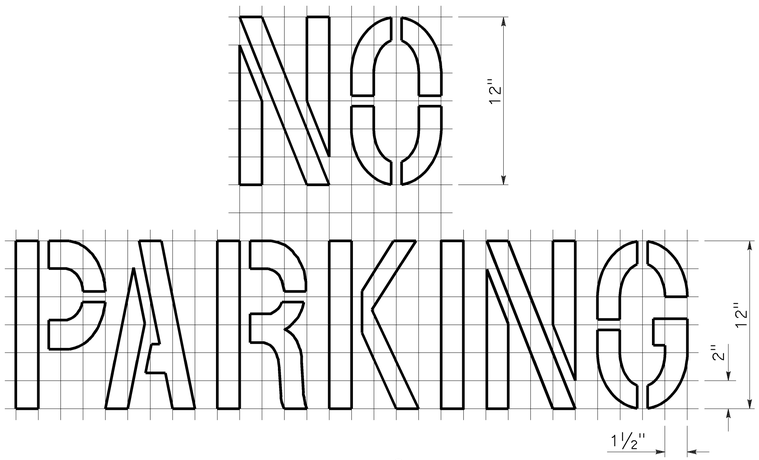


A=2 ft²
See Notes 6 and 7

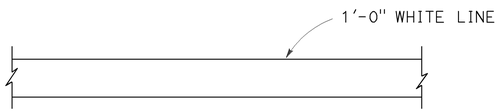


LIMIT LINE (STOP LINE)

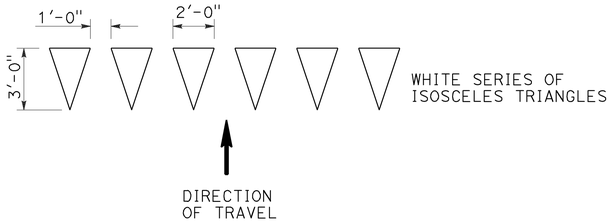


YIELD LINE

NOTES:

1. If a message consists of more than one word, it should read "UP", i.e., the first word should be nearest the driver.
2. The space between words should be at least four times the height of the characters for low speed roads, but not more than ten times the height of the characters. The space may be reduced appropriately where there is limited space because of local conditions.
3. Minor variations in dimensions may be accepted by the Engineer.
4. Portions of a letter, number or symbol may be separated by connecting segments not to exceed 2" in width.
5. The words "NO PARKING" pavement marking is to be used for parking facilities. For typical locations of markings, see Standard Plans A90A and A90B.
6. The words "NO PARKING", shall be painted in white letters no less than 1'-0" high on a contrasting background and located so that it is visible to traffic enforcement officials.

STATE OF CALIFORNIA
DEPARTMENT OF TRANSPORTATION

# PAVEMENT MARKINGS WORDS, LIMIT AND YIELD LINES

NO SCALE

RSP A24E DATED JULY 20, 2012 SUPERSEDES STANDARD PLAN A24E
DATED MAY 20, 2011 - PAGE 17 OF THE STANDARD PLANS BOOK DATED 2010.

## REVISED STANDARD PLAN RSP A24E

2010 REVISED STANDARD PLAN RSP A24E

6-12-12

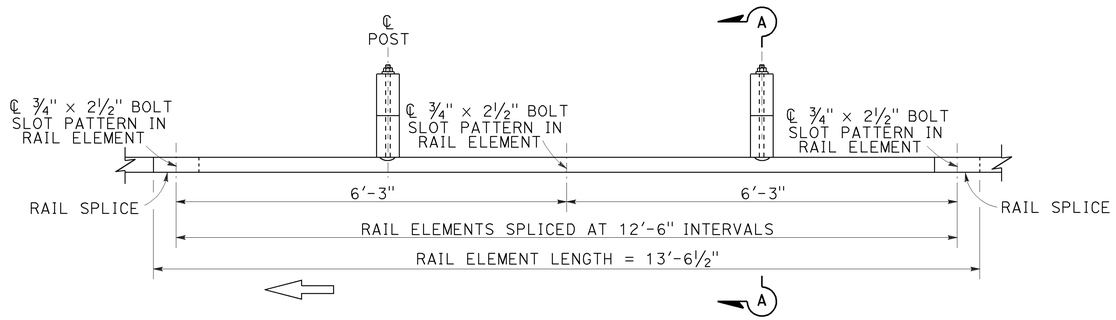


PLAN

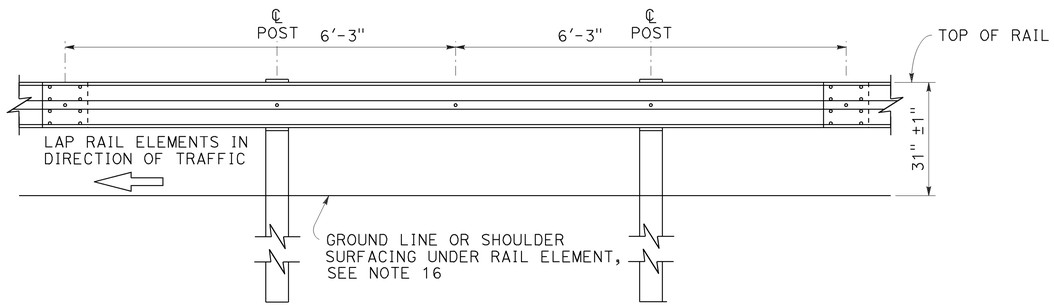


ELEVATION

# MIDWEST GUARDRAIL SYSTEM WITH WOOD POST AND BLOCKS

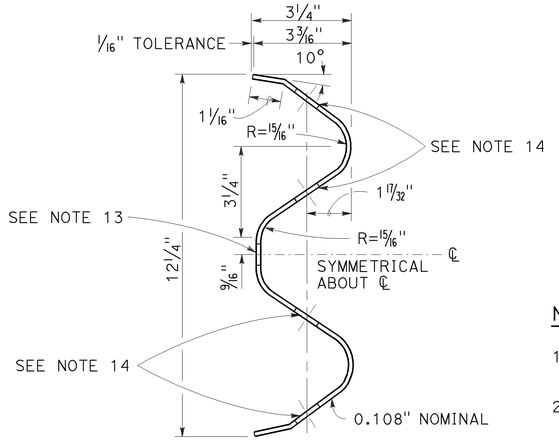


SECTION THRU RAIL ELEMENT

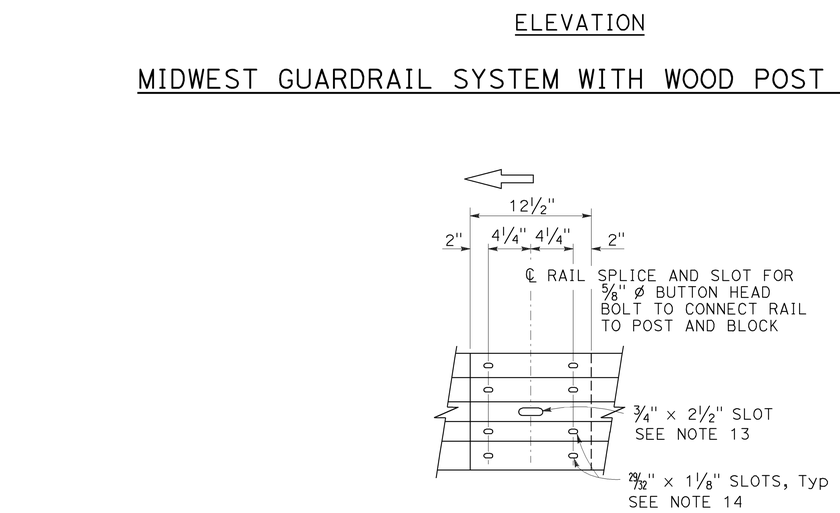


ELEVATION

## RAIL ELEMENT SPLICE DETAIL

a) Connect the over lapped end of the rail elements with ⅝" ø x 1⅜" button head oval shoulder splice bolts inserted into the 29/32" x 1⅛" slots and bolted together with ⅝" ø recessed hex nuts. Recess of hex nut points toward rail element. A total of 8 bolts and nuts are to be used at each rail splice connection.

b) The ends of the rail elements are to be overlapped in the direction of traffic (see details).

c) Where end cap is to be attached to the end of a rail element, a total of 4 of the above described splice bolts and nuts are to be used.

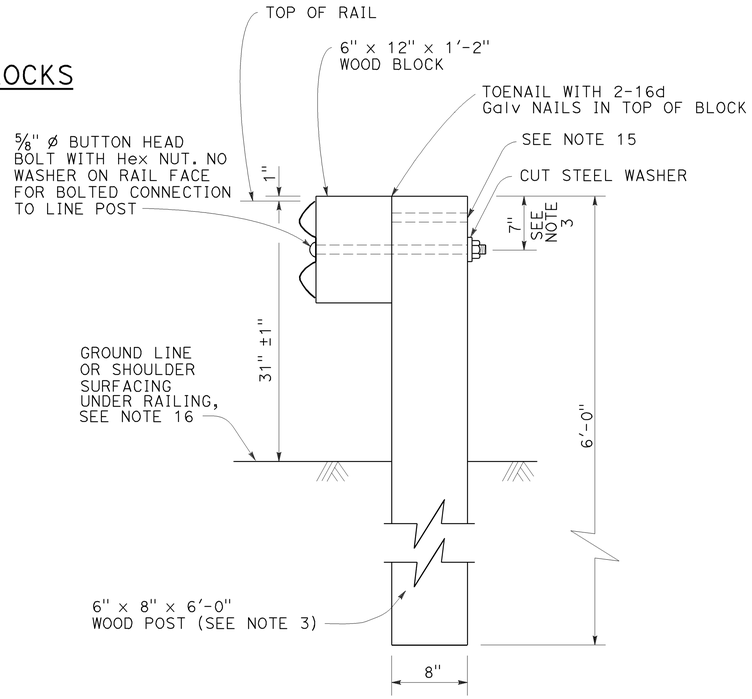


SECTION A-A

TYPICAL WOOD LINE POST INSTALLATION

See Note 4

NOTES:

1. For details of steel post installations, see Revised Standard Plan RSP A77L2.
2. For details of standard hardware used to construct MGS, see Revised Standard Plan RSP A77M1.
3. For details of wood posts and wood blocks used to construct MGS, see Revised Standard Plan RSP A77N1.
4. For additional installation details, see Revised Standard Plan RSP A77N3.
5. MGS post spacing to be 6'-3" center to center, except as otherwise noted.
6. For MGS typical layouts, see the A77P, A77Q and A77R Series of Standard Plans.
7. If railing is connected to terminal system end treatment, use 31" height terminal system end treatment.
8. For MGS end anchor details, see Revised Standard Plans RSP A77S1 and RSP A77T2.
9. For details of MGS transition to bridge railing, see Revised Standard Plan RSP A77U4.
10. For additional details of MSG connection to bridge railing, see Revised Standard Plans RSP A77U1, RSP A77U2 and RSP A77V1.
11. For MGS connection details to abutments and walls, see Revised Standard Plan RSP A77U3.
12. For typical MGS delineation and dike positioning details, see Revised Standard Plan RSP A77N4.
13. Slotted hole for bolted connection of rail element to block and post. See "Section Thru Rail Element".
14. Slotted holes for splice bolts to overlap ends of rail element. See "Section Thru Rail Element".
15. Additional hole in uppermost portion of line post is for potential future adjustments of railing height. See Revised Standard Plan RSP A77N1.
16. Install posts in soil.

| Dist | COUNTY | ROUTE | POST MILES TOTAL PROJECT | SHEET No. | TOTAL SHEETS |
|---|---|---|---|---|---|
| 11 | Imp | 8 | R90.0/R96.8 | 160 | 209 |

Randell D. Hiatt
REGISTERED CIVIL ENGINEER

July 19, 2013
PLANS APPROVAL DATE

REGISTERED PROFESSIONAL ENGINEER — Randell D. Hiatt — No. C50200 — Exp. 6-30-15 — CIVIL — STATE OF CALIFORNIA

THE STATE OF CALIFORNIA OR ITS OFFICERS OR AGENTS SHALL NOT BE RESPONSIBLE FOR THE ACCURACY OR COMPLETENESS OF SCANNED COPIES OF THIS PLAN SHEET.

TO ACCOMPANY PLANS DATED 08-31-15

STATE OF CALIFORNIA
DEPARTMENT OF TRANSPORTATION

# MIDWEST GUARDRAIL SYSTEM STANDARD RAILING SECTION (WOOD POST WITH WOOD BLOCK)

NO SCALE

RSP A77L1 DATED JULY 19, 2013 SUPPLEMENTS STANDARD PLANS BOOK DATED 2010.

**REVISED STANDARD PLAN RSP A77L1**

2010 REVISED STANDARD PLAN RSP A77L1

7-3-13

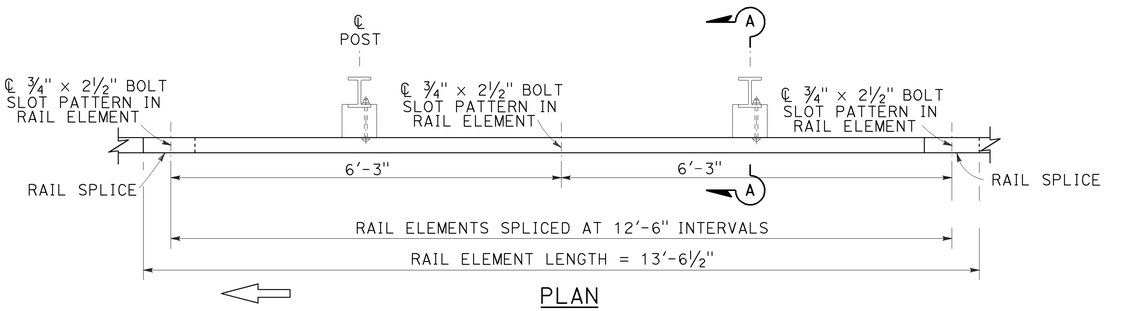


PLAN

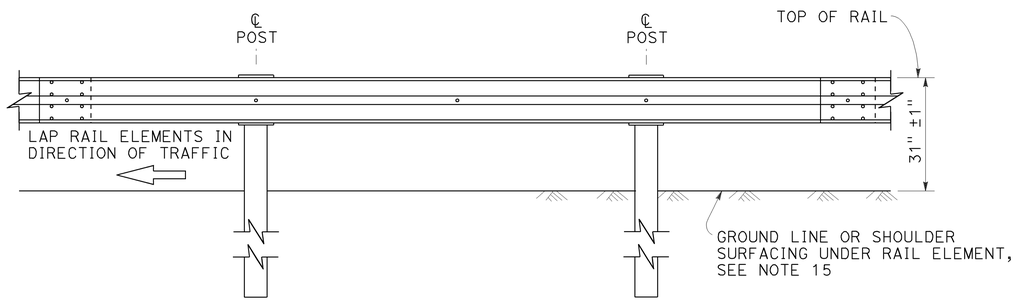


ELEVATION

## MIDWEST GUARDRAIL SYSTEM WITH STEEL POSTS AND NOTCHED WOOD OR NOTCHED RECYCLED PLASTIC BLOCKS

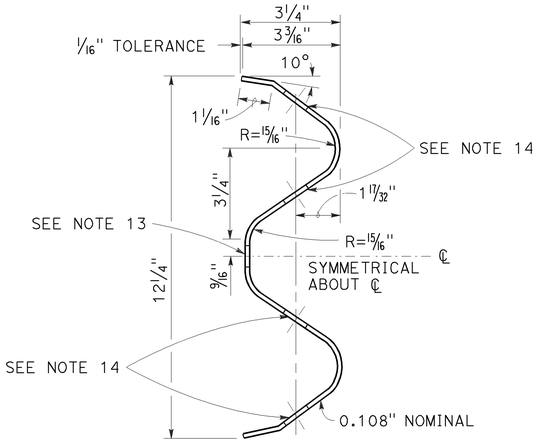


SECTION THRU RAIL ELEMENT

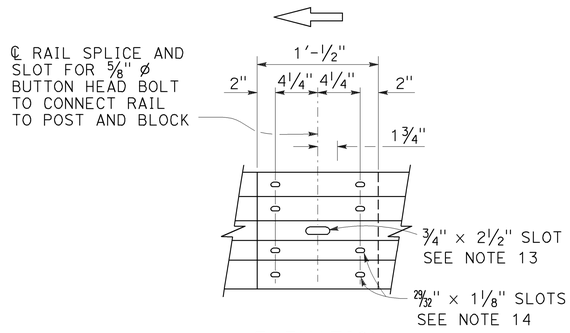


ELEVATION

## RAIL ELEMENT SPLICE DETAIL

a) Connect the over lapped end of the rail elements with ⅝" ø x 1⅜" button head oval shoulder splice bolts inserted into the 29/32" x 1⅛" slots and bolted together with ⅝" ø recessed hex nuts. Recess of hex nut points toward rail element. A total of 8 bolts and nuts are to be used at each rail splice connection.

b) The ends of the rail elements are to be overlapped in the direction of traffic (see details).

c) Where end cap is to be attached to the end of a rail element, a total of 4 of the above described splice bolts and nuts are to be used.

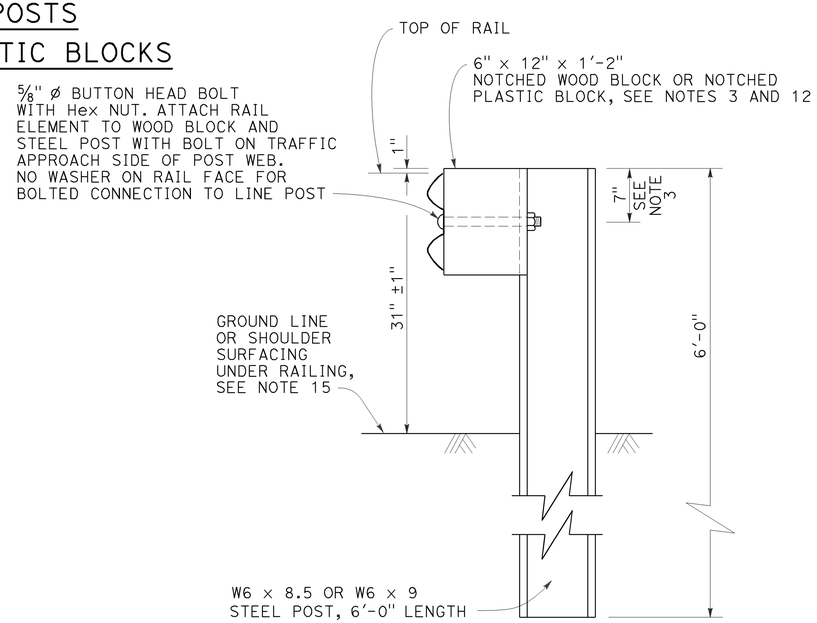


SECTION A-A

## TYPICAL STEEL LINE POST INSTALLATION

See Note 4

| Dist | COUNTY | ROUTE | POST MILES TOTAL PROJECT | SHEET No. | TOTAL SHEETS |
|---|---|---|---|---|---|
| 11 | Imp | 8 | R90.0/R96.8 | 161 | 209 |

Randell D. Hiatt
REGISTERED CIVIL ENGINEER

July 19, 2013
PLANS APPROVAL DATE

REGISTERED PROFESSIONAL ENGINEER — Randell D. Hiatt — No. C50200 — Exp. 6-30-15 — CIVIL — STATE OF CALIFORNIA

THE STATE OF CALIFORNIA OR ITS OFFICERS OR AGENTS SHALL NOT BE RESPONSIBLE FOR THE ACCURACY OR COMPLETENESS OF SCANNED COPIES OF THIS PLAN SHEET.

TO ACCOMPANY PLANS DATED 08-31-15

NOTES:

1. For details of wood post installations, see Revised Standard Plan RSP A77L1.
2. For details of standard hardware used to construct MGS, see Revised Standard Plan RSP A77M1.
3. For details of steel posts and notched wood blocks used to construct MGS, see Revised Standard Plan RSP A77N2.
4. For additional installation details, see Revised Standard Plan RSP A77N3.
5. MGS post spacing to be 6'-3" center to center, except as otherwise noted.
6. For MGS typical layouts, see the A77P, A77Q and A77R Series of Standard Plans.
7. If railing is connected to terminal system end treatment, use 31" height terminal system end treatment.
8. For MGS end anchor details, see Revised Standard Plans RSP A77S1 and RSP A77T2.
9. For details of MGS transition to bridge railing, see Revised Standard Plan RSP A77U4.
10. For additional details of MGS connection to bridge railings, see Revised Standard Plans RSP A77U1, RSP A77U2 and RSP A77V1.
11. For dike positioning and MGS delineation details, see Revised Standard Plan RSP A77N4.
12. Notched face of block faces steel post.
13. Slotted hole for bolted connection of rail element to block and post. See "Section Thru Rail Element".
14. Slotted holes for splice bolts to overlap ends of rail element. See "Section Thru Rail Element".
15. Install posts in soil.

STATE OF CALIFORNIA
DEPARTMENT OF TRANSPORTATION

# MIDWEST GUARDRAIL SYSTEM STANDARD RAILING SECTION (STEEL POST WITH NOTCHED WOOD OR NOTCHED RECYCLED PLASTIC BLOCK)

NO SCALE

RSP A77L2 DATED JULY 19, 2013 SUPPLEMENTS THE STANDARD PLANS BOOK DATED 2010.

**REVISED STANDARD PLAN RSP A77L2**

2010 REVISED STANDARD PLAN RSP A77L2

7-3-13

| Dist | COUNTY | ROUTE | POST MILES TOTAL PROJECT | SHEET No. | TOTAL SHEETS |
|---|---|---|---|---|---|
| 11 | Imp | 8 | R90.0/R96.8 | 162 | 209 |

Randell D. Hiatt
REGISTERED CIVIL ENGINEER

July 19, 2013
PLANS APPROVAL DATE

REGISTERED PROFESSIONAL ENGINEER
Randell D. Hiatt
No. C50200
Exp. 6-30-15
CIVIL
STATE OF CALIFORNIA

THE STATE OF CALIFORNIA OR ITS OFFICERS OR AGENTS SHALL NOT BE RESPONSIBLE FOR THE ACCURACY OR COMPLETENESS OF SCANNED COPIES OF THIS PLAN SHEET.

TO ACCOMPANY PLANS DATED 08-31-15

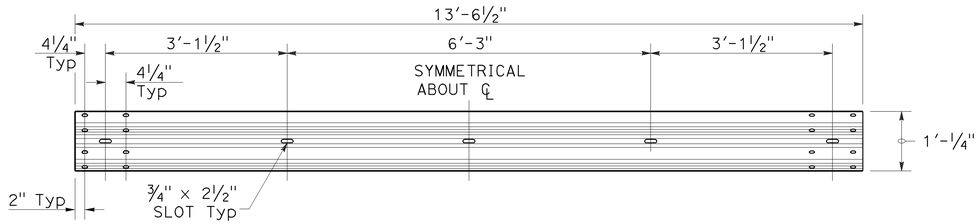


## TYPICAL RAIL ELEMENT

**NOTE:**

1. Slotted holes for splice bolts to overlap ends of rail element.

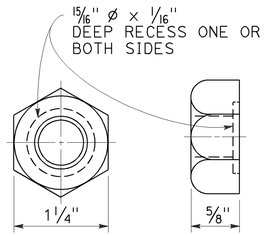


## ⅝" ø RECESS NUT

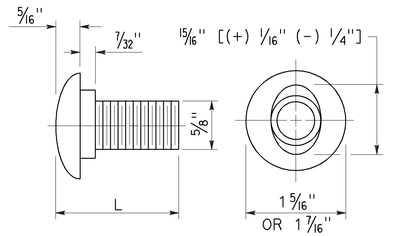


## ⅝" ø BUTTON HEAD BOLT

### BUTTON HEAD BOLT

| L | THREAD LENGTH |
|---|---|
| 1⅜" | FULL THREAD LENGTH |
| 2" | FULL THREAD LENGTH |
| 10" | 4" Min THREAD LENGTH |
| 18" | 4" Min THREAD LENGTH |
| 20" | 4" Min THREAD LENGTH |
| 22" | 4" Min THREAD LENGTH |
| 26" | 4" Min THREAD LENGTH |
| 36" | 4" Min THREAD LENGTH |
| ** 2¾" | 2" Min THREAD LENGTH |
| ** 19" | 4" Min THREAD LENGTH |

** For nested rail applications.

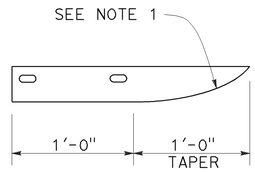


## PLAN

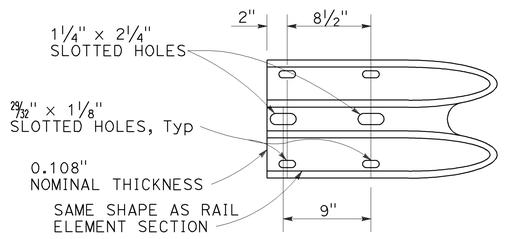


## ELEVATION

## END CAP (TYPE A)

STATE OF CALIFORNIA
DEPARTMENT OF TRANSPORTATION

# MIDWEST GUARDRAIL SYSTEM STANDARD HARDWARE

NO SCALE

RSP A77M1 DATED JULY 19, 2013 SUPPLEMENTS THE STANDARD PLANS BOOK DATED 2010.

**REVISED STANDARD PLAN RSP A77M1**

2010 REVISED STANDARD PLAN RSP A77M1

7-3-13

| Dist | COUNTY | ROUTE | POST MILES TOTAL PROJECT | SHEET No. | TOTAL SHEETS |
|---|---|---|---|---|---|
| 11 | Imp | 8 | R90.0/R96.8 | 163 | 209 |

Randell D. Hiatt
REGISTERED CIVIL ENGINEER

July 19, 2013
PLANS APPROVAL DATE

REGISTERED PROFESSIONAL ENGINEER
Randell D. Hiatt
No. C50200
Exp. 6-30-15
CIVIL
STATE OF CALIFORNIA

THE STATE OF CALIFORNIA OR ITS OFFICERS OR AGENTS SHALL NOT BE RESPONSIBLE FOR THE ACCURACY OR COMPLETENESS OF SCANNED COPIES OF THIS PLAN SHEET.

TO ACCOMPANY PLANS DATED 08-31-15

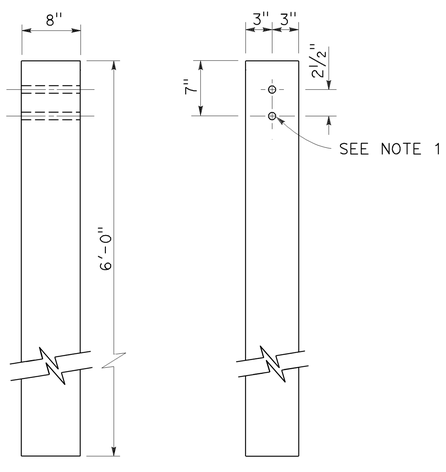


SIDE FRONT

6" x 8" WOOD POST
See Note 3

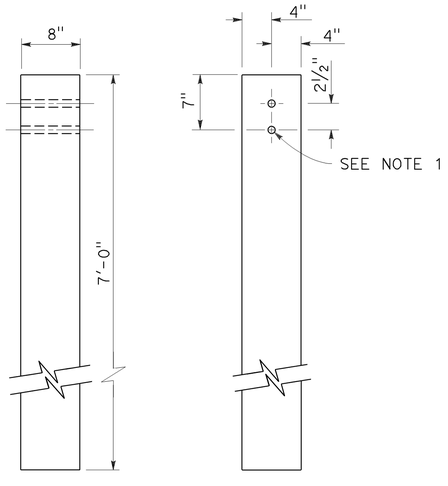


SIDE FRONT

8" x 8" WOOD POST
See Note 4

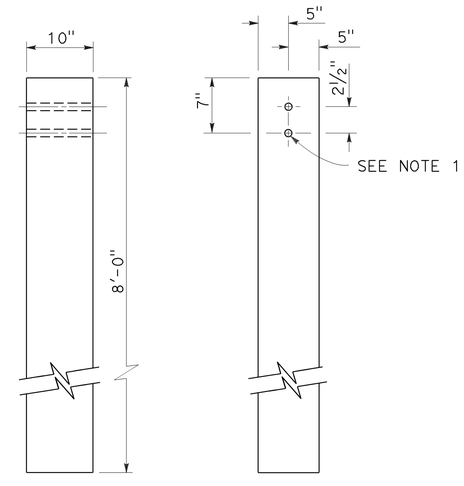


SIDE FRONT

10" x 10" WOOD POST
See Note 5

## NOTES:

1. All holes in wood posts and blocks shall be ¾" Dia ± 1/16".
2. Dimensions shown for wood post are nominal.
3. This post and block combination used for standard line post sections of MGS.
4. This post and 8" x 12" block combination used for line post sections of MGS on narrow roadways.
5. This post and 8" x 12" block combination is typically used where strengthened line post sections of MGS are warranted to shield fixed objects.
6. See Revised Standard Plan RSP A77L3 for use of 6" x 8" and 8" x 8" wood blocks.

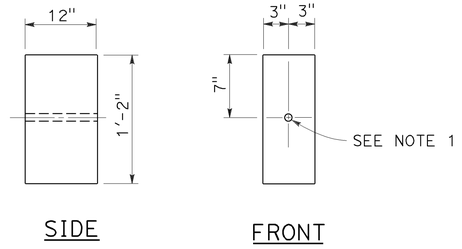


SIDE FRONT

6" x 12" WOOD BLOCK
See Note 3

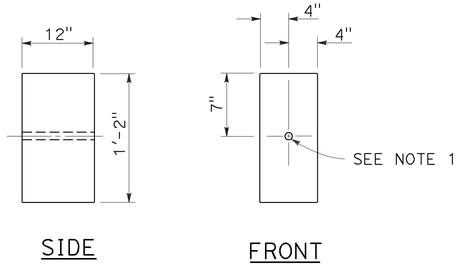


SIDE FRONT

8" x 12" WOOD BLOCK

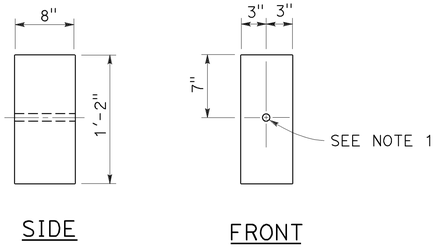


SIDE FRONT

6" x 8" WOOD BLOCK
Only for use with metal beam guard rail see Note 6

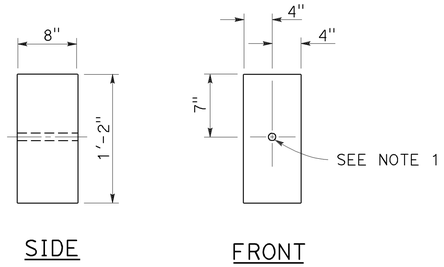


SIDE FRONT

8" x 8" WOOD BLOCK
Only for use with metal beam guard rail see Note 6

STATE OF CALIFORNIA
DEPARTMENT OF TRANSPORTATION

# MIDWEST GUARDRAIL SYSTEM WOOD POST AND WOOD BLOCK DETAILS

NO SCALE

RSP A77N1 DATED JULY 19, 2013 SUPPLEMENTS THE STANDARD PLANS BOOK DATED 2010.

**REVISED STANDARD PLAN RSP A77N1**

2010 REVISED STANDARD PLAN RSP A77N1

7-3-13

| Dist | COUNTY | ROUTE | POST MILES TOTAL PROJECT | SHEET No. | TOTAL SHEETS |
|---|---|---|---|---|---|
| 11 | Imp | 8 | R90.0/R96.8 | 164 | 209 |

Randell D. Hiatt
REGISTERED CIVIL ENGINEER

November 15, 2013
PLANS APPROVAL DATE

REGISTERED PROFESSIONAL ENGINEER
Randell D. Hiatt
No. C50200
Exp. 6-30-15
CIVIL
STATE OF CALIFORNIA

THE STATE OF CALIFORNIA OR ITS OFFICERS OR AGENTS SHALL NOT BE RESPONSIBLE FOR THE ACCURACY OR COMPLETENESS OF SCANNED COPIES OF THIS PLAN SHEET.

TO ACCOMPANY PLANS DATED 08-31-15

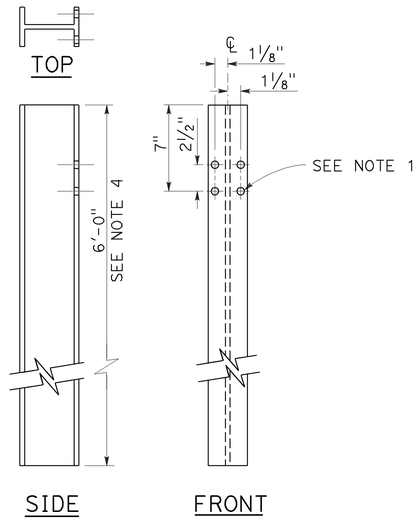


## W6 x 9 OR W6 x 8.5 STEEL POST

See Note 4

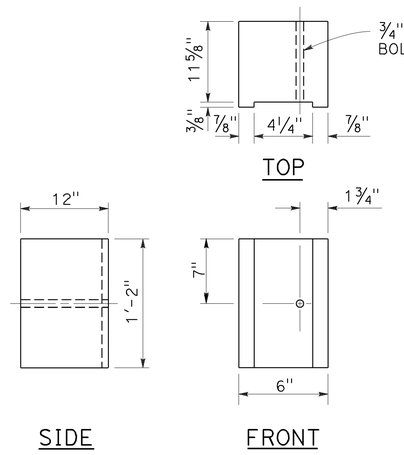


## 6" x 12" NOTCHED WOOD BLOCK

See Notes 2 and 3

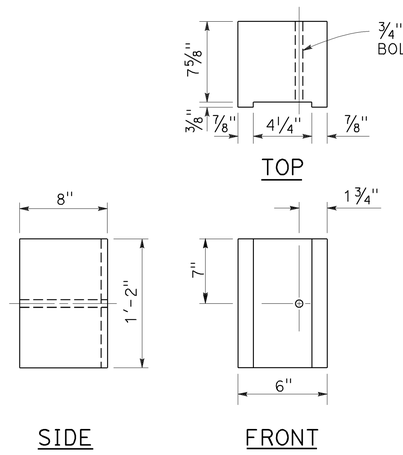


## 6" x 8" NOTCHED WOOD BLOCK

Only for use with metal beam guard railing. See Note 5

### NOTES:

1. All holes in steel post shall be 13/16" Dia maximum.
2. Dimensions shown for wood block are nominal.
3. Notched face of block faces steel post.
4. 6'-0" length posts to be used for typical roadway installation. See Revised Standard Plan RSP A77N3.
5. See Revised Standard Plan RSP A77L3 for use of 6" x 8" and 8" x 8" notched wood blocks.
6. This post and 8" x 12" block combination to be used for line post sections of MGS on narrow roadways and where strengthened line post sections of MGS are warranted to shield fixed objects.

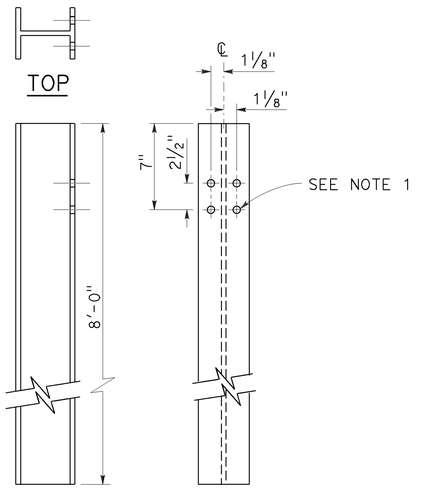


## W6 x 15 STEEL POST

See Note 6

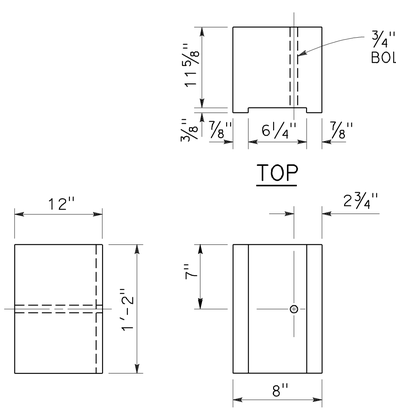


## 8" x 12" NOTCHED WOOD BLOCK

See Notes 2 and 3

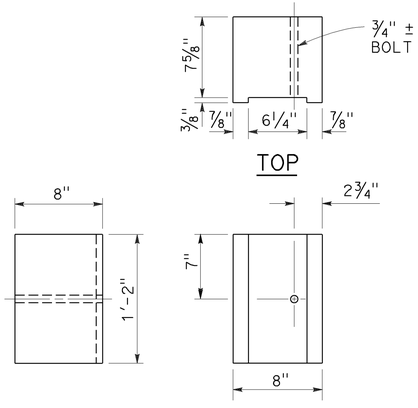


## 8" x 8" NOTCHED WOOD BLOCK

Only for use with metal beam guard railing. See Note 5

STATE OF CALIFORNIA
DEPARTMENT OF TRANSPORTATION

# MIDWEST GUARDRAIL SYSTEM STEEL POST AND NOTCHED WOOD BLOCK DETAILS

NO SCALE

RSP A77N2 DATED NOVEMBER 15, 2013 SUPERSEDES RSP A77N2 DATED JULY 19, 2013 THAT SUPPLEMENTS THE STANDARD PLANS BOOK DATED 2010.

**REVISED STANDARD PLAN RSP A77N2**

**2010 REVISED STANDARD PLAN RSP A77N2**

10-29-13

| Dist | COUNTY | ROUTE | POST MILES TOTAL PROJECT | SHEET No. | TOTAL SHEETS |
|---|---|---|---|---|---|
| 11 | Imp | 8 | R90.0/R96.8 | 165 | 209 |

Randell D. Hiatt
REGISTERED CIVIL ENGINEER

November 15, 2013
PLANS APPROVAL DATE

REGISTERED PROFESSIONAL ENGINEER
Randell D. Hiatt
No. C50200
Exp. 6-30-15
CIVIL
STATE OF CALIFORNIA

THE STATE OF CALIFORNIA OR ITS OFFICERS OR AGENTS SHALL NOT BE RESPONSIBLE FOR THE ACCURACY OR COMPLETENESS OF SCANNED COPIES OF THIS PLAN SHEET.

TO ACCOMPANY PLANS DATED 08-31-15

2010 REVISED STANDARD PLAN RSP A77N3

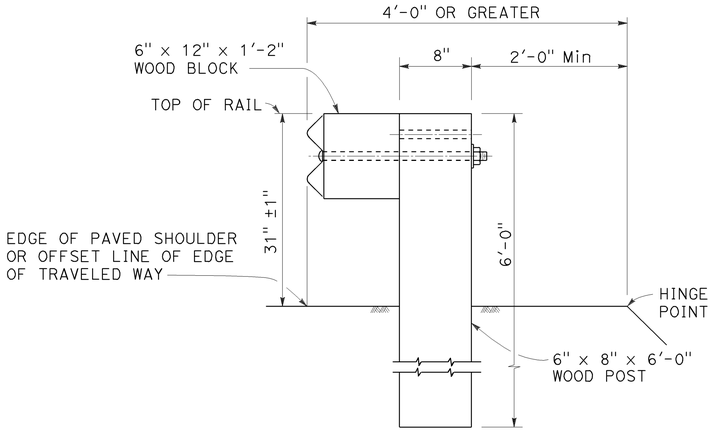


DETAIL A

## TYPICAL ROADWAY INSTALLATION

See Note 1

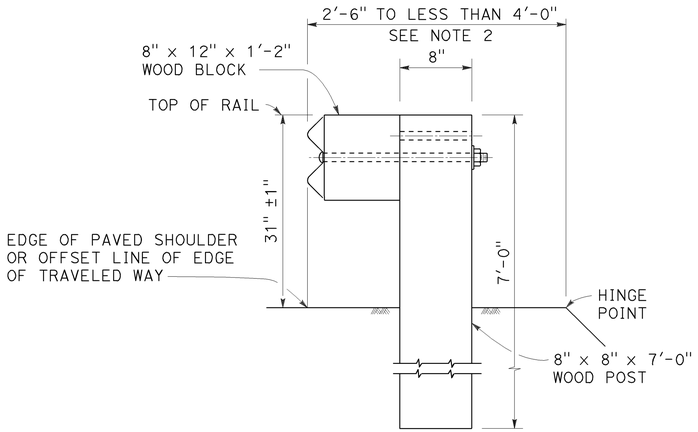


DETAIL B

## NARROW ROADWAY INSTALLATION

See Note 1

## POST EMBEDMENT

NOTES:

1. These installation details also applicable to steel line post installations. For Detail A, C, and D, where steel line post installations are constructed, W6 x 8.5 or W6 x 9 steel post, 6'-0" in length, with 6" x 12" x 1'-2" notched wood blocks or notched recycled plastic blocks are to be used in place of the size of wood post and wood block shown. For Detail B, where steel line post installations are constructed, W6 x 15 steel post, 8'-0" in length, with 8" x 12" x 1'-2" notched wood blocks or notched recycled plastic blocks are to be used in place of the size of wood post and wood block shown. For additional installation details, see Revised Standard Plan RSP A77L1 and RSP A77L2.
2. Where the distance between the face of the rail and the hinge point is less than 2'-6", see the Project Plans for special details.
3. For dike positioning with MGS installations, see Revised Standard Plan RSP A77N4.

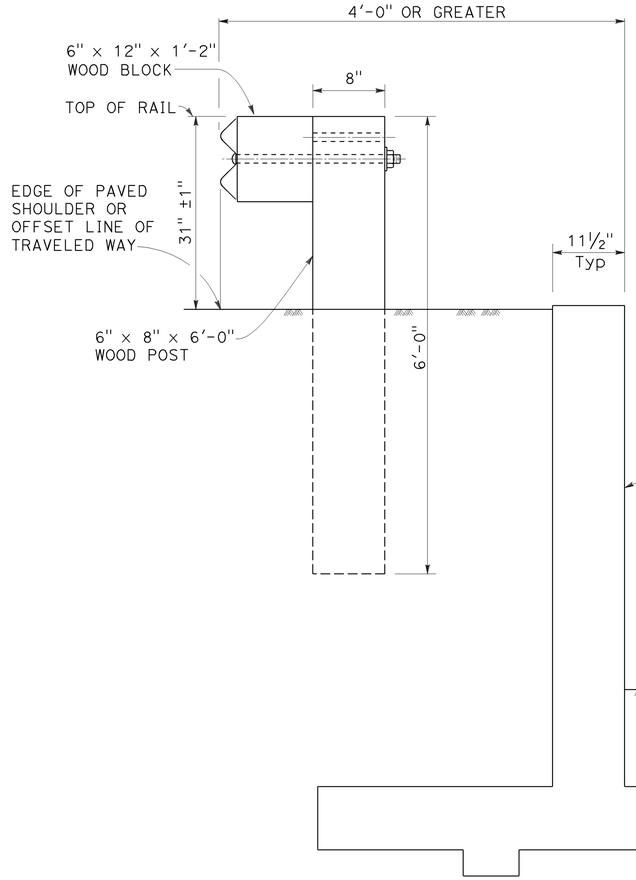


DETAIL C

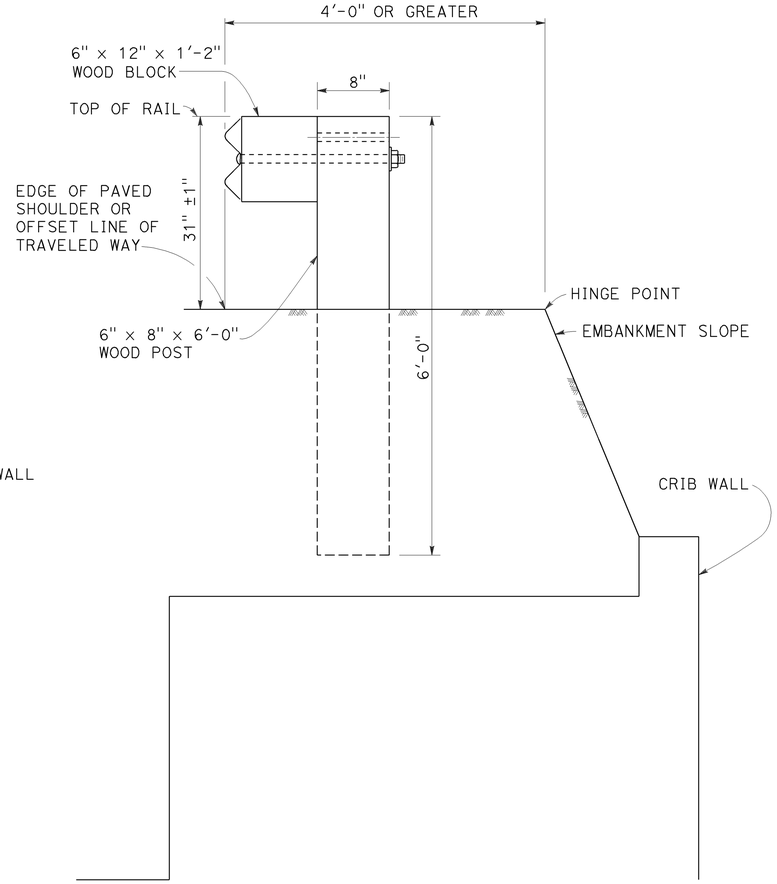


DETAIL D

## INSTALLATION AT EARTH RETAINING WALLS

STATE OF CALIFORNIA
DEPARTMENT OF TRANSPORTATION

# MIDWEST GUARDRAIL SYSTEM TYPICAL LINE POST EMBEDMENT AND HINGE POINT OFFSET DETAILS

NO SCALE

RSP A77N3 DATED NOVEMBER 15, 2013 SUPERSEDES RSP A77N3 DATED JULY 19, 2013 THAT SUPPLEMENTS THE STANDARD PLANS BOOK DATED 2010.

**REVISED STANDARD PLAN RSP A77N3**

10-29-13

| Dist | COUNTY | ROUTE | POST MILES TOTAL PROJECT | SHEET No. | TOTAL SHEETS |
|---|---|---|---|---|---|
| 11 | Imp | 8 | R90.0/R96.8 | 166 | 209 |

Randell D. Hiatt
REGISTERED CIVIL ENGINEER

July 19, 2013
PLANS APPROVAL DATE

REGISTERED PROFESSIONAL ENGINEER
Randell D. Hiatt
No. C50200
Exp. 6-30-15
CIVIL
STATE OF CALIFORNIA

THE STATE OF CALIFORNIA OR ITS OFFICERS OR AGENTS SHALL NOT BE RESPONSIBLE FOR THE ACCURACY OR COMPLETENESS OF SCANNED COPIES OF THIS PLAN SHEET.

TO ACCOMPANY PLANS DATED 08-31-15

## NOTES:

1. When necessary to place dike more than 7" in front of face of MGS, only Type C dike may be used. For dike details, see Revised Standard Plan RSP A87B.
2. For standard railing post embedment, see Revised Standard Plan RSP A77N3.
3. MGS delineation to be used where shown on the Project Plans.
4. When dike or curb is placed under MGS, the maximum height of the dike or curb shall be 6". Mountable dike should not be used. For dike and curb details, see Revised Standard Plans RSP A87A and RSP A87B.
5. For details of typical distance between the face of rail and hinge point, see Revised Standard Plan RSP A77N3.
6. For steel line posts, use 1/4 - 20 self-tapping screws in 0.22" diameter holes or 1/4" bolts in 9/32" diameter holes.

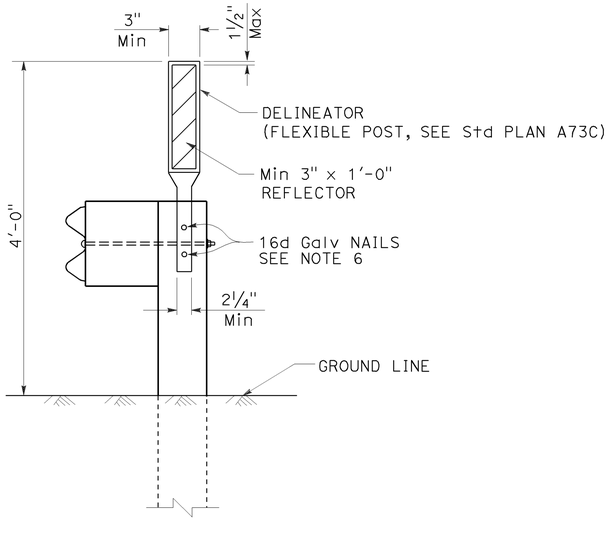


## MGS DELINEATION

See Note 3

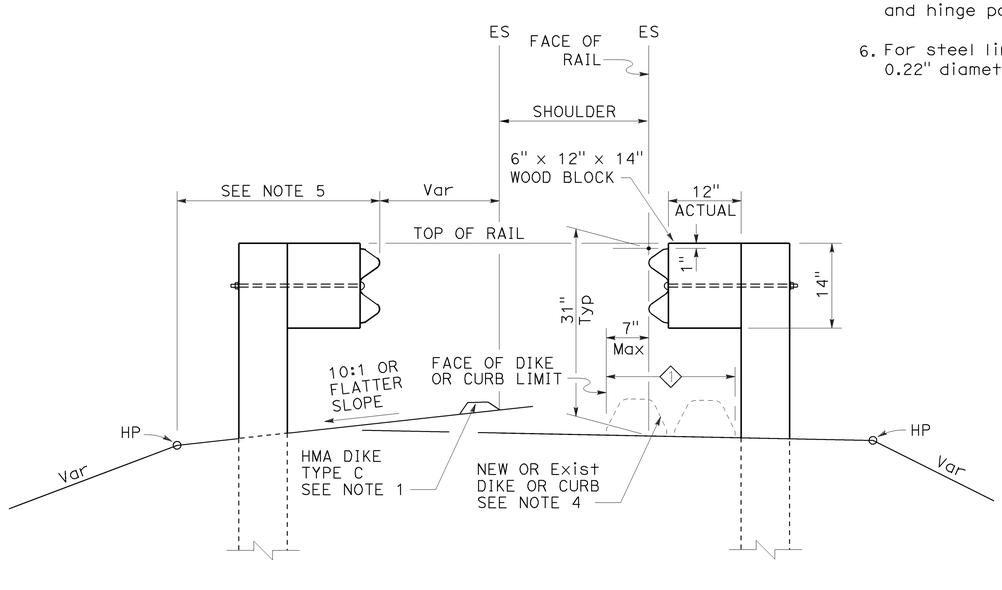


## DIKE POSITIONING

See Note 1

◇1 PERMISSIBLE DIKE OR CURB PLACEMENT AREA

STATE OF CALIFORNIA
DEPARTMENT OF TRANSPORTATION

# MIDWEST GUARDRAIL SYSTEM TYPICAL RAILING DELINEATION AND DIKE POSITIONING DETAILS

NO SCALE

RSP A77N4 DATED JULY 19, 2013 SUPPLEMENTS THE STANDARD PLANS BOOK DATED 2010.

**REVISED STANDARD PLAN RSP A77N4**

2010 REVISED STANDARD PLAN RSP A77N4

7-10-13

| Dist | COUNTY | ROUTE | POST MILES TOTAL PROJECT | SHEET No. | TOTAL SHEETS |
|---|---|---|---|---|---|
| 11 | Imp | 8 | R90.0/R96.8 | 167 | 209 |

Randell D. Hiatt
REGISTERED CIVIL ENGINEER

August 14, 2015
PLANS APPROVAL DATE

REGISTERED PROFESSIONAL ENGINEER
Randell D. Hiatt
No. C50200
Exp. 6-30-17
CIVIL
STATE OF CALIFORNIA

THE STATE OF CALIFORNIA OR ITS OFFICERS OR AGENTS SHALL NOT BE RESPONSIBLE FOR THE ACCURACY OR COMPLETENESS OF SCANNED COPIES OF THIS PLAN SHEET.

TO ACCOMPANY PLANS DATED 08-31-15

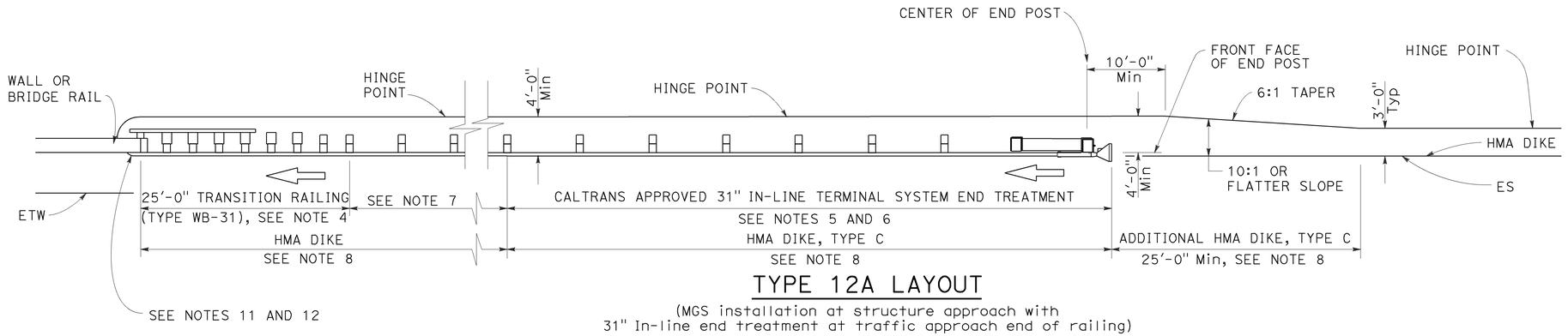


## TYPE 12A LAYOUT

(MGS installation at structure approach with
31" In-line end treatment at traffic approach end of railing)
See Note 9

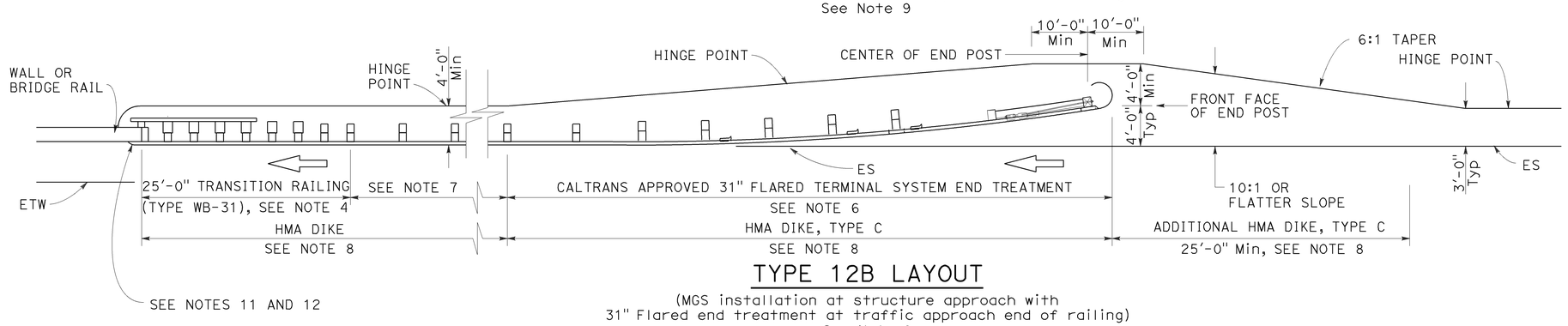


## TYPE 12B LAYOUT

(MGS installation at structure approach with
31" Flared end treatment at traffic approach end of railing)
See Note 9

## NOTES:

1. Line post, blocks and hardware to be used are shown on Revised Standard Plans RSP A77L1, RSP A77L2, RSP A77M1, RSP A77N1 and RSP A77N2.
2. MGS post spacing to be 6'-3" center to center, except as otherwise noted.
3. Except as noted, line posts are 6" x 8" x 6'-0" wood with 6" x 12" x 1'-2" wood blocks. W6 x 8.5 or W6 x 9 steel posts, 6'-0" in length, with 6" x 12" x 1'-2" notched wood blocks or plastic blocks may be used for 6" x 8" x 6'-0" wood posts with 6" x 12" x 1'-2" wood blocks where applicable and when specified.
4. For Transition Railing (Type WB-31) details for Types 12A and 12B Layouts, see Revised Standard Plan RSP A77U4.
5. 31" in-line terminal system end treatments are used where site conditions will not accommodate a 31" flared end treatment.
6. The type of 31" terminal system end treatment to be used will be shown on the Project Plans.
7. Dependent on site conditions (embankment height, side slopes, or other fixed objects), it may be advisable to construct additional guard railing (a length equal to multiples of 12'-6" with 6'-3" post spacing) between the transition railing and end treatment. A 12.5 degree angle of departure can be drawn on the Project Plans from the edge of traveled way through the outer most point of the fixed object to determine the additional length of railing needed.
8. Where placement of dike is required with guard railing installations, see Revised Standard Plan RSP A77N4 for dike positioning details.
9. Type 12A or Type 12B Layouts are typically used:
   a. To the right of approaching traffic, at the end of a structure, on two-lane conventional highway where the roadbed width across the structure is less than 40 feet.
   b. To the left of approaching traffic, at the end of a structure, on two-lane conventional highway where the roadbed width across the structure is less than 40 feet.
   c. To the right of approaching traffic at the end of each structure on multilane freeways or expressways with separate adjacent or parallel bridges.
   d. To the right of approaching traffic at the end of the structure on multilane freeways or expressways with decked median on the bridge.
10. See Revised Standard Plan RSP A77Q3 for typical layout used left of approaching traffic at the ends of each structure on multilane freeways or expressways with separate adjacent or parallel bridges.
11. For additional details of typical connections to bridge rail, see Connection Detail AA on Revised Standard Plans RSP A77U1 and RSP A77U2 and Connection Detail FF on Revised Standard Plans RSP A77V1 and RSP A77V2.
12. For additional details of a typical connection to walls or abutments, see Revised Standard Plan RSP A77U3.

STATE OF CALIFORNIA
DEPARTMENT OF TRANSPORTATION

# MIDWEST GUARDRAIL SYSTEM TYPICAL LAYOUTS FOR STRUCTURE APPROACH

NO SCALE

RSP A77Q1 DATED AUGUST 14, 2015 SUPERSEDES RSP A77Q1 DATED JULY 19, 2013 THAT SUPPLEMENTS THE STANDARD PLANS BOOK DATED 2010.

**REVISED STANDARD PLAN RSP A77Q1**

2010 REVISED STANDARD PLAN RSP A77Q1

8-12-15

| Dist | COUNTY | ROUTE | POST MILES TOTAL PROJECT | SHEET No. | TOTAL SHEETS |
|---|---|---|---|---|---|
| 11 | Imp | 8 | R90.0/R96.8 | 168 | 209 |

Randell D. Hiatt
REGISTERED CIVIL ENGINEER

August 14, 2015
PLANS APPROVAL DATE

REGISTERED PROFESSIONAL ENGINEER
Randell D. Hiatt
No. C50200
Exp. 6-30-17
CIVIL
STATE OF CALIFORNIA

THE STATE OF CALIFORNIA OR ITS OFFICERS OR AGENTS SHALL NOT BE RESPONSIBLE FOR THE ACCURACY OR COMPLETENESS OF SCANNED COPIES OF THIS PLAN SHEET.

TO ACCOMPANY PLANS DATED 08-31-15

2010 REVISED STANDARD PLAN RSP A77Q3

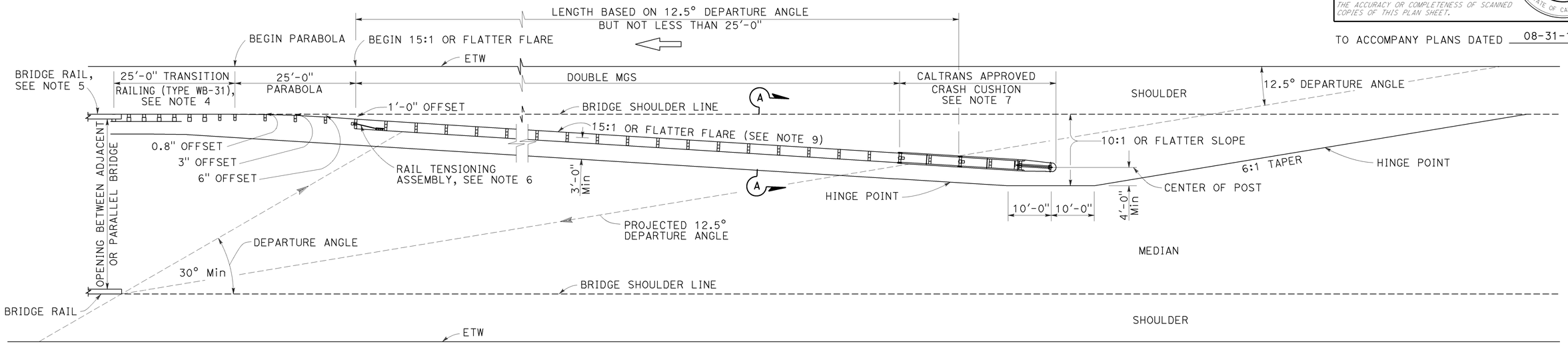


## TYPE 12E LAYOUT

See Note 9

⅝" ø BUTTON HEAD BOLT WITH Hex NUT OR ⅝" ø ROD, THREADED BOTH ENDS, WITH Hex NUTS. ½" Max EXPOSED THREADS AFTER Hex NUT(S) TIGHTENED. NO WASHER ON RAIL FACES FOR BOLTED CONNECTION TO LINE POST

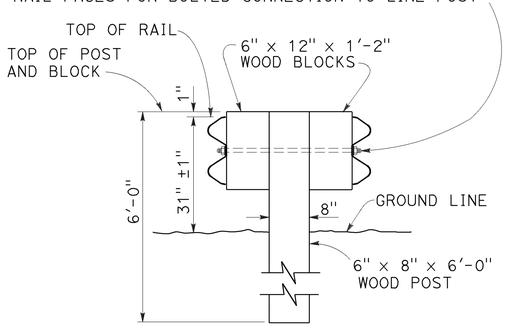


## SECTION A-A
## TYPICAL DOUBLE MIDWEST GUARDRAIL SYSTEM

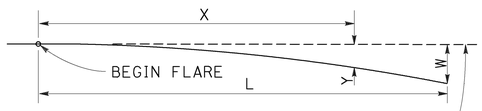


$$Y = \frac{WX^2}{L^2}$$

Y = OFFSET FROM BASE LINE
W = MAXIMUM OFFSET
X = DISTANCE ALONG BASE LINE
L = LENGTH OF FLARE

## PARABOLIC FLARE OFFSETS

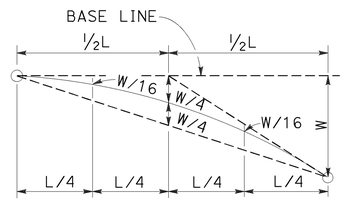


## TYPICAL PARABOLIC LAYOUT

NOTES:

1. Line post, blocks and hardware to be used are shown on Revised Standard Plans RSP A77L1, RSP A77L2, RSP A77M1, RSP A77N1 and RSP A77N2.
2. MGS post spacing to be 6'-3" center to center, except as otherwise noted.
3. Except as noted, line posts are 6" x 8" x 6'-0" wood with 6" x 12" x 1'-2" wood blocks. W6 x 8.5 or W6 x 9 steel posts, 6'-0" in length, with 6" x 12" x 1'-2" notched wood blocks or notched recycled plastic blocks may be used for 6" x 8" x 6'-0" wood line posts with 6" x 12" x 1'-2" wood blocks where applicable and when specified.
4. For Transition Railing (Type WB-31) details, see Revised Standard Plan RSP A77U4.
5. For additional details of a typical connection to bridge rail, see Connection Detail AA on Revised Standard Plan RSP A77U1.
6. For Rail Tensioning Assembly details, see Revised Standard Plan RSP A77S2.
7. The type of Crash Cushion to be used will be shown on the Project Plans.
8. Type 12E Layout is typically used left of approaching traffic at the end of each structure on multilane freeways or expressways where a median type barrier is not constructed between separated roadbeds.
9. The 15:1 or flatter flare is measured off of the edge of traveled way.

STATE OF CALIFORNIA
DEPARTMENT OF TRANSPORTATION

# MIDWEST GUARDRAIL SYSTEM TYPICAL LAYOUTS FOR STRUCTURE APPROACH

NO SCALE

RSP A77Q3 DATED AUGUST 14, 2015 SUPERSEDES RSP A77Q3 DATED JULY 19, 2013 THAT SUPPLEMENTS THE STANDARD PLANS BOOK DATED 2010.

# REVISED STANDARD PLAN RSP A77Q3

7-8-15

| Dist | COUNTY | ROUTE | POST MILES TOTAL PROJECT | SHEET No. | TOTAL SHEETS |
|---|---|---|---|---|---|
| 11 | Imp | 8 | R90.0/R96.8 | 169 | 209 |

Randell D. Hiatt
REGISTERED CIVIL ENGINEER

August 14, 2015
PLANS APPROVAL DATE

REGISTERED PROFESSIONAL ENGINEER — Randell D. Hiatt — No. C50200 — Exp. 6-30-17 — CIVIL — STATE OF CALIFORNIA

THE STATE OF CALIFORNIA OR ITS OFFICERS OR AGENTS SHALL NOT BE RESPONSIBLE FOR THE ACCURACY OR COMPLETENESS OF SCANNED COPIES OF THIS PLAN SHEET.

TO ACCOMPANY PLANS DATED 08-31-15

## NOTES:

1. Line post, blocks and hardware to be used are shown on Revised Standard Plans RSP A77L1, RSP A77L2, RSP A77M1, RSP A77N1, and RSP A77N2.
2. MGS post spacing to be 6'-3" center to center, except as otherwise noted.
3. Except as noted, line posts are 6" x 8" x 6'-0" wood with 6" x 12" x 1'-2" wood blocks. W6 x 8.5 or W6 x 9 steel posts, 6'-0" in length, with 6" x 12" x 1'-2" notched wood blocks or notched recycled plastic blocks may be used for 6" x 8" x 6'-0" wood line posts with 6" x 12" x 1'-2" wood blocks where applicable and when specified.
4. A 4'-0" minimum clearance is required between the face of the railing and the face of a fixed object located directly behind MGS sections with post spacing of 6'-3". Construct MGS as shown in the detail "Strengthened Midwest Guardrail System Sections for Fixed Object" on this plan, where the clearance between the face of the railing and the face of a fixed object is less than 4'-0", but not less than 3'-0". Where the clearance is less than 3'-0", a concrete wall or barrier should be constructed to shield the fixed object(s).
5. For End Anchor Assembly (Type SFT) details, see Revised Standard Plan RSP A77S1.
6. For details of Rail Tensioning Assembly, see Revised Standard Plan RSP A77S2.
7. The type of crash cushion to be used will be shown on the Project Plans.
8. Type 14A layout is typically used on multilane freeways or expressways to shield fixed objects where a median type barrier is not constructed between the separated roadbeds.
9. For typical flare offsets for 25'-0" length parabola with maximum offset of 1'-0", see Revised Standard Plan RSP A77P1.
10. The 15:1 or flatter flare is measured off of the edge of traveled way.
11. W6 x 15 steel post, 8'-0" in length, with 8" x 12" x 1'-2" notched wood block or notched recycled plastic block may be used in place of the 10" x 10" x 8'-0" wood post with 8" x 12" x 1'-2" wood block shown in the detail "Strengthened Midwest Guardrail System Sections for Fixed Object".

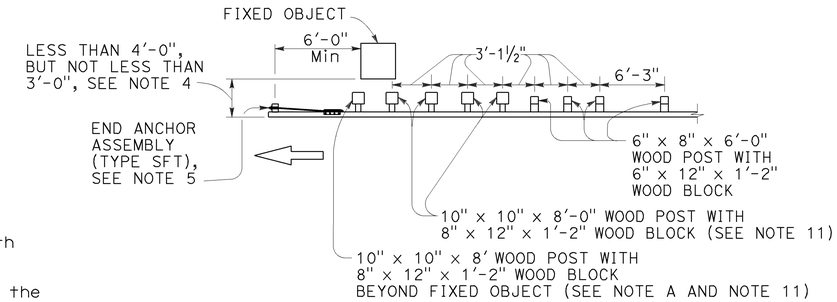


**NOTE A:** For a series of fixed objects (bridge columns, overhead sign supports, etc.) additional 10" x 10" x 8'-0" wood post with 8" x 12" x 1'-2" wood blocks at 3'-1½" center to center spacing are to be used between fixed objects.

## STRENGTHENED MIDWEST GUARDRAIL SYSTEM SECTIONS FOR FIXED OBJECT

Use strengthened MGS sections with Type 14A layout where minimum clearance between the face of the railing and fixed object(s) is less than 4'-0", but not less than 3'-0", See Note 4.

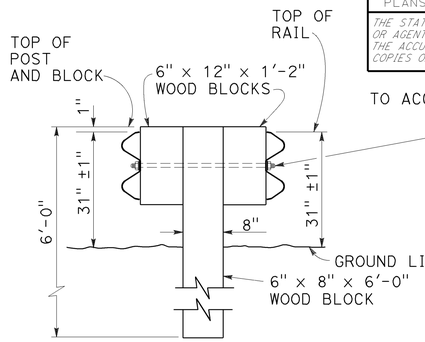


## SECTION A-A
## TYPICAL DOUBLE MIDWEST GUARDRAIL SYSTEM

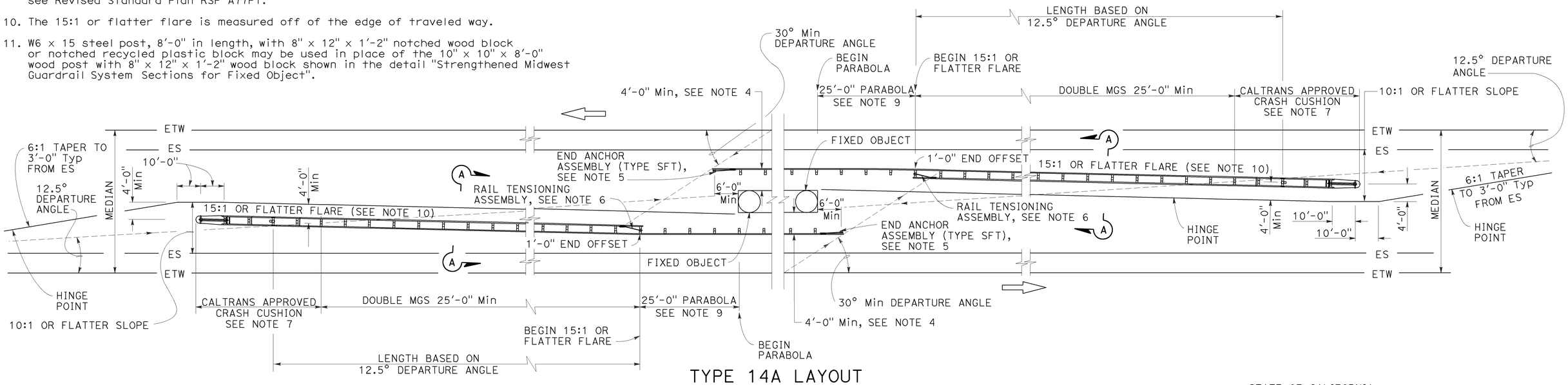


## TYPE 14A LAYOUT

See Note 8

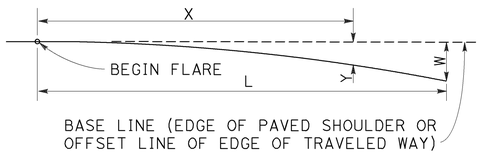


$$Y = \frac{WX^2}{L^2}$$

Y = OFFSET FROM BASE LINE
W = MAXIMUM OFFSET
X = DISTANCE ALONG BASE LINE
L = LENGTH OF FLARE

## PARABOLIC FLARE OFFSETS

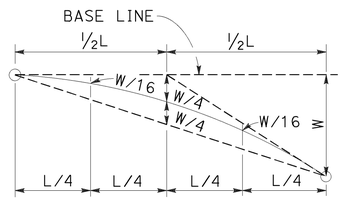


## TYPICAL PARABOLIC LAYOUT

STATE OF CALIFORNIA
DEPARTMENT OF TRANSPORTATION

# MIDWEST GUARDRAIL SYSTEM TYPICAL LAYOUTS FOR FIXED OBJECTS BETWEEN SEPARATE ROADBEDS (TWO-WAY TRAFFIC)

NO SCALE

RSP A77R1 DATED AUGUST 14, 2015 SUPERSEDES RSP A77R1 DATED JULY 19, 2013 THAT SUPPLEMENTS THE STANDARD PLANS BOOK DATED 2010.

**REVISED STANDARD PLAN RSP A77R1**

2010 REVISED STANDARD PLAN RSP A77R1

7-8-15

| Dist | COUNTY | ROUTE | POST MILES TOTAL PROJECT | SHEET No. | TOTAL SHEETS |
|---|---|---|---|---|---|
| 11 | Imp | 8 | R90.0/R96.8 | 170 | 209 |

Randell D. Hiatt
REGISTERED CIVIL ENGINEER

November 15, 2013
PLANS APPROVAL DATE

THE STATE OF CALIFORNIA OR ITS OFFICERS OR AGENTS SHALL NOT BE RESPONSIBLE FOR THE ACCURACY OR COMPLETENESS OF SCANNED COPIES OF THIS PLAN SHEET.

REGISTERED PROFESSIONAL ENGINEER
Randell D. Hiatt
No. C50200
Exp. 6-30-15
CIVIL
STATE OF CALIFORNIA

TO ACCOMPANY PLANS DATED 08-31-15

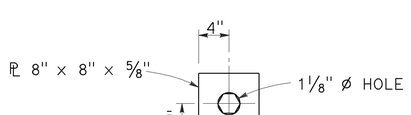


DETAIL "A"
CABLE CONNECTION
END PLATE

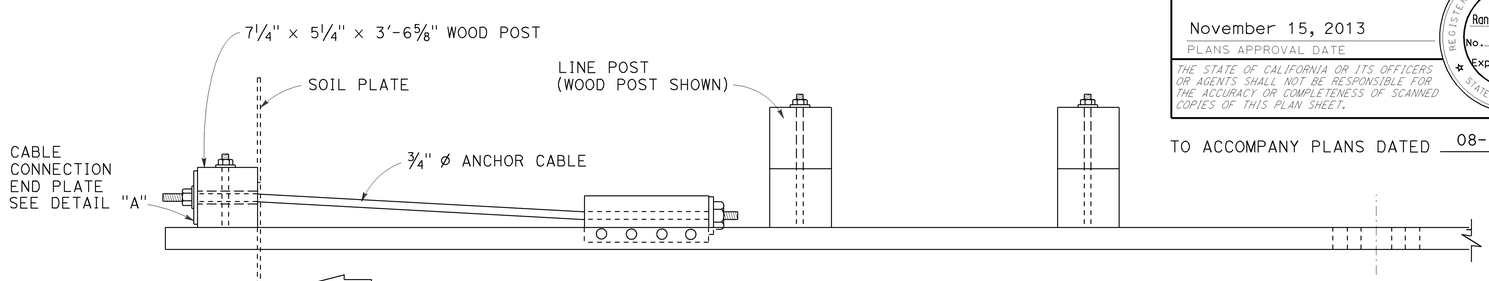


PLAN

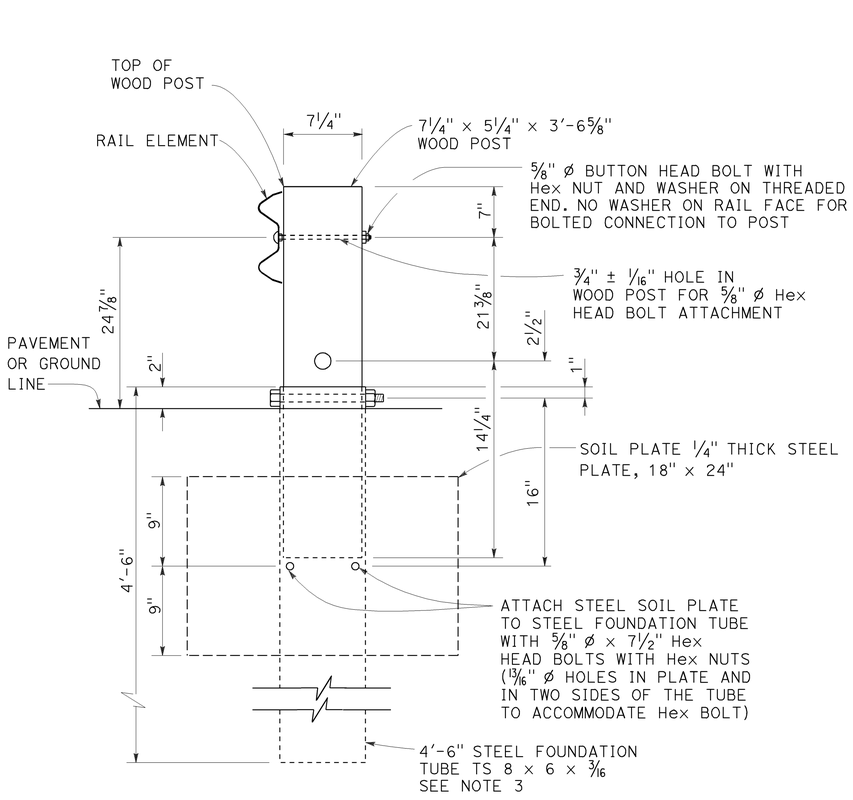


SECTION A-A

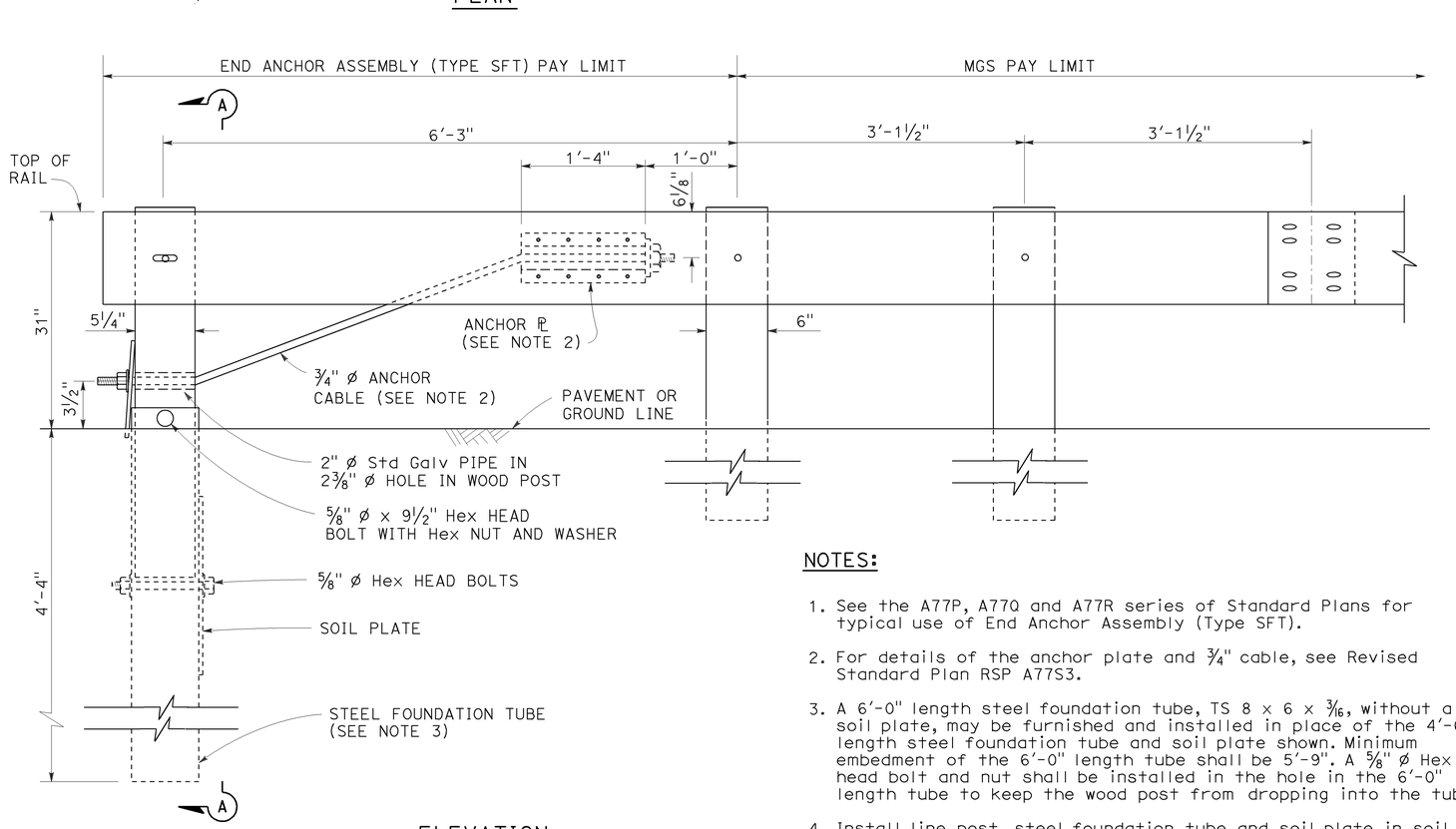


ELEVATION

END ANCHOR
ASSEMBLY (TYPE SFT)
See Note 1

NOTES:

1. See the A77P, A77Q and A77R series of Standard Plans for typical use of End Anchor Assembly (Type SFT).
2. For details of the anchor plate and 3/4" cable, see Revised Standard Plan RSP A77S3.
3. A 6'-0" length steel foundation tube, TS 8 x 6 x 3/16, without a soil plate, may be furnished and installed in place of the 4'-6" length steel foundation tube and soil plate shown. Minimum embedment of the 6'-0" length tube shall be 5'-9". A 5/8" ø Hex head bolt and nut shall be installed in the hole in the 6'-0" length tube to keep the wood post from dropping into the tube.
4. Install line post, steel foundation tube and soil plate in soil.

STATE OF CALIFORNIA
DEPARTMENT OF TRANSPORTATION

# MIDWEST GUARDRAIL SYSTEM
# END ANCHOR ASSEMBLY
# (TYPE SFT)

NO SCALE

RSP A77S1 DATED NOVEMBER 15, 2013 SUPERSEDES RSP A77S1 DATED JULY 19, 2013 THAT SUPPLEMENTS THE STANDARD PLANS BOOK DATED 2010.

**REVISED STANDARD PLAN RSP A77S1**

**2010 REVISED STANDARD PLAN RSP A77S1**

10-4-13

| Dist | COUNTY | ROUTE | POST MILES TOTAL PROJECT | SHEET No. | TOTAL SHEETS |
|---|---|---|---|---|---|
| 11 | Imp | 8 | R90.0/R96.8 | 171 | 209 |

Randell D. Hiatt
REGISTERED CIVIL ENGINEER

July 19, 2013
PLANS APPROVAL DATE

REGISTERED PROFESSIONAL ENGINEER
Randell D. Hiatt
No. C50200
Exp. 6-30-15
CIVIL
STATE OF CALIFORNIA

THE STATE OF CALIFORNIA OR ITS OFFICERS OR AGENTS SHALL NOT BE RESPONSIBLE FOR THE ACCURACY OR COMPLETENESS OF SCANNED COPIES OF THIS PLAN SHEET.

TO ACCOMPANY PLANS DATED 08-31-15

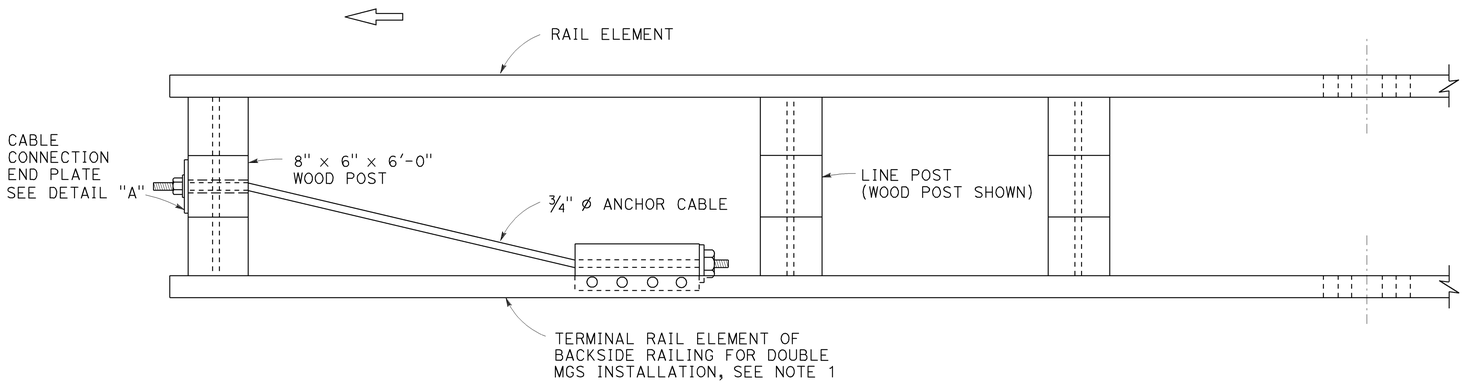


PLAN

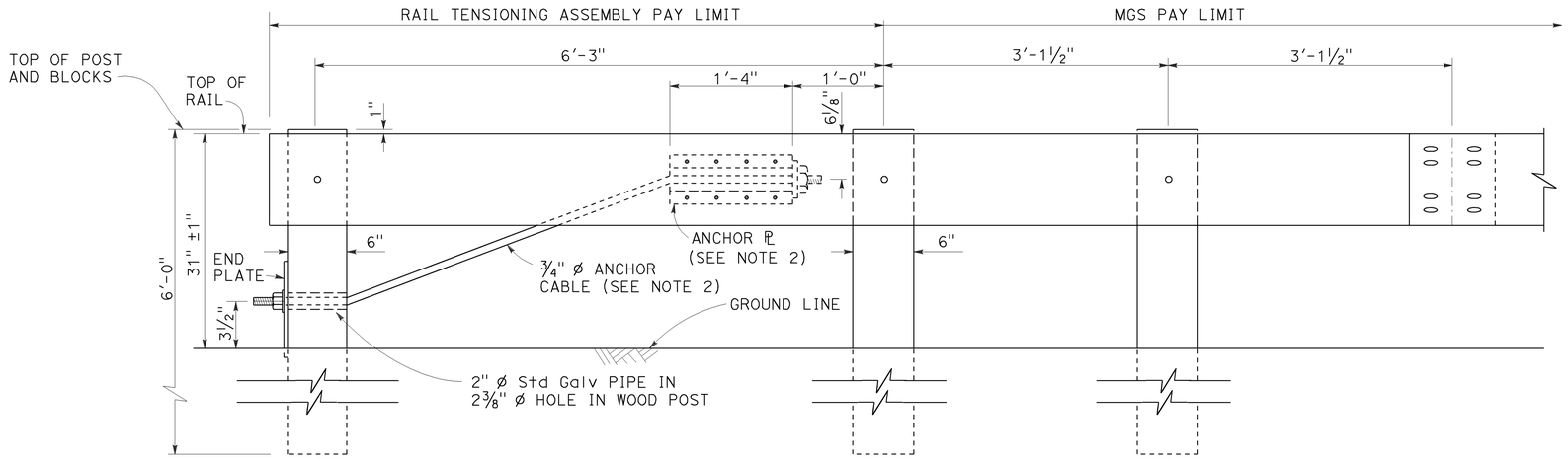


ELEVATION
RAIL TENSIONING ASSEMBLY
See Note 1

NOTES:

1. See Revised Standard Plans RSP A77Q3 and RSP A77R1 for typical use of rail tensioning assembly.
2. For details of the anchor plate and ¾" cable, see Revised Standard Plan RSP A77S3.

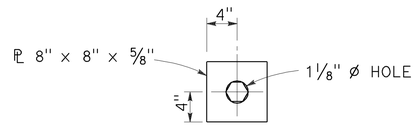


DETAIL "A"
CABLE CONNECTION END PLATE

STATE OF CALIFORNIA
DEPARTMENT OF TRANSPORTATION

# MIDWEST GUARDRAIL SYSTEM
# RAIL TENSIONING ASSEMBLY

NO SCALE

RSP A77S2 DATED JULY 19, 2013 SUPPLEMENTS THE STANDARD PLANS BOOK DATED 2010.

**REVISED STANDARD PLAN RSP A77S2**

2010 REVISED STANDARD PLAN RSP A77S2

7-3-13

| Dist | COUNTY | ROUTE | POST MILES TOTAL PROJECT | SHEET No. | TOTAL SHEETS |
|---|---|---|---|---|---|
| 11 | Imp | 8 | R90.0/R96.8 | 172 | 209 |

Randell D. Hiatt
REGISTERED CIVIL ENGINEER

November 15, 2013
PLANS APPROVAL DATE

REGISTERED PROFESSIONAL ENGINEER
Randell D. Hiatt
No. C50200
Exp. 6-30-15
CIVIL
STATE OF CALIFORNIA

THE STATE OF CALIFORNIA OR ITS OFFICERS OR AGENTS SHALL NOT BE RESPONSIBLE FOR THE ACCURACY OR COMPLETENESS OF SCANNED COPIES OF THIS PLAN SHEET.

TO ACCOMPANY PLANS DATED 08-31-15

**NOTE:**

See Revised Standard Plans RSP A77S1, RSP A77S2 and RSP A77T1 for typical use of anchor cable and anchor plate.

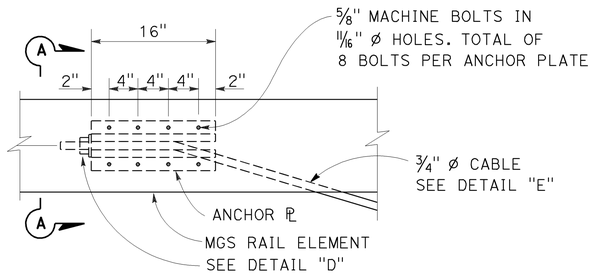


## ANCHOR PLATE DETAIL

(MGS shown, TBB similar)

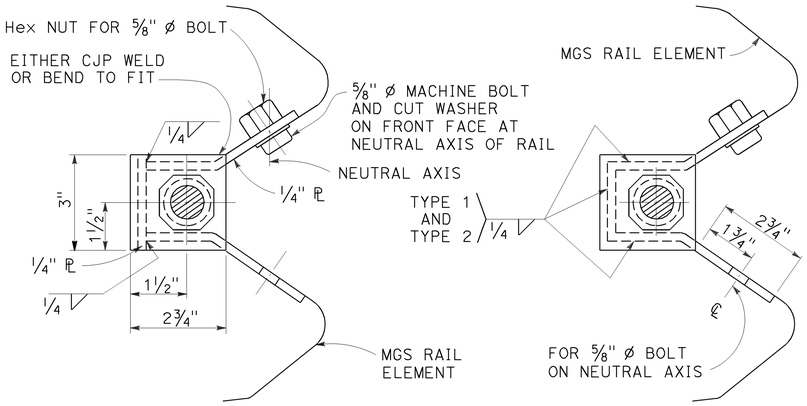


**NOTE:**

Dimensioning applies to both types.

SECTION A-A
(ALTERNATIVE TYPE 1)

SECTION A-A
(ALTERNATIVE TYPE 2)

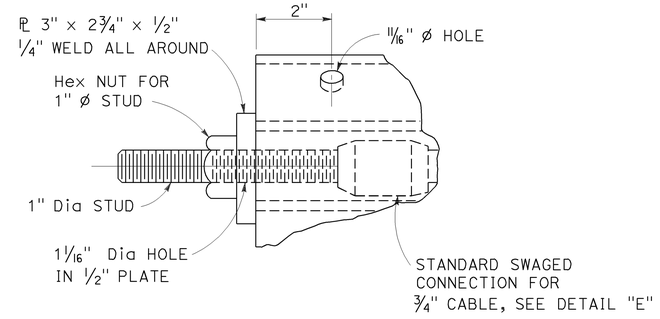


## DETAIL "D"

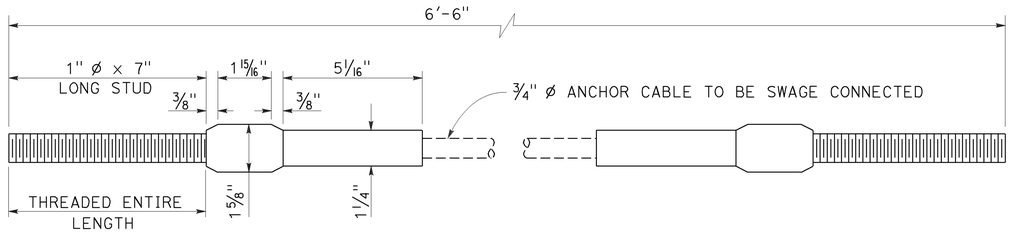


## ANCHOR CABLE WITH SWAGED FITTING AND STUD
## DETAIL "E"

STATE OF CALIFORNIA
DEPARTMENT OF TRANSPORTATION

# METAL RAILING ANCHOR CABLE AND ANCHOR PLATE DETAILS

NO SCALE

RSP A77S3 DATED NOVEMBER 15, 2013 SUPERSEDES RSP A77S3
DATED JULY 19, 2013 THAT SUPPLEMENTS THE STANDARD PLANS BOOK DATED 2010.

**REVISED STANDARD PLAN RSP A77S3**

**2010 REVISED STANDARD PLAN RSP A77S3**

10-4-13

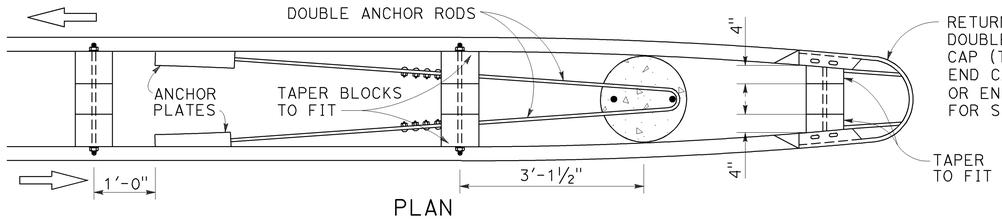


PLAN

See Note 4

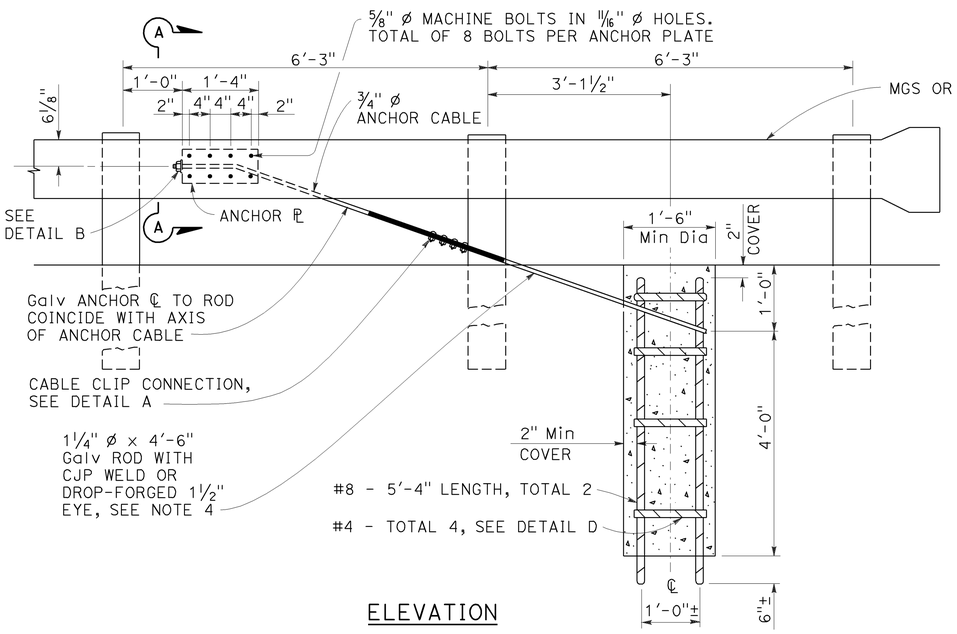


ELEVATION

END ANCHOR ASSEMBLY

(TYPE CA)

(Wood post, MGS shown, details similar for Thrie Beam Barrier.)

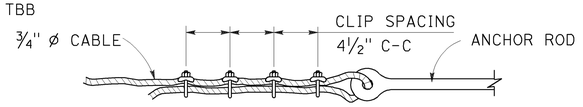


"U" bolts of clip on short end of cable only
"U" bolts tightened to 50 ft/lb torque

DETAIL A

CABLE CLIP CONNECTION

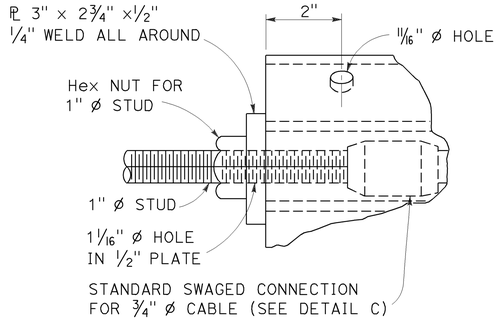


DETAIL B

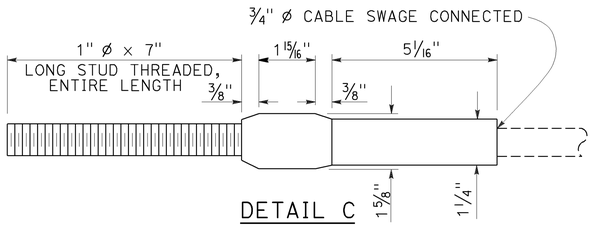


DETAIL C

ANCHOR CABLE WITH SWAGED FITTING AND STUD

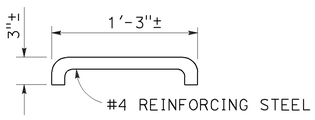


DETAIL D

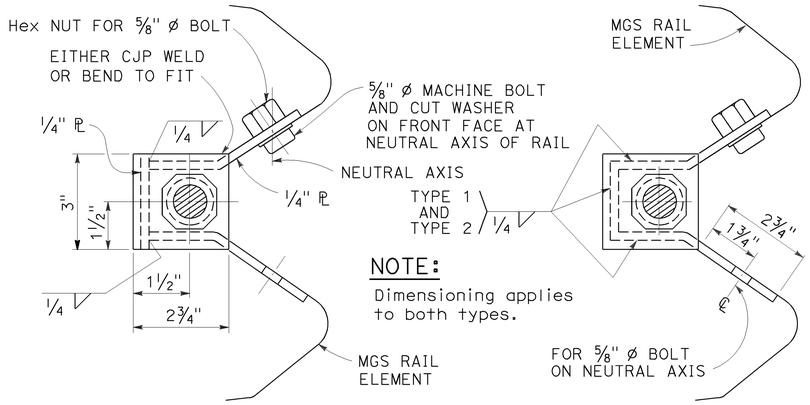


NOTE:

Dimensioning applies to both types.

SECTION A-A

(Alternative Type 1 )

SECTION A-A

(Alternative Type 2)

ANCHOR PLATE DETAILS

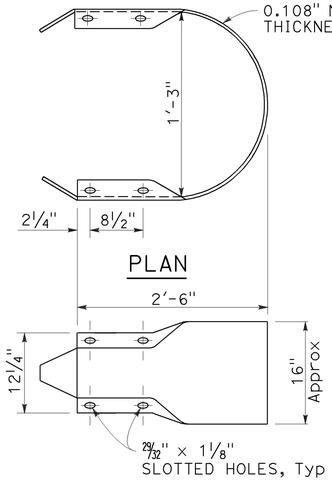


ELEVATION

RETURN CAP

(TYPE A)

| Dist | COUNTY | ROUTE | POST MILES TOTAL PROJECT | SHEET No. | TOTAL SHEETS |
|---|---|---|---|---|---|
| 11 | Imp | 8 | R90.0/R96.8 | 173 | 209 |

Randell D. Hiatt
REGISTERED CIVIL ENGINEER

November 15, 2013
PLANS APPROVAL DATE

REGISTERED PROFESSIONAL ENGINEER
Randell D. Hiatt
No. C50200
Exp. 6-30-15
CIVIL
STATE OF CALIFORNIA

THE STATE OF CALIFORNIA OR ITS OFFICERS OR AGENTS SHALL NOT BE RESPONSIBLE FOR THE ACCURACY OR COMPLETENESS OF SCANNED COPIES OF THIS PLAN SHEET.

TO ACCOMPANY PLANS DATED 08-31-15

NOTES:

1. For typical use of this type of end anchor, see Revised Standard Plan RSP A78E2.
2. Anchor cable to be parallel to railing for straight runs of rail. Anchor cable may have angle point at anchor plate if railing is curved.
3. Anchor rod hooks to be in contact with anchor reinforcement when concrete is placed. Wire ties may be used to position anchor rods.
4. Single sided railing installations require only one anchor plate, anchor rod and anchor cable. Single sided railing will not have a rail element or blockouts on backside of line posts as shown in the plan view.

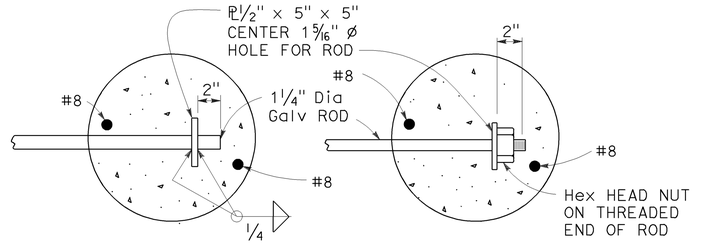


OPTIONAL ENDS ON SINGLE ANCHOR ROD

(Not to be used for double anchors)

NOTE:

Use two 1¼" ø Galv rods with hook and eye for double MGS anchor.

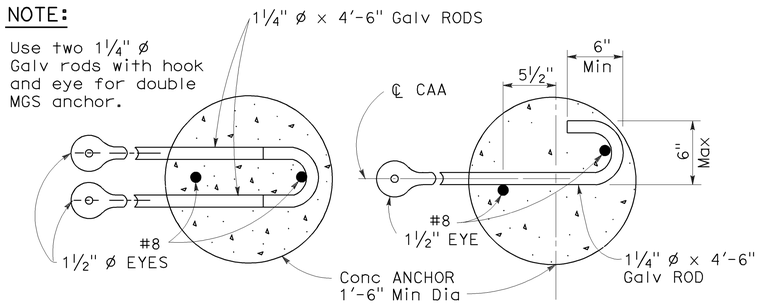


DOUBLE ANCHOR SINGLE ANCHOR

ANCHOR RODS

STATE OF CALIFORNIA
DEPARTMENT OF TRANSPORTATION

# METAL RAILING END ANCHOR ASSEMBLY (TYPE CA)

NO SCALE

RSP A77T1 DATED NOVEMBER 15, 2013 SUPERSEDES RSP A77T1 DATED JULY 19, 2013 THAT SUPPLEMENTS THE STANDARD PLANS BOOK DATED 2010.

**REVISED STANDARD PLAN RSP A77T1**

**2010 REVISED STANDARD PLAN RSP A77T1**

10-22-13

| Dist | COUNTY | ROUTE | POST MILES TOTAL PROJECT | SHEET No. | TOTAL SHEETS |
|---|---|---|---|---|---|
| 11 | Imp | 8 | R90.0/R96.8 | 174 | 209 |

Randell D. Hiatt
REGISTERED CIVIL ENGINEER

July 19, 2013
PLANS APPROVAL DATE

REGISTERED PROFESSIONAL ENGINEER
Randell D. Hiatt
No. C50200
Exp. 6-30-15
CIVIL
STATE OF CALIFORNIA

THE STATE OF CALIFORNIA OR ITS OFFICERS OR AGENTS SHALL NOT BE RESPONSIBLE FOR THE ACCURACY OR COMPLETENESS OF SCANNED COPIES OF THIS PLAN SHEET.

TO ACCOMPANY PLANS DATED 08-31-15

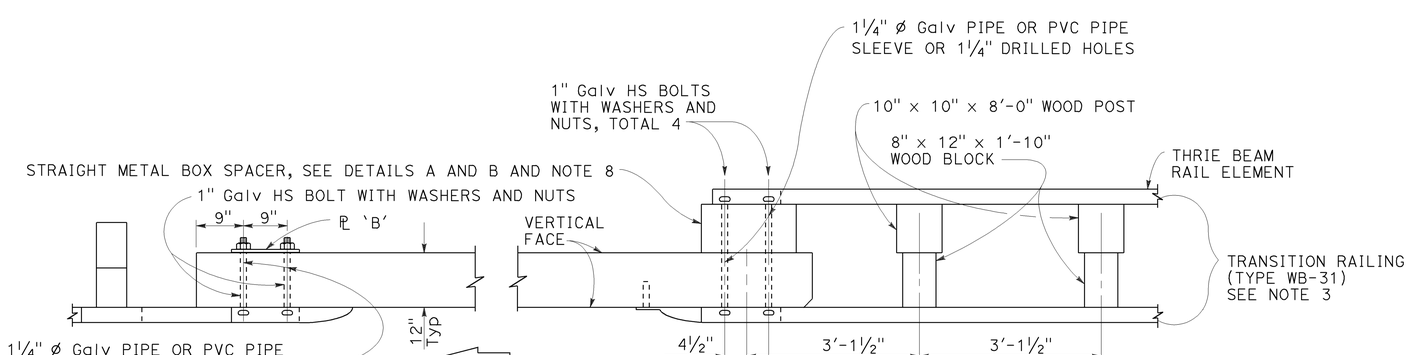


PLAN

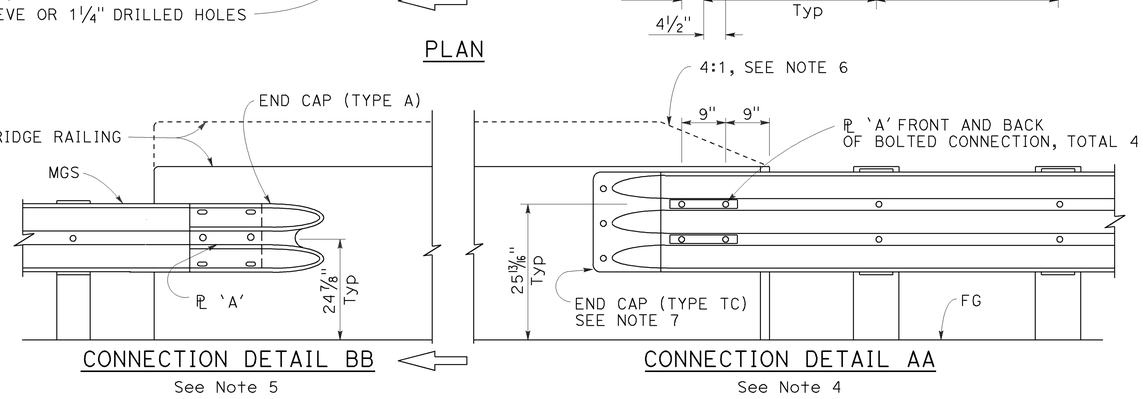


ELEVATION

## MIDWEST GUARDRAIL SYSTEM CONNECTION TO BRIDGE RAILING WITHOUT SIDEWALK

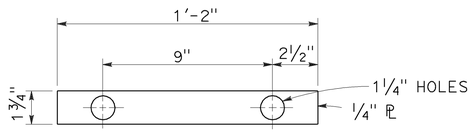


PLATE 'A'

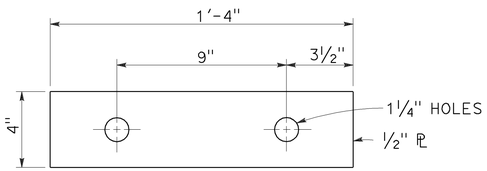


PLATE 'B'
(For backside of connection BB)

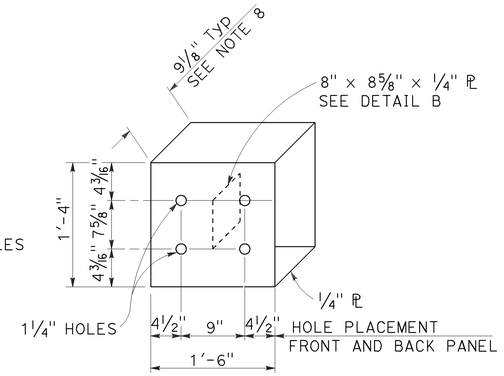


DETAIL A

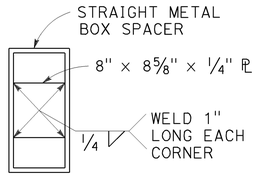


DETAIL B

## STRAIGHT METAL BOX SPACER

### NOTES:

1. See Revised Standard Plan RSP A77U2 for additional connection details to bridges without sidewalks.
2. Additional details of posts, blocks and hardware are shown on Revised Standard Plans RSP A77M1, RSP A77N1 and RSP A77N2.
3. For additional details of Transition Railing (Type WB-31), see Revised Standard Plan RSP A77U4. Transition Railing (Type WB-31) transitions the 12 gauge MGS railing section to a heavier gage nested thrie beam railing section which is connected to the concrete bridge railing.
4. For typical use of Connection Detail AA, see Layout Types 12A and 12B on Revised Standard Plan RSP A77Q1, Layout Types 12C and 12D on Revised Standard Plan RSP A77Q2, and Layout Type 12E on Revised Standard Plan RSP A77Q3.
5. For typical use of Connection Detail BB, see Layout Type 12D (structure departure railing connection) on Revised Standard Plan RSP A77Q2 and Layout Type 12DD on Revised Standard Plan RSP A77Q5.
6. Where the height of the bridge railing exceeds the height of the thrie beam railing by more than 1" at Connection Detail AA, taper the top of the end of the bridge railing at 4:1 to match the top elevation of the thrie beam rail.
7. For details of End Cap (Type TC), see Revised Standard Plan RSP A77U4.
8. See Revised Standard Plan RSP A77U4 for additional details regarding depth dimension for straight metal box spacer.

STATE OF CALIFORNIA
DEPARTMENT OF TRANSPORTATION

# MIDWEST GUARDRAIL SYSTEM CONNECTIONS TO BRIDGE RAILINGS WITHOUT SIDEWALKS DETAILS No. 1

NO SCALE

RSP A77U1 DATED JULY 19, 2013 SUPPLEMENTS THE STANDARD PLANS BOOK DATED 2010.

**REVISED STANDARD PLAN RSP A77U1**

2010 REVISED STANDARD PLAN RSP A77U1

7-8-13

| Dist | COUNTY | ROUTE | POST MILES TOTAL PROJECT | SHEET No. | TOTAL SHEETS |
|---|---|---|---|---|---|
| 11 | Imp | 8 | R90.0/R96.8 | 175 | 209 |

Randell D. Hiatt
REGISTERED CIVIL ENGINEER

July 19, 2013
PLANS APPROVAL DATE

REGISTERED PROFESSIONAL ENGINEER — Randell D. Hiatt — No. C50200 — Exp. 6-30-15 — CIVIL — STATE OF CALIFORNIA

THE STATE OF CALIFORNIA OR ITS OFFICERS OR AGENTS SHALL NOT BE RESPONSIBLE FOR THE ACCURACY OR COMPLETENESS OF SCANNED COPIES OF THIS PLAN SHEET.

TO ACCOMPANY PLANS DATED 08-31-15

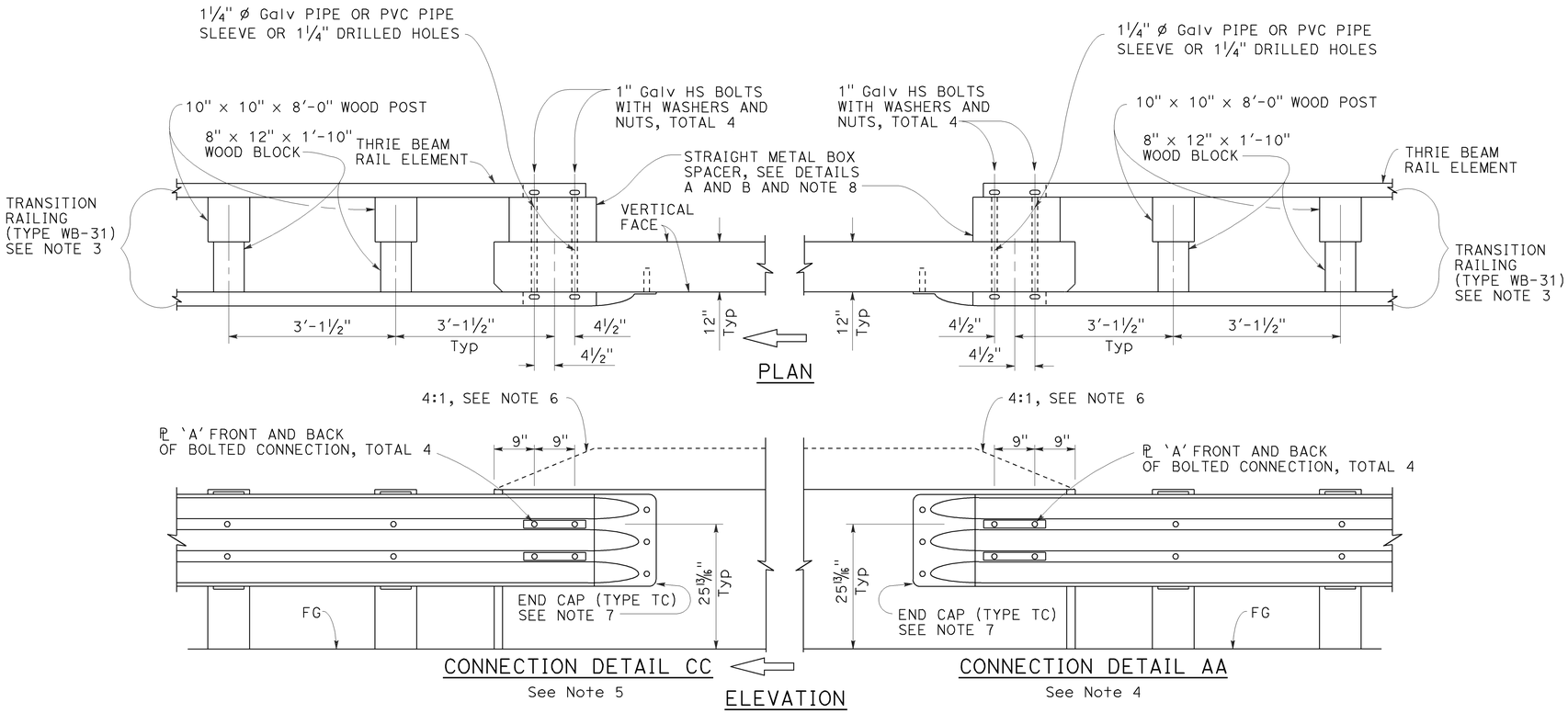


## MIDWEST GUARDRAIL SYSTEM CONNECTION TO BRIDGE RAILING WITHOUT SIDEWALK

## NOTES:

1. See Revised Standard Plan RSP A77U1 for additional connection details to bridges without sidewalks.
2. Additional details of posts, blocks and hardware are shown on Revised Standard Plans RSP A77M1, RSP A77N1 and RSP A77N2.
3. For additional details of Transition Railing (Type WB-31), see Revised Standard Plan RSP A77U4. Transition Railing (Type WB-31) transitions the 12 gauge MGS railing section to a heavier gage nested thrie beam railing section which is connected to the concrete bridge railing.
4. For typical use of Connection Detail AA, see Layout Types 12A and 12B on Revised Standard Plan RSP A77Q1, Layout Types 12C and 12D on Revised Standard Plan RSP A77Q2, and Layout Type 12E on Revised Standard Plan RSP A77Q3.
5. For typical use of Connection Detail CC, see Layout Types 12AA and 12BB on Revised Standard Plan RSP A77Q4 and Layout Type 12CC on Revised Standard Plan RSP A77Q5.
6. Where the height of the bridge railing exceeds the height of the thrie beam railing by more than 1" at Connection Detail AA and connection Detail CC, taper the top of the end of the bridge railing at 4:1 to match the top elevation of the thrie beam railing.
7. For details of End Cap (Type TC), see Revised Standard Plan RSP A77U4.
8. See Revised Standard Plan RSP A77U4 for additional details regarding depth dimension for straight metal box spacer.

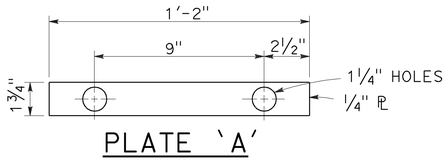


PLATE 'A'

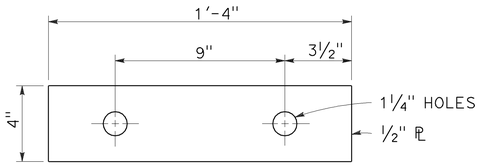


PLATE 'B'
(For backside of connection BB)

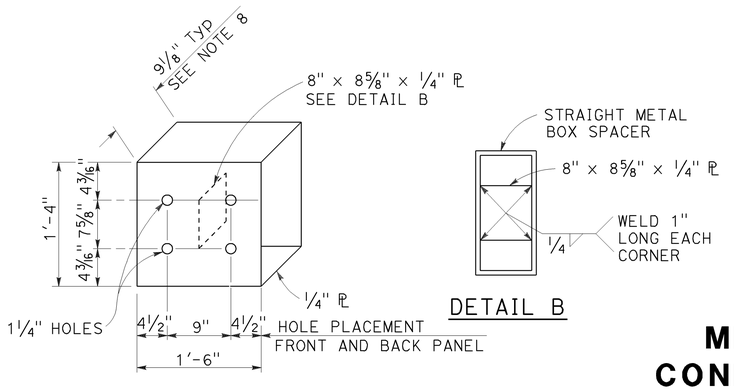


DETAIL A

DETAIL B

STRAIGHT METAL BOX SPACER

STATE OF CALIFORNIA
DEPARTMENT OF TRANSPORTATION

# MIDWEST GUARDRAIL SYSTEM CONNECTIONS TO BRIDGE RAILINGS WITHOUT SIDEWALKS DETAILS No. 2

NO SCALE

RSP A77U2 DATED JULY 19, 2013 SUPPLEMENTS THE STANDARD PLANS BOOK DATED 2010.

# REVISED STANDARD PLAN RSP A77U2

2010 REVISED STANDARD PLAN RSP A77U2

6-20-13

| Dist | COUNTY | ROUTE | POST MILES TOTAL PROJECT | SHEET No. | TOTAL SHEETS |
|---|---|---|---|---|---|
| 11 | Imp | 8 | R90.0/R96.8 | 176 | 209 |

Randell D. Hiatt
REGISTERED CIVIL ENGINEER

July 19, 2013
PLANS APPROVAL DATE

REGISTERED PROFESSIONAL ENGINEER — Randell D. Hiatt — No. C50200 — Exp. 6-30-15 — CIVIL — STATE OF CALIFORNIA

THE STATE OF CALIFORNIA OR ITS OFFICERS OR AGENTS SHALL NOT BE RESPONSIBLE FOR THE ACCURACY OR COMPLETENESS OF SCANNED COPIES OF THIS PLAN SHEET.

TO ACCOMPANY PLANS DATED 08-31-15

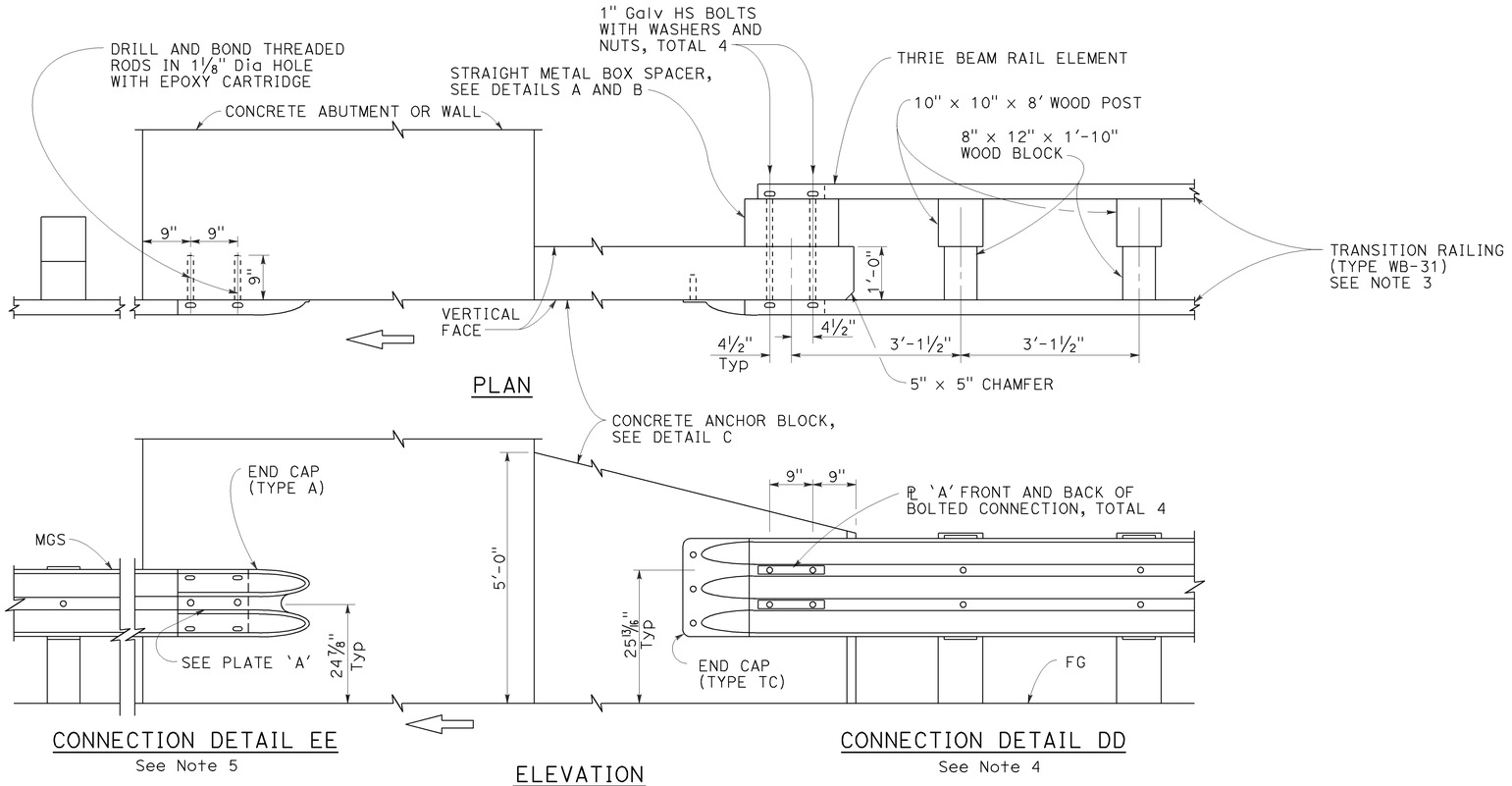


## MIDWEST GUARDRAIL SYSTEM CONNECTION TO ABUTMENT OR WALL

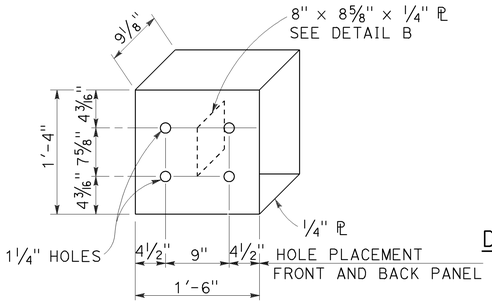


DETAIL A

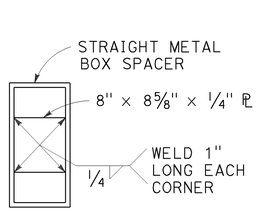


DETAIL B

## STRAIGHT METAL BOX SPACER

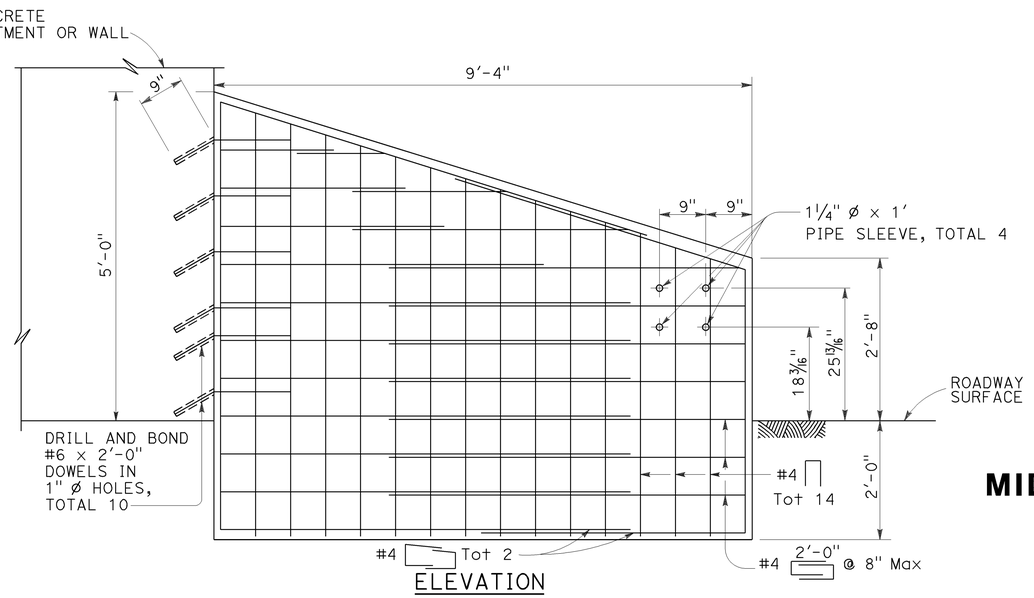


ELEVATION

## ANCHOR BLOCK FOR TRANSITION RAILING CONNECTION

DETAIL C

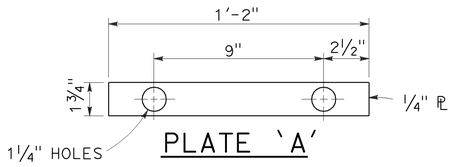


PLATE 'A'

## NOTES:

1. These connection details apply to abutments and walls.
2. Additional details of posts, blocks and hardware are shown on Revised Standard Plans RSP A77M1, RSP A77N1 and RSP A77N2.
3. For additional details of Transition Railing (Type WB-31), see Revised Standard Plan RSP A77U4. Transition Railing (Type WB-31) transitions the 12 gauge MGS railing section to a heavier gage nested thrie beam railingsection which is connected to the concrete anchor block.
4. For typical use of Connection Details DD, see Layout Types 12A and 12B on Revised Standard Plan RSP A77Q1 and Layout Types 12C and 12D on Revised Standard Plan RSP A77Q2.
5. For typical use of Connection Detail EE, see Layout Type 12D on Revised Standard Plan RSP A77Q2 and Layout Type 12DD on Revised Standard Plan RSP A77Q5.

STATE OF CALIFORNIA
DEPARTMENT OF TRANSPORTATION

# MIDWEST GUARDRAIL SYSTEM CONNECTIONS TO ABUTMENTS AND WALLS

NO SCALE

RSP A77U3 DATED JULY 19, 2013 SUPPLEMENTS THE STANDARD PLANS BOOK DATED 2010.

# REVISED STANDARD PLAN RSP A77U3

2010 REVISED STANDARD PLAN RSP A77U3

7-8-13

| Dist | COUNTY | ROUTE | POST MILES TOTAL PROJECT | SHEET No. | TOTAL SHEETS |
|---|---|---|---|---|---|
| 11 | Imp | 8 | R90.0/R96.8 | 177 | 209 |

Randell D. Hiatt
REGISTERED CIVIL ENGINEER

January 23, 2015
PLANS APPROVAL DATE

REGISTERED PROFESSIONAL ENGINEER
Randell D. Hiatt
No. C50200
Exp. 6-30-15
CIVIL
STATE OF CALIFORNIA

THE STATE OF CALIFORNIA OR ITS OFFICERS OR AGENTS SHALL NOT BE RESPONSIBLE FOR THE ACCURACY OR COMPLETENESS OF SCANNED COPIES OF THIS PLAN SHEET.

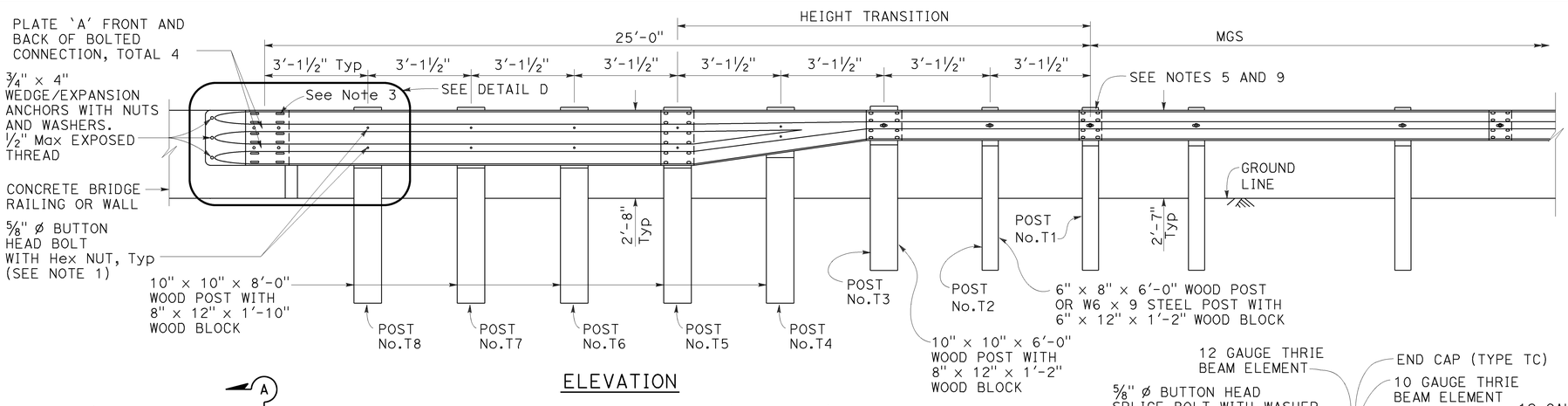


ELEVATION

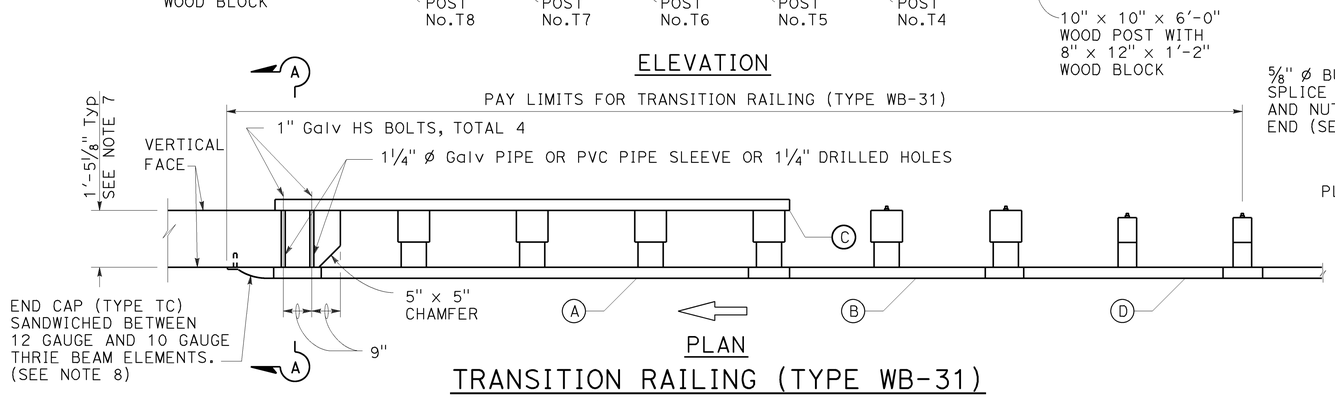


PLAN

## TRANSITION RAILING (TYPE WB-31)

(No Blockout Attachment)

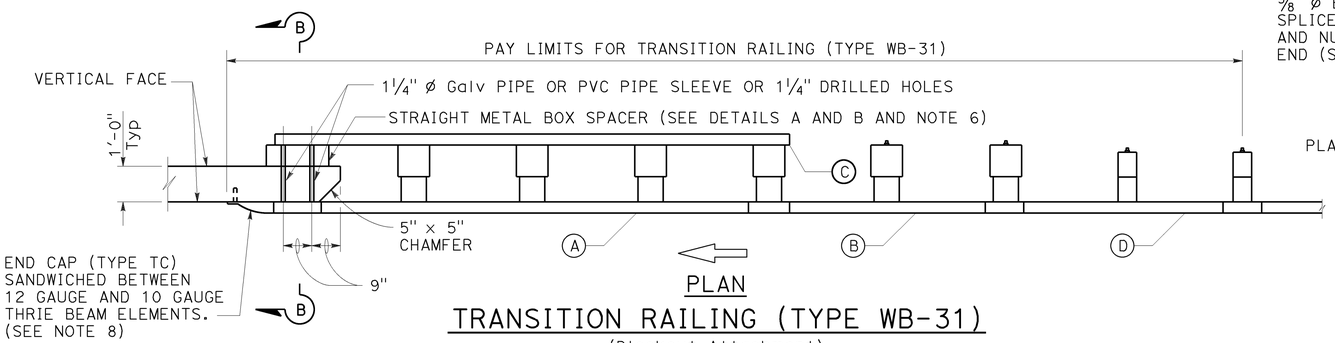


PLAN

## TRANSITION RAILING (TYPE WB-31)

(Blockout Attachment)

### LEGEND:

- (A) NESTED THRIE BEAM ELEMENTS (ONE 12 GAUGE ELEMENT NESTED OVER ONE 10 GAUGE ELEMENT).
- (B) ONE ASYMMETRICAL 10 GAUGE "W" BEAM TO THRIE BEAM ELEMENT.
- (C) ONE 12 GAUGE THRIE BEAM ELEMENT.
- (D) ONE 10 GAUGE "W" BEAM RAIL ELEMENT (7'-3½"LENGTH)

10 GAUGE = 0.138" THICK
12 GAUGE = 0.108" THICK

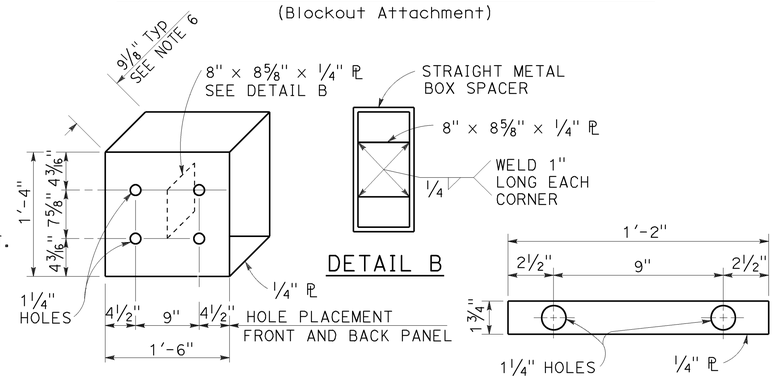


DETAIL A




DETAIL B




DETAIL C

## STRAIGHT METAL BOX SPACER

## PLATE 'A'

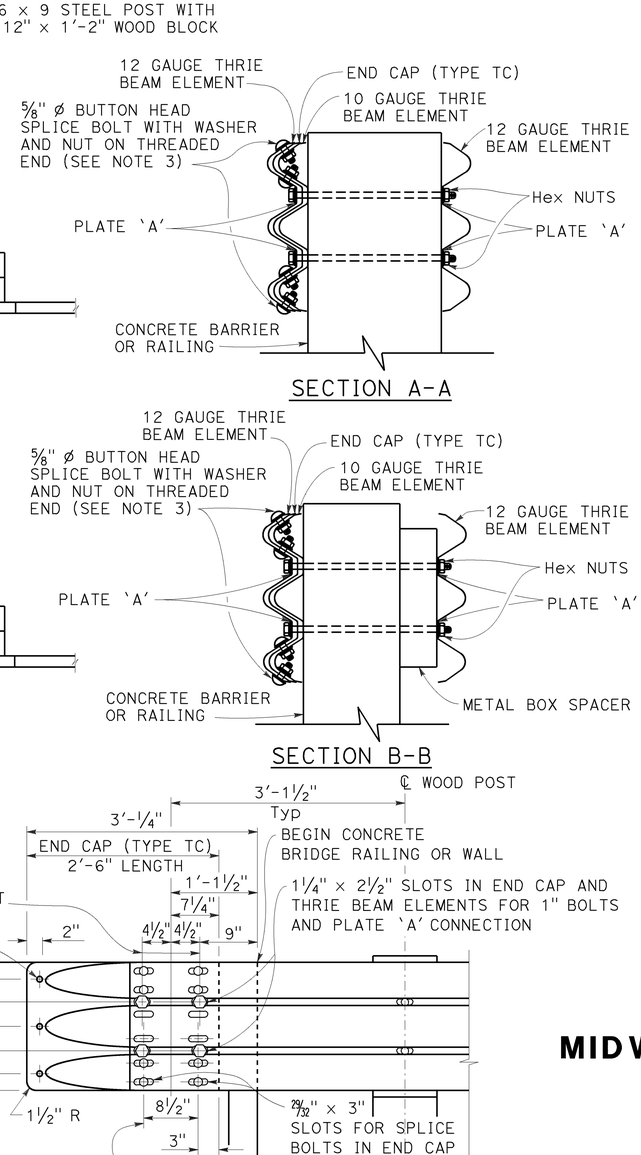


SECTION A-A

SECTION B-B

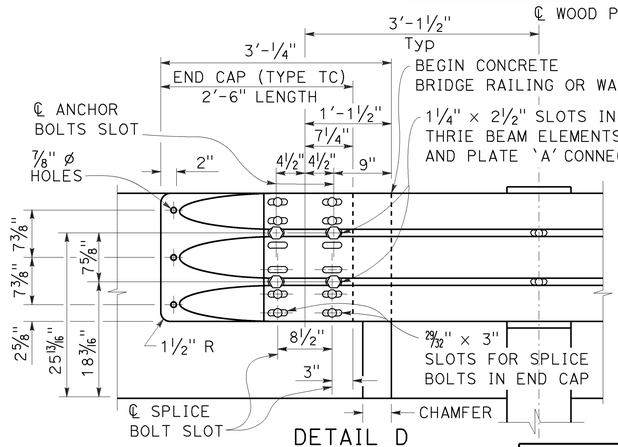


DETAIL D

## NOTES:

TO ACCOMPANY PLANS DATED 08-31-15

1. Use ⅝" ø Button head bolts and hex nuts for connections to posts. No washer on rail face for bolted connections to post.
2. The nested rail elements, end cap, and 'W' beam to thrie beam element may be spliced together prior to bolting the elements to the wood post and concrete barrier or railing.
3. Exterior splice bolt holes for rail element splices at Post No. T5 and the connection to the concrete barrier or railing shall be the standard 29/32" x 1⅛" slot size. Interior splice bolt holes at these locations may be increased up to 1¼" ø. Only the top 4 and the bottom 4 splice bolts with washers and nuts are required for rail splices at Post No. T5 and the connection to the concrete barrier or railing.
4. The top elevation of Posts No. T2 through No. T7 shall not project more than 1" above the top elevation of the rail element.
5. Typically, the railing connected to Transition Railing (Type WB-31) will be either standard railing section of MGS with height transition ratio of 150:1 or a Caltrans approved 31" end treatment attached to Post No. T1.
6. The depth of the metal box spacer varies from the 9⅛" to 1½" and is dependent on the width of the concrete railing or wall. The combined dimension for the depth of the metal box spacer plus the width of railing or wall is typically 21⅛". Where the space between the backside of the concrete railing or wall and the rear thrie beam element is less than 1½", metal plates similar to Plate 'A' are to be used as spacers.
7. Where the width of the concrete railing or wall is greater than 17⅛", wood blocks are to be used to fill the space created between the backside of Posts No. T5 through No. T8 and the rear thrie beam element. These wood blocks shall be 8" in width and 1'-2" in length. The dimension between the front thrie beam element and the rear thrie beam element is to match the width of the concrete railing or wall.
8. End cap may be installed over 12 gauge and 10 gauge thrie beam elements where transition railing is installed on the departure end of bridge railing.
9. Conform standard railing section height to 31" at Post No. T1 using height transition ratio of 150:1.

STATE OF CALIFORNIA
DEPARTMENT OF TRANSPORTATION

# MIDWEST GUARDRAIL SYSTEM TRANSITION RAILING (TYPE WB-31)

NO SCALE

RSP A77U4 DATED JANUARY 23, 2015 SUPERSEDES RSP A77U4 DATED NOVEMBER 15, 2013 AND RSP A77U4 DATED JULY 19, 2013 THAT SUPPLEMENTS THE STANDARD PLANS BOOK DATED 2010.

**REVISED STANDARD PLAN RSP A77U4**

2010 REVISED STANDARD PLAN RSP A77U4

1-8-15

| Dist | COUNTY | ROUTE | POST MILES TOTAL PROJECT | SHEET No. | TOTAL SHEETS |
|---|---|---|---|---|---|
| 11 | Imp | 8 | R90.0/R96.8 | 178 | 209 |

REGISTERED CIVIL ENGINEER

July 19, 2013
PLANS APPROVAL DATE

Michael Janzen
No. 44788
Exp. 03-31-14
CIVIL
REGISTERED PROFESSIONAL ENGINEER
STATE OF CALIFORNIA

THE STATE OF CALIFORNIA OR ITS OFFICERS OR AGENTS SHALL NOT BE RESPONSIBLE FOR THE ACCURACY OR COMPLETENESS OF SCANNED COPIES OF THIS PLAN SHEET.

TO ACCOMPANY PLANS DATED 08-31-15

2010 REVISED STANDARD PLAN RSP A87B

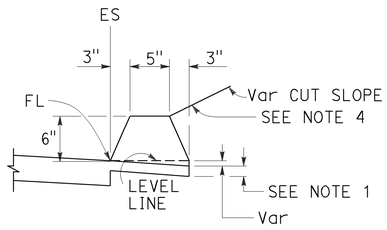


TYPE A
See Note 3

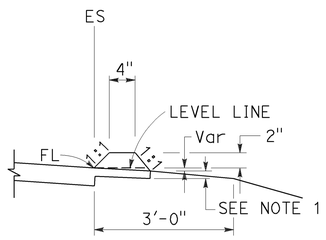


TYPE C

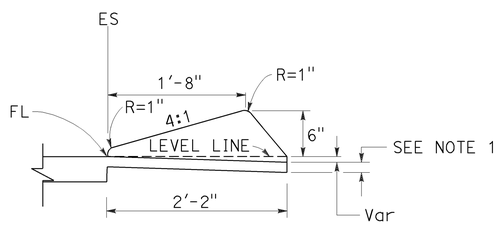


TYPE D

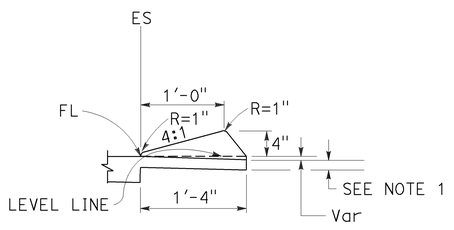


TYPE E

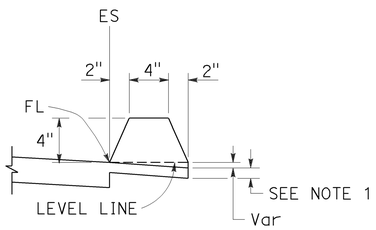


TYPE F
See Note 5

## DIKES

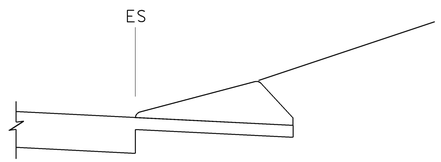


CASE C-1
Cut Slope

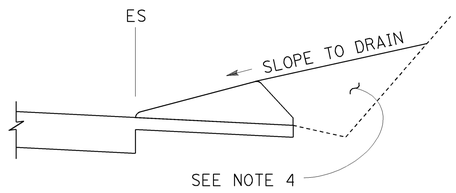


CASE C-2
Cut Slope

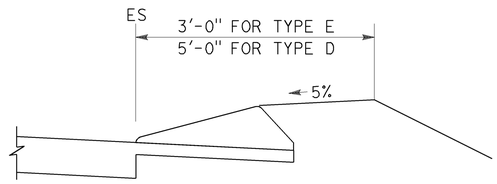


CASE F

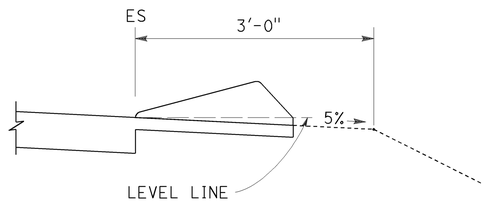


CASE R
See Note 2

## TYPE D AND E BACKFILL DETAILS

### NOTES:

1. For HMA shoulders only, extend top layer of HMA placed on the shoulder under dike with no joint at the ES. For projects with OGFC shoulders, do not extend OGFC under dike. See project plans for modified dike detail.
2. Case R applies to retrofit only projects where restrictive conditions do not provide enough width for Case F backfill.
3. Type A dike only to be used where restrictive slope conditions do not provide enough width to use Type D or Type E dike.
4. Fill and compact with excavated material to top of dike.
5. Use Type F dike, where dike is required with guard railing installations. See Revised Standard Plan RSP A77N4 for dike positioning details.

DIKE QUANTITIES

| TYPE | CUBIC YARDS PER LINEAR FOOT |
|---|---|
| A | 0.0135 |
| C | 0.0038 |
| D | 0.0293 |
| E | 0.0130 |
| F | 0.0066 |

Quantities based on 5% cross slope.

STATE OF CALIFORNIA
DEPARTMENT OF TRANSPORTATION

# HOT MIX ASPHALT DIKES

NO SCALE

RSP A87B DATED JULY 19, 2013 SUPERSEDES STANDARD PLAN A87B
DATED MAY 20, 2011 - PAGE 120 OF THE STANDARD PLANS BOOK DATED 2010.

**REVISED STANDARD PLAN RSP A87B**

6-27-13

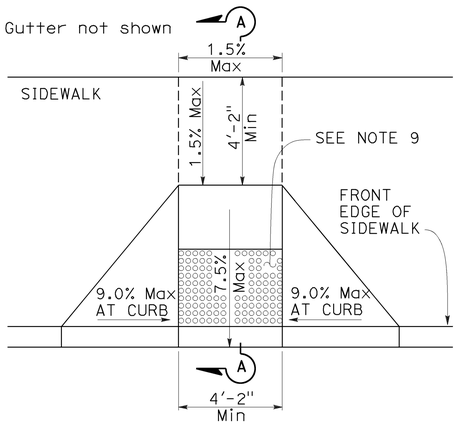


CASE A

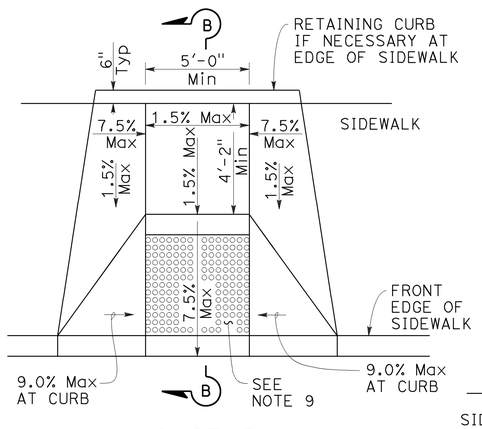


CASE B

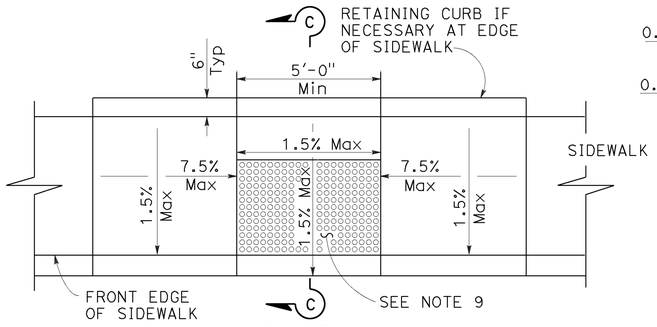


CASE C

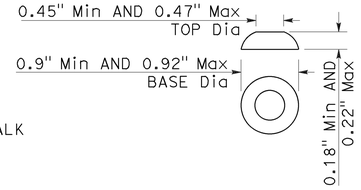


RAISED TRUNCATED DOME

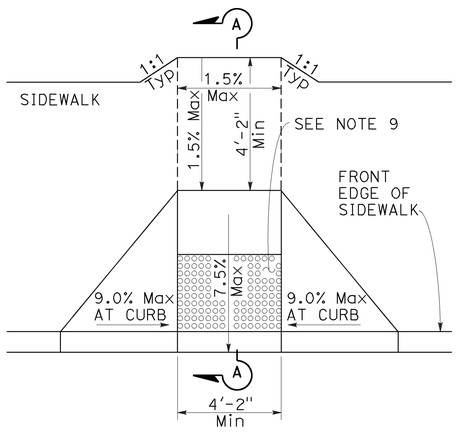


CASE D

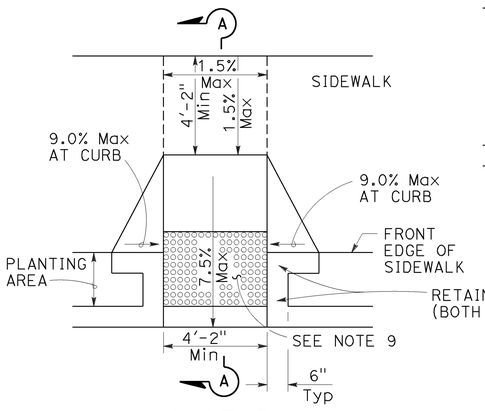


CASE E

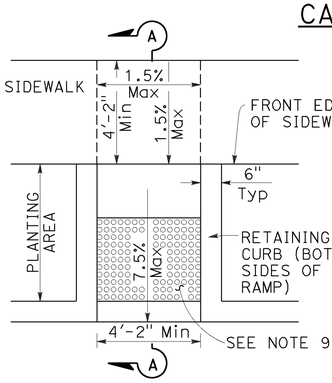


CASE F

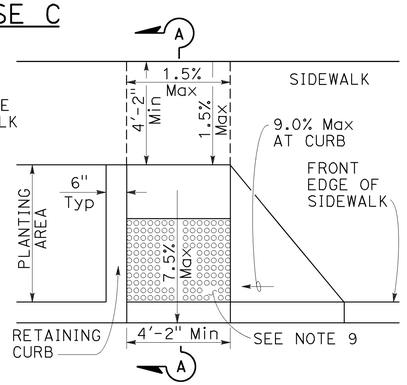


CASE G
See Note 4

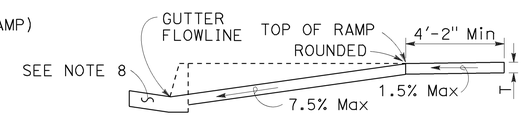


SECTION A-A

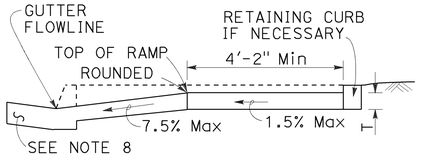


SECTION B-B

Depress entire sidewalk as required

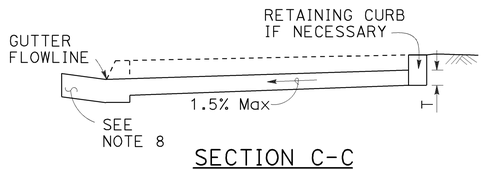


SECTION C-C

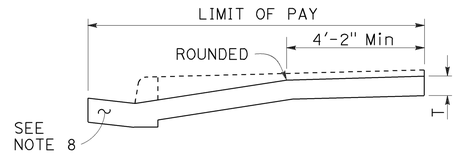


RETROFIT PAY LIMITS

Existing curb and sidewalk

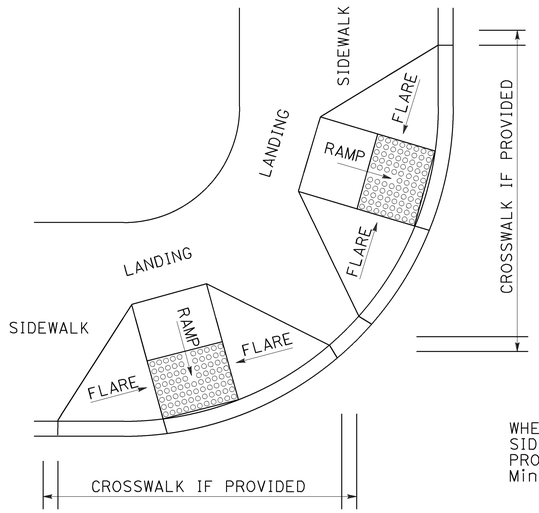


DETAIL A

TYPICAL TWO-RAMP CORNER INSTALLATION

See Note 1

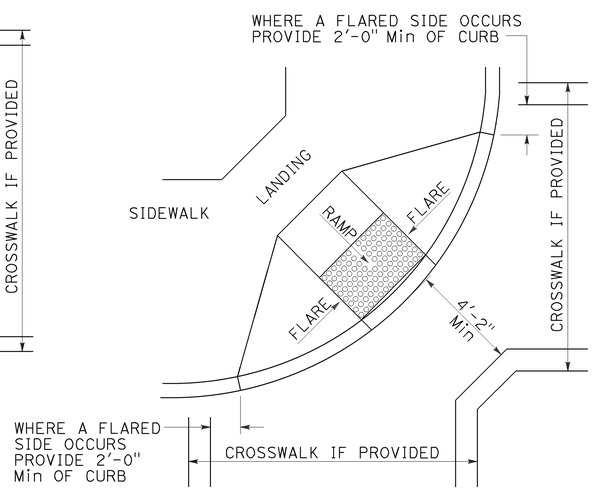


DETAIL B

TYPICAL ONE-RAMP CORNER INSTALLATION

See Notes 1 and 3

## NOTES:

1. As site conditions dictate, Case A through Case G curb ramps may be used for corner installations similar to those shown in Detail A and Detail B. The case of curb ramps used in Detail A do not have to be the same. Case A through Case G curb ramps also may be used at mid block locations, as site conditions dictate.
2. If distance from curb to back of sidewalk is too short to accommodate ramp and 4'-2" platform (landing) as shown in Case A, the sidewalk may be depressed longitudinally as in Case B, or C or may be widened as in Case D.
3. When ramp is located in center of curb return, crosswalk configuration must be similar to that shown for Detail B.
4. As site conditions dictate, the retaining curb side and the flared side of the Case G ramp shall be constructed in reversed position.
5. If located on a curve, the sides of the ramp need not be parallel, but the minimum width of the ramp shall be 4'-2".
6. Side slope of ramp flares vary uniformly from a maximum of 9.0% at curb to conform with longitudinal sidewalk slope adjacent to top of the ramp, except in Case C and Case F.
7. Transitions from ramps and landing to walks, gutters or streets shall be flush (no lip) and free of abrupt changes.
8. Counter slopes of adjoining gutters and road surfaces immediately adjacent to and within 24 inches of the curb ramp shall not be steeper than 1:20 (5.0%). Gutter pan slope shall not exceed 1" of depth for each 2'-0" of width.
9. Curb ramps shall have a detectable warning surface that extends the full width and 3'-0" depth of the ramp. A 4'-0" wide detectable warning surface may be used on a 4'-2" wide curb ramp. Detectable Warning Surfaces shall conform to the requirements in the Standard Specifications.
10. Sidewalk and ramp thickness, "T", shall be 3½" minimum.
11. Utility pull boxes, manholes, vaults and all other utility facilities within the boundaries of the curb ramp will be relocated or adjusted to grade by the owner prior to, or in conjunction with, curb ramp construction.
12. Detectable warning surface may have to be cut to allow removal of utility covers while maintaining full detectable warning width and depth.

RAISED TRUNCATED DOME PATTERN (IN-LINE)

DETECTABLE WARNING SURFACE

See Note 9

STATE OF CALIFORNIA
DEPARTMENT OF TRANSPORTATION

# CURB RAMP DETAILS

NO SCALE

RSP A88A DATED JULY 3, 2015 SUPERSEDES RSP A88A DATED MARCH 21, 2014 AND RSP A88A DATED JULY 19, 2013 AND STANDARD PLAN A88A DATED MAY 20, 2011 - PAGE 121 OF THE STANDARD PLANS BOOK DATED 2010.

**REVISED STANDARD PLAN RSP A88A**

| Dist | COUNTY | ROUTE | POST MILES TOTAL PROJECT | SHEET No. | TOTAL SHEETS |
|---|---|---|---|---|---|
| 11 | Imp | 8 | R90.0/R96.8 | 179 | 209 |

H. David Cordova
REGISTERED CIVIL ENGINEER

July 3, 2015
PLANS APPROVAL DATE

REGISTERED PROFESSIONAL ENGINEER — Hector David Cordova — No. C41957 — Exp. 3-31-16 — CIVIL — STATE OF CALIFORNIA

THE STATE OF CALIFORNIA OR ITS OFFICERS OR AGENTS SHALL NOT BE RESPONSIBLE FOR THE ACCURACY OR COMPLETENESS OF SCANNED COPIES OF THIS PLAN SHEET.

TO ACCOMPANY PLANS DATED 08-31-15

2010 REVISED STANDARD PLAN RSP A88A

6-30-15

| Dist | COUNTY | ROUTE | POST MILES TOTAL PROJECT | SHEET No. | TOTAL SHEETS |
|---|---|---|---|---|---|
| 11 | Imp | 8 | R90.0/R96.8 | 180 | 209 |

William K. Farnbach
REGISTERED CIVIL ENGINEER

July 19, 2013
PLANS APPROVAL DATE

REGISTERED PROFESSIONAL ENGINEER
William K. Farnbach
No. C49042
Exp. 9-30-14
CIVIL
STATE OF CALIFORNIA

THE STATE OF CALIFORNIA OR ITS OFFICERS OR AGENTS SHALL NOT BE RESPONSIBLE FOR THE ACCURACY OR COMPLETENESS OF SCANNED COPIES OF THIS PLAN SHEET.

TO ACCOMPANY PLANS DATED 08-31-15

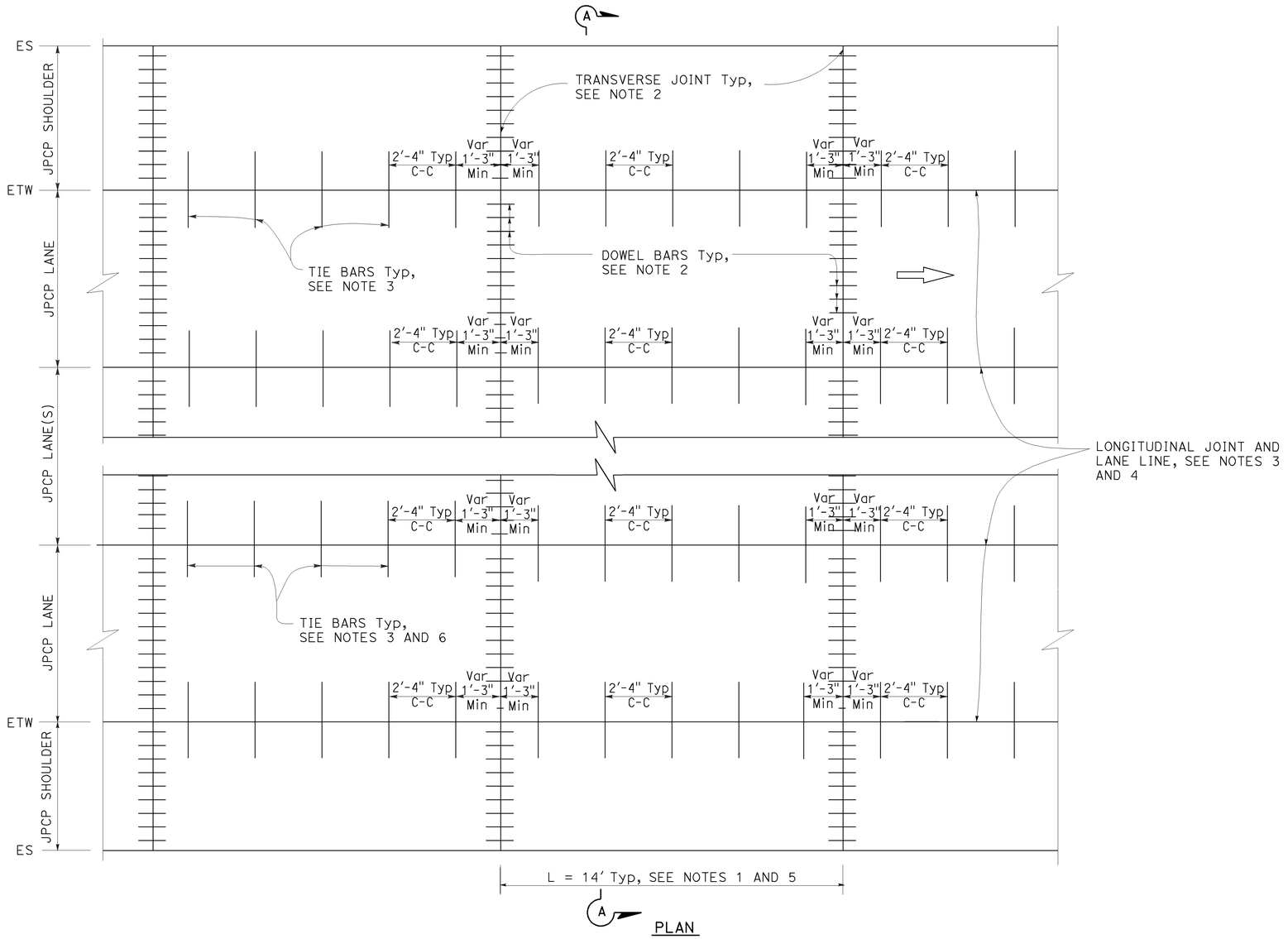


PLAN

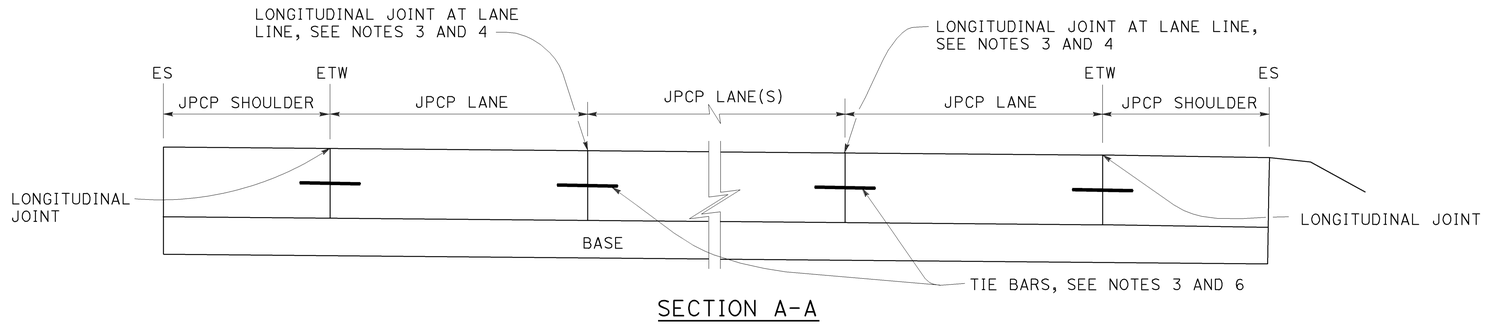


SECTION A-A

NOTES:

1. Transverse joint spacing may be adjusted to no less than 10' and no more than 14' to conform to bridges, change in pavement type, and hardened concrete pavement.
2. For transverse joint and dowel bar details not shown, see Revised Standard Plan RSP P10.
3. For longitudinal joint and tie bar details not shown, see Revised Standard Plan RSP P15.
4. For additional longitudinal joint layout details, see Revised Standard Plan RSP P18.
5. For joint layout at intersections, see Project Plans.
6. For dowel bars at longitudinal joint. see Revised Standard Plan RSP P18.

STATE OF CALIFORNIA
DEPARTMENT OF TRANSPORTATION

# JOINTED PLAIN CONCRETE PAVEMENT NEW CONSTRUCTION

NO SCALE

RSP P1 DATED JULY 19, 2013 SUPERSEDES STANDARD PLAN P1
DATED MAY 20, 2011 - PAGE 125 OF THE STANDARD PLANS BOOK DATED 2010.

## REVISED STANDARD PLAN RSP P1

2010 REVISED STANDARD PLAN RSP P1

5-31-13

| Dist | COUNTY | ROUTE | POST MILES TOTAL PROJECT | SHEET No. | TOTAL SHEETS |
|---|---|---|---|---|---|
| 11 | Imp | 8 | R90.0/R96.8 | 181 | 209 |

William K. Farnbach
REGISTERED CIVIL ENGINEER

July 19, 2013
PLANS APPROVAL DATE

REGISTERED PROFESSIONAL ENGINEER — William K. Farnbach — No. C49042 — Exp. 9-30-14 — CIVIL — STATE OF CALIFORNIA

THE STATE OF CALIFORNIA OR ITS OFFICERS OR AGENTS SHALL NOT BE RESPONSIBLE FOR THE ACCURACY OR COMPLETENESS OF SCANNED COPIES OF THIS PLAN SHEET.

TO ACCOMPANY PLANS DATED 08-31-15

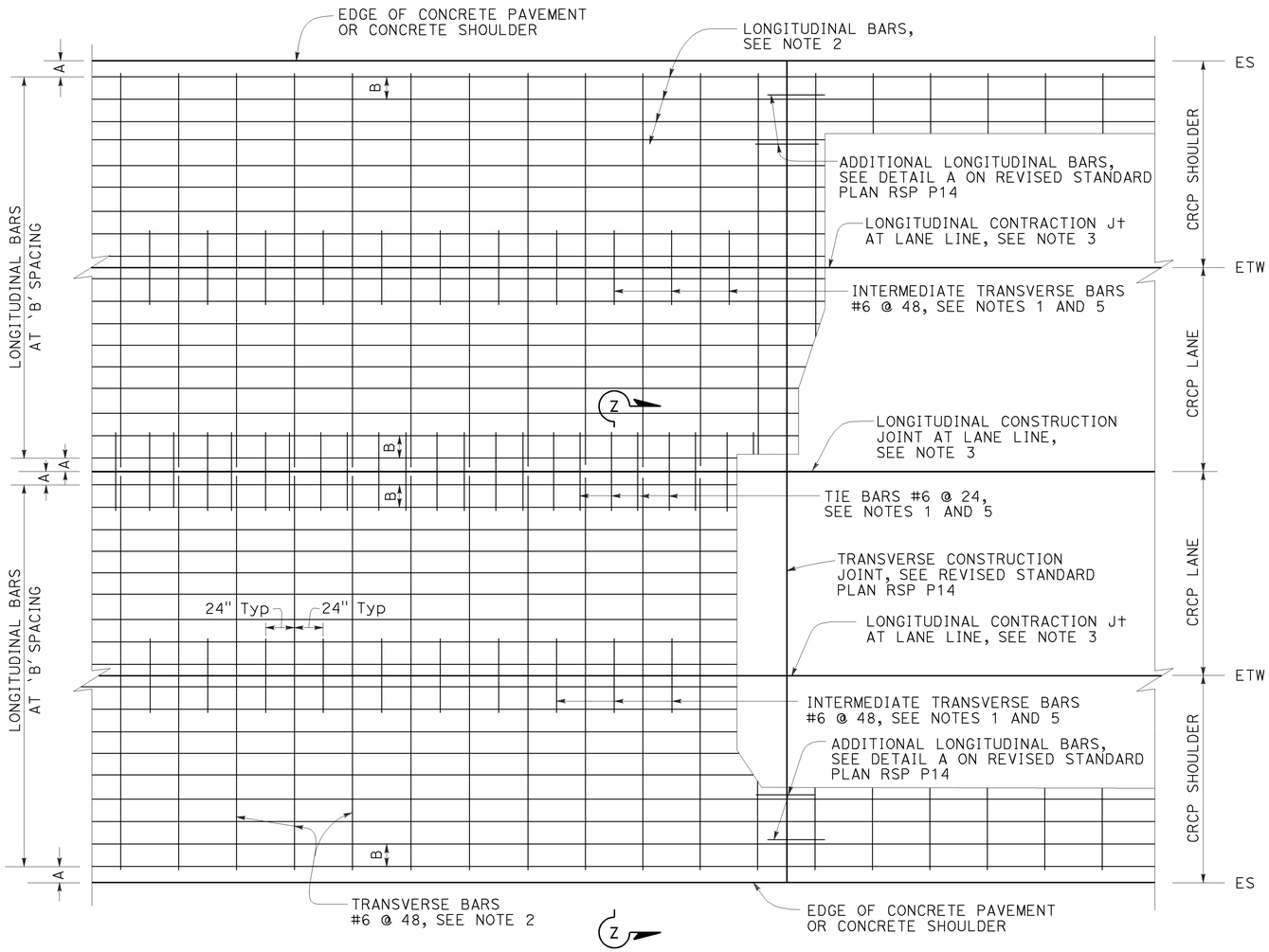


PLAN
See Note 4

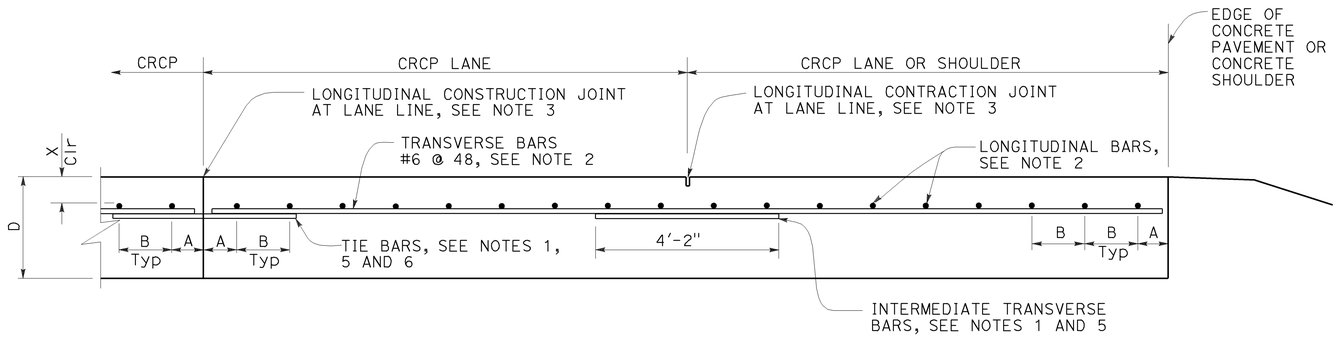


SECTION Z-Z

## TABLE No. 1 LONGITUDINAL BAR REINFORCEMENT

| SLAB THICKNESS AND BAR SIZE | | FIRST SPACING AT EDGE OR JOINT | REGULAR BARS | ADDITIONAL BARS AT TRANSVERSE CONSTRUCTION JOINT | Clr |
|---|---|---|---|---|---|
| D | BAR SIZE | SPACING A | SPACING B | SPACING 2 x B | X |
| .75′ | #6 | 3" TO 4" | 8.0" | 16" | 4" |
| .80′ | #6 | 3" TO 4" | 7.5" | 15" | 4" |
| .85′ | #6 | 3" TO 4" | 7.0" | 14" | 4" |
| .90′ | #6 | 3" TO 4" | 6.5" | 13" | 4" |
| .95′ | #6 | 3" TO 4" | 6.25" | 12.5" | 4" |
| 1.00′ | #6 | 3" TO 4" | 6.0" | 12" | 5" |
| 1.05′ | #6 | 3" TO 4" | 5.75" | 11.5" | 5" |
| 1.10′ | #6 | 3" TO 4" | 5.5" | 11" | 5.5" |

NOTES:

1. Place transverse tie bars and intermediate transvese bars parallel to and in the same plane as transverse bars.
2. The length of lap splices for bar reinforcement must be at least 25".
3. For longitudinal contraction and construction joint details, see Revised Standard Plan RSP P16.
4. For curved lane layout see Revised Standard Plan RSP P16.
5. For tie bar and intermediate transverse bar details see Revised Standard Plan RSP P16.

STATE OF CALIFORNIA
DEPARTMENT OF TRANSPORTATION

# CONTINUOUSLY REINFORCED CONCRETE PAVEMENT

NO SCALE

RSP P4 DATED JULY 19, 2013 SUPERSEDES RSP P4 DATED APRIL 20, 2012 AND STANDARD PLAN P4 DATED MAY 20, 2011 - PAGE 128 OF THE STANDARD PLANS BOOK DATED 2010.

## REVISED STANDARD PLAN RSP P4

2010 REVISED STANDARD PLAN RSP P4

5-31-13

| Dist | COUNTY | ROUTE | POST MILES TOTAL PROJECT | SHEET No. | TOTAL SHEETS |
|---|---|---|---|---|---|
| 11 | Imp | 8 | R90.0/R96.8 | 182 | 209 |

William K. Farnbach
REGISTERED CIVIL ENGINEER

July 19, 2013
PLANS APPROVAL DATE

REGISTERED PROFESSIONAL ENGINEER — William K. Farnbach — No. C49042 — Exp. 9-30-14 — CIVIL — STATE OF CALIFORNIA

THE STATE OF CALIFORNIA OR ITS OFFICERS OR AGENTS SHALL NOT BE RESPONSIBLE FOR THE ACCURACY OR COMPLETENESS OF SCANNED COPIES OF THIS PLAN SHEET.

TO ACCOMPANY PLANS DATED 08-31-15

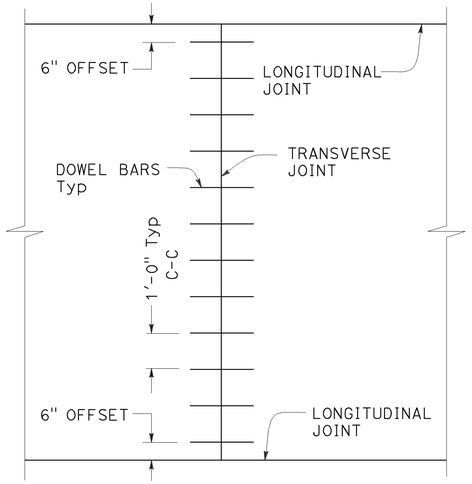


## TRANSVERSE JOINT DOWEL BAR LAYOUT

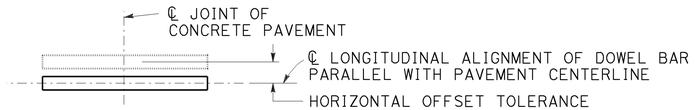


PLAN

## HORIZONTAL OFFSET TOLERANCE

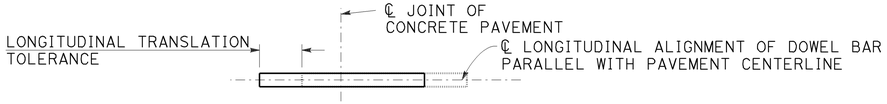


PLAN

## LONGITUDINAL TRANSLATION TOLERANCE

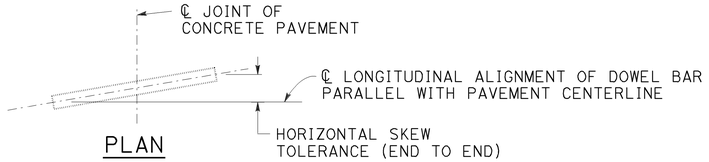


PLAN

## HORIZONTAL SKEW TOLERANCE

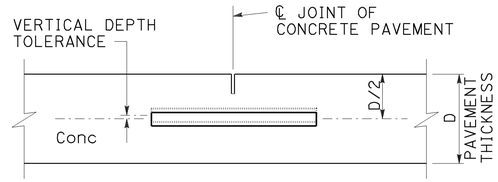


ELEVATION

## VERTICAL DEPTH TOLERANCE

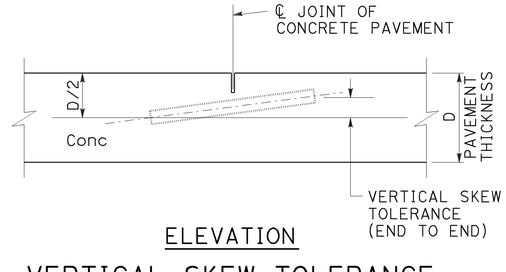


ELEVATION

## VERTICAL SKEW TOLERANCE

### NOTES:

1. See Revised Standard Plan RSP P1 for typical dowel bar placement and locations.
2. Where fresh concrete pavement is placed against new concrete or existing concrete pavement, rounding the corner of the existing concrete pavement is not required.
3. May also use ¾" Dia dowel bars 2'-4" ± ¼" in length. Center the length of dowel bars at the centerline of longitudinal joint.




## TRANSVERSE CONSTRUCTION JOINT DETAIL

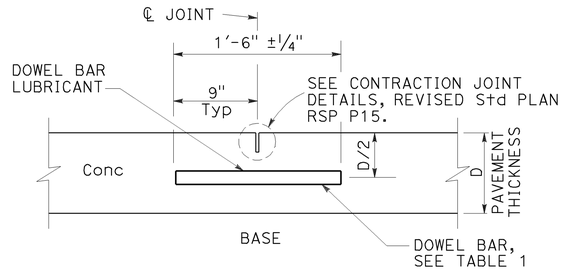


## TRANSVERSE CONTRACTION JOINT

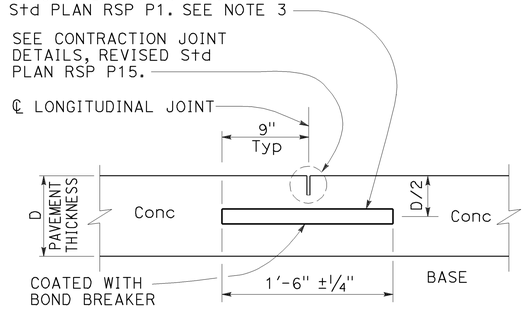


## LONGITUDINAL CONTRACTION JOINT WITH DOWEL BARS

See Revised Std Plan RSP P18

### TABLE 1

| DOWEL BAR DIAMETER TABLE | | | |
|---|---|---|---|
| PAVEMENT THICKNESS | 0.65' | > 0.65' - 0.85' | > 0.85' |
| MINIMUM DOWEL * BAR DIAMETER | 1" | 1¼" | 1½" |

* The drilled hole diameter must be ⅛" to 3/16" larger than the bar diameter.

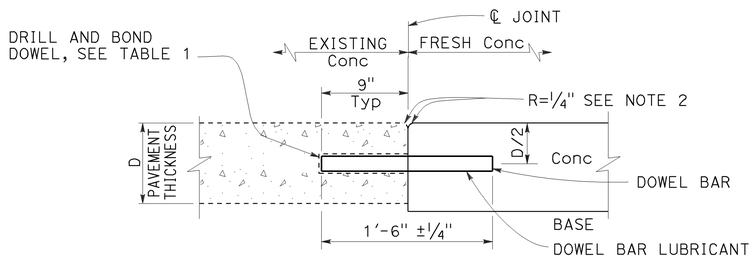


## TRANSVERSE CONSTRUCTION JOINT FOR EXISTING CONCRETE PAVEMENT

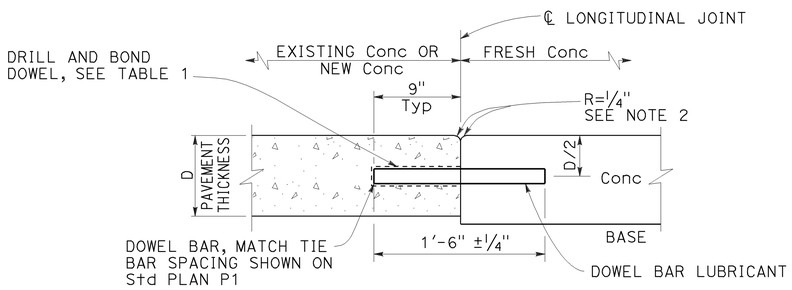


## LONGITUDINAL CONSTRUCTION JOINT WITH DOWEL BARS

See Revised Std Plan RSP P18

STATE OF CALIFORNIA
DEPARTMENT OF TRANSPORTATION

# CONCRETE PAVEMENT DOWEL BAR DETAILS

NO SCALE

RSP P10 DATED JULY 19, 2013 SUPERSEDES RSP P10 DATED APRIL 20, 2012 AND STANDARD PLAN P10 DATED MAY 20, 2011 - PAGE 131 OF THE STANDARD PLANS BOOK DATED 2010.

**REVISED STANDARD PLAN RSP P10**

**2010 REVISED STANDARD PLAN RSP P10**

5-31-13

| Dist | COUNTY | ROUTE | POST MILES TOTAL PROJECT | SHEET No. | TOTAL SHEETS |
|---|---|---|---|---|---|
| 11 | Imp | 8 | R90.0/R96.8 | 183 | 209 |

William K. Farnbach
REGISTERED CIVIL ENGINEER

October 19, 2012
PLANS APPROVAL DATE

REGISTERED PROFESSIONAL ENGINEER
William K. Farnbach
No. C49042
Exp. 9-30-14
CIVIL
STATE OF CALIFORNIA

THE STATE OF CALIFORNIA OR ITS OFFICERS OR AGENTS SHALL NOT BE RESPONSIBLE FOR THE ACCURACY OR COMPLETENESS OF SCANNED COPIES OF THIS PLAN SHEET.

TO ACCOMPANY PLANS DATED 08-31-15

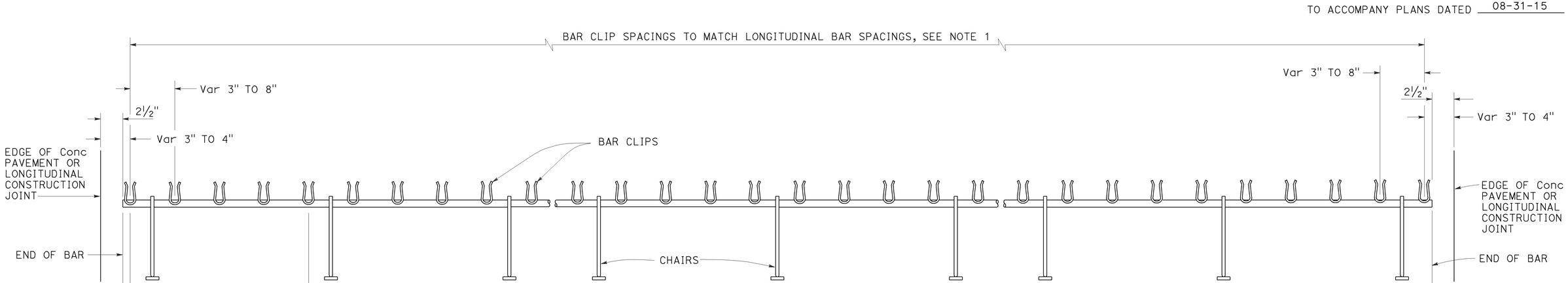


## TRANSVERSE BAR ASSEMBLY

NOTES:

1. See Revised Standard Plan RSP P4 for spacing of longitudinal bars.
2. Tensile strength of chair shall be at least 50,000 psi.
3. Wire sizes shown are minimum required.
4. For concrete cover (X), see Table 1 in Revised Standard Plan RSP P4.

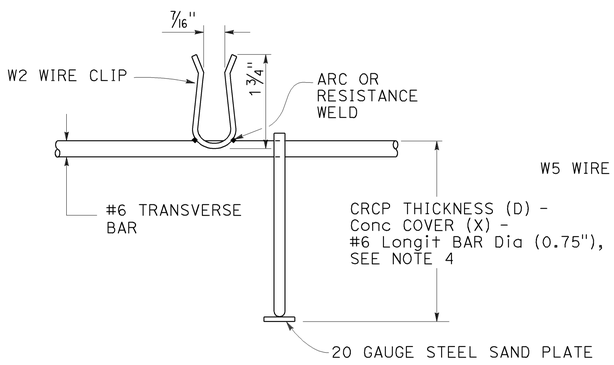


#6 BAR CLIP DETAIL

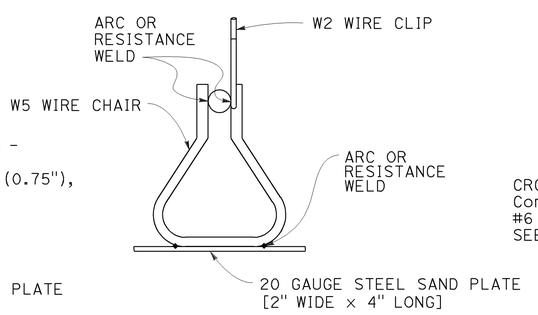


CHAIR DETAIL

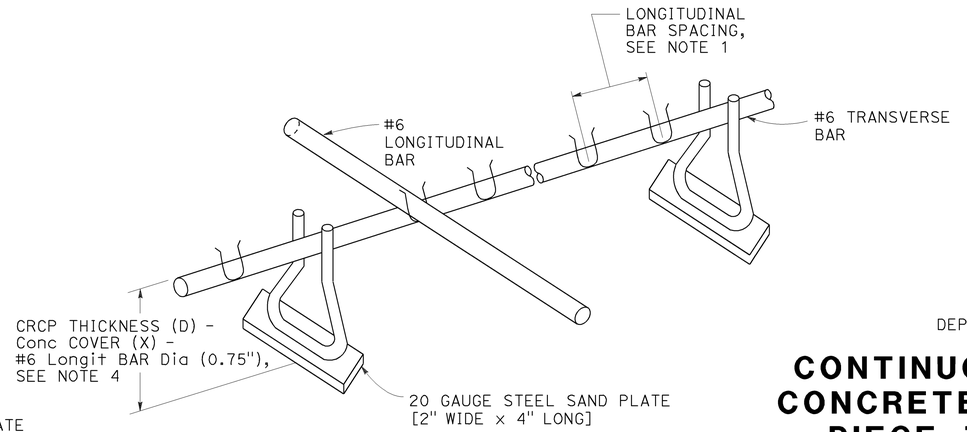


ISOMETRIC VIEW OF CHAIR ASSEMBLY

STATE OF CALIFORNIA
DEPARTMENT OF TRANSPORTATION

# CONTINUOUSLY REINFORCED CONCRETE PAVEMENT-SINGLE PIECE TRANSVERSE BAR ASSEMBLY

NO SCALE

RSP P13 DATED OCTOBER 19, 2012 SUPERSEDES STANDARD PLAN P13 DATED MAY 20, 2011 - PAGE 133 OF THE STANDARD PLANS BOOK DATED 2010.

**REVISED STANDARD PLAN RSP P13**

2010 REVISED STANDARD PLAN RSP P13

8-28-12

| Dist | COUNTY | ROUTE | POST MILES TOTAL PROJECT | SHEET No. | TOTAL SHEETS |
|---|---|---|---|---|---|
| 11 | Imp | 8 | R90.0/R96.8 | 184 | 209 |

William K. Farnbach
REGISTERED CIVIL ENGINEER

July 19, 2013
PLANS APPROVAL DATE

REGISTERED PROFESSIONAL ENGINEER
William K. Farnbach
No. C49042
Exp. 9-30-14
CIVIL
STATE OF CALIFORNIA

THE STATE OF CALIFORNIA OR ITS OFFICERS OR AGENTS SHALL NOT BE RESPONSIBLE FOR THE ACCURACY OR COMPLETENESS OF SCANNED COPIES OF THIS PLAN SHEET.

TO ACCOMPANY PLANS DATED 08-31-15

## NOTES:

1. For longitudinal bar size, spacing and clearances, see Table 1 on Revised Standard Plan RSP P4.
2. The length of lap splices for bar reinforcement must be at least 25".
3. For tie bars in longitudinal construction joint, see Revised Standard Plan RSP P16.
4. Place additional longitudinal bars parallel to and in the same plane as the longitudinal bars.
5. Place additional longitudinal bars symmetrically about longitudinal construction joint.

## ABBREVIATION

D = Thickness of CRCP

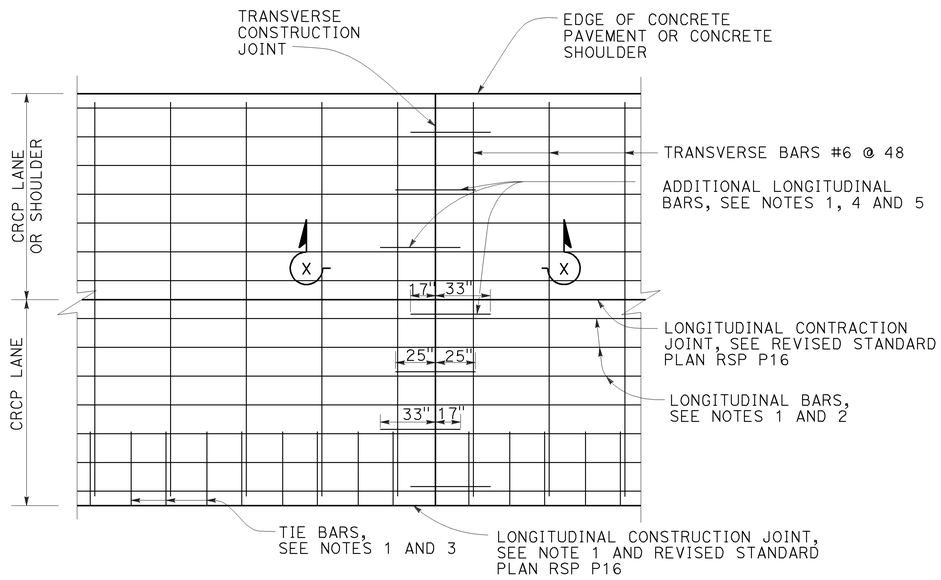


### DETAIL A

Additional longitudinal bars at transverse construction joint

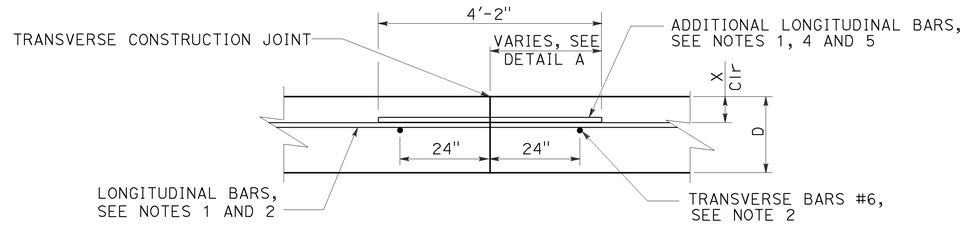


### SECTION X-X

### TRANSVERSE CONSTRUCTION JOINT

STATE OF CALIFORNIA
DEPARTMENT OF TRANSPORTATION

# CONTINUOUSLY REINFORCED CONCRETE PAVEMENT TRANSVERSE CONSTRUCTION JOINT

NO SCALE

RSP P14 DATED JULY 19, 2013 SUPPLEMENTS THE STANDARD PLANS BOOK DATED 2010.

# REVISED STANDARD PLAN RSP P14

2010 REVISED STANDARD PLAN RSP P14

5-31-13

| Dist | COUNTY | ROUTE | POST MILES TOTAL PROJECT | SHEET No. | TOTAL SHEETS |
|---|---|---|---|---|---|
| 11 | Imp | 8 | R90.0/R96.8 | 185 | 209 |

William K. Farnbach
REGISTERED CIVIL ENGINEER

July 19, 2013
PLANS APPROVAL DATE

REGISTERED PROFESSIONAL ENGINEER — William K. Farnbach — No. C49042 — Exp. 9-30-14 CIVIL — STATE OF CALIFORNIA

THE STATE OF CALIFORNIA OR ITS OFFICERS OR AGENTS SHALL NOT BE RESPONSIBLE FOR THE ACCURACY OR COMPLETENESS OF SCANNED COPIES OF THIS PLAN SHEET.

TO ACCOMPANY PLANS DATED 08-31-15

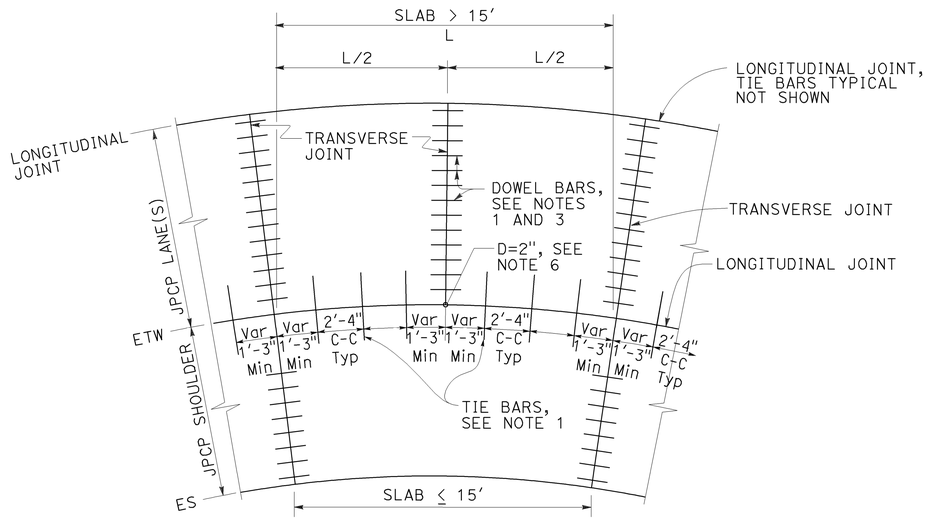


## TIE BAR LAYOUT IN CURVED LANES

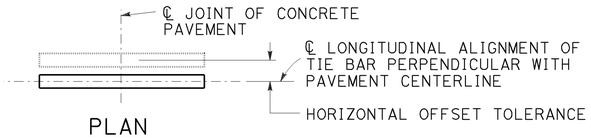


PLAN

## HORIZONTAL OFFSET TOLERANCE

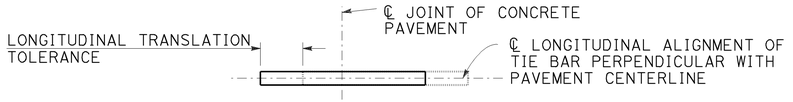


PLAN

## LONGITUDINAL TRANSLATION TOLERANCE

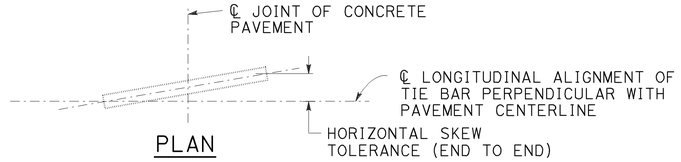


PLAN

## HORIZONTAL SKEW TOLERANCE

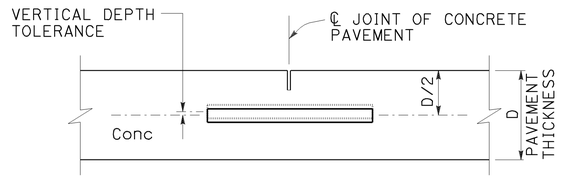


ELEVATION

## VERTICAL DEPTH TOLERANCE

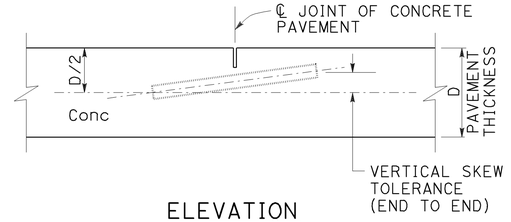


ELEVATION

## VERTICAL SKEW TOLERANCE

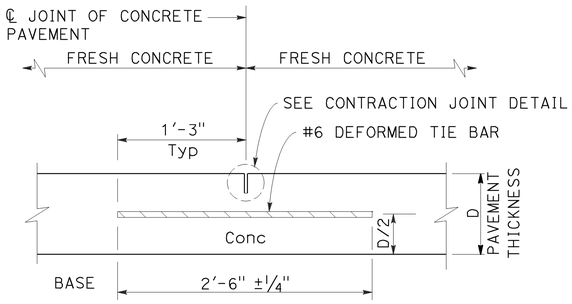


## LONGITUDINAL CONTRACTION JOINT

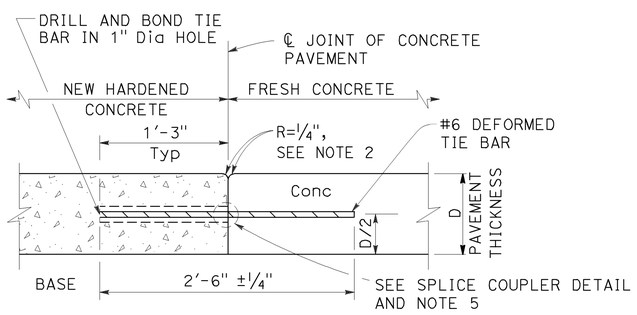


## LONGITUDINAL CONSTRUCTION JOINT

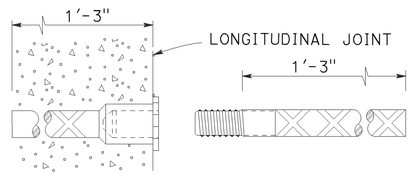


## ALTERNATIVE SPLICE COUPLER

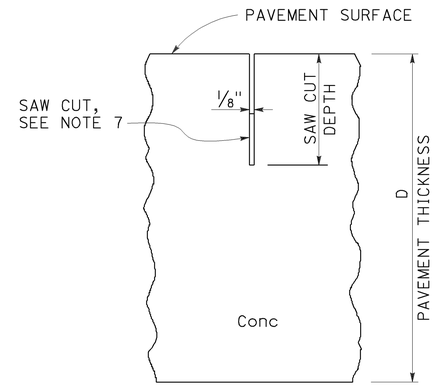


## CONTRACTION JOINT DETAIL

### NOTES:

1. See Revised Standard Plan RSP P1 for typical dowel bar and tie bar placement and locations.
2. Where new pavement is placed against existing concrete pavement, rounding the corner is not required.
3. For dowel bar sizes, See Revised Standard Plan RSP P10.
4. Tie bar details apply to inside widenings.
5. Use either drill and bond or splice couplers.
6. Full depth drilled hole. Fill hole with filler material.
7. The bottom of the saw cut must be at least 0.5" clear of any dowel bar, tie bar and bar reinforcement.

STATE OF CALIFORNIA
DEPARTMENT OF TRANSPORTATION

# CONCRETE PAVEMENT-TIE BAR DETAILS

NO SCALE

RSP P15 DATED JULY 19, 2013 SUPPLEMENTS THE STANDARD PLANS BOOK DATED 2010.

**REVISED STANDARD PLAN RSP P15**

2010 REVISED STANDARD PLAN RSP P15

5-31-13

| Dist | COUNTY | ROUTE | POST MILES TOTAL PROJECT | SHEET No. | TOTAL SHEETS |
|---|---|---|---|---|---|
| 11 | Imp | 8 | R90.0/R96.8 | 186 | 209 |

William K. Farnbach
REGISTERED CIVIL ENGINEER

July 19, 2013
PLANS APPROVAL DATE

REGISTERED PROFESSIONAL ENGINEER — William K. Farnbach — No. C49042 — Exp. 9-30-14 — CIVIL — STATE OF CALIFORNIA

THE STATE OF CALIFORNIA OR ITS OFFICERS OR AGENTS SHALL NOT BE RESPONSIBLE FOR THE ACCURACY OR COMPLETENESS OF SCANNED COPIES OF THIS PLAN SHEET.

TO ACCOMPANY PLANS DATED 08-31-15

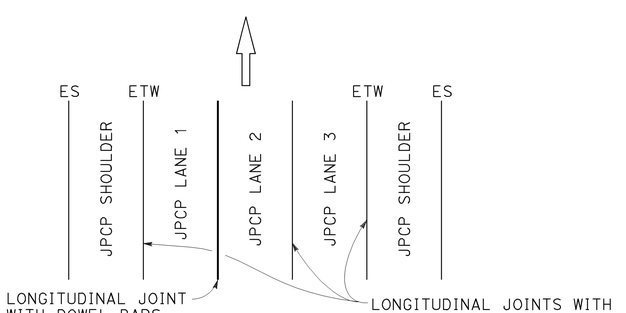


3 LANES WITH CONCRETE SHOULDERS
PLAN

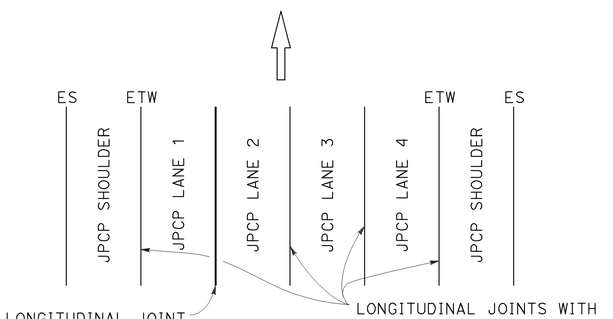


4 LANES WITH CONCRETE SHOULDERS
PLAN

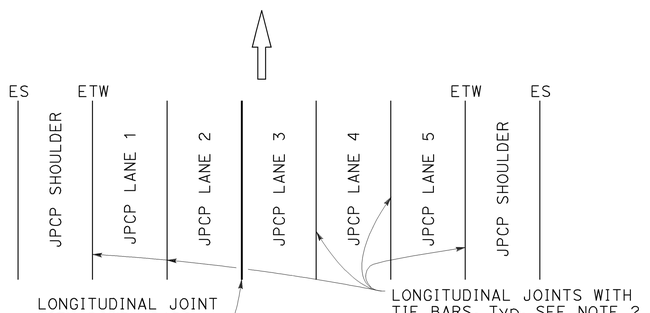


5 LANES WITH CONCRETE SHOULDERS
PLAN

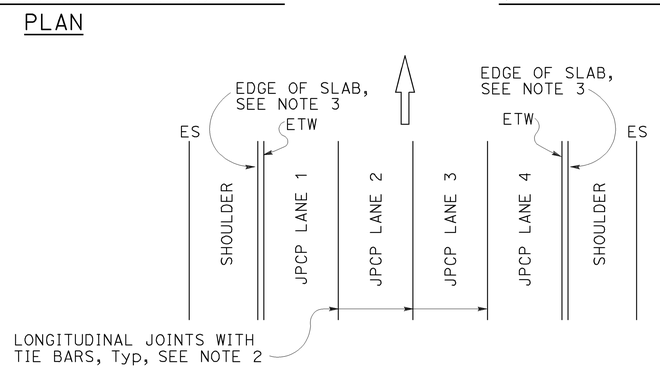


4 LANES OR LESS WITH AC SHOULDERS
PLAN

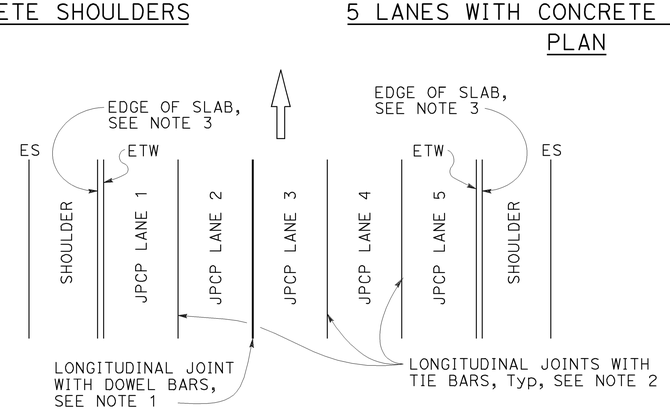


5 LANES WITH AC SHOULDERS
PLAN

## NEW CONSTRUCTION
Location of Longitudinal Joints
For JPCP

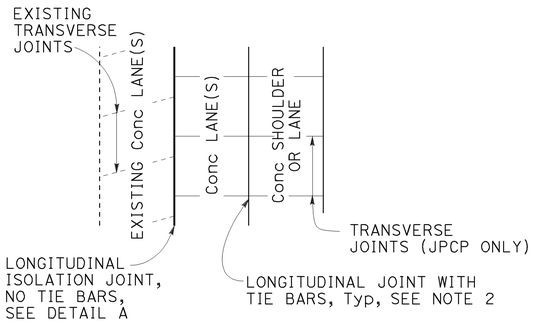


CASE 1
PLAN
Transverse Joints do not align between new and existing.

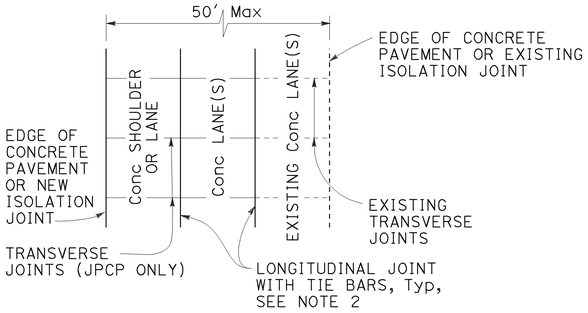


CASE 2
PLAN
Transverse Joints align between new and existing.
(For JPCP only)

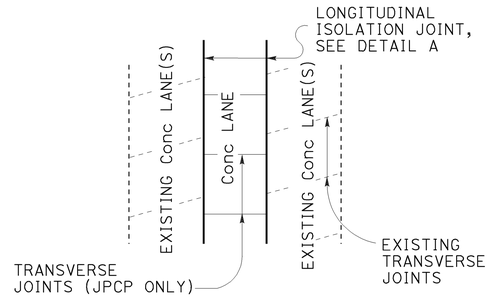


CASE 3 (INTERIOR LANE REPLACEMENT)
PLAN
Transverse Joints do not align between new and existing.

## LANE/SHOULDER ADDITION OR RECONSTRUCTION
For JPCP and CRCP

NOTES:

1. See Revised Standard Plan RSP P10 for longitudinal joint with dowel bars.
2. See Revised Standard Plan RSP P15 for longitudinal joint with tie bars.
3. S= Reservoir depth.
   S= 7/8" ± 1/16" for asphalt rubber seals
   S= 9/16" ± 1/16" for silicone seals
   Preformed compression seals must be 13/16" wide and S= 1 11/16" ± 1/16"

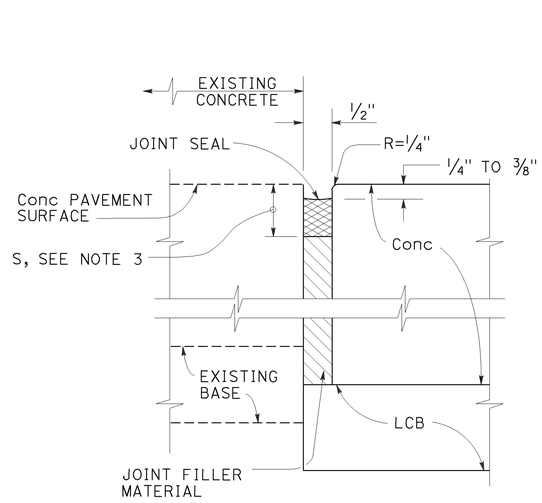


DETAIL "A"
ISOLATION JOINT

STATE OF CALIFORNIA
DEPARTMENT OF TRANSPORTATION

# CONCRETE PAVEMENT LANE SCHEMATICS AND ISOLATION JOINT DETAIL

NO SCALE

RSP P18 DATED JULY 19, 2013 SUPERSEDES RSP P18 DATED APRIL 20, 2012 AND STANDARD PLAN P18 DATED MAY 20, 2011 - PAGE 135 OF THE STANDARD PLANS BOOK DATED 2010.

**REVISED STANDARD PLAN RSP P18**

**2010 REVISED STANDARD PLAN RSP P18**

5-31-13

| Dist | COUNTY | ROUTE | POST MILES TOTAL PROJECT | SHEET No. | TOTAL SHEETS |
|---|---|---|---|---|---|
| 11 | Imp | 8 | R90.0/R96.8 | 187 | 209 |

William K. Farnbach
REGISTERED CIVIL ENGINEER

July 19, 2013
PLANS APPROVAL DATE

REGISTERED PROFESSIONAL ENGINEER — William K. Farnbach — No. C49042 — Exp. 9-30-14 — CIVIL — STATE OF CALIFORNIA

THE STATE OF CALIFORNIA OR ITS OFFICERS OR AGENTS SHALL NOT BE RESPONSIBLE FOR THE ACCURACY OR COMPLETENESS OF SCANNED COPIES OF THIS PLAN SHEET.

TO ACCOMPANY PLANS DATED 08-31-15

2010 REVISED STANDARD PLAN RSP P20

NOTES:

1. Details do not apply to isolation joints and longitudinal construction joints.
2. Tie bars, dowel bars, and bar reinforcement are not shown.
3. Depths are measured from the final concrete pavement surface elevation after any grinding.

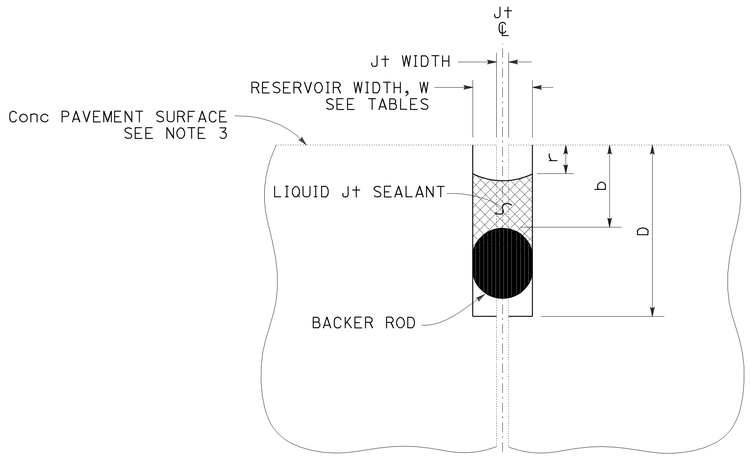


## LIQUID JOINT SEALANT

| RESERVOIR WIDTH W ±1/16" | LIQUID JOINT SEALANT DIMENSIONS | | | | | |
|---|---|---|---|---|---|---|
| | BACKER ROD NOMINAL Dia * | DEPTHS (ASPHALT RUBBER) ** | | DEPTHS (SILICONE) | | |
| | | RESERVOIR D ± 1/4" | BACKER ROD b ± 1/16" | RESERVOIR D ± 1/4" | BACKER ROD b ± 1/16" | RECESS r ± 1/16" |
| 1/4" | 3/8" | 1 3/4" | 7/8" | 1 3/8" | 1/2" | 1/4" |
| 3/8" | 1/2" | 1 7/8" | 7/8" | 1 1/2" | 1/2" | 1/4" |
| 1/2" | 3/4" | 2" | 7/8" | 1 3/4" | 9/16" | 5/16" |
| 5/8" | 7/8" | 2 1/4" | 1" | 2" | 5/8" | 5/16" |
| 3/4" | 1" | 2 3/4" | 1 1/8" | 2 1/4" | 3/4" | 3/8" |
| 7/8" | 1 1/4" | 3" | 1 1/4" | 2 1/2" | 13/16" | 3/8" |
| 1" | 1 1/2" | 3 1/4" | 1 3/8" | 2 5/8" | 7/8" | 3/8" |
| 1 1/8" | 1 1/2" | 3 1/2" | 1 1/2" | 2 13/16" | 1" | 1/2" |

* Larger diameter backer rods may be substituted according to manufacturer recommendations if reservoir depth is increased equivalently.

** Asphalt rubber sealant recess depth "r" varies from 1/4" to 3/8"

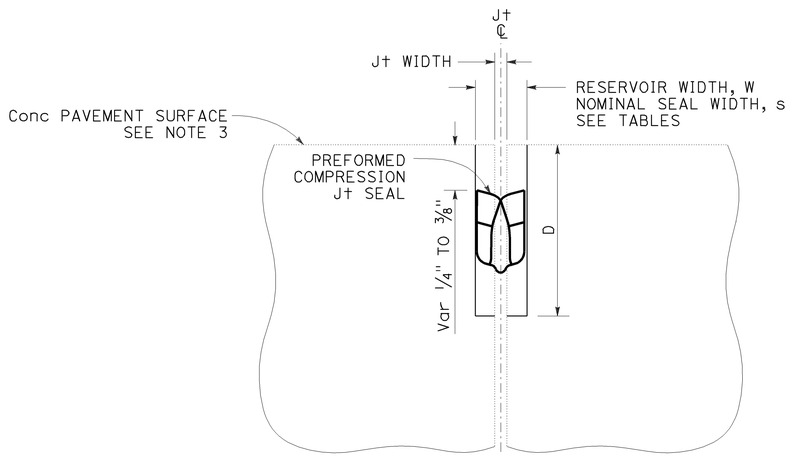


## PREFORMED COMPRESSION JOINT SEAL

| RESERVOIR WIDTH W ±1/16" | PREFORMED COMPRESSION JOINT SEAL DIMENSIONS | |
|---|---|---|
| | NOMINAL SEAL WIDTH s | RESERVOIR DEPTH D ± 1/4" |
| 1/4" | 7/16" | 1 1/4" |
| 3/8" | 11/16" | 1 7/16" |
| 1/2" | 13/16" | 1 11/16" |
| 5/8" | 1" | 1 7/8" |
| 3/4" | 1 1/4" | 2 1/8" |
| 7/8" | 1 5/8" | 2 5/8" |
| 1" | 1 5/8" | 2 5/8" |
| 1 1/8" | 2" | 2 7/8" |

| Const SEASON | Min RESERVOIR WIDTH * W ± 1/16" |
|---|---|
| WINTER | 1/4" |
| SPRING | 3/8" |
| SUMMER | |
| FALL | |

* Minimum reservoir width for replace joint seal = existing joint width + 1/8"

STATE OF CALIFORNIA
DEPARTMENT OF TRANSPORTATION

# JOINT SEALS

NO SCALE

RSP P20 DATED JULY 19, 2013 SUPERSEDES STANDARD PLAN P20
DATED MAY 20, 2011 - PAGE 136 OF THE STANDARD PLANS BOOK DATED 2010.

# REVISED STANDARD PLAN RSP P20

6-17-13

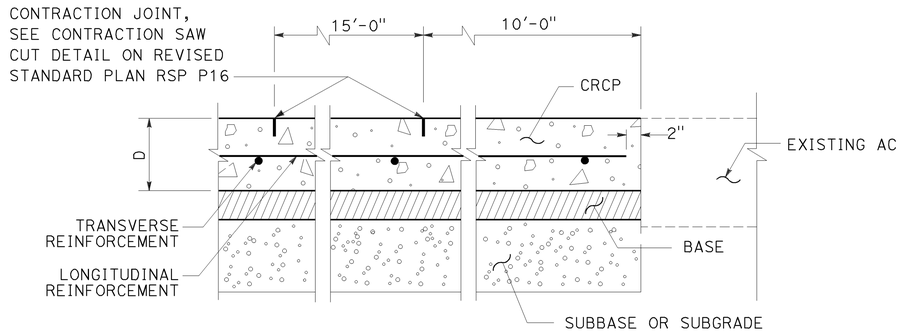


## TERMINAL JOINT TYPE A

(For Existing AC)

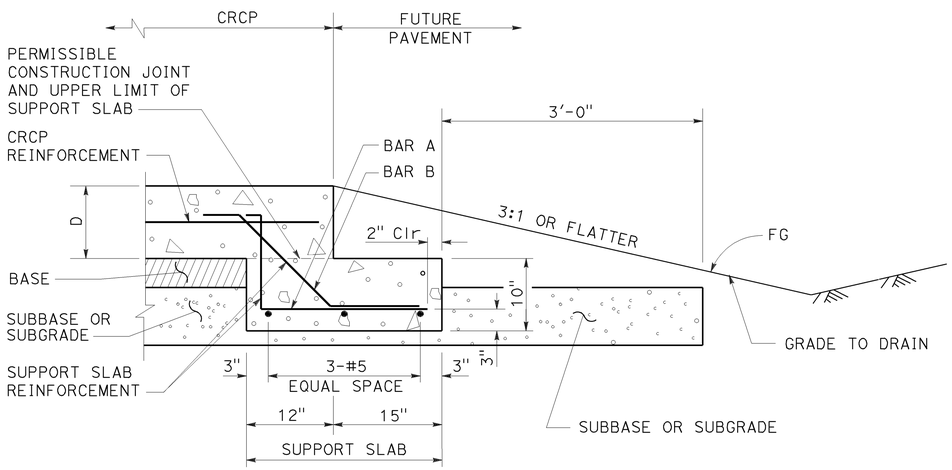


## TERMINAL JOINT TYPE B

(For Future Pavement)

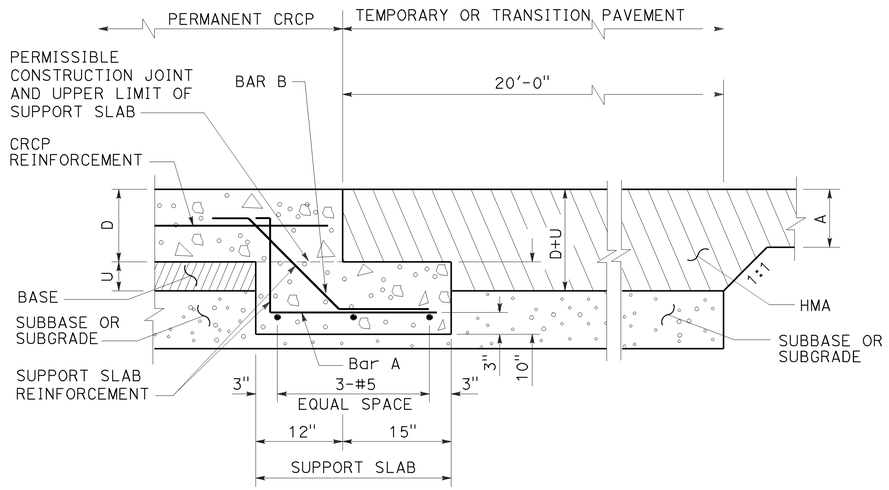


## TERMINAL JOINT TYPE C

(For Temporary HMA Pavement)

## NOTES:

1. For the locations of wide flange beam terminal, pavement anchors and expansion joints, see Projects Plans.
2. See Revised Standard Plans RSP P31B and RSP P32A.

## ABBREVIATIONS

D = Thickness of CRCP
A = Depth of HMA as shown on Project Plans
U = Thickness of Base

| Dist | COUNTY | ROUTE | POST MILES TOTAL PROJECT | SHEET No. | TOTAL SHEETS |
|---|---|---|---|---|---|
| 11 | Imp | 8 | R90.0/R96.8 | 188 | 209 |

William K. Farnbach
REGISTERED CIVIL ENGINEER

July 19, 2013
PLANS APPROVAL DATE

REGISTERED PROFESSIONAL ENGINEER — William K. Farnbach — No. C49042 — Exp. 9-30-14 — CIVIL — STATE OF CALIFORNIA

THE STATE OF CALIFORNIA OR ITS OFFICERS OR AGENTS SHALL NOT BE RESPONSIBLE FOR THE ACCURACY OR COMPLETENESS OF SCANNED COPIES OF THIS PLAN SHEET.

TO ACCOMPANY PLANS DATED 08-31-15

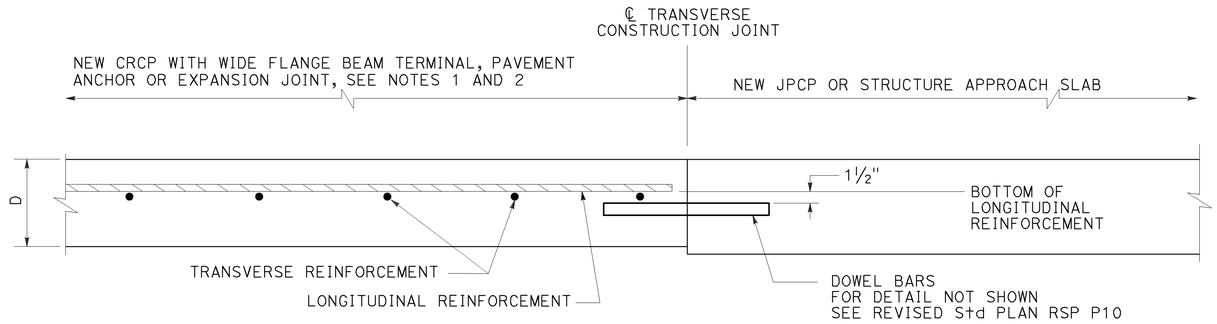


## TERMINAL JOINT TYPE E

(For New JPCP or Structure Appproach Slabs)

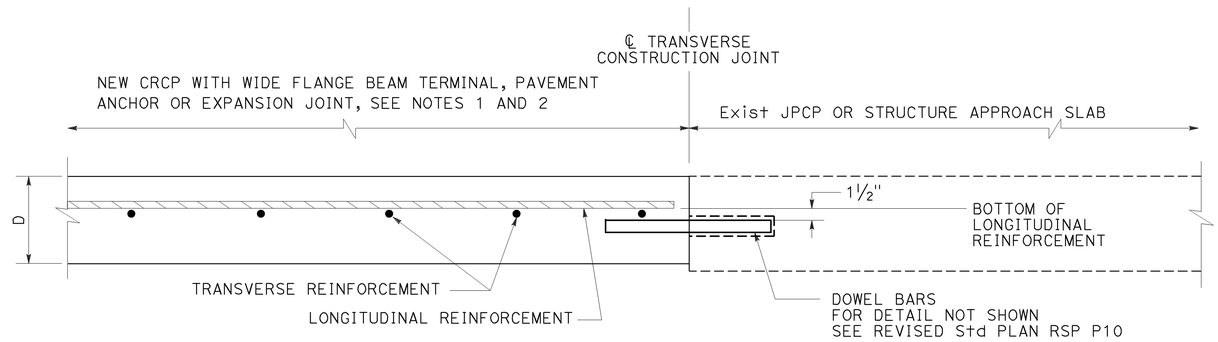


## TERMINAL JOINT TYPE D

(For Existing JPCP or Structure Appproach Slabs)

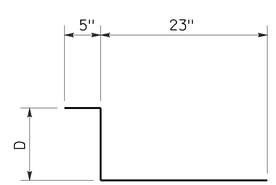


BAR "A" (#5)
AT 12" C-C

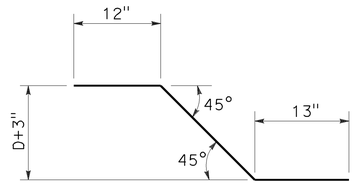


BAR "B" (#5)
AT 12" C-C

STATE OF CALIFORNIA
DEPARTMENT OF TRANSPORTATION

# CONTINUOUSLY REINFORCED CONCRETE PAVEMENT TERMINAL JOINT DETAILS

NO SCALE

RSP P31A DATED JULY 19, 2013 SUPERSEDES STANDARD PLAN P31A DATED MAY 20, 2011 - PAGE 138 OF THE STANDARD PLANS BOOK DATED 2010.

**REVISED STANDARD PLAN RSP P31A**

**2010 REVISED STANDARD PLAN RSP P31A**

5-31-13

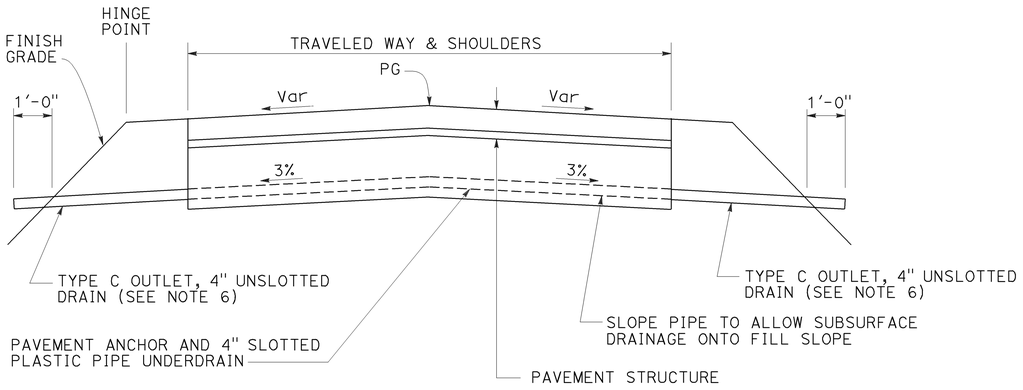


## PAVEMENT ANCHOR PROFILE

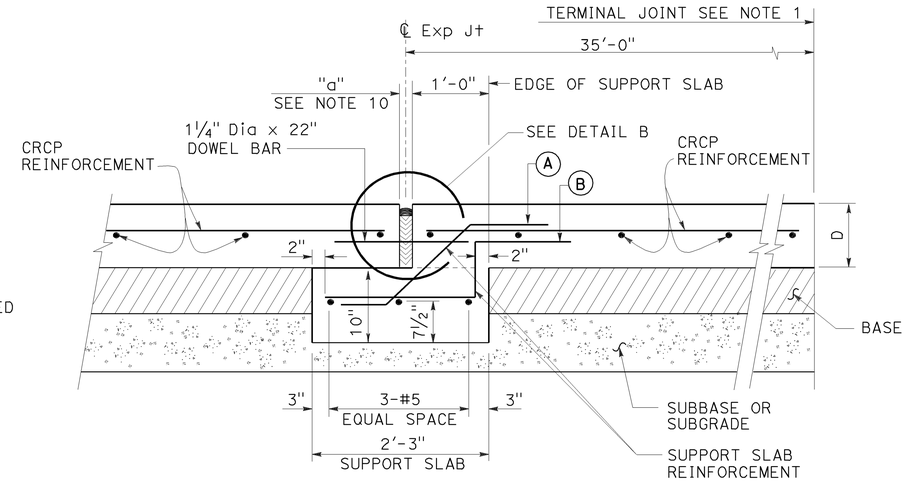


## EXPANSION JOINT TYPE AN

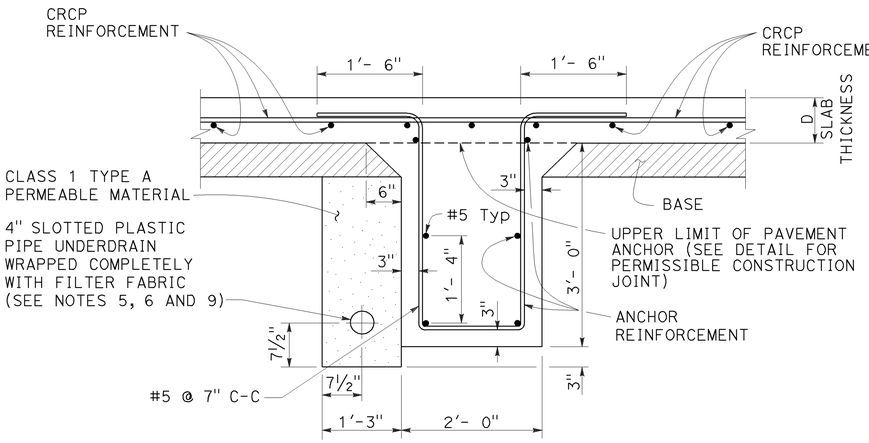


## PAVEMENT ANCHOR

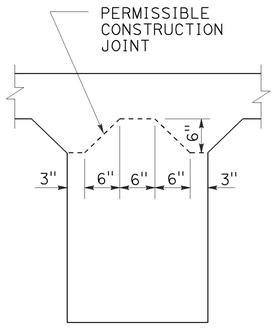


## PAVEMENT ANCHOR DETAIL SHOWING PERMISSIBLE CONSTRUCTION JOINT

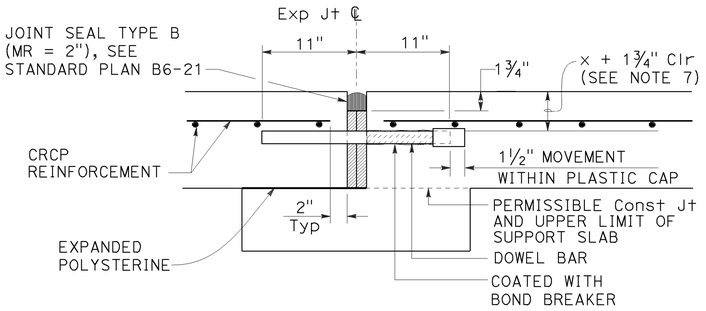


## DETAIL B

(For layout, tolerances, and other details not shown, see Revised Standard Plan RSP P10.)

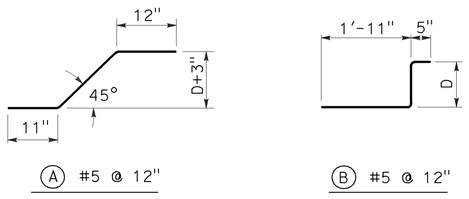


## REINFORCEMENT DETAIL

### NOTES:

1. For the locations of the terminal joints, expansion joints and pavement anchors, see project plans.
2. The CRCP shall continue across the pavement anchor and expansion joints as shown.
3. Details of reinforcement, tie bars, and longitudinal joints (and if necessary, transverse construction joints) are shown on Revised Standard Plan RSP P4.
4. Transverse construction joints are not allowed within 20'-0" of the pavement anchor.
5. When placing pipe through concrete barrier, use 4" unslotted plastic pipe wrapped completely with 5/16" polystyrene.
6. See Standard Plan D99B for details not shown.
7. See Revised Standard Plan RSP P4 for "x".
8. D = thickness of CRCP
9. Place the 4" Slotted Plastic Pipe on the high side of the longitudinal grade.
10. See Standard Plan B6-21 for "a".

| Dist | COUNTY | ROUTE | POST MILES TOTAL PROJECT | SHEET No. | TOTAL SHEETS |
|---|---|---|---|---|---|
| 11 | Imp | 8 | R90.0/R96.8 | 189 | 209 |

Florante E. Bautista
REGISTERED CIVIL ENGINEER

April 20, 2012
PLANS APPROVAL DATE

REGISTERED PROFESSIONAL ENGINEER — Florante E. Bautista — No. C54859 — Exp. 6-30-12 — CIVIL — STATE OF CALIFORNIA

THE STATE OF CALIFORNIA OR ITS OFFICERS OR AGENTS SHALL NOT BE RESPONSIBLE FOR THE ACCURACY OR COMPLETENESS OF SCANNED COPIES OF THIS PLAN SHEET.

TO ACCOMPANY PLANS DATED 08-31-15

STATE OF CALIFORNIA
DEPARTMENT OF TRANSPORTATION

# CONTINUOUSLY REINFORCED CONCRETE PAVEMENT- EXPANSION JOINT AND ANCHOR DETAILS

NO SCALE

RSP P31B DATED APRIL 20, 2012 SUPERSEDES STANDARD PLAN P31B DATED MAY 20, 2011 - PAGE 139 OF THE STANDARD PLANS BOOK DATED 2010.

# REVISED STANDARD PLAN RSP P31B

2010 REVISED STANDARD PLAN RSP P31B

2-22-12

| Dist | COUNTY | ROUTE | POST MILES TOTAL PROJECT | SHEET No. | TOTAL SHEETS |
|---|---|---|---|---|---|
| 11 | Imp | 8 | R90.0/R96.8 | 190 | 209 |

Florante E. Bautista
REGISTERED CIVIL ENGINEER

April 20, 2012
PLANS APPROVAL DATE

REGISTERED PROFESSIONAL ENGINEER — Florante E. Bautista — No. C54859 — Exp. 6-30-12 — CIVIL — STATE OF CALIFORNIA

THE STATE OF CALIFORNIA OR ITS OFFICERS OR AGENTS SHALL NOT BE RESPONSIBLE FOR THE ACCURACY OR COMPLETENESS OF SCANNED COPIES OF THIS PLAN SHEET.

TO ACCOMPANY PLANS DATED 08-31-15

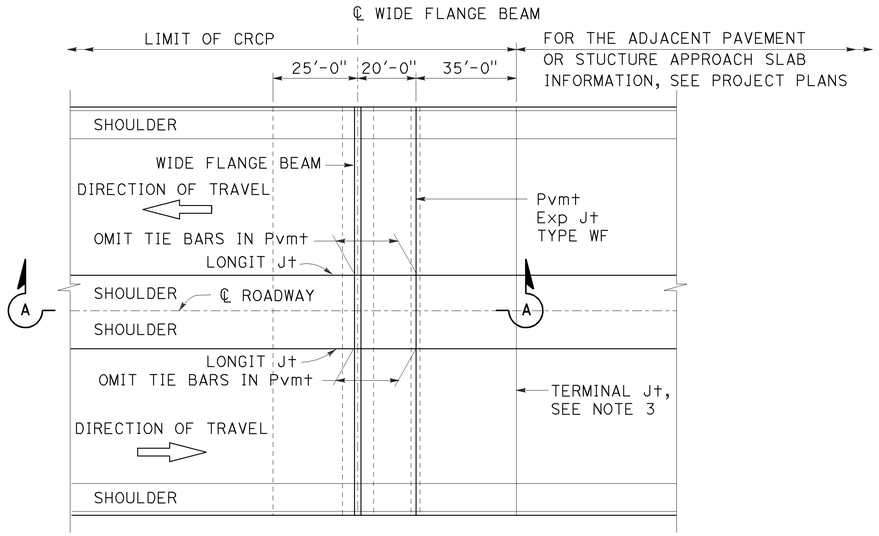


PLAN

## NOTES:

1. For additional details on reinforcement member quantities of the wide flange beam terminal and Pavement Expansion Joint Type WF, see Revised Standard Plan RSP P32B.
2. For reinforcement (A), (B), and (C) Details, see Revised Standard Plan RSP P32B.
3. For the Pavement Terminal Joint Details, see Standard Plan P31A. For Pavement Terminal Joint Type, see Project Plans.
4. See Revised Standard Plan RSP P4 for "x".
5. D = Thickness of CRCP
6. See Standard Plan B6-21 for "a".

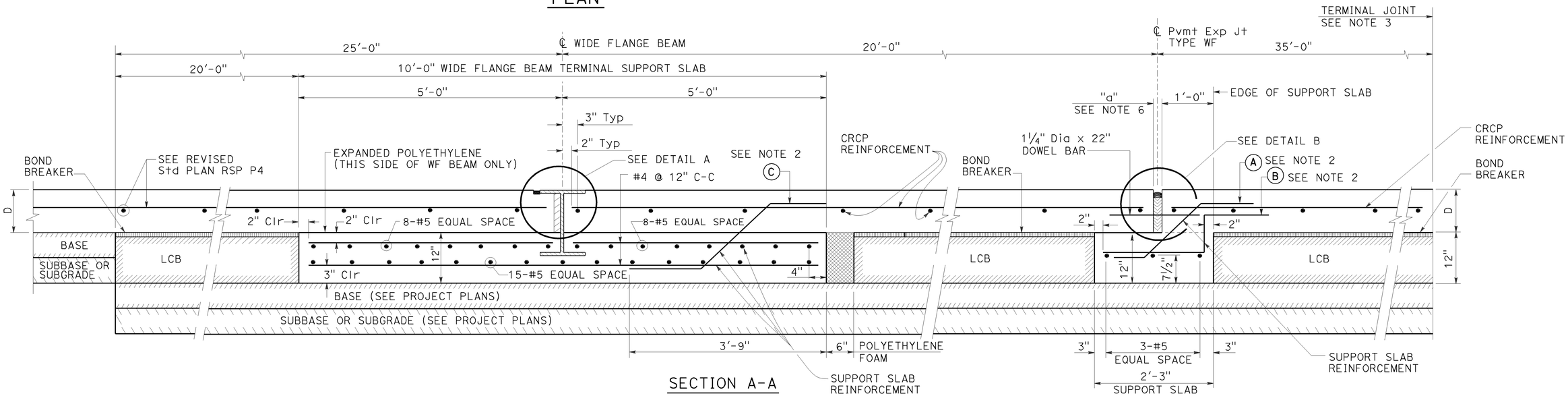


SECTION A-A

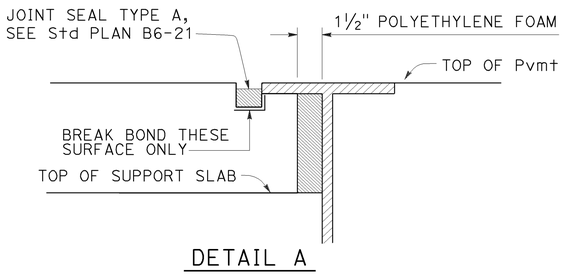


DETAIL A

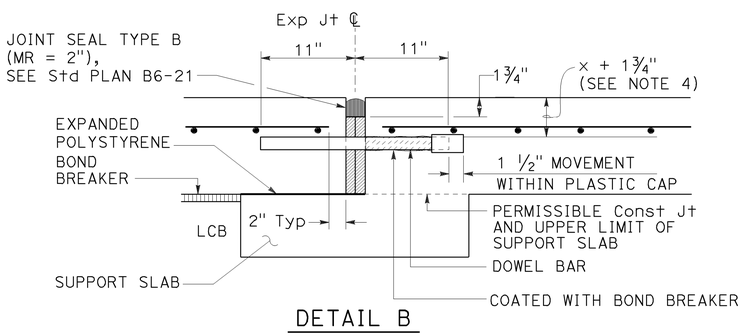


DETAIL B

For layout, tolerances, and other details not shown see Revised Std Plan RSP P10.

STATE OF CALIFORNIA
DEPARTMENT OF TRANSPORTATION

# CONTINOUSLY REINFORCED CONCRETE PAVEMENT - WIDE FLANGE BEAM TERMINALS

NO SCALE

RSP P32A DATED APRIL 20, 2012 SUPERSEDES STANDARD PLAN P32A DATED MAY 20, 2011 - PAGE 140 OF THE STANDARD PLANS BOOK DATED 2010.

# REVISED STANDARD PLAN RSP P32A

2010 REVISED STANDARD PLAN RSP P32A

2-22-12

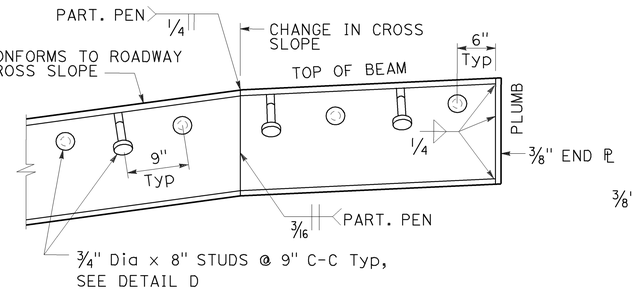


## WIDE FLANGE DETAIL

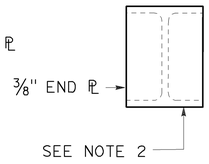


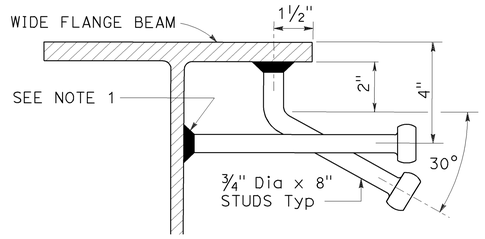


## DETAIL D

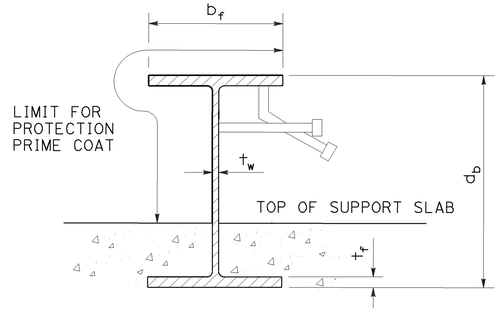


## WIDE FLANGE PAINTING DETAIL

See "TABLE OF BEAM SIZES"

| Dist | COUNTY | ROUTE | POST MILES TOTAL PROJECT | SHEET No. | TOTAL SHEETS |
|---|---|---|---|---|---|
| 11 | Imp | 8 | R90.0/R96.8 | 191 | 209 |

William K. Farnbach
REGISTERED CIVIL ENGINEER

July 19, 2013
PLANS APPROVAL DATE

REGISTERED PROFESSIONAL ENGINEER — William K. Farnbach — No. C49042 — Exp. 9-30-14 CIVIL — STATE OF CALIFORNIA

THE STATE OF CALIFORNIA OR ITS OFFICERS OR AGENTS SHALL NOT BE RESPONSIBLE FOR THE ACCURACY OR COMPLETENESS OF SCANNED COPIES OF THIS PLAN SHEET.

TO ACCOMPANY PLANS DATED 08-31-15

## LEGEND:

$b_f$ - FLANGE WIDTH
$t_f$ - FLANGE THICKNESS
$t_w$ - WEB THICKNESS
$d_b$ - BEAM DEPTH
D1, D2 - PAVEMENT THICKNESSES

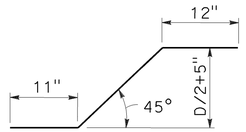


Ⓐ #5 @ 12"

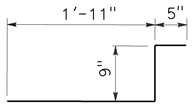


Ⓑ #5 @ 12"

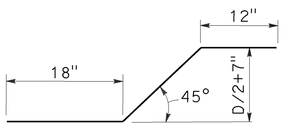


Ⓒ #4 @ 12"

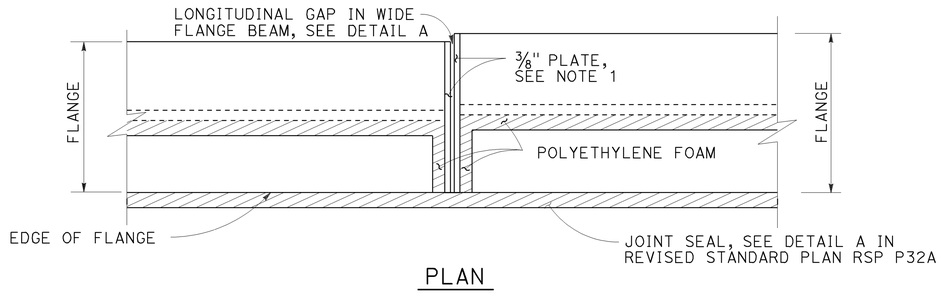


## PLAN

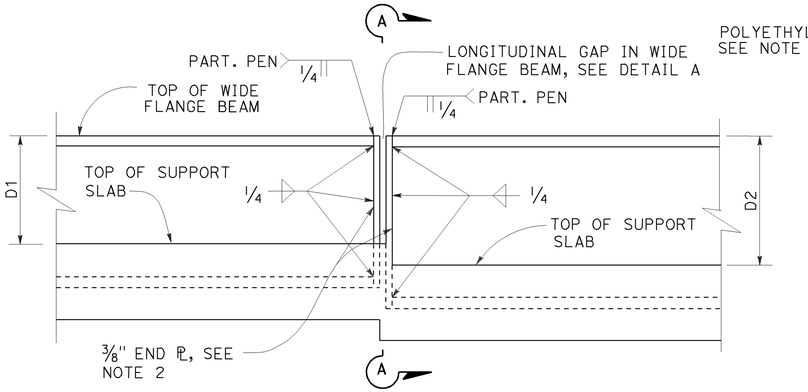


## ELEVATION

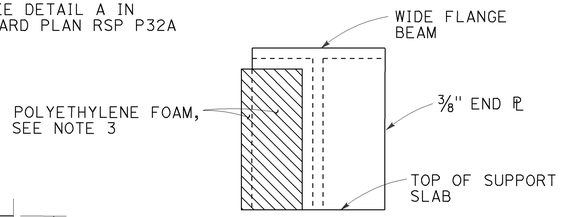


## SECTION A-A

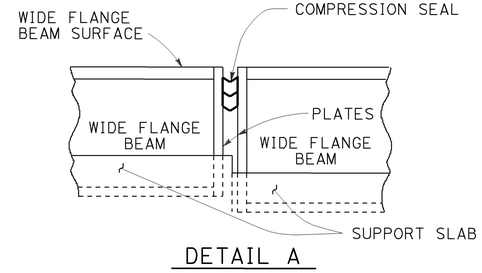


## DETAIL A

## NOTES:

1. Studs must be electric arc end welded with complete fusion. Any stud dislodged in shipping or that can be dislodged by hammer must be replaced.
2. Weld 3/8" plate to each end of wide flange beam at pavement edges only. End plate covers the entire wide flange beam.
3. Extend polyethylene foam to the sides and edges of the front part of the plate.

### TABLE OF BEAM SIZES

| PAVEMENT THICKNESS | WIDE FLANGE BEAM DESIGNATION | $d_b$ | $b_f$ | $t_f$ | $t_w$ |
|---|---|---|---|---|---|
| .75′ | W14 x 43 | 13.70" | 8.00" | 0.53" | 0.31" |
| .80′ | W14 x 68 | 14.04" | 10.04" | 0.72" | 0.42" |
| .85′ | W16 x 89 | 16.75" | 10.37" | 0.88" | 0.53" |
| .90′ | W16 x 89 | 16.75" | 10.37" | 0.88" | 0.53" |
| .95′ | W18 x 97 | 18.59" | 11.15" | 0.87" | 0.54" |
| 1.00′ | W18 x 97 | 18.59" | 11.15" | 0.87" | 0.54" |
| 1.05′ | W18 x 97 | 18.59" | 11.15" | 0.87" | 0.54" |
| 1.10′ | W18 x 97 | 18.59" | 11.15" | 0.87" | 0.54" |

### CONCRETE AND STEEL QUANTITIES

| | ITEM | PAVEMENT THICKNESS .75′ | .80′ | .85′ | .90′ | .95′ | 1.00′ | 1.05′ | 1.10′ |
|---|---|---|---|---|---|---|---|---|---|
| WIDE FLANGE BEAM TERMINAL SLAB | CONCRETE | 4.8 CY | 4.8 CY | 4.8 CY | 4.8 CY | 4.8 CY | 4.8 CY | 4.8 CY | 4.8 CY |
| | REINFORCING STEEL | 552.0 LBS | 552.2 LBS | 552.4 LBS | 552.6 LBS | 552.8 LBS | 553.0 LBS | 553.1 LBS | 553.3 LBS |
| Exp JOINT TYPE WIDE FLANGE SUPPORT SLAB | CONCRETE | 1.1 CY | 1.1 CY | 1.1 CY | 1.1 CY | 1.1 CY | 1.1 CY | 1.1 CY | 1.1 CY |
| | REINFORCING STEEL | 99.9 LBS | 99.9 LBS | 100.2 LBS | 100.5 LBS | 100.8 LBS | 101.1 LBS | 101.1 LBS | 101.6 LBS |
| | STEEL BEAM (WEIGHT OF WIDE FLANGE BEAM AND STUDS) | 43.0 LBS/LF +2 PLATES @ 14.9 LBS EA | 69.51 LBS/LF +2 PLATES @ 14.9 LBS EA | 90.51 LBS/LF +2 PLATES @ 18.5 LBS EA | 90.51 LBS/LF +2 PLATES @ 18.5 LBS EA | 98.51 LBS/LF +2 PLATES @ 22.0 LBS EA | 98.51 LBS/LF +2 PLATES @ 22.0 LBS EA | 98.51 LBS/LF +2 PLATES @ 22.0 LBS EA | 98.51 LBS/LF +2 PLATES @ 22.0 LBS EA |

STATE OF CALIFORNIA
DEPARTMENT OF TRANSPORTATION

# CONTINOUSLY REINFORCED CONCRETE PAVEMENT WIDE FLANGE BEAM TERMINALS

NO SCALE

RSP P32B DATED JULY 19, 2013 SUPERSEDES RSP P32B DATED APRIL 20, 2012 AND STANDARD PLAN P32B DATED MAY 20, 2011 - PAGE 141 OF THE STANDARD PLANS BOOK DATED 2010.

**REVISED STANDARD PLAN RSP P32B**

**2010 REVISED STANDARD PLAN RSP P32B**

5-31-13

| Dist | COUNTY | ROUTE | POST MILES TOTAL PROJECT | SHEET No. | TOTAL SHEETS |
|---|---|---|---|---|---|
| 11 | Imp | 8 | R90.0/R96.8 | 192 | 209 |

REGISTERED CIVIL ENGINEER

July 19, 2013
PLANS APPROVAL DATE

Gurinderpal Bhullar
No. C48815
Exp. 9-30-14
CIVIL
REGISTERED PROFESSIONAL ENGINEER
STATE OF CALIFORNIA

THE STATE OF CALIFORNIA OR ITS OFFICERS OR AGENTS SHALL NOT BE RESPONSIBLE FOR THE ACCURACY OR COMPLETENESS OF SCANNED COPIES OF THIS PLAN SHEET.

TO ACCOMPANY PLANS DATED 08-31-15

## TABLE 1

### TAPER LENGTH CRITERIA AND CHANNELIZING DEVICE SPACING

| SPEED (S) | MINIMUM TAPER LENGTH * FOR WIDTH OF OFFSET 12 FEET (W) | | | | MAXIMUM CHANNELIZING DEVICE SPACING | | |
|---|---|---|---|---|---|---|---|
| | | | | | X | Y | Z ** |
| | TANGENT 2L | MERGING L | SHIFTING L/2 | SHOULDER L/3 | TAPER | TANGENT | CONFLICT |
| mph | ft | ft | ft | ft | ft | ft | ft |
| 20 | 160 | 80 | 40 | 27 | 20 | 40 | 10 |
| 25 | 250 | 125 | 63 | 42 | 25 | 50 | 12 |
| 30 | 360 | 180 | 90 | 60 | 30 | 60 | 15 |
| 35 | 490 | 245 | 123 | 82 | 35 | 70 | 17 |
| 40 | 640 | 320 | 160 | 107 | 40 | 80 | 20 |
| 45 | 1080 | 540 | 270 | 180 | 45 | 90 | 22 |
| 50 | 1200 | 600 | 300 | 200 | 50 | 100 | 25 |
| 55 | 1320 | 660 | 330 | 220 | 55 | 110 | 27 |
| 60 | 1440 | 720 | 360 | 240 | 60 | 120 | 30 |
| 65 | 1560 | 780 | 390 | 260 | 65 | 130 | 32 |
| 70 | 1680 | 840 | 420 | 280 | 70 | 140 | 35 |

* - For other offsets, use the following merging taper length formula for L:
For speed of 40 mph or less, $L = WS^2/60$
For speed of 45 mph or more, $L = WS$

Where: L = Taper length in feet
W = Width of offset in feet
S = Posted speed limit, off-peak 85th-percentile speed prior to work starting, or the anticipated operating speed in mph

** - Use for taper and tangent sections where there are no pavement markings or where there is a conflict between existing pavement markings and channelizers (CA).

## TABLE 2

### LONGITUDINAL BUFFER SPACE AND FLAGGER STATION SPACING

| SPEED * | Min D ** | DOWNGRADE Min D *** | | |
|---|---|---|---|---|
| | | -3% | -6% | -9% |
| mph | ft | ft | ft | ft |
| 20 | 115 | 116 | 120 | 126 |
| 25 | 155 | 158 | 165 | 173 |
| 30 | 200 | 205 | 215 | 227 |
| 35 | 250 | 257 | 271 | 287 |
| 40 | 305 | 315 | 333 | 354 |
| 45 | 360 | 378 | 400 | 427 |
| 50 | 425 | 446 | 474 | 507 |
| 55 | 495 | 520 | 553 | 593 |
| 60 | 570 | 598 | 638 | 686 |
| 65 | 645 | 682 | 728 | 785 |
| 70 | 730 | 771 | 825 | 891 |

* - Speed is posted speed limit, off-peak 85th-percentile speed prior to work starting, or the anticipated operating speed in mph

** - Longitudinal buffer space or flagger station spacing

*** - Use on sustained downgrade steeper than -3 percent and longer than 1 mile.

## TABLE 3

### ADVANCE WARNING SIGN SPACING

| ROAD TYPE | DISTANCE BETWEEN SIGNS * | | |
|---|---|---|---|
| | A | B | C |
| | ft | ft | ft |
| URBAN - 25 mph OR LESS | 100 | 100 | 100 |
| URBAN - MORE THAN 25 mph TO 40 mph | 250 | 250 | 250 |
| URBAN - MORE THAN 40 mph | 350 | 350 | 350 |
| RURAL | 500 | 500 | 500 |
| EXPRESSWAY / FREEWAY | 1000 | 1500 | 2640 |

* - The distances are approximate, are intended for guidance purposes only, and should be applied with engineering judgment. These distances should be adjusted by the Engineer for field conditions, if necessary, by increasing or decreasing the recommmended distances.

2010 REVISED STANDARD PLAN RSP T9

STATE OF CALIFORNIA
DEPARTMENT OF TRANSPORTATION

# TRAFFIC CONTROL SYSTEM TABLES FOR LANE AND RAMP CLOSURES

NO SCALE

RSP T9 DATED JULY 19, 2013 SUPERSEDES RSP T9 DATED APRIL 19, 2013 THAT SUPPLEMENTS THE STANDARD PLANS BOOK DATED 2010.

**REVISED STANDARD PLAN RSP T9**

4-30-13

| Dist | COUNTY | ROUTE | POST MILES TOTAL PROJECT | SHEET No. | TOTAL SHEETS |
|---|---|---|---|---|---|
| 11 | Imp | 8 | R90.0/R96.8 | 193 | 209 |

TO ACCOMPANY PLANS DATED 08-31-15

REGISTERED CIVIL ENGINEER

April 19, 2013
PLANS APPROVAL DATE

REGISTERED PROFESSIONAL ENGINEER
Gurinderpal Bhullar
No. C48815
Exp. 9-30-14
CIVIL
STATE OF CALIFORNIA

THE STATE OF CALIFORNIA OR ITS OFFICERS OR AGENTS SHALL NOT BE RESPONSIBLE FOR THE ACCURACY OR COMPLETENESS OF SCANNED COPIES OF THIS PLAN SHEET.

## NOTES:

See Revised Standard Plan RSP T9 for tables.

Use cone spacing X for taper segment, Y for tangent segment or Z for conflict situations, as approriate, per Table 1, unless X, Y, or Z cone spacing is shown on this sheet.

Unless otherwise specified in the special provisions, all temporary warning signs shall have black legend on fluorescent orange background.

California codes are designated by (CA). Otherwise, Federal (MUTCD) codes are shown.

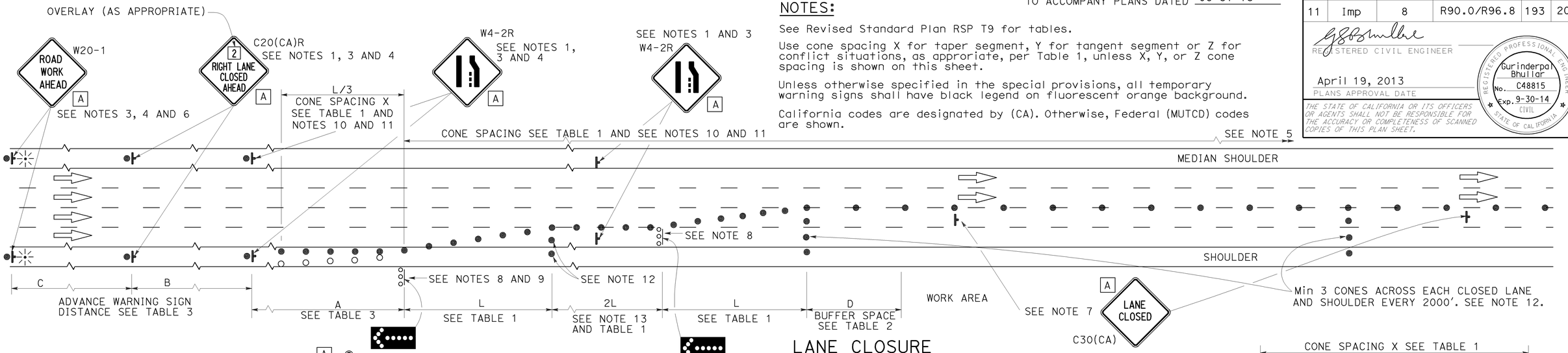


## LANE CLOSURE

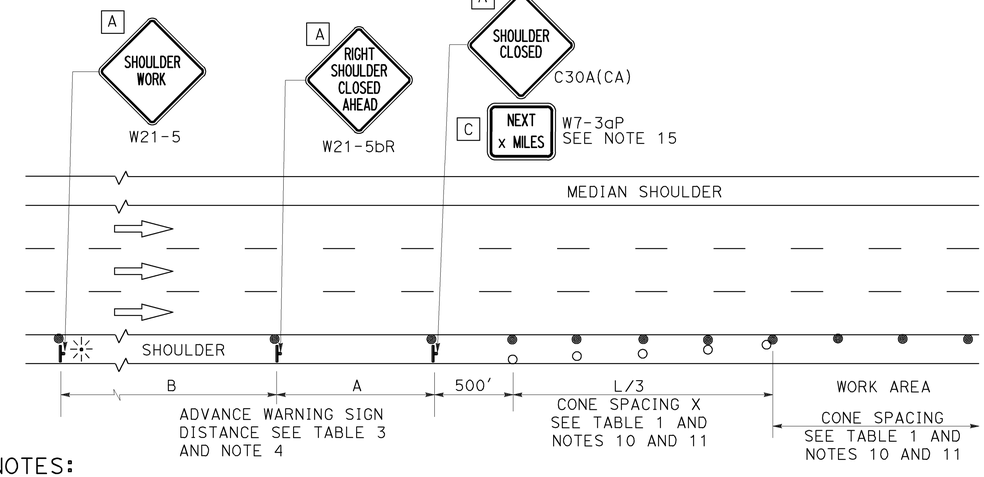


## SHOULDER CLOSURE

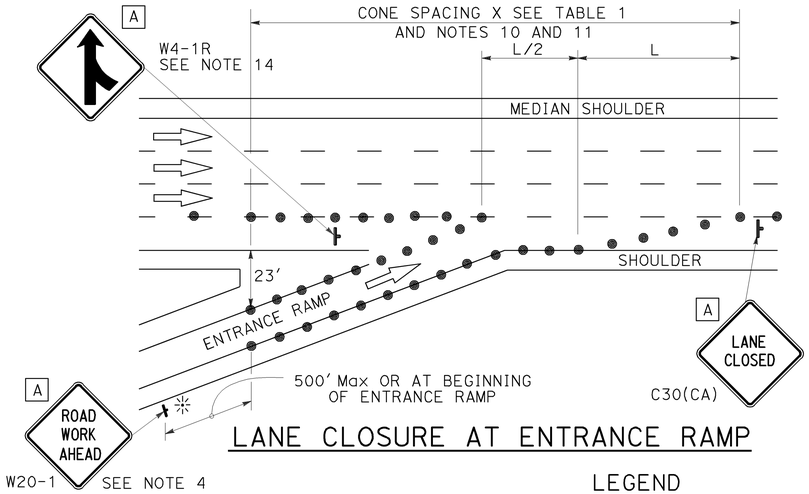


## LANE CLOSURE AT ENTRANCE RAMP

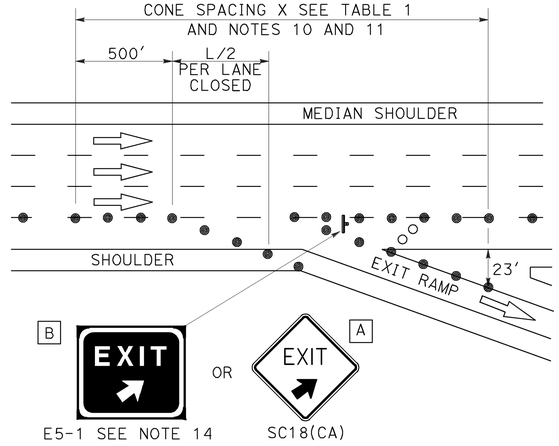


## LANE CLOSURE AT EXIT RAMP

## NOTES:

1. Median lane closures shall conform to the details as shown except that C20(CA)L and W4-2L signs shall be used.
2. At least one person shall be assigned to provide full time maintenance of traffic control devices for lane closures.
3. Duplicate sign installations are not required:
   a) On opposite shoulder if at least one-half of the available lanes remain open to traffic.
   b) In the median if the width of the median shoulder is less than 8' and the outside lanes are to be closed.
4. Each advance warning sign on each side of the roadway shall be equipped with at least two flags for daytime closure. Each flag shall be at least 16" x 16" in size and shall be orange or fluorescent red-orange in color. Flashing beacons shall be placed at the locations indicated for lane closure during hours of darkness.
5. A G20-2 "END ROAD WORK" sign, with minimum size of 48" x 24" as appropriate, shall be placed at the end of the lane closure unless the end of work area is obvious or ends within a larger project's limits.
6. If the W20-1 sign would follow within 2000' of a stationary W20-1 or G20-1 "ROAD WORK NEXT _____ MILES", use a C20(CA) sign for the first advance warning sign.
7. Place a C30(CA) sign every 2000' throughout length of lane closure.
8. One flashing arrow sign for each lane closed. The flashing arrow signs shall be Type I.
9. A minimum 1500' of sight distance shall be provided where possible for vehicles approaching the first flashing arrow sign. Lane closures shall not begin at top of crest vertical curve or on a horizontal curve.
10. All cones used for lane closures during the hours of darkness shall be fitted with retroreflective bands (or sleeves) as specified in the specifications.
11. Portable delineators, placed at one-half the spacing indicated for traffic cones may be used instead of cones for daytime closures only.
12. Unless otherwise specified in the special provisions, a minimum of 3 cones shall be placed transversely across each closed lane and shoulder at each location where a taper across a traffic lane ends and every 2000' as shown on the "Lane Closure" detail. Two Type II barricades may be used instead of the 3 cones. The transverse alignment of the cones or barricades on the closed shoulder may be shifted from the transverse alignment to provide access to the work.
13. Unless otherwise specified in the special provisions, the 2L tangent shown along lane lines shall be used between the L tapers required for each closed traffic lane.
14. Unless otherwise specified in the special provisions, the E5-1 or SC18(CA) and W4-1 signs shall be used as shown.
15. A W7-3aP "NEXT___MILES" plaque must be used if theshoulder closure extends beyond the distance that can be perceived by road users.

## LEGEND

- TRAFFIC CONE
- TRAFFIC CONE (OPTIONAL TAPER)
- TEMPORARY TRAFFIC CONTROL SIGN
- FLASHING ARROW SIGN (FAS)
- FAS SUPPORT OR TRAILER
- PORTABLE FLASHING BEACON

## SIGN PANEL SIZE (Min)

| | |
|---|---|
| A | 48" x 48" |
| B | 72" x 60" |
| C | 36" x 30" |

STATE OF CALIFORNIA
DEPARTMENT OF TRANSPORTATION

# TRAFFIC CONTROL SYSTEM FOR LANE CLOSURE ON FREEWAYS AND EXPRESSWAYS

NO SCALE

RSP T10 DATED APRIL 19, 2013 SUPERSEDES STANDARD PLAN T10 DATED MAY 20, 2011 - PAGE 237 OF THE STANDARD PLANS BOOK DATED 2010.

# REVISED STANDARD PLAN RSP T10

2010 REVISED STANDARD PLAN RSP T10

12-18-12

TO ACCOMPANY PLANS DATED 08-31-15

| Dist | COUNTY | ROUTE | POST MILES TOTAL PROJECT | SHEET No. | TOTAL SHEETS |
|---|---|---|---|---|---|
| 11 | Imp | 8 | R90.0/R96.8 | 194 | 209 |

REGISTERED CIVIL ENGINEER

April 19, 2013
PLANS APPROVAL DATE

REGISTERED PROFESSIONAL ENGINEER — Gurinderpal Bhullar — No. C48815 — Exp. 9-30-14 CIVIL — STATE OF CALIFORNIA

THE STATE OF CALIFORNIA OR ITS OFFICERS OR AGENTS SHALL NOT BE RESPONSIBLE FOR THE ACCURACY OR COMPLETENESS OF SCANNED COPIES OF THIS PLAN SHEET.

**NOTES:**

See Revised Standard Plan RSP T9 for tables.

Use cone spacing X for taper segment, Y for tangent segment or Z for conflict situations, as approriate, per Table 1, unless X, Y, or Z cone spacing is shown on this sheet.

Unless otherwise specified in the special provisions, all temporary warning signs shall have black legend on fluorescent orange background.

California codes are designated by (CA). Otherwise, Federal (MUTCD) codes are shown.

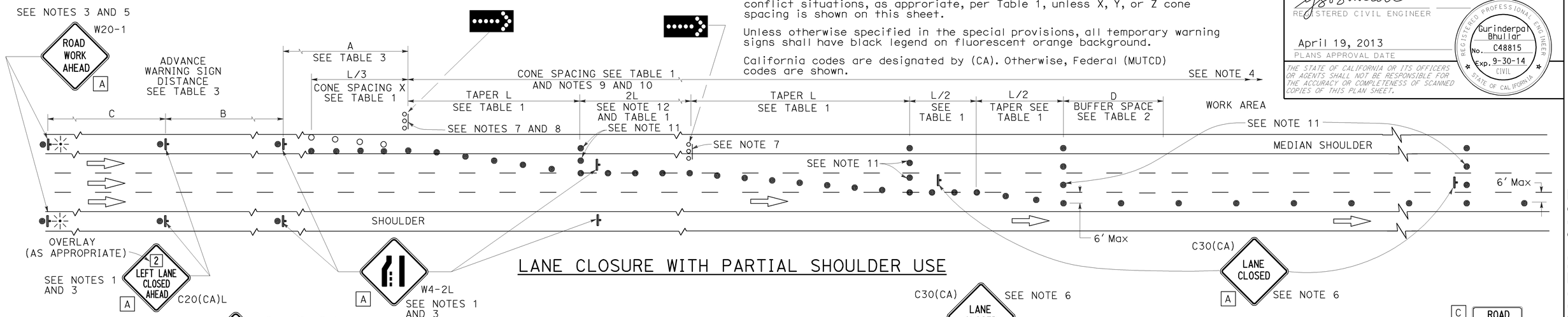


## LANE CLOSURE WITH PARTIAL SHOULDER USE

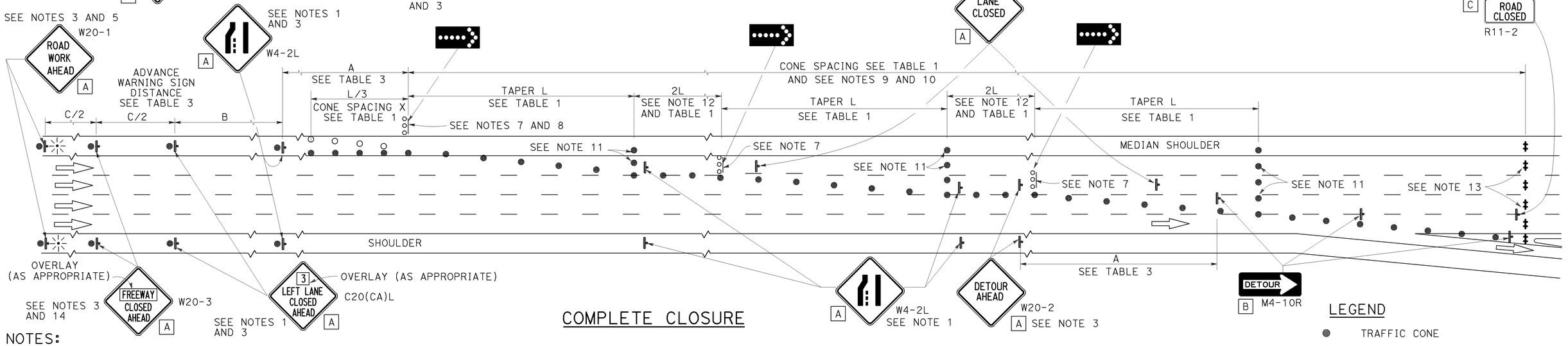


## COMPLETE CLOSURE

**NOTES:**

1. Lane closures on the right side using partial median shoulder as a traffic lane shall conform to the details as shown except that C20(CA)R and W4-2R signs shall be used.
2. At least one person shall be assigned to provide full time maintenance of traffic control devices for lane closures.
3. Each advance warning sign on each side of the roadway shall be equipped with at least two flags for daytime closure. Each flag shall be at least 16" X 16" in size and shall be orange or fluorescent red-orange in color. Flashing beacons shall be placed at the locations indicated for lane closure during hours of darkness.
4. A G20-2 "END ROAD WORK" sign, with minimum size of 48" x 24" as appropriate, shall be placed at the end of the lane closure unless the end of work area is obvious or ends within a larger project's limits.
5. If the W20-1 sign would follow within 2000' of a stationary W20-1 or G20-1 "ROAD WORK NEXT ___ MILES", use a C20(CA) sign for the first advance warning sign.
6. Place a C30(CA) sign every 2000' throughout length of lane closure.
7. One flashing arrow sign for each lane closed. The flashing arrow signs shall be Type I.
8. A minimum 1500' of sight distance shall be provided where possible for vehicles approaching the first flashing arrow sign. Lane closures shall not begin at the top of crest vertical curve or on a horizontal curve.
9. All cones used for lane closures during the hours of darkness shall be fitted with retroreflective bands (or sleeves) as specified in the specifications.
10. Portable delineators, placed at one-half the spacing indicated for traffic cones, may be used instead of cones for daytime closures only.
11. Unless otherwise specified in the special provisions, a minimum of 3 cones shall be placed transversely across each closed lane and shoulder at each location where a taper across a traffic lane ends and every 2000' as shown on the "Lane Closure With Partial Shoulder Use" detail. Two Type II barricades may be used instead of the 3 cones. The transverse alignment of the cones or barricades on the closed shoulder may be shifted from the transverse alignment to provide access to the work.
12. Unless otherwise specified in the special provisions, the 2L tangent shown along lane lines shall be used between the L tapers required for each closed traffic lane.
13. A minimum of Two Type II or III barricades shall be placed across each closed lane and shoulder at the location shown and every 2000' within the complete closure area. Within the complete closure area, the transverse alignment of the barricades on the closed shoulder may be shifted from the transverse alignment to provide access to the work.
14. When specified in the special provisions, a W20-2 "DETOUR AHEAD" sign is to be used in place of the W20-3 "FREEWAY CLOSED AHEAD" sign.

### SIGN PANEL SIZE (Min)

- A 48" x 48"
- B 48" x 18"
- C 48" x 30"

### LEGEND

- TRAFFIC CONE
- TRAFFIC CONE (OPTIONAL TAPER)
- TEMPORARY TRAFFIC CONTROL SIGN
- FLASHING ARROW SIGN (FAS)
- FAS SUPPORT OR TRAILER
- PORTABLE FLASHING BEACON

STATE OF CALIFORNIA
DEPARTMENT OF TRANSPORTATION

# TRAFFIC CONTROL SYSTEM FOR LANE CLOSURES ON FREEWAYS AND EXPRESSWAYS

NO SCALE

RSP T10A DATED APRIL 19, 2013 SUPERSEDES STANDARD PLAN T10A DATED MAY 20, 2011 - PAGE 238 OF THE STANDARD PLANS BOOK DATED 2010.

## REVISED STANDARD PLAN RSP T10A

2010 REVISED STANDARD PLAN RSP T10A

12-18-12

# TYPICAL RAMP CLOSURES

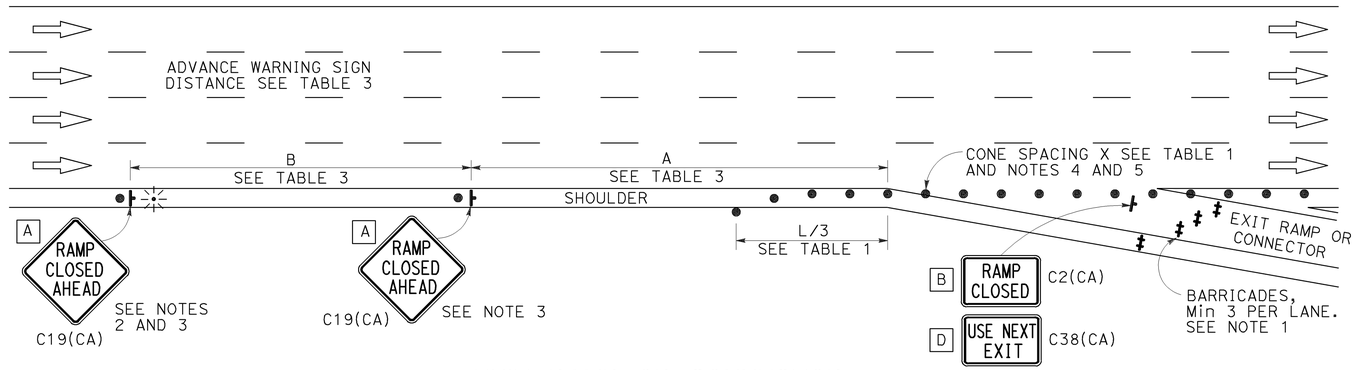


## EXIT RAMP OR CONNECTOR

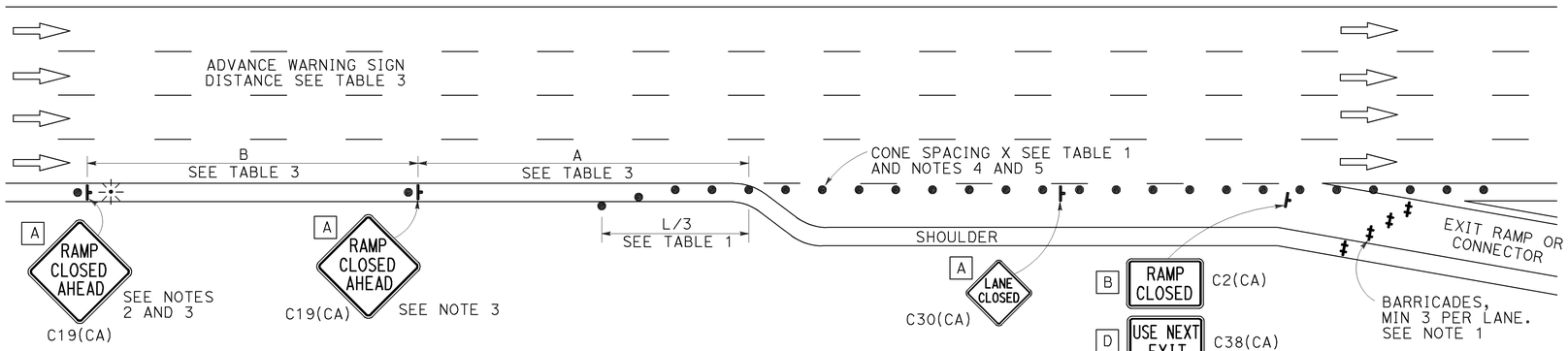


## EXIT RAMP OR CONNECTOR WITH ADDITIONAL LANE

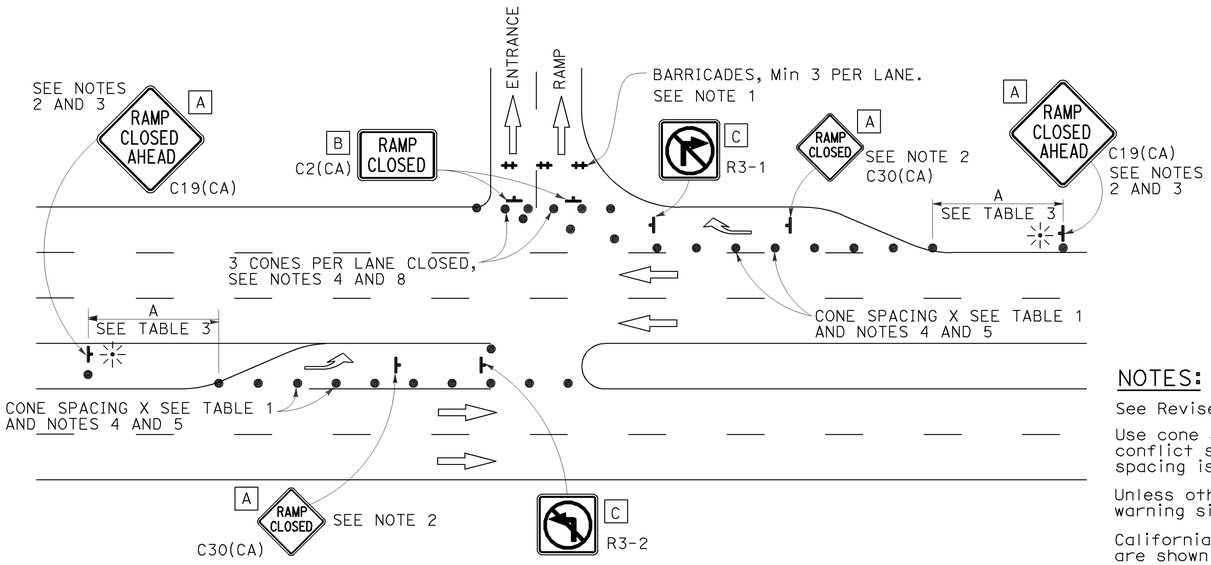


## ENTRANCE RAMP WITH TURNING POCKETS

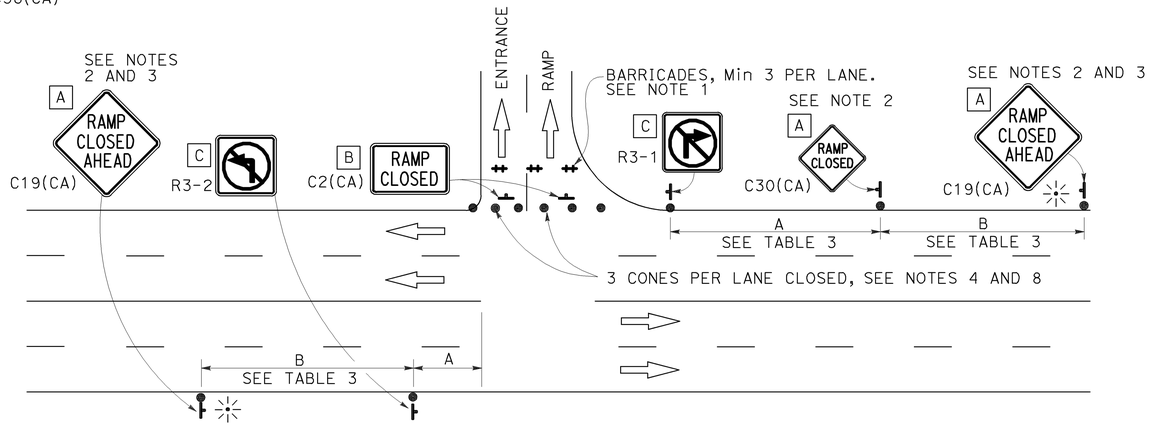


## ENTRANCE RAMP WITHOUT TURNING POCKETS

### SIGN PANEL SIZE (Min)

- A 48" × 48"
- B 48" × 30"
- C 36" × 36"
- D 48" × 36"

### LEGEND

- TRAFFIC CONE
- TEMPORARY TRAFFIC CONTROL SIGN
- BARRICADES
- PORTABLE FLASHING BEACON

| Dist | COUNTY | ROUTE | POST MILES TOTAL PROJECT | SHEET No. | TOTAL SHEETS |
|---|---|---|---|---|---|
| 11 | Imp | 8 | R90.0/R96.8 | 195 | 209 |

REGISTERED CIVIL ENGINEER

April 19, 2013
PLANS APPROVAL DATE

REGISTERED PROFESSIONAL ENGINEER
Gurinderpal Bhullar
No. C48815
Exp. 9-30-14
CIVIL
STATE OF CALIFORNIA

THE STATE OF CALIFORNIA OR ITS OFFICERS OR AGENTS SHALL NOT BE RESPONSIBLE FOR THE ACCURACY OR COMPLETENESS OF SCANNED COPIES OF THIS PLAN SHEET.

TO ACCOMPANY PLANS DATED 08-31-15

### NOTES:

1. Barricades shall be Type I, II, or III for closures lasting one week or less and Type III for closures lasting longer than one week.
2. In addition to placing the C19(CA) "RAMP CLOSED AHEAD" and C30(CA) "RAMP CLOSED" signs, black on orange overlay plates with the word "CLOSED" may be mounted, as directed by the Engineer, on all guide signs that refer to the closed ramp. The letter size on the overlay shall be the same as the guide sign.
3. Each advance C19(CA) "RAMP CLOSED AHEAD" sign shall be equipped with at least two flags for daytime closure. Each flag shall be at least 16" × 16" in size and shall be orange or fluorescent red-orange in color. A flashing beacon shall be placed on top of the first C19(CA) sign during hours of darkness.
4. All cones used for ramp closures during the hours of darkness shall be fitted with retroreflective bands (or sleeves) as specified in the specifications.
5. Portable delineators, placed at one-half the spacing indicated for traffic cones, may be used instead of cones for daytime ramp closures only.
6. At least one person shall be assigned to provide full time maintenance of traffic control devices, unless otherwise directed by the Engineer.
7. The existing "EXIT" signs shall be covered during ramp closures.
8. A minimum of 3 cones shall be placed transversely across each closed lane and shoulder.

### NOTES:

See Revised Standard Plan RSP T9 for tables.

Use cone spacing X for taper segment, Y for tangent segment or Z for conflict situations, as approriate, per Table 1, unless X, Y, or Z cone spacing is shown on this sheet.

Unless otherwise specified in the special provisions, all temporary warning signs shall have black legend on fluorescent orange background.

California codes are designated by (CA). Otherwise, Federal (MUTCD) codes are shown.

STATE OF CALIFORNIA
DEPARTMENT OF TRANSPORTATION

# TRAFFIC CONTROL SYSTEM FOR RAMP CLOSURE

NO SCALE

RSP T14 DATED APRIL 19, 2013 SUPERSEDES STANDARD PLAN T14
DATED MAY 20, 2011 - PAGE 242 OF THE STANDARD PLANS BOOK DATED 2010.

**REVISED STANDARD PLAN RSP T14**

**2010 REVISED STANDARD PLAN RSP T14**

12-18-12

| Dist | COUNTY | ROUTE | POST MILES TOTAL PROJECT | SHEET No. | TOTAL SHEETS |
|---|---|---|---|---|---|
| 11 | Imp | 8 | R90.0/R96.8 | 196 | 209 |

REGISTERED CIVIL ENGINEER

April 19, 2013
PLANS APPROVAL DATE

REGISTERED PROFESSIONAL ENGINEER
Gurinderpal Bhullar
No. C48815
Exp. 9-30-14
CIVIL
STATE OF CALIFORNIA

THE STATE OF CALIFORNIA OR ITS OFFICERS OR AGENTS SHALL NOT BE RESPONSIBLE FOR THE ACCURACY OR COMPLETENESS OF SCANNED COPIES OF THIS PLAN SHEET.

TO ACCOMPANY PLANS DATED 08-31-15

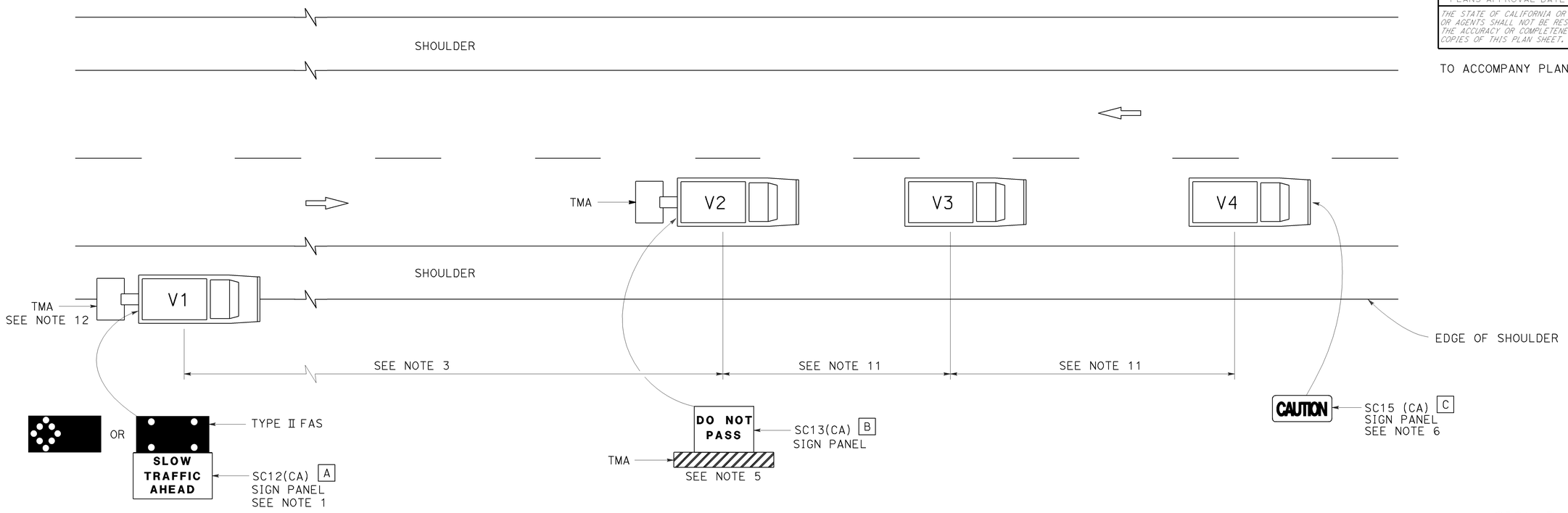


## NOTES:

1. Either a changeable message sign or a SC12(CA) "SLOW TRAFFIC AHEAD" sign shall be mounted on the rear of sign vehicle V1. The changeable message sign shall be sequenced to show the "CAUTION" message first, follow by the "SLOW TRAFFIC AHEAD" message. A Type II flashing arrow sign may be used with the SC12(CA) sign panel.
2. Sign vehicle V1 should be positioned where highly visible when shoulders are not available.
3. If traffic queues develop, sign vehicle V1 should be positioned upstream from the end of queue.
4. Vehicle-mounted sign panels shall have Type III or above retroreflective sheeting, black on white, or black on fluorescent orange, with 6" minimum series D letters per Caltrans sign specifications.
5. Shadow vehicle shall be equipped with a truck-mounted attenuator. The sign panel shown shall be mounted on the rear of shadow vehicle V2. The message "LANE CLOSED" may be used in place of the "DO NOT PASS" message.
6. The sign panel shown shall be mounted on the front of sign vehicle V4, facing opposing traffic.
7. All vehicles shall be equipped with flashing or rotating amber lights.
8. Sign vehicle V4 will not be required when the work and vehicles V2 and V3 are 2′ or more from the centerline of the highway during the work or application operations.
9. All vehicles used for lane closures shall be equipped with two-way radios and the vehicle operators shall maintain communication during the work or application operation.
10. This plan shall not be used where workers would be on foot in the work area. Use a stationary type lane closure (Revised Standard Plan T13) for this condition.
11. Minimize spacing between vehicles V2 and V3 and vehicles V3 and V4 to deter road users from driving in between them.
12. If sign vehicle V1 encroaches into the traffic lane due to insufficient shoulder width, sign vehicle V1 shall be equipped with a truck-mounted attenuator. Sign vehicle V1 shall stay as close to the edge of shoulder as practicable.

## LEGEND

| | |
|---|---|
| V1 | SIGN VEHICLE |
| V2 | SHADOW VEHICLE |
| V3 | WORK/APPLICATION VEHICLE |
| V4 | SIGN VEHICLE |
| TMA | TRUCK-MOUNTED ATTENUATOR |
| | FLASHING ARROW SIGN (FAS) IN FLASHING CAUTION MODE |
| | FLASHING ARROW SIGN (FAS) IN ALTERNATING DIAMOND CAUTION |

## SIGN PANEL SIZE (Min)

| | |
|---|---|
| A | 72" x 42" |
| B | 54" x 42" |
| C | 54" x 24" |

STATE OF CALIFORNIA
DEPARTMENT OF TRANSPORTATION

# TRAFFIC CONTROL SYSTEM FOR MOVING LANE CLOSURE ON TWO LANE HIGHWAYS

NO SCALE

RSP T17 DATED APRIL 19, 2013 SUPERSEDES STANDARD PLAN T17
DATED MAY 20, 2011 - PAGE 245 OF THE STANDARD PLANS BOOK DATED 2010.

# REVISED STANDARD PLAN RSP T17

2010 REVISED STANDARD PLAN RSP T17

12-18-12

## LEGEND:

| | |
|---|---|
| AB | ABANDON. IF APPLIED TO CONDUIT, REMOVE CONDUCTORS |
| BC | INSTALL PULL BOX IN EXISTING CONDUIT RUN |
| BP | PEDESTRIAN BARRICADE, TYPE AS INDICATED ON PLAN |
| CB | INSTALL CONDUIT INTO EXISTING PULL BOX |
| CC | CONNECT NEW AND EXISTING CONDUIT. REMOVE EXISTING CONDUCTORS AND INSTALL CONDUCTORS AS INDICATED |
| CF | CONDUIT TO REMAIN FOR FUTURE USE. REMOVE CONDUCTORS. INSTALL PULL TAPE |
| DH | DETECTOR HANDHOLE |
| FA | FOUNDATION TO BE ABANDONED |
| IS | INSTALL SIGN ON SIGNAL MAST ARM |
| NS | NO SLIP BASE ON STANDARD |
| PEC | PHOTOELECTRIC CONTROL |
| PEU | PHOTOELECTRIC UNIT |
| RC | EQUIPMENT OR MATERIAL TO BE REMOVED AND BECOME THE PROPERTY OF THE CONTRACTOR |
| RE | REMOVE ELECTROLIER, FUSES AND BALLAST. TAPE ENDS OF CONDUCTORS |
| RL | RELOCATE EQUIPMENT |
| RR | REMOVE AND REUSE EQUIPMENT |
| RS | REMOVE AND SALVAGE EQUIPMENT |
| SC | SPLICE NEW TO EXISTING CONDUCTORS |
| SD | SERVICE DISCONNECT |
| TSP | TELEPHONE SERVICE POINT |

## ABBREVIATIONS

| | |
|---|---|
| APS | ACCESSIBLE PEDESTRIAN SIGNAL |
| BBS | BATTERY BACKUP SYSTEM |
| BC | BOLT CIRCLE |
| BPB | BICYCLE PUSH BUTTON |
| C | CONDUIT |
| CB | CIRCUIT BREAKER |
| CCTV | CLOSED CIRCUIT TELEVISION |
| Ckt | CIRCUIT |
| CMS | CHANGEABLE MESSAGE SIGN |
| Ctid | CALTRANS IDENTIFICATION |
| Comm | COMMUNICATION |
| DLC | LOOP DETECTOR LEAD-IN CABLE |
| EMS | EXTINGUISHABLE MESSAGE SIGN |
| EVUC | EMERGENCY VEHICLE UNIT CABLE |
| EVUD | EMERGENCY VEHICLE UNIT DETECTOR |
| FB | FLASHING BEACON |
| FBCA | FLASHING BEACON CONTROL ASSEMBLY |
| FBS | FLASHING BEACON WITH SLIP BASE |
| FO | FIBER OPTIC |
| G | EQUIPMENT GROUNDING CONDUCTOR |
| GB | GROUND BUS |
| GFCI | GROUND FAULT CIRCUIT INTERRUPTER |
| HAR | HIGHWAY ADVISORY RADIO |
| Hex | HEXAGONAL |
| HPS | HIGH PRESSURE SODIUM |
| IISNS | INTERNALLY ILLUMINATED STREET NAME SIGN |
| ISL | INDUCTION SIGN LIGHTING |
| LED | LIGHT EMITTING DIODE |
| LMA | LUMINAIRE MAST ARM |
| LPS | LOW PRESSURE SODIUM |
| Ltg | LIGHTING |
| Lum | LUMINAIRE |
| M | METERED |
| MAT | MAST ARM MOUNTING TOP ATTACHMENT |
| MAS | MAST ARM MOUNTING SIDE ATTACHMENT |
| M/M | MULTIPLE TO MULTIPLE TRANSFORMER |
| Mtg | MOUNTING |
| MV | MERCURY VAPOR LIGHTING FIXTURE |
| MVDS | MICROWAVE VEHICLE DETECTION SYSTEM |
| N | NEUTRAL (GROUNDED CONDUCTOR) |
| NB | NEUTRAL BUS |
| NC | NORMALLY CLOSE |
| NO | NORMALLY OPEN |
| P | CIRCUIT BREAKER'S POLE |
| PB | PULL BOX |
| PBA | PUSH BUTTON ASSEMBLY |
| PEC | PHOTOELECTRIC CONTROL |
| Ped | PEDESTRIAN |
| PEU | PHOTOELECTRIC UNIT |
| PT | CONDUIT WITH PULL TAPE |
| RE | RELOCATED EQUIPMENT |
| RM | RAMP METERING |
| RWIS | ROADSIDE WEATHER INFORMATION SYSTEM |
| SB | SLIP BASE |
| SIC | SIGNAL INTERCONNECT CABLE |
| Sig | SIGNAL |
| SMA | SIGNAL MAST ARM |
| SNS | STREET NAME SIGN |
| SP | SERVICE POINT |
| TDC | TELEPHONE DEMARCATION CABINET |
| TMS | TRAFFIC MONITORING STATION |
| TOS | TRAFFIC OPERATIONS SYSTEM |
| Veh | VEHICLE |
| VIVDS | VIDEO IMAGE VEHICLE DETECTION SYSTEM |
| WIM | WEIGH-IN-MOTION |
| Xfmr | TRANSFORMER |

| Dist | COUNTY | ROUTE | POST MILES TOTAL PROJECT | SHEET No. | TOTAL SHEETS |
|---|---|---|---|---|---|
| 11 | Imp | 8 | R90.0/R96.8 | 197 | 209 |

Theresa Gabriel
REGISTERED ELECTRICAL ENGINEER

Theresa Aziz Gabriel No. E15129 Exp. 6-30-14 ELECTRICAL — REGISTERED PROFESSIONAL ENGINEER — STATE OF CALIFORNIA

July 19, 2013
PLANS APPROVAL DATE

THE STATE OF CALIFORNIA OR ITS OFFICERS OR AGENTS SHALL NOT BE RESPONSIBLE FOR THE ACCURACY OR COMPLETENESS OF SCANNED COPIES OF THIS PLAN SHEET.

TO ACCOMPANY PLANS DATED 08-31-15

## SOFFIT AND WALL MOUNTED LUMINAIRES

- PENDANT, 70 W HPS UNLESS OTHERWISE SPECIFIED
- FLUSH, 70 W HPS UNLESS OTHERWISE SPECIFIED
- WALL SURFACE, 70 W HPS UNLESS OTHERWISE SPECIFIED
- EXISTING SOFFIT OR WALL LUMINAIRE TO REMAIN UNMODIFIED
- (M) EXISTING SOFFIT OR WALL LUMINAIRE TO BE MODIFIED AS SPECIFIED

**NOTE:**
Arrow indicates "street side" of luminaire.

COMMONLY USED SYMBOLS FOR UNITED STATES CUSTOMARY UNITS OF MEASUREMENT:

| SYMBOL USED | DEFINITIONS |
|---|---|
| Ω | OHMS |
| min | MINUTE |
| s | SECOND |
| bps | BITS PER SECOND |
| Bps | BYTES PER SECOND |
| A | AMPERE |
| V | VOLT |
| V(dc) | VOLT (DIRECT CURRENT) |
| V(ac) | VOLT (ALTERNATING CURRENT) |
| FC | FOOT - CANDLE |
| W | WATTS |
| VA | VOLT-AMPERE |
| M | MEGA |
| k | KILO |
| m | MILLI |
| μ | MICRO |
| P | PICO |
| Hz | HERTZ |

## MISCELLANEOUS ELECTROLIERS

| NEW | EXISTING | |
|---|---|---|
| | | LUMINAIRE ON WOOD POLE |
| | | NON-STANDARD ELECTROLIER (SEE PROJECT NOTES OR PROJECT PLANS) |
| | | CITY ELECTROLIER |
| | | ELECTROLIER FOUNDATION (FUTURE INSTALLATION) |

**NOTES:**

1. HPS luminaires shall be 310 W HPS when installed on Type 21, 21D, 30, 31 and 32 Standards, unless otherwise specified. HPS luminaires shall be 200 W when installed on other type standards or poles, unless otherwise specified.
2. LED luminaires shall be 235 W when installed on Type 21, 21D, 30, 31 and 32 Standards, unless otherwise specified. LED luminaires shall be 165 W when installed on other type standards or poles, unless otherwise specified.
3. Luminaires shall be the cutoff type, ANSI Type III medium cutoff lighting distribution, unless otherwise specified.

## STANDARD ELECTROLIER

| NEW | EXISTING | STANDARD TYPE |
|---|---|---|
| | | 15 |
| | | 15D |
| | | 15 STRUCTURE |
| | | 15D STRUCTURE |
| | | 21 |
| | | 21D |
| | | 21 STRUCTURE |
| | | 21D STRUCTURE |
| | | 30 |
| | | 31 |
| | | 32 |

STATE OF CALIFORNIA
DEPARTMENT OF TRANSPORTATION

# ELECTRICAL SYSTEMS (LEGEND AND ABBREVIATIONS)

NO SCALE

RSP ES-1A DATED JULY 19, 2013 SUPERSEDES STANDARD PLAN ES-1A DATED MAY 20, 2011 - PAGE 425 OF THE STANDARD PLANS BOOK DATED 2010.

**REVISED STANDARD PLAN RSP ES-1A**

2010 REVISED STANDARD PLAN RSP ES-1A

7-15-13

| Dist | COUNTY | ROUTE | POST MILES TOTAL PROJECT | SHEET No. | TOTAL SHEETS |
|---|---|---|---|---|---|
| 11 | Imp | 8 | R90.0/R96.8 | 198 | 209 |

Theresa Gabriel
REGISTERED ELECTRICAL ENGINEER

Theresa Aziz Gabriel No. E15129 Exp. 6-30-14 ELECTRICAL — REGISTERED PROFESSIONAL ENGINEER — STATE OF CALIFORNIA

July 19, 2013
PLANS APPROVAL DATE

THE STATE OF CALIFORNIA OR ITS OFFICERS OR AGENTS SHALL NOT BE RESPONSIBLE FOR THE ACCURACY OR COMPLETENESS OF SCANNED COPIES OF THIS PLAN SHEET.

TO ACCOMPANY PLANS DATED 08-31-15

## CONDUIT

| NEW | EXISTING | |
|---|---|---|
| | | LIGHTING CONDUIT, UNLESS OTHERWISE INDICATED OR NOTED |
| | | TRAFFIC SIGNAL CONDUIT |
| C | c | COMMUNICATION CONDUIT |
| T | t | TELEPHONE CONDUIT |
| F | f | FIRE ALARM CONDUIT |
| FO | fo | FIBER OPTIC CONDUIT |
| | | CONDUIT TERMINATION |
| R | r | CONDUIT RISER ATTACHED TO THE STRUCTURE OR SERVICE POLE |

## SERVICE EQUIPMENT

| NEW | EXISTING | |
|---|---|---|
| OH | oh | OVERHEAD LINES |
| U | U | WOOD POLE, "U" INDICATES UTILITY OWNED |
| | | POLE GUY WITH ANCHOR |
| | | UTILITY TRANSFORMER - GROUND MOUNTED |
| III | III | SERVICE EQUIPMENT ENCLOSURE TYPE. DOOR INDICATES FRONT OF ENCLOSURE |
| T | t | TELEPHONE DEMARCATION CABINET |

## POLE-MOUNTED SERVICE DESIGNATION

TYPE H SERVICE, 28'-10" — TYPE OF INSTALLATION AND POLE HEIGHT ABOVE GRADE

## FLASHING BEACON

| NEW | EXISTING | |
|---|---|---|
| R | R | FLASHING BEACON (ONE VEHICLE SIGNAL HEAD WITH BACKPLATE AND VISOR) "R" INDICATES RED INDICATION, "Y" INDICATES YELLOW INDICATION |
| Y Y | Y Y | FLASHING BEACON WITH TYPE 15-FBS STANDARD AND A SIGN. |
| R R | R R | FLASHING BEACON WITH TYPES 9, 9A OR 9B SIGN UNLESS OTHERWISE SPECIFIED OR INDICATED |

## SIGNAL EQUIPMENT

| NEW | EXISTING | |
|---|---|---|
| C | C | PEDESTRIAN SIGNAL HEAD "C" INDICATES COUNTDOWN PEDESTRIAN HEAD |
| | | PUSH BUTTON ASSEMBLY POST |
| | | PEDESTRIAN BARRICADE |
| | | VEHICLE SIGNAL HEAD (WITH BACKPLATE AND 3-SECTIONS: RED, YELLOW AND GREEN) |
| | | VEHICLE SIGNAL HEAD WITH ANGLE VISOR |
| PV | PV | MODIFICATIONS OF BASIC SYMBOL: "L" INDICATES ALL NON-ARROW SECTIONS LOUVERED "LG" INDICATES LOUVERED GREEN SECTION ONLY "PV" INDICATES ALL 12" SECTIONS PROGRAMMED VISIBILITY "8" INDICATES ALL 8" SECTIONS (ONLY WHEN SPECIFIED) |
| | | VEHICLE SIGNAL HEAD CONSISTING OF RED, YELLOW AND GREEN LEFT ARROW SECTIONS |
| | | VEHICLE SIGNAL HEAD CONSISTING OF RED AND YELLOW SECTIONS WITH AN UP GREEN ARROW SECTION |
| | | VEHICLE SIGNAL HEAD (5 SECTION) CONSISTING OF RED, YELLOW AND GREEN SECTIONS WITH YELLOW AND GREEN RIGHT ARROW SECTIONS |
| | | TYPE 15TS STANDARD WITH VEHICLE SIGNAL HEAD AND LUMINAIRE |
| | | TYPE 21TS STANDARD WITH VEHICLE SIGNAL HEAD AND LUMINAIRE |
| | | STANDARD WITH LUMINAIRE AND SIGNAL MAST ARMS AND ATTACHED VEHICLE SIGNAL HEADS |
| | | TYPE 1 STANDARD WITH ATTACHED VEHICLE SIGNAL HEADS |
| | | STANDARD WITH A SIGNAL MAST ARM, ATTACHED VEHICLE SIGNAL HEADS AND INTERNALLY ILLUMINATED STREET NAME SIGN |
| | | CONTROLLER ASSEMBLY. DOOR INDICATES FRONT OF CABINET |

## SIGNAL EQUIPMENT Cont

| NEW | EXISTING | |
|---|---|---|
| | | GUARD POST |
| | | TYPE 1 STANDARD WITH RAMP METERING SIGN |
| | | OPTICAL DETECTOR FOR THE EMERGENCY VEHICLE DETECTION SYSTEM |

### NOTES:

1. All signal sections shall be 12" unless shown otherwise.
2. Signal heads shall be provided with backplates unless shown otherwise.

## ILLUMINATED OVERHEAD SIGN

| NEW | EXISTING | |
|---|---|---|
| | | SINGLE POST, SINGLE ILLUMINATED SIGN, BALANCED BUTTERFLY |
| | | SINGLE POST, DOUBLE ILLUMINATED SIGN, BALANCED BUTTERFLY |
| | | SINGLE POST, SINGLE ILLUMINATED SIGN, FULL CANTILEVER |
| | | DOUBLE POST, SINGLE ILLUMINATED SIGN |
| | | SINGLE ILLUMINATED SIGN MOUNTED ON STRUCTURE |
| | | DOUBLE POST, SINGLE ILLUMINATED SIGN WITH ELECTROLIER |

STATE OF CALIFORNIA
DEPARTMENT OF TRANSPORTATION

# ELECTRICAL SYSTEMS (LEGEND AND ABBREVIATIONS)

NO SCALE

RSP ES-1B DATED JULY 19, 2013 SUPERSEDES STANDARD PLAN ES-1B DATED MAY 20, 2011 - PAGE 426 OF THE STANDARD PLANS BOOK DATED 2010.

**REVISED STANDARD PLAN RSP ES-1B**

**2010 REVISED STANDARD PLAN RSP ES-1B**

7-15-13

| Dist | COUNTY | ROUTE | POST MILES TOTAL PROJECT | SHEET No. | TOTAL SHEETS |
|---|---|---|---|---|---|
| 11 | Imp | 8 | R90.0/R96.8 | 199 | 209 |

Theresa Gabriel
REGISTERED ELECTRICAL ENGINEER

July 19, 2013
PLANS APPROVAL DATE

REGISTERED PROFESSIONAL ENGINEER — Theresa Aziz Gabriel — No. E15129 — Exp. 6-30-14 — ELECTRICAL — STATE OF CALIFORNIA

THE STATE OF CALIFORNIA OR ITS OFFICERS OR AGENTS SHALL NOT BE RESPONSIBLE FOR THE ACCURACY OR COMPLETENESS OF SCANNED COPIES OF THIS PLAN SHEET.

TO ACCOMPANY PLANS DATED 08-31-15

# EQUIPMENT IDENTIFICATION

## ILLUMINATED SIGN IDENTIFICATION NUMBER:

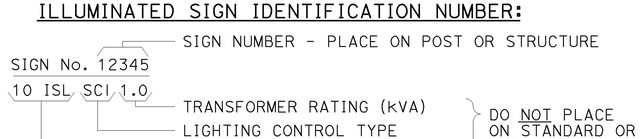


## ELECTROLIER OR EQUIPMENT IDENTIFICATION NUMBER:

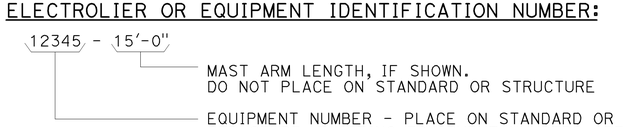


## CONDUIT AND CONDUCTOR IDENTIFICATION:

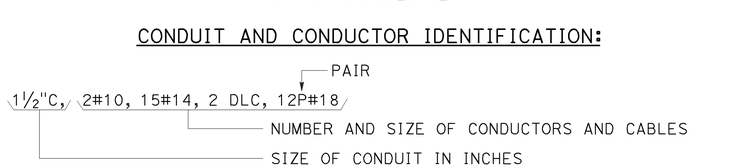


## SIGNAL AND LIGHTING STANDARD (TYPICAL DESIGNATION):

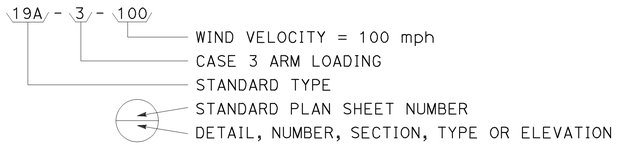


# MISCELLANEOUS EQUIPMENT

| NEW | EXISTING | |
|---|---|---|
| CMS | cms | CHANGEABLE MESSAGE SIGN |
| | | CLOSED CIRCUIT TELEVISION CAMERA |
| | | HIGHWAY ADVISORY RADIO POLE AND ANTENNA |
| EMS | ems | EXTINGUISHABLE MESSAGE SIGN |
| M<br>V | m<br>v | DETECTION DEVICE<br>M = MICROWAVE SENSOR<br>V = VIDEO IMAGE SENSOR |

# WIRING DIAGRAM LEGEND

| | |
|---|---|
| | EXTERNAL CONDUCTOR |
| | CONDUCTOR OR BUS |
| | TIE POINT |
| | CONTACTOR COIL |
| | CONTACTOR, NO CONTACT |
| | TERMINAL BLOCKS |
| | CONTACTOR, NC CONTACT |
| | ENCLOSURE BOND |
| | GROUNDING ELECTRODE |
| | CIRCUIT BREAKER |
| | RECEPTACLE |

# PULL BOXES

| NEW | EXISTING | |
|---|---|---|
| | | PULL BOX, No. 5 UNLESS OTHERWISE INDICATED OR NOTED |
| 3 | 9A(21) | PULL BOX, ADDITIONAL DESIGNATIONS OR DESCRIPTIONS |

3 No. 3½ PULL BOX
5 No. 5 PULL BOX
6 No. 6 PULL BOX
7 No. 7 (CEILING PULL BOX)
8 No. 8 (PENDANT SOFFIT PULL BOX)
9 No. 9 PULL BOX
9A No. 9A PULL BOX

(C) COMMUNICATIONS PULL BOX
(E) PULL BOX WITH EXTENSION
(S) SPRINKLER CONTROL PULL BOX
(21) ANCHOR BOLTS AND CONDUIT FOR FUTURE INSTALLATION OF TYPE 21 STANDARD
(T) TRAFFIC PULL BOX

# VEHICLE DETECTORS

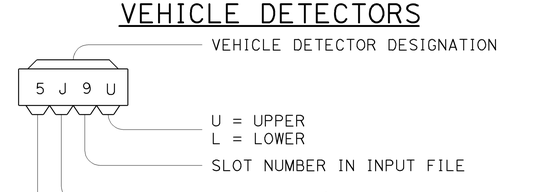


| NEW | EXISTING | |
|---|---|---|
| | | TYPE A DETECTOR LOOP. OUTLINE OF SAWCUT SHOWN |
| | | TYPE B DETECTOR LOOP. OUTLINE OF SAWCUT SHOWN |
| | | TYPE C DETECTOR LOOP. OUTLINE OF SAWCUT SHOWN |
| | | TYPE D DETECTOR LOOP. OUTLINE OF SAWCUT SHOWN |
| | | TYPE E DETECTOR LOOP. OUTLINE OF SAWCUT SHOWN |
| | | TYPE Q DETECTOR LOOP. OUTLINE OF SAWCUT SHOWN |
| | | MAGNETIC DETECTOR |
| DH | dh | DETECTOR HANDHOLE |
| | | MICROWAVE OR VIDEO DETECTION ZONE |

STATE OF CALIFORNIA
DEPARTMENT OF TRANSPORTATION

# ELECTRICAL SYSTEMS (LEGEND AND ABBREVIATIONS)

NO SCALE

RSP ES-1C DATED JULY 19, 2013 SUPERSEDES STANDARD PLAN ES-1C DATED MAY 20, 2011 - PAGE 427 OF THE STANDARD PLANS BOOK DATED 2010.

**REVISED STANDARD PLAN RSP ES-1C**

**2010 REVISED STANDARD PLAN RSP ES-1C**

7-11-13

| Dist | COUNTY | ROUTE | POST MILES TOTAL PROJECT | SHEET No. | TOTAL SHEETS |
|---|---|---|---|---|---|
| 11 | Imp | 8 | R90.0/R96.8 | 200 | 209 |

Theresa Gabriel
REGISTERED ELECTRICAL ENGINEER

July 19, 2013
PLANS APPROVAL DATE

Theresa Aziz Gabriel No. E15129 Exp. 6-30-14 ELECTRICAL — REGISTERED PROFESSIONAL ENGINEER — STATE OF CALIFORNIA

THE STATE OF CALIFORNIA OR ITS OFFICERS OR AGENTS SHALL NOT BE RESPONSIBLE FOR THE ACCURACY OR COMPLETENESS OF SCANNED COPIES OF THIS PLAN SHEET.

TO ACCOMPANY PLANS DATED 08-31-15

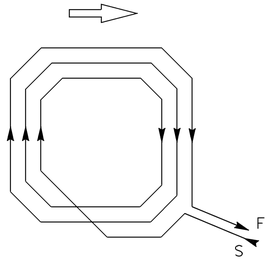


WINDING DETAIL

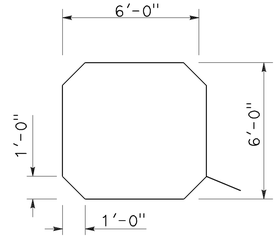


SAWCUT DETAIL

TYPE A LOOP DETECTOR CONFIGURATION

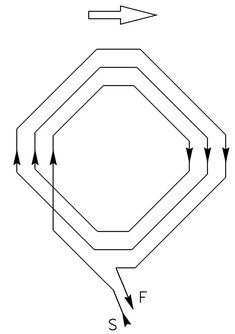


WINDING DETAIL

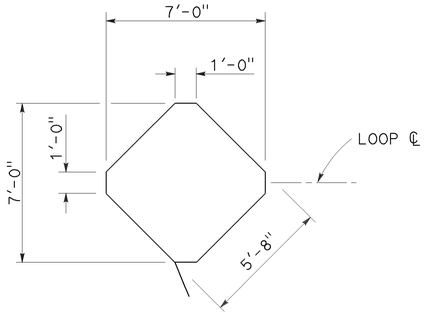


SAWCUT DETAIL

TYPE B LOOP DETECTOR CONFIGURATION

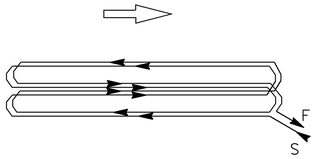


WINDING DETAIL

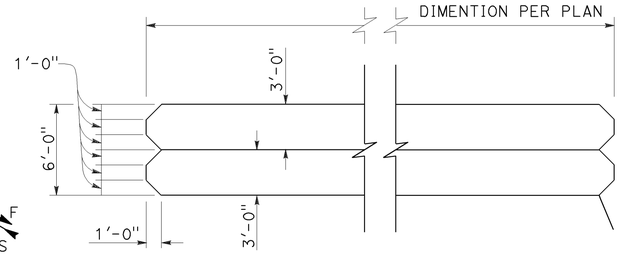


SAWCUT DETAIL

TYPE C LOOP DETECTOR CONFIGURATION

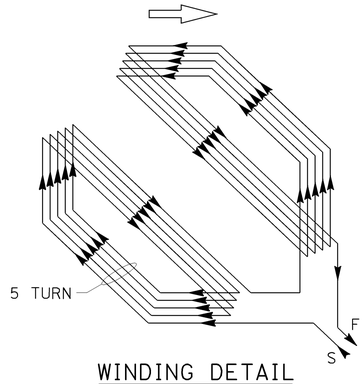


WINDING DETAIL

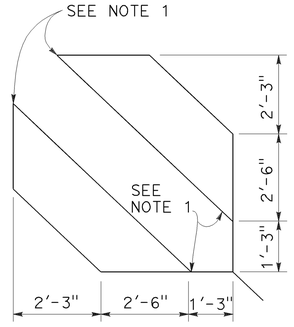


SAWCUT DETAIL

TYPE D LOOP DETECTOR CONFIGURATION

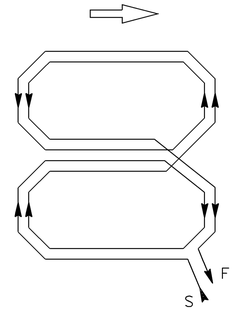


WINDING DETAIL

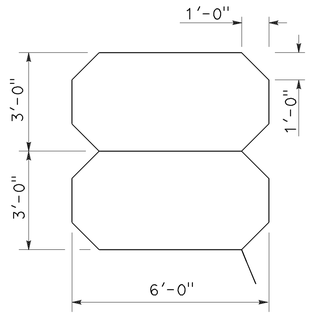


SAWCUT DETAIL

TYPE Q LOOP DETECTOR CONFIGURATION

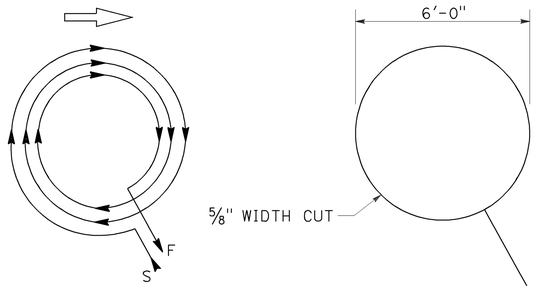


WINDING DETAIL SAWCUT DETAIL

TYPE E LOOP DETECTOR CONFIGURATION

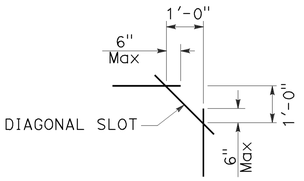


PLAN VIEW OF DIAGONAL SLOT AT CORNERS

NOTES:

1. Round corners of acute angle sawcuts to prevent damage to conductors.
2. Typical distance separating loops from edge to edge is 10' for Type A, B, D and E installation in single lane.

STATE OF CALIFORNIA
DEPARTMENT OF TRANSPORTATION

# ELECTRICAL SYSTEMS (DETECTORS)

NO SCALE

RSP ES-5B DATED JULY 19, 2013 SUPERSEDES STANDARD PLAN ES-5B
DATED MAY 20, 2011 - PAGE 449 OF THE STANDARD PLANS BOOK DATED 2010.

**REVISED STANDARD PLAN RSP ES-5B**

**2010 REVISED STANDARD PLAN RSP ES-5B**

7-9-13

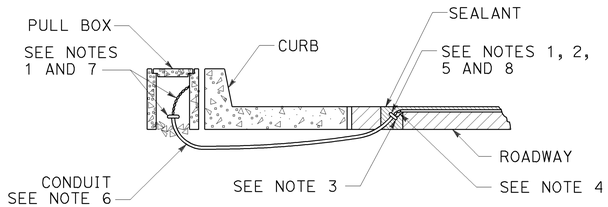


TYPE A

## CURB TERMINATION DETAIL

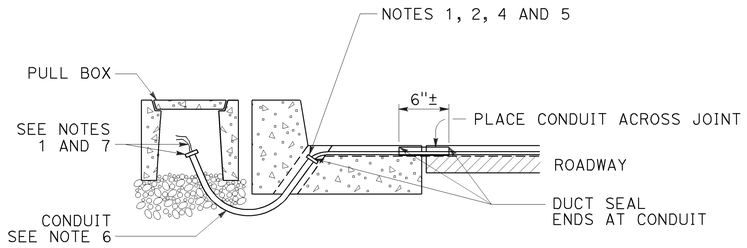


CROSS SECTION

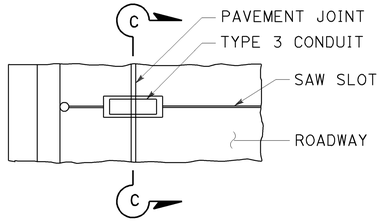


PLAN VIEW

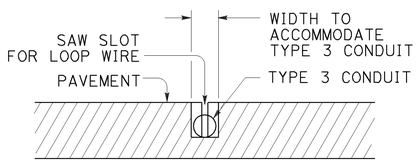


SECTION C-C

TYPE B

## CURB TERMINATION DETAIL

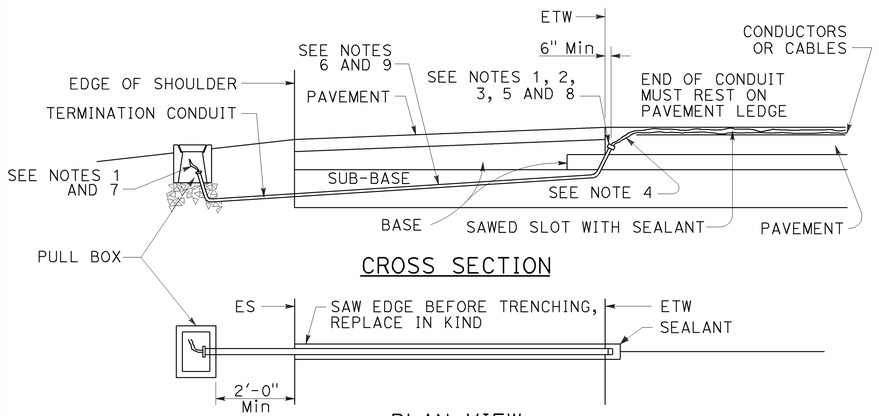


CROSS SECTION




PLAN VIEW

## SHOULDER TERMINATION DETAILS

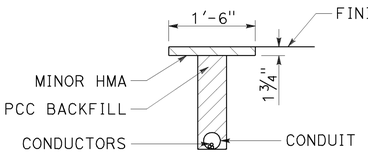


## "T" TRENCH DETAIL T

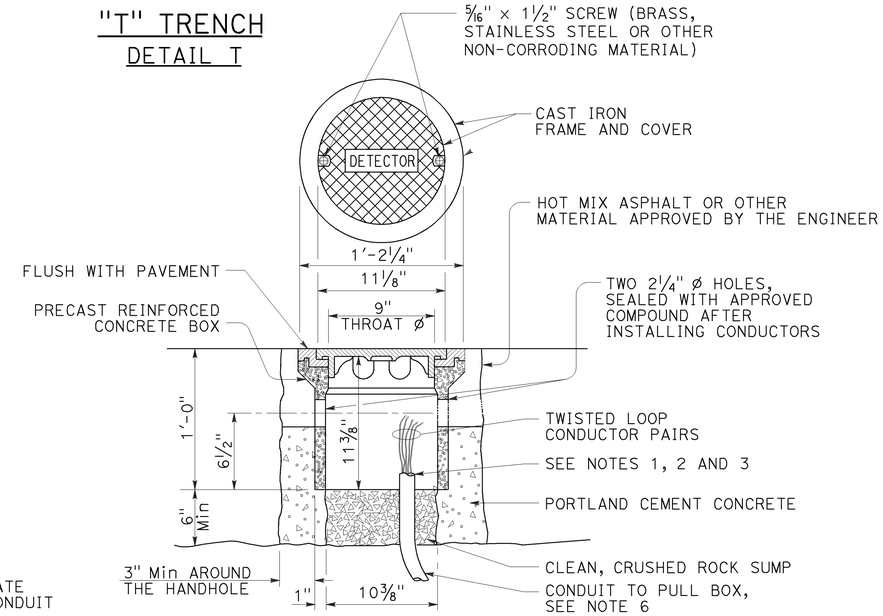


## DETECTOR HANDHOLE DETAIL

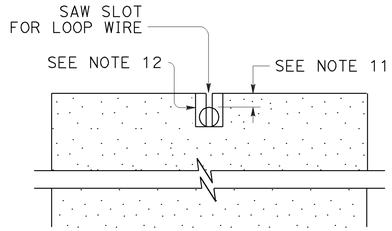


SECTION A-A

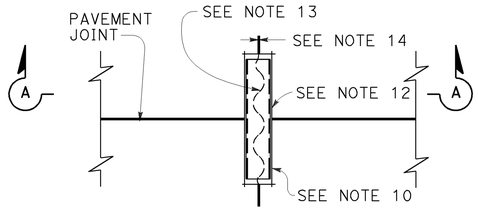


PLAN VIEW

## TYPICAL LOOP LEAD-IN DETAIL AT PAVEMENT JOINT

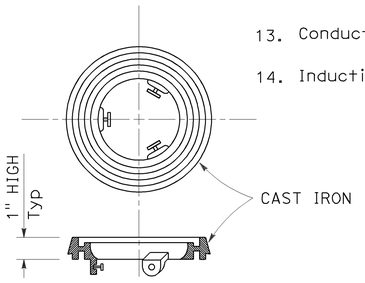


## LOCKING GRADE RING

| Dist | COUNTY | ROUTE | POST MILES TOTAL PROJECT | SHEET No. | TOTAL SHEETS |
|---|---|---|---|---|---|
| 11 | Imp | 8 | R90.0/R96.8 | 201 | 209 |

Theresa Gabriel
REGISTERED ELECTRICAL ENGINEER

July 19, 2013
PLANS APPROVAL DATE

REGISTERED PROFESSIONAL ENGINEER
Theresa Aziz Gabriel
No. E15129
Exp. 6-30-14
ELECTRICAL
STATE OF CALIFORNIA

THE STATE OF CALIFORNIA OR ITS OFFICERS OR AGENTS SHALL NOT BE RESPONSIBLE FOR THE ACCURACY OR COMPLETENESS OF SCANNED COPIES OF THIS PLAN SHEET.

TO ACCOMPANY PLANS DATED 08-31-15

### NOTES:

1. Bushing shall be used at end of conduit.
2. Tape detector conductors or cables 3" each side of bushings.
3. Install duct seal compound to each end of termination conduit before installing sealant.
4. Round all sharp edges where detector conductors or cables have to pass.
5. End of conduit shall be 3⅛" below roadway surface.
6. 

| Conduit size | Loop conductors |
|---|---|
| 1"C minimum | 1 to 2 pairs |
| 1½"C minimum | 3 to 4 pairs |
| 2"C minimum | 5 or more pairs |

7. Splice detector conductors or cables to detector lead-in-cable.
8. Location of detector handhole when shown on plans.
9. When the shoulder and traveled way are paved with the same material and there is no joint between them, the conduit shall extend only 2'-0" into the shoulder pavement.
10. ¾"C, Type 3 conduit 6" long minimum, plug both ends with duct compound to keep out sealant.
11. ½" Minimum between top of conduit and pavement surface.
12. Sawcut shall not exceed 1" in width and ⅛" longer than conduit to be installed.
13. Conductors with ½" minimum slack inside conduit.
14. Inductive loop detector saw slot.

STATE OF CALIFORNIA
DEPARTMENT OF TRANSPORTATION

# ELECTRICAL SYSTEMS (CURB TERMINATION AND HANDHOLE)

NO SCALE

RSP ES-5D DATED JULY 19, 2013 SUPERSEDES STANDARD PLAN ES-5D DATED MAY 20, 2011 - PAGE 451 OF THE STANDARD PLANS BOOK DATED 2010.

**REVISED STANDARD PLAN RSP ES-5D**

**2010 REVISED STANDARD PLAN RSP ES-5D**

7-9-13

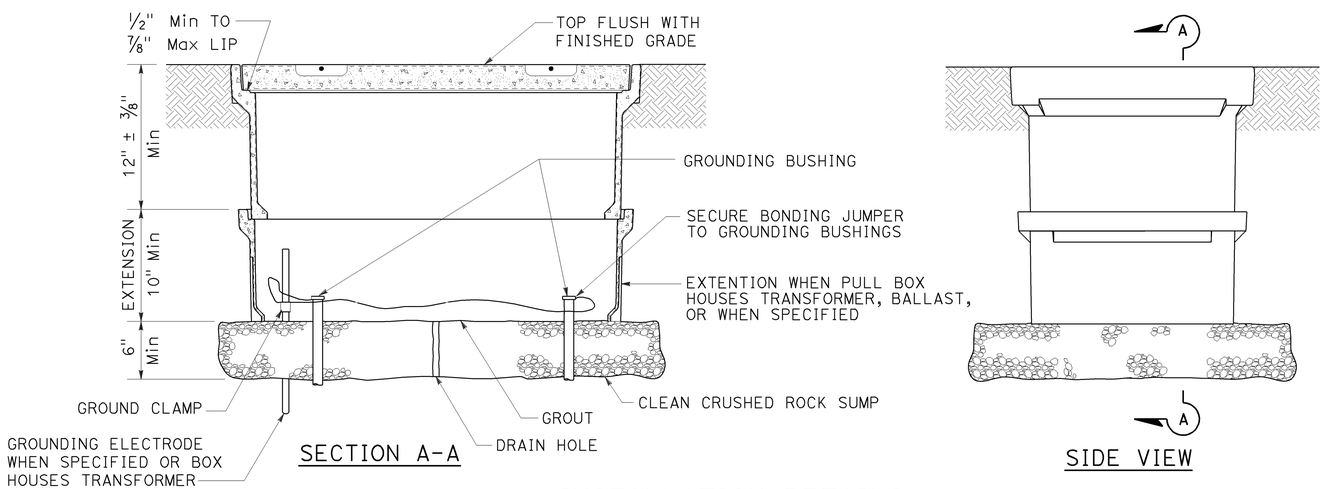


SECTION A-A

SIDE VIEW

# INSTALLATION DETAILS

## DETAIL A

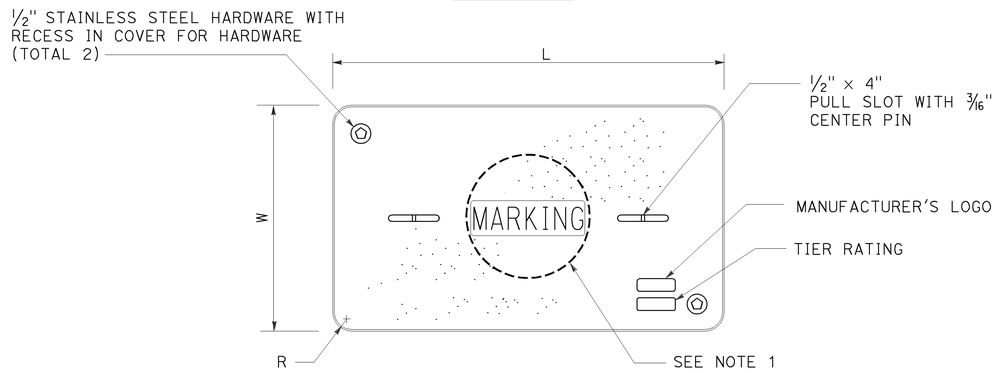


COVER TOP VIEW

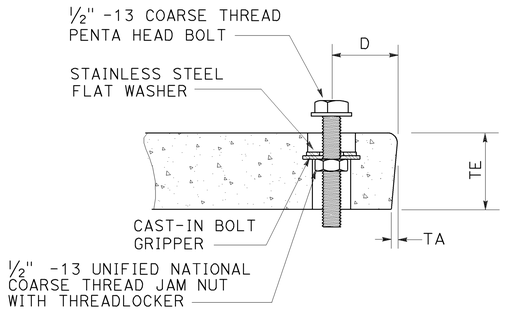


TYPICAL COVER CAPTIVE BOLT
OR SIMILAR

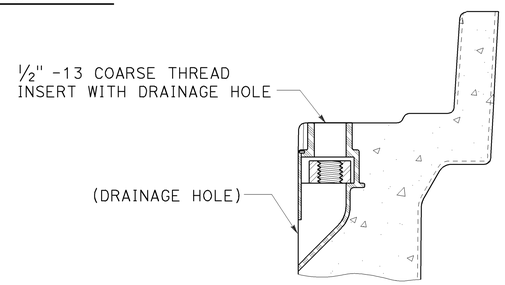


TYPICAL THREADED INSERT
OR SIMILAR

## DIMENSION TABLE

| PULL BOX | PULL BOX | | | COVER | | | | | | |
|---|---|---|---|---|---|---|---|---|---|---|
| | MINIMUM DEPTH BOX | MINIMUM DEPTH EXTENSION | MAXIMUM WEIGHT | L | W | R | TE | TA | D | MAXIMUM WEIGHT |
| No. 3½ | 12" | N/A | 40 lb | 1′ - 3⅜" | 10⅛" | 1⅜" | 2" | ⅛" | 1¾" | 30 lb |
| No. 5 | 12" | 10" | 55 lb | 1′ - 11¼" | 1′ - 1¾" | 1⅜" | 2" | ⅛" | 1¾" | 60 lb |
| No. 6 | 12" | 10" | 70 lb | 2′ - 6½" | 1′ - 5½" | 1⅜" | 2" | ⅛" | 2" | 85 lb |

| DIST | COUNTY | ROUTE | POST MILES TOTAL PROJECT | SHEET NO. | TOTAL SHEETS |
|---|---|---|---|---|---|
| 11 | Imp | 8 | R90.0/R96.8 | 202 | 209 |

Theresa Gabriel
REGISTERED ELECTRICAL ENGINEER

REGISTERED PROFESSIONAL ENGINEER
Theresa Aziz Gabriel
No. E15129
Exp. 6-30-14
ELECTRICAL
STATE OF CALIFORNIA

July 19, 2013
PLANS APPROVAL DATE

THE STATE OF CALIFORNIA OR ITS OFFICERS OR AGENTS SHALL NOT BE RESPONSIBLE FOR THE ACCURACY OR COMPLETENESS OF SCANNED COPIES OF THIS PLAN SHEET.

TO ACCOMPANY PLANS DATED 08-31-15

## NOTES:

1. Pull box covers shall be marked as follows: "SERVICE" Service circuits between service point and service disconnect; "SPRINKLER-CONTROL" sprinkler control circuits, 50 V or less; "CALTRANS" on all pull boxes, except pull boxes marked "SPRINKLER-CONTROL"; and "TELEPHONE" Telephone service;

   A) No. 3½ pull box.
      1) "SIGNAL" - Traffic signal circuits with or without lighting or sign lighting circuits.
      2) "LIGHTING" - Lighting or sign lighting circuits where voltage is under 600 V.

   B) No. 5, 6, 9 or 9A pull box.
      1) "TRAFFIC SIGNAL" - Traffic signal circuits with or without lighting or sign lighting circuits.
      2) "LIGHTING" - Lighting or sign lighting circuits where voltage is under 600 V.
      3) "LIGHTING-HIGH VOLTAGE" - Lighting or sign lighting circuits where voltage is above 600 V.
      4) "IRRIGATION" - Circuits to irrigation controller 120 V or more.
      5) "RAMP METER" - Ramp meter circuits.
      6) "COUNT STATION" - Count or speed monitor circuits.
      7) "COMMUNICATIONS" - Communication circuits.
      8) "TOS COMMUNICATIONS" - TOS communication line.
      9) "TOS POWER" - TOS power.
      10) "TDC POWER" - Telephone demarcation cabinet power.
      11) "CCTV" - Closed circuit television circuits.
      12) "TMS" - Traffic monitoring station circuits.
      13) "CMS" - Changeable message sign circuits.
      14) "HAR" - Highway advisory radio circuits.
      15) "BOOSTER PUMP" - Booster pump circuit.

2. The nominal dimensions of the opening in which the cover sets shall be the same as the cover dimensions except the length and width dimensions shall be ⅛" greater.
3. Covers and boxes shall be interchangeable with California standard male and female gages. When interchanged with a standard male or female gage, the top surfaces shall be flush within ⅛". Top outside radius of covers and pull boxes shall have a ⅛" radius.
4. Pull box extension may be another pull box as long as the bottom edge of the pull box can fit into the cover opening.
5. All dimensions for the cover for non-traffic pull box are nominal values.

STATE OF CALIFORNIA
DEPARTMENT OF TRANSPORTATION

# ELECTRICAL SYSTEMS (NON-TRAFFIC PULL BOX)

NO SCALE

RSP ES-8A DATED JULY 19, 2013 SUPERSEDES RSP ES-8A DATED JANUARY 20, 2012 THAT SUPPLEMENTS THE STANDARD PLANS BOOK DATED 2010.

# REVISED STANDARD PLAN RSP ES-8A

2010 REVISED STANDARD PLAN RSP ES-8A

7-15-13

| Dist | COUNTY | ROUTE | POST MILES TOTAL PROJECT | SHEET No. | TOTAL SHEETS |
|---|---|---|---|---|---|
| 11 | Imp | 8 | R90.0/R96.8 | 203 | 209 |

Theresa Gabriel
REGISTERED ELECTRICAL ENGINEER

Theresa Aziz Gabriel No. E15129 Exp. 6-30-14 ELECTRICAL — REGISTERED PROFESSIONAL ENGINEER — STATE OF CALIFORNIA

July 19, 2013
PLANS APPROVAL DATE

THE STATE OF CALIFORNIA OR ITS OFFICERS OR AGENTS SHALL NOT BE RESPONSIBLE FOR THE ACCURACY OR COMPLETENESS OF SCANNED COPIES OF THIS PLAN SHEET.

TO ACCOMPANY PLANS DATED 08-31-15

2010 REVISED STANDARD PLAN RSP ES-10A

## ISOFOOTCANDLE CURVE - MINIMUM

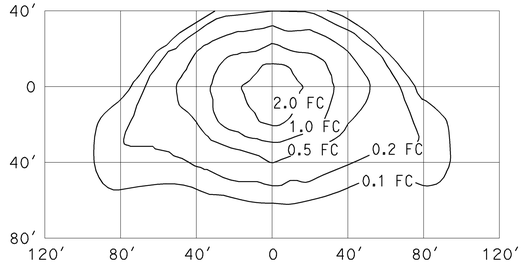


TYPE III MEDIUM CUTOFF

Cutoff Luminaire
34′ Mounting Height
Lamp operated at 22,000 lm
200-W high pressure sodium lamp
ANSI Designation S66

## ISOFOOTCANDLE CURVE - MINIMUM

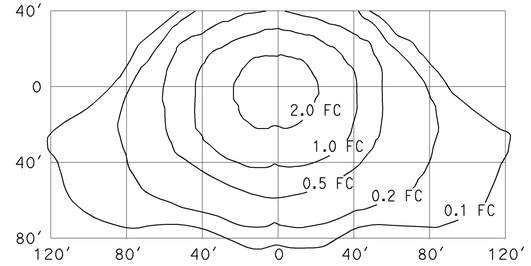


TYPE III MEDIUM CUTOFF

Cutoff Luminaire
40′ Mounting Height
Lamp operated at 37,000 lm
310-W high pressure sodium lamp
ANSI Designation S67

## ISOFOOTCANDLE CURVE - MINIMUM

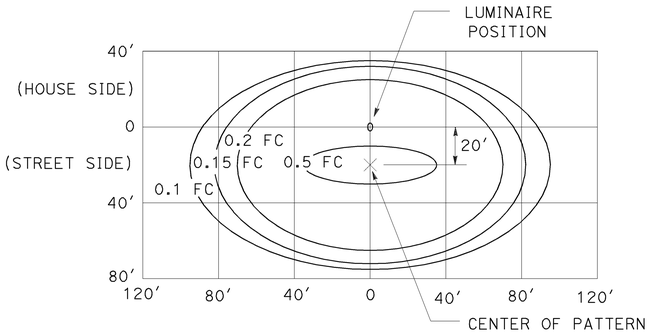


LED LUMINAIRE ROADWAY 1

165-W at 34′ Mounting Height

## ISOFOOTCANDLE CURVE - MINIMUM

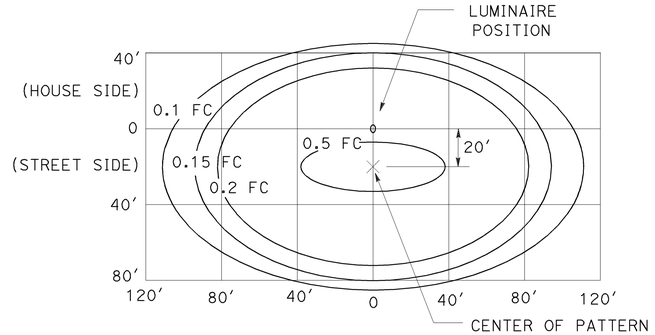


LED LUMINAIRE ROADWAY 2

235-W at 40′ Mounting Height

## ISOFOOTCANDLE CURVE - MINIMUM

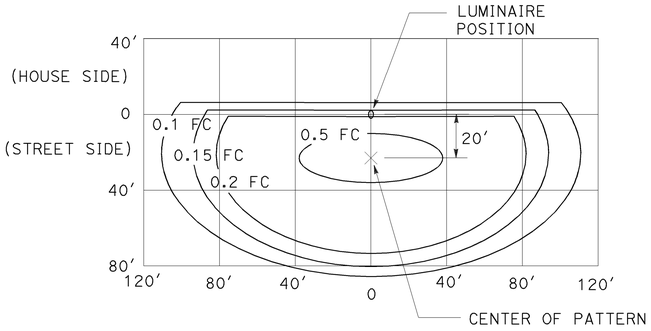


LED LUMINAIRE ROADWAY 3

235-W at 40′ Mounting Height
with back side control

## ISOFOOTCANDLE CURVE - MINIMUM

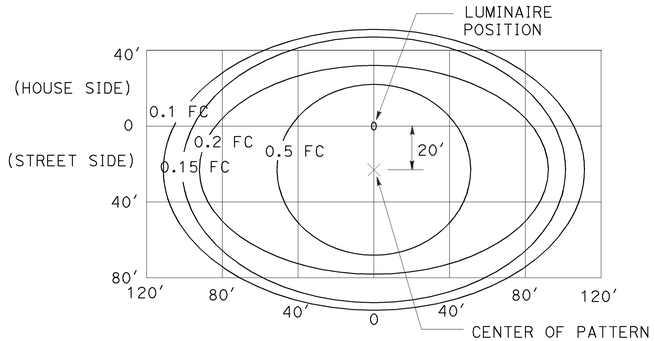


LED LUMINAIRE ROADWAY 4

300-W at 40′ Mounting Height

## ISOFOOTCANDLE CURVE - MINIMUM

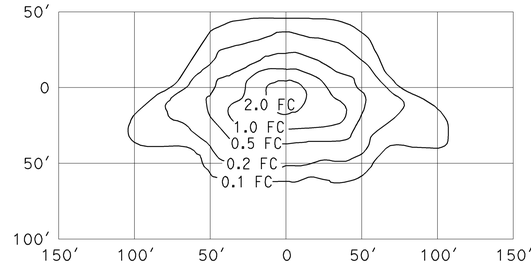


TYPE III MEDIUM CUTOFF

Cutoff Luminaire
30′ Mounting Height
Lamp operated at 16,000 lm
150-W high pressure sodium lamp
ANSI Designation S55

## ISOFOOTCANDLE CURVE - MINIMUM

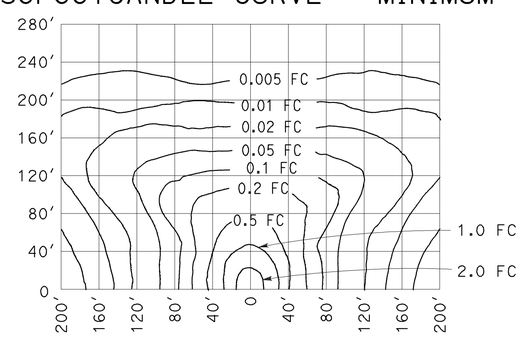


LOW PRESSURE SODIUM LUMINAIRE

40′ Mounting Height
Lamp operated at 33,000 lm
180-W low pressure sodium lamp

STATE OF CALIFORNIA
DEPARTMENT OF TRANSPORTATION

# ELECTRICAL SYSTEMS (ISOFOOTCANDLE DIAGRAMS)

NO SCALE

RSP ES-10A DATED JULY 19, 2013 SUPERSEDES RSP ES-10A DATED JULY 20, 2012 THAT SUPPLEMENTS THE STANDARD PLANS BOOK DATED 2010.

**REVISED STANDARD PLAN RSP ES-10A**

7-9-13

| Dist | COUNTY | ROUTE | POST MILES TOTAL PROJECT | SHEET No. | TOTAL SHEETS |
|---|---|---|---|---|---|
| 11 | Imp | 8 | R90.0/R96.8 | 204 | 209 |

REGISTERED CIVIL ENGINEER

July 19, 2013
PLANS APPROVAL DATE

REGISTERED PROFESSIONAL ENGINEER
Stanley P. Johnson
No. C57793
Exp. 3-31-14
CIVIL
STATE OF CALIFORNIA

THE STATE OF CALIFORNIA OR ITS OFFICERS OR AGENTS SHALL NOT BE RESPONSIBLE FOR THE ACCURACY OR COMPLETENESS OF SCANNED COPIES OF THIS PLAN SHEET.

TO ACCOMPANY PLANS DATED 08-31-15

| STANDARD TYPE | SETBACK (DIMENSION A) |
|---|---|
| 32 | 30'-0" (Min) |
| 31 | 20'-0" (Min) |
| 15, 15D, 15-SB, 21, 21D, 30 | ARM LENGTH (Min) |

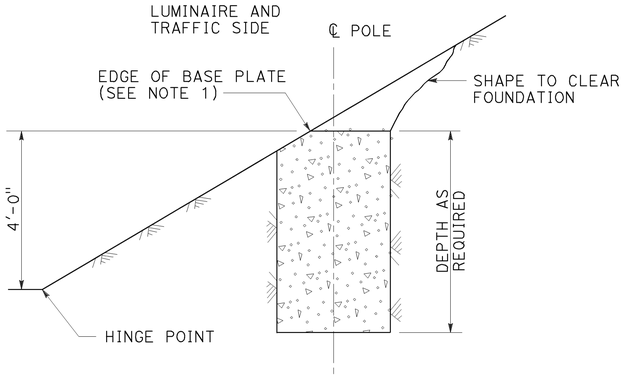


CUT SLOPES
STEEPER THAN 4:1,
LESS THAN 2:1
DETAIL A-1
See Note 2 and 3

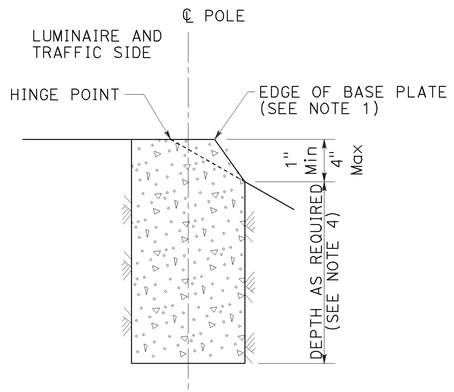


FILL SLOPES
STEEPER THAN 4:1,
LESS THAN 2:1
DETAIL A-2
See Note 2 and 3

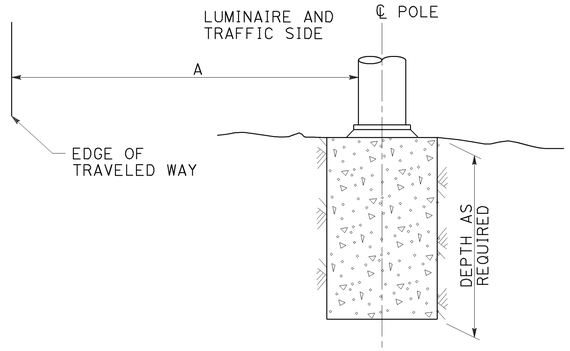


FLAT SECTIONS, CUT OR FILL SLOPES
4:1 OR FLATTER
DETAIL A-3
See Note 2

## FOUNDATIONS ADJACENT TO ALL ROADWAYS EXCEPT IN SIDEWALK, MEDIAN AND ISLAND AREAS
DETAIL A

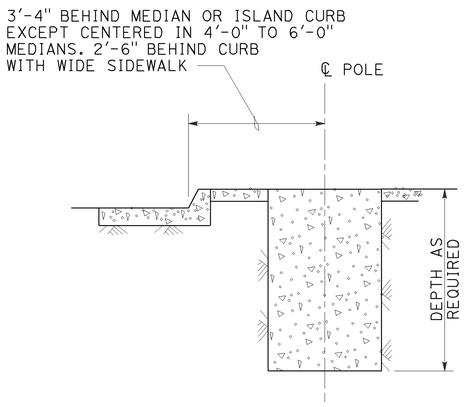


MEDIAN, ISLAND
OR WIDE SIDEWALK
DETAIL B-1
7' Wide and wider

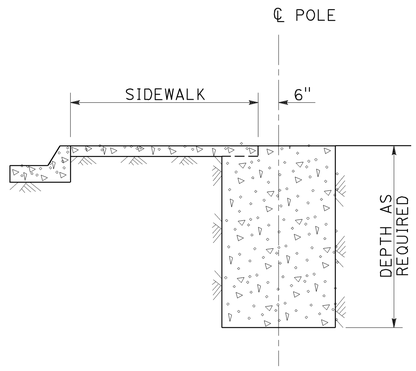


NARROW SIDEWALK
DETAIL B-2
Less than 7' wide

## FOUNDATIONS IN SIDEWALK, MEDIAN AND ISLAND AREAS
DETAIL B

NOTES:

1. Where a portion of the foundation is above grade, the top edges shall have a 1" chamfer.
2. Slopes shall be horizontal to vertical ratio (Horizontal : Vertical).
3. Horizontal setbacks on cut and fill slopes steeper than 4:1 shall not exceed the distance shown for flat sections.
4. CIDH embedment depth shall be increased beyond standard depths by the diameter of the CIDH.

STATE OF CALIFORNIA
DEPARTMENT OF TRANSPORTATION

# ELECTRICAL SYSTEMS (FOUNDATION INSTALLATIONS)

NO SCALE

RSP ES-11 DATED JULY 19, 2013 SUPERSEDES STANDARD PLAN ES-11
DATED MAY 20, 2011 - PAGE 488 OF THE STANDARD PLANS BOOK DATED 2010.

**REVISED STANDARD PLAN RSP ES-11**

**2010 REVISED STANDARD PLAN RSP ES-11**

7-9-13

| DIST | COUNTY | ROUTE | POST MILES TOTAL PROJECT | SHEET No. | TOTAL SHEETS |
|---|---|---|---|---|---|
| 11 | Imp | 8 | R90.0/R96.8 | 205 | 209 |

REGISTERED CIVIL ENGINEER — 02-23-15 DATE

08-31-15
PLANS APPROVAL DATE

MAMUNUR RAHMAN No. C48515 Exp. 06-30-16 CIVIL — REGISTERED PROFESSIONAL ENGINEER — STATE OF CALIFORNIA

*The State of California or its officers or agents shall not be responsible for the accuracy or completeness of scanned copies of this plan sheet.*

## STANDARD PLANS DATED 2010

| | | |
|---|---|---|
| | A10A | ABBREVIATIONS (SHEET 1 OF 2) |
| RSP | A10B | ABBREVIATIONS (SHEET 2 OF 2) |
| | A10C | LINES AND SYMBOLS (SHEET 1 OF 3) |
| | A10E | LINES AND SYMBOLS (SHEET 3 OF 3) |
| | B6-21 | JOINT SEALS (MAXIMUM MOVEMENT RATING=2") |
| RSP | P10 | CONCRETE PAVEMENT DOWEL BAR DETAILS |
| RSP | P31A | CONTINUOUSLY REINFORCED CONCRETE PAVEMENT TERMINAL JOINT DETAILS |

STANDARD PLAN SHEET No.

DETAIL No.

## QUANTITIES

| | | |
|---|---|---|
| RAPID SETTING CONCRETE (PATCH) | 3 | CF |
| REMOVE UNSOUND CONCRETE | 3 | CF |
| AGGREGATE BASE (APPROACH SLAB) | 24 | CY |
| STRUCTURAL CONCRETE, APPROACH SLAB (TYPE R) | 236 | CY |
| JOINT SEAL (MR 1½") | 172 | LF |

## INDEX TO PLANS


| Sheet No. | Title |
|---|---|
| 1 | GENERAL PLAN NO. 1 |
| 2 | GENERAL PLAN NO. 2 |
| 3 | JOINT SEAL DETAILS |
| 4 | STRUCTURE APPROACH TYPE R(30S) |
| 5 | STRUCTURE APPROACH TYPE R(30D) |


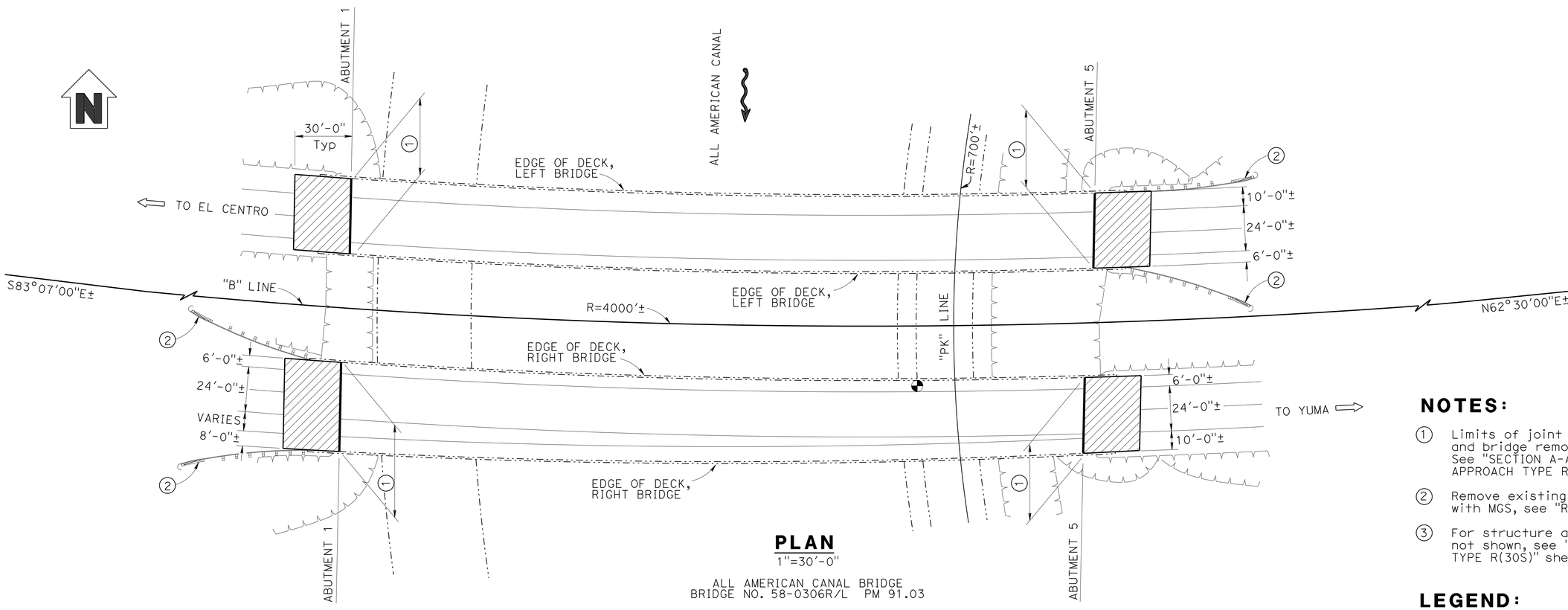


## PLAN

1"=30'-0"

ALL AMERICAN CANAL BRIDGE
BRIDGE NO. 58-0306R/L PM 91.03

## NOTES:

1. Limits of joint seal replacement and bridge removal (portion). See "SECTION A-A" on "STRUCTURE APPROACH TYPE R(30S)" sheet.
2. Remove existing MBGR and replace with MGS, see "ROADWAY PLANS".
3. For structure approach details not shown, see "STRUCTURE APPROACH TYPE R(30S)" sheet.

## LEGEND:

- —— Indicates new construction
- –·–·– Indicates existing structure
- ▬▬ Indicates location of existing Joint Seal removal and placement of new Joint Seal.
- ▨ Indicates limits of Approach Slab Type R(30S)
- ◔ Point of Min Vertical Clearance

NOTE:
THE CONTRACTOR MUST VERIFY ALL CONTROLLING FIELD DIMENSIONS BEFORE ORDERING OR FABRICATING ANY MATERIAL.

B. GUNTER
DESIGN ENGINEER

| | BY | CHECKED |
|---|---|---|
| DESIGN | M. RAHMAN | S. YEH |
| DETAILS | G. HALLSTROM / H.I. | S. YEH |
| QUANTITIES | M. RAHMAN | S. YEH |

LOAD & RESISTANCE FACTOR DESIGN — LIVE LOADING: HL93 W/"LOW-BOY"; PERMIT DESIGN VEHICLE

| | BY | CHECKED |
|---|---|---|
| LAYOUT | B. GUNTER | M. RAHMAN |
| SPECIFICATIONS | X. CHEN | PLANS AND SPECS COMPARED A. CHEN |

STATE OF CALIFORNIA
DEPARTMENT OF TRANSPORTATION

DIVISION OF ENGINEERING SERVICES
STRUCTURE DESIGN
DESIGN BRANCH 19

| | |
|---|---|
| BRIDGE NO. | Various |
| POST MILE | Various |

# VARIOUS ROUTE 8 BRIDGES
## GENERAL PLAN NO. 1

ORIGINAL SCALE IN INCHES FOR REDUCED PLANS 0 1 2 3

UNIT: 3621
PROJECT NUMBER & PHASE: 1114000006 - 1 CONTRACT NO.: 11-416904

DISREGARD PRINTS BEARING EARLIER REVISION DATES →

| REVISION DATES | | | | SHEET | OF |
|---|---|---|---|---|---|
| ~~8-08-14~~ | | 02-23-15 | ~~02-17-15~~ | 1 | 5 |

STRUCTURES DESIGN GENERAL PLAN SHEET (ENGLISH) (REV.09-01-10)

FILE => 58-0306r1-a-gp_01.dgn

USERNAME => s127400 DATE PLOTTED => 03-SEP-2015 TIME PLOTTED => 14:40

| DIST | COUNTY | ROUTE | POST MILES TOTAL PROJECT | SHEET No. | TOTAL SHEETS |
|---|---|---|---|---|---|
| 11 | Imp | 8 | R90.0/R96.8 | 206 | 209 |

REGISTERED CIVIL ENGINEER — 02-23-15 DATE

08-31-15
PLANS APPROVAL DATE

MAMUNUR RAHMAN No. C48515 Exp. 6-30-16 CIVIL — REGISTERED PROFESSIONAL ENGINEER — STATE OF CALIFORNIA

*The State of California or its officers or agents shall not be responsible for the accuracy or completeness of scanned copies of this plan sheet.*

# QUANTITIES

| | | |
|---|---|---|
| RAPID SETTING CONCRETE (PATCH) | 3 | CF |
| REMOVE UNSOUND CONCRETE | 3 | CF |
| AGGREGATE BASE (APPROACH SLAB) | 46 | CY |
| STRUCTURAL CONCRETE, APPROACH SLAB (TYPE R) | 451 | CY |
| PAVING NOTCH EXTENSION | 185 | CF |
| JOINT SEAL (MR 1/2") | 250 | LF |

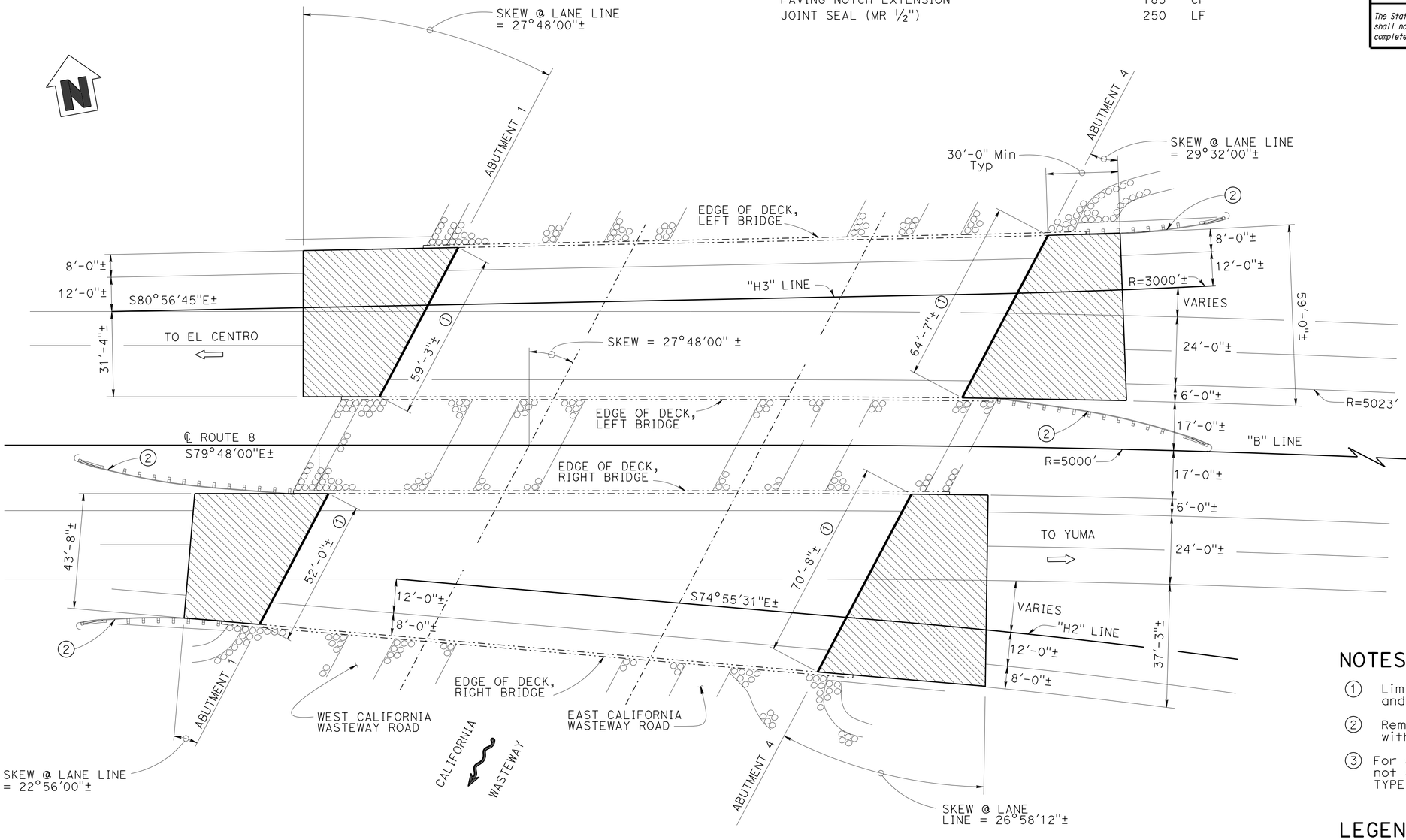


## PLAN

1" = 20'-0"

CALIFORNIA WASTEWAY BRIDGE
BRIDGE NO. 58-0310R/L PM 96.35

## NOTES:

① Limits of paving notch extension and joint seal replacement.

② Remove existing MBGR and replace with MGS, see "ROADWAY PLANS".

③ For structure approach details not shown, see "STRUCTURE APPROACH TYPE R(30D)" sheet.

## LEGEND:

—— Indicates new construction

–·–·– Indicates existing structure

▬▬ Indicates location of existing Joint Seal removal and placement of new Joint Seal.

▨ Indicates limits of Approach Slab

NOTE:
THE CONTRACTOR MUST VERIFY ALL CONTROLLING FIELD DIMENSIONS BEFORE ORDERING OR FABRICATING ANY MATERIAL.

| | | | |
|---|---|---|---|
| DESIGN | BY M. RAHMAN | CHECKED S. YEH | STATE OF CALIFORNIA DEPARTMENT OF TRANSPORTATION |
| DETAILS | BY G. HALLSTROM / H. I. | CHECKED S. YEH | |
| QUANTITIES | BY M. RAHMAN | CHECKED S. YEH | |

DIVISION OF ENGINEERING SERVICES STRUCTURE DESIGN
DESIGN BRANCH 19

BRIDGE NO. Various
POST MILE Various

# VARIOUS ROUTE 8 BRIDGES
## GENERAL PLAN NO. 2

STRUCTURES DESIGN DETAIL SHEET (ENGLISH) (REV. 09-01-10)

ORIGINAL SCALE IN INCHES FOR REDUCED PLANS 0 1 2 3

UNIT: 3621
PROJECT NUMBER & PHASE: 1114000006 - 1 CONTRACT NO.: 11-416904

DISREGARD PRINTS BEARING EARLIER REVISION DATES →

| REVISION DATES | | | SHEET | OF |
|---|---|---|---|---|
| 08-06-14 | | 02-23-15 02-27-15 | 2 | 5 |

FILE => 58-0306r1-a-gp_02.dgn

USERNAME => s127400 DATE PLOTTED => 03-SEP-2015 TIME PLOTTED => 14:40

| DIST | COUNTY | ROUTE | POST MILES TOTAL PROJECT | SHEET No. | TOTAL SHEETS |
|---|---|---|---|---|---|
| 11 | Imp | 8 | R90.0/R96.8 | 207 | 209 |

REGISTERED CIVIL ENGINEER — 2-23-15 DATE

08-31-15
PLANS APPROVAL DATE

REGISTERED PROFESSIONAL ENGINEER — MAMUNUR RAHMAN No. C48515 Exp. 6-30-16 CIVIL — STATE OF CALIFORNIA

*The State of California or its officers or agents shall not be responsible for the accuracy or completeness of scanned copies of this plan sheet.*

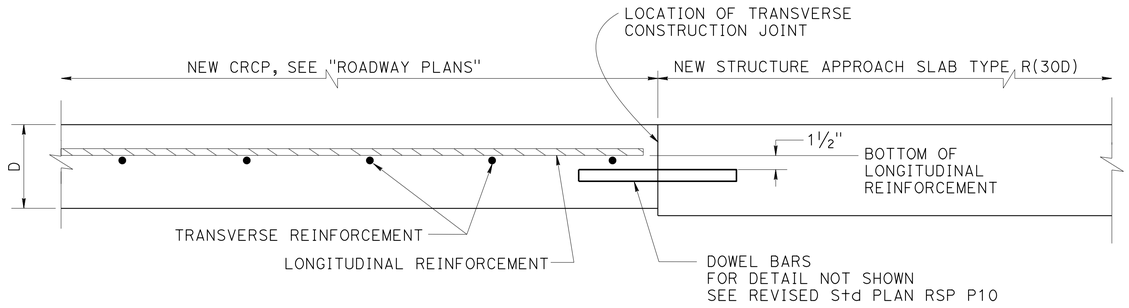


## TERMINAL JOINT TYPE E

RSP P31A P10

NO SCALE

(FOR NEW STRUCTURE APPPROACH SLABS)

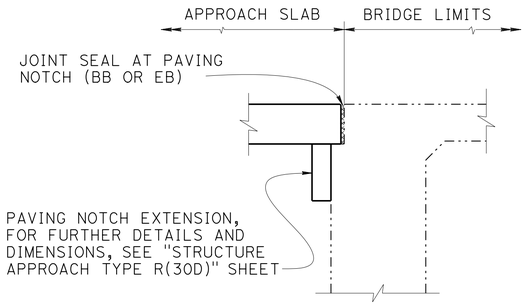


## DIAPHRAGM ABUTMENT

## JOINT SEAL LOCATION

NO SCALE

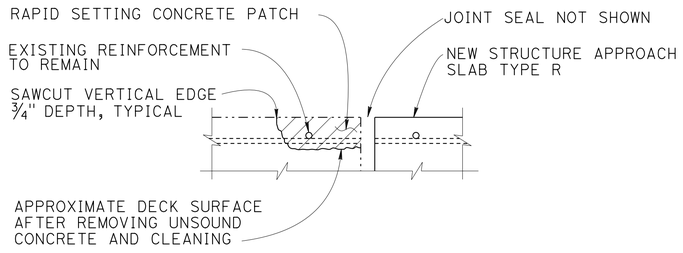


## JOINT SPALL REPAIR DETAIL

NO SCALE

REINFORCEMENT MAY BE ENCOUNTERED DURING DECK CONCRETE REMOVAL AND IS TO REMAIN UNDAMAGED.

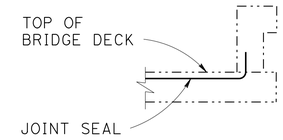


## BARRIER RAIL

## JOINT SEAL AT LOW SIDE OF DECK

NO SCALE

NOTE: DETAILS SHOWN FOR ILLUSTRATION PURPOSES ONLY.

FOR USE ONLY WHERE DECK JOINT MATCHES THE SIDEWALK, CURB OR BARRIER RAIL JOINT.

## JOINT SEAL TABLE

| BRIDGE NO. | BRIDGE NAME | LOCATION | JOINT SEAL TYPE | Min "MR" (in) | Approx LENGTH (ft) | CLEAN EXPANSION JOINT | | Approx DEPTH OF JOINT SPALL (in) | Approx WIDTH OF JOINT SPALL (in) | Approx LENGTH OF JOINT SPALL (ft) |
|---|---|---|---|---|---|---|---|---|---|---|
| | | | | | | Approx LENGTH (ft) | Approx DEPTH (in) | | | |
| 58-0306L | ALL AMERICAN | Abut 1 | B | 1½ | 41 | N/A | N/A | 3 | 6 | 5.0 |
| 58-0306L | ALL AMERICAN | Abut 5 | B | 1½ | 41 | N/A | N/A | 3 | 6 | 5.0 |
| 58-0306R | ALL AMERICAN | Abut 1 | B | 1½ | 49 | N/A | N/A | 3 | 6 | 5.0 |
| 58-0306R | ALL AMERICAN | Abut 5 | B | 1½ | 41 | N/A | N/A | 3 | 6 | 5.0 |
| 58-0310L | CALIF WASTEWAY | Abut 1 | - | ½ | 60 | N/A | N/A | 3 | 6 | 5.0 |
| 58-0310L | CALIF WASTEWAY | Abut 4 | - | ½ | 65 | N/A | N/A | 3 | 6 | 5.0 |
| 58-0310R | CALIF WASTEWAY | Abut 1 | - | ½ | 53 | N/A | N/A | 3 | 6 | 5.0 |
| 58-0310R | CALIF WASTEWAY | Abut 4 | - | ½ | 72 | N/A | N/A | 3 | 6 | 5.0 |

NOTE:
THE CONTRACTOR MUST VERIFY ALL CONTROLLING FIELD DIMENSIONS BEFORE ORDERING OR FABRICATING ANY MATERIAL.

## NOTES:

The following notes apply to JOINT SEAL TYPE B:

Install Joint Seal (MR = 1½") up into curb or barrier rail on the low side of the deck where deck joint aligns with curb or barrier rail joint.

For details not shown, see B6-21

| | | | | | |
|---|---|---|---|---|---|
| DESIGN | BY M. RAHMAN | CHECKED S. YEH | STATE OF CALIFORNIA DEPARTMENT OF TRANSPORTATION | DIVISION OF ENGINEERING SERVICES STRUCTURE DESIGN DESIGN BRANCH 19 | BRIDGE NO. Various |
| DETAILS | BY G. HALLSTROM / H. I. | CHECKED S. YEH | | | POST MILE Various |
| QUANTITIES | BY M. RAHMAN | CHECKED S. YEH | | | |

# VARIOUS ROUTE 8 BRIDGES
## JOINT SEAL DETAILS

STRUCTURES DESIGN DETAIL SHEET (ENGLISH) (REV. 09-01-10)

ORIGINAL SCALE IN INCHES FOR REDUCED PLANS 0 1 2 3

UNIT: 3621
PROJECT NUMBER & PHASE: 1114000006 - 1 CONTRACT NO.: 11-416904

DISREGARD PRINTS BEARING EARLIER REVISION DATES →

| REVISION DATES | | | SHEET | OF |
|---|---|---|---|---|
| 08-06-14 | | 02-17-15 02-23-15 | 3 | 5 |

FILE => 58-0306ri-q-jnt_det.dgn

USERNAME => s127400 DATE PLOTTED => 03-SEP-2015 TIME PLOTTED => 14:40

| DIST | COUNTY | ROUTE | POST MILES TOTAL PROJECT | SHEET No. | TOTAL SHEETS |
|---|---|---|---|---|---|
| 11 | Imp | 8 | R90.0/R96.8 | 208 | 209 |

REGISTERED CIVIL ENGINEER — 02-23-15 DATE

08-31-15
PLANS APPROVAL DATE

*The State of California or its officers or agents shall not be responsible for the accuracy or completeness of electronic copies of this plan sheet.*

REGISTERED PROFESSIONAL ENGINEER — C. J. SIMS — No. C 46471 — Exp. 6/30/15 — CIVIL — STATE OF CALIFORNIA

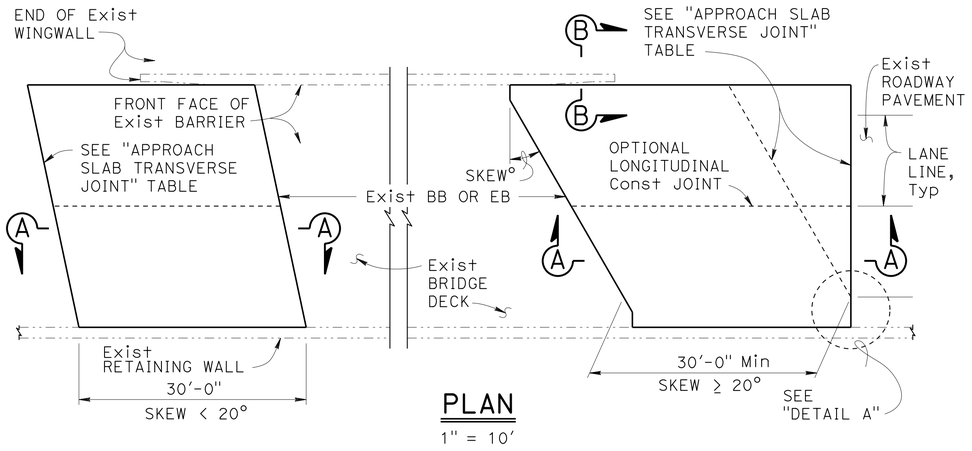


## PLAN
1" = 10'

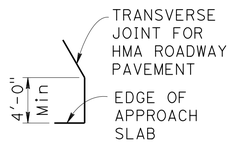


## DETAIL A
No Scale

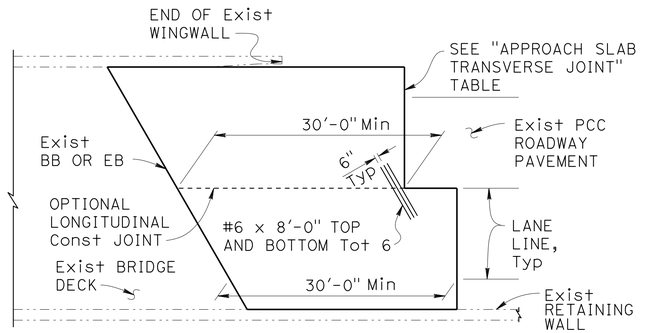


## END STAGGER DETAIL
1" = 10'

| APPROACH SLAB TRANSVERSE JOINT | | |
|---|---|---|
| APPROACH SKEW | WITH HMA ROADWAY PAVEMENT | WITH PCC ROADWAY PAVEMENT |
| < 20° | PARALLEL TO BB OR EB | PARALLEL TO BB OR EB |
| 20° - 45° | PARALLEL TO BB OR EB USE "DETAIL A" | STAGGER AT LANE LINES 24' TO 36' APART, SEE "END STAGGER DETAIL" |
| > 45° | PARALLEL TO BB OR EB USE "DETAIL A" | STAGGER AT EACH LANE LINE, SEE "END STAGGER DETAIL" |

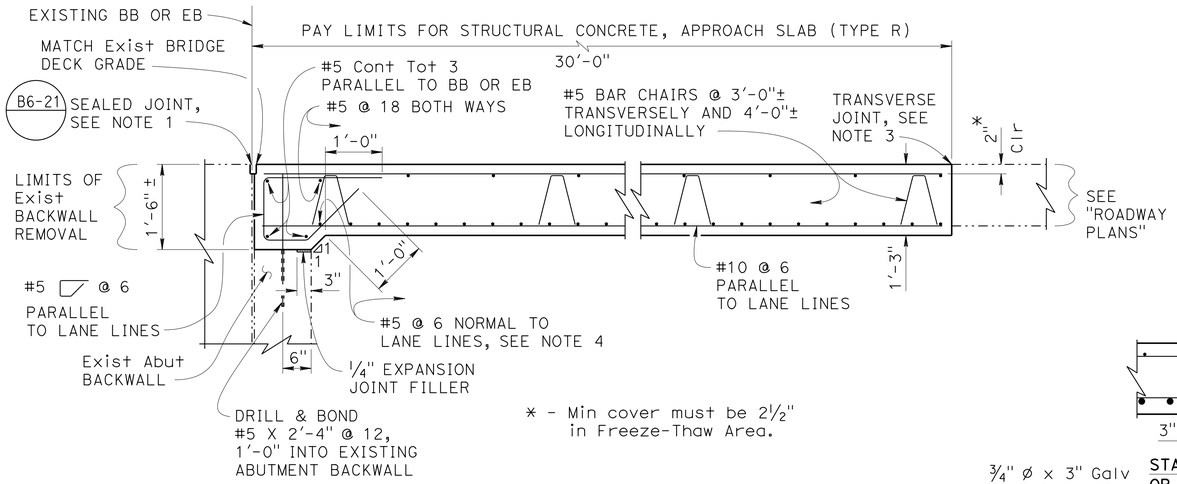


* - Min cover must be 2½" in Freeze-Thaw Area.

## SECTION A-A
¾" = 1'-0"

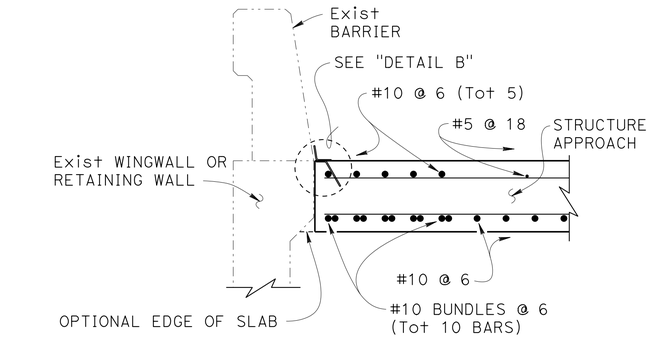


## SECTION B-B
¾" = 1'-0"

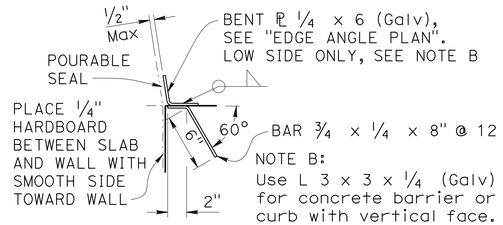


## DETAIL B
1½" = 1'-0"

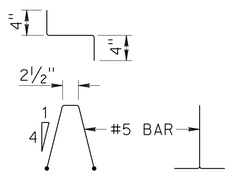


## BAR CHAIR DETAIL
1" = 1'-0"

NOTE:
The contractor must verify all controlling field dimensions before ordering or fabricating any material.

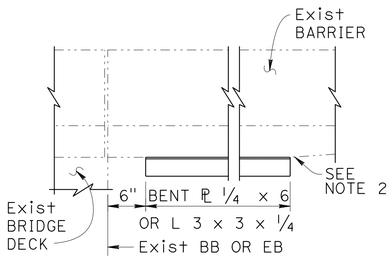


## EDGE ANGLE PLAN
1" = 1'-0"

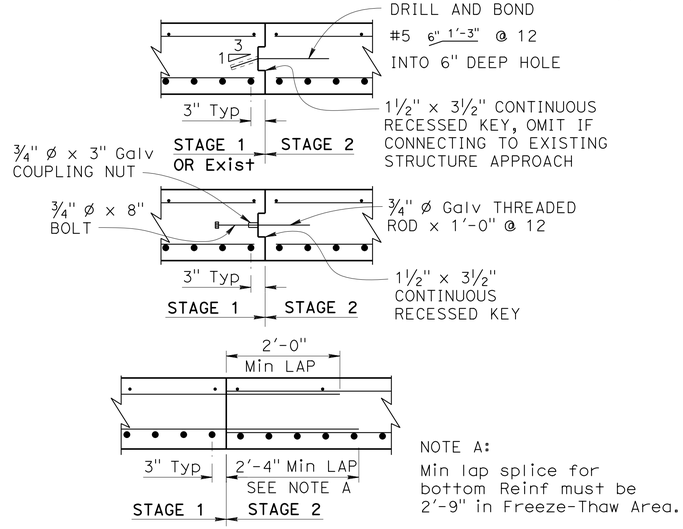


NOTE A:
Min lap splice for bottom Reinf must be 2'-9" in Freeze-Thaw Area.

## LONGITUDINAL CONSTRUCTION JOINT ALTERNATIVES
¾" = 1'-0"

## DESIGN NOTES

DESIGN: AASHTO LRFD Bridge Design Specifications, 2012 Edition with Caltrans Amendments, preface dated January 2014

LIMIT STATES: Service I, Strength I & II, Extreme II and Fatigue I ( $\gamma_{FAT}$ = 1.0)

DEAD LOAD: Includes 35 psf for future wearing surface

LIVE LOAD: HL93 and permit design load
Equivalent strip width method: $W_1$ = 12 ft
Slab span: $L_1$ = 24.5 ft

REINFORCED CONCRETE:
$f_y$ = 60 ksi
$f'_c$ = 3.6 ksi
n = 8

NOTES:

1. For joint protection details and other details not shown, see other plan sheets. Adjust reinforcement to clear sawcut for sealed joint.
2. End the plate or edge angle at beginning of barrier transition, end of wingwall, or end of structure approach as applicable.
3. Transverse Joint must be a minimum of 5'-0" from an existing or constructed weakened plane joint in approach PCC roadway pavement. Refer to Standard Plans P10 and P14.
4. At the Contractor's option, approach slab transverse reinforcement may be placed parallel to BB or EB. Spacing of transverse reinforcement is measured along ℄ roadway.

—·—·— Indicates Existing Structure

STANDARD DRAWING

FILE NO. xs3-130

APPROVAL DATE January 2015

STATE OF CALIFORNIA
DEPARTMENT OF TRANSPORTATION

DIVISION OF ENGINEERING SERVICES

BRIDGE NO. Various
POST MILE Various

# VARIOUS ROUTE 8 BRIDGES
## STRUCTURE APPROACH TYPE R (30S)

OS OSD 2147A (ENGLISH STANDARD DRAWING "XS" BORDER REV. (10-01-14)

ORIGINAL SCALE IN INCHES FOR REDUCED PLANS 0 1 2 3

UNIT: 3621
PROJECT NUMBER & PHASE: 1114000006 - 1 CONTRACT NO.: 11-416904

DISREGARD PRINTS BEARING EARLIER REVISION DATES →

| REVISION DATES | | | | SHEET | OF |
|---|---|---|---|---|---|
| 09-17-14 | | 02-17-15 | 02-23-15 | 4 | 5 |

FILE => 58-0306rl-s-sa_r(30s).dgn

USERNAME => s127400 DATE PLOTTED => 03-SEP-2015 TIME PLOTTED => 14:40

| DIST | COUNTY | ROUTE | POST MILES TOTAL PROJECT | SHEET No. | TOTAL SHEETS |
|---|---|---|---|---|---|
| 11 | Imp | 8 | R90.0/R96.8 | 209 | 209 |

REGISTERED CIVIL ENGINEER — 02-23-15 DATE

08-31-15
PLANS APPROVAL DATE

*The State of California or its officers or agents shall not be responsible for the accuracy or completeness of electronic copies of this plan sheet.*

REGISTERED PROFESSIONAL ENGINEER — C. J. SIMS — No. C 46471 — Exp. 6/30/15 — CIVIL — STATE OF CALIFORNIA

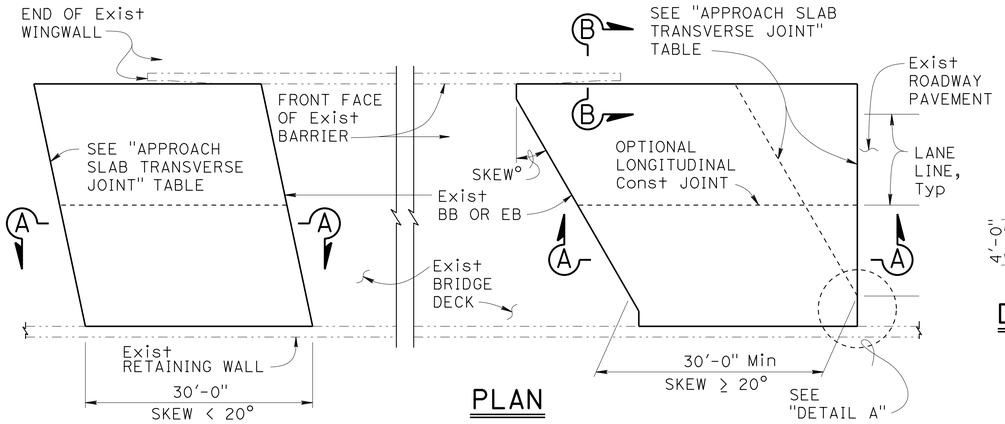


## PLAN
1" = 10'

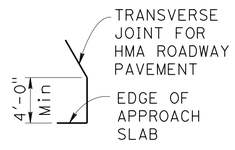


## DETAIL A
No Scale

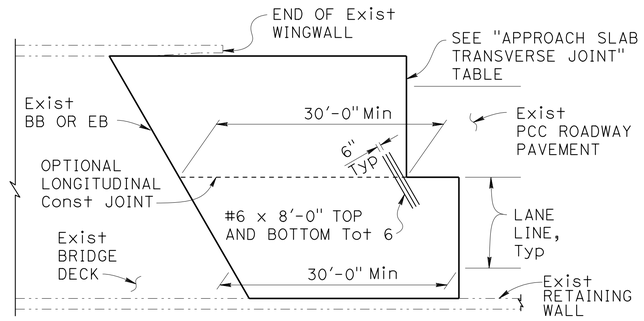


## END STAGGER DETAIL
1" = 10'

| APPROACH SLAB TRANSVERSE JOINT | | |
|---|---|---|
| APPROACH SKEW | WITH HMA ROADWAY PAVEMENT | WITH PCC ROADWAY PAVEMENT |
| < 20° | PARALLEL TO BB OR EB | PARALLEL TO BB OR EB |
| 20° - 45° | PARALLEL TO BB OR EB USE "DETAIL A" | STAGGER AT LANE LINES 24' TO 36' APART, SEE "END STAGGER DETAIL" |
| > 45° | PARALLEL TO BB OR EB USE "DETAIL A" | STAGGER AT EACH LANE LINE, SEE "END STAGGER DETAIL" |

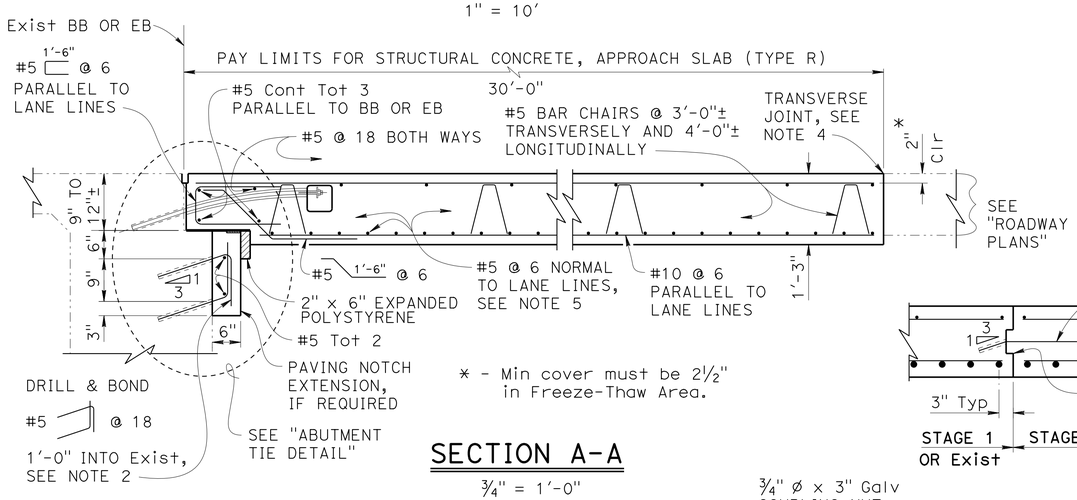


* - Min cover must be 2½" in Freeze-Thaw Area.

## SECTION A-A
¾" = 1'-0"

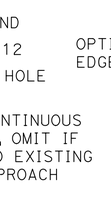


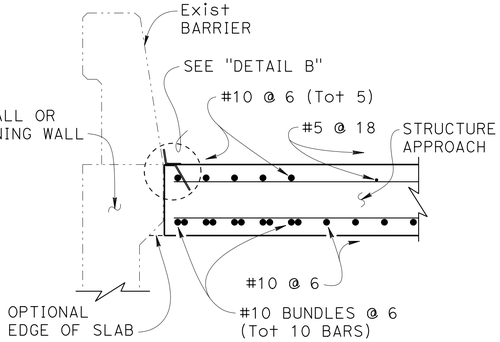


## SECTION B-B
¾" = 1'-0"

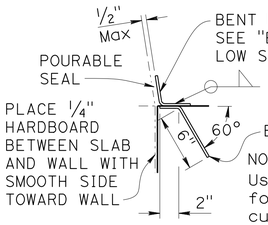


## DETAIL B
1½" = 1'-0"

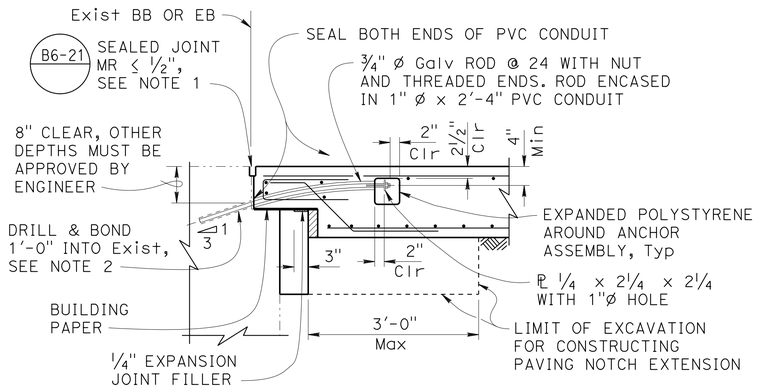


NOTE:
The contractor must verify all controlling field dimensions before ordering or fabricating any material.

NOTE: For details not shown, see "SECTION A-A".

## ABUTMENT TIE DETAIL
¾" = 1'-0"

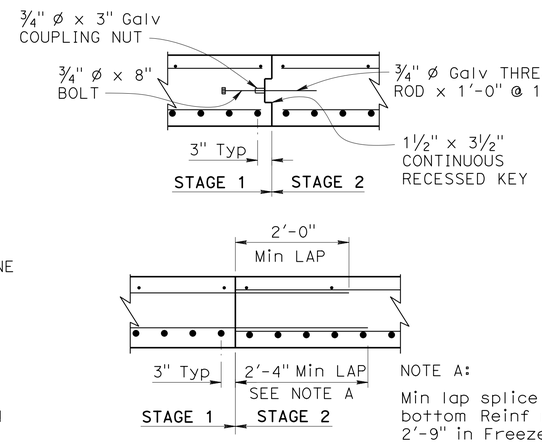


NOTE A:
Min lap splice for bottom Reinf must be 2'-9" in Freeze-Thaw Area.

## LONGITUDINAL CONSTRUCTION JOINT ALTERNATIVES
¾" = 1'-0"

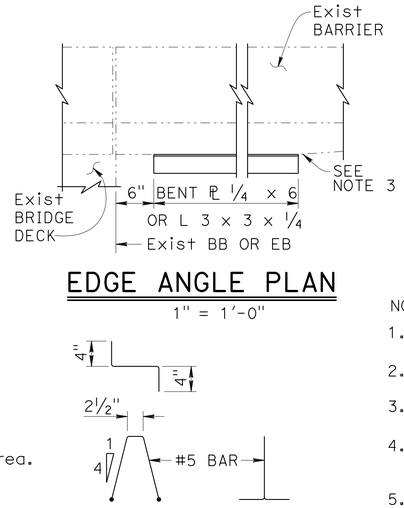


## EDGE ANGLE PLAN
1" = 1'-0"




## BAR CHAIR DETAIL
1" = 1'-0"

## DESIGN NOTES

DESIGN: AASHTO LRFD Bridge Design Specifications, 2012 Edition with Caltrans Amendments, preface dated January 2014

LIMIT STATES: Service I, Strength I & II, Extreme II and Fatigue I ( $\gamma_{FAT}$ = 1.0)

DEAD LOAD: Includes 35 psf for future wearing surface

LIVE LOAD: HL93 and permit design load
Equivalent strip width method: $W_1$ = 12 ft
Slab span: $L_1$ = 24.5 ft

REINFORCED CONCRETE:
$f_y$ = 60 ksi
$f'_c$ = 3.6 ksi
n = 8

NOTES:

1. For details not shown, see other plan sheets. Adjust reinforcement to clear sawcut for sealed joint.
2. Space reinforcement to avoid existing prestress anchorages and other abutment reinforcement.
3. End the plate or edge angle at beginning of barrier transition, end of wingwall, or end of structure approach as applicable.
4. Transverse Joint must be a minimum of 5'-0" from an existing or constructed weakened plane joint in approach PCC roadway pavement. Refer to Standard Plans P10 and P14.
5. At the Contractor's option, approach slab transverse reinforcement may be placed parallel to BB or EB. Spacing of transverse reinforcement is measured along ℄ roadway.

——·—— Indicates Existing Structure

| STANDARD DRAWING | | STATE OF CALIFORNIA DEPARTMENT OF TRANSPORTATION | DIVISION OF ENGINEERING SERVICES | BRIDGE NO. Various | VARIOUS ROUTE 8 BRIDGES |
|---|---|---|---|---|---|
| FILE NO. xs3-150 | APPROVAL DATE January 2015 | | | POST MILE Various | STRUCTURE APPROACH TYPE R (30D) |

DS OSD 2147A (ENGLISH STANDARD DRAWING "XS" BORDER REV. (10-01-14)

ORIGINAL SCALE IN INCHES FOR REDUCED PLANS 0 1 2 3

UNIT: 3621
PROJECT NUMBER & PHASE: 1114000006 - 1 CONTRACT NO.: 11-416904

DISREGARD PRINTS BEARING EARLIER REVISION DATES

| REVISION DATES | | | SHEET | OF |
|---|---|---|---|---|
| 09-12-14 | | 02-12-15 02-23-15 | 5 | 5 |

FILE => 58-0306rl-s-sa-r(30d).dgn

USERNAME => s1127400 DATE PLOTTED => 03-SEP-2015 TIME PLOTTED => 14:41