Dist	COUNTY	ROUTE	POST MILES TOTAL PROJECT	SHEET No.	TOTAL SHEETS
11	SD	5	R58.1/R72.4	1	259

STATE OF CALIFORNIA

DEPARTMENT OF TRANSPORTATION

ACNHPI-005-1(627)E

PROJECT PLANS FOR CONSTRUCTION ON

STATE HIGHWAY

IN SAN DIEGO COUNTY NEAR OCEANSIDE FROM COCKLEBURR OVERCROSSING TO THE SAN DIEGO COUNTY LINE

TO BE SUPPLEMENTED BY STANDARD PLANS DATED 2010

INDEX OF PLANS

SHEET No.	DESCRIPTION
1	TITLE AND LOCATION MAP
2-7	TYPICAL CROSS SECTIONS
8	PROJECT CONTROL
9-65	LAYOUTS
66-97	CONSTRUCTION DETAILS
98-121	DRAINAGE PLANS, PROFILES, DETAILS AND QUANTITIES
122-152	UTILITY PLANS
153	CONSTRUCTION AREA SIGNS
154-165	TRAFFIC HANDLING PLANS, DETAILS AND QUANTITIES
166-186	PAVEMENT DELINEATION DETAILS AND QUANTITIES
187-198	SIGN PLANS, DETAILS AND QUANTITIES
199-227	SUMMARY OF QUANTITIES
228	EROSION CONTROL LEGEND, DETAILS AND QUANTITIES
229-233	ELECTRICAL PLANS
234-253	REVISED STANDARD PLANS
STRUCTURE PLANS	
254-256	GENERAL PLAN
257	STRUCTURE APPROACH & JOINT SEAL DETAILS
258	STRUCTURE APPROACH TYPE R(30D)
259	STRUCTURE APPROACH TYPE R(30S)

THE STANDARD PLANS LIST APPLICABLE TO THIS CONTRACT IS INCLUDED IN THE NOTICE TO BIDDERS AND SPECIAL PROVISIONS BOOK.

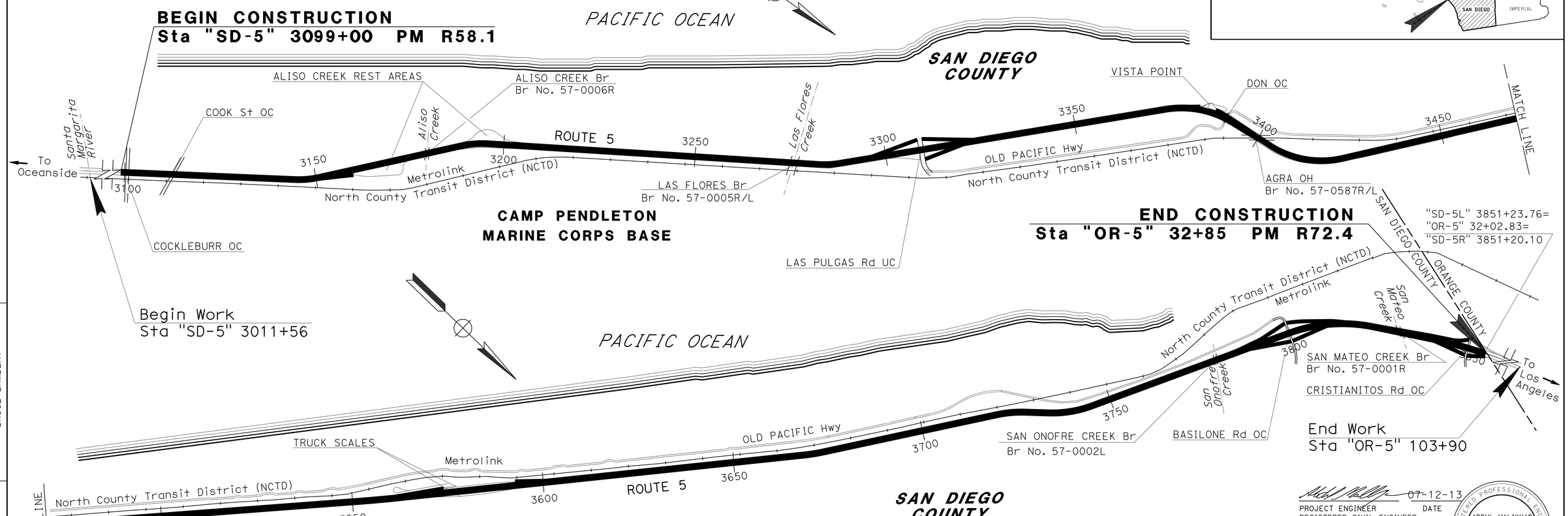

PROJECT MANAGER: BRUCE LAMBERT

DESIGN ENGINEER: ABDUL MALIKYAR

07-12-13

PROJECT ENGINEER REGISTERED CIVIL ENGINEER — DATE

November 4, 2013

PLANS APPROVAL DATE

REGISTERED PROFESSIONAL ENGINEER — ABDUL MALIKYAR — No. C66169 — Exp. 06-30-14 — CIVIL — STATE OF CALIFORNIA

THE STATE OF CALIFORNIA OR ITS OFFICERS OR AGENTS SHALL NOT BE RESPONSIBLE FOR THE ACCURACY OR COMPLETENESS OF SCANNED COPIES OF THIS PLAN SHEET.

THE CONTRACTOR SHALL POSSESS THE CLASS (OR CLASSES) OF LICENSE AS SPECIFIED IN THE "NOTICE TO BIDDERS."

NO SCALE

CONTRACT No.	11-406704
PROJECT ID	1100020342

LAST REVISION 07-16-13 — DATE PLOTTED => 31-OCT-2013 — TIME PLOTTED => 15:21

Dist	COUNTY	ROUTE	POST MILES TOTAL PROJECT	SHEET No.	TOTAL SHEETS
11	SD	5	R58.1/R72.4	2	259

REGISTERED CIVIL ENGINEER 07-12-13 DATE

11-04-13
PLANS APPROVAL DATE

REGISTERED PROFESSIONAL ENGINEER ABDUL MALIKYAR No. C66169 Exp. 06-30-14 CIVIL STATE OF CALIFORNIA

THE STATE OF CALIFORNIA OR ITS OFFICERS OR AGENTS SHALL NOT BE RESPONSIBLE FOR THE ACCURACY OR COMPLETENESS OF SCANNED COPIES OF THIS PLAN SHEET.

NOTES:

1. DIMENSIONS OF THE PAVEMENT STRUCTURES (STRUCTURAL SECTIONS) ARE SUBJECT TO TOLERANCES SPECIFIED IN THE STANDARD SPECIFICATIONS.
2. FOG SEAL COAT SHALL BE APPLIED TO ALL HMA SURFACES EXCEPT TRAVELED WAYS.
3. * = 1.0′ DEPTH OF IMPORTED BORROW.
4. FOR LOCATIONS AND TYPE OF DIKE, SEE LAYOUT SHEETS.
5. FOR LOCATIONS OF UNDERDRAINS AND GORE AREAS, SEE LAYOUT SHEETS.
6. FOR LOCATIONS OF INDIVIDUAL SLAB REPLACEMENTS SEE LAYOUT SHEETS. FOR LOCATIONS OF GRIND PCC PAVEMENTS, SEE LAYOUT SHEETS AND CONSTRUCTION DETAILS.
7. FOR REPAIR SPALL JOINT SEE CONSTRUCTION DETAILS AND SUMMARY OF QUANTITIES SHEETS.
8. ** = COLD PLANE ENTIRE Shld (NOT SHOWN FOR CLARITY).

ABBREVIATIONS:

S/L SAWCUT LINE
SSDL SUBSURFACE DRAINAGE LAYER

DESIGN DESIGNATION

ROUTE 5, NORTHBOUND AND SOUTHBOUND
(PM R58.1-R72.4)

ADT (2010)	127,800
ADT (2018)	144,000
ADT (2038)	185,400
DHV	8,680
D	53%
T	7%
V	65 MPH

PAVEMENT CLIMATE REGION

SOUTH COAST

LEGEND:

1	0.75 INDIVIDUAL SLAB REPLACEMENT(RAPID STRENGTH CONCRETE) 0.50 LEAN CONCRETE BASE RAPID SETTING
1A	0.90′ PRECAST PRESTRESSED CONCRETE PAVEMENT(SEE Const DETAILS) 0.35′ LEAN CONCRETE BASE RAPID SETTING
2	0.75′ HMA (TYPE A) 1.25′ AB-CLASS 2
3	1.25′ HMA (TYPE A)
4	COLD PLANE AC (0.15′ Max) 0.15′ HMA (TYPE A)
5	COLD PLANE AC (0.15′ Max) 0.15′ RUBBERIZED HMA(GAP GRADED)
6	0.95′ JOINTED PLAIN CONCRETE PAVEMENT (RAPID STRENGTH CONCRETE) 0.35′ RAPID STRENGTH CONCRETE BASE
7	0.35′ HMA (TYPE A)

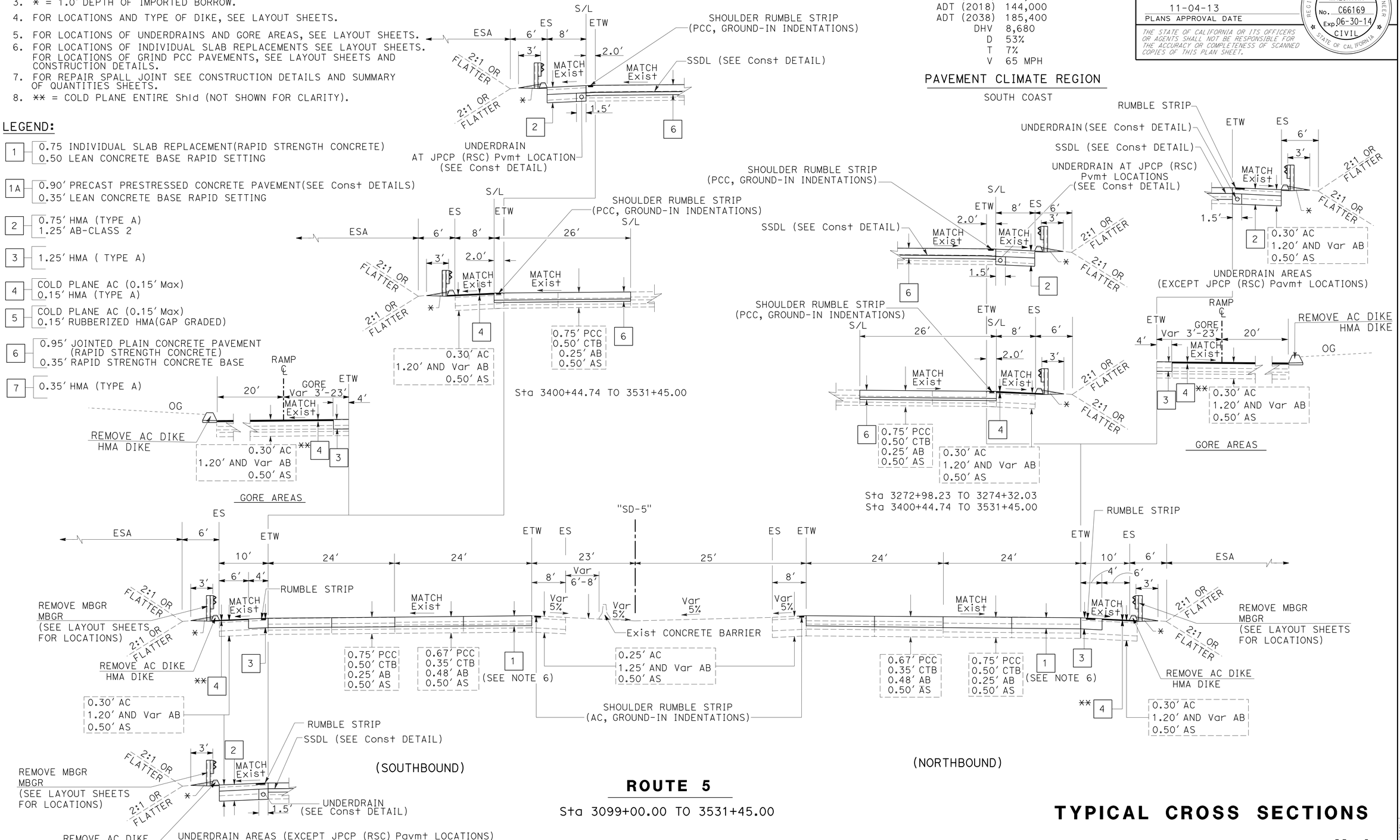

ROUTE 5

Sta 3099+00.00 TO 3531+45.00

TYPICAL CROSS SECTIONS

NO SCALE

X-1

STATE OF CALIFORNIA - DEPARTMENT OF TRANSPORTATION
DESIGN
FUNCTIONAL SUPERVISOR: EDWARD HAJJ
CALCULATED-DESIGNED BY: ABDUL MALIKYAR
CHECKED BY: HECTOR GRACIA
REVISED BY / DATE REVISED

LAST REVISION 07-22-13 | DATE PLOTTED => 31-OCT-2013 | TIME PLOTTED => 15:21

Dist	COUNTY	ROUTE	POST MILES TOTAL PROJECT	SHEET No.	TOTAL SHEETS
11	SD	5	R58.1/R72.4	3	259

07-12-13
REGISTERED CIVIL ENGINEER DATE

11-04-13
PLANS APPROVAL DATE

REGISTERED PROFESSIONAL ENGINEER ABDUL MALIKYAR No. C66169 Exp. 06-30-14 CIVIL STATE OF CALIFORNIA

THE STATE OF CALIFORNIA OR ITS OFFICERS OR AGENTS SHALL NOT BE RESPONSIBLE FOR THE ACCURACY OR COMPLETENESS OF SCANNED COPIES OF THIS PLAN SHEET.

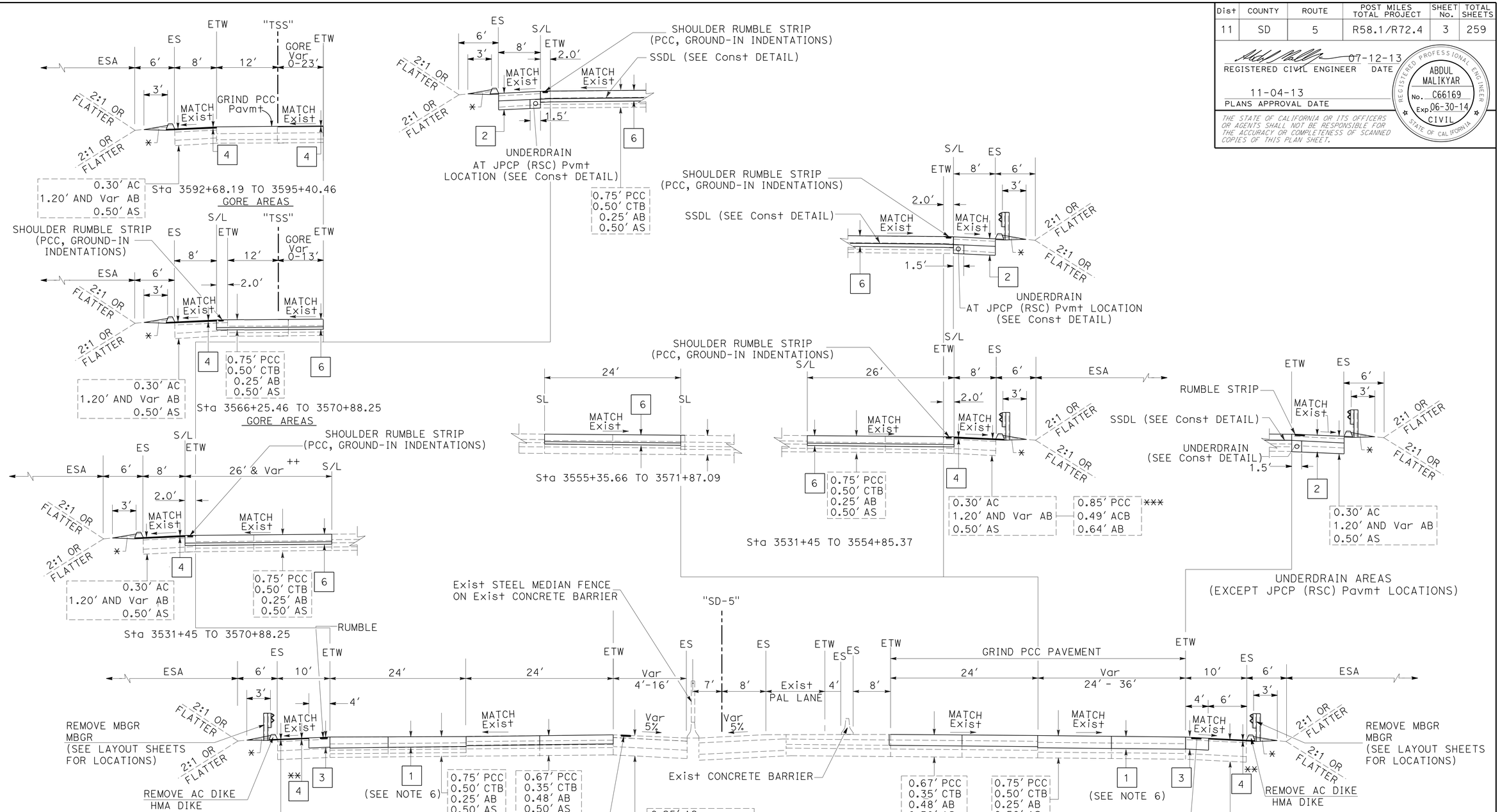

++ - VARIES 26.5′-52.2′ FROM Sta 3545+70.4 TO 3570+88.3

*** - FROM Sta 3545+50.00 TO 3554+85.37

TYPICAL CROSS SECTIONS

NO SCALE

X-2

STATE OF CALIFORNIA - DEPARTMENT OF TRANSPORTATION
Caltrans® DESIGN

FUNCTIONAL SUPERVISOR: EDWARD HAJJ
CALCULATED-DESIGNED BY: ABDUL MALIKYAR
CHECKED BY: HECTOR GRACIA
REVISED BY / DATE REVISED

LAST REVISION 07-22-13 | DATE PLOTTED => 31-OCT-2013 | TIME PLOTTED => 15:21

Dist	COUNTY	ROUTE	POST MILES TOTAL PROJECT	SHEET No.	TOTAL SHEETS
11	SD	5	R58.1/R72.4	4	259

07-12-13
REGISTERED CIVIL ENGINEER DATE

11-04-13
PLANS APPROVAL DATE

REGISTERED PROFESSIONAL ENGINEER
ABDUL MALIKYAR
No. C66169
Exp. 06-30-14
CIVIL
STATE OF CALIFORNIA

THE STATE OF CALIFORNIA OR ITS OFFICERS OR AGENTS SHALL NOT BE RESPONSIBLE FOR THE ACCURACY OR COMPLETENESS OF SCANNED COPIES OF THIS PLAN SHEET.

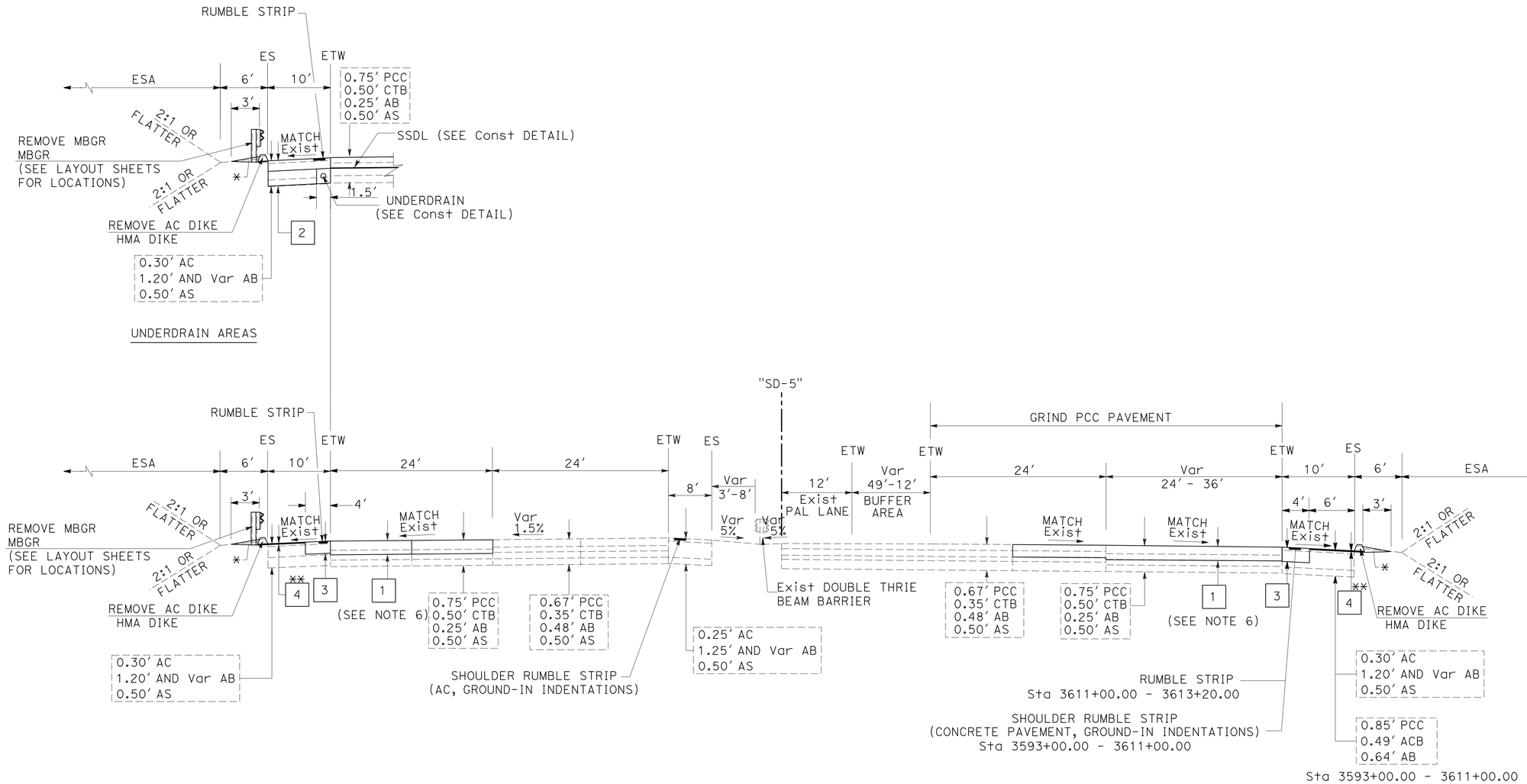

"SD-5" LINE

(SOUTHBOUND) Sta 3593+00.00 TO 3613+20.00 (NORTHBOUND)

TYPICAL CROSS SECTIONS

NO SCALE

X-3

STATE OF CALIFORNIA - DEPARTMENT OF TRANSPORTATION
Caltrans®
DESIGN

FUNCTIONAL SUPERVISOR: EDWARD HAJJ
CALCULATED-DESIGNED BY: ABDUL MALIKYAR
CHECKED BY: HECTOR GRACIA
REVISED BY
DATE REVISED

LAST REVISION 07-22-13
DATE PLOTTED => 31-OCT-2013
TIME PLOTTED => 15:21

Dist	COUNTY	ROUTE	POST MILES TOTAL PROJECT	SHEET No.	TOTAL SHEETS
11	SD	5	R58.1/R72.4	5	259

07-12-13
REGISTERED CIVIL ENGINEER DATE

11-04-13
PLANS APPROVAL DATE

REGISTERED PROFESSIONAL ENGINEER ABDUL MALIKYAR No. C66169 Exp. 06-30-14 CIVIL STATE OF CALIFORNIA

THE STATE OF CALIFORNIA OR ITS OFFICERS OR AGENTS SHALL NOT BE RESPONSIBLE FOR THE ACCURACY OR COMPLETENESS OF SCANNED COPIES OF THIS PLAN SHEET.

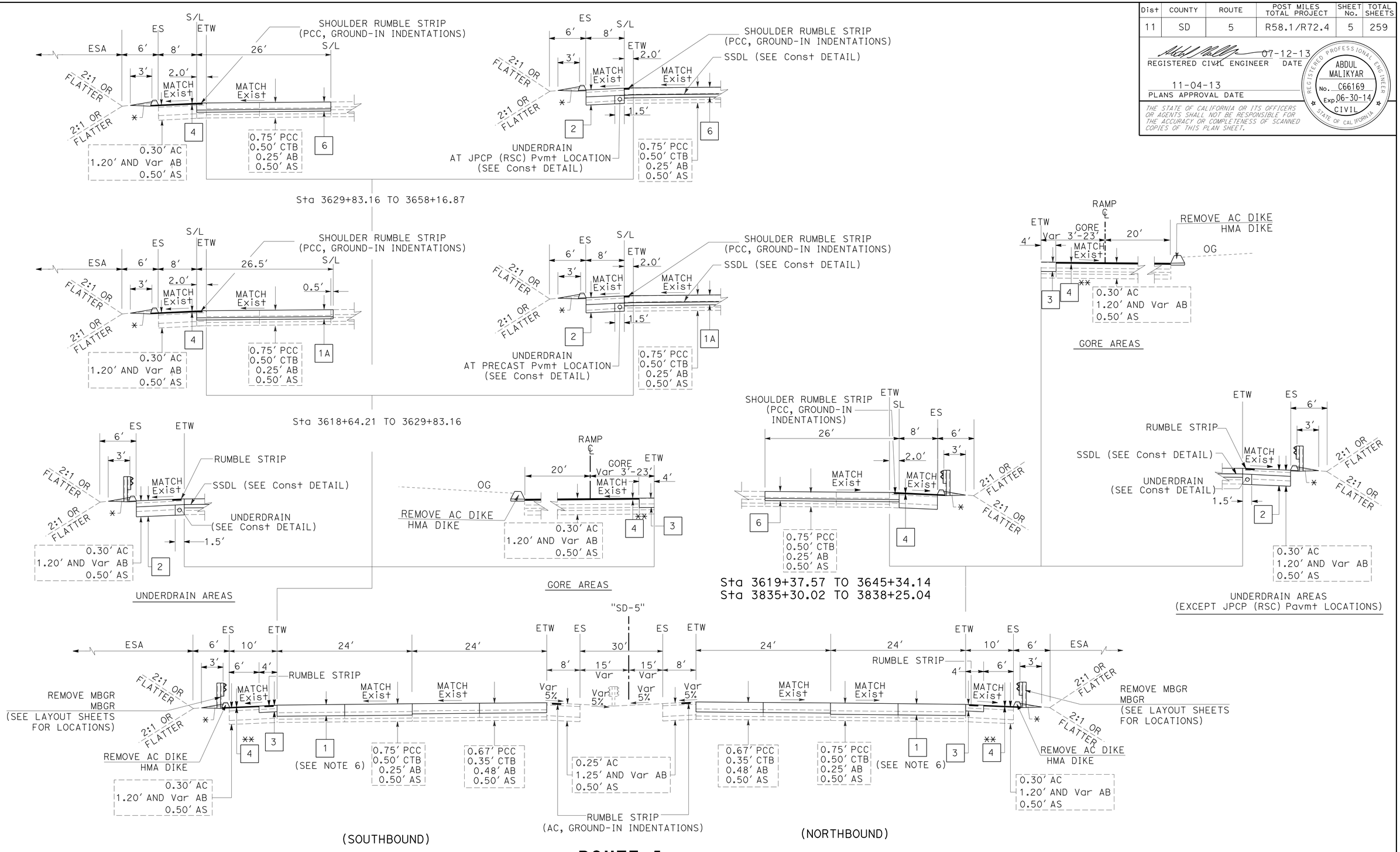

ROUTE 5

Sta 3613+20.00 TO 3838+25.04

TYPICAL CROSS SECTIONS

NO SCALE

X-4

STATE OF CALIFORNIA - DEPARTMENT OF TRANSPORTATION
Caltrans®
DESIGN
FUNCTIONAL SUPERVISOR: EDWARD HAJJ
CALCULATED-DESIGNED BY: ABDUL MALIKYAR
CHECKED BY: HECTOR GRACIA
REVISED BY
DATE REVISED

LAST REVISION 07-22-13
DATE PLOTTED => 31-OCT-2013
TIME PLOTTED => 15:21

Dist	COUNTY	ROUTE	POST MILES TOTAL PROJECT	SHEET No.	TOTAL SHEETS
11	SD	5	R58.1/R72.4	6	259

REGISTERED CIVIL ENGINEER 07-12-13 DATE

11-04-13
PLANS APPROVAL DATE

REGISTERED PROFESSIONAL ENGINEER ABDUL MALIKYAR No. C66169 Exp. 06-30-14 CIVIL STATE OF CALIFORNIA

THE STATE OF CALIFORNIA OR ITS OFFICERS OR AGENTS SHALL NOT BE RESPONSIBLE FOR THE ACCURACY OR COMPLETENESS OF SCANNED COPIES OF THIS PLAN SHEET.

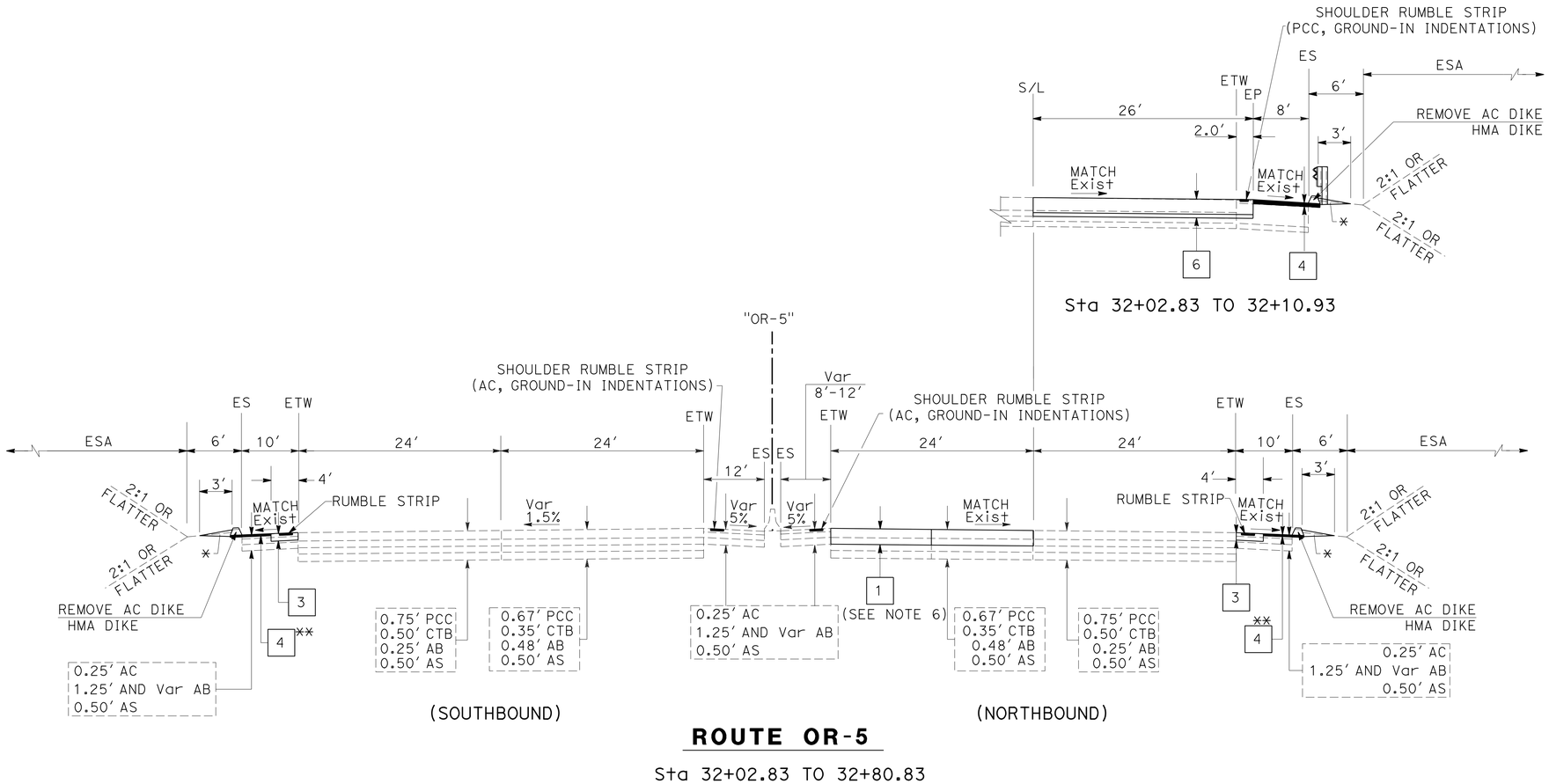

ROUTE OR-5

Sta 32+02.83 TO 32+80.83

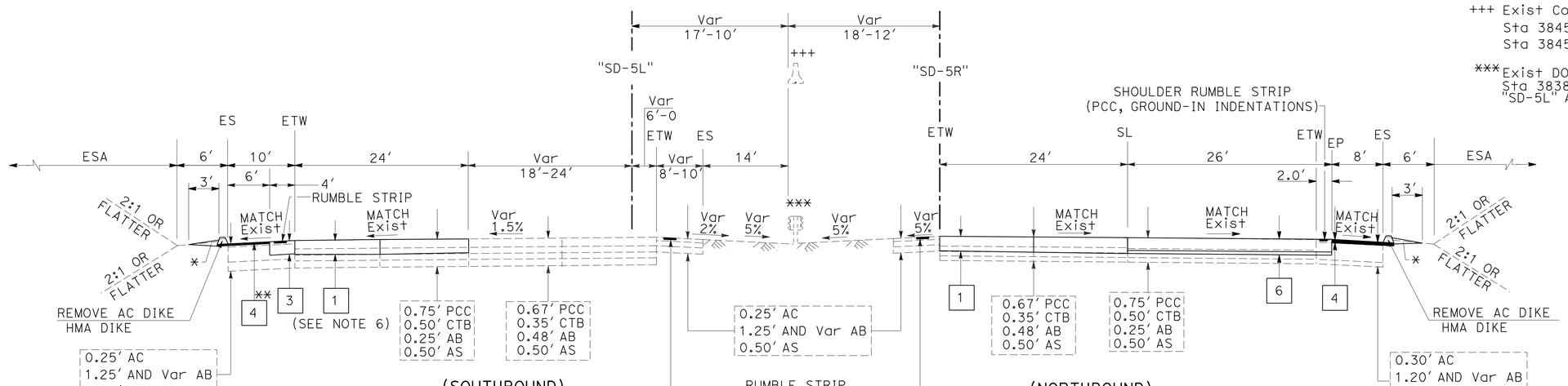

+++ Exist Conc BARRIER
Sta 3845+72.90 TO 3851+23.76 "SD-5L"
Sta 3845+72.90 TO 3851+23.10 "SD-5R"

*** Exist DOUBLE THRIE BEAM BARRIER
Sta 3838+25.04 TO 3845+72.90
"SD-5L" AND "SD-5R"

"SD-5L" LINE

Sta 3838+25.04 TO 3851+23.76

"SD-5R" LINE

Sta 3838+25.04 TO 3851+20.10

TYPICAL CROSS SECTIONS

NO SCALE

X-5

REVISED BY | DATE REVISED
ABDUL MALIKYAR | HECTOR GRACIA
CALCULATED-DESIGNED BY | CHECKED BY
FUNCTIONAL SUPERVISOR
EDWARD HAJJ

STATE OF CALIFORNIA - DEPARTMENT OF TRANSPORTATION
Caltrans
DESIGN

LAST REVISION | DATE PLOTTED => 31-OCT-2013
07-22-13 | TIME PLOTTED => 15:21

Dist	COUNTY	ROUTE	POST MILES TOTAL PROJECT	SHEET No.	TOTAL SHEETS
11	SD	5	R58.1/R72.4	7	259

07-12-13
REGISTERED CIVIL ENGINEER DATE

11-04-13
PLANS APPROVAL DATE

REGISTERED PROFESSIONAL ENGINEER
ABDUL MALIKYAR
No. C66169
Exp. 06-30-14
CIVIL
STATE OF CALIFORNIA

THE STATE OF CALIFORNIA OR ITS OFFICERS OR AGENTS SHALL NOT BE RESPONSIBLE FOR THE ACCURACY OR COMPLETENESS OF SCANNED COPIES OF THIS PLAN SHEET.

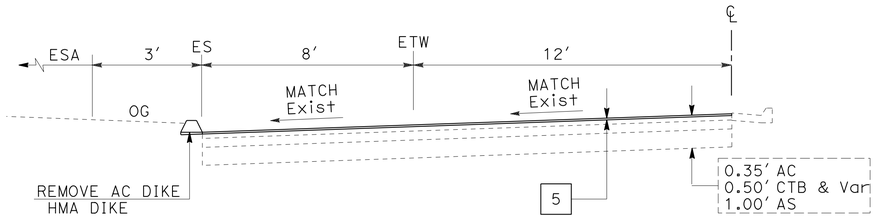

LAS PULGAS Rd OFFRAMP

STA 3309+43.87 TO 3319+00.00 "LPR-4" LINE

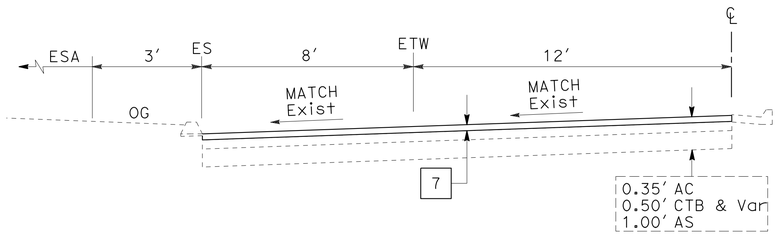

LAS PULGAS Rd ONRAMP

STA 3299+81.57 TO 3309+36.33 "LPR-3" LINE

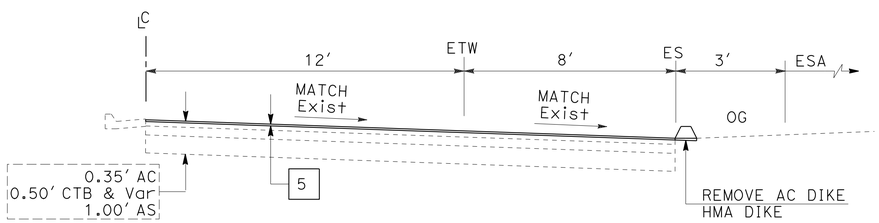

LAS PULGAS Rd ONRAMP

STA 3309+97.92 TO 3320+49.94 "LPR-1" LINE

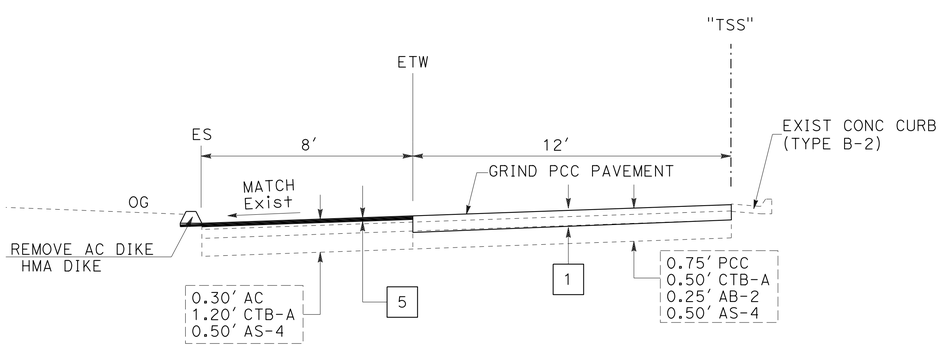

"TSS" LINE

STA 3570+92.62 TO 3575+00.00

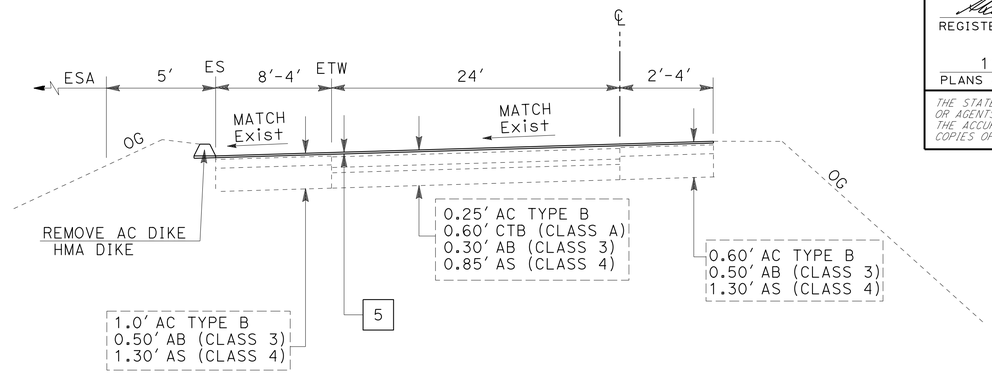

CRISTIANITOS Rd ONRAMP AND OFFRAMP

STA 3840+62.97 TO 3847+28.80 "AR1" LINE
STA 3842+50.00 TO 3847+60.00 "AR2" LINE
STA 28+42.06 TO 34+50.00 "AR4" LINE

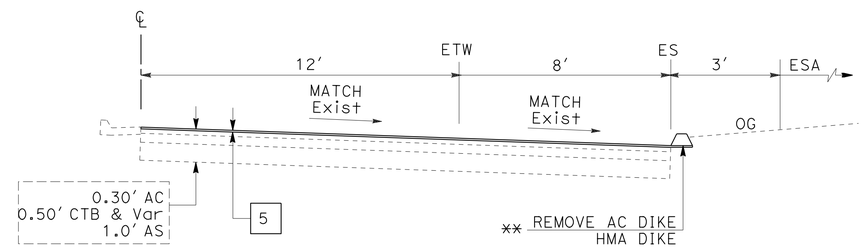

STA 3800+27.69 TO 3808+38.63 "R1" LINE
STA 3791+54.13 TO 3799+77.59 "R2" LINE

BASILONE Rd ONRAMP AND OFFRAMP

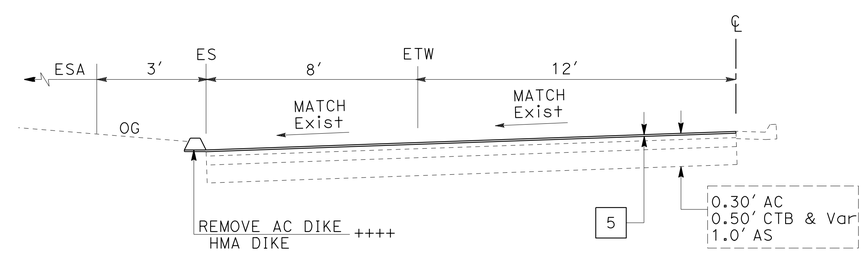

BASILONE Rd ONRAMP AND OFFRAMP

STA 3791+44.69 TO 3799+79.32 "R3" LINE
STA 3799+40.41 TO 3808+00.00 "R4" LINE

(++++ - DIKE FROM 3799+40.41 TO 3799+90.00 "R4" LINE)

TYPICAL CROSS SECTIONS

NO SCALE

X-6

STATE OF CALIFORNIA - DEPARTMENT OF TRANSPORTATION
DESIGN
Caltrans

FUNCTIONAL SUPERVISOR: EDWARD HAJJ
CALCULATED-DESIGNED BY: ABDUL MALIKYAR
CHECKED BY: HECTOR GRACIA
REVISED BY
DATE REVISED

LAST REVISION 07-22-13
DATE PLOTTED => 31-OCT-2013
TIME PLOTTED => 15:21

Dist	COUNTY	ROUTE	POST MILES TOTAL PROJECT	SHEET No.	TOTAL SHEETS
11	SD	5	R58.1/R72.4	8	259

George J. Schuh 07-15-13
PROFESSIONAL LAND SURVEYOR DATE

11-04-13
PLANS APPROVAL DATE

PROFESSIONAL LAND SURVEYOR GEORGE J. SCHUH L.S. 7121 Exp. 12/31/2014 STATE OF CALIFORNIA

THE STATE OF CALIFORNIA OR ITS OFFICERS OR AGENTS SHALL NOT BE RESPONSIBLE FOR THE ACCURACY OR COMPLETENESS OF SCANNED COPIES OF THIS PLAN SHEET.

NOTES:

FOR COMPLETE PROJECT CONTROL AND MONUMENTATION DATA, SEE THE SURVEY RECORDS ON FILE AT DISTRICT 11 SURVEYS.

BASIS OF BEARINGS AND COORDINATES

FOR THIS PROJECT IS THE CALIFORNIA COORDINATE SYSTEM OF 1983 NSRS (2007) ZONE 6. PROJECT CONTROL STATIONS WERE ESTABLISHED ACCORDING TO CRITERIA SET FORTH IN THE FEDERAL GEODETIC CONTROL SUBCOMMITTEE'S "GEOMETRIC GEODETIC ACCURACY STANDARDS AND SPECIFICATIONS FOR USING GPS RELATIVE POSITIONING TECHNIQUES" REPRINTED AUGUST 1, 1989.

BASIS OF ELEVATIONS

FOR THIS PROJECT IS THE NORTH AMERICAN VERTICAL DATUM OF 1988 (NAVD88 CGPS). ELEVATIONS WERE ESTABLISHED BY GPS FAST STATIC SURVEY.

ABBREVIATIONS:

CADT	CALIFORNIA DEPARTMENT OF TRANSPORTATION
CDH	CALIFORNIA DIVISION OF HIGHWAYS
USC&GS	UNITED STATES COASTAL AND GEODETIC SURVEY
CGPS	CONTINUOUS GLOBAL POSITIONING SYSTEM

LEGEND:

(1) 1ST ORDER STATION

CONTROL FOR DESIGN AND CONSTRUCTION

STATION DESIGNATION	ORDER	NORTHING	EASTING	ELEVATION	DESCRIPTION
5-59.9	1ST	2045055.77	6197263.34	78.89	2-1/4" CADT BRASS DISK
5-61.1	1ST	2050414.28	6193744.42	72.23	2-1/4" CADT BRASS DISK
5-62.26	1ST	2055213.28	6189986.38	94.08	2-1/4" CDH BRASS DISK
5-63.59	1ST	2060234.16	6185032.65	152.28	2-1/4" CADT BRASS DISK
5-65.1	1ST	2066424.74	6180964.28	180.77	2-1/4" CADT BRASS DISK
5-66.85	1ST	2072664.24	6173927.65	173.84	2-1/4" CADT BRASS DISK
5-69.1	1ST	2079988.87	6164947.74	120.69	2-1/4" CADT BRASS DISK
5-72.3	1ST	2090051.94	6151606.76	113.57	2-1/4" CADT BRASS DISK
E 131	1ST	2039623.27	6202107.83	65.73	3-1/2" USC&GS BM DISK
SDGPS 01 AZ	1ST	2085766.22	6154794.67	78.32	SAN DIEGO CO. ENGINEER DISK
SAN DIEGO GPS 01	1ST	2082714.72	6160179.58	96.88	SAN DIEGO CO. ENGINEER DISK

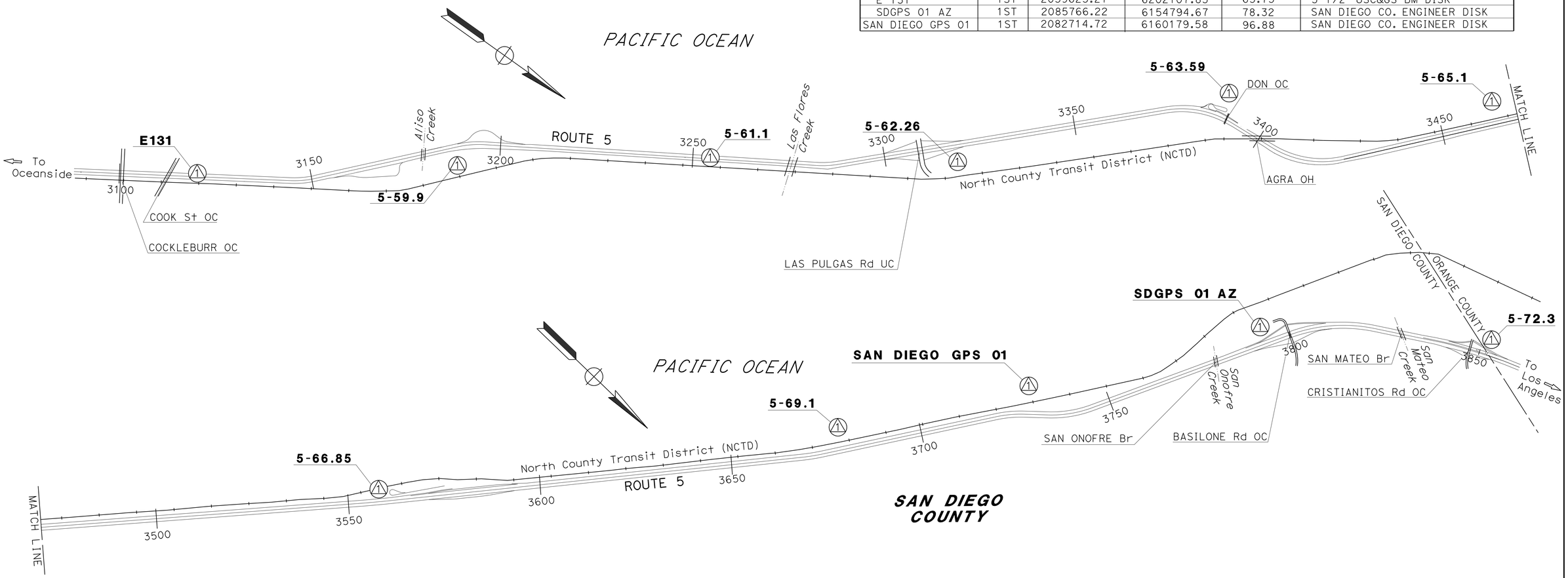

PROJECT CONTROL

NO SCALE

PC-1

APPROVED FOR PROJECT CONTROL INFORMATION ONLY

STATE OF CALIFORNIA - DEPARTMENT OF TRANSPORTATION
Caltrans® LAND SURVEYS DIVISION

FUNCTIONAL SUPERVISOR: BRUCE URQUHART
DESIGNED-DRAWN BY: ANDREW SUI / GEORGE SCHUH
CHECKED BY
REVISED BY
DATE REVISED

LAST REVISION 07-22-13
DATE PLOTTED => 04-NOV-2013
TIME PLOTTED => 09:42

Dist	COUNTY	ROUTE	POST MILES TOTAL PROJECT	SHEET No.	TOTAL SHEETS
11	SD	5	R58.1/R72.4	9	259

07-12-13
REGISTERED CIVIL ENGINEER DATE

11-04-13
PLANS APPROVAL DATE

REGISTERED PROFESSIONAL ENGINEER
ABDUL MALIKYAR
No. C66169
Exp. 06-30-14
CIVIL
STATE OF CALIFORNIA

THE STATE OF CALIFORNIA OR ITS OFFICERS OR AGENTS SHALL NOT BE RESPONSIBLE FOR THE ACCURACY OR COMPLETENESS OF SCANNED COPIES OF THIS PLAN SHEET.

NOTES:

1. FOR ACCURATE RIGHT OF WAY DATA, CONTACT RIGHT OF WAY ENGINEERING AT THE DISTRICT OFFICE.
2. SEE CONSTRUCTION DETAILS FOR MODIFIED HMA OVERSIDE DRAINS AND HMA GUTTER FLARES WITH Temp FIBER ROLLS.

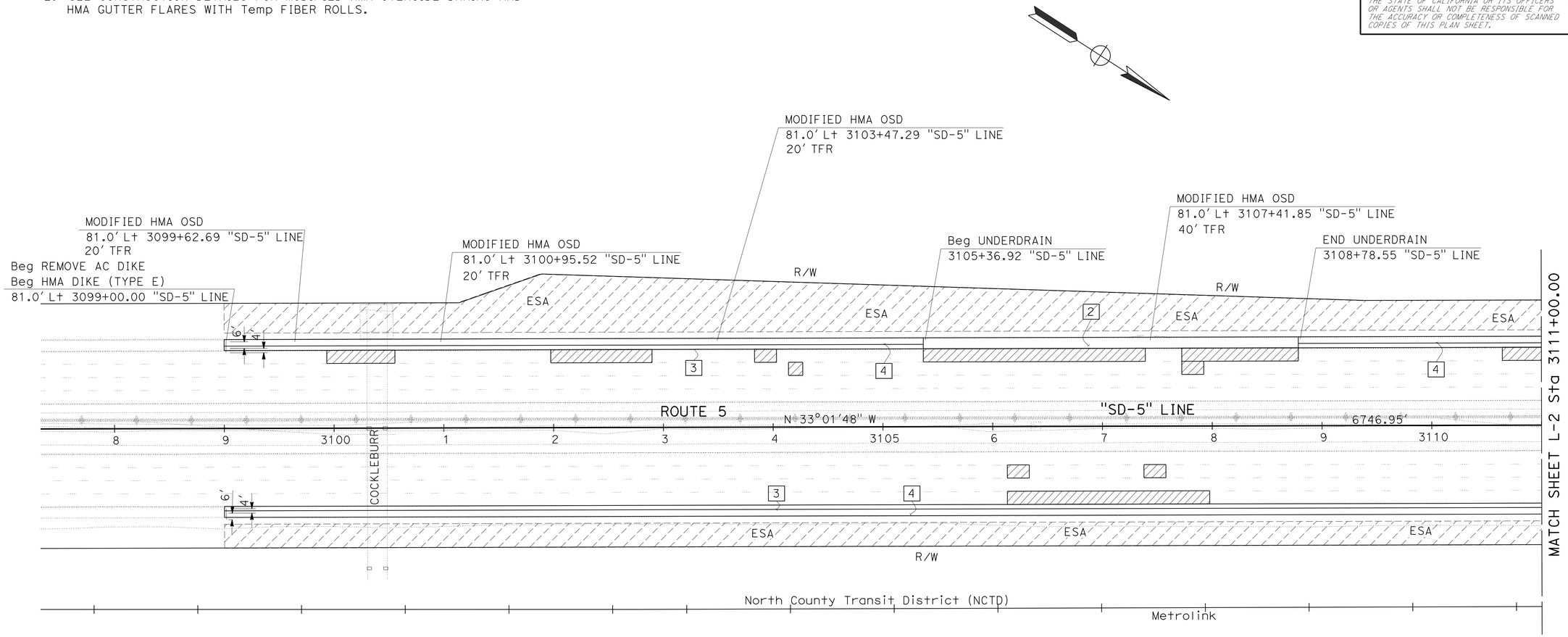

LEGEND:

	STRUCTURAL SECTION 1 (SEE TYPICAL CROSS SECTIONS)
	STRUCTURAL SECTION 1A (SEE TYPICAL CROSS SECTIONS)
	STRUCTURAL SECTION 6 (SEE TYPICAL CROSS SECTIONS)
	PAVEMENT JACKING
X	STRUCTURAL SECTION (SEE TYPICAL CROSS SECTIONS)
TFR	TEMPORARY FIBER ROLL
	PROPOSED AREA FOR CONTRACTOR USE
	CLEARING AND GRUBBING

LAYOUT

SCALE 1" = 50'

L-1

STATE OF CALIFORNIA - DEPARTMENT OF TRANSPORTATION
Caltrans
DESIGN

FUNCTIONAL SUPERVISOR: EDWARD HAJJ
CALCULATED-DESIGNED BY: ABDUL MALIKYAR
CHECKED BY: HECTOR GRACIA
REVISED BY
DATE REVISED

LAST REVISION 10-23-13
DATE PLOTTED => 04-NOV-2013
TIME PLOTTED => 09:42

Dist	COUNTY	ROUTE	POST MILES TOTAL PROJECT	SHEET No.	TOTAL SHEETS
11	SD	5	R58.1/R72.4	10	259

07-12-13
REGISTERED CIVIL ENGINEER DATE

11-04-13
PLANS APPROVAL DATE

REGISTERED PROFESSIONAL ENGINEER
ABDUL MALIKYAR
No. C66169
Exp. 06-30-14
CIVIL
STATE OF CALIFORNIA

THE STATE OF CALIFORNIA OR ITS OFFICERS OR AGENTS SHALL NOT BE RESPONSIBLE FOR THE ACCURACY OR COMPLETENESS OF SCANNED COPIES OF THIS PLAN SHEET.

NOTE:

1. FOR ACCURATE RIGHT OF WAY DATA, CONTACT RIGHT OF WAY ENGINEERING AT THE DISTRICT OFFICE.

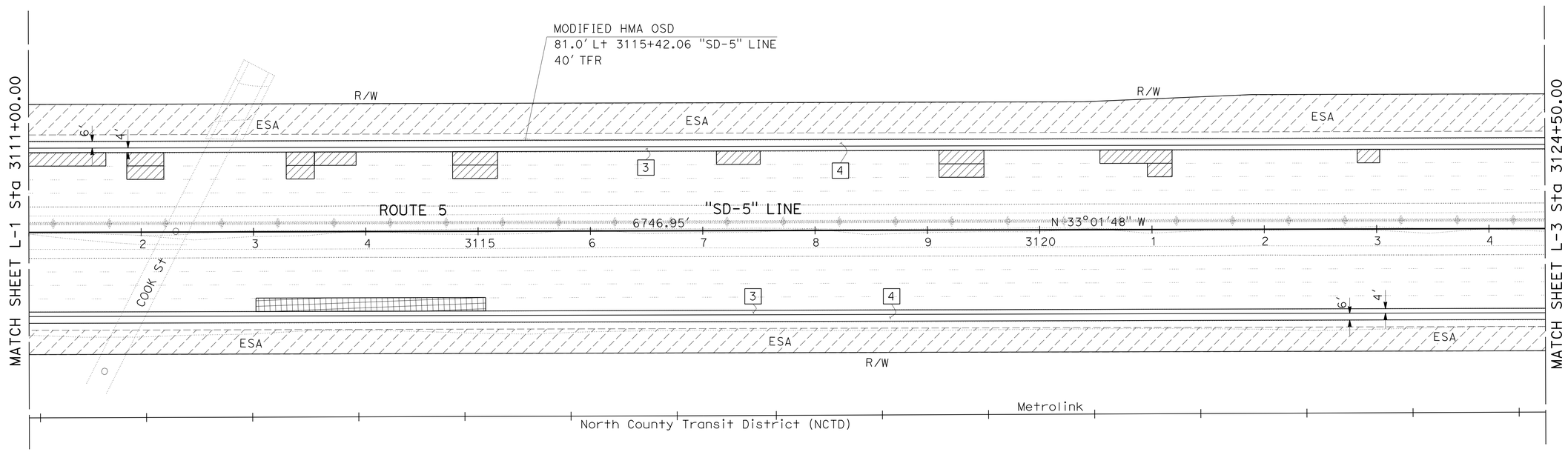

LAYOUT

SCALE 1"= 50'

L-2

REVISED BY	DATE REVISED
ABDUL MALIKYAR	HECTOR GRACIA
CALCULATED-DESIGNED BY	CHECKED BY
FUNCTIONAL SUPERVISOR	EDWARD HAJJ

STATE OF CALIFORNIA - DEPARTMENT OF TRANSPORTATION
Caltrans
DESIGN

LAST REVISION 07-22-13
DATE PLOTTED => 31-OCT-2013
TIME PLOTTED => 15:21

Dist	COUNTY	ROUTE	POST MILES TOTAL PROJECT	SHEET No.	TOTAL SHEETS
11	SD	5	R58.1/R72.4	11	259

07-12-13
REGISTERED CIVIL ENGINEER DATE

11-04-13
PLANS APPROVAL DATE

REGISTERED PROFESSIONAL ENGINEER
ABDUL MALIKYAR
No. C66169
Exp. 06-30-14
CIVIL
STATE OF CALIFORNIA

THE STATE OF CALIFORNIA OR ITS OFFICERS OR AGENTS SHALL NOT BE RESPONSIBLE FOR THE ACCURACY OR COMPLETENESS OF SCANNED COPIES OF THIS PLAN SHEET.

NOTE:

1. FOR ACCURATE RIGHT OF WAY DATA, CONTACT RIGHT OF WAY ENGINEERING AT THE DISTRICT OFFICE.

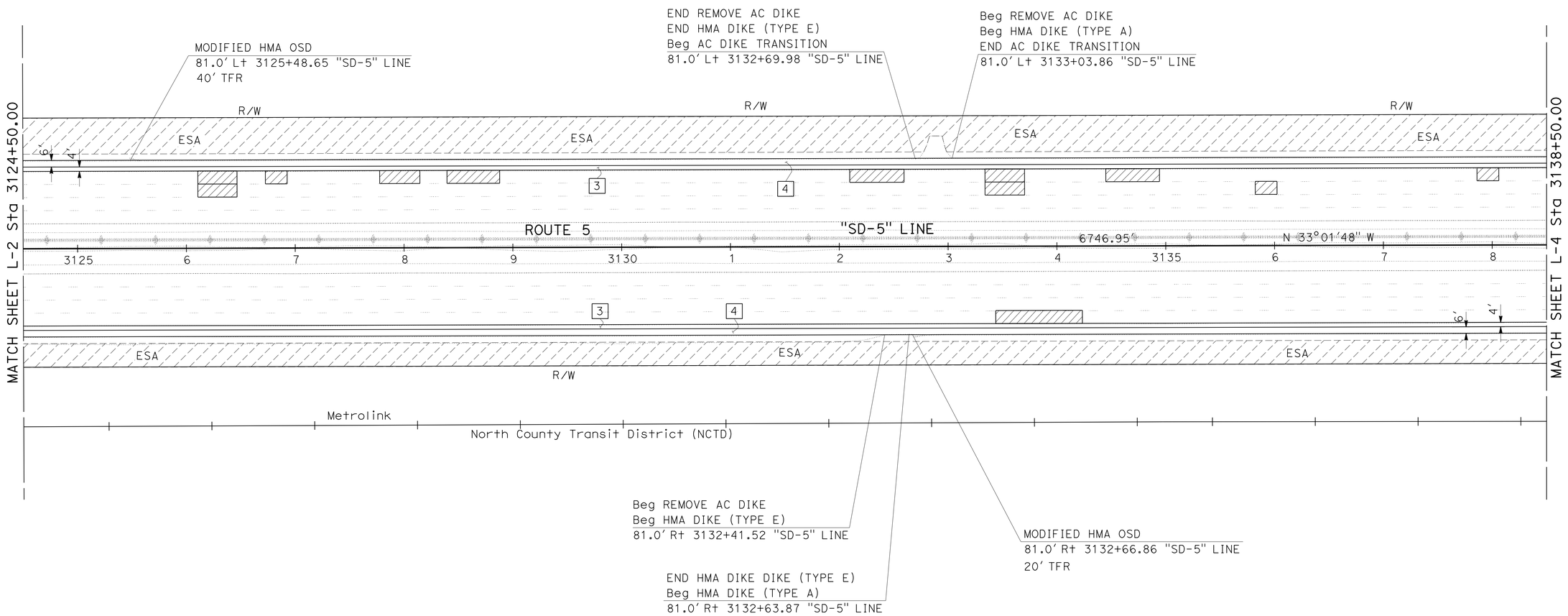

LAYOUT

SCALE 1" = 50'

L-3

STATE OF CALIFORNIA - DEPARTMENT OF TRANSPORTATION
Caltrans
DESIGN

FUNCTIONAL SUPERVISOR: EDWARD HAJJ
CALCULATED-DESIGNED BY: ABDUL MALIKYAR
CHECKED BY: HECTOR GRACIA
REVISED BY
DATE REVISED

LAST REVISION 07-22-13
DATE PLOTTED => 31-OCT-2013
TIME PLOTTED => 15:21

Dist	COUNTY	ROUTE	POST MILES TOTAL PROJECT	SHEET No.	TOTAL SHEETS
11	SD	5	R58.1/R72.4	12	259

07-12-13
REGISTERED CIVIL ENGINEER DATE

11-04-13
PLANS APPROVAL DATE

REGISTERED PROFESSIONAL ENGINEER
ABDUL MALIKYAR
No. C66169
Exp. 06-30-14
CIVIL
STATE OF CALIFORNIA

THE STATE OF CALIFORNIA OR ITS OFFICERS OR AGENTS SHALL NOT BE RESPONSIBLE FOR THE ACCURACY OR COMPLETENESS OF SCANNED COPIES OF THIS PLAN SHEET.

NOTE:

1. FOR ACCURATE RIGHT OF WAY DATA, CONTACT RIGHT OF WAY ENGINEERING AT THE DISTRICT OFFICE.

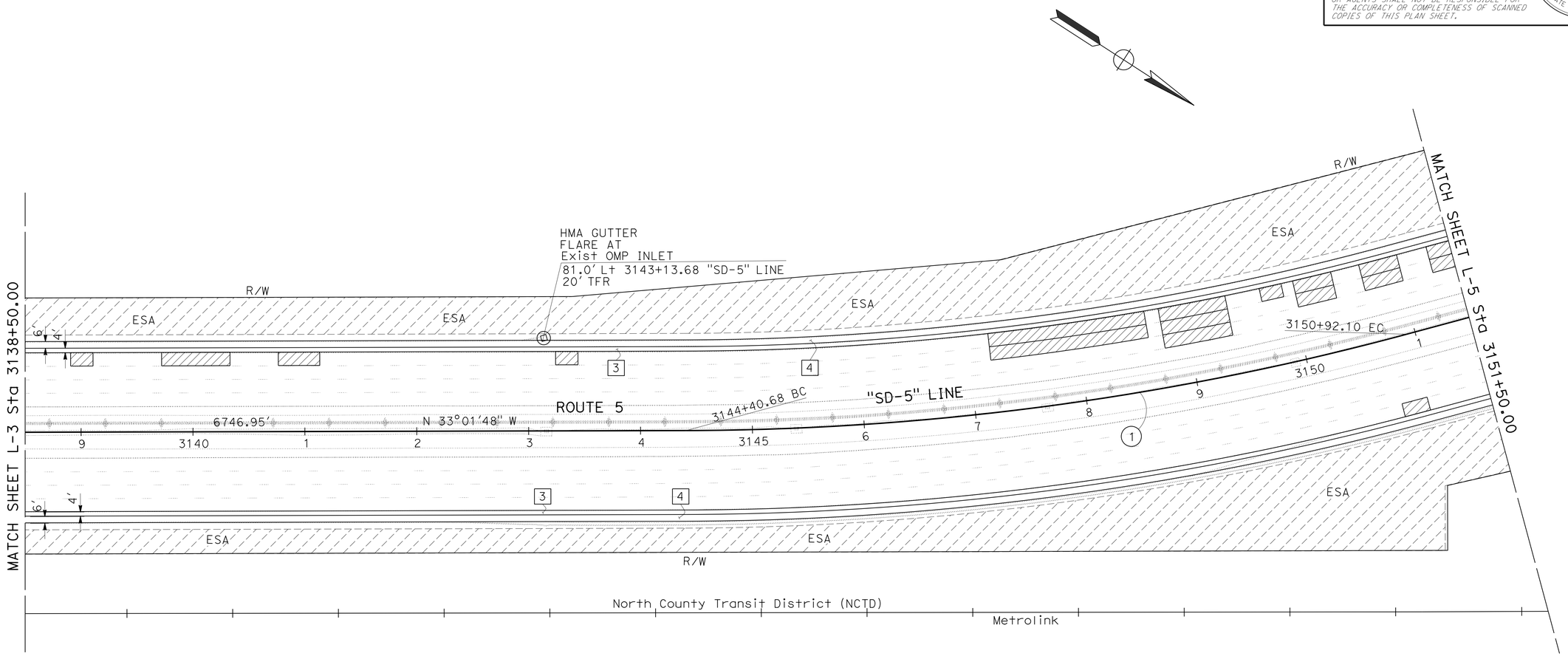

CURVE DATA

No.	R	Δ	T	L
1	2499.99'	14°55'46"	327.56'	651.41'

LAYOUT

SCALE 1" = 50'

L-4

STATE OF CALIFORNIA - DEPARTMENT OF TRANSPORTATION
Caltrans
DESIGN

FUNCTIONAL SUPERVISOR: EDWARD HAJJ
CALCULATED-DESIGNED BY: ABDUL MALIKYAR
CHECKED BY: HECTOR GRACIA
REVISED BY
DATE REVISED

LAST REVISION 07-22-13
DATE PLOTTED => 31-OCT-2013
TIME PLOTTED => 15:21

Dist	COUNTY	ROUTE	POST MILES TOTAL PROJECT	SHEET No.	TOTAL SHEETS
11	SD	5	R58.1/R72.4	13	259

REGISTERED CIVIL ENGINEER 07-12-13 DATE

11-04-13
PLANS APPROVAL DATE

REGISTERED PROFESSIONAL ENGINEER ABDUL MALIKYAR No. C66169 Exp. 06-30-14 CIVIL STATE OF CALIFORNIA

THE STATE OF CALIFORNIA OR ITS OFFICERS OR AGENTS SHALL NOT BE RESPONSIBLE FOR THE ACCURACY OR COMPLETENESS OF SCANNED COPIES OF THIS PLAN SHEET.

NOTE:

1. FOR ACCURATE RIGHT OF WAY DATA, CONTACT RIGHT OF WAY ENGINEERING AT THE DISTRICT OFFICE.

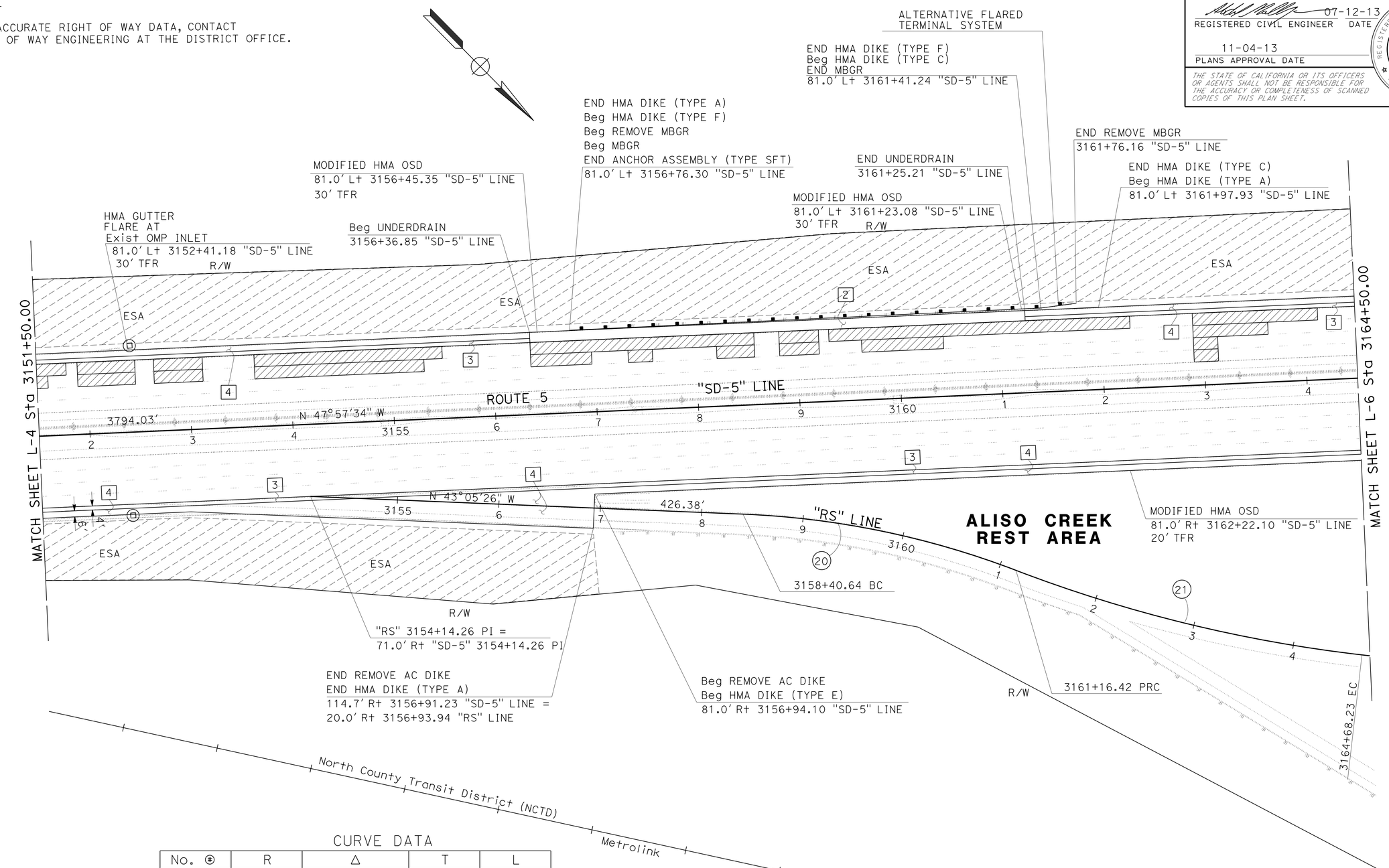

CURVE DATA

No. ⊕	R	Δ	T	L
20	850'	18°35'22"	139.11'	275.78'
21	1400'	14°23'54"	176.84'	351.82'

LAYOUT

SCALE 1" = 50'

L-5

STATE OF CALIFORNIA - DEPARTMENT OF TRANSPORTATION
Caltrans® DESIGN
FUNCTIONAL SUPERVISOR: EDWARD HAJJ
CALCULATED-DESIGNED BY: ABDUL MALIKYAR
CHECKED BY: HECTOR GRACIA
REVISED BY / DATE REVISED

LAST REVISION 07-22-13 | DATE PLOTTED => 31-OCT-2013 | TIME PLOTTED => 15:21

Dist	COUNTY	ROUTE	POST MILES TOTAL PROJECT	SHEET No.	TOTAL SHEETS
11	SD	5	R58.1/R72.4	14	259

REGISTERED CIVIL ENGINEER 07-12-13 DATE

11-04-13
PLANS APPROVAL DATE

REGISTERED PROFESSIONAL ENGINEER ABDUL MALIKYAR No. C66169 Exp. 06-30-14 CIVIL STATE OF CALIFORNIA

THE STATE OF CALIFORNIA OR ITS OFFICERS OR AGENTS SHALL NOT BE RESPONSIBLE FOR THE ACCURACY OR COMPLETENESS OF SCANNED COPIES OF THIS PLAN SHEET.

NOTE:

1. FOR ACCURATE RIGHT OF WAY DATA, CONTACT RIGHT OF WAY ENGINEERING AT THE DISTRICT OFFICE.

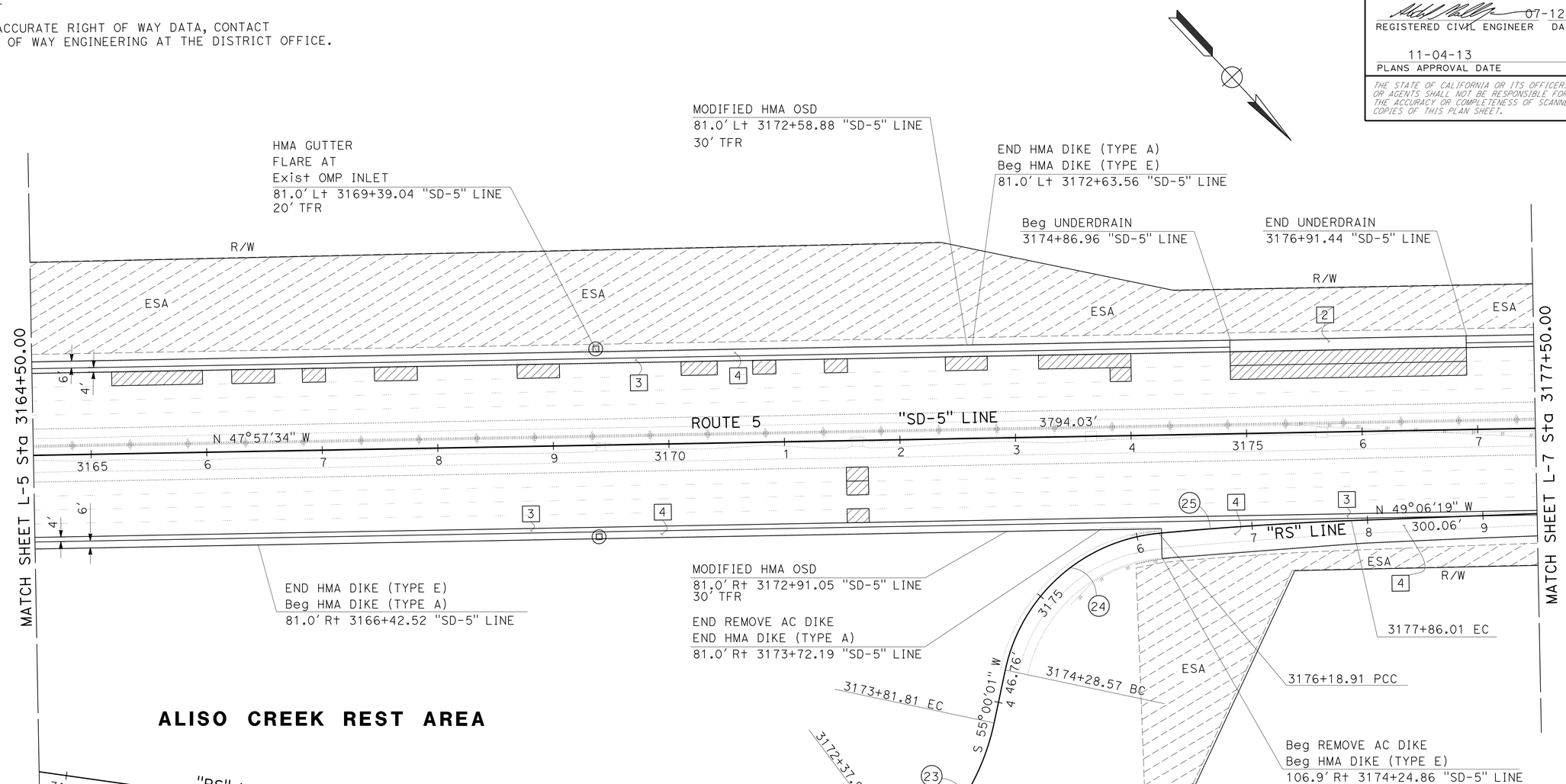

CURVE DATA

No. ⊕	R	Δ	T	L
22	100'	44°52'22"	41.29'	78.32'
23	200'	41°13'38"	75.23'	143.91'
24	150'	72°42'10"	110.39'	190.34'
25	3000'	03°11'29"	83.57'	167.10'

LAYOUT

SCALE 1" = 50'

L-6

STATE OF CALIFORNIA - DEPARTMENT OF TRANSPORTATION
Caltrans
DESIGN

FUNCTIONAL SUPERVISOR: EDWARD HAJJ
CALCULATED-DESIGNED BY: ABDUL MALIKYAR
CHECKED BY: HECTOR GRACIA
REVISED BY
DATE REVISED

LAST REVISION 07-22-13
DATE PLOTTED => 31-OCT-2013
TIME PLOTTED => 15:21

Dist	COUNTY	ROUTE	POST MILES TOTAL PROJECT	SHEET No.	TOTAL SHEETS
11	SD	5	R58.1/R72.4	15	259

07-12-13
REGISTERED CIVIL ENGINEER DATE

11-04-13
PLANS APPROVAL DATE

REGISTERED PROFESSIONAL ENGINEER ABDUL MALIKYAR No. C66169 Exp. 06-30-14 CIVIL STATE OF CALIFORNIA

THE STATE OF CALIFORNIA OR ITS OFFICERS OR AGENTS SHALL NOT BE RESPONSIBLE FOR THE ACCURACY OR COMPLETENESS OF SCANNED COPIES OF THIS PLAN SHEET.

NOTE:

1. FOR ACCURATE RIGHT OF WAY DATA, CONTACT RIGHT OF WAY ENGINEERING AT THE DISTRICT OFFICE.

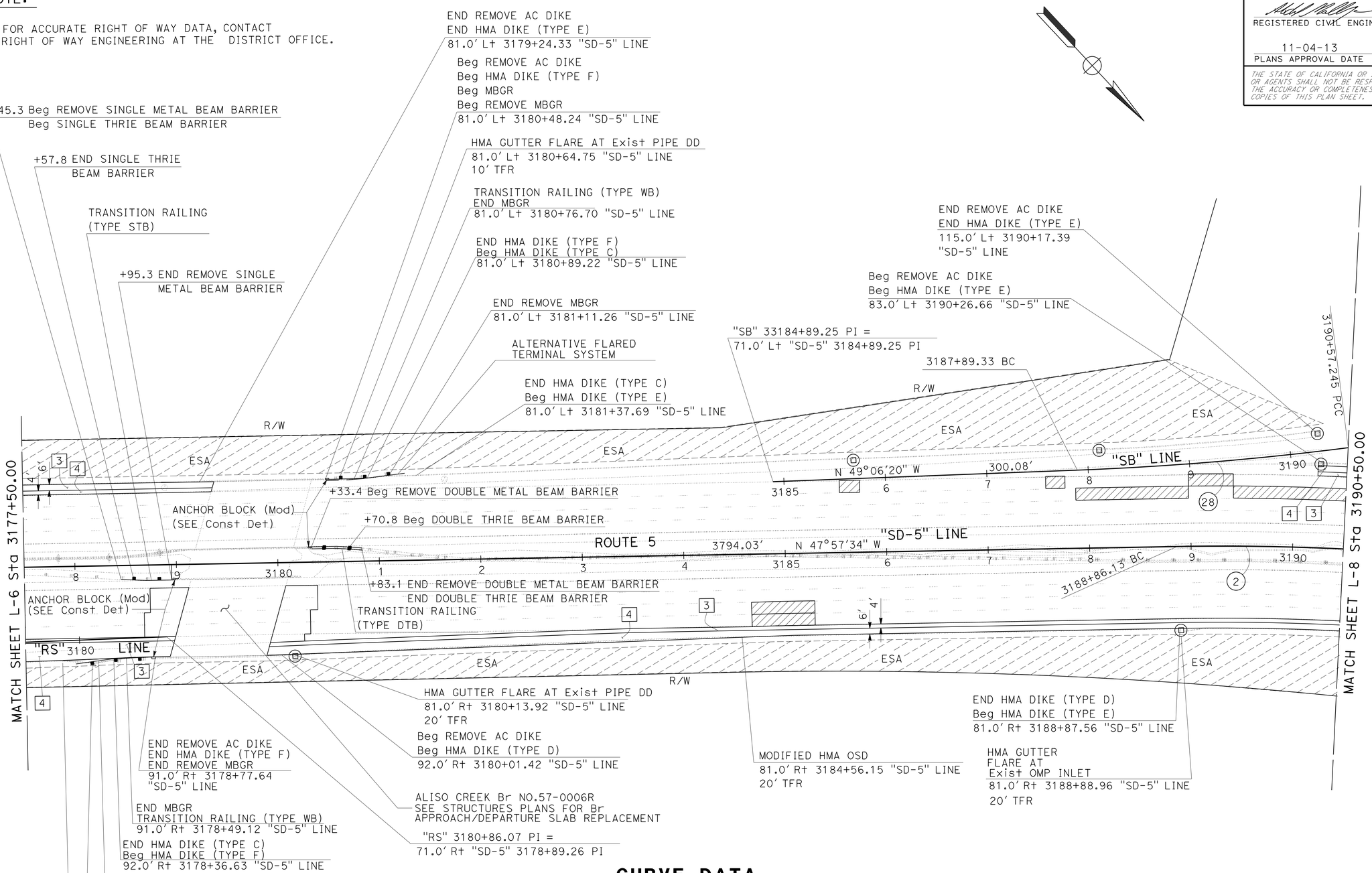

CURVE DATA

No.	R	Δ	T	L
2	2499.99'	16°06'18"	353.69'	702.71'
28	3000.00'	5°07'00"	134.05'	267.91'

LAYOUT

SCALE 1" = 50'

L-7

REVISED BY	DATE REVISED
ABDUL MALIKYAR	HECTOR GRACIA
CALCULATED-DESIGNED BY	CHECKED BY
FUNCTIONAL SUPERVISOR	EDWARD HAJJ

STATE OF CALIFORNIA - DEPARTMENT OF TRANSPORTATION
Caltrans
DESIGN

LAST REVISION 07-22-13
DATE PLOTTED => 31-OCT-2013
TIME PLOTTED => 15:21

Dist	COUNTY	ROUTE	POST MILES TOTAL PROJECT	SHEET No.	TOTAL SHEETS
11	SD	5	R58.1/R72.4	16	259

07-12-13
REGISTERED CIVIL ENGINEER DATE

11-04-13
PLANS APPROVAL DATE

REGISTERED PROFESSIONAL ENGINEER
ABDUL MALIKYAR
No. C66169
Exp. 06-30-14
CIVIL
STATE OF CALIFORNIA

THE STATE OF CALIFORNIA OR ITS OFFICERS OR AGENTS SHALL NOT BE RESPONSIBLE FOR THE ACCURACY OR COMPLETENESS OF SCANNED COPIES OF THIS PLAN SHEET.

NOTE:

1. FOR ACCURATE RIGHT OF WAY DATA, CONTACT RIGHT OF WAY ENGINEERING AT THE DISTRICT OFFICE.

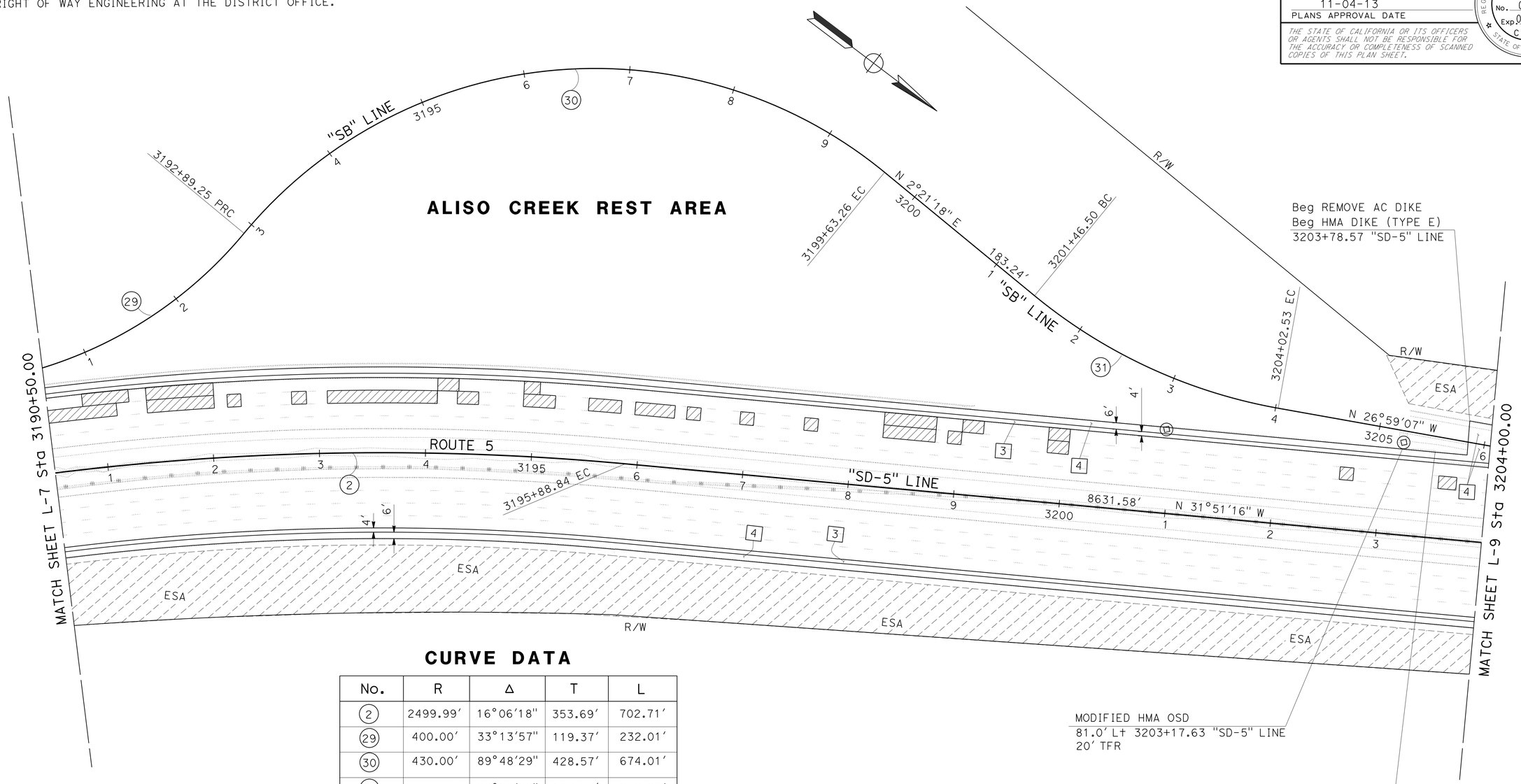

CURVE DATA

No.	R	Δ	T	L
2	2499.99'	16°06'18"	353.69'	702.71'
29	400.00'	33°13'57"	119.37'	232.01'
30	430.00'	89°48'29"	428.57'	674.01'
31	500.00'	29°20'22"	130.89'	256.03'

LAYOUT

SCALE 1" = 50'

L-8

STATE OF CALIFORNIA - DEPARTMENT OF TRANSPORTATION
Caltrans
DESIGN

FUNCTIONAL SUPERVISOR: EDWARD HAJJ
CALCULATED-DESIGNED BY: ABDUL MALIKYAR
CHECKED BY: HECTOR GRACIA
REVISED BY
DATE REVISED

LAST REVISION 07-22-13
DATE PLOTTED => 31-OCT-2013
TIME PLOTTED => 15:21

Dist	COUNTY	ROUTE	POST MILES TOTAL PROJECT	SHEET No.	TOTAL SHEETS
11	SD	5	R58.1/R72.4	17	259

07-12-13
REGISTERED CIVIL ENGINEER DATE

11-04-13
PLANS APPROVAL DATE

REGISTERED PROFESSIONAL ENGINEER
ABDUL MALIKYAR
No. C66169
Exp. 06-30-14
CIVIL
STATE OF CALIFORNIA

THE STATE OF CALIFORNIA OR ITS OFFICERS OR AGENTS SHALL NOT BE RESPONSIBLE FOR THE ACCURACY OR COMPLETENESS OF SCANNED COPIES OF THIS PLAN SHEET.

NOTE:

1. FOR ACCURATE RIGHT OF WAY DATA, CONTACT RIGHT OF WAY ENGINEERING AT THE DISTRICT OFFICE.

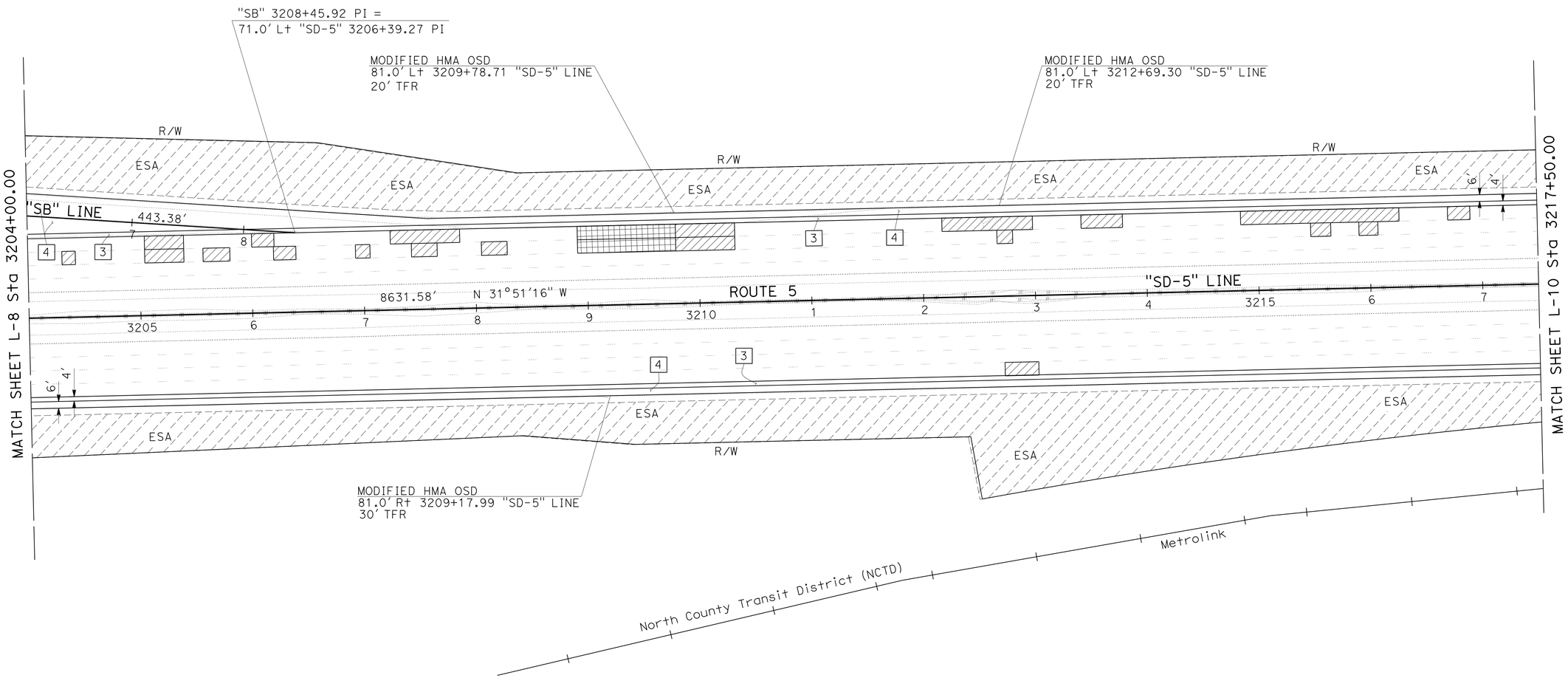

LAYOUT

SCALE 1"= 50'

L-9

STATE OF CALIFORNIA - DEPARTMENT OF TRANSPORTATION
Caltrans®
DESIGN

FUNCTIONAL SUPERVISOR: EDWARD HAJJ
CALCULATED-DESIGNED BY: ABDUL MALIKYAR
CHECKED BY: HECTOR GRACIA
REVISED BY
DATE REVISED

LAST REVISION 07-22-13
DATE PLOTTED => 31-OCT-2013
TIME PLOTTED => 15:21

Dist	COUNTY	ROUTE	POST MILES TOTAL PROJECT	SHEET No.	TOTAL SHEETS
11	SD	5	R58.1/R72.4	18	259

REGISTERED CIVIL ENGINEER 07-12-13 DATE

11-04-13
PLANS APPROVAL DATE

REGISTERED PROFESSIONAL ENGINEER ABDUL MALIKYAR No. C66169 Exp. 06-30-14 CIVIL STATE OF CALIFORNIA

THE STATE OF CALIFORNIA OR ITS OFFICERS OR AGENTS SHALL NOT BE RESPONSIBLE FOR THE ACCURACY OR COMPLETENESS OF SCANNED COPIES OF THIS PLAN SHEET.

NOTE:

1. FOR ACCURATE RIGHT OF WAY DATA, CONTACT RIGHT OF WAY ENGINEERING AT THE DISTRICT OFFICE.

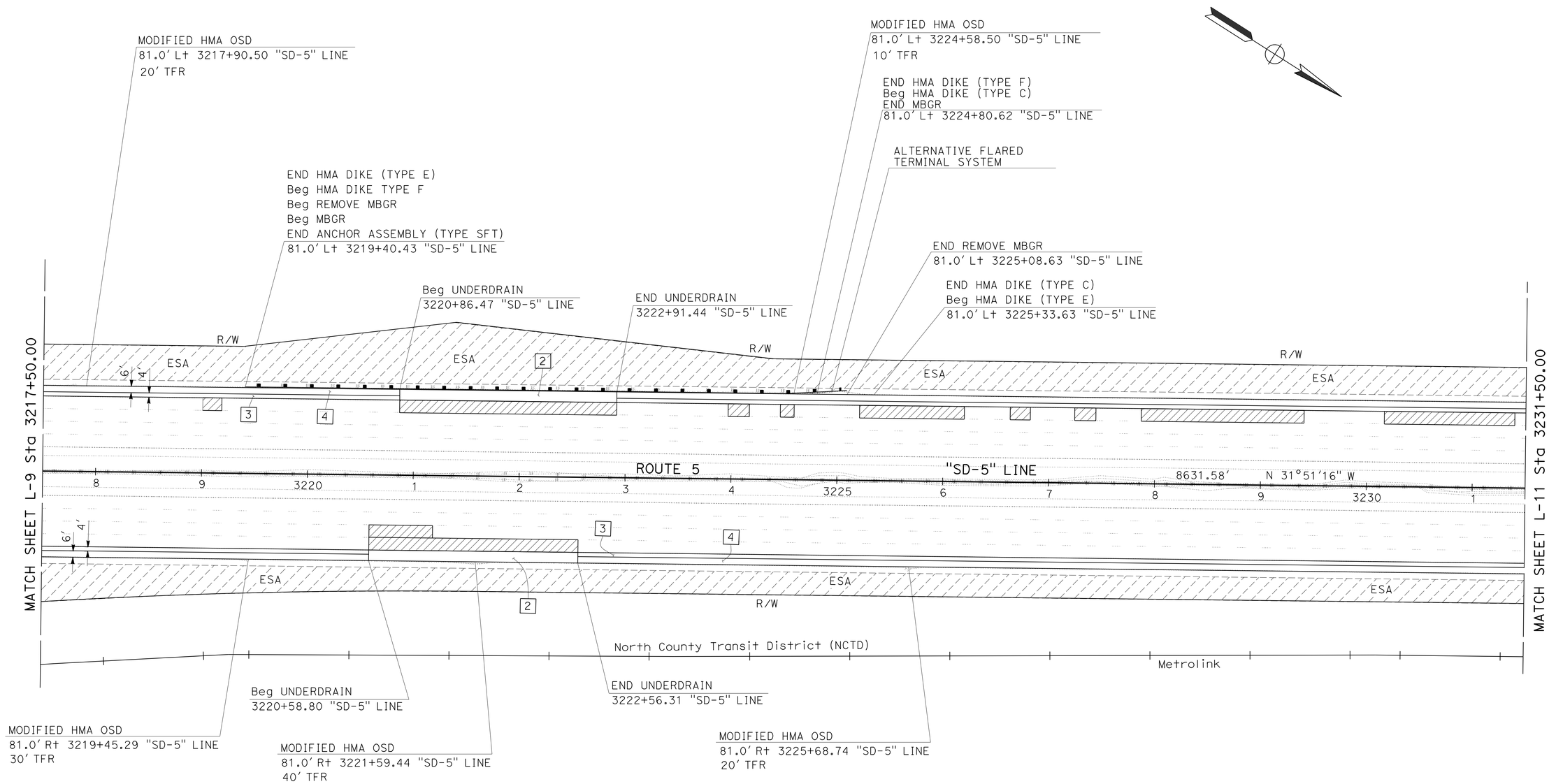

LAYOUT

SCALE 1" = 50'

L-10

STATE OF CALIFORNIA - DEPARTMENT OF TRANSPORTATION
DESIGN

FUNCTIONAL SUPERVISOR: EDWARD HAJJ

CALCULATED-DESIGNED BY: ABDUL MALIKYAR
CHECKED BY: HECTOR GRACIA

REVISED BY
DATE REVISED

LAST REVISION 07-22-13
DATE PLOTTED => 31-OCT-2013
TIME PLOTTED => 15:21

Dist	COUNTY	ROUTE	POST MILES TOTAL PROJECT	SHEET No.	TOTAL SHEETS
11	SD	5	R58.1/R72.4	19	259

07-12-13
REGISTERED CIVIL ENGINEER DATE

11-04-13
PLANS APPROVAL DATE

REGISTERED PROFESSIONAL ENGINEER
ABDUL MALIKYAR
No. C66169
Exp. 06-30-14
CIVIL
STATE OF CALIFORNIA

THE STATE OF CALIFORNIA OR ITS OFFICERS OR AGENTS SHALL NOT BE RESPONSIBLE FOR THE ACCURACY OR COMPLETENESS OF SCANNED COPIES OF THIS PLAN SHEET.

NOTE:

1. FOR ACCURATE RIGHT OF WAY DATA, CONTACT RIGHT OF WAY ENGINEERING AT THE DISTRICT OFFICE.

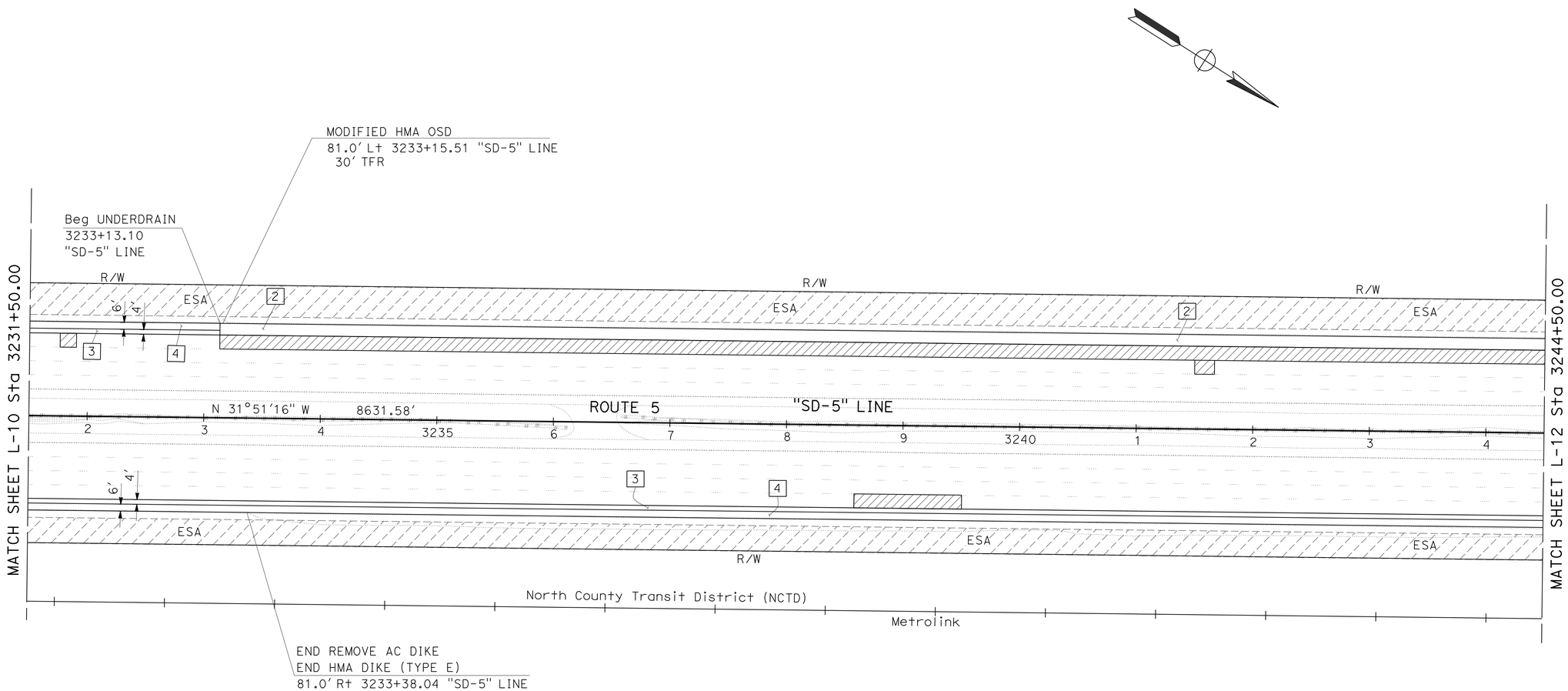

LAYOUT

SCALE 1" = 50'

L-11

STATE OF CALIFORNIA - DEPARTMENT OF TRANSPORTATION
Caltrans
DESIGN

FUNCTIONAL SUPERVISOR: EDWARD HAJJ
CALCULATED-DESIGNED BY: ABDUL MALIKYAR
CHECKED BY: HECTOR GRACIA
REVISED BY
DATE REVISED

LAST REVISION 07-22-13
DATE PLOTTED => 31-OCT-2013
TIME PLOTTED => 15:21

Dist	COUNTY	ROUTE	POST MILES TOTAL PROJECT	SHEET No.	TOTAL SHEETS
11	SD	5	R58.1/R72.4	20	259

07-12-13
REGISTERED CIVIL ENGINEER DATE

11-04-13
PLANS APPROVAL DATE

REGISTERED PROFESSIONAL ENGINEER
ABDUL MALIKYAR
No. C66169
Exp. 06-30-14
CIVIL
STATE OF CALIFORNIA

THE STATE OF CALIFORNIA OR ITS OFFICERS OR AGENTS SHALL NOT BE RESPONSIBLE FOR THE ACCURACY OR COMPLETENESS OF SCANNED COPIES OF THIS PLAN SHEET.

NOTE:

1. FOR ACCURATE RIGHT OF WAY DATA, CONTACT RIGHT OF WAY ENGINEERING AT THE DISTRICT OFFICE.

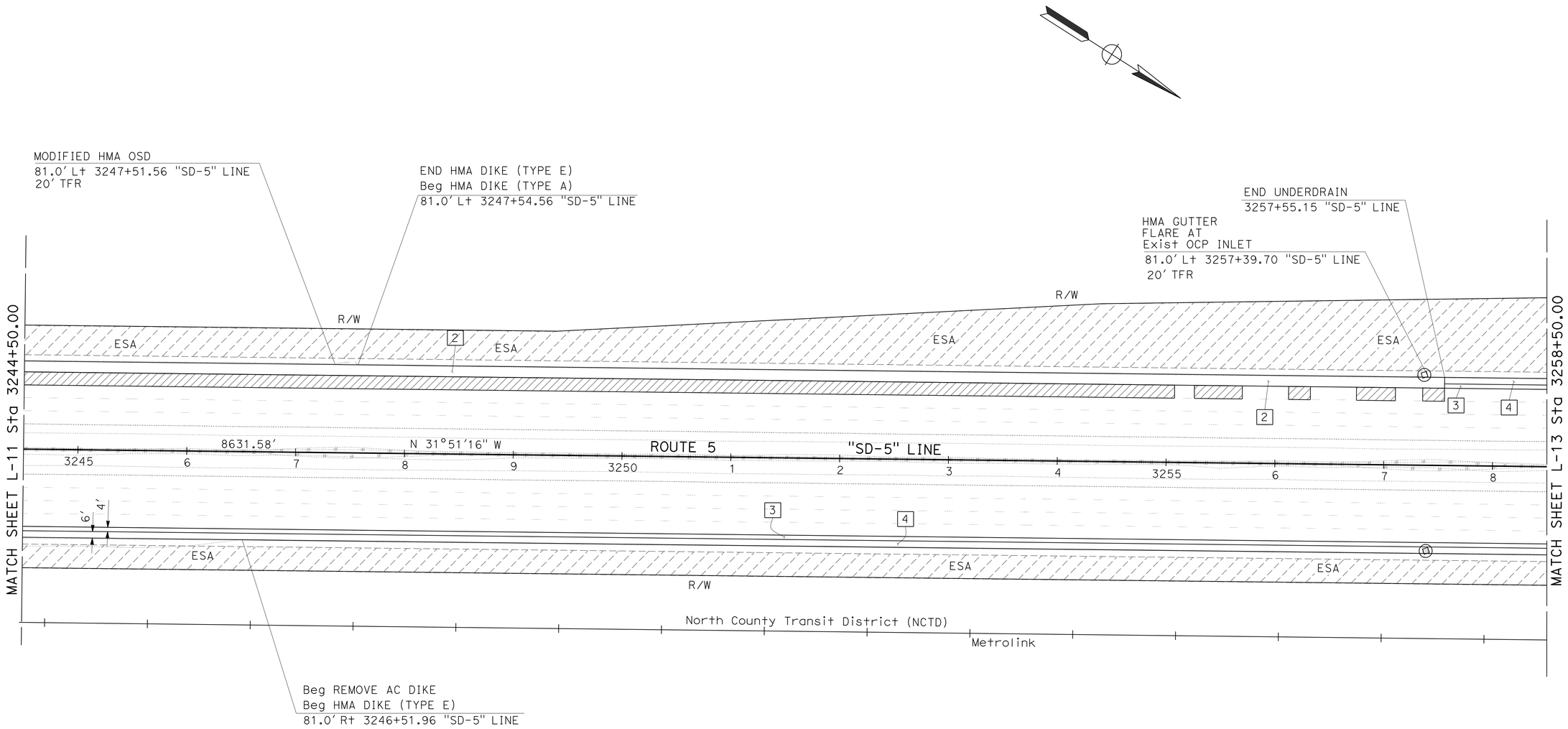

LAYOUT

SCALE 1" = 50'

L-12

STATE OF CALIFORNIA - DEPARTMENT OF TRANSPORTATION
Caltrans
DESIGN

FUNCTIONAL SUPERVISOR: EDWARD HAJJ
CALCULATED-DESIGNED BY: ABDUL MALIKYAR
CHECKED BY: HECTOR GRACIA
REVISED BY
DATE REVISED

LAST REVISION 07-22-13
DATE PLOTTED => 31-OCT-2013
TIME PLOTTED => 15:21

Dist	COUNTY	ROUTE	POST MILES TOTAL PROJECT	SHEET No.	TOTAL SHEETS
11	SD	5	R58.1/R72.4	21	259

REGISTERED CIVIL ENGINEER 07-12-13 DATE

11-04-13
PLANS APPROVAL DATE

REGISTERED PROFESSIONAL ENGINEER ABDUL MALIKYAR No. C66169 Exp. 06-30-14 CIVIL STATE OF CALIFORNIA

THE STATE OF CALIFORNIA OR ITS OFFICERS OR AGENTS SHALL NOT BE RESPONSIBLE FOR THE ACCURACY OR COMPLETENESS OF SCANNED COPIES OF THIS PLAN SHEET.

NOTE:

1. FOR ACCURATE RIGHT OF WAY DATA, CONTACT RIGHT OF WAY ENGINEERING AT THE DISTRICT OFFICE.

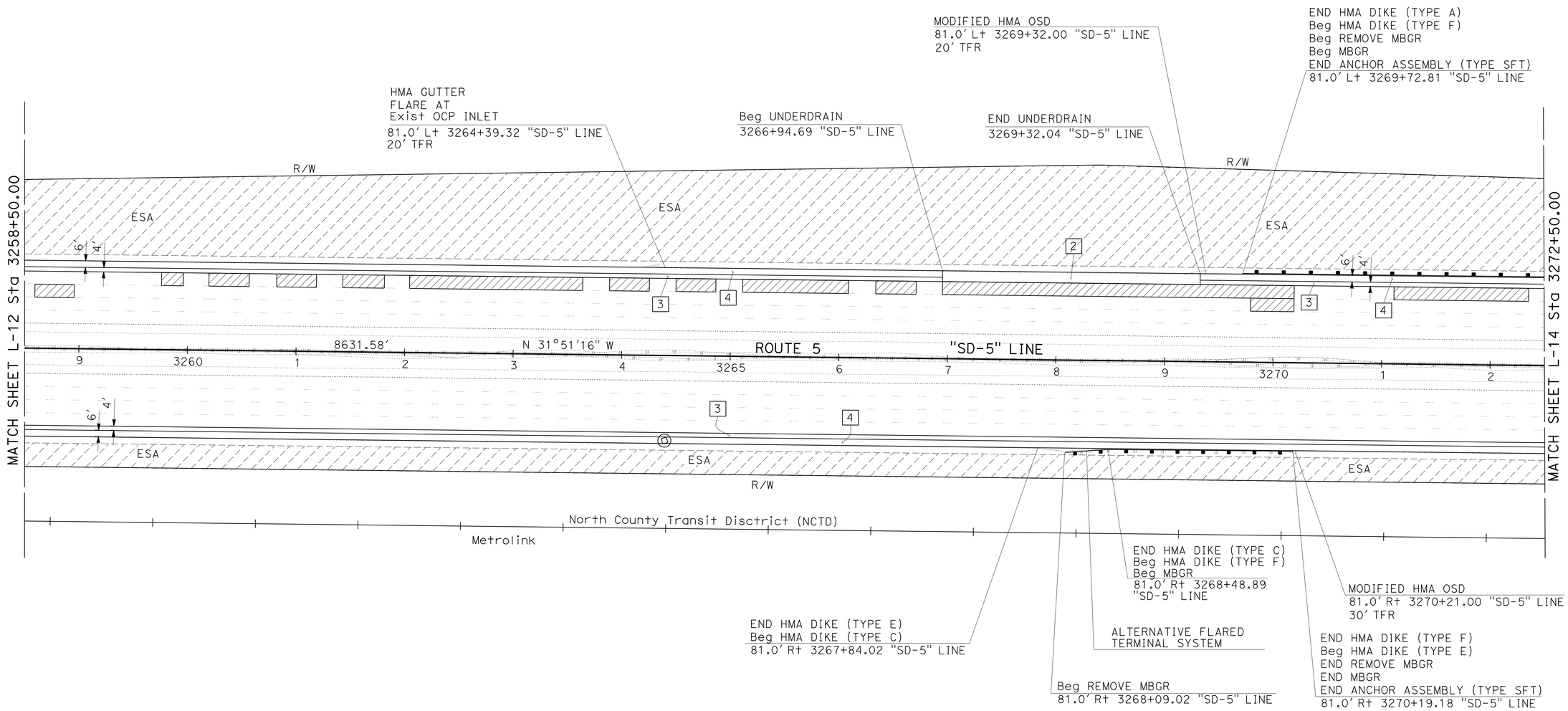

LAYOUT

SCALE 1" = 50′

L-13

REVISED BY	DATE REVISED

CALCULATED-DESIGNED BY	CHECKED BY
ABDUL MALIKYAR	HECTOR GRACIA

FUNCTIONAL SUPERVISOR: EDWARD HAJJ

STATE OF CALIFORNIA - DEPARTMENT OF TRANSPORTATION

DESIGN

Caltrans

LAST REVISION 07-22-13 | DATE PLOTTED => 31-OCT-2013 | TIME PLOTTED => 15:21

Dist	COUNTY	ROUTE	POST MILES TOTAL PROJECT	SHEET No.	TOTAL SHEETS
11	SD	5	R58.1/R72.4	22	259

REGISTERED CIVIL ENGINEER 07-12-13 DATE

11-04-13
PLANS APPROVAL DATE

REGISTERED PROFESSIONAL ENGINEER ABDUL MALIKYAR No. C66169 Exp. 06-30-14 CIVIL STATE OF CALIFORNIA

THE STATE OF CALIFORNIA OR ITS OFFICERS OR AGENTS SHALL NOT BE RESPONSIBLE FOR THE ACCURACY OR COMPLETENESS OF SCANNED COPIES OF THIS PLAN SHEET.

NOTE:

1. FOR ACCURATE RIGHT OF WAY DATA, CONTACT RIGHT OF WAY ENGINEERING AT THE DISTRICT OFFICE.

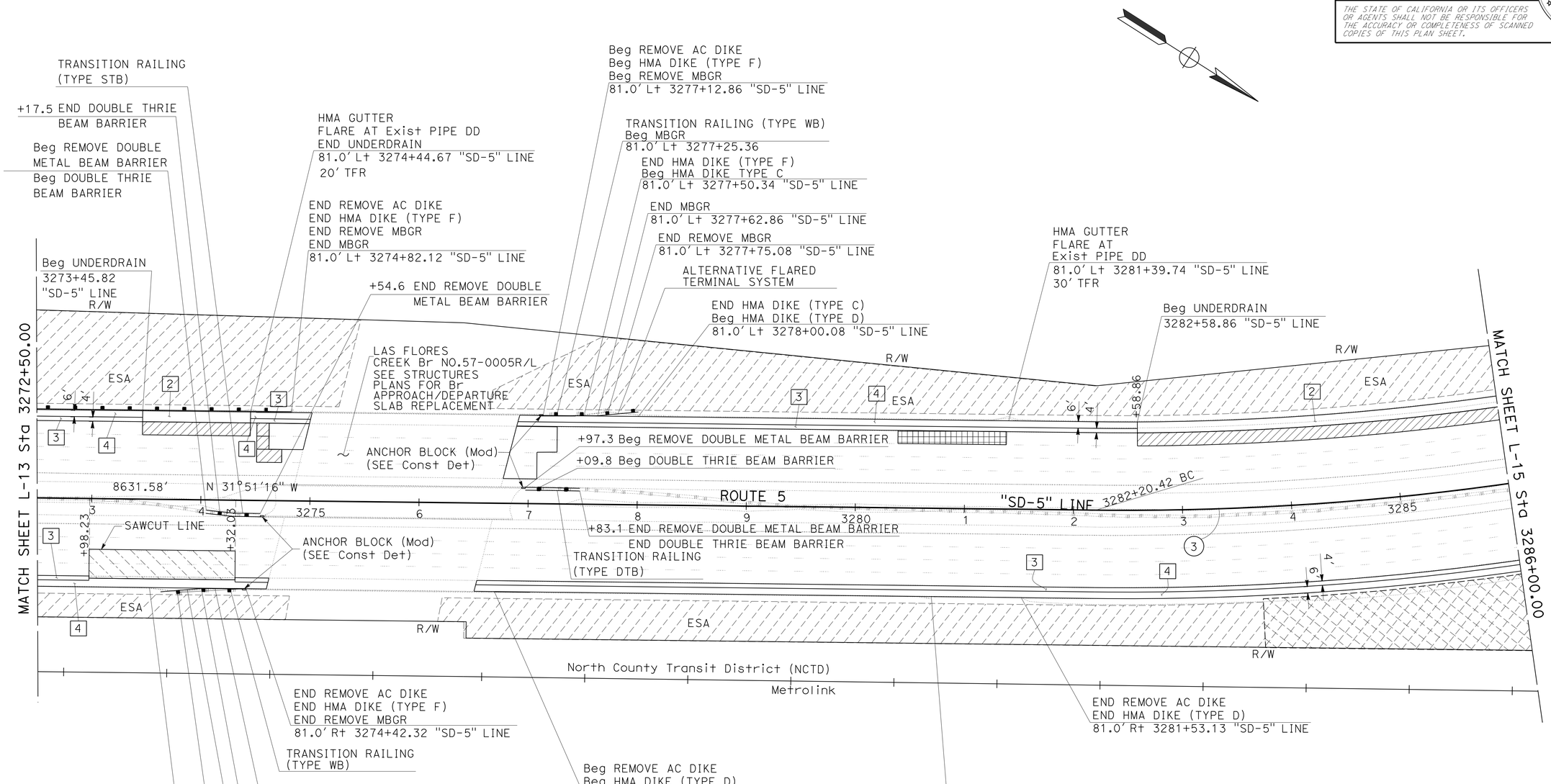

CURVE DATA

No. ⊛	R	Δ	T	L
3	2500'	13°00'46"	285.13'	567.80'

LAYOUT

SCALE 1" = 50'

L-14

STATE OF CALIFORNIA - DEPARTMENT OF TRANSPORTATION
Caltrans
DESIGN

FUNCTIONAL SUPERVISOR: EDWARD HAJJ
CALCULATED-DESIGNED BY: ABDUL MALIKYAR
CHECKED BY: HECTOR GRACIA
REVISED BY
DATE REVISED

LAST REVISION 07-22-13
DATE PLOTTED => 31-OCT-2013
TIME PLOTTED => 15:21

Dist	COUNTY	ROUTE	POST MILES TOTAL PROJECT	SHEET No.	TOTAL SHEETS
11	SD	5	R58.1/R72.4	23	259

07-12-13
REGISTERED CIVIL ENGINEER DATE

11-04-13
PLANS APPROVAL DATE

REGISTERED PROFESSIONAL ENGINEER
ABDUL MALIKYAR
No. C66169
Exp. 06-30-14
CIVIL
STATE OF CALIFORNIA

THE STATE OF CALIFORNIA OR ITS OFFICERS OR AGENTS SHALL NOT BE RESPONSIBLE FOR THE ACCURACY OR COMPLETENESS OF SCANNED COPIES OF THIS PLAN SHEET.

NOTE:

1. FOR ACCURATE RIGHT OF WAY DATA, CONTACT RIGHT OF WAY ENGINEERING AT THE DISTRICT OFFICE.

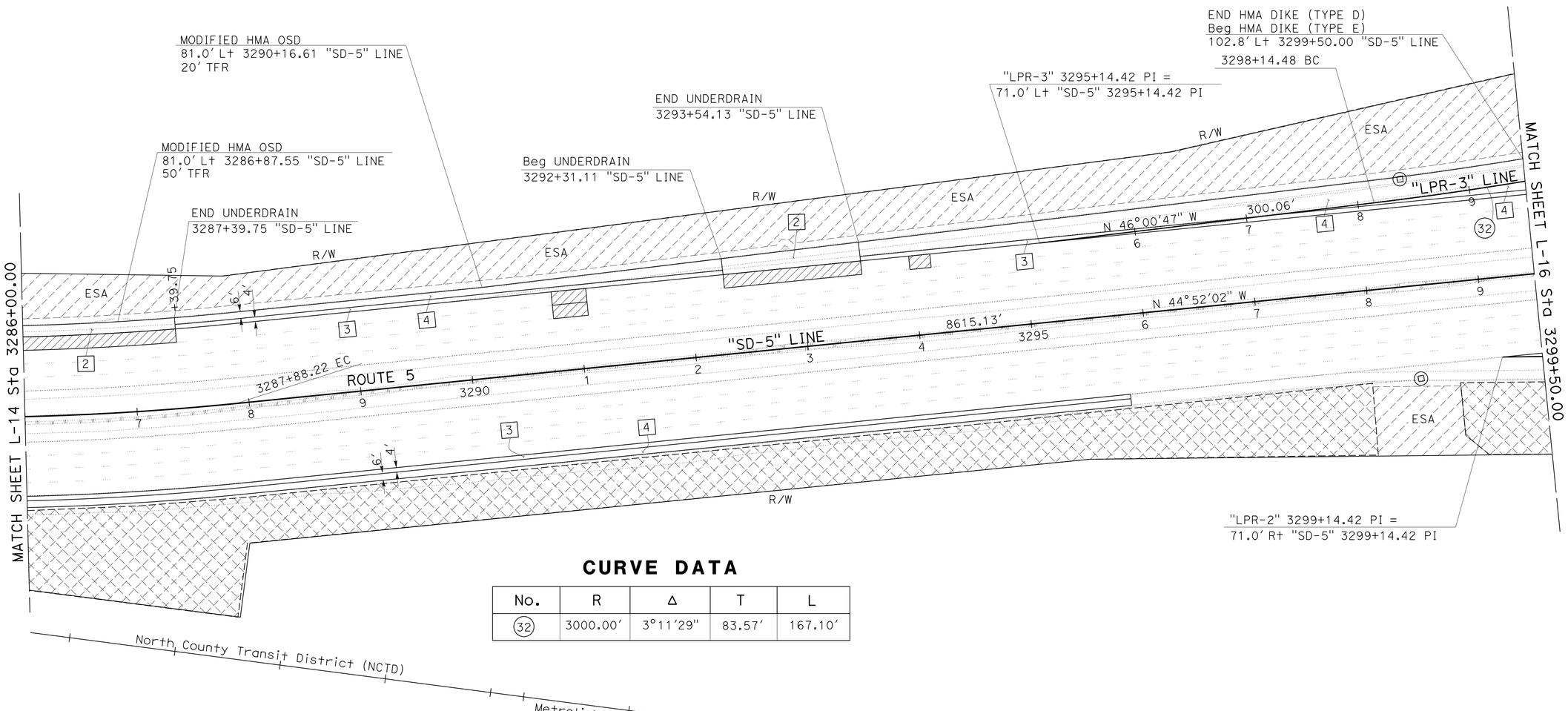

CURVE DATA

No.	R	Δ	T	L
32	3000.00'	3°11'29"	83.57'	167.10'

LAYOUT

SCALE 1" = 50'

L-15

STATE OF CALIFORNIA - DEPARTMENT OF TRANSPORTATION
Caltrans
DESIGN

FUNCTIONAL SUPERVISOR: EDWARD HAJJ
CALCULATED-DESIGNED BY: ABDUL MALIKYAR
CHECKED BY: HECTOR GRACIA
REVISED BY
DATE REVISED

LAST REVISION 07-22-13
DATE PLOTTED => 31-OCT-2013
TIME PLOTTED => 15:21

Dist	COUNTY	ROUTE	POST MILES TOTAL PROJECT	SHEET No.	TOTAL SHEETS
11	SD	5	R58.1/R72.4	24	259

REGISTERED CIVIL ENGINEER 07-12-13 DATE

11-04-13
PLANS APPROVAL DATE

REGISTERED PROFESSIONAL ENGINEER ABDUL MALIKYAR No. C66169 Exp. 06-30-14 CIVIL STATE OF CALIFORNIA

THE STATE OF CALIFORNIA OR ITS OFFICERS OR AGENTS SHALL NOT BE RESPONSIBLE FOR THE ACCURACY OR COMPLETENESS OF SCANNED COPIES OF THIS PLAN SHEET.

NOTE:

1. FOR ACCURATE RIGHT OF WAY DATA, CONTACT RIGHT OF WAY ENGINEERING AT THE DISTRICT OFFICE.

CURVE DATA

No.	R	Δ	T	L
33	1000.00′	6°42′20"	58.58′	117.03′
34	1000.00′	9°8′00"	82.80′	165.22′
35	500.00′	46°19′12"	213.89′	404.22′

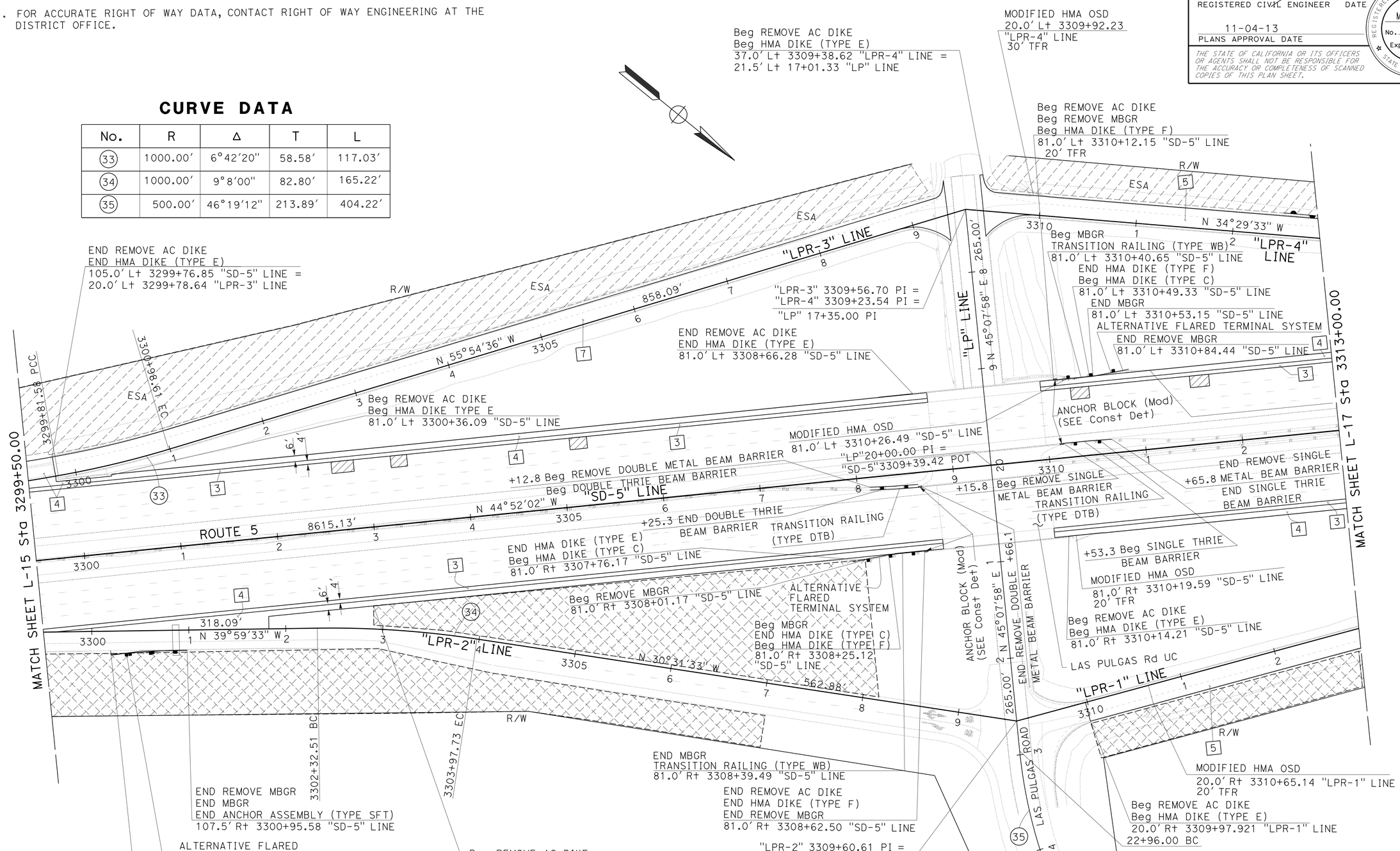

SCALE 1" = 50′

LAYOUT

L-16

STATE OF CALIFORNIA - DEPARTMENT OF TRANSPORTATION
Caltrans® DESIGN
FUNCTIONAL SUPERVISOR: EDWARD HAJJ
CALCULATED-DESIGNED BY: ABDUL MALIKYAR
CHECKED BY: HECTOR GRACIA
REVISED BY
DATE REVISED

LAST REVISION 07-22-13
DATE PLOTTED => 31-OCT-2013
TIME PLOTTED => 15:22

Dist	COUNTY	ROUTE	POST MILES TOTAL PROJECT	SHEET No.	TOTAL SHEETS
11	SD	5	R58.1/R72.4	25	259

07-12-13
REGISTERED CIVIL ENGINEER DATE

11-04-13
PLANS APPROVAL DATE

REGISTERED PROFESSIONAL ENGINEER ABDUL MALIKYAR No. C66169 Exp. 06-30-14 CIVIL STATE OF CALIFORNIA

THE STATE OF CALIFORNIA OR ITS OFFICERS OR AGENTS SHALL NOT BE RESPONSIBLE FOR THE ACCURACY OR COMPLETENESS OF SCANNED COPIES OF THIS PLAN SHEET.

NOTE:

1. FOR ACCURATE RIGHT OF WAY DATA, CONTACT RIGHT OF WAY ENGINEERING AT THE DISTRICT OFFICE.

CURVE DATA

No.	R	Δ	T	L
36	1000.00′	5°30′00″	48.03′	95.99′
37	1000.00′	5°05′28″	44.46′	88.86′
38	3000.00′	3°11′29″	83.57′	167.10′

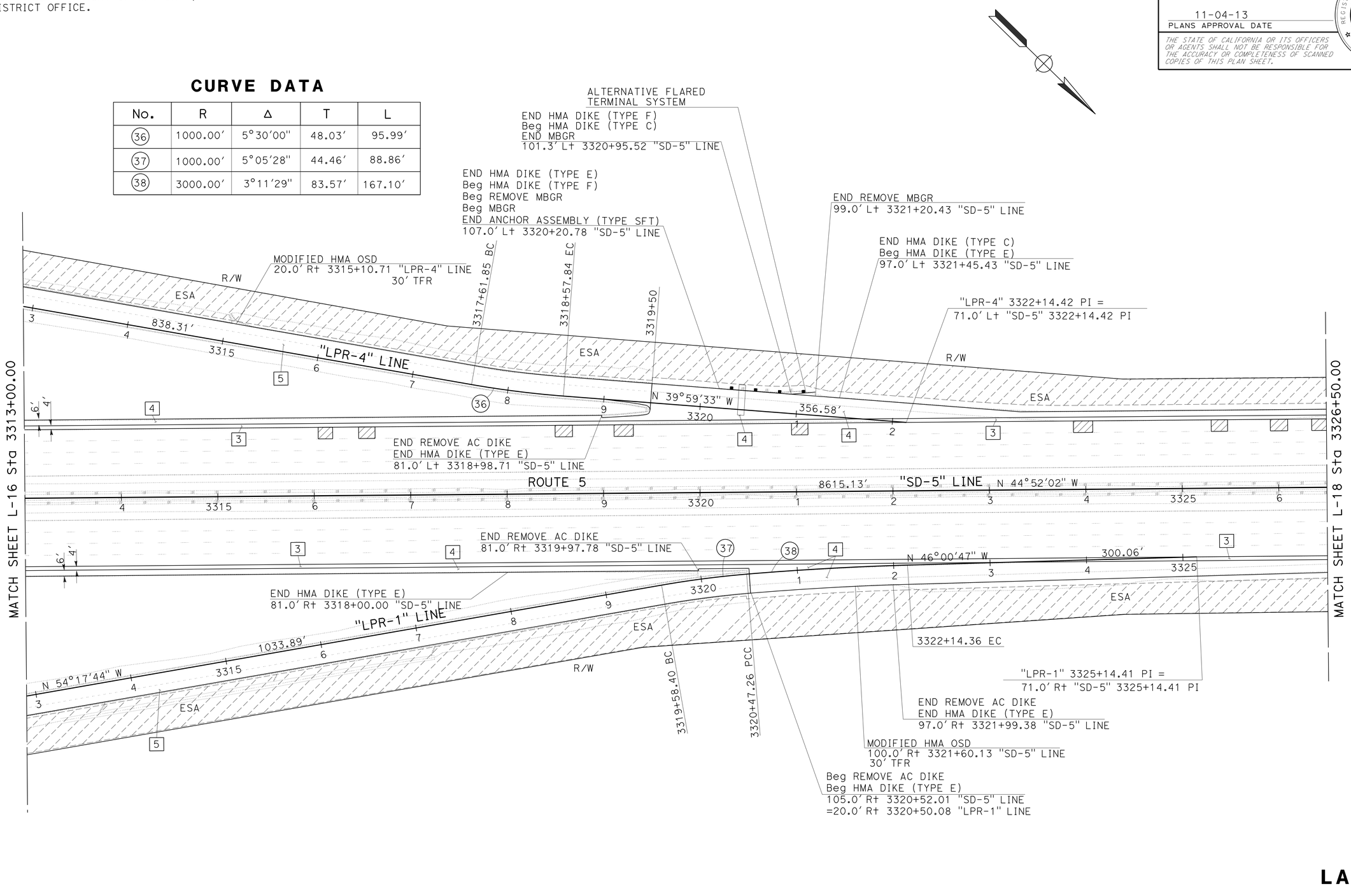

LAYOUT

SCALE 1" = 50′

L-17

STATE OF CALIFORNIA - DEPARTMENT OF TRANSPORTATION
Caltrans
DESIGN

FUNCTIONAL SUPERVISOR: EDWARD HAJJ
CALCULATED-DESIGNED BY: ABDUL MALIKYAR
CHECKED BY: HECTOR GRACIA
REVISED BY
DATE REVISED

LAST REVISION 07-22-13
DATE PLOTTED => 31-OCT-2013
TIME PLOTTED => 15:22

Dist	COUNTY	ROUTE	POST MILES TOTAL PROJECT	SHEET No.	TOTAL SHEETS
11	SD	5	R58.1/R72.4	26	259

07-12-13
REGISTERED CIVIL ENGINEER DATE

11-04-13
PLANS APPROVAL DATE

REGISTERED PROFESSIONAL ENGINEER
ABDUL MALIKYAR
No. C66169
Exp. 06-30-14
CIVIL
STATE OF CALIFORNIA

THE STATE OF CALIFORNIA OR ITS OFFICERS OR AGENTS SHALL NOT BE RESPONSIBLE FOR THE ACCURACY OR COMPLETENESS OF SCANNED COPIES OF THIS PLAN SHEET.

NOTE:

1. FOR ACCURATE RIGHT OF WAY DATA, CONTACT RIGHT OF WAY ENGINEERING AT THE DISTRICT OFFICE.

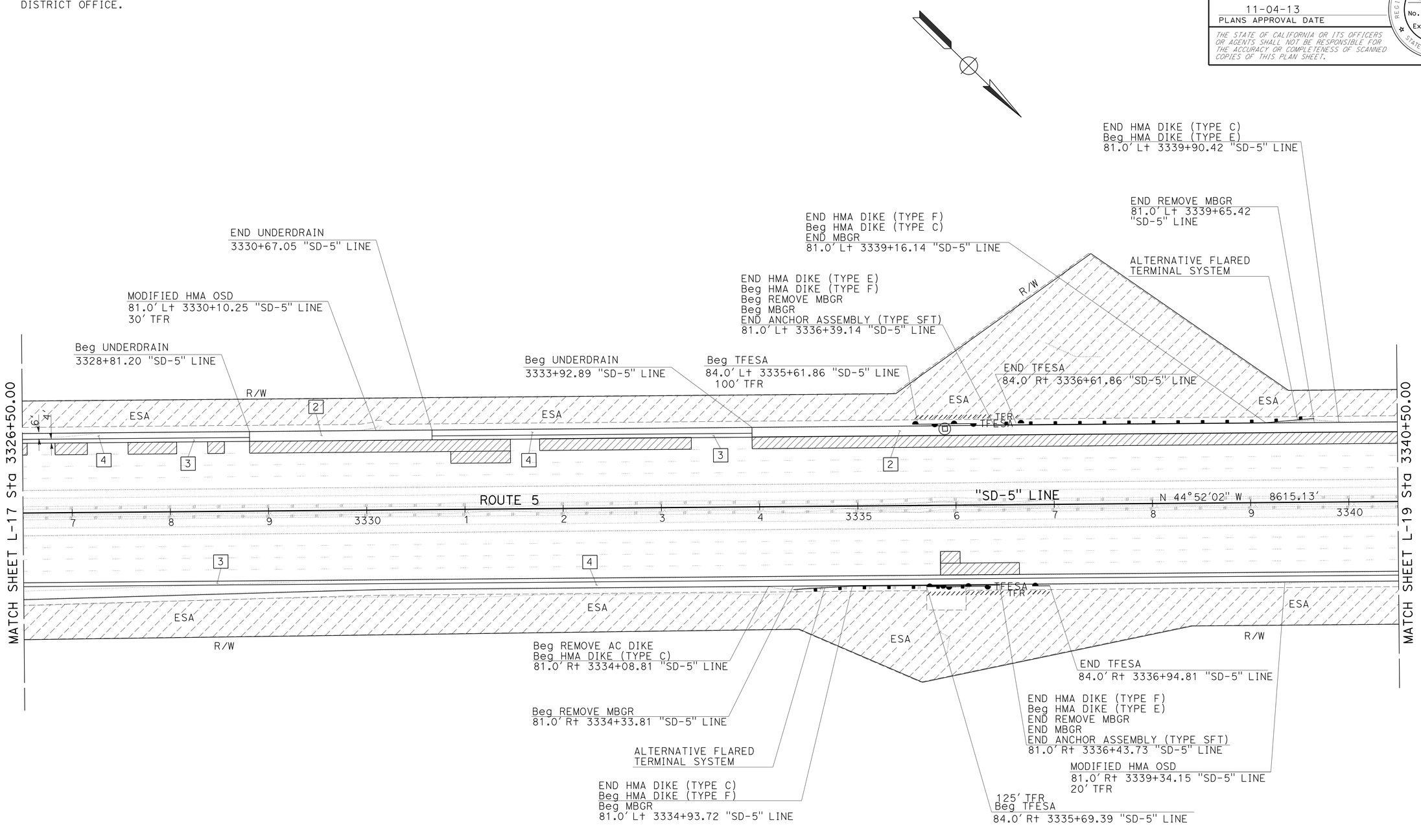

LAYOUT

SCALE 1" = 50'

L-18

REVISED BY	DATE REVISED

CALCULATED-DESIGNED BY	CHECKED BY
ABDUL MALIKYAR	HECTOR GRACIA

FUNCTIONAL SUPERVISOR: EDWARD HAJJ

STATE OF CALIFORNIA - DEPARTMENT OF TRANSPORTATION

Caltrans®

DESIGN

LAST REVISION 07-22-13 | DATE PLOTTED => 31-OCT-2013 | TIME PLOTTED => 15:22

Dist	COUNTY	ROUTE	POST MILES TOTAL PROJECT	SHEET No.	TOTAL SHEETS
11	SD	5	R58.1/R72.4	27	259

07-12-13
REGISTERED CIVIL ENGINEER DATE

11-04-13
PLANS APPROVAL DATE

REGISTERED PROFESSIONAL ENGINEER
ABDUL MALIKYAR
No. C66169
Exp. 06-30-14
CIVIL
STATE OF CALIFORNIA

THE STATE OF CALIFORNIA OR ITS OFFICERS OR AGENTS SHALL NOT BE RESPONSIBLE FOR THE ACCURACY OR COMPLETENESS OF SCANNED COPIES OF THIS PLAN SHEET.

NOTE:

1. FOR ACCURATE RIGHT OF WAY DATA, CONTACT RIGHT OF WAY ENGINEERING AT THE DISTRICT OFFICE.

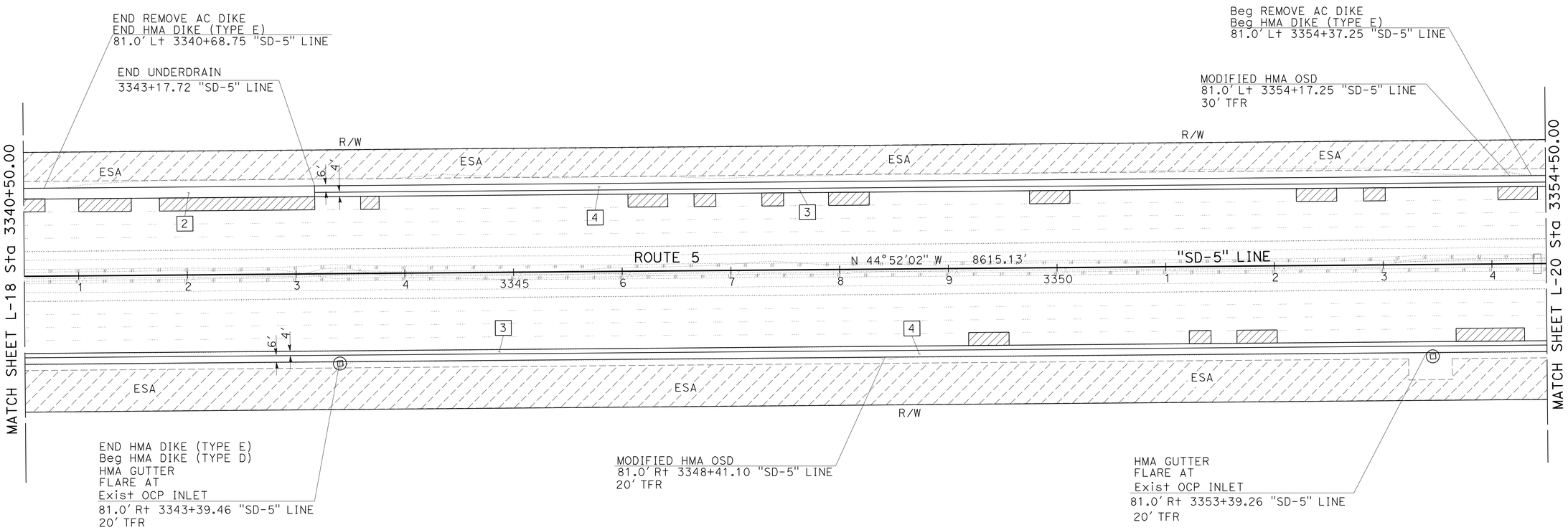

LAYOUT

SCALE 1" = 50'

L-19

STATE OF CALIFORNIA - DEPARTMENT OF TRANSPORTATION
Caltrans®
DESIGN

FUNCTIONAL SUPERVISOR: EDWARD HAJJ
CALCULATED-DESIGNED BY: ABDUL MALIKYAR
CHECKED BY: HECTOR GRACIA
REVISED BY
DATE REVISED

LAST REVISION 07-22-13
DATE PLOTTED => 31-OCT-2013
TIME PLOTTED => 15:22

Dist	COUNTY	ROUTE	POST MILES TOTAL PROJECT	SHEET No.	TOTAL SHEETS
11	SD	5	R58.1/R72.4	28	259

07-12-13
REGISTERED CIVIL ENGINEER DATE

11-04-13
PLANS APPROVAL DATE

REGISTERED PROFESSIONAL ENGINEER
ABDUL MALIKYAR
No. C66169
Exp. 06-30-14
CIVIL
STATE OF CALIFORNIA

THE STATE OF CALIFORNIA OR ITS OFFICERS OR AGENTS SHALL NOT BE RESPONSIBLE FOR THE ACCURACY OR COMPLETENESS OF SCANNED COPIES OF THIS PLAN SHEET.

NOTE:

1. FOR ACCURATE RIGHT OF WAY DATA, CONTACT RIGHT OF WAY ENGINEERING AT THE DISTRICT OFFICE.

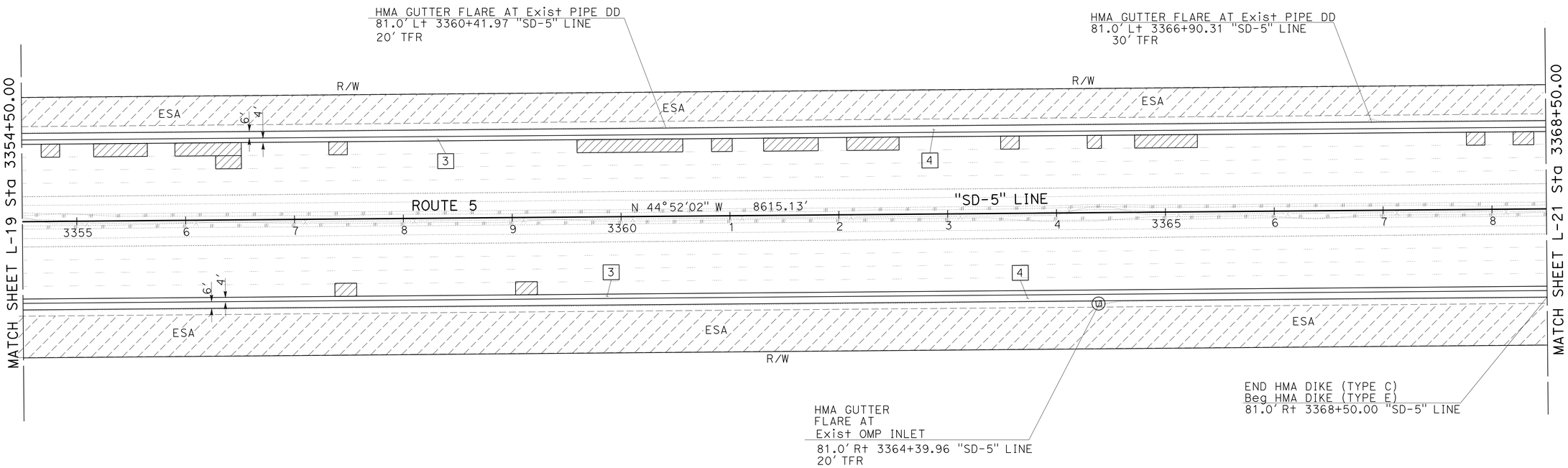

LAYOUT

SCALE 1" = 50'

L-20

STATE OF CALIFORNIA - DEPARTMENT OF TRANSPORTATION
Caltrans
DESIGN

FUNCTIONAL SUPERVISOR: EDWARD HAJJ
CALCULATED-DESIGNED BY: ABDUL MALIKYAR
CHECKED BY: HECTOR GRACIA
REVISED BY
DATE REVISED

LAST REVISION 07-22-13
DATE PLOTTED => 31-OCT-2013
TIME PLOTTED => 15:22

Dist	COUNTY	ROUTE	POST MILES TOTAL PROJECT	SHEET No.	TOTAL SHEETS
11	SD	5	R58.1/R72.4	29	259

07-12-13
REGISTERED CIVIL ENGINEER DATE

11-04-13
PLANS APPROVAL DATE

REGISTERED PROFESSIONAL ENGINEER
ABDUL MALIKYAR
No. C66169
Exp. 06-30-14
CIVIL
STATE OF CALIFORNIA

THE STATE OF CALIFORNIA OR ITS OFFICERS OR AGENTS SHALL NOT BE RESPONSIBLE FOR THE ACCURACY OR COMPLETENESS OF SCANNED COPIES OF THIS PLAN SHEET.

NOTE:

1. FOR ACCURATE RIGHT OF WAY DATA, CONTACT RIGHT OF WAY ENGINEERING AT THE DISTRICT OFFICE.

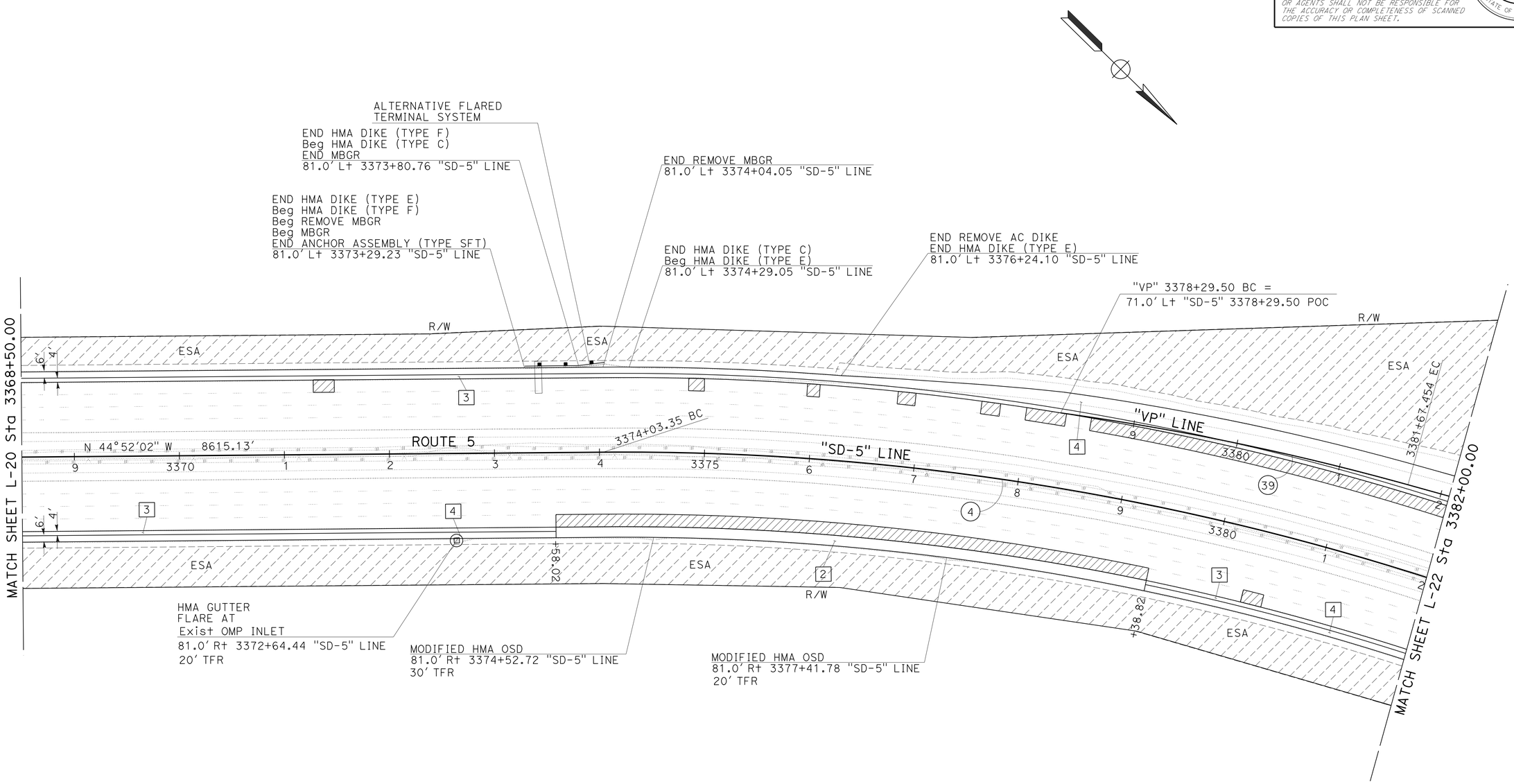

CURVE DATA

No.	R	Δ	T	L
4	2500.02'	37°29'51"	848.58'	1636.15'
39	2500.02'	7°44'43"	169.23'	337.95'

LAYOUT

SCALE 1" = 50'

L-21

STATE OF CALIFORNIA - DEPARTMENT OF TRANSPORTATION
Caltrans
DESIGN

FUNCTIONAL SUPERVISOR: EDWARD HAJJ
CALCULATED-DESIGNED BY: ABDUL MALIKYAR
CHECKED BY: HECTOR GRACIA
REVISED BY
DATE REVISED

LAST REVISION 07-22-13
DATE PLOTTED => 31-OCT-2013
TIME PLOTTED => 15:22

Dist	COUNTY	ROUTE	POST MILES TOTAL PROJECT	SHEET No.	TOTAL SHEETS
11	SD	5	R58.1/R72.4	30	259

REGISTERED CIVIL ENGINEER 07-12-13 DATE

11-04-13
PLANS APPROVAL DATE

REGISTERED PROFESSIONAL ENGINEER ABDUL MALIKYAR No. C66169 Exp. 06-30-14 CIVIL STATE OF CALIFORNIA

THE STATE OF CALIFORNIA OR ITS OFFICERS OR AGENTS SHALL NOT BE RESPONSIBLE FOR THE ACCURACY OR COMPLETENESS OF SCANNED COPIES OF THIS PLAN SHEET.

NOTE:

1. FOR ACCURATE RIGHT OF WAY DATA, CONTACT RIGHT OF WAY ENGINEERING AT THE DISTRICT OFFICE.

CURVE DATA

No.	R	Δ	T	L
5	2500.02′	3°30′07"	76.43′	152.80′
40	200.00′	50°18′04"	93.90′	175.59′
41	140.00′	40°55′31"	114.30′	191.72′
42	150.00′	24°07′51"	32.06′	63.17′
43	1732.93′	08°50′45"	134.04′	267.55′
44	48.00′	180°04′54"	67351.82′	150.87′
45	150.00′	35°38′19"	48.22′	93.30′
46	70.00′	221°06′13"	186.71′	270.13′
47	1200.01′	11°56′12"	125.46′	250.00′
48	2500.02′	7°23′42"	161.56′	322.67′

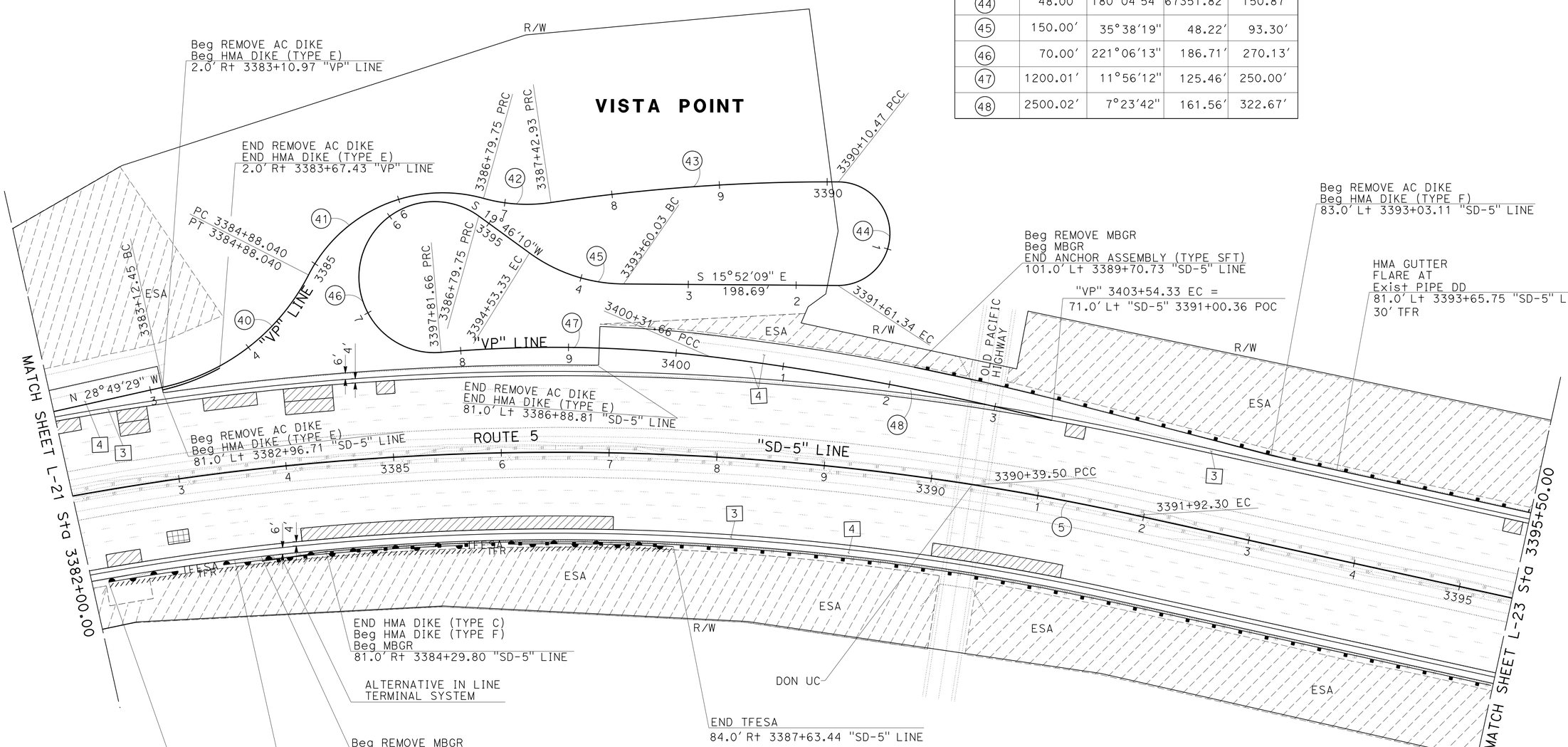

LAYOUT

SCALE 1" = 50′

L-22

STATE OF CALIFORNIA - DEPARTMENT OF TRANSPORTATION
Caltrans
DESIGN

FUNCTIONAL SUPERVISOR: EDWARD HAJJ
CALCULATED-DESIGNED BY: ABDUL MALIKYAR
CHECKED BY: HECTOR GRACIA
REVISED BY
DATE REVISED

LAST REVISION 07-22-13
DATE PLOTTED => 31-OCT-2013
TIME PLOTTED => 15:22

Dist	COUNTY	ROUTE	POST MILES TOTAL PROJECT	SHEET No.	TOTAL SHEETS
11	SD	5	R58.1/R72.4	31	259

REGISTERED CIVIL ENGINEER 07-12-13 DATE

11-04-13
PLANS APPROVAL DATE

REGISTERED PROFESSIONAL ENGINEER ABDUL MALIKYAR No. C66169 Exp. 06-30-14 CIVIL STATE OF CALIFORNIA

THE STATE OF CALIFORNIA OR ITS OFFICERS OR AGENTS SHALL NOT BE RESPONSIBLE FOR THE ACCURACY OR COMPLETENESS OF SCANNED COPIES OF THIS PLAN SHEET.

NOTE:

1. FOR ACCURATE RIGHT OF WAY DATA, CONTACT RIGHT OF WAY ENGINEERING AT THE DISTRICT OFFICE.

CURVE DATA

No.	R	Δ	T	L
6	2500.02′	44°30′40″	1023.07′	1942.18′

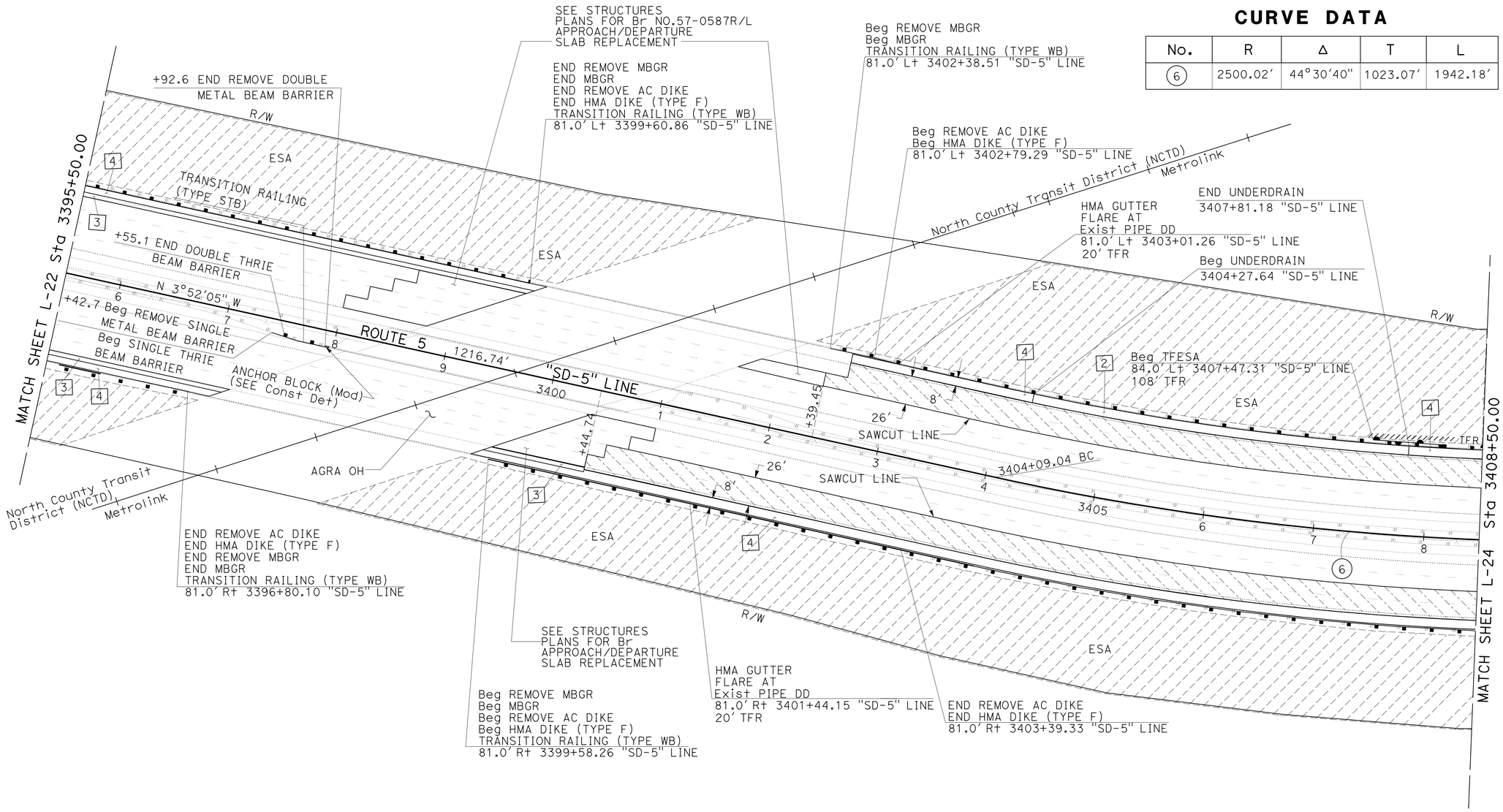

LAYOUT

SCALE 1" = 50′

L-23

STATE OF CALIFORNIA - DEPARTMENT OF TRANSPORTATION
Caltrans
DESIGN
FUNCTIONAL SUPERVISOR: EDWARD HAJJ
CALCULATED-DESIGNED BY: ABDUL MALIKYAR
CHECKED BY: HECTOR GRACIA
REVISED BY
DATE REVISED

LAST REVISION 07-22-13
DATE PLOTTED => 31-OCT-2013
TIME PLOTTED => 15:22

BORDER LAST REVISED 7/2/2010
USERNAME => s127400
DGN FILE => 1100020342ea023.dgn
RELATIVE BORDER SCALE IS IN INCHES 0 1 2 3
UNIT 2761
PROJECT NUMBER & PHASE 11000203421

Dist	COUNTY	ROUTE	POST MILES TOTAL PROJECT	SHEET No.	TOTAL SHEETS
11	SD	5	R58.1/R72.4	32	259

07-12-13
REGISTERED CIVIL ENGINEER DATE

11-04-13
PLANS APPROVAL DATE

REGISTERED PROFESSIONAL ENGINEER
ABDUL MALIKYAR
No. C66169
Exp. 06-30-14
CIVIL
STATE OF CALIFORNIA

THE STATE OF CALIFORNIA OR ITS OFFICERS OR AGENTS SHALL NOT BE RESPONSIBLE FOR THE ACCURACY OR COMPLETENESS OF SCANNED COPIES OF THIS PLAN SHEET.

NOTE:

1. FOR ACCURATE RIGHT OF WAY DATA, CONTACT RIGHT OF WAY ENGINEERING AT THE DISTRICT OFFICE.

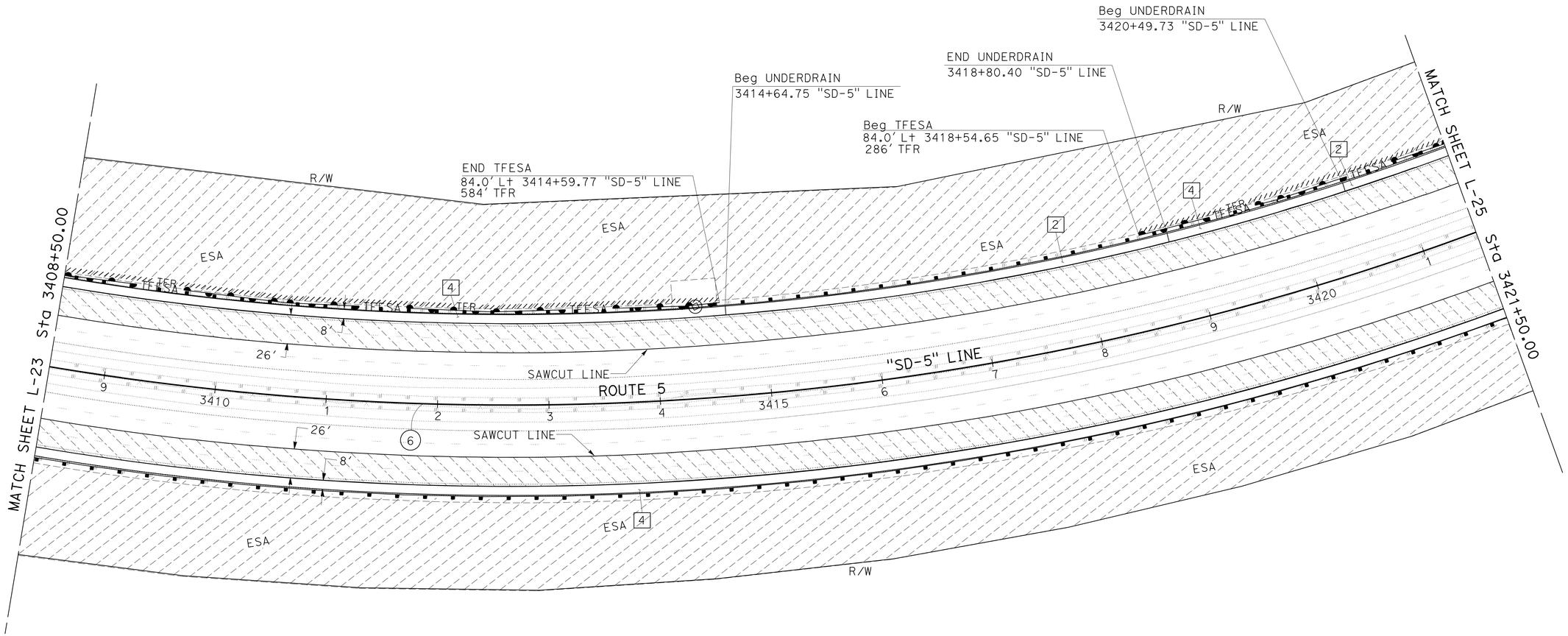

CURVE DATA

No.	R	Δ	T	L
6	2500.02'	44°30'40"	1023.07'	1942.18'

LAYOUT

SCALE 1" = 50'

L-24

STATE OF CALIFORNIA - DEPARTMENT OF TRANSPORTATION
Caltrans
DESIGN

FUNCTIONAL SUPERVISOR: EDWARD HAJJ
CALCULATED-DESIGNED BY: ABDUL MALIKYAR
CHECKED BY: HECTOR GRACIA
REVISED BY
DATE REVISED

LAST REVISION 07-22-13
DATE PLOTTED => 31-OCT-2013
TIME PLOTTED => 15:22

Dist	COUNTY	ROUTE	POST MILES TOTAL PROJECT	SHEET No.	TOTAL SHEETS
11	SD	5	R58.1/R72.4	33	259

07-12-13
REGISTERED CIVIL ENGINEER DATE

11-04-13
PLANS APPROVAL DATE

REGISTERED PROFESSIONAL ENGINEER
ABDUL MALIKYAR
No. C66169
Exp. 06-30-14
CIVIL
STATE OF CALIFORNIA

THE STATE OF CALIFORNIA OR ITS OFFICERS OR AGENTS SHALL NOT BE RESPONSIBLE FOR THE ACCURACY OR COMPLETENESS OF SCANNED COPIES OF THIS PLAN SHEET.

NOTE:

1. FOR ACCURATE RIGHT OF WAY DATA, CONTACT RIGHT OF WAY ENGINEERING AT THE DISTRICT OFFICE.

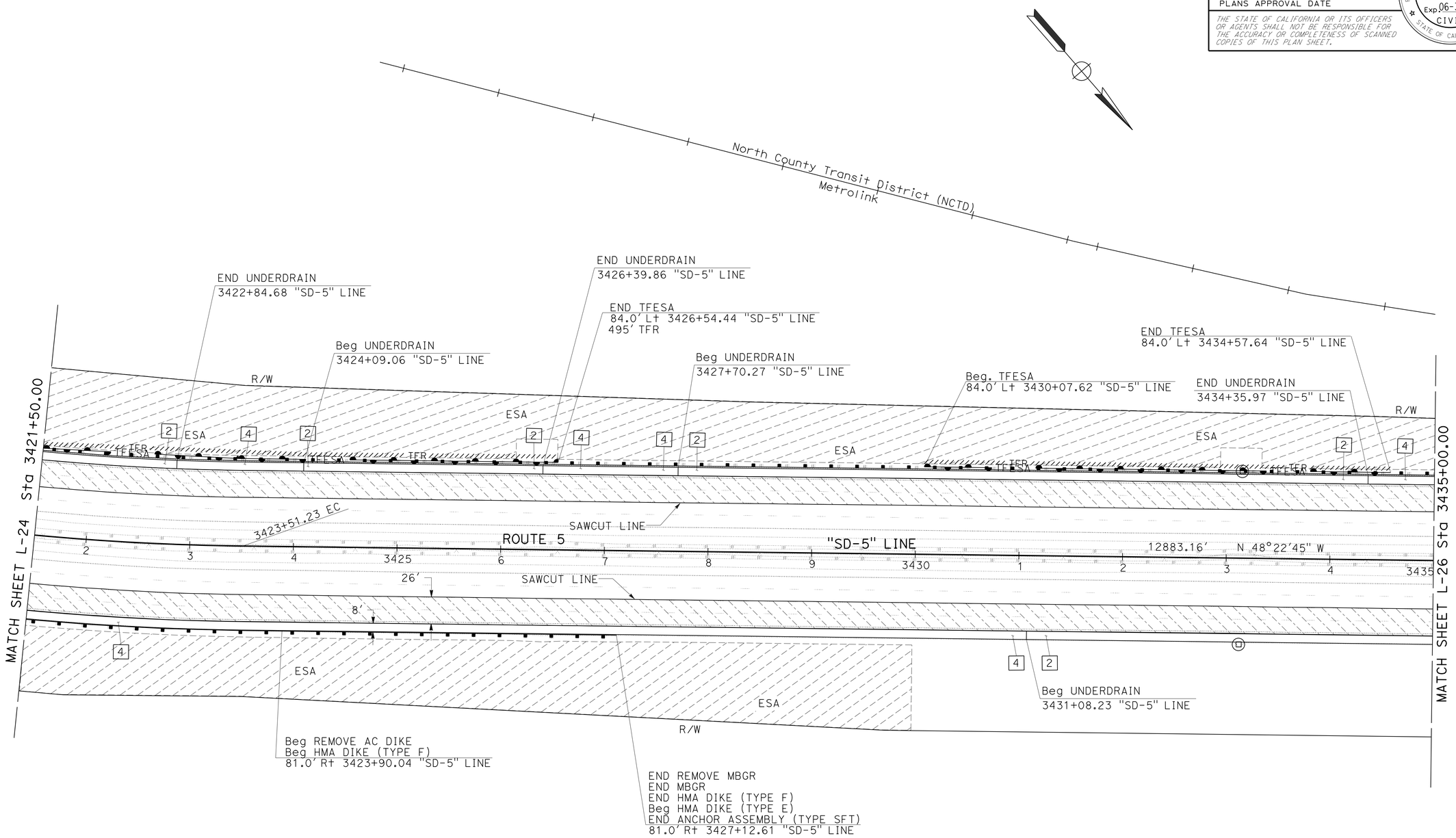

LAYOUT

SCALE 1" = 50'

L-25

STATE OF CALIFORNIA - DEPARTMENT OF TRANSPORTATION
Caltrans
DESIGN

FUNCTIONAL SUPERVISOR: EDWARD HAJJ
CALCULATED-DESIGNED BY: ABDUL MALIKYAR
CHECKED BY: HECTOR GRACIA
REVISED BY
DATE REVISED

LAST REVISION 07-22-13
DATE PLOTTED => 31-OCT-2013
TIME PLOTTED => 15:22

Dist	COUNTY	ROUTE	POST MILES TOTAL PROJECT	SHEET No.	TOTAL SHEETS
11	SD	5	R58.1/R72.4	34	259

07-12-13
REGISTERED CIVIL ENGINEER DATE

11-04-13
PLANS APPROVAL DATE

REGISTERED PROFESSIONAL ENGINEER
ABDUL MALIKYAR
No. C66169
Exp. 06-30-14
CIVIL
STATE OF CALIFORNIA

THE STATE OF CALIFORNIA OR ITS OFFICERS OR AGENTS SHALL NOT BE RESPONSIBLE FOR THE ACCURACY OR COMPLETENESS OF SCANNED COPIES OF THIS PLAN SHEET.

NOTE:

1. FOR ACCURATE RIGHT OF WAY DATA, CONTACT RIGHT OF WAY ENGINEERING AT THE DISTRICT OFFICE.

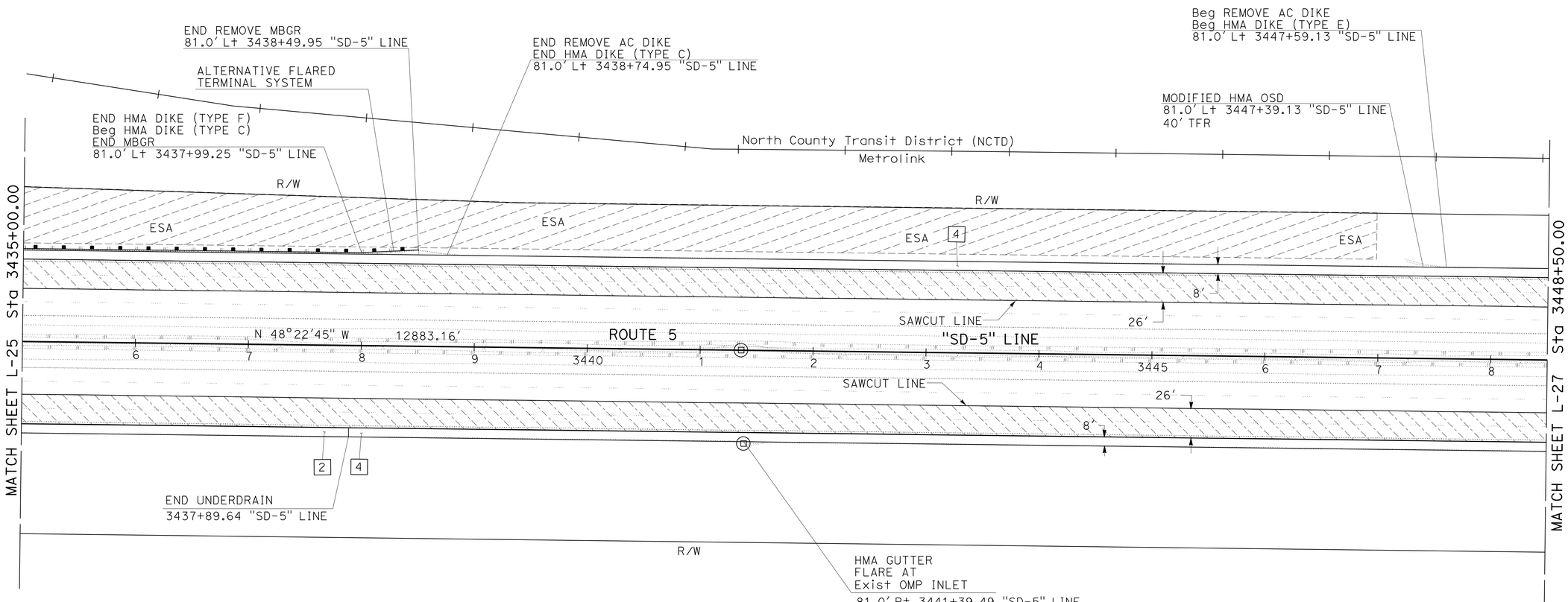

LAYOUT

SCALE 1" = 50'

L-26

STATE OF CALIFORNIA - DEPARTMENT OF TRANSPORTATION
Caltrans
DESIGN

FUNCTIONAL SUPERVISOR: EDWARD HAJJ
CALCULATED-DESIGNED BY: ABDUL MALIKYAR
CHECKED BY: HECTOR GRACIA
REVISED BY
DATE REVISED

LAST REVISION 07-22-13
DATE PLOTTED => 05-NOV-2013
TIME PLOTTED => 13:48

Dist	COUNTY	ROUTE	POST MILES TOTAL PROJECT	SHEET No.	TOTAL SHEETS
11	SD	5	R58.1/R72.4	35	259

07-12-13
REGISTERED CIVIL ENGINEER DATE

11-04-13
PLANS APPROVAL DATE

REGISTERED PROFESSIONAL ENGINEER
ABDUL MALIKYAR
No. C66169
Exp. 06-30-14
CIVIL
STATE OF CALIFORNIA

THE STATE OF CALIFORNIA OR ITS OFFICERS OR AGENTS SHALL NOT BE RESPONSIBLE FOR THE ACCURACY OR COMPLETENESS OF SCANNED COPIES OF THIS PLAN SHEET.

NOTE:

1. FOR ACCURATE RIGHT OF WAY DATA, CONTACT RIGHT OF WAY ENGINEERING AT THE DISTRICT OFFICE.

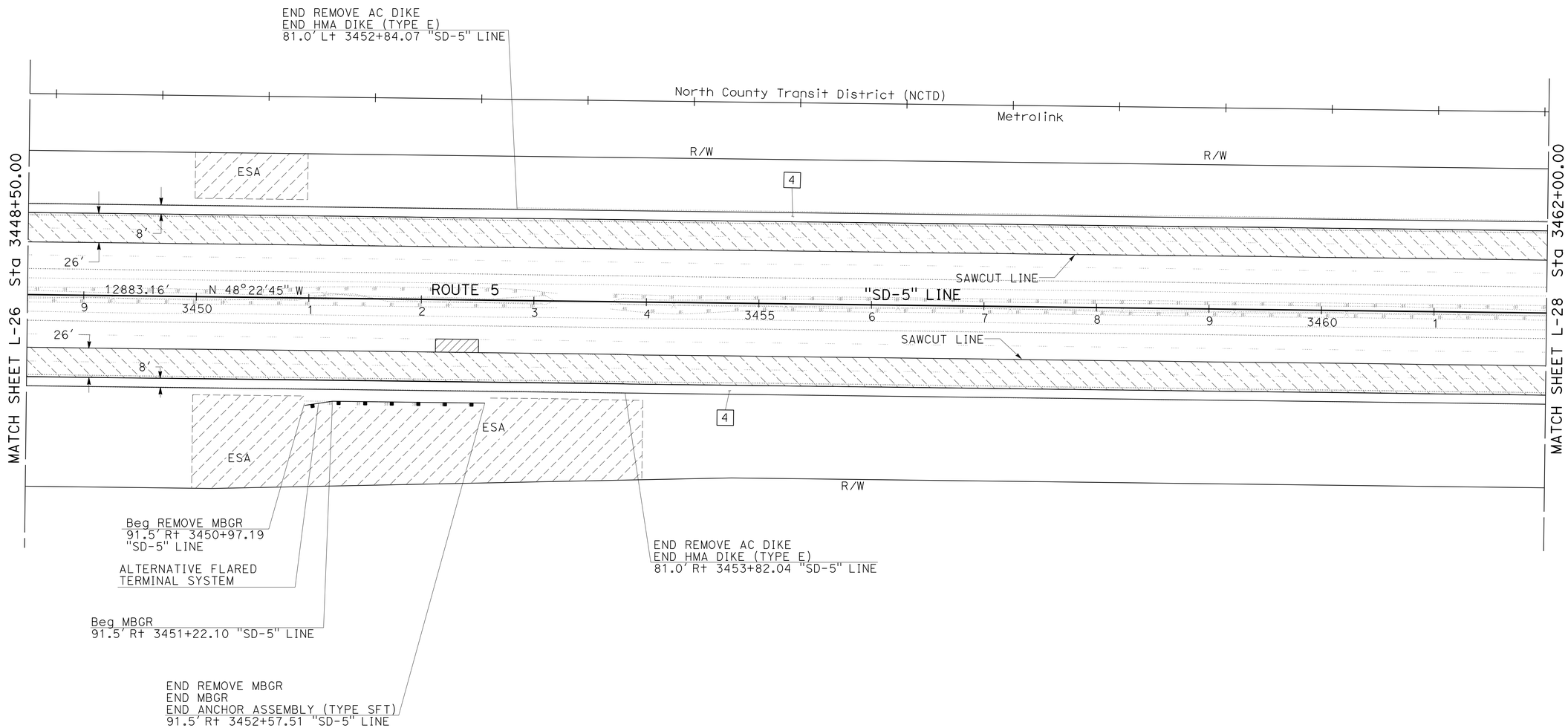

LAYOUT

SCALE 1" = 50'

L-27

REVISED BY	DATE REVISED

CALCULATED-DESIGNED BY: ABDUL MALIKYAR
CHECKED BY: HECTOR GRACIA
FUNCTIONAL SUPERVISOR: EDWARD HAJJ

STATE OF CALIFORNIA - DEPARTMENT OF TRANSPORTATION
Caltrans
DESIGN

LAST REVISION 07-23-13
DATE PLOTTED => 31-OCT-2013
TIME PLOTTED => 15:22

Dist	COUNTY	ROUTE	POST MILES TOTAL PROJECT	SHEET No.	TOTAL SHEETS
11	SD	5	R58.1/R72.4	36	259

07-12-13
REGISTERED CIVIL ENGINEER DATE

11-04-13
PLANS APPROVAL DATE

REGISTERED PROFESSIONAL ENGINEER
ABDUL MALIKYAR
No. C66169
Exp. 06-30-14
CIVIL
STATE OF CALIFORNIA

THE STATE OF CALIFORNIA OR ITS OFFICERS OR AGENTS SHALL NOT BE RESPONSIBLE FOR THE ACCURACY OR COMPLETENESS OF SCANNED COPIES OF THIS PLAN SHEET.

NOTE:

1. FOR ACCURATE RIGHT OF WAY DATA, CONTACT RIGHT OF WAY ENGINEERING AT THE DISTRICT OFFICE.

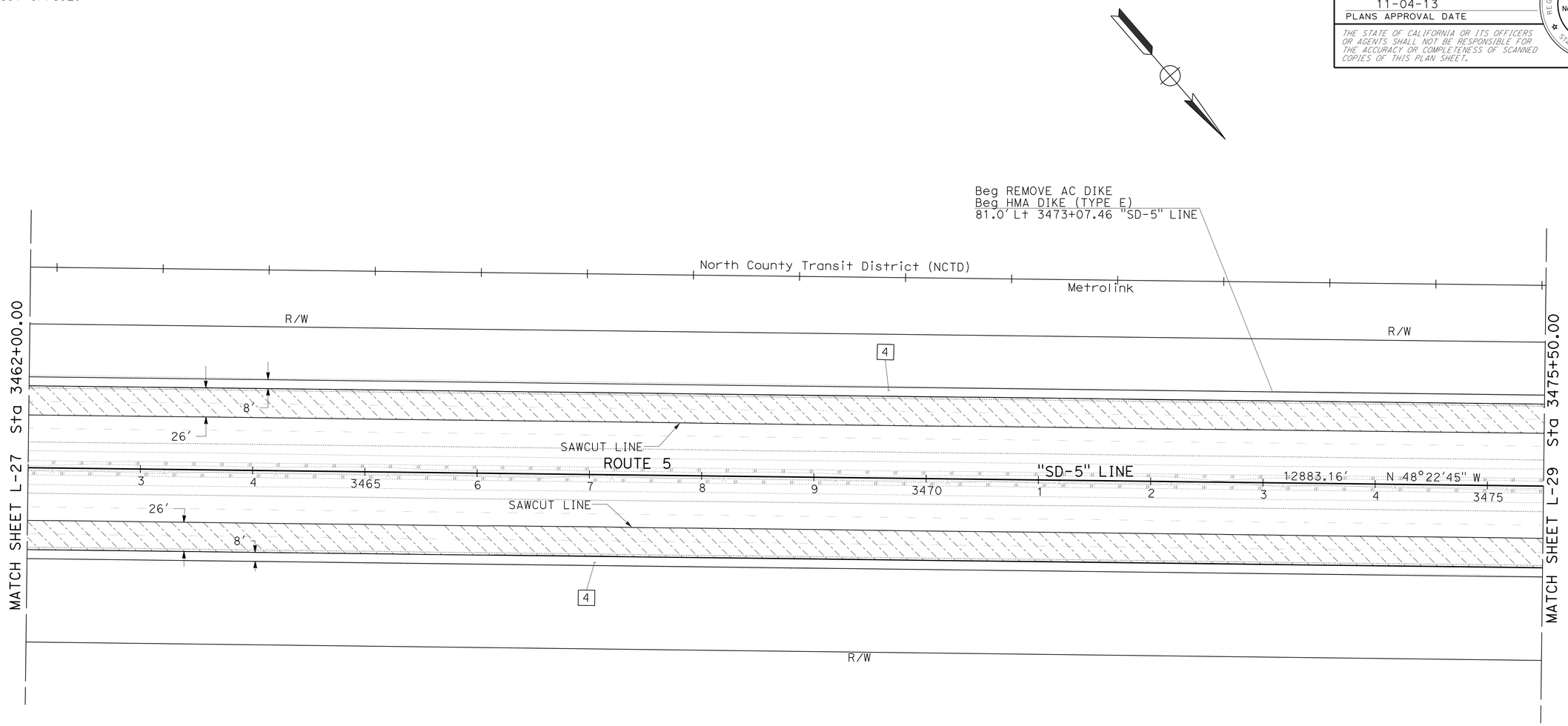

LAYOUT

SCALE 1" = 50'

L-28

STATE OF CALIFORNIA - DEPARTMENT OF TRANSPORTATION
DESIGN

FUNCTIONAL SUPERVISOR: EDWARD HAJJ
CALCULATED-DESIGNED BY: ABDUL MALIKYAR
CHECKED BY: HECTOR GRACIA
REVISED BY
DATE REVISED

LAST REVISION 07-23-13
DATE PLOTTED => 31-OCT-2013
TIME PLOTTED => 15:22

Dist	COUNTY	ROUTE	POST MILES TOTAL PROJECT	SHEET No.	TOTAL SHEETS
11	SD	5	R58.1/R72.4	37	259

07-12-13
REGISTERED CIVIL ENGINEER DATE

11-04-13
PLANS APPROVAL DATE

REGISTERED PROFESSIONAL ENGINEER
ABDUL MALIKYAR
No. C66169
Exp. 06-30-14
CIVIL
STATE OF CALIFORNIA

THE STATE OF CALIFORNIA OR ITS OFFICERS OR AGENTS SHALL NOT BE RESPONSIBLE FOR THE ACCURACY OR COMPLETENESS OF SCANNED COPIES OF THIS PLAN SHEET.

NOTE:

1. FOR ACCURATE RIGHT OF WAY DATA, CONTACT RIGHT OF WAY ENGINEERING AT THE DISTRICT OFFICE.

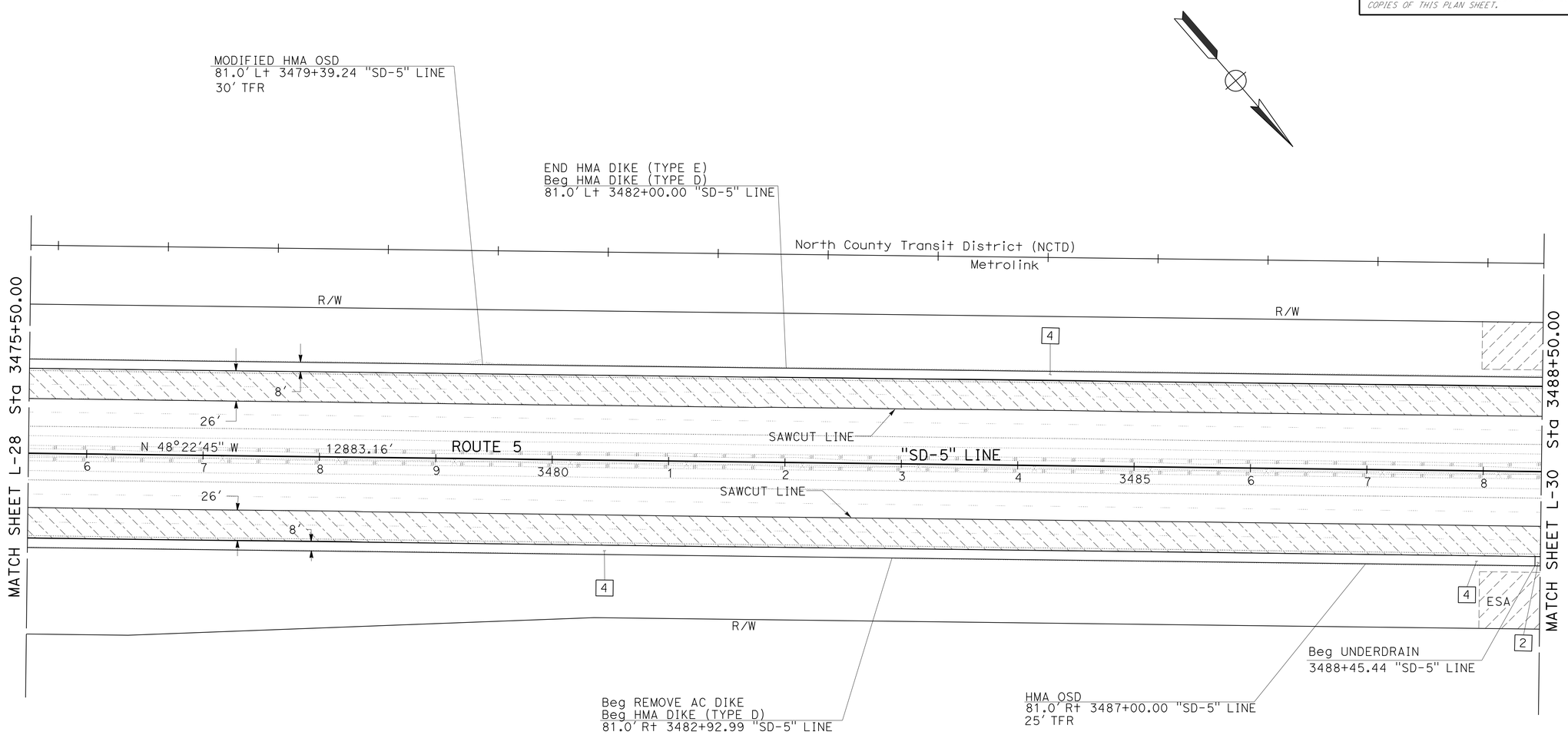

LAYOUT

SCALE 1" = 50'

L-29

STATE OF CALIFORNIA - DEPARTMENT OF TRANSPORTATION
Caltrans
DESIGN

FUNCTIONAL SUPERVISOR: EDWARD HAJJ
CALCULATED-DESIGNED BY: ABDUL MALIKYAR
CHECKED BY: HECTOR GRACIA
REVISED BY
DATE REVISED

LAST REVISION 07-23-13
DATE PLOTTED => 31-OCT-2013
TIME PLOTTED => 15:22

Dist	COUNTY	ROUTE	POST MILES TOTAL PROJECT	SHEET No.	TOTAL SHEETS
11	SD	5	R58.1/R72.4	38	259

07-12-13
REGISTERED CIVIL ENGINEER DATE

11-04-13
PLANS APPROVAL DATE

REGISTERED PROFESSIONAL ENGINEER
ABDUL MALIKYAR
No. C66169
Exp. 06-30-14
CIVIL
STATE OF CALIFORNIA

THE STATE OF CALIFORNIA OR ITS OFFICERS OR AGENTS SHALL NOT BE RESPONSIBLE FOR THE ACCURACY OR COMPLETENESS OF SCANNED COPIES OF THIS PLAN SHEET.

NOTE:

1. FOR ACCURATE RIGHT OF WAY DATA, CONTACT RIGHT OF WAY ENGINEERING AT THE DISTRICT OFFICE.

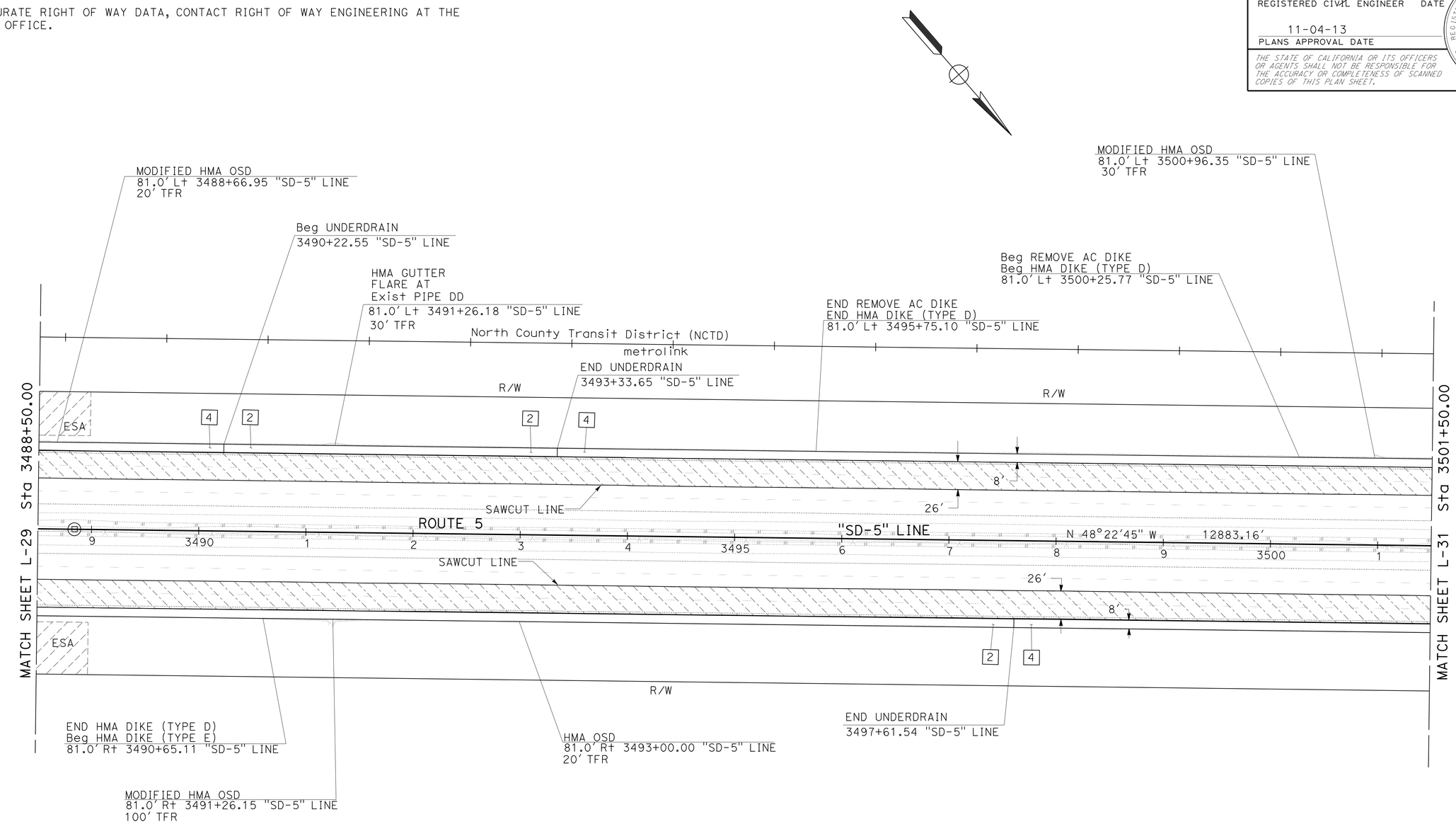

LAYOUT

SCALE 1" = 50'

L-30

STATE OF CALIFORNIA - DEPARTMENT OF TRANSPORTATION
Caltrans
DESIGN

FUNCTIONAL SUPERVISOR: EDWARD HAJJ
CALCULATED-DESIGNED BY: ABDUL MALIKYAR
CHECKED BY: HECTOR GRACIA
REVISED BY
DATE REVISED

LAST REVISION 07-23-13
DATE PLOTTED => 31-OCT-2013
TIME PLOTTED => 15:22

Dist	COUNTY	ROUTE	POST MILES TOTAL PROJECT	SHEET No.	TOTAL SHEETS
11	SD	5	R58.1/R72.4	39	259

07-12-13
REGISTERED CIVIL ENGINEER DATE

11-04-13
PLANS APPROVAL DATE

REGISTERED PROFESSIONAL ENGINEER
ABDUL MALIKYAR
No. C66169
Exp. 06-30-14
CIVIL
STATE OF CALIFORNIA

THE STATE OF CALIFORNIA OR ITS OFFICERS OR AGENTS SHALL NOT BE RESPONSIBLE FOR THE ACCURACY OR COMPLETENESS OF SCANNED COPIES OF THIS PLAN SHEET.

NOTE:

1. FOR ACCURATE RIGHT OF WAY DATA, CONTACT RIGHT OF WAY ENGINEERING AT THE DISTRICT OFFICE.

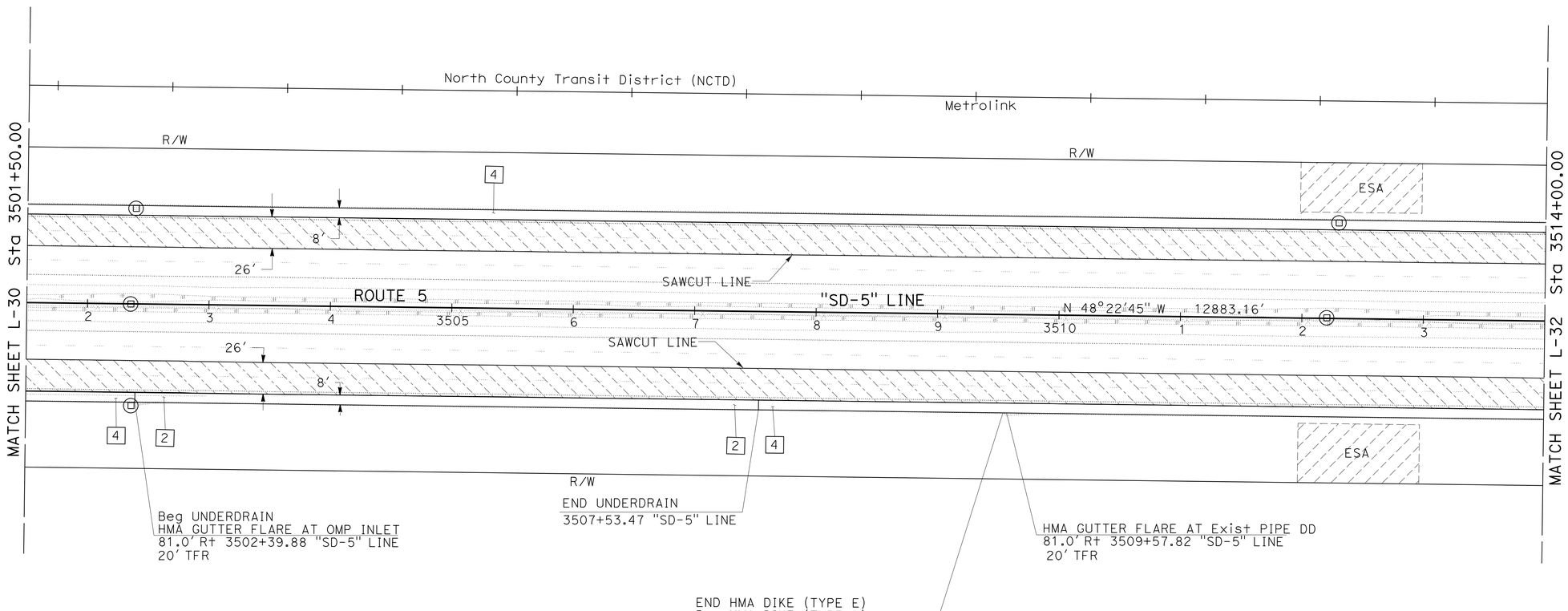

LAYOUT

SCALE 1" = 50'

L-31

REVISED BY	DATE REVISED

CALCULATED-DESIGNED BY	CHECKED BY
ABDUL MALIKYAR	HECTOR GRACIA

FUNCTIONAL SUPERVISOR: EDWARD HAJJ

STATE OF CALIFORNIA - DEPARTMENT OF TRANSPORTATION

Caltrans®

DESIGN

LAST REVISION 07-23-13 | DATE PLOTTED => 31-OCT-2013 | TIME PLOTTED => 15:22

Dist	COUNTY	ROUTE	POST MILES TOTAL PROJECT	SHEET No.	TOTAL SHEETS
11	SD	5	R58.1/R72.4	40	259

07-12-13
REGISTERED CIVIL ENGINEER DATE

11-04-13
PLANS APPROVAL DATE

REGISTERED PROFESSIONAL ENGINEER
ABDUL MALIKYAR
No. C66169
Exp. 06-30-14
CIVIL
STATE OF CALIFORNIA

THE STATE OF CALIFORNIA OR ITS OFFICERS OR AGENTS SHALL NOT BE RESPONSIBLE FOR THE ACCURACY OR COMPLETENESS OF SCANNED COPIES OF THIS PLAN SHEET.

NOTE:

1. FOR ACCURATE RIGHT OF WAY DATA, CONTACT RIGHT OF WAY ENGINEERING AT THE DISTRICT OFFICE.

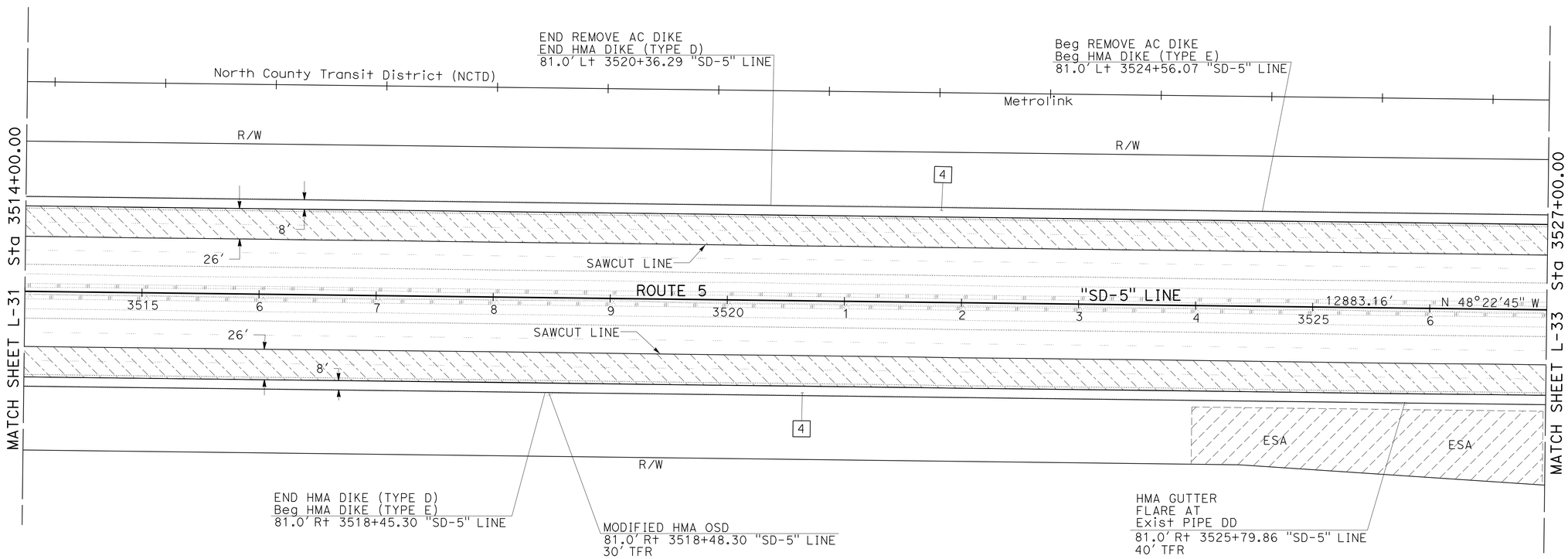

LAYOUT

SCALE 1" = 50'

L-32

STATE OF CALIFORNIA - DEPARTMENT OF TRANSPORTATION
Caltrans
DESIGN

FUNCTIONAL SUPERVISOR: EDWARD HAJJ
CALCULATED-DESIGNED BY: ABDUL MALIKYAR
CHECKED BY: HECTOR GRACIA
REVISED BY
DATE REVISED

LAST REVISION 07-23-13
DATE PLOTTED => 31-OCT-2013
TIME PLOTTED => 15:22

BORDER LAST REVISED 7/2/2010
USERNAME => s127400
DGN FILE => 1100020342ea032.dgn
RELATIVE BORDER SCALE IS IN INCHES 0 1 2 3
UNIT 2761
PROJECT NUMBER & PHASE 11000203421

Dist	COUNTY	ROUTE	POST MILES TOTAL PROJECT	SHEET No.	TOTAL SHEETS
11	SD	5	R58.1/R72.4	41	259

07-12-13
REGISTERED CIVIL ENGINEER DATE

11-04-13
PLANS APPROVAL DATE

REGISTERED PROFESSIONAL ENGINEER
ABDUL MALIKYAR
No. C66169
Exp. 06-30-14
CIVIL
STATE OF CALIFORNIA

THE STATE OF CALIFORNIA OR ITS OFFICERS OR AGENTS SHALL NOT BE RESPONSIBLE FOR THE ACCURACY OR COMPLETENESS OF SCANNED COPIES OF THIS PLAN SHEET.

NOTE:

1. FOR ACCURATE RIGHT OF WAY DATA, CONTACT RIGHT OF WAY ENGINEERING AT THE DISTRICT OFFICE.

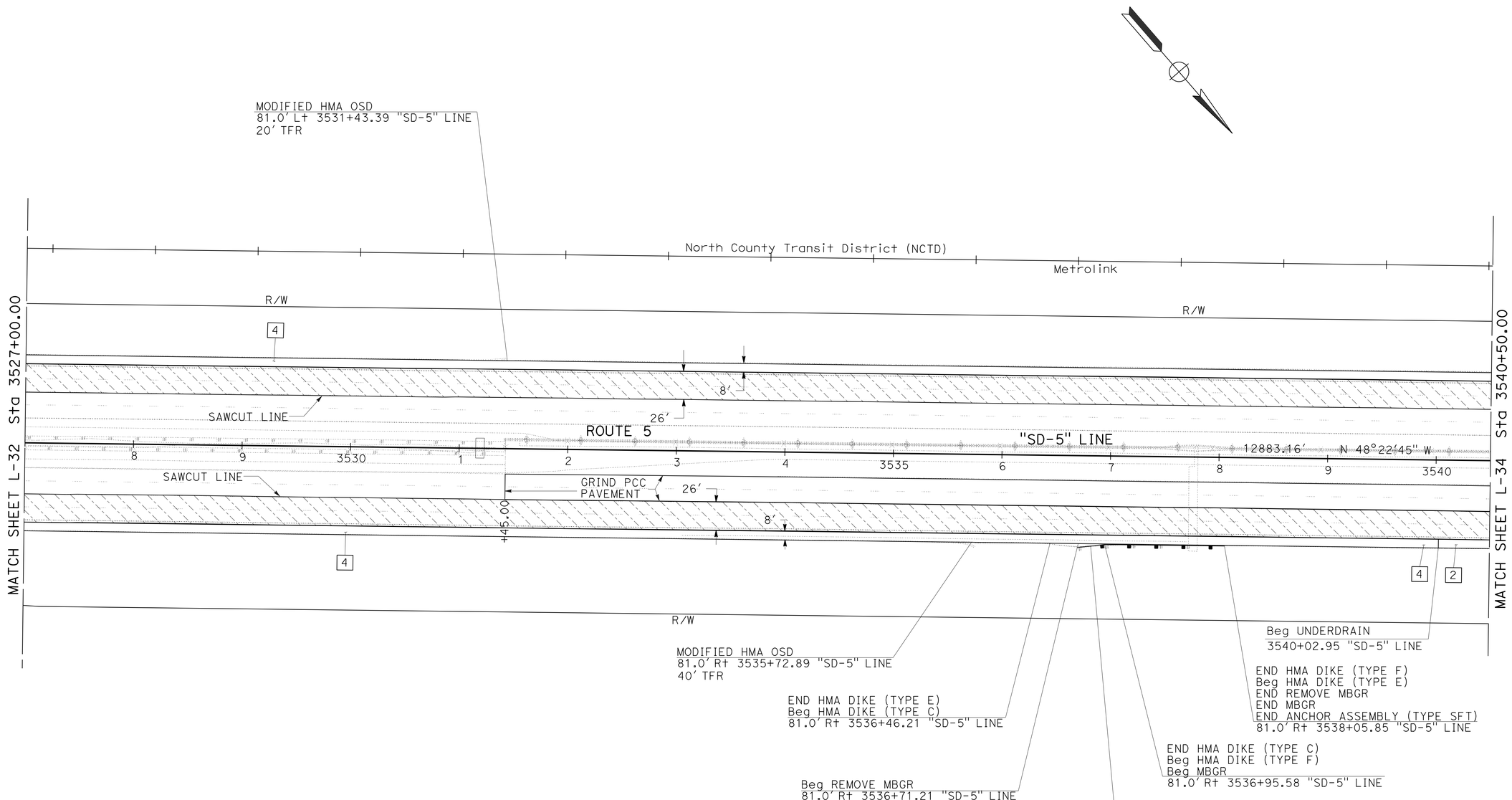

LAYOUT

SCALE 1" = 50'

L-33

REVISED BY	DATE REVISED
ABDUL MALIKYAR	HECTOR GRACIA
CALCULATED-DESIGNED BY	CHECKED BY
FUNCTIONAL SUPERVISOR	EDWARD HAJJ

STATE OF CALIFORNIA - DEPARTMENT OF TRANSPORTATION
Caltrans
DESIGN

LAST REVISION 07-23-13 | DATE PLOTTED => 31-OCT-2013 | TIME PLOTTED => 15:22

Dist	COUNTY	ROUTE	POST MILES TOTAL PROJECT	SHEET No.	TOTAL SHEETS
11	SD	5	R58.1/R72.4	42	259

07-12-13
REGISTERED CIVIL ENGINEER DATE

11-04-13
PLANS APPROVAL DATE

REGISTERED PROFESSIONAL ENGINEER
ABDUL MALIKYAR
No. C66169
Exp. 06-30-14
CIVIL
STATE OF CALIFORNIA

THE STATE OF CALIFORNIA OR ITS OFFICERS OR AGENTS SHALL NOT BE RESPONSIBLE FOR THE ACCURACY OR COMPLETENESS OF SCANNED COPIES OF THIS PLAN SHEET.

NOTE:

1. FOR ACCURATE RIGHT OF WAY DATA, CONTACT RIGHT OF WAY ENGINEERING AT THE DISTRICT OFFICE.

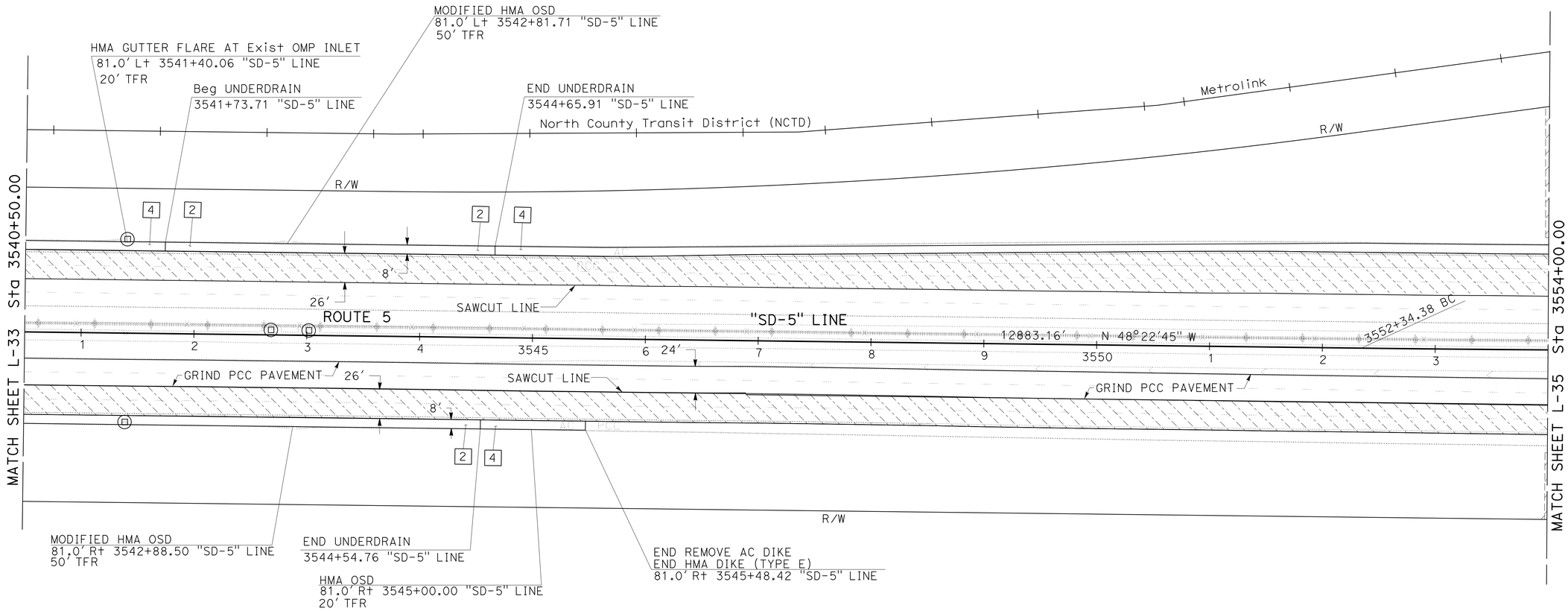

SCALE 1" = 50'

LAYOUT

L-34

STATE OF CALIFORNIA - DEPARTMENT OF TRANSPORTATION
Caltrans
DESIGN

FUNCTIONAL SUPERVISOR: EDWARD HAJJ
CALCULATED-DESIGNED BY: ABDUL MALIKYAR
CHECKED BY: HECTOR GRACIA
REVISED BY
DATE REVISED

LAST REVISION 07-23-13
DATE PLOTTED => 31-OCT-2013
TIME PLOTTED => 15:22

Dist	COUNTY	ROUTE	POST MILES TOTAL PROJECT	SHEET No.	TOTAL SHEETS
11	SD	5	R58.1/R72.4	43	259

REGISTERED CIVIL ENGINEER 07-12-13 DATE

11-04-13
PLANS APPROVAL DATE

REGISTERED PROFESSIONAL ENGINEER ABDUL MALIKYAR No. C66169 Exp. 06-30-14 CIVIL STATE OF CALIFORNIA

THE STATE OF CALIFORNIA OR ITS OFFICERS OR AGENTS SHALL NOT BE RESPONSIBLE FOR THE ACCURACY OR COMPLETENESS OF SCANNED COPIES OF THIS PLAN SHEET.

NOTE:

1. FOR ACCURATE RIGHT OF WAY DATA, CONTACT RIGHT OF WAY ENGINEERING AT THE DISTRICT OFFICE.

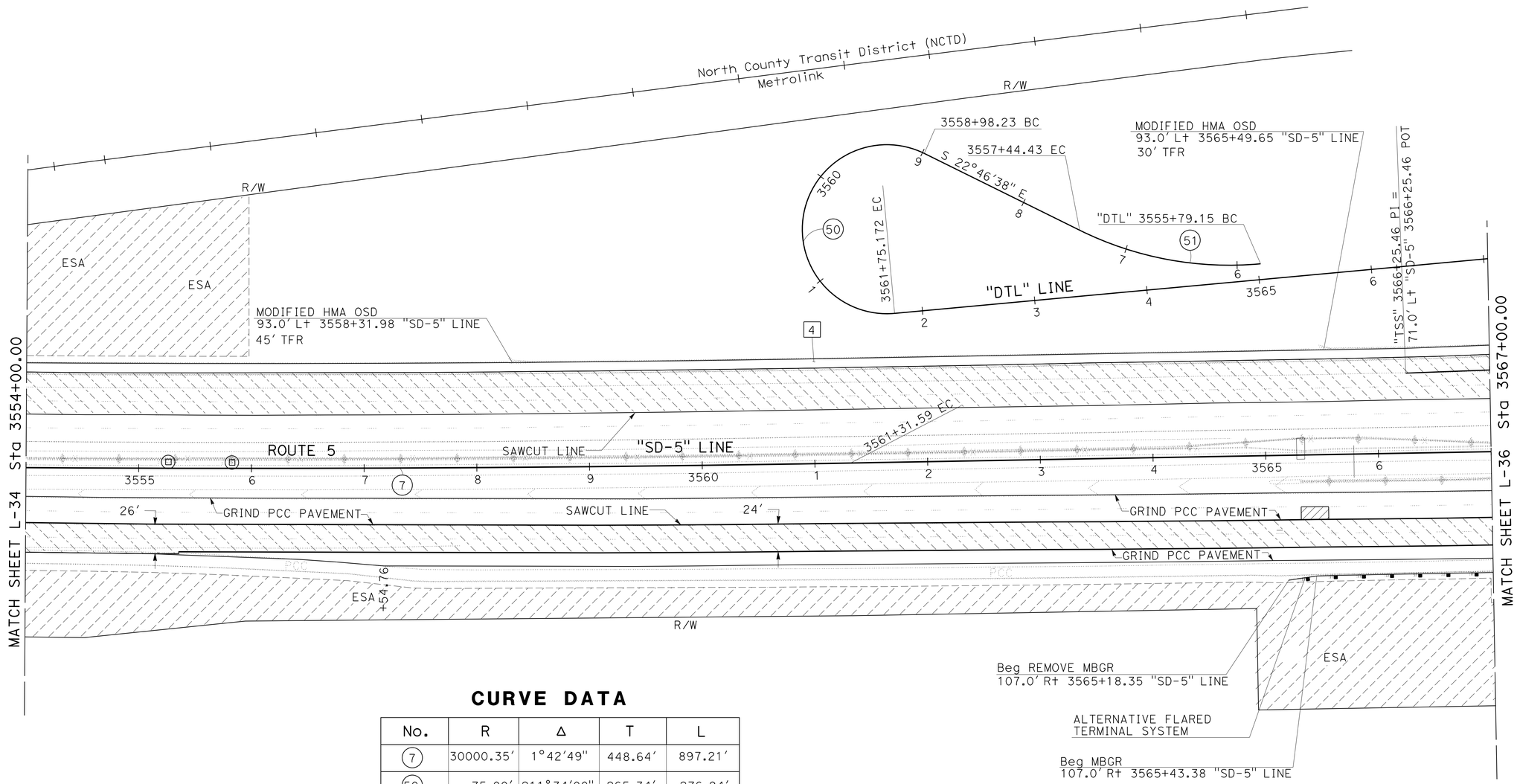

CURVE DATA

No.	R	Δ	T	L
7	30000.35'	1°42'49"	448.64'	897.21'
50	75.00'	211°34'00"	265.34'	276.94'
51	300.00'	31°34'00"	84.80'	165.28'

LAYOUT

SCALE 1" = 50'

L-35

REVISED BY | DATE REVISED
ABDUL MALIKYAR | HECTOR GRACIA
CALCULATED-DESIGNED BY | CHECKED BY
FUNCTIONAL SUPERVISOR | EDWARD HAJJ
STATE OF CALIFORNIA - DEPARTMENT OF TRANSPORTATION
Caltrans
DESIGN

LAST REVISION 07-23-13 | DATE PLOTTED => 31-OCT-2013 | TIME PLOTTED => 15:22

BORDER LAST REVISED 7/2/2010 | USERNAME => s127400 | DGN FILE => 1100020342ea035.dgn | RELATIVE BORDER SCALE IS IN INCHES 0 1 2 3 | UNIT 2761 | PROJECT NUMBER & PHASE 11000203421

Dist	COUNTY	ROUTE	POST MILES TOTAL PROJECT	SHEET No.	TOTAL SHEETS
11	SD	5	R58.1/R72.4	44	259

REGISTERED CIVIL ENGINEER 07-12-13 DATE

11-04-13
PLANS APPROVAL DATE

REGISTERED PROFESSIONAL ENGINEER ABDUL MALIKYAR No. C66169 Exp. 06-30-14 CIVIL STATE OF CALIFORNIA

THE STATE OF CALIFORNIA OR ITS OFFICERS OR AGENTS SHALL NOT BE RESPONSIBLE FOR THE ACCURACY OR COMPLETENESS OF SCANNED COPIES OF THIS PLAN SHEET.

NOTES:

1. FOR ACCURATE RIGHT OF WAY DATA, CONTACT RIGHT OF WAY ENGINEERING AT THE DISTRICT OFFICE.
2. AISLES TO BE SHARED USED BETWEEN STATE/ FEDERAL AGENCIES AND THE CONTRACTOR.
3. SEE CONSTRUCTION DETAIL SHEET C-2 FOR TREE DRIPLINE DETAIL.

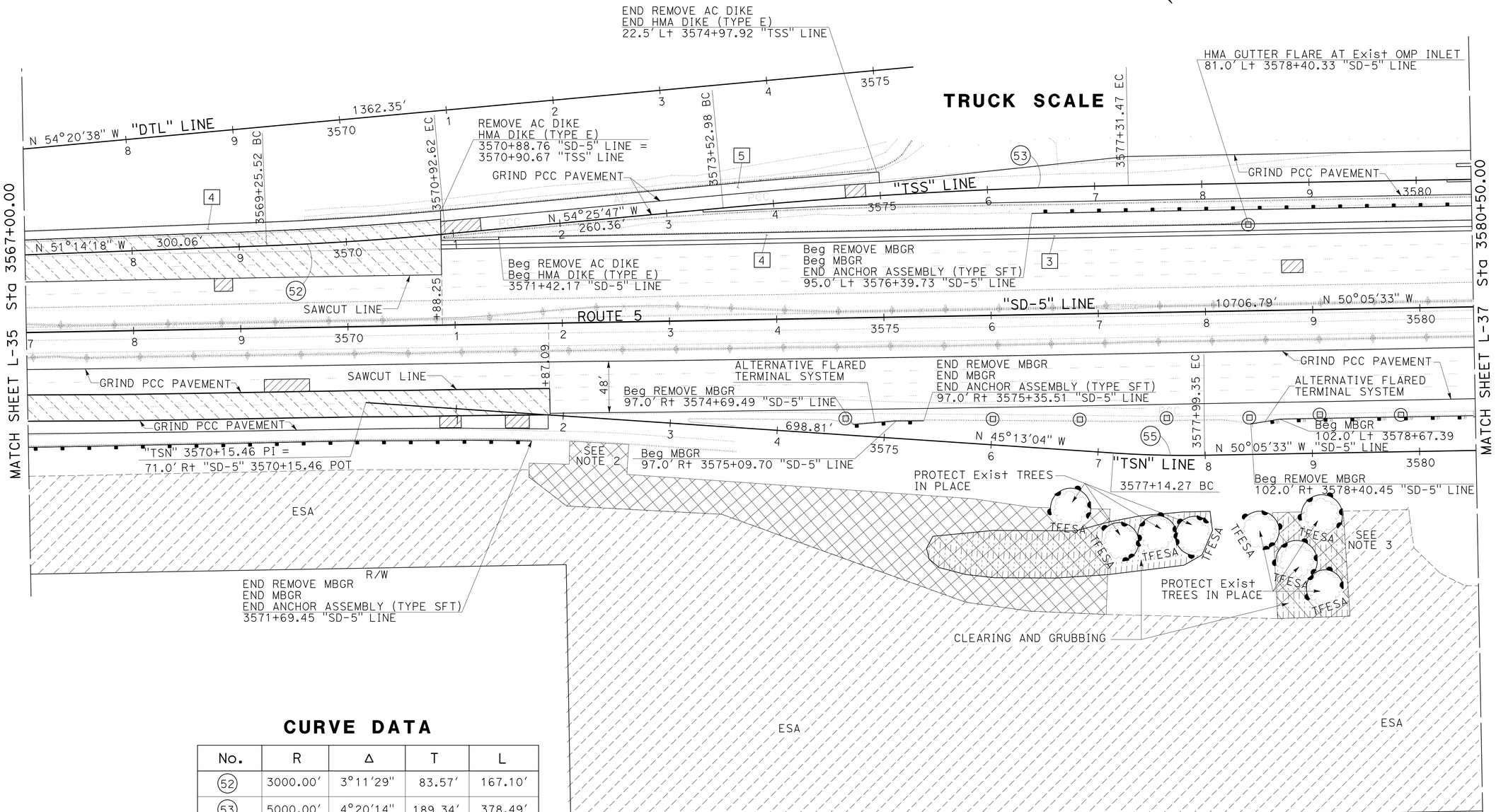

CURVE DATA

No.	R	Δ	T	L
52	3000.00'	3°11'29"	83.57'	167.10'
53	5000.00'	4°20'14"	189.34'	378.49'
55	1000.00'	04°52'29"	42.57'	85.08'

LAYOUT

SCALE 1" = 50'

L-36

STATE OF CALIFORNIA - DEPARTMENT OF TRANSPORTATION
Caltrans® DESIGN
FUNCTIONAL SUPERVISOR: EDWARD HAJJ
CALCULATED-DESIGNED BY: ABDUL MALIKYAR
CHECKED BY: HECTOR GRACIA
REVISED BY / DATE REVISED

LAST REVISION 10-28-13 | DATE PLOTTED => 04-NOV-2013 | TIME PLOTTED => 09:50

Dist	COUNTY	ROUTE	POST MILES TOTAL PROJECT	SHEET No.	TOTAL SHEETS
11	SD	5	R58.1/R72.4	45	259

REGISTERED CIVIL ENGINEER 07-12-13 DATE

11-04-13
PLANS APPROVAL DATE

REGISTERED PROFESSIONAL ENGINEER ABDUL MALIKYAR No. C66169 Exp. 06-30-14 CIVIL STATE OF CALIFORNIA

THE STATE OF CALIFORNIA OR ITS OFFICERS OR AGENTS SHALL NOT BE RESPONSIBLE FOR THE ACCURACY OR COMPLETENESS OF SCANNED COPIES OF THIS PLAN SHEET.

NOTE:

1. FOR ACCURATE RIGHT OF WAY DATA, CONTACT RIGHT OF WAY ENGINEERING AT THE DISTRICT OFFICE.

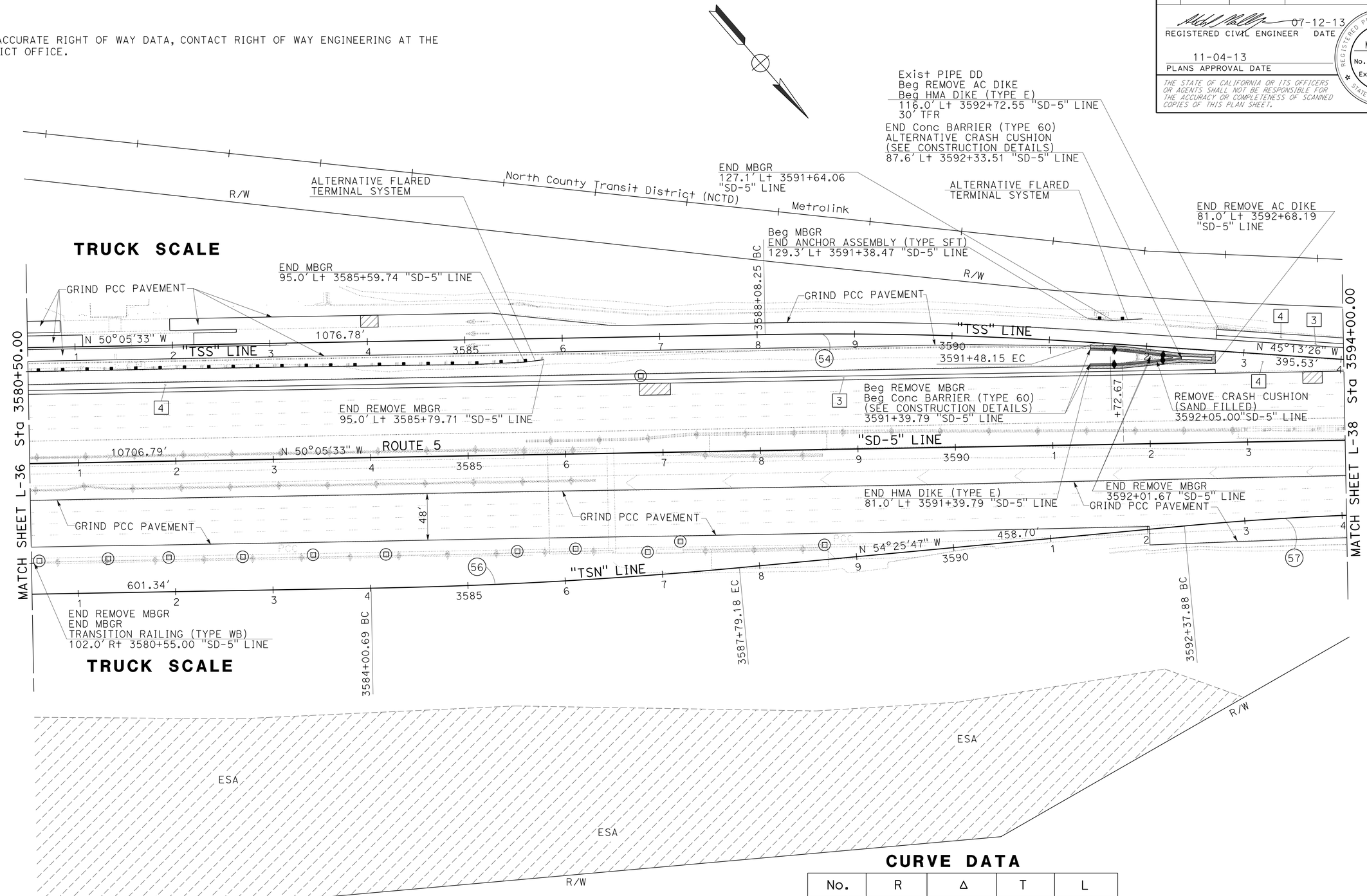

CURVE DATA

No.	R	Δ	T	L
54	4000.00'	4°52'07"	170.05'	339.89'
56	5000.00'	4°20'14"	189.34'	378.49'	
57	3000.00'	3°11'29"	83.57'	167.10'

SCALE 1" = 50'

LAYOUT L-37

REVISED BY | DATE REVISED
ABDUL MALIKYAR | HECTOR GRACIA
CALCULATED-DESIGNED BY | CHECKED BY
FUNCTIONAL SUPERVISOR: EDWARD HAJJ

STATE OF CALIFORNIA - DEPARTMENT OF TRANSPORTATION
Caltrans DESIGN

LAST REVISION 07-23-13 | DATE PLOTTED => 31-OCT-2013 | TIME PLOTTED => 15:22

Dist	COUNTY	ROUTE	POST MILES TOTAL PROJECT	SHEET No.	TOTAL SHEETS
11	SD	5	R58.1/R72.4	46	259

07-12-13
REGISTERED CIVIL ENGINEER DATE

11-04-13
PLANS APPROVAL DATE

REGISTERED PROFESSIONAL ENGINEER
ABDUL MALIKYAR
No. C66169
Exp. 06-30-14
CIVIL
STATE OF CALIFORNIA

THE STATE OF CALIFORNIA OR ITS OFFICERS OR AGENTS SHALL NOT BE RESPONSIBLE FOR THE ACCURACY OR COMPLETENESS OF SCANNED COPIES OF THIS PLAN SHEET.

NOTE:

1. FOR ACCURATE RIGHT OF WAY DATA, CONTACT RIGHT OF WAY ENGINEERING AT THE DISTRICT OFFICE.

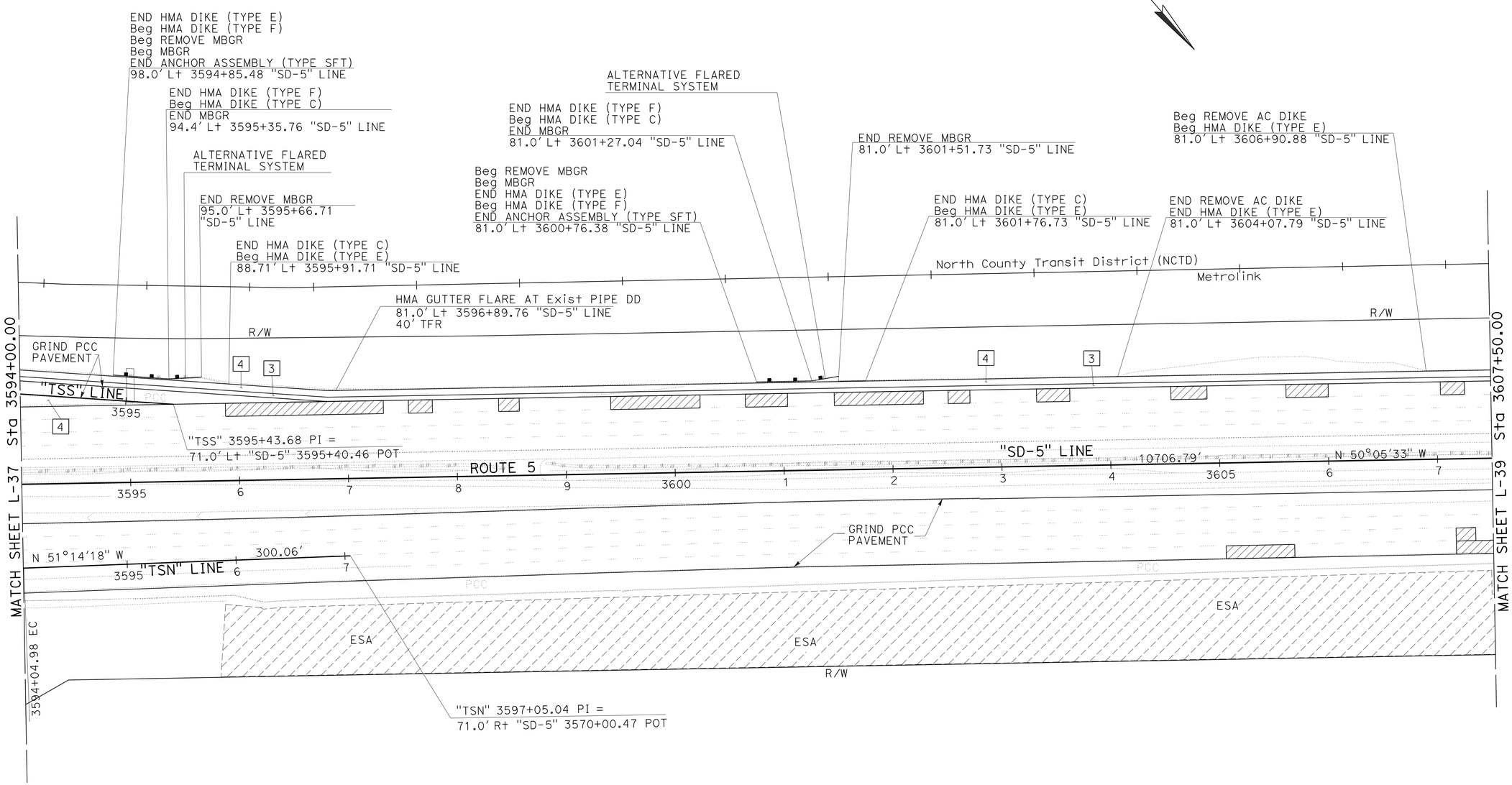

LAYOUT

SCALE 1" = 50'

L-38

REVISED BY	DATE REVISED

CALCULATED-DESIGNED BY	CHECKED BY
ABDUL MALIKYAR	HECTOR GRACIA

FUNCTIONAL SUPERVISOR: EDWARD HAJJ

STATE OF CALIFORNIA - DEPARTMENT OF TRANSPORTATION

Caltrans

DESIGN

LAST REVISION 07-24-13 | DATE PLOTTED => 31-OCT-2013 | TIME PLOTTED => 15:22

Dist	COUNTY	ROUTE	POST MILES TOTAL PROJECT	SHEET No.	TOTAL SHEETS
11	SD	5	R58.1/R72.4	47	259

07-12-13
REGISTERED CIVIL ENGINEER DATE

11-04-13
PLANS APPROVAL DATE

REGISTERED PROFESSIONAL ENGINEER
ABDUL MALIKYAR
No. C66169
Exp. 06-30-14
CIVIL
STATE OF CALIFORNIA

THE STATE OF CALIFORNIA OR ITS OFFICERS OR AGENTS SHALL NOT BE RESPONSIBLE FOR THE ACCURACY OR COMPLETENESS OF SCANNED COPIES OF THIS PLAN SHEET.

NOTE:

1. FOR ACCURATE RIGHT OF WAY DATA, CONTACT RIGHT OF WAY ENGINEERING AT THE DISTRICT OFFICE.

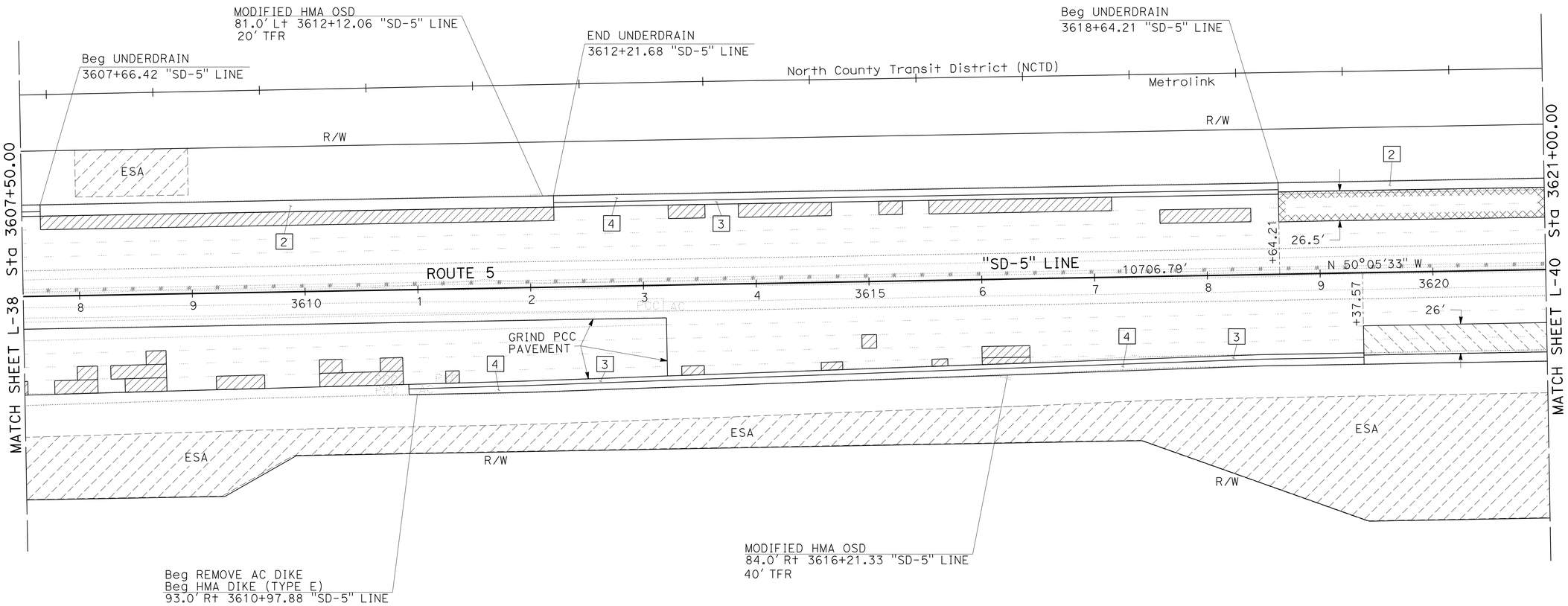

LAYOUT

SCALE 1" = 50'

L-39

REVISED BY	ABDUL MALIKYAR
DATE REVISED	HECTOR GRACIA
CALCULATED-DESIGNED BY	
CHECKED BY	
FUNCTIONAL SUPERVISOR	EDWARD HAJJ

STATE OF CALIFORNIA - DEPARTMENT OF TRANSPORTATION
Caltrans
DESIGN

LAST REVISION 07-24-13
DATE PLOTTED => 31-OCT-2013
TIME PLOTTED => 15:22

Dist	COUNTY	ROUTE	POST MILES TOTAL PROJECT	SHEET No.	TOTAL SHEETS
11	SD	5	R58.1/R72.4	48	259

REGISTERED CIVIL ENGINEER 07-12-13 DATE

11-04-13
PLANS APPROVAL DATE

REGISTERED PROFESSIONAL ENGINEER ABDUL MALIKYAR No. C66169 Exp. 06-30-14 CIVIL STATE OF CALIFORNIA

THE STATE OF CALIFORNIA OR ITS OFFICERS OR AGENTS SHALL NOT BE RESPONSIBLE FOR THE ACCURACY OR COMPLETENESS OF SCANNED COPIES OF THIS PLAN SHEET.

NOTE:

1. FOR ACCURATE RIGHT OF WAY DATA, CONTACT RIGHT OF WAY ENGINEERING AT THE DISTRICT OFFICE.

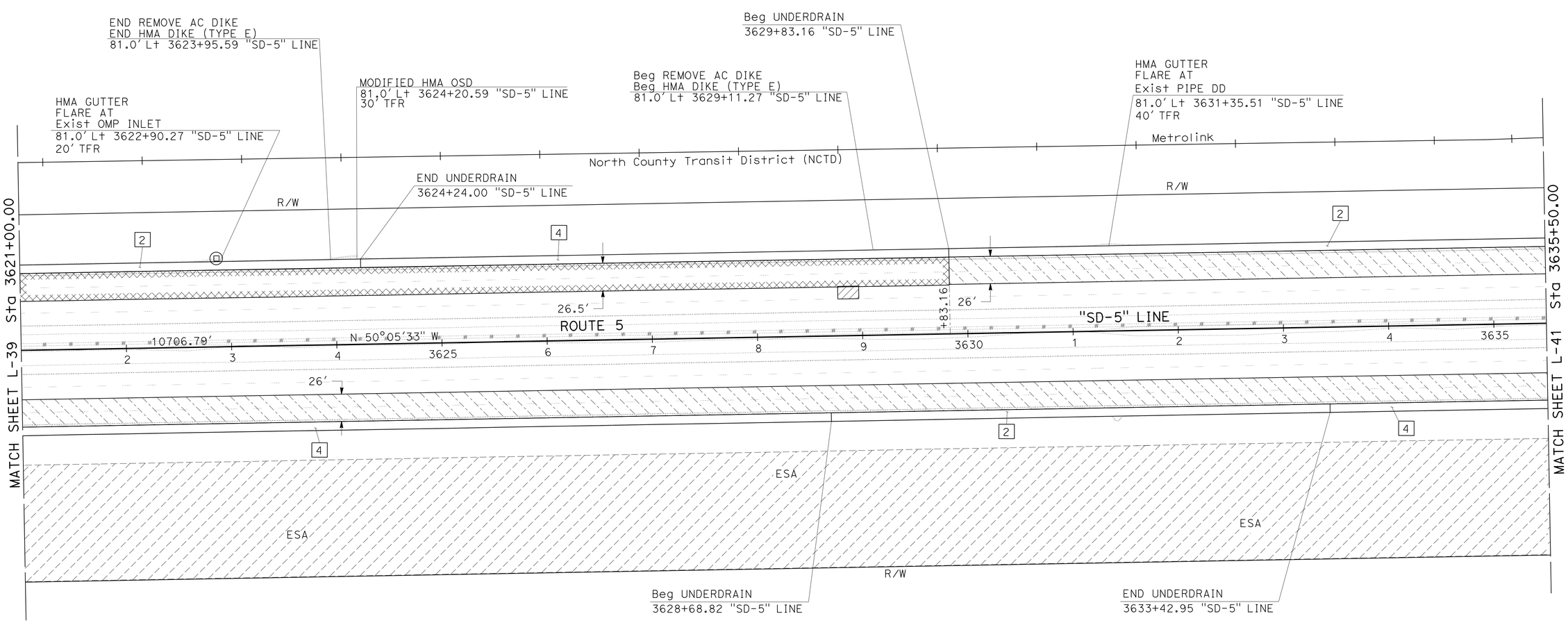

LAYOUT

SCALE 1" = 50'

L-40

REVISED BY	DATE REVISED

CALCULATED-DESIGNED BY	CHECKED BY
ABDUL MALIKYAR	HECTOR GRACIA

FUNCTIONAL SUPERVISOR: EDWARD HAJJ

STATE OF CALIFORNIA - DEPARTMENT OF TRANSPORTATION

Caltrans®

DESIGN

LAST REVISION 07-24-13 | DATE PLOTTED => 31-OCT-2013 | TIME PLOTTED => 15:22

Dist	COUNTY	ROUTE	POST MILES TOTAL PROJECT	SHEET No.	TOTAL SHEETS
11	SD	5	R58.1/R72.4	49	259

07-12-13
REGISTERED CIVIL ENGINEER DATE

11-04-13
PLANS APPROVAL DATE

REGISTERED PROFESSIONAL ENGINEER
ABDUL MALIKYAR
No. C66169
Exp. 06-30-14
CIVIL
STATE OF CALIFORNIA

THE STATE OF CALIFORNIA OR ITS OFFICERS OR AGENTS SHALL NOT BE RESPONSIBLE FOR THE ACCURACY OR COMPLETENESS OF SCANNED COPIES OF THIS PLAN SHEET.

NOTE:

1. FOR ACCURATE RIGHT OF WAY DATA, CONTACT RIGHT OF WAY ENGINEERING AT THE DISTRICT OFFICE.

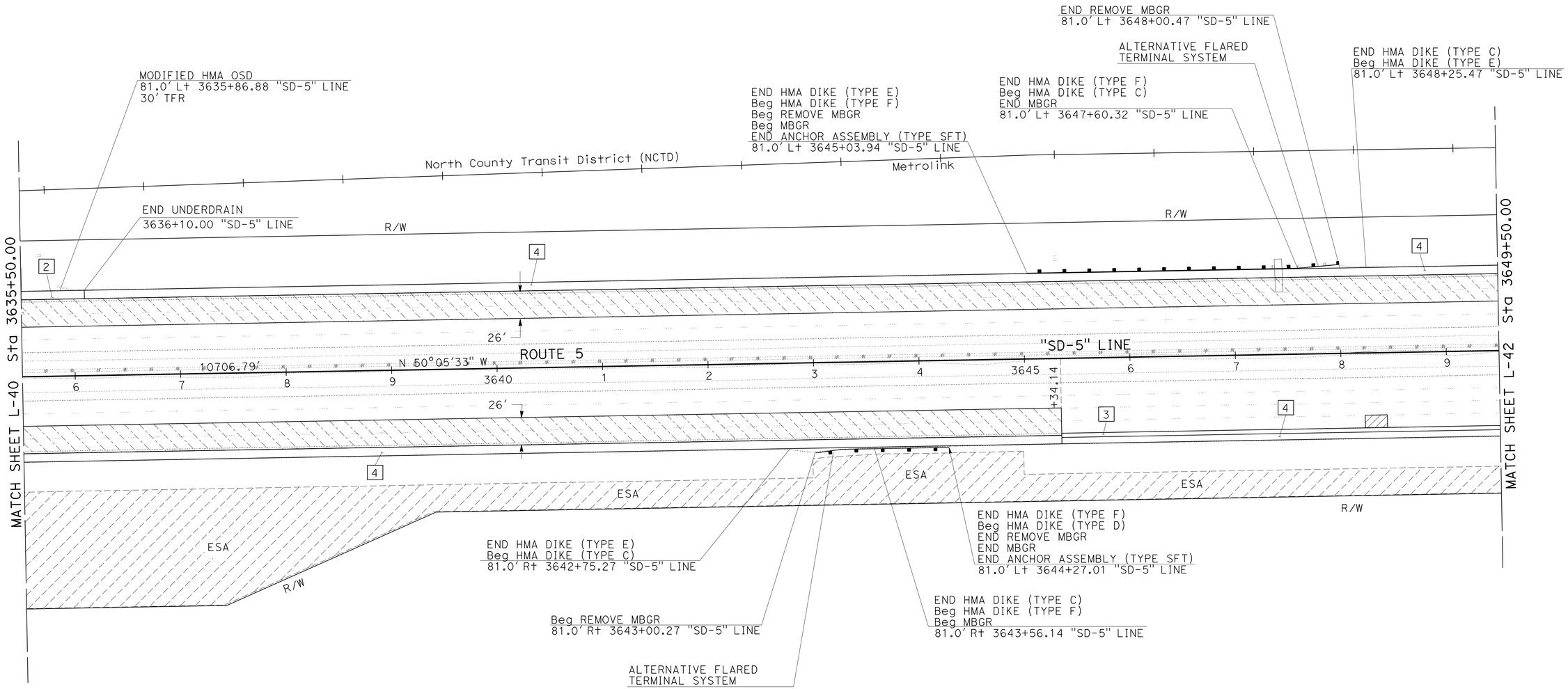

LAYOUT

SCALE 1" = 50'

L-41

REVISED BY	DATE REVISED

CALCULATED-DESIGNED BY	CHECKED BY
ABDUL MALIKYAR	HECTOR GRACIA

FUNCTIONAL SUPERVISOR: EDWARD HAJJ

STATE OF CALIFORNIA - DEPARTMENT OF TRANSPORTATION

Caltrans®

DESIGN

LAST REVISION 07-24-13 | DATE PLOTTED => 31-OCT-2013 | TIME PLOTTED => 15:22

Dist	COUNTY	ROUTE	POST MILES TOTAL PROJECT	SHEET No.	TOTAL SHEETS
11	SD	5	R58.1/R72.4	50	259

07-12-13
REGISTERED CIVIL ENGINEER DATE

11-04-13
PLANS APPROVAL DATE

REGISTERED PROFESSIONAL ENGINEER
ABDUL MALIKYAR
No. C66169
Exp. 06-30-14
CIVIL
STATE OF CALIFORNIA

THE STATE OF CALIFORNIA OR ITS OFFICERS OR AGENTS SHALL NOT BE RESPONSIBLE FOR THE ACCURACY OR COMPLETENESS OF SCANNED COPIES OF THIS PLAN SHEET.

NOTE:

1. FOR ACCURATE RIGHT OF WAY DATA, CONTACT RIGHT OF WAY ENGINEERING AT THE DISTRICT OFFICE.

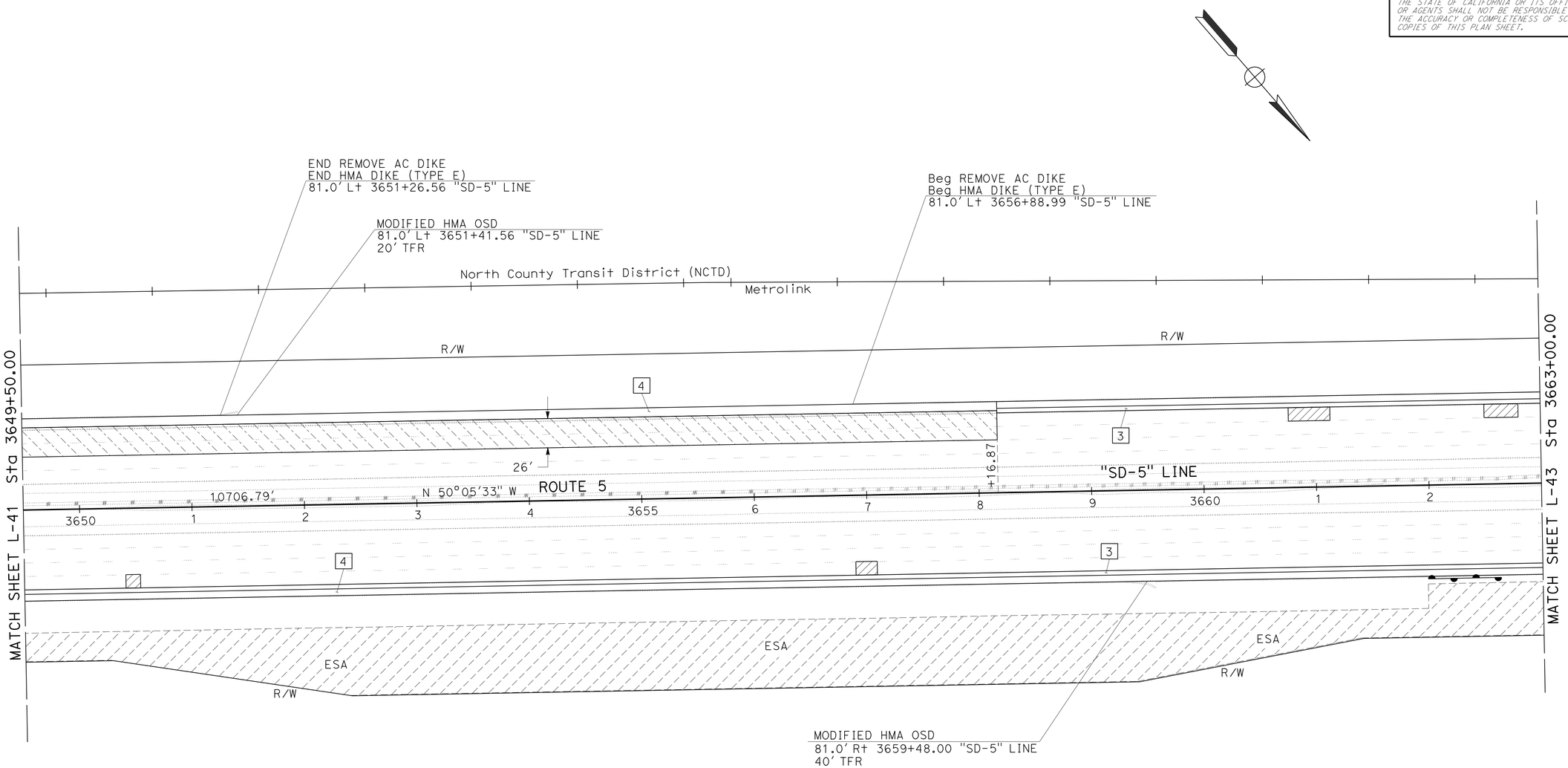

SCALE 1" = 50'

LAYOUT

L-42

STATE OF CALIFORNIA - DEPARTMENT OF TRANSPORTATION
Caltrans®
DESIGN

FUNCTIONAL SUPERVISOR: EDWARD HAJJ
CALCULATED-DESIGNED BY: ABDUL MALIKYAR
CHECKED BY: HECTOR GRACIA
REVISED BY
DATE REVISED

LAST REVISION 07-24-13
DATE PLOTTED => 31-OCT-2013
TIME PLOTTED => 15:22

BORDER LAST REVISED 7/2/2010
USERNAME => s127400
DGN FILE => 1100020342ea042.dgn
RELATIVE BORDER SCALE IS IN INCHES 0 1 2 3
UNIT 2761
PROJECT NUMBER & PHASE 11000203421

Dist	COUNTY	ROUTE	POST MILES TOTAL PROJECT	SHEET No.	TOTAL SHEETS
11	SD	5	R58.1/R72.4	51	259

07-12-13
REGISTERED CIVIL ENGINEER DATE

11-04-13
PLANS APPROVAL DATE

REGISTERED PROFESSIONAL ENGINEER
ABDUL MALIKYAR
No. C66169
Exp. 06-30-14
CIVIL
STATE OF CALIFORNIA

THE STATE OF CALIFORNIA OR ITS OFFICERS OR AGENTS SHALL NOT BE RESPONSIBLE FOR THE ACCURACY OR COMPLETENESS OF SCANNED COPIES OF THIS PLAN SHEET.

NOTE:

1. FOR ACCURATE RIGHT OF WAY DATA, CONTACT RIGHT OF WAY ENGINEERING AT THE DISTRICT OFFICE.

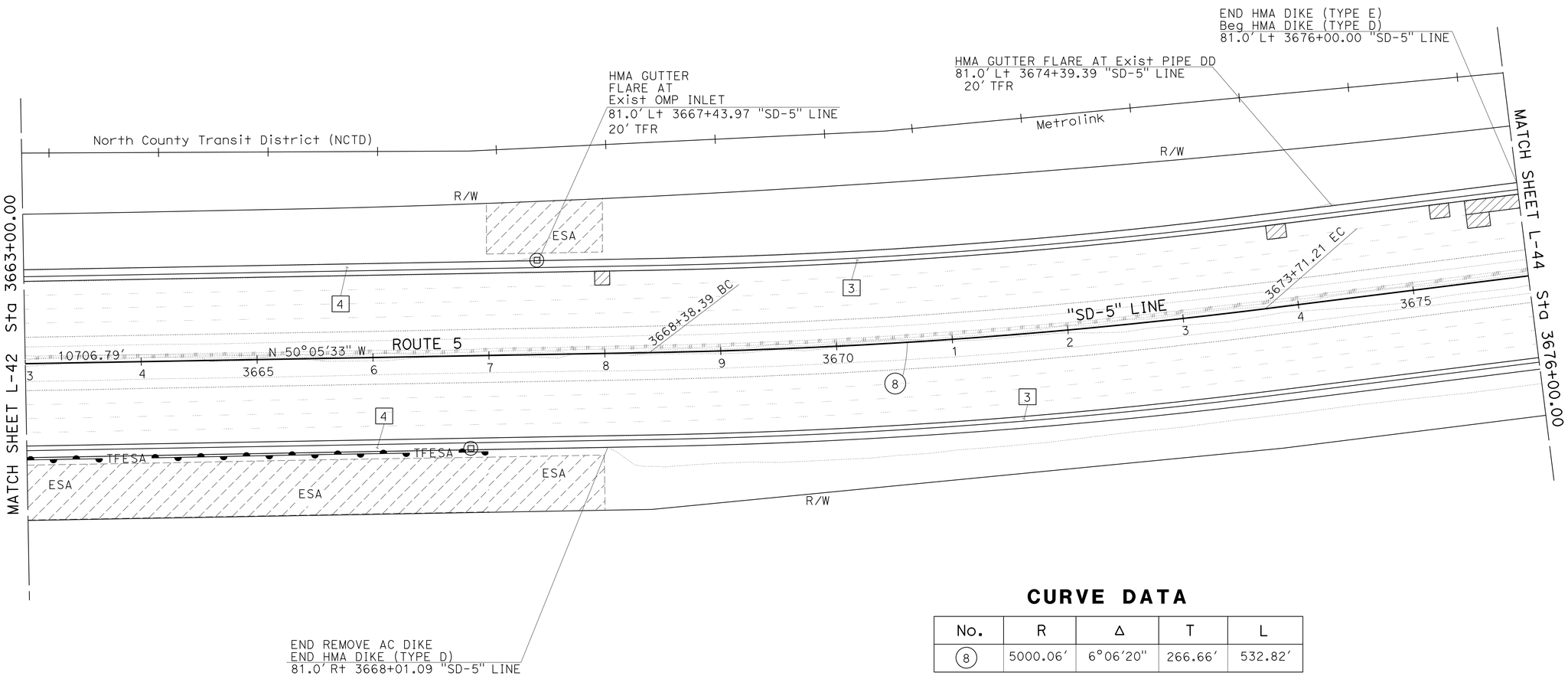

CURVE DATA

No.	R	Δ	T	L
8	5000.06'	6°06'20"	266.66'	532.82'

LAYOUT

SCALE 1" = 50'

L-43

STATE OF CALIFORNIA - DEPARTMENT OF TRANSPORTATION
Caltrans
DESIGN

FUNCTIONAL SUPERVISOR: EDWARD HAJJ
CALCULATED-DESIGNED BY: ABDUL MALIKYAR
CHECKED BY: HECTOR GRACIA
REVISED BY
DATE REVISED

LAST REVISION 07-24-13
DATE PLOTTED => 31-OCT-2013
TIME PLOTTED => 15:22

Dist	COUNTY	ROUTE	POST MILES TOTAL PROJECT	SHEET No.	TOTAL SHEETS
11	SD	5	R58.1/R72.4	52	259

07-12-13
REGISTERED CIVIL ENGINEER DATE

11-04-13
PLANS APPROVAL DATE

REGISTERED PROFESSIONAL ENGINEER
ABDUL MALIKYAR
No. C66169
Exp. 06-30-14
CIVIL
STATE OF CALIFORNIA

THE STATE OF CALIFORNIA OR ITS OFFICERS OR AGENTS SHALL NOT BE RESPONSIBLE FOR THE ACCURACY OR COMPLETENESS OF SCANNED COPIES OF THIS PLAN SHEET.

NOTE:

1. FOR ACCURATE RIGHT OF WAY DATA, CONTACT RIGHT OF WAY ENGINEERING AT THE DISTRICT OFFICE.

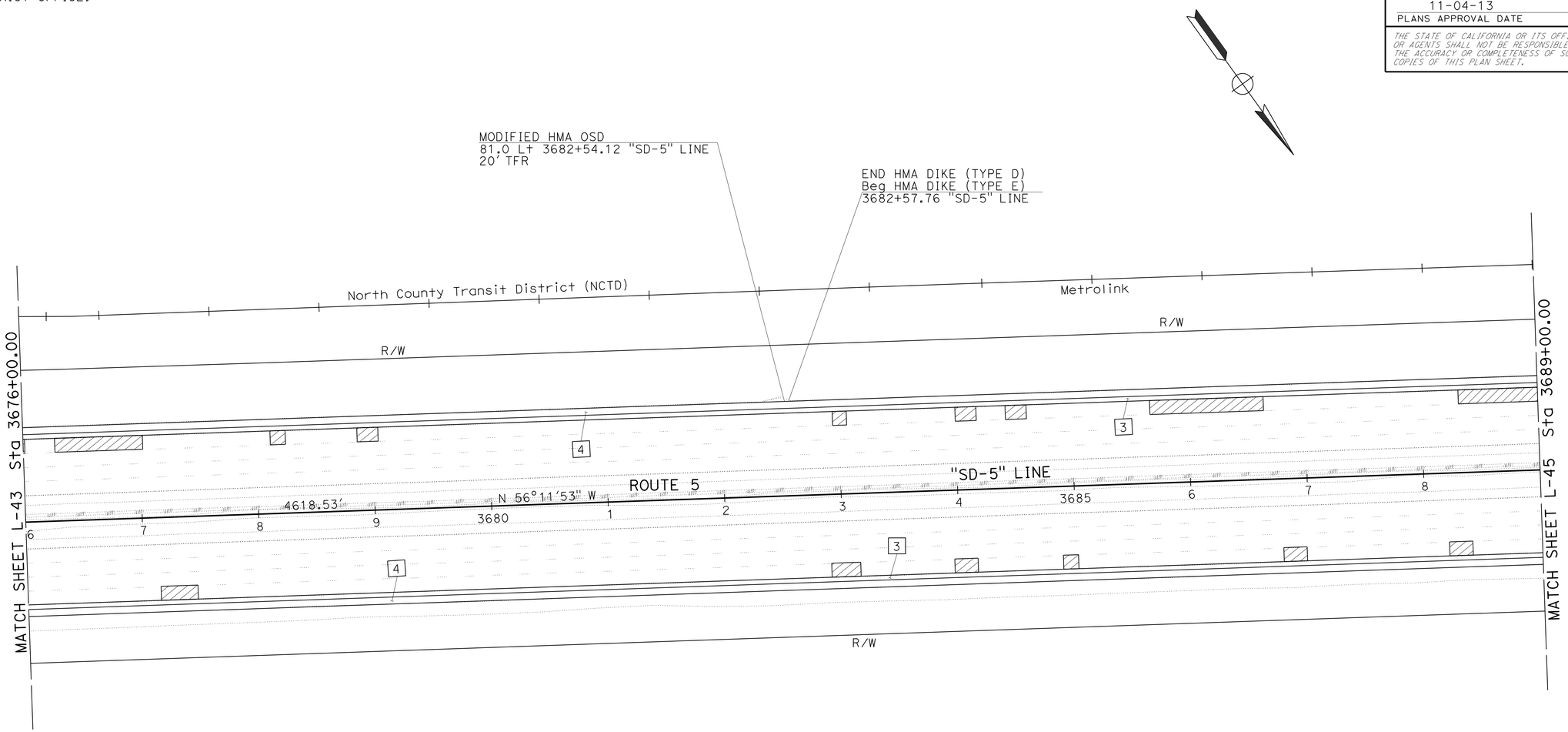

LAYOUT

SCALE 1" = 50'

L-44

STATE OF CALIFORNIA - DEPARTMENT OF TRANSPORTATION
Caltrans
DESIGN

FUNCTIONAL SUPERVISOR: EDWARD HAJJ
CALCULATED-DESIGNED BY: ABDUL MALIKYAR
CHECKED BY: HECTOR GRACIA
REVISED BY
DATE REVISED

LAST REVISION 07-25-13
DATE PLOTTED => 31-OCT-2013
TIME PLOTTED => 15:22

Dist	COUNTY	ROUTE	POST MILES TOTAL PROJECT	SHEET No.	TOTAL SHEETS
11	SD	5	R58.1/R72.4	53	259

07-12-13
REGISTERED CIVIL ENGINEER DATE

11-04-13
PLANS APPROVAL DATE

REGISTERED PROFESSIONAL ENGINEER
ABDUL MALIKYAR
No. C66169
Exp. 06-30-14
CIVIL
STATE OF CALIFORNIA

THE STATE OF CALIFORNIA OR ITS OFFICERS OR AGENTS SHALL NOT BE RESPONSIBLE FOR THE ACCURACY OR COMPLETENESS OF SCANNED COPIES OF THIS PLAN SHEET.

NOTE:

1. FOR ACCURATE RIGHT OF WAY DATA, CONTACT RIGHT OF WAY ENGINEERING AT THE DISTRICT OFFICE.

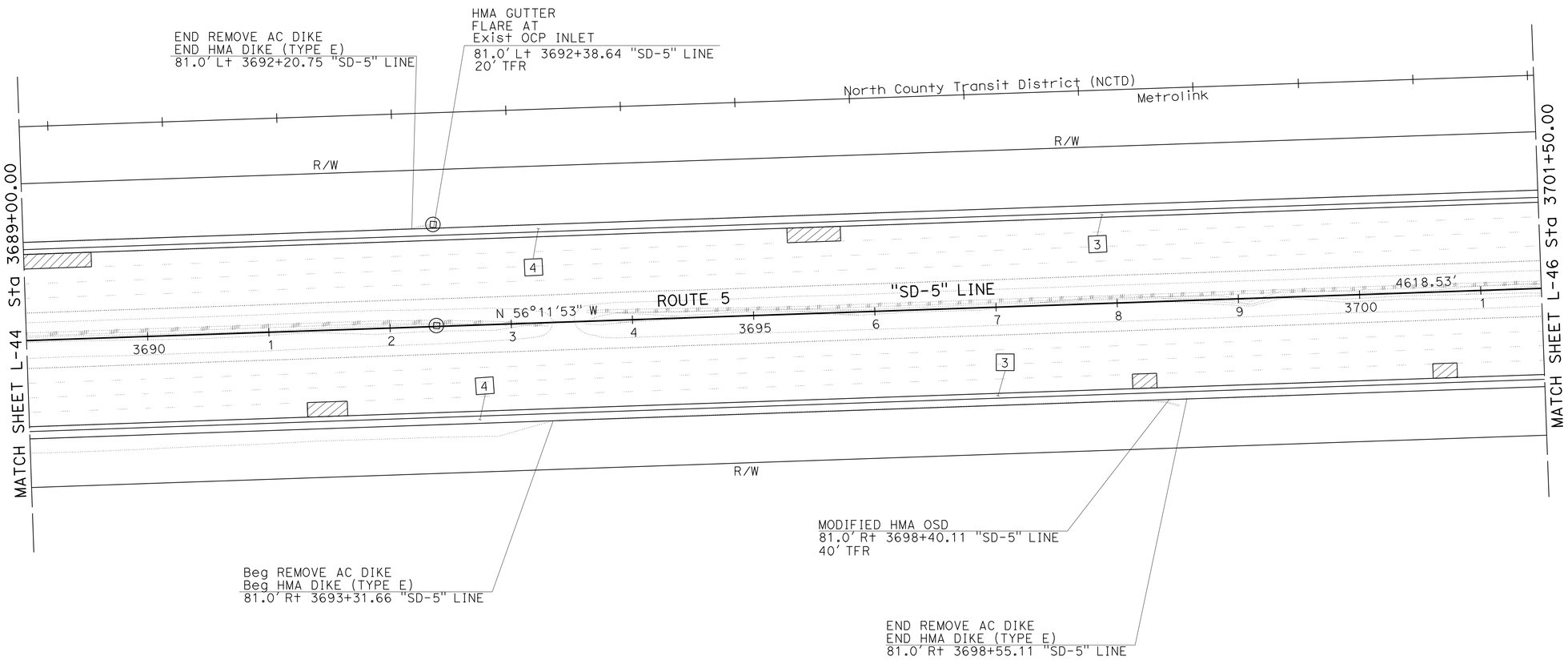

LAYOUT

SCALE 1" = 50'

L-45

STATE OF CALIFORNIA - DEPARTMENT OF TRANSPORTATION
Caltrans
DESIGN

FUNCTIONAL SUPERVISOR: EDWARD HAJJ

CALCULATED-DESIGNED BY: ABDUL MALIKYAR
CHECKED BY: HECTOR GRACIA

REVISED BY
DATE REVISED

LAST REVISION 07-25-13
DATE PLOTTED => 31-OCT-2013
TIME PLOTTED => 15:22

Dist	COUNTY	ROUTE	POST MILES TOTAL PROJECT	SHEET No.	TOTAL SHEETS
11	SD	5	R58.1/R72.4	54	259

07-12-13
REGISTERED CIVIL ENGINEER DATE

11-04-13
PLANS APPROVAL DATE

REGISTERED PROFESSIONAL ENGINEER
ABDUL MALIKYAR
No. C66169
Exp. 06-30-14
CIVIL
STATE OF CALIFORNIA

THE STATE OF CALIFORNIA OR ITS OFFICERS OR AGENTS SHALL NOT BE RESPONSIBLE FOR THE ACCURACY OR COMPLETENESS OF SCANNED COPIES OF THIS PLAN SHEET.

NOTE:

1. FOR ACCURATE RIGHT OF WAY DATA, CONTACT RIGHT OF WAY ENGINEERING AT THE DISTRICT OFFICE.

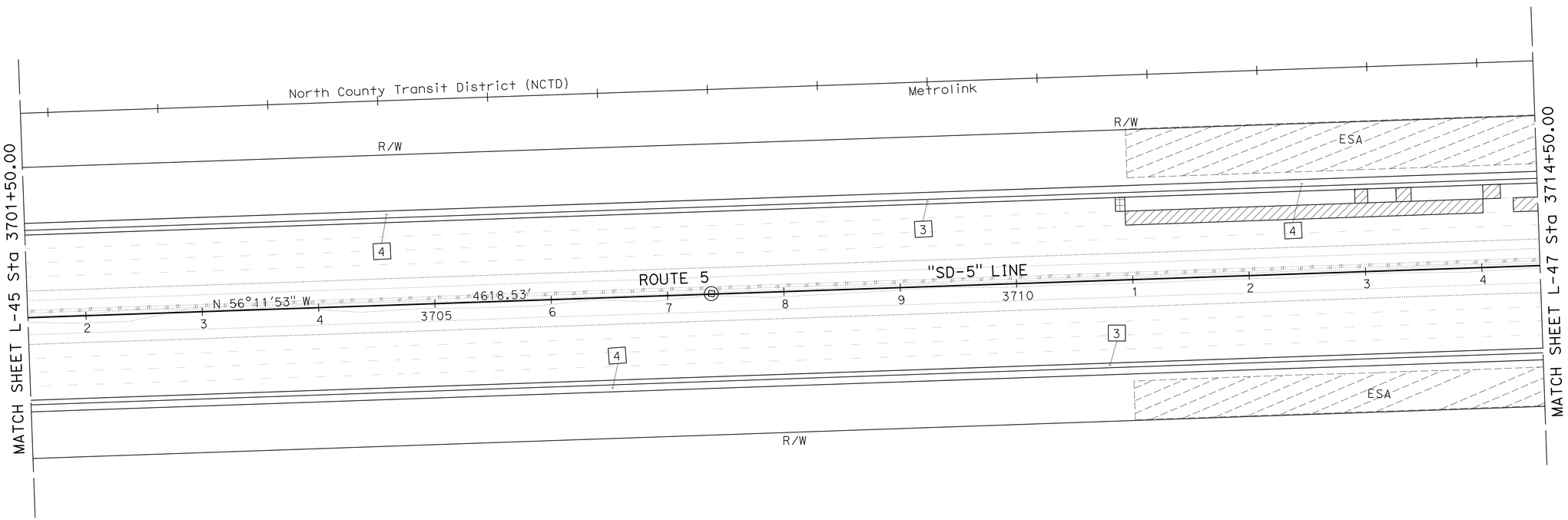

LAYOUT

SCALE 1" = 50'

L-46

STATE OF CALIFORNIA - DEPARTMENT OF TRANSPORTATION
Caltrans
DESIGN

FUNCTIONAL SUPERVISOR: EDWARD HAJJ
CALCULATED-DESIGNED BY: ABDUL MALIKYAR
CHECKED BY: HECTOR GRACIA
REVISED BY
DATE REVISED

LAST REVISION 07-25-13
DATE PLOTTED => 31-OCT-2013
TIME PLOTTED => 15:22

Dist	COUNTY	ROUTE	POST MILES TOTAL PROJECT	SHEET No.	TOTAL SHEETS
11	SD	5	R58.1/R72.4	55	259

07-12-13
REGISTERED CIVIL ENGINEER DATE

11-04-13
PLANS APPROVAL DATE

REGISTERED PROFESSIONAL ENGINEER
ABDUL MALIKYAR
No. C66169
Exp. 06-30-14
CIVIL
STATE OF CALIFORNIA

THE STATE OF CALIFORNIA OR ITS OFFICERS OR AGENTS SHALL NOT BE RESPONSIBLE FOR THE ACCURACY OR COMPLETENESS OF SCANNED COPIES OF THIS PLAN SHEET.

NOTE:

1. FOR ACCURATE RIGHT OF WAY DATA, CONTACT RIGHT OF WAY ENGINEERING AT THE DISTRICT OFFICE.

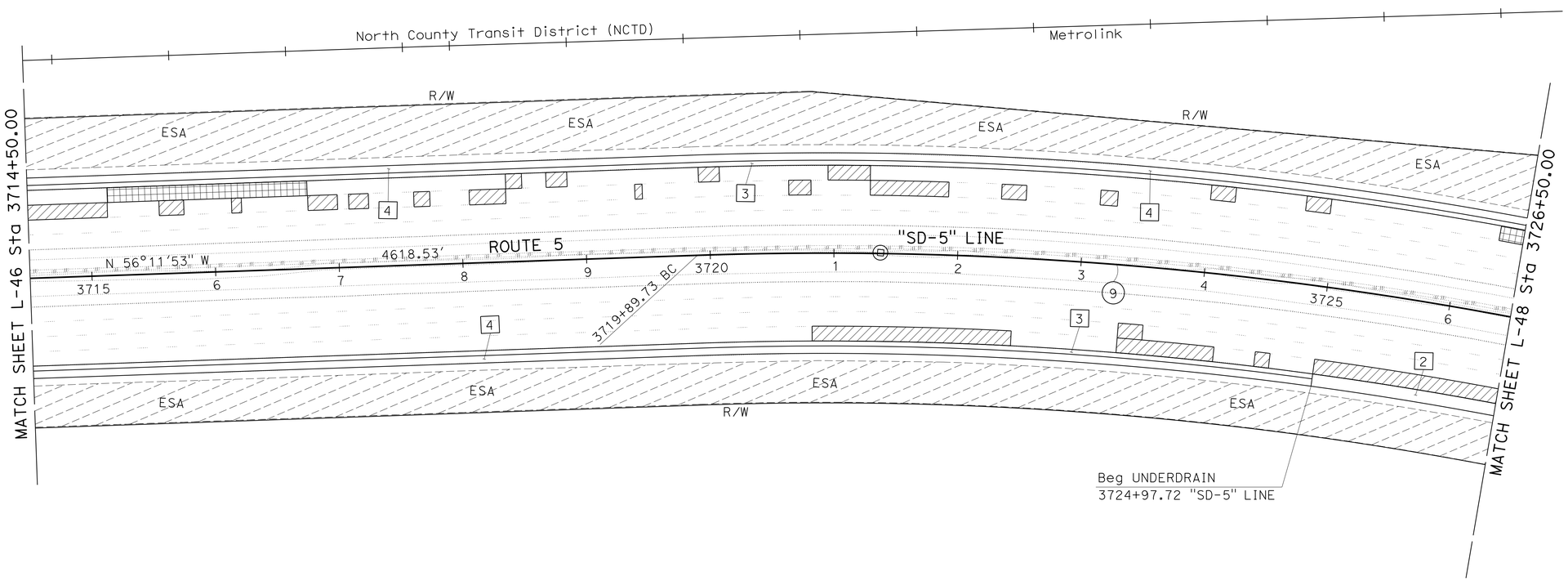

CURVE DATA

No.	R	Δ	T	L
9	3000.00'	13°51'55"	364.77'	725.98'

LAYOUT

SCALE 1" = 50'

L-47

REVISED BY | DATE REVISED
ABDUL MALIKYAR | HECTOR GRACIA
CALCULATED-DESIGNED BY | CHECKED BY
FUNCTIONAL SUPERVISOR: EDWARD HAJJ

STATE OF CALIFORNIA - DEPARTMENT OF TRANSPORTATION
Caltrans
DESIGN

LAST REVISION 07-25-13 | DATE PLOTTED => 31-OCT-2013 | TIME PLOTTED => 15:22

Dist	COUNTY	ROUTE	POST MILES TOTAL PROJECT	SHEET No.	TOTAL SHEETS
11	SD	5	R58.1/R72.4	56	259

REGISTERED CIVIL ENGINEER 07-12-13 DATE

11-04-13
PLANS APPROVAL DATE

REGISTERED PROFESSIONAL ENGINEER ABDUL MALIKYAR No. C66169 Exp. 06-30-14 CIVIL STATE OF CALIFORNIA

THE STATE OF CALIFORNIA OR ITS OFFICERS OR AGENTS SHALL NOT BE RESPONSIBLE FOR THE ACCURACY OR COMPLETENESS OF SCANNED COPIES OF THIS PLAN SHEET.

NOTE:

1. FOR ACCURATE RIGHT OF WAY DATA, CONTACT RIGHT OF WAY ENGINEERING AT THE DISTRICT OFFICE.

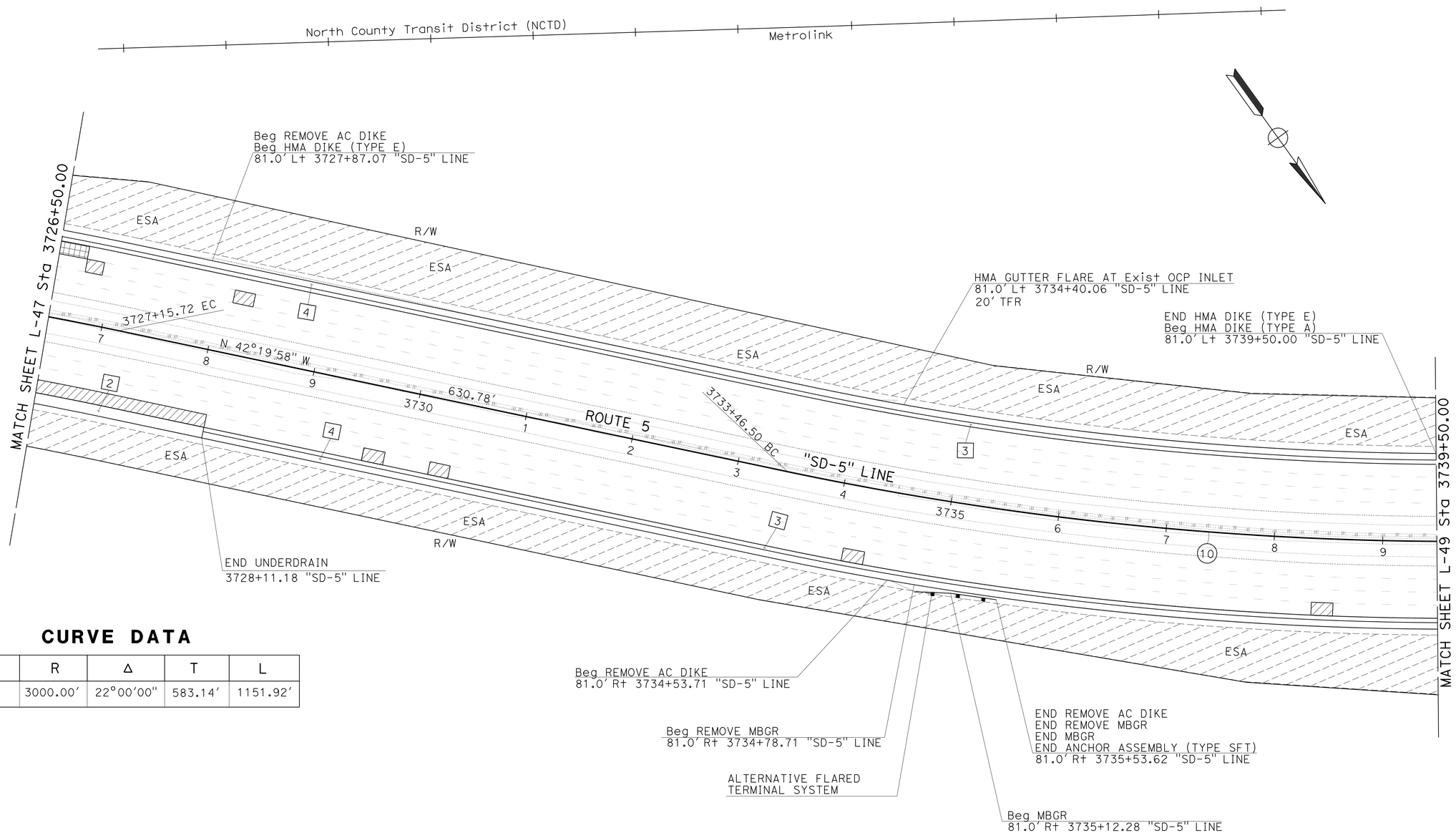

CURVE DATA

No.	R	Δ	T	L
10	3000.00'	22°00'00"	583.14'	1151.92'

SCALE 1" = 50'

LAYOUT
L-48

REVISED BY	DATE REVISED

CALCULATED-DESIGNED BY	CHECKED BY
ABDUL MALIKYAR	HECTOR GRACIA

FUNCTIONAL SUPERVISOR: EDWARD HAJJ

STATE OF CALIFORNIA - DEPARTMENT OF TRANSPORTATION
Caltrans
DESIGN

LAST REVISION 07-25-13 | DATE PLOTTED => 31-OCT-2013 | TIME PLOTTED => 15:22

Dist	COUNTY	ROUTE	POST MILES TOTAL PROJECT	SHEET No.	TOTAL SHEETS
11	SD	5	R58.1/R72.4	57	259

07-12-13
REGISTERED CIVIL ENGINEER DATE

11-04-13
PLANS APPROVAL DATE

REGISTERED PROFESSIONAL ENGINEER
ABDUL MALIKYAR
No. C66169
Exp. 06-30-14
CIVIL
STATE OF CALIFORNIA

THE STATE OF CALIFORNIA OR ITS OFFICERS OR AGENTS SHALL NOT BE RESPONSIBLE FOR THE ACCURACY OR COMPLETENESS OF SCANNED COPIES OF THIS PLAN SHEET.

NOTE:

1. FOR ACCURATE RIGHT OF WAY DATA, CONTACT RIGHT OF WAY ENGINEERING AT THE DISTRICT OFFICE.

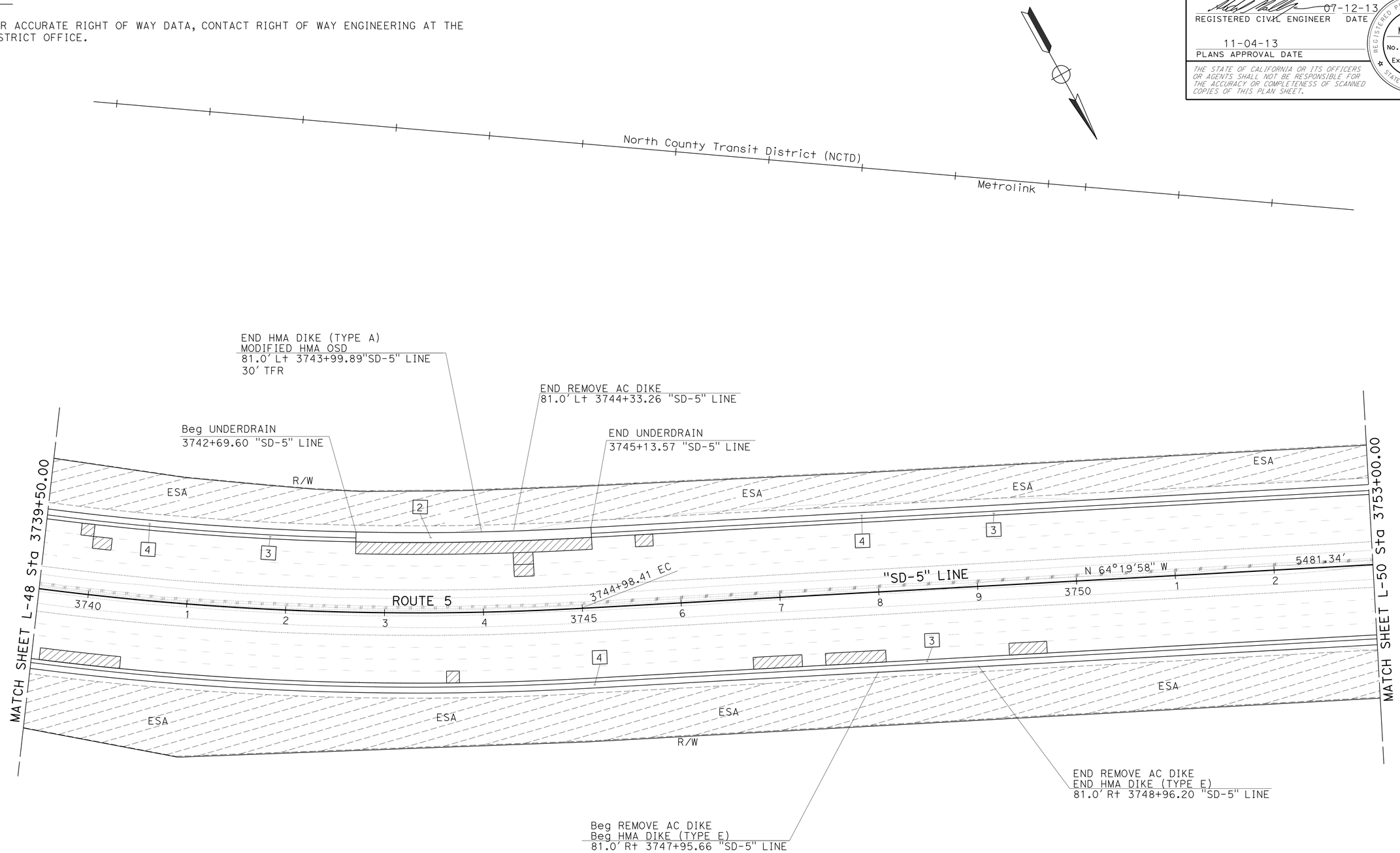

LAYOUT

SCALE 1" = 50'

L-49

REVISED BY	DATE REVISED
ABDUL MALIKYAR	HECTOR GRACIA
CALCULATED-DESIGNED BY	CHECKED BY
FUNCTIONAL SUPERVISOR	EDWARD HAJJ

STATE OF CALIFORNIA - DEPARTMENT OF TRANSPORTATION
Caltrans
DESIGN

LAST REVISION 07-25-13 | DATE PLOTTED => 31-OCT-2013 | TIME PLOTTED => 15:22

Dist	COUNTY	ROUTE	POST MILES TOTAL PROJECT	SHEET No.	TOTAL SHEETS
11	SD	5	R58.1/R72.4	58	259

07-12-13
REGISTERED CIVIL ENGINEER DATE

11-04-13
PLANS APPROVAL DATE

REGISTERED PROFESSIONAL ENGINEER
ABDUL MALIKYAR
No. C66169
Exp. 06-30-14
CIVIL
STATE OF CALIFORNIA

THE STATE OF CALIFORNIA OR ITS OFFICERS OR AGENTS SHALL NOT BE RESPONSIBLE FOR THE ACCURACY OR COMPLETENESS OF SCANNED COPIES OF THIS PLAN SHEET.

NOTE:

1. FOR ACCURATE RIGHT OF WAY DATA, CONTACT RIGHT OF WAY ENGINEERING AT THE DISTRICT OFFICE.

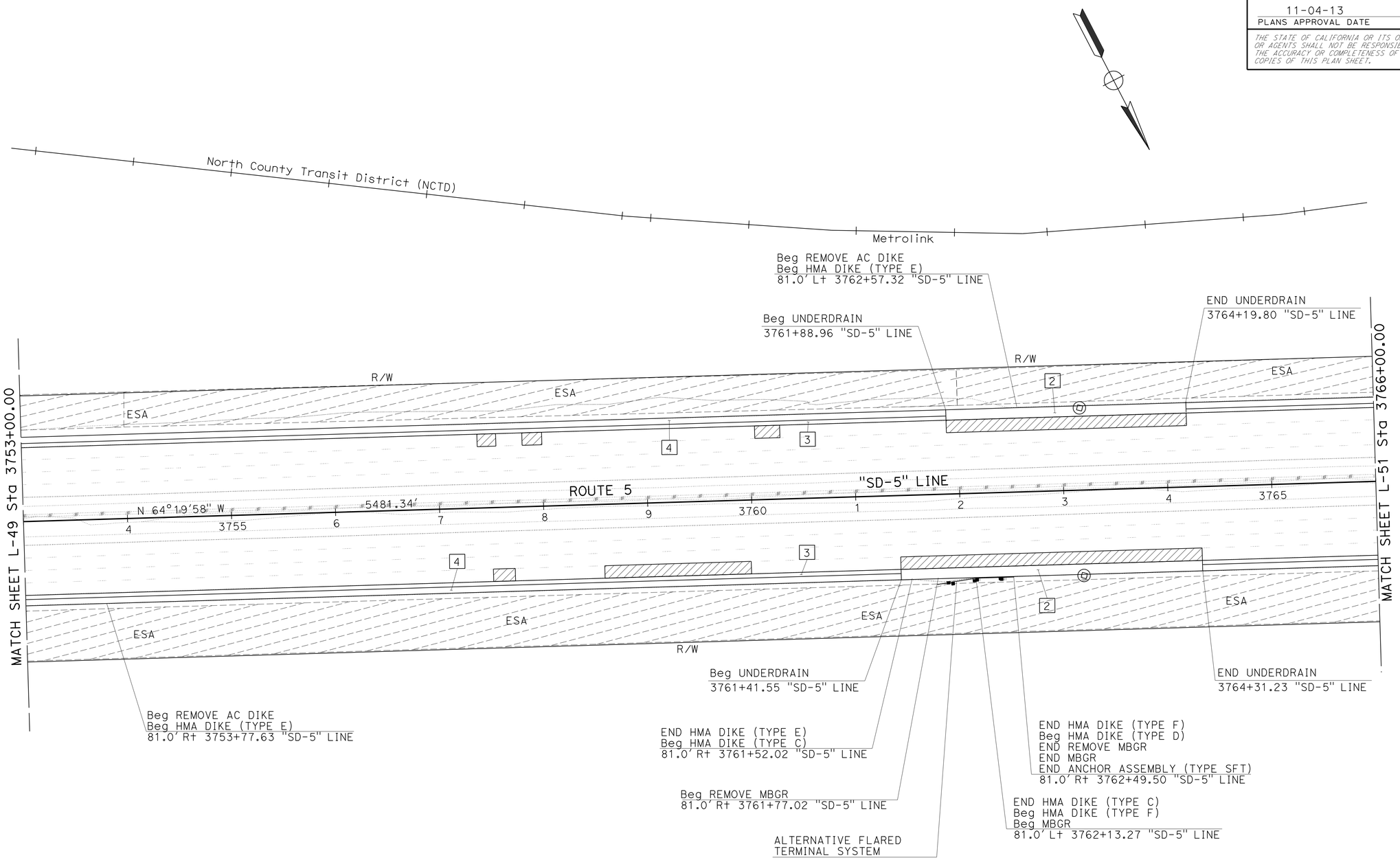

SCALE 1" = 50'

LAYOUT
L-50

STATE OF CALIFORNIA - DEPARTMENT OF TRANSPORTATION
Caltrans
DESIGN

FUNCTIONAL SUPERVISOR: EDWARD HAJJ
CALCULATED-DESIGNED BY: ABDUL MALIKYAR
CHECKED BY: HECTOR GRACIA
REVISED BY
DATE REVISED

LAST REVISION 07-25-13
DATE PLOTTED => 31-OCT-2013
TIME PLOTTED => 15:22

Dist	COUNTY	ROUTE	POST MILES TOTAL PROJECT	SHEET No.	TOTAL SHEETS
11	SD	5	R58.1/R72.4	59	259

07-12-13
REGISTERED CIVIL ENGINEER DATE

11-04-13
PLANS APPROVAL DATE

REGISTERED PROFESSIONAL ENGINEER
ABDUL MALIKYAR
No. C66169
Exp. 06-30-14
CIVIL
STATE OF CALIFORNIA

THE STATE OF CALIFORNIA OR ITS OFFICERS OR AGENTS SHALL NOT BE RESPONSIBLE FOR THE ACCURACY OR COMPLETENESS OF SCANNED COPIES OF THIS PLAN SHEET.

NOTE:

1. FOR ACCURATE RIGHT OF WAY DATA, CONTACT RIGHT OF WAY ENGINEERING AT THE DISTRICT OFFICE.

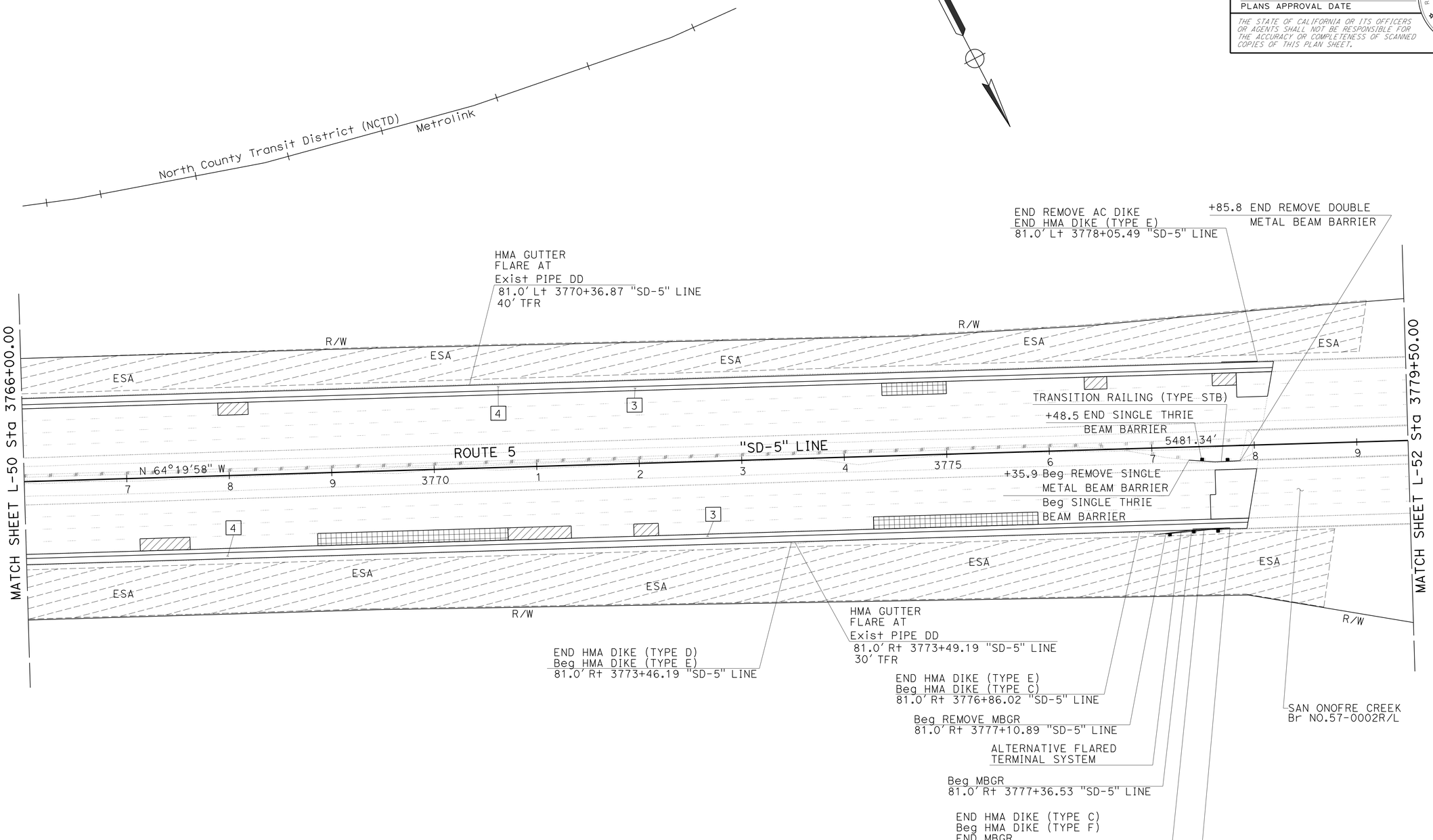

SCALE 1" = 50'

LAYOUT L-51

STATE OF CALIFORNIA - DEPARTMENT OF TRANSPORTATION
DESIGN
Caltrans
FUNCTIONAL SUPERVISOR: EDWARD HAJJ
CALCULATED-DESIGNED BY: ABDUL MALIKYAR
CHECKED BY: HECTOR GRACIA
REVISED BY
DATE REVISED

LAST REVISION 07-25-13
DATE PLOTTED => 31-OCT-2013
TIME PLOTTED => 15:22

Dist	COUNTY	ROUTE	POST MILES TOTAL PROJECT	SHEET No.	TOTAL SHEETS
11	SD	5	R58.1/R72.4	60	259

07-12-13
REGISTERED CIVIL ENGINEER DATE

11-04-13
PLANS APPROVAL DATE

REGISTERED PROFESSIONAL ENGINEER ABDUL MALIKYAR No. C66169 Exp. 06-30-14 CIVIL STATE OF CALIFORNIA

THE STATE OF CALIFORNIA OR ITS OFFICERS OR AGENTS SHALL NOT BE RESPONSIBLE FOR THE ACCURACY OR COMPLETENESS OF SCANNED COPIES OF THIS PLAN SHEET.

NOTE:

1. FOR ACCURATE RIGHT OF WAY DATA, CONTACT RIGHT OF WAY ENGINEERING AT THE DISTRICT OFFICE.

CURVE DATA

No.	R	Δ	T	L
60	2999.98′	3°11′29"	83.57′	167.10′
61	999.99′	9°01′50"	78.97′	157.61′
62	1000.00′	4°39′10"	40.63′	81.21′

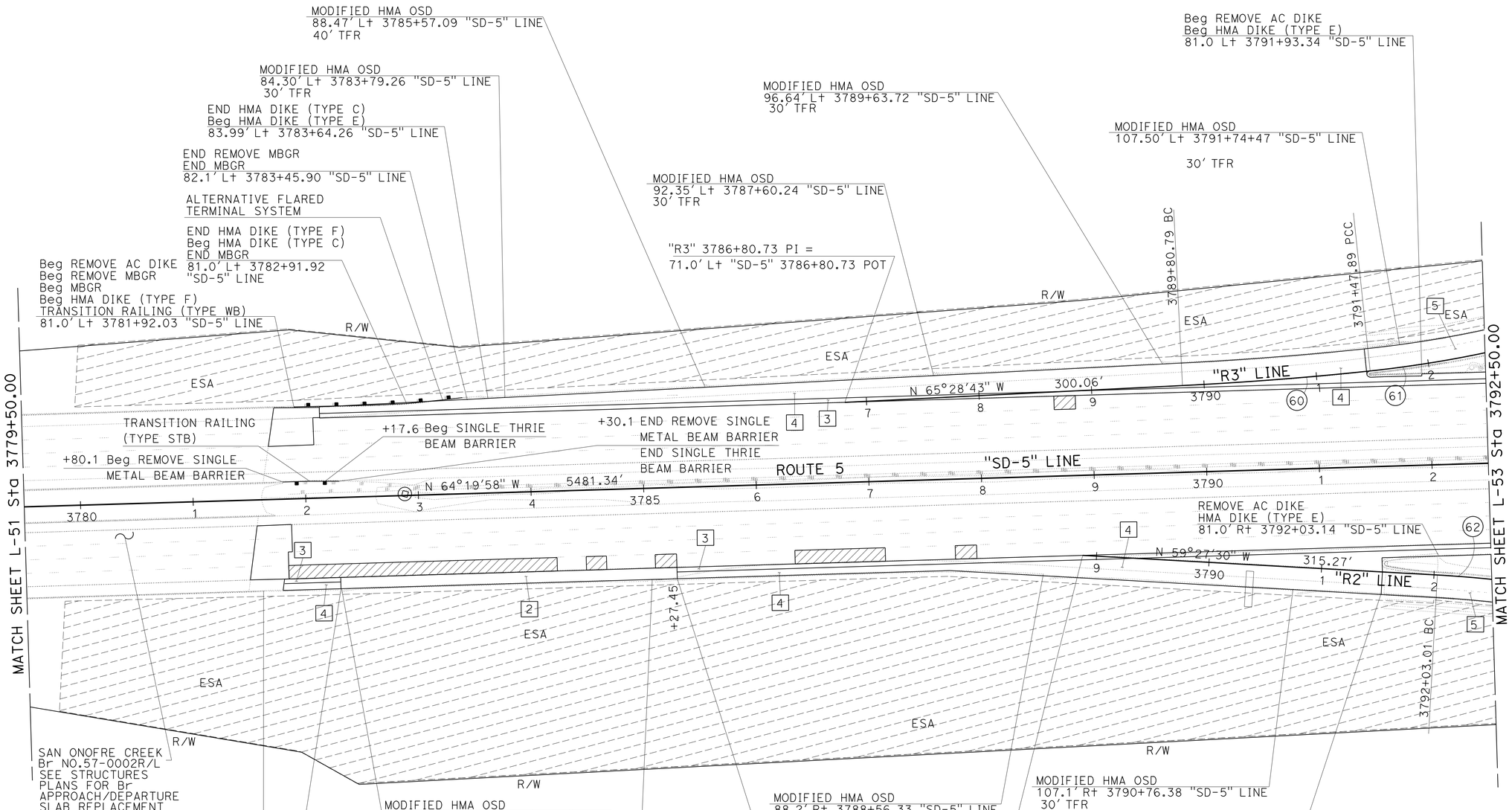

LAYOUT

SCALE 1" = 50′

L-52

STATE OF CALIFORNIA - DEPARTMENT OF TRANSPORTATION
Caltrans
DESIGN

FUNCTIONAL SUPERVISOR: EDWARD HAJJ
CALCULATED-DESIGNED BY: ABDUL MALIKYAR
CHECKED BY: HECTOR GRACIA
REVISED BY
DATE REVISED

LAST REVISION 07-25-13
DATE PLOTTED => 31-OCT-2013
TIME PLOTTED => 15:22

Dist	COUNTY	ROUTE	POST MILES TOTAL PROJECT	SHEET No.	TOTAL SHEETS
11	SD	5	R58.1/R72.4	61	259

07-12-13
REGISTERED CIVIL ENGINEER DATE

11-04-13
PLANS APPROVAL DATE

REGISTERED PROFESSIONAL ENGINEER
ABDUL MALIKYAR
No. C66169
Exp. 06-30-14
CIVIL
STATE OF CALIFORNIA

THE STATE OF CALIFORNIA OR ITS OFFICERS OR AGENTS SHALL NOT BE RESPONSIBLE FOR THE ACCURACY OR COMPLETENESS OF SCANNED COPIES OF THIS PLAN SHEET.

NOTE:

1. FOR ACCURATE RIGHT OF WAY DATA, CONTACT RIGHT OF WAY ENGINEERING AT THE DISTRICT OFFICE.

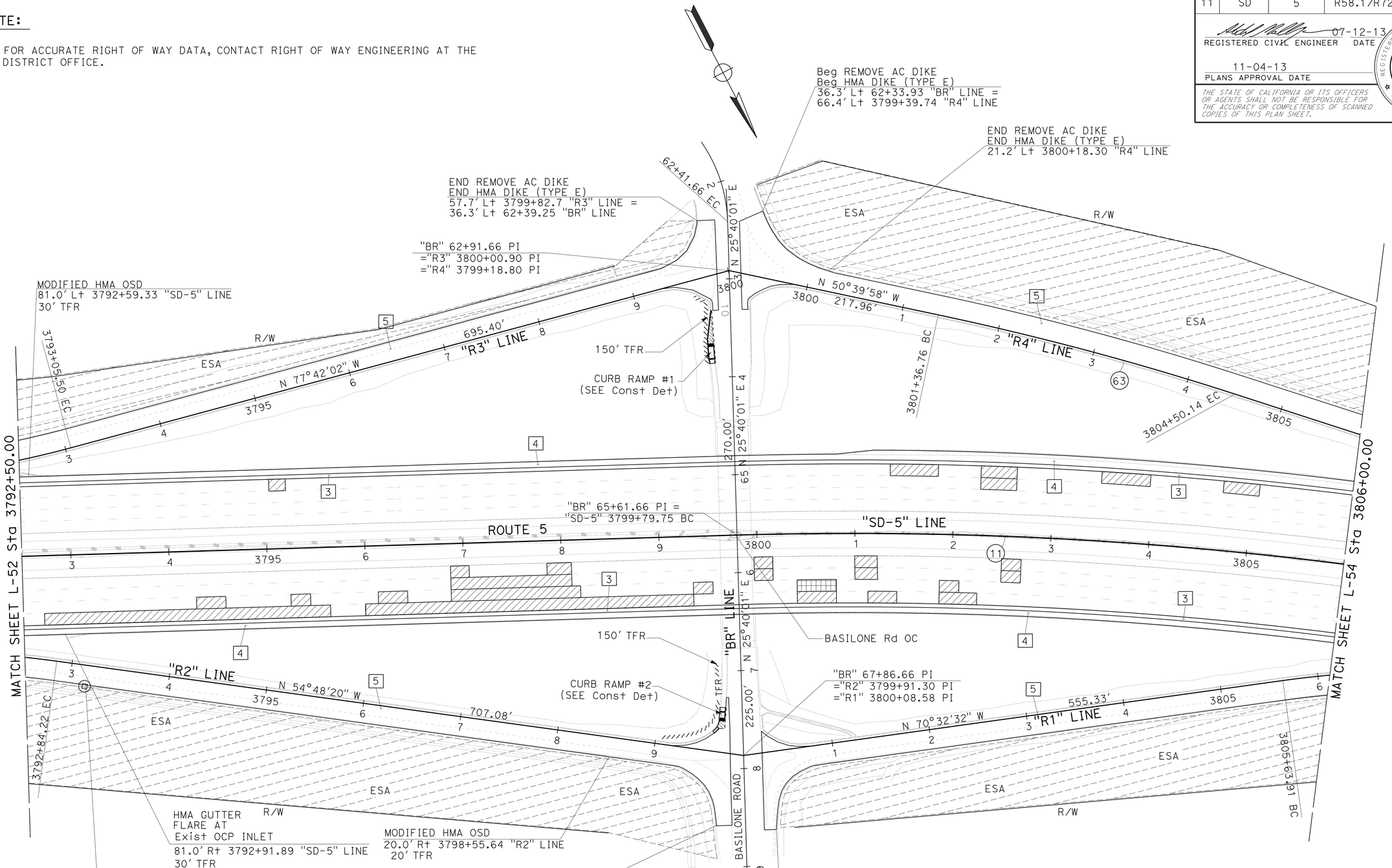

CURVE DATA

No.	R	Δ	T	L
63	2999.95'	5°59'07"	156.83'	313.38'
11	3999.99'	32°00'00"	1146.98'	2234.02'

LAYOUT

SCALE 1" = 50'

L-53

STATE OF CALIFORNIA - DEPARTMENT OF TRANSPORTATION
Caltrans
DESIGN

FUNCTIONAL SUPERVISOR: EDWARD HAJJ
CALCULATED-DESIGNED BY: ABDUL MALIKYAR
CHECKED BY: HECTOR GRACIA
REVISED BY
DATE REVISED

LAST REVISION 10-11-13
DATE PLOTTED => 31-OCT-2013
TIME PLOTTED => 15:53

Dist	COUNTY	ROUTE	POST MILES TOTAL PROJECT	SHEET No.	TOTAL SHEETS
11	SD	5	R58.1/R72.4	62	259

07-12-13
REGISTERED CIVIL ENGINEER DATE

11-04-13
PLANS APPROVAL DATE

REGISTERED PROFESSIONAL ENGINEER
ABDUL MALIKYAR
No. C66169
Exp. 06-30-14
CIVIL
STATE OF CALIFORNIA

THE STATE OF CALIFORNIA OR ITS OFFICERS OR AGENTS SHALL NOT BE RESPONSIBLE FOR THE ACCURACY OR COMPLETENESS OF SCANNED COPIES OF THIS PLAN SHEET.

NOTE:

1. FOR ACCURATE RIGHT OF WAY DATA, CONTACT RIGHT OF WAY ENGINEERING AT THE DISTRICT OFFICE.

CURVE DATA

No.	R	Δ	T	L
11	3999.99′	32°00′00"	1146.98′	2234.02′
64	1000.00′	15°35′04"	136.82′	271.95′
65	2999.00′	8°54′32"	233.66′	466.38′

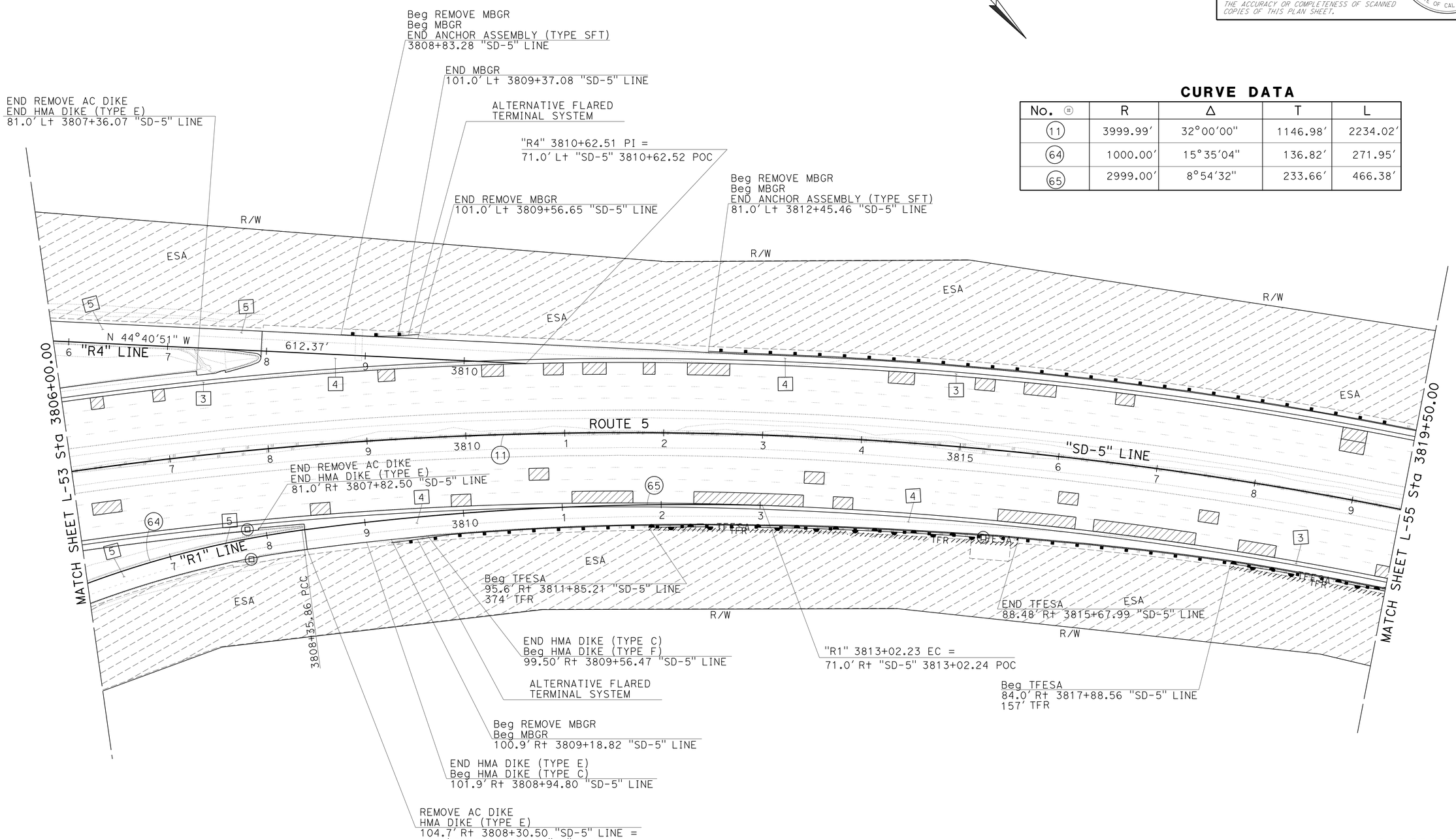

SCALE 1" = 50′

LAYOUT

L-54

STATE OF CALIFORNIA - DEPARTMENT OF TRANSPORTATION
Caltrans®
DESIGN

FUNCTIONAL SUPERVISOR: EDWARD HAJJ
CALCULATED-DESIGNED BY: ABDUL MALIKYAR
CHECKED BY: HECTOR GRACIA
REVISED BY
DATE REVISED

LAST REVISION 07-25-13
DATE PLOTTED => 31-OCT-2013
TIME PLOTTED => 15:22

Dist	COUNTY	ROUTE	POST MILES TOTAL PROJECT	SHEET No.	TOTAL SHEETS
11	SD	5	R58.1/R72.4	63	259

07-12-13
REGISTERED CIVIL ENGINEER DATE

11-04-13
PLANS APPROVAL DATE

REGISTERED PROFESSIONAL ENGINEER
ABDUL MALIKYAR
No. C66169
Exp. 06-30-14
CIVIL
STATE OF CALIFORNIA

THE STATE OF CALIFORNIA OR ITS OFFICERS OR AGENTS SHALL NOT BE RESPONSIBLE FOR THE ACCURACY OR COMPLETENESS OF SCANNED COPIES OF THIS PLAN SHEET.

NOTE:

1. FOR ACCURATE RIGHT OF WAY DATA, CONTACT RIGHT OF WAY ENGINEERING AT THE DISTRICT OFFICE.

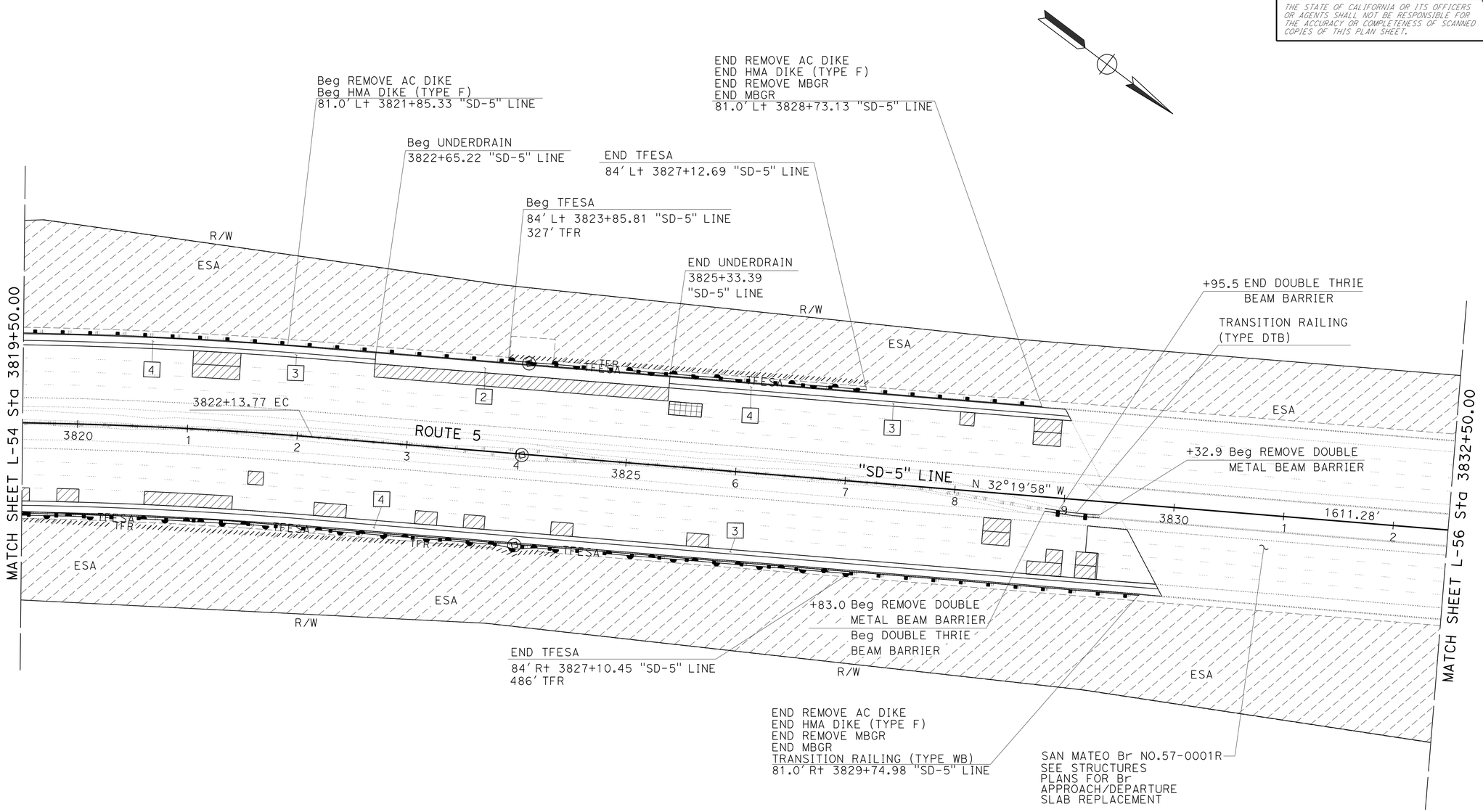

LAYOUT

SCALE 1" = 50'

L-55

STATE OF CALIFORNIA - DEPARTMENT OF TRANSPORTATION
Caltrans
DESIGN

FUNCTIONAL SUPERVISOR: EDWARD HAJJ
CALCULATED-DESIGNED BY: ABDUL MALIKYAR
CHECKED BY: HECTOR GRACIA
REVISED BY
DATE REVISED

LAST REVISION 07-25-13
DATE PLOTTED => 31-OCT-2013
TIME PLOTTED => 15:22

Dist	COUNTY	ROUTE	POST MILES TOTAL PROJECT	SHEET No.	TOTAL SHEETS
11	SD	5	R58.1/R72.4	64	259

REGISTERED CIVIL ENGINEER 07-12-13 DATE

11-04-13
PLANS APPROVAL DATE

REGISTERED PROFESSIONAL ENGINEER ABDUL MALIKYAR No. C66169 Exp. 06-30-14 CIVIL STATE OF CALIFORNIA

THE STATE OF CALIFORNIA OR ITS OFFICERS OR AGENTS SHALL NOT BE RESPONSIBLE FOR THE ACCURACY OR COMPLETENESS OF SCANNED COPIES OF THIS PLAN SHEET.

NOTE:

1. FOR ACCURATE RIGHT OF WAY DATA, CONTACT RIGHT OF WAY ENGINEERING AT THE DISTRICT OFFICE.

CURVE DATA

No.	R	Δ	T	L
15	9999.99′	6°09′19"	537.67′	1074.30′
16	9988.99′	3°58′26"	346.56′	692.83′
68	2000.00′	12°54′54"	226.37′	450.82′
69	1000.00′	18°15′59"	160.77′	318.81′

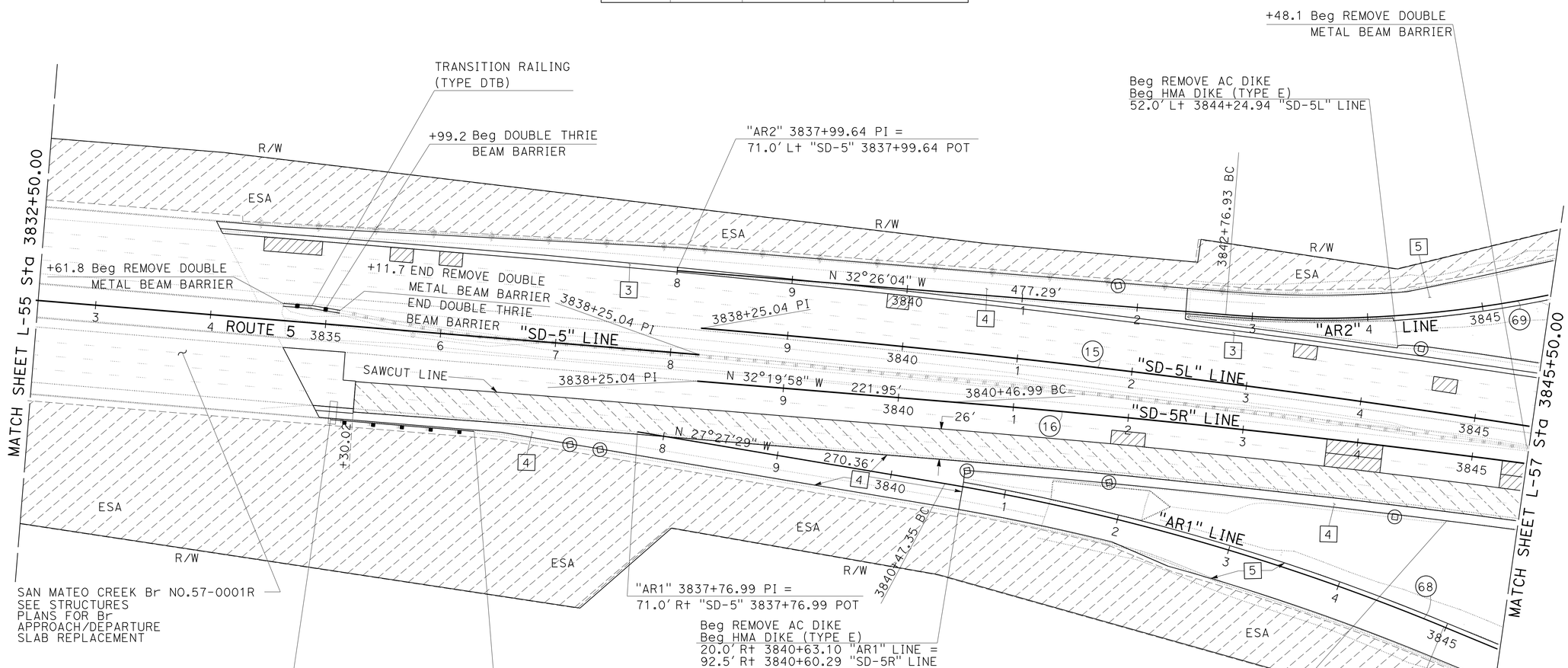

LAYOUT

SCALE 1" = 50′

L-56

STATE OF CALIFORNIA - DEPARTMENT OF TRANSPORTATION
DESIGN
Caltrans

FUNCTIONAL SUPERVISOR: EDWARD HAJJ
CALCULATED-DESIGNED BY: ABDUL MALIKYAR
CHECKED BY: HECTOR GRACIA
REVISED BY
DATE REVISED

LAST REVISION 07-25-13
DATE PLOTTED => 31-OCT-2013
TIME PLOTTED => 15:22

Dist	COUNTY	ROUTE	POST MILES TOTAL PROJECT	SHEET No.	TOTAL SHEETS
11	SD	5	R58.1/R72.4	65	259

07-12-13
REGISTERED CIVIL ENGINEER DATE

11-04-13
PLANS APPROVAL DATE

REGISTERED PROFESSIONAL ENGINEER
ABDUL MALIKYAR
No. C66169
Exp. 06-30-14
CIVIL
STATE OF CALIFORNIA

THE STATE OF CALIFORNIA OR ITS OFFICERS OR AGENTS SHALL NOT BE RESPONSIBLE FOR THE ACCURACY OR COMPLETENESS OF SCANNED COPIES OF THIS PLAN SHEET.

NOTE:

1. FOR ACCURATE RIGHT OF WAY DATA, CONTACT RIGHT OF WAY ENGINEERING AT THE DISTRICT OFFICE.

CURVE DATA

No.	R	Δ	T	L
17	10000.00′	03°37′38″	316.64′	633.08′
70	2000.00′	19°18′15″	340.15′	673.85′
71	9941.00′	1°17′01″	111.35′	222.70′
72	2000.00′	6°40′29″	116.63′	232.99′

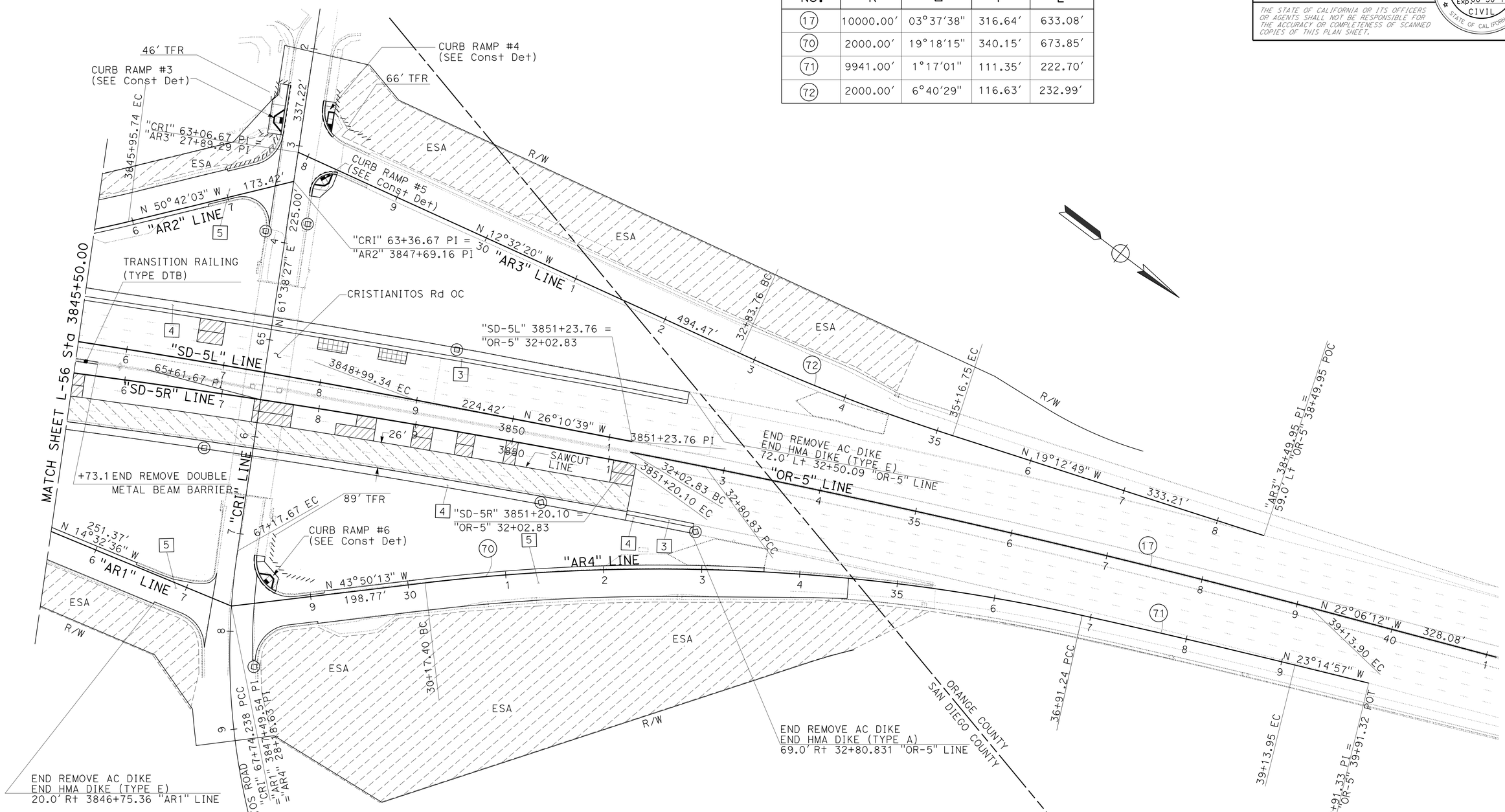

LAYOUT

SCALE 1" = 50′ **L-57**

REVISED BY	DATE REVISED
ABDUL MALIKYAR	HECTOR GRACIA
CALCULATED-DESIGNED BY	CHECKED BY
FUNCTIONAL SUPERVISOR	EDWARD HAJJ

STATE OF CALIFORNIA - DEPARTMENT OF TRANSPORTATION
Caltrans
DESIGN

LAST REVISION 07-25-13 | DATE PLOTTED => 31-OCT-2013 | TIME PLOTTED => 15:22

Dist	COUNTY	ROUTE	POST MILES TOTAL PROJECT	SHEET No.	TOTAL SHEETS
11	SD	5	R58.1/R72.4	66	259

REGISTERED CIVIL ENGINEER 07-12-13 DATE

11-04-13
PLANS APPROVAL DATE

REGISTERED PROFESSIONAL ENGINEER ABDUL MALIKYAR No. C66169 Exp. 06-30-14 CIVIL STATE OF CALIFORNIA

THE STATE OF CALIFORNIA OR ITS OFFICERS OR AGENTS SHALL NOT BE RESPONSIBLE FOR THE ACCURACY OR COMPLETENESS OF SCANNED COPIES OF THIS PLAN SHEET.

NOTE:

THE CONTRACTOR SHALL VERIFY ALL CONTROLLING FIELD DIMENSIONS BEFORE ORDERING OR FABRICATING ANY MATERIAL.

CUT AND REMOVE PORTION OF BARRIER RAILING AND BRIDGE APPROACH GUARD RAILING AS REQUIRED.

LEGEND:

INDICATES EXISTING STRUCTURE

INDICATES NEW STRUCTURE

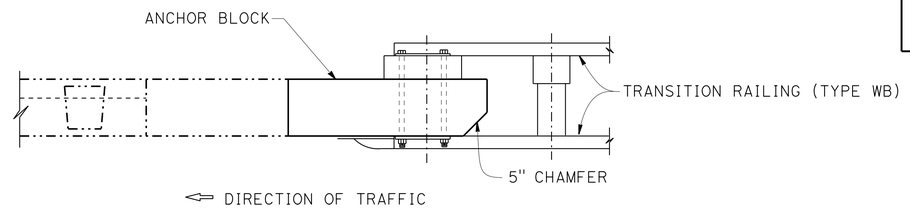

PLAN

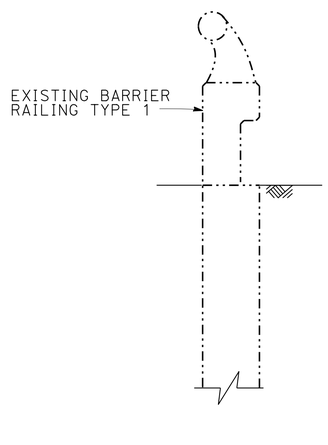

SECTION A-A

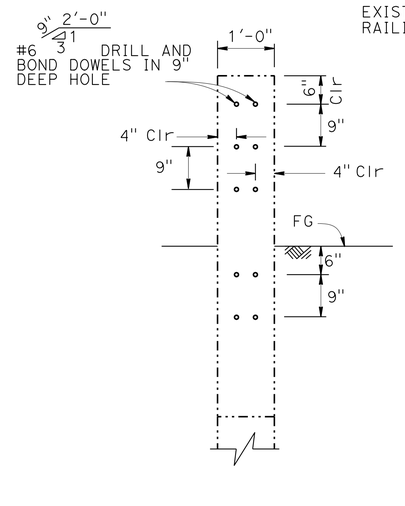

SECTION B-B

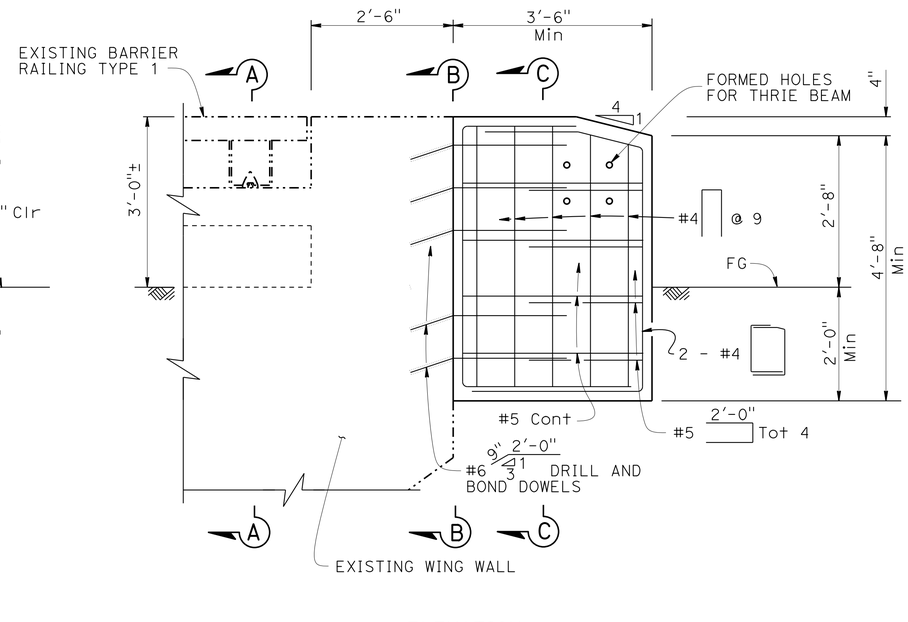

ELEVATION

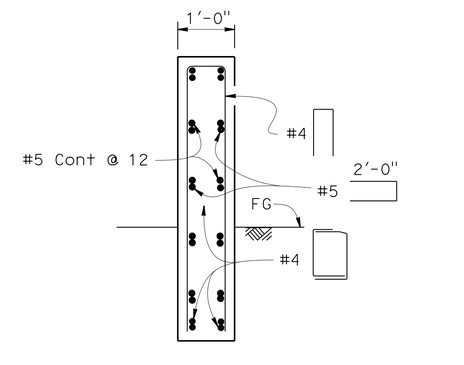

NOTE:
DRILL AND BOND DOWELS NOT SHOWN

SECTION C-C

ANCHOR BLOCK (Mod)

CONSTRUCTION DETAILS

NO SCALE

C-1

STATE OF CALIFORNIA - DEPARTMENT OF TRANSPORTATION
Caltrans DESIGN

FUNCTIONAL SUPERVISOR: EDWARD HAJJ
CALCULATED-DESIGNED BY: ABDUL MALIKYAR
CHECKED BY: SEAN D. HOANG
REVISED BY
DATE REVISED

LAST REVISION 07-25-13
DATE PLOTTED => 31-OCT-2013
TIME PLOTTED => 15:22

Dist	COUNTY	ROUTE	POST MILES TOTAL PROJECT	SHEET No.	TOTAL SHEETS
11	SD	5	R58.1/R72.4	67	259

07-12-13
REGISTERED CIVIL ENGINEER DATE

11-04-13
PLANS APPROVAL DATE

REGISTERED PROFESSIONAL ENGINEER
ABDUL MALIKYAR
No. C66169
Exp. 06-30-14
CIVIL
STATE OF CALIFORNIA

THE STATE OF CALIFORNIA OR ITS OFFICERS OR AGENTS SHALL NOT BE RESPONSIBLE FOR THE ACCURACY OR COMPLETENESS OF SCANNED COPIES OF THIS PLAN SHEET.

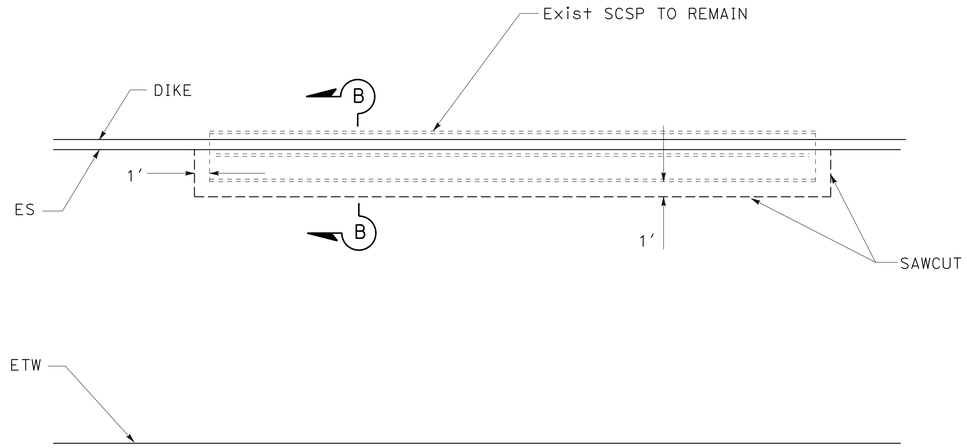

PLAN

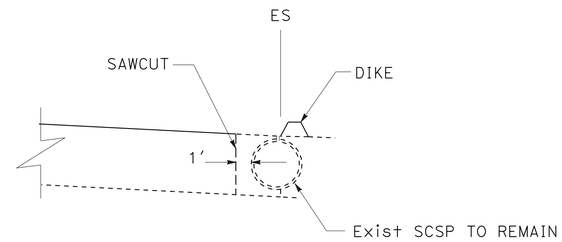

SECTION B-B

DETAIL FOR Exist SCSP

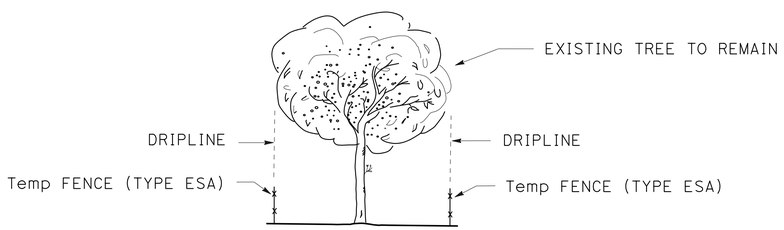

SECTION C-C

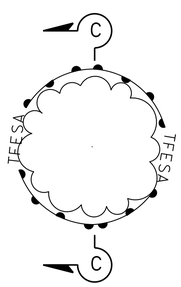

PLAN VIEW

TREE DRIPLINE

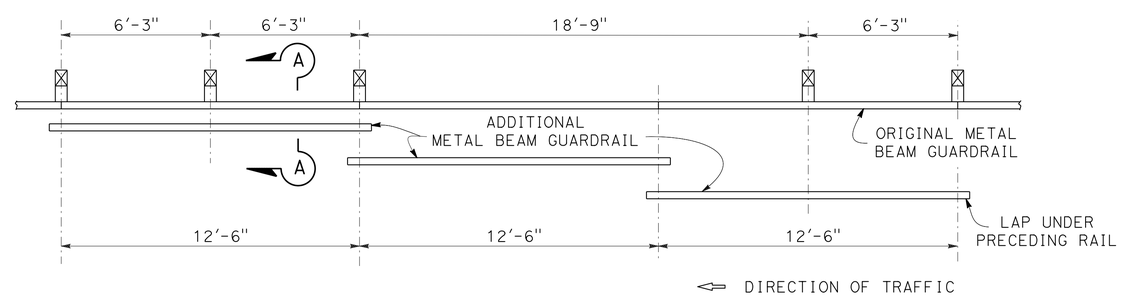

PLAN

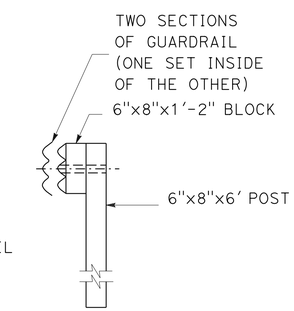

SECTION A-A

METAL BEAM GUARDRAIL
TWO POST OMITTED FOR CULVERT CROSSING

CONSTRUCTION DETAILS

NO SCALE

C-2

STATE OF CALIFORNIA - DEPARTMENT OF TRANSPORTATION
Caltrans
DESIGN

FUNCTIONAL SUPERVISOR: EDWARD HAJJ
CALCULATED-DESIGNED BY: HECTOR GRACIA
CHECKED BY: ABDUL MALIKYAR
REVISED BY
DATE REVISED

LAST REVISION 07-25-13
DATE PLOTTED => 31-OCT-2013
TIME PLOTTED => 15:22

Dist	COUNTY	ROUTE	POST MILES TOTAL PROJECT	SHEET No.	TOTAL SHEETS
11	SD	5	R58.1/R72.4	68	259

07-12-13
REGISTERED CIVIL ENGINEER DATE

11-04-13
PLANS APPROVAL DATE

REGISTERED PROFESSIONAL ENGINEER
MEHDI PARVINI
No. 63186
Exp 6-30-14
CIVIL
STATE OF CALIFORNIA

THE STATE OF CALIFORNIA OR ITS OFFICERS OR AGENTS SHALL NOT BE RESPONSIBLE FOR THE ACCURACY OR COMPLETENESS OF SCANNED COPIES OF THIS PLAN SHEET.

LEGEND:

PLACE PPCP (SEE GENERAL SLAB LAYOUTS SHEET C-4)

EXPANSION JOINT

ABBREVIATION:

(s) EXISTING JOINT SPACING

PPCP PRECAST PRESTRESSED CONCRETE PAVEMENT

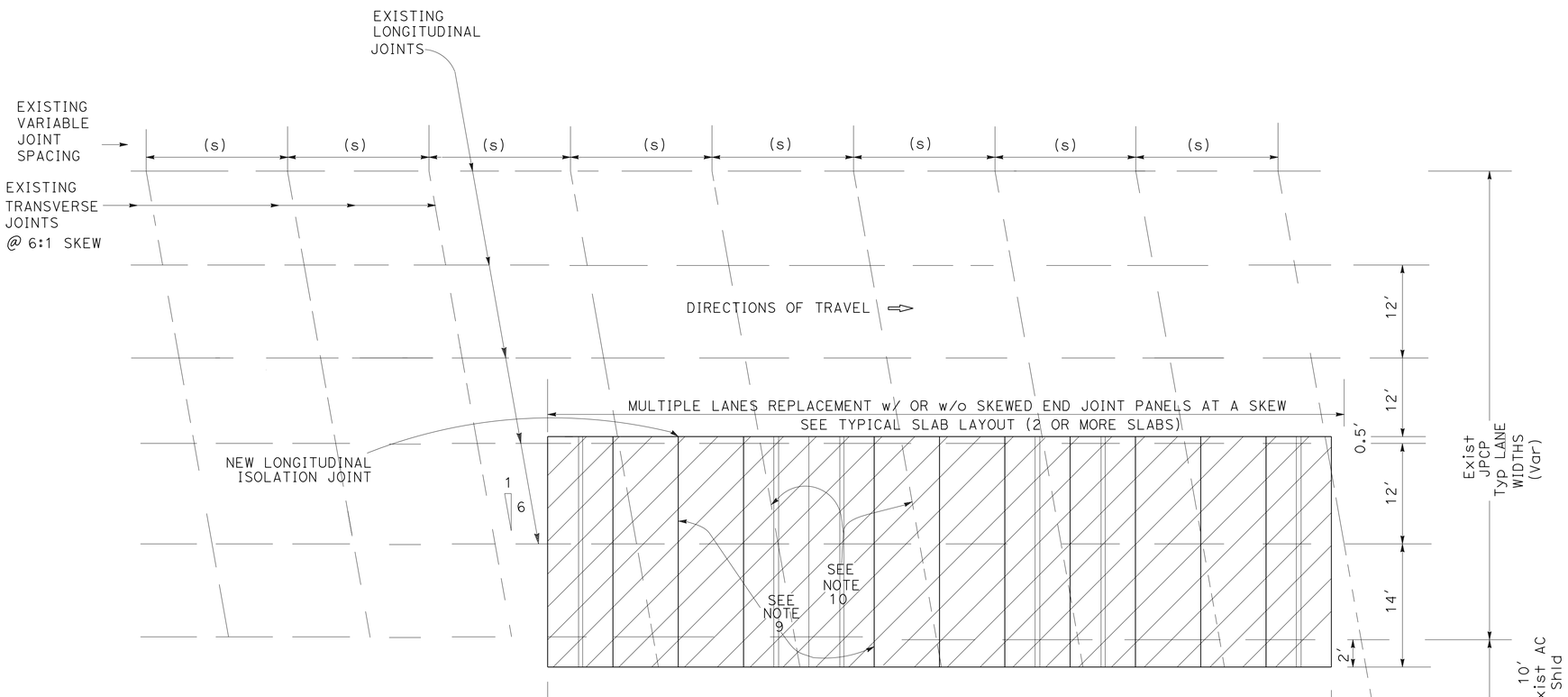

NOTES:

1. SKEW PANELS HAVE A MINIMUM LENGTH OF 4' FROM THE EXPANSION JOINT.
2. Exist JOINT SPACING (s) VARIES BASED ON YEAR OF DESIGN AND ARE TYPICALLY AT A SKEW OF 6:1.
3. NEW PANEL JOINTS ARE NOT NECESSARILY REQUIRED TO MATCH w/ THE Exist JOINTS.
4. FOR DETAILS OF BASE PANELS, CENTRAL STRESSING PANELS,TYPE C1 JOINT PANELS, TYPE C2 JOINT PANELS AND TYPE C3 JOINT PANELS, SEE THE INDIVIDUAL PLANS FOR EACH OF THESE PANELS. CASE IA & IB SINGLE SLAB LAYOUTS ARE PRESTRESSED WITHOUT POST-TENSIONING.
5. SKEW JOINT PANELS ARE OPTIONAL & ARE USED TO MATCH Exist.
6. Min Std PANEL LENGTH (L) = 8'. Min PANEL WIDTH (W) = DIMENSION AS NEEDED. Max PANEL WIDTH (W) = 60'.
7. IF POSSIBLE, LINE UP THE TRANSVERSE JOINTS WHEN MULTIPLE LANES OF PANELS ARE USED.
8. FOR LONGITUDINAL ISOLATION JOINTS, SEE "ISOLATION JOINT DETAIL" ON MISCELLANEOUS PANEL DETAILS PLAN.
9. FOR PPCP NEXT TO Exist PCC PAVEMENT, SEE "DOWEL BAR PLACEMENT" PLAN.
10. FOR TRANSVERSE JOINTS OF PPCP PANELS, SEE "KEY & KEYWAY DETAIL" ON CONSTRUCTION DETAILS C-15.

GENERAL PLAN LAYOUTS
PRECAST PRESTRESSED CONCRETE PAVEMENT (PPCP)

CONSTRUCTION DETAILS

NO SCALE

C-3

REVISED BY	DATE REVISED
MP	06/12/2012

CALCULATED-DESIGNED BY: MEHDI PARVINI
CHECKED BY: WILLIAM FARNBACH
FUNCTIONAL SUPERVISOR: WILLIAM FARNBACH

STATE OF CALIFORNIA - DEPARTMENT OF TRANSPORTATION
Caltrans
56-MAINTENANCE

LAST REVISION 07-29-13
DATE PLOTTED => 31-OCT-2013
TIME PLOTTED => 15:22

Dist	COUNTY	ROUTE	POST MILES TOTAL PROJECT	SHEET No.	TOTAL SHEETS
11	SD	5	R58.1/R72.4	69	259

07-12-13
REGISTERED CIVIL ENGINEER DATE

11-04-13
PLANS APPROVAL DATE

REGISTERED PROFESSIONAL ENGINEER
MEHDI PARVINI
No. 63186
Exp 6-30-14
CIVIL
STATE OF CALIFORNIA

THE STATE OF CALIFORNIA OR ITS OFFICERS OR AGENTS SHALL NOT BE RESPONSIBLE FOR THE ACCURACY OR COMPLETENESS OF SCANNED COPIES OF THIS PLAN SHEET.

NOTES:

1. SEE Misc PANEL DETAILS(SHEET C-15) FOR CENTRAL STRESSING BLOCKOUT DETAIL.
2. L IS THE LENGTH OF PANEL OR SLAB ALONG THE DIRECTION OF TRAVEL.
3. WHEN CENTRAL STRESSING PANELS ARE INCLUDED IN A SLAB, ONLY TWO LONG BLOCKOUTS PLACED APPROXIMATELY AT THIRD POINTS OF JOINT PANELS ARE NEEDED.

LEGEND:

- SMALL BLOCKOUTS FOR END ANCHORS
- LARGE BLOCKOUTS FOR POST-TENSIONING JACKS
- TYPICAL DIRECTION OF POST-TENSIONING PULL & LOCATION OF TENSION LOCK.
- POST-TENSIONING DUCT

TYPICAL BLOCKOUTS FOR END ANCHORS AND POST-TENSIONING JACKS

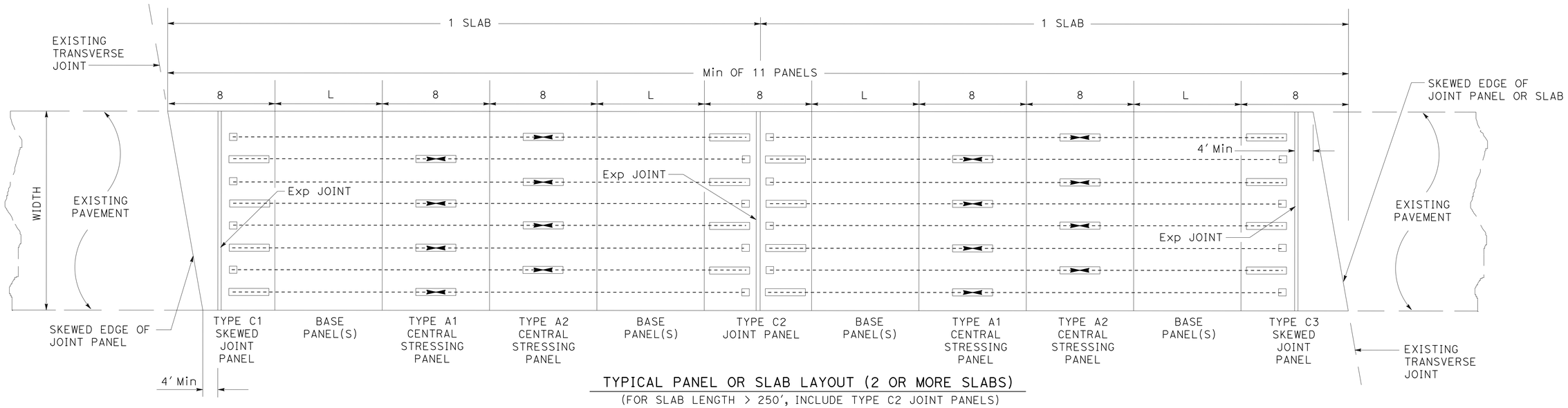

TYPICAL PANEL OR SLAB LAYOUT (2 OR MORE SLABS)
(FOR SLAB LENGTH > 250', INCLUDE TYPE C2 JOINT PANELS)

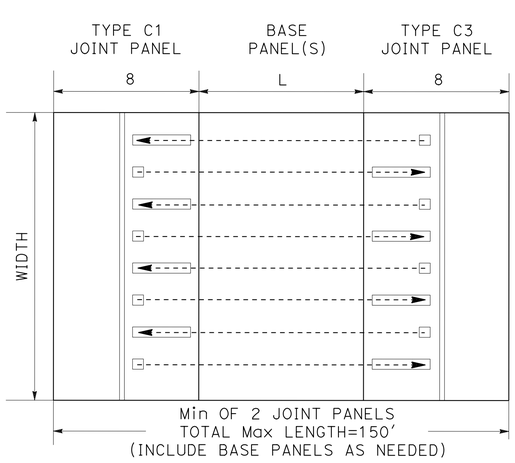

CASE I PANEL OR SLAB LAYOUT

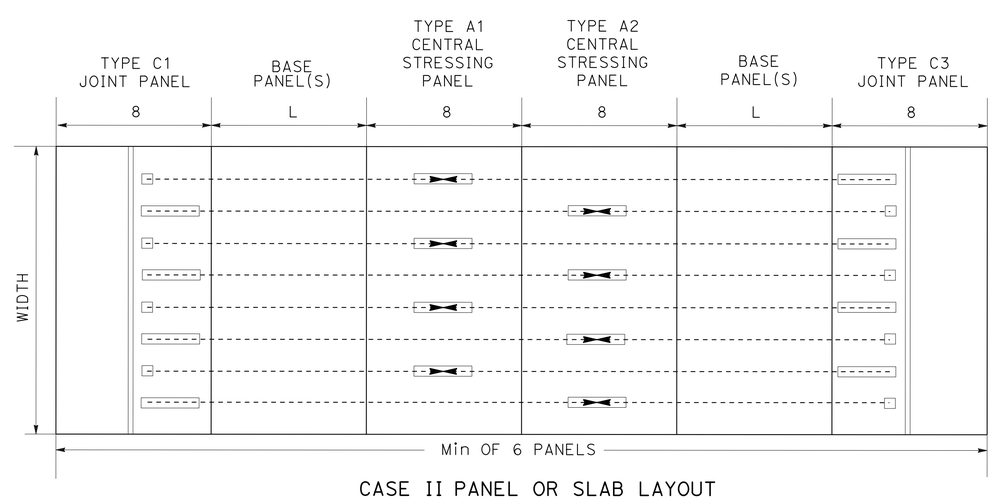

CASE II PANEL OR SLAB LAYOUT
(FOR SLAB LENGTH > 150' & < 250')

GENERAL PANEL OR SLAB LAYOUTS
PRECAST PRESTRESSED CONCRETE PAVEMENT (PPCP)

CONSTRUCTION DETAILS

NO SCALE

C-4

STATE OF CALIFORNIA - DEPARTMENT OF TRANSPORTATION
Caltrans
56-MAINTENANCE

FUNCTIONAL SUPERVISOR: WILLIAM FARNBACH
CALCULATED-DESIGNED BY: MEHDI PARVINI
CHECKED BY: WILLIAM FARNBACH
REVISED BY: MP
DATE REVISED: 06/12/2012

LAST REVISION 07-29-13
DATE PLOTTED => 31-OCT-2013
TIME PLOTTED => 15:22

Dist	COUNTY	ROUTE	POST MILES TOTAL PROJECT	SHEET No.	TOTAL SHEETS
11	SD	5	R58.1/R72.4	70	259

07-12-13
REGISTERED CIVIL ENGINEER DATE

11-04-13
PLANS APPROVAL DATE

REGISTERED PROFESSIONAL ENGINEER
MEHDI PARVINI
No. 63186
Exp 6-30-14
CIVIL
STATE OF CALIFORNIA

THE STATE OF CALIFORNIA OR ITS OFFICERS OR AGENTS SHALL NOT BE RESPONSIBLE FOR THE ACCURACY OR COMPLETENESS OF SCANNED COPIES OF THIS PLAN SHEET.

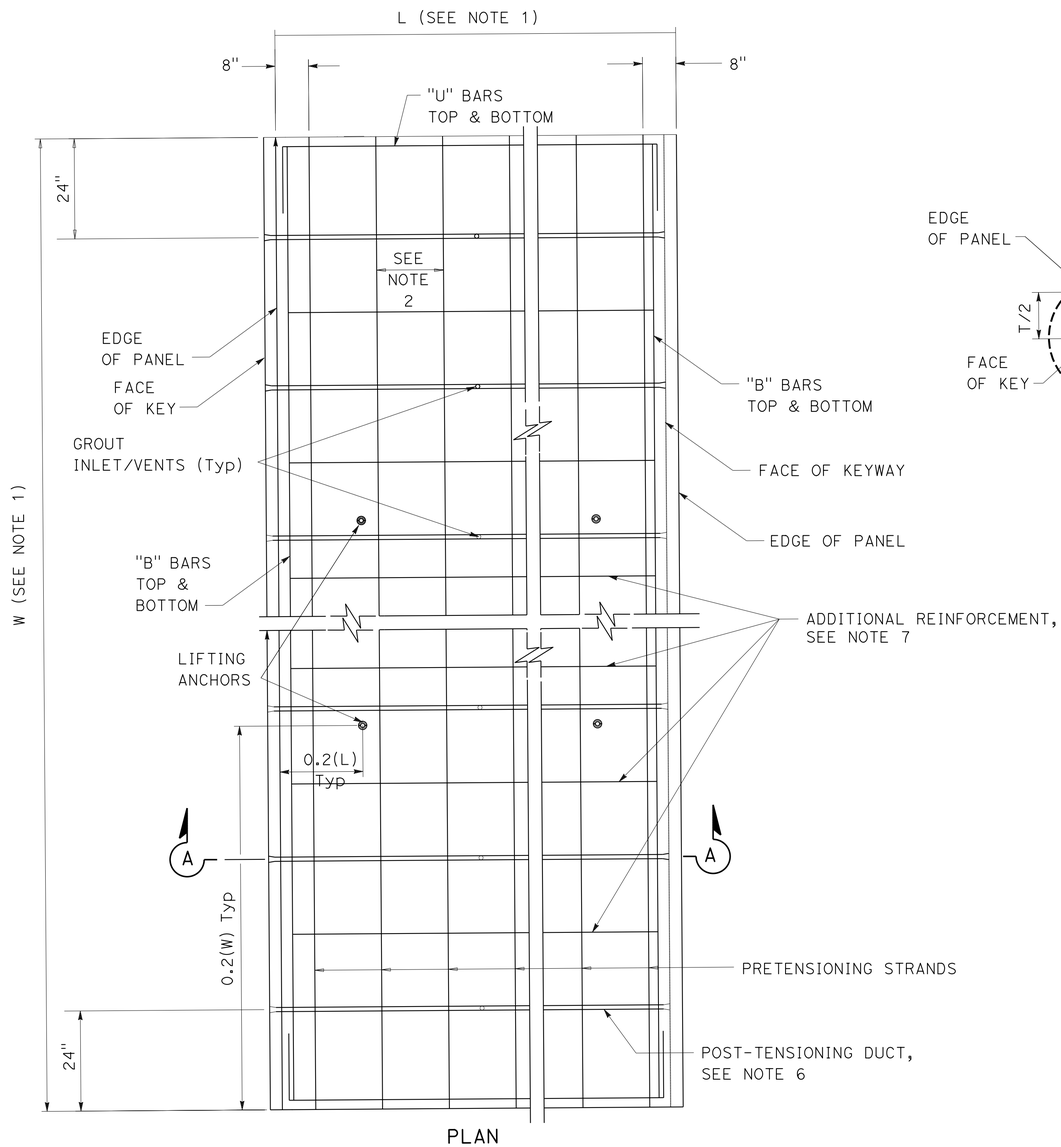

PLAN

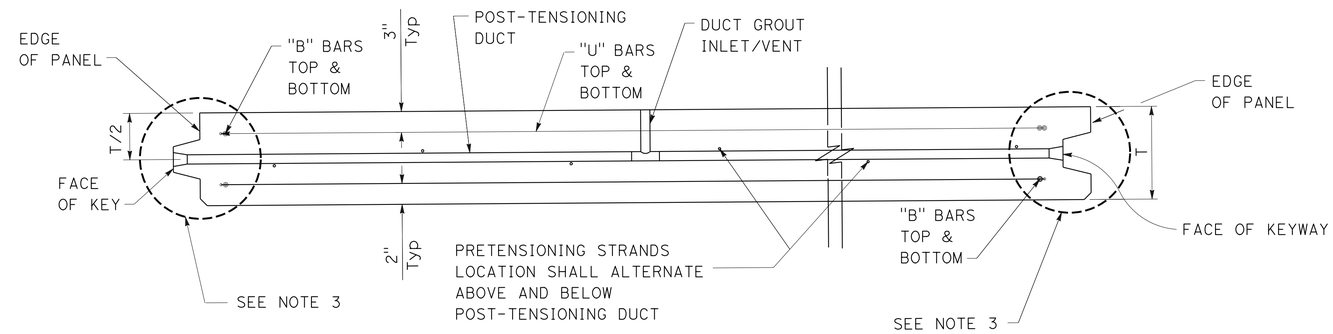

SECTION A-A

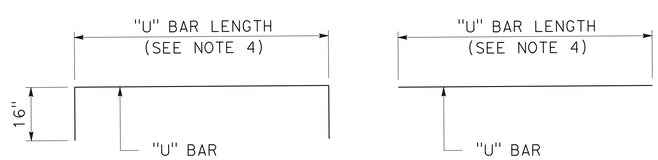

NOTES:

1. SEE TABLES A AND B (SHEETS C-17 THROUGH C-19) FOR LENGTH (L) OR WIDTH (W) FOR BASE PANELS.
2. THE SPACING BETWEEN PRETENSIONING STRANDS SHALL NOT BE MORE THAN 16" C-C.
3. SEE Misc PANEL DETAILS (SHEET C-15) FOR KEY & KEYWAY DETAIL.
4. FOR "B" BAR AND "U" BAR LENGTHS, SEE TABLES A AND B (SHEETS C-17 THROUGH C-19) FOR BASE PANELS.
5. VERIFY REINFORCEMENT DIMENSIONS & QUANTITIES BEFORE FABRICATION.
6. POST-TENSIONING DUCTS ARE SPACED UNIFORMLY AT MAXIMUM 36" C-C ALONG THE 'W' DIMENSION BETWEEN THE FIRST & LAST POST-TENSIONING DUCT.
7. ADDITIONAL REINFORCEMENT TO CARRY SHIPPING AND INSTALLATION LOADS TO BE CALCULATED BY THE CONTRACTOR.

BASE PANEL LAYOUT
PRECAST PRESTRESSED CONCRETE PAVEMENT (PPCP)

CONSTRUCTION DETAILS

NO SCALE

C-5

REVISED BY	DATE REVISED
MP	06/12/2012

CALCULATED-DESIGNED BY: MEHDI PARVINI
CHECKED BY: WILLIAM FARNBACH
FUNCTIONAL SUPERVISOR: WILLIAM FARNBACH

STATE OF CALIFORNIA - DEPARTMENT OF TRANSPORTATION
Caltrans
56-MAINTENANCE

LAST REVISION 07-29-13
DATE PLOTTED => 31-OCT-2013
TIME PLOTTED => 15:22

Dist	COUNTY	ROUTE	POST MILES TOTAL PROJECT	SHEET No.	TOTAL SHEETS
11	SD	5	R58.1/R72.4	71	259

REGISTERED CIVIL ENGINEER 07-12-13 DATE

11-04-13
PLANS APPROVAL DATE

REGISTERED PROFESSIONAL ENGINEER MEHDI PARVINI No. 63186 Exp 6-30-14 CIVIL STATE OF CALIFORNIA

THE STATE OF CALIFORNIA OR ITS OFFICERS OR AGENTS SHALL NOT BE RESPONSIBLE FOR THE ACCURACY OR COMPLETENESS OF SCANNED COPIES OF THIS PLAN SHEET.

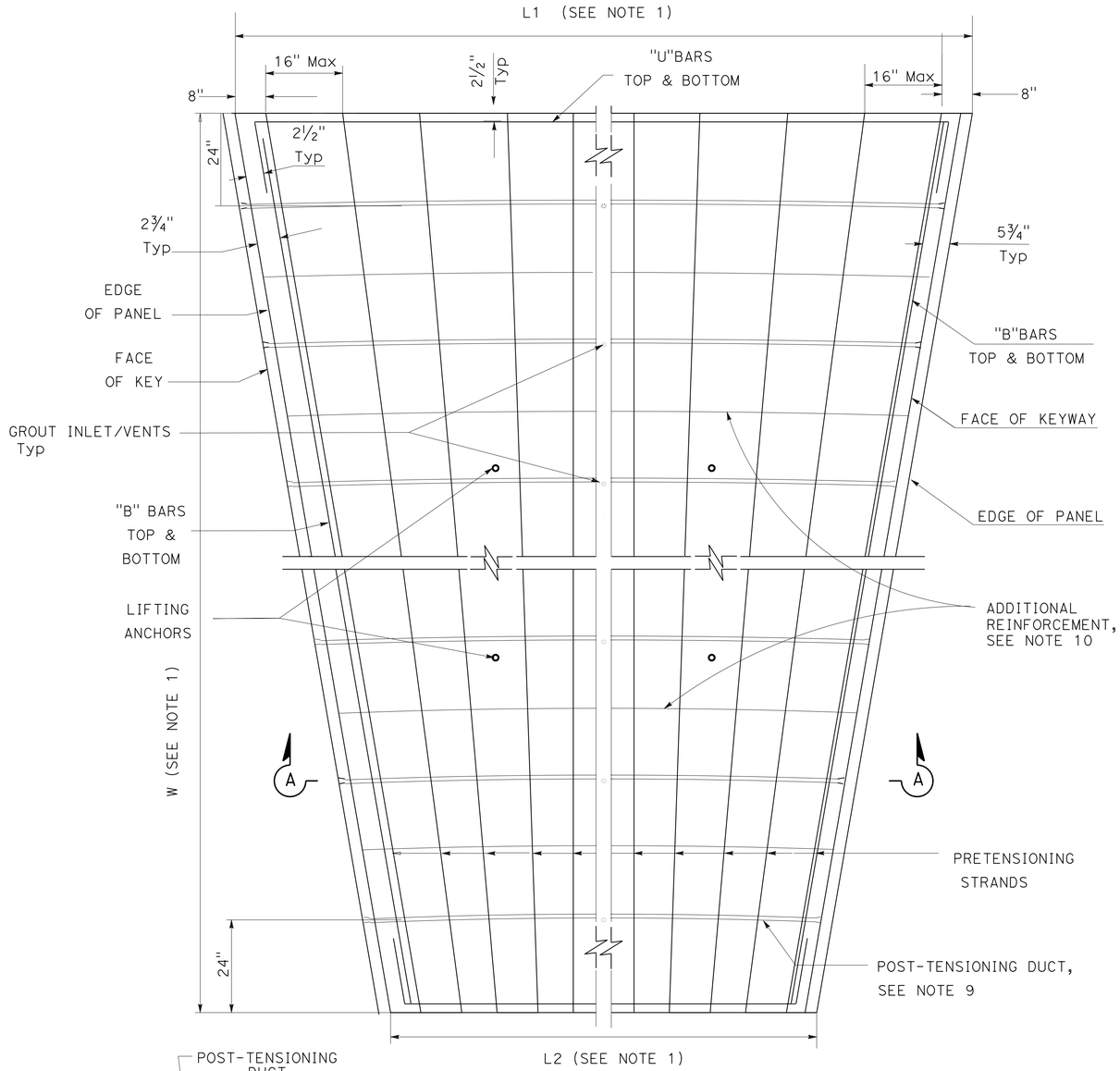

PLAN

NOTES:

1. SEE TABLES A AND B(SHEETS C-17 THROUGH C-19) WIDTH (W) AND LIMITS OF LENGTHS (L1 AND L2). CALCULATE L1 AND L2 BASED ON CURVE RADIUS.
2. THE SPACING BETWEEN PRETENSIONING STRANDS SHALL NOT BE MORE THAN 16" C-C.
3. SEE Misc PANEL DETAILS (SHEET C-15) FOR KEY & KEYWAY DETAIL.
4. FOR "U" BAR LENGTH, SEE TABLES A AND B (SHEETS C-17 THROUGH C-19) FOR BASE PANELS. ADJUST THE LENGTH OF "B" BAR, "U" BAR AND PRETENSIONING STRANDS BASED ON W, L1 AND L2 DIMENSIONS.
5. SEE MISCELLANEOUS PANEL DETAILS FOR GROUT INLET/VENT.
6. VERIFY REINFORCEMENT DIMENSIONS AND QUANTITIES BEFORE FABRICATION.
7. FOR CURVES WITH RADIUS LESS THAN 2000′, THE DUCT MUST BE PERPENDICULAR TO THE EDGE OF PANEL AND SHOULD HAVE AN ANGLE TO MATCH THE RADIUS OF CURVE.
8. FOR TIGHT CURVES WITH RADIUS LESS THAN 2000′, BUILD THE CURVE TO MATCH THE ROAD.
9. 1" POST-TENSIONING DUCTS ARE SPACED UNIFORMLY AT MAXIMUM 36" C-C ALONG THE`W′ DIMENSION BETWEEN THE FIRST & LAST POST-TENSIONING DUCT.
10. ADDITIONAL REINFORCEMENT TO CARRY SHIPPING AND INSTALLATION LOADS TO BE CALCULATED BY THE CONTRACTOR.

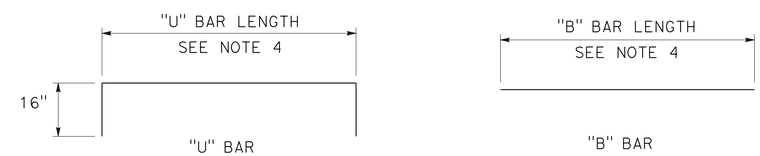

PLAN

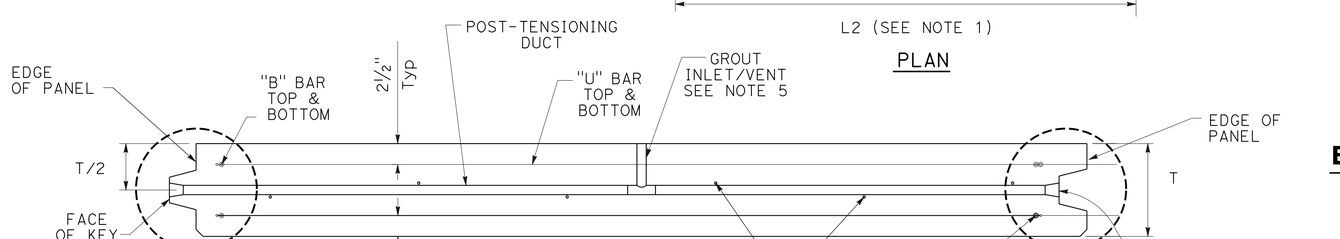

SECTION A-A
BASE PANEL

BASE PANEL (AT CURVE)
PRECAST PRESTRESSED CONCRETE PAVEMENT (PPCP)

CONSTRUCTION DETAILS

NO SCALE

C-6

STATE OF CALIFORNIA - DEPARTMENT OF TRANSPORTATION
56-MAINTENANCE

FUNCTIONAL SUPERVISOR: WILLIAM FARNBACH
CALCULATED-DESIGNED BY: MEHDI PARVINI
CHECKED BY: WILLIAM FARNBACH
REVISED BY: MP
DATE REVISED: 06/12/2012

LAST REVISION 07-29-13
DATE PLOTTED => 31-OCT-2013
TIME PLOTTED => 15:22

Dist	COUNTY	ROUTE	POST MILES TOTAL PROJECT	SHEET No.	TOTAL SHEETS
11	SD	5	R58.1/R72.4	72	259

07-12-13
REGISTERED CIVIL ENGINEER DATE

11-04-13
PLANS APPROVAL DATE

REGISTERED PROFESSIONAL ENGINEER MEHDI PARVINI No. 63186 Exp. 6-30-14 CIVIL STATE OF CALIFORNIA

THE STATE OF CALIFORNIA OR ITS OFFICERS OR AGENTS SHALL NOT BE RESPONSIBLE FOR THE ACCURACY OR COMPLETENESS OF SCANNED COPIES OF THIS PLAN SHEET.

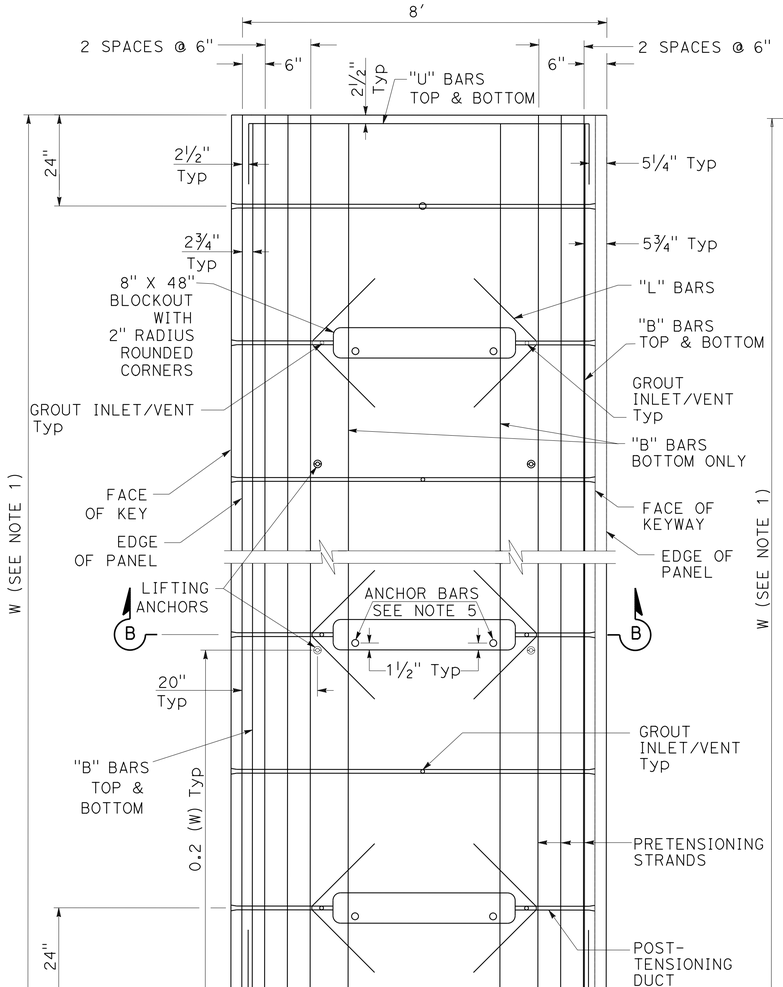

PLAN
TYPE A1

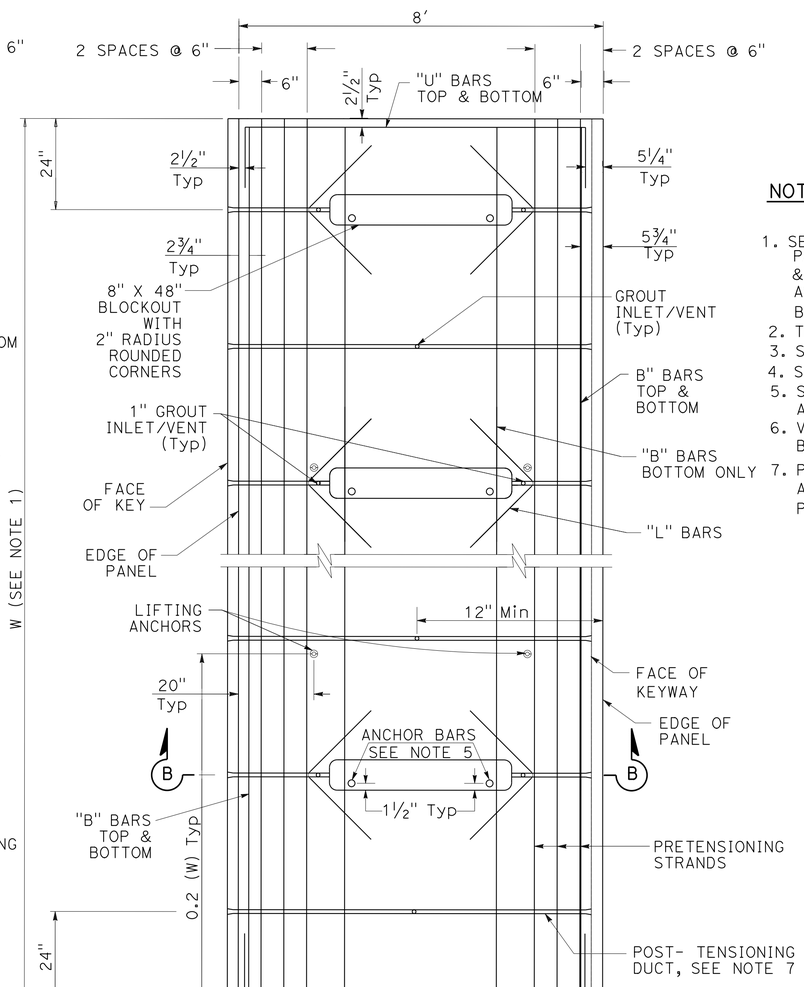

PLAN
TYPE A2

NOTES:

1. SEE TABLE B (SHEETS C-17 THROUGH C-19)FOR BASE PANELS FOR NUMBER OF POST-TENSIONING DUCTS & LENGTH OF PRETENSIONING STRANDS. NUMBER OF BARS ASSOCIATED WITH EACH TYPE OF BLOCK-OUT IS CALCULATED BASED ON THE NUMBER OF THAT TYPE.
2. THE SPACING BETWEEN PRETENSIONING STRANDS IS 6" C-C.
3. SEE MISCELLANEOUS PANEL DETAILS (SHEET C-15) FOR KEY & KEYWAY DETAIL.
4. SEE MISCELLANEOUS PANEL DETAILS (SHEET C-15) FOR GROUT INLET/VENT.
5. SEE CENTRAL STRESSING BLOCKOUT DETAIL AND ANCHOR BAR DETAIL IN MISCELLANEOUS PANEL DETAILS (SHEET C-15).
6. VERIFY REINFORCEMENT DIMENSIONS AND QUANTITIES BEFORE FABRICATION.
7. POST-TENSIONING DUCTS ARE SPACED UNIFORMLY AT Max 36" C-C ALONG THE 'W' DIMENSION BETWEEN THE FIRST & LAST POST-TENSIONING DUCT.

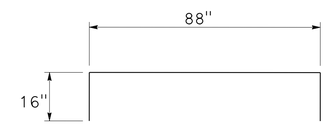

"U" BAR

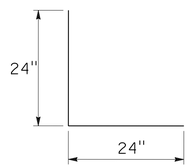

"L" BARS

PLAN

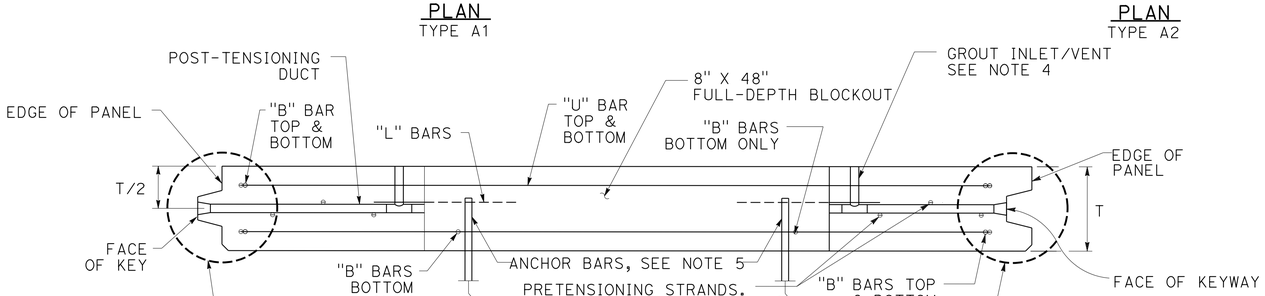

SECTION B-B

CENTRAL STRESSING PANELS (TYPE A1 & A2)
PRECAST PRESTRESSED CONCRETE PAVEMENT

CONSTRUCTION DETAILS

NO SCALE

C-7

STATE OF CALIFORNIA - DEPARTMENT OF TRANSPORTATION
Caltrans®
56-MAINTENANCE

FUNCTIONAL SUPERVISOR: WILLIAM FARNBACH
CALCULATED-DESIGNED BY: MEHDI PARVINI
CHECKED BY: WILLIAM FARNBACH
REVISED BY: MP
DATE REVISED: 06/12/2012

LAST REVISION 07-29-13
DATE PLOTTED => 31-OCT-2013
TIME PLOTTED => 15:22

Dist	COUNTY	ROUTE	POST MILES TOTAL PROJECT	SHEET No.	TOTAL SHEETS
11	SD	5	R58.1/R72.4	73	259

07-12-13
REGISTERED CIVIL ENGINEER DATE

11-04-13
PLANS APPROVAL DATE

REGISTERED PROFESSIONAL ENGINEER MEHDI PARVINI No. 63186 Exp 6-30-14 CIVIL STATE OF CALIFORNIA

THE STATE OF CALIFORNIA OR ITS OFFICERS OR AGENTS SHALL NOT BE RESPONSIBLE FOR THE ACCURACY OR COMPLETENESS OF SCANNED COPIES OF THIS PLAN SHEET.

NOTES:

1. SEE TABLE B (SHEETS C-17 THROUGH C-19)FOR BASE PANELS FOR NUMBER OF POST-TENSIONING DUCTS & LENGTH OF PRETENSIONING STRANDS. NUMBER OF BARS ASSOCIATED WITH EACH TYPE OF BLOCK-OUT IS CALCULATED BASED ON THE NUMBER OF THAT TYPE.
2. SEE MISCELLANEOUS PANEL DETAILS (SHEET C-15)FOR KEY & KEYWAY DETAIL.
3. SEE MISCELLANEOUS PANEL DETAILS (SHEET C-15)FOR GROUT INLET/VENT.
4. THE SECTION OF DOWEL EXTENDING INTO THE EXPANSION SLEEVE MUST BE GREASED PRIOR TO BEING INSERTED INTO THE EXPANSION SLEEVE PRIOR TO CASTING.
5. VERIFY REINFORCEMENT DIMENSIONS AND QUANTITIES BEFORE FABRICATION.
6. POST-TENSIONING DUCTS ARE SPACED UNIFORMLY AT Max 36" C-C ALONG THE`W' DIMENSION BETWEEN THE FIRST & LAST POST-TENSIONING DUCT.

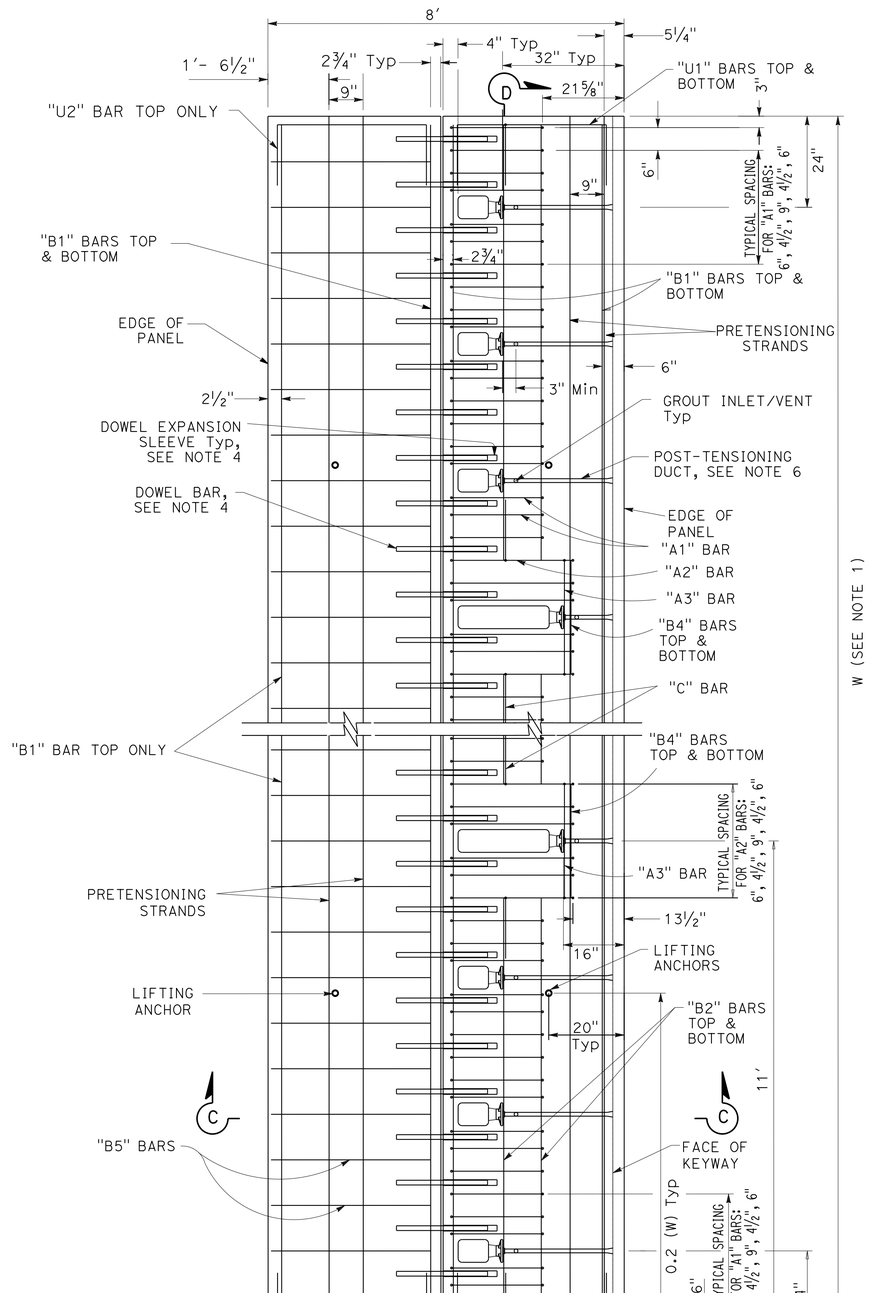

PLAN

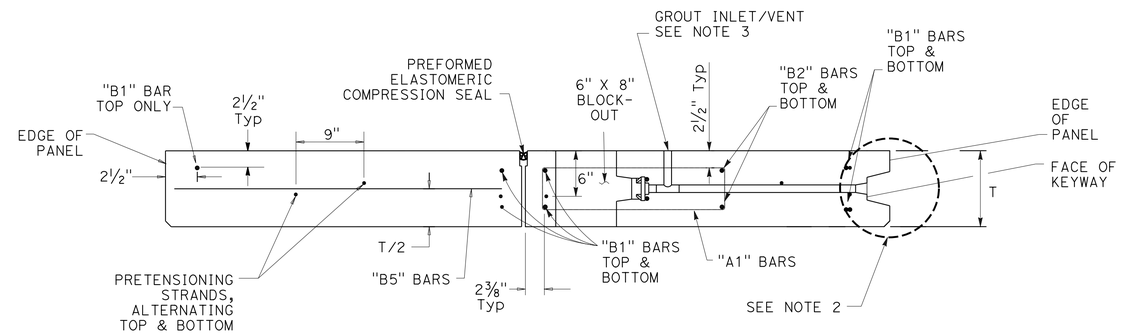

SECTION C-C

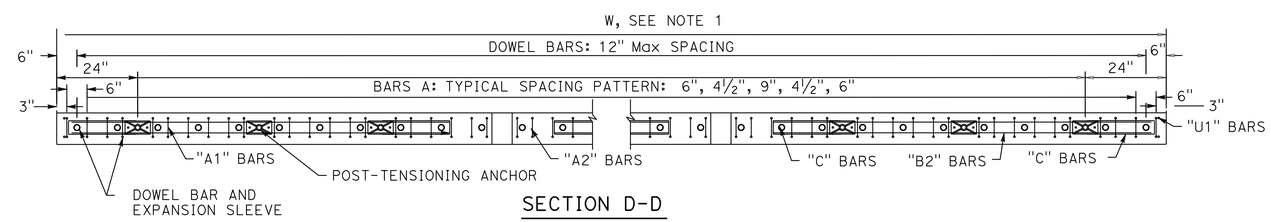

SECTION D-D

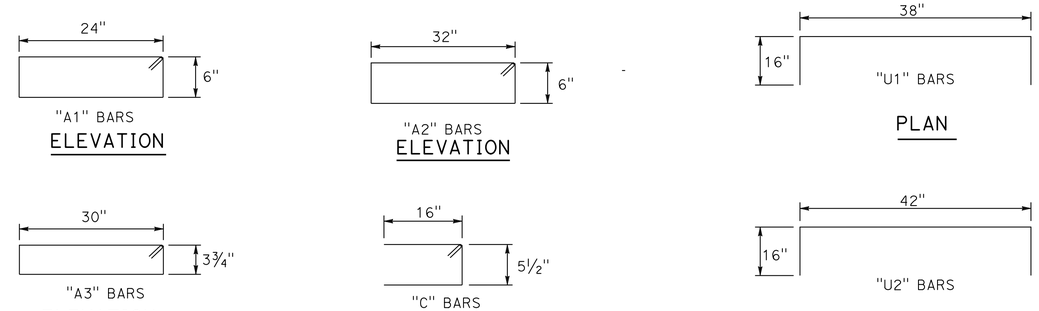

JOINT PANEL (TYPE C1)

PRECAST PRESTRESSED CONCRETE PAVEMENT

CONSTRUCTION DETAILS

NO SCALE

C-8

STATE OF CALIFORNIA - DEPARTMENT OF TRANSPORTATION
56-MAINTENANCE

FUNCTIONAL SUPERVISOR: WILLIAM FARNBACH
CALCULATED-DESIGNED BY: MEHDI PARVINI
CHECKED BY: WILLIAM FARNBACH
REVISED BY: MP
DATE REVISED: 06/12/2012

LAST REVISION 07-29-13
DATE PLOTTED => 31-OCT-2013
TIME PLOTTED => 15:22

Dist	COUNTY	ROUTE	POST MILES TOTAL PROJECT	SHEET No.	TOTAL SHEETS
11	SD	5	R58.1/R72.4	74	259

07-12-13
REGISTERED CIVIL ENGINEER DATE

11-04-13
PLANS APPROVAL DATE

REGISTERED PROFESSIONAL ENGINEER MEHDI PARVINI No. 63186 Exp 6-30-14 CIVIL STATE OF CALIFORNIA

THE STATE OF CALIFORNIA OR ITS OFFICERS OR AGENTS SHALL NOT BE RESPONSIBLE FOR THE ACCURACY OR COMPLETENESS OF SCANNED COPIES OF THIS PLAN SHEET.

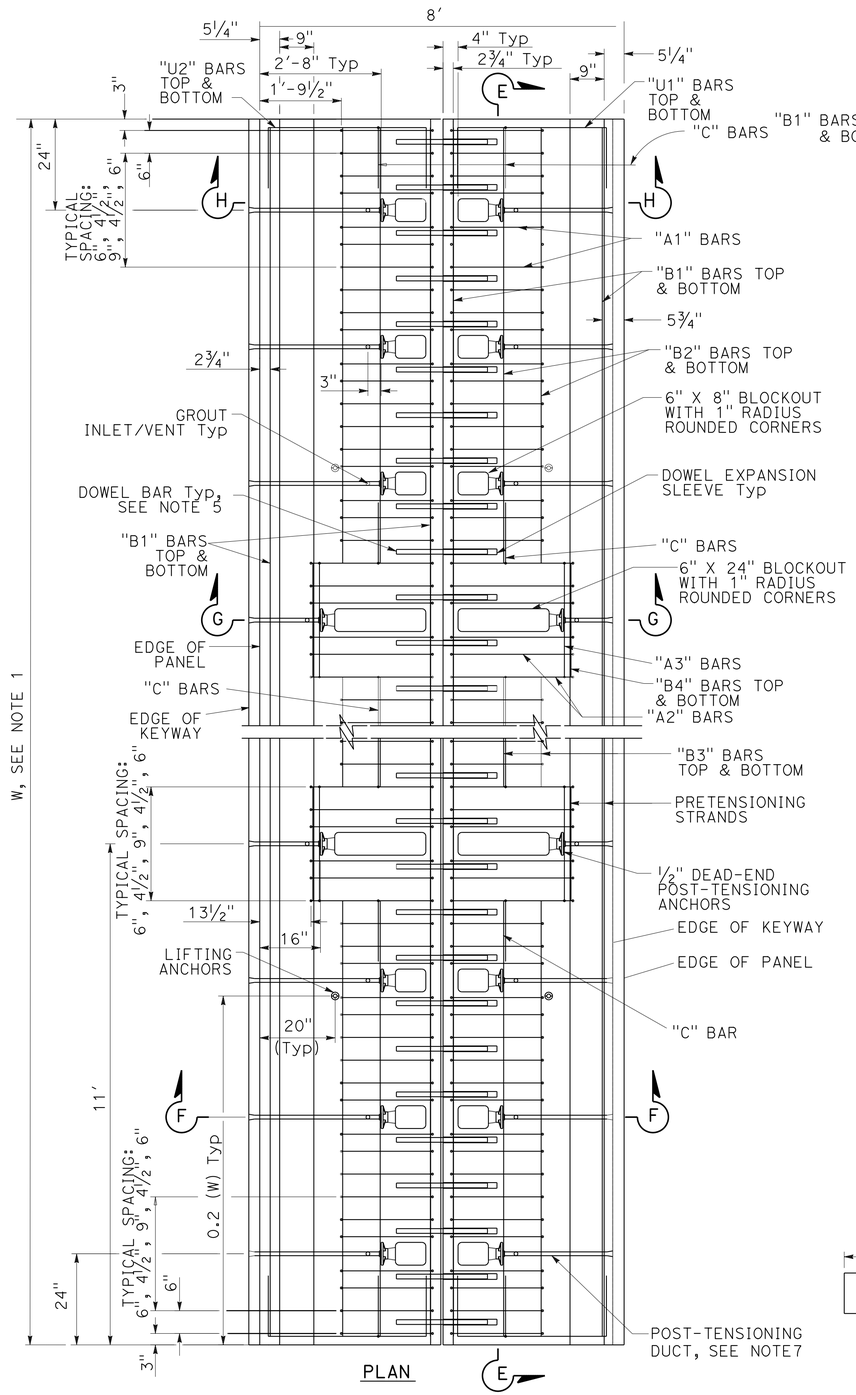

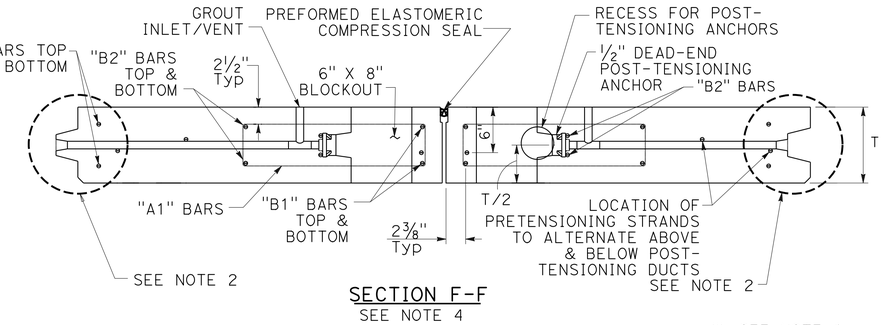

SECTION F-F
SEE NOTE 4

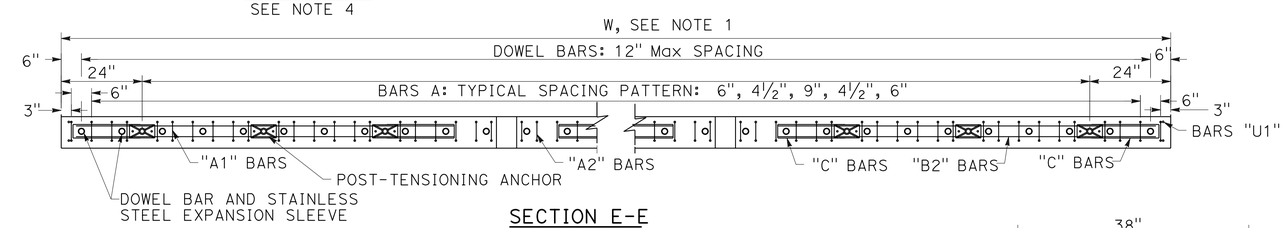

SECTION E-E

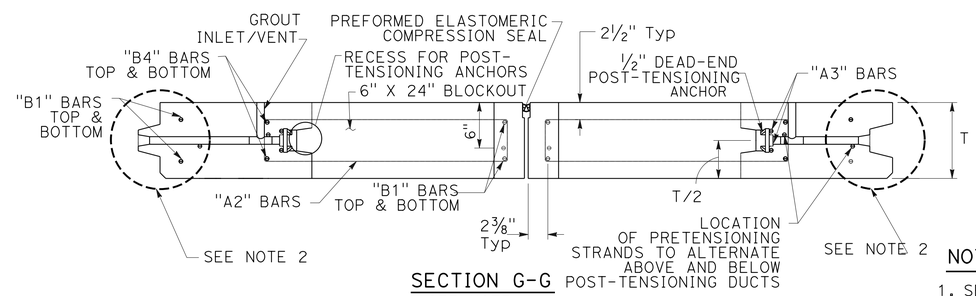

SECTION G-G
SEE NOTE 4

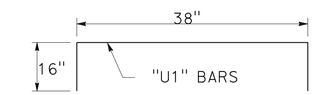

PLAN

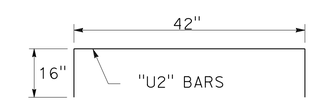

PLAN

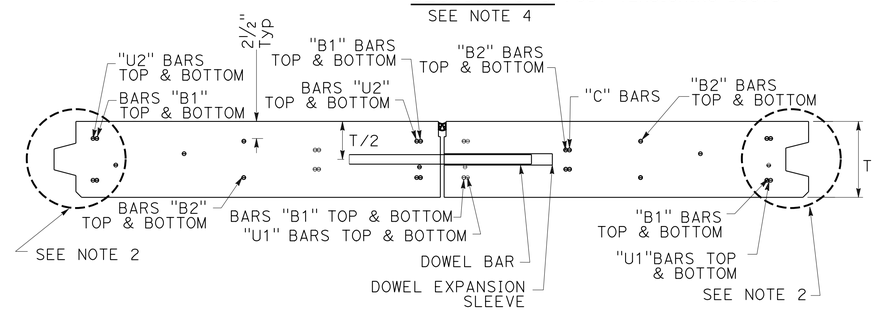

SECTION H-H

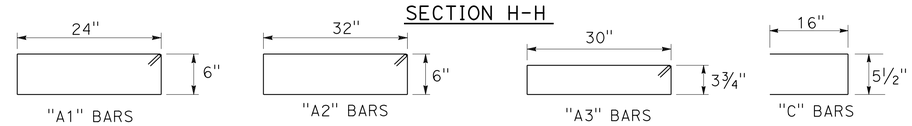

ELEVATION

NOTES:

1. SEE TABLE B FOR BASE PANELS FOR NUMBER OF POST-TENSIONING DUCTS & LENGTH OF PRETENSIONING STRANDS. NUMBER OF BARS ASSOCIATED WITH EACH TYPE OF BLOCK-OUT IS CALCULATED BASED ON THE NUMBER OF THAT TYPE.(SHEETS C-17 THROUGH C-19)
2. SEE MISCELLANEOUS PANEL DETAILS (SHEET C-15)FOR KEY & KEYWAY DETAIL.
3. SEE MISCELLANEOUS PANEL DETAILS (SHEET C-15)FOR GROUT INLET/VENT.
4. SEE MISCELLANEOUS PANEL DETAILS FOR (SHEET C-15)EXPANSION JOINT/ANCHOR DETAIL.
5. THE SECTION OF DOWEL EXTENDING INTO THE EXPANSION SLEEVE SHALL BE GREASED PRIOR TO BEING INSERTED INTO THE EXPANSION SLEEVE PRIOR TO CASTING.
6. REINFORCEMENT DIMENSIONS SHALL BE VERIFIED BY THE MANUFACTURER BEFORE PANEL FABRICATION.
7. POST-TENSIONING DUCTS ARE SPACED UNIFORMLY AT MAXIMUM 36" C-C ALONG THE 'W' DIMENSION BETWEEN THE FIRST & LAST POST-TENSIONING DUCT.

JOINT PANEL (TYPE C2)
PRECAST PRESTRESSED CONCRETE PAVEMENT

CONSTRUCTION DETAILS

NO SCALE

C-9

STATE OF CALIFORNIA - DEPARTMENT OF TRANSPORTATION
Caltrans 56-MAINTENANCE

CALCULATED-DESIGNED BY	MEHDI PARVINI	FUNCTIONAL SUPERVISOR	WILLIAM FARNBACH
CHECKED BY	WILLIAM FARNBACH	REVISED BY	MP
		DATE REVISED	06/12/2012

LAST REVISION 07-29-13 | DATE PLOTTED => 31-OCT-2013 | TIME PLOTTED => 15:22

Dist	COUNTY	ROUTE	POST MILES TOTAL PROJECT	SHEET No.	TOTAL SHEETS
11	SD	5	R58.1/R72.4	75	259

07-12-13
REGISTERED CIVIL ENGINEER DATE

11-04-13
PLANS APPROVAL DATE

REGISTERED PROFESSIONAL ENGINEER MEHDI PARVINI No. 63186 Exp 6-30-14 CIVIL STATE OF CALIFORNIA

THE STATE OF CALIFORNIA OR ITS OFFICERS OR AGENTS SHALL NOT BE RESPONSIBLE FOR THE ACCURACY OR COMPLETENESS OF SCANNED COPIES OF THIS PLAN SHEET.

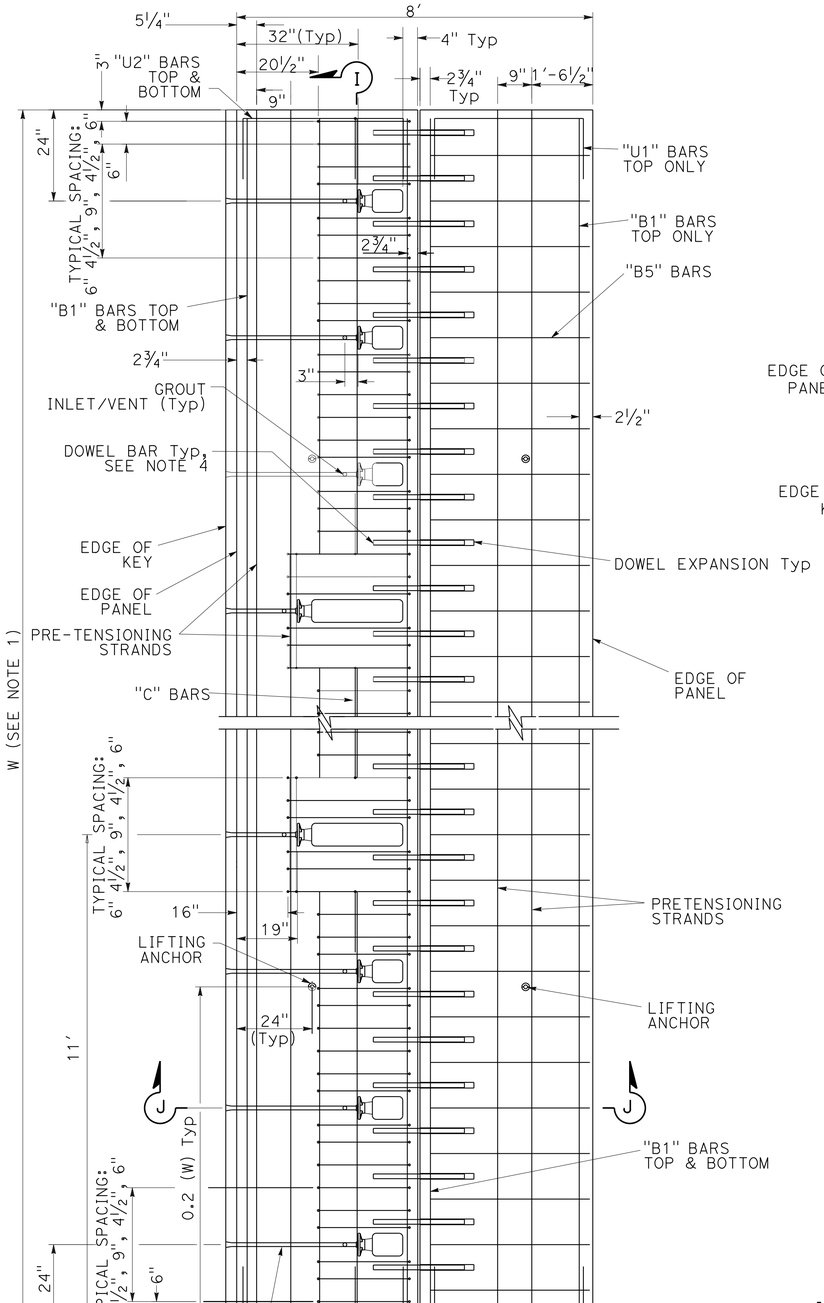

NOTES:

1. SEE TABLE B FOR BASE PANELS FOR NUMBER OF POST-TENSIONING DUCTS & LENGTH OF PRETENSIONING STRANDS. (SHEETS C-17 THROUGH C-19)NUMBER OF BARS ASSOCIATED WITH EACH TYPE OF BLOCK-OUT IS CALCULATED BASED ON THE NUMBER OF THAT TYPE.
2. SEE MISCELLANEOUS PANEL DETAILS (SHEET C-15) FOR KEY & KEYWAY DETAIL.
3. SEE MISCELLANEOUS PANEL DETAILS (SHEET C-15) FOR GROUT INLET/VENT.
4. THE SECTION OF DOWEL EXTENDING INTO THE EXPANSION SLEEVE SHALL BE GREASED PRIOR TO BEING INSERTED INTO THE EXPANSION SLEEVE PRIOR TO CASTING.
5. ALL REINFORCEMENT DIMENSIONS SHALL BE VERIFIED BY THE MANUFACTURER BEFORE PANEL FABRICATION.
6. POST-TENSIONING DUCTS ARE SPACED UNIFORMLY AT MAXIMUM 36" C-C ALONG THE 'W' DIMENSION BETWEEN THE FIRST & LAST POST-TENSIONING DUCT.

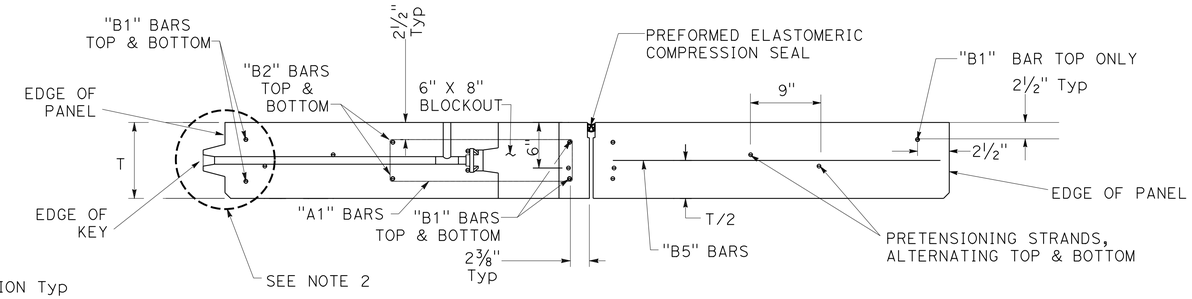

SECTION J-J

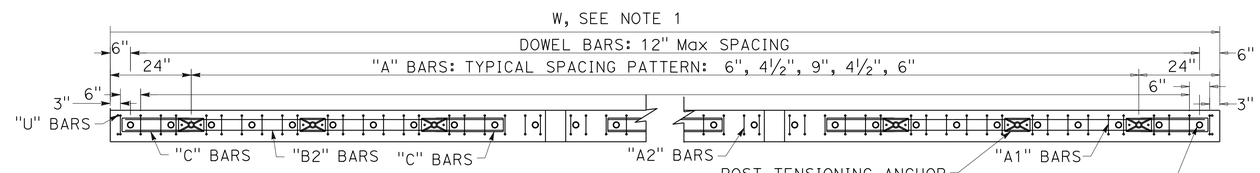

SECTION I-I

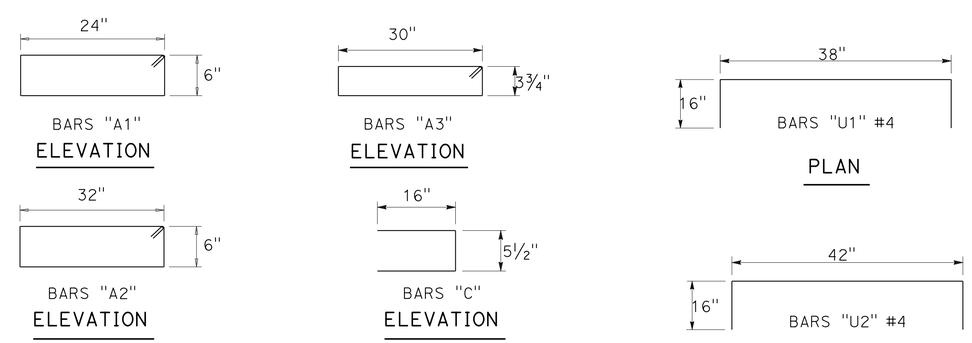

JOINT PANEL (TYPE C3)

PRECAST PRESTRESSED CONCRETE PAVEMENT

CONSTRUCTION DETAILS

NO SCALE

C-10

STATE OF CALIFORNIA - DEPARTMENT OF TRANSPORTATION
Caltrans 56-MAINTENANCE

FUNCTIONAL SUPERVISOR: WILLIAM FARNBACH
CALCULATED-DESIGNED BY: MEHDI PARVINI
CHECKED BY: WILLIAM FARNBACH
REVISED BY: MP
DATE REVISED: 06/12/2012

LAST REVISION 07-29-13
DATE PLOTTED => 31-OCT-2013
TIME PLOTTED => 15:23

Dist	COUNTY	ROUTE	POST MILES TOTAL PROJECT	SHEET No.	TOTAL SHEETS
11	SD	5	R58.1/R72.4	76	259

REGISTERED CIVIL ENGINEER 07-12-13 DATE

11-04-13
PLANS APPROVAL DATE

REGISTERED PROFESSIONAL ENGINEER MEHDI PARVINI No. 63186 Exp 6-30-14 CIVIL STATE OF CALIFORNIA

THE STATE OF CALIFORNIA OR ITS OFFICERS OR AGENTS SHALL NOT BE RESPONSIBLE FOR THE ACCURACY OR COMPLETENESS OF SCANNED COPIES OF THIS PLAN SHEET.

NOTES:

1. SEE TABLE B (SHEETS C-17 THROUGH C-19)FOR BASE PANELS FOR NUMBER OF POST-TENSIONING DUCTS & LENGTH OF PRETENSIONING STRANDS. NUMBER OF BARS ASSOCIATED WITH EACH TYPE OF BLOCK-OUT IS CALCULATED BASED ON THE NUMBER OF THAT TYPE.
2. SEE MISCELLANEOUS PANEL DETAILS (SHEET C-15)FOR KEY & KEYWAY DETAIL.
3. SEE MISCELLANEOUS PANEL DETAILS (SHEET C-15)FOR GROUT INLET/VENT.
4. SEE MISCELLANEOUS PANEL DETAILS FOR EXPANSION JOINT/ANCHOR DETAIL.
5. THE SECTION OF DOWEL EXTENDING INTO THE EXPANSION SLEEVE SHALL BE GREASED PRIOR TO BEING INSERTED INTO THE EXPANSION SLEEVE PRIOR TO CASTING.
6. POST-TENSIONING DUCTS ARE SPACED UNIFORMLY AT MAXIMUM 36" C-C ALONG THE 'W' DIMENSION BETWEEN THE FIRST & LAST POST-TENSIONING DUCT.

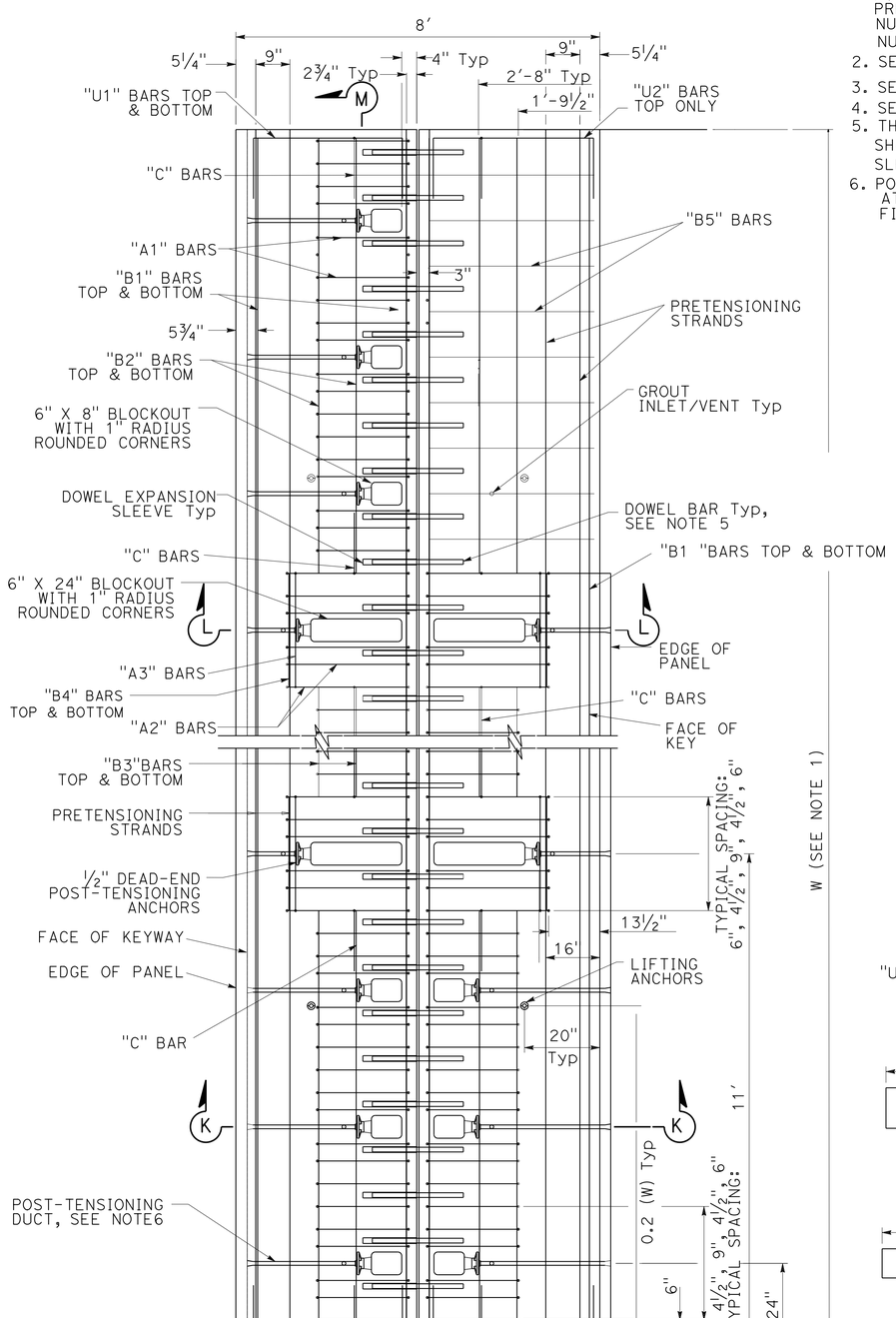

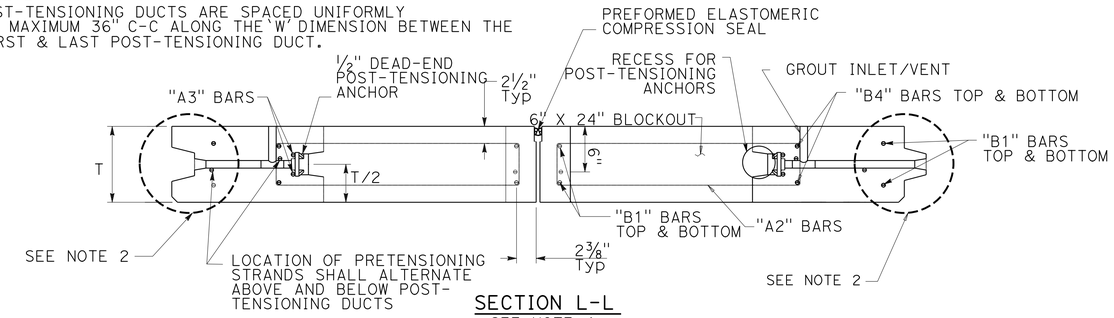

SECTION L-L
SEE NOTE 4

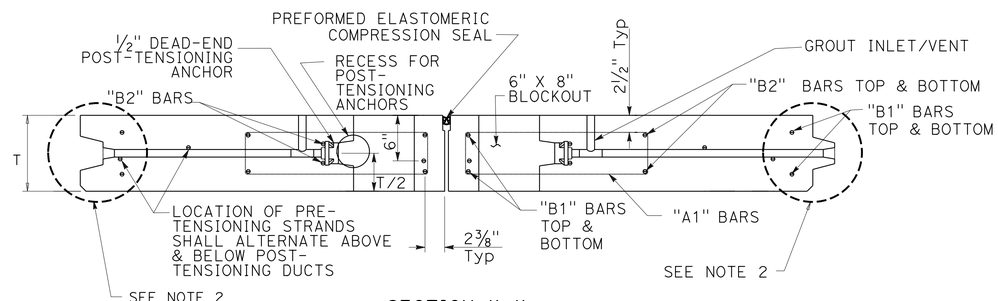

SECTION K-K
SEE NOTE 4

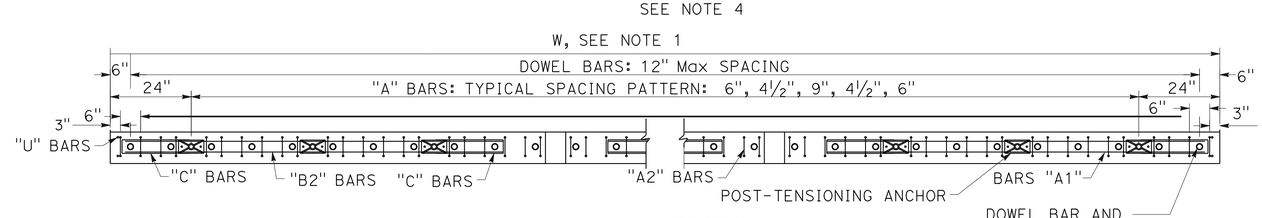

SECTION M-M

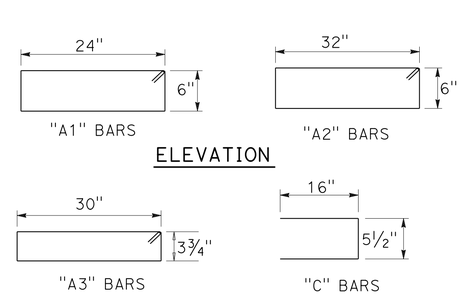

PLAN

JOINT PANEL (TYPE M)
PRECAST PRESTRESSED CONCRETE PAVEMENT

CONSTRUCTION DETAILS

NO SCALE

C-11

STATE OF CALIFORNIA - DEPARTMENT OF TRANSPORTATION
Caltrans® 56-MAINTENANCE

FUNCTIONAL SUPERVISOR: WILLIAM FARNBACH
CALCULATED-DESIGNED BY: MEHDI PARVINI
CHECKED BY: WILLIAM FARNBACH
REVISED BY: MP
DATE REVISED: 06/12/2012

LAST REVISION 07-29-13
DATE PLOTTED => 31-OCT-2013
TIME PLOTTED => 15:23

Dist	COUNTY	ROUTE	POST MILES TOTAL PROJECT	SHEET No.	TOTAL SHEETS
11	SD	5	R58.1/R72.4	77	259

07-12-13
REGISTERED CIVIL ENGINEER DATE

11-04-13
PLANS APPROVAL DATE

REGISTERED PROFESSIONAL ENGINEER
MEHDI PARVINI
No. 63186
Exp 6-30-14
CIVIL
STATE OF CALIFORNIA

THE STATE OF CALIFORNIA OR ITS OFFICERS OR AGENTS SHALL NOT BE RESPONSIBLE FOR THE ACCURACY OR COMPLETENESS OF SCANNED COPIES OF THIS PLAN SHEET.

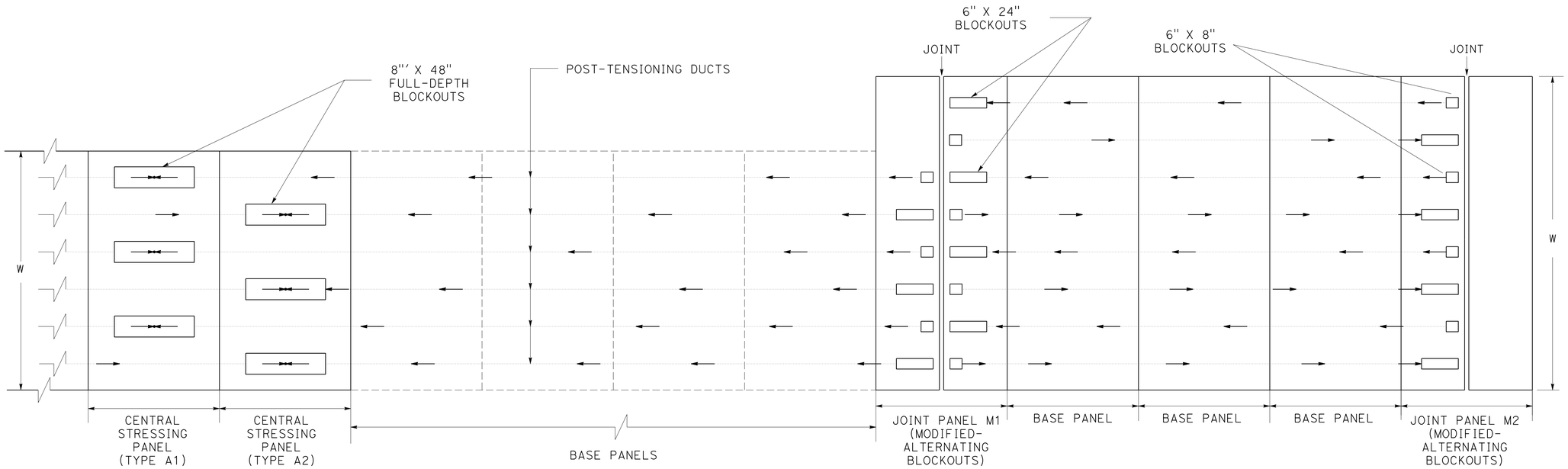

TYPICAL LAYOUT OF PANELS WITH VARIABLE WIDTHS (W) & ALTERNATING BLOCKOUTS

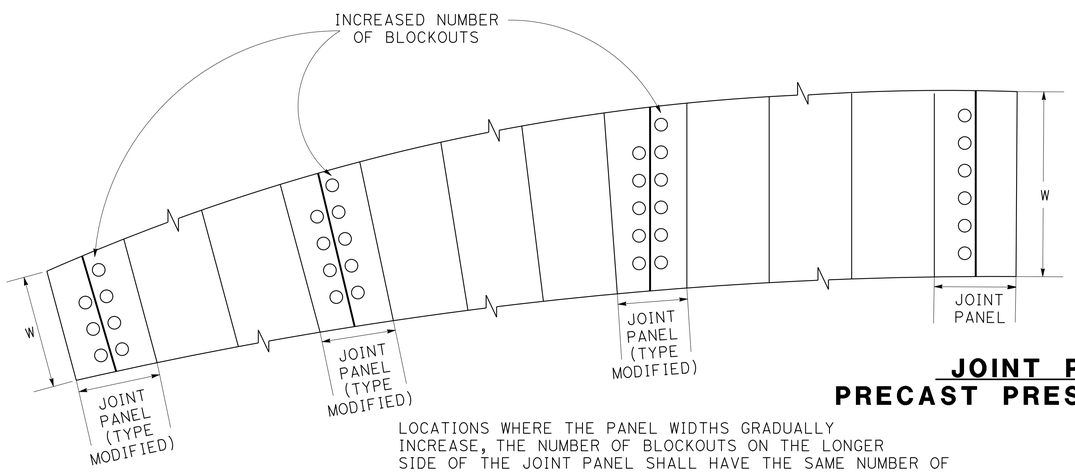

SYMBOLS:

← DIRECTION OF PULL FOR POST-TENSIONING

○ REPRESENTATION OF BLOCKOUTS (SMALL: 6"X8" OR LARGE: 6"X24")

JOINT PANELS M1 & M2 LAYOUT
PRECAST PRESTRESSED CONCRETE PAVEMENT

LOCATIONS WHERE THE PANEL WIDTHS GRADUALLY INCREASE, THE NUMBER OF BLOCKOUTS ON THE LONGER SIDE OF THE JOINT PANEL SHALL HAVE THE SAME NUMBER OF BLOCKOUTS AS THE NEXT LONGER JOINT PANEL.

NUMBER OF BLOCKOUTS

CONSTRUCTION DETAILS

NO SCALE

C-12

STATE OF CALIFORNIA - DEPARTMENT OF TRANSPORTATION
Caltrans
56-MAINTENANCE

FUNCTIONAL SUPERVISOR: WILLIAM FARNBACH
CALCULATED-DESIGNED BY: MEHDI PARVINI
CHECKED BY: WILLIAM FARNBACH
REVISED BY: MP
DATE REVISED: 06/12/2012

LAST REVISION: DATE PLOTTED => 31-OCT-2013
07-29-13 TIME PLOTTED => 15:23

Dist	COUNTY	ROUTE	POST MILES TOTAL PROJECT	SHEET No.	TOTAL SHEETS
11	SD	5	R58.1/R72.4	78	259

07-12-13
REGISTERED CIVIL ENGINEER DATE

11-04-13
PLANS APPROVAL DATE

REGISTERED PROFESSIONAL ENGINEER MEHDI PARVINI No. 63186 Exp 6-30-14 CIVIL STATE OF CALIFORNIA

THE STATE OF CALIFORNIA OR ITS OFFICERS OR AGENTS SHALL NOT BE RESPONSIBLE FOR THE ACCURACY OR COMPLETENESS OF SCANNED COPIES OF THIS PLAN SHEET.

NOTES:

1. SEE MISCELLANEOUS PANEL DETAILS (SHEET C-15)FOR KEY & KEYWAY DETAIL.
2. SEE MISCELLANEOUS PANELS DETAILS (SHEET C-15)FOR GROUT INLET/VENT.
3. SEE MISCELLANEOUS PANEL DETAILS (SHEET C-15)FOR EXPANSION JOINT/ANCHOR DETAIL.
4. THE SECTION OF DOWEL EXTENDING INTO THE EXPANSION SLEEVE SHALL BE GREASED PRIOR TO BEING INSERTED INTO THE EXPANSION SLEEVE PRIOR TO CASTING.
5. POST-TENSIONING DUCTS ARE SPACED UNIFORMLY AT MAXIMUM 36" C-C ALONG THE`W' DIMENSION BETWEEN THE FIRST & LAST POST-TENSIONING DUCT.

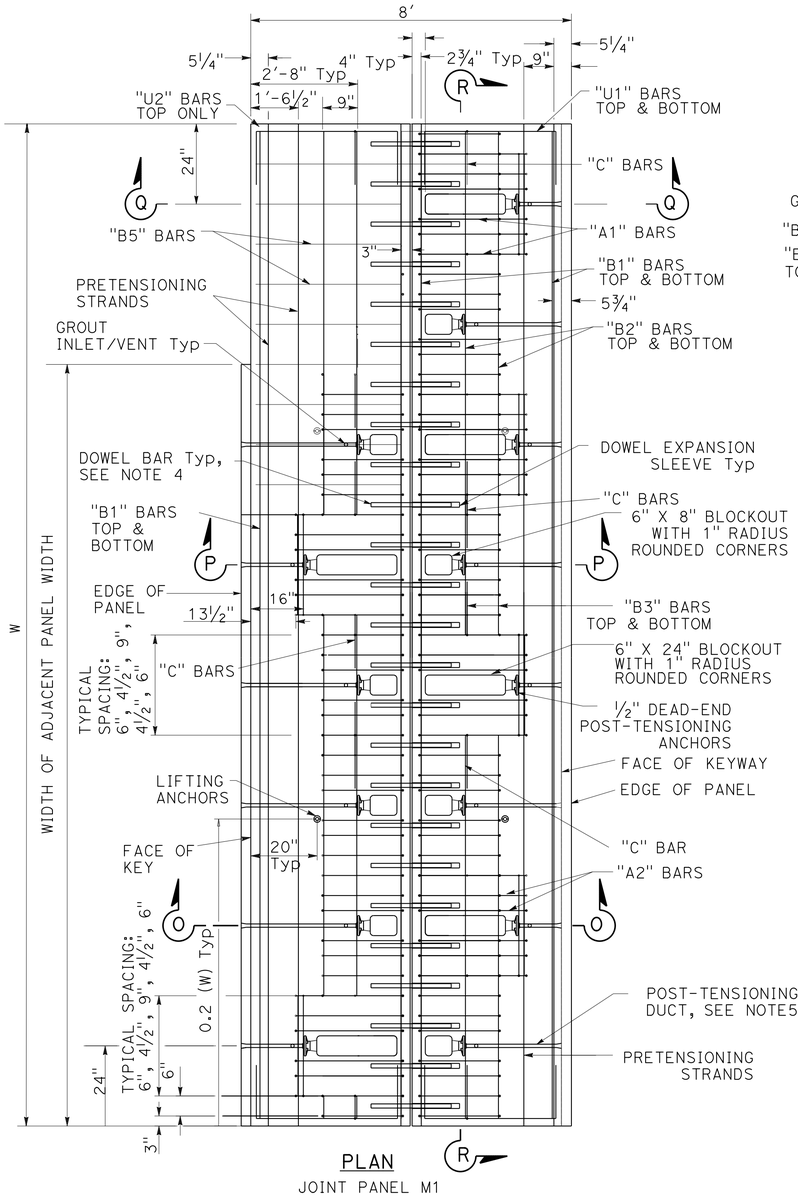

PLAN
JOINT PANEL M1

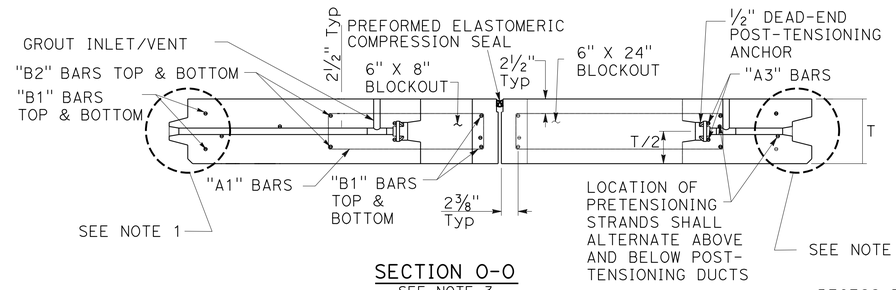

SECTION O-O
SEE NOTE 3

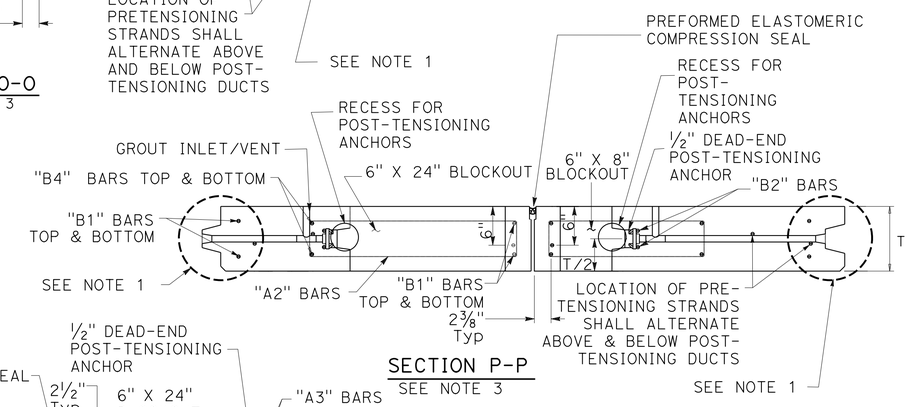

SECTION P-P
SEE NOTE 3

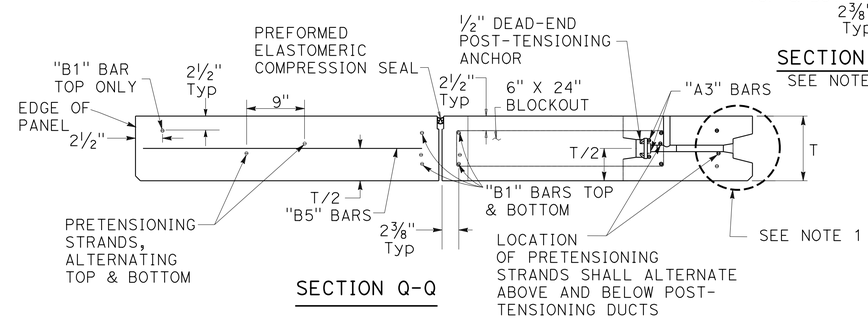

SECTION Q-Q

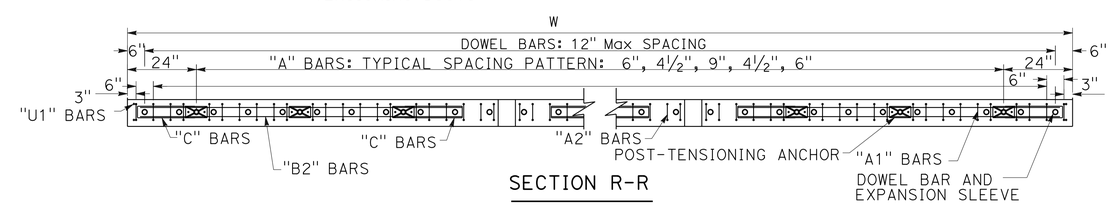

SECTION R-R

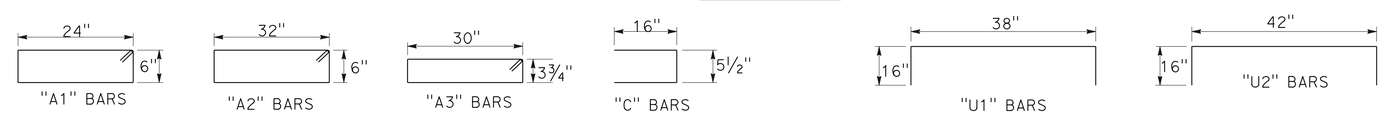

ELEVATION

PLAN

JOINT PANELS (TYPE M1)
PRECAST PRESTRESSED CONCRETE PAVEMENT

CONSTRUCTION DETAILS

NO SCALE

C-13

STATE OF CALIFORNIA - DEPARTMENT OF TRANSPORTATION
Caltrans 56-MAINTENANCE

FUNCTIONAL SUPERVISOR: WILLIAM FARNBACH
CALCULATED-DESIGNED BY: MEHDI PARVINI
CHECKED BY: WILLIAM FARNBACH
REVISED BY: MP
DATE REVISED: 06/12/2012

LAST REVISION 07-30-13
DATE PLOTTED => 31-OCT-2013
TIME PLOTTED => 15:23

Dist	COUNTY	ROUTE	POST MILES TOTAL PROJECT	SHEET No.	TOTAL SHEETS
11	SD	5	R58.1/R72.4	79	259

07-12-13
REGISTERED CIVIL ENGINEER DATE

11-04-13
PLANS APPROVAL DATE

REGISTERED PROFESSIONAL ENGINEER MEHDI PARVINI No. 63186 Exp 6-30-14 CIVIL STATE OF CALIFORNIA

THE STATE OF CALIFORNIA OR ITS OFFICERS OR AGENTS SHALL NOT BE RESPONSIBLE FOR THE ACCURACY OR COMPLETENESS OF SCANNED COPIES OF THIS PLAN SHEET.

NOTES:

1. SEE MISCELLEANEOUS PANEL DETAILS (SHEET C-15)FOR KEY & KEYWAY DETAIL.
2. SEE MISCELLANEOUS PANEL DETAILS (SHEET C-15)FOR GROUT INLET/VENT.
3. SEE MISCELLANEOUS PANEL DETAILS (SHEET C-15)FOR EXPANSION JOINT/ANCHOR DETAIL.
4. THE SECTION OF DOWEL EXTENDING INTO THE EXPANSION SLEEVE SHALL BE GREASED PRIOR TO BEING INSERTED INTO THE EXPANSION SLEEVE PRIOR TO CASTING.
5. POST-TENSIONING DUCTS ARE SPACED UNIFORMLY AT MAXIMUM 36" C-C ALONG THE 'W' DIMENSION BETWEEN THE FIRST & LAST POST-TENSIONING DUCT.

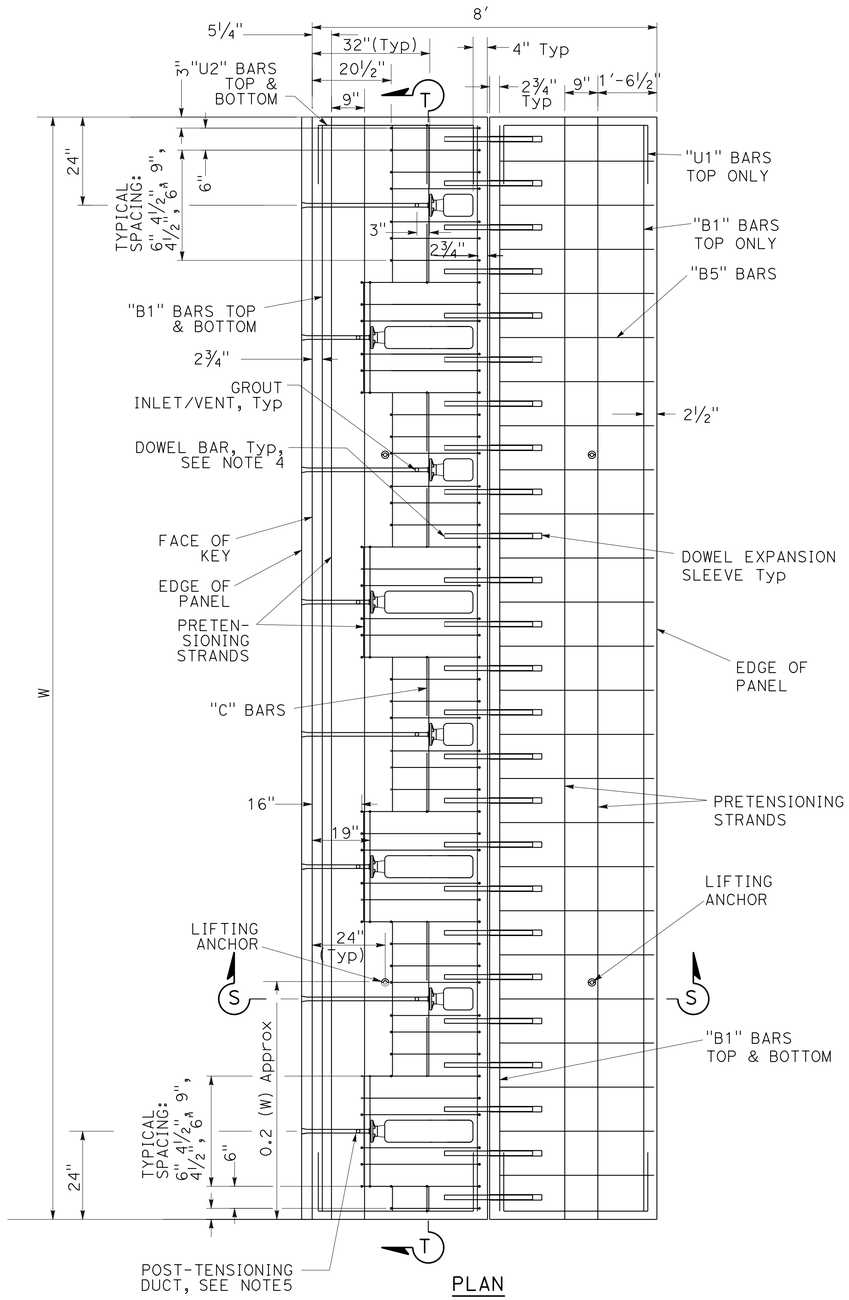

PLAN

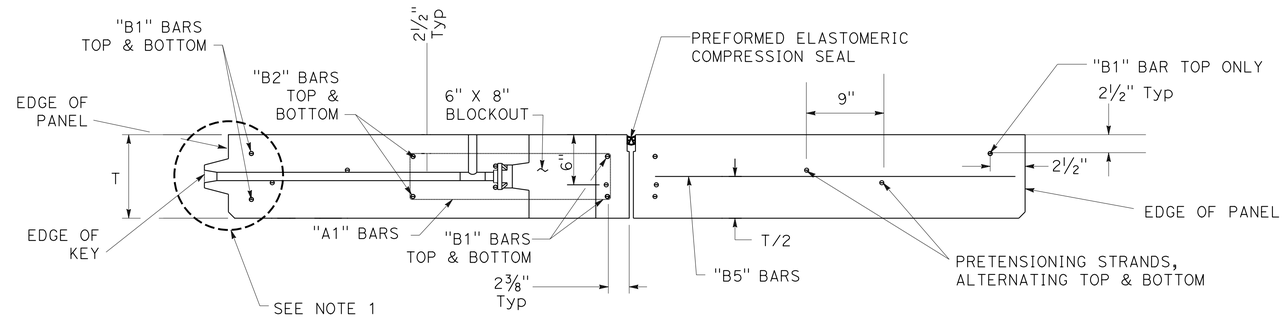

SECTION S-S

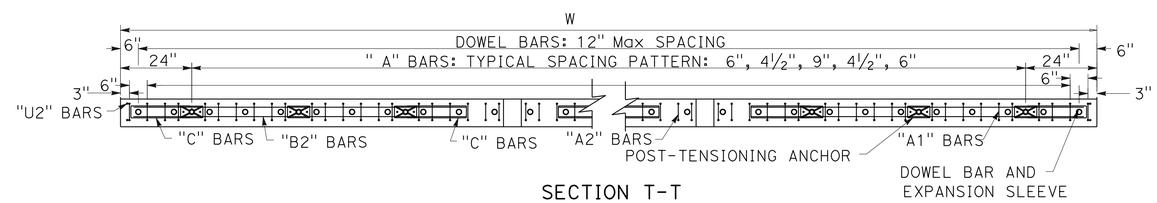

SECTION T-T

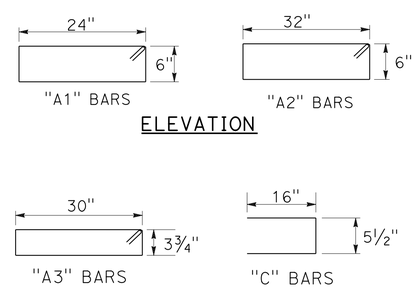

ELEVATION

ELEVATION

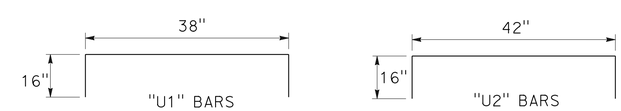

PLAN

JOINT PANEL (TYPE M2)
PRECAST PRESTRESSED CONCRETE PAVEMENT

CONSTRUCTION DETAILS

NO SCALE

C-14

STATE OF CALIFORNIA - DEPARTMENT OF TRANSPORTATION
Caltrans
56-MAINTENANCE

FUNCTIONAL SUPERVISOR: WILLIAM FARNBACH
CALCULATED-DESIGNED BY: MEHDI PARVINI
CHECKED BY: WILLIAM FARNBACH
REVISED BY: MP
DATE REVISED: 06/12/2012

LAST REVISION 07-31-13
DATE PLOTTED => 31-OCT-2013
TIME PLOTTED => 15:23

Dist	COUNTY	ROUTE	POST MILES TOTAL PROJECT	SHEET No.	TOTAL SHEETS
11	SD	5	R58.1/R72.4	80	259

REGISTERED CIVIL ENGINEER 07-12-13 DATE

11-04-13
PLANS APPROVAL DATE

REGISTERED PROFESSIONAL ENGINEER MEHDI PARVINI No. 63186 Exp 6-30-14 CIVIL STATE OF CALIFORNIA

THE STATE OF CALIFORNIA OR ITS OFFICERS OR AGENTS SHALL NOT BE RESPONSIBLE FOR THE ACCURACY OR COMPLETENESS OF SCANNED COPIES OF THIS PLAN SHEET.

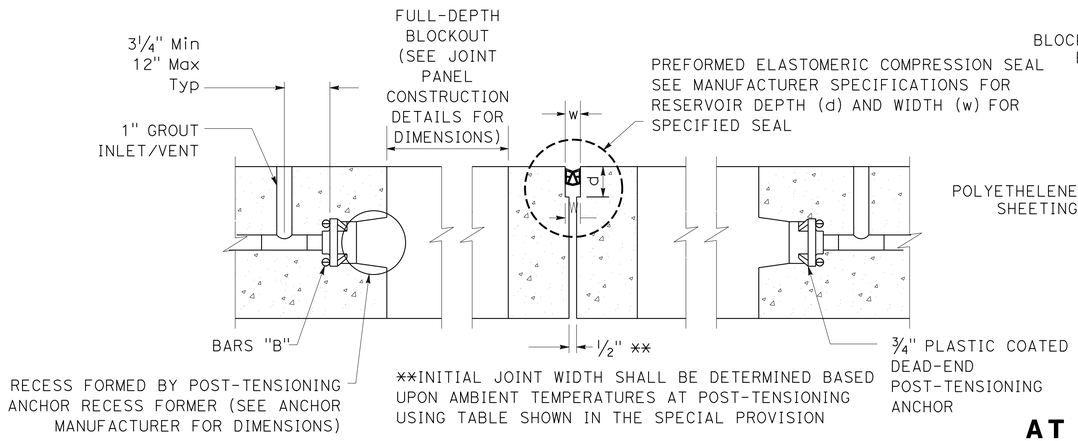

EXPANSION JOINT/ANCHOR DETAIL

FOR TYPE C2 JOINT PANELS AND ALL MODIFIED JOINT PANELS

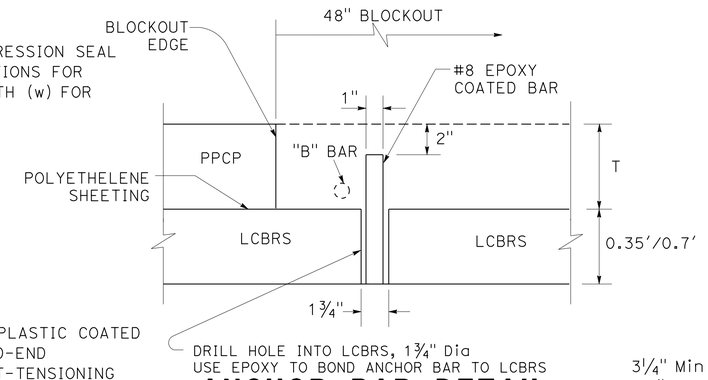

ANCHOR BAR DETAIL AT FULL-DEPTH BLOCKOUTS FOR CENTRAL STRESSING PANELS

ABBREVIATIONS:

LCBRS = LEAN CONCRETE BASE RAPID SETTING
PPCP = PRECAST PRESTRESSED CONCRETE PAVEMENT
P-T = POST TENSIONING

NOTE:

X = 1'' MINIMUM

CENTRAL STRESSING BLOCKOUT DETAIL

FOR TYPE A1 AND TYPE A2 CENTRAL STRESSING PANELS

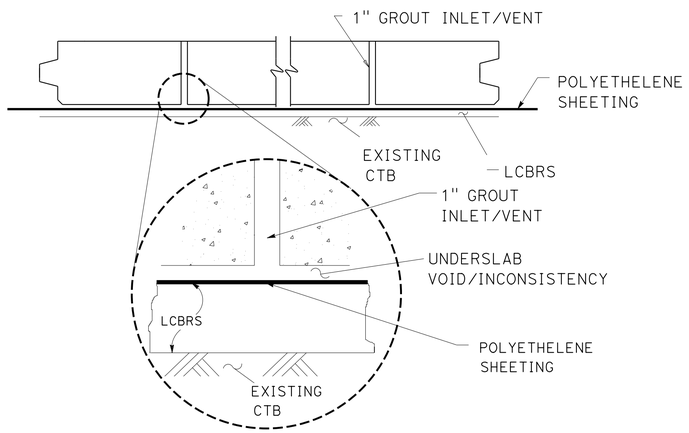

UNDERSLAB GROUT INLET/VENT AND POLYETHELENE SHEETING

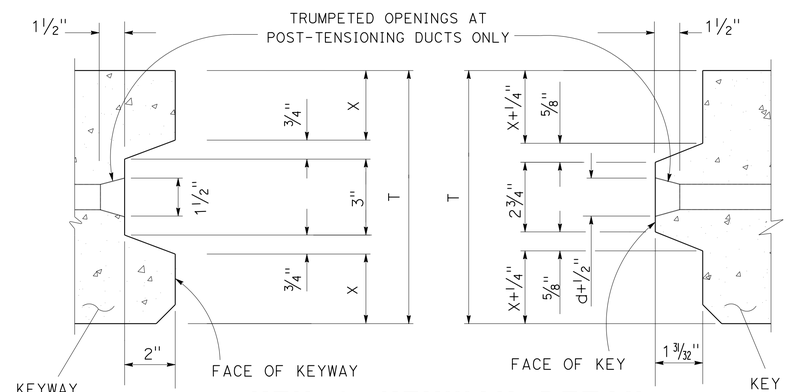

KEY & KEYWAY DETAIL

d = DIAMETER OF THE POST-TENSIONING DUCT = 1"

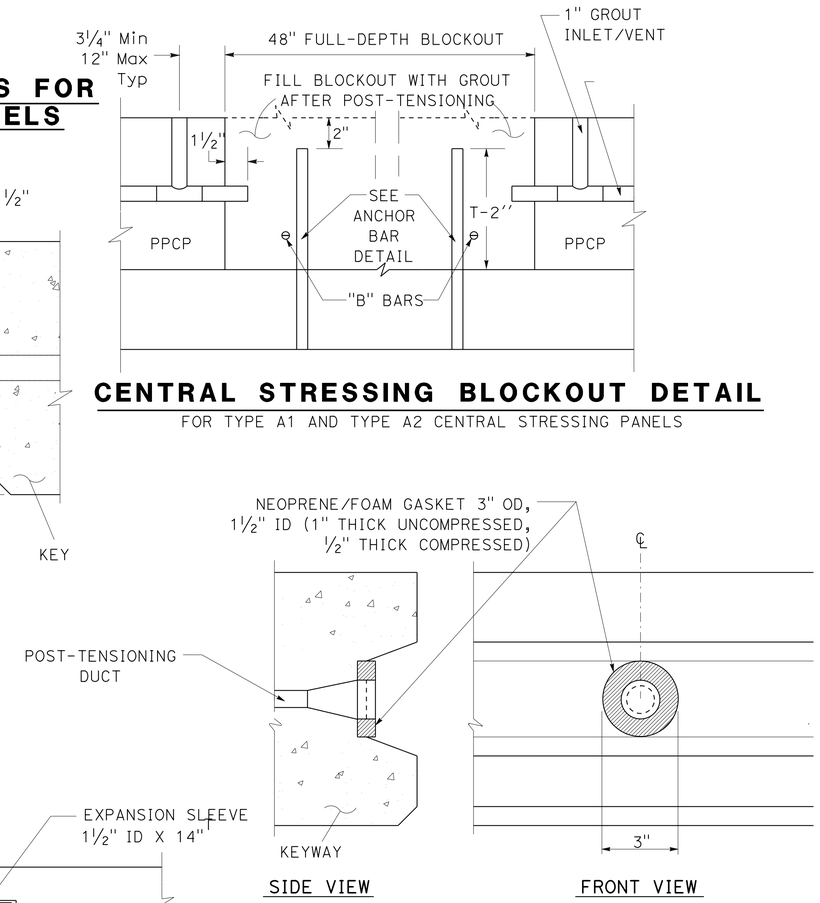

STRAND POST-TENSIONING DUCT SEAL DETAIL

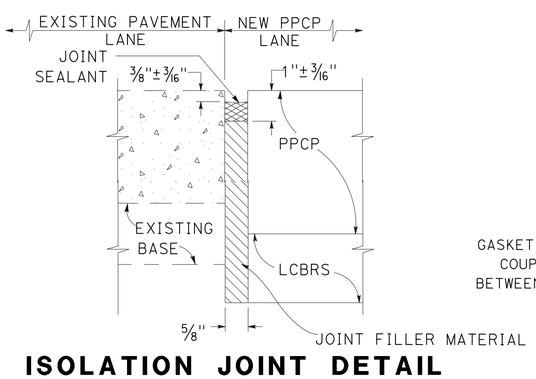

ISOLATION JOINT DETAIL

FOR LONGITUDINAL JOINTS ADJACENT TO EXISTING PAVEMENT, JPCP, RSC, AND PPCP

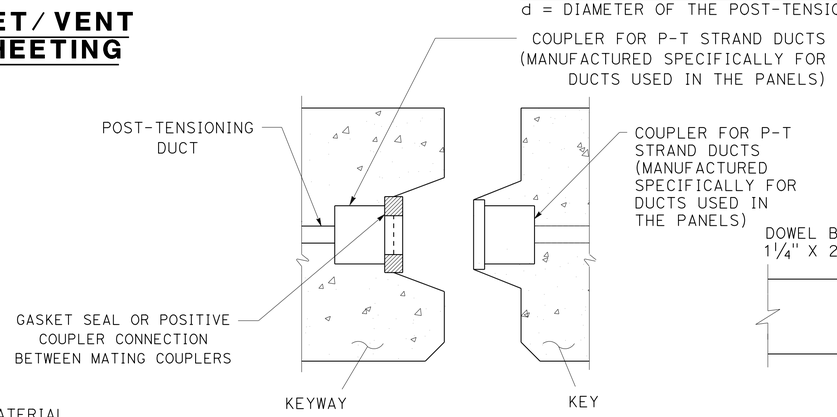

COUPLER ALTERNATIVE FOR STRAND POST-TENSIONING DUCT SEAL

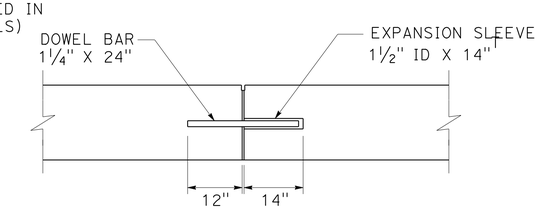

DOWEL AND EXPANSION SLEEVE FOR JOINT PANELS

MISCELLANEOUS PANEL DETAILS
PRECAST PRESTRESSED CONCRETE PAVEMENT

CONSTRUCTION DETAILS

NO SCALE

C-15

REVISED BY	MP	CALCULATED-DESIGNED BY	
DATE REVISED	06/12/2012	CHECKED BY	
MEHDI PARVINI		FUNCTIONAL SUPERVISOR	WILLIAM FARNBACH
WILLIAM FARNBACH			

STATE OF CALIFORNIA - DEPARTMENT OF TRANSPORTATION
Caltrans® 56-MAINTENANCE

LAST REVISION 07-31-13 | DATE PLOTTED => 31-OCT-2013 | TIME PLOTTED => 15:23

Dist	COUNTY	ROUTE	POST MILES TOTAL PROJECT	SHEET No.	TOTAL SHEETS
11	SD	5	R58.1/R72.4	81	259

REGISTERED CIVIL ENGINEER 07-12-13 DATE

11-04-13
PLANS APPROVAL DATE

REGISTERED PROFESSIONAL ENGINEER MEHDI PARVINI No. 63186 Exp 6-30-14 CIVIL STATE OF CALIFORNIA

THE STATE OF CALIFORNIA OR ITS OFFICERS OR AGENTS SHALL NOT BE RESPONSIBLE FOR THE ACCURACY OR COMPLETENESS OF SCANNED COPIES OF THIS PLAN SHEET.

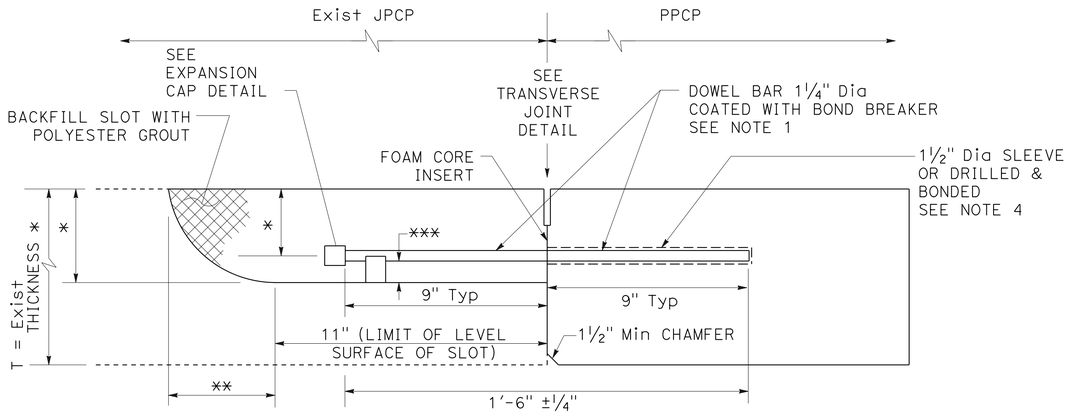

ELEVATION

T = EXISTING THICKNESS OF JPCP OR NEW PPCP
* T/2 ±¼"
** T/2 +1½"
*** Min Clr ½" BETWEEN BAR AND BOTTOM OF SLOT

ABBREVIATIONS:

LCBRS = LEAN CONCRETE BASE RAPID SETTING
P-T = POST-TENSIONING
RSC = RAPID STRENGTH CONCRETE
PPCP = PRECAST PRESTRESSED CONCRETE PAVEMENT

NOTES:

1. 1½" DIAMETER DOWEL BARS 1'-6" ±¼" LENGTH SHALL BE USED WHEN THE EXISTING PAVEMENT THICKNESS, D, IS EQUAL TO OR GREATER THAN 0.70'. FOR A PAVEMENT THICKNESS, D, LESS THAN 0.70', USE 1¼" DIAMETER DOWEL BAR 1'-6" ±¼" IN LENGTH.
2. SEAL EXISTING TRANSVERSE JOINT AT BOTTOM AND SIDES OF THE DOWEL BAR SLOT WITH CAULKING FILLER PRIOR TO PLACING DOWEL BAR AND FOAM CORE INSERT.
3. SEE STANDARD PLAN P7 FOR FOAM CORE INSERT DETAIL.
4. CAST SLEEVES EVERY 1' C-C DURING PANEL FABRICATION OR DRILL AND BOND EVERY 1' C-C. SLEEVES OR DRILLED HOLES ARE ⅛" LARGER THAN THE DOWEL DIAMETER.

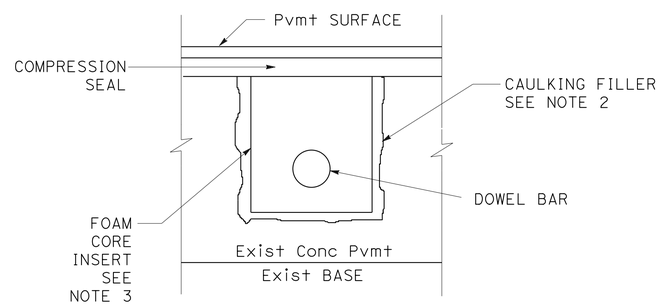

SECTION N-N

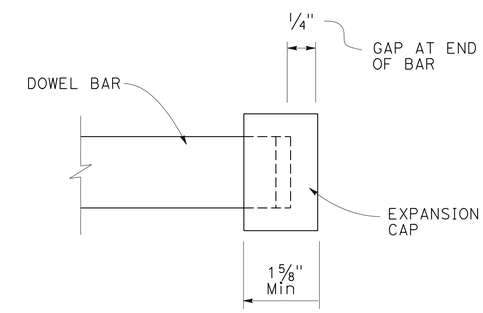

EXPANSION CAP DETAIL

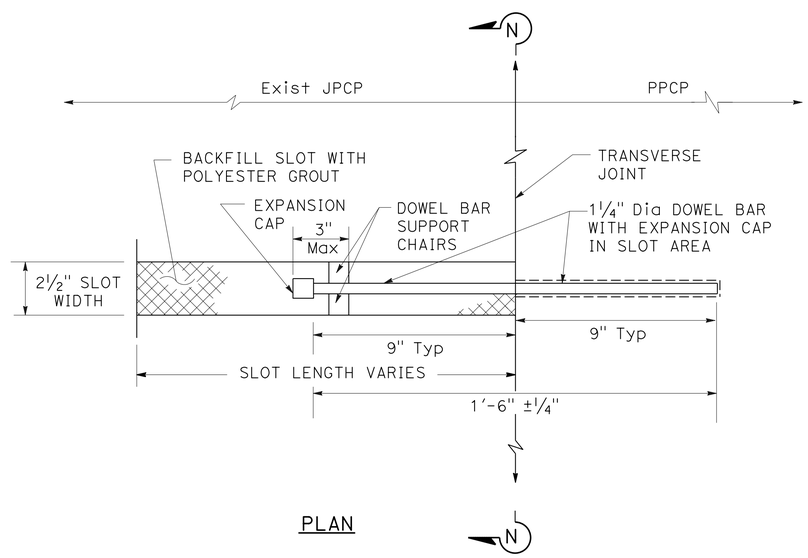

PLAN

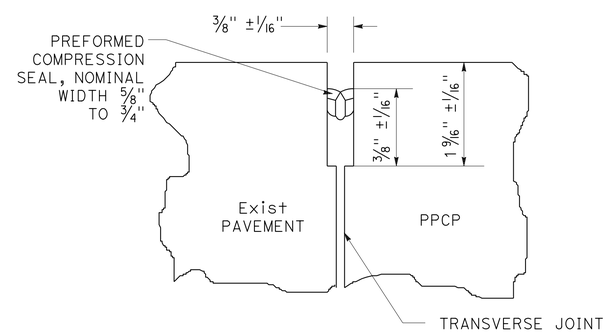

TRANSVERSE JOINT DETAIL (COMPRESSION SEAL)

DOWEL SLOT & DOWEL BAR PLACEMENT AT THE TRANSVERSE CONTACT JOINT WITH PCC, JPCP, OR RSC

DOWEL BAR PLACEMENT
PRECAST PRESTRESSED CONCRETE PAVEMENT

CONSTRUCTION DETAILS

NO SCALE

C-16

STATE OF CALIFORNIA - DEPARTMENT OF TRANSPORTATION
Caltrans 56-MAINTENANCE

FUNCTIONAL SUPERVISOR: WILLIAM FARNBACH
CALCULATED-DESIGNED BY: MEHDI PARVINI
CHECKED BY: WILLIAM FARNBACH
REVISED BY: MP
DATE REVISED: 06/12/2012

LAST REVISION 07-31-13
DATE PLOTTED => 31-OCT-2013
TIME PLOTTED => 15:23

Dist	COUNTY	ROUTE	POST MILES TOTAL PROJECT	SHEET No.	TOTAL SHEETS
11	SD	5	R58.1/R72.4	82	259

07-12-13
REGISTERED CIVIL ENGINEER DATE

11-04-13
PLANS APPROVAL DATE

REGISTERED PROFESSIONAL ENGINEER
MEHDI PARVINI
No. 63186
Exp 6-30-14
CIVIL
STATE OF CALIFORNIA

THE STATE OF CALIFORNIA OR ITS OFFICERS OR AGENTS SHALL NOT BE RESPONSIBLE FOR THE ACCURACY OR COMPLETENESS OF SCANNED COPIES OF THIS PLAN SHEET.

NOTES:

1. FOR PANELS WITH A RADIUS (WEDGE PANELS), THE DIMENSIONS AND QUANTITIES OF THE REINFORCEMENT ARE CONSIDERED THE SAME AND VARY MINIMALLY WITH RESPECT TO THE LENGTH (L) AND IN WIDTH (W).
2. FOR TABLE A, REINFORCEMENT IS PLACED OR MEASURED IN THE LONGITUDINAL DIRECTION, UNLESS INDICATED OTHERWISE.
3. FOR TABLE B, REINFORCEMENT IS PLACED OR MEASURED IN THE TRANSVERSE DIRECTION, UNLESS INDICATED OTHERWISE.
4. REINFORCEMENT DIMENSIONS SHALL BE VERIFIED BY THE MANUFACTURER BEFORE PANEL FABRICATION.
5. ALL BARS ARE #4.
6. FOR VALUES IN TABLE B, USE W=26.5′ TO MEET PROJECT SPECIFIC WIDTH REQUIREMENT.

ABBREVIATION:

P-T POST-TENSIONING

TABLE A

L	COUNT OF PRETENSIONING STRANDS (7-WIRE 1/2") (1) PLACED TRANSVERSELY	LENGTH OF EACH P-T DUCT (2)	COUNT OF BAR "U"	LENGTH OF EACH BAR "U"	COUNT OF LIFTING ANCHORS
FT	EA	FT	EA	FT-INCH	EA
7	6	7	4	9′-0"	4
8	6	8	4	10′-0"	4
9	8	9	4	11′-0"	4
10	8	10	4	12′-0"	4

(1) SEE TABLE B FOR LENGTH OF EACH PRETENSIONING STRAND.
(2) SEE TABLE B FOR COUNT OF P-T DUCTS.

TABLE B

W	COUNT OF P-T DUCTS PLACED (1) LONGITUDINALLY	COUNT OF BAR "B"	LENGTH OF EACH BAR "B"	LENGTH OF EACH PRETENSIONING STRAND (2) (7-WIRE 1/2")
FT	EA	EA	FT-INCH	FT
12	4	4	11′-7"	12
12.5	4	4	12′-1"	12.5
13	4	4	12′-7"	13
13.5	5	4	13′-1"	13.5
14	5	4	13′-7"	14
14.5	5	4	14′-1"	14.5
15	5	4	14′-7"	15
15.5	5	4	15′-1"	15.5
16	5	4	15′-7"	16
16.5	6	4	16′-1"	16.5

(1) SEE TABLE A FOR LENGTH OF EACH P-T DUCT.
(2) SEE TABLE A FOR COUNT OF PRETENSIONING STRANDS.

BASE PANEL TABLES

REINFORCEMENT DIMENSIONS AND QUANTITIES
PRECAST PRESTRESSED CONCRETE PAVEMENT

CONSTRUCTION DETAILS

NO SCALE

C-17

REVISED BY	DATE REVISED
MP	06/12/2012

CALCULATED-DESIGNED BY: MEHDI PARVINI
CHECKED BY: WILLIAM FARNBACH
FUNCTIONAL SUPERVISOR: WILLIAM FARNBACH

STATE OF CALIFORNIA - DEPARTMENT OF TRANSPORTATION
Caltrans
56-MAINTENANCE

LAST REVISION 07-31-13
DATE PLOTTED => 31-OCT-2013
TIME PLOTTED => 15:23

Dist	COUNTY	ROUTE	POST MILES TOTAL PROJECT	SHEET No.	TOTAL SHEETS
11	SD	5	R58.1/R72.4	83	259

07-12-13
REGISTERED CIVIL ENGINEER DATE

11-04-13
PLANS APPROVAL DATE

REGISTERED PROFESSIONAL ENGINEER MEHDI PARVINI No. 63186 Exp 6-30-14 CIVIL STATE OF CALIFORNIA

THE STATE OF CALIFORNIA OR ITS OFFICERS OR AGENTS SHALL NOT BE RESPONSIBLE FOR THE ACCURACY OR COMPLETENESS OF SCANNED COPIES OF THIS PLAN SHEET.

NOTES:

1. FOR PANELS WITH A RADIUS (WEDGE PANELS), THE DIMENSIONS AND QUANTITIES OF THE REINFORCEMENT ARE CONSIDERED THE SAME AND VARY MINIMALLY WITH RESPECT TO THE LENGTH (L) AND IN WIDTH (W).
2. FOR TABLE A, REINFORCEMENT IS PLACED OR MEASURED IN THE LONGITUDINAL DIRECTION, UNLESS INDICATED OTHERWISE.
3. FOR TABLE B, REINFORCEMENT IS PLACED OR MEASURED IN THE TRANSVERSE DIRECTION, UNLESS INDICATED OTHERWISE.
4. REINFORCEMENT DIMENSIONS SHALL BE VERIFIED BY THE MANUFACTURER BEFORE PANEL FABRICATION.
5. FOR VALUES IN TABLE B, USE W=26.5′ TO MEET PROJECT SPECIFIC WIDTH REQUIREMENT.

ABBREVIATION:

P-T POST-TENSIONING

TABLE B (Cont)

W	COUNT OF P-T DUCTS PLACED (1) LONGITUDINALLY	COUNT OF "B" BAR	LENGTH OF EACH "B" BAR	LENGTH OF EACH PRETENSIONING STRAND (2) (7-WIRE 1/2")
FT	EA		FT-INCH	FT
17	6	4	16′-7"	17
17.5	6	4	17′-1"	17.5
18	6	4	17′-7"	18
18.5	6	4	18′-1"	18.5
19	6	4	18′-7"	19
19.5	7	4	19′-1"	19.5
20	7	4	19′-7"	20
20.5	7	4	20′-1"	20.5
21	7	4	20′-7"	21
21.5	7	4	21′-1"	21.5
22	7	4	21′-7"	22
22.5	8	4	22′-1"	22.5
23	8	4	22′-7"	23
23.5	8	4	23′-1"	23.5
24	8	4	23′-7"	24
24.5	8	4	24′-1"	24.5
25	8	4	24′-7"	25
25.5	9	4	25′-1"	25.5
26	9	4	25′-7"	26
26.5	9	4	26′-1"	26.5

(1) SEE TABLE A FOR LENGTH OF EACH P-T DUCT.
(2) SEE TABLE A FOR COUNT OF PRETENSIONING STRANDS.

TABLE B (Cont)

W	COUNT OF P-T DUCTS PLACED (1) LONGITUDINALLY	COUNT OF "B" BAR	LENGTH OF EACH "B" BAR	LENGTH OF EACH PRETENSIONING STRAND (2) (7-WIRE 1/2")
FT	EA		FT-INCH	FT
27	9	4	26′-7"	27
27.5	9	4	27′-1"	27.5
28	9	4	27′-7"	28
28.5	10	4	28′-1"	28.5
29	10	4	28′-7"	29
29.5	10	4	29′-1"	29.5
30	10	4	29′-7"	30
30.5	10	4	30′-1"	30.5
31	10	4	30′-7"	31
31.5	11	4	31′-1"	31.5
32	11	4	31′-7"	32
32.5	11	4	32′-1"	32.5
33	11	4	32′-7"	33
33.5	11	4	33′-1"	33.5
34	11	4	33′-7"	34
34.5	12	4	34′-1"	34.5
35	12	4	34′-7"	35
35.5	12	4	35′-1"	35.5
36	12	4	35′-7"	36
36.5	12	4	36′-1"	36.5

(1) SEE TABLE A FOR LENGTH OF EACH P-T DUCT.
(2) SEE TABLE A FOR COUNT OF PRETENSIONING STRANDS.

BASE PANEL TABLES

REINFORCEMENT DIMENSIONS AND QUANTITIES PRECAST PRESTRESSED CONCRETE PAVEMENT

CONSTRUCTION DETAILS

NO SCALE

C-18

STATE OF CALIFORNIA - DEPARTMENT OF TRANSPORTATION
Caltrans 56-MAINTENANCE

FUNCTIONAL SUPERVISOR: WILLIAM FARNBACH
CALCULATED-DESIGNED BY: MEHDI PARVINI
CHECKED BY: WILLIAM FARNBACH
REVISED BY: MP
DATE REVISED: 06/12/2012

LAST REVISION 07-31-13 | DATE PLOTTED => 31-OCT-2013 | TIME PLOTTED => 15:23

Dist	COUNTY	ROUTE	POST MILES TOTAL PROJECT	SHEET No.	TOTAL SHEETS
11	SD	5	R58.1/R72.4	84	259

07-12-13
REGISTERED CIVIL ENGINEER DATE

11-04-13
PLANS APPROVAL DATE

REGISTERED PROFESSIONAL ENGINEER MEHDI PARVINI No. 63186 Exp 6-30-14 CIVIL STATE OF CALIFORNIA

THE STATE OF CALIFORNIA OR ITS OFFICERS OR AGENTS SHALL NOT BE RESPONSIBLE FOR THE ACCURACY OR COMPLETENESS OF SCANNED COPIES OF THIS PLAN SHEET.

NOTES:

1. FOR PANELS WITH A RADIUS (WEDGE PANELS), THE DIMENSIONS AND QUANTITIES OF THE REINFORCEMENT ARE CONSIDERED THE SAME AND VARY MINIMALLY WITH RESPECT TO THE LENGTH (L) AND IN WIDTH (W).
2. FOR TABLE A, REINFORCEMENT IS PLACED OR MEASURED IN THE LONGITUDINAL DIRECTION, UNLESS INDICATED OTHERWISE.
3. FOR TABLE B, REINFORCEMENT IS PLACED OR MEASURED IN THE TRANSVERSE DIRECTION, UNLESS INDICATED OTHERWISE.
4. REINFORCEMENT DIMENSIONS SHALL BE VERIFIED BY THE MANUFACTURER BEFORE PANEL FABRICATION.
5. FOR VALUES IN TABLE B, USE W=26.5' TO MEET PROJECT SPECIFIC WIDTH REQUIREMENT.

ABBREVIATION:

P-T POST-TENSIONING

TABLE B (Cont)

W	COUNT OF P-T DUCTS PLACED (1) LONGITUDINALLY	COUNT OF "B" BAR	LENGTH OF EACH "B" BAR	LENGTH OF EACH PRETENSIONING STRAND (2) (7-WIRE 1/2")
FT	EA		FT-INCH	FT
37	12	4	36'-7"	37
37.5	13	4	37'-1"	37.5
38	13	4	37'-7"	38
38.5	13	4	38'-1"	38.5
39	13	4	38'-7"	39
39.5	13	4	39'-1"	39.5
40	13	4	39'-7"	40
40.5	14	4	40'-1"	40.5
41	14	4	40'-7"	41
41.5	14	4	41'-1"	41.5
42	14	4	41'-7"	42
42.5	14	4	42'-1"	42.5
43	14	4	42'-7"	43
43.5	15	4	43'-1"	43.5
44	15	4	43'-7"	44
44.5	15	4	44'-1"	44.5
45	15	4	44'-7"	45
45.5	15	4	45'-1"	45.5
46	15	4	45'-7"	46
46.5	16	4	46'-1"	46.5

(1) SEE TABLE A FOR LENGTH OF EACH P-T DUCT.
(2) SEE TABLE A FOR COUNT OF PRETENSIONING STRANDS.

TABLE B (Cont)

W	COUNT OF P-T DUCTS PLACED (1) LONGITUDINALLY	COUNT OF "B" BAR	LENGTH OF EACH "B" BAR	LENGTH OF EACH PRETENSIONING STRAND (2) (7-WIRE 1/2")
FT	EA		FT-INCH	FT
47	16	4	46'-7"	47
47.5	16	4	47'-1"	47.5
48	16	4	47'-7"	48
48.5	16	4	48'-1"	48.5
49	16	4	48'-7"	49
49.5	17	4	49'-1"	49.5
50	17	4	49'-7"	50

(1) SEE TABLE A FOR LENGTH OF EACH P-T DUCT.
(2) SEE TABLE A FOR COUNT OF PRETENSIONING STRANDS.

BASE PANEL TABLES

REINFORCEMENT DIMENSIONS AND QUANTITIES PRECAST PRESTRESSED CONCRETE PAVEMENT

CONSTRUCTION DETAILS

NO SCALE

C-19

REVISED BY MP DATE REVISED 06/12/2012
MEHDI PARVINI WILLIAM FARNBACH
CALCULATED-DESIGNED BY CHECKED BY
FUNCTIONAL SUPERVISOR WILLIAM FARNBACH
STATE OF CALIFORNIA - DEPARTMENT OF TRANSPORTATION
Caltrans 56-MAINTENANCE

LAST REVISION 07-31-13 DATE PLOTTED => 31-OCT-2013 TIME PLOTTED => 15:23

Dist	COUNTY	ROUTE	POST MILES TOTAL PROJECT	SHEET No.	TOTAL SHEETS
11	SD	5	R58.1/R72.4	85	259

REGISTERED CIVIL ENGINEER 07-12-13 DATE

11-04-13
PLANS APPROVAL DATE

REGISTERED PROFESSIONAL ENGINEER ABDUL MALIKYAR No. C66169 Exp. 06-30-14 CIVIL STATE OF CALIFORNIA

THE STATE OF CALIFORNIA OR ITS OFFICERS OR AGENTS SHALL NOT BE RESPONSIBLE FOR THE ACCURACY OR COMPLETENESS OF SCANNED COPIES OF THIS PLAN SHEET.

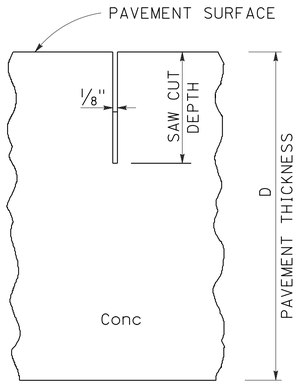

CONTRACTION JOINT DETAIL

NO SCALE

NOTE:
EXCEPT FOR SEALING OF TRANSVERSE JOINTS AS SHOWN IN THE SUMMARY OF QUANTITIES AND WITHIN LIMITS OF PRECAST PRESTRESSED CONCRETE PAVEMENT, SEALING OF TRANSVERSE JOINTS NOT REQUIRED.

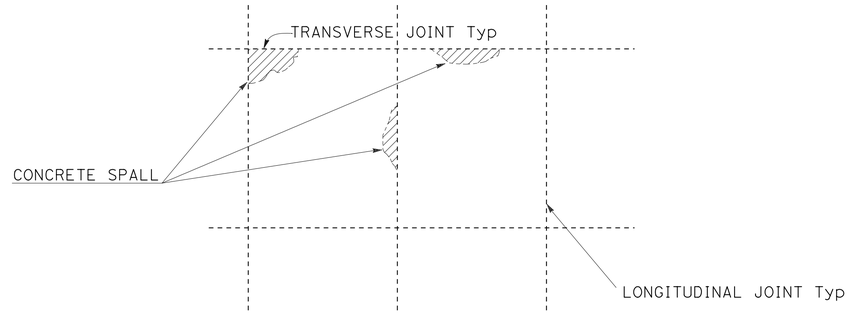

PLAN

LEGEND

REPAIR SPALLED JOINTS

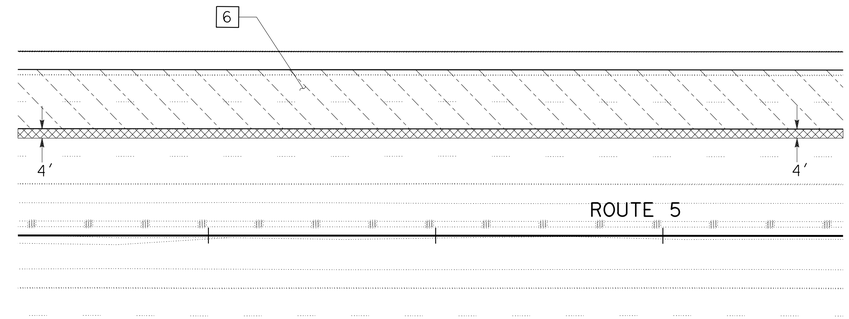

GRIND EXISTING PAVEMENT - 4' WIDE, UNLESS OTHERWISE SHOWN.

JPCP (RSC) LANE REPLACEMENT

6 - SEE TYPICAL CROSS SECTIONS

GRIND EXISTING PAVEMENT

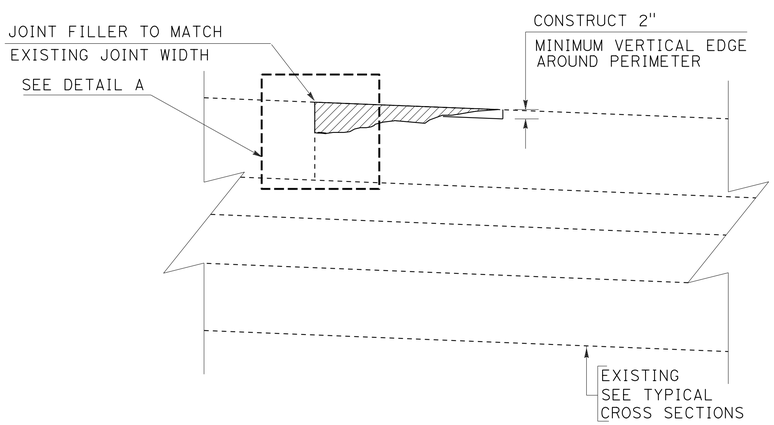

ELEVATION

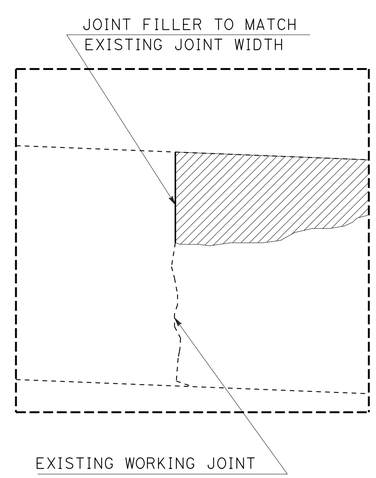

DETAIL A

REPAIR SPALLED JOINTS

(TYPICAL)

NOTES:

1. LOCATIONS AND QUANTITIES TO BE DETERMINED BY THE ENGINEER.

NOTES:

1. BASED ON 1" SETTLEMENT DEPTH

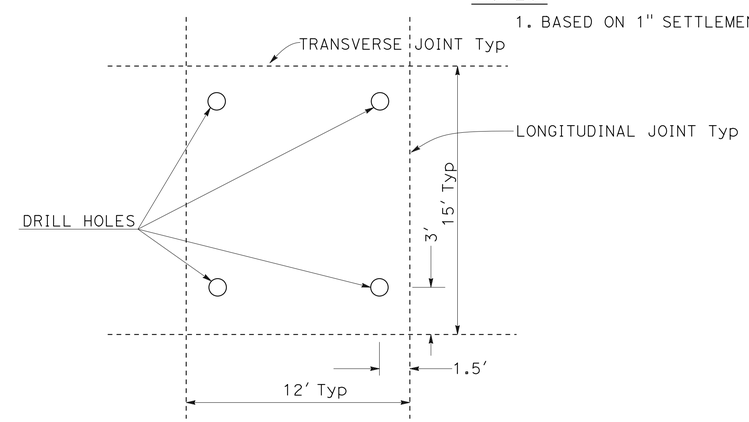

PAVEMENT JACKING

CONSTRUCTION DETAILS

NO SCALE

C-20

STATE OF CALIFORNIA - DEPARTMENT OF TRANSPORTATION
Caltrans DESIGN
FUNCTIONAL SUPERVISOR: EDWARD HAJJ
CALCULATED-DESIGNED BY: HECTOR GRACIA
CHECKED BY: ABDUL MALIKYAR
REVISED BY
DATE REVISED

LAST REVISION 07-31-13
DATE PLOTTED => 31-OCT-2013
TIME PLOTTED => 15:23

Dist	COUNTY	ROUTE	POST MILES TOTAL PROJECT	SHEET No.	TOTAL SHEETS
11	SD	5	R58.1/R72.4	86	259

07-12-13
REGISTERED CIVIL ENGINEER DATE

11-04-13
PLANS APPROVAL DATE

REGISTERED PROFESSIONAL ENGINEER
ABDUL MALIKYAR
No. C66169
Exp. 06-30-14
CIVIL
STATE OF CALIFORNIA

THE STATE OF CALIFORNIA OR ITS OFFICERS OR AGENTS SHALL NOT BE RESPONSIBLE FOR THE ACCURACY OR COMPLETENESS OF SCANNED COPIES OF THIS PLAN SHEET.

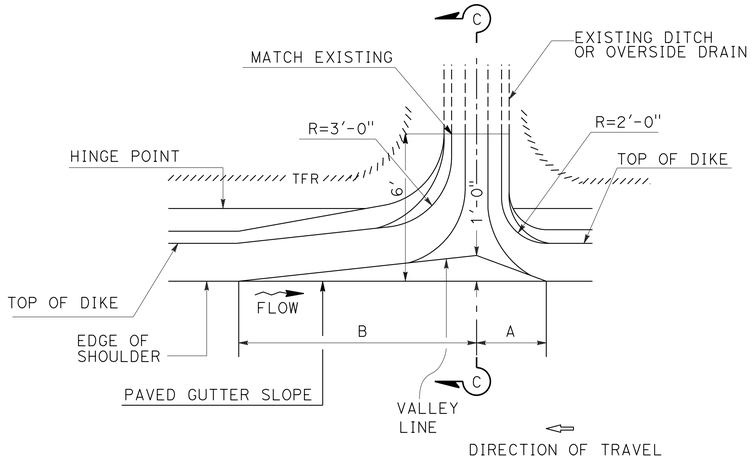

CASE 1

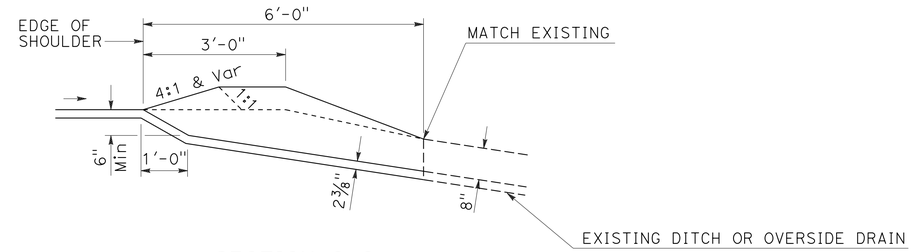

SECTION C-C

NOTES:

1. FOR ADDITIONAL DETAILS SEE Std Pln D87D
2. FOR LENGTHS OF A AND B, SEE SUMMARY OF QUANTITIES.

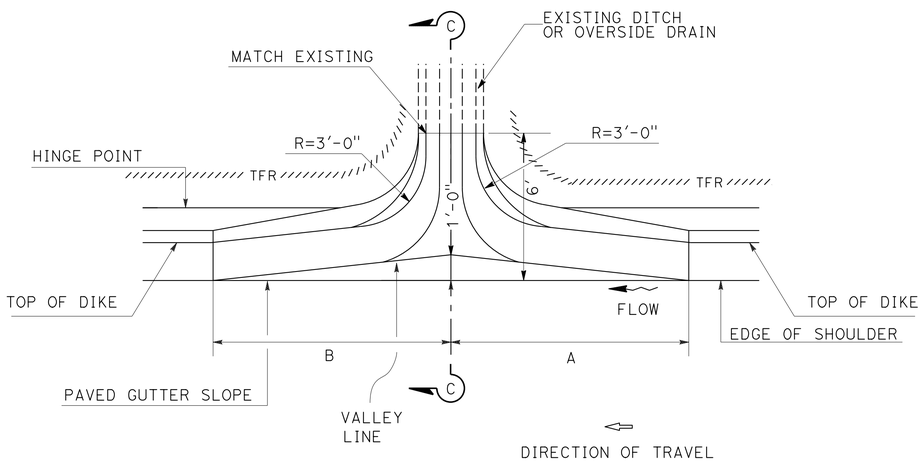

NOTE: FOR ADDITIONAL DETAILS SEE Std Pln D87D

CASE 2

NOTE: FOR TFR QUANTITIES SEE SUMMARY OF QUANTITES Q-26

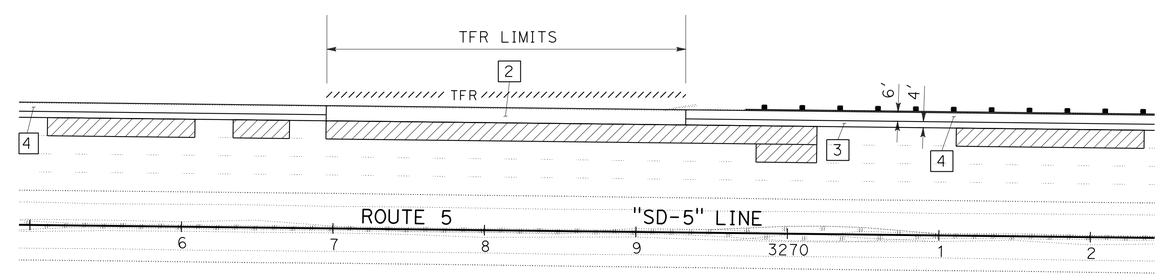

SHOULDER REPLACEMENT LOCATIONS WITH TEMPORARY FIBER ROLLS

MODIFIED HMA OVERSIDE DRAINS WITH TEMPORARY FIBER ROLLS

CONSTRUCTION DETAILS

NO SCALE

C-21

STATE OF CALIFORNIA - DEPARTMENT OF TRANSPORTATION
Caltrans
DESIGN

FUNCTIONAL SUPERVISOR: EDWARD HAJJ
CALCULATED-DESIGNED BY: HECTOR GRACIA
CHECKED BY: ABDUL MALIKYAR
REVISED BY
DATE REVISED

LAST REVISION 07-31-13
DATE PLOTTED => 31-OCT-2013
TIME PLOTTED => 15:23

Dist	COUNTY	ROUTE	POST MILES TOTAL PROJECT	SHEET No.	TOTAL SHEETS
11	SD	5	R58.1/R72.4	87	259

07-12-13
REGISTERED CIVIL ENGINEER DATE

11-04-13
PLANS APPROVAL DATE

REGISTERED PROFESSIONAL ENGINEER
ABDUL MALIKYAR
No. C66169
Exp. 06-30-14
CIVIL
STATE OF CALIFORNIA

THE STATE OF CALIFORNIA OR ITS OFFICERS OR AGENTS SHALL NOT BE RESPONSIBLE FOR THE ACCURACY OR COMPLETENESS OF SCANNED COPIES OF THIS PLAN SHEET.

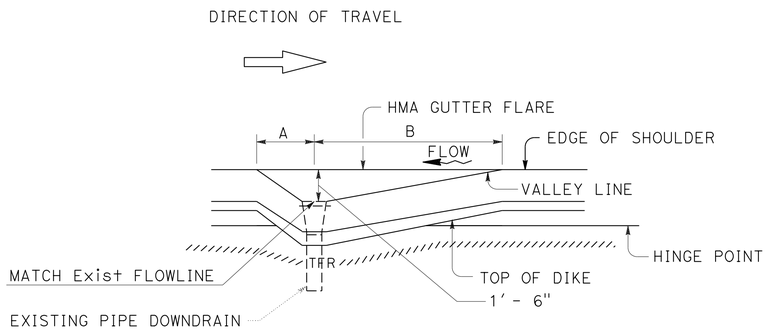

NOTE: FOR ADDITIONAL DETAILS SEE Std Pln D87A

CASE 3

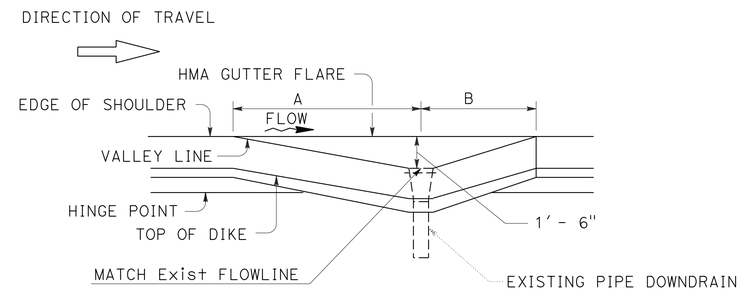

NOTE: FOR ADDITIONAL DETAILS SEE Std Pln D87A

CASE 4

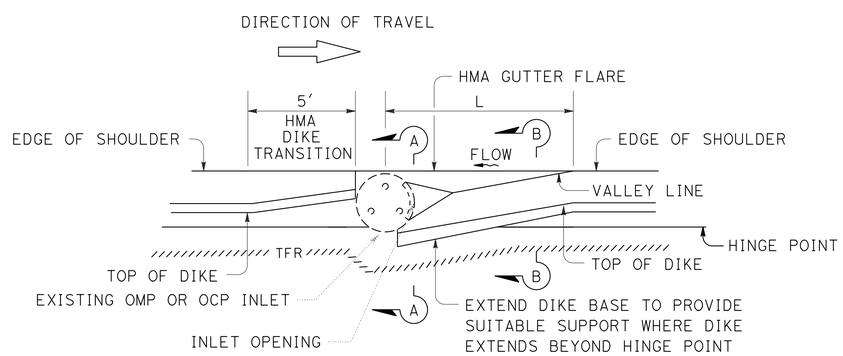

CASE 5

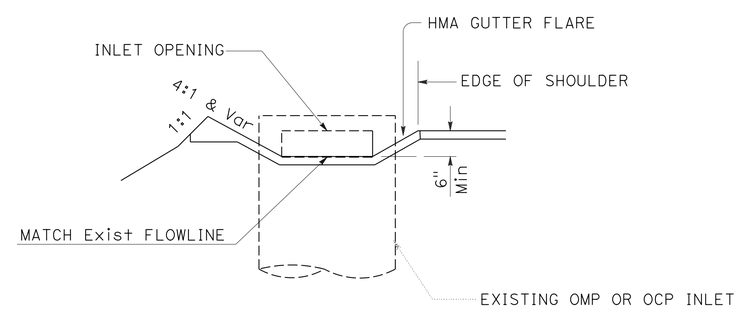

SECTION A-A

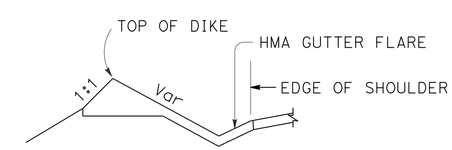

SECTION B-B

HMA GUTTER FLARE WITH TEMPORARY FIBER ROLLS

CONSTRUCTION DETAILS

NO SCALE

C-22

REVISED BY | DATE REVISED
HECTOR GRACIA | ABDUL MALIKYAR
CALCULATED-DESIGNED BY | CHECKED BY
FUNCTIONAL SUPERVISOR | EDWARD HAJJ
STATE OF CALIFORNIA - DEPARTMENT OF TRANSPORTATION
Caltrans®
DESIGN

LAST REVISION 07-31-13 | DATE PLOTTED => 31-OCT-2013 | TIME PLOTTED => 15:23

Dist	COUNTY	ROUTE	POST MILES TOTAL PROJECT	SHEET No.	TOTAL SHEETS
11	SD	5	R58.1/R72.4	88	259

REGISTERED CIVIL ENGINEER 07-12-13 DATE

11-04-13
PLANS APPROVAL DATE

REGISTERED PROFESSIONAL ENGINEER ABDUL MALIKYAR No. C66169 Exp. 06-30-14 CIVIL STATE OF CALIFORNIA

THE STATE OF CALIFORNIA OR ITS OFFICERS OR AGENTS SHALL NOT BE RESPONSIBLE FOR THE ACCURACY OR COMPLETENESS OF SCANNED COPIES OF THIS PLAN SHEET.

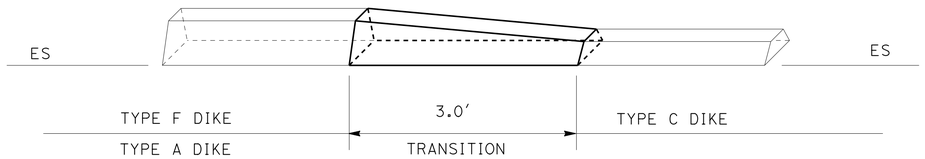

HMA DIKE TRANSITION

TYPE A OR F TO TYPE C

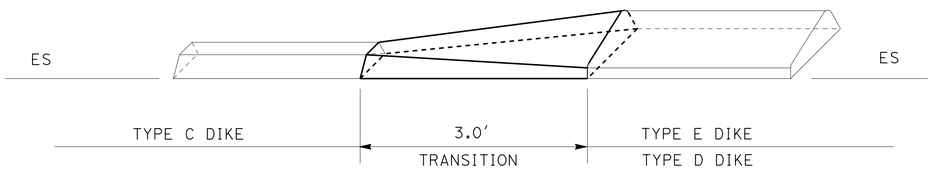

HMA DIKE TRANSITION

TYPE C TO TYPE E OR D

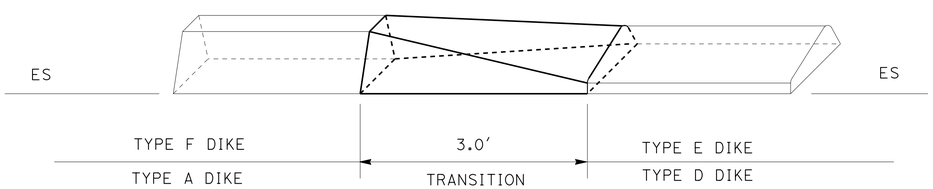

HMA DIKE TRANSITION

TYPE A OR F TO TYPE E OR D

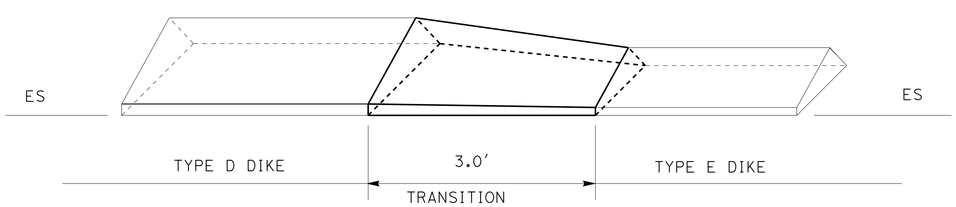

HMA DIKE TRANSITION

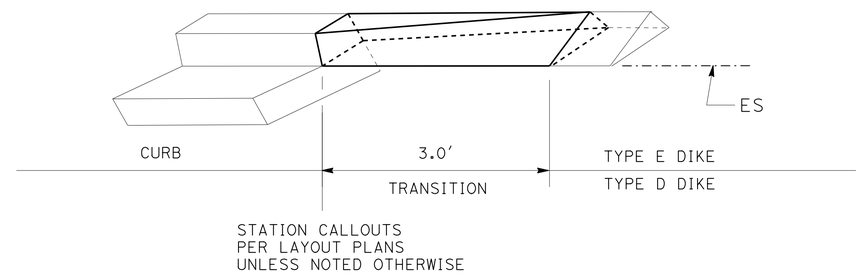

HMA DIKE TRANSITION

TYPE E OR D TO CURB

CONSTRUCTION DETAILS

NO SCALE

C-23

STATE OF CALIFORNIA - DEPARTMENT OF TRANSPORTATION
Caltrans® DESIGN

FUNCTIONAL SUPERVISOR: EDWARD HAJJ
CALCULATED-DESIGNED BY: HECTOR GRACIA
CHECKED BY: ABDUL MALIKYAR
REVISED BY
DATE REVISED

LAST REVISION 07-31-13
DATE PLOTTED => 31-OCT-2013
TIME PLOTTED => 15:23

Dist	COUNTY	ROUTE	POST MILES TOTAL PROJECT	SHEET No.	TOTAL SHEETS
11	SD	5	R58.1/R72.4	89	259

07-12-13
REGISTERED CIVIL ENGINEER DATE

11-04-13
PLANS APPROVAL DATE

REGISTERED PROFESSIONAL ENGINEER ABDUL MALIKYAR No. C66169 Exp. 06-30-14 CIVIL STATE OF CALIFORNIA

THE STATE OF CALIFORNIA OR ITS OFFICERS OR AGENTS SHALL NOT BE RESPONSIBLE FOR THE ACCURACY OR COMPLETENESS OF SCANNED COPIES OF THIS PLAN SHEET.

LEGEND:

PERMEABLE MATERIAL

DIRECTION OF FLOW

SSDL - SYNTHETIC SUBSURFACE DRAINAGE LAYER UNDER PCC

S/L SAWCUT LINE

* 1.10′ AT PRECAST PRESTRESSED CONCRETE LOCATIONS

** 0.90′ AT PRECAST PRESTRESSED CONCRETE LOCATIONS

\+ 12.5′ AT PRECAST PRESTRESSED CONCRETE LOCATIONS

NOTE:

CORE HOLE ON SIDE OF EXISTING INLET OR EXISTING DRAINAGE PIPE TO CONNECT PIPE

SEE TYPICAL CROSS SECTION PLANS FOR ADDITIONAL STRUCTURAL SECTION INFORMATION.

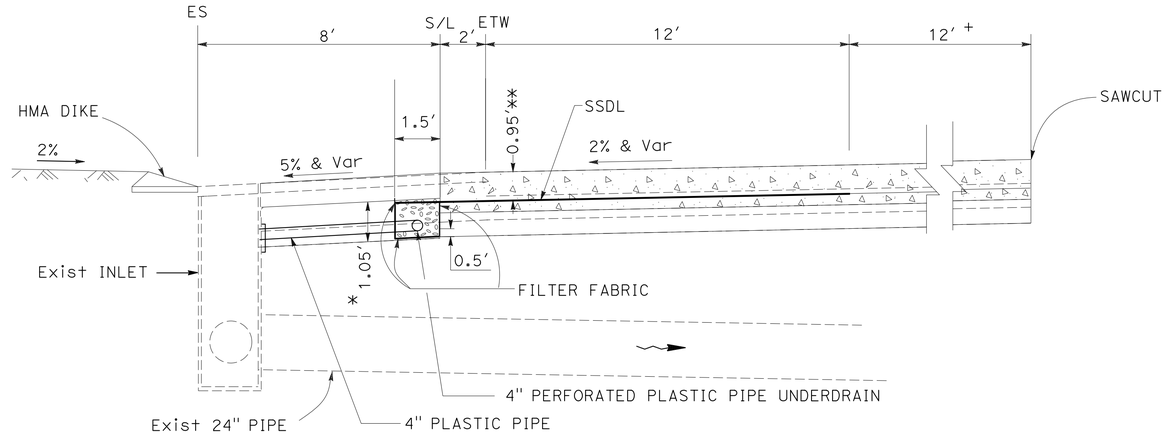

Typ FOR PRECAST PRESTRESSED CONCRETE & JPCP(RSC) PAVEMENT

ELEVATION

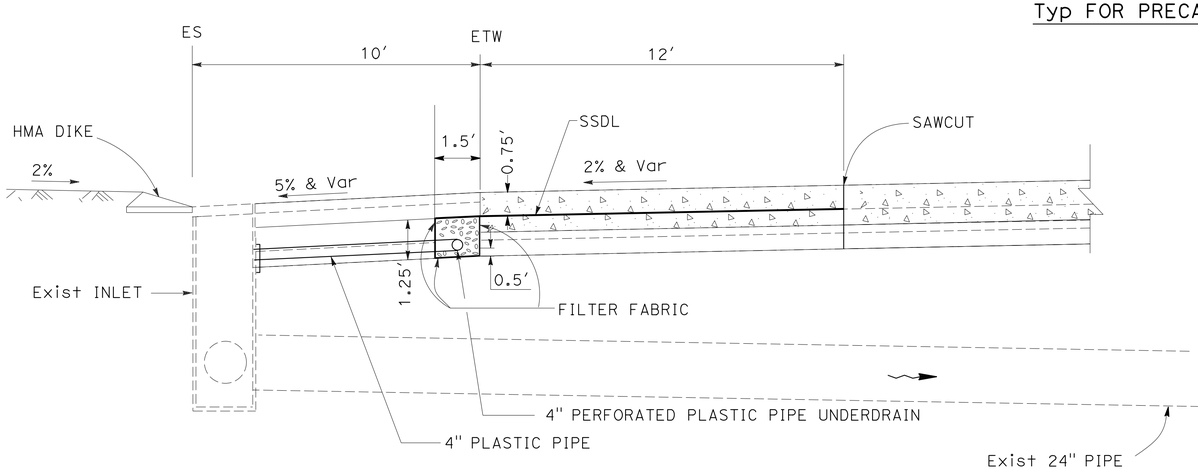

Typ FOR INDIVIDUAL SLAB REPLACEMENT(RAPID STRENGTH CONCRETE)

ELEVATION

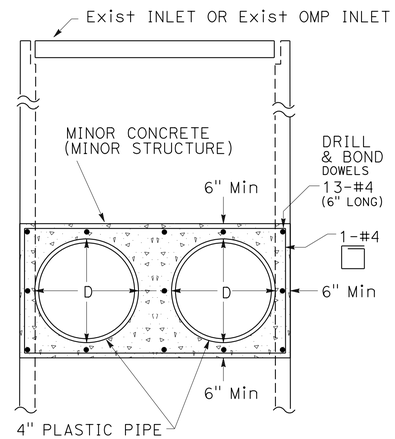

SECTION B-B

DOUBLE CONNECTION

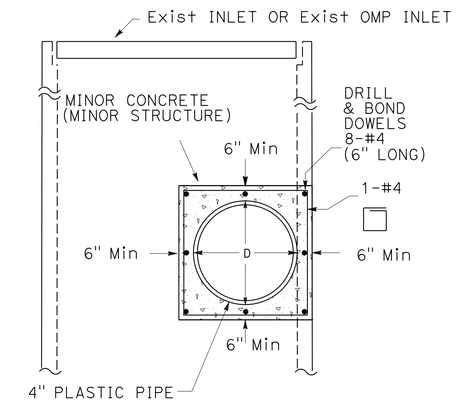

SECTION B-B

SINGLE CONNECTION

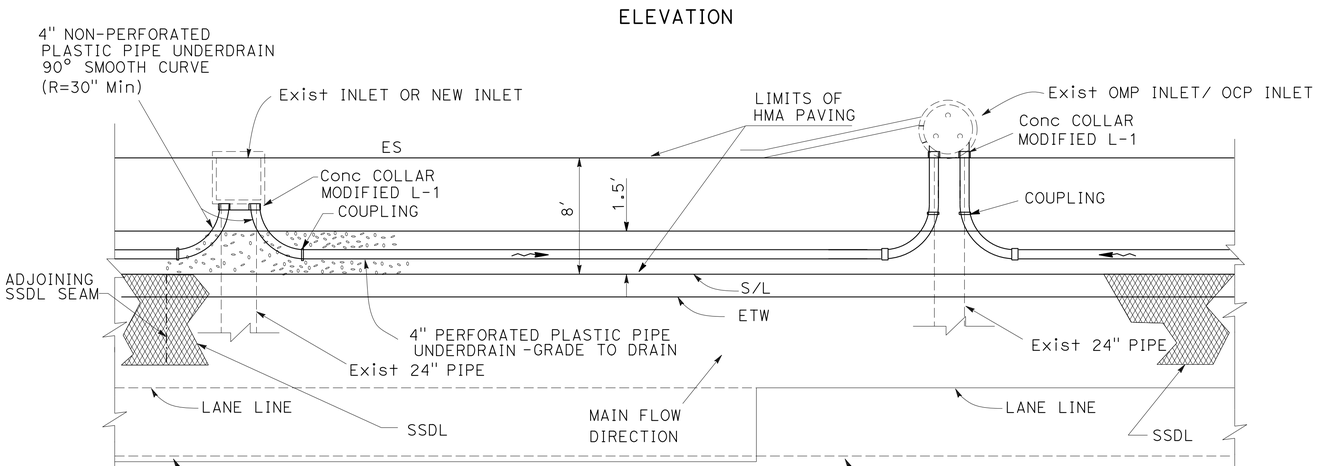

PLAN VIEW

UNDERDRAINS AT INLETS AND OMP/OCP INLETS

TYPICAL DETAIL

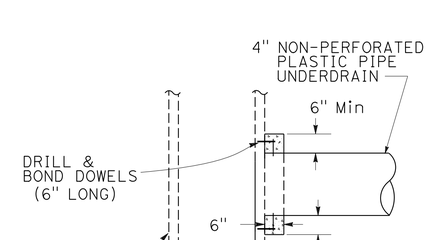

SECTION C-C

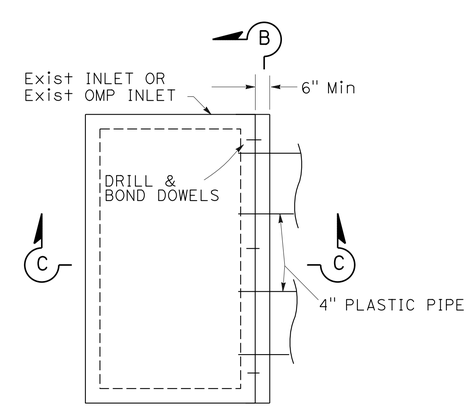

PLAN VIEW

CONCRETE COLLAR MODIFIED L-1

CONSTRUCTION DETAILS

NO SCALE

C-24

STATE OF CALIFORNIA - DEPARTMENT OF TRANSPORTATION

Caltrans

DESIGN

FUNCTIONAL SUPERVISOR: EDWARD HAJJ

CALCULATED-DESIGNED BY: HECTOR GRACIA

CHECKED BY: ABDUL MALIKYAR

REVISED BY

DATE REVISED

LAST REVISION 07-31-13

DATE PLOTTED => 31-OCT-2013

TIME PLOTTED => 15:23

Dist	COUNTY	ROUTE	POST MILES TOTAL PROJECT	SHEET No.	TOTAL SHEETS
11	SD	5	R58.1/R72.4	90	259

07-12-13
REGISTERED CIVIL ENGINEER DATE

11-04-13
PLANS APPROVAL DATE

REGISTERED PROFESSIONAL ENGINEER ABDUL MALIKYAR No. C66169 Exp. 06-30-14 CIVIL STATE OF CALIFORNIA

THE STATE OF CALIFORNIA OR ITS OFFICERS OR AGENTS SHALL NOT BE RESPONSIBLE FOR THE ACCURACY OR COMPLETENESS OF SCANNED COPIES OF THIS PLAN SHEET.

NOTES:

CORE HOLE ON SIDE OF EXISTING INLET OR Exist DRAINAGE PIPE TO CONNECT PIPE

SSDL - SYNTHETIC SUBSURFACE DRAINAGE LAYER UNDER PCC

* - CONSTRUCTION DETAIL C-2

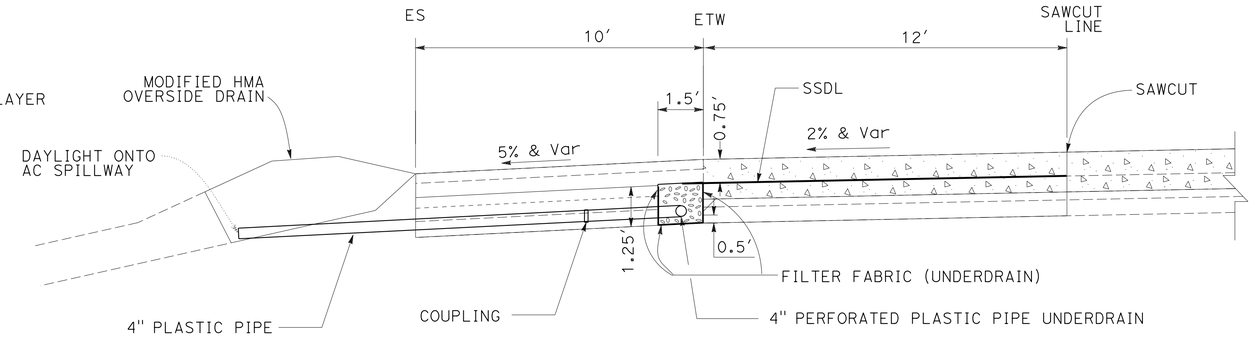

SECTION A-A
ELEVATION

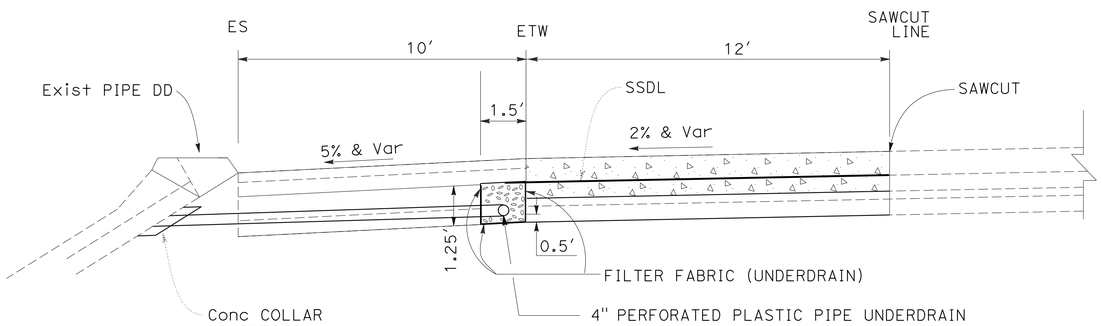

SECTION B-B
ELEVATION

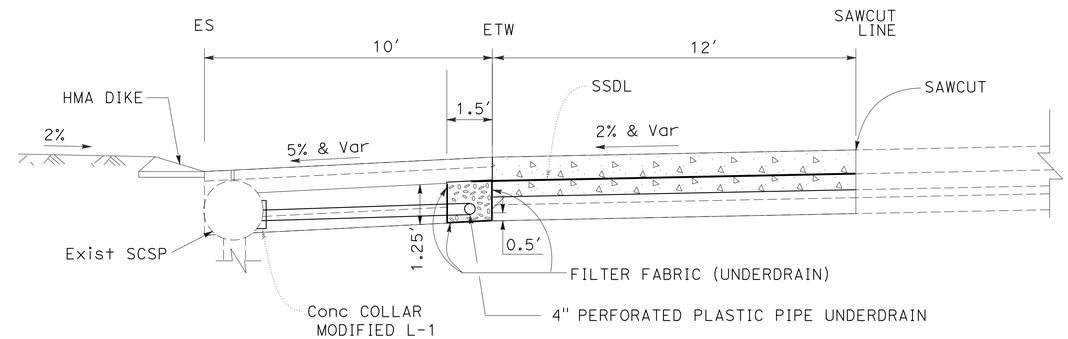

SECTION C-C
ELEVATION

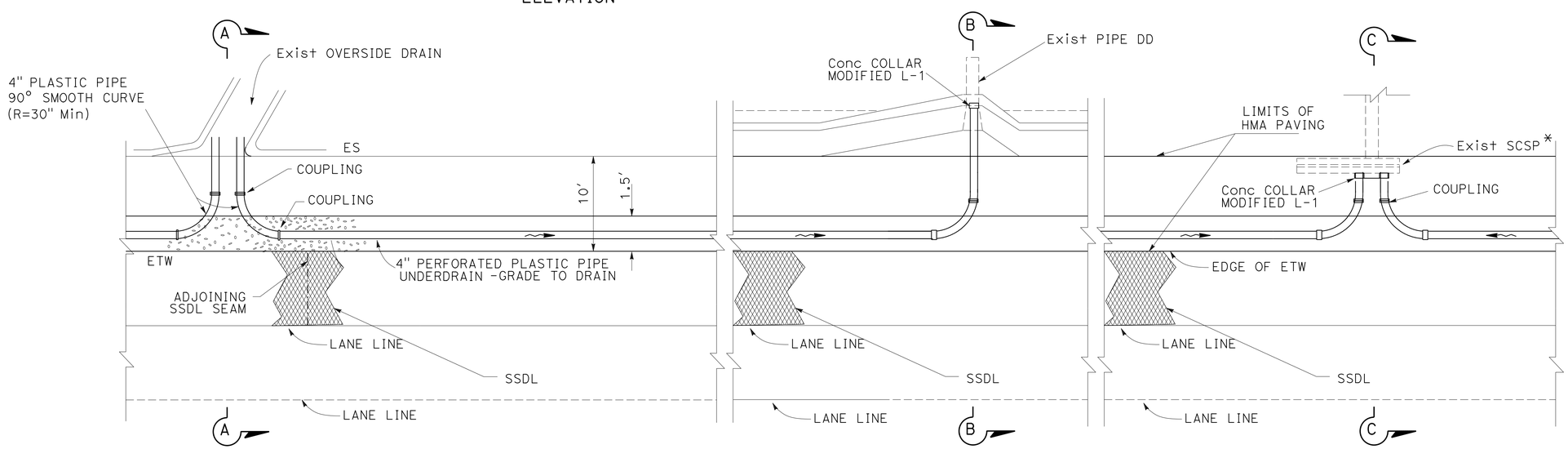

PLAN VIEW

UNDERDRAINS AT OVERSIDE DRAINS, PIPE DOWNDRAINS AND Exist SCSP

CONSTRUCTION DETAILS

NO SCALE

C-25

STATE OF CALIFORNIA - DEPARTMENT OF TRANSPORTATION
DESIGN
FUNCTIONAL SUPERVISOR: EDWARD HAJJ
CALCULATED-DESIGNED BY: HECTOR GRACIA
CHECKED BY: ABDUL MALIKYAR
REVISED BY
DATE REVISED

LAST REVISION 07-31-13
DATE PLOTTED => 31-OCT-2013
TIME PLOTTED => 15:23

Dist	COUNTY	ROUTE	POST MILES TOTAL PROJECT	SHEET No.	TOTAL SHEETS
11	SD	5	R58.1/R72.4	91	259

REGISTERED CIVIL ENGINEER 07-12-13 DATE

11-04-13
PLANS APPROVAL DATE

REGISTERED PROFESSIONAL ENGINEER ABDUL MALIKYAR No. C66169 Exp. 06-30-14 CIVIL STATE OF CALIFORNIA

THE STATE OF CALIFORNIA OR ITS OFFICERS OR AGENTS SHALL NOT BE RESPONSIBLE FOR THE ACCURACY OR COMPLETENESS OF SCANNED COPIES OF THIS PLAN SHEET.

NOTE:

1. SEE STANDARD PLAN A88A FOR ADDITIONAL INFORMATION.

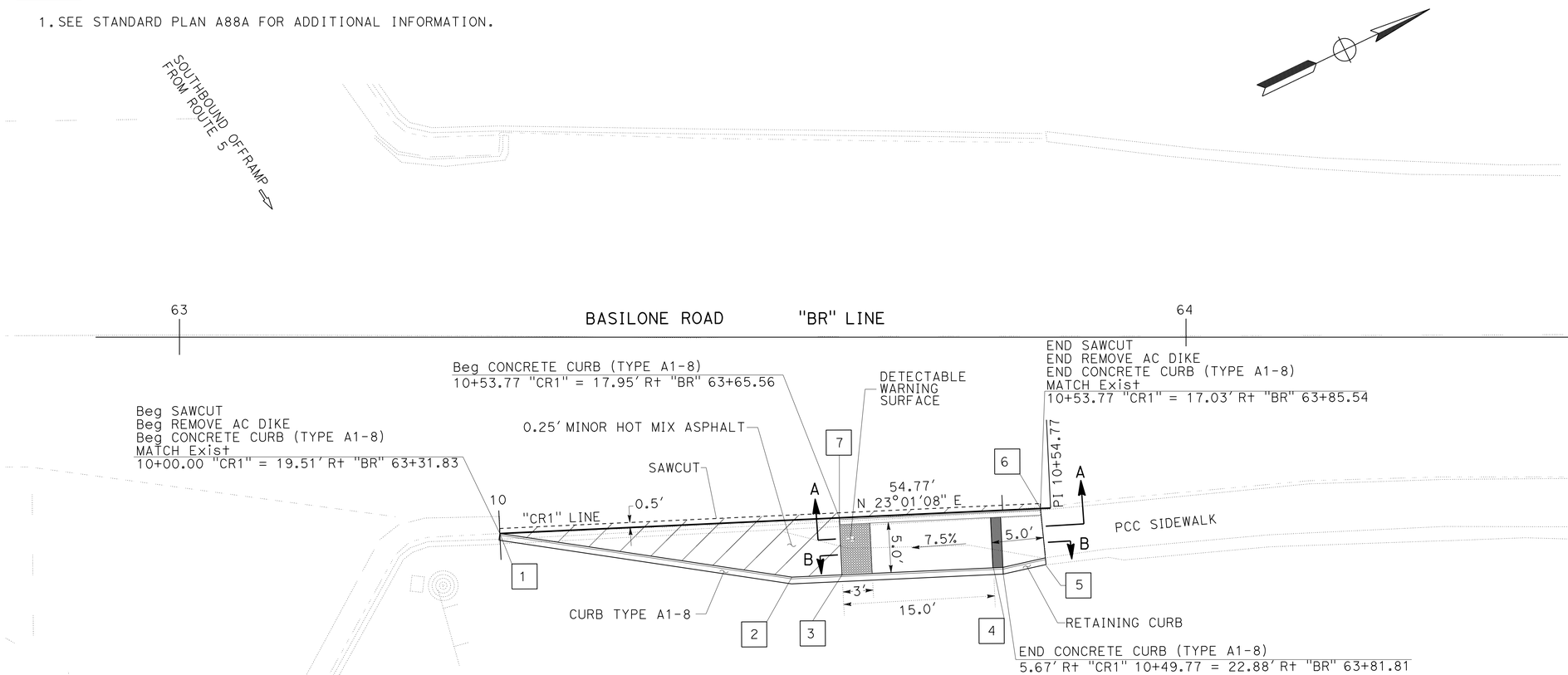

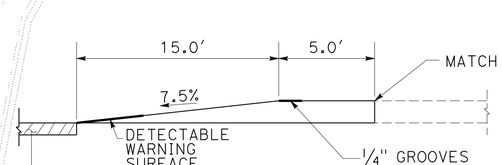

SECTION A-A

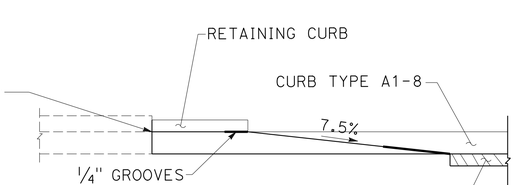

SECTION B-B

CURB RAMP #1

No.	STATION	OFFSET (RIGHT)	FLOWLINE ELEVATION	ELEVATION	NOTES
1	10+00.00 "CR1"		83.38		MATCH Exist
2	10+28.77 "CR1"	5.67	84.76		
3	10+33.77 "CR1"	5.67	84.99		
4	10+48.77 "CR1"	5.67		86.12	
5	10+54.03 "CR1"	4.92		86.50	MATCH Exist
6	10+53.77 "CR1"			85.64	MATCH Exist
7	10+33.77 "CR1"		84.91		

BASILONE ROAD
(SOUTHEAST CORNER)

CONSTRUCTION DETAILS

NO SCALE

C-26

STATE OF CALIFORNIA - DEPARTMENT OF TRANSPORTATION
Caltrans
DESIGN
FUNCTIONAL SUPERVISOR: EDWARD HAJJ
CALCULATED-DESIGNED BY: ABDUL MALIKYAR
CHECKED BY: SEAN D. HOANG
REVISED BY
DATE REVISED

LAST REVISION 10-23-13
DATE PLOTTED => 31-OCT-2013
TIME PLOTTED => 15:55

Dist	COUNTY	ROUTE	POST MILES TOTAL PROJECT	SHEET No.	TOTAL SHEETS
11	SD	5	R58.1/R72.4	92	259

07-12-13
REGISTERED CIVIL ENGINEER DATE

11-04-13
PLANS APPROVAL DATE

REGISTERED PROFESSIONAL ENGINEER
ABDUL MALIKYAR
No. C66169
Exp. 06-30-14
CIVIL
STATE OF CALIFORNIA

THE STATE OF CALIFORNIA OR ITS OFFICERS OR AGENTS SHALL NOT BE RESPONSIBLE FOR THE ACCURACY OR COMPLETENESS OF SCANNED COPIES OF THIS PLAN SHEET.

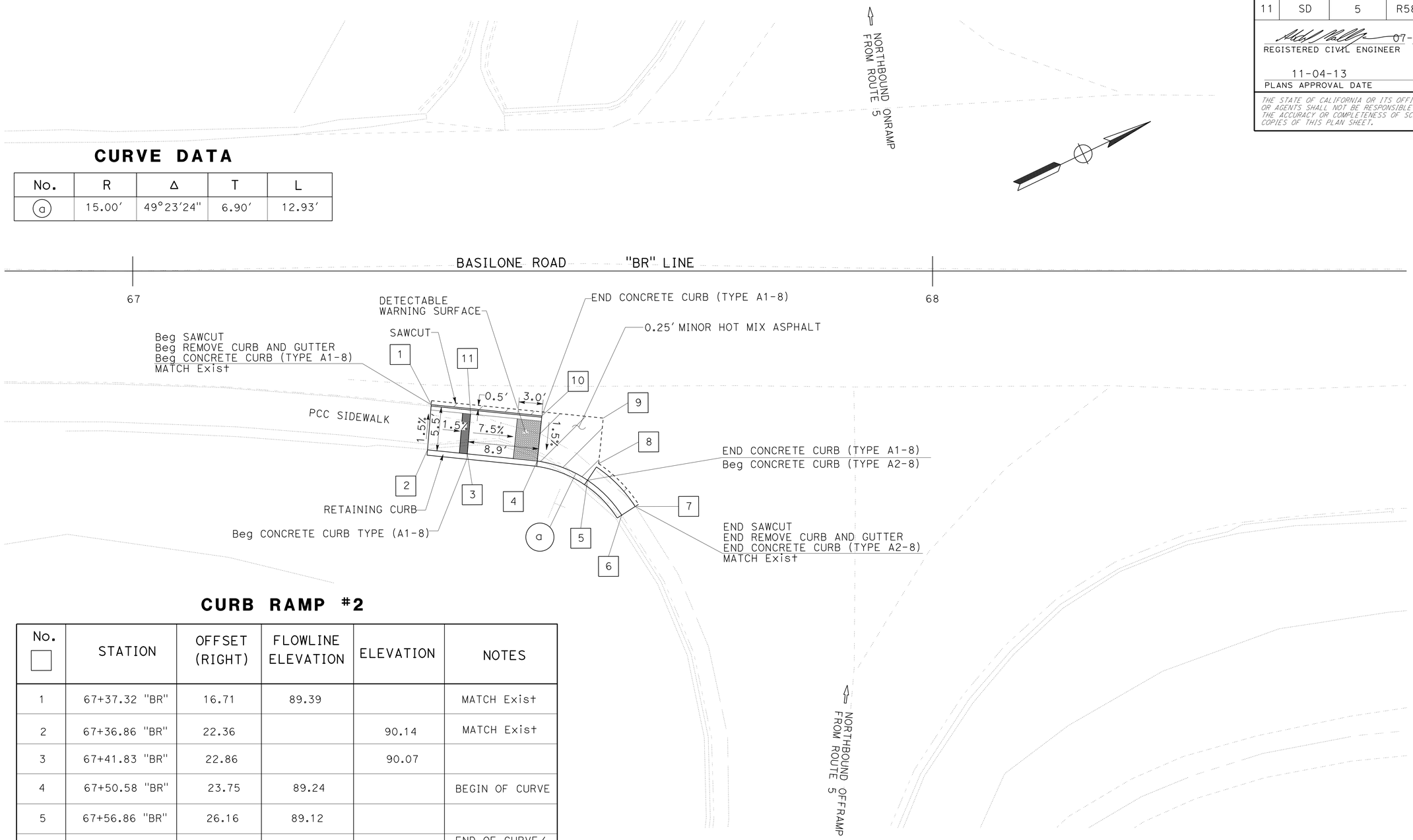

CURVE DATA

No.	R	Δ	T	L
a	15.00'	49°23'24"	6.90'	12.93'

CURB RAMP #2

No.	STATION	OFFSET (RIGHT)	FLOWLINE ELEVATION	ELEVATION	NOTES
1	67+37.32 "BR"	16.71	89.39		MATCH Exist
2	67+36.86 "BR"	22.36		90.14	MATCH Exist
3	67+41.83 "BR"	22.86		90.07	
4	67+50.58 "BR"	23.75	89.24		BEGIN OF CURVE
5	67+56.86 "BR"	26.16	89.12		
6	67+61.14 "BR"	30.52	89.07		END OF CURVE/ MATCH Exist
7	67+63.25 "BR"	29.17		89.18	MATCH Exist
8	67+58.25 "BR"	24.08		89.23	MATCH Exist
9	67+58.83 "BR"	18.39		89.33	MATCH Exist
10	67+51.15 "BR"	18.11	89.32		
11	67+42.24 "BR"	17.88		89.99	

BASILONE ROAD
(SOUTHWEST CORNER)

CONSTRUCTION DETAILS

NO SCALE

C-27

STATE OF CALIFORNIA - DEPARTMENT OF TRANSPORTATION
DESIGN
Caltrans
FUNCTIONAL SUPERVISOR: EDWARD HAJJ
CALCULATED-DESIGNED BY: ABDUL MALIKYAR
CHECKED BY: SEAN D. HOANG
REVISED BY
DATE REVISED

LAST REVISION 10-23-13
DATE PLOTTED => 31-OCT-2013
TIME PLOTTED => 15:55

Dist	COUNTY	ROUTE	POST MILES TOTAL PROJECT	SHEET No.	TOTAL SHEETS
11	SD	5	R58.1/R72.4	93	259

07-12-13
REGISTERED CIVIL ENGINEER DATE

11-04-13
PLANS APPROVAL DATE

REGISTERED PROFESSIONAL ENGINEER
ABDUL MALIKYAR
No. C66169
Exp. 06-30-14
CIVIL
STATE OF CALIFORNIA

THE STATE OF CALIFORNIA OR ITS OFFICERS OR AGENTS SHALL NOT BE RESPONSIBLE FOR THE ACCURACY OR COMPLETENESS OF SCANNED COPIES OF THIS PLAN SHEET.

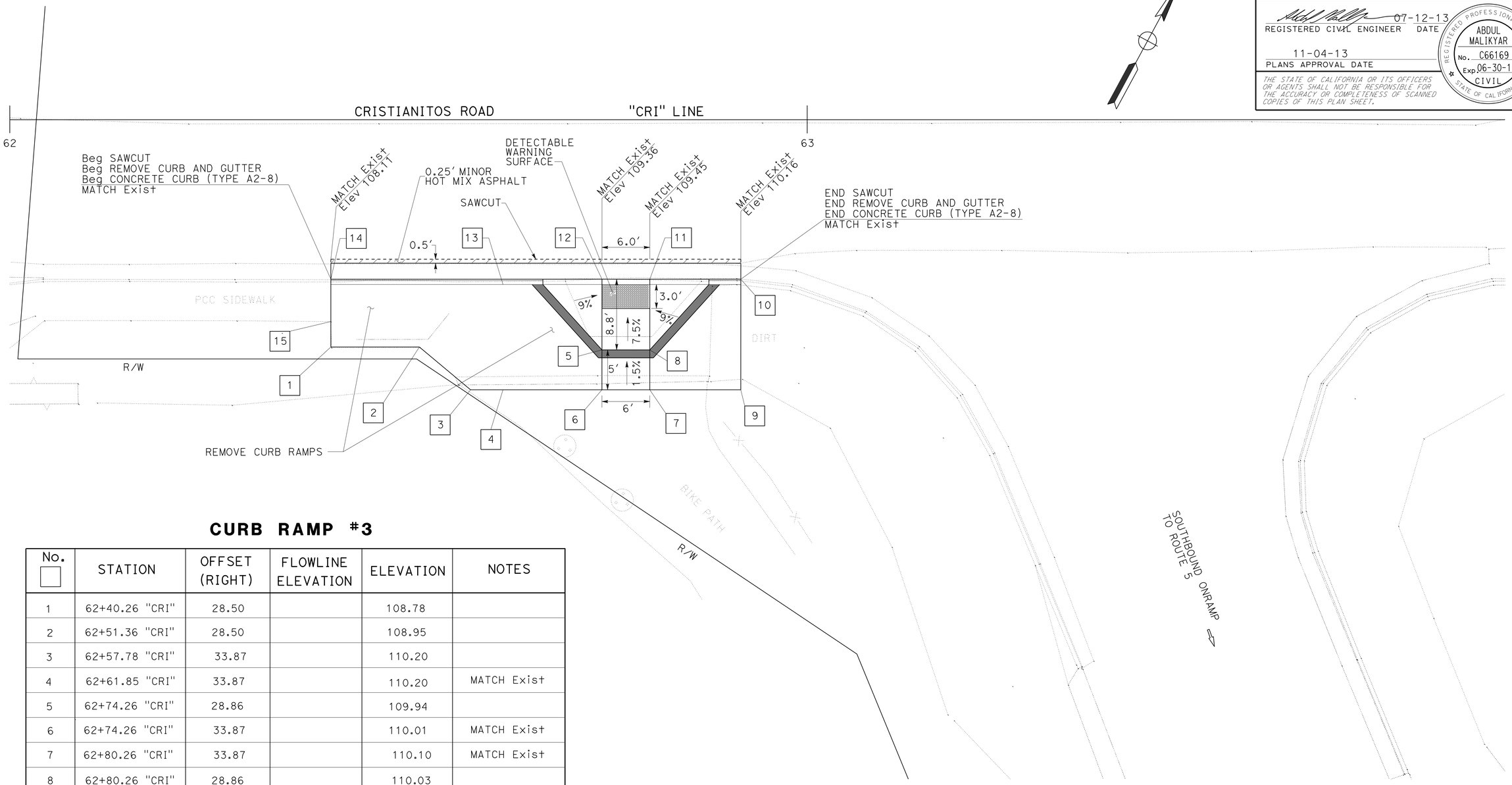

CURB RAMP #3

No.	STATION	OFFSET (RIGHT)	FLOWLINE ELEVATION	ELEVATION	NOTES
1	62+40.26 "CRI"	28.50		108.78	
2	62+51.36 "CRI"	28.50		108.95	
3	62+57.78 "CRI"	33.87		110.20	
4	62+61.85 "CRI"	33.87		110.20	MATCH Exist
5	62+74.26 "CRI"	28.86		109.94	
6	62+74.26 "CRI"	33.87		110.01	MATCH Exist
7	62+80.26 "CRI"	33.87		110.10	MATCH Exist
8	62+80.26 "CRI"	28.86		110.03	
9	62+91.67 "CRI"	33.87		110.33	
10	62+91.67 "CRI"	20.17	109.86		MATCH Exist
11	62+80.26 "CRI"	20.00	109.47		
12	62+74.26 "CRI"	20.00	109.27		
13	62+61.85 "CRI"	20.67		110.01	
14	62+40.26 "CRI"	20.00	107.93		MATCH Exist
15	62+40.26 "CRI"	25.31		108.73	MATCH Exist

CRISTIANITOS ROAD (SOUTHWEST CORNER)

CONSTRUCTION DETAILS

NO SCALE

C-28

STATE OF CALIFORNIA - DEPARTMENT OF TRANSPORTATION
Caltrans
DESIGN

REVISED BY | DATE REVISED
ABDUL MALIKYAR | SEAN D. HOANG
CALCULATED-DESIGNED BY | CHECKED BY
FUNCTIONAL SUPERVISOR | EDWARD HAJJ

LAST REVISION 10-28-13 | DATE PLOTTED => 31-OCT-2013 | TIME PLOTTED => 15:55

Dist	COUNTY	ROUTE	POST MILES TOTAL PROJECT	SHEET No.	TOTAL SHEETS
11	SD	5	R58.1/R72.4	94	259

07-12-13
REGISTERED CIVIL ENGINEER DATE

11-04-13
PLANS APPROVAL DATE

REGISTERED PROFESSIONAL ENGINEER
ABDUL MALIKYAR
No. C66169
Exp. 06-30-14
CIVIL
STATE OF CALIFORNIA

THE STATE OF CALIFORNIA OR ITS OFFICERS OR AGENTS SHALL NOT BE RESPONSIBLE FOR THE ACCURACY OR COMPLETENESS OF SCANNED COPIES OF THIS PLAN SHEET.

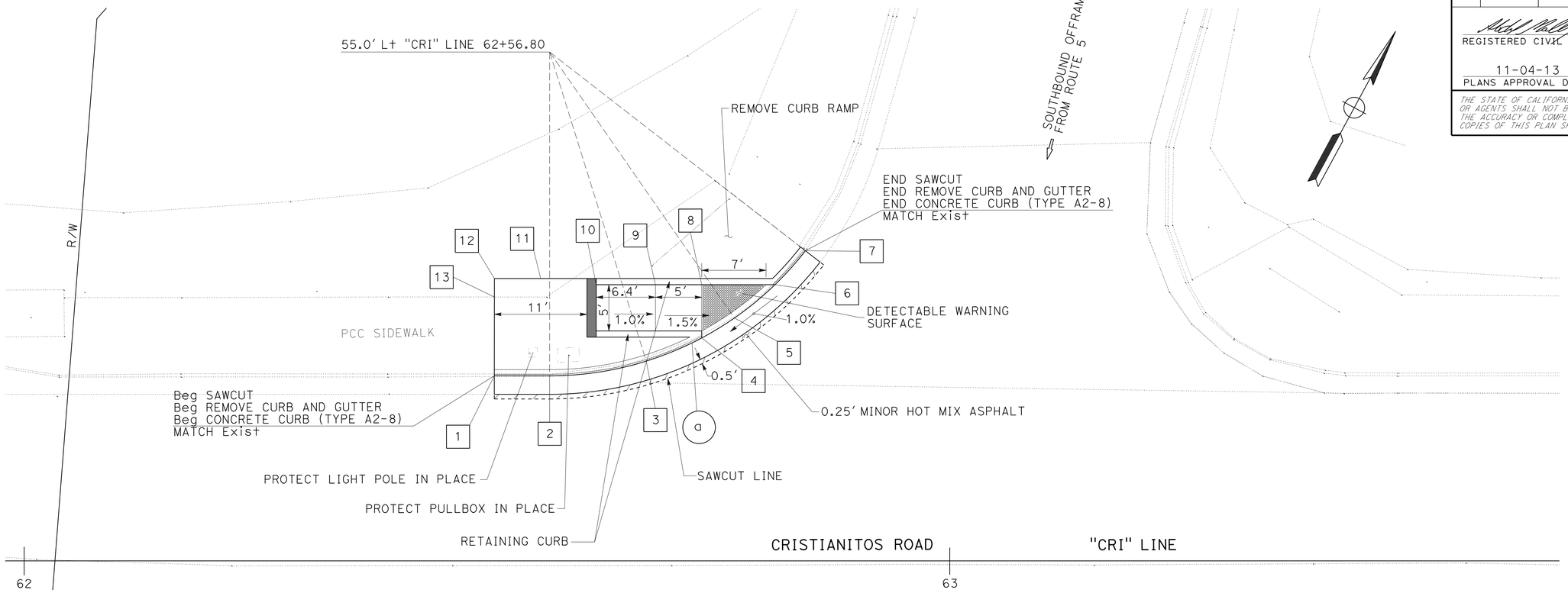

CURB RAMP #4

No.	STATION	OFFSET (LEFT)	FLOWLINE ELEVATION	ELEVATION	NOTES
1	62+50.80 "CRI"	20.00	108.36		MATCH Exist
2	62+56.77 "CRI"	20.00	108.68		BEGIN OF CURVE
3	62+67.22 "CRI"	21.59	109.00		1/3 L
4	62+73.24 "CRI"	24.10	109.38		
5	62+76.72 "CRI"	26.22	109.41		2/3 L
6	62+81.14 "CRI"	29.85	109.46		
7	62+84.40 "CRI"	33.47	109.48		MATCH Exist / END OF CURVE
8	62+73.20 "CRI"	29.85		109.46	
9	62+68.20 "CRI"	29.85		109.53	
10	62+61.80 "CRI"	29.85		109.59	
11	62+55.80 "CRI"	30.52		109.50	
12	62+50.80 "CRI"	30.52		109.40	
13	62+50.80 "CRI"	28.52		109.30	MATCH Exist

CURVE DATA

No.	R	Δ	T	L
a	35.00'	52°05'24"	17.10'	31.82'

CRISTIANITOS ROAD (NORTHWEST CORNER)

CONSTRUCTION DETAILS

NO SCALE

C-29

REVISED BY | DATE REVISED
ABDUL MALIKYAR | SEAN D. HOANG
CALCULATED-DESIGNED BY | CHECKED BY
FUNCTIONAL SUPERVISOR: EDWARD HAJJ
STATE OF CALIFORNIA - DEPARTMENT OF TRANSPORTATION
Caltrans
DESIGN

LAST REVISION | DATE PLOTTED => 31-OCT-2013 | TIME PLOTTED => 15:56
10-23-13

Dist	COUNTY	ROUTE	POST MILES TOTAL PROJECT	SHEET No.	TOTAL SHEETS
11	SD	5	R58.1/R72.4	95	259

07-12-13
REGISTERED CIVIL ENGINEER DATE

11-04-13
PLANS APPROVAL DATE

REGISTERED PROFESSIONAL ENGINEER
ABDUL MALIKYAR
No. C66169
Exp. 06-30-14
CIVIL
STATE OF CALIFORNIA

THE STATE OF CALIFORNIA OR ITS OFFICERS OR AGENTS SHALL NOT BE RESPONSIBLE FOR THE ACCURACY OR COMPLETENESS OF SCANNED COPIES OF THIS PLAN SHEET.

CURVE DATA

No.	R	Δ	T	L
a	20.00′	97°19′22″	22.73′	33.97′

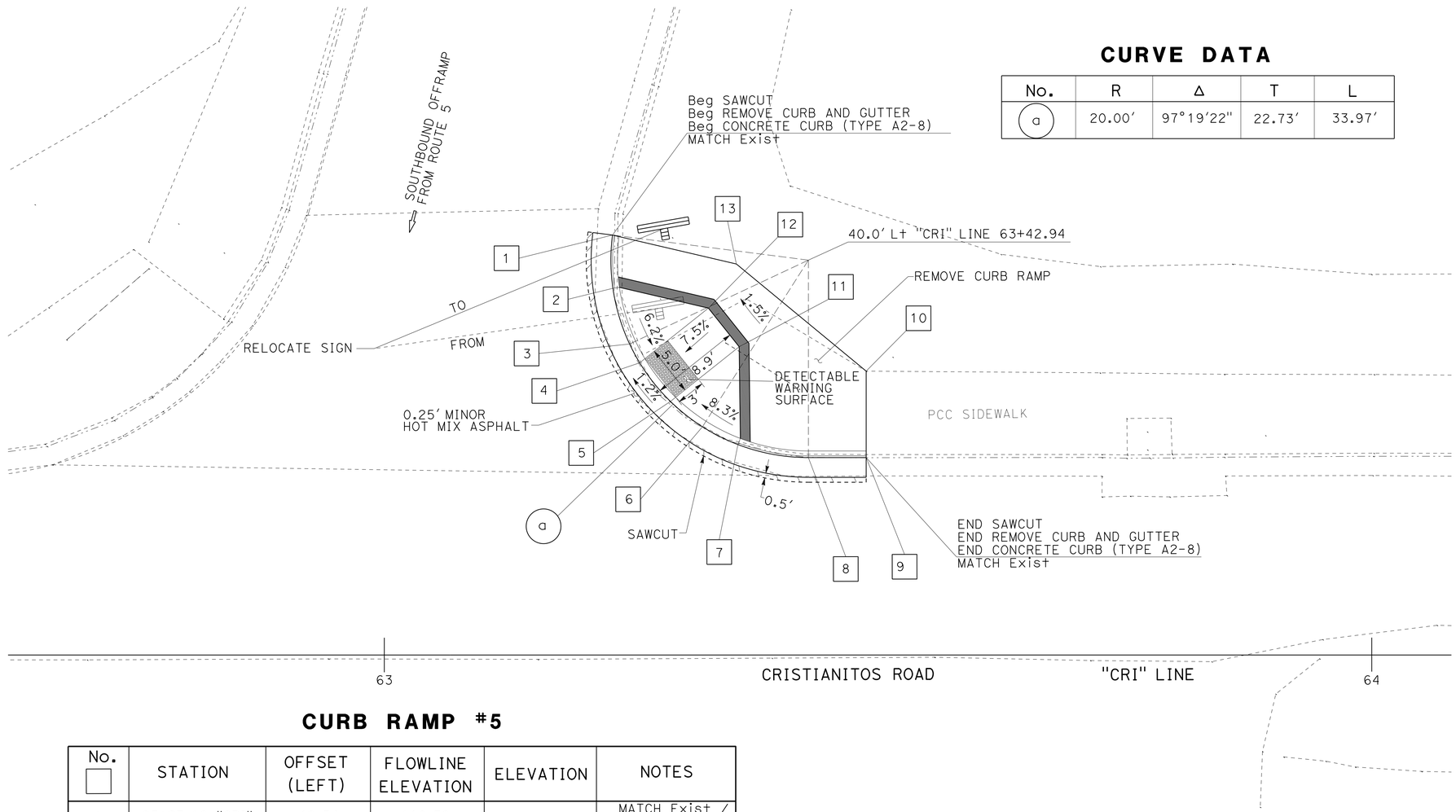

CURB RAMP #5

No.	STATION	OFFSET (LEFT)	FLOWLINE ELEVATION	ELEVATION	NOTES
1	63+23.10 "CRI"	42.54	110.72		MATCH Exist / BEGIN OF CURVE
2	63+23.15 "CRI"	37.15	111.74		
3	63+24.84 "CRI"	31.50	111.84		1/3 L
4	63+25.86 "CRI"	29.60	111.88		
5	63+28.97 "CRI"	25.69	111.94		
6	63+32.23 "CRI"	23.11	111.95		2/3 L
7	63+35.82 "CRI"	21.31	111.96		
8	63+42.95 "CRI"	20.00	112.00		END OF CURVE
9	63+48.79 "CRI"	20.00	112.08		MATCH Exist
10	63+48.80 "CRI"	28.76		112.91	MATCH Exist
11	63+35.94 "CRI"	31.22		112.61	
12	63+32.82 "CRI"	35.14		112.55	
13	63+35.65 "CRI"	39.61		112.60	

CRISTIANITOS ROAD
(NORTHEAST CORNER)

CONSTRUCTION DETAILS

NO SCALE

C-30

STATE OF CALIFORNIA - DEPARTMENT OF TRANSPORTATION
Caltrans DESIGN

REVISED BY | DATE REVISED
ABDUL MALIKYAR | SEAN D. HOANG
CALCULATED-DESIGNED BY | CHECKED BY
FUNCTIONAL SUPERVISOR | EDWARD HAJJ

LAST REVISION 10-29-13 | DATE PLOTTED => 05-NOV-2013 | TIME PLOTTED => 13:42

Dist	COUNTY	ROUTE	POST MILES TOTAL PROJECT	SHEET No.	TOTAL SHEETS
11	SD	5	R58.1/R72.4	96	259

07-12-13
REGISTERED CIVIL ENGINEER DATE

11-04-13
PLANS APPROVAL DATE

REGISTERED PROFESSIONAL ENGINEER
ABDUL MALIKYAR
No. C66169
Exp. 06-30-14
CIVIL
STATE OF CALIFORNIA

THE STATE OF CALIFORNIA OR ITS OFFICERS OR AGENTS SHALL NOT BE RESPONSIBLE FOR THE ACCURACY OR COMPLETENESS OF SCANNED COPIES OF THIS PLAN SHEET.

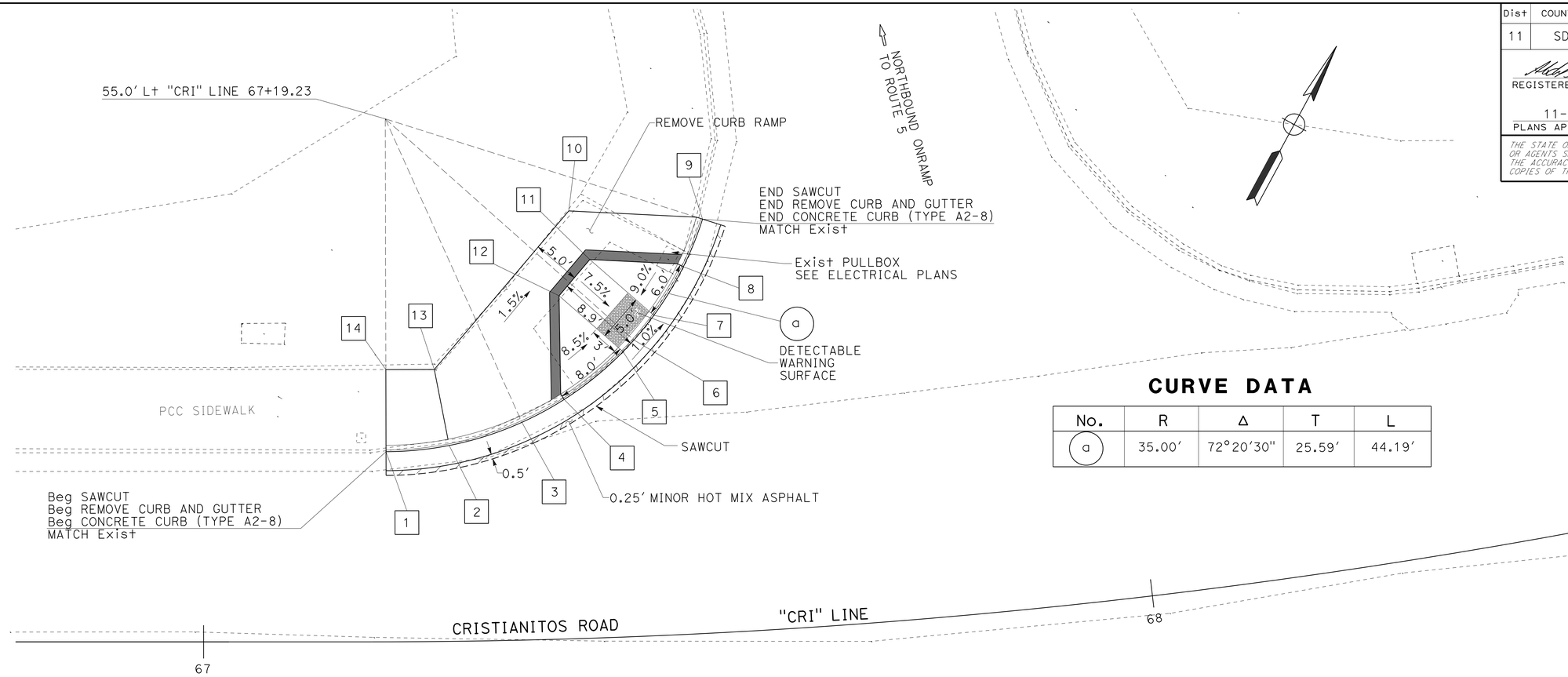

CURVE DATA

No.	R	Δ	T	L
a	35.00'	72°20'30"	25.59'	44.19'

CURB RAMP #6

No.	STATION	OFFSET (LEFT)	FLOWLINE ELEVATION	ELEVATION	NOTES
1	67+19.23 "CRI"	20.00	116.75		MATCH Exist / BEGIN OF CURVE
2	67+26.06 "CRI"	20.60	116.78		
3	67+34.01 "CRI"	22.90	116.71		1/3 L
4	67+38.68 "CRI"	25.18	116.67		
5	67+45.32 "CRI"	30.00	116.66		
6	67+46.56 "CRI"	31.17	116.64		2/3 L
7	67+48.87 "CRI"	33.67	116.61		
8	67+52.40 "CRI"	38.64	116.48		
9	67+54.81 "CRI"	43.54	116.39		END OF CURVE / MATCH Exist
10	67+39.84 "CRI"	44.99		117.26	
11	67+42.02 "CRI"	39.81		117.28	
12	67+38.47 "CRI"	36.10		117.30	
13	67+24.55 "CRI"	28.61		117.60	
14	67+19.23 "CRI"	28.63		117.68	MATCH Exist

CRISTIANITOS ROAD
(NORTHWEST CORNER)

CONSTRUCTION DETAILS

NO SCALE

C-31

REVISED BY | DATE REVISED
ABDUL MALIKYAR | SEAN D. HOANG
CALCULATED-DESIGNED BY | CHECKED BY
FUNCTIONAL SUPERVISOR: EDWARD HAJJ
STATE OF CALIFORNIA - DEPARTMENT OF TRANSPORTATION
Caltrans
DESIGN

LAST REVISION 10-23-13 | DATE PLOTTED => 31-OCT-2013 | TIME PLOTTED => 15:56

Dist	COUNTY	ROUTE	POST MILES TOTAL PROJECT	SHEET No.	TOTAL SHEETS
11	SD	5	R58.1/R72.4	97	259

07-12-13
REGISTERED CIVIL ENGINEER DATE

11-04-13
PLANS APPROVAL DATE

REGISTERED PROFESSIONAL ENGINEER
ABDUL MALIKYAR
No. C66169
Exp. 06-30-14
CIVIL
STATE OF CALIFORNIA

THE STATE OF CALIFORNIA OR ITS OFFICERS OR AGENTS SHALL NOT BE RESPONSIBLE FOR THE ACCURACY OR COMPLETENESS OF SCANNED COPIES OF THIS PLAN SHEET.

NOTES:

1. PARTIAL UNIFORM OF ALTERNATIVE CRASH CUSHIONS IS SHOWN FOR REFERENCE ONLY. FOR COMPLETE DETAILS, SEE MANUFACTURERS' PRODUCT MANUAL OF SELECTED CRASH CUSHION.
2. FOR ADDITIONAL DETAILS OF THE CONCRETE BARRIER TYPE 60, SEE STANDARD PLANS A76A.

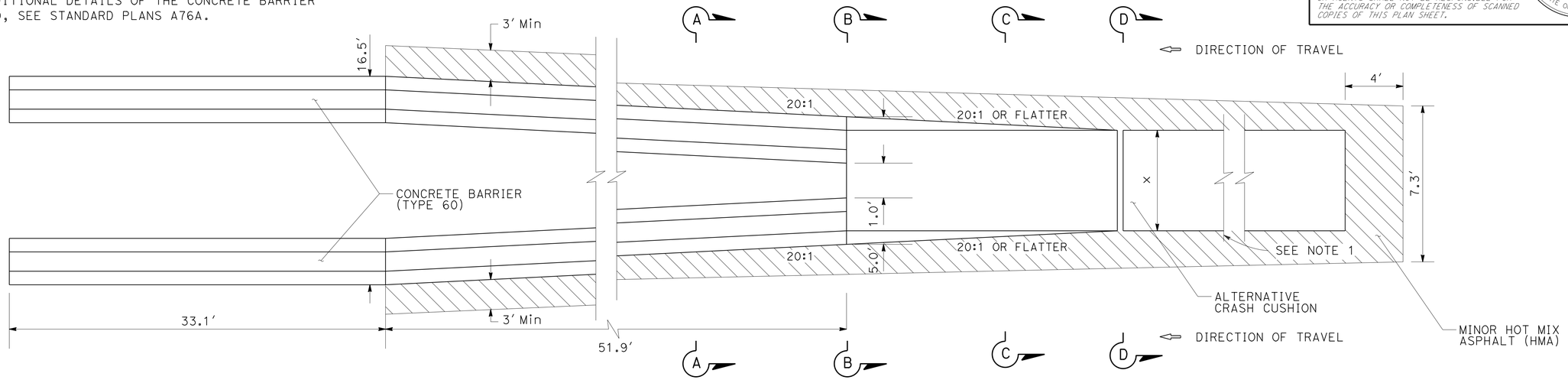

PLAN

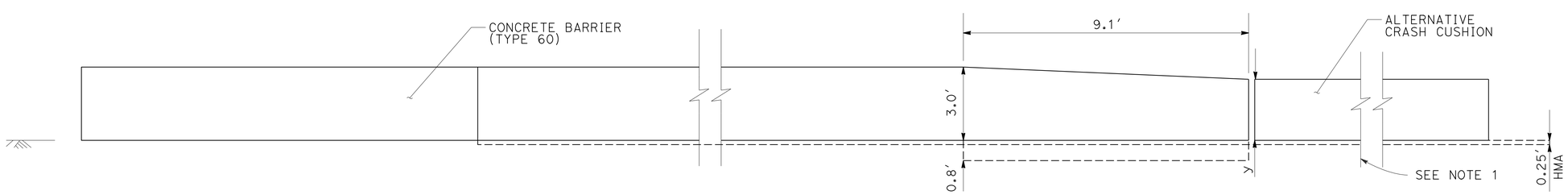

ELEVATION

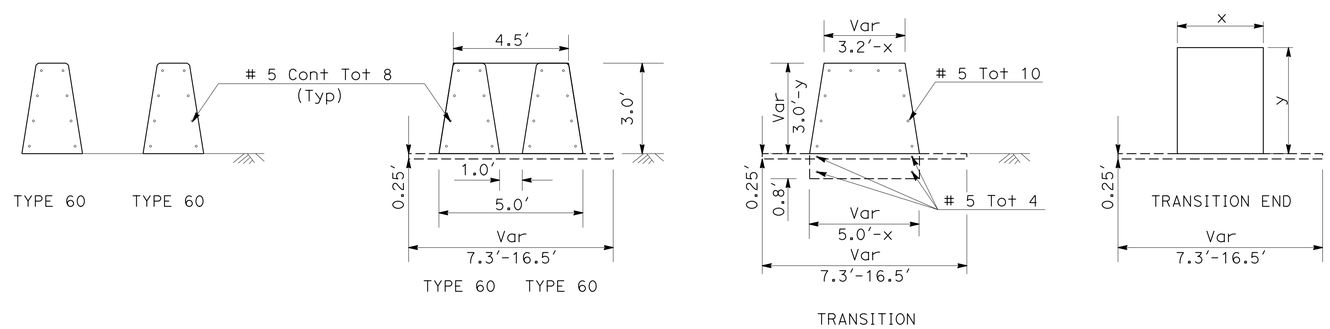

SECTION A-A SECTION B-B SECTION C-C SECTION D-D

ALTERNATIVE CRASH CUSHION

DIMENSION	TRANSITION END DIMENSIONS			
	TYPE 1	TYPE 2	TYPE 3	TYPE 4
	FT	FT	FT	FT
x	3.0	3.6	2.0	3.0
y	3.5	2.3	2.8	2.7

TRANSITION FROM TWO Conc BARRIER TYPE 60 TO ALTERNATIVE CRASH CUSHION

SOUTHBOUND "SD-5" Sta 3591+39.79 TO 3592+33.51

CONSTRUCTION DETAILS

NO SCALE

C-32

STATE OF CALIFORNIA - DEPARTMENT OF TRANSPORTATION
DESIGN
FUNCTIONAL SUPERVISOR: EDWARD HAJJ
CALCULATED-DESIGNED BY: ABDUL MALIKYAR
CHECKED BY: QUAN TON
REVISED BY
DATE REVISED

LAST REVISION 08-02-13 | DATE PLOTTED => 31-OCT-2013 | TIME PLOTTED => 15:23

Dist	COUNTY	ROUTE	POST MILES TOTAL PROJECT	SHEET No.	TOTAL SHEETS
11	SD	5	R58.1/R72.4	98	259

07-12-13
REGISTERED CIVIL ENGINEER DATE

11-04-13
PLANS APPROVAL DATE

REGISTERED PROFESSIONAL ENGINEER
ABDUL MALIKYAR
No. C66169
Exp. 06-30-14
CIVIL
STATE OF CALIFORNIA

THE STATE OF CALIFORNIA OR ITS OFFICERS OR AGENTS SHALL NOT BE RESPONSIBLE FOR THE ACCURACY OR COMPLETENESS OF SCANNED COPIES OF THIS PLAN SHEET.

NOTE:

FOR ACCURATE RIGHT OF WAY DATA, CONTACT RIGHT OF WAY ENGINEERING AT THE DISTRICT OFFICE.

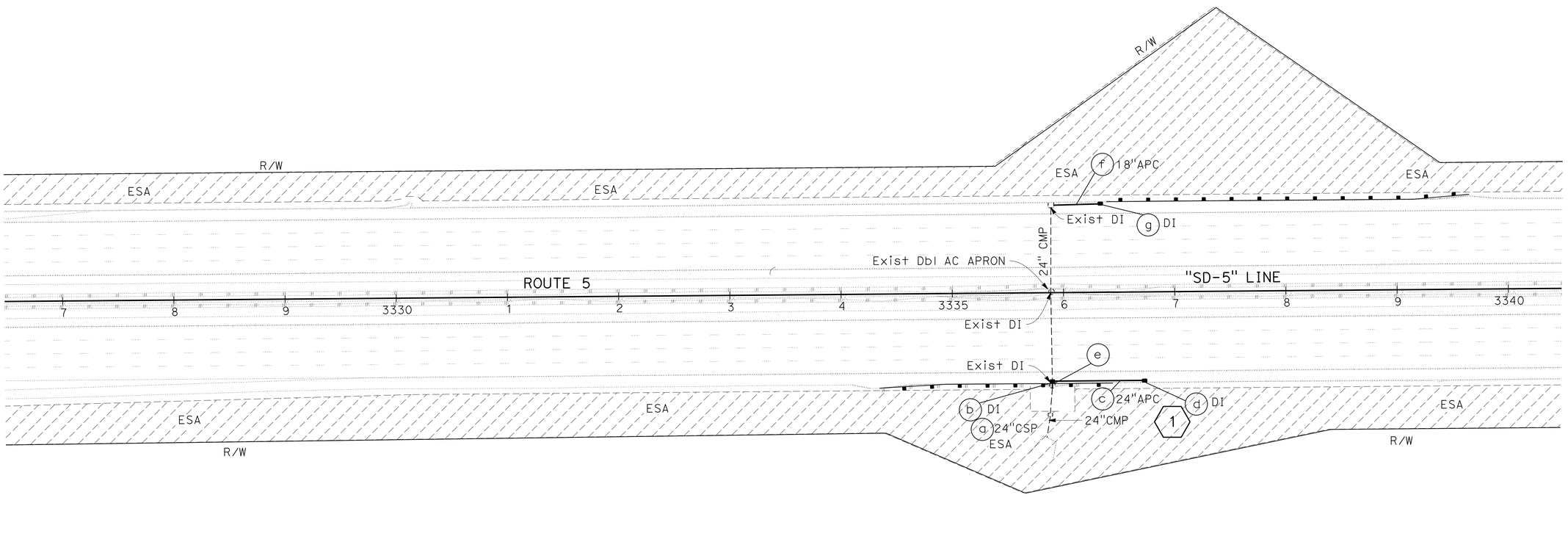

APPROVED FOR DRAINAGE WORK ONLY

DRAINAGE PLAN

SCALE 1" = 50'

D-1

REVISED BY | DATE REVISED

HECTOR GRACIA | ABDUL MALIKYAR

CALCULATED-DESIGNED BY | CHECKED BY

FUNCTIONAL SUPERVISOR: EDWARD HAJJ

STATE OF CALIFORNIA - DEPARTMENT OF TRANSPORTATION

Caltrans

DESIGN

LAST REVISION 08-02-13 | DATE PLOTTED => 31-OCT-2013 | TIME PLOTTED => 15:23

Dist	COUNTY	ROUTE	POST MILES TOTAL PROJECT	SHEET No.	TOTAL SHEETS
11	SD	5	R58.1/R72.4	99	259

07-12-13
REGISTERED CIVIL ENGINEER DATE

11-04-13
PLANS APPROVAL DATE

REGISTERED PROFESSIONAL ENGINEER
ABDUL MALIKYAR
No. C66169
Exp. 06-30-14
CIVIL
STATE OF CALIFORNIA

THE STATE OF CALIFORNIA OR ITS OFFICERS OR AGENTS SHALL NOT BE RESPONSIBLE FOR THE ACCURACY OR COMPLETENESS OF SCANNED COPIES OF THIS PLAN SHEET.

NOTE:

FOR ACCURATE RIGHT OF WAY DATA, CONTACT RIGHT OF WAY ENGINEERING AT THE DISTRICT OFFICE.

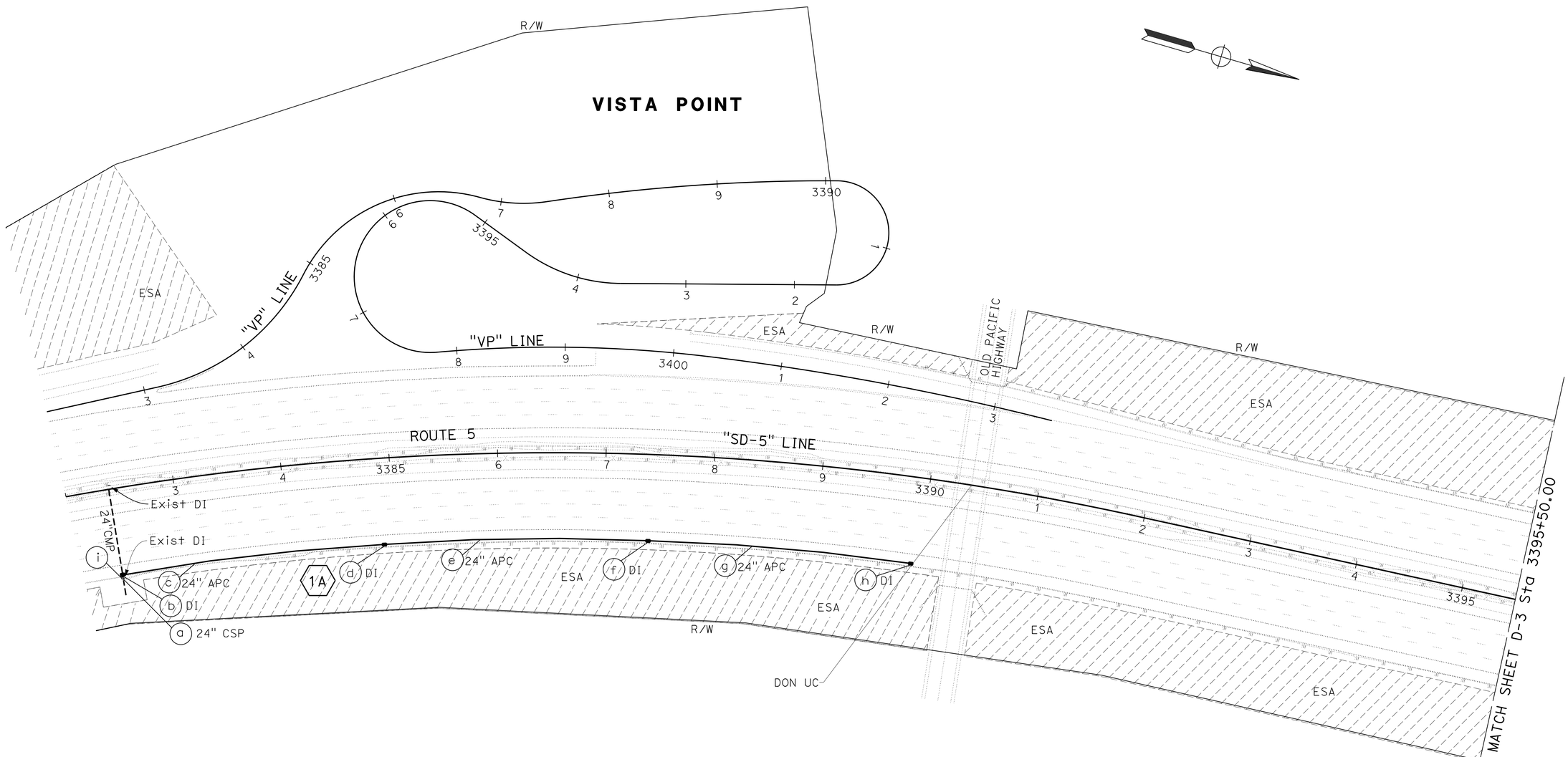

APPROVED FOR DRAINAGE WORK ONLY

DRAINAGE PLAN

SCALE 1" = 50'

D-2

STATE OF CALIFORNIA - DEPARTMENT OF TRANSPORTATION
Caltrans
DESIGN

FUNCTIONAL SUPERVISOR: EDWARD HAJJ
CALCULATED-DESIGNED BY: HECTOR GRACIA
CHECKED BY: ABDUL MALIKYAR
REVISED BY
DATE REVISED

LAST REVISION 08-02-13
DATE PLOTTED => 31-OCT-2013
TIME PLOTTED => 15:23

Dist	COUNTY	ROUTE	POST MILES TOTAL PROJECT	SHEET No.	TOTAL SHEETS
11	SD	5	R58.1/R72.4	100	259

REGISTERED CIVIL ENGINEER 07-12-13 DATE

11-04-13
PLANS APPROVAL DATE

REGISTERED PROFESSIONAL ENGINEER ABDUL MALIKYAR No. C66169 Exp. 06-30-14 CIVIL STATE OF CALIFORNIA

THE STATE OF CALIFORNIA OR ITS OFFICERS OR AGENTS SHALL NOT BE RESPONSIBLE FOR THE ACCURACY OR COMPLETENESS OF SCANNED COPIES OF THIS PLAN SHEET.

NOTE:

FOR ACCURATE RIGHT OF WAY DATA, CONTACT RIGHT OF WAY ENGINEERING AT THE DISTRICT OFFICE.

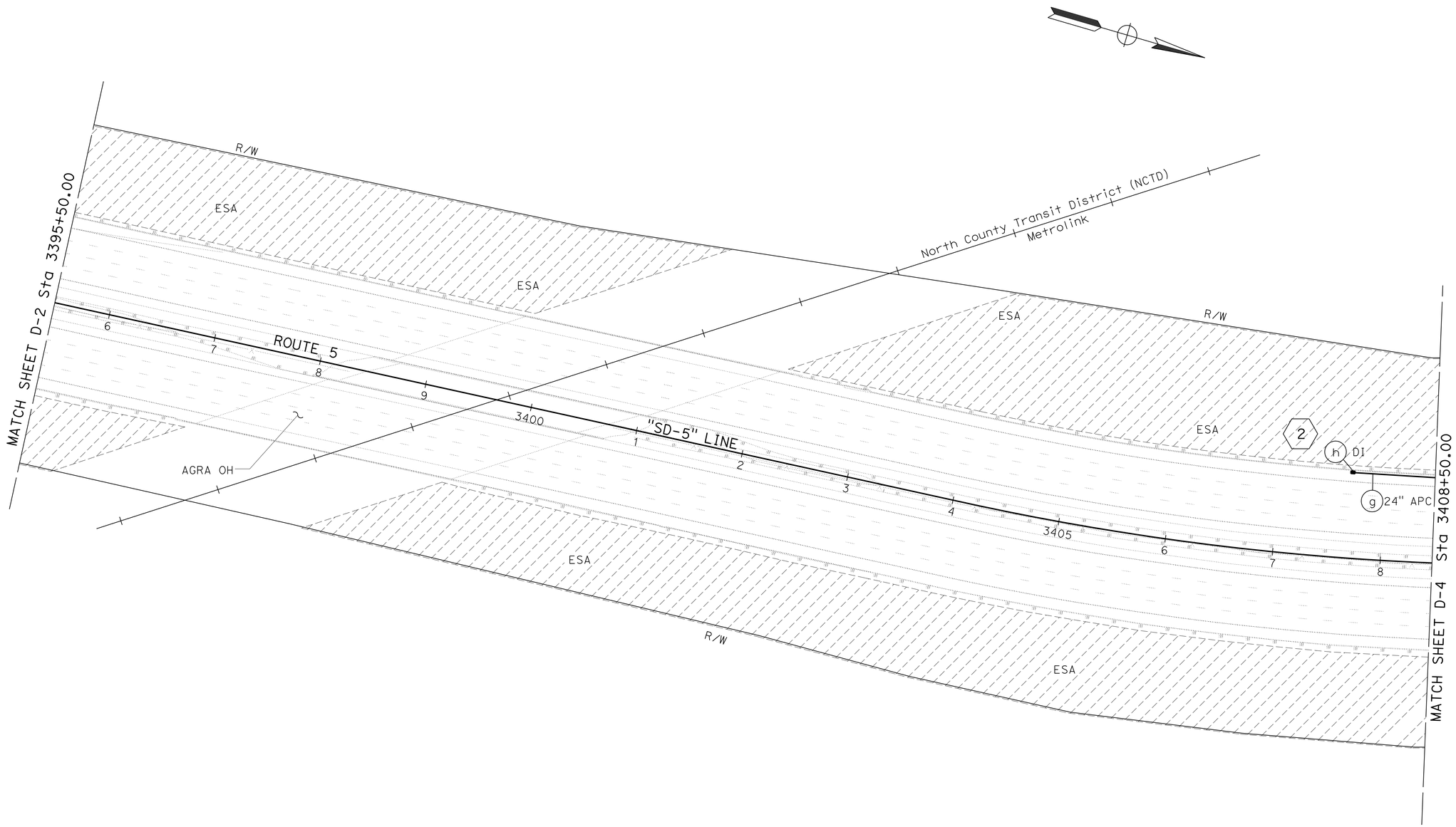

DRAINAGE PLAN

SCALE 1" = 50'

D-3

APPROVED FOR DRAINAGE WORK ONLY

STATE OF CALIFORNIA - DEPARTMENT OF TRANSPORTATION

Caltrans

DESIGN

FUNCTIONAL SUPERVISOR: EDWARD HAJJ

CALCULATED-DESIGNED BY: HECTOR GRACIA

CHECKED BY: ABDUL MALIKYAR

REVISED BY

DATE REVISED

LAST REVISION 08-02-13

DATE PLOTTED => 31-OCT-2013

TIME PLOTTED => 15:23

BORDER LAST REVISED 7/2/2010

USERNAME => s127400

DGN FILE => 11000020342ia003.dgn

RELATIVE BORDER SCALE IS IN INCHES 0 1 2 3

UNIT 2761

PROJECT NUMBER & PHASE 11000203421