5 **REPLACED PER ADDENDUM No. 5 DATED MARCH 24, 2015**

Dist	COUNTY	ROUTE	POST MILES TOTAL PROJECT	SHEET No.	TOTAL SHEETS
11	SD	8	6.9/8.2	25	150

REGISTERED CIVIL ENGINEER 12-10-14 DATE

12-15-14
PLANS APPROVAL DATE

REGISTERED PROFESSIONAL ENGINEER JOHAN PULGARIN No. C76894 Exp. 12-31-16 CIVIL STATE OF CALIFORNIA

THE STATE OF CALIFORNIA OR ITS OFFICERS OR AGENTS SHALL NOT BE RESPONSIBLE FOR THE ACCURACY OR COMPLETENESS OF SCANNED COPIES OF THIS PLAN SHEET.

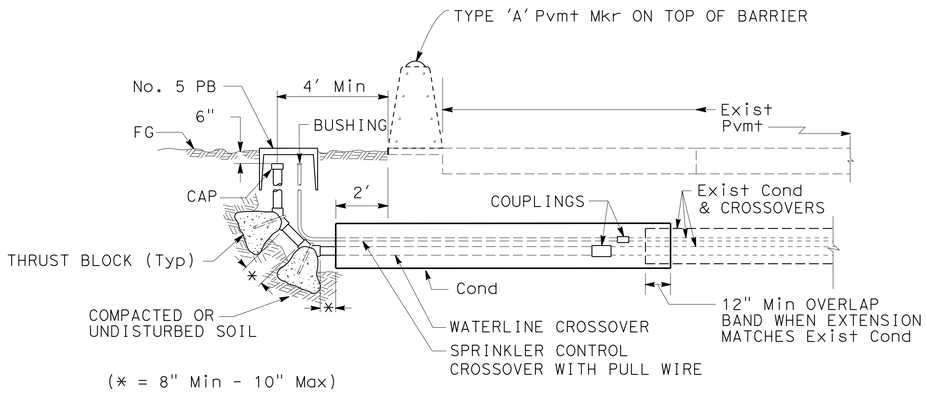

SECTION

EXTEND IRRIGATION CONDUIT

(MODIFIED)

THRUST BLOCK DETAIL

INSTALLATION	TYPE FITTING	INSTALLATION	TYPE FITTING
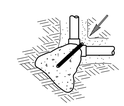	90° ELL	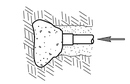	DEAD END
	BEND 45° 22.5° 11.25°		GATE VALVE
			VERTICAL BEND (TYPE I) 45° 22.5° 11.25°
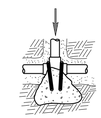	TEE		OR
		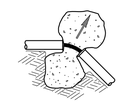	VERTICAL BEND (TYPE II) 45° 22.5° 11.25°

NOTES:

Min 1 CF PCC FOR 1½" PIPE SIZE AND SMALLER.
Min 2 CF PCC FOR 2" PIPE SIZE.
Min 3 CF PCC FOR 3" AND 4" PIPE SIZE.
USE #3 REINFORCING BAR WHERE SHOWN.

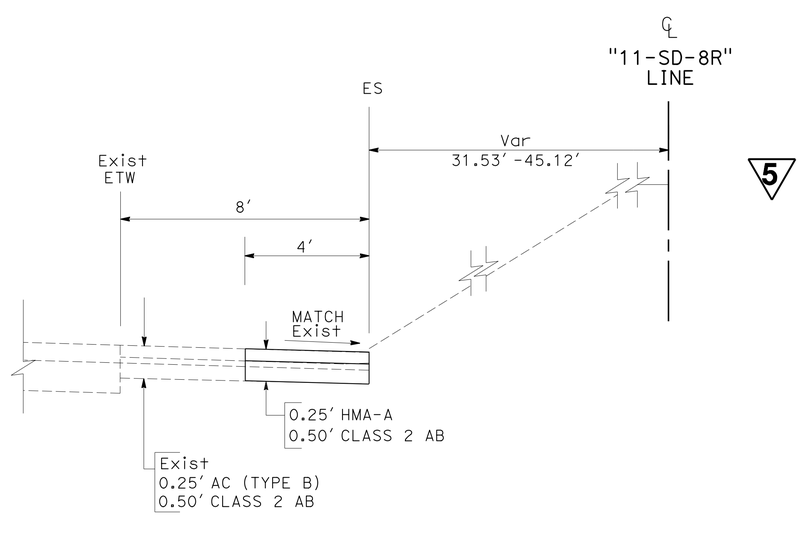

DRAINAGE SYSTEM No. 5
HOT MIX ASPHALT (TYPE A)

"11-SD-8R" Lt Sta 544+04 TO Sta 549+11

CONSTRUCTION DETAILS

NO SCALE

C-14

STATE OF CALIFORNIA - DEPARTMENT OF TRANSPORTATION
Caltrans
TRAFFIC PROJECT DEVELOPMENT

FUNCTIONAL SUPERVISOR: RICHARD ESTRADA
CALCULATED-DESIGNED BY: HUNG TRAN
CHECKED BY: JOHAN PULGARIN
REVISED BY / DATE REVISED

LAST REVISION 03-23-15
DATE PLOTTED => 23-MAR-2015
TIME PLOTTED => 13:57

Dist	COUNTY	ROUTE	POST MILES TOTAL PROJECT	SHEET No.	TOTAL SHEETS
11	SD	8	6.9/8.2	36	150

REGISTERED CIVIL ENGINEER 12-10-14 DATE

12-15-14
PLANS APPROVAL DATE

REGISTERED PROFESSIONAL ENGINEER JOHAN PULGARIN No. C76894 Exp. 12-31-16 CIVIL STATE OF CALIFORNIA

THE STATE OF CALIFORNIA OR ITS OFFICERS OR AGENTS SHALL NOT BE RESPONSIBLE FOR THE ACCURACY OR COMPLETENESS OF SCANNED COPIES OF THIS PLAN SHEET.

NOTE:

FOR ACCURATE RIGHT OF WAY DATA, CONTACT RIGHT OF WAY ENGINEERING AT THE DISTRICT OFFICE.

5 REPLACED PER ADDENDUM No. 5 DATED MARCH 24, 2015

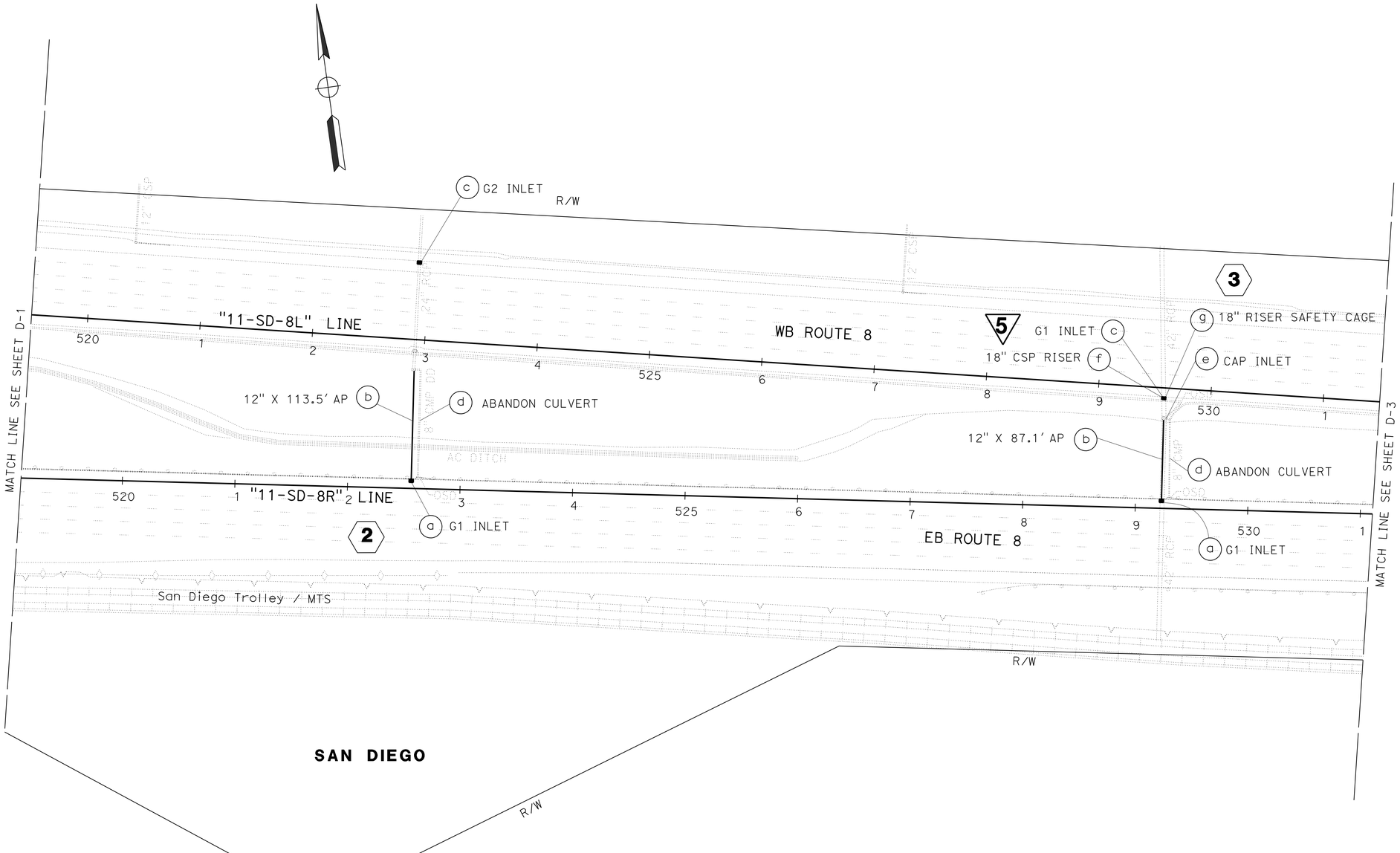

DRAINAGE PLAN D-2

SCALE: 1" = 50'

APPROVED FOR DRAINAGE WORK ONLY

STATE OF CALIFORNIA - DEPARTMENT OF TRANSPORTATION
Caltrans
TRAFFIC PROJECT DEVELOPMENT

FUNCTIONAL SUPERVISOR: RICHARD ESTRADA
CALCULATED-DESIGNED BY: EVANGELINA PALMA
CHECKED BY: JOHAN PULGARIN
REVISED BY
DATE REVISED

LAST REVISION 03-23-15
DATE PLOTTED => 23-MAR-2015
TIME PLOTTED => 13:57

BORDER LAST REVISED 7/2/2010
USERNAME => s127400
DGN FILE => 11000201221a002.dgn
RELATIVE BORDER SCALE IS IN INCHES 0 1 2 3
UNIT 2771
PROJECT NUMBER & PHASE 11000201221

Dist	COUNTY	ROUTE	POST MILES TOTAL PROJECT	SHEET No.	TOTAL SHEETS
11	SD	8	6.9/8.2	42	150

REGISTERED CIVIL ENGINEER 12-10-14 DATE

12-15-14
PLANS APPROVAL DATE

REGISTERED PROFESSIONAL ENGINEER JOHAN PULGARIN No. C76894 Exp. 12-31-16 CIVIL STATE OF CALIFORNIA

THE STATE OF CALIFORNIA OR ITS OFFICERS OR AGENTS SHALL NOT BE RESPONSIBLE FOR THE ACCURACY OR COMPLETENESS OF SCANNED COPIES OF THIS PLAN SHEET.

5 REPLACED PER ADDENDUM No. 5 DATED MARCH 24, 2015

DRAINAGE SYSTEM 3
Sta 529+23.5 "11-SD-8R"

a) TYPE G1 INLET WITH 24-12 GRATE AND FRAME; H=3.20′
b) 12" X 87.1′ AP DOWNDRAIN WITH CONCRETE COLLAR (TYPE L-3)
5 c) TYPE G1 INLET WITH 24-12 GRATE AND FRAME; H=3.0′
d) ABANDON CULVERT, 8" X 70.3′ CMP
e) CAP INLET
f) 18" CSP RISER WITH CONCRETE COLLAR (TYPE L-1), H=7.8′
5 g) 18" RISER SAFETY CAGE

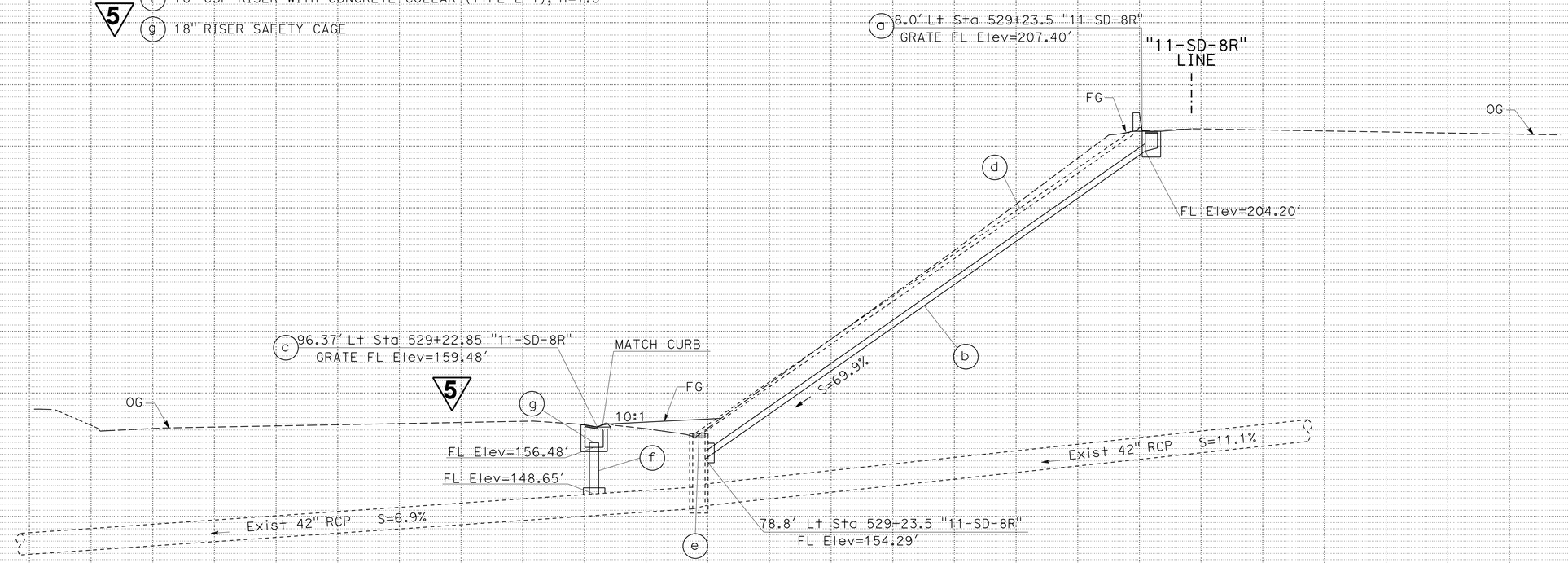

DRAINAGE PROFILES

SCALE: Horiz 1" = 10′
Vert 1" = 10′

DP-3

STATE OF CALIFORNIA - DEPARTMENT OF TRANSPORTATION
Caltrans
TRAFFIC PROJECT DEVELOPMENT

FUNCTIONAL SUPERVISOR: RICHARD ESTRADA
CALCULATED-DESIGNED BY: KENNY NGUYEN
CHECKED BY: JOHAN PULGARIN
REVISED BY
DATE REVISED

LAST REVISION 03-23-15
DATE PLOTTED => 23-MAR-2015
TIME PLOTTED => 13:57

5 REPLACED PER ADDENDUM No. 5 DATED MARCH 24, 2015

Dist	COUNTY	ROUTE	POST MILES TOTAL PROJECT	SHEET No.	TOTAL SHEETS
11	SD	8	6.9/8.2	45	150

REGISTERED CIVIL ENGINEER 12-10-14 DATE

12-15-14
PLANS APPROVAL DATE

REGISTERED PROFESSIONAL ENGINEER JOHAN PULGARIN No. C76894 Exp. 12-31-16 CIVIL STATE OF CALIFORNIA

THE STATE OF CALIFORNIA OR ITS OFFICERS OR AGENTS SHALL NOT BE RESPONSIBLE FOR THE ACCURACY OR COMPLETENESS OF SCANNED COPIES OF THIS PLAN SHEET.

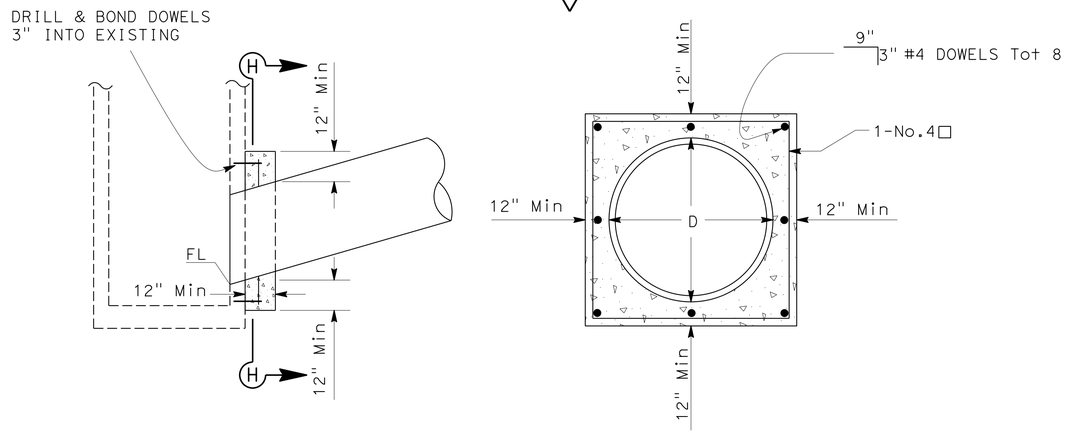

SECTION H-H

NOTE: BEND EXPOSED REBAR INTO CONCRETE COLLAR.

TYPE L-3 COLLAR

1 b, 2 b, 3 b, 4 b, c, 5 b

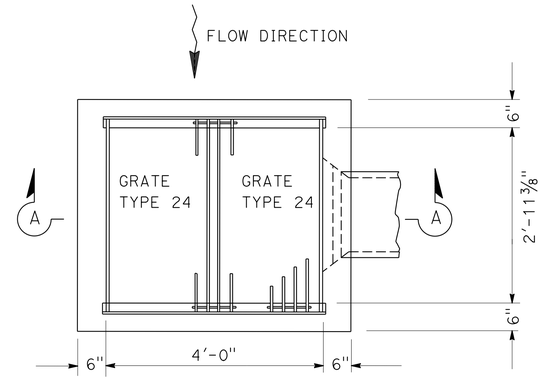

PLAN

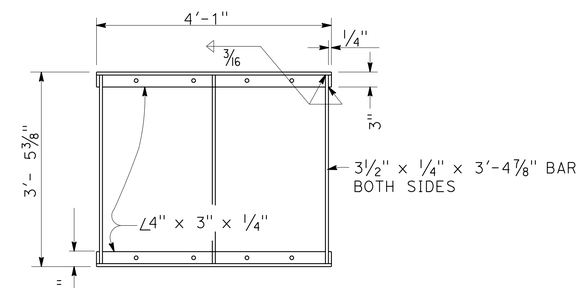

GRATE FRAME

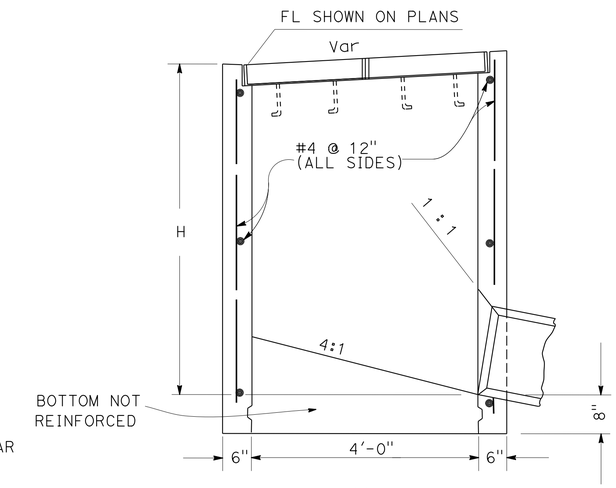

SECTION A-A

TYPE GD1 INLET

TABLE A

CONCRETE CUBIC YARD		
TYPE	H=3'-0" TO 8'-0" (T= 6")	
	H=3'-0"	ADDITIONAL PCC PER FT (CY3)
GD1	1.59	0.294

TABLE BASED ON 8" FLOOR SLAB. NO DEDUCTIONS OR ADJUSTMENTS ARE TO BE MADE TO THESE QUANTITIES BECAUSE OF PIPE OPENINGS, DIFFERENT FLOOR ALTERNATIVES OR DIFFERENT CURB TYPES.

MISCELLANEOUS IRON & STEEL			
INLET TYPE	GRATE TYPE	No. OF GRATES	WEIGHT
GD1	24 - 12	2	616 lbs

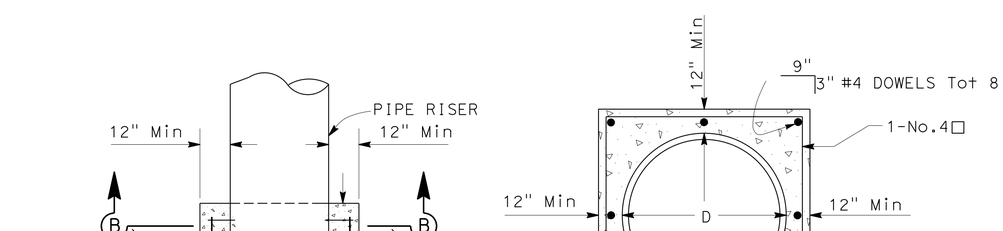

SECTION B-B

NOTE: BEND EXPOSED REBAR INTO CONCRETE COLLAR.

TYPE L-1 COLLAR

3 f

NOTES:

1. SEE STANDARD PLAN RSP D77A FOR ADDITIONAL FRAME AND GRATE DETAILS.
2. SEE NOTES FOR STANDARD PLAN RSP D73 AND D74B.

DRAINAGE DETAILS

NO SCALE

DD-1

STATE OF CALIFORNIA - DEPARTMENT OF TRANSPORTATION
TRAFFIC PROJECT DEVELOPMENT
Caltrans

FUNCTIONAL SUPERVISOR: RICHARD ESTRADA
CALCULATED-DESIGNED BY: HUNG TRAN
CHECKED BY: JOHAN PULGARIN
REVISED BY / DATE REVISED

LAST REVISION 03-23-15
DATE PLOTTED => 23-MAR-2015
TIME PLOTTED => 13:57

5 **REPLACED PER ADDENDUM No. 5 DATED MARCH 24, 2015** 5

Dist	COUNTY	ROUTE	POST MILES TOTAL PROJECT	SHEET No.	TOTAL SHEETS
11	SD	8	6.9/8.2	48	150

REGISTERED CIVIL ENGINEER 12-10-14 DATE

12-15-14
PLANS APPROVAL DATE

REGISTERED PROFESSIONAL ENGINEER JOHAN PULGARIN No. C76894 Exp. 12-31-16 CIVIL STATE OF CALIFORNIA

THE STATE OF CALIFORNIA OR ITS OFFICERS OR AGENTS SHALL NOT BE RESPONSIBLE FOR THE ACCURACY OR COMPLETENESS OF SCANNED COPIES OF THIS PLAN SHEET.

DRAINAGE QUANTITIES

DRAINAGE SHEET No.	DRAINAGE SYSTEM No. ⬡	DRAINAGE UNIT ○	12" AP DOWNDRAIN LF	18" AP DOWNDRAIN LF	24" AP CULVERT LF	18" CSP RISER (.109" THICK) LF	CONCRETE COLLAR (N) EA	MINOR Conc (MINOR STRUCTURE) CY	Misc IRON AND STEEL LB	HEIGHT OF INLET (N) LF	GRATED LINE DRAIN LF	Max PIPE COVER HEIGHT (N) LF	PIPE JOINT CLASSIFICATION (N) EA	ABANDON CULVERT EA	CAP INLET EA	GRATE CHAIN (N) EA	DESCRIPTION	STATION	DRAINAGE SYSTEM No. ⬡	DRAINAGE UNIT ○
D-1	1	a						1.17	326	4.0						1	TYPE G1 INLET WITH 24-12 GRATE AND FRAME; H=4.0′	"11-SD-8R" 516+70.00	1	a
		b	115.6				1					0.5	S				12" X 115.6′ AP DOWNDRAIN WITH CONCRETE COLLAR (TYPE L-3)			b
		c												1			ABANDON CULVERT, 8" X 96.6′ CMP			c
D-2	2	a						0.99	326	3.2						1	TYPE G1 INLET WITH 24-12 GRATE AND FRAME; H=3.2′	"11-SD-8R" 522+56.62	2	a
		b	113.5				1					1.8	S				12" X 113.5′ AP DOWNDRAIN WITH CONCRETE COLLAR (TYPE L-3)			b
		c						6.28	326	15.78						1	TYPE G2 INLET WITH 24-12 GRATE AND FRAME; H=15.78′			c
		d												1			ABANDON CULVERT, 8" X 96.4′ CMP			d
D-2	3	a						0.99	326	3.2						1	TYPE G1 INLET WITH 24-12 GRATE AND FRAME; H=3.2′	"11-SD-8R" 529+23.50	3	a
		b	87.1				1					4.0	S				12" X 87.1′ AP DOWNDRAIN WITH CONCRETE COLLAR (TYPE L-3)			b
		c						0.95	326	3.0						1	TYPE G1 INLET WITH 24-12 GRATE AND FRAME; H=3.0′			c
		d												1			ABANDON CULVERT, 8" X 70.3′ CMP			d
		e													1		CAP INLET			e
		f				7.8	1										18" CSP RISER WITH CONCRETE COLLAR (TYPE L-1)			f
		g							7								18" RISER SAFETY CAGE			g
D-3	4	a						1.10	326	3.33						1	TYPE G3 INLET WITH 24-12 GRATE AND FRAME; H=3.33′	"11-SD-8R" 537+72.00	4	a
		b		2.3			1					1.5	S				18" X 2.3′ AP DOWNDRAIN WITH CONCRETE COLLAR (TYPE L-3)			b
		c		61.1			1					1.6	S				18" X 61.1′ AP DOWNDRAIN WITH CONCRETE COLLAR (TYPE L-3)			c
		d						1.06	326	3.5						1	TYPE G1 INLET WITH 24-12 GRATE AND FRAME; H=3.50′			d
		e									20						GRATED LINE DRAIN			e
		f													1		CAP INLET			f
		g												1			ABANDON CULVERT, 12" X 47.7′ CMP			g
D-4	5	a						2.10	326	6.27						1	TYPE G4 INLET WITH 24-12 GRATE AND FRAME; H=6.27′	"11-SD-8R" 544+04.00	5	a
		b		37.6			1					0.9	S				18" X 37.6′ AP DOWNDRAIN WITH CONCRETE COLLAR (TYPE L-3)			b
		c						1.88	616	4.0						1	TYPE GD1 INLET WITH 2-24-12 GRATE AND FRAME; H=4.0			c
		d												1			ABANDON CULVERT, 8" X 25.4′ CMP			d
		e													1		CAP INLET			e
		f			259.5							3.9	S				24" X 259.5′ AP CULVERT			f
		g						2.10	326	6.25						1	TYPE G4 INLET WITH 24-12 GRATE AND FRAME; H=6.25′			g
		h			239.9							3.8	S				24" X 239.9′ AP CULVERT			h
		i						2.10	326	6.16						1	TYPE G4 INLET WITH 24-12 GRATE AND FRAME; H=6.16′			i
		j		25.2								2.7	S				18" X 25.2′ AP DOWNDRAIN			j
		k						1.88	616	4.0						1	TYPE GD1 INLET WITH 24-24-12 GRATE AND FRAME; H=4.00′			k
		l												1			ABANDON CULVERT, 8" X 16.8′ CMP			l
D-5	6	a													1		CAP INLET	"11-SD-8R" 557+04.00	6	a
TOTAL			316.2	126.2	499.4	7.8		22.6*	4499		20			6	4					

* SEE Q-2 SHEET FOR ADDITIONAL QUANTITIES.

(N) - NOT A SEPERATE PAY ITEM, FOR INFORMATION ONLY.

AP ALLOWABLE PIPE MATERIALS

DESIGNATION	HDPE OR PVC	RCP	14-GAGE Bit Ctd CSP
12" AP	12"	12"	12"
18" AP	18"	18"	18"
24" AP	24"	24"	24"

DRAINAGE QUANTITIES

DQ-1

STATE OF CALIFORNIA - DEPARTMENT OF TRANSPORTATION
Caltrans
TRAFFIC PROJECT DEVELOPMENT

FUNCTIONAL SUPERVISOR: RICHARD ESTRADA
CALCULATED-DESIGNED BY: KENNY T NGUYEN
CHECKED BY: JOHAN PULGARIN
REVISED BY
DATE REVISED

LAST REVISION 03-23-15
DATE PLOTTED =>
TIME PLOTTED =>

Dist	COUNTY	ROUTE	POST MILES TOTAL PROJECT	SHEET No.	TOTAL SHEETS
11	SD	8	6.9/8.2	79	150

REGISTERED CIVIL ENGINEER 12-10-14 DATE

12-15-14
PLANS APPROVAL DATE

REGISTERED PROFESSIONAL ENGINEER JOHAN PULGARIN No. C76894 Exp. 12-31-16 CIVIL STATE OF CALIFORNIA

THE STATE OF CALIFORNIA OR ITS OFFICERS OR AGENTS SHALL NOT BE RESPONSIBLE FOR THE ACCURACY OR COMPLETENESS OF SCANNED COPIES OF THIS PLAN SHEET.

5 REPLACED PER ADDENDUM No. 5 DATED MARCH 24, 2015

EARTHWORK

LINE	STATION	ROADWAY EXCAVATION (CY)
"11-SD-8R"	Sta 507+70.00 to Sta 558+09.36	3,504.23
"11-SD-8E"	Sta 558+09.36 to Sta 565+18.00	1,093.34
"R1WR"	Sta 509+77.00 to Sta 516+68.92	28.51
"11-SD-8L"	Sta 516+72.20 to Sta 520+35.50	10.09
	TOTAL	4,636.17

ASPHALTIC EMULSION (FOG SEAL COAT)

LINE	SIDE		STATION	WEIGHT (TON)
	Lt	Rt		
"11-SD-8L"	X		Sta 516+72.20 TO Sta 520+35.50	0.02
"11-SD-8L"		X	Sta 519+00.00 TO Sta 551+90.00	0.61
"11-SD-8E"	X		Sta 562+46.00 TO Sta 567+50.00	0.10
"11-SD-8E"		X	Sta 562+84.00 TO Sta 567+50.00	0.15
"R1WR"	X		Sta 509+77.00 TO Sta 516+68.92	0.04
			TOTAL	0.92

COLD PLANE AC PAVEMENT

LINE	SIDE	STATION	AREA (SQYD)
"11-SD-8E"	Lt	Sta 562+46.00 TO Sta 567+50.00	557.6
"11-SD-8E"	Rt	Sta 562+84.00 TO Sta 567+50.00	1,044.3
		TOTAL	1,601.9

ROADWAY EXCAVATION (TYPE Z-2) (AERIALLY DEPOSITED LEAD)

LINE	STATION	SIDE	VOLUME (CY)
"11-SD-8R"	Sta 507+70.00 TO Sta 555+00.00	MEDIAN	933.78
"R1WR"	Sta 509+77.00 TO Sta 516+68.92	Lt	196.34
"11-SD-8L"	Sta 516+72.00 TO Sta 520+35.00	Lt	80.62
"8R1"	Sta 562+03.00 TO Sta 565+73.00	Lt	10.28
"11-SD-8L"	Sta 520+35.00 TO Sta 539+58.00	Lt	427.33
"11-SD-8R"	Sta 516+70.00 TO Sta 549+11.00	MEDIAN**	222.21
"WR2"	Sta 499+79.25 TO Sta 501+29.25	*	2.83
"WR2"	Sta 500+43.89 TO Sta 501+54.03	*	2.08
"R1WR"	Sta 507+70.00 TO Sta 510+45.00	*	5.19
"11-SD-8R"	Sta 499+79.25 TO Sta 505+41.75	*	10.62
"11-SD-8R"	Sta 507+24.53 TO Sta 511+62.03	*	8.26
"11-SD-8R"	Sta 527+36.56 TO Sta 531+74.00	*	8.26
"11-SD-8R"	Sta 541+02.64 TO Sta 542+08.89	*	2.01
"11-SD-8L"	Sta 539+68.00 TO Sta 540+95.59	*	2.41
"8R1"	Sta 565+83.00 TO Sta 567+07.00	*	2.34
		TOTAL	1,914.56

* EXCAVATION FOR VEGETATION CONTROL
** EXCAVATION AT DRAINAGE INLETS

CRACK TREATMENT

LINE	LOCATION	STATION	LENGTH *LNMI
"11-SD-8L"	WB INSIDE SHOULDER	Sta 519+00.00 TO Sta 551+90.00	0.62
		TOTAL	0.62

*LNMI = LANE MILES

GRIND EXISTING CONCRETE PAVEMENT

LINE	SIDE		STATION	AREA (SQYD)
	Lt	Rt		
"11-SD-8R"		X	Sta 507+38.00 TO Sta 555+00.00	1,587
"11-SD-8R"	X	X	Sta 555+00.00 TO Sta 558+09.36	206
"11-SD-8E"	X	X	Sta 558+09.36 TO Sta 565+18.00	472
			TOTAL	2,265

PAVEMENT STRUCTURE

LOCATION				JOINTED PLAIN CONCRETE PAVEMENT	HOT MIX ASPHALT (TYPE A)					CLASS 2 AB	
					SHOULDER (0.20')	SHOULDER (0.25')	MVP (0.30')	SIDE DITCH	UNDER CB	SHOULDER	MVP (1.0')
LINE	STATION	SIDE Lt	SIDE Rt	(CY)	(TON)	(TON)	(TON)	(TON)	(TON)	(CY)	(CY)
"11-SD-8R"	Sta 507+70.00 to Sta 558+09.36	X	X	1,383.30		806.50			23.70	1030.45	
"11-SD-8L"	Sta 516+72.00 to Sta 558+37.71	X	X	144.40		100.41	17.33	20.18	7.50	104.29	18.78
"11-SD-8E"	Sta 558+09.36 to Sta 565+18.00	X	X	519.67		288.71				375.32	
"11-SD-8E"	Sta 562+46.00 to Sta 567+50.00	X			79.52						
"11-SD-8E"	Sta 562+84.00 to Sta 567+50.00		X		148.77						
"8R1"	Sta 562+03.00 to Sta 565+73.00	X							13.70		
"R1WR"	Sta 509+77.00 TO Sta 516+68.92	X	X					38.42	17.48		
			SUBTOTAL	2,047.37	228.29	1,195.62	17.33	58.60	62.38	1,510.06	18.78
			TOTAL	2,047.37	1,562.22					1,528.84	

5

CHAIN LINK FENCE

LINE	SIDE	STATION	TYPE CL-6 (LF)	REMOVE (LF)
"11-SD-8L"	Lt	Sta 508+25.60 TO Sta 509+57.50	303.00	
"11-SD-8L"	Rt	Sta 519+88.00 TO Sta 526+28.00	640.00	640.00
		TOTAL	943.00	640.00

CLEARING AND GRUBBING

STATION	AREA (ACRE)
507+38.00 "11-SD-8R" TO 567+50.00 "11-SD-8E"	0.26
TOTAL	0.26

REMOVE CRASH CUSHION

STATION	EA
Sta 511+55.00 "R1WR" LINE	1
TOTAL	1

SUMMARY OF QUANTITIES

Q-1

STATE OF CALIFORNIA - DEPARTMENT OF TRANSPORTATION
Caltrans
TRAFFIC PROJECT DEVELOPMENT

FUNCTIONAL SUPERVISOR: RICHARD ESTRADA
CALCULATED-DESIGNED BY: EVANGELINA PALMA
CHECKED BY: JOHAN PULGARIN
REVISED BY
DATE REVISED

LAST REVISION 03-23-15
DATE PLOTTED => 23-MAR-2015
TIME PLOTTED => 13:57

Dist	COUNTY	ROUTE	POST MILES TOTAL PROJECT	SHEET No.	TOTAL SHEETS
11	SD	8	6.9/8.2	80	150

REGISTERED CIVIL ENGINEER 12-10-14 DATE

12-15-14
PLANS APPROVAL DATE

REGISTERED PROFESSIONAL ENGINEER JOHAN PULGARIN No. C76894 Exp. 12-31-16 CIVIL STATE OF CALIFORNIA

THE STATE OF CALIFORNIA OR ITS OFFICERS OR AGENTS SHALL NOT BE RESPONSIBLE FOR THE ACCURACY OR COMPLETENESS OF SCANNED COPIES OF THIS PLAN SHEET.

5 **REPLACED PER ADDENDUM No. 5 DATED MARCH 24, 2015**

DIKE QUANTITIES

LOCATION		PLACE HMA DIKE			MINOR HMA	REMOVE ASPHALT CONCRETE DIKE
LINE	STATION	(TYPE C) (LF)	(TYPE E) (LF)	(TYPE F) (LF)	TON	LF
"11-SD-8R"	Sta 515+56.00 TO Sta 558+00.00					4,244.00
"11-SD-8R"	Sta 527+36.56 TO Sta 531+74.00	124.94		312.50	5.06	437.44
"11-SD-8R"	Sta 541+02.64 TO Sta 542+08.89	106.25			0.80	106.25
"WR2"	Sta 500+43.89 TO Sta 501+54.03	110.14			0.80	110.14
"R1WR"	Sta 509+77.00 TO Sta 511+25.00					148.00
11-SD-8L"	Sta 520+35.50 TO Sta 542+36.98					2,201.48
11-SD-8L"	Sta 535+70.00 TO Sta 538+30.00					260.00
11-SD-8L"	Sta 539+68.00 TO Sta 542+36.98	127.59	141.39		4.70	
"8R1"	Sta 562+03.00 TO Sta 567+07.00					504.00
"8R1"	Sta 565+83.00 TO Sta 567+07.00	124.00			0.94	
	TOTAL	592.92	141.39	312.50	12.30	8,011.31

ALTERNATIVE CRASH CUSHION SYSTEM

LINE	SIDE		STATION	EA
	L+	R+		
"R1WR"		X	Sta 512+18.00	1
"11-SD-8L"		X	Sta 537+73.00	1
			TOTAL	2

JOINT SEAL (SILICONE)

LINE	SIDE		STATION	TRANSVERSE JOINT
	L+	R+		LF
"11-SD-8R"	X		Sta 507+70.00 TO Sta 555+00.00	2,702.86
"11-SD-8R"	X		Sta 555+00.00 TO Sta 558+09.36	243.07
"11-SD-8E"	X	X	Sta 558+09.36 TO Sta 565+18.00	1,113.58
"11-SD-8L"		X	Sta 555+28.28 TO Sta 558+37.71	309.43
			TOTAL	4,368.94

IRRIGATION CONDUIT

SHEET No.	LOCATION		SIDE		Exist Irr CONDUIT	EXTENSION CONNECTION TYPE		(*) PLASTIC PIPE (SUPPLY LINE)	(N) ELECTRICAL CONDUIT FOR CNC	CORRUGATED HIGH DENSITY POLYETHYLENE PIPE		
										CONDUIT SIZE (INCH)		
	LINE	STATION	L+	R+	SIZE (INCH)	CB	OL	SIZE (INCH)	SIZE (INCH)	8"	10"	12"
										LENGTH (LF)		
L-3	"11-SD-8L"	537+36	X	-	8	-	X	3	-	-	2	-
L-5	"11-SD-8E"	562+06	X	-	8	-	X	3	-	-	2	-
									TOTAL		4	

(N) - NOT A SEPARATE PAY ITEM, FOR INFORMATION ONLY
* - FOR QUANTITIES SEE IRRIGATION QUANTITY SHEETS
X - DENOTES REQUIREMENT

ABBREVIATIONS:
CB - COUPLING BAND
OL - OVERLAP

ISOLATION JOINT SEAL (SILICONE)

LINE	SIDE		STATION	ISOLATION JOINT
	L+	R+		LF
"11-SD-8R"	X		Sta 507+70.00 TO Sta 555+00.00	4,730.00
"11-SD-8R"	X		Sta 555+00.00 TO Sta 558+09.36	309.36
"11-SD-8E"	X	X	Sta 558+09.36 TO Sta 565+18.00	1,417.28
"11-SD-8L"		X	Sta 555+28.28 TO Sta 558+37.71	309.43
			TOTAL	6,766.07

MINOR CONCRETE (MINOR STRUCTURE)

LINE	STATION	VOLUME (CY)	ANCHOR BLOCK
"WR2"	Sta 501+54.03	3.59	Mod-1
"WR2"	Sta 501+29.25	4.06	Mod-2
"11-SD-8R"	Sta 505+41.75	0.69	Mod-3
"11-SD-8R"	Sta 507+24.53	1.61	Mod-4
"11-SD-8R"	Sta 542+08.89	0.77	Mod-6
"R1WR"	Sta 510+45.00	3.37	Mod-5
"11-SD-8L"	Sta 539+58.00	3.37	Mod-5
"8R1"	Sta 565+73.00	3.37	Mod-5
	TOTAL	20.83*	

*SEE DRAINAGE QUANTITY SHEET DQ-1 FOR ADDITIONAL MINOR CONCRETE (MINOR STRUCTURE)

16" CIDH CONCRETE PILING

STATION	LENGTH (LF)
Sta 513+50.00 TO Sta 517+65.00 "11-SD-8R" LINE	682.50
Sta 525+50.00 TO Sta 531+00.00 "11-SD-8R" LINE	893.75
Sta 541+80.00 TO Sta 545+55.00 "11-SD-8R" LINE	617.50
TOTAL	2,193.75

REMOVE CONCRETE CURB

LINE	STATION	SIDE	DESCRIPTION	LENGTH (LF)
"R1WR"	Sta 507+70.00 TO 510+38.00	R+	CURB	268
			TOTAL	268

DRILL AND BOND

LOCATION		DOWEL BAR
LINE	STATION	EA
"11-SD-8L"	Sta 555+28.28	9
"11-SD-8E"	Sta 565+18.00	21
	TOTAL	30

5

CONCRETE (DITCH LINING)

LOCATION	CY	REMARKS
70.5' R+ Sta 542+08.89 "11-SD-8R"	0.2	GUTTER AT ANCHOR BLOCK (Mod-6)
TOTAL	0.2	

SUMMARY OF QUANTITIES

Q-2

STATE OF CALIFORNIA - DEPARTMENT OF TRANSPORTATION
TRAFFIC PROJECT DEVELOPMENT
Caltrans

FUNCTIONAL SUPERVISOR: RICHARD ESTRADA
CALCULATED-DESIGNED BY: EVANGELINA PALMA
CHECKED BY: JOHAN PULGARIN
REVISED BY
DATE REVISED

LAST REVISION 03-23-15
DATE PLOTTED => 23-MAR-2015
TIME PLOTTED => 13:57