Dist	COUNTY	ROUTE	POST MILES TOTAL PROJECT	SHEET No.	TOTAL SHEETS
11	SD	805	5.8/13.0	101	216

REGISTERED CIVIL ENGINEER 02-14-13 DATE

02-25-13
PLANS APPROVAL DATE

REGISTERED PROFESSIONAL ENGINEER
WILLIAM MICHAEL NICHOLS
No. C74525
Exp. 12-31-13
CIVIL
STATE OF CALIFORNIA

THE STATE OF CALIFORNIA OR ITS OFFICERS OR AGENTS SHALL NOT BE RESPONSIBLE FOR THE ACCURACY OR COMPLETENESS OF SCANNED COPIES OF THIS PLAN SHEET.

NOTES:

1. EXACT LOCATION OF CONSTRUCTION AREA SIGNS SHALL BE DETERMINED BY THE ENGINEER.
2. FEDERAL MANUAL ON UNIFORM TRAFFIC CONTROL DEVICES (MUTCD) SIGN CODES ARE SHOWN UNLESS DESIGNATED BY (CA), INDICATING CALIFORNIA MUTCD.
3. EXISTING UTILITIES ARE NOT SHOWN ON THESE PLAN SHEETS. THE CONTRACTOR SHALL VERIFY LOCATIONS OF EXISTING UTILITIES AND ADJUST THE FIELD LOCATION OF SIGN POSTS IN CONSULTATION WITH THE ENGINEER.

LEGEND:

[X] = CONSTRUCTION AREA SIGNS

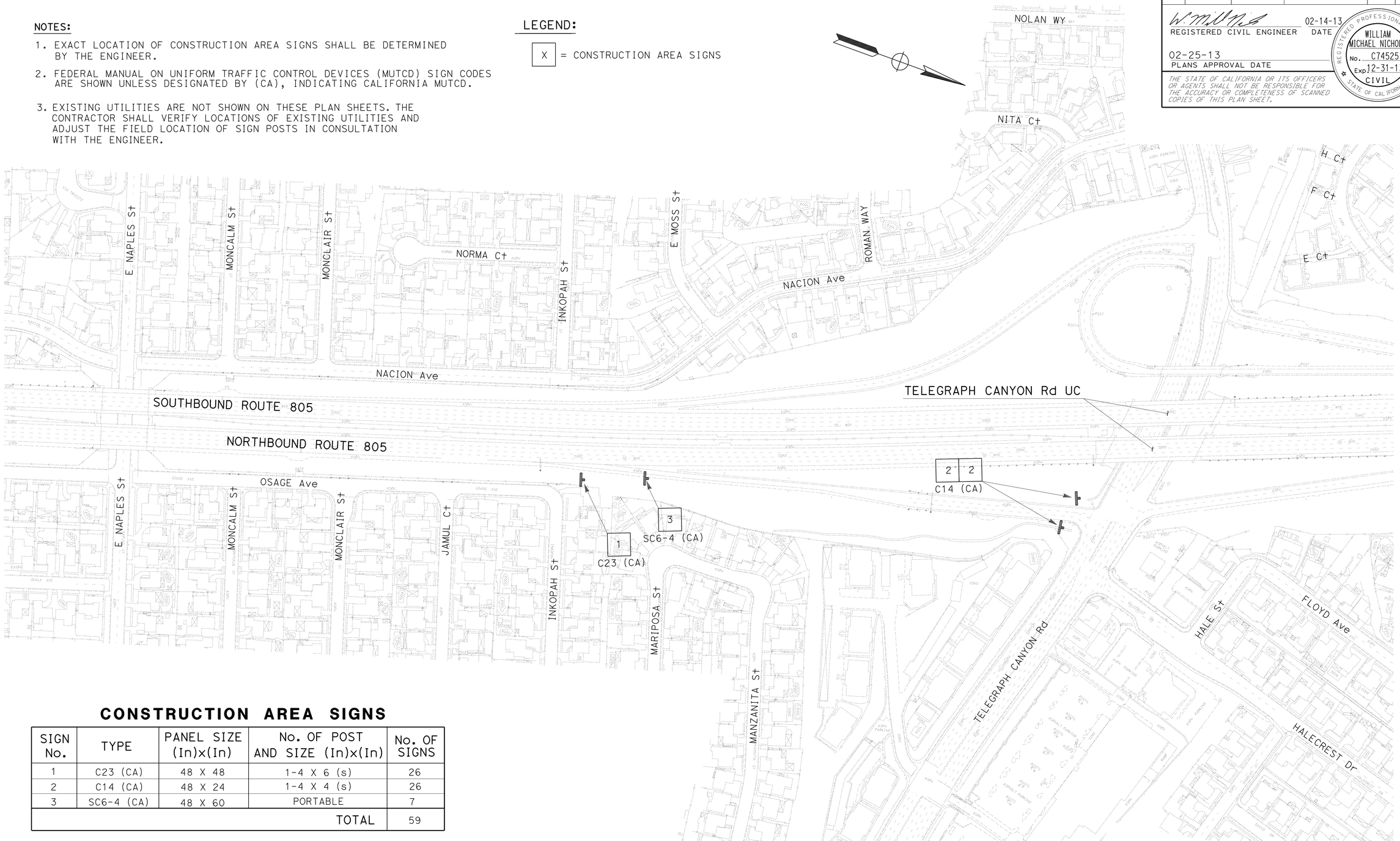

CONSTRUCTION AREA SIGNS

SIGN No.	TYPE	PANEL SIZE (In)x(In)	No. OF POST AND SIZE (In)x(In)	No. OF SIGNS
1	C23 (CA)	48 X 48	1-4 X 6 (s)	26
2	C14 (CA)	48 X 24	1-4 X 4 (s)	26
3	SC6-4 (CA)	48 X 60	PORTABLE	7
			TOTAL	59

(s) DENOTES STATIONARY MOUNTED SIGN

APPROVED FOR CONSTRUCTION AREA SIGN WORK ONLY

CONSTRUCTION AREA SIGNS

LOCATION 1

NO SCALE

CS-1

STATE OF CALIFORNIA - DEPARTMENT OF TRANSPORTATION
Caltrans®
DESIGN
FUNCTIONAL SUPERVISOR: HARWELL M. ONTOY
CALCULATED-DESIGNED BY: TONYA CARTER
CHECKED BY: RYAN CHAO
REVISED BY
DATE REVISED

LAST REVISION 02-19-13
DATE PLOTTED => 28-FEB-2013
TIME PLOTTED => 15:40

Dist	COUNTY	ROUTE	POST MILES TOTAL PROJECT	SHEET No.	TOTAL SHEETS
11	SD	805	5.8/13.0	102	216

REGISTERED CIVIL ENGINEER 02-14-13 DATE

02-25-13
PLANS APPROVAL DATE

REGISTERED PROFESSIONAL ENGINEER
WILLIAM MICHAEL NICHOLS
No. C74525
Exp. 12-31-13
CIVIL
STATE OF CALIFORNIA

THE STATE OF CALIFORNIA OR ITS OFFICERS OR AGENTS SHALL NOT BE RESPONSIBLE FOR THE ACCURACY OR COMPLETENESS OF SCANNED COPIES OF THIS PLAN SHEET.

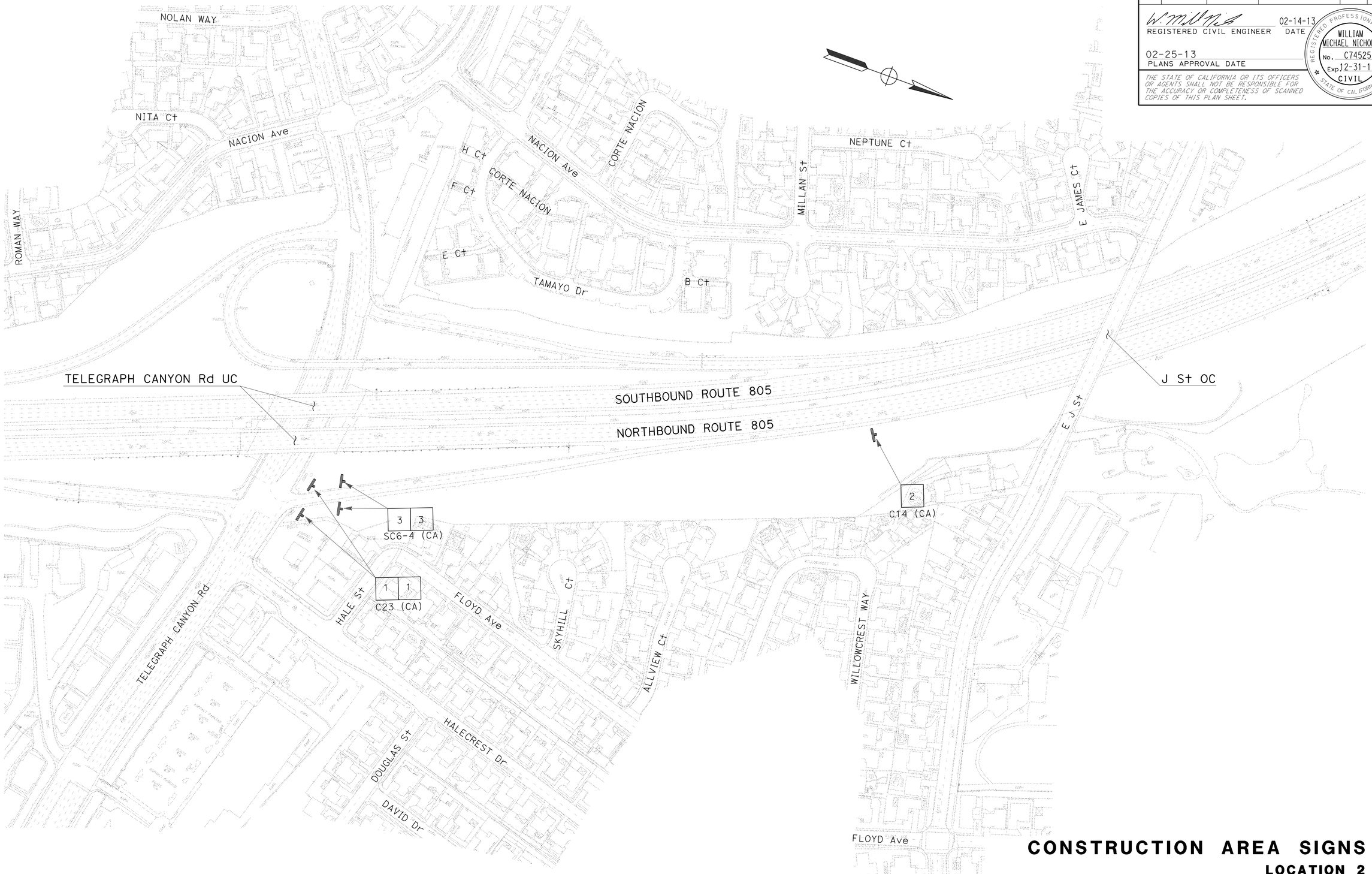

APPROVED FOR CONSTRUCTION AREA SIGN WORK ONLY

CONSTRUCTION AREA SIGNS

LOCATION 2

NO SCALE

CS-2

STATE OF CALIFORNIA - DEPARTMENT OF TRANSPORTATION
Caltrans
DESIGN

FUNCTIONAL SUPERVISOR: HARWELL M. ONTOY
CALCULATED-DESIGNED BY: TONYA CARTER
CHECKED BY: RYAN CHAO
REVISED BY
DATE REVISED

LAST REVISION 02-19-13
DATE PLOTTED => 28-FEB-2013
TIME PLOTTED => 15:40

Dist	COUNTY	ROUTE	POST MILES TOTAL PROJECT	SHEET No.	TOTAL SHEETS
11	SD	805	5.8/13.0	103	216

REGISTERED CIVIL ENGINEER 02-14-13 DATE

02-25-13
PLANS APPROVAL DATE

REGISTERED PROFESSIONAL ENGINEER
WILLIAM MICHAEL NICHOLS
No. C74525
Exp. 12-31-13
CIVIL
STATE OF CALIFORNIA

THE STATE OF CALIFORNIA OR ITS OFFICERS OR AGENTS SHALL NOT BE RESPONSIBLE FOR THE ACCURACY OR COMPLETENESS OF SCANNED COPIES OF THIS PLAN SHEET.

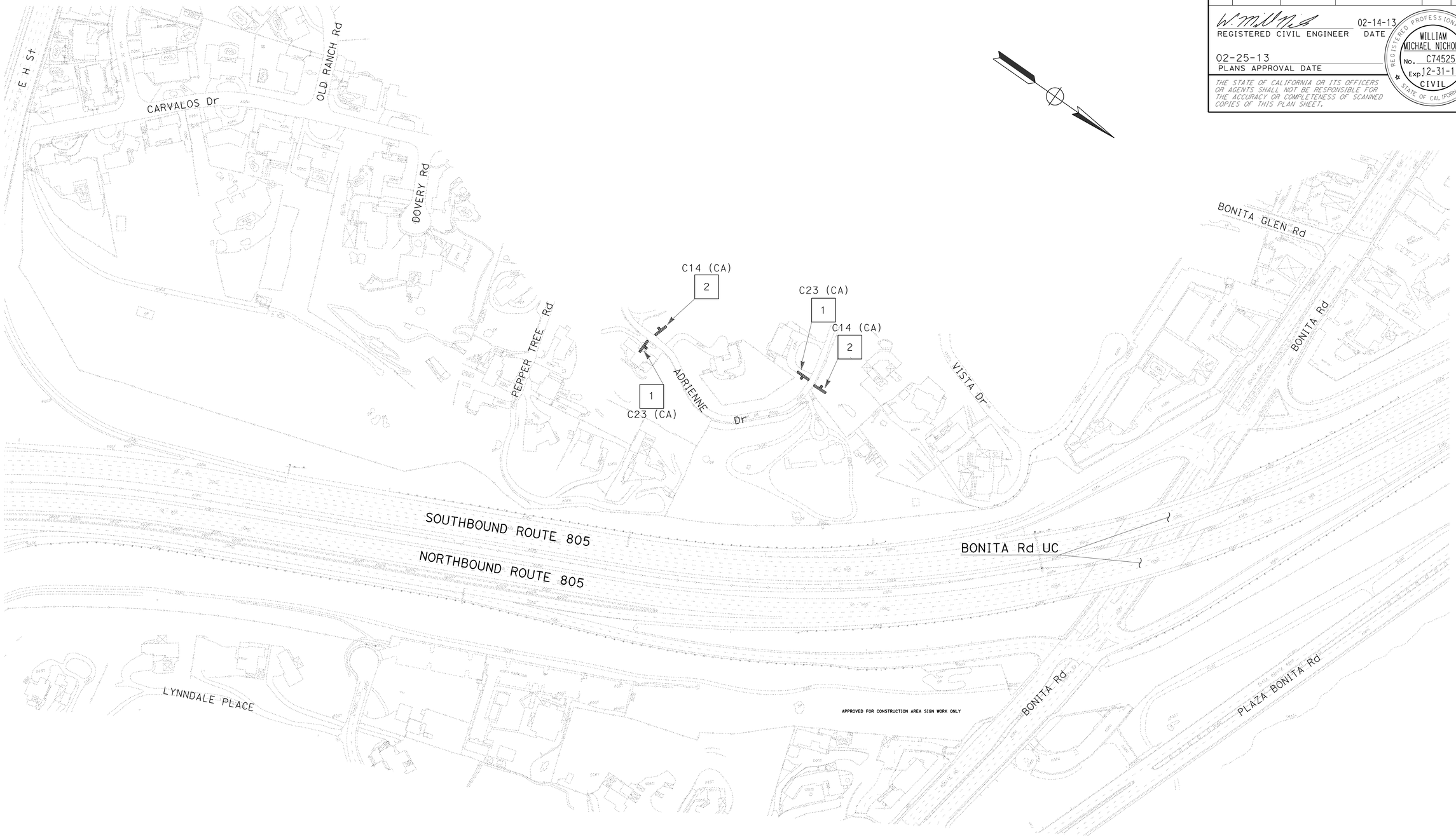

APPROVED FOR CONSTRUCTION AREA SIGN WORK ONLY

CONSTRUCTION AREA SIGNS

LOCATION 3

NO SCALE

CS-3

STATE OF CALIFORNIA - DEPARTMENT OF TRANSPORTATION
Caltrans
DESIGN

FUNCTIONAL SUPERVISOR: HARWELL M. ONTOY
CALCULATED-DESIGNED BY: TONYA CARTER
CHECKED BY: RYAN CHAO
REVISED BY
DATE REVISED

LAST REVISION 02-19-13
DATE PLOTTED => 28-FEB-2013
TIME PLOTTED => 15:40

Dist	COUNTY	ROUTE	POST MILES TOTAL PROJECT	SHEET No.	TOTAL SHEETS
11	SD	805	5.8/13.0	104	216

REGISTERED CIVIL ENGINEER 02-14-13 DATE

02-25-13
PLANS APPROVAL DATE

REGISTERED PROFESSIONAL ENGINEER WILLIAM MICHAEL NICHOLS No. C74525 Exp. 12-31-13 CIVIL STATE OF CALIFORNIA

THE STATE OF CALIFORNIA OR ITS OFFICERS OR AGENTS SHALL NOT BE RESPONSIBLE FOR THE ACCURACY OR COMPLETENESS OF SCANNED COPIES OF THIS PLAN SHEET.

CONSTRUCTION AREA SIGNS

LOCATION 4

NO SCALE

CS-4

APPROVED FOR CONSTRUCTION AREA SIGN WORK ONLY

STATE OF CALIFORNIA - DEPARTMENT OF TRANSPORTATION
Caltrans
DESIGN

FUNCTIONAL SUPERVISOR: HARWELL M. ONTOY

CALCULATED-DESIGNED BY: TONYA CARTER
CHECKED BY: RYAN CHAO

REVISED BY
DATE REVISED

LAST REVISION 02-19-13
DATE PLOTTED => 28-FEB-2013
TIME PLOTTED => 15:40

Dist	COUNTY	ROUTE	POST MILES TOTAL PROJECT	SHEET No.	TOTAL SHEETS
11	SD	805	5.8/13.0	105	216

REGISTERED CIVIL ENGINEER 02-14-13 DATE

02-25-13
PLANS APPROVAL DATE

REGISTERED PROFESSIONAL ENGINEER
WILLIAM MICHAEL NICHOLS
No. C74525
Exp. 12-31-13
CIVIL
STATE OF CALIFORNIA

THE STATE OF CALIFORNIA OR ITS OFFICERS OR AGENTS SHALL NOT BE RESPONSIBLE FOR THE ACCURACY OR COMPLETENESS OF SCANNED COPIES OF THIS PLAN SHEET.

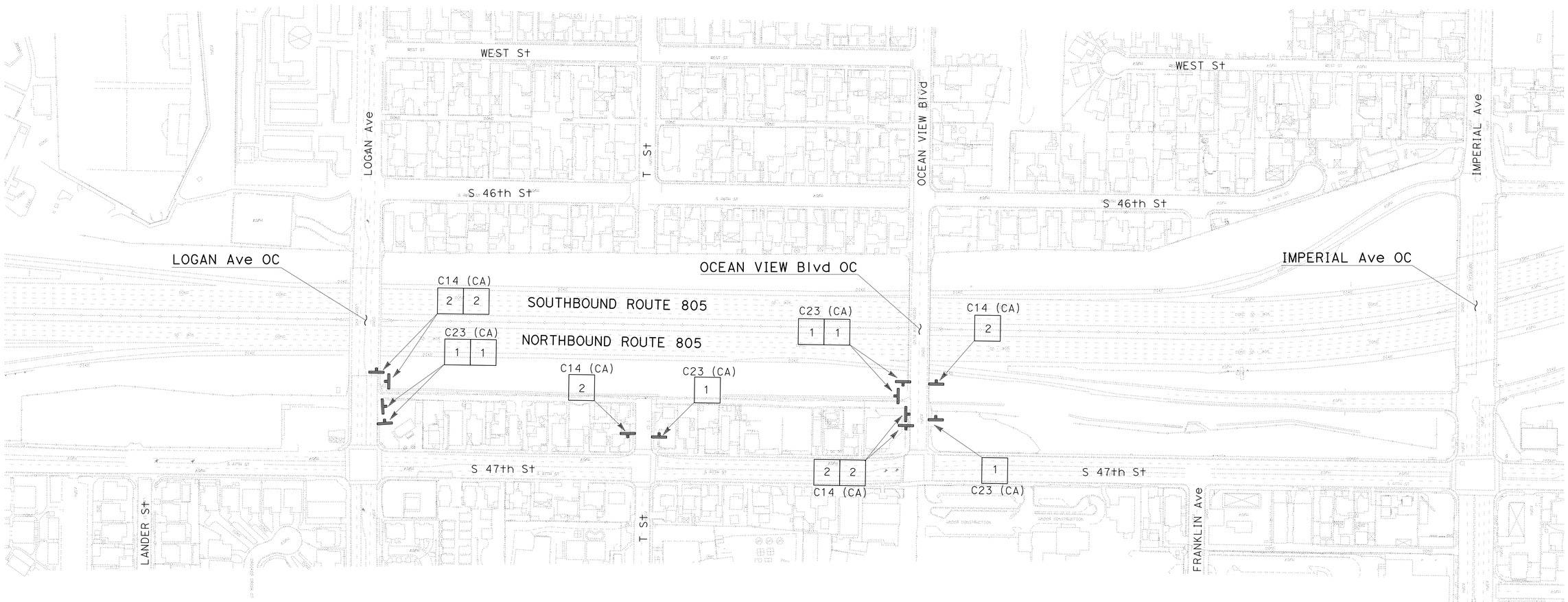

CONSTRUCTION AREA SIGNS

LOCATION 5

NO SCALE

CS-5

APPROVED FOR CONSTRUCTION AREA SIGN WORK ONLY

STATE OF CALIFORNIA - DEPARTMENT OF TRANSPORTATION
Caltrans®
DESIGN

FUNCTIONAL SUPERVISOR: HARWELL M. ONTOY
CALCULATED-DESIGNED BY: TONYA CARTER
CHECKED BY: RYAN CHAO
REVISED BY
DATE REVISED

LAST REVISION 02-19-13
DATE PLOTTED => 28-FEB-2013
TIME PLOTTED => 15:40

Dist	COUNTY	ROUTE	POST MILES TOTAL PROJECT	SHEET No.	TOTAL SHEETS
11	SD	805	5.8/13.0	106	216

REGISTERED CIVIL ENGINEER 02-14-13 DATE

02-25-13
PLANS APPROVAL DATE

REGISTERED PROFESSIONAL ENGINEER WILLIAM MICHAEL NICHOLS No. C74525 Exp. 12-31-13 CIVIL STATE OF CALIFORNIA

THE STATE OF CALIFORNIA OR ITS OFFICERS OR AGENTS SHALL NOT BE RESPONSIBLE FOR THE ACCURACY OR COMPLETENESS OF SCANNED COPIES OF THIS PLAN SHEET.

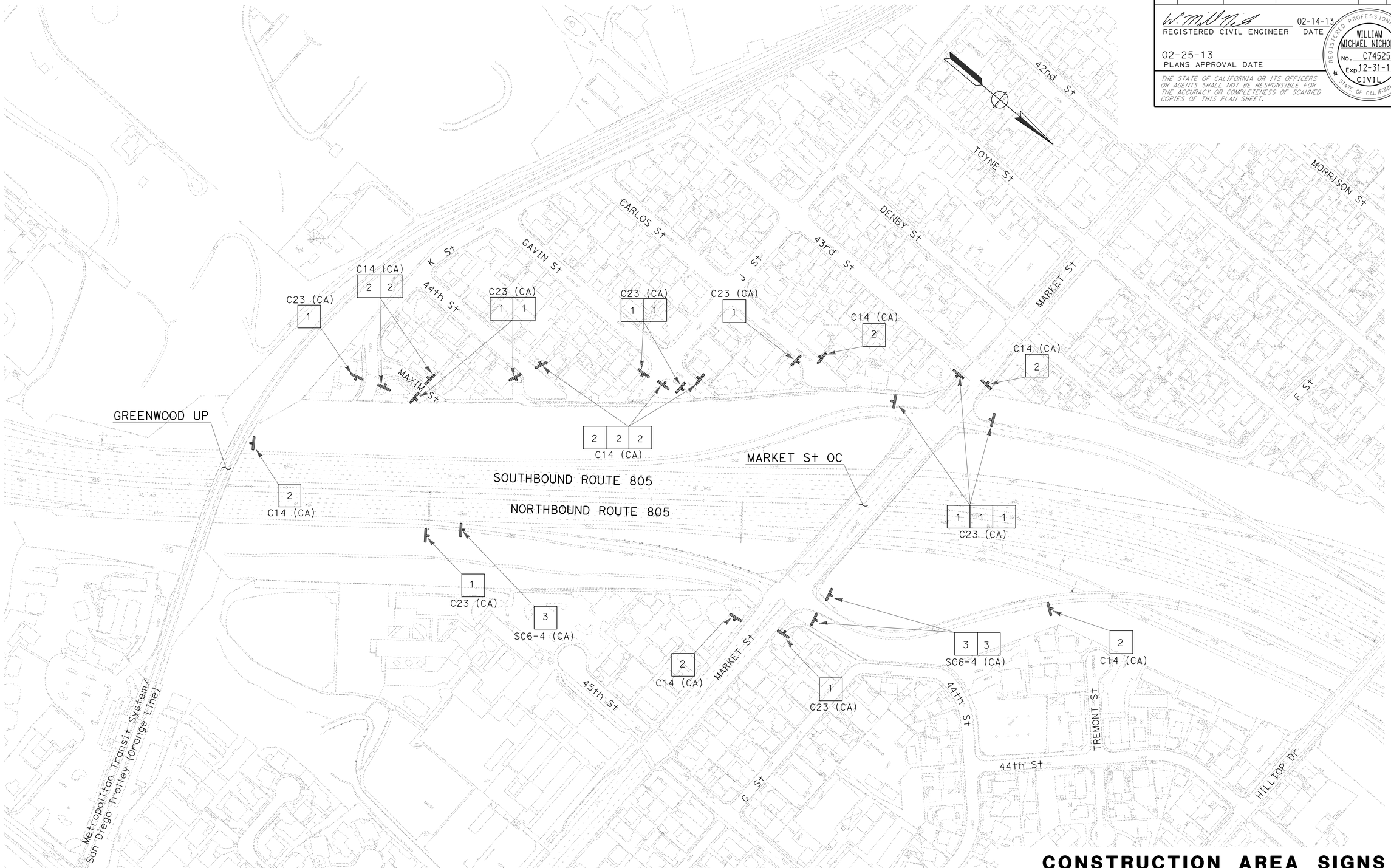

CONSTRUCTION AREA SIGNS

LOCATIONS 6, 7 & 8

APPROVED FOR CONSTRUCTION AREA SIGN WORK ONLY

NO SCALE

CS-6

STATE OF CALIFORNIA - DEPARTMENT OF TRANSPORTATION

Caltrans® DESIGN

FUNCTIONAL SUPERVISOR: HARWELL M. ONTOY

CALCULATED-DESIGNED BY: TONYA CARTER

CHECKED BY: RYAN CHAO

REVISED BY

DATE REVISED

LAST REVISION 02-19-13

DATE PLOTTED => 28-FEB-2013

TIME PLOTTED => 15:40

Dist	COUNTY	ROUTE	POST MILES TOTAL PROJECT	SHEET No.	TOTAL SHEETS
11	SD	805	5.8/13.0	107	216

REGISTERED CIVIL ENGINEER 02-14-13 DATE

02-25-13
PLANS APPROVAL DATE

REGISTERED PROFESSIONAL ENGINEER WILLIAM MICHAEL NICHOLS No. C74525 Exp. 12-31-13 CIVIL STATE OF CALIFORNIA

THE STATE OF CALIFORNIA OR ITS OFFICERS OR AGENTS SHALL NOT BE RESPONSIBLE FOR THE ACCURACY OR COMPLETENESS OF SCANNED COPIES OF THIS PLAN SHEET.

TEMPORARY FENCE (TYPE CL-6, SLATTED)

SHEET NUMBER	PARCEL NUMBER	LINE	L+/R+	STATION	LENGTH LF
C-1	34890	SW340R	R+	10+07.6 TO 11+12.5	103.4
C-2	34891	SW340R	R+	11+12.5 TO 12+00.2	87.7
C-3	34892	SW340R	R+	12+00.2 TO 12+68.4	68.2
C-4	34893	SW340R	R+	12+68.4 TO 13+33.2	64.8
C-5	34894	SW340R	R+	13+33.2 TO 13+97.4	73.3
C-6	34895	SW340R	R+	13+97.4 TO 14+75.9	89.9
C-7	34902	SW358R	R+	10+03.4 TO 11+08.2	110.1
C-8	34903	SW358R	R+	11+08.2 TO 11+58.1	49.9
C-9	34904	SW358R	R+	11+58.1 TO 12+23.0	63.6
C-9	34904	SW358R	R+	12+39.2 TO 12+44.9	5.7
C-9	34904	SW358R	R+	12+64.3 TO 12+83.0	18.7
C-10	34907	SW362R	R+	10+00.0 TO 10+87.3	101.8
C-11	34908	SW362R	R+	10+87.3 TO 12+08.9	125.7
C-12	34909	SW362R	R+	12+08.9 TO 13+65.2	159.7
C-13	34910	SW362R/SW366R	R+	13+65.2 TO 10+50.4	57.3
C-14	34911	SW366R	R+	10+50.4 TO 11+47.5	105.3
C-15	34912	SW366R	R+	11+47.5 TO 12+26.4	83.3
C-16/C-17	34928	A	L+	429+27.1 TO 432+57.0	366.6
C-18/C-19	34931	SW581L	L+	10+95.0 TO 12+62.7	166.4
C-20	34930	SW581L	L+	12+62.7 TO 12+65.5	2.8
C-20	34930	SW581L	L+	12+74.8 TO 14+00.8	130.0
C-21/C-22	34929	SW581L/P4	L+	14+21.1 TO 584+29.1	216.8
C-23	34886	SW707L	L+	10+02.3 TO 11+42.1	146.0
C-24	34888	SW707L	L+	11+92.3 TO 13+46.0	153.7
C-27/C-28/C-29	34914	SW708R	R+	13+65.4 TO 16+44.0	278.6
				TOTAL	2,829.3

REMOVE FENCE

SHEET NUMBER	LINE	L+/R+	STATION	LENGTH LF	REMARKS
L-1	A/T4	R+	337+55.6 TO 344+90.3	677.6	TYPE CL-6
L-2	T2	R+	356+33.3 TO 359+12.2	279.7	TYPE CL-6
L-2	T2/A	R+	361+09.6 TO 366+98.9	594.8	TYPE CL-6
L-4	P4	R+	575+25.2 TO 584+73.5	1096.8	TYPE CL-6
L-5	A	R+	656+32.0 TO 669+05.4	1268.7	TYPE CL-6, SALVAGE 3 GATES
L-6/L-7/L-8	A/M3	L+	699+37.6 TO 716+91.2	1741.3	TYPE CL-6, SALVAGE 4 GATES
L-7	M2	R+	709+04.9 TO 712+16.1	374.2	TYPE CL-6
L-8	M1	R+	713+81.2 TO 717+59.0	448.9	TYPE CL-6
C-2	SW340R	L+	11+08.4 TO 12+00.5	92.5	WOOD
C-5	SW340R	R+	13+33.4 TO 13+50.2	16.6	WOOD/FIBERGLASS
C-5	SW340R	R+	13+76.8 TO 13+98.1	21.7	WOOD/FIBERGLASS
C-6	SW340R	R+	13+98.7 TO 14+76.7	78.0	WOOD (H=4.5′-6′)
C-6	SW340R	R+	14+71.7 TO 14+81.7	10.0	TYPE (CL-4)
C-7	SW358R	R+	10+00.0 TO 10+30.0	30.0	WOOD (H=6′)
C-11	SW362R	R+	10+84.8 TO 12+10.2	125.5	WOOD (H=6′)
C-12	SW362R	R+	12+10.2 TO 13+68.8	158.6	TYPE CL-4
C-13	SW366R	R+	10+00.0 TO 10+47.5	47.2	TYPE CL-4 WITH WOOD SLATS
C-14	SW366R	R+	10+47.9 TO 11+47.7	99.8	TYPE CL-4
C-16/C-17	SW431L	L+	10+00.0 TO 12+83.5	284.1	WOOD/ WIRE FABRIC (H=4.5′)
C-22	P4	L+	584+25.3 TO 584+29.2	3.9	WOOD (H=6′)
			TOTAL	7,449.9	

TEMPORARY FENCE (TYPE CL-6)

SHEET NUMBER	LINE	L+/R+	STATION	LENGTH LF
L-4	P4	L+	577+87.3 TO 578+80.8	130.3
L-4	P4	L+	581+80.3 TO 582+13.1	31.7
L-5	A	R+	656+40.0 TO 669+05.4	1,269.0
L-6	A	L+	700+88.2 TO 701+39.7	51.6
L-7/L-8	A/M3	L+	702+95.9 TO 716+60.6	1,362.0
L-8	M1	R+	713+75.1 TO 715+88.0	234.8
			TOTAL	3,079.4

TYPE III BARRICADE

SHEET NUMBER	LINE	L+/R+	STATION	QUANTITY EACH
L-4	P4	L+	578+41	3
L-4	P4	L+	582+00	3
L-7	A	L+	703+15	4
L-8	M3	L+	714+30	4
			TOTAL	14

SUMMARY OF QUANTITIES
Q-1

STATE OF CALIFORNIA - DEPARTMENT OF TRANSPORTATION
Caltrans®
DESIGN

FUNCTIONAL SUPERVISOR: HARWELL M. ONTOY
CALCULATED-DESIGNED BY: WILLIAM MICHAEL NICHOLS
CHECKED BY: MAY ALSHEIKH
REVISED BY
DATE REVISED

LAST REVISION 02-19-13
DATE PLOTTED => 28-FEB-2013
TIME PLOTTED => 15:41

Dist	COUNTY	ROUTE	POST MILES TOTAL PROJECT	SHEET No.	TOTAL SHEETS
11	SD	805	5.8/13.0	108	216

REGISTERED CIVIL ENGINEER 02-14-13 DATE

02-25-13
PLANS APPROVAL DATE

REGISTERED PROFESSIONAL ENGINEER
WILLIAM MICHAEL NICHOLS
No. C74525
Exp. 12-31-13
CIVIL
STATE OF CALIFORNIA

THE STATE OF CALIFORNIA OR ITS OFFICERS OR AGENTS SHALL NOT BE RESPONSIBLE FOR THE ACCURACY OR COMPLETENESS OF SCANNED COPIES OF THIS PLAN SHEET.

RECONSTRUCT FENCE

SHEET NUMBER	LINE	L+/R+	STATION	LENGTH LF	REMARKS
C-2	SW340R	R+	11+08.4	8.0	WOOD W/METAL POST (H=6′)
C-2	SW340R	R+	12+00.5	8.0	WOOD W/METAL POST (H=6′)
C-5	SW340R	R+	13+98.8	8.0	WOOD (H=6′)
C-7	SW358R	R+	10+00.0	8.0	WOOD (H=6′)
C-7	SW358R	R+	11+17.4	8.0	CHAIN LINK (TYPE CL-4.5)
C-9	SW358R	R+	11+58.1	4.0	WOOD (H=4′)
C-10	SW362R	R+	10+84.8	2.0	WOOD (H=7.5′)
C-11	SW362R	R+	10+84.8	6.6	WOOD (H=6′)
C-12	SW362R	R+	12+10.2	3.0	WOOD (H=6′)
C-12	SW362R	R+	13+68.8	8.0	CHAIN LINK (TYPE CL-4 WITH WOOD SLATS)
C-13	SW366R	R+	10+47.5	5.5	CHAIN LINK (TYPE CL-4 WITH WOOD SLATS)
C-14	SW366R	R+	11+47.7	5.0	WOOD (H=5.5′)
C-16	SW431L	L+	10+00.0	14.0	WOOD (H=4.5′)
C-17	SW431L	L+	12+83.5	5.4	WOOD (H=4.5′)
C-19	SW581L	L+	12+62.7	2.0	CHAIN LINK (TYPE CL-6)
C-21	SW581L	L+	15+53.9	2.7	WIRE FABRIC (H=4′)
C-22	P4	L+	584+70.6 TO 584+33.2	4.0	WOOD (H=6′)
			TOTAL	102.2	

RESET ROADSIDE SIGN

SHEET NUMBER	LINE	L+/R+	STATION	QUANTITY EA
L-4	P4	L+	581+92.88	1
			TOTAL	1

RESET FENCE (VINYL)

SHEET NUMBER	LINE	L+/R+	STATION	LENGTH LF
C-4	SW340R	R+	13+33.2	8
			TOTAL	8

MASONRY BLOCK WALL (TYPE 1)

SHEET NUMBER	LINE	L+/R+	STATION	LENGTH LF (N)	AREA SQFT	REMARKS
C-3	SW340R	R+	12+00.5	3.3	19.8	HEIGHT=6′
C-3	SW340R	R+	12+68.2	3.3	19.8	HEIGHT=6′
				TOTAL	39.6	

RECONSTRUCT METAL BEAM GUARD RAILING

SHEET NUMBER	LINE	L+/R+	STATION	LENGTH LF
L-4	"P4"	L+	578+00.9 TO 578+65.4	64.5
L-7	"A"	L+	702+93.5 TO 703+53.5	60
			TOTAL	124.5

SUMMARY OF QUANTITIES
Q-2

STATE OF CALIFORNIA - DEPARTMENT OF TRANSPORTATION
Caltrans® DESIGN

FUNCTIONAL SUPERVISOR: HARWELL M. ONTOY
CALCULATED-DESIGNED BY: WILLIAM MICHAEL NICHOLS
CHECKED BY: MAY ALSHEIKH
REVISED BY
DATE REVISED

LAST REVISION 02-19-13
DATE PLOTTED => 28-FEB-2013
TIME PLOTTED => 15:41

Dist	COUNTY	ROUTE	POST MILES TOTAL PROJECT	SHEET No.	TOTAL SHEETS
11	SD	805	5.8/13.0	109	216

REGISTERED CIVIL ENGINEER 02-14-13 DATE

02-25-13
PLANS APPROVAL DATE

REGISTERED PROFESSIONAL ENGINEER WILLIAM MICHAEL NICHOLS No. C74525 Exp. 12-31-13 CIVIL STATE OF CALIFORNIA

THE STATE OF CALIFORNIA OR ITS OFFICERS OR AGENTS SHALL NOT BE RESPONSIBLE FOR THE ACCURACY OR COMPLETENESS OF SCANNED COPIES OF THIS PLAN SHEET.

REMOVE CONCRETE

SHEET NUMBER	LINE	L+/R+	STATION	QUANTITY CY	REMARKS
C-1	SW340R	R+	10+00.0 TO 10+15.7	0.5	Conc SLAB (+=0.42')
C-1	SW340R	R+	10+55.8 TO 11+04.8	0.6	RED BRICK PAVERS
C-3	SW340R	R+	12+00.5 TO 12+68.7	17.9	3.5' TO 6.0' MASONRY WALL (+=0.67')
C-3	SW340R	R+	12+36.8 TO 12+56.8	0.6	Conc SLAB (+=0.42)
C-3	SW340R	R+	12+56.8 TO 12+68.7	1.7	Conc SLAB (+=0.42)
C-3	SW340R	R+	12+56.8 TO 12+59.8	2.2	BARBEQUE ISLAND (+=0.67', H=3.5')
C-3	SW340R	R+	12+66.2 TO 12+68.7	0.5	MASONRY CABINET (T=0.67', H=3.5')
C-4	SW340R	R+	12+89.3 TO 12+95.2	0.2	BRICK PAVERS (+= 0.25')
C-4	SW340R	R+	12+95.2 TO 13+05.3	1.2	FOUNTAIN (+=1.0')
C-4	SW340R	R+	12+68.2 TO 13+33.2	7.3	4.5' MASONRY WALL (+=0.67')
C-5	SW340R	R+	13+33.2 TO 13+98.8	3.5	Conc SLAB (+= 0.42')
C-6	SW340R	R+	14+25.1 TO 14+69.4	1.4	Conc SLAB (+= 0.42')
C-6	SW340R	R+	14+25.1 TO 14+69.4	0.7	Conc CURB (AREA=0.403 SQFT)
C-7	SW358R	R+	10+39.2 TO 10+51.5	0.7	Conc PIER (20 EA)
C-9	SW358R	R+	12+64.0 TO 12+83.6	0.3	Conc SLAB (+=0.42')
C-11	SW362R	R+	10+85.2 TO 11+32.9	0.8	Conc SLAB (+=0.42')
C-11	SW362R	R+	11+58.3	0.1	2' DECORATIVE MASONRY WALL (H=1')
C-13	SW366R	R+	10+35.6 TO 10+46.3	1.4	Conc SLAB (+=0.42')
C-13	SW366R	R+	10+35.6	0.0	MASONRY WALL (H=0.75')
C-14	SW366R	R+	10+47.9 TO 10+62.9	0.2	Conc SLAB (+=0.42')
C-14	SW366R	R+	11+03.2 TO 11+17.2	0.7	Conc SLAB (+=0.42') & 6" Conc CURB
C-14	SW366R	R+	12+06.0 TO 12+23.1	0.1	Conc CURB (H=12")
C-14	SW366R	R+	10+96.2 TO 11+05.2	0.1	Conc CURB (H=12")
C-15	SW366R	R+		0.1	Conc SLAB (+=0.42')
C-18	SW581L	L+		0.8	Conc PAD (+=0.42')
			TOTAL	43.6 *	

+= THICKNESS

* FOR ADDITIONAL QUANTITIES, SEE DRAINAGE QUANTITIES

GATE

SHEET NUMBER	LINE	L+/R+	STATION	4' CHAIN LINK GATE (TYPE CL-6) EA	8' CHAIN LINK GATE (TYPE CL-6) EA	RESET GATE EA
L-5	A	R+	656+32.70	1	-	-
L-5	A	R+	662+89.32	1	-	-
L-5	A	R+	668+99.64	1	-	-
L-7	M3	L+	711+06.40	1	-	-
L-7	M2	R+	711+97.93	1	-	-
L-8	M3	L+	714+10.00	-	1	-
L-8	M1	R+	715+95.28	1	-	-
C-16	A	R+	429+64.11	-	-	1
			TOTAL	6	1	1

(N): NOT A SEPARATE PAY ITEM FOR INFORMATION ONLY

ROADWAY EXCAVATION

SW/ ACCESS Rd	LINE	STATION	STATION	ROADWAY EXCAVATION CY	EMBANKMENT (N) CY
AR1	T4	346+77.97	347+87.87	298	-
AR2	T4	343+60.67	348+85.14	75	1
SW340R	A/T4	338+10.25	342+89.74	500	179
AR1	T4	346+77.97	347+87.87	-	299
AR2	T4	343+60.67	348+85.14	1	88
AR3	T2	354+66.17	356+69.71	5	123
AR4	T2	355+64.68	355+98.43	1	1
SW358R	T2	356+33.83	359+12.87	454	3
AR3	T2	354+66.17	356+69.71	135	5
AR4	T2	355+64.68	355+98.43	1	1
SW362R	A	361+39.93	364+87.14	863	19
SW366R	A	364+87.39	366+98.36	981	1
SW431L	A	429+63.83	432+51.81	65	-
SW581L	P4	577+86.87	584+27.91	1,145	4
SW662	A	656+53.55	668+94.54	226	210
SW707L	A/M3	699+47.31	716+39.46	312	29
AR5	M2	711+71.19	711+79.50	1	-
AR6	M2	711+91.67	711+93.86	1	-
SW708R	A/M2	705+23.01	711+86.66	109	331
AR5	M2	711+71.19	711+79.50	-	1
AR6	M2	711+91.67	711+93.86	-	1
SW714	M1	713+85.12	715+87.44	42	1
AR7	M1	715+05.20	715+31.18	-	6
AR8	M1	715+31.18	715+55.85	14	-
AR7	M1	715+05.20	715+31.18	5	-
AR8	M1	715+31.18	715+55.85	-	10
			TOTAL	5,234	1,313

SUMMARY OF QUANTITIES
Q-3

STATE OF CALIFORNIA - DEPARTMENT OF TRANSPORTATION
Caltrans DESIGN

FUNCTIONAL SUPERVISOR: HARWELL M. ONTOY
CALCULATED-DESIGNED BY: WILLIAM MICHAEL NICHOLS
CHECKED BY: MAY ALSHEIKH
REVISED BY / DATE REVISED

LAST REVISION 02-19-13 | DATE PLOTTED => 28-FEB-2013 | TIME PLOTTED => 15:41

Dist	COUNTY	ROUTE	POST MILES TOTAL PROJECT	SHEET No.	TOTAL SHEETS
11	SD	805	5.8/13.0	110	216

REGISTERED CIVIL ENGINEER 02-14-13 DATE

02-25-13
PLANS APPROVAL DATE

REGISTERED PROFESSIONAL ENGINEER WILLIAM MICHAEL NICHOLS No. C74525 Exp. 12-31-13 CIVIL STATE OF CALIFORNIA

THE STATE OF CALIFORNIA OR ITS OFFICERS OR AGENTS SHALL NOT BE RESPONSIBLE FOR THE ACCURACY OR COMPLETENESS OF SCANNED COPIES OF THIS PLAN SHEET.

SOUND WALL

SOUND WALL NUMBER	SOUND WALL (MASONRY BLOCK)	STRUCTURAL CONCRETE, SOUND WALL	16" CIDH CONCRETE PILING (SOUND WALL)	ACCESS GATE (SOUND WALL)	TRANSPARENT SOUND WALL	ANTI-GRAFFITI COATING
	SQFT	CY	LF	EA	SQFT	SQFT
340R	-	-	-	-	4,914	2,318
358R	3,914	29.0	412.5	-	-	3,914
362R	4,752	37.3	440.0	-	-	4,752
366R	-	-	-	-	3,051	1,064
431L	-	-	-	-	3,181	-
581L	6,630	63.5	735.3	2	-	9,593
662R	16,630	122.4	1,700.8	2	-	33,260
707L	17,020	167.6	1067.8	4	-	34,040
708R	8,580	63.0	914.5	2	-	17,160
714R	2,162	23.0	171.0	-	-	4,324
TOTAL	59,688	505.8	5,441.9	10	11,146	110,425

CHAIN LINK FENCE (TYPE CL-6)

SHEET NUMBER	LINE	L+/R+	STATION	LENGTH
				LF
L-1	A	R+	337+55.6 TO 338+09.2	81.9
L-1	T4	R+	342+90.7 TO 344+90.3	199.8
L-4	P4	L+	575+25.2 TO 577+87.3	406.3
L-4	P4	L+	580+46.9 TO 580+46.9	3.2
L-4	P4	L+	578+80.6 TO 578+80.6	2.7
L-4	P4	L+	584+27.9 TO 584+73.5	54.1
L-5	A	R+	656+32.0 TO 669+05.4	1,291.2
L-6	A	L+	669+37.6 TO 669+46.2	9.5
L-7/L-8	M3	L+	711+00.8 TO 714+60.0	359.8
L-7	M2	R+	709+04.9 TO 712+26.9	372.2
L-8	M3	L+	716+39.3 TO 716+91.2	62.1
L-8	M1	R+	713+81.2 TO 717+59.0	449.0
			TOTAL	3,291.8

TREATED WOOD WASTE

METAL BEAM GUARD RAILING

SHEET NUMBER	LINE	L+/R+	STATION	LENGTH	POSTS/ BLOCKS	AREA	POST LENGTH	WEIGHT
				LF	EA	SQFT	LF	LB
L-4	A	L+	578+00.9 TO 578+65.4	63	10	0.45	7.00	1,091
L-4	A	L+	578+00.9 TO 578+65.4	63	10	0.45	1.17	182
L-7	A	L+	702+93.5 TO 703+53.5	51	8	0.45	7.00	874
L-7	A	L+	702+93.5 TO 703+53.5	51	8	0.45	1.17	146

FENCE

SHEET NUMBER	LINE	L+/R+	STATION	LENGTH	POSTS/ RAILS	AREA	HEIGHT	WEIGHT
				LF	EA	SQFT	LF	LB
C-2	SW340R	R+	11+08.42 TO 12+00.50	92	13	0.09	8.00	292
C-2	SW340R	R+	11+08.4	8	2	0.09	8.00	47
C-2	SW340R	R+	12+00.5	8	2	0.09	8.00	47
C-5	SW340R	R+	13+33.24 TO 13+50.24	17	3	0.09	8.00	73
C-5	SW340R	R+	13+76.84 TO 13+98.84	22	4	0.09	8.00	88
C-5	SW340R	R+	13+98.8	8	2	0.09	8.00	47
C-6	SW340R	R+	13+98.66 TO 14+76.66	78	11	0.09	8.00	251
C-7	SW358R	R+	10+00.00 TO 10+30.00	30	5	0.09	8.00	111
C-7	SW358R	R+	10+00.0	8	2	0.09	5.50	32
C-9	SW358R	R+	11+58.8	3	1	0.09	6.00	24
C-10	SW362R	R+	10+84.8	2	1	0.09	6.00	22
C-11	SW362R	R+	10+84.77 TO 12+10.18	125	17	0.09	8.00	390
C-12	SW362R	R+	12+10.2	2	1	0.09	8.00	29
C-14	SW366R	R+	11+47.7	5	2	0.09	8.00	47
C-16/C-17	SW431L	L+	10+00.00 TO 12+83.48	283	36	0.09	6.00	638
C-16/C-17	SW431L	L+	10+00.00 TO 12+83.48	283	2	0.06	-	1,081
C-16	SW431L	L+	10+00.00 TO 12+83.48	14	3	0.09	6.00	48
C-17	SW431L	L+	10+00.00 TO 12+83.48	283	1	0.06	-	584
C-22	P4	L+	584+29.2 TO 584+33.2	4	2	0.09	8.00	35
C-22	P4	L+	584+70.6 TO 584+33.2	4	2	0.09	8.00	35
							TOTAL	6,214

IRRIGATION CROSSOVERS

LOCATION			SIDE	CHDPE Cond	WATER LINE CROSSOVER (N)	SPRINKLER CONTROL CROSSOVER (N)
SHEET NUMBER	LINE	STATION	L+/R+	SIZE 8"		
				LENGTH (LF)	SIZE (INCH)	SIZE (INCH)
L-8	"M3"	714+53	L+	6	2	2
			TOTAL	6		

(N) NOT A SEPARATE PAY ITEM FOR INFORMATION ONLY

SUMMARY OF QUANTITIES
Q-4

STATE OF CALIFORNIA - DEPARTMENT OF TRANSPORTATION
Caltrans® DESIGN

FUNCTIONAL SUPERVISOR: HARWELL M. ONTOY
CALCULATED-DESIGNED BY: WILLIAM MICHAEL NICHOLS
CHECKED BY: MAY ALSHEIKH
REVISED BY
DATE REVISED

LAST REVISION 02-19-13
DATE PLOTTED => 28-FEB-2013
TIME PLOTTED => 15:41

Dist	COUNTY	ROUTE	POST MILES TOTAL PROJECT	SHEET No.	TOTAL SHEETS
11	SD	805	5.8/13.0	111	216

REGISTERED CIVIL ENGINEER 02-14-13 DATE

02-25-13
PLANS APPROVAL DATE

REGISTERED PROFESSIONAL ENGINEER WILLIAM MICHAEL NICHOLS No. C74525 Exp. 12-31-13 CIVIL STATE OF CALIFORNIA

THE STATE OF CALIFORNIA OR ITS OFFICERS OR AGENTS SHALL NOT BE RESPONSIBLE FOR THE ACCURACY OR COMPLETENESS OF SCANNED COPIES OF THIS PLAN SHEET.

CONCRETE (SLOPE PROTECTION)

CONCRETE SLOPE PAVING							
NUMBER ⬭	SHEET NUMBER	LINE	L+/R+	STATION	WIDTH LF (N)	VOLUME CY	REMARKS
1	L-1	A/T4	R+	338+09.2 TO 342+90.6	0.6-1.0	5.6	COLORED
2	L-2	T2	R+	358+42.6 TO 359+12.9	1.33	0.1	
3	L-2	A	R+	364+86.9 TO 366+98.9	0.75	2.1	
4	L-4	P4	L+	578+80.5 TO 580+04.4	1.18-2.74	2.9	
5	L-4	P4	L+	580+47.8 TO 581+85.1	0.93-2.67	3.6	
6	L-5	A	R+	656+53.6 TO 668+94.5	2.27-2.67	47.9	
6	L-7	A/M3	L+	699+47.3 TO 711+00.6	1.11-2.77	21.2	
6	L-8	M3	L+	711+00.6 TO 716+39.5	1.10-3.60	7.3	
7	L-7	A/M2	R+	705+23.0 TO 711+86.7	2.10-3.00	22.3	
TOTAL						113.0**	

** FOR ADDITIONAL QUANTITIES, SEE DRAINAGE QUANTITIES SHEETS

MINOR CONCRETE (CURB)

LINE	L+/R+	STATION	LENGTH LF (N)	VOLUME CY	REMARKS
M1	R+	713+86.44 TO 713+92.45	6.00	0.12	COLORED
M1	R+	713+92.45 *	7.00	0.14	
M1	R+	713+93.12 TO 714+08.45	15.33	0.31	
M1	R+	714+09.79 TO 714+21.11	11.33	0.23	
M1	R+	714+21.11 *	7.00	0.14	
M1	R+	714+21.78 TO 714+29.78	8.00	0.16	
M1	R+	714+31.11 TO 714+38.44	7.33	0.15	
M1	R+	714+38.44 *	7.00	0.14	
M1	R+	714+39.11 TO 714+51.10	12.00	0.24	
M1	R+	714+52.43 TO 714+54.43	2.00	0.04	
M1	R+	714+54.43 *	7.00	0.14	
M1	R+	714+55.10 TO 714+72.43	17.33	0.35	
M1	R+	714+73.77 TO 714+75.77	2.00	0.04	
M1	R+	714+75.77 *	7.00	0.14	
M1	R+	714+76.43 TO 714+93.35	17.34	0.35	
M1	R+	714+94.46 TO 715+01.70	8.67	0.17	
M1	R+	715+01.70 *	7.00	0.14	
M1	R+	715+02.25 TO 715+11.39	10.67	0.21	
M1	R+	715+12.22 TO 715+13.88	2.00	0.04	
M1	R+	715+13.88 *	7.00	0.14	
M1	R+	715+14.43 TO 715+28.70	17.33	0.35	
M1	R+	715+29.79 TO 715+32.51	3.33	0.07	
M1	R+	715+32.51 *	7.00	0.14	
M1	R+	715+33.06 TO 715+45.98	16.00	0.32	
M1	R+	715+47.05 TO 715+62.85	20.00	0.40	
M1	R+	715+63.89 TO 715+79.20	20.00	0.40	
M1	R+	715+80.08 TO 715+86.43	8.00	0.16	
TOTALS			260.66	5.23	

* STATION AT CURB OPENING (L=7')

TEMPORARY FENCE (TYPE ESA)

SHEET NUMBER	LINE	L+/R+	STATION	LENGTH LF
L-1	A/T4	R+	337+55.6 TO 346+74.8	993.4
L-1	T4	R+	343+99.5 TO 349+18.8	611.7
L-1	T4	R+	347+36.0 TO 348+60.8	140.9
L-2	T2	R+	354+59.1 TO 355+15.1	65.2
L-2	T2/A	R+	355+86.1 TO 367+05.9	1,270.6
L-4	P4	L+	575+35.0 TO 584+73.5	1,128.1
L-5	A	R+	656+48.6 TO 669+01.4	1,278.8
L-6	A	L+	699+37.6 TO 701+50.0	219.2
L-7	A/M3	L+	701+50.0 TO 712+61.8	1,113.8
L-7	A/M2	R+	705+16.8 TO 711+66.2	720.2
L-8	M3	L+	712+61.8 TO 716+34.7	383.0
L-8	M1	R+	713+92.2 TO 715+91.4	256.1
			TOTAL	8,181.0

SLOPE PAVING (EXPOSED AGGREGATE)

NUMBER ⬡	SHEET NUMBER	LINE	L+/R+	STATION	WIDTH LF (N)	VOLUME CY	REMARKS
1	L-8	M1	R+	713+85.1 TO 715+87.4	5.33	14.3	COLORED
TOTAL						14.3	

SUMMARY OF QUANTITIES
Q-5

STATE OF CALIFORNIA - DEPARTMENT OF TRANSPORTATION
Caltrans® DESIGN

FUNCTIONAL SUPERVISOR: HARWELL M. ONTOY
CALCULATED-DESIGNED BY: WILLIAM MICHAEL NICHOLS
CHECKED BY: MAY ALSHEIKH
REVISED BY / DATE REVISED

LAST REVISION 02-19-13 | DATE PLOTTED => 28-FEB-2013 | TIME PLOTTED => 15:41

Dist	COUNTY	ROUTE	POST MILES TOTAL PROJECT	SHEET No.	TOTAL SHEETS
11	SD	805	5.8/13.0	112	216

REGISTERED CIVIL ENGINEER — DATE 02-14-13

02-25-13
PLANS APPROVAL DATE

REGISTERED PROFESSIONAL ENGINEER — WILLIAM MICHAEL NICHOLS — No. C74525 — Exp. 12-31-13 — CIVIL — STATE OF CALIFORNIA

THE STATE OF CALIFORNIA OR ITS OFFICERS OR AGENTS SHALL NOT BE RESPONSIBLE FOR THE ACCURACY OR COMPLETENESS OF SCANNED COPIES OF THIS PLAN SHEET.

NOTE:

FOR ACCURATE RIGHT OF WAY DATA, CONTACT RIGHT OF WAY ENGINEERING AT THE DISTRICT OFFICE.

LEGEND:

- (x) PRECAST CONCRETE PANEL (SEE SOUND WALL DETAILS)
- (x) TRANSPARENT SOUND WALL PANEL (SEE SOUND WALL DETAILS)
- XXXXX PARCEL NUMBER
- (x) DRAINAGE SYSTEM (SEE DRAINAGE PLANS)

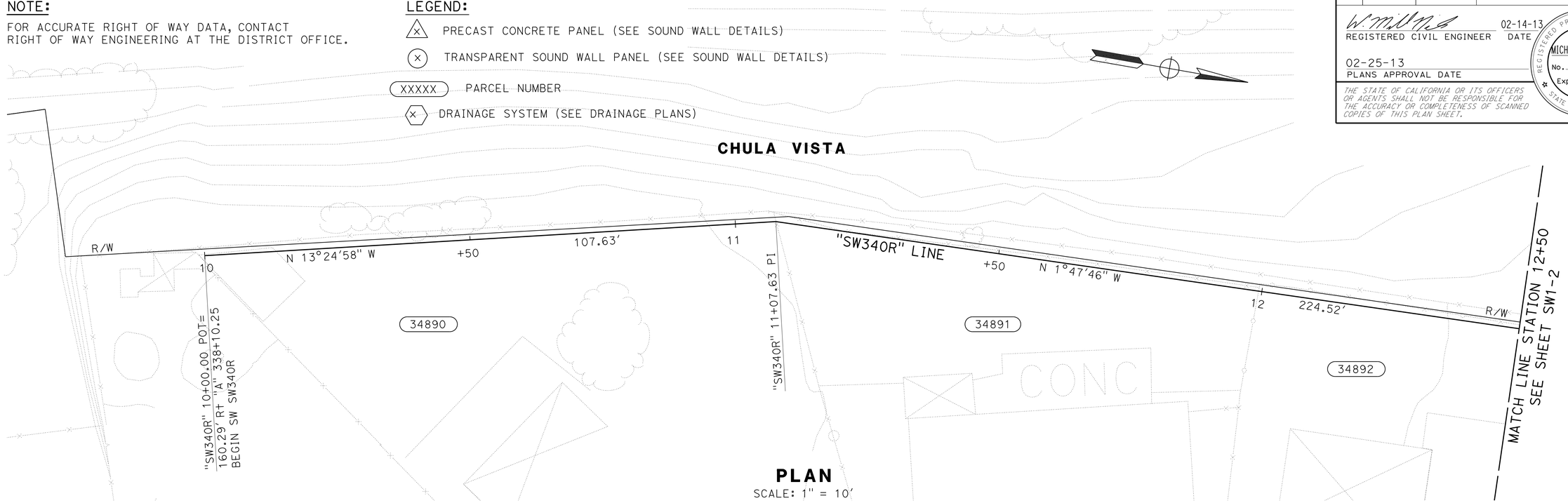

PLAN

SCALE: 1" = 10'

DESIGN HEIGHT	10'	12'
LENGTH	84.50'	247.65'
TOTAL LENGTH	479.94'	

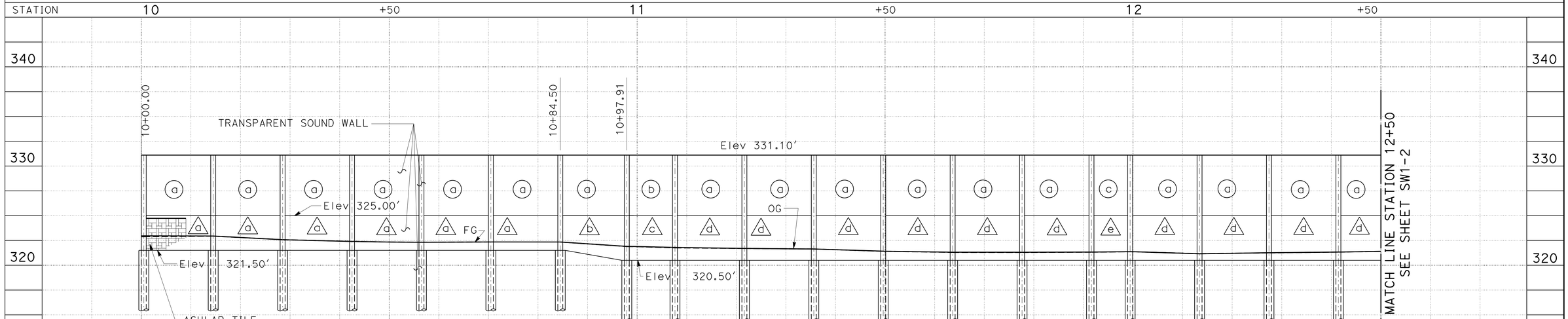

ELEVATION

SCALE: Horiz 1" = 10'
Vert 1" = 5'

APPROVED FOR SOUND WALL WORK ONLY

SOUND WALL PLAN
SOUND WALL SW340R - LOCATION 1

SCALE AS SHOWN

SW1-1

STATE OF CALIFORNIA - DEPARTMENT OF TRANSPORTATION
Caltrans® DESIGN

FUNCTIONAL SUPERVISOR: HARWELL M. ONTOY
CALCULATED-DESIGNED BY: WILLIAM MICHAEL NICHOLS
CHECKED BY: MAY ALSHEIKH
REVISED BY
DATE REVISED

LAST REVISION 02-19-13
DATE PLOTTED => 28-FEB-2013
TIME PLOTTED => 15:41

Dist	COUNTY	ROUTE	POST MILES TOTAL PROJECT	SHEET No.	TOTAL SHEETS
11	SD	805	5.8/13.0	113	216

REGISTERED CIVIL ENGINEER 02-14-13 DATE

02-25-13
PLANS APPROVAL DATE

REGISTERED PROFESSIONAL ENGINEER WILLIAM MICHAEL NICHOLS No. C74525 Exp. 12-31-13 CIVIL STATE OF CALIFORNIA

THE STATE OF CALIFORNIA OR ITS OFFICERS OR AGENTS SHALL NOT BE RESPONSIBLE FOR THE ACCURACY OR COMPLETENESS OF SCANNED COPIES OF THIS PLAN SHEET.

NOTE:

FOR ACCURATE RIGHT OF WAY DATA, CONTACT RIGHT OF WAY ENGINEERING AT THE DISTRICT OFFICE.

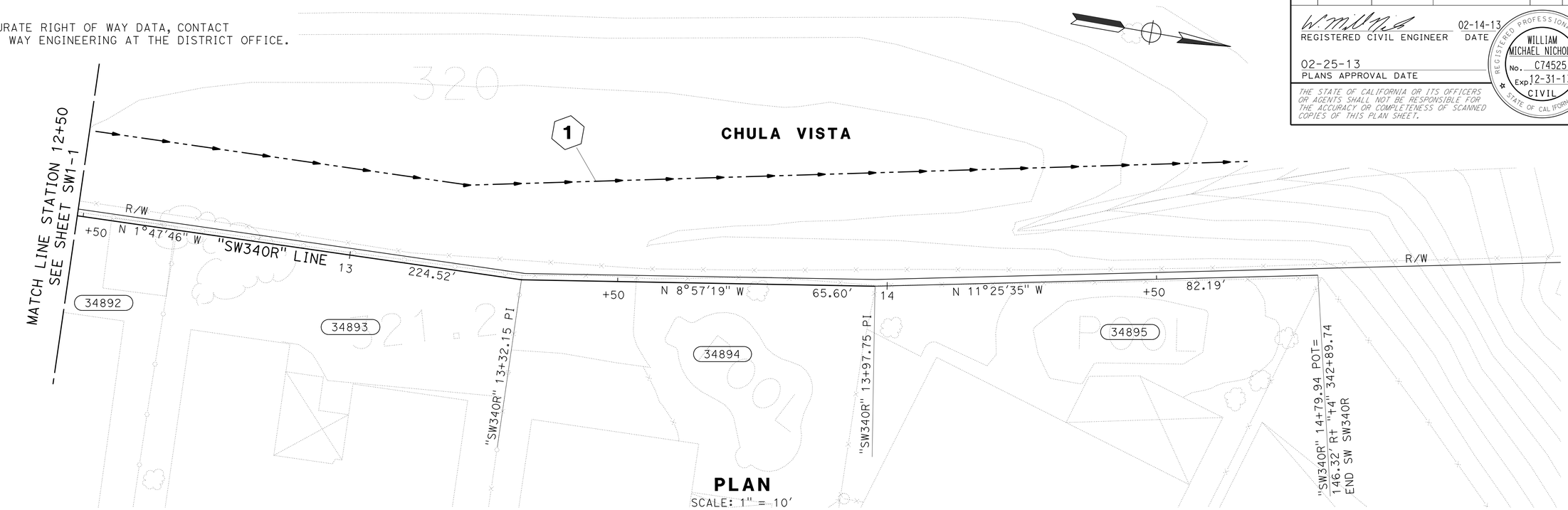

PLAN
SCALE: 1" = 10'

DESIGN HEIGHT	12'	10'
LENGTH	247.65'	147.94'
TOTAL LENGTH	479.94'	

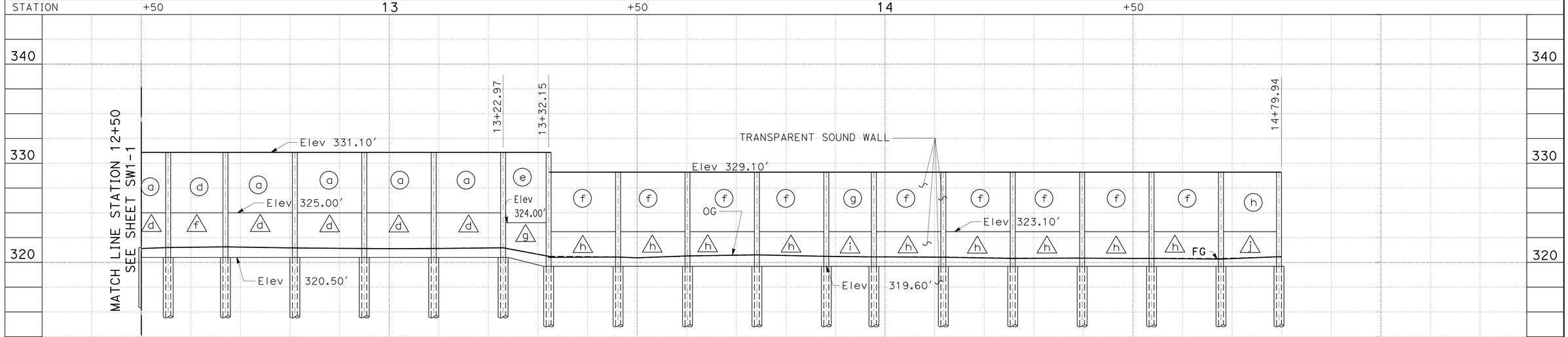

ELEVATION
SCALE: Horiz 1" = 10'
Vert 1" = 5'

APPROVED FOR SOUND WALL WORK ONLY

SOUND WALL PLAN

SOUND WALL SW340R - LOCATION 1

SCALE AS SHOWN **SW1-2**

STATE OF CALIFORNIA - DEPARTMENT OF TRANSPORTATION
DESIGN
Caltrans
FUNCTIONAL SUPERVISOR: HARWELL M. ONTOY
CALCULATED-DESIGNED BY: WILLIAM MICHAEL NICHOLS
CHECKED BY: MAY ALSHEIKH
REVISED BY
DATE REVISED

LAST REVISION 02-19-13
DATE PLOTTED => 28-FEB-2013
TIME PLOTTED => 15:41

Dist	COUNTY	ROUTE	POST MILES TOTAL PROJECT	SHEET No.	TOTAL SHEETS
11	SD	805	5.8/13.0	114	216

REGISTERED CIVIL ENGINEER 02-14-13 DATE

02-25-13
PLANS APPROVAL DATE

REGISTERED PROFESSIONAL ENGINEER WILLIAM MICHAEL NICHOLS No. C74525 Exp. 12-31-13 CIVIL STATE OF CALIFORNIA

THE STATE OF CALIFORNIA OR ITS OFFICERS OR AGENTS SHALL NOT BE RESPONSIBLE FOR THE ACCURACY OR COMPLETENESS OF SCANNED COPIES OF THIS PLAN SHEET.

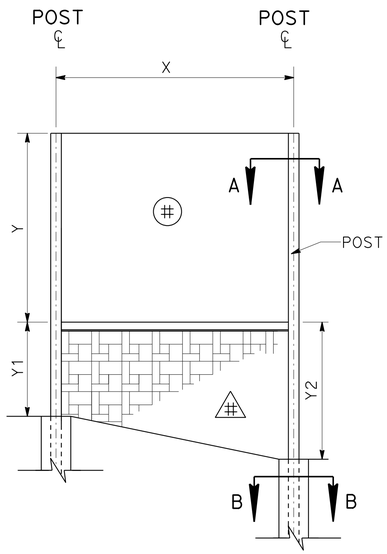

PANEL DIMENSIONS

ELEVATION

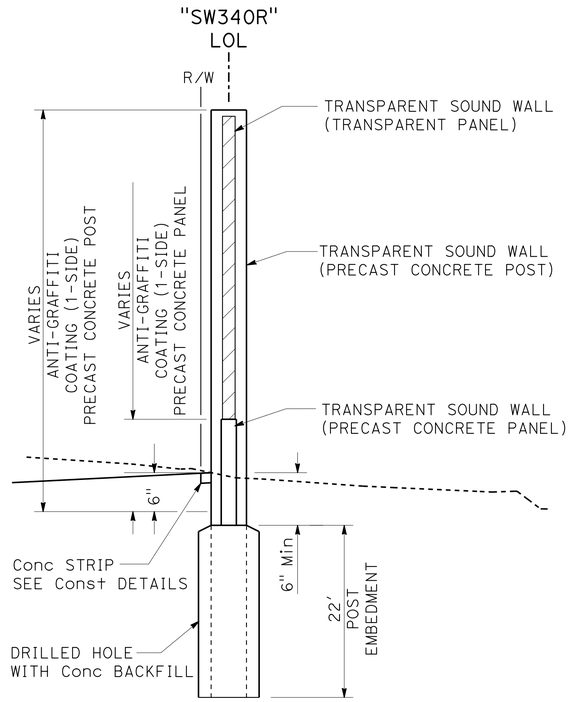

TYPICAL SECTION

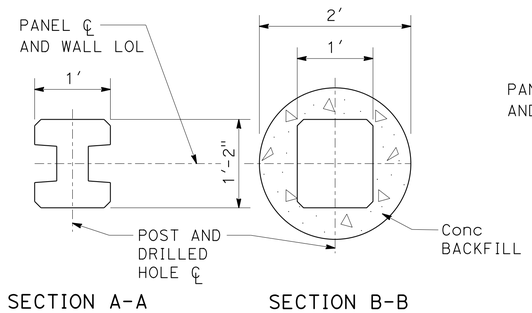

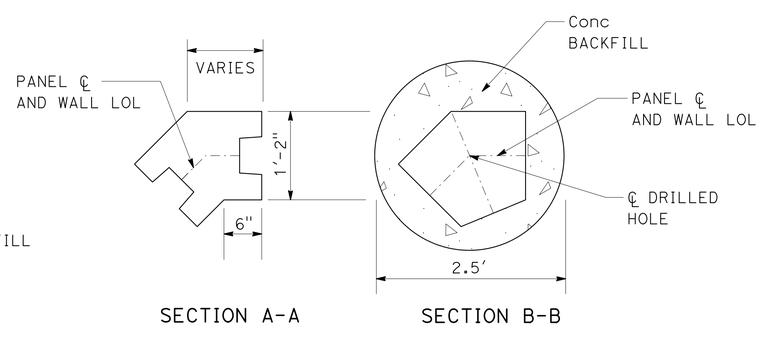

Sta 11+07.63 AND 13+32.15

CONCRETE BACKFILL

STATION	24"Dia	30"Dia	STATION	24"Dia	30"Dia	STATION	24"Dia	30"Dia
10+00.50	X	-	11+77.66	X	-	13+46.15	X	-
10+14.50	X	-	11+91.63	X	-	13+60.15	X	-
10+28.50	X	-	11+99.42	X	-	13+74.15	X	-
10+42.50	X	-	12+13.42	X	-	13+88.15	X	-
10+56.50	X	-	12+27.42	X	-	13+97.75	X	-
10+70.50	X	-	12+41.42	X	-	14+11.75	X	-
10+84.50	X	-	12+55.41	X	-	14+25.75	X	-
10+97.91	X	-	12+66.97	X	-	14+37.75	X	-
11+07.63	-	X	12+80.97	X	-	14+53.75	X	-
11+21.63	X	-	12+94.97	X	-	14+67.75	X	-
11+35.63	X	-	13+08.97	X	-	14+79.94	X	-
11+49.63	X	-	13+22.97	X	-	-	-	-
11+63.63	X	-	13+32.15	-	X	-	-	-

(N) NOT A PAY ITEM FOR INFORMATION ONLY

TRANSPARENT SOUND WALL PANEL DIMENSIONS

PANEL ◯	X	Y	PANEL	AREA
	LF	LF	EACH (N)	SQFT
a	14.00	6.28	21	1,846.3
b	9.13	6.28	1	57.3
c	7.80	6.28	1	49.0
d	11.55	6.28	1	72.5
e	9.18	7.28	1	66.8
f	14.00	5.50	9	693.0
g	9.60	5.50	1	52.8
h	11.70	5.50	1	64.4
			TOTAL	2,902.1

(N) NOT A SEPARATE PAY ITEM. FOR INFORMATION ONLY

TRANSPARENT SOUND WALL PRECAST CONCRETE PANEL (COLOR) DIMENSIONS

PANEL △	X	Y1	Y2	PANEL	AREA
	LF	LF	LF	EACH (N)	SQFT
a	14.00	3.50	3.50	6	294.0
b	14.00	3.50	4.50	1	56.0
c	9.13	4.50	4.50	1	41.1
d	14.00	4.50	4.50	14	882.0
e	7.80	4.50	4.50	1	35.1
f	11.55	4.50	4.50	1	52.0
g	9.18	3.50	4.40	1	36.3
h	14.00	4.18	4.18	9	526.7
i	9.60	4.18	4.18	1	40.1
j	11.70	4.18	4.18	1	48.9
				TOTAL	2,012.1

(N) NOT A SEPARATE PAY ITEM. FOR INFORMATION ONLY

ANTI-GRAFFITI COATING

PRECAST CONCRETE PANELS	1,925 SQFT
PRECAST CONCRETE POST	393 SQFT
TOTAL	2,318 SQFT

SOUND WALL QUANTITIES (SW340R)

TRANSPARENT SOUND WALL	4,914 SQFT
ANTI-GRAFFITI COATING	2,318 SQFT

APPROVED FOR SOUND WALL WORK ONLY

SOUND WALL DETAILS

SOUND WALL SW340R

NO SCALE

SW1-3

STATE OF CALIFORNIA - DEPARTMENT OF TRANSPORTATION
Caltrans DESIGN

FUNCTIONAL SUPERVISOR: HARWELL M. ONTOY
CALCULATED-DESIGNED BY: WILLIAM MICHAEL NICHOLS
CHECKED BY: MAY ALSHEIKH
REVISED BY / DATE REVISED

LAST REVISION 02-19-13 | DATE PLOTTED => 28-FEB-2013 | TIME PLOTTED => 15:41

Dist	COUNTY	ROUTE	POST MILES TOTAL PROJECT	SHEET No.	TOTAL SHEETS
11	SD	805	5.8/13.0	115	216

REGISTERED CIVIL ENGINEER 02-14-13 DATE

02-25-13
PLANS APPROVAL DATE

REGISTERED PROFESSIONAL ENGINEER WILLIAM MICHAEL NICHOLS No. C74525 Exp. 12-31-13 CIVIL STATE OF CALIFORNIA

THE STATE OF CALIFORNIA OR ITS OFFICERS OR AGENTS SHALL NOT BE RESPONSIBLE FOR THE ACCURACY OR COMPLETENESS OF SCANNED COPIES OF THIS PLAN SHEET.

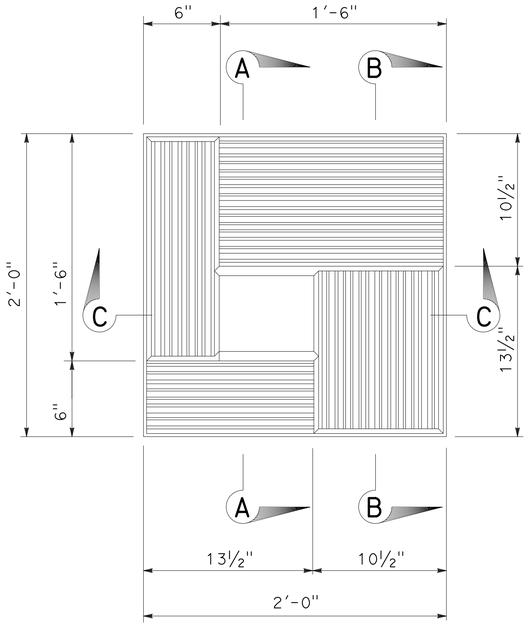

ASHLAR TILE TEXTURE (SMALL) DETAIL

LARGE STRIATED TEXTURE DETAIL

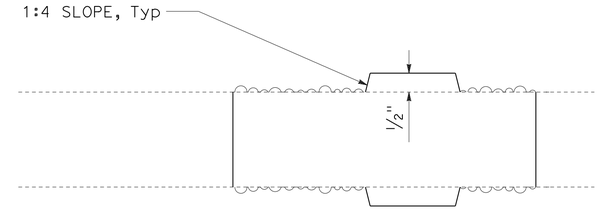

SECTION A-A

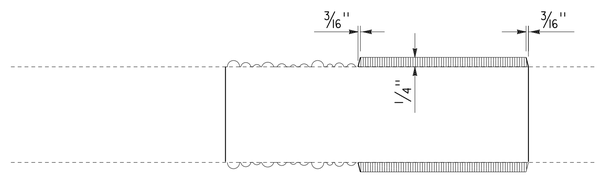

SECTION B-B

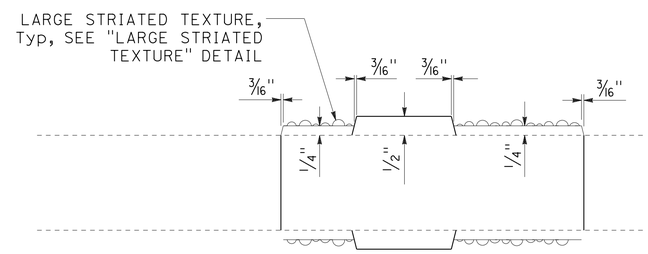

SECTION C-C

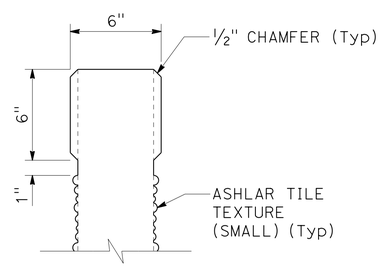

SECTION D-D

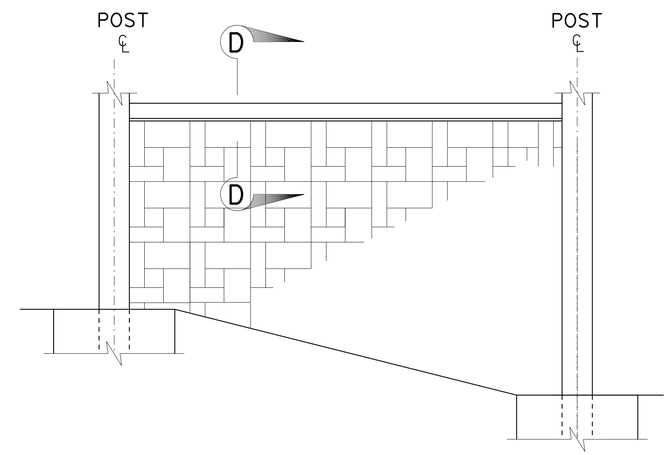

PRECAST CONCRETE PANEL ARCHITECTURAL TREATMENT DETAIL

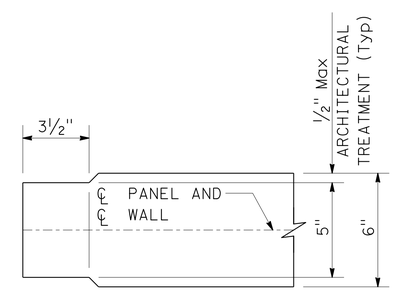

PRECAST CONCRETE PANEL END DETAIL

SOUND WALL DETAILS

SOUND WALL SW340R

NO SCALE

SW1-4

STATE OF CALIFORNIA - DEPARTMENT OF TRANSPORTATION
Caltrans®
DESIGN

FUNCTIONAL SUPERVISOR: HARWELL M. ONTOY
CALCULATED-DESIGNED BY: WILLIAM MICHAEL NICHOLS
CHECKED BY: MAY ALSHEIKH
REVISED BY
DATE REVISED

LAST REVISION 02-19-13
DATE PLOTTED => 28-FEB-2013
TIME PLOTTED => 15:41

DIST	COUNTY	ROUTE	POST MILES TOTAL PROJECT	SHEET No	TOTAL SHEETS
11	SD	805	5.8/13.0	116	216

PROFESSIONAL GEOLOGIST 02-20-13

02-25-13
PLANS APPROVAL DATE

PROFESSIONAL GEOLOGIST Mark Wilson No. 8164 Exp. 06-30-14 STATE OF CALIFORNIA

The State of California or its officers or agents shall not be responsible for the accuracy or completeness of electronic copies of this plan sheet.

This LOTB sheet was prepared in accordance with the Caltrans Soil & Rock Logging, Classification, & Presentation Manual (2010 Edition).

BENCH MARK

BM 805-5.00, Brass disk in sidewalk on north side of E. Palomar St. OC Bridge. Sta 298+46, 60′ Rt from ℄ Rte 805.
Elev 300.93′
N 549996.899
E 1926063.832
NAVD88 (Vertical)
CCS83 (Horizontal)

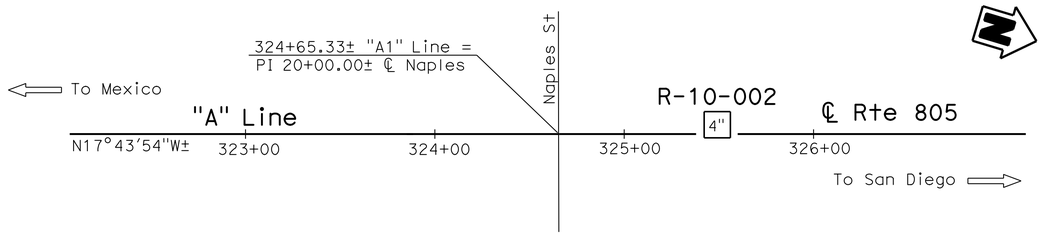

PLAN
1" = 40′

Notes:

1. No ground water was encountered during the 2010 subsurface investigation.
2. RQD designation with "N/A" (not applicable) indicates that the rock encountered within the drill interval was not sound rock, therefore RQD was not calculated.

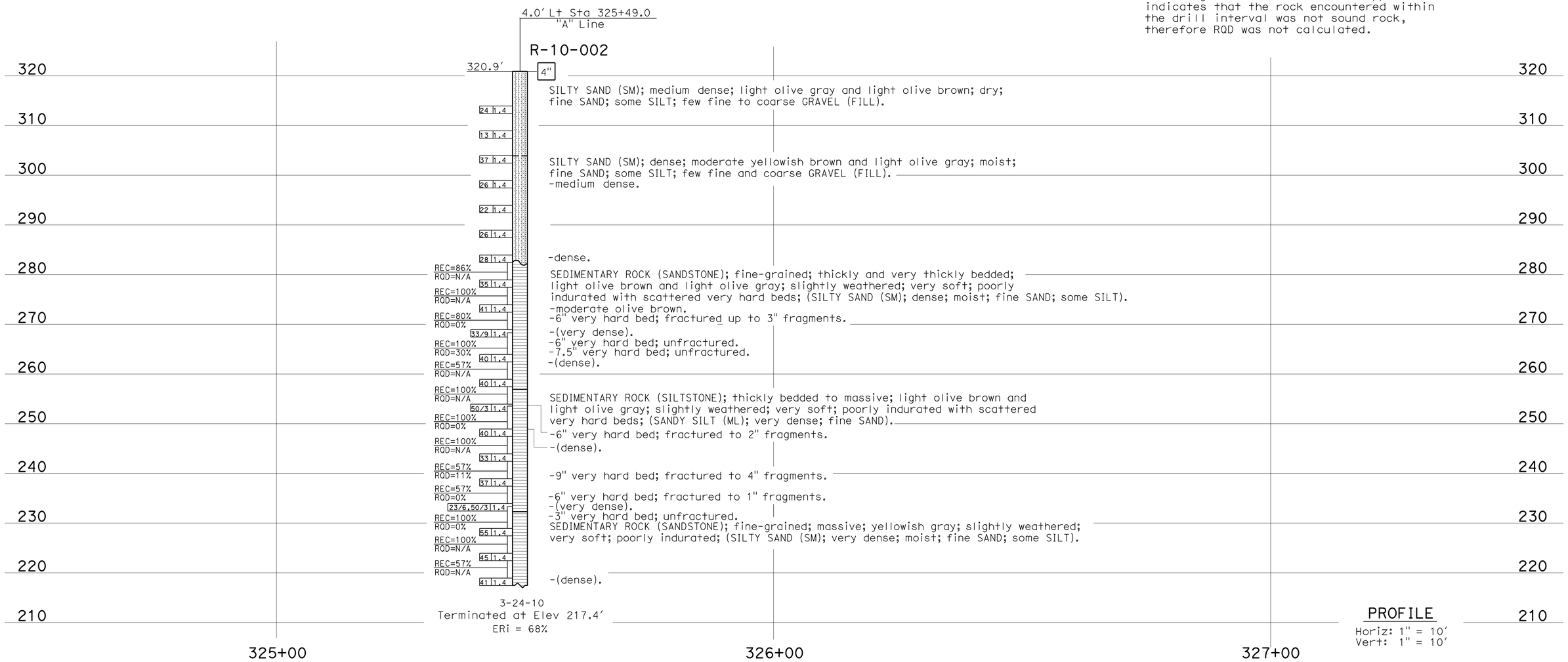

PROFILE
Horiz: 1" = 10′
Vert: 1" = 10′

ENGINEERING SERVICES	MATERIALS AND GEOTECHNICAL SERVICES	STATE OF CALIFORNIA DEPARTMENT OF TRANSPORTATION	DIVISION OF ENGINEERING SERVICES STRUCTURE DESIGN DESIGN BRANCH X	BRIDGE NO. / POST MILE 6.2	SOUND WALL SW340R	1 OF 2
FUNCTIONAL SUPERVISOR NAME: S. Wei	DRAWN BY: W. Tang, I.G-Remmen / CHECKED BY: B. Gutierrez	FIELD INVESTIGATION BY: T-M Liao			LOG OF TEST BORINGS	SW1-5

OGS CIVIL LOG OF TEST BORINGS SHEET

ORIGINAL SCALE IN INCHES FOR REDUCED PLANS 0 1 2 3

UNIT: 3643
PROJECT NUMBER & PHASE: 11000200481 CONTRACT NO.: 11-2T1831

DISREGARD PRINTS BEARING EARLIER REVISION DATES → REVISION DATES 05-22-12 SHEET X OF X

FILE => 1100020048ra005.dgn

USERNAME => s127400 DATE PLOTTED => 28-FEB-2013 TIME PLOTTED => 15:41

FED. ROAD DIV. NO.	STATE	F.A. PROJECT NO.	SHEET NO.	TOTAL SHEETS
7	CALIF.			

DIST.	COUNTY	ROUTE	SECTION	SHEET NO.	TOTAL SHEETS
11	SD	805	2.2, 2.3	162	215

REN. STRUCT. CIVIL ENGINEER

DATE APPROVED May 26, 1969

BENCH MARK

BM" BL-875 B Elev. 304.51
2" I.P. with std. brass disc set on ℄ of Nacion St. produced S. to a point on first ridge 500'± S. of Naples Street.

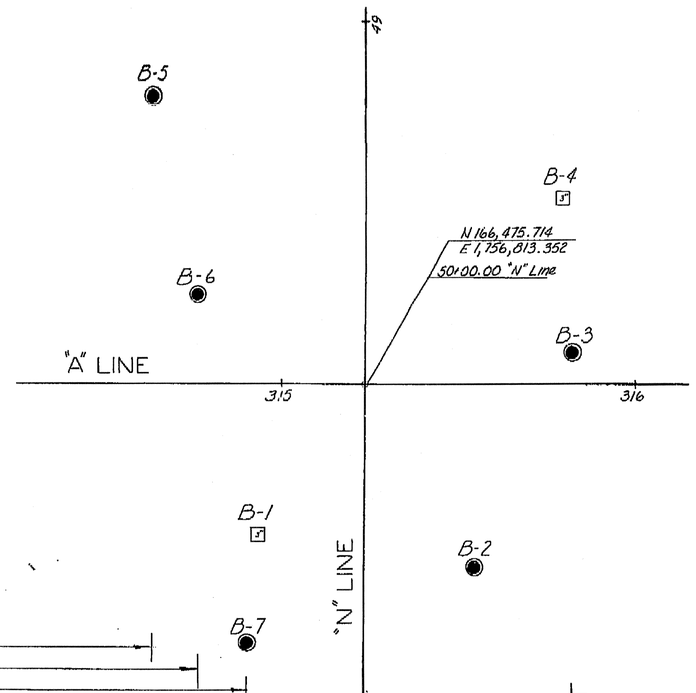

PLAN

Scale 1" = 20'

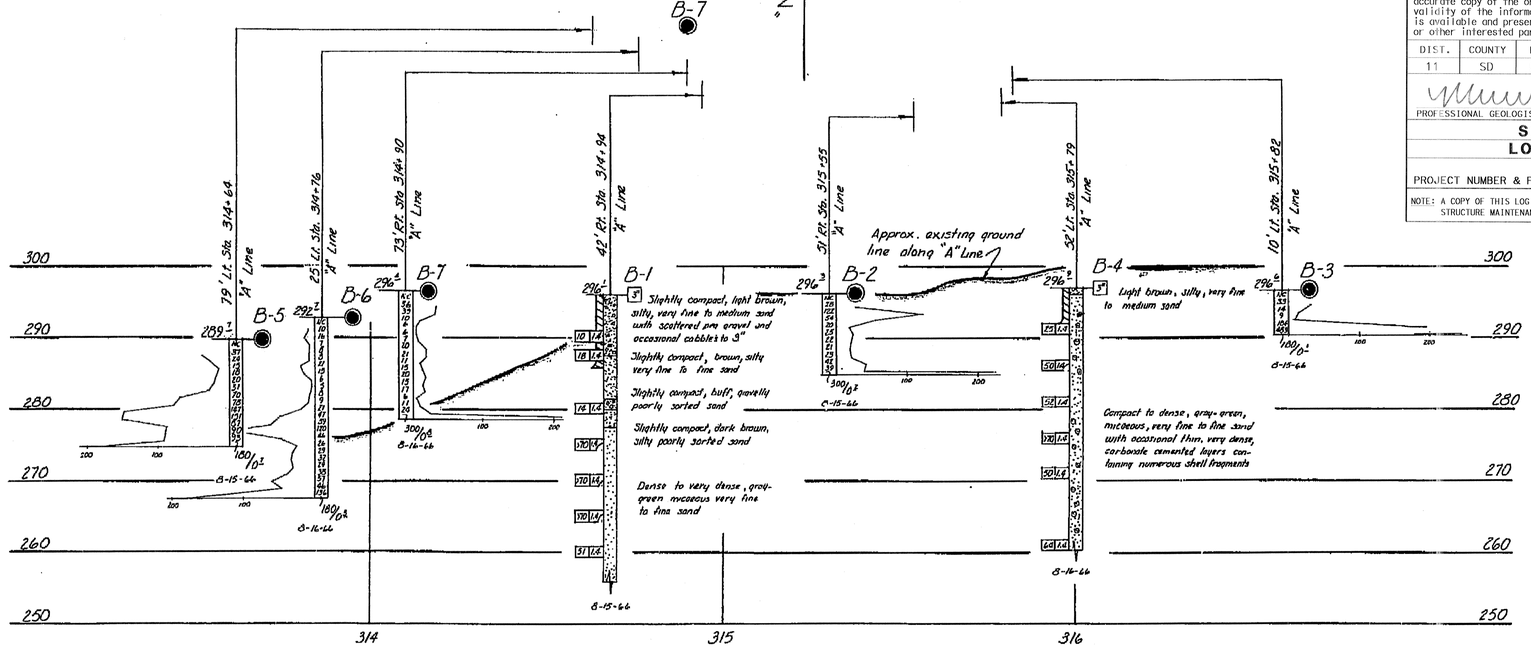

PROFILE

Scale Vert. 1" = 10'
Horiz. 1" = 20'

DIVISION OF ENGINEERING SERVICES - MATERIALS AND GEOTECHNICAL SERVICES

As-Built Log of Test Borings sheet is considered an informational document only. As such, the State of California registration seal with signature, license number and registration certificate expiration date confirm that this is a true and accurate copy of the original document. It does not attest to the accuracy or validity of the information contained in the original document. This drawing is available and presented only for the convenience of any bidder, contractor or other interested party.

DIST.	COUNTY	ROUTE	POST MILE-TOTAL PROJECT	Sheet No.	Total Sheets
11	SD	805	5.8/13.0	117	216

PROFESSIONAL GEOLOGIST 3/28/12 DATE

PROFESSIONAL GEOLOGIST Mark Wilson No. 8164 Exp. 06-30-14 STATE OF CALIFORNIA

SOUND WALL SW340R
LOG OF TEST BORINGS 2 OF 2

UNIT: 3643	CONTRACT No.	BRIDGE No.
PROJECT NUMBER & PHASE: 11000200481	11-2T1831	

NOTE: A COPY OF THIS LOG OF TEST BORINGS IS AVAILABLE AT OFFICE OF STRUCTURE MAINTENANCE AND INVESTIGATIONS, SACRAMENTO, CALIFORNIA

Sheet of

INFORMATION ON ACTUAL FOUNDATION CONDITIONS IS ON FILE IN BRIDGE GEOLOGY SECTION

SHEET 8 OF 18

STATE OF CALIFORNIA
DEPARTMENT OF PUBLIC WORKS
DIVISION OF HIGHWAYS

NAPLES STREET UNDERCROSSING

LOG OF TEST BORINGS

SCALE As Noted | BRIDGE 57-634 ℄ | FILE | DRAWING 57634-10

PREL. DRAWING No. PR- 5/1/6

Disregard prints bearing earlier numbers

Charge 11201
W.A. 110121

AS BUILT PLANS
Contract No. 11-110124
Date Completed
Document No. A0000816

LEGEND OF BORING OPERATIONS

- Penetrometer
- 2½" Cone Penetrometer
- Sampler Boring (Dry)
- Rotary Boring (Wet)
- Auger Boring (Dry)
- Jet Boring
- Core Boring
- Test Pit

Penetrometer: Top Hole El. — Penetration Resistance — Blows per Foot (Blows per 12" Pen. Dis.) — Pulled from 50 Blows — Sample Taken — Penetrometer Number — Size of penetrometer (Blows per foot for penetration with a 30" drop of a 350 lb. weight) — Unconfined compressive strength (lb/ft²) — Shear strength (lb/ft²) — Soil Tube — Rotary Boring — Top Hole El. — Penetration Resistance — Size of sampler (Blows per foot for penetration with a 30" drop of a 140 lb. weight) — Unconfined compressive strength (lb/ft²) — Shear strength (lb/ft²) — Estimated material change — Unconformable material change — Unconformable material change — Rotary Boring — Top Hole El. — Penetration Resistance — Size of sampler (Blows per foot for penetration with a 30" drop of a 140 lb. weight) — Unconfined compressive strength (lb/ft²) — Shear strength (lb/ft²) — Estimated material change — Unconformable material change — Penetrometer Boring

LEGEND OF EARTH MATERIALS

- Gravel
- Sand
- Silt
- Clay
- Sandy Clay or Clayey Sand
- Sandy Silt or Silty Sand
- Silty Clay or Clayey Silt
- Peat or Organic Matter
- Fill Material
- Igneous Rock
- Sedimentary Rock
- Metamorphic Rock

CLASSIFICATION OF MATERIAL BASED ON STANDARD GRADE SIZE LIMITS

Diagram showing the basis for estimates of grain size distribution in determination of class names. If gravel is present in appreciable quantities, the class name may be added to the classification, as "gravelly sand." The terms "coarse," "medium" and "fine" modify sand and gravel, refer to standard grade size limits.

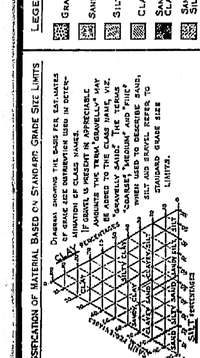

NOTE: Classification of earth material as shown on this sheet is based upon field inspection and is not to be construed to imply mechanical analysis.

CHECKED Fr. H. E. Beckstrom 3-15-66
Approval Recommended Charles E. Mace
Engineering Geologist

BRIDGE DEPARTMENT
ENGINEERING GEOLOGY SECTION

162

Dist	COUNTY	ROUTE	POST MILES TOTAL PROJECT	SHEET No.	TOTAL SHEETS
11	SD	805	5.8/13.0	118	216

REGISTERED CIVIL ENGINEER 02-14-13 DATE

02-25-13
PLANS APPROVAL DATE

REGISTERED PROFESSIONAL ENGINEER WILLIAM MICHAEL NICHOLS No. C74525 Exp. 12-31-13 CIVIL STATE OF CALIFORNIA

THE STATE OF CALIFORNIA OR ITS OFFICERS OR AGENTS SHALL NOT BE RESPONSIBLE FOR THE ACCURACY OR COMPLETENESS OF SCANNED COPIES OF THIS PLAN SHEET.

NOTE:

FOR ACCURATE RIGHT OF WAY DATA, CONTACT RIGHT OF WAY ENGINEERING AT THE DISTRICT OFFICE.

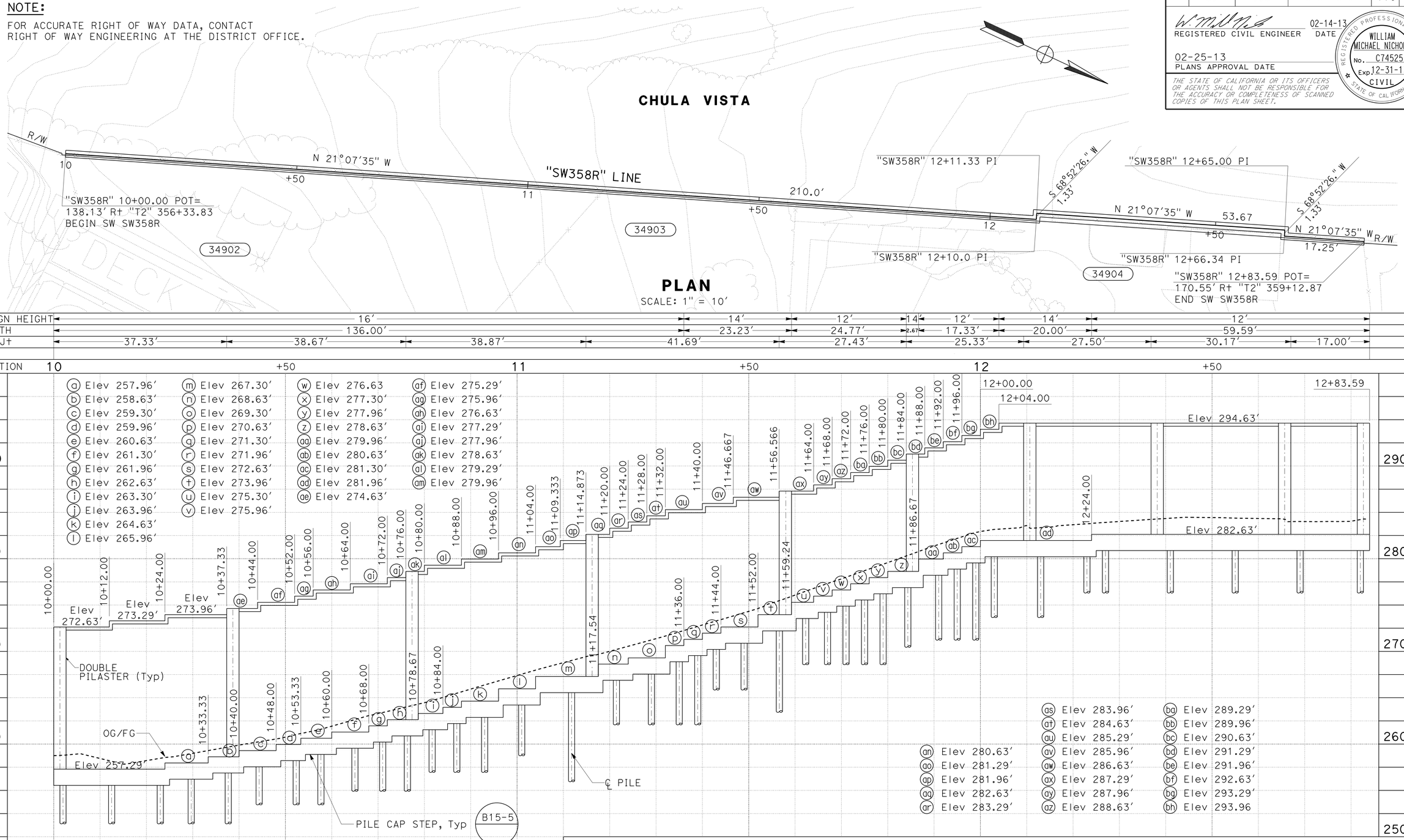

(a) Elev 257.96'	(m) Elev 267.30'	(w) Elev 276.63	(af) Elev 275.29'
(b) Elev 258.63'	(n) Elev 268.63'	(x) Elev 277.30'	(ag) Elev 275.96'
(c) Elev 259.30'	(o) Elev 269.30'	(y) Elev 277.96'	(ah) Elev 276.63'
(d) Elev 259.96'	(p) Elev 270.63'	(z) Elev 278.63'	(ai) Elev 277.29'
(e) Elev 260.63'	(q) Elev 271.30'	(aa) Elev 279.96'	(aj) Elev 277.96'
(f) Elev 261.30'	(r) Elev 271.96'	(ab) Elev 280.63'	(ak) Elev 278.63'
(g) Elev 261.96'	(s) Elev 272.63'	(ac) Elev 281.30'	(al) Elev 279.29'
(h) Elev 262.63'	(t) Elev 273.96'	(ad) Elev 281.96'	(am) Elev 279.96'
(i) Elev 263.30'	(u) Elev 275.30'	(ae) Elev 274.63'	
(j) Elev 263.96'	(v) Elev 275.96'		
(k) Elev 264.63'			
(l) Elev 265.96'			

		(as) Elev 283.96'	(ba) Elev 289.29'
		(at) Elev 284.63'	(bb) Elev 289.96'
		(au) Elev 285.29'	(bc) Elev 290.63'
(an) Elev 280.63'		(av) Elev 285.96'	(bd) Elev 291.29'
(ao) Elev 281.29'		(aw) Elev 286.63'	(be) Elev 291.96'
(ap) Elev 281.96'		(ax) Elev 287.29'	(bf) Elev 292.63'
(aq) Elev 282.63'		(ay) Elev 287.96'	(bg) Elev 293.29'
(ar) Elev 283.29'		(az) Elev 288.63'	(bh) Elev 293.96

SOUND WALL PLAN

SOUND WALL SW358R - LOCATION 2

SCALE AS SHOWN **SW2-1**

REVISED BY	DATE REVISED

CALCULATED- WILLIAM MICHAEL NICHOLS
DESIGNED BY MAY ALSHEIKH
CHECKED BY
FUNCTIONAL SUPERVISOR HARWELL M. ONTOY

STATE OF CALIFORNIA - DEPARTMENT OF TRANSPORTATION
Caltrans®
DESIGN

LAST REVISION 02-19-13 | DATE PLOTTED => 28-FEB-2013 | TIME PLOTTED => 15:41

Dist	COUNTY	ROUTE	POST MILES TOTAL PROJECT	SHEET No.	TOTAL SHEETS
11	SD	805	5.8/13.0	119	216

REGISTERED CIVIL ENGINEER 02-14-13 DATE

02-25-13
PLANS APPROVAL DATE

REGISTERED PROFESSIONAL ENGINEER WILLIAM MICHAEL NICHOLS No. C74525 Exp. 12-31-13 CIVIL STATE OF CALIFORNIA

THE STATE OF CALIFORNIA OR ITS OFFICERS OR AGENTS SHALL NOT BE RESPONSIBLE FOR THE ACCURACY OR COMPLETENESS OF SCANNED COPIES OF THIS PLAN SHEET.

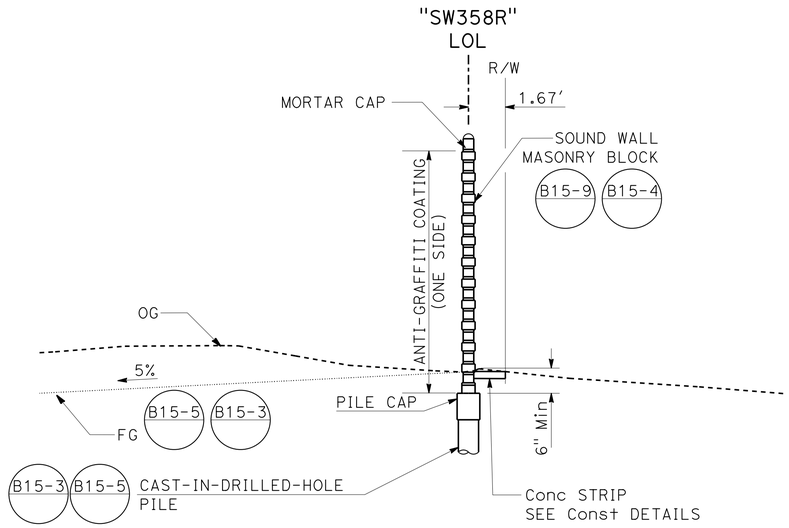

Sta "SW358R" 12+10 TO 12+66.34

PILE LOCATION	
10+02.00	11+43.00
10+12.50	11+49.00
10+23.00	11+56.62
10+29.67	11+62.28
10+37.67	11+67.00
10+44.33	11+71.00
10+52.33	11+75.00
10+57.67	11+79.00
10+65.00	11+84.33
10+71.00	11+91.00
10+76.33	11+95.00
10+81.67	11+99.00
10+87.00	12+03.00
10+93.00	12+13.00
11+01.00	12+23.00
11+11.77	12+27.00
11+21.44	12+41.00
11+29.00	12+55.00
11+35.00	12+69.00
11+39.00	12+82.00

GROUND LINE
CASE 1

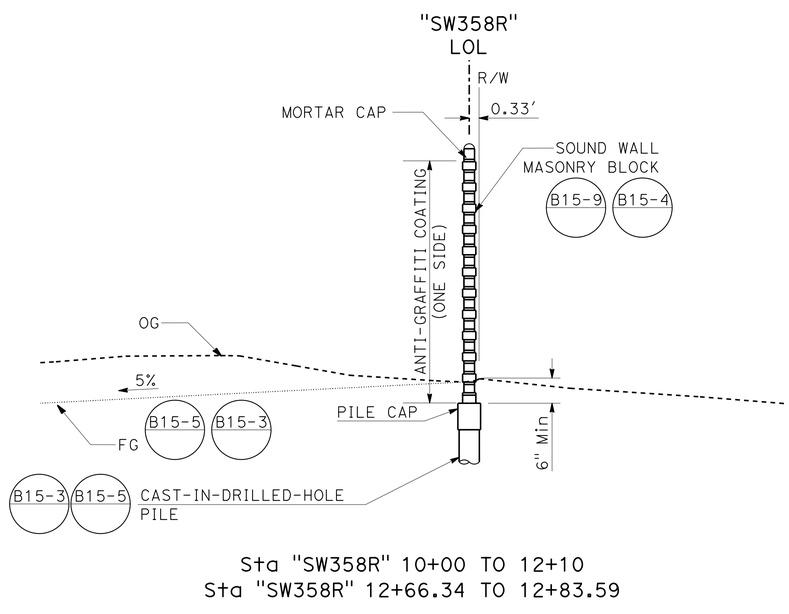

Sta "SW358R" 10+00 TO 12+10
Sta "SW358R" 12+66.34 TO 12+83.59

TYPICAL SECTIONS
NO SCALE

SW QUANTITIES	
SOUND WALL (MASONRY BLOCK)	3,914 SQFT
STRUCTURAL CONCRETE (SOUND WALL)	29.0 CY
16" CIDH CONCRETE PILING (SOUND WALL)	412.5 LF
ANTI-GRAFFITI COATING	3,914 SQFT

APPROVED FOR SOUND WALL WORK ONLY

SOUND WALL TYPICAL SECTION

SOUND WALL SW358R

SCALE AS SHOWN **SW2-2**

STATE OF CALIFORNIA - DEPARTMENT OF TRANSPORTATION
Caltrans®
DESIGN

FUNCTIONAL SUPERVISOR: HARWELL M. ONTOY
CALCULATED-DESIGNED BY: WILLIAM MICHAEL NICHOLS
CHECKED BY: MAY ALSHEIKH
REVISED BY
DATE REVISED

LAST REVISION 02-19-13
DATE PLOTTED => 28-FEB-2013
TIME PLOTTED => 15:41

Dist	COUNTY	ROUTE	POST MILES TOTAL PROJECT	SHEET No.	TOTAL SHEETS
11	SD	805	5.8/13.0	120	216

REGISTERED CIVIL ENGINEER 02-14-13 DATE

02-25-13
PLANS APPROVAL DATE

REGISTERED PROFESSIONAL ENGINEER WILLIAM MICHAEL NICHOLS No. C74525 Exp. 12-31-13 CIVIL STATE OF CALIFORNIA

THE STATE OF CALIFORNIA OR ITS OFFICERS OR AGENTS SHALL NOT BE RESPONSIBLE FOR THE ACCURACY OR COMPLETENESS OF SCANNED COPIES OF THIS PLAN SHEET.

MASONRY BLOCK WALL NOTES:

1. CORE SIZE FOR 10" WIDE BLOCK SHALL MATCH THE CORE SIZE FOR 8" WIDE BLOCKS.
2. ALL PILASTERS SHALL BE PLUMB.
3. FOR DETAILS NOT SHOWN, SEE STANDARD PLAN, B15-3.
4. PROVIDE 16" X4" X 16" PILASTER BLOCK NEAR BOTTOM OF WALL AS REQUIRED FOR TOP OF PILASTER TO BE FLUSH WITH ADJACENT WALL.

MASONRY BLOCK LEGEND:

- BLOCK 'A': 10" x 8" x 8" SMOOTH FACE ALL EXPOSED SIDES. BLOCK WILL PROJECT 1" ON BOTH SIDES OF WALL.
- BLOCK 'B': 8" x 8" x 8" SPLIT FACE ALL EXPOSED SIDES.
- BLOCK 'C': 10" x 4" x 16" SPLIT FACE ALL EXPOSED SIDES. BLOCK WILL PROJECT 1" ON BOTH SIDES OF WALL.
- BLOCK 'D': 8" x 8" x 16" SPLIT FACE ALL EXPOSED SIDES.
- BLOCK 'E': 16" x 8" x 16" SPLIT FACE ALL EXPOSED SIDES EXCEPT WHERE FACE MEETS EXISTING WALL.
- BLOCK 'F': 10" x 4" x 16" SMOOTH FACE AT EXISTING WALL
  BLOCK 'F': 16" x 4" x 16" SMOOTH FACE AT PILASTER

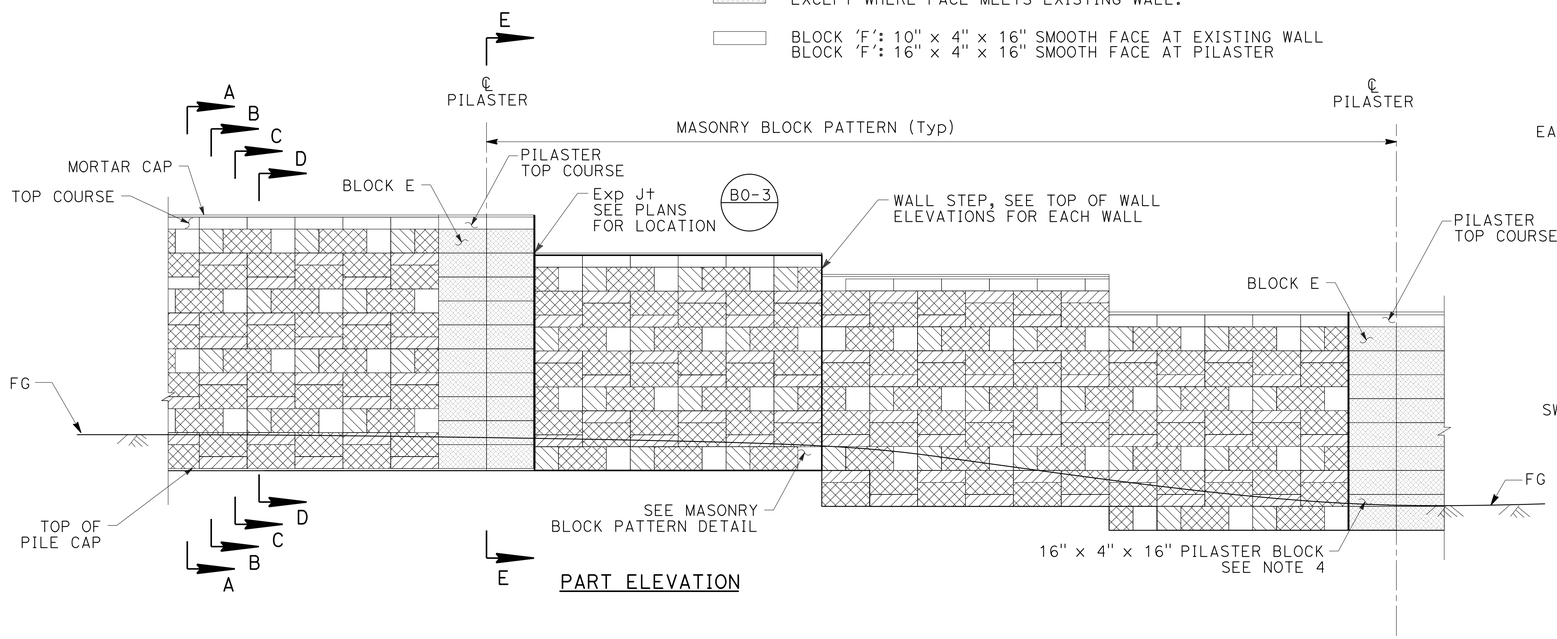

PART ELEVATION

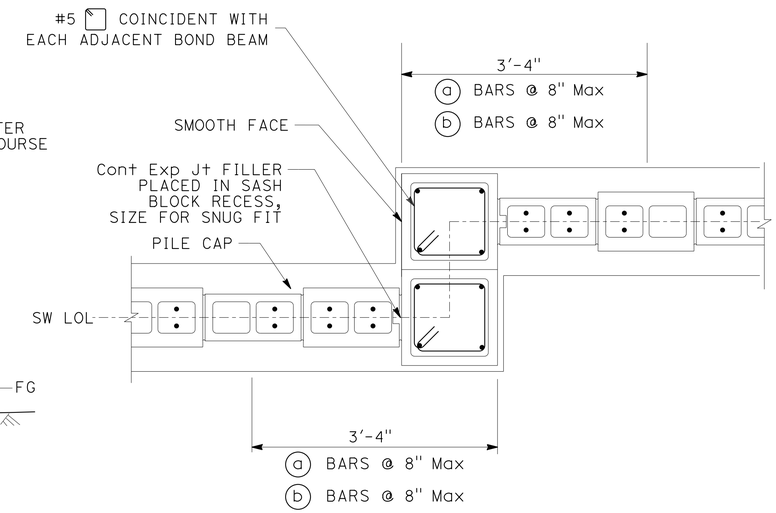

PILASTER DETAIL - DOUBLE PILASTER AT AN ANGLE

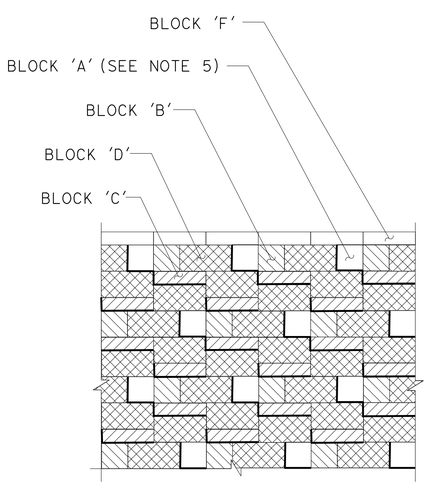

MASONRY BLOCK PATTERN

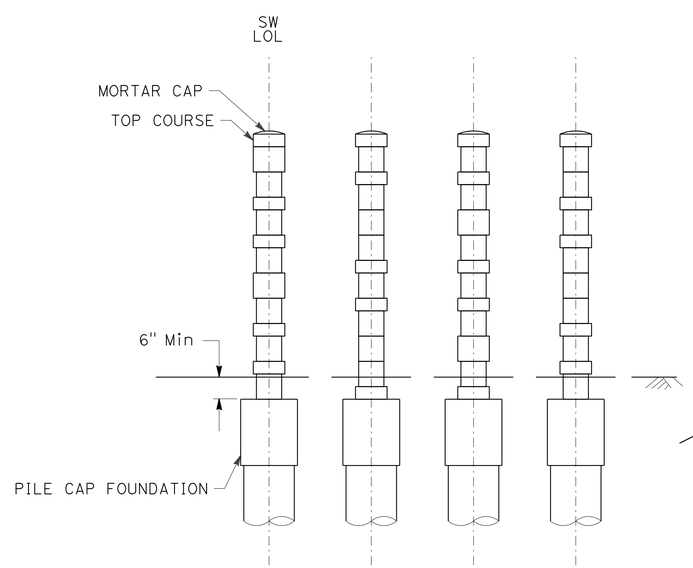

SECTIONS A-A, B-B, C-C, & D-D

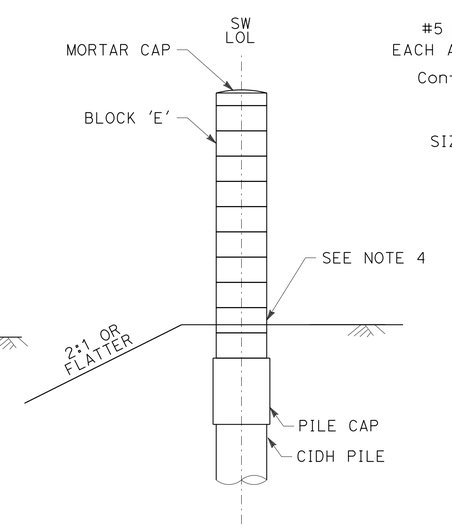

SECTION E-E

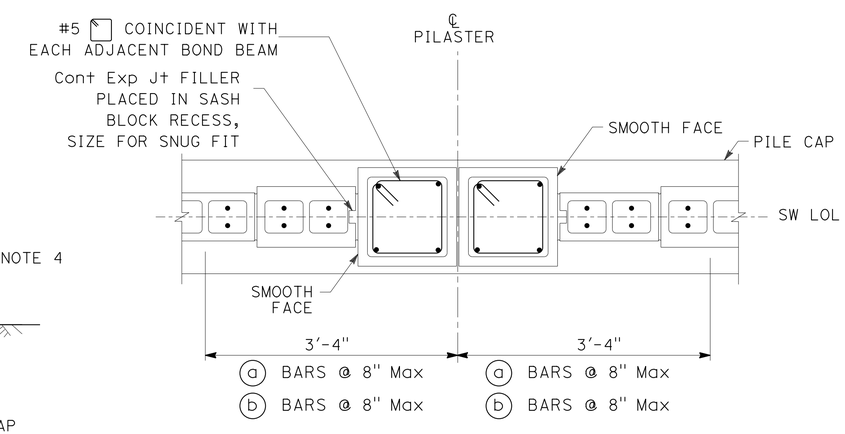

PILASTER DETAIL - DOUBLE PILASTER

SOUND WALL DETAILS

SOUND WALL SW358R

NO SCALE

SW2-3

REVISED BY	DATE REVISED
WILLIAM MICHAEL NICHOLS	MAY ALSHEIKH
CALCULATED-DESIGNED BY	CHECKED BY
FUNCTIONAL SUPERVISOR	HARWELL M. ONTOY

STATE OF CALIFORNIA - DEPARTMENT OF TRANSPORTATION
Caltrans
DESIGN

LAST REVISION 02-19-13 | DATE PLOTTED => 28-FEB-2013 | TIME PLOTTED => 15:41

DIST	COUNTY	ROUTE	POST MILES TOTAL PROJECT	SHEET No	TOTAL SHEETS
11	SD	805	5.8/13.0	121	216

PROFESSIONAL GEOLOGIST 02-20-13

02-25-13
PLANS APPROVAL DATE

PROFESSIONAL GEOLOGIST Mark Wilson No. 8164 Exp. 06-30-14 STATE OF CALIFORNIA

The State of California or its officers or agents shall not be responsible for the accuracy or completeness of electronic copies of this plan sheet.

This LOTB sheet was prepared in accordance with the Caltrans Soil & Rock Logging, Classification, & Presentation Manual (June 2010 Edition).

BENCH MARK

BM 805-5.00, Brass disk in sidewalk on north side of E. Palomar St. OC Bridge. Sta 298+46, 60′ Rt from ℄ Rte 805.
Elev 300.93′
N 549996.899
E 1926063.832
NAVD88 (Vertical)
CCS83 (Horizontal)

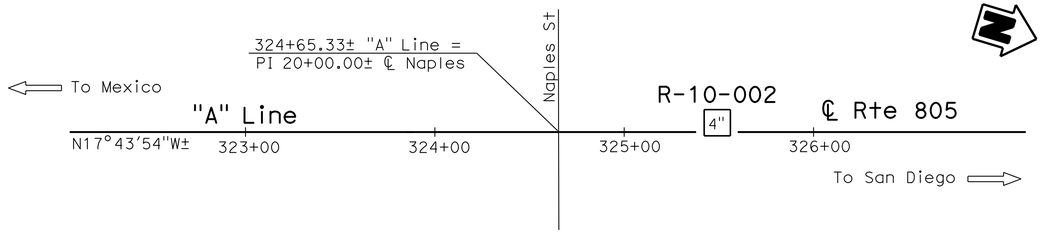

PLAN
1" = 40′

Notes:

1. No ground water was encountered during the 2010 subsurface investigation.
2. RQD designation with "N/A" (not applicable) indicates that the rock encountered within the drill interval was not sound rock, therefore RQD was not calculated.

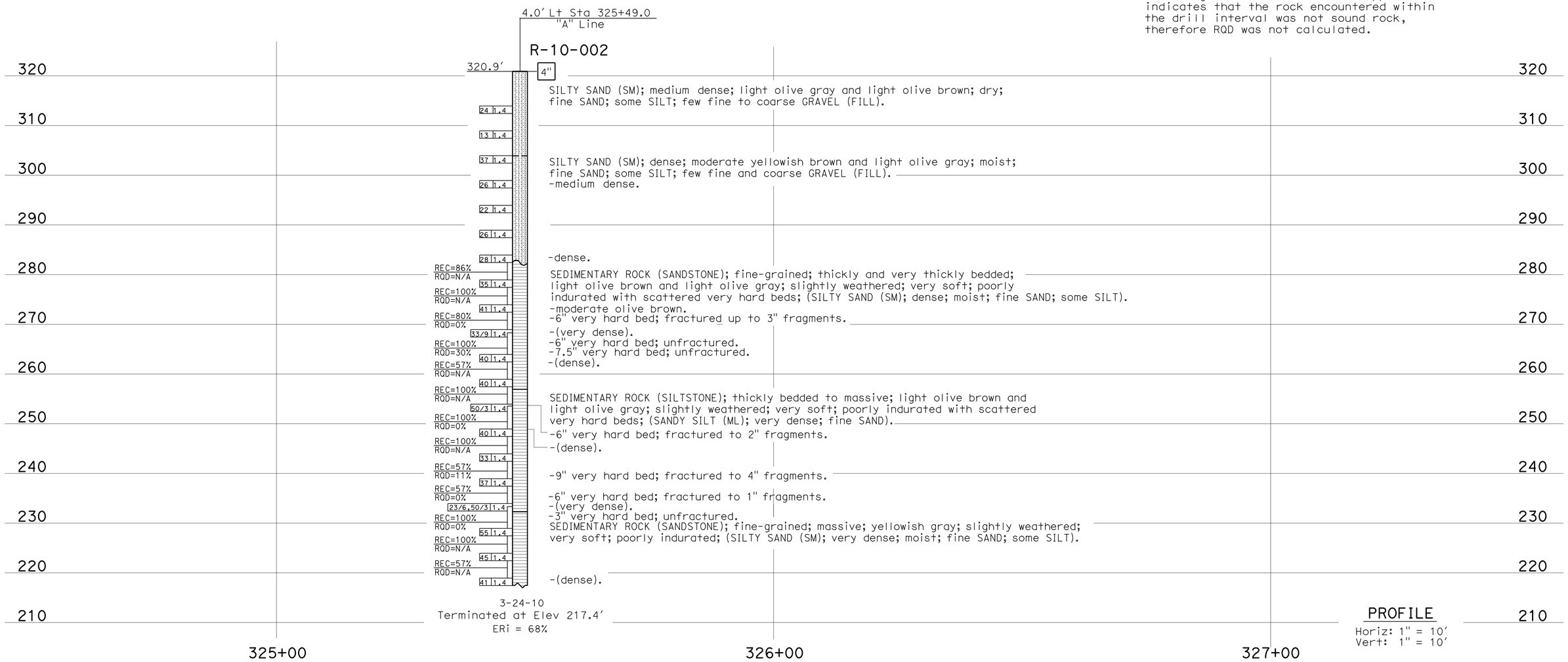

PROFILE
Horiz: 1" = 10′
Vert: 1" = 10′

ENGINEERING SERVICES	MATERIALS AND GEOTECHNICAL SERVICES	STATE OF CALIFORNIA DEPARTMENT OF TRANSPORTATION	DIVISION OF ENGINEERING SERVICES STRUCTURE DESIGN DESIGN BRANCH X	BRIDGE NO. / POST MILE 6.2	SOUND WALL SW358R	1 OF 2
FUNCTIONAL SUPERVISOR NAME: S. Wei	DRAWN BY: W. Tang, I.G-Remmen / CHECKED BY: B. Gutierrez	FIELD INVESTIGATION BY: T-M Liao			LOG OF TEST BORINGS	SW2-4

OGS CIVIL LOG OF TEST BORINGS SHEET

ORIGINAL SCALE IN INCHES FOR REDUCED PLANS 0 1 2 3

UNIT: 3643
PROJECT NUMBER & PHASE: 11000200481 CONTRACT NO.: 11-2T0831

DISREGARD PRINTS BEARING EARLIER REVISION DATES → REVISION DATES 03-28-12 03-28-12 SHEET X OF X

FILE => 1100020048rb004.dgn

USERNAME => s127400 DATE PLOTTED => 28-FEB-2013 TIME PLOTTED => 15:41

FED. HWY. DIV. NO.	STATE	F. A. PROJECT NO.	SHEET NO.	TOTAL SHEETS
7	CALIF.			

DIST.	COUNTY	ROUTE	SECTION	SHEET NO.	TOTAL SHEETS
11	SD	805	5.8/13.0	162	215

REGISTERED CIVIL ENGINEER

DATE SIGNED May 26, 1969

LEGEND OF BORING OPERATIONS

- PENETROMETER
- 2½" CONE PENETROMETER (DRY) (WET)
- SAMPLER BORING (DRY)
- ROTARY BORING (WET)
- AUGER BORING (DRY)
- JET BORING
- CORE BORING
- TEST PIT

Top Hole El. — Blows per foot 140 lb. hand hammer 30" Free fall — Pulled pipe — Sample taken — Top of casing — Elevation of material — Sample

1" SOIL TUBE

Top Hole El. — Casing driven — Size of sampler (casing) — Blows 140 lb. hammer 30" free fall — Unconfined compressive strength (tsf) — Elevation of material — Unconfined material change — Line drawn through (tsf)

ROTARY BORING

Top Hole El. — Elevation of material — Blow weight (lbs) (ft) — Penetration Test — Unconfined material change — Unconfined material change — Unconformable material change — Line drawn through (tsf)

PENETRATION BORING

LEGEND OF EARTH MATERIALS

- GRAVEL
- SILTY CLAY OR CLAYEY SILT
- SAND
- PEAT AND/OR ORGANIC MATTER
- SILT
- FILL MATERIAL
- CLAY
- IGNEOUS ROCK
- SANDY CLAY OR CLAYEY SAND
- SEDIMENTARY ROCK
- SANDY SILT OR SILTY SAND
- METAMORPHIC ROCK

CLASSIFICATION OF MATERIAL BASED ON STANDARD GRADE SIZE LIMITS

DIAGRAM SHOWING THE SIZES FOR SATURATED GRADE SIZE DISTRIBUTION USED IN DETERMINING IF CLASS NAMES.

IF COBBLES AND BOULDERS ARE PRESENTS, INCLUDE THE TERMS "GRAVELLY" MAY BE ADDED TO THE CLASS NAME, VIZ. "GRAVELLY SILTY CLAY", "GRAVELLY COARSE" SAND, SILT AND GRAVEL. REFER TO SIEVE SIZES LISTED.

NOTE: Classification of earth material as shown on this sheet is based upon field inspection and is not to be construed to imply mechanical analysis.

BENCH MARK

BM" BL-873 B Elev. 304.51
2" I. P. with std. brass disc set on ℄ of Nacion St, produced S. to a point on first ridge 500'± S. of Naples Street.

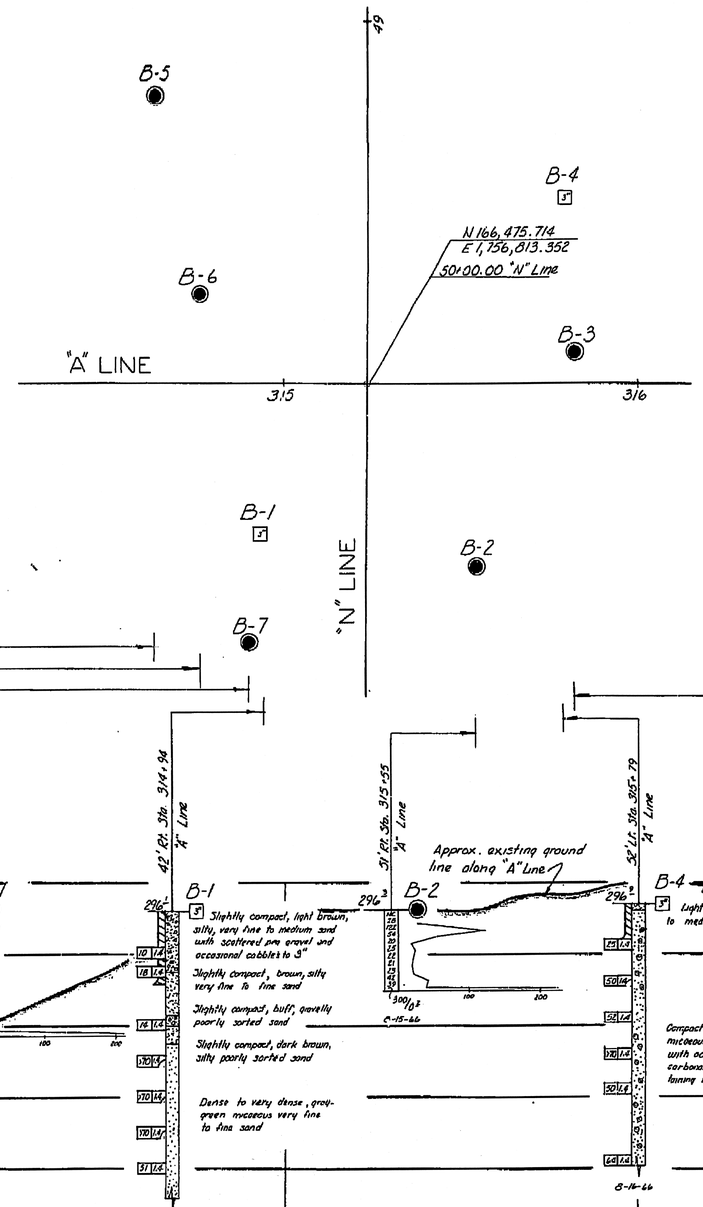

PLAN

Scale 1" = 20'

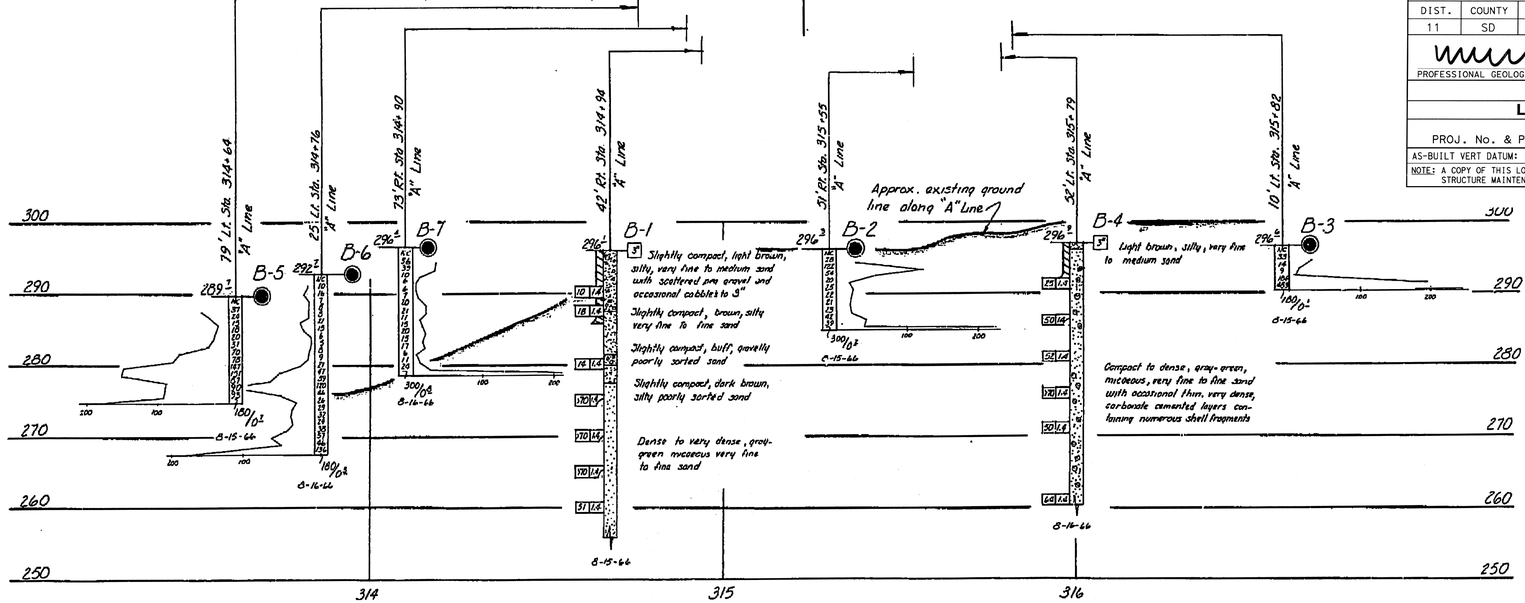

PROFILE

Scale Vert. 1" = 10'
Horiz. 1" = 20'

DIVISION OF ENGINEERING SERVICES - MATERIALS AND GEOTECHNICAL SERVICES					
As-Built Log of Test Borings sheet is considered an informational document only. As such, the State of California registration seal with signature, license number and registration certificate expiration date confirm that this is a true and accurate copy of the original document. It does not attest to the accuracy or validity of the information contained in the original document. This drawing is available and presented only for the convenience of any bidder, contractor or other interested party.					
DIST.	COUNTY	ROUTE	POST MILE-TOTAL PROJECT	Sheet No.	Total Sheets
11	SD	805	5.8/13.0	122	216
PROFESSIONAL GEOLOGIST				DATE 3/20/12	
SOUND WALL SW358R					
LOG OF TEST BORINGS 2 OF 2					
UNIT: 3643			CONTRACT No.	BRIDGE No.	
PROJ. No. & PHASE: 11000200481			11-2T1831		
AS-BUILT VERT DATUM:		CONVERSION:		Sheet	of
NOTE: A COPY OF THIS LOG OF TEST BORINGS IS AVAILABLE AT OFFICE OF STRUCTURE MAINTENANCE AND INVESTIGATIONS, SACRAMENTO, CALIFORNIA					

PROFESSIONAL GEOLOGIST
Mark Wilson
No. 8164
Exp. 06-30-14
STATE OF CALIFORNIA

INFORMATION ON ACTUAL FOUNDATION CONDITIONS IS ON FILE IN BRIDGE GEOLOGY SECTION

SHEET 8 OF 18

STATE OF CALIFORNIA
DEPARTMENT OF PUBLIC WORKS
DIVISION OF HIGHWAYS

NAPLES STREET UNDERCROSSING

LOG OF TEST BORINGS

SCALE As Noted | BRIDGE 57-634 R/L | FILE | DRAWING 57634-10

PREL. DRAWING NO. PR-

Disregard prints bearing earlier numbers

Charge 11201
W.A. 110121

AS BUILT PLANS
Contract No. 11-110124
Date Completed
Document No. A0000816

BRIDGE DEPARTMENT
ENGINEERING GEOLOGY SECTION

CHECKED by H.E. Perkins 3-15-66
Approval Recommended
Engineering Geologist

162

Dist	COUNTY	ROUTE	POST MILES TOTAL PROJECT	SHEET No.	TOTAL SHEETS
11	SD	805	5.8/13.0	123	216

REGISTERED CIVIL ENGINEER 02-14-13 DATE

02-25-13
PLANS APPROVAL DATE

REGISTERED PROFESSIONAL ENGINEER WILLIAM MICHAEL NICHOLS No. C74525 Exp. 12-31-13 CIVIL STATE OF CALIFORNIA

THE STATE OF CALIFORNIA OR ITS OFFICERS OR AGENTS SHALL NOT BE RESPONSIBLE FOR THE ACCURACY OR COMPLETENESS OF SCANNED COPIES OF THIS PLAN SHEET.

NOTE:

FOR ACCURATE RIGHT OF WAY DATA, CONTACT RIGHT OF WAY ENGINEERING AT THE DISTRICT OFFICE.

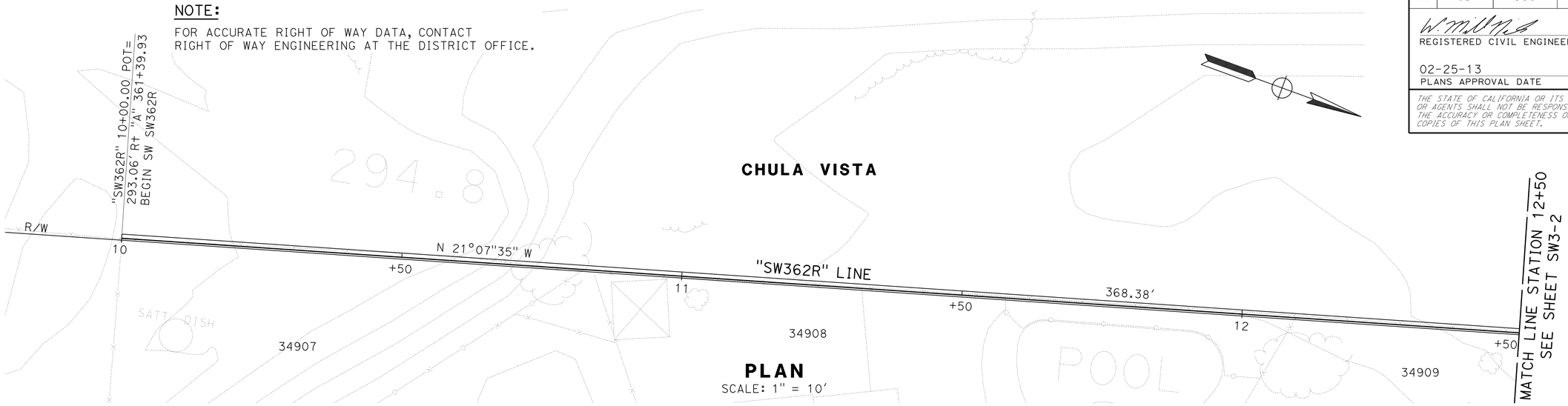

PLAN

SCALE: 1" = 10'

DESIGN HEIGHT	14'		12'		10'		8'	10'	12'														14'
LENGTH	42.67'		26.67'		16.00'		8.00'	10.67'	21.33'														198.67'
EXPANSION JOINTS	40.00'		42.67'				42.67'						41.33'				41.33'						42.67'

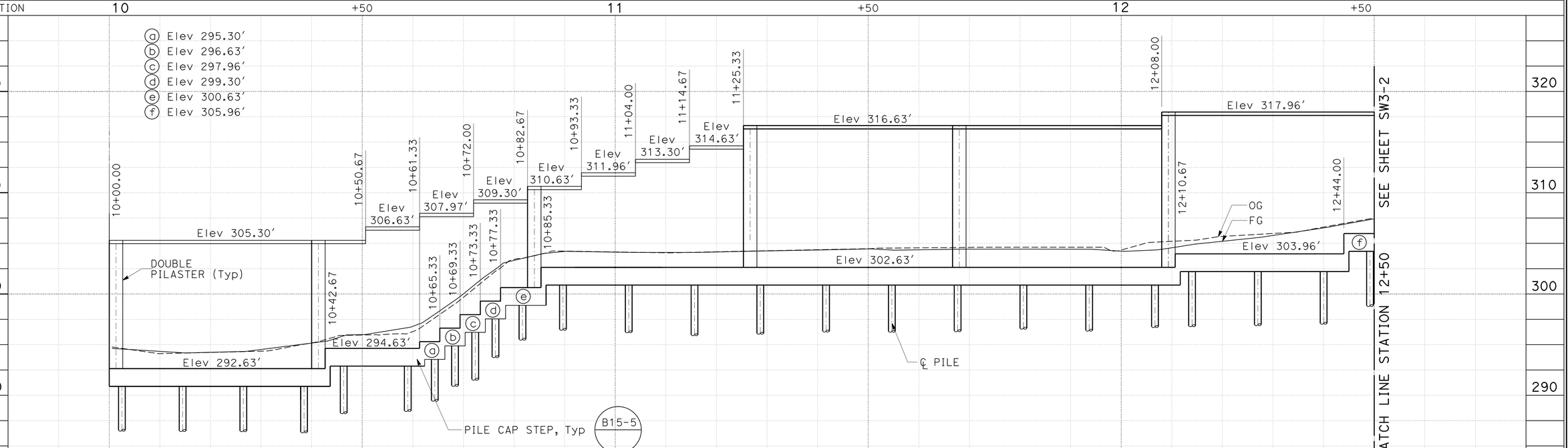

ELEVATION

SCALE: Horiz 1" = 10'
Vert 1" = 5'

APPROVED FOR SOUND WALL WORK ONLY

SOUND WALL PLAN

SOUND WALL SW362R - LOCATION 2

SCALE AS SHOWN **SW3-1**

STATE OF CALIFORNIA - DEPARTMENT OF TRANSPORTATION
Caltrans®
DESIGN

FUNCTIONAL SUPERVISOR: HARWELL M. ONTOY
CALCULATED-DESIGNED BY: WILLIAM MICHAEL NICHOLS
CHECKED BY: MAY ALSHEIKH
REVISED BY
DATE REVISED

LAST REVISION 02-19-13
DATE PLOTTED => 28-FEB-2013
TIME PLOTTED => 15:41

Dist	COUNTY	ROUTE	POST MILES TOTAL PROJECT	SHEET No.	TOTAL SHEETS
11	SD	805	5.8/13.0	124	216

REGISTERED CIVIL ENGINEER 02-14-13 DATE

02-25-13
PLANS APPROVAL DATE

REGISTERED PROFESSIONAL ENGINEER WILLIAM MICHAEL NICHOLS No. C74525 Exp. 12-31-13 CIVIL STATE OF CALIFORNIA

THE STATE OF CALIFORNIA OR ITS OFFICERS OR AGENTS SHALL NOT BE RESPONSIBLE FOR THE ACCURACY OR COMPLETENESS OF SCANNED COPIES OF THIS PLAN SHEET.

NOTE:

FOR ACCURATE RIGHT OF WAY DATA, CONTACT RIGHT OF WAY ENGINEERING AT THE DISTRICT OFFICE.

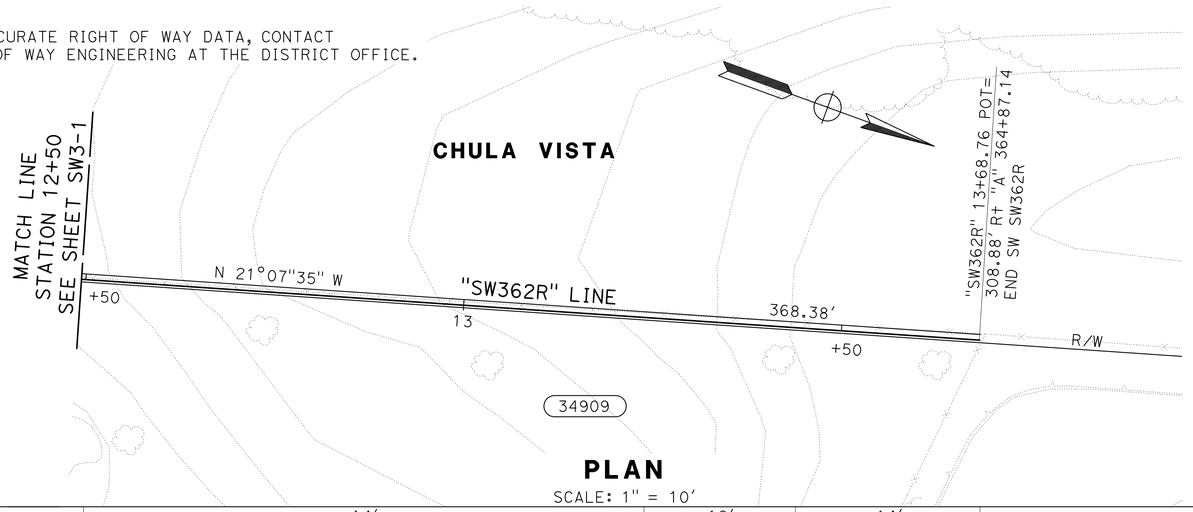

PLAN

SCALE: 1" = 10'

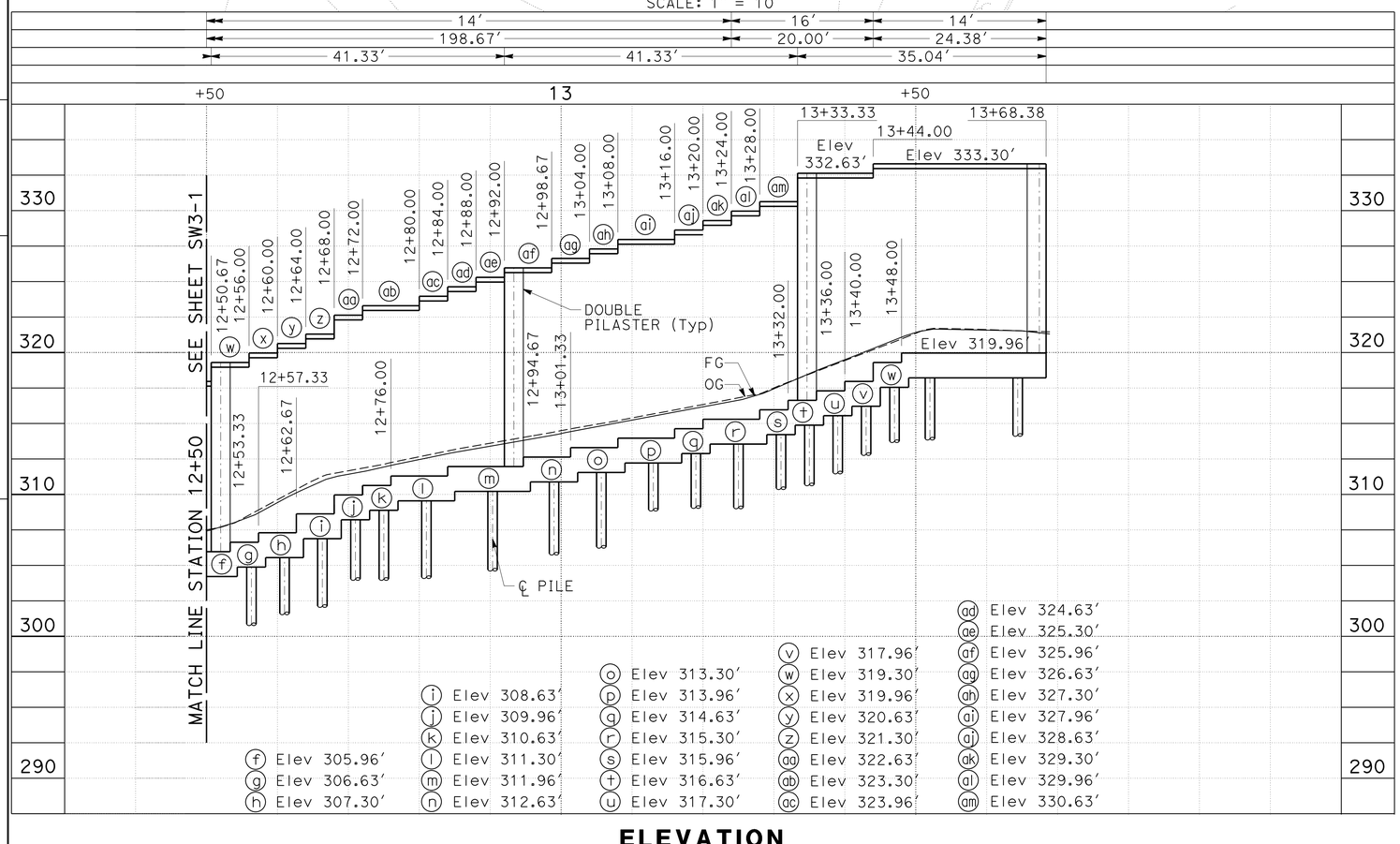

ELEVATION

SCALE: Horiz 1" = 10'
Vert 1" = 5'

PILE LOCATIONS

10+02.50	11+41.67	12+90.33
10+14.50	11+54.67	12+99.00
10+26.50	11+67.67	13+05.67
10+38.50	11+80.67	13+13.00
10+46.33	11+93.67	13+19.00
10+59.00	12+06.67	13+25.00
10+64.33	12+14.00	13+31.00
10+68.33	12+27.00	13+35.00
10+72.33	12+40.00	13+39.00
10+76.33	12+49.17	13+43.00
10+81.67	12+56.33	13+47.00
10+89.67	12+61.00	13+52.00
11+02.67	12+66.33	13+64.38
11+15.67	12+75.00	
11+28.67	12+81.00	

APPROVED FOR SOUND WALL WORK ONLY

SOUND WALL PLAN

SOUND WALL SW362R - LOCATION 2

SCALE AS SHOWN **SW3-2**

STATE OF CALIFORNIA - DEPARTMENT OF TRANSPORTATION
Caltrans® DESIGN

CALCULATED-DESIGNED BY WILLIAM MICHAEL NICHOLS
CHECKED BY MAY ALSHEIKH
FUNCTIONAL SUPERVISOR HARWELL M. ONTOY
REVISED BY
DATE REVISED

LAST REVISION 02-19-13
DATE PLOTTED => 28-FEB-2013
TIME PLOTTED => 15:41

Dist	COUNTY	ROUTE	POST MILES TOTAL PROJECT	SHEET No.	TOTAL SHEETS
11	SD	805	5.8/13.0	125	216

REGISTERED CIVIL ENGINEER 02-14-13 DATE

02-25-13
PLANS APPROVAL DATE

REGISTERED PROFESSIONAL ENGINEER
WILLIAM MICHAEL NICHOLS
No. C74525
Exp. 12-31-13
CIVIL
STATE OF CALIFORNIA

THE STATE OF CALIFORNIA OR ITS OFFICERS OR AGENTS SHALL NOT BE RESPONSIBLE FOR THE ACCURACY OR COMPLETENESS OF SCANNED COPIES OF THIS PLAN SHEET.

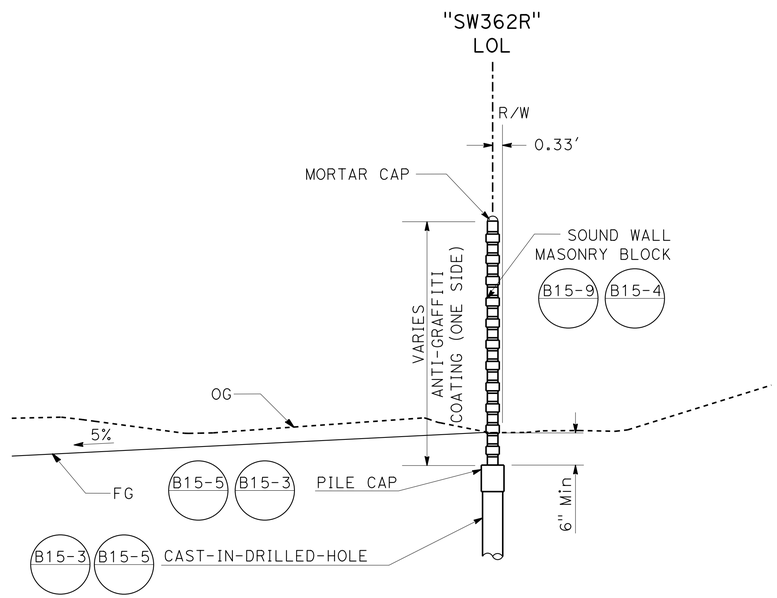

TYPICAL SECTION

SOUND WALL QUANTITIES (SW362R)

SOUND WALL (MASONRY BLOCK)	4,752	SQFT
STRUCTURAL CONCRETE (SOUND WALL)	37.3	CY
16" CIDH CONCRETE PILING (SOUND WALL)	440	LF
ANTI-GRAFFITI COATING	4,752	SQFT

GROUND LINE
CASE 1

SOUND WALL TYPICAL SECTION

SOUND WALL SW362R

NO SCALE

SW3-3

APPROVED FOR SOUND WALL WORK ONLY

STATE OF CALIFORNIA - DEPARTMENT OF TRANSPORTATION
Caltrans®
DESIGN

FUNCTIONAL SUPERVISOR: HARWELL M. ONTOY

CALCULATED-DESIGNED BY: WILLIAM MICHAEL NICHOLS
CHECKED BY: MAY ALSHEIKH

REVISED BY
DATE REVISED

LAST REVISION 02-19-13
DATE PLOTTED => 28-FEB-2013
TIME PLOTTED => 15:41

Dist	COUNTY	ROUTE	POST MILES TOTAL PROJECT	SHEET No.	TOTAL SHEETS
11	SD	805	5.8/13.0	126	216

REGISTERED CIVIL ENGINEER 02-14-13 DATE

02-25-13
PLANS APPROVAL DATE

REGISTERED PROFESSIONAL ENGINEER WILLIAM MICHAEL NICHOLS No. C74525 Exp. 12-31-13 CIVIL STATE OF CALIFORNIA

THE STATE OF CALIFORNIA OR ITS OFFICERS OR AGENTS SHALL NOT BE RESPONSIBLE FOR THE ACCURACY OR COMPLETENESS OF SCANNED COPIES OF THIS PLAN SHEET.

MASONRY BLOCK WALL NOTES:

1. CORE SIZE FOR 10" WIDE BLOCK SHALL MATCH THE CORE SIZE FOR 8" WIDE BLOCKS.
2. ALL PILASTERS SHALL BE PLUMB.
3. FOR DETAILS NOT SHOWN, SEE STANDARD PLAN, B15-3.
4. PROVIDE 16" X4" X 16" PILASTER BLOCK NEAR BOTTOM OF WALL AS REQUIRED FOR TOP OF PILASTER TO BE FLUSH WITH ADJACENT WALL.

MASONRY BLOCK LEGEND:

- BLOCK 'A': 10" x 8" x 8" SMOOTH FACE ALL EXPOSED SIDES. BLOCK WILL PROJECT 1" ON BOTH SIDES OF WALL.
- BLOCK 'B': 8" x 8" x 8" SPLIT FACE ALL EXPOSED SIDES.
- BLOCK 'C': 10" x 4" x 16" SPLIT FACE ALL EXPOSED SIDES. BLOCK WILL PROJECT 1" ON BOTH SIDES OF WALL.
- BLOCK 'D': 8" x 8" x 16" SPLIT FACE ALL EXPOSED SIDES.
- BLOCK 'E': 16" x 8" x 16" SPLIT FACE ALL EXPOSED SIDES EXCEPT WHERE FACE MEETS EXISTING WALL.
- BLOCK 'F': 10" x 4" x 16" SMOOTH FACE AT EXISTING WALL
  BLOCK 'F': 16" x 4" x 16" SMOOTH FACE AT PILASTER

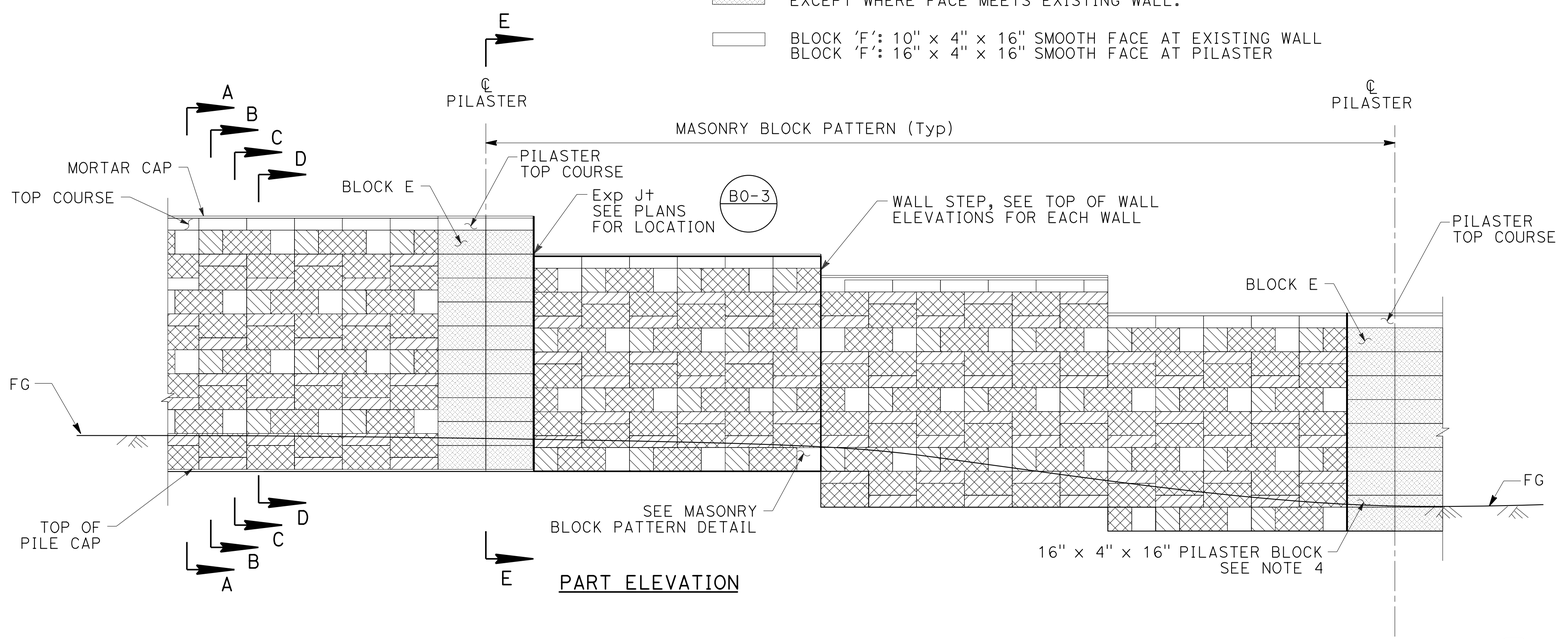

PART ELEVATION

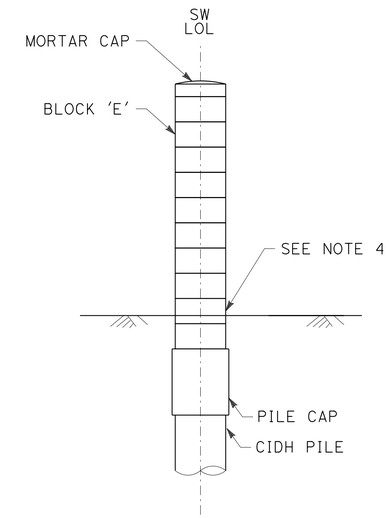

SECTION E-E

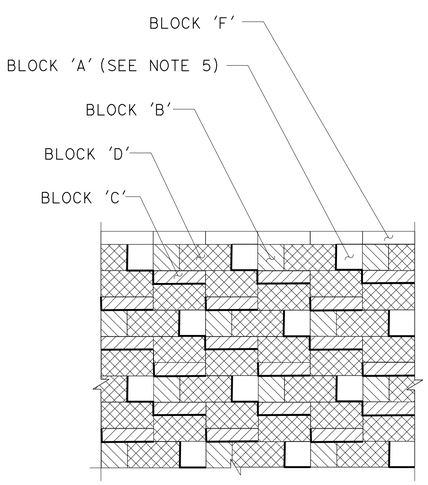

MASONRY BLOCK PATTERN

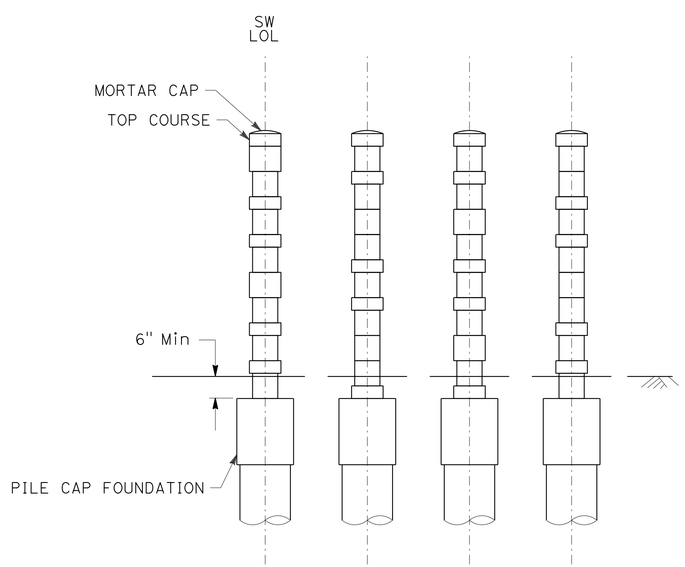

SECTIONS A-A, B-B, C-C, & D-D

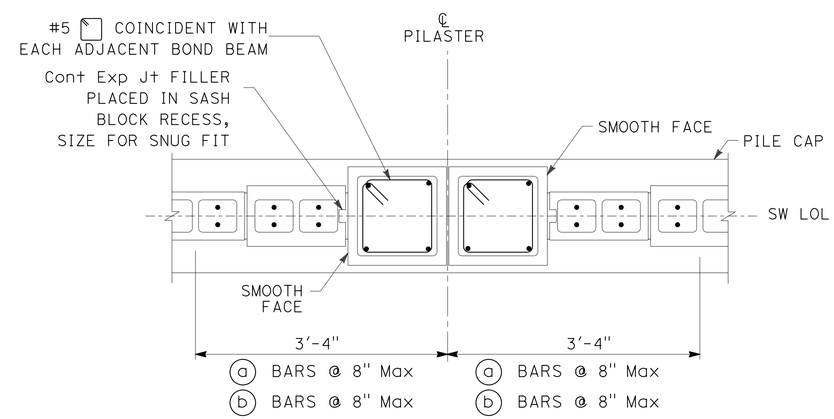

PILASTER DETAIL - DOUBLE PILASTER

SOUND WALL DETAILS

SOUND WALL SW362R

NO SCALE

SW3-4

STATE OF CALIFORNIA - DEPARTMENT OF TRANSPORTATION
DESIGN
Caltrans
FUNCTIONAL SUPERVISOR: HARWELL M. ONTOY
CALCULATED-DESIGNED BY: WILLIAM MICHAEL NICHOLS
CHECKED BY: MAY ALSHEIKH
REVISED BY
DATE REVISED

LAST REVISION 02-19-13
DATE PLOTTED => 28-FEB-2013
TIME PLOTTED => 15:41

DIST	COUNTY	ROUTE	POST MILES TOTAL PROJECT	SHEET No	TOTAL SHEETS
11	SD	805	5.8/13.0	127	216

PROFESSIONAL GEOLOGIST 02-20-13

02-25-13
PLANS APPROVAL DATE

PROFESSIONAL GEOLOGIST Mark Wilson No. 8164 Exp. 06-30-14 STATE OF CALIFORNIA

The State of California or its officers or agents shall not be responsible for the accuracy or completeness of electronic copies of this plan sheet.

This LOTB sheet was prepared in accordance with the Caltrans Soil & Rock Logging, Classification, & Presentation Manual (June 2010 Edition).

BENCH MARK

BM 805-5.00, Brass disk in sidewalk on north side of E. Palomar St. OC Bridge. Sta 298+46, 60′ Rt from ℄ Rte 805.
Elev 300.93′
N 549996.899
E 1926063.832
NAVD88 (Vertical)
CCS83 (Horizontal)

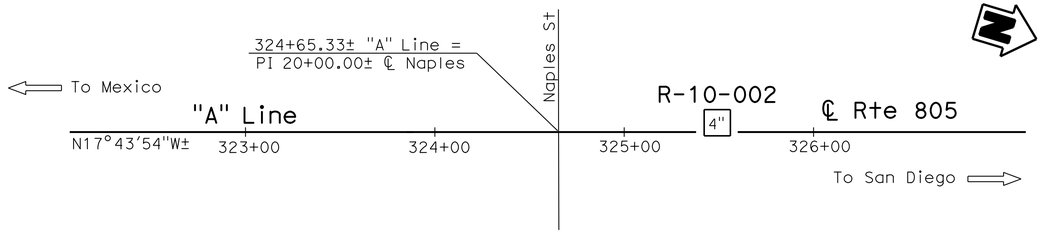

PLAN
1" = 40′

Notes:

1. No ground water was encountered during the 2010 subsurface investigation.
2. RQD designation with "N/A" (not applicable) indicates that the rock encountered within the drill interval was not sound rock, therefore RQD was not calculated.

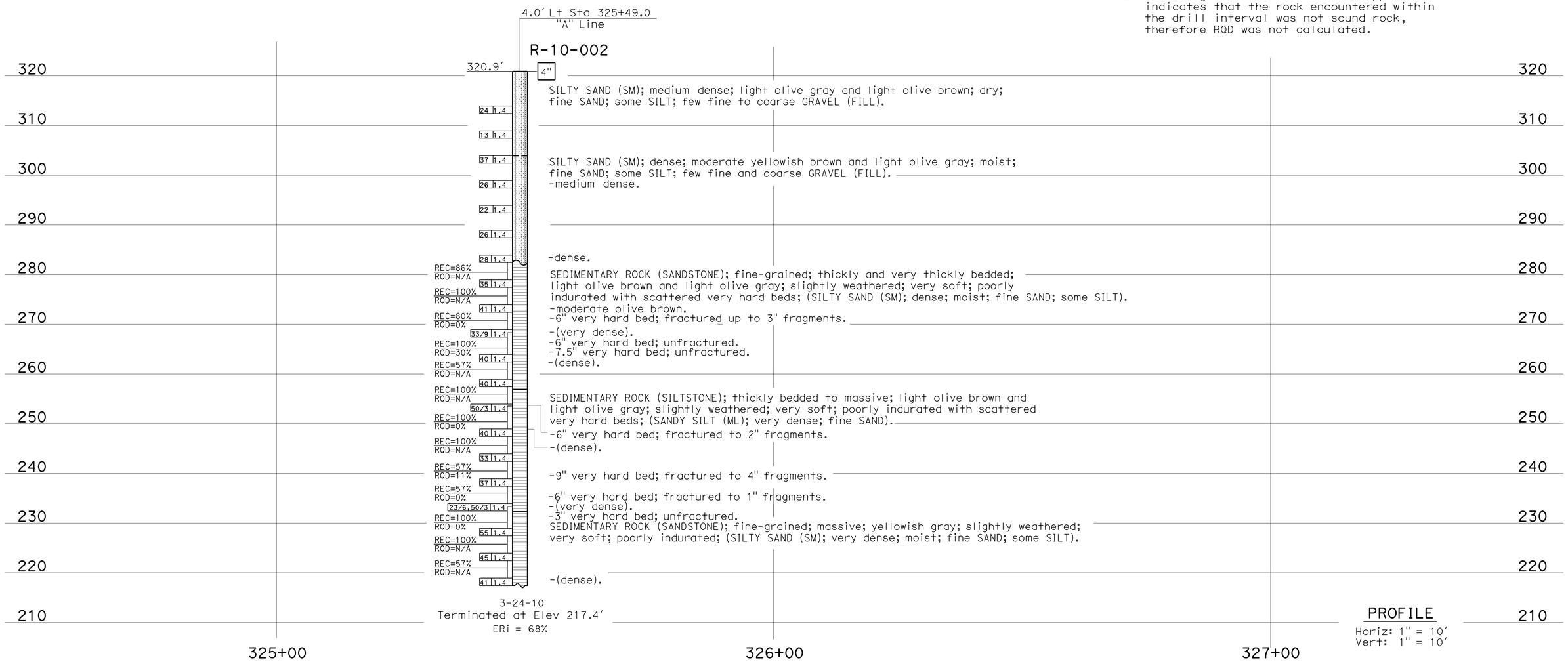

PROFILE
Horiz: 1" = 10′
Vert: 1" = 10′

ENGINEERING SERVICES	MATERIALS AND GEOTECHNICAL SERVICES	STATE OF CALIFORNIA DEPARTMENT OF TRANSPORTATION	DIVISION OF ENGINEERING SERVICES STRUCTURE DESIGN DESIGN BRANCH X	BRIDGE NO. / POST MILE 6.2	SOUND WALL SW362R	1 OF 2
FUNCTIONAL SUPERVISOR NAME: S. Wei	DRAWN BY: W. Tang, I.G-Remmen / CHECKED BY: B. Gutierrez	FIELD INVESTIGATION BY: T-M Liao			LOG OF TEST BORINGS	SW3-5

OGS CIVIL LOG OF TEST BORINGS SHEET

ORIGINAL SCALE IN INCHES FOR REDUCED PLANS 0 1 2 3

UNIT: 3643
PROJECT NUMBER & PHASE: 11000200481 CONTRACT NO.: 11-2T0831

DISREGARD PRINTS BEARING EARLIER REVISION DATES → REVISION DATES 03-28-12 03-28-12 SHEET X OF X

FILE => 1100020048rc005.dgn

USERNAME => s127400 DATE PLOTTED => 28-FEB-2013 TIME PLOTTED => 15:41

FED. ROAD DIST. NO.	STATE	F. A. PROJECT NO.	SHEET NO.	TOTAL SHEETS
7	CALIF.			

DIST.	COUNTY	ROUTE	SECTION	SHEET NO.	TOTAL SHEETS
11	SD	805	5.8/13.0	162	216

REGISTERED CIVIL ENGINEER

DATE SIGNED May 26, 1969

LEGEND OF BORING OPERATIONS

- PENETROMETER
- 2¾" CORE PENETROMETER
- SAMPLER BORING (DRY)
- ROTARY BORING (WET)
- AUGER BORING (DRY)
- JET BORING
- CORE BORING
- TEST PIT

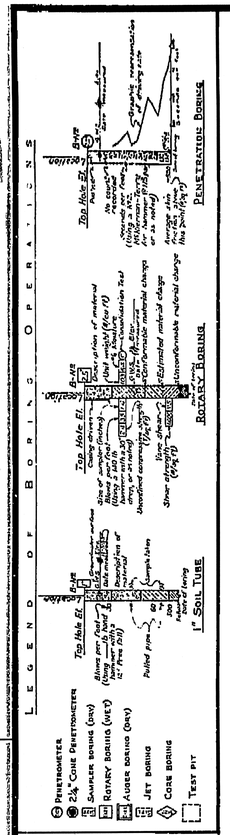

LEGEND OF EARTH MATERIALS

- GRAVEL
- SAND
- SILT
- CLAY
- SANDY CLAY OR CLAYEY SAND
- SANDY SILT OR SILTY SAND
- SILTY CLAY OR CLAYEY SILT
- PEAT AND ORGANIC MATTER
- FILL MATERIAL
- IGNEOUS ROCK
- SEDIMENTARY ROCK
- METAMORPHIC ROCK

CLASSIFICATION OF MATERIAL BASED ON STANDARD GRADE SIZE LIMITS

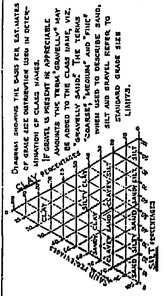

NOTE: Classification of earth material as shown on this sheet is based upon field inspection and is not to be construed to imply mechanical analysis.

CHECKED

Approval Recommended

BRIDGE DEPARTMENT
ENGINEERING GEOLOGY SECTION

BENCH MARK

BM" BL-875 B Elev. 304.51
2" I. P. with std. brass disc set on ℄ of Nacion St. produced S. to a point on first ridge 500'± S. of Naples Street.

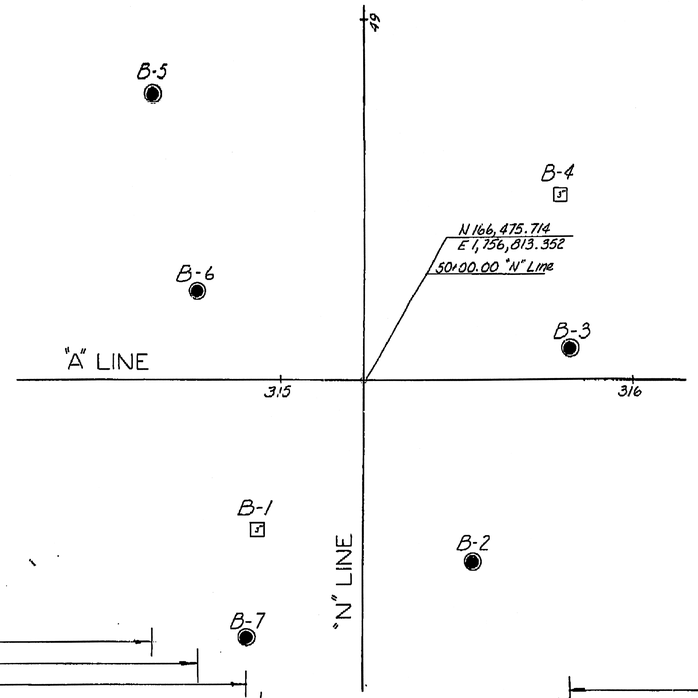

PLAN

Scale 1" = 20'

DIVISION OF ENGINEERING SERVICES - MATERIALS AND GEOTECHNICAL SERVICES

As-Built Log of Test Borings sheet is considered an informational document only. As such, the State of California registration seal with signature, license number and registration certificate expiration date confirm that this is a true and accurate copy of the original document. It does not attest to the accuracy or validity of the information contained in the original document. This drawing is available and presented only for the convenience of any bidder, contractor or other interested party.

DIST.	COUNTY	ROUTE	POST MILE-TOTAL PROJECT	Sheet No.	Total Sheets
11	SD	805	5.8/13.0	128	216

PROFESSIONAL GEOLOGIST — DATE 3/20/12

PROFESSIONAL GEOLOGIST — Mark Wilson — No. 8164 — Exp. 06-30-14 — STATE OF CALIFORNIA

SOUND WALL SW362R

LOG OF TEST BORINGS 2 OF 2

UNIT: 3643	CONTRACT No.	BRIDGE No.
PROJ. No. & PHASE: 11000200481	11-2T1831	
AS-BUILT VERT DATUM: CONVERSION:	Sheet	of

NOTE: A COPY OF THIS LOG OF TEST BORINGS IS AVAILABLE AT OFFICE OF STRUCTURE MAINTENANCE AND INVESTIGATIONS, SACRAMENTO, CALIFORNIA

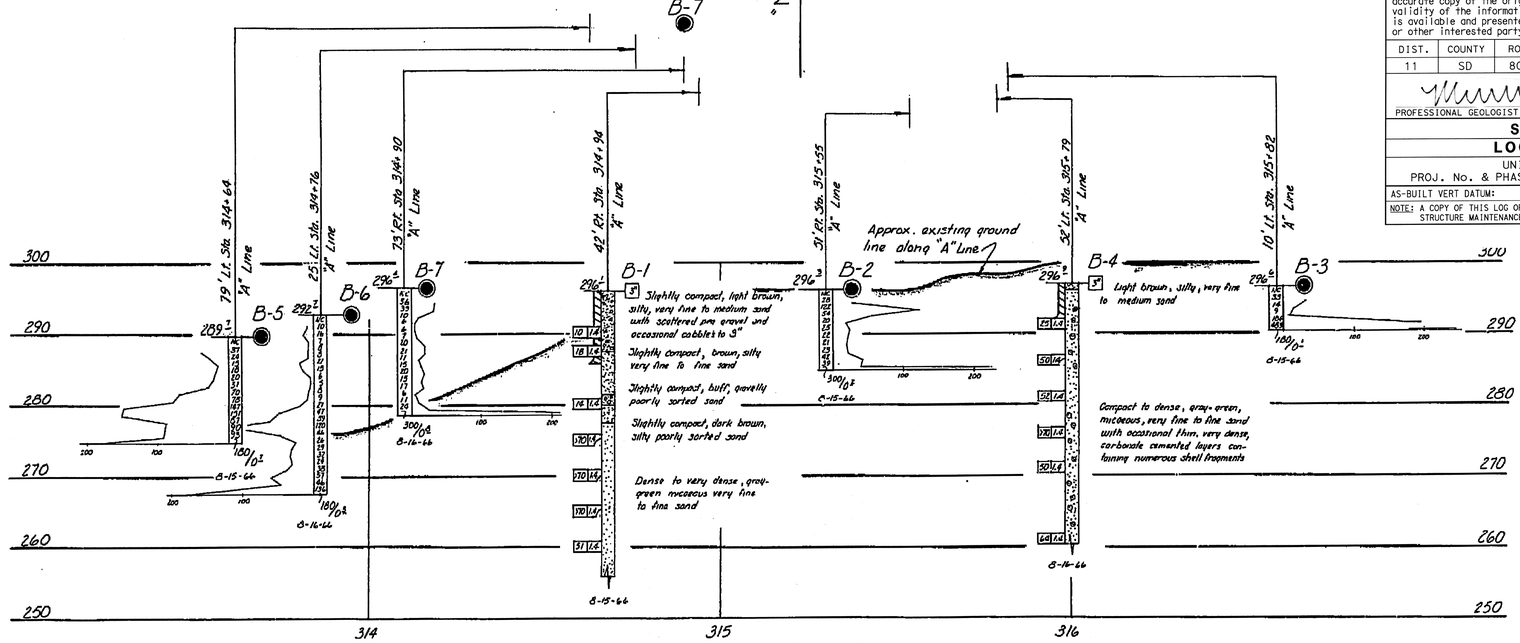

PROFILE

Scale Vert. 1" = 10'
Horiz. 1" = 20'

INFORMATION ON ACTUAL FOUNDATION CONDITIONS IS ON FILE IN BRIDGE ENGINEERING GEOLOGY SECTION

SHEET	OF
8	18

STATE OF CALIFORNIA
DEPARTMENT OF PUBLIC WORKS
DIVISION OF HIGHWAYS

NAPLES STREET UNDERCROSSING

LOG OF TEST BORINGS

SCALE As Noted	BRIDGE 57-634 S/L	FILE	DRAWING 57634-10

AS BUILT PLANS
Contract No. 11-110124
Date Completed
Document No. A0000816

Charge 11201
W.A. 110121

Disregard prints bearing earlier numbers

PREL. DRAWING No. PR-

Dist	COUNTY	ROUTE	POST MILES TOTAL PROJECT	SHEET No.	TOTAL SHEETS
11	SD	805	5.8/13.0	129	216

REGISTERED CIVIL ENGINEER 02-14-13 DATE

02-25-13
PLANS APPROVAL DATE

REGISTERED PROFESSIONAL ENGINEER WILLIAM MICHAEL NICHOLS No. C74525 Exp. 12-31-13 CIVIL STATE OF CALIFORNIA

THE STATE OF CALIFORNIA OR ITS OFFICERS OR AGENTS SHALL NOT BE RESPONSIBLE FOR THE ACCURACY OR COMPLETENESS OF SCANNED COPIES OF THIS PLAN SHEET.

NOTE:

FOR ACCURATE RIGHT OF WAY DATA, CONTACT RIGHT OF WAY ENGINEERING AT THE DISTRICT OFFICE.

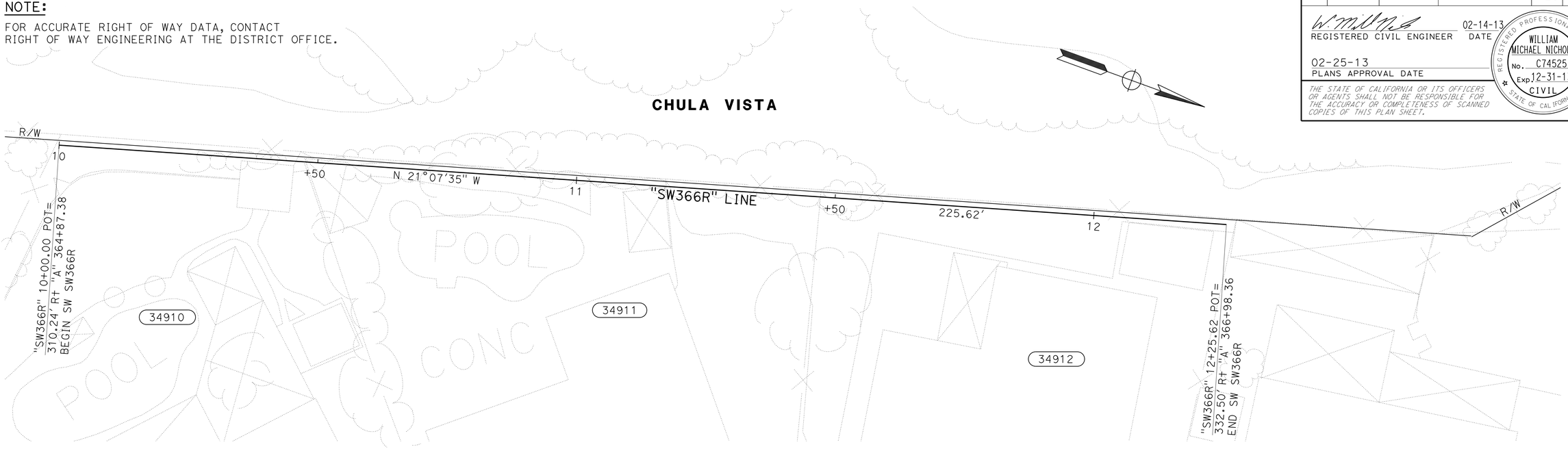

FOOTING PLAN

SCALE: 1" = 10'

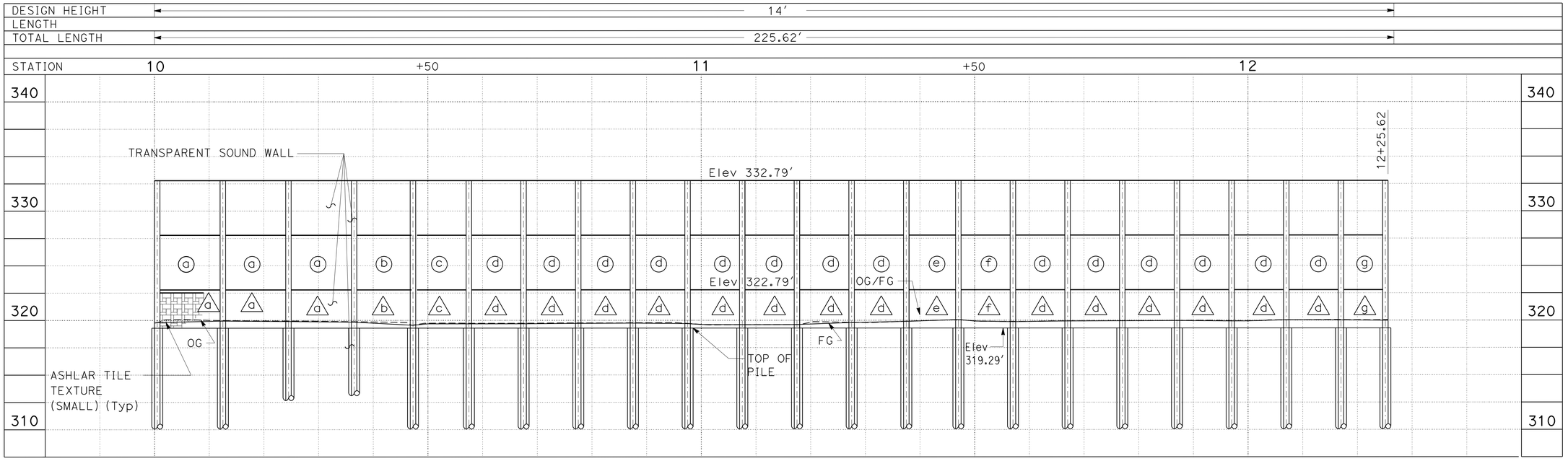

ELEVATION

SCALE: Horiz 1" = 10'
Vert 1" = 5'

APPROVED FOR SOUND WALL WORK ONLY

SOUND WALL PLAN

SOUND WALL SW366R - LOCATION 2

SCALE AS SHOWN

SW4-1

STATE OF CALIFORNIA - DEPARTMENT OF TRANSPORTATION
Caltrans®
DESIGN

FUNCTIONAL SUPERVISOR: HARWELL M. ONTOY
CALCULATED-DESIGNED BY: WILLIAM MICHAEL NICHOLS
CHECKED BY: MAY ALSHEIKH
REVISED BY
DATE REVISED

LAST REVISION 02-19-13
DATE PLOTTED => 28-FEB-2013
TIME PLOTTED => 15:41

Dist	COUNTY	ROUTE	POST MILES TOTAL PROJECT	SHEET No.	TOTAL SHEETS
11	SD	805	5.8/13.0	130	216

REGISTERED CIVIL ENGINEER 02-14-13 DATE

02-25-13
PLANS APPROVAL DATE

REGISTERED PROFESSIONAL ENGINEER WILLIAM MICHAEL NICHOLS No. C74525 Exp. 12-31-13 CIVIL STATE OF CALIFORNIA

THE STATE OF CALIFORNIA OR ITS OFFICERS OR AGENTS SHALL NOT BE RESPONSIBLE FOR THE ACCURACY OR COMPLETENESS OF SCANNED COPIES OF THIS PLAN SHEET.

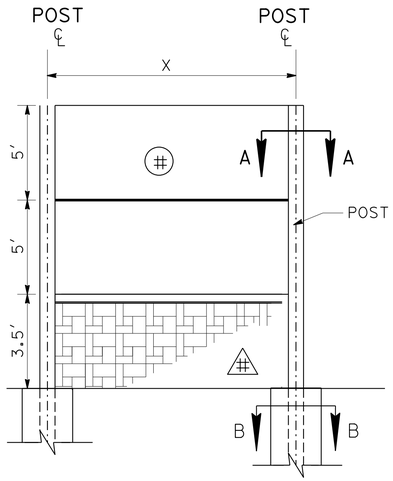

PANEL DIMENSIONS

ELEVATION

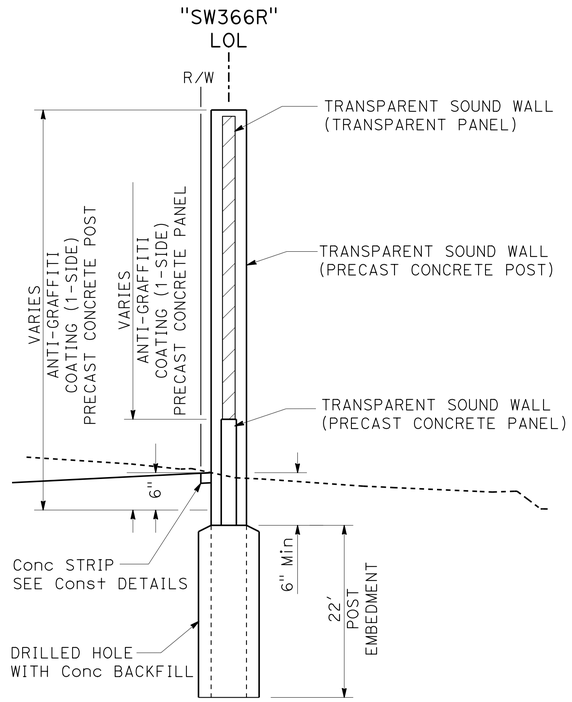

TYPICAL SECTION

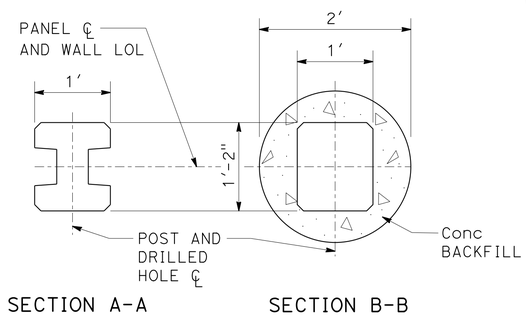

CONCRETE BACKFILL

STATION	24"Dia	STATION	24"Dia
10+00.50	X	11+27.50	X
10+12.50	X	11+37.50	X
10+24.50	X	11+47.02	X
10+36.50	X	11+57.00	X
10+47.30	X	11+67.00	X
10+57.50	X	11+77.00	X
10+67.50	X	11+87.00	X
10+77.50	X	11+97.00	X
10+87.50	X	12+07.00	X
10+97.50	X	12+17.00	X
11+07.50	X	12+25.12	X
11+17.50	X	-	-

(N) NOT A PAY ITEM FOR INFORMATION ONLY

TRANSPARENT SOUND WALL PANEL DIMENSIONS

PANEL ◯	X	HEIGHT	PANEL	AREA
	LF	LF	EACH (N)	SQFT
a	12.00	10.00	3	360.0
b	10.77	10.00	1	107.7
c	10.23	10.00	1	102.3
d	10.00	10.00	14	1,400.0
e	9.52	10.00	1	95.2
f	9.98	10.00	1	99.8
g	8.12	10.00	1	81.2
			TOTAL	2,246.2

(N) NOT A PAY ITEM FOR INFORMATION ONLY

TRANSPARENT SOUND WALL PRECAST CONCRETE PANEL DIMENSIONS

PANEL △	X	HEIGHT	PANEL	AREA
	LF	LF	EACH (N)	SQFT
a	12.00	3.50	3	126.0
b	10.77	3.50	1	37.7
c	10.23	3.50	1	35.8
d	10.00	3.50	14	490.0
e	9.52	3.50	1	33.3
f	9.98	3.50	1	34.9
g	8.12	3.50	1	28.4
			TOTAL	786.1

(N) NOT A PAY ITEM FOR INFORMATION ONLY

ANTI-GRAFFITI COATING

PRECAST CONCRETE PANEL	742 SQFT
PRECAST CONCRETE POST	322 SQFT
TOTAL	1,064 SQFT

SOUND WALL QUANTITIES (SW366R)

TRANSPARENT SOUND WALL	3,051 SQFT
ANTI-GRAFFITI COATING	1,064 SQFT

APPROVED FOR SOUND WALL WORK ONLY

SOUND WALL DETAILS

SOUND WALL SW366R - LOCATION 2

NO SCALE

SW4-2

STATE OF CALIFORNIA - DEPARTMENT OF TRANSPORTATION
Caltrans® DESIGN

FUNCTIONAL SUPERVISOR: HARWELL M. ONTOY
CALCULATED-DESIGNED BY: WILLIAM MICHAEL NICHOLS
CHECKED BY: MAY ALSHEIKH
REVISED BY
DATE REVISED

LAST REVISION 02-19-13
DATE PLOTTED => 28-FEB-2013
TIME PLOTTED => 15:41

Dist	COUNTY	ROUTE	POST MILES TOTAL PROJECT	SHEET No.	TOTAL SHEETS
11	SD	805	5.8/13.0	131	216

REGISTERED CIVIL ENGINEER 02-14-13 DATE

02-25-13
PLANS APPROVAL DATE

REGISTERED PROFESSIONAL ENGINEER WILLIAM MICHAEL NICHOLS No. C74525 Exp. 12-31-13 CIVIL STATE OF CALIFORNIA

THE STATE OF CALIFORNIA OR ITS OFFICERS OR AGENTS SHALL NOT BE RESPONSIBLE FOR THE ACCURACY OR COMPLETENESS OF SCANNED COPIES OF THIS PLAN SHEET.

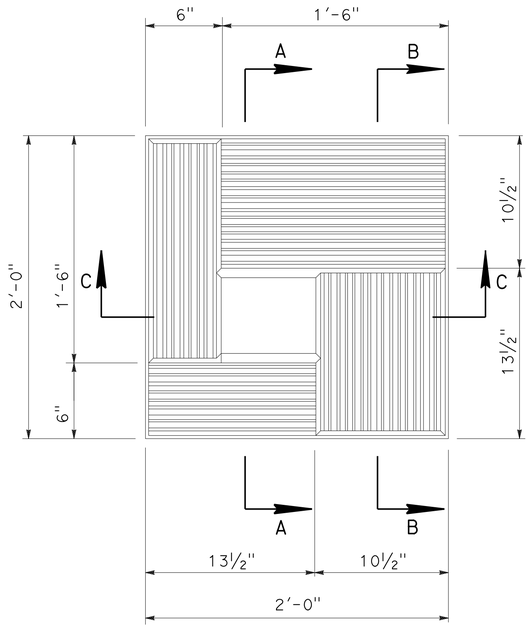

ASHLAR TILE TEXTURE (SMALL) DETAIL

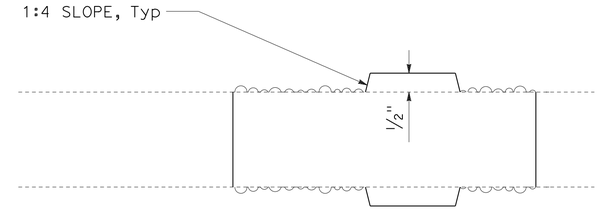

SECTION A-A

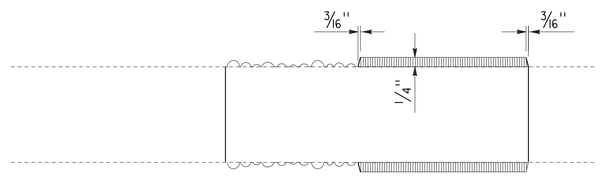

SECTION B-B

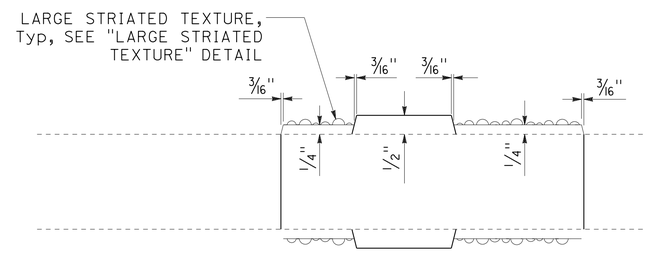

SECTION C-C

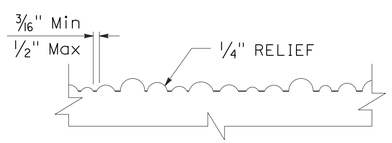

LARGE STRIATED TEXTURE DETAIL

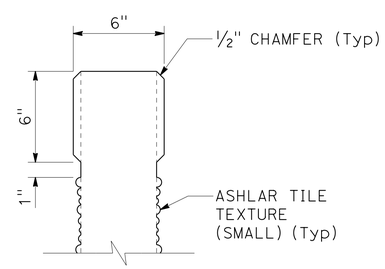

SECTION D-D

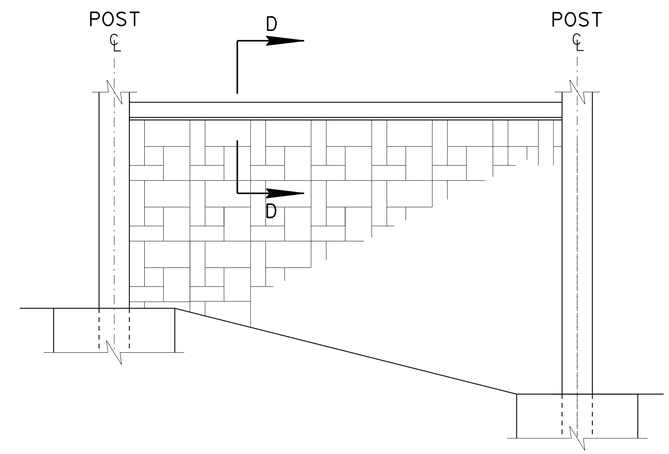

PRECAST CONCRETE PANEL ARCHITECTURAL TREATMENT DETAIL

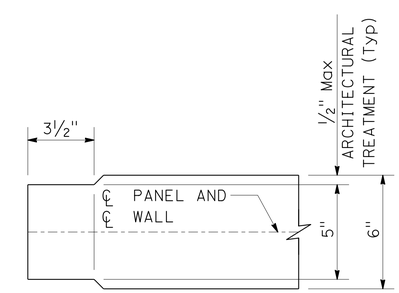

PRECAST CONCRETE PANEL END DETAIL

SOUND WALL DETAILS

SOUND WALL SW366R

NO SCALE

SW4-3

STATE OF CALIFORNIA - DEPARTMENT OF TRANSPORTATION
Caltrans®
DESIGN

FUNCTIONAL SUPERVISOR: HARWELL M. ONTOY
CALCULATED-DESIGNED BY: WILLIAM MICHAEL NICHOLS
CHECKED BY: MAY ALSHEIKH
REVISED BY
DATE REVISED

LAST REVISION 02-19-13
DATE PLOTTED => 28-FEB-2013
TIME PLOTTED => 15:41

FED. ROAD DIV. NO.	STATE	F. A. PROJECT No.	SHEET No.	TOTAL SHEETS
7	CALIF.			

Dist.	County	Route	Section	Sheet No.	Total Sheets
11	SD	805	5.8/13.0	123	210

Resident Structure Representative — Registered Civil Engineer No. 22515

Date of Plans: May 26, 1969

DATE APRIL 1968

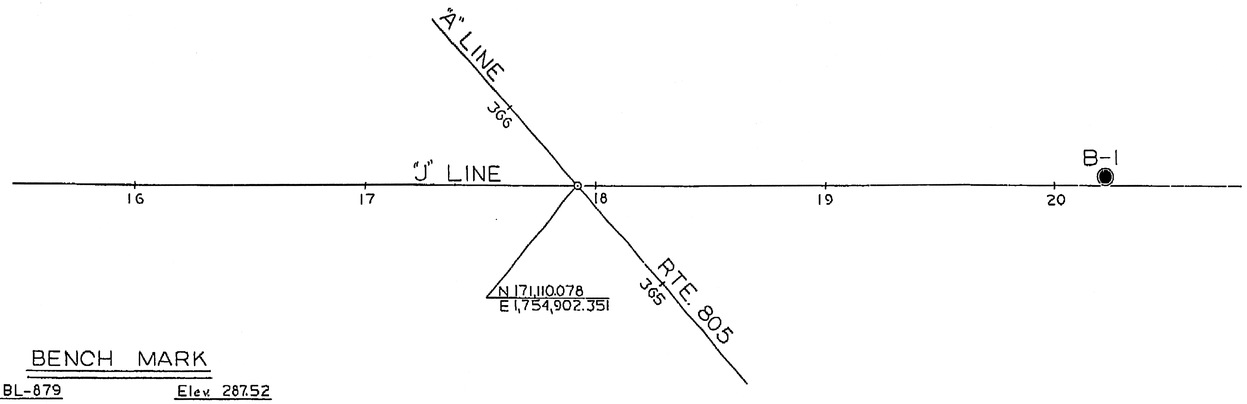

BENCH MARK

BM BL-879 Elev. 287.52

2" I.P. with std brass disc set on a saddle 124.65' left of sta. 363+76.10 P.O.C. "A" Line.

PLAN

Scale: 1"=30'

DIVISION OF ENGINEERING SERVICES - MATERIALS AND GEOTECHNICAL SERVICES					
As-Built Log of Test Borings sheet is considered an informational document only. As such, the State of California registration seal with signature, license number and registration certificate expiration date confirm that this is a true and accurate copy of the original document. It does not attest to the accuracy or validity of the information contained in the original document. This drawing is available and presented only for the convenience of any bidder, contractor or other interested party.					
DIST.	COUNTY	ROUTE	POST MILE-TOTAL PROJECT	Sheet No.	Total Sheets
11	SD	805	5.8/13.0	132	216
PROFESSIONAL GEOLOGIST			DATE 3/20/12		
SOUND WALL SW366R					
LOG OF TEST BORINGS 1 OF 2					
UNIT: 3643		CONTRACT No.	BRIDGE No.		
PROJ. No. & PHASE: 11000200481		11-2T1831			
AS-BUILT VERT DATUM: CONVERSION:				Sheet	of
NOTE: A COPY OF THIS LOG OF TEST BORINGS IS AVAILABLE AT OFFICE OF STRUCTURE MAINTENANCE AND INVESTIGATIONS, SACRAMENTO, CALIFORNIA					

PROFESSIONAL GEOLOGIST — Mark Wilson — No. 8164 — Exp. 06-30-14 — STATE OF CALIFORNIA

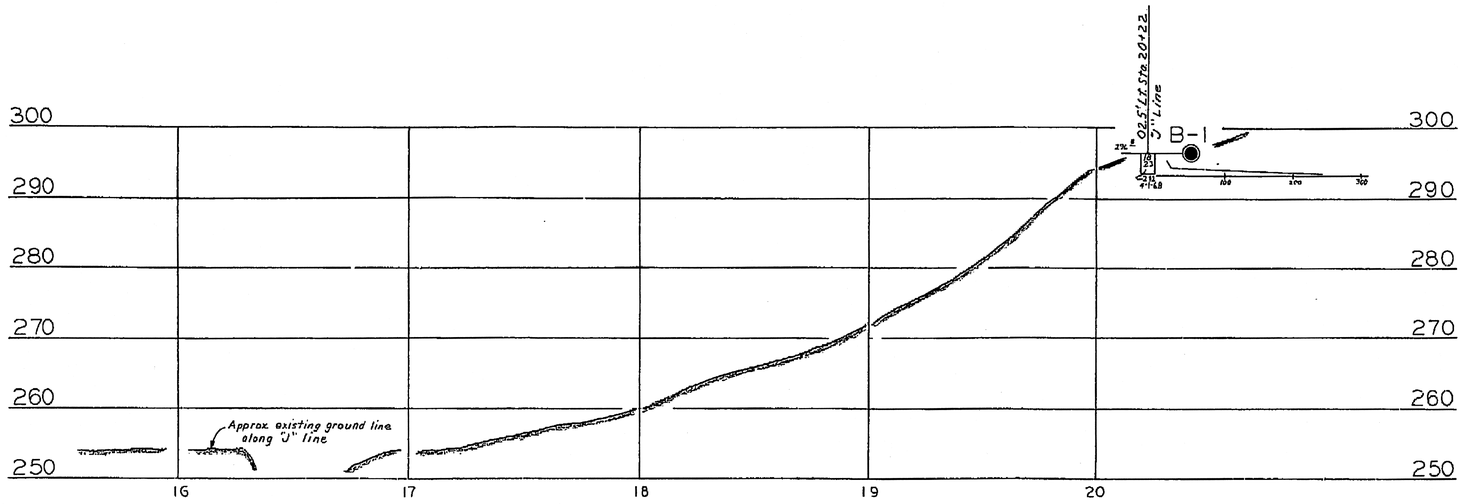

PROFILE

Scale: Vert. 1"=10'
Horz. 1"=30'

INFORMATION ON ACTUAL FOUNDATION CONDITIONS MAY BE OBTAINED IN BRIDGE DEPARTMENT SCHEMES

SHEET 11 OF 15

STATE OF CALIFORNIA
DEPARTMENT OF PUBLIC WORKS
DIVISION OF HIGHWAYS

"J" STREET OVERCROSSING

LOG OF TEST BORINGS

SCALE As Noted	BRIDGE 57-636	FILE	DRAWING 57636-11

PREL. DRAWING No. PR- 2/21/21

CHG 11201
WA 110111

Disregard prints bearing earlier numbers

AS BUILT PLANS
Contract No. 11-110124
Date Completed
Document No. A0000816

LEGEND OF OPERATIONS

- Penetrometer
- 2½" Core Penetrometer
- Sampler Boring (Dry)
- Sampler Boring (Wet)
- Rotary Boring (Wet)
- Auger Boring (Dry)
- Jet Boring
- Core Boring
- Test Pit

Penetration Boring — Rotary Boring — 1" Soil Tube

LEGEND OF EARTH MATERIALS

Gravel; Sand; Silt; Clay; Sandy Clay or Clayey Sand; Sandy Silt or Silty Sand; Silty Clay or Clayey Silt; Organic Matter; Fill Material; Igneous Rock; Sedimentary Rock; Metamorphic Rock

CLASSIFICATION OF MATERIAL BASED ON STANDARD GRADE SIZE LIMITS

Diagram showing the sieve the estimates of grade size distribution less in determination of class names.

If gravel is present in appreciable quantities the modifier "gravelly" may be added to the class name, viz. "gravelly sand". The terms "trace" and "with" may be used to describe sand, silt and gravel. Refer to standard grade size limits.

NOTE: Classification of earth material as shown on this sheet is based upon field inspection and is not to be construed to imply mechanical analysis.

CHECKED — Approval Recommended

BRIDGE DEPARTMENT
ENGINEERING GEOLOGY SECTION

33

FED. ROAD DIV. No.	STATE	F.A. PROJECT No.	SHEET No.	TOTAL SHEETS
7	CALIF.			

DIST.	COUNTY	ROUTE	SECTION	SHEET No.	TOTAL SHEETS
11	SD	805	3.4/7.3	129	216

REPRODUCED FROM ORIGINAL OF DATE May 26, 1969

BENCH MARK

BM" BL 877 Elev 200.10
Lead and tag set in curb of Telegraph Canyon Road
44.28' left of station 11+07.82 on "T" Line

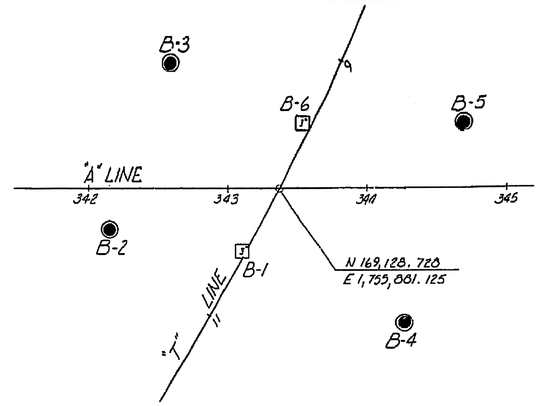

PLAN

Scale 1" = 50'

DIVISION OF ENGINEERING SERVICES - MATERIALS AND GEOTECHNICAL SERVICES					
As-Built Log of Test Borings sheet is considered an informational document only. As such, the State of California registration seal with signature, license number and registration certificate expiration date confirm that this is a true and accurate copy of the original document. It does not attest to the accuracy or validity of the information contained in the original document. This drawing is available and presented only for the convenience of any bidder, contractor or other interested party.					
DIST.	COUNTY	ROUTE	POST MILE-TOTAL PROJECT	Sheet No.	Total Sheets
11	SD	805	5.8/13.0	133	216
PROFESSIONAL GEOLOGIST			DATE 3/20/12		
SOUND WALL SW366R					
LOG OF TEST BORINGS 2 OF 2					
UNIT: 3643			CONTRACT No.	BRIDGE No.	
PROJ. No. & PHASE: 11000200481			11-2T1831		
AS-BUILT VERT DATUM:		CONVERSION:		Sheet	of
NOTE: A COPY OF THIS LOG OF TEST BORINGS IS AVAILABLE AT OFFICE OF STRUCTURE MAINTENANCE AND INVESTIGATIONS, SACRAMENTO, CALIFORNIA					

PROFESSIONAL GEOLOGIST
Mark Wilson
No. 8164
Exp. 06-30-14
STATE OF CALIFORNIA

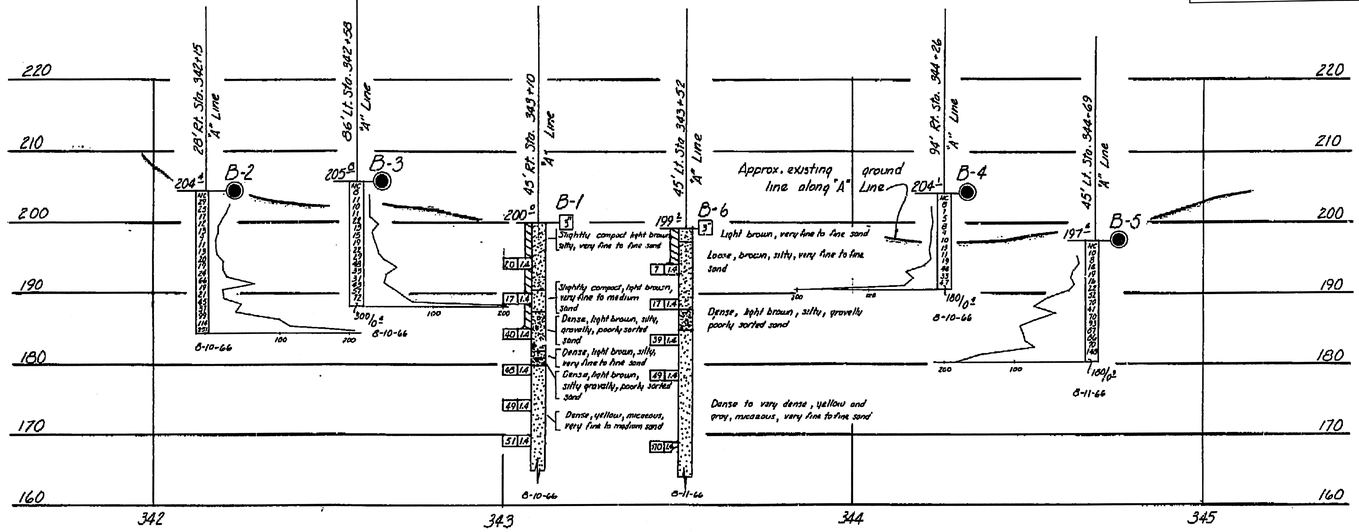

INFORMATION ON ACTUAL FOUNDATION CONDITIONS ENCOUNTERED IS ON FILE IN BRIDGE GEOLOGY SECTION

PROFILE

Scale Vert. 1" = 10'
Horiz. 1" = 20'

AS BUILT PLANS
Contract No. 11-110124
Date Completed
Document No. A0000816

LEGEND OF BORING OPERATIONS

- Penetrometer
- 2½" Coil Penetrometer
- Sampler Boring (Dry)
- Rotary Boring (Wet)
- Auger Boring (Dry)
- Jet Boring
- Core Boring
- Test Pit

Penetration Boring

Rotary Boring

1" Soil Tube

LEGEND OF EARTH MATERIALS

- Gravel
- Silty Clay or Clayey Silt
- Peat and Organic Matter
- Sand
- Fill Material
- Silt
- Clay
- Igneous Rock
- Sandy Clay or Clayey Sand
- Sedimentary Rock
- Sandy Silt or Silty Sand
- Metamorphic Rock

Approved Recommended: Charles E. Nelson, Materials Engineer

CLASSIFICATION OF MATERIAL BASED ON STANDARD GRADE SIZE LIMITS

Diagram showing the basis for estimates of percentages of constituents used in letter designation of class names. If gravel is present in appreciable amounts, the term "gravelly" may be added to the class name, viz. "gravelly sandy clay". The terms "coarse", "medium" and "fine" modify gravel, sand, and silt and gravel, respectively, to standard grade size limits.

NOTE: Classification of earth material as shown on this sheet is based upon field inspection and is not to be construed to imply mechanical analysis.

BRIDGE DEPARTMENT
ENGINEERING GEOLOGY SECTION

Sheet 2 of 17

STATE OF CALIFORNIA
DEPARTMENT OF PUBLIC WORKS
DIVISION OF HIGHWAYS

TELEGRAPH CANYON ROAD
UNDERCROSSING

LOG OF TEST BORINGS

SCALE As Noted	BRIDGE 57-635 R/L	FILE	DRAWING 57635-11

Charge 11201
W.A. 110121

Disregard prints bearing earlier numbers

PREL. DRAWING No. PR- 7/4

Dist	COUNTY	ROUTE	POST MILES TOTAL PROJECT	SHEET No.	TOTAL SHEETS
11	SD	805	5.8/13.0	134	216

REGISTERED CIVIL ENGINEER 02-14-13 DATE

02-25-13
PLANS APPROVAL DATE

REGISTERED PROFESSIONAL ENGINEER WILLIAM MICHAEL NICHOLS No. C74525 Exp. 12-31-13 CIVIL STATE OF CALIFORNIA

THE STATE OF CALIFORNIA OR ITS OFFICERS OR AGENTS SHALL NOT BE RESPONSIBLE FOR THE ACCURACY OR COMPLETENESS OF SCANNED COPIES OF THIS PLAN SHEET.

NOTE:

FOR ACCURATE RIGHT OF WAY DATA, CONTACT RIGHT OF WAY ENGINEERING AT THE DISTRICT OFFICE.

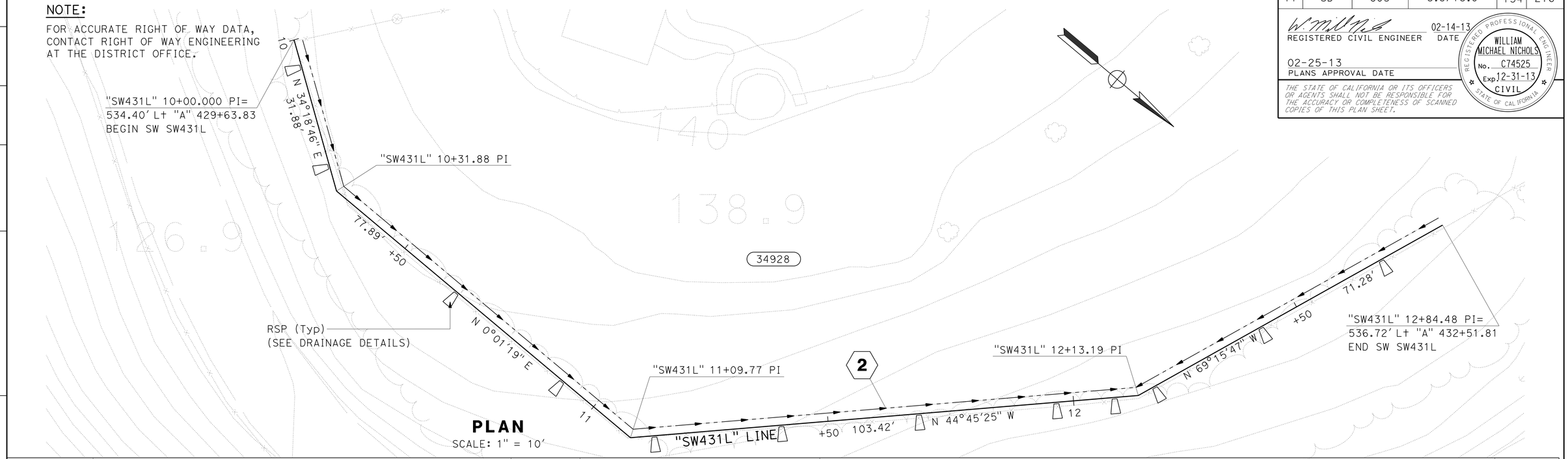

PLAN

SCALE: 1" = 10'

DESIGN HEIGHT	12'	10'	12'	14'
LENGTH				
TOTAL LENGTH	284.48'			

EXPANSION JOINTS

STATION 10 +50 11 +50 12 +50

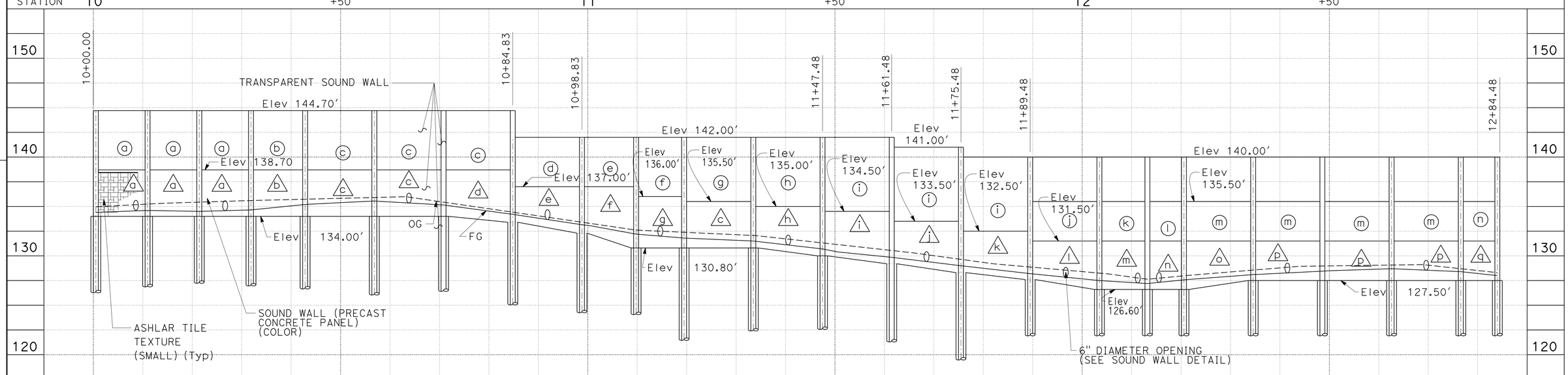

ELEVATION

SCALE: Horiz 1" = 10'
Vert 1" = 5'

APPROVED FOR SOUND WALL WORK ONLY

SOUND WALL PLAN

SOUND WALL SW431L - LOCATION 3

SCALE AS SHOWN **SW5-1**

STATE OF CALIFORNIA - DEPARTMENT OF TRANSPORTATION

Caltrans

DESIGN

FUNCTIONAL SUPERVISOR: HARWELL M. ONTOY

CALCULATED-DESIGNED BY: WILLIAM MICHAEL NICHOLS

CHECKED BY: MAY ALSHEIKH

REVISED BY | DATE REVISED

LAST REVISION 02-19-13 | DATE PLOTTED => 28-FEB-2013 | TIME PLOTTED => 15:41

Dist	COUNTY	ROUTE	POST MILES TOTAL PROJECT	SHEET No.	TOTAL SHEETS
11	SD	805	5.8/13.0	135	216

REGISTERED CIVIL ENGINEER 02-14-13 DATE

02-25-13
PLANS APPROVAL DATE

REGISTERED PROFESSIONAL ENGINEER WILLIAM MICHAEL NICHOLS No. C74525 Exp. 12-31-13 CIVIL STATE OF CALIFORNIA

THE STATE OF CALIFORNIA OR ITS OFFICERS OR AGENTS SHALL NOT BE RESPONSIBLE FOR THE ACCURACY OR COMPLETENESS OF SCANNED COPIES OF THIS PLAN SHEET.

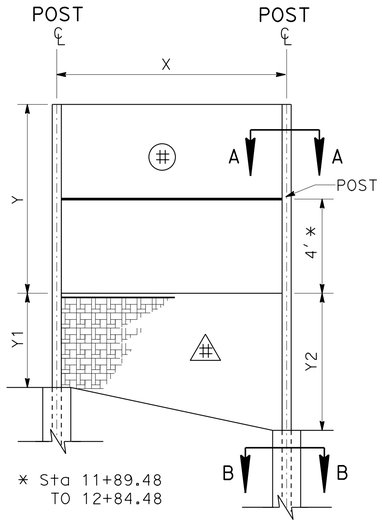

PANEL DIMENSIONS

ELEVATION

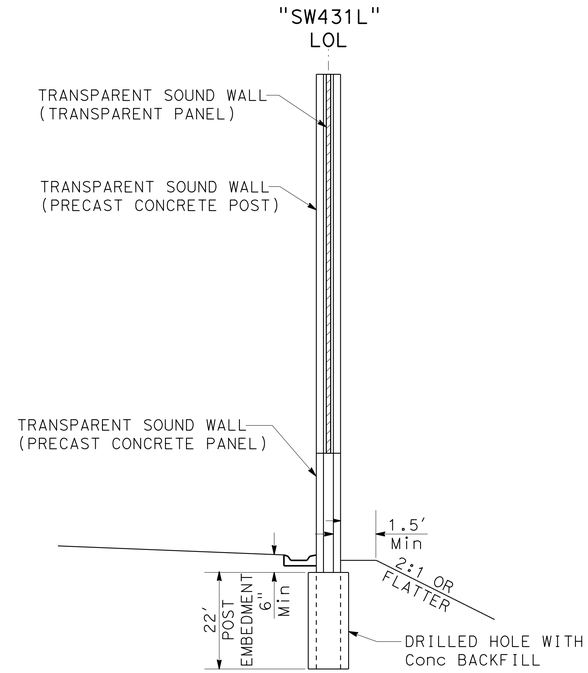

TYPICAL SECTION

TRANSPARENT SOUND WALL PANEL DIMENSIONS

PANEL ◯	X	Y	PANEL	AREA
	LF	LF	EACH (N)	SQFT
a	10.46	6.00	3	188.3
b	10.95	6.00	1	65.7
c	14.00	6.00	3	252.0
d	14.00	5.00	1	70.0
e	10.95	5.00	1	54.8
f	9.71	6.00	1	58.3
g	14.00	6.50	1	91.0
h	14.00	7.00	1	98.0
i	14.00	7.50	3	315.0
j	14.00	8.50	1	119.0
k	9.71	8.50	1	82.5
l	7.39	8.50	1	62.8
m	14.00	8.50	3	357.0
n	7.39	8.50	1	62.8
			TOTAL	1,877.2

(N) NOT A PAY QUANTITY FOR INFORMATION ONLY

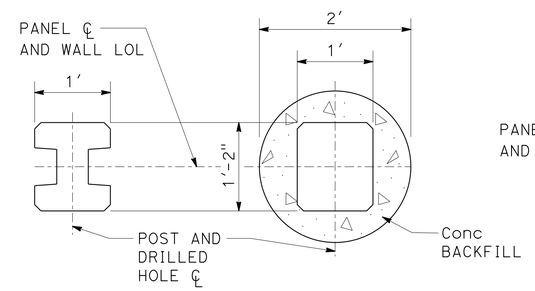

TYPICAL POST LOCATIONS

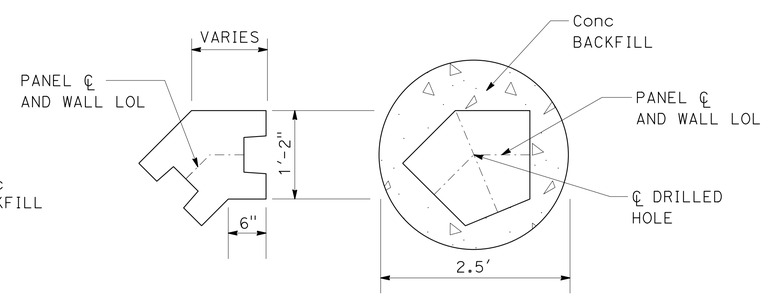

AT STATIONS 10+31.88 AND 11+09.77

6" DIAMETER CORE LOCATIONS

STATION
10+05.23
10+26.15
10+63.33
10+91.33
11+14.13
11+39.98
11+67.98
11+95.98
12+07.84
12+16.39
12+41.09
12+69.09

(N) NOT A PAY QUANTITY FOR INFORMATION ONLY

TRANSPARENT SOUND WALL PRECAST CONCRETE PANEL DIMENSIONS

PANEL △	X	Y1	Y2	PANEL	AREA
	LF	LF	LF	EACH (N)	SQFT
a	10.46	4.70	4.70	3	147.5
b	10.95	4.70	4.70	1	51.5
c	14.00	4.70	4.70	3	197.4
d	14.00	4.70	5.30	1	70.0
e	14.00	3.60	4.70	1	58.1
f	10.95	4.70	6.20	1	59.7
g	9.71	5.20	5.20	1	50.5
h	14.00	4.20	5.00	1	64.4
i	14.00	4.50	5.30	1	68.6
j	14.00	4.30	5.20	1	66.5
k	14.00	4.20	4.90	1	63.7
l	14.00	3.90	4.90	1	61.6
m	9.71	4.90	4.90	1	47.6
n	7.39	4.90	4.90	1	36.2
o	14.00	4.90	4.00	1	62.3
p	14.00	4.00	4.00	3	168.0
q	7.39	4.00	4.00	1	29.6
				TOTAL	1,303.2

(N) NOT A PAY QUANTITY FOR INFORMATION ONLY

CONCRETE BACKFILL

STATION	Elev	24"Dia	30"Dia	STATION	Elev	24"Dia	30"Dia
10+00.50	134.00'	X	-	11+47.48	130.00'	X	-
10+10.96	134.00'	X	-	11+61.48	129.20'	X	-
10+21.42	134.00'	X	-	11+75.48	128.30'	X	-
10+31.88	134.00'	-	X	11+89.48	127.60'	X	-
10+42.83	134.00'	X	-	12+03.48	126.60'	X	-
10+56.83	134.00'	X	-	12+13.19	126.60'	-	X
10+70.83	134.00'	X	-	12+20.59	126.60'	X	-
10+84.83	133.40'	X	-	12+34.59	127.50'	X	-
10+98.83	132.30'	X	-	12+48.59	127.50'	X	-
11+09.77	130.80'	-	X	12+62.59	127.50'	X	-
11+19.48	130.80'	X	-	12+76.59	127.50'	X	-
11+33.48	130.80'	X	-	12+83.98	127.50'	X	-

(N) NOT A PAY QUANTITY FOR INFORMATION ONLY

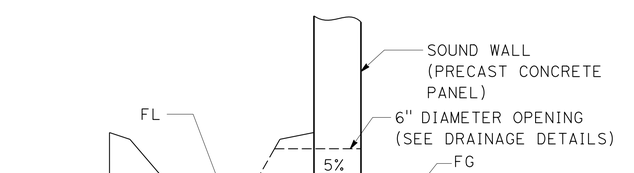

APPROVED FOR SOUND WALL WORK ONLY

SOUND WALL QUANTITY (SW431R)

TRANSPARENT SOUND WALL	3,181 SQFT

SOUND WALL DETAILS

SOUND WALL SW431L - LOCATION 3

NO SCALE

SW5-2

STATE OF CALIFORNIA - DEPARTMENT OF TRANSPORTATION
DESIGN
Caltrans
FUNCTIONAL SUPERVISOR: HARWELL M. ONTOY
WILLIAM MICHAEL NICHOLS
MAY ALSHEIKH
REVISED BY | DATE REVISED
CALCULATED-DESIGNED BY | CHECKED BY

LAST REVISION 02-19-13 | DATE PLOTTED => 28-FEB-2013 | TIME PLOTTED => 15:41

Dist	COUNTY	ROUTE	POST MILES TOTAL PROJECT	SHEET No.	TOTAL SHEETS
11	SD	805	5.8/13.0	136	216

REGISTERED CIVIL ENGINEER 02-14-13 DATE

02-25-13
PLANS APPROVAL DATE

REGISTERED PROFESSIONAL ENGINEER WILLIAM MICHAEL NICHOLS No. C74525 Exp. 12-31-13 CIVIL STATE OF CALIFORNIA

THE STATE OF CALIFORNIA OR ITS OFFICERS OR AGENTS SHALL NOT BE RESPONSIBLE FOR THE ACCURACY OR COMPLETENESS OF SCANNED COPIES OF THIS PLAN SHEET.

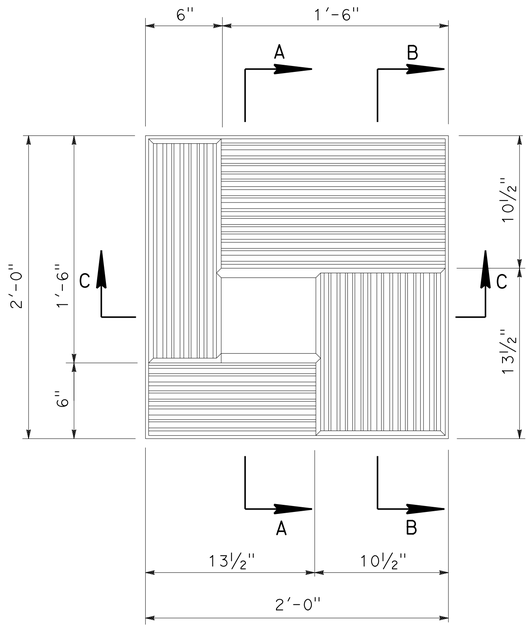

ASHLAR TILE TEXTURE (SMALL) DETAIL

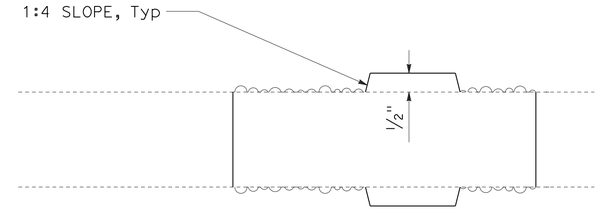

SECTION A-A

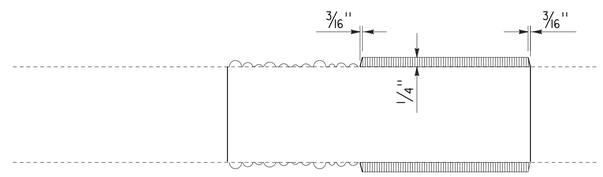

SECTION B-B

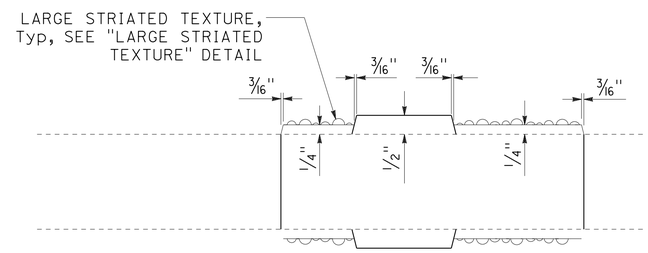

SECTION C-C

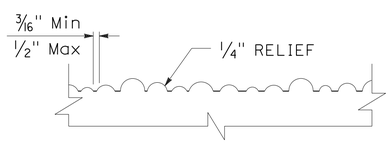

LARGE STRIATED TEXTURE DETAIL

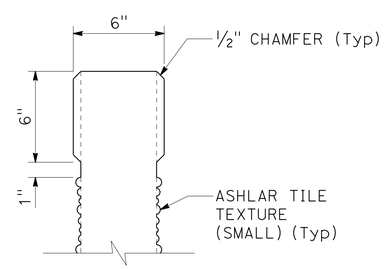

SECTION D-D

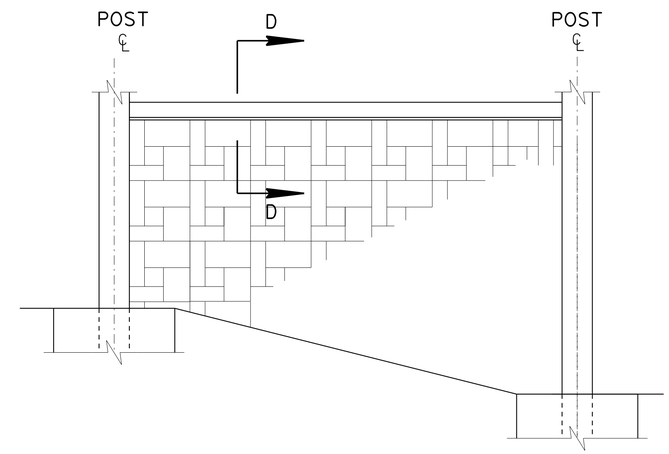

PRECAST CONCRETE PANEL ARCHITECTURAL TREATMENT DETAIL

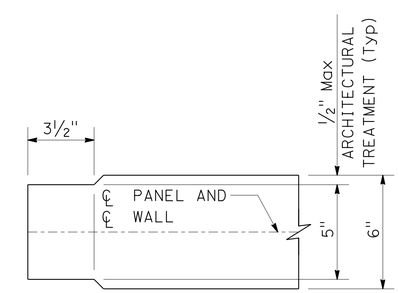

PRECAST CONCRETE PANEL END DETAIL

SOUND WALL DETAILS

SOUND WALL SW431L

NO SCALE

SW5-3

REVISED BY	DATE REVISED

WILLIAM MICHAEL NICHOLS — MAY ALSHEIKH

CALCULATED-DESIGNED BY — CHECKED BY

FUNCTIONAL SUPERVISOR: HARWELL M. ONTOY

STATE OF CALIFORNIA - DEPARTMENT OF TRANSPORTATION — DESIGN — Caltrans

LAST REVISION 02-19-13 — DATE PLOTTED => 28-FEB-2013 — TIME PLOTTED => 15:41

DIST	COUNTY	ROUTE	POST MILES TOTAL PROJECT	SHEET No	TOTAL SHEETS
11	SD	805	5.8/13.0	137	216

PROFESSIONAL GEOLOGIST 02-20-13

02-25-13
PLANS APPROVAL DATE

PROFESSIONAL GEOLOGIST Mark Wilson No. 8164 Exp. 06-30-14 STATE OF CALIFORNIA

The State of California or its officers or agents shall not be responsible for the accuracy or completeness of electronic copies of this plan sheet.

This LOTB sheet was prepared in accordance with the Caltrans Soil & Rock Logging, Classification, & Presentation Manual (2010 Edition).

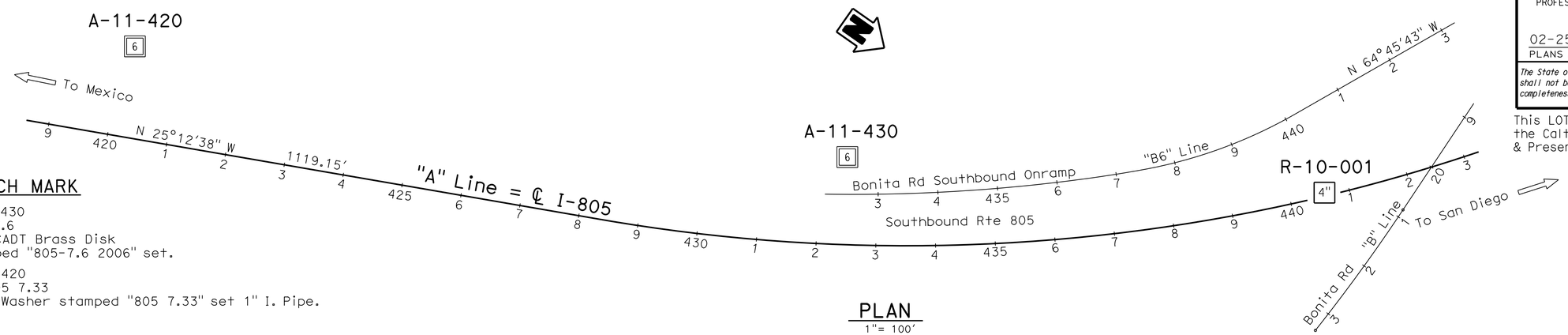

BENCH MARK

A-11-430
805 7.6
2¼" CADT Brass Disk
stamped "805-7.6 2006" set.

A-11-420
WP 805 7.33
PK & Washer stamped "805 7.33" set 1" I. Pipe.

PLAN

1"= 100'

Notes :

1. Ground water was encountered during the April 2010 field investigation in borings R-10-001. No ground water was encountered at Boring A-11-420 and A-11-430 during field investigation.
2. RQD designated with "N/A" (not applicable) indicates that the rock encountered within the drilled interval was not sound rock, therefore RQD was not calculated.

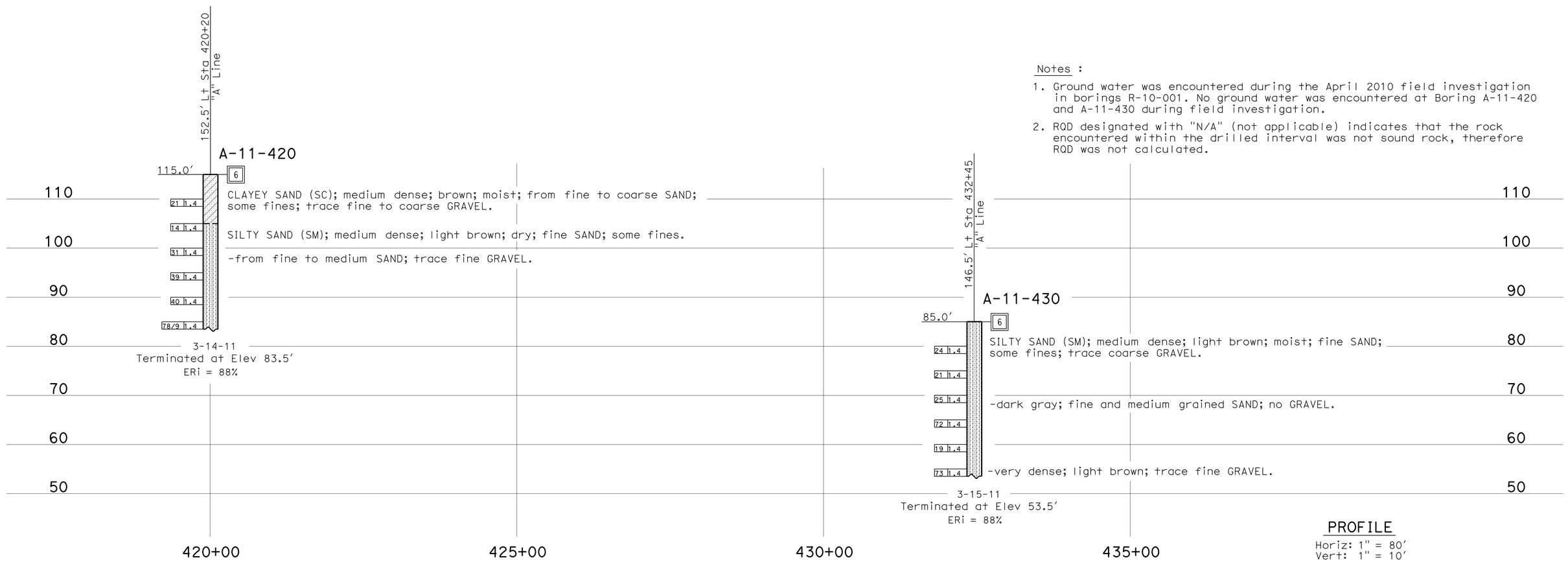

PROFILE

Horiz: 1" = 80'
Vert: 1" = 10'

ENGINEERING SERVICES	MATERIALS AND GEOTECHNICAL SERVICES	STATE OF CALIFORNIA DEPARTMENT OF TRANSPORTATION	DIVISION OF ENGINEERING SERVICES STRUCTURE DESIGN DESIGN BRANCH X	BRIDGE NO. / POST MILE 7.7	SOUND WALL SW431L	1 OF 2
FUNCTIONAL SUPERVISOR NAME: S. Wei	DRAWN BY: F. Nguyen 10/11 / CHECKED BY: B. Gutierrez	FIELD INVESTIGATION BY: c. Hoadley			LOG OF TEST BORINGS	SW5-4

OGS CIVIL LOG OF TEST BORINGS SHEET

ORIGINAL SCALE IN INCHES FOR REDUCED PLANS 0 1 2 3

UNIT: 3643
PROJECT NUMBER & PHASE: 11000200481 CONTRACT NO.: 11-2T1831

DISREGARD PRINTS BEARING EARLIER REVISION DATES

REVISION DATES 03-28-12 SHEET X OF X

FILE => 1100020048re004.dgn

USERNAME => s127400 DATE PLOTTED => 28-FEB-2013 TIME PLOTTED => 15:41

DIST	COUNTY	ROUTE	POST MILES TOTAL PROJECT	SHEET No	TOTAL SHEETS
11	SD	805	5.8/13.0	138	216

PROFESSIONAL GEOLOGIST 02-20-13

PROFESSIONAL GEOLOGIST Mark Wilson No. 8164 Exp. 06-30-14 STATE OF CALIFORNIA

02-25-13
PLANS APPROVAL DATE

The State of California or its officers or agents shall not be responsible for the accuracy or completeness of electronic copies of this plan sheet.

This LOTB sheet was prepared in accordance with the Caltrans Soil & Rock Logging, Classification, & Presentation Manual (June 2010 Edition).

FOR PLAN VIEW, SEE
"LOG OF TEST BORINGS 1 OF 2"

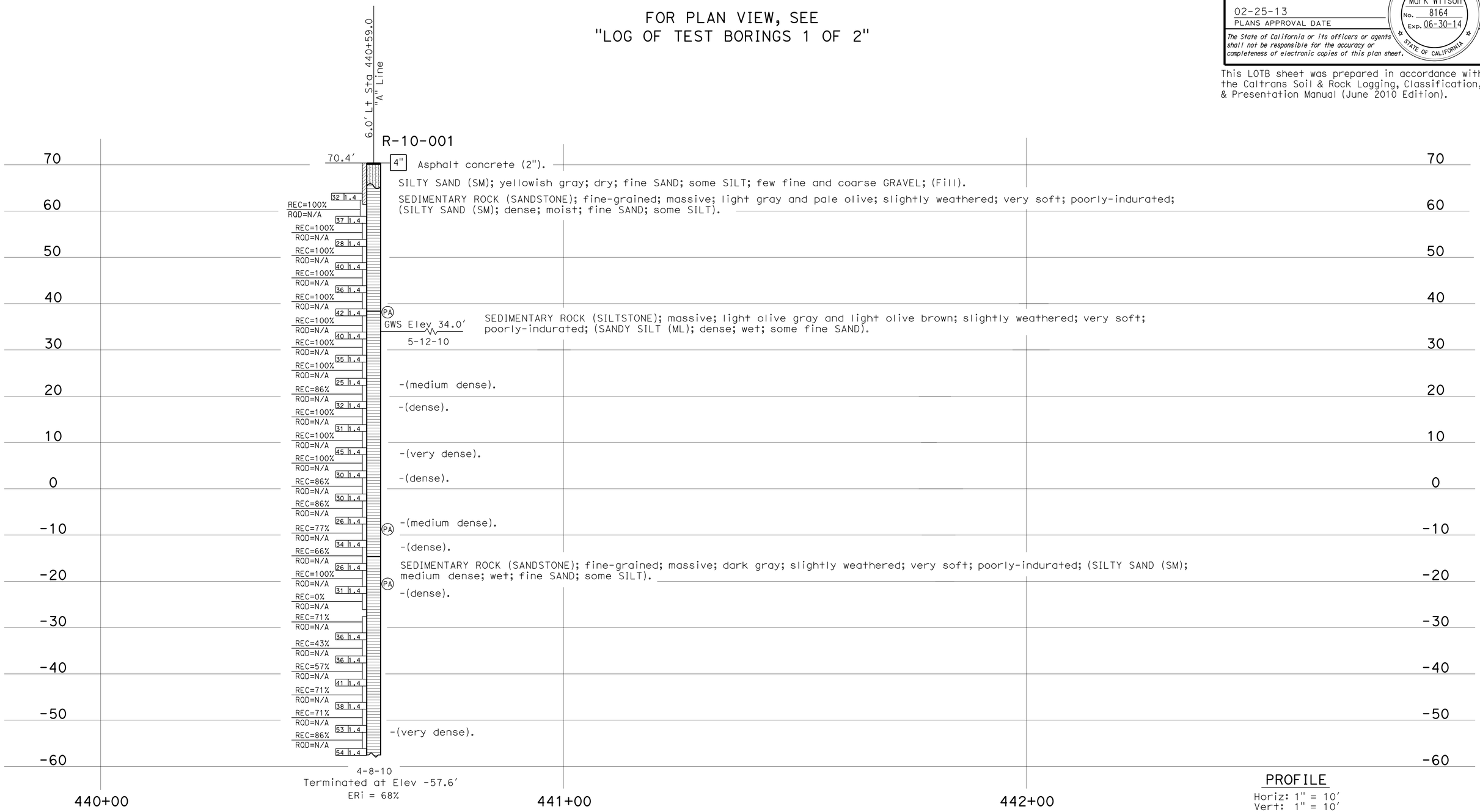

ENGINEERING SERVICES		MATERIALS AND GEOTECHNICAL SERVICES	STATE OF CALIFORNIA DEPARTMENT OF TRANSPORTATION	DIVISION OF ENGINEERING SERVICES STRUCTURE DESIGN DESIGN BRANCH X	BRIDGE NO. / POST MILE 7.7	SOUND WALL SW431L	2 OF 2
FUNCTIONAL SUPERVISOR NAME: S. Wei	DRAWN BY: W. Tang 11/10 CHECKED BY: E. Neupert	FIELD INVESTIGATION BY: T-M Liao				LOG OF TEST BORINGS	SW5-5

OGS CIVIL LOG OF TEST BORINGS SHEET

ORIGINAL SCALE IN INCHES FOR REDUCED PLANS 0 1 2 3

UNIT: 3643
PROJECT NUMBER & PHASE: 11000200481
CONTRACT NO.: 11-2T0831

DISREGARD PRINTS BEARING EARLIER REVISION DATES

REVISION DATES 03-28-12 | SHEET X | OF X

FILE => 1100020048re005.dgn

USERNAME => s12400 DATE PLOTTED => 28-FEB-2013 TIME PLOTTED => 15:41

Dist	COUNTY	ROUTE	POST MILES TOTAL PROJECT	SHEET No.	TOTAL SHEETS
11	SD	805	5.8/13.0	139	216

REGISTERED CIVIL ENGINEER 02-14-13 DATE

02-25-13
PLANS APPROVAL DATE

REGISTERED PROFESSIONAL ENGINEER WILLIAM MICHAEL NICHOLS No. C74525 Exp. 12-31-13 CIVIL STATE OF CALIFORNIA

THE STATE OF CALIFORNIA OR ITS OFFICERS OR AGENTS SHALL NOT BE RESPONSIBLE FOR THE ACCURACY OR COMPLETENESS OF SCANNED COPIES OF THIS PLAN SHEET.

NOTE:

FOR ACCURATE RIGHT OF WAY DATA, CONTACT RIGHT OF WAY ENGINEERING AT THE DISTRICT OFFICE.

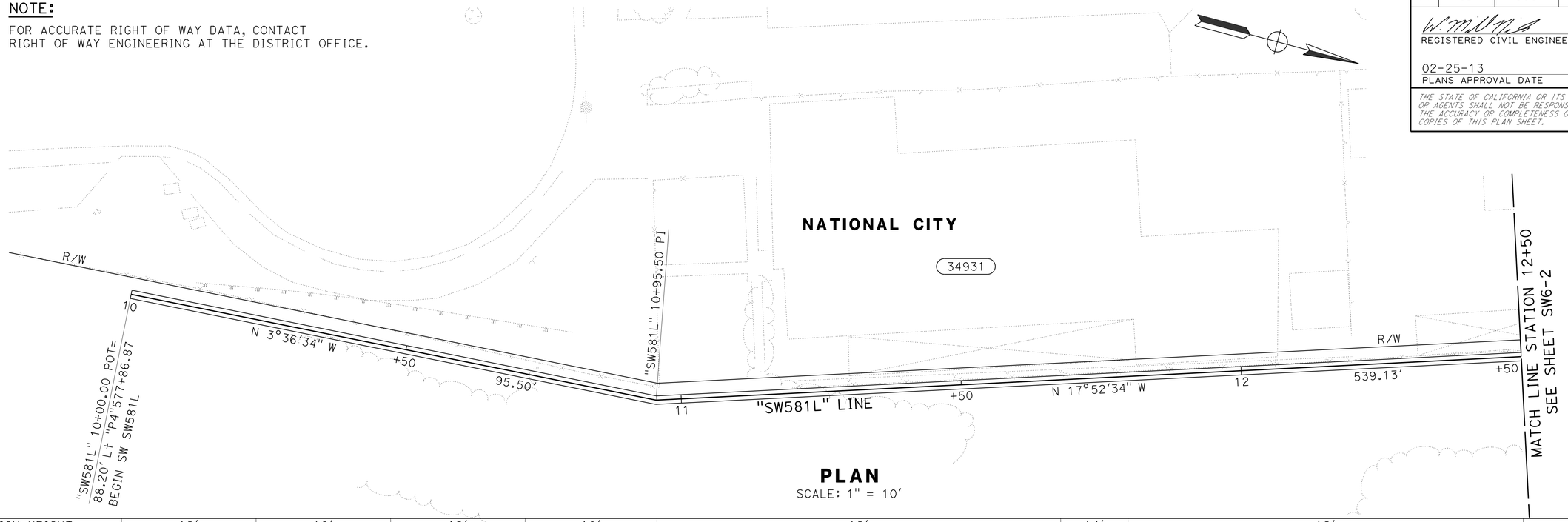

PLAN

SCALE: 1" = 10'

DESIGN HEIGHT	12'		10'		12'		10'		12'				14'		12'			
LENGTH	24.00'	24.00'		24.00'		23.50'		72.00'				12.00'		108.00'				
EXPANSION JOINTS	48.00'			47.50'			48.00'			48.00'			48.00'			48.00'		48.00'

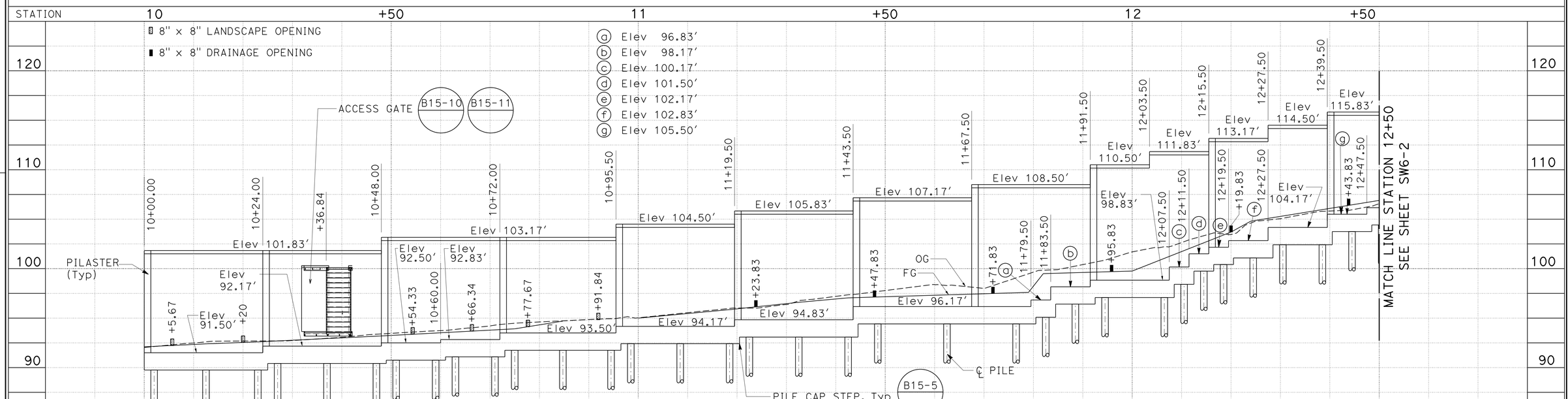

ELEVATION

SCALE: Horiz 1" = 10'
Vert 1" = 5'

APPROVED FOR SOUND WALL WORK ONLY

SOUND WALL PLAN

SOUND WALL SW581L - LOCATION 4

SCALE AS SHOWN **SW6-1**

STATE OF CALIFORNIA - DEPARTMENT OF TRANSPORTATION
Caltrans®
DESIGN

FUNCTIONAL SUPERVISOR: HARWELL M. ONTOY
CALCULATED-DESIGNED BY: WILLIAM MICHAEL NICHOLS
CHECKED BY: MAY ALSHEIKH
REVISED BY
DATE REVISED

LAST REVISION 02-19-13
DATE PLOTTED => 28-FEB-2013
TIME PLOTTED => 15:41

Dist	COUNTY	ROUTE	POST MILES TOTAL PROJECT	SHEET No.	TOTAL SHEETS
11	SD	805	5.8/13.0	140	216

REGISTERED CIVIL ENGINEER 02-14-13 DATE

02-25-13
PLANS APPROVAL DATE

REGISTERED PROFESSIONAL ENGINEER WILLIAM MICHAEL NICHOLS No. C74525 Exp. 12-31-13 CIVIL STATE OF CALIFORNIA

THE STATE OF CALIFORNIA OR ITS OFFICERS OR AGENTS SHALL NOT BE RESPONSIBLE FOR THE ACCURACY OR COMPLETENESS OF SCANNED COPIES OF THIS PLAN SHEET.

NOTE:

FOR ACCURATE RIGHT OF WAY DATA, CONTACT RIGHT OF WAY ENGINEERING AT THE DISTRICT OFFICE.

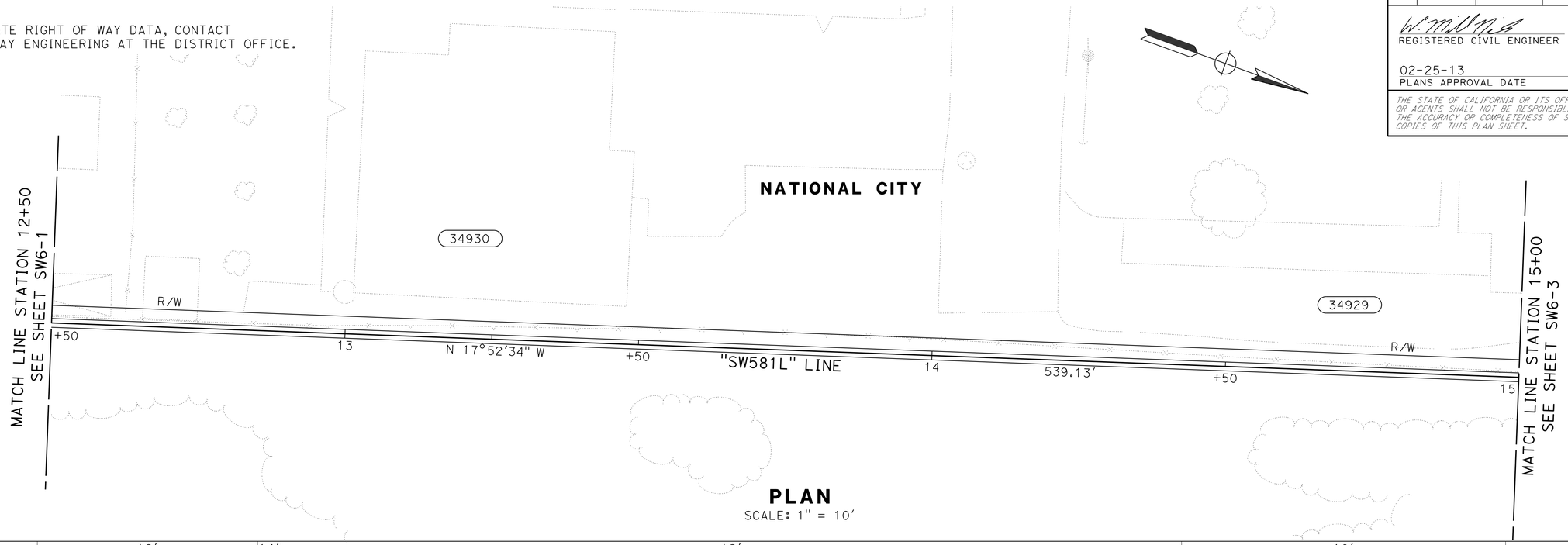

PLAN

SCALE: 1" = 10'

DESIGN HEIGHT	12'	14'	12'										10'			
LENGTH	108.00'	4.00'	153.33'										166.67'			
EXPANSION JOINTS	48.00'	48.00'	48.00'	48.00'	24.00'	48.00'	48.00'									

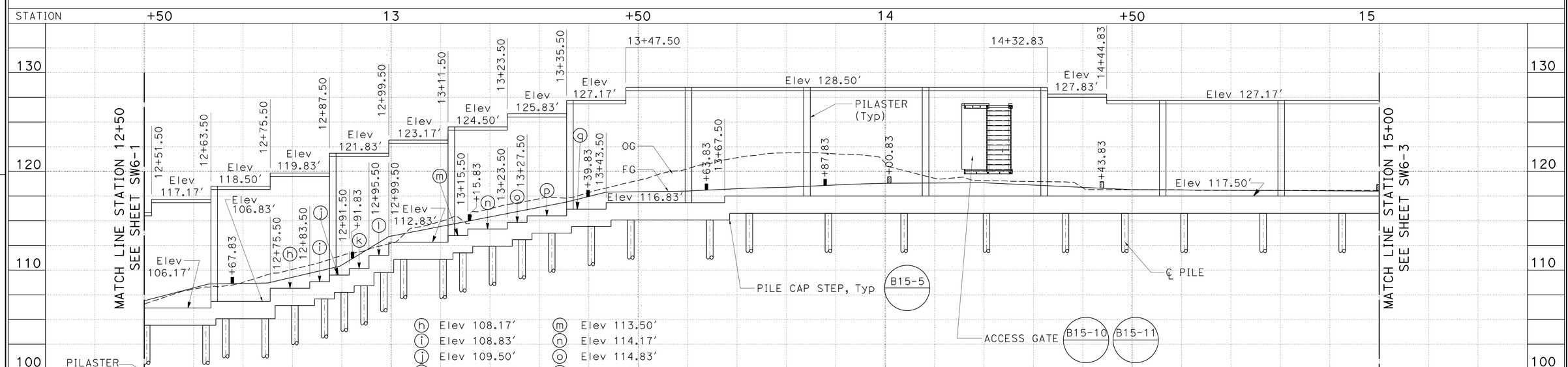

ELEVATION

SCALE: Horiz 1" = 10'
Vert 1" = 5'

APPROVED FOR SOUND WALL WORK ONLY

SOUND WALL PLAN

SOUND WALL SW581L - LOCATION 4

SCALE AS SHOWN **SW6-2**

WILLIAM MICHAEL NICHOLS — REVISED BY
MAY ALSHEIKH — DATE REVISED
CALCULATED-DESIGNED BY
CHECKED BY
HARWELL M. ONTOY — FUNCTIONAL SUPERVISOR

STATE OF CALIFORNIA - DEPARTMENT OF TRANSPORTATION
Caltrans
DESIGN

LAST REVISION 02-19-13
DATE PLOTTED => 28-FEB-2013
TIME PLOTTED => 15:41

Dist	COUNTY	ROUTE	POST MILES TOTAL PROJECT	SHEET No.	TOTAL SHEETS
11	SD	805	5.8/13.0	141	216

REGISTERED CIVIL ENGINEER 02-14-13 DATE

02-25-13
PLANS APPROVAL DATE

REGISTERED PROFESSIONAL ENGINEER
WILLIAM MICHAEL NICHOLS
No. C74525
Exp. 12-31-13
CIVIL
STATE OF CALIFORNIA

THE STATE OF CALIFORNIA OR ITS OFFICERS OR AGENTS SHALL NOT BE RESPONSIBLE FOR THE ACCURACY OR COMPLETENESS OF SCANNED COPIES OF THIS PLAN SHEET.

NOTE:

FOR ACCURATE RIGHT OF WAY DATA, CONTACT RIGHT OF WAY ENGINEERING AT THE DISTRICT OFFICE.

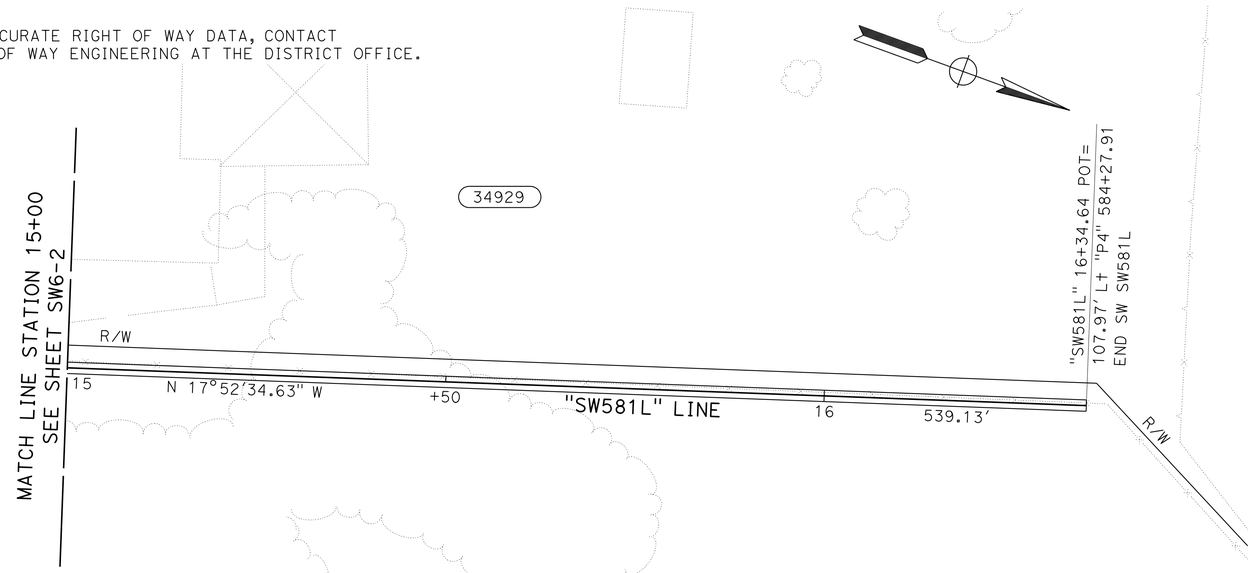

PLAN

SCALE: 1" = 10'

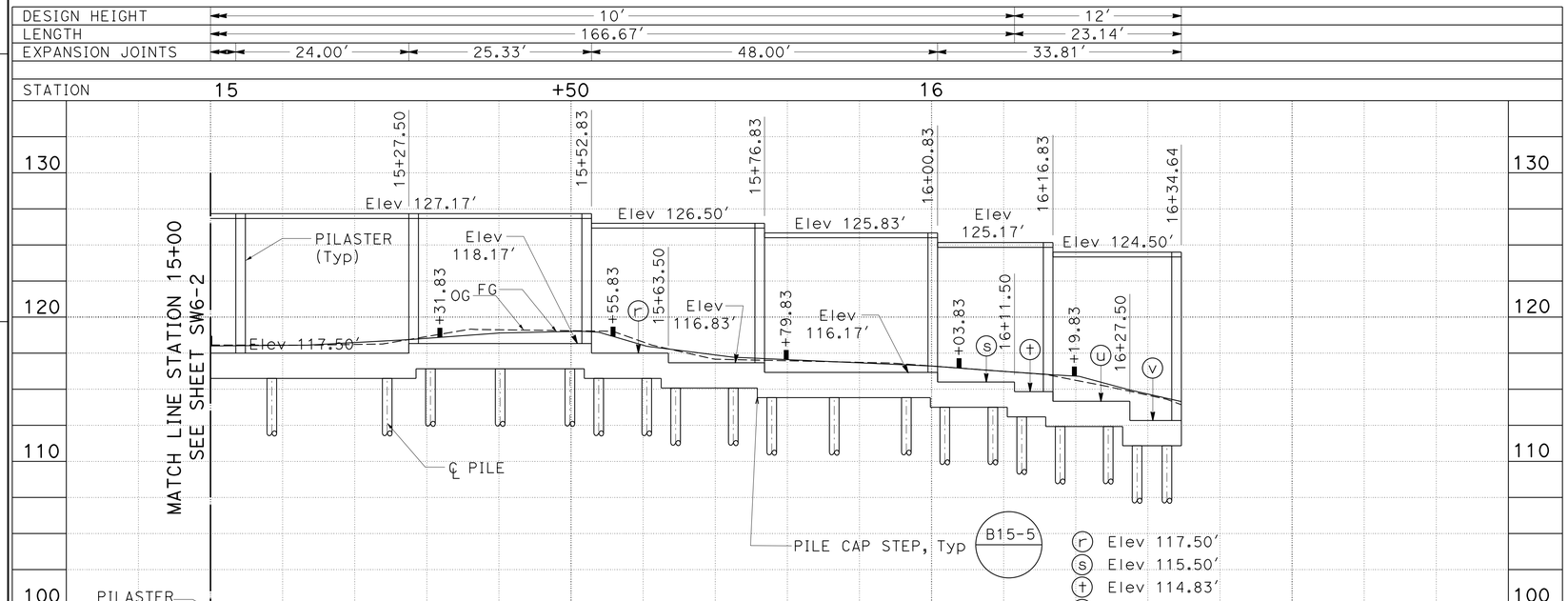

ELEVATION

SCALE: Horiz 1" = 10'
Vert 1" = 5'

APPROVED FOR SOUND WALL WORK ONLY

PILE LOCATIONS

10+02.00	11+22.50	12+44.50	13+40.50	15+49.83
10+12.50	11+32.50	12+50.50	13+48.50	15+53.83
10+23.00	11+42.50	12+62.50	13+64.50	15+60.50
10+27.00	11+48.50	12+66.50	13+72.50	15+64.50
10+37.00	11+62.50	12+74.50	13+88.50	15+72.50
10+47.00	11+76.50	12+80.50	14+04.50	15+77.83
10+51.00	11+82.50	12+86.50	14+20.50	15+86.50
10+59.00	11+88.50	12+90.50	14+36.50	15+96.50
10+63.00	11+94.50	12+94.50	14+48.50	16+01.83
10+71.00	12+06.50	12+98.50	14+60.50	16+08.50
10+75.00	12+10.50	13+02.59	14+76.50	16+12.50
10+84.75	12+14.50	13+10.50	14+92.50	16+17.83
10+94.50	12+18.50	13+14.50	15+08.50	16+24.50
10+98.50	12+24.50	13+20.50	15+24.50	16+27.50
11+08.50	12+30.50	13+26.50	15+30.50	16+32.64
11+18.50	12+38.50	13+32.50	15+40.17	

SOUND WALL PLAN

SOUND WALL SW581L - LOCATION 4

SCALE AS SHOWN **SW6-3**

STATE OF CALIFORNIA - DEPARTMENT OF TRANSPORTATION
Caltrans®
DESIGN

FUNCTIONAL SUPERVISOR: HARWELL M. ONTOY
CALCULATED-DESIGNED BY: WILLIAM MICHAEL NICHOLS
CHECKED BY: MAY ALSHEIKH
REVISED BY
DATE REVISED

LAST REVISION 02-19-13
DATE PLOTTED => 28-FEB-2013
TIME PLOTTED => 15:41

Dist	COUNTY	ROUTE	POST MILES TOTAL PROJECT	SHEET No.	TOTAL SHEETS
11	SD	805	5.8/13.0	142	216

REGISTERED CIVIL ENGINEER 02-14-13 DATE

02-25-13
PLANS APPROVAL DATE

REGISTERED PROFESSIONAL ENGINEER WILLIAM MICHAEL NICHOLS No. C74525 Exp. 12-31-13 CIVIL STATE OF CALIFORNIA

THE STATE OF CALIFORNIA OR ITS OFFICERS OR AGENTS SHALL NOT BE RESPONSIBLE FOR THE ACCURACY OR COMPLETENESS OF SCANNED COPIES OF THIS PLAN SHEET.

NOTES:

1. DRAINAGE OPENING TO BE PLACE IN CELLS WITHOUT VERTICAL REINFORCEMENT.
2. LANDSCAPE OPENING TO BE PLACE IN CELLS WITHOUT VERTICAL REINFORCEMENT. FOR ADDITIONAL INFORMATION SEE PLANTING PLANS

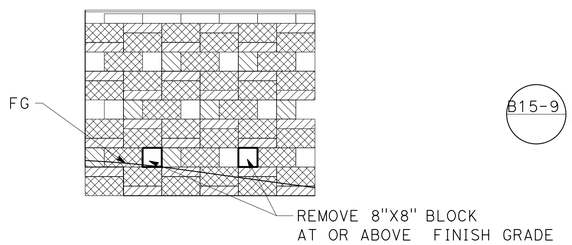

LANDSCAPE OPENING DETAIL

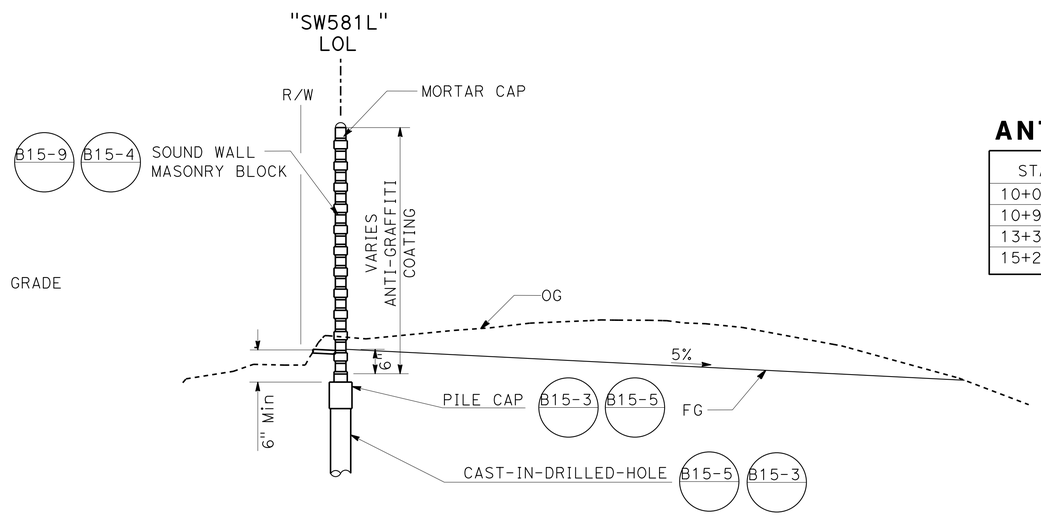

TYPICAL SECTION

LIMITS OF ANTI-GRAFFITI COATING

STATION (SW581L)	SIDE	AREA SQFT (n)
10+00.0 TO 10+96.8	2-SIDE	1,946
10+96.8 TO 13+36.8	1-SIDE	2,630
13+36.8 TO 15+27.5	2-SIDE	3,980
15+27.5 TO 16+34.6	1-SIDE	1,037

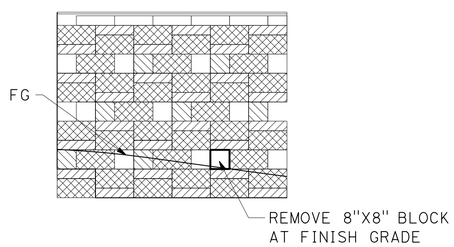

DRAINAGE OPENING DETAIL

GROUND LINE

CASE 1

SOUND WALL QUANTITIES (SW581L)

SOUND WALL (MASONRY BLOCK)	6,630 SQFT
STRUCTURAL CONCRETE (SOUND WALL)	63.5 CY
16" CIDH CONCRETE PILING (SOUND WALL)	735.3 LF
ANTI-GRAFFITI COATING	9,593 SQFT
ACCESS GATE (SOUND WALL)	2 EA

APPROVED FOR SOUND WALL WORK ONLY

SOUND WALL TYPICAL SECTION

SOUND WALL SW581L - LOCATION 4

NO SCALE

SW6-4

STATE OF CALIFORNIA - DEPARTMENT OF TRANSPORTATION
Caltrans
DESIGN

FUNCTIONAL SUPERVISOR: HARWELL M. ONTOY

CALCULATED-DESIGNED BY: WILLIAM MICHAEL NICHOLS
CHECKED BY: MAY ALSHEIKH

REVISED BY
DATE REVISED

LAST REVISION 02-19-13
DATE PLOTTED => 28-FEB-2013
TIME PLOTTED => 15:41

Dist	COUNTY	ROUTE	POST MILES TOTAL PROJECT	SHEET No.	TOTAL SHEETS
11	SD	805	5.8/13.0	143	216

REGISTERED CIVIL ENGINEER 02-14-13 DATE

02-25-13
PLANS APPROVAL DATE

REGISTERED PROFESSIONAL ENGINEER WILLIAM MICHAEL NICHOLS No. C74525 Exp 12-31-13 CIVIL STATE OF CALIFORNIA

THE STATE OF CALIFORNIA OR ITS OFFICERS OR AGENTS SHALL NOT BE RESPONSIBLE FOR THE ACCURACY OR COMPLETENESS OF SCANNED COPIES OF THIS PLAN SHEET.

MASONRY BLOCK WALL NOTES:

1. CORE SIZE FOR 10" WIDE BLOCK SHALL MATCH THE CORE SIZE FOR 8" WIDE BLOCKS.
2. ALL PILASTERS SHALL BE PLUMB.
3. FOR DETAILS NOT SHOWN, SEE STANDARD PLAN, B15-3.
4. PROVIDE 16" X4" X 16" PILASTER BLOCK NEAR BOTTOM OF WALL AS REQUIRED FOR TOP OF PILASTER TO BE FLUSH WITH ADJACENT WALL.

MASONRY BLOCK LEGEND:

- BLOCK 'A': 10" x 8" x 8" SMOOTH FACE ALL EXPOSED SIDES. BLOCK WILL PROJECT 1" ON BOTH SIDES OF WALL.
- BLOCK 'B': 8" x 8" x 8" SPLIT FACE ALL EXPOSED SIDES.
- BLOCK 'C': 10" x 4" x 16" SPLIT FACE ALL EXPOSED SIDES. BLOCK WILL PROJECT 1" ON BOTH SIDES OF WALL.
- BLOCK 'D': 8" x 8" x 16" SPLIT FACE ALL EXPOSED SIDES.
- BLOCK 'E': 16" x 8" x 16" SPLIT FACE ALL EXPOSED SIDES EXCEPT WHERE FACE MEETS EXISTING WALL.
- BLOCK 'F': 10" x 4" x 16" SMOOTH FACE AT EXISTING WALL
  BLOCK 'F': 16" x 4" x 16" SMOOTH FACE AT PILASTER

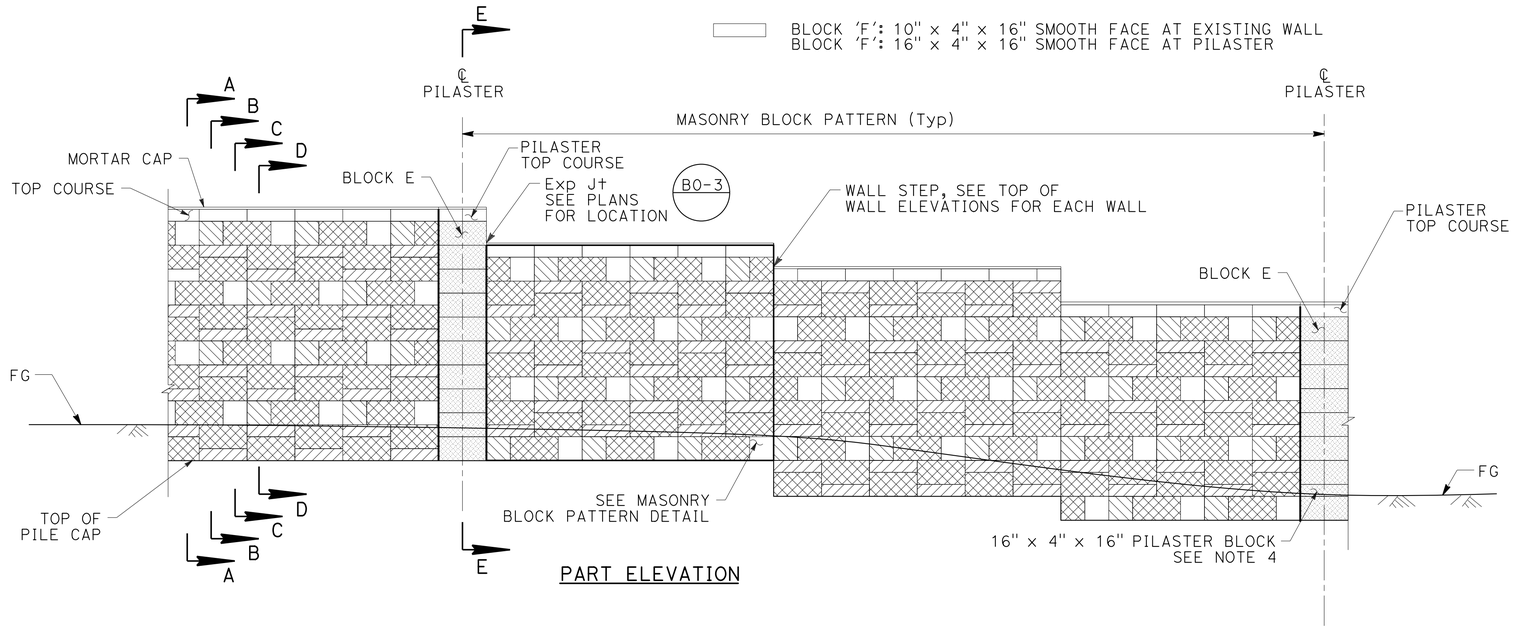

PART ELEVATION

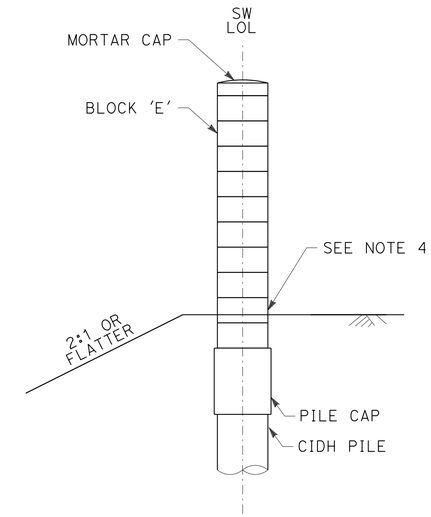

SECTION E-E

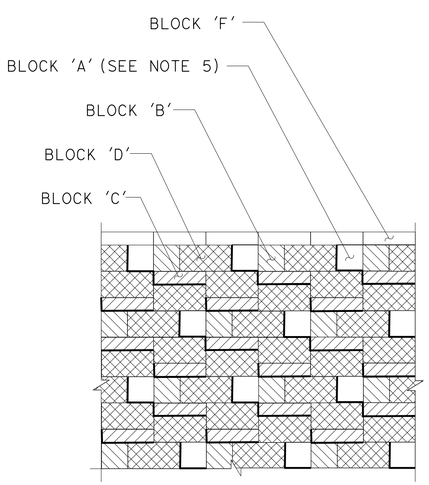

MASONRY BLOCK PATTERN

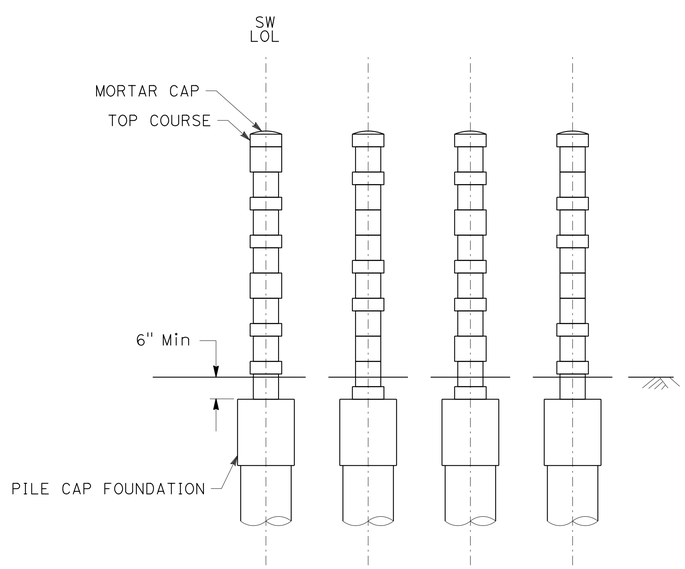

SECTIONS A-A, B-B, C-C, & D-D

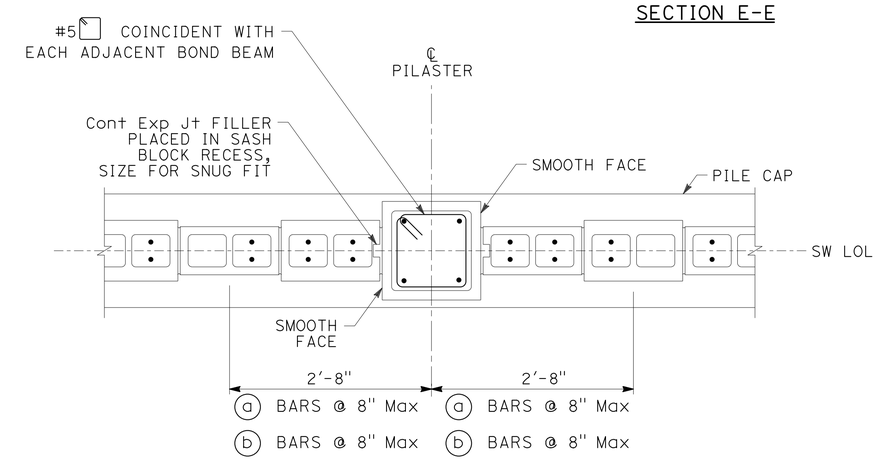

PILASTER DETAIL - SINGLE PILASTER

SOUND WALL DETAILS

SOUND WALL SW581L - LOCATION 4

NO SCALE

SW6-5

STATE OF CALIFORNIA - DEPARTMENT OF TRANSPORTATION
Caltrans® DESIGN
FUNCTIONAL SUPERVISOR HARWELL M. ONTOY
CALCULATED-DESIGNED BY WILLIAM MICHAEL NICHOLS CHECKED BY MAY ALSHEIKH
REVISED BY DATE REVISED

LAST REVISION 02-19-13 DATE PLOTTED => 28-FEB-2013 TIME PLOTTED => 15:41

DIST	COUNTY	ROUTE	POST MILES TOTAL PROJECT	SHEET No	TOTAL SHEETS
11	SD	805	5.8/13.0	144	216

J. Tesar 02-15-13
CERTIFIED ENGINEERING GEOLOGIST DATE

02-25-13
PLANS APPROVAL DATE

REGISTERED GEOLOGIST Jeff Tesar No. 2137 Exp. 01-31-15 CERTIFIED ENGINEERING GEOLOGIST STATE OF CALIFORNIA

The State of California or its officers or agents shall not be responsible for the accuracy or completeness of electronic copies of this plan sheet.

This LOTB sheet was prepared in accordance with the Caltrans Soil & Rock Logging, Classification, & Presentation Manual (2010 Edition).

A-11-57650L

A-11-58210L

HA-11-58740L

BENCH MARK

805-10.3
1" Iron Pipe w/ 2-1/4" CADT Disk
Stamped "805-10.3 2006" in AC MVP
96.39' Lt. "A" Line, Station 578+08.90
Elevation: 99.77'
N: 1827472.950 E: 6304617.650

PLAN
SCALE: 1" = 50'

Note: No ground water encountered during field investigation

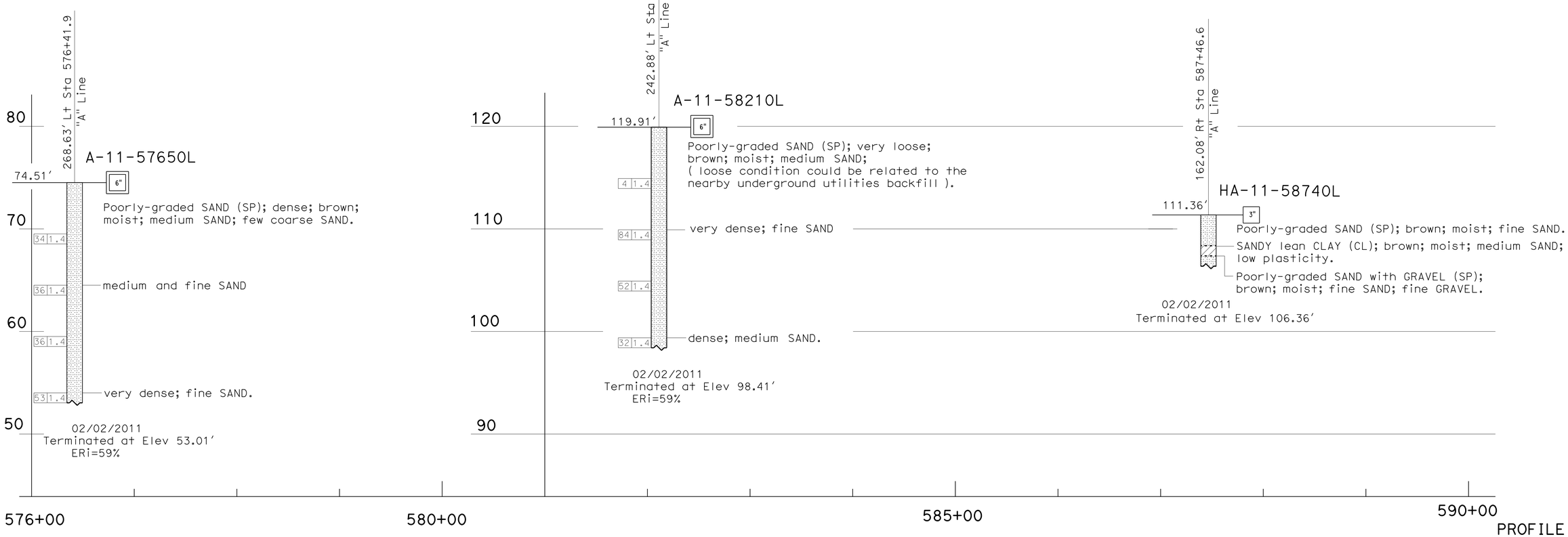

PROFILE
Horiz: 1" = 50'
Vert: 1" = 5'

ENGINEERING SERVICES		GEOTECHNICAL SERVICES	STATE OF CALIFORNIA DEPARTMENT OF TRANSPORTATION	DIVISION OF ENGINEERING SERVICES STRUCTURE DESIGN DESIGN BRANCH	BRIDGE NO. / POST MILES 5.8/13.0	SOUND WALL No. SW581L	1 OF 1
FUNCTIONAL SUPERVISOR NAME: B. Hinman	DRAWN BY: K. Le / CHECKED BY: Z. Yazdani	FIELD INVESTIGATION BY: J. Tesar				LOG OF TEST BORINGS	SW6-6
OGS CIVIL LOG OF TEST BORINGS SHEET	ORIGINAL SCALE IN INCHES FOR REDUCED PLANS 0 1 2 3			CU 3569 EA 1100020048	DISREGARD PRINTS BEARING EARLIER REVISION DATES	REVISION DATES	SHEET 1 OF 1

FILE => 1100020048rf006.dgn

USERNAME => s12740D DATE PLOTTED => 28-FEB-2013 TIME PLOTTED => 15:41

Dist	COUNTY	ROUTE	POST MILES TOTAL PROJECT	SHEET No.	TOTAL SHEETS
11	SD	805	5.8/13.0	145	216

REGISTERED CIVIL ENGINEER 02-14-13 DATE

02-25-13
PLANS APPROVAL DATE

REGISTERED PROFESSIONAL ENGINEER WILLIAM MICHAEL NICHOLS No. C74525 Exp. 12-31-13 CIVIL STATE OF CALIFORNIA

THE STATE OF CALIFORNIA OR ITS OFFICERS OR AGENTS SHALL NOT BE RESPONSIBLE FOR THE ACCURACY OR COMPLETENESS OF SCANNED COPIES OF THIS PLAN SHEET.

NOTE:

FOR ACCURATE RIGHT OF WAY DATA, CONTACT RIGHT OF WAY ENGINEERING AT THE DISTRICT OFFICE.

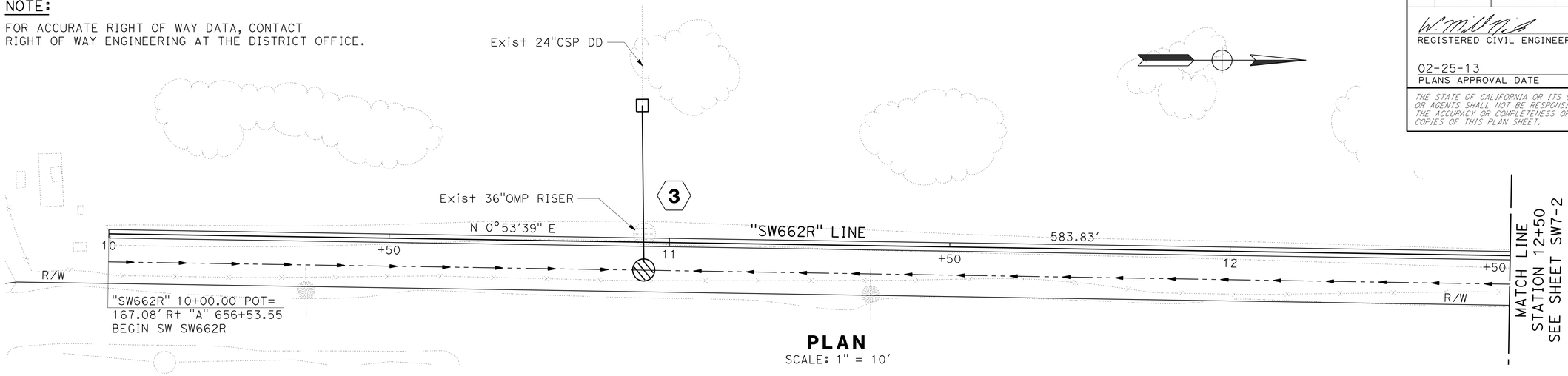

PLAN

SCALE: 1" = 10'

DESIGN HEIGHT	10'	12'	14'	16'	14'	
LENGTH	73.33'	94.67'	48.00'	24.00'	24.00'	
EXPANSION JOINTS	48.00'	48.00'	48.00'	48.00'	48.00'	48.00'

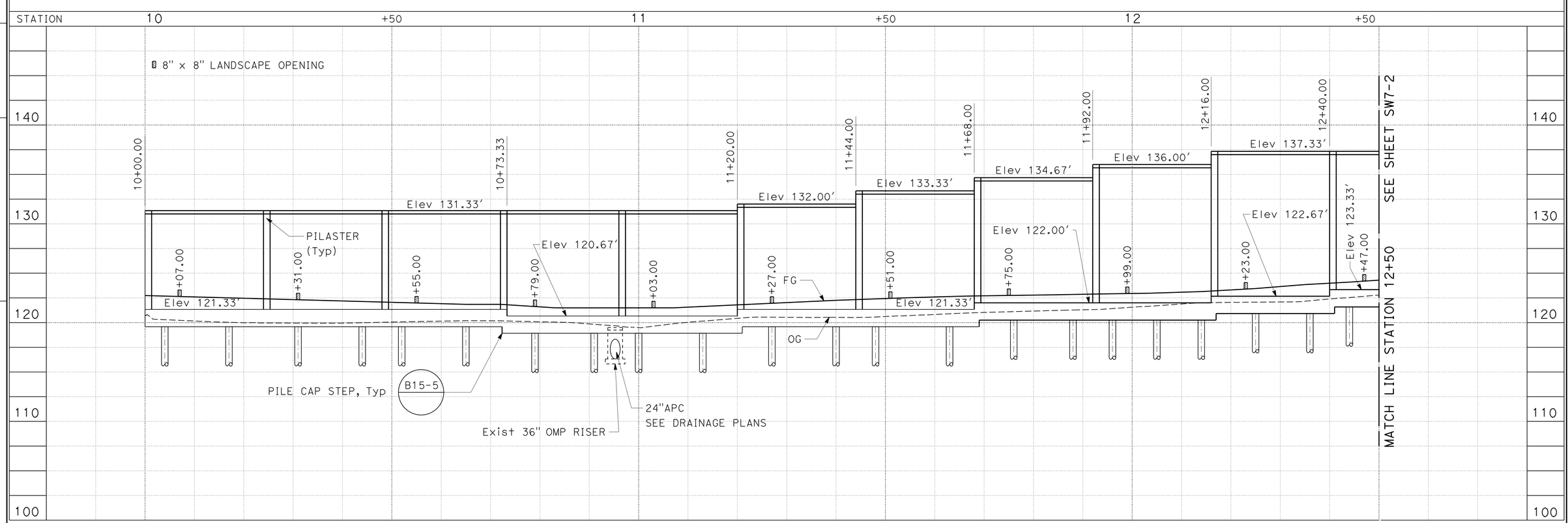

ELEVATION

SCALE: Horiz 1" = 10'
Vert 1" = 5'

APPROVED FOR SOUND WALL WORK ONLY

SOUND WALL PLAN

SOUND WALL SW662R - LOCATION 5

SCALE AS SHOWN **SW7-1**

REVISED BY | DATE REVISED

WILLIAM MICHAEL NICHOLS | MAY ALSHEIKH

CALCULATED-DESIGNED BY | CHECKED BY

FUNCTIONAL SUPERVISOR: HARWELL M. ONTOY

STATE OF CALIFORNIA - DEPARTMENT OF TRANSPORTATION

DESIGN

Caltrans

LAST REVISION 02-19-13 | DATE PLOTTED => 01-MAR-2013 | TIME PLOTTED => 10:42

Dist	COUNTY	ROUTE	POST MILES TOTAL PROJECT	SHEET No.	TOTAL SHEETS
11	SD	805	5.8/13.0	146	216

REGISTERED CIVIL ENGINEER 02-14-13 DATE

02-25-13
PLANS APPROVAL DATE

REGISTERED PROFESSIONAL ENGINEER WILLIAM MICHAEL NICHOLS No. C74525 Exp. 12-31-13 CIVIL STATE OF CALIFORNIA

THE STATE OF CALIFORNIA OR ITS OFFICERS OR AGENTS SHALL NOT BE RESPONSIBLE FOR THE ACCURACY OR COMPLETENESS OF SCANNED COPIES OF THIS PLAN SHEET.

NOTE:

FOR ACCURATE RIGHT OF WAY DATA, CONTACT RIGHT OF WAY ENGINEERING AT THE DISTRICT OFFICE.

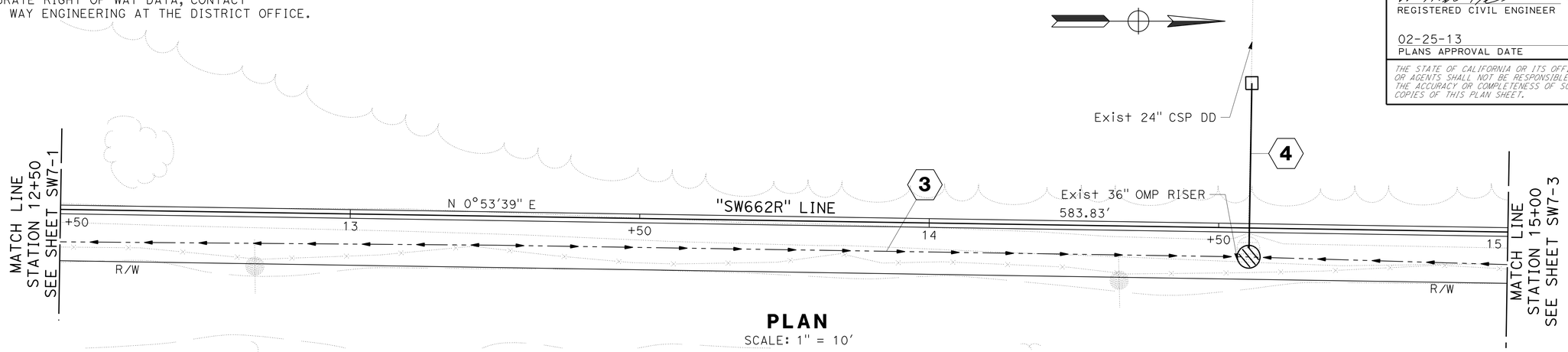

PLAN

SCALE: 1" = 10'

DESIGN HEIGHT	14'	16'														
LENGTH	24.00'	432.00'														
EXPANSION JOINTS	48.00'	24.00'	25.33'	24.00'	48.00'	24.00'	48.00'	24.00'								

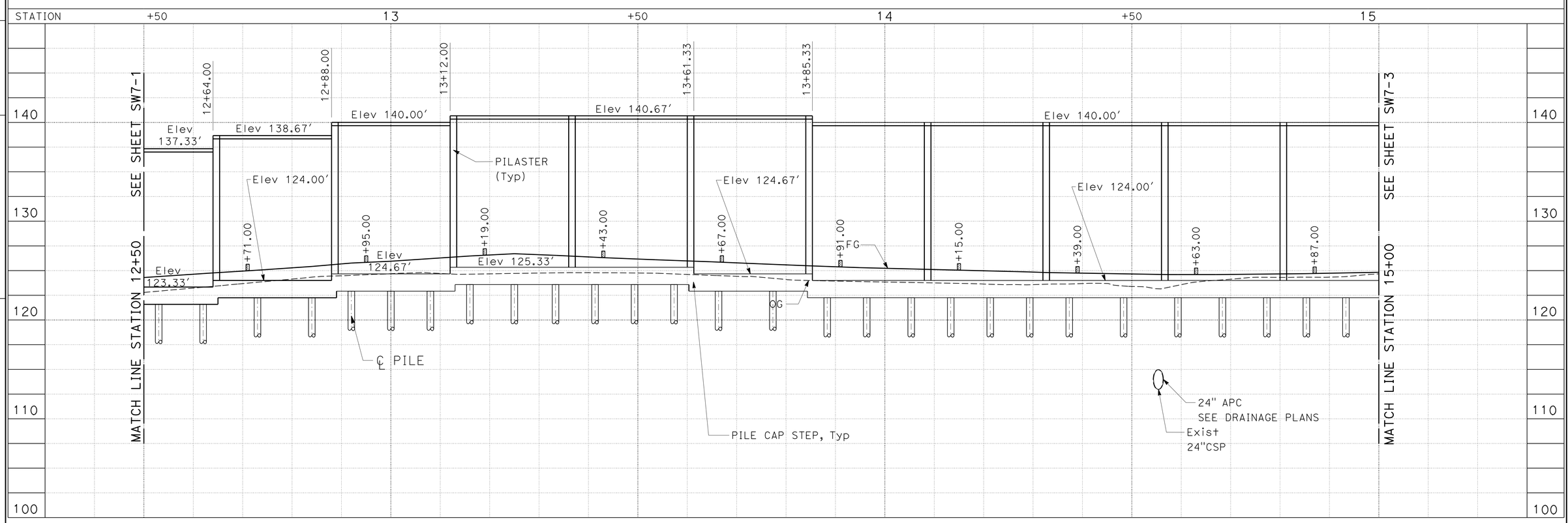

ELEVATION

SCALE: Horiz 1"=10'
Vert 1"= 5'

APPROVED FOR SOUND WALL WORK ONLY

SOUND WALL PLAN

SOUND WALL SW662R - LOCATION 5

SCALE AS SHOWN **SW7-2**

STATE OF CALIFORNIA - DEPARTMENT OF TRANSPORTATION
Caltrans
DESIGN

FUNCTIONAL SUPERVISOR: HARWELL M. ONTOY
CALCULATED-DESIGNED BY: WILLIAM MICHAEL NICHOLS
CHECKED BY: MAY ALSHEIKH
REVISED BY
DATE REVISED

LAST REVISION 02-19-13
DATE PLOTTED => 01-MAR-2013
TIME PLOTTED => 10:42

Dist	COUNTY	ROUTE	POST MILES TOTAL PROJECT	SHEET No.	TOTAL SHEETS
11	SD	805	5.8/13.0	147	216

REGISTERED CIVIL ENGINEER 02-14-13 DATE

02-25-13
PLANS APPROVAL DATE

REGISTERED PROFESSIONAL ENGINEER WILLIAM MICHAEL NICHOLS No. C74525 Exp. 12-31-13 CIVIL STATE OF CALIFORNIA

THE STATE OF CALIFORNIA OR ITS OFFICERS OR AGENTS SHALL NOT BE RESPONSIBLE FOR THE ACCURACY OR COMPLETENESS OF SCANNED COPIES OF THIS PLAN SHEET.

NOTE:

FOR ACCURATE RIGHT OF WAY DATA, CONTACT RIGHT OF WAY ENGINEERING AT THE DISTRICT OFFICE.

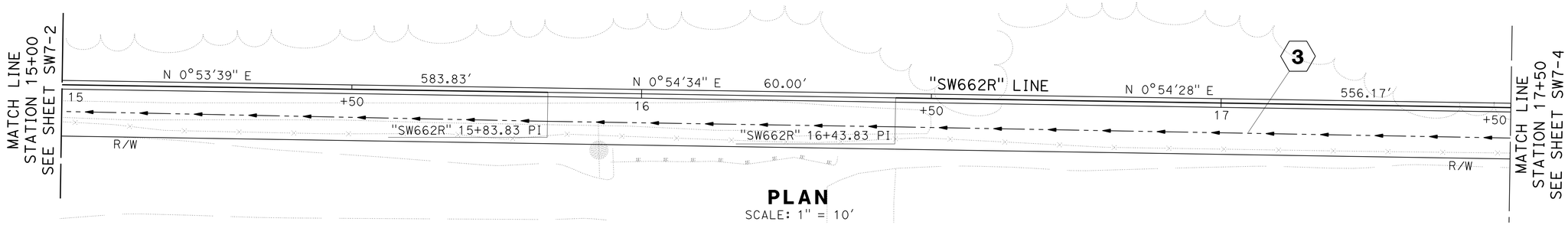

PLAN
SCALE: 1" = 10'

DESIGN HEIGHT	16'				14'	
LENGTH	432.00'				73.33'	
EXPANSION JOINTS	48.00'	48.00'	48.00'	46.67'	48.00'	

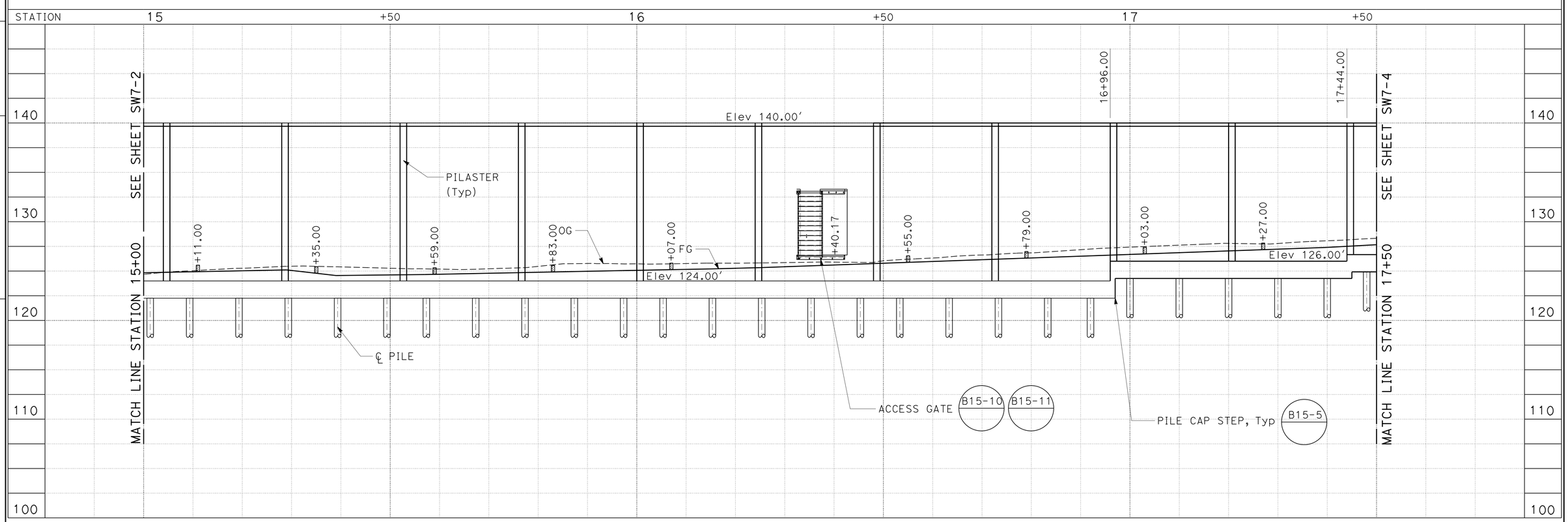

ELEVATION
SCALE: Horiz 1" = 10'
Vert 1" = 5'

APPROVED FOR SOUND WALL WORK ONLY

SOUND WALL PLAN

SOUND WALL SW662R - LOCATION 5

SCALE AS SHOWN **SW7-3**

WILLIAM MICHAEL NICHOLS — REVISED BY
MAY ALSHEIKH — DATE REVISED
CALCULATED-DESIGNED BY
CHECKED BY
HARWELL M. ONTOY — FUNCTIONAL SUPERVISOR
STATE OF CALIFORNIA - DEPARTMENT OF TRANSPORTATION
Caltrans
DESIGN

LAST REVISION 02-19-13 | DATE PLOTTED => 01-MAR-2013 | TIME PLOTTED => 10:42

Dist	COUNTY	ROUTE	POST MILES TOTAL PROJECT	SHEET No.	TOTAL SHEETS
11	SD	805	5.8/13.0	148	216

REGISTERED CIVIL ENGINEER 02-14-13 DATE

02-25-13
PLANS APPROVAL DATE

THE STATE OF CALIFORNIA OR ITS OFFICERS OR AGENTS SHALL NOT BE RESPONSIBLE FOR THE ACCURACY OR COMPLETENESS OF SCANNED COPIES OF THIS PLAN SHEET.

REGISTERED PROFESSIONAL ENGINEER
WILLIAM MICHAEL NICHOLS
No. C74525
Exp. 12-31-13
CIVIL
STATE OF CALIFORNIA

NOTE:

FOR ACCURATE RIGHT OF WAY DATA, CONTACT RIGHT OF WAY ENGINEERING AT THE DISTRICT OFFICE.

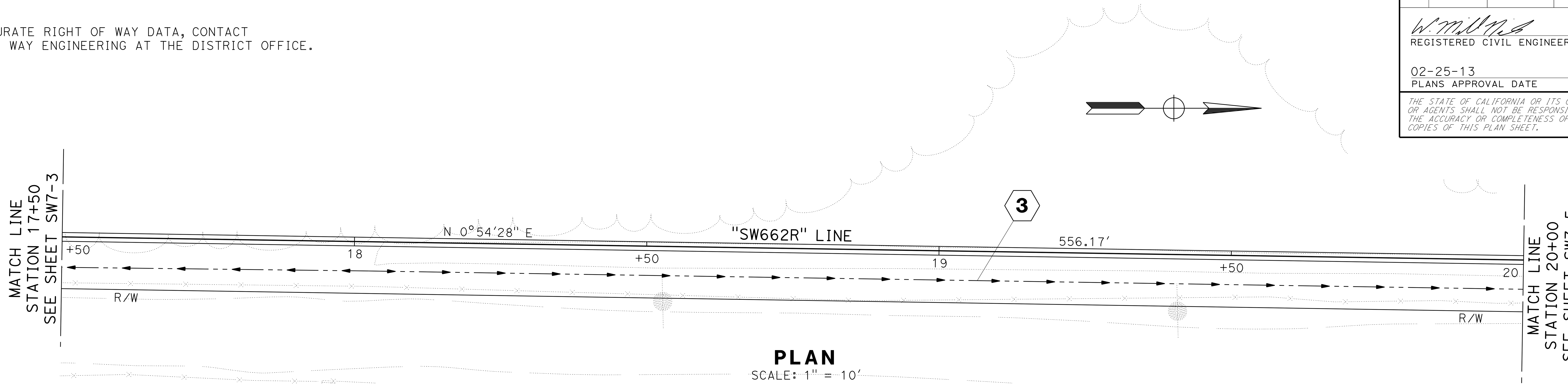

PLAN
SCALE: 1" = 10'

DESIGN HEIGHT	14'	12'		14'		12'	14'
LENGTH	73.33'	72.00'		120.00'		24.00'	46.67'
EXPANSION JOINTS	48.00'	25.33'	24.00'	48.00'	48.00'	48.00'	46.67'

ELEVATION
SCALE: Horiz 1" = 10'
Vert 1" = 5'

APPROVED FOR SOUND WALL WORK ONLY

SOUND WALL PLAN
SOUND WALL SW662R - LOCATION 5
SCALE AS SHOWN **SW7-4**

STATE OF CALIFORNIA - DEPARTMENT OF TRANSPORTATION
Caltrans
DESIGN
FUNCTIONAL SUPERVISOR HARWELL M. ONTOY
CALCULATED-DESIGNED BY WILLIAM MICHAEL NICHOLS
CHECKED BY MAY ALSHEIKH
REVISED BY
DATE REVISED

LAST REVISION 02-19-13
DATE PLOTTED => 01-MAR-2013
TIME PLOTTED => 10:43

BORDER LAST REVISED 7/2/2010
USERNAME => s127400
DGN FILE => 1100020048rg004.dgn
RELATIVE BORDER SCALE IS IN INCHES 0 1 2 3
UNIT 2762
PROJECT NUMBER & PHASE 11000200481

Dist	COUNTY	ROUTE	POST MILES TOTAL PROJECT	SHEET No.	TOTAL SHEETS
11	SD	805	5.8/13.0	149	216

REGISTERED CIVIL ENGINEER 02-14-13 DATE

02-25-13
PLANS APPROVAL DATE

REGISTERED PROFESSIONAL ENGINEER WILLIAM MICHAEL NICHOLS No. C74525 Exp. 12-31-13 CIVIL STATE OF CALIFORNIA

THE STATE OF CALIFORNIA OR ITS OFFICERS OR AGENTS SHALL NOT BE RESPONSIBLE FOR THE ACCURACY OR COMPLETENESS OF SCANNED COPIES OF THIS PLAN SHEET.

NOTE:

FOR ACCURATE RIGHT OF WAY DATA, CONTACT RIGHT OF WAY ENGINEERING AT THE DISTRICT OFFICE.

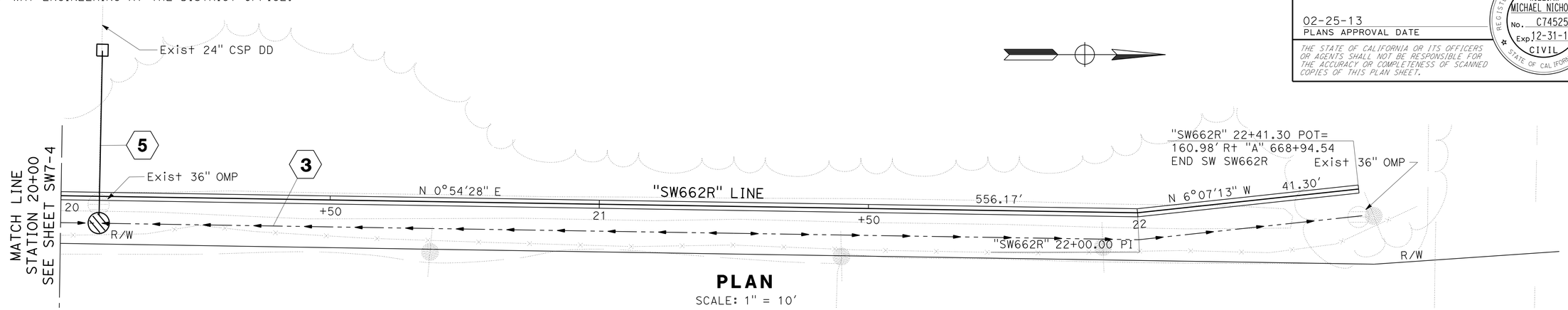

PLAN

SCALE: 1" = 10'

DESIGN HEIGHT	14'	12'	10'	12'	14'	12'
LENGTH	46.67'	48.00'	48.00'	25.33'	77.33'	10.63'
EXPANSION JOINTS	46.67'	48.00'	48.00'	49.33'	44.00'	19.97'

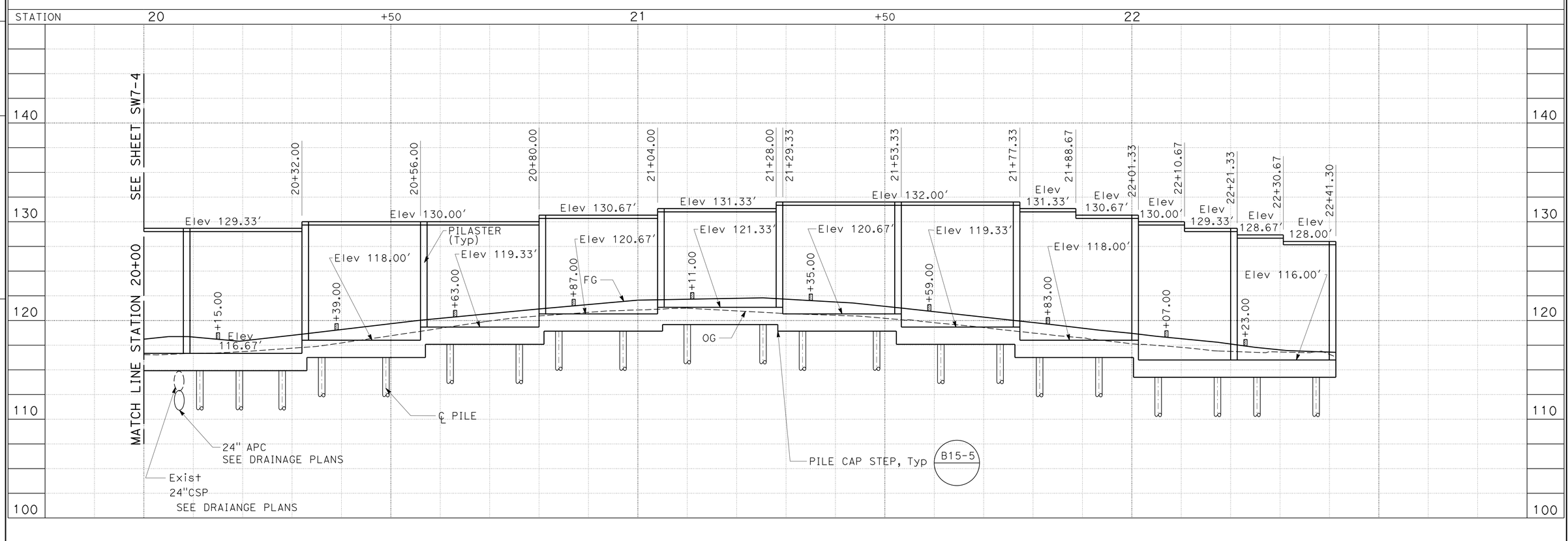

ELEVATION

SCALE: Horiz 1" = 10'
Vert 1" = 5'

APPROVED FOR SOUND WALL WORK ONLY

SOUND WALL PLAN

SOUND WALL SW662R - LOCATION 5

SCALE AS SHOWN **SW7-5**

STATE OF CALIFORNIA - DEPARTMENT OF TRANSPORTATION
Caltrans®
DESIGN

FUNCTIONAL SUPERVISOR: HARWELL M. ONTOY
CALCULATED-DESIGNED BY: WILLIAM MICHAEL NICHOLS
CHECKED BY: MAY ALSHEIKH
REVISED BY
DATE REVISED

LAST REVISION 02-19-13
DATE PLOTTED => 01-MAR-2013
TIME PLOTTED => 10:43

Dist	COUNTY	ROUTE	POST MILES TOTAL PROJECT	SHEET No.	TOTAL SHEETS
11	SD	805	5.8/13.0	150	216

REGISTERED CIVIL ENGINEER 02-14-13 DATE

02-25-13
PLANS APPROVAL DATE

REGISTERED PROFESSIONAL ENGINEER WILLIAM MICHAEL NICHOLS No. C74525 Exp. 12-31-13 CIVIL STATE OF CALIFORNIA

THE STATE OF CALIFORNIA OR ITS OFFICERS OR AGENTS SHALL NOT BE RESPONSIBLE FOR THE ACCURACY OR COMPLETENESS OF SCANNED COPIES OF THIS PLAN SHEET.

NOTES:

1. LANDSCAPE OPENING TO BE PLACE IN CELLS WITHOUT VERTICAL REINFORCEMENT. FOR ADDITIONAL INFORMATION SEE PLANTING PLANS

PILE LOCATIONS

10+04.00	11+96.00	13+41.33	14+85.33	16+25.33	17+66.00	19+17.33	20+76.00
10+17.00	12+05.00	13+49.33	14+93.33	16+35.33	17+76.00	19+25.33	20+84.00
10+31.00	12+14.00	13+57.33	15+01.33	16+45.33	17+88.00	19+33.33	20+97.00
10+44.00	12+25.00	13+66.33	15+09.33	16+53.33	17+96.00	19+42.33	21+10.00
10+52.00	12+36.00	13+77.33	15+19.33	16+63.33	18+05.00	19+54.33	21+25.33
10+65.00	12+44.00	13+88.33	15+29.33	16+73.33	18+13.33	19+66.33	21+33.33
10+79.00	12+53.00	13+96.33	15+39.33	16+83.33	18+21.83	19+81.33	21+48.33
10+91.00	12+62.00	14+05.33	15+49.33	16+92.00	18+36.83	19+89.33	21+61.33
11+00.00	12+73.00	14+13.33	15+57.33	17+00.00	18+46.33	19+99.33	21+73.33
11+13.00	12+84.00	14+21.33	15+67.33	17+10.00	18+58.33	20+11.33	21+81.33
11+27.00	12+92.00	14+29.33	15+77.33	17+20.00	18+70.33	20+19.33	21+93.33
11+40.00	13+00.00	14+37.33	15+87.33	17+30.00	18+78.33	20+28.00	22+05.33
11+48.00	13+08.00	14+48.33	15+97.33	17+40.00	18+85.33	20+36.00	22+17.33
11+63.00	13+16.00	14+59.33	16+05.33	17+48.00	18+93.33	20+49.00	22+25.33
11+76.00	13+25.00	14+68.33	16+15.33	17+57.00	19+05.33	20+62.00	22+37.30
11+88.00	13+33.33	14+77.33					

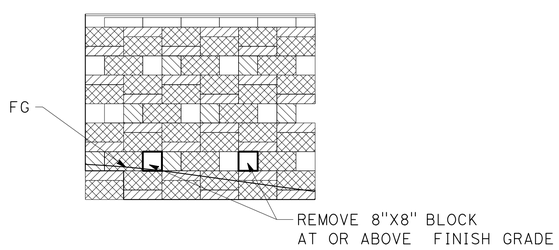

LANDSCAPE OPENING DETAIL

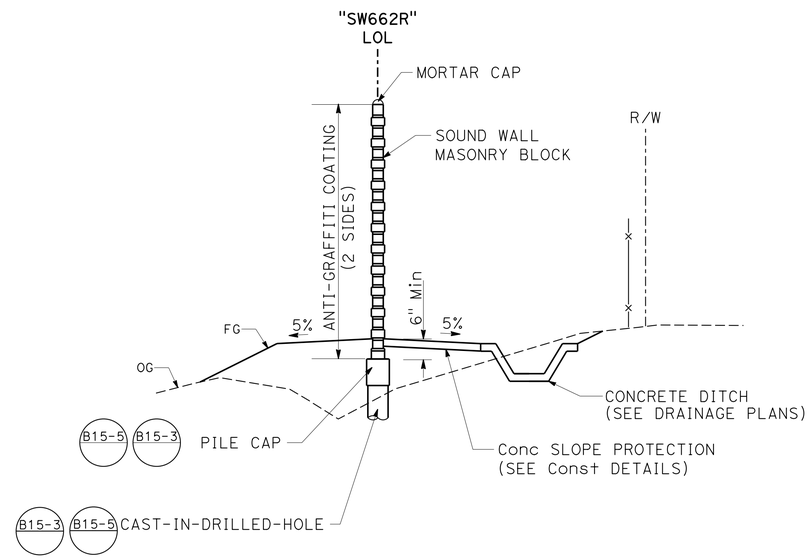

TYPICAL SECTION

NO SCALE

GROUND LINE
CASE 2

SOUND WALL QUANTITIES (SW662R)

SOUND WALL (MASONRY BLOCK)	16,630 SQFT
STRUCTURAL CONCRETE (SOUND WALL)	122.4 CY
16" CIDH CONCRETE PILING (SOUND WALL)	1,700.8 LF
ANTI-GRAFFITI COATING	33,260 SQFT
ACCESS GATE (SOUND WALL)	2 EA

SOUND WALL TYPICAL SECTION

SOUND WALL SW662R - LOCATION 5

SCALE AS SHOWN **SW7-6**

STATE OF CALIFORNIA - DEPARTMENT OF TRANSPORTATION
Caltrans®
DESIGN
FUNCTIONAL SUPERVISOR: HARWELL M. ONTOY
CALCULATED-DESIGNED BY: WILLIAM MICHAEL NICHOLS
CHECKED BY: MAY ALSHEIKH
REVISED BY
DATE REVISED

LAST REVISION 02-19-13
DATE PLOTTED => 28-FEB-2013
TIME PLOTTED => 15:42

Dist	COUNTY	ROUTE	POST MILES TOTAL PROJECT	SHEET No.	TOTAL SHEETS
11	SD	805	5.8/13.0	151	216

REGISTERED CIVIL ENGINEER 02-14-13 DATE

02-25-13
PLANS APPROVAL DATE

REGISTERED PROFESSIONAL ENGINEER WILLIAM MICHAEL NICHOLS No. C74525 Exp. 12-31-13 CIVIL STATE OF CALIFORNIA

THE STATE OF CALIFORNIA OR ITS OFFICERS OR AGENTS SHALL NOT BE RESPONSIBLE FOR THE ACCURACY OR COMPLETENESS OF SCANNED COPIES OF THIS PLAN SHEET.

MASONRY BLOCK WALL NOTES:

1. CORE SIZE FOR 10" WIDE BLOCK SHALL MATCH THE CORE SIZE FOR 8" WIDE BLOCKS.
2. ALL PILASTERS SHALL BE PLUMB.
3. FOR DETAILS NOT SHOWN, SEE STANDARD PLAN, B15-3.
4. PROVIDE 16" X4" X 16" PILASTER BLOCK NEAR BOTTOM OF WALL AS REQUIRED FOR TOP OF PILASTER TO BE FLUSH WITH ADJACENT WALL.

MASONRY BLOCK LEGEND:

- BLOCK 'A': 10" x 8" x 8" SMOOTH FACE ALL EXPOSED SIDES. BLOCK WILL PROJECT 1" ON BOTH SIDES OF WALL.
- BLOCK 'B': 8" x 8" x 8" SPLIT FACE ALL EXPOSED SIDES.
- BLOCK 'C': 10" x 4" x 16" SPLIT FACE ALL EXPOSED SIDES. BLOCK WILL PROJECT 1" ON BOTH SIDES OF WALL.
- BLOCK 'D': 8" x 8" x 16" SPLIT FACE ALL EXPOSED SIDES.
- BLOCK 'E': 16" x 8" x 16" SPLIT FACE ALL EXPOSED SIDES EXCEPT WHERE FACE MEETS EXISTING WALL.
- BLOCK 'F': 10" x 4" x 16" SMOOTH FACE AT EXISTING WALL
  BLOCK 'F': 16" x 4" x 16" SMOOTH FACE AT PILASTER

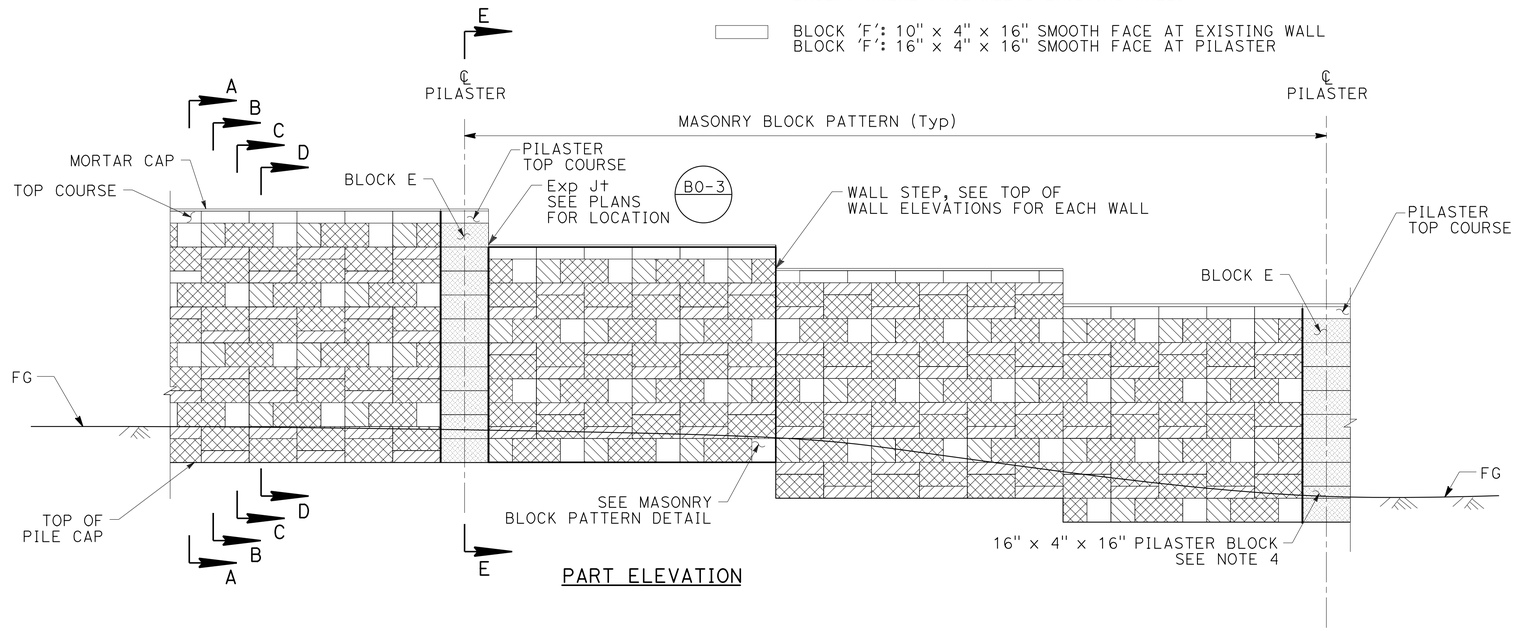

PART ELEVATION

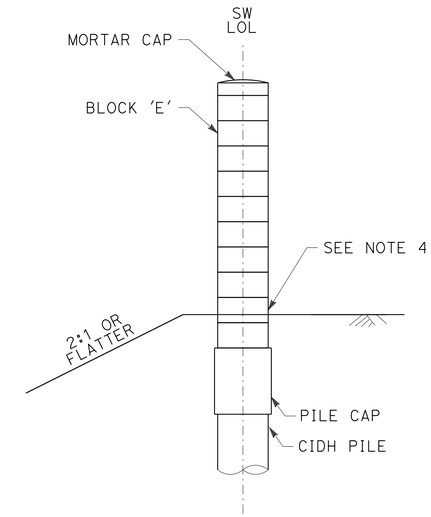

SECTION E-E

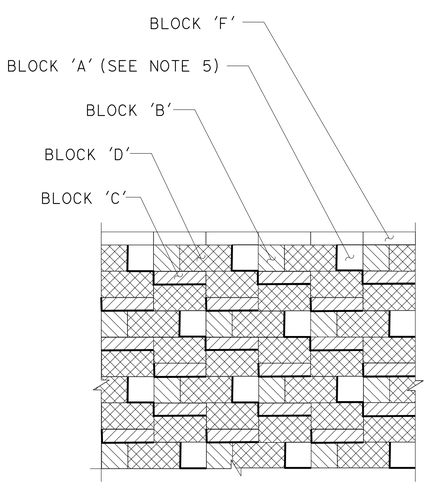

MASONRY BLOCK PATTERN

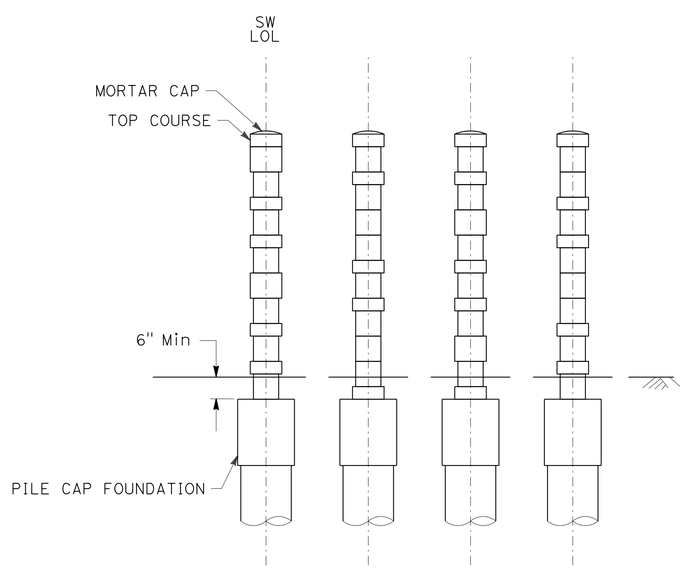

SECTIONS A-A, B-B, C-C, & D-D

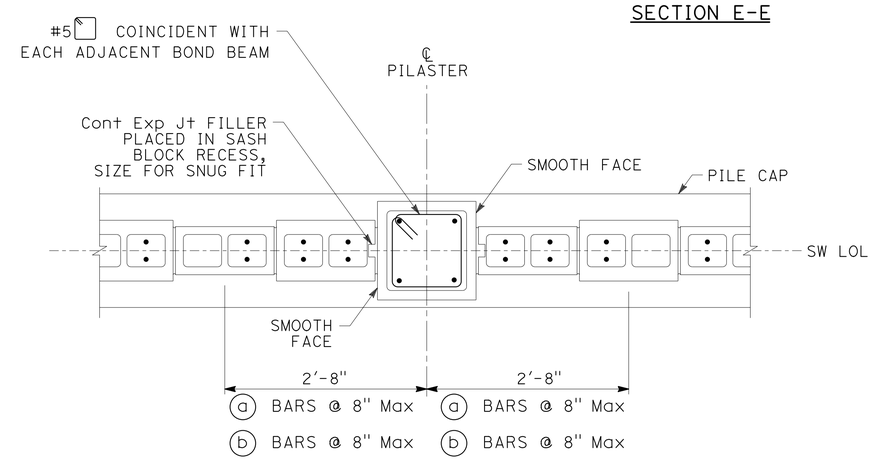

PILASTER DETAIL - SINGLE PILASTER

SOUND WALL DETAILS

SOUND WALL SW662R - LOCATION 5

NO SCALE

SW7-7

STATE OF CALIFORNIA - DEPARTMENT OF TRANSPORTATION
Caltrans DESIGN
FUNCTIONAL SUPERVISOR: HARWELL M. ONTOY
CALCULATED-DESIGNED BY: MAY ALSHEIKH
CHECKED BY: WILLIAM MICHAEL NICHOLS
REVISED BY
DATE REVISED

LAST REVISION 02-19-13 | DATE PLOTTED => 28-FEB-2013 | TIME PLOTTED => 15:42

DIST	COUNTY	ROUTE	POST MILES TOTAL PROJECT	SHEET No	TOTAL SHEETS
11	SD	805	5.8/13.0	152	216

J. Tesar 02-15-13
CERTIFIED ENGINEERING GEOLOGIST DATE

02-25-13
PLANS APPROVAL DATE

REGISTERED GEOLOGIST Jeff Tesar No. 2137 Exp. 01-31-15 CERTIFIED ENGINEERING GEOLOGIST STATE OF CALIFORNIA

The State of California or its officers or agents shall not be responsible for the accuracy or completeness of electronic copies of this plan sheet.

This LOTB sheet was prepared in accordance with the Caltrans Soil & Rock Logging, Classification, & Presentation Manual (2010 Edition).

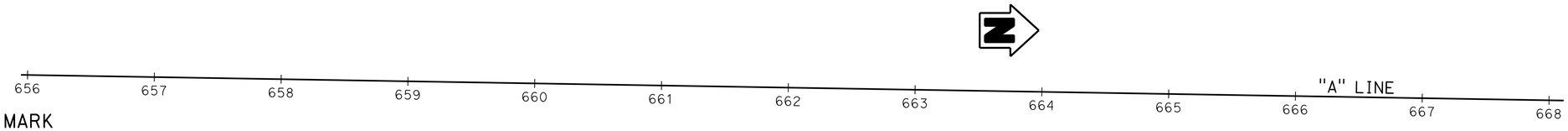

BENCH MARK

WP 805 11.89
PK Nail/ Washer in AC Dike
85.38′ Lt. "A" Line, Station 660+06.68
Elevation: 89.30′
N: 1834773.670 E: 6301663.600

PLAN

SCALE: 1" = 50′

HA-10-65785R 3"

A-10-66460R 6"

A-10-66730R 6"

Note: No ground water encountered during field investigation

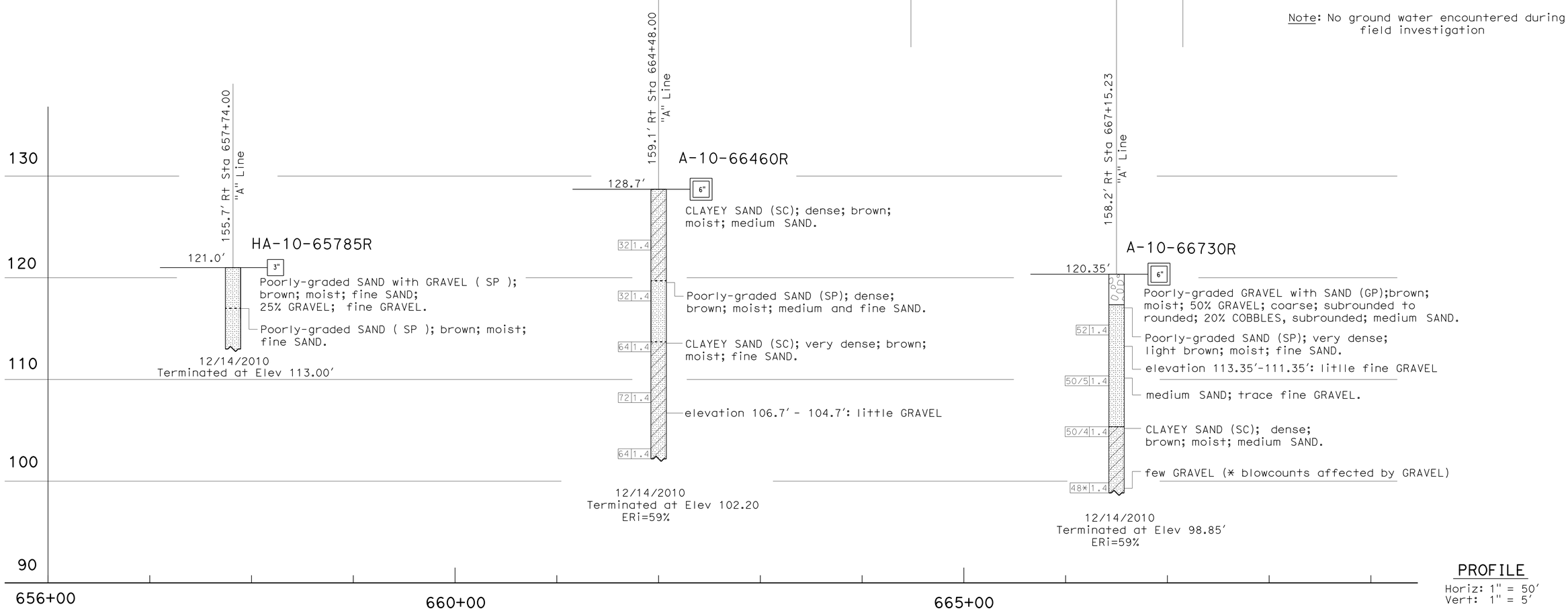

PROFILE

Horiz: 1" = 50′
Vert: 1" = 5′

ENGINEERING SERVICES	GEOTECHNICAL SERVICES	STATE OF CALIFORNIA DEPARTMENT OF TRANSPORTATION	DIVISION OF ENGINEERING SERVICES STRUCTURE DESIGN DESIGN BRANCH	BRIDGE NO. / POST MILES 5.8/13.0	SOUND WALL No. SW662R 1 OF 1
FUNCTIONAL SUPERVISOR NAME: B. Hinman	DRAWN BY: K. Le / CHECKED BY: Z. Yazdani	FIELD INVESTIGATION BY: J. Tesar			LOG OF TEST BORINGS SW7-8

OGS CIVIL LOG OF TEST BORINGS SHEET

ORIGINAL SCALE IN INCHES FOR REDUCED PLANS 0 1 2 3

CU 3569
EA 1100020048

DISREGARD PRINTS BEARING EARLIER REVISION DATES

REVISION DATES SHEET OF

FILE => 1100020048rg008.dgn

USERNAME => s127400 DATE PLOTTED => 28-FEB-2013 TIME PLOTTED => 15:42

Dist	COUNTY	ROUTE	POST MILES TOTAL PROJECT	SHEET No.	TOTAL SHEETS
11	SD	805	5.8/13.0	153	216

REGISTERED CIVIL ENGINEER 02-14-13 DATE

02-25-13
PLANS APPROVAL DATE

THE STATE OF CALIFORNIA OR ITS OFFICERS OR AGENTS SHALL NOT BE RESPONSIBLE FOR THE ACCURACY OR COMPLETENESS OF SCANNED COPIES OF THIS PLAN SHEET.

REGISTERED PROFESSIONAL ENGINEER — WILLIAM MICHAEL NICHOLS — No. C74525 — Exp. 12-31-13 — CIVIL — STATE OF CALIFORNIA

NOTE:

FOR ACCURATE RIGHT OF WAY DATA, CONTACT RIGHT OF WAY ENGINEERING AT THE DISTRICT OFFICE.

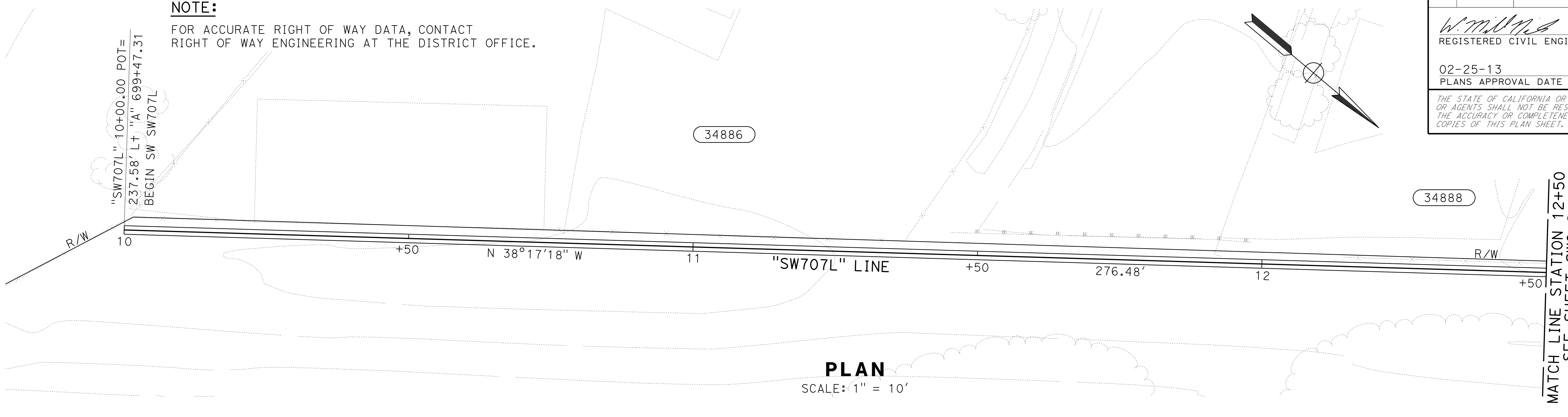

PLAN

SCALE: 1" = 10'

DESIGN HEIGHT	10'				12'	10'	
LENGTH	184.65'				22.70'	158.66'	
EXPANSION JOINTS	46.67'	45.33'	46.67'	46.02'	45.33'		45.33'

ELEVATION

SCALE: Horiz 1" = 10'
Vert 1" = 5'

APPROVED FOR SOUND WALL WORK ONLY

SOUND WALL PLAN

SOUND WALL SW707L - LOCATION 6

SCALE AS SHOWN

SW8-1

STATE OF CALIFORNIA - DEPARTMENT OF TRANSPORTATION
Caltrans
DESIGN

FUNCTIONAL SUPERVISOR: HARWELL M. ONTOY
CALCULATED-DESIGNED BY: WILLIAM MICHAEL NICHOLS
CHECKED BY: MAY ALSHEIKH
REVISED BY
DATE REVISED

LAST REVISION 02-19-12
DATE PLOTTED => 28-FEB-2013
TIME PLOTTED => 15:42

Dist	COUNTY	ROUTE	POST MILES TOTAL PROJECT	SHEET No.	TOTAL SHEETS
11	SD	805	5.8/13.0	154	216

REGISTERED CIVIL ENGINEER 02-14-13 DATE

02-25-13
PLANS APPROVAL DATE

REGISTERED PROFESSIONAL ENGINEER
WILLIAM MICHAEL NICHOLS
No. C74525
Exp. 12-31-13
CIVIL
STATE OF CALIFORNIA

THE STATE OF CALIFORNIA OR ITS OFFICERS OR AGENTS SHALL NOT BE RESPONSIBLE FOR THE ACCURACY OR COMPLETENESS OF SCANNED COPIES OF THIS PLAN SHEET.

NOTE:

FOR ACCURATE RIGHT OF WAY DATA, CONTACT RIGHT OF WAY ENGINEERING AT THE DISTRICT OFFICE.

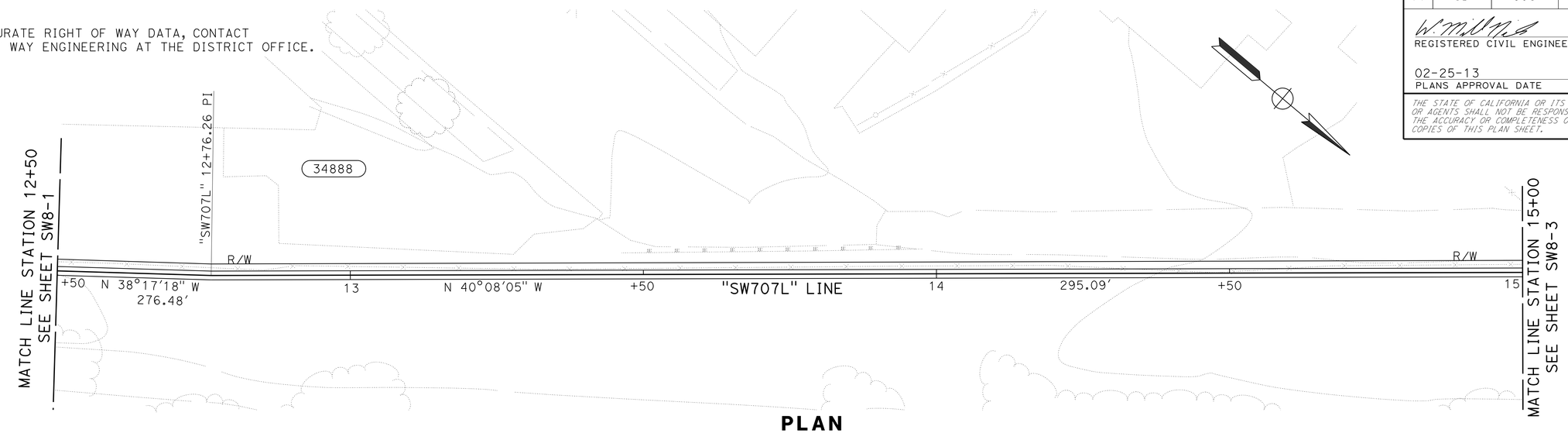

PLAN
SCALE: 1" = 10'

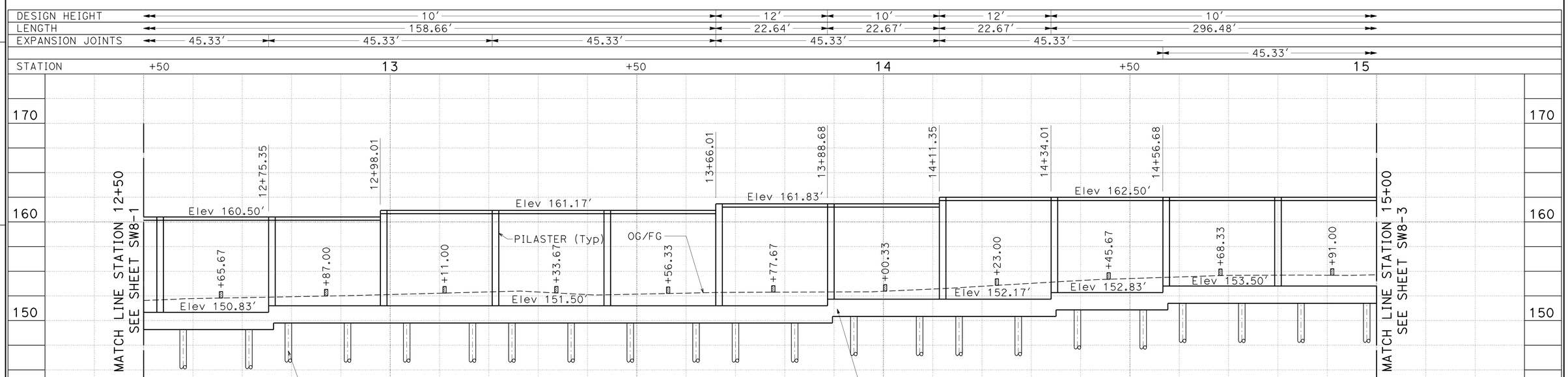

ELEVATION
SCALE: Horiz 1" = 10'
Vert 1" = 5'
APPROVED FOR SOUND WALL WORK ONLY

SOUND WALL PLAN
SOUND WALL SW707L - LOCATION 6
SCALE AS SHOWN **SW8-2**

REVISED BY | DATE REVISED
WILLIAM MICHAEL NICHOLS | MAY ALSHEIKH
CALCULATED-DESIGNED BY | CHECKED BY
FUNCTIONAL SUPERVISOR | HARWELL M. ONTOY
STATE OF CALIFORNIA - DEPARTMENT OF TRANSPORTATION
Caltrans
DESIGN

LAST REVISION 02-19-12 | DATE PLOTTED => 28-FEB-2013 | TIME PLOTTED => 15:42

Dist	COUNTY	ROUTE	POST MILES TOTAL PROJECT	SHEET No.	TOTAL SHEETS
11	SD	805	5.8/13.0	155	216

REGISTERED CIVIL ENGINEER 02-14-13 DATE

02-25-13
PLANS APPROVAL DATE

REGISTERED PROFESSIONAL ENGINEER WILLIAM MICHAEL NICHOLS No. C74525 Exp. 12-31-13 CIVIL STATE OF CALIFORNIA

THE STATE OF CALIFORNIA OR ITS OFFICERS OR AGENTS SHALL NOT BE RESPONSIBLE FOR THE ACCURACY OR COMPLETENESS OF SCANNED COPIES OF THIS PLAN SHEET.

NOTE:

FOR ACCURATE RIGHT OF WAY DATA, CONTACT RIGHT OF WAY ENGINEERING AT THE DISTRICT OFFICE.

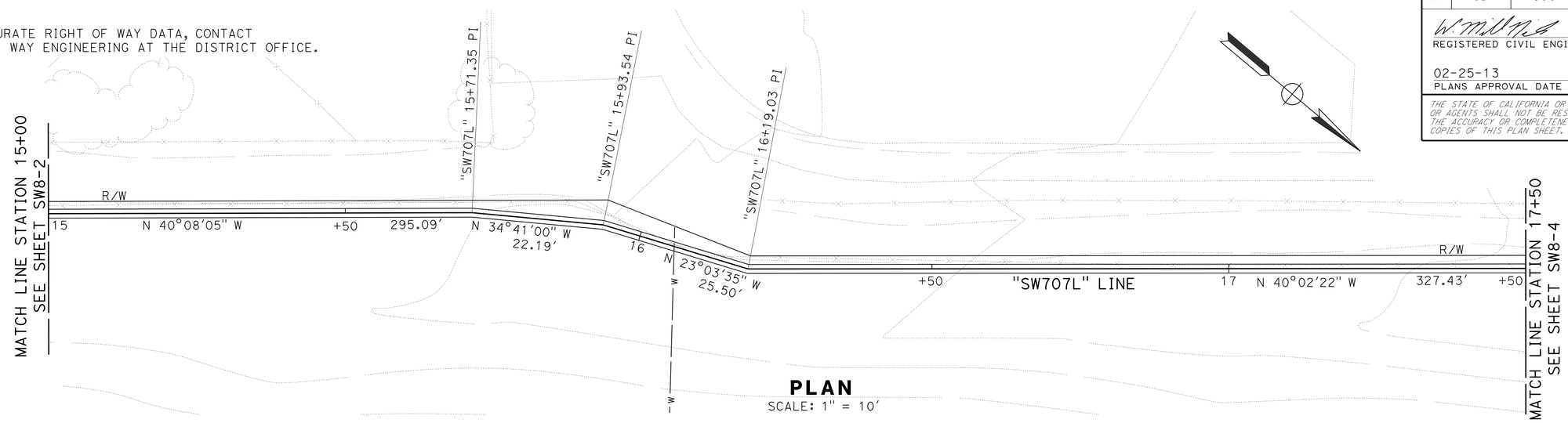

PLAN
SCALE: 1" = 10'

DESIGN HEIGHT	10'					12'
LENGTH	296.48'					46.66'
EXPANSION JOINTS	45.33'	44.85'	47.28'	45.65'	45.33'	46.66'

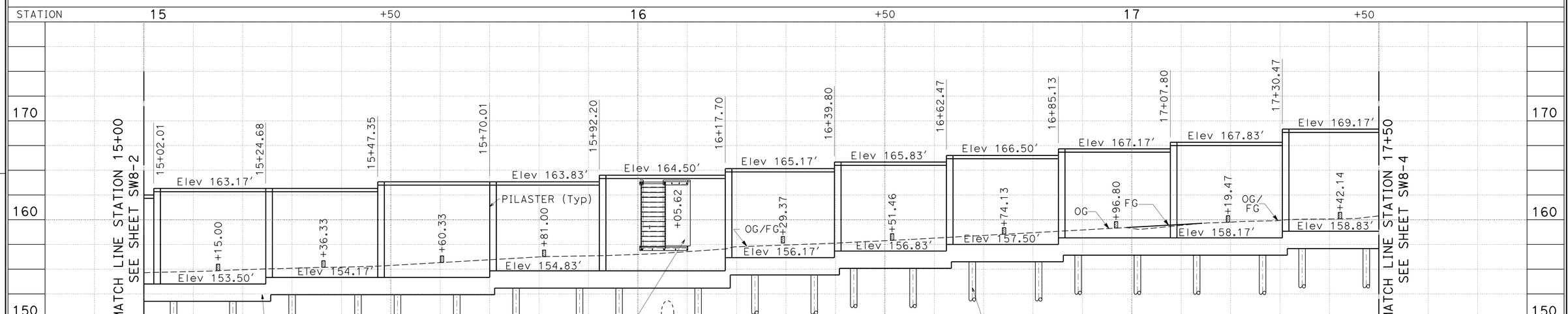

ELEVATION
SCALE: Horiz 1" = 10'
Vert 1" = 5'
APPROVED FOR SOUND WALL WORK ONLY

SOUND WALL PLAN
SOUND WALL SW707L - LOCATION 6
SCALE AS SHOWN **SW8-3**

STATE OF CALIFORNIA - DEPARTMENT OF TRANSPORTATION
Caltrans DESIGN

FUNCTIONAL SUPERVISOR: HARWELL M. ONTOY
CALCULATED-DESIGNED BY: WILLIAM MICHAEL NICHOLS
CHECKED BY: MAY ALSHEIKH
REVISED BY
DATE REVISED

LAST REVISION 02-19-12
DATE PLOTTED => 28-FEB-2013
TIME PLOTTED => 15:42

Dist	COUNTY	ROUTE	POST MILES TOTAL PROJECT	SHEET No.	TOTAL SHEETS
11	SD	805	5.8/13.0	156	216

REGISTERED CIVIL ENGINEER 02-14-13 DATE

02-25-13
PLANS APPROVAL DATE

REGISTERED PROFESSIONAL ENGINEER WILLIAM MICHAEL NICHOLS No. C74525 Exp. 12-31-13 CIVIL STATE OF CALIFORNIA

THE STATE OF CALIFORNIA OR ITS OFFICERS OR AGENTS SHALL NOT BE RESPONSIBLE FOR THE ACCURACY OR COMPLETENESS OF SCANNED COPIES OF THIS PLAN SHEET.

NOTE:

FOR ACCURATE RIGHT OF WAY DATA, CONTACT RIGHT OF WAY ENGINEERING AT THE DISTRICT OFFICE.

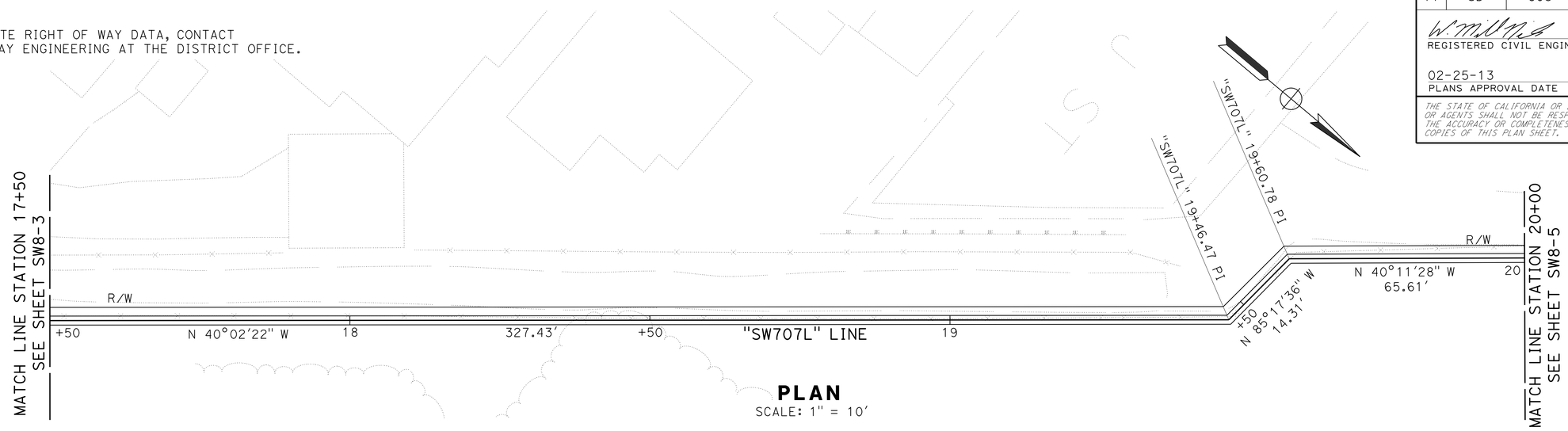

PLAN
SCALE: 1" = 10'

DESIGN HEIGHT	12'				10'				12'				14'				12'				10'		12'
LENGTH	46.66'				48.00'				25.34'				24.00'				72.00'				14.31'		104.23'
EXPANSION JOINTS	46.66'				48.00'				25.34'				48.00'				48.00'				39.88'		45.33'

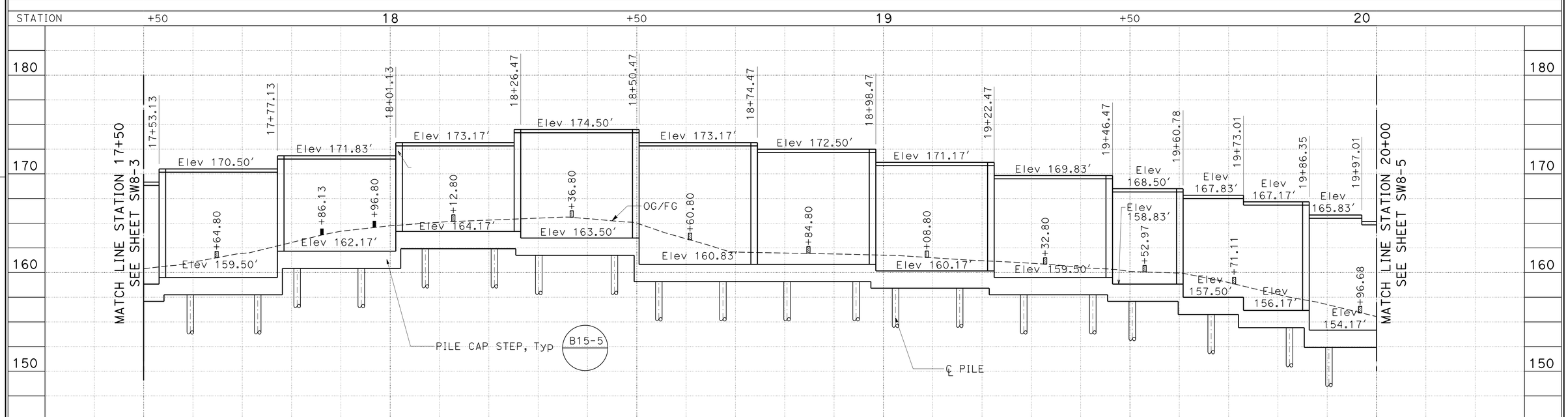

ELEVATION
SCALE: Horiz 1" = 10'
Vert 1" = 5'

APPROVED FOR SOUND WALL WORK ONLY

SOUND WALL PLAN
SOUND WALL SW707L - LOCATION 6
SCALE AS SHOWN **SW8-4**

STATE OF CALIFORNIA - DEPARTMENT OF TRANSPORTATION
Caltrans® DESIGN

FUNCTIONAL SUPERVISOR: HARWELL M. ONTOY
CALCULATED-DESIGNED BY: WILLIAM MICHAEL NICHOLS
CHECKED BY: MAY ALSHEIKH
REVISED BY
DATE REVISED

LAST REVISION 02-19-12
DATE PLOTTED => 28-FEB-2013
TIME PLOTTED => 15:42

Dist	COUNTY	ROUTE	POST MILES TOTAL PROJECT	SHEET No.	TOTAL SHEETS
11	SD	805	5.8/13.0	157	216

REGISTERED CIVIL ENGINEER 02-14-13 DATE

02-25-13
PLANS APPROVAL DATE

REGISTERED PROFESSIONAL ENGINEER WILLIAM MICHAEL NICHOLS No. C74525 Exp. 12-31-13 CIVIL STATE OF CALIFORNIA

THE STATE OF CALIFORNIA OR ITS OFFICERS OR AGENTS SHALL NOT BE RESPONSIBLE FOR THE ACCURACY OR COMPLETENESS OF SCANNED COPIES OF THIS PLAN SHEET.

NOTE:

FOR ACCURATE RIGHT OF WAY DATA, CONTACT RIGHT OF WAY ENGINEERING AT THE DISTRICT OFFICE.

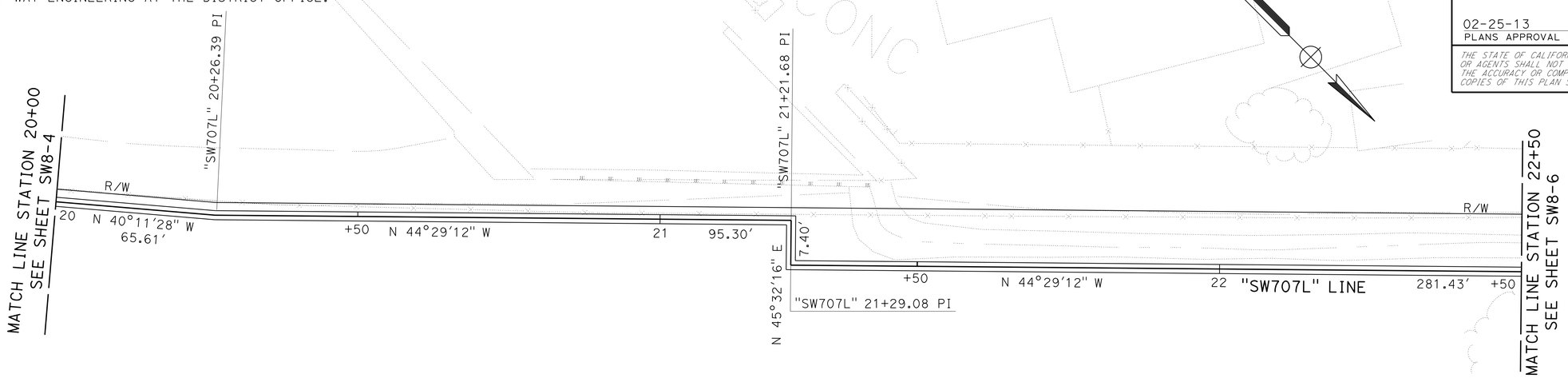

PLAN
SCALE: 1" = 10'

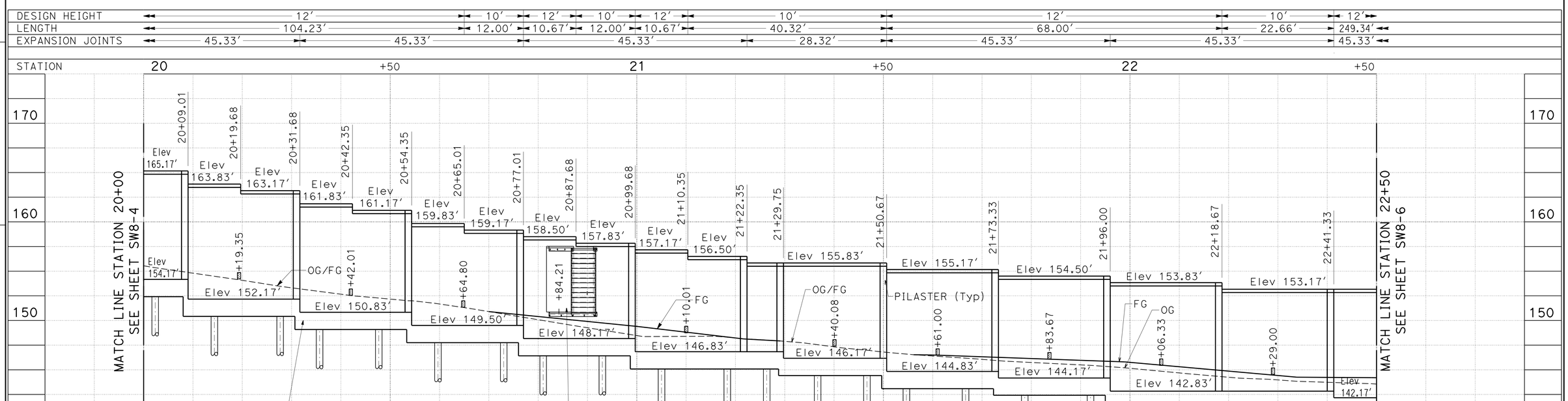

ELEVATION
SCALE: Horiz 1" = 10'
Vert 1" = 5'

APPROVED FOR SOUND WALL WORK ONLY

SOUND WALL PLAN

SOUND WALL SW707L - LOCATION 6

SCALE AS SHOWN **SW8-5**

STATE OF CALIFORNIA - DEPARTMENT OF TRANSPORTATION
Caltrans® DESIGN

FUNCTIONAL SUPERVISOR: HARWELL M. ONTOY
CALCULATED-DESIGNED BY: WILLIAM MICHAEL NICHOLS
CHECKED BY: MAY ALSHEIKH
REVISED BY
DATE REVISED

LAST REVISION 02-19-12
DATE PLOTTED => 28-FEB-2013
TIME PLOTTED => 15:42

Dist	COUNTY	ROUTE	POST MILES TOTAL PROJECT	SHEET No.	TOTAL SHEETS
11	SD	805	5.8/13.0	158	216

REGISTERED CIVIL ENGINEER 02-14-13 DATE

02-25-13
PLANS APPROVAL DATE

REGISTERED PROFESSIONAL ENGINEER
WILLIAM MICHAEL NICHOLS
No. C74525
Exp. 12-31-13
CIVIL
STATE OF CALIFORNIA

THE STATE OF CALIFORNIA OR ITS OFFICERS OR AGENTS SHALL NOT BE RESPONSIBLE FOR THE ACCURACY OR COMPLETENESS OF SCANNED COPIES OF THIS PLAN SHEET.

NOTE:

FOR ACCURATE RIGHT OF WAY DATA, CONTACT RIGHT OF WAY ENGINEERING AT THE DISTRICT OFFICE.

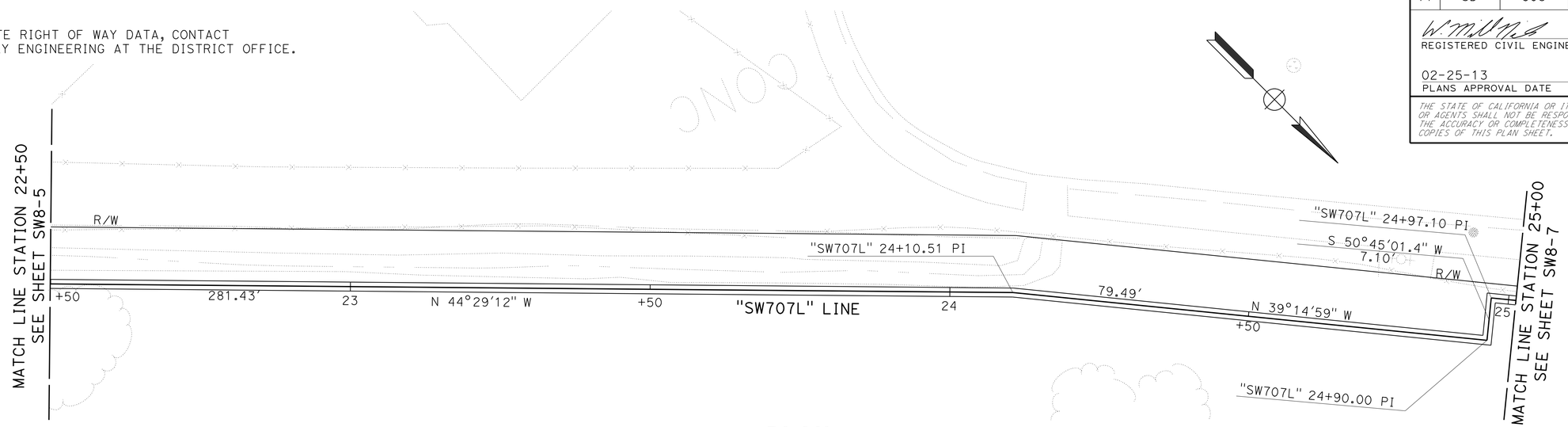

PLAN

SCALE: 1" = 10'

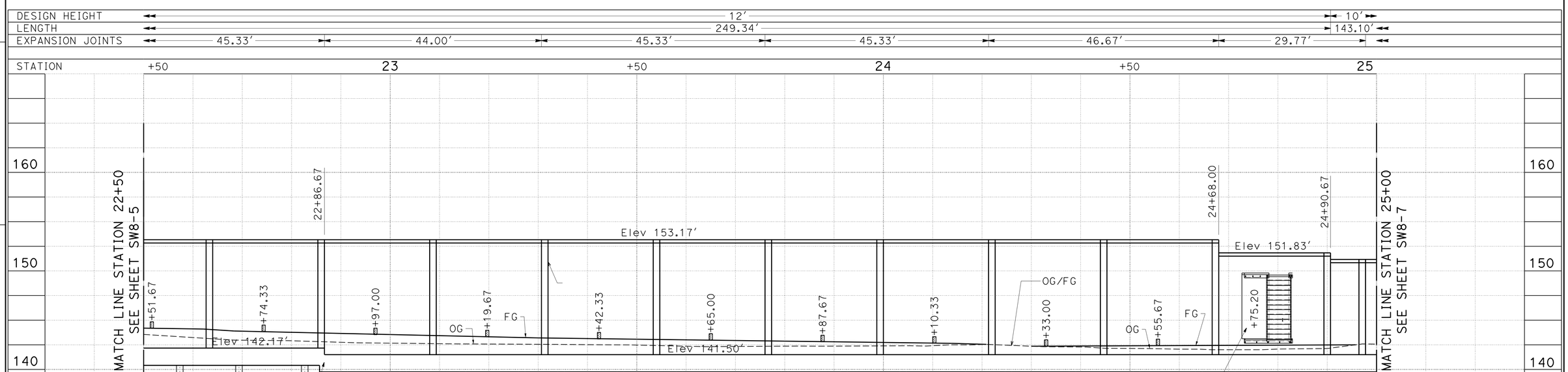

ELEVATION

SCALE: Horiz 1" = 10'
Vert 1" = 5'

APPROVED FOR SOUND WALL WORK ONLY

SOUND WALL PLAN

SOUND WALL SW707L - LOCATION 6

SCALE AS SHOWN

SW8-6

STATE OF CALIFORNIA - DEPARTMENT OF TRANSPORTATION
Caltrans®
DESIGN

FUNCTIONAL SUPERVISOR: HARWELL M. ONTOY
CALCULATED-DESIGNED BY: WILLIAM MICHAEL NICHOLS
CHECKED BY: MAY ALSHEIKH
REVISED BY
DATE REVISED

LAST REVISION 02-19-12
DATE PLOTTED => 28-FEB-2013
TIME PLOTTED => 15:42

Dist	COUNTY	ROUTE	POST MILES TOTAL PROJECT	SHEET No.	TOTAL SHEETS
11	SD	805	5.8/13.0	159	216

REGISTERED CIVIL ENGINEER 02-14-13 DATE

02-25-13
PLANS APPROVAL DATE

REGISTERED PROFESSIONAL ENGINEER WILLIAM MICHAEL NICHOLS No. C74525 Exp. 12-31-13 CIVIL STATE OF CALIFORNIA

THE STATE OF CALIFORNIA OR ITS OFFICERS OR AGENTS SHALL NOT BE RESPONSIBLE FOR THE ACCURACY OR COMPLETENESS OF SCANNED COPIES OF THIS PLAN SHEET.

NOTE:

FOR ACCURATE RIGHT OF WAY DATA, CONTACT RIGHT OF WAY ENGINEERING AT THE DISTRICT OFFICE.

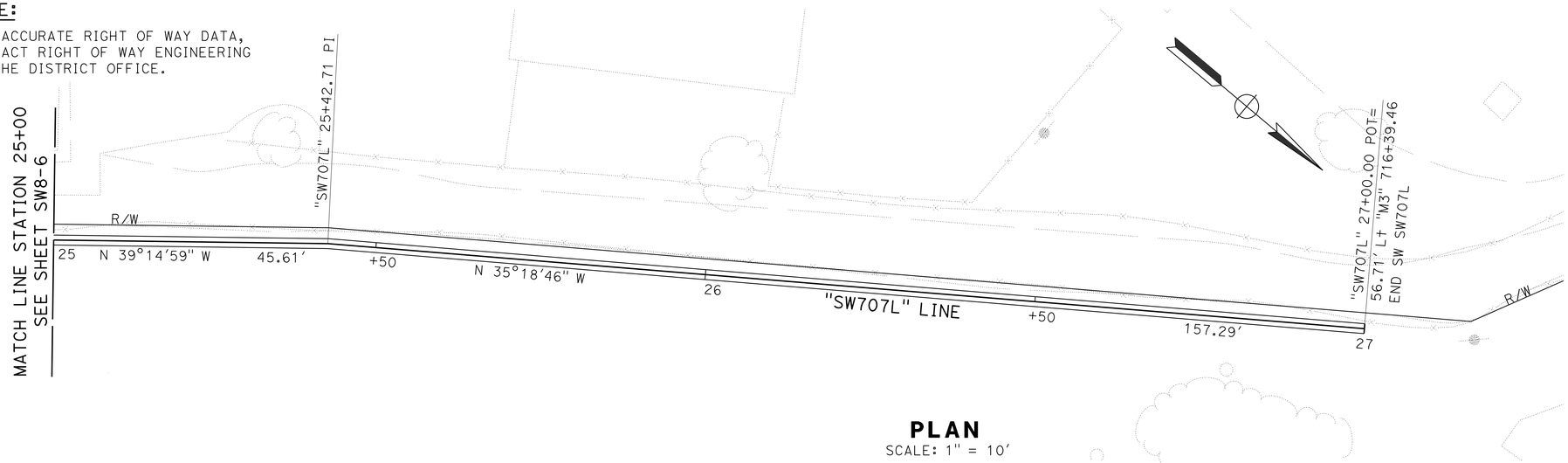

PLAN

SCALE: 1" = 10'

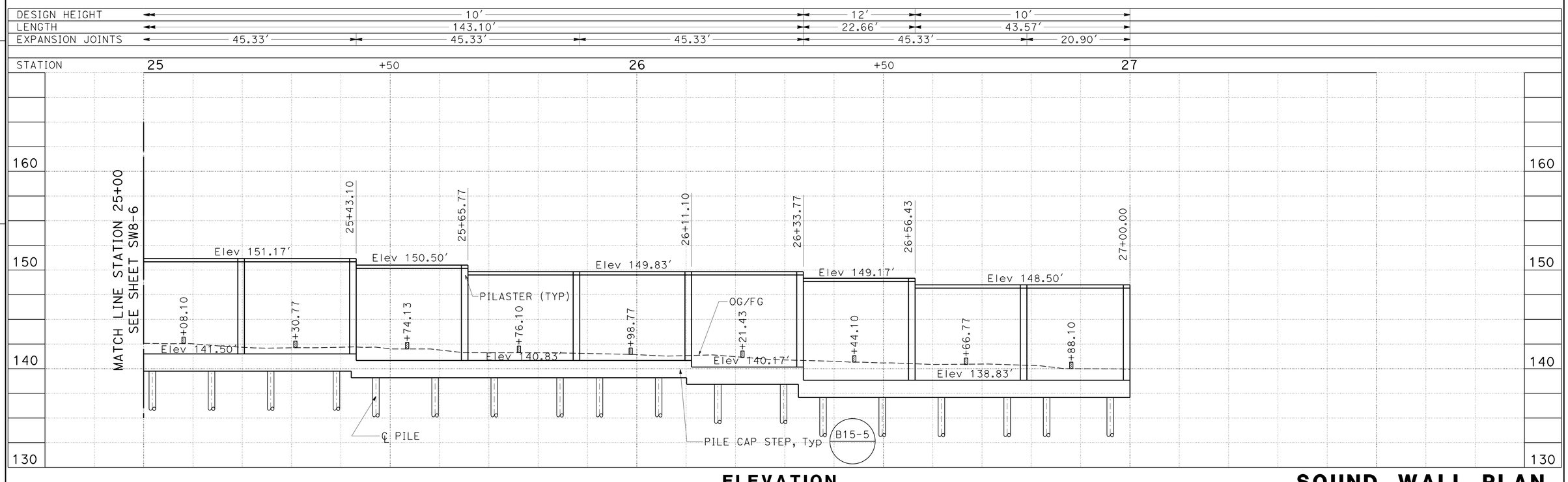

ELEVATION

SCALE: Horiz 1" = 10'
Vert 1" = 5'

APPROVED FOR SOUND WALL WORK ONLY

SOUND WALL PLAN

SOUND WALL SW707L - LOCATION 6

SCALE AS SHOWN **SW8-7**

CALCULATED-DESIGNED BY WILLIAM MICHAEL NICHOLS
CHECKED BY MAY ALSHEIKH
REVISED BY
DATE REVISED
FUNCTIONAL SUPERVISOR HARWELL M. ONTOY

STATE OF CALIFORNIA - DEPARTMENT OF TRANSPORTATION
Caltrans®
DESIGN

LAST REVISION 02-19-12
DATE PLOTTED => 28-FEB-2013
TIME PLOTTED => 15:42

Dist	COUNTY	ROUTE	POST MILES TOTAL PROJECT	SHEET No.	TOTAL SHEETS
11	SD	805	5.8/13.0	160	216

REGISTERED CIVIL ENGINEER 02-14-13 DATE

02-25-13
PLANS APPROVAL DATE

REGISTERED PROFESSIONAL ENGINEER WILLIAM MICHAEL NICHOLS No. C74525 Exp. 12-31-13 CIVIL STATE OF CALIFORNIA

THE STATE OF CALIFORNIA OR ITS OFFICERS OR AGENTS SHALL NOT BE RESPONSIBLE FOR THE ACCURACY OR COMPLETENESS OF SCANNED COPIES OF THIS PLAN SHEET.

NOTES:

1. DRAINAGE OPENING TO BE PLACE IN CELLS WITHOUT VERTICAL REINFORCEMENT.
2. LANDSCAPE OPENING TO BE PLACE IN CELLS WITHOUT VERTICAL REINFORCEMENT. FOR ADDITIONAL INFORMATION SEE PLANTING PLANS

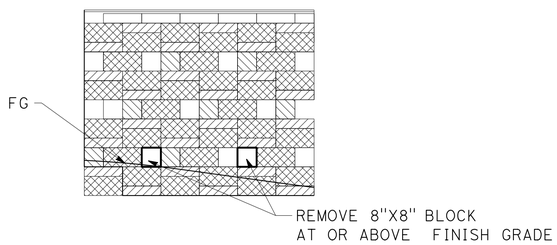

LANDSCAPE OPENING DETAIL

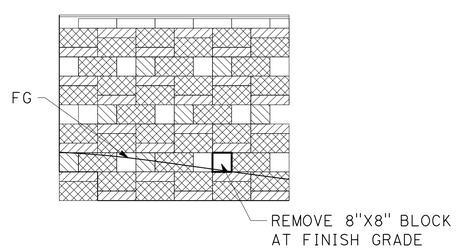

DRAINAGE OPENING DETAIL

PILE LOCATIONS

10+04.00	12+26.01	14+39.35	16+55.70	18+80.47	21+05.02	23+14.67	25+25.77
10+16.00	12+34.01	14+52.68	16+67.70	18+94.47	21+18.35	23+26.67	25+39.10
10+28.00	12+46.01	14+60.68	16+81.13	19+02.47	21+26.35	23+34.67	25+47.10
10+42.67	12+58.01	14+72.68	16+89.13	19+15.47	21+36.67	23+46.67	25+59.10
10+50.67	12+71.35	14+84.68	17+01.13	19+28.47	21+46.67	23+58.67	25+71.10
10+62.67	12+79.35	14+98.02	17+13.13	19+42.47	21+54.67	23+72.00	25+84.43
10+74.67	12+91.35	15+06.02	17+26.47	19+50.47	21+66.67	23+80.00	25+92.43
10+88.00	13+03.35	15+18.02	17+34.47	19+66.47	21+78.67	23+92.00	26+04.43
10+96.00	13+16.68	15+30.02	17+47.47	19+82.34	21+92.00	24+04.00	26+16.43
11+08.00	13+24.68	15+43.35	17+59.47	19+90.34	22+00.00	24+17.33	26+29.77
11+20.00	13+36.68	15+51.35	17+73.13	20+02.34	22+12.00	24+25.33	26+37.77
11+34.67	13+48.68	15+63.35	17+81.13	20+14.34	22+24.00	24+38.33	26+49.77
11+42.67	13+62.02	15+75.35	17+94.13	20+27.68	22+37.33	24+51.33	26+61.77
11+54.67	13+70.02	15+88.20	18+07.13	20+35.68	22+45.33	24+64.00	26+75.10
11+66.67	13+82.02	15+96.20	18+21.13	20+47.68	22+57.33	24+72.00	26+83.10
11+80.68	13+94.02	16+12.20	18+30.13	20+59.68	22+69.33	24+82.00	26+96.00
11+88.68	14+07.35	16+23.70	18+45.47	20+73.01	22+82.67	24+93.77	
12+00.68	14+15.35	16+35.70	18+54.47	20+81.01	22+90.67	25+01.77	
12+12.68	14+27.35	16+43.70	18+67.47	20+93.01	23+02.67	25+13.77	

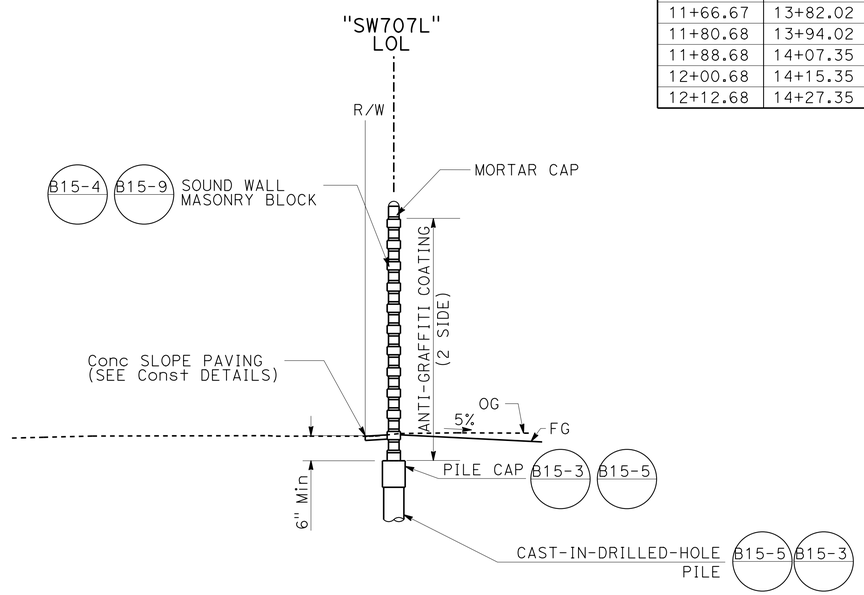

TYPICAL SECTION

GROUND LINE
CASE 1

SOUND WALL QUANTITIES (SW707L)

SOUND WALL (MASONRY BLOCK)	17,020 SQFT
STRUCTURAL CONCRETE (SOUND WALL)	167.6 CY
16" CIDH CONCRETE PILING (SOUND WALL)	1,067.8 LF
ANTI-GRAFFITI COATING	34,040 SQFT
ACCESS GATE (SOUND WALL)	4 EA

APPROVED FOR SOUND WALL WORK ONLY

SOUND WALL TYPICAL SECTION

SOUND WALL SW707L - LOCATION 6

NO SCALE

SW8-8

STATE OF CALIFORNIA - DEPARTMENT OF TRANSPORTATION
Caltrans®
DESIGN

FUNCTIONAL SUPERVISOR: HARWELL M. ONTOY
CALCULATED-DESIGNED BY: WILLIAM MICHAEL NICHOLS
CHECKED BY: MAY ALSHEIKH
REVISED BY
DATE REVISED

LAST REVISION 02-19-13
DATE PLOTTED => 28-FEB-2013
TIME PLOTTED => 15:42

Dist	COUNTY	ROUTE	POST MILES TOTAL PROJECT	SHEET No.	TOTAL SHEETS
11	SD	805	5.8/13.0	161	216

REGISTERED CIVIL ENGINEER 02-14-13 DATE

02-25-13
PLANS APPROVAL DATE

REGISTERED PROFESSIONAL ENGINEER WILLIAM MICHAEL NICHOLS No. C74525 Exp. 12-31-13 CIVIL STATE OF CALIFORNIA

THE STATE OF CALIFORNIA OR ITS OFFICERS OR AGENTS SHALL NOT BE RESPONSIBLE FOR THE ACCURACY OR COMPLETENESS OF SCANNED COPIES OF THIS PLAN SHEET.

MASONRY BLOCK WALL NOTES:

1. CORE SIZE FOR 10" WIDE BLOCK SHALL MATCH THE CORE SIZE FOR 8" WIDE BLOCKS.
2. ALL PILASTERS SHALL BE PLUMB.
3. FOR DETAILS NOT SHOWN, SEE STANDARD PLAN, B15-3.
4. PROVIDE 16" X4" X 16" PILASTER BLOCK NEAR BOTTOM OF WALL AS REQUIRED FOR TOP OF PILASTER TO BE FLUSH WITH ADJACENT WALL.

MASONRY BLOCK LEGEND:

- BLOCK 'A': 10" x 8" x 8" SMOOTH FACE ALL EXPOSED SIDES. BLOCK WILL PROJECT 1" ON BOTH SIDES OF WALL.
- BLOCK 'B': 8" x 8" x 8" SPLIT FACE ALL EXPOSED SIDES.
- BLOCK 'C': 10" x 4" x 16" SPLIT FACE ALL EXPOSED SIDES. BLOCK WILL PROJECT 1" ON BOTH SIDES OF WALL.
- BLOCK 'D': 8" x 8" x 16" SPLIT FACE ALL EXPOSED SIDES.
- BLOCK 'E': 16" x 8" x 16" SPLIT FACE ALL EXPOSED SIDES EXCEPT WHERE FACE MEETS EXISTING WALL.
- BLOCK 'F': 10" x 4" x 16" SMOOTH FACE AT EXISTING WALL
  BLOCK 'F': 16" x 4" x 16" SMOOTH FACE AT PILASTER

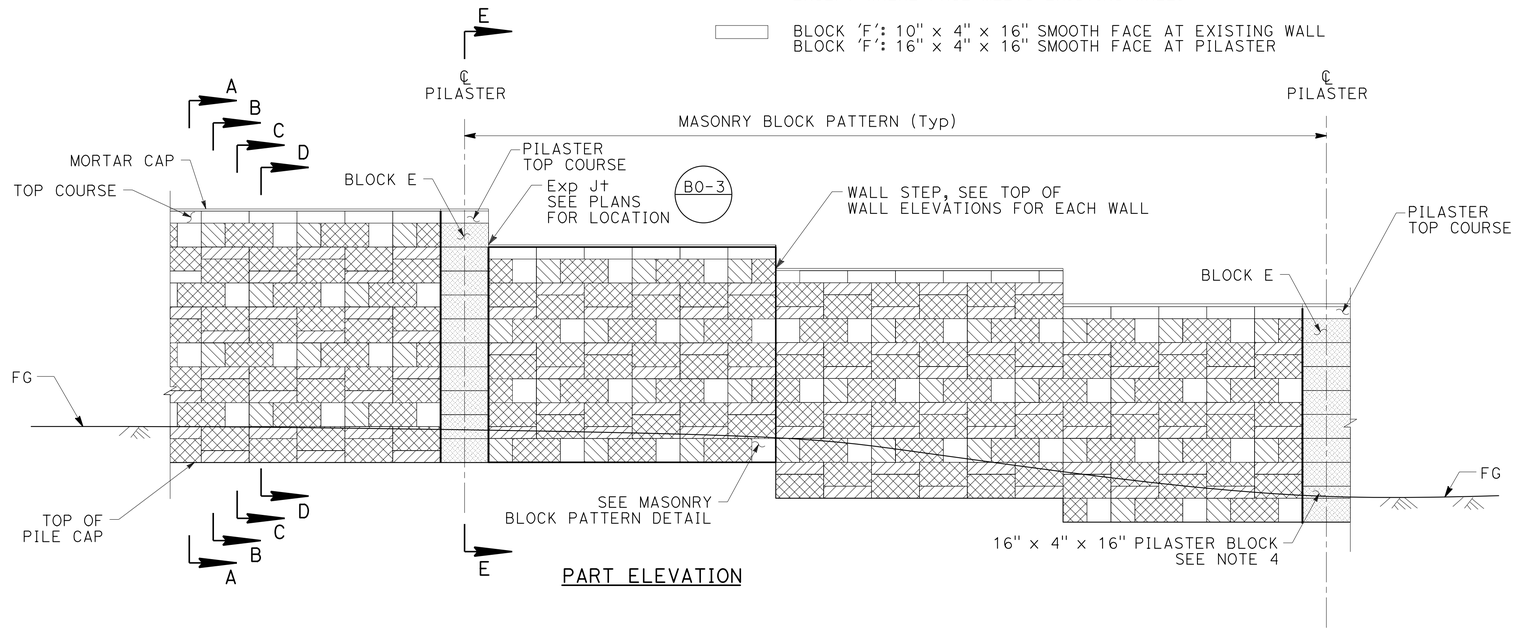

PART ELEVATION

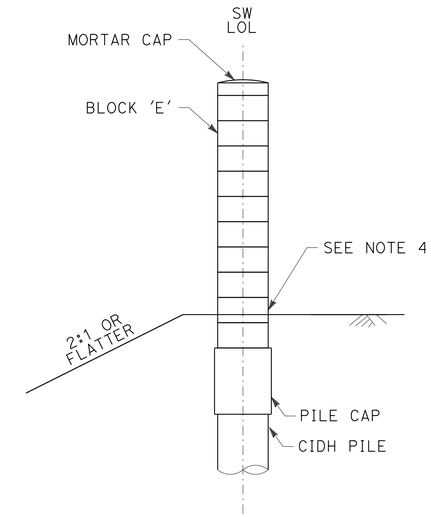

SECTION E-E

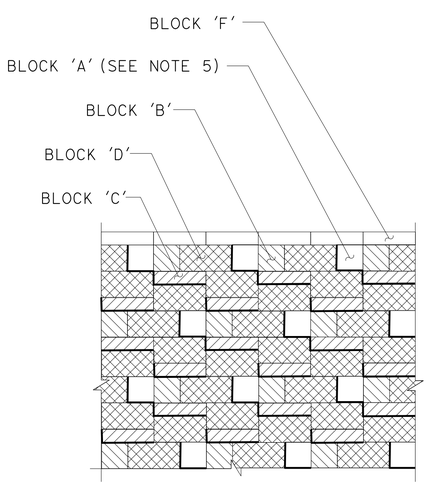

MASONRY BLOCK PATTERN

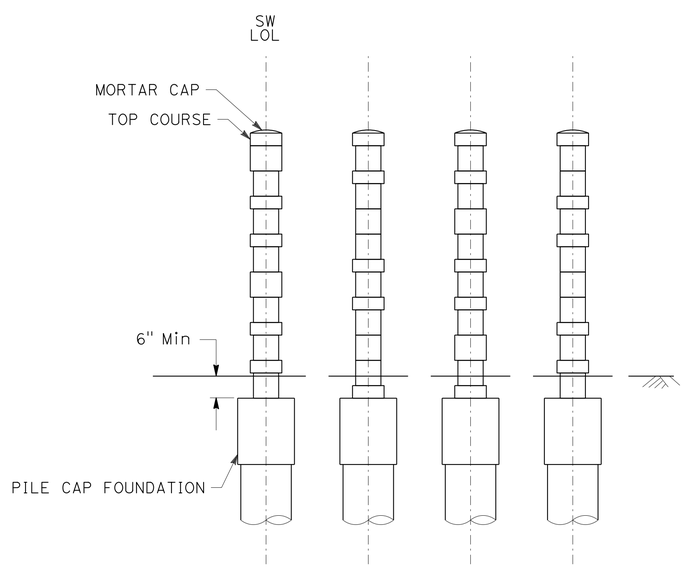

SECTIONS A-A, B-B, C-C, & D-D

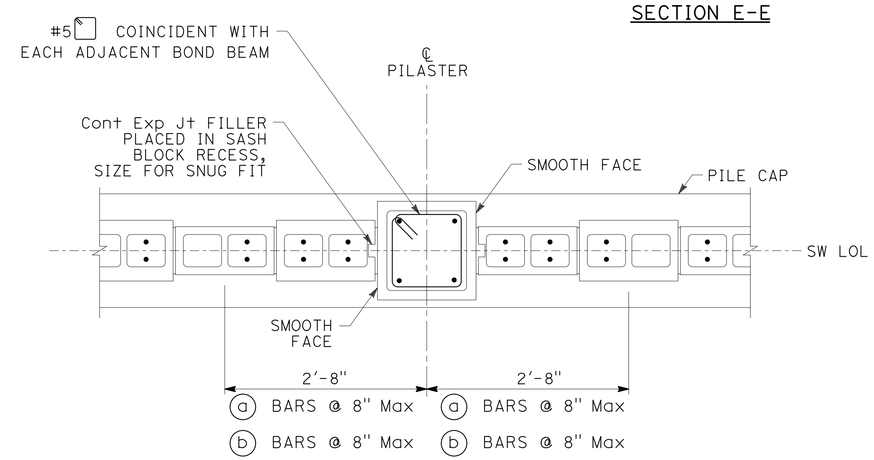

PILASTER DETAIL - SINGLE PILASTER

SOUND WALL DETAILS

SOUND WALL SW707L - LOCATION 6

NO SCALE

SW8-9

STATE OF CALIFORNIA - DEPARTMENT OF TRANSPORTATION
Caltrans® DESIGN
FUNCTIONAL SUPERVISOR: HARWELL M. ONTOY
CALCULATED-DESIGNED BY: MAY ALSHEIKH
CHECKED BY: WILLIAM MICHAEL NICHOLS
REVISED BY
DATE REVISED

LAST REVISION 02-19-12
DATE PLOTTED => 28-FEB-2013
TIME PLOTTED => 15:42

DIST	COUNTY	ROUTE	POST MILES TOTAL PROJECT	SHEET No	TOTAL SHEETS
11	SD	805	5.8/13.0	162	216

J. Tesar 02-15-13
CERTIFIED ENGINEERING GEOLOGIST DATE

02-25-13
PLANS APPROVAL DATE

REGISTERED GEOLOGIST
Jeff Tesar
No. 2137
Exp. 01-31-15
CERTIFIED ENGINEERING GEOLOGIST
STATE OF CALIFORNIA

The State of California or its officers or agents shall not be responsible for the accuracy or completeness of electronic copies of this plan sheet.

This LOTB sheet was prepared in accordance with the Caltrans Soil & Rock Logging, Classification, & Presentation Manual (2010 Edition).

BENCH MARK

WP 805 12.54
PK Nail w/ Washer in AC Shld
105.68 ′Rt. "A" Line, Station 693+14.26
Elevation: 89.040′
N: 1838048.970 E: 6301405.280

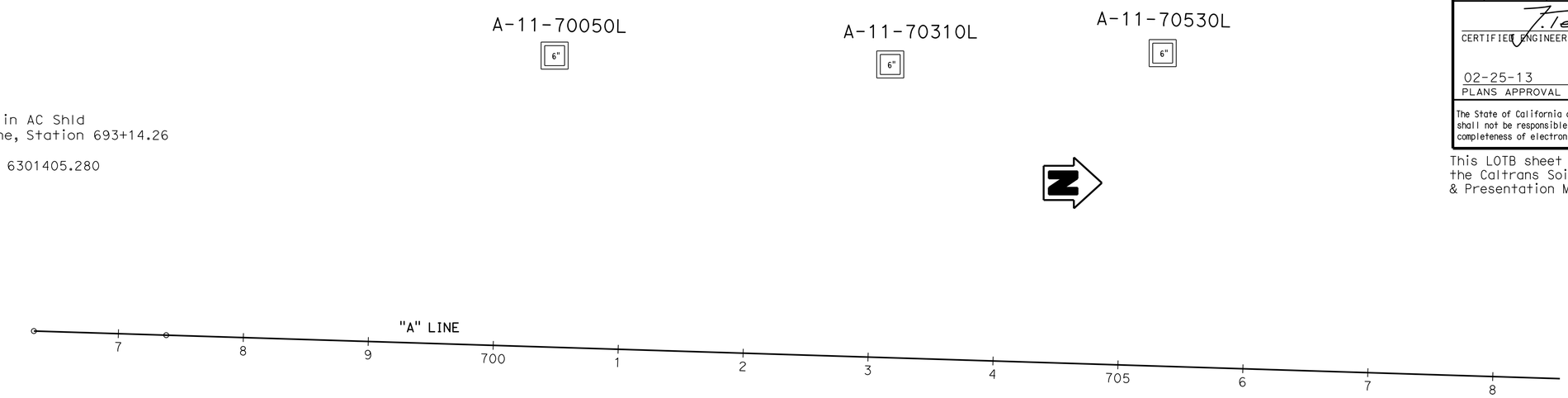

PLAN
SCALE: 1" = 50′

Note: No ground water encountered during field investigation

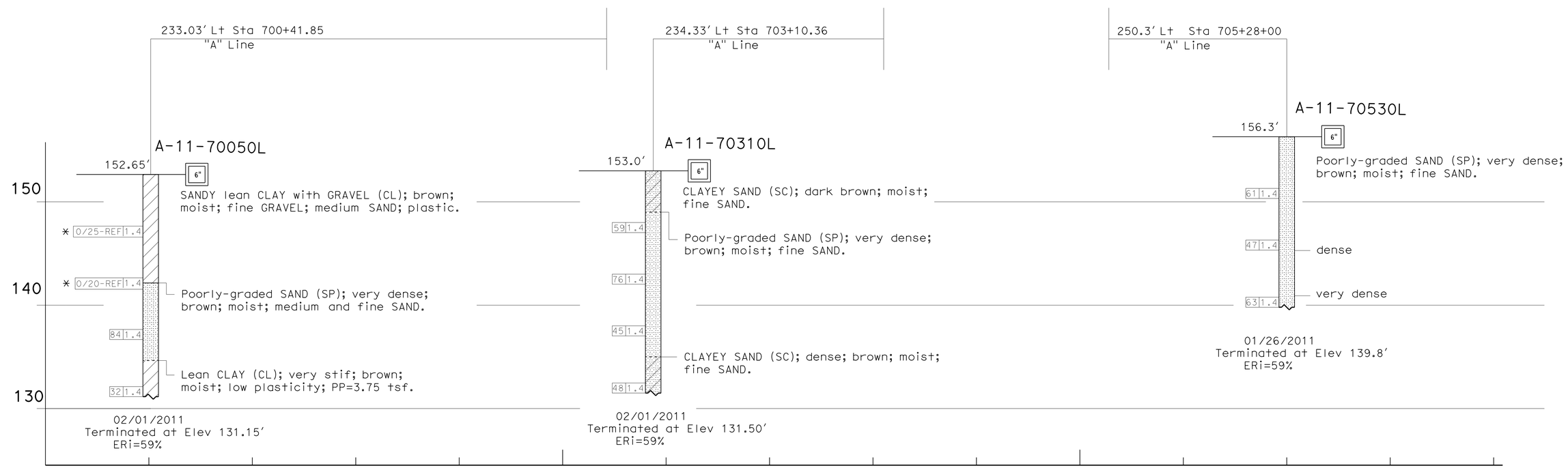

* SPT blowcounts affected by GRAVEL

PROFILE
Horiz: 1" = 50′
Vert: 1" = 5′

ENGINEERING SERVICES	GEOTECHNICAL SERVICES	STATE OF CALIFORNIA DEPARTMENT OF TRANSPORTATION	DIVISION OF ENGINEERING SERVICES STRUCTURE DESIGN DESIGN BRANCH	BRIDGE NO. / POST MILES 5.8/13.0	SOUND WALL No. SW707L 1 OF 2
FUNCTIONAL SUPERVISOR NAME: B. Hinman	DRAWN BY: K. Le / CHECKED BY: Z. Yazdani	FIELD INVESTIGATION BY: J. Tesar			LOG OF TEST BORINGS SW8-10

OGS CIVIL LOG OF TEST BORINGS SHEET

ORIGINAL SCALE IN INCHES FOR REDUCED PLANS 0 1 2 3

CU 3569
EA 1100020048

DISREGARD PRINTS BEARING EARLIER REVISION DATES

REVISION DATES | SHEET | OF

FILE => 1100020048rh010.dgn

USERNAME => s12400 DATE PLOTTED => 28-FEB-2013 TIME PLOTTED => 15:42

DIST	COUNTY	ROUTE	POST MILES TOTAL PROJECT	SHEET No	TOTAL SHEETS
11	SD	805	5.8/13.0	163	216

J. Tesar 02-15-13
CERTIFIED ENGINEERING GEOLOGIST DATE

02-25-13
PLANS APPROVAL DATE

REGISTERED GEOLOGIST Jeff Tesar No. 2137 Exp. 01-31-15 CERTIFIED ENGINEERING GEOLOGIST STATE OF CALIFORNIA

The State of California or its officers or agents shall not be responsible for the accuracy or completeness of electronic copies of this plan sheet.

This LOTB sheet was prepared in accordance with the Caltrans Soil & Rock Logging, Classification, & Presentation Manual (2010 Edition).

A-11-70980L 6"

A-11-71320L 6"

A-11-71640L 6"

BENCH MARK

WP 805 12.54
PK Nail w/ Washer in AC Shld
105.68 ′Rt. "A" Line, Station 693+14.26
Elevation: 89.040′
N: 1838048.970 E: 6301405.280

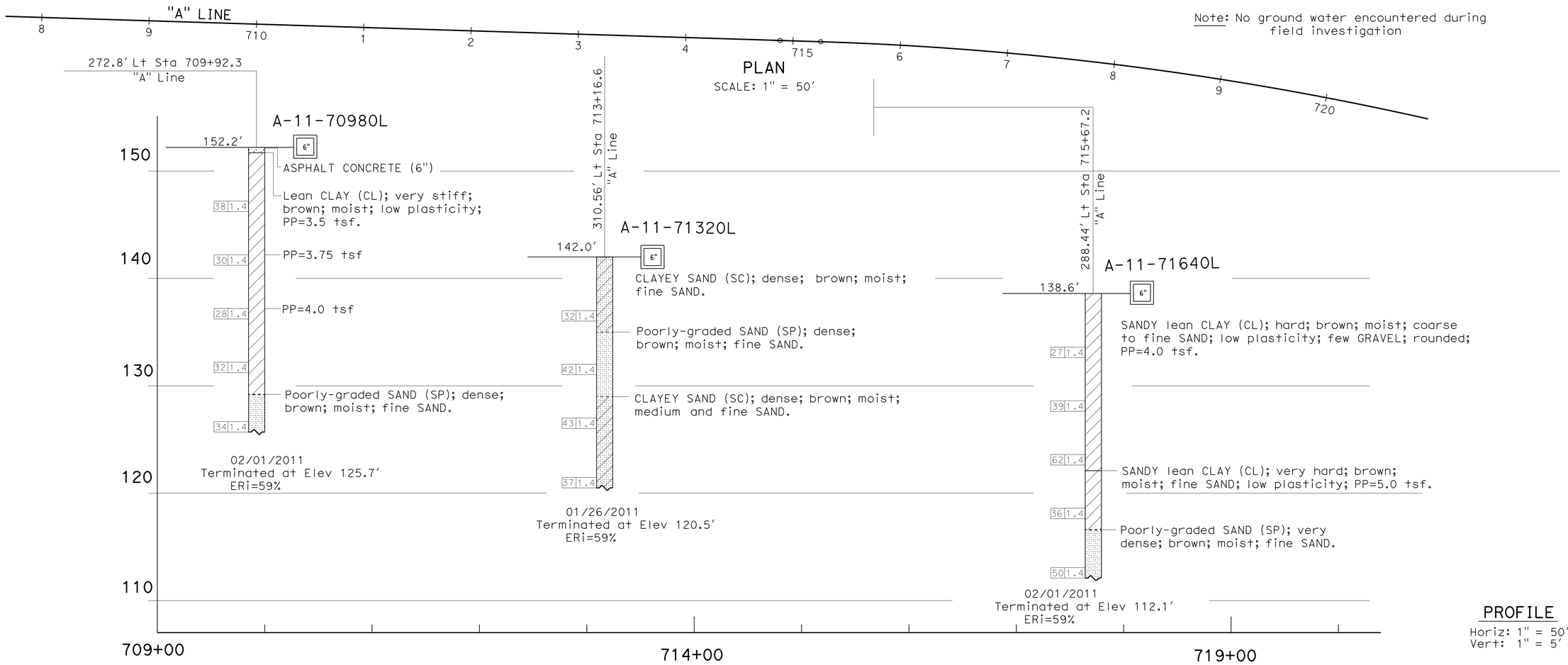

Note: No ground water encountered during field investigation

PROFILE

Horiz: 1" = 50′
Vert: 1" = 5′

ENGINEERING SERVICES	GEOTECHNICAL SERVICES	STATE OF CALIFORNIA DEPARTMENT OF TRANSPORTATION	DIVISION OF ENGINEERING SERVICES STRUCTURE DESIGN DESIGN BRANCH	BRIDGE NO. / POST MILES 5.8/13.0	SOUND WALL No. SW707L 2 OF 2 LOG OF TEST BORINGS SW8-11
FUNCTIONAL SUPERVISOR NAME: B. Hinman	DRAWN BY: K. Le CHECKED BY: Z. Yazdani	FIELD INVESTIGATION BY: J. Tesar			

OGS CIVIL LOG OF TEST BORINGS SHEET

ORIGINAL SCALE IN INCHES FOR REDUCED PLANS 0 1 2 3

CU 3569
EA 1100020048

DISREGARD PRINTS BEARING EARLIER REVISION DATES

REVISION DATES | SHEET | OF

FILE => 1100020048rh011.dgn

USERNAME => s127400 DATE PLOTTED => 28-FEB-2013 TIME PLOTTED => 15:42

Dist	COUNTY	ROUTE	POST MILES TOTAL PROJECT	SHEET No.	TOTAL SHEETS
11	SD	805	5.8/13.0	164	216

REGISTERED CIVIL ENGINEER — DATE 02-14-13

02-25-13
PLANS APPROVAL DATE

THE STATE OF CALIFORNIA OR ITS OFFICERS OR AGENTS SHALL NOT BE RESPONSIBLE FOR THE ACCURACY OR COMPLETENESS OF SCANNED COPIES OF THIS PLAN SHEET.

REGISTERED PROFESSIONAL ENGINEER — WILLIAM MICHAEL NICHOLS — No. C74525 — Exp. 12-31-13 — CIVIL — STATE OF CALIFORNIA

NOTE:
FOR ACCURATE RIGHT OF WAY DATA, CONTACT RIGHT OF WAY ENGINEERING AT THE DISTRICT OFFICE.

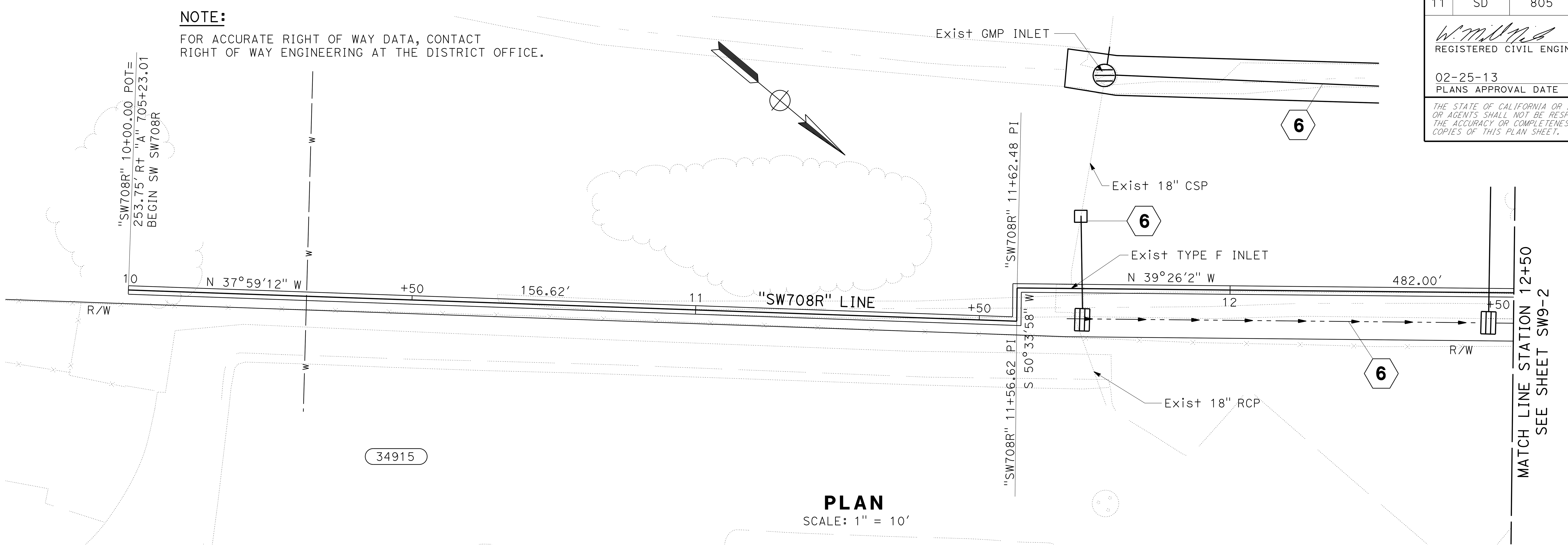

PLAN
SCALE: 1" = 10'

ELEVATION
SCALE: Horiz 1" = 10'
Vert 1" = 5'

APPROVED FOR SOUND WALL WORK ONLY

SOUND WALL PLAN
SOUND WALL SW708R - LOCATION 7
SCALE AS SHOWN

SW9-1

STATE OF CALIFORNIA - DEPARTMENT OF TRANSPORTATION
DESIGN
Caltrans®

FUNCTIONAL SUPERVISOR: HARWELL M. ONTOY
CALCULATED-DESIGNED BY: WILLIAM MICHAEL NICHOLS
CHECKED BY: MAY ALSHEIKH
REVISED BY
DATE REVISED

LAST REVISION 02-19-13
DATE PLOTTED => 28-FEB-2013
TIME PLOTTED => 15:42

Dist	COUNTY	ROUTE	POST MILES TOTAL PROJECT	SHEET No.	TOTAL SHEETS
11	SD	805	5.8/13.0	165	216

REGISTERED CIVIL ENGINEER 02-14-13 DATE

02-25-13
PLANS APPROVAL DATE

REGISTERED PROFESSIONAL ENGINEER WILLIAM MICHAEL NICHOLS No. C74525 Exp. 12-31-13 CIVIL STATE OF CALIFORNIA

THE STATE OF CALIFORNIA OR ITS OFFICERS OR AGENTS SHALL NOT BE RESPONSIBLE FOR THE ACCURACY OR COMPLETENESS OF SCANNED COPIES OF THIS PLAN SHEET.

NOTE:

FOR ACCURATE RIGHT OF WAY DATA, CONTACT RIGHT OF WAY ENGINEERING AT THE DISTRICT OFFICE.

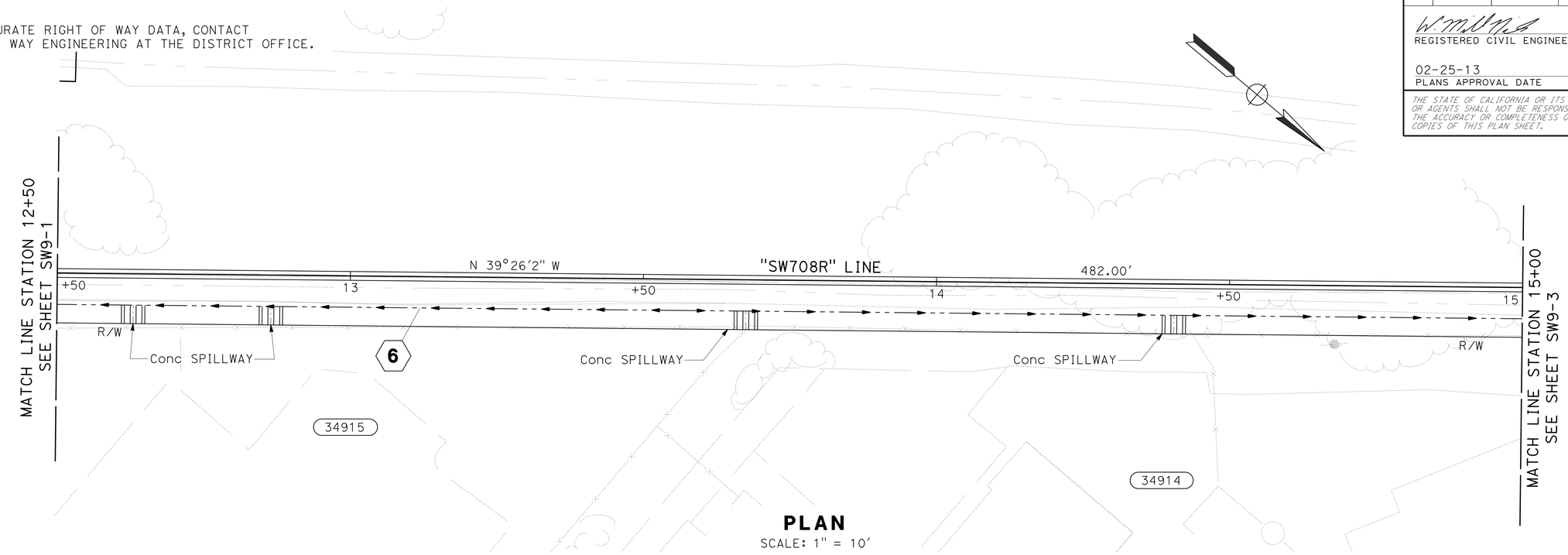

PLAN

SCALE: 1" = 10'

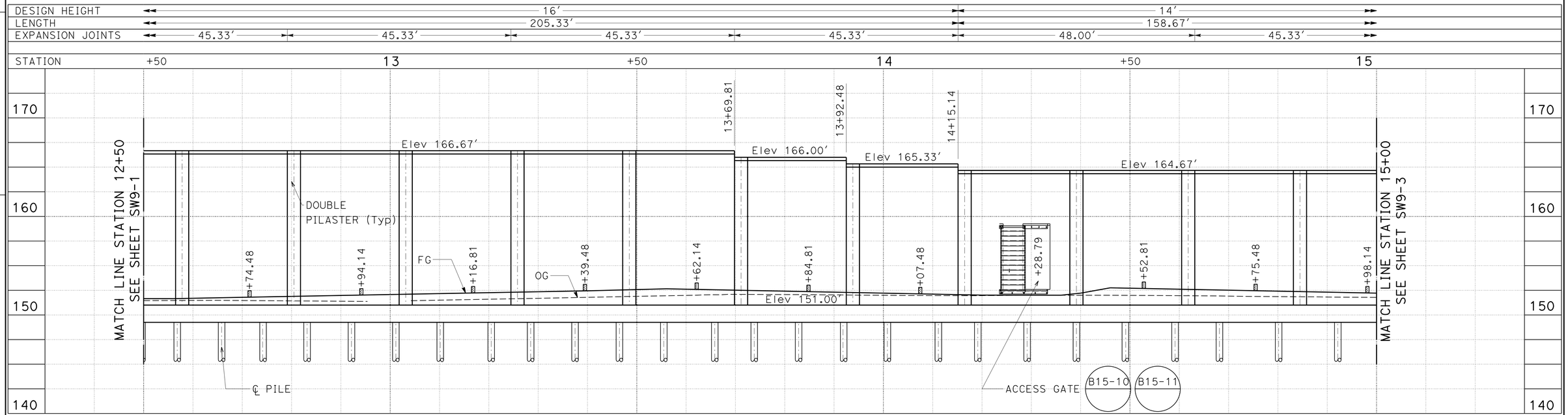

ELEVATION

SCALE: Horiz 1" = 10'
Vert 1" = 5'

APPROVED FOR SOUND WALL WORK ONLY

SOUND WALL PLAN

SOUND WALL SW708R - LOCATION 7

SCALE AS SHOWN

SW9-2

LAST REVISION 02-19-13 | DATE PLOTTED => 28-FEB-2013 | TIME PLOTTED => 15:42

WILLIAM MICHAEL NICHOLS | MAY ALSHEIKH | REVISED BY | DATE REVISED | CALCULATED-DESIGNED BY | CHECKED BY | FUNCTIONAL SUPERVISOR HARWELL M. ONTOY

STATE OF CALIFORNIA - DEPARTMENT OF TRANSPORTATION

DESIGN

Caltrans

Dist	COUNTY	ROUTE	POST MILES TOTAL PROJECT	SHEET No.	TOTAL SHEETS
11	SD	805	5.8/13.0	166	216

REGISTERED CIVIL ENGINEER 02-14-13 DATE

02-25-13
PLANS APPROVAL DATE

REGISTERED PROFESSIONAL ENGINEER WILLIAM MICHAEL NICHOLS No. C74525 Exp. 12-31-13 CIVIL STATE OF CALIFORNIA

THE STATE OF CALIFORNIA OR ITS OFFICERS OR AGENTS SHALL NOT BE RESPONSIBLE FOR THE ACCURACY OR COMPLETENESS OF SCANNED COPIES OF THIS PLAN SHEET.

NOTE:

FOR ACCURATE RIGHT OF WAY DATA, CONTACT RIGHT OF WAY ENGINEERING AT THE DISTRICT OFFICE.

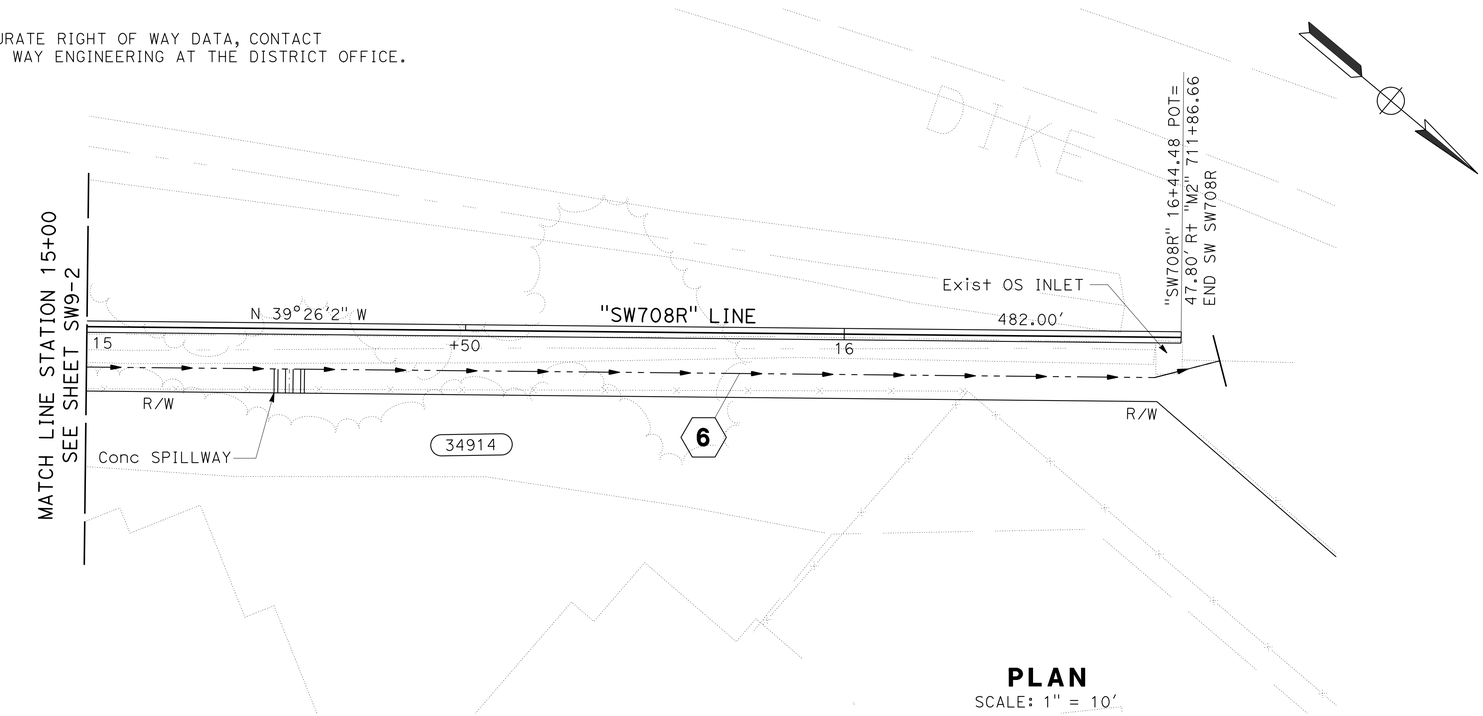

PLAN

SCALE: 1" = 10'

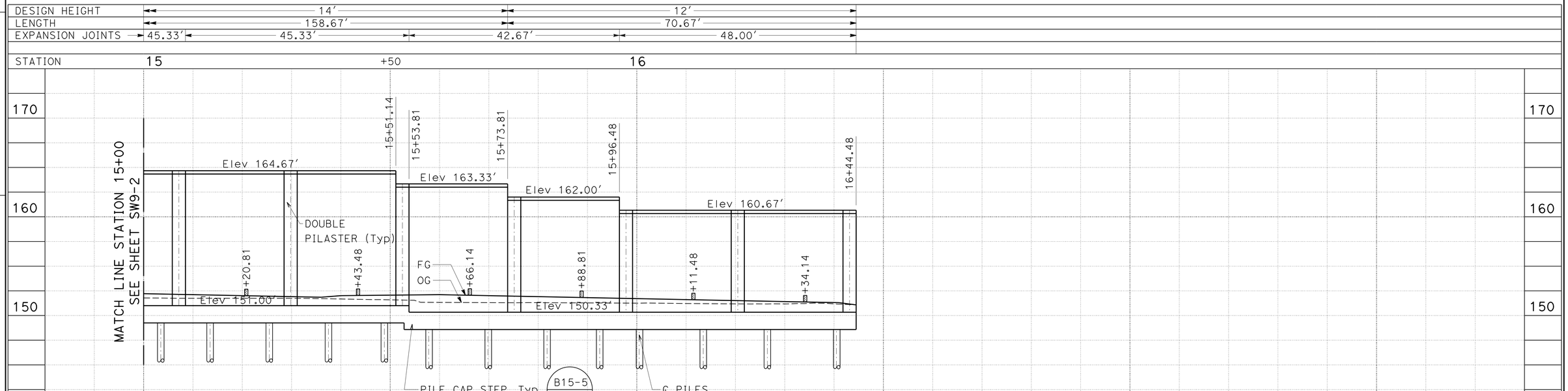

ELEVATION

SCALE: Horiz 1" = 10'
Vert 1" = 5'

APPROVED FOR SOUND WALL WORK ONLY

SOUND WALL PLAN

SOUND WALL SW708R - LOCATION 7

SCALE AS SHOWN

SW9-3

STATE OF CALIFORNIA - DEPARTMENT OF TRANSPORTATION
Caltrans
DESIGN

FUNCTIONAL SUPERVISOR: HARWELL M. ONTOY

CALCULATED-DESIGNED BY: WILLIAM MICHAEL NICHOLS
CHECKED BY: MAY ALSHEIKH

REVISED BY
DATE REVISED

LAST REVISION 02-19-13
DATE PLOTTED => 28-FEB-2013
TIME PLOTTED => 15:42

Dist	COUNTY	ROUTE	POST MILES TOTAL PROJECT	SHEET No.	TOTAL SHEETS
11	SD	805	5.8/13.0	167	216

REGISTERED CIVIL ENGINEER 02-14-13 DATE

02-25-13
PLANS APPROVAL DATE

REGISTERED PROFESSIONAL ENGINEER WILLIAM MICHAEL NICHOLS No. C74525 Exp. 12-31-13 CIVIL STATE OF CALIFORNIA

THE STATE OF CALIFORNIA OR ITS OFFICERS OR AGENTS SHALL NOT BE RESPONSIBLE FOR THE ACCURACY OR COMPLETENESS OF SCANNED COPIES OF THIS PLAN SHEET.

NOTES:

1. LANDSCAPE OPENING TO BE PLACE IN CELLS WITHOUT VERTICAL REINFORCEMENT. FOR ADDITIONAL INFORMATION SEE PLANTING PLANS

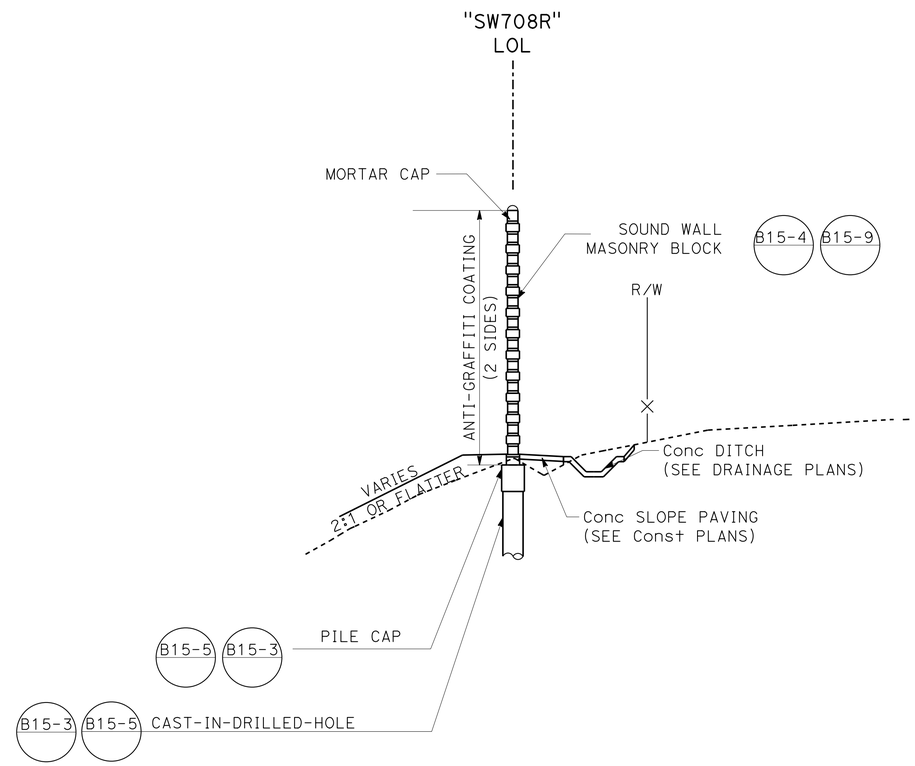

TYPICAL SECTION

GROUND LINE
CASE 2

PILE LOCATION

10+04.00	11+59.95	13+20.48	14+80.14
10+14.00	11+69.48	13+28.48	14+92.14
10+25.62	11+81.48	13+37.48	15+03.48
10+35.62	11+93.48	13+46.48	15+13.48
10+43.63	12+05.48	13+55.48	15+25.48
10+51.95	12+13.81	13+65.81	15+37.48
10+59.95	12+21.81	13+73.81	15+48.81
10+67.95	12+29.81	13+82.81	15+57.81
10+77.28	12+38.81	13+91.81	15+69.81
10+85.28	12+49.67	14+00.81	15+81.81
10+93.28	12+56.81	14+11.14	15+92.48
11+02.62	12+65.81	14+19.14	16+00.48
11+10.62	12+74.14	14+29.14	16+13.48
11+18.62	12+83.14	14+39.14	16+26.48
11+27.95	12+92.14	14+49.14	16+40.48
11+35.95	13+01.15	14+59.14	
11+47.95	13+10.15	14+68.14	

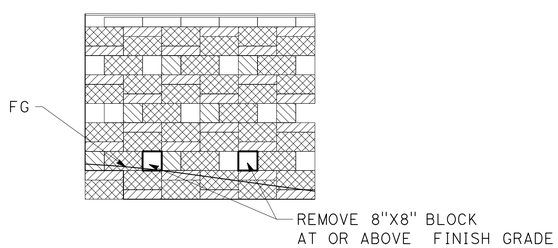

LANDSCAPE OPENING DETAIL

SOUND WALL QUANTITIES (SW708R)

SOUND WALL (MASONRY BLOCK)	8,580 SQFT
STRUCTURAL CONCRETE (SOUND WALL)	63.0 CY
16" CIDH CONCRETE PILING (SOUND WALL)	914.5 LF
ANTI-GRAFFITI COATING	17,160 SQFT
ACCESS GATE (SOUND WALL)	2 EA

APPROVED FOR SOUND WALL WORK ONLY

SOUND WALL TYPICAL SECTION

SOUND WALL SW708R - LOCATION 7

SCALE AS SHOWN **SW9-4**

STATE OF CALIFORNIA - DEPARTMENT OF TRANSPORTATION
DESIGN
Caltrans

FUNCTIONAL SUPERVISOR: HARWELL M. ONTOY
CALCULATED-DESIGNED BY: WILLIAM MICHAEL NICHOLS
CHECKED BY: MAY ALSHEIKH
REVISED BY
DATE REVISED

LAST REVISION 02-19-13
DATE PLOTTED => 28-FEB-2013
TIME PLOTTED => 15:42

Dist	COUNTY	ROUTE	POST MILES TOTAL PROJECT	SHEET No.	TOTAL SHEETS
11	SD	805	5.8/13.0	168	216

REGISTERED CIVIL ENGINEER 02-14-13 DATE

02-25-13
PLANS APPROVAL DATE

REGISTERED PROFESSIONAL ENGINEER WILLIAM MICHAEL NICHOLS No. C74525 Exp. 12-31-13 CIVIL STATE OF CALIFORNIA

THE STATE OF CALIFORNIA OR ITS OFFICERS OR AGENTS SHALL NOT BE RESPONSIBLE FOR THE ACCURACY OR COMPLETENESS OF SCANNED COPIES OF THIS PLAN SHEET.

MASONRY BLOCK WALL NOTES:

1. CORE SIZE FOR 10" WIDE BLOCK SHALL MATCH THE CORE SIZE FOR 8" WIDE BLOCKS.
2. ALL PILASTERS SHALL BE PLUMB.
3. FOR DETAILS NOT SHOWN, SEE STANDARD PLAN, B15-3.
4. PROVIDE 16" X4" X 16" PILASTER BLOCK NEAR BOTTOM OF WALL AS REQUIRED FOR TOP OF PILASTER TO BE FLUSH WITH ADJACENT WALL.

MASONRY BLOCK LEGEND:

- BLOCK 'A': 10" x 8" x 8" SMOOTH FACE ALL EXPOSED SIDES. BLOCK WILL PROJECT 1" ON BOTH SIDES OF WALL.
- BLOCK 'B': 8" x 8" x 8" SPLIT FACE ALL EXPOSED SIDES.
- BLOCK 'C': 10" x 4" x 16" SPLIT FACE ALL EXPOSED SIDES. BLOCK WILL PROJECT 1" ON BOTH SIDES OF WALL.
- BLOCK 'D': 8" x 8" x 16" SPLIT FACE ALL EXPOSED SIDES.
- BLOCK 'E': 16" x 8" x 16" SPLIT FACE ALL EXPOSED SIDES EXCEPT WHERE FACE MEETS EXISTING WALL.
- BLOCK 'F': 10" x 4" x 16" SMOOTH FACE AT EXISTING WALL
  BLOCK 'F': 16" x 4" x 16" SMOOTH FACE AT PILASTER

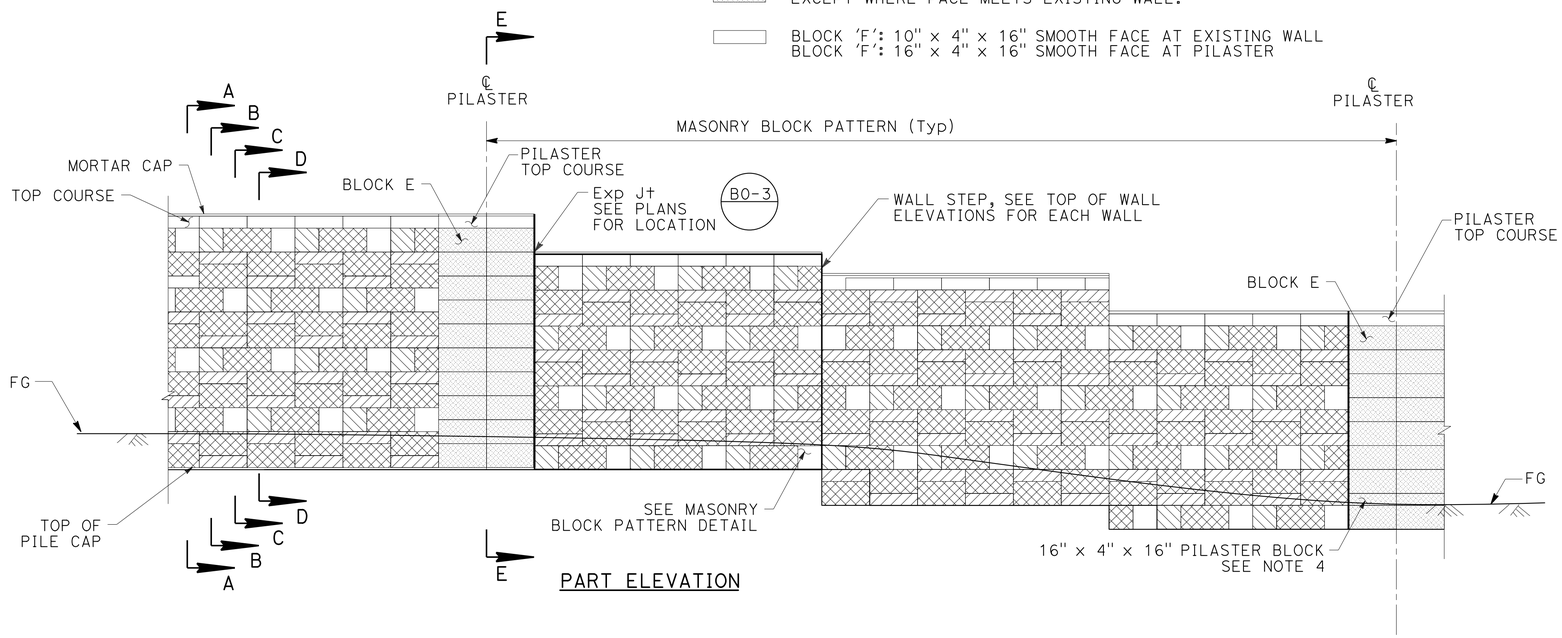

PART ELEVATION

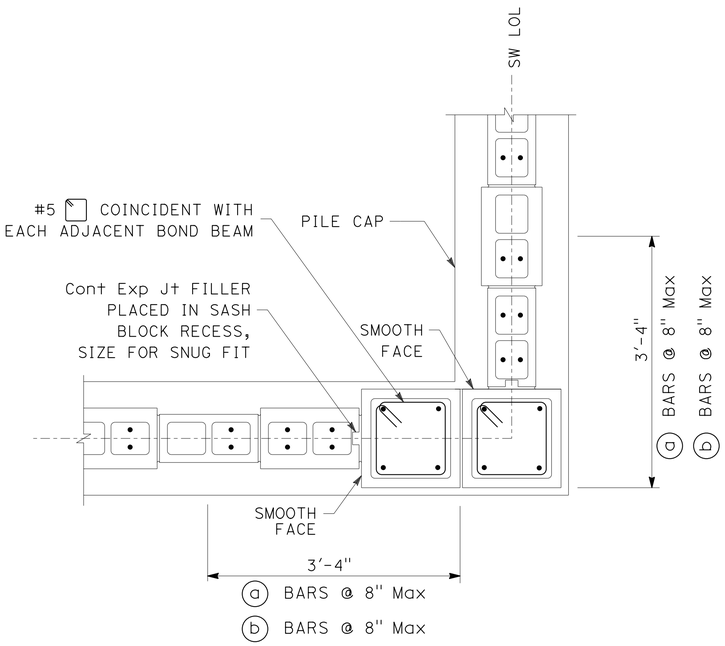

PILASTER DETAIL - DOUBLE PILASTER AT AN ANGLE

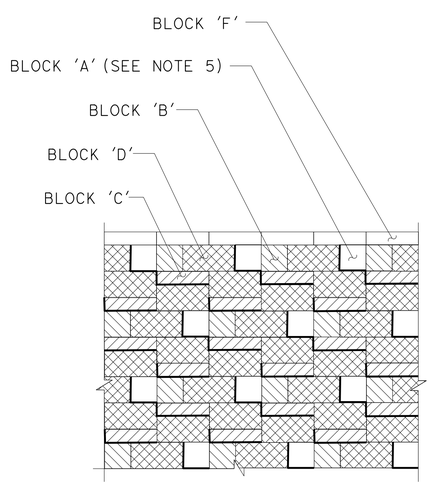

MASONRY BLOCK PATTERN

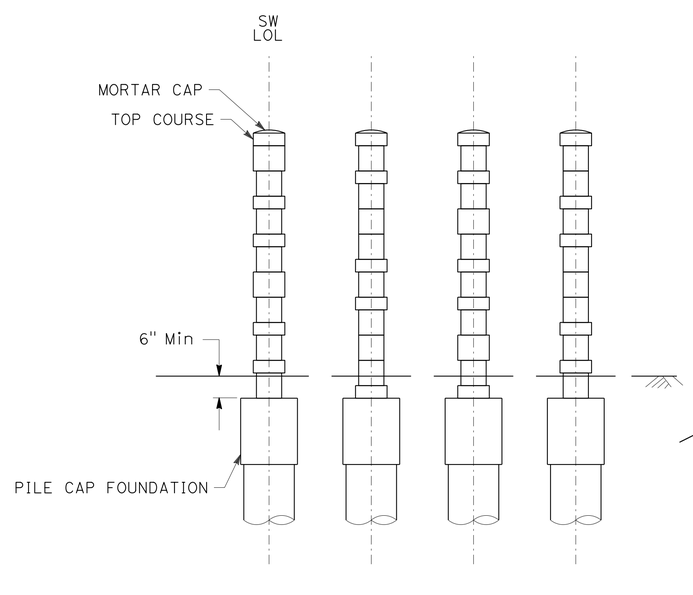

SECTIONS A-A, B-B, C-C, & D-D

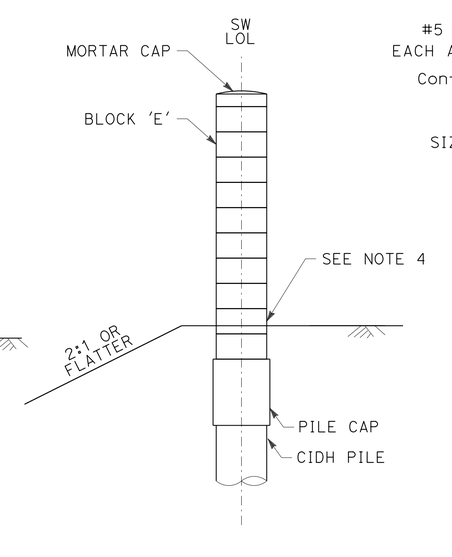

SECTION E-E

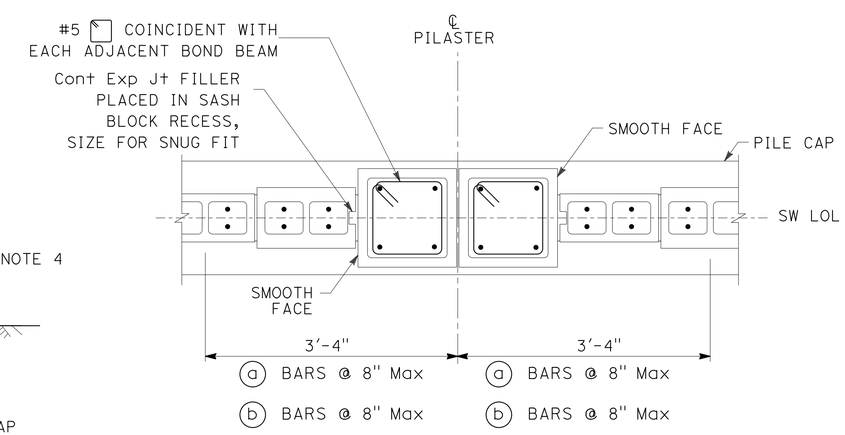

PILASTER DETAIL - DOUBLE PILASTER

SOUND WALL DETAILS

SOUND WALL SW708R - LOCATION 7

NO SCALE

SW9-5

REVISED BY	DATE REVISED
WILLIAM MICHAEL NICHOLS	MAY ALSHEIKH
CALCULATED-DESIGNED BY	CHECKED BY
FUNCTIONAL SUPERVISOR	HARWELL M. ONTOY

STATE OF CALIFORNIA - DEPARTMENT OF TRANSPORTATION
Caltrans
DESIGN

LAST REVISION 02-19-13 | DATE PLOTTED => 28-FEB-2013 | TIME PLOTTED => 15:42

DIST	COUNTY	ROUTE	POST MILES TOTAL PROJECT	SHEET No	TOTAL SHEETS
11	SD	805	5.8/13.0	169	216

J. Tesar 02-15-13
CERTIFIED ENGINEERING GEOLOGIST DATE

02-25-13
PLANS APPROVAL DATE

REGISTERED GEOLOGIST
Jeff Tesar
No. 2137
Exp. 01-31-15
CERTIFIED ENGINEERING GEOLOGIST
STATE OF CALIFORNIA

The State of California or its officers or agents shall not be responsible for the accuracy or completeness of electronic copies of this plan sheet.

This LOTB sheet was prepared in accordance with the Caltrans Soil & Rock Logging, Classification, & Presentation Manual (2010 Edition).

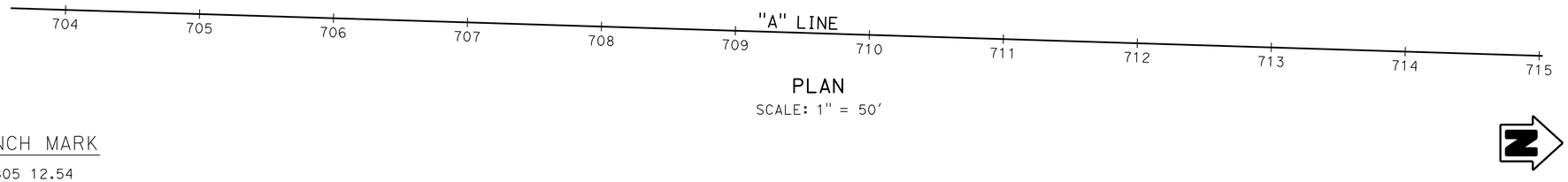

PLAN
SCALE: 1" = 50'

BENCH MARK

WP 805 12.54
PK Nail w/ Washer in AC Shld
105.68 ' Rt. "A" Line, Station 693+14.26
Elevation: 89.040'
N: 1838048.970 E: 6301405.280

Note: No ground water encountered during field investigation

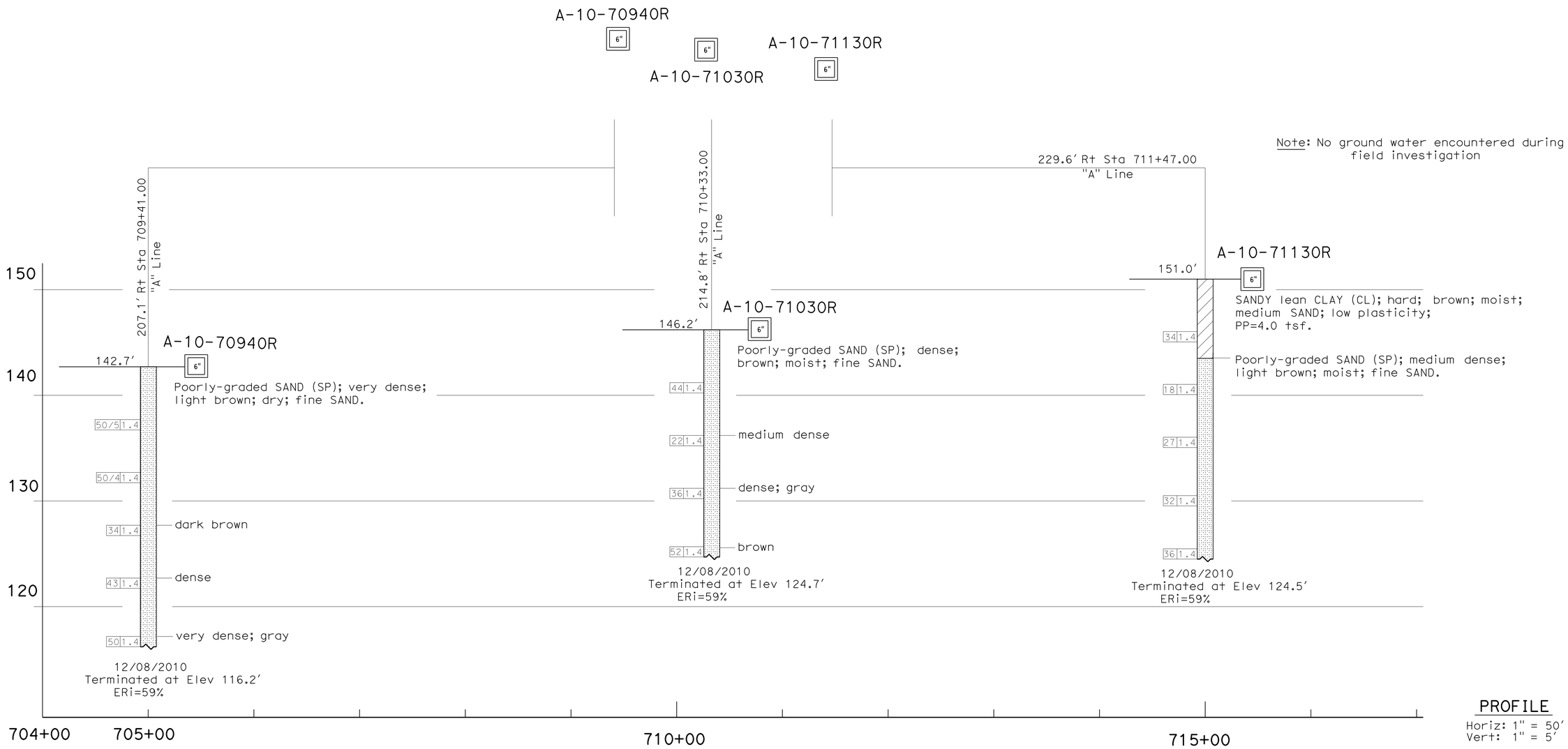

PROFILE
Horiz: 1" = 50'
Vert: 1" = 5'

ENGINEERING SERVICES	GEOTECHNICAL SERVICES	STATE OF CALIFORNIA DEPARTMENT OF TRANSPORTATION	DIVISION OF ENGINEERING SERVICES STRUCTURE DESIGN DESIGN BRANCH	BRIDGE NO. / POST MILES 5.8/13.0	SOUND WALL No. SW708R 1 OF 1 LOG OF TEST BORINGS SW9-6
FUNCTIONAL SUPERVISOR NAME: B. Hinman	DRAWN BY: K. Le CHECKED BY: Z. Yazdani FIELD INVESTIGATION BY: J. Tesar				

OGS CIVIL LOG OF TEST BORINGS SHEET

ORIGINAL SCALE IN INCHES FOR REDUCED PLANS 0 1 2 3

CU 3569
EA 1100020048

DISREGARD PRINTS BEARING EARLIER REVISION DATES

REVISION DATES | SHEET | OF

FILE => 1100020048ri006.dgn

USERNAME => s127400 DATE PLOTTED => 28-FEB-2013 TIME PLOTTED => 15:42

Dist	COUNTY	ROUTE	POST MILES TOTAL PROJECT	SHEET No.	TOTAL SHEETS
11	SD	805	5.8/13.0	170	216

REGISTERED CIVIL ENGINEER 02-14-13 DATE

02-25-13
PLANS APPROVAL DATE

REGISTERED PROFESSIONAL ENGINEER WILLIAM MICHAEL NICHOLS No. C74525 Exp. 12-31-13 CIVIL STATE OF CALIFORNIA

THE STATE OF CALIFORNIA OR ITS OFFICERS OR AGENTS SHALL NOT BE RESPONSIBLE FOR THE ACCURACY OR COMPLETENESS OF SCANNED COPIES OF THIS PLAN SHEET.

NOTE:

FOR ACCURATE RIGHT OF WAY DATA, CONTACT RIGHT OF WAY ENGINEERING AT THE DISTRICT OFFICE.

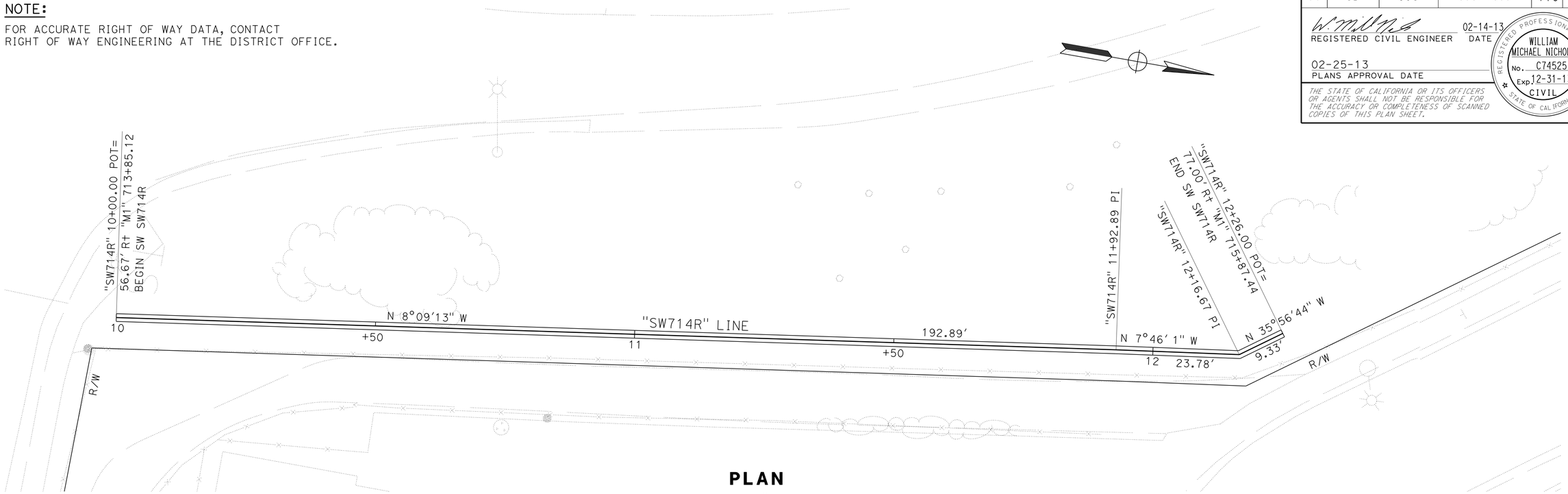

PLAN

SCALE: 1" = 10'

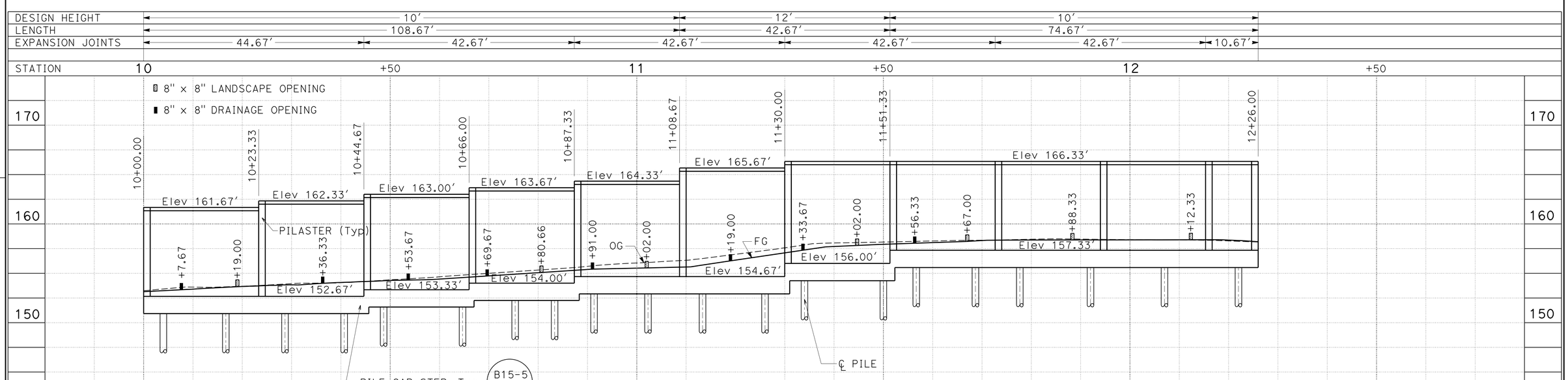

ELEVATION

SCALE: Horiz 1" = 10'
Vert 1" = 5'

APPROVED FOR SOUND WALL WORK ONLY

SOUND WALL PLAN

SOUND WALL SW714R - LOCATION 8

SCALE AS SHOWN **SW10-1**

REVISED BY	DATE REVISED
WILLIAM MICHAEL NICHOLS	MAY ALSHEIKH
CALCULATED-DESIGNED BY	CHECKED BY
FUNCTIONAL SUPERVISOR	HARWELL M. ONTOY

STATE OF CALIFORNIA - DEPARTMENT OF TRANSPORTATION

DESIGN

Caltrans

LAST REVISION 02-19-13 DATE PLOTTED => 28-FEB-2013 TIME PLOTTED => 15:42

Dist	COUNTY	ROUTE	POST MILES TOTAL PROJECT	SHEET No.	TOTAL SHEETS
11	SD	805	5.8/13.0	171	216

REGISTERED CIVIL ENGINEER 02-14-13 DATE

02-25-13
PLANS APPROVAL DATE

REGISTERED PROFESSIONAL ENGINEER
WILLIAM MICHAEL NICHOLS
No. C74525
Exp. 12-31-13
CIVIL
STATE OF CALIFORNIA

THE STATE OF CALIFORNIA OR ITS OFFICERS OR AGENTS SHALL NOT BE RESPONSIBLE FOR THE ACCURACY OR COMPLETENESS OF SCANNED COPIES OF THIS PLAN SHEET.

NOTES:

1. DRAINAGE OPENING TO BE PLACE IN CELLS WITHOUT VERTICAL REINFORCEMENT.
2. LANDSCAPE OPENING TO BE PLACE IN CELLS WITHOUT VERTICAL REINFORCEMENT. FOR ADDITIONAL INFORMATION SEE PLANTING PLANS

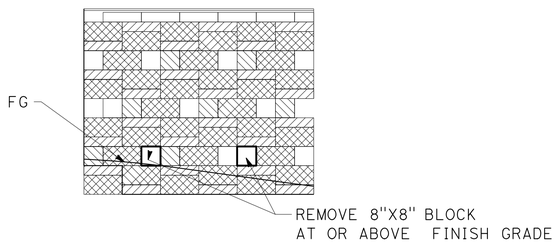

LANDSCAPE OPENING DETAIL

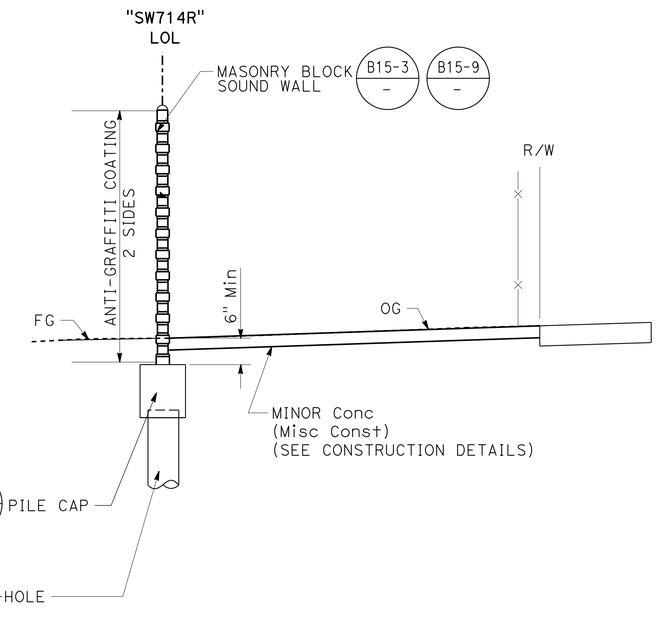

TYPICAL CROSS SECTION

PILE LOCATION

10+04.00	10+64.67	11+13.33	11+68.67
10+16.67	10+75.33	11+26.00	11+77.67
10+28.67	10+83.33	11+34.00	11+92.00
10+40.67	10+91.33	11+50.00	12+07.00
10+48.67	11+02.33	11+56.67	12+22.00

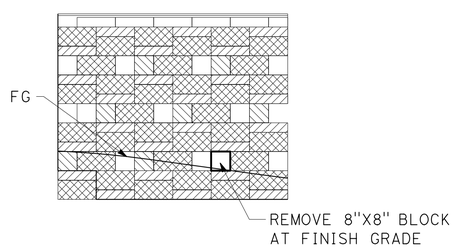

DRAINAGE OPENING DETAIL

GROUND LINE
CASE 1

SOUND WALL QUANTITIES (SW714R)

SOUND WALL (MASONRY BLOCK)	2,162 SQFT
STRUCTURAL CONCRETE (SOUND WALL)	23.0 CY
16" CIDH CONCRETE PILING (SOUND WALL)	171.0 LF
ANTI-GRAFFITI COATING	4,324 SQFT

APPROVED FOR SOUND WALL WORK ONLY

SOUND WALL TYPICAL SECTION

SOUND WALL SW714R - LOCATION 8

NO SCALE

SW10-2

STATE OF CALIFORNIA - DEPARTMENT OF TRANSPORTATION
Caltrans®
DESIGN

FUNCTIONAL SUPERVISOR: HARWELL M. ONTOY
CALCULATED-DESIGNED BY: WILLIAM MICHAEL NICHOLS
CHECKED BY: MAY ALSHEIKH
REVISED BY
DATE REVISED

LAST REVISION 02-19-13
DATE PLOTTED => 28-FEB-2013
TIME PLOTTED => 15:42

Dist	COUNTY	ROUTE	POST MILES TOTAL PROJECT	SHEET No.	TOTAL SHEETS
11	SD	805	5.8/13.0	172	216

REGISTERED CIVIL ENGINEER 02-14-13 DATE

02-25-13
PLANS APPROVAL DATE

REGISTERED PROFESSIONAL ENGINEER WILLIAM MICHAEL NICHOLS No. C74525 Exp. 12-31-13 CIVIL STATE OF CALIFORNIA

THE STATE OF CALIFORNIA OR ITS OFFICERS OR AGENTS SHALL NOT BE RESPONSIBLE FOR THE ACCURACY OR COMPLETENESS OF SCANNED COPIES OF THIS PLAN SHEET.

MASONRY BLOCK WALL NOTES:

1. CORE SIZE FOR 10" WIDE BLOCK SHALL MATCH THE CORE SIZE FOR 8" WIDE BLOCKS.
2. ALL PILASTERS SHALL BE PLUMB.
3. FOR DETAILS NOT SHOWN, SEE STANDARD PLAN, B15-3.
4. PROVIDE 16" X4" X 16" PILASTER BLOCK NEAR BOTTOM OF WALL AS REQUIRED FOR TOP OF PILASTER TO BE FLUSH WITH ADJACENT WALL.

MASONRY BLOCK LEGEND:

- BLOCK 'A': 10" x 8" x 8" SMOOTH FACE ALL EXPOSED SIDES. BLOCK WILL PROJECT 1" ON BOTH SIDES OF WALL.
- BLOCK 'B': 8" x 8" x 8" SPLIT FACE ALL EXPOSED SIDES.
- BLOCK 'C': 10" x 4" x 16" SPLIT FACE ALL EXPOSED SIDES. BLOCK WILL PROJECT 1" ON BOTH SIDES OF WALL.
- BLOCK 'D': 8" x 8" x 16" SPLIT FACE ALL EXPOSED SIDES.
- BLOCK 'E': 16" x 8" x 16" SPLIT FACE ALL EXPOSED SIDES EXCEPT WHERE FACE MEETS EXISTING WALL.
- BLOCK 'F': 10" x 4" x 16" SMOOTH FACE AT EXISTING WALL
  BLOCK 'F': 16" x 4" x 16" SMOOTH FACE AT PILASTER

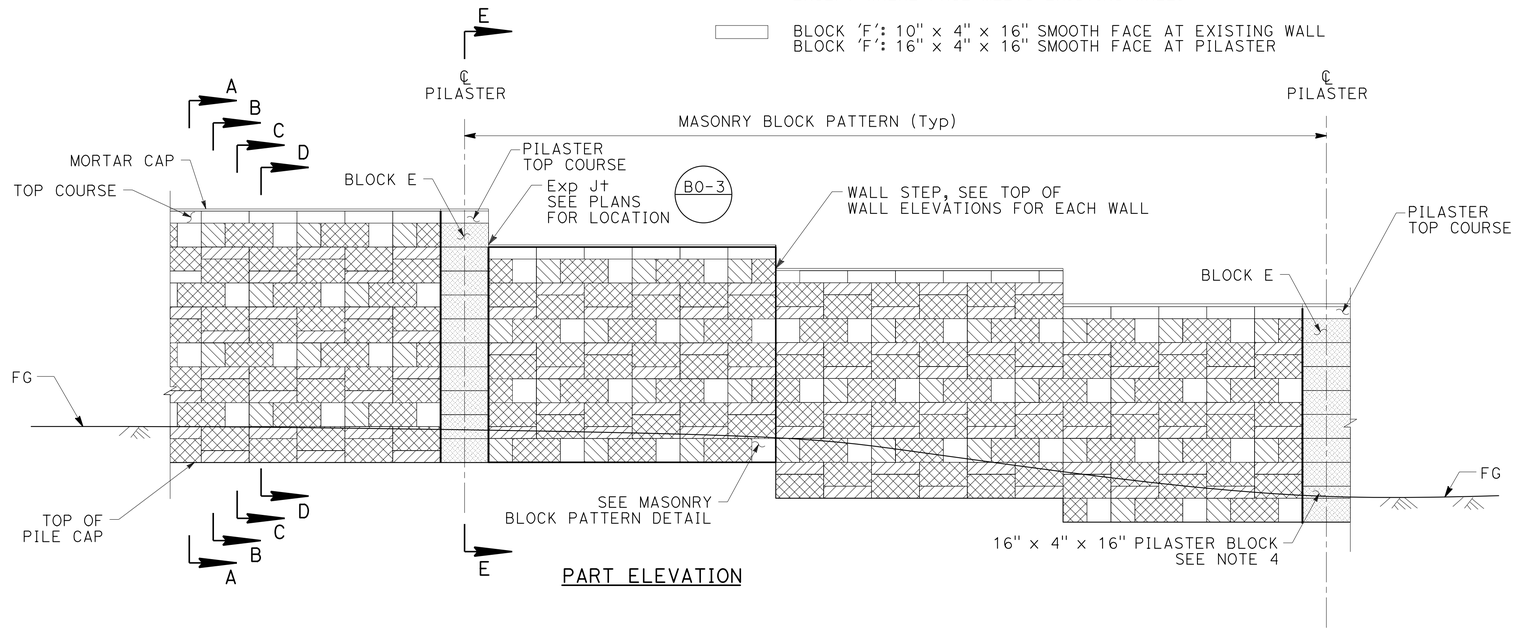

PART ELEVATION

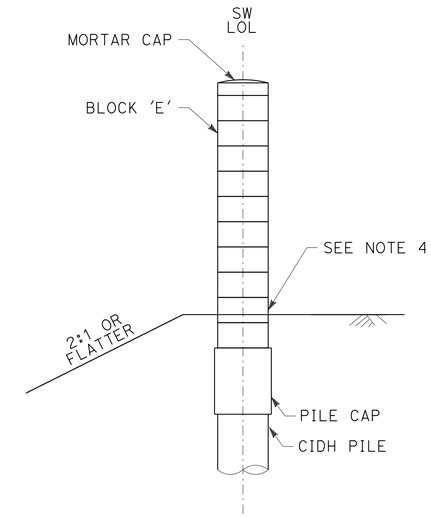

SECTION E-E

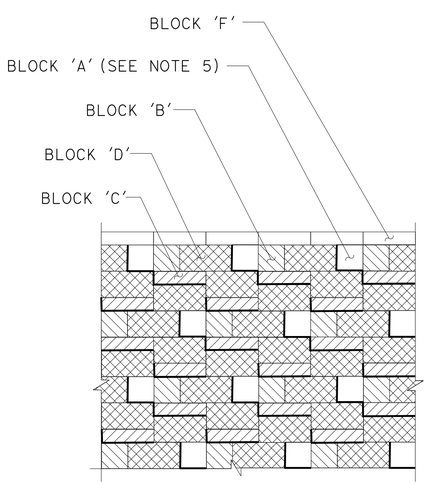

MASONRY BLOCK PATTERN

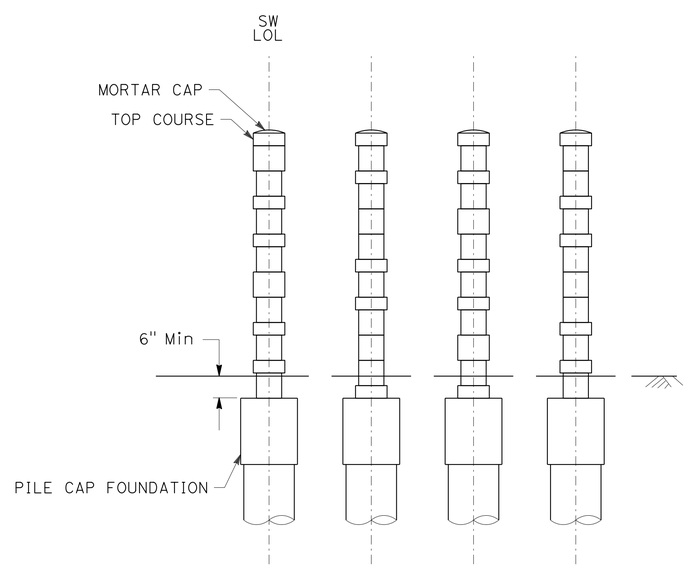

SECTIONS A-A, B-B, C-C, & D-D

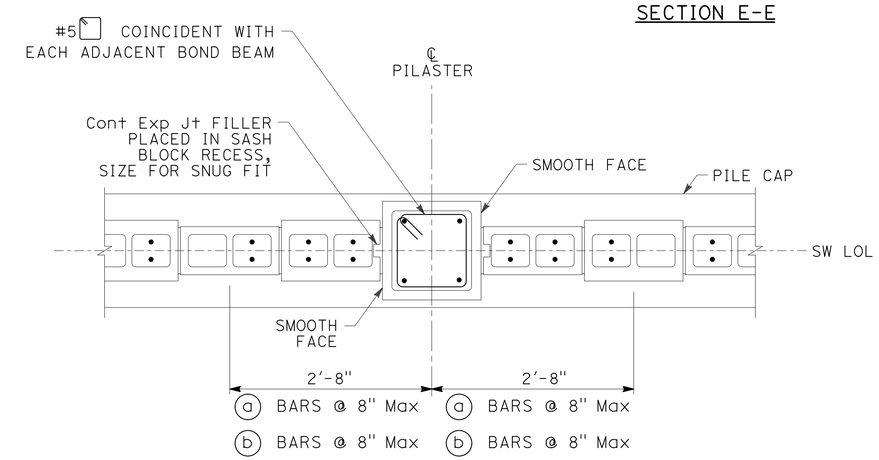

PILASTER DETAIL - SINGLE PILASTER

SOUND WALL DETAILS

SOUND WALL SW714R - LOCATION 8

NO SCALE

SW10-3

STATE OF CALIFORNIA - DEPARTMENT OF TRANSPORTATION
Caltrans® DESIGN
FUNCTIONAL SUPERVISOR: HARWELL M. ONTOY
CALCULATED-DESIGNED BY: MAY ALSHEIKH
CHECKED BY: WILLIAM MICHAEL NICHOLS
REVISED BY
DATE REVISED

LAST REVISION 02-19-13 | DATE PLOTTED => 28-FEB-2013 | TIME PLOTTED => 15:42

DIST	COUNTY	ROUTE	POST MILES TOTAL PROJECT	SHEET No	TOTAL SHEETS
11	SD	805	5.8/13.0	173	216

J. Tesar 02-15-13
CERTIFIED ENGINEERING GEOLOGIST DATE

02-25-13
PLANS APPROVAL DATE

REGISTERED GEOLOGIST
Jeff Tesar
No. 2137
Exp. 01-31-15
CERTIFIED ENGINEERING GEOLOGIST
STATE OF CALIFORNIA

The State of California or its officers or agents shall not be responsible for the accuracy or completeness of electronic copies of this plan sheet.

This LOTB sheet was prepared in accordance with the Caltrans Soil & Rock Logging, Classification, & Presentation Manual (2010 Edition).

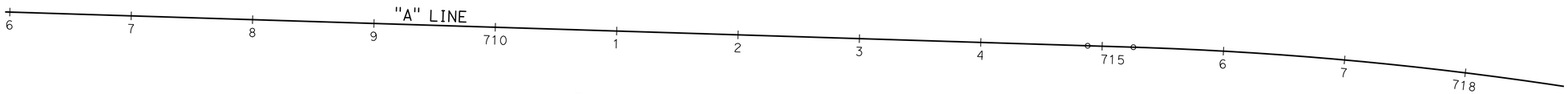

PLAN
SCALE: 1" = 50'

BENCH MARK

805-12.9
2-1/4" CADT Disk
Stamped "805-12.9 2006"
in PCC Gore paving Area
108' Lt. "SD805" Line, Station 712+08.13
Elevation: 108.41'
N: 1839423.460 E: 6300072.400

Note: No ground water encountered during field investigation

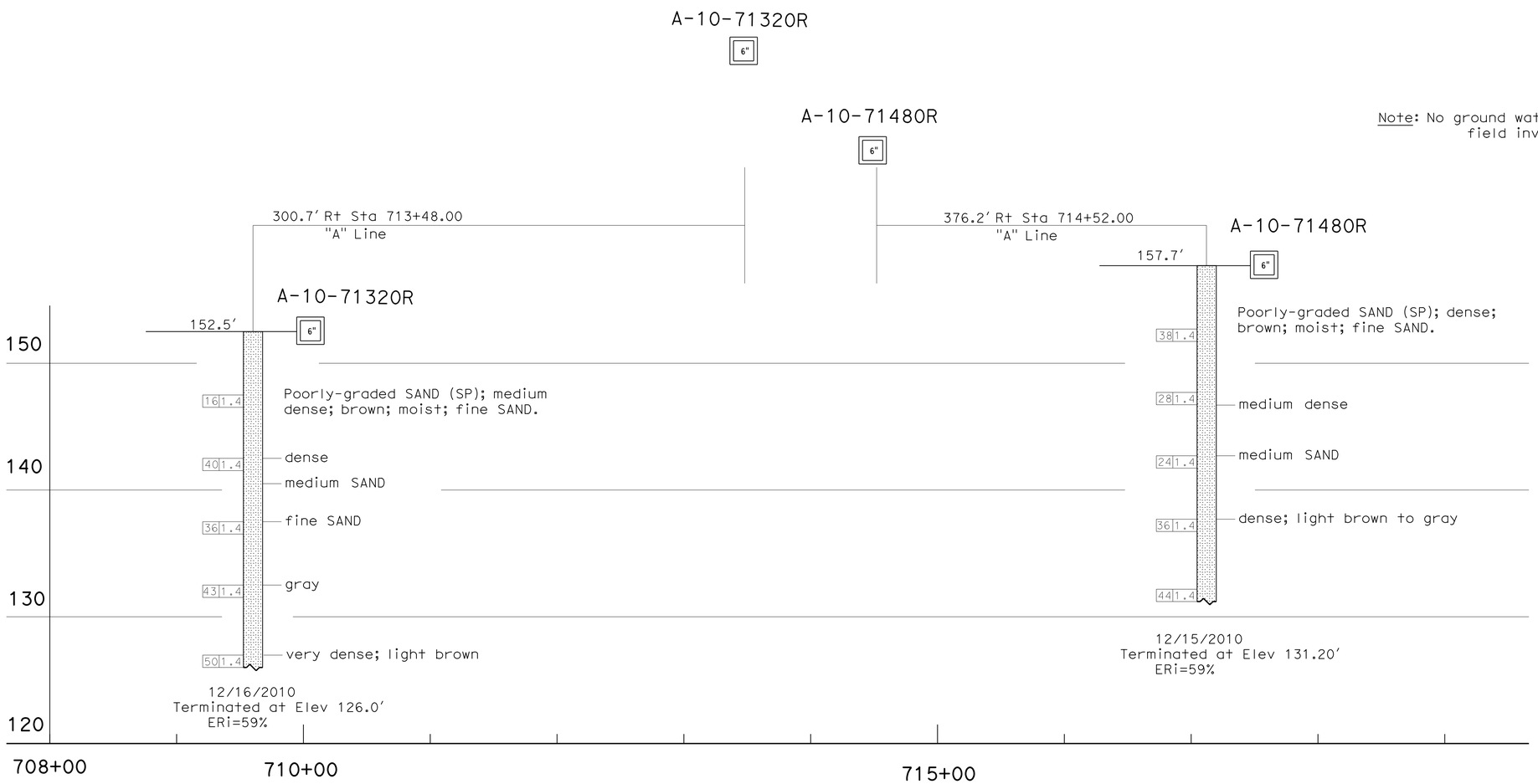

PROFILE
Horiz: 1" = 50'
Vert: 1" = 5'

ENGINEERING SERVICES		GEOTECHNICAL SERVICES	STATE OF CALIFORNIA DEPARTMENT OF TRANSPORTATION	DIVISION OF ENGINEERING SERVICES STRUCTURE DESIGN	BRIDGE NO.	SOUND WALL No. SW714R 1 OF 1
FUNCTIONAL SUPERVISOR	DRAWN BY: K. Le	FIELD INVESTIGATION BY:		DESIGN BRANCH	POST MILES 5.8/13.0	LOG OF TEST BORINGS SW10-4
NAME: B. Hinman	CHECKED BY: Z. Yazdani	J. Tesar				

OGS CIVIL LOG OF TEST BORINGS SHEET

ORIGINAL SCALE IN INCHES FOR REDUCED PLANS 0 1 2 3

CU 3569
EA 1100020048

DISREGARD PRINTS BEARING EARLIER REVISION DATES

REVISION DATES | SHEET | OF

FILE => 1100020048rj004.dgn

USERNAME => s127400 DATE PLOTTED => 28-FEB-2013 TIME PLOTTED => 15:42

Dist	COUNTY	ROUTE	POST MILES TOTAL PROJECT	SHEET No.	TOTAL SHEETS
11	SD	805	5.8/13.0	174	216

LICENSED LANDSCAPE ARCHITECT

02-25-13
PLANS APPROVAL DATE

LICENSED LANDSCAPE ARCHITECT — MARLENE J. GROS No. 2977 — STATE OF CALIFORNIA — REGISTERED PROFESSIONAL ENGINEER 09-19-13 — PLANNING DOCTOR 02-19-13 DATE

THE STATE OF CALIFORNIA OR ITS OFFICERS OR AGENTS SHALL NOT BE RESPONSIBLE FOR THE ACCURACY OR COMPLETENESS OF SCANNED COPIES OF THIS PLAN SHEET.

ABBREVIATIONS:

AMEND — amendment
B & B — balled and burlapped
Dia — diameter
EA — each
lb — pound
oz — ounce
ft — foot/feet
SQFT — square feet
SQYD — square yard
CF — cubic feet
CY — cubic yard
GERM — germination
Max — maximum
Min — minimum
NCN — no common name
No. — number
Pkt — packet
PLT ESTB — plant establishment
Pvmt — pavement
R/W — right of way
SF — state furnished

PLANT LIST AND PLANTING SPECIFICATIONS

PLANT GROUP	PLANT No.	SYMBOL	BOTANICAL NAME	COMMON NAME	SIZE	QUANTITY EACH	HOLE SIZE (INCH) Dia	HOLE SIZE (INCH) DEPTH	BASIN TYPE	IRON SULFATE ①	SOIL AMEND	FERTILIZER ① PLANTING	FERTILIZER ① PLT ESTB	BASIN MULCH (CY)	STAKING	PLANTING LIMITS MINIMUM DISTANCE (Ft) FROM ETW	PVMT	FENCE	WALL	PAVED DITCH	EARTH DITCH	ON CENTER (Ft)	REMARKS
A	1	◉	ACACIA REDOLENS 'DESERT CARPET'	PROSTRATE ACACIA	1 GAL	33	⑩	③	II	4 oz	-	1 Pkt	8 oz	0.06	-	-	6	6	6	6	8	⑦	SHRUB
A	2		SEDUM DENDROIDEUM	BUSH SEDUM	1 GAL	162	⑩	③	II	4 oz	-	1 Pkt	8 oz	②	-	-	6	6	6	6	8	3	GROUND COVER
B	3	○	CRASSULA ARGENTEA	JADE PLANT	5 GAL	149	⑩	③	④	-	-	3 Pkt	8 oz	②	-	-	8	8	2	8	8	5	SHRUB
B	4	●	PARTHENOCISSUS TRICUSPIDATA	BOSTON IVY	5 GAL	548	⑩	③	④	4 oz	-	3 Pkt	8 oz	②	④⑪	-	6	6	2	6	8	12 ⑧	VINE ⑨
B	5	◎	XYLOSMA CONGESTUM	GLOSSY XYLOSMA	5 GAL	108	⑩	③	II	4 oz	-	3 Pkt	8 oz	0.06 ②	-	-	8	8	2	8	8	⑦	SHRUB
H	6		CARPOBROTUS EDULIS	HOTTENTOT FIG	CUTTINGS	74,445	-	-	-	8 LB/ 1,000 SQFT	-	8 LB/ 1,000 SQFT	4 LB/ 1,000 SQFT	-	-	-	6	6	6	6	8	1	GROUND COVER

APPLICABLE WHEN CIRCLED:

① - QUANTITIES SHOWN ARE "PER PLANT" UNLESS SHOWN AS SQFT OR SQYD APPLICATION RATES
② - BASIN MULCH IS INCLUDED WITH MULCH QUANTITIES SHOWN ON PLANTING PLAN WHEN SHOWN WITHIN MULCHED AREAS.
③ - SUFFICIENT TO RECEIVE ROOT BALL AND AMENDMENTS IF REQUIRED
④ - SEE DETAIL
5 - SEE SPECIAL PROVISIONS
6 - SEE STANDARD SPECIFICATIONS
⑦ - AS SHOWN ON PLANS
⑧ - VINES SPACING AT SOUND WALL LANDSCAPE OPENINGS WILL BE 6' OR LESS FROM THE NEXT VINE.
⑨ - DO NOT PLANT VINES BETWEEN PILASTERS AT SOUND WALL ACCESS GATE LOCATIONS
⑩ - TWICE THE SIZE OF THE ROOTBALL
⑪ - SEE STANDARD DETAIL

NOTE:

UNDERLINED PORTIONS OF BOTANICAL NAME INDICATE ABBREVIATIONS USED ON PLANTING PLANS.

EROSION CONTROL SUMMARY OF QUANTITIES

SHEET	EROSION CONTROL (BONDED FIBER MATRIX)
	SQFT
PP-2	45,110
TOTAL	45,110

LEGEND:

- WEED GERMINATION (EROSION CONTROL)
- WEED GERMINATION (GROUND COVER)
- CULTIVATE
- LANDSCAPE PROTECTION AREA
- MULCH
- PRUNE Exist PLANTS (TREE)
- Exist TREE TO REMAIN
- REMOVE GROUND COVER
- REMOVE PALM
- REMOVE TREE

SEED

BOTANICAL NAME (COMMON NAME)	PERCENT GERMINATION (MINIMUM)	POUNDS PURE LIVE SEED PER ACRE (SLOPE MEASUREMENT)
ESCHSCHOLZIA CALIFORNICA [1] (CALIFORNIA POPPY)	40	2
ENCELIA CALIFORNICA [1] (BUSH SUNFLOWER)	30	2
ERIOGONUM FASCICULATUM [1] (CALIFORNIA BUCKWHEAT)	10	3
HELIOTROPIUM CURASSAVICUM [1] (SALT HELIOTROPE)	30	0.5
LASTHENIA CALIFORNICA [1] (GOLDFIELDS)	35	2
NASSELLA PULCHRA [1] (PURPLE NEEDLEGRASS)	40	4
	TOTAL	13.5

[1] SEED SOURCES FROM SOUTHERN CALIFORNIA ONLY.

EROSION CONTROL LEGEND

SYMBOL	SEQUENCE	ITEM	MATERIAL DESCRIPTION	TYPE	APPLICATION RATE	REMARKS
	STEP 1	CULTIVATE	SEE PLANTING PLANS			
	STEP 2	IRRIGATION	SEE IRRIGATION PLANS			
	STEP 3	WEED GERMINATION	SEE PLANTING PLANS			
	STEP 4	FIBER ROLL	SEE EROSION CONTROL PLANS			
	STEP 5	BONDED FIBER MATRIX	FIBER	WOOD	1,200 LB/ACRE	APPLICATION RATE IS FOR FIBER AND TACTIFIER COMBINED
			TACKIFIER	BFM		
	STEP 6	BONDED FIBER MATRIX	FIBER	WOOD		
			TACKIFIER	BFM	600 LB/ACRE	
			SEED		13.5 LB/ACRE	

PLANT LIST
PL-1

REVISED BY | DATE REVISED
MARLENE GROS | JASON GROS
CALCULATED-DESIGNED BY | CHECKED BY
SENIOR LANDSCAPE ARCHITECT | STEPHEN ALVAREZ

STATE OF CALIFORNIA - DEPARTMENT OF TRANSPORTATION
Caltrans® LANDSCAPE ARCHITECTURE

LAST REVISION 02-19-13 | DATE PLOTTED => 01-MAR-2013 | TIME PLOTTED => 13:37

Dist	COUNTY	ROUTE	POST MILES TOTAL PROJECT	SHEET No.	TOTAL SHEETS
11	SD	805	5.8/13.0	175	216

LICENSED LANDSCAPE ARCHITECT

02-25-13
PLANS APPROVAL DATE

MARLENE J. GROS No. 2917 LICENSED LANDSCAPE ARCHITECT STATE OF CALIFORNIA
SIGNED 09-19-13
APPROVED 02-19-13
DATE

THE STATE OF CALIFORNIA OR ITS OFFICERS OR AGENTS SHALL NOT BE RESPONSIBLE FOR THE ACCURACY OR COMPLETENESS OF SCANNED COPIES OF THIS PLAN SHEET.

NOTE:

FOR ACCURATE RIGHT OF WAY AND ACCESS DATA,
CONTACT RIGHT OF WAY ENGINEERING AT THE DISTRICT OFFICE.

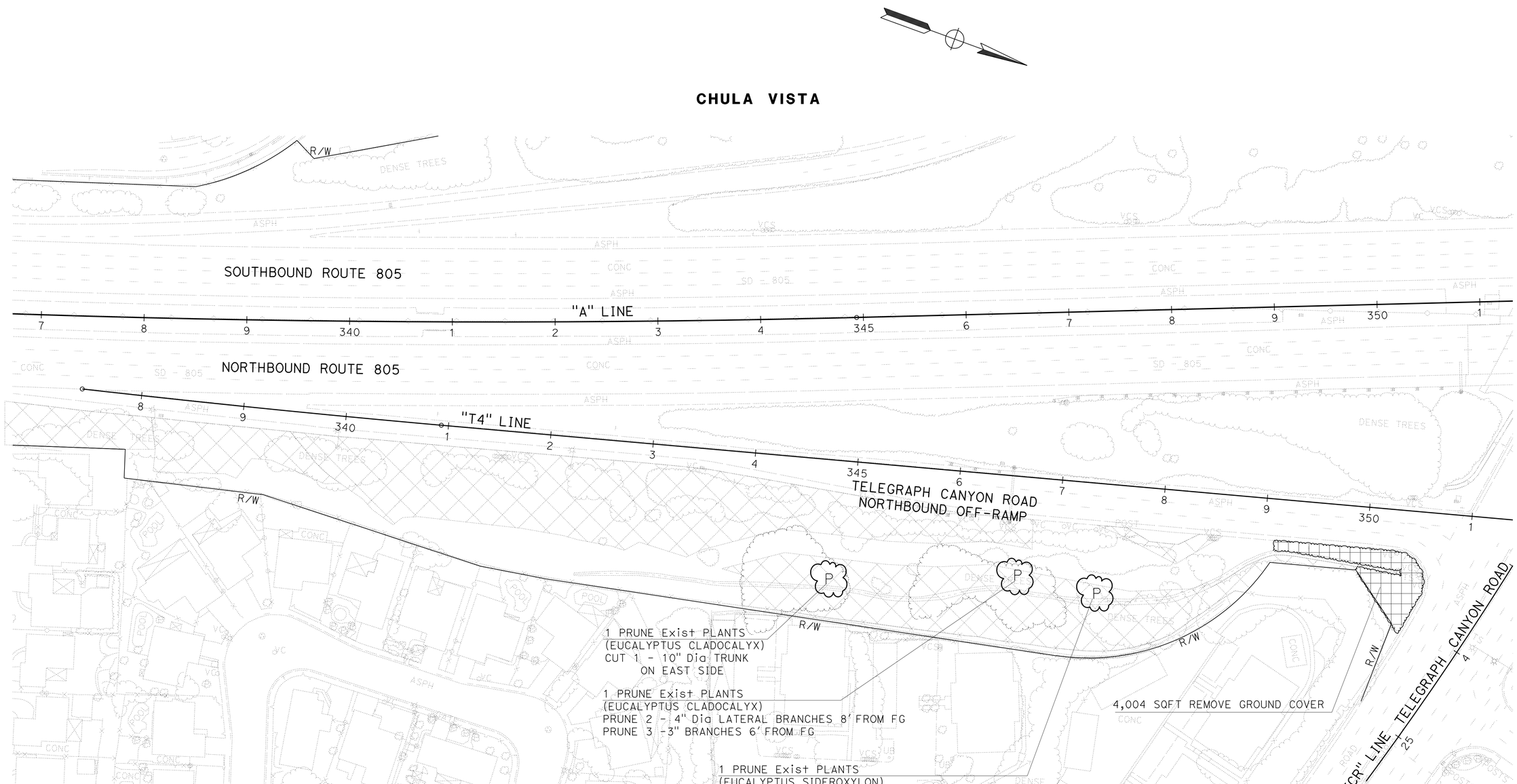

APPROVED FOR PLANT REMOVAL WORK ONLY

PLANT REMOVAL PLAN

SCALE 1" = 50'

PR-1

STATE OF CALIFORNIA - DEPARTMENT OF TRANSPORTATION
Caltrans® LANDSCAPE ARCHITECTURE

SENIOR LANDSCAPE ARCHITECT: STEPHEN ALVAREZ

CALCULATED-DESIGNED BY: JASON GROS
CHECKED BY: MARLENE GROS

REVISED BY
DATE REVISED

LAST REVISION 02-19-13
DATE PLOTTED => 28-FEB-2013
TIME PLOTTED => 15:42

Dist	COUNTY	ROUTE	POST MILES TOTAL PROJECT	SHEET No.	TOTAL SHEETS
11	SD	805	5.8/13.0	176	216

LICENSED LANDSCAPE ARCHITECT

02-25-13
PLANS APPROVAL DATE

LICENSED LANDSCAPE ARCHITECT MARLENE J. GROS No. 2917 STATE OF CALIFORNIA
09-19-13 EXPIRATION DATE
02-19-13 Date

THE STATE OF CALIFORNIA OR ITS OFFICERS OR AGENTS SHALL NOT BE RESPONSIBLE FOR THE ACCURACY OR COMPLETENESS OF SCANNED COPIES OF THIS PLAN SHEET.

NOTES:

1. FOR ACCURATE RIGHT OF WAY AND ACCESS DATA, CONTACT RIGHT OF WAY ENGINEERING AT THE DISTRICT OFFICE.

APPROVED FOR PLANT REMOVAL WORK ONLY

THIS PLAN ACCURATE FOR PLANTING WORK ONLY.

PLANT REMOVAL PLAN

SCALE 1" = 50'

PR-2

STATE OF CALIFORNIA - DEPARTMENT OF TRANSPORTATION
Caltrans® LANDSCAPE ARCHITECTURE

SENIOR LANDSCAPE ARCHITECT: STEPHEN ALVAREZ
CALCULATED-DESIGNED BY: JASON GROS
CHECKED BY: MARLENE GROS
REVISED BY
DATE REVISED

LAST REVISION 02-19-13
DATE PLOTTED => 28-FEB-2013
TIME PLOTTED => 15:42

Dist	COUNTY	ROUTE	POST MILES TOTAL PROJECT	SHEET No.	TOTAL SHEETS
11	SD	805	5.8/13.0	177	216

LICENSED LANDSCAPE ARCHITECT

02-25-13
PLANS APPROVAL DATE

MARLENE J. GROS No. 2917 LICENSED LANDSCAPE ARCHITECT STATE OF CALIFORNIA
PROJECT DATE 09-19-13
APPROVED DATE 02-19-13
DATE

THE STATE OF CALIFORNIA OR ITS OFFICERS OR AGENTS SHALL NOT BE RESPONSIBLE FOR THE ACCURACY OR COMPLETENESS OF SCANNED COPIES OF THIS PLAN SHEET.

NOTES:

1. FOR ACCURATE RIGHT OF WAY AND ACCESS DATA, CONTACT RIGHT OF WAY ENGINEERING AT THE DISTRICT OFFICE.

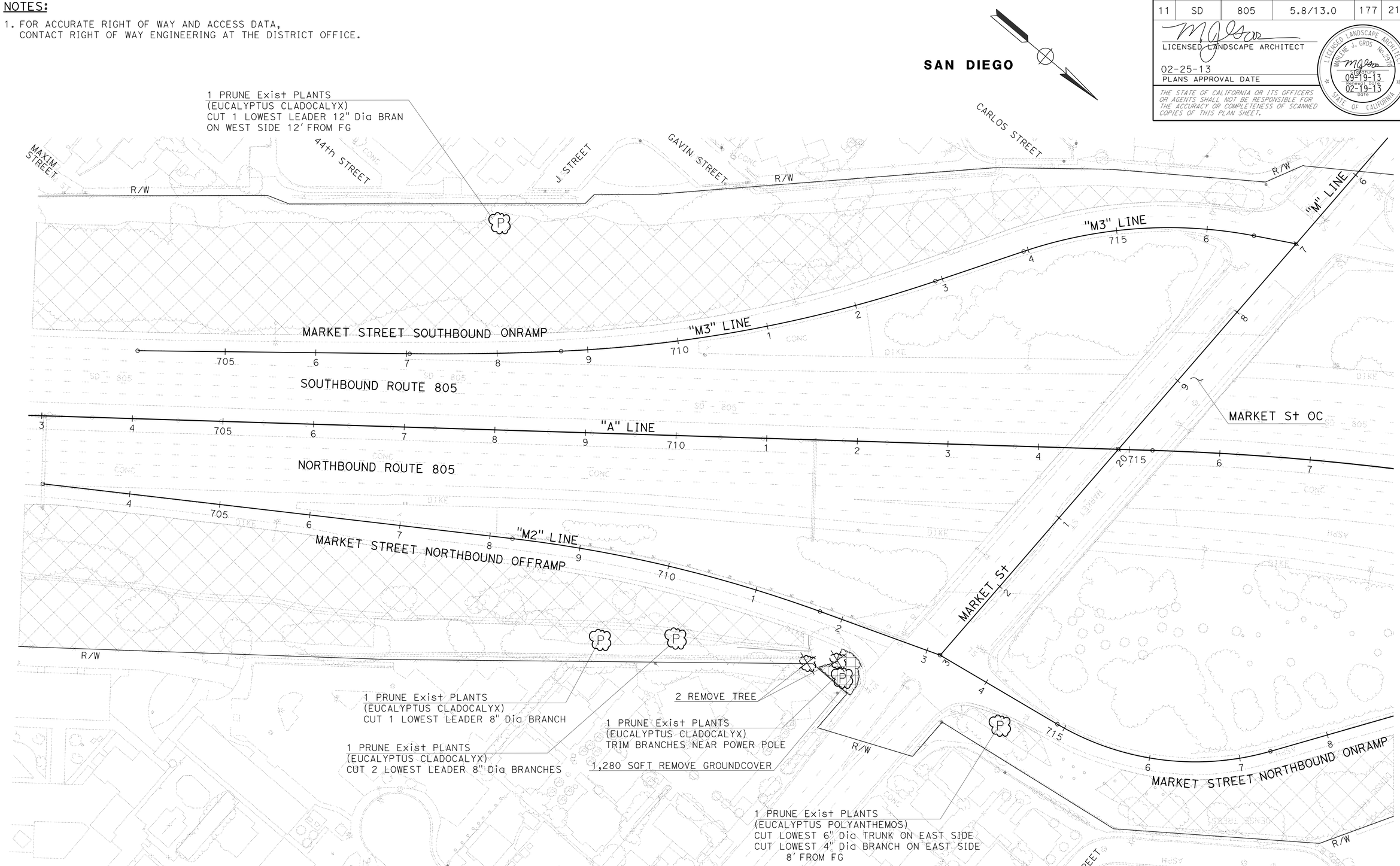

APPROVED FOR PLANT REMOVAL WORK ONLY

PLANT REMOVAL PLAN

SCALE 1" = 50'

PR-3

STATE OF CALIFORNIA - DEPARTMENT OF TRANSPORTATION
Caltrans® LANDSCAPE ARCHITECTURE

SENIOR LANDSCAPE ARCHITECT: STEPHEN ALVAREZ
CALCULATED-DESIGNED BY: JASON GROS
CHECKED BY: MARLENE GROS
REVISED BY
DATE REVISED

LAST REVISION 02-19-13
DATE PLOTTED => 28-FEB-2013
TIME PLOTTED => 15:42

Dist	COUNTY	ROUTE	POST MILES TOTAL PROJECT	SHEET No.	TOTAL SHEETS
11	SD	805	5.8/13.0	178	216

LICENSED LANDSCAPE ARCHITECT

02-25-13
PLANS APPROVAL DATE

LICENSED LANDSCAPE ARCHITECT
MARLENE J. GROS No. 2917
09-19-13 EXPIRATION DATE
02-19-13 Date
STATE OF CALIFORNIA

THE STATE OF CALIFORNIA OR ITS OFFICERS OR AGENTS SHALL NOT BE RESPONSIBLE FOR THE ACCURACY OR COMPLETENESS OF SCANNED COPIES OF THIS PLAN SHEET.

NOTES:

1. FOR ACCURATE RIGHT OF WAY DATA, CONTACT RIGHT OF WAY ENGINEERING AT THE DISTRICT OFFICE.
2. FOR SOUND WALL DETAILS, SEE ROADWAY PLANS.

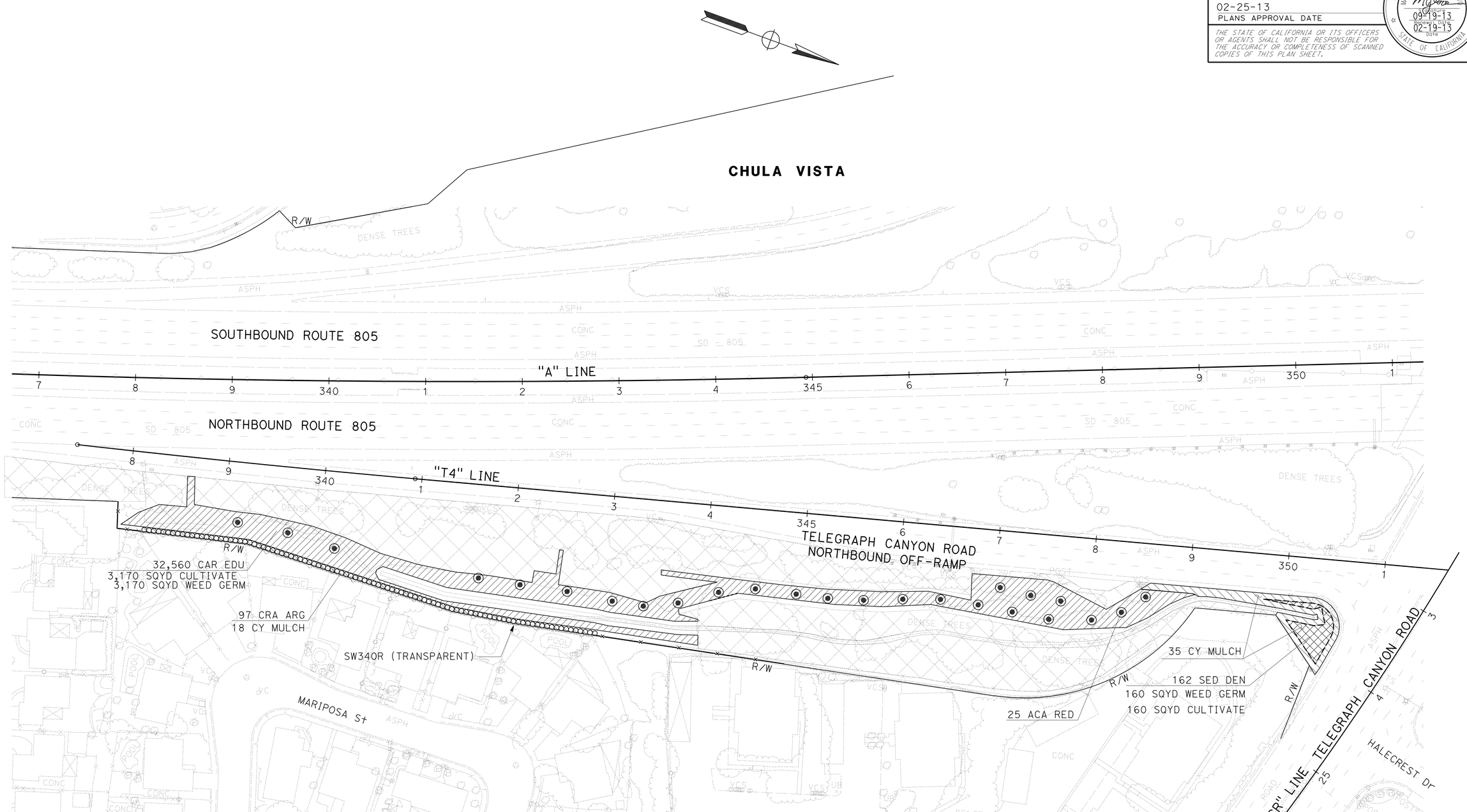

PLANTING PLAN

SCALE: 1" = 50'

PP-1

APPROVED FOR PLANTING WORK ONLY

STATE OF CALIFORNIA - DEPARTMENT OF TRANSPORTATION
Caltrans® LANDSCAPE ARCHITECTURE

SENIOR LANDSCAPE ARCHITECT: STEPHEN ALVAREZ
CALCULATED-DESIGNED BY: MARLENE GROS
CHECKED BY: JASON GROS
REVISED BY
DATE REVISED

LAST REVISION 02-19-13
DATE PLOTTED => 28-FEB-2013
TIME PLOTTED => 15:42

Dist	COUNTY	ROUTE	POST MILES TOTAL PROJECT	SHEET No.	TOTAL SHEETS
11	SD	805	5.8/13.0	179	216

LICENSED LANDSCAPE ARCHITECT

02-25-13
PLANS APPROVAL DATE

LICENSED LANDSCAPE ARCHITECT
MARLENE J. GROS No. 2817
09-19-13
EXPIRATION DATE
02-19-13
DATE
STATE OF CALIFORNIA

THE STATE OF CALIFORNIA OR ITS OFFICERS OR AGENTS SHALL NOT BE RESPONSIBLE FOR THE ACCURACY OR COMPLETENESS OF SCANNED COPIES OF THIS PLAN SHEET.

NOTES:

1. FOR ACCURATE RIGHT OF WAY DATA, CONTACT RIGHT OF WAY ENGINEERING AT THE DISTRICT OFFICE.
2. FOR SOUND WALL DETAILS, SEE ROADWAY PLANS.

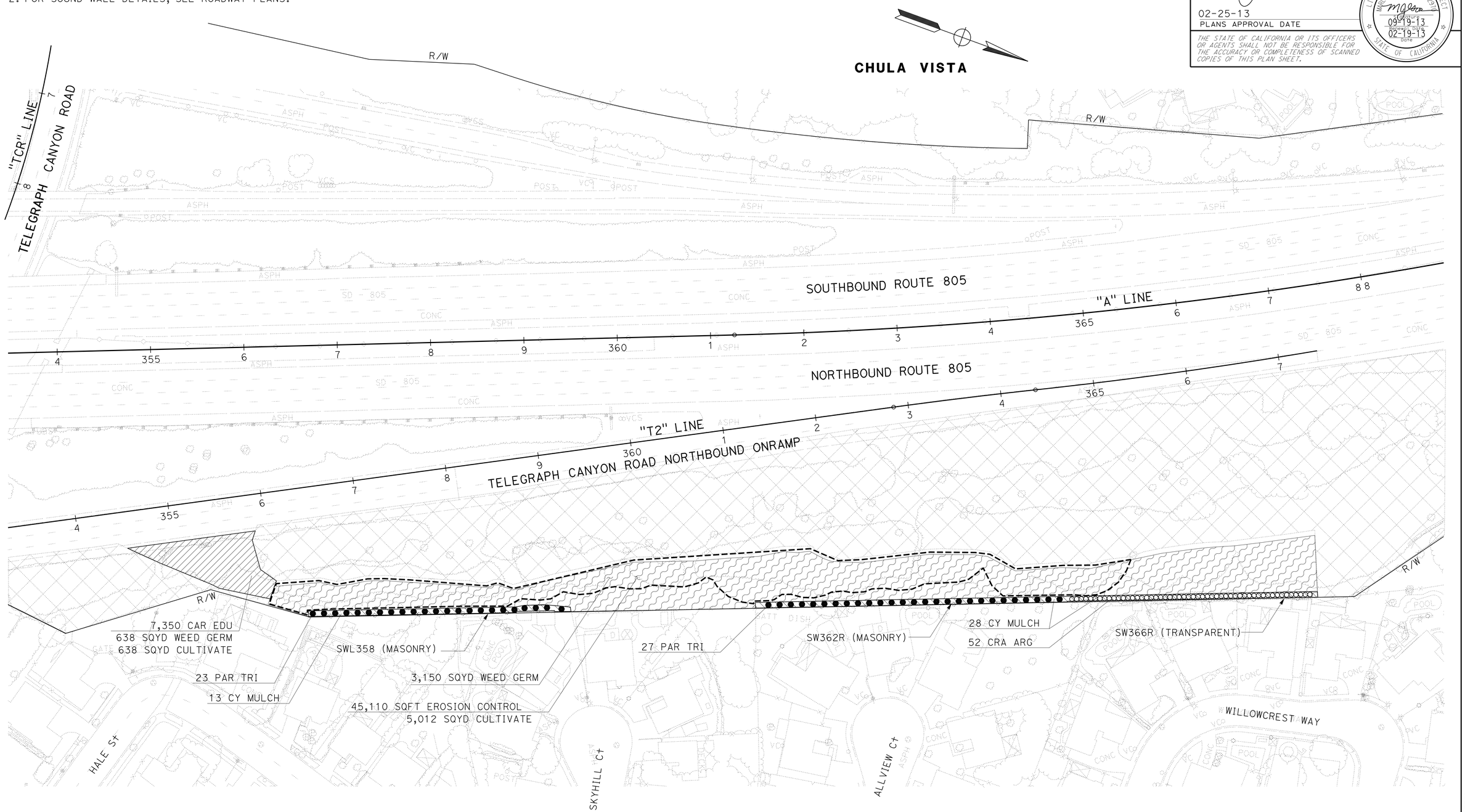

APPROVED FOR PLANTING WORK ONLY

PLANTING PLAN

SCALE: 1" = 50'

PP-2

STATE OF CALIFORNIA - DEPARTMENT OF TRANSPORTATION
Caltrans® LANDSCAPE ARCHITECTURE

SENIOR LANDSCAPE ARCHITECT: STEPHEN ALVAREZ
CALCULATED-DESIGNED BY: MARLENE GROS
CHECKED BY: JASON GROS
REVISED BY
DATE REVISED

LAST REVISION 02-19-13
DATE PLOTTED => 28-FEB-2013
TIME PLOTTED => 15:42

Dist	COUNTY	ROUTE	POST MILES TOTAL PROJECT	SHEET No.	TOTAL SHEETS
11	SD	805	5.8/13.0	180	216

LICENSED LANDSCAPE ARCHITECT

02-25-13
PLANS APPROVAL DATE

LICENSED LANDSCAPE ARCHITECT
MARLENE J. GROS No. 2917
09-19-13
EXPIRATION DATE
02-19-13
Date
STATE OF CALIFORNIA

THE STATE OF CALIFORNIA OR ITS OFFICERS OR AGENTS SHALL NOT BE RESPONSIBLE FOR THE ACCURACY OR COMPLETENESS OF SCANNED COPIES OF THIS PLAN SHEET.

NOTES:

1. FOR ACCURATE RIGHT OF WAY DATA, CONTACT RIGHT OF WAY ENGINEERING AT THE DISTRICT OFFICE.
2. FOR SOUND WALL DETAILS, SEE ROADWAY PLANS.

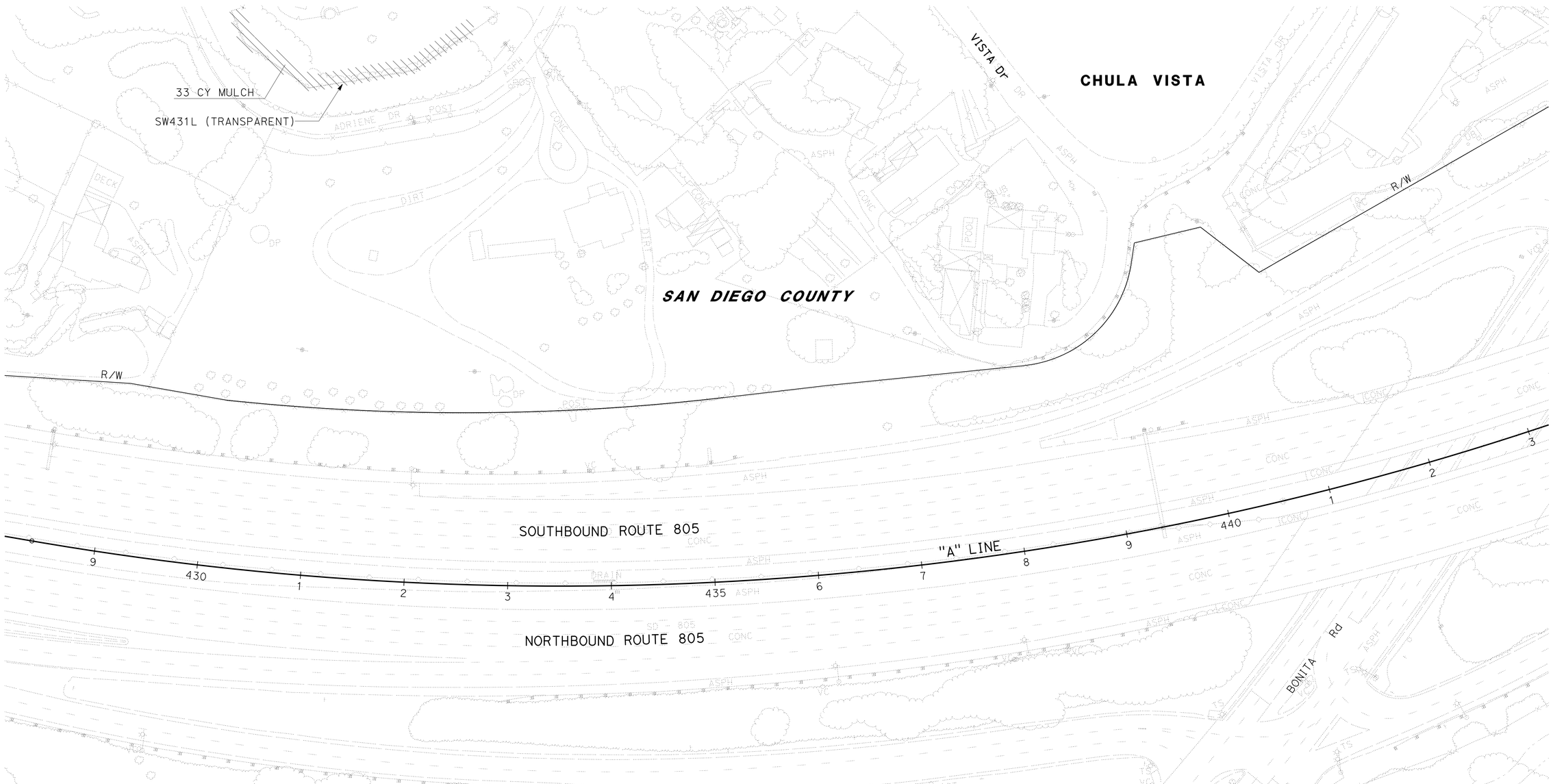

APPROVED FOR PLANTING WORK ONLY

PLANTING PLAN

SCALE: 1" = 50'

PP-3

STATE OF CALIFORNIA - DEPARTMENT OF TRANSPORTATION
Caltrans® LANDSCAPE ARCHITECTURE

SENIOR LANDSCAPE ARCHITECT: STEPHEN ALVAREZ
CALCULATED-DESIGNED BY: MARLENE GROS
CHECKED BY: JASON GROS
REVISED BY
DATE REVISED

LAST REVISION 02-19-13
DATE PLOTTED => 28-FEB-2013
TIME PLOTTED => 15:43

Dist	COUNTY	ROUTE	POST MILES TOTAL PROJECT	SHEET No.	TOTAL SHEETS
11	SD	805	5.8/13.0	181	216

LICENSED LANDSCAPE ARCHITECT

02-25-13
PLANS APPROVAL DATE

LICENSED LANDSCAPE ARCHITECT
MARLENE J. GROS No. 2917
09-19-13
PROFESSIONAL ENGINEER DATE
02-19-13
DATE
STATE OF CALIFORNIA

THE STATE OF CALIFORNIA OR ITS OFFICERS OR AGENTS SHALL NOT BE RESPONSIBLE FOR THE ACCURACY OR COMPLETENESS OF SCANNED COPIES OF THIS PLAN SHEET.

NOTES:

1. FOR ACCURATE RIGHT OF WAY DATA, CONTACT RIGHT OF WAY ENGINEERING AT THE DISTRICT OFFICE.
2. FOR LANDSCAPE OPENING LOCATIONS AT SOUND WALLS, SEE ROADWAY PLANS.
3. INSERT TOP OF VINE THROUGH GROW HOLE IN SOUND WALL TO THE WEST FACING SIDE OF WALL. SEE LANDSCAPE DETAILS.

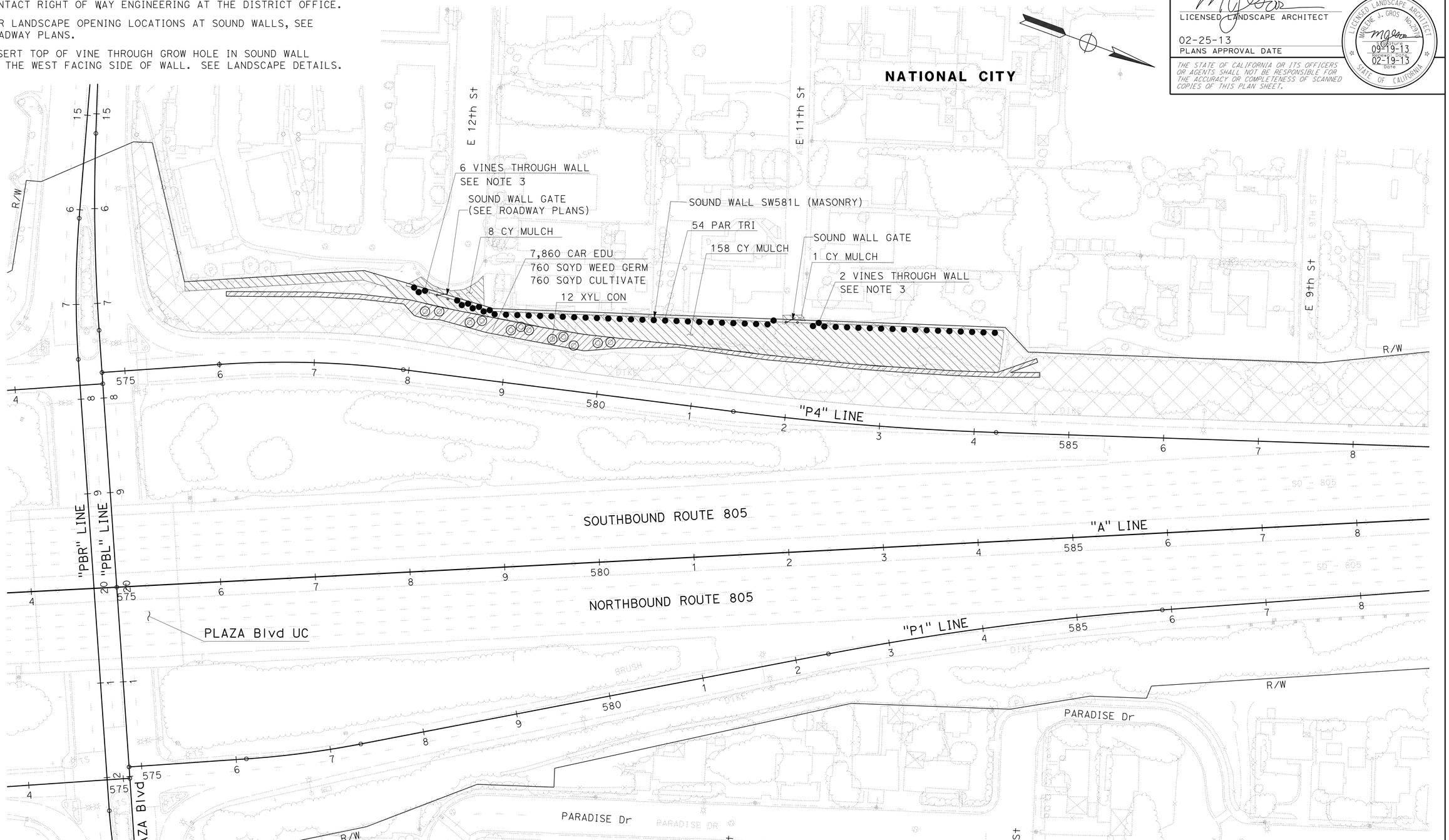

THIS PLAN ACCURATE FOR PLANTING WORK ONLY.

APPROVED FOR PLANTING WORK ONLY

PLANTING PLAN

SCALE: 1" = 50'

PP-4

STATE OF CALIFORNIA - DEPARTMENT OF TRANSPORTATION
LANDSCAPE ARCHITECTURE

SENIOR LANDSCAPE ARCHITECT: STEPHEN ALVAREZ

CALCULATED-DESIGNED BY: MARLENE GROS
CHECKED BY: JASON GROS

REVISED BY
DATE REVISED

LAST REVISION 02-19-13
DATE PLOTTED => 28-FEB-2013
TIME PLOTTED => 15:43

Dist	COUNTY	ROUTE	POST MILES TOTAL PROJECT	SHEET No.	TOTAL SHEETS
11	SD	805	5.8/13.0	182	216

LICENSED LANDSCAPE ARCHITECT

02-25-13
PLANS APPROVAL DATE

LICENSED LANDSCAPE ARCHITECT MARLENE J. GROS No. 2917 STATE OF CALIFORNIA
09-19-13 Expiration Date
02-19-13 Date

THE STATE OF CALIFORNIA OR ITS OFFICERS OR AGENTS SHALL NOT BE RESPONSIBLE FOR THE ACCURACY OR COMPLETENESS OF SCANNED COPIES OF THIS PLAN SHEET.

NOTES:

1. FOR ACCURATE RIGHT OF WAY AND ACCESS DATA, CONTACT RIGHT OF WAY ENGINEERING AT THE DISTRICT OFFICE.
2. FOR LANDSCAPE OPENING LOCATIONS AT SOUND WALLS, SEE ROADWAY PLANS.
3. INSERT TOP OF VINE THROUGH GROW HOLE IN SOUND WALL TO THE EAST FACING SIDE OF WALL. SEE LANDSCAPE DETAILS.

SAN DIEGO

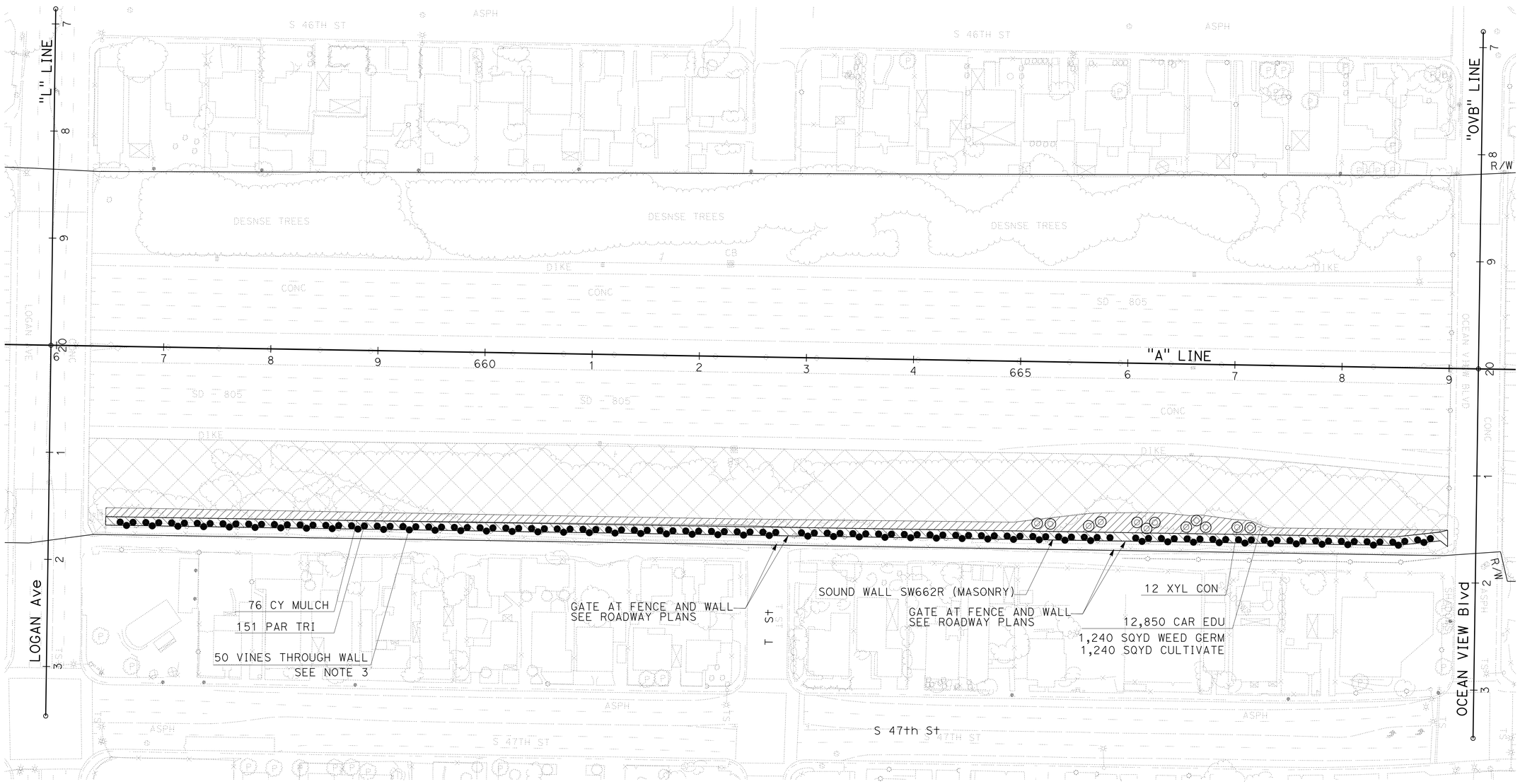

PLANTING PLAN

APPROVED FOR PLANTING WORK ONLY

SCALE: 1" = 50'

PP-5

STATE OF CALIFORNIA - DEPARTMENT OF TRANSPORTATION
Caltrans® LANDSCAPE ARCHITECTURE

SENIOR LANDSCAPE ARCHITECT: STEPHEN ALVAREZ
CALCULATED-DESIGNED BY: MARLENE GROS
CHECKED BY: JASON GROS
REVISED BY
DATE REVISED

LAST REVISION 02-19-13
DATE PLOTTED => 28-FEB-2013
TIME PLOTTED => 15:43

Dist	COUNTY	ROUTE	POST MILES TOTAL PROJECT	SHEET No.	TOTAL SHEETS
11	SD	805	5.8/13.0	183	216

LICENSED LANDSCAPE ARCHITECT

02-25-13
PLANS APPROVAL DATE

MARLENE J. GROS No. 2917 LICENSED LANDSCAPE ARCHITECT STATE OF CALIFORNIA
09-19-13 Expiration Date
02-19-13 Date

THE STATE OF CALIFORNIA OR ITS OFFICERS OR AGENTS SHALL NOT BE RESPONSIBLE FOR THE ACCURACY OR COMPLETENESS OF SCANNED COPIES OF THIS PLAN SHEET.

NOTES:

1. FOR ACCURATE RIGHT OF WAY AND ACCESS DATA, CONTACT RIGHT OF WAY ENGINEERING AT THE DISTRICT OFFICE.
2. FOR LANDSCAPE OPENING LOCATION IN SOUND WALL, SEE ROADWAY PLANS.
3. INSERT TOP OF VINE THROUGH GROW HOLE TO THE RIGHT-OF-WAY FACING SIDE OF WALL. SEE LANDSCAPE DETAILS.

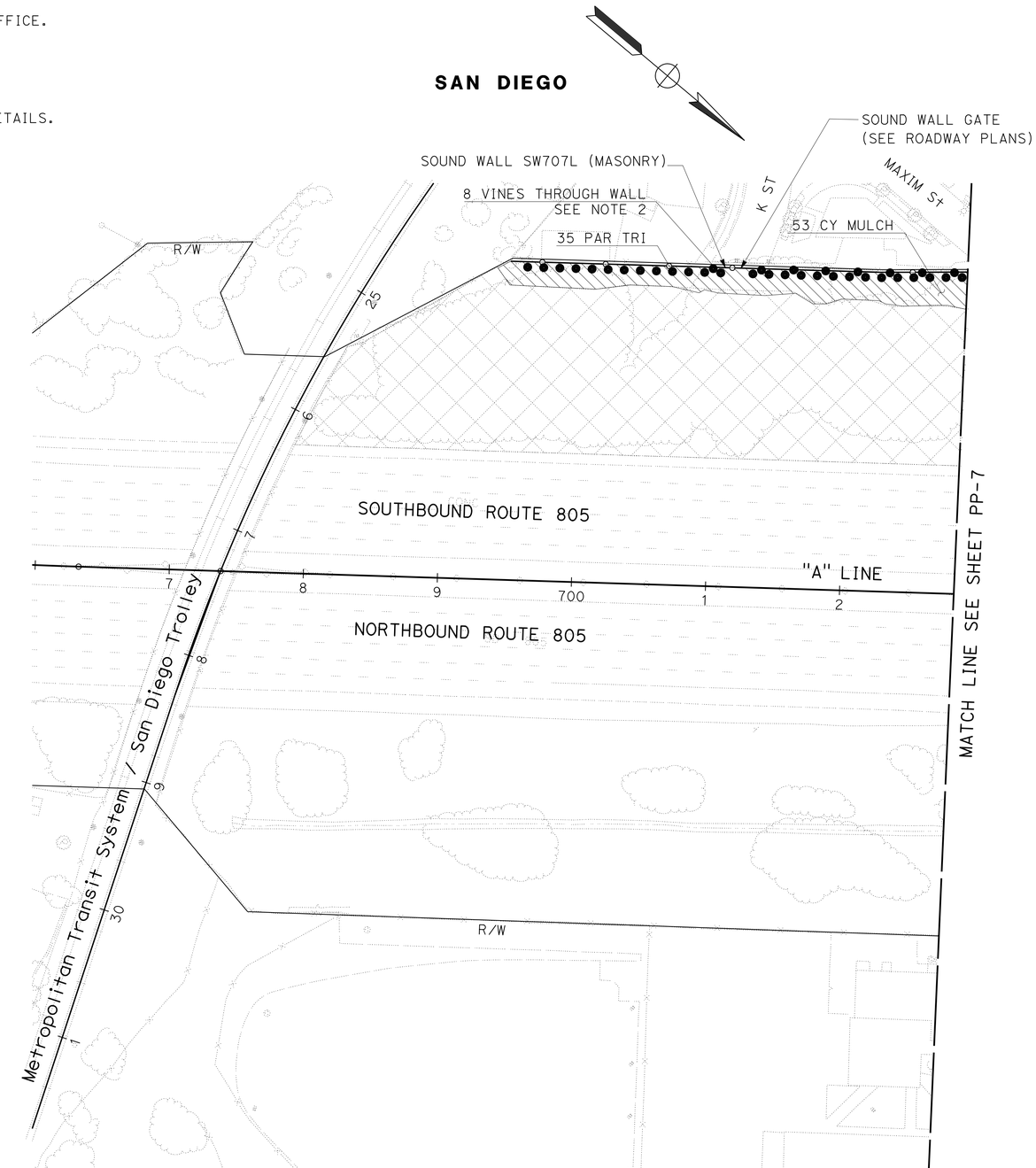

APPROVED FOR PLANTING WORK ONLY

PLANTING PLAN

SCALE: 1" = 50'

PP-6

REVISED BY	DATE REVISED

CALCULATED-DESIGNED BY	CHECKED BY
MARLENE GROS	JASON GROS

SENIOR LANDSCAPE ARCHITECT: STEPHEN ALVAREZ

STATE OF CALIFORNIA - DEPARTMENT OF TRANSPORTATION
Caltrans® LANDSCAPE ARCHITECTURE

LAST REVISION 02-19-13 | DATE PLOTTED => 28-FEB-2013 | TIME PLOTTED => 15:43

Dist	COUNTY	ROUTE	POST MILES TOTAL PROJECT	SHEET No.	TOTAL SHEETS
11	SD	805	5.8/13.0	184	216

LICENSED LANDSCAPE ARCHITECT

02-25-13
PLANS APPROVAL DATE

LICENSED LANDSCAPE ARCHITECT MARLENE J. GROS No. 2917 STATE OF CALIFORNIA
09-19-13 EXPIRATION DATE
02-19-13 Date

THE STATE OF CALIFORNIA OR ITS OFFICERS OR AGENTS SHALL NOT BE RESPONSIBLE FOR THE ACCURACY OR COMPLETENESS OF SCANNED COPIES OF THIS PLAN SHEET.

NOTES:

1. FOR ACCURATE RIGHT OF WAY DATA, CONTACT RIGHT OF WAY ENGINEERING AT THE DISTRICT OFFICE.
2. FOR LANDSCAPE OPENING LOCATION IN SOUND WALL, SEE ROADWAY PLANS.
3. INSERT TOP OF VINE THROUGH GROW HOLE TO THE RIGHT-OF-WAY FACING SIDE OF WALL. SEE LANDSCAPE DETAILS.

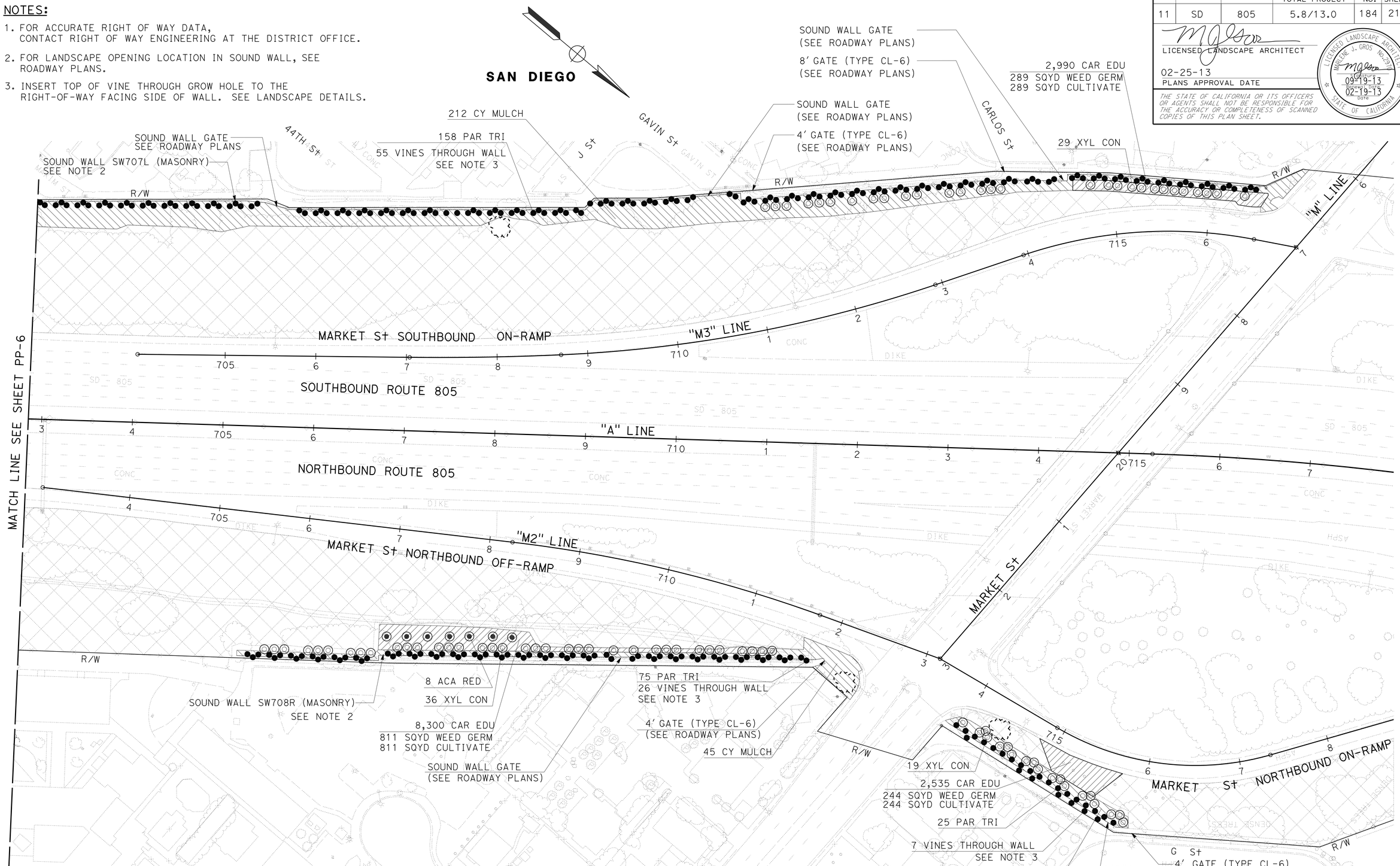

APPROVED FOR PLANTING WORK ONLY

PLANTING PLAN

SCALE: 1" = 50'

PP-7

REVISED BY	DATE REVISED

CALCULATED-DESIGNED BY	CHECKED BY
MARLENE GROS	JASON GROS

SENIOR LANDSCAPE ARCHITECT: STEPHEN ALVAREZ

STATE OF CALIFORNIA - DEPARTMENT OF TRANSPORTATION
Caltrans® LANDSCAPE ARCHITECTURE

LAST REVISION 02-19-13
DATE PLOTTED => 28-FEB-2013
TIME PLOTTED => 15:43

Dist	COUNTY	ROUTE	POST MILES TOTAL PROJECT	SHEET No.	TOTAL SHEETS
11	SD	805	5.8/13.0	185	216

LICENSED LANDSCAPE ARCHITECT

02-25-13
PLANS APPROVAL DATE

LICENSED LANDSCAPE ARCHITECT MARLENE J. GROS No. 2817 STATE OF CALIFORNIA
09-19-13 Expiration Date
02-19-13 Date

THE STATE OF CALIFORNIA OR ITS OFFICERS OR AGENTS SHALL NOT BE RESPONSIBLE FOR THE ACCURACY OR COMPLETENESS OF SCANNED COPIES OF THIS PLAN SHEET.

NOTES:

1. FOR ACCURATE RIGHT OF WAY DATA, CONTACT RIGHT OF WAY ENGINEERING AT THE DISTRICT OFFICE.
2. WM AND BPA FOR RCVs I, J, K & L ARE LOCATED AT TELEGRAPH CANYON Rd AND SOUTHBOUND ON-RAMP TO ROUTE 805.

REMOVE IRRIGATION FACILITY (QUANTITIES ARE APPROXIMATE)

DESCRIPTION	EA
REMOTE CONTROL VALVE	6
GATE VALVE	1
SPRINKLER	40

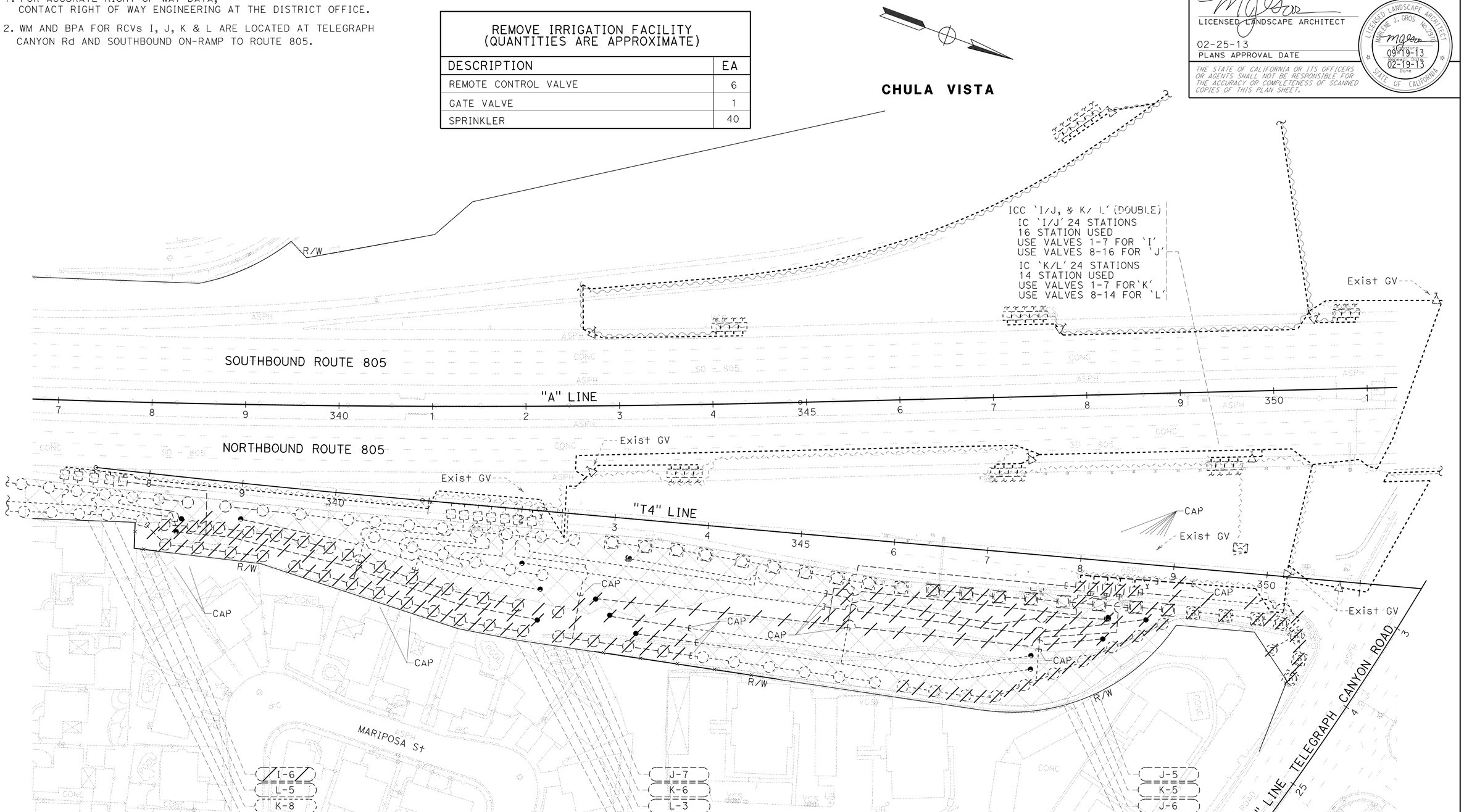

APPROVED FOR IRRIGATION REMOVAL WORK ONLY

IRRIGATION REMOVAL PLAN

SCALE: 1" = 50'

IR-1

STATE OF CALIFORNIA - DEPARTMENT OF TRANSPORTATION
Caltrans® LANDSCAPE ARCHITECTURE

SENIOR LANDSCAPE ARCHITECT: STEPHEN ALVAREZ

CALCULATED-DESIGNED BY: JOHN NEWLON
CHECKED BY: MARLENE GROS

REVISED BY
DATE REVISED

LAST REVISION 02-19-13
DATE PLOTTED => 28-FEB-2013
TIME PLOTTED => 15:43

Dist	COUNTY	ROUTE	POST MILES TOTAL PROJECT	SHEET No.	TOTAL SHEETS
11	SD	805	5.8/13.0	186	216

LICENSED LANDSCAPE ARCHITECT

02-25-13
PLANS APPROVAL DATE

LICENSED LANDSCAPE ARCHITECT
MARLENE J. GROS No. 2817
09-19-13
PROFESSIONAL ENGINEER
02-19-13
DATE
STATE OF CALIFORNIA

THE STATE OF CALIFORNIA OR ITS OFFICERS OR AGENTS SHALL NOT BE RESPONSIBLE FOR THE ACCURACY OR COMPLETENESS OF SCANNED COPIES OF THIS PLAN SHEET.

NOTE:

FOR ACCURATE RIGHT OF WAY DATA,
CONTACT RIGHT OF WAY ENGINEERING AT THE DISTRICT OFFICE.

REMOVE IRRIGATION FACILITY (QUANTITIES ARE APPROXIMATE)	
DESCRIPTION	EA
REMOTE CONTROL VALVE	0
GATE VALVE	0
SPRINKLER	30

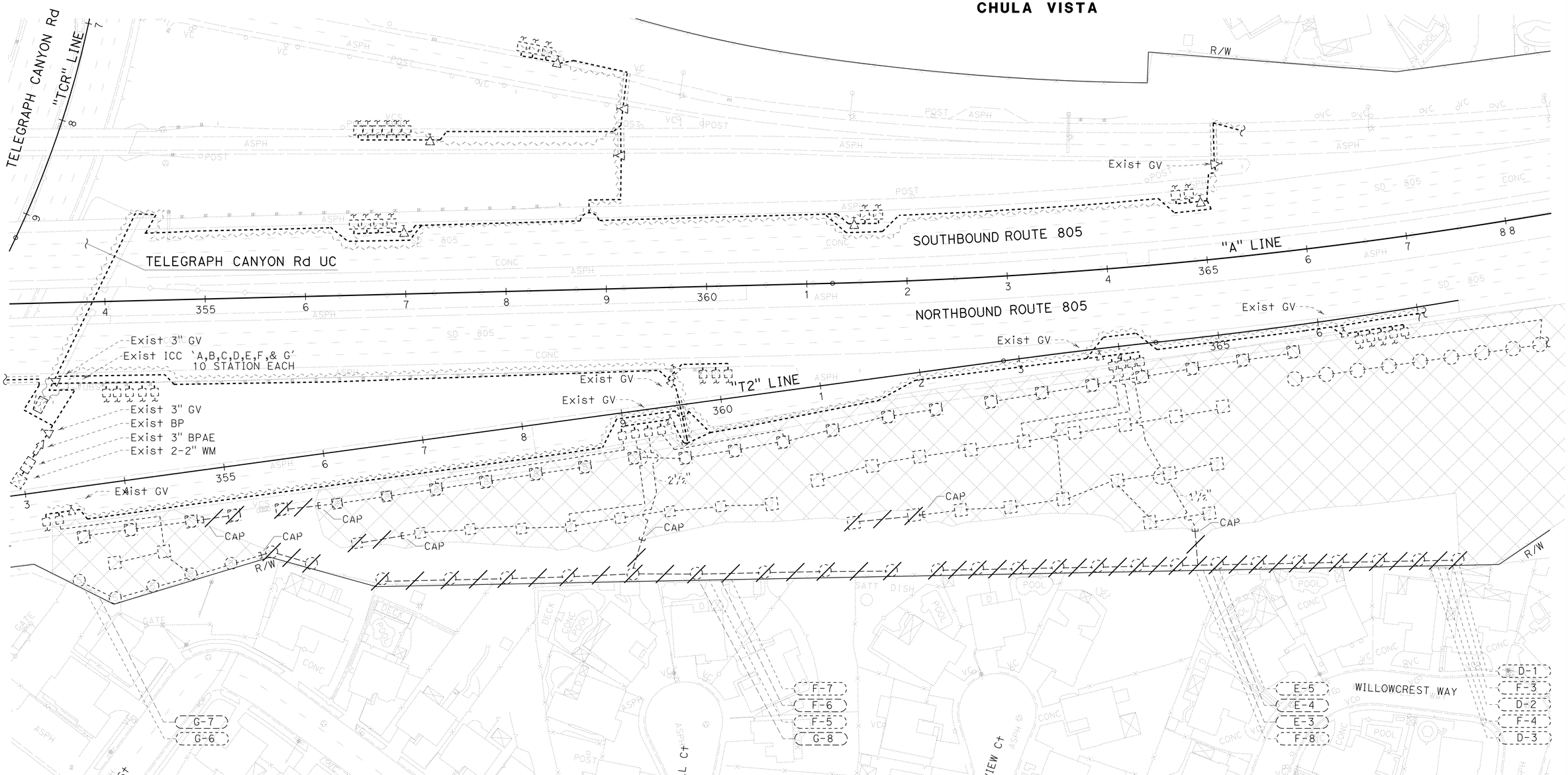

IRRIGATION REMOVAL PLAN

APPROVED FOR IRRIGATION REMOVAL WORK ONLY

SCALE: 1" = 50'

IR-2

STATE OF CALIFORNIA - DEPARTMENT OF TRANSPORTATION
Caltrans® LANDSCAPE ARCHITECTURE

SENIOR LANDSCAPE ARCHITECT: STEPHEN ALVAREZ
CALCULATED-DESIGNED BY: JOHN NEWLON
CHECKED BY: MARLENE GROS
REVISED BY
DATE REVISED

LAST REVISION 02-19-13
DATE PLOTTED => 28-FEB-2013
TIME PLOTTED => 15:43

Dist	COUNTY	ROUTE	POST MILES TOTAL PROJECT	SHEET No.	TOTAL SHEETS
11	SD	805	5.8/13.0	187	216

LICENSED LANDSCAPE ARCHITECT

02-25-13
PLANS APPROVAL DATE

MARLENE J. GROS No. 2917 LICENSED LANDSCAPE ARCHITECT
09-19-13 Expiration Date
02-19-13 Date
STATE OF CALIFORNIA

THE STATE OF CALIFORNIA OR ITS OFFICERS OR AGENTS SHALL NOT BE RESPONSIBLE FOR THE ACCURACY OR COMPLETENESS OF SCANNED COPIES OF THIS PLAN SHEET.

NOTES:

1. FOR ACCURATE RIGHT OF WAY AND ACCESS DATA, CONTACT RIGHT OF WAY ENGINEERING AT THE DISTRICT OFFICE.
2. WM AND BPA FOR RCVs 18(D) ARE LOCATED AT NORTH BOUND ROUTE 805 NORTH OF 4TH St BRIDGE.

REMOVE IRRIGATION FACILITY (QUANTITIES ARE APPROXIMATE)

DESCRIPTION	EA
REMOTE CONTROL VALVE	0
GATE VALVE	0
SPRINKLER	30

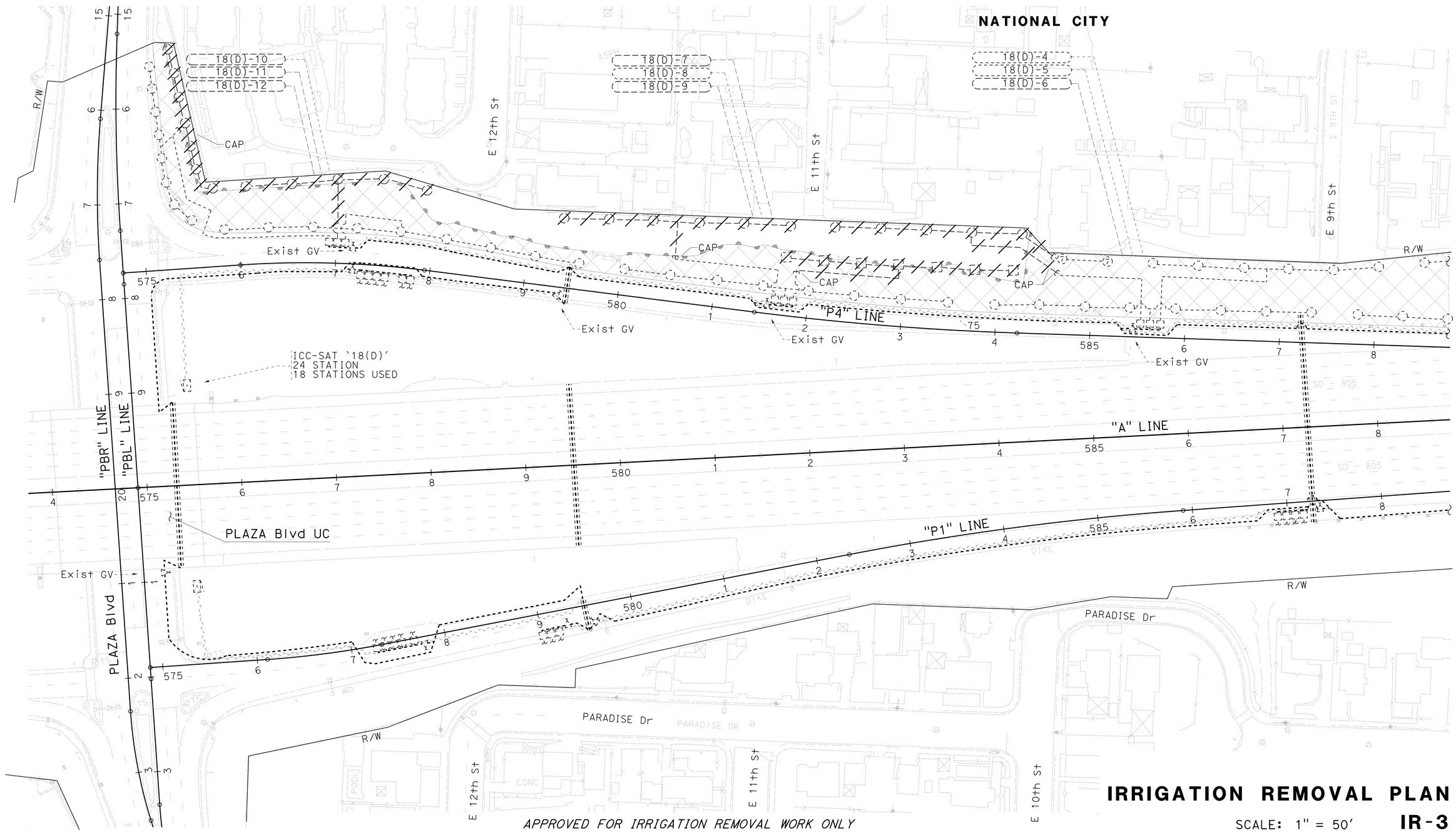

IRRIGATION REMOVAL PLAN

SCALE: 1" = 50'

IR-3

STATE OF CALIFORNIA - DEPARTMENT OF TRANSPORTATION
Caltrans® LANDSCAPE ARCHITECTURE

SENIOR LANDSCAPE ARCHITECT: STEPHEN ALVAREZ
CALCULATED-DESIGNED BY: JOHN NEWLON
CHECKED BY: MARLENE GROS
REVISED BY
DATE REVISED

LAST REVISION 02-19-13
DATE PLOTTED => 28-FEB-2013
TIME PLOTTED => 15:43

Dist	COUNTY	ROUTE	POST MILES TOTAL PROJECT	SHEET No.	TOTAL SHEETS
11	SD	805	5.8/13.0	188	216

LICENSED LANDSCAPE ARCHITECT

02-25-13
PLANS APPROVAL DATE

LICENSED LANDSCAPE ARCHITECT
MARLENE J. GROS No. 2917
09-19-13
Expiration Date
02-19-13
Date
STATE OF CALIFORNIA

THE STATE OF CALIFORNIA OR ITS OFFICERS OR AGENTS SHALL NOT BE RESPONSIBLE FOR THE ACCURACY OR COMPLETENESS OF SCANNED COPIES OF THIS PLAN SHEET.

NOTE:

FOR ACCURATE RIGHT OF WAY DATA,
CONTACT RIGHT OF WAY ENGINEERING AT THE DISTRICT OFFICE.

REMOVE IRRIGATION FACILITY
(QUANTITIES ARE APPROXIMATE)

DESCRIPTION	EA
REMOTE CONTROL VALVE	0
GATE VALVE	0
SPRINKLER	27

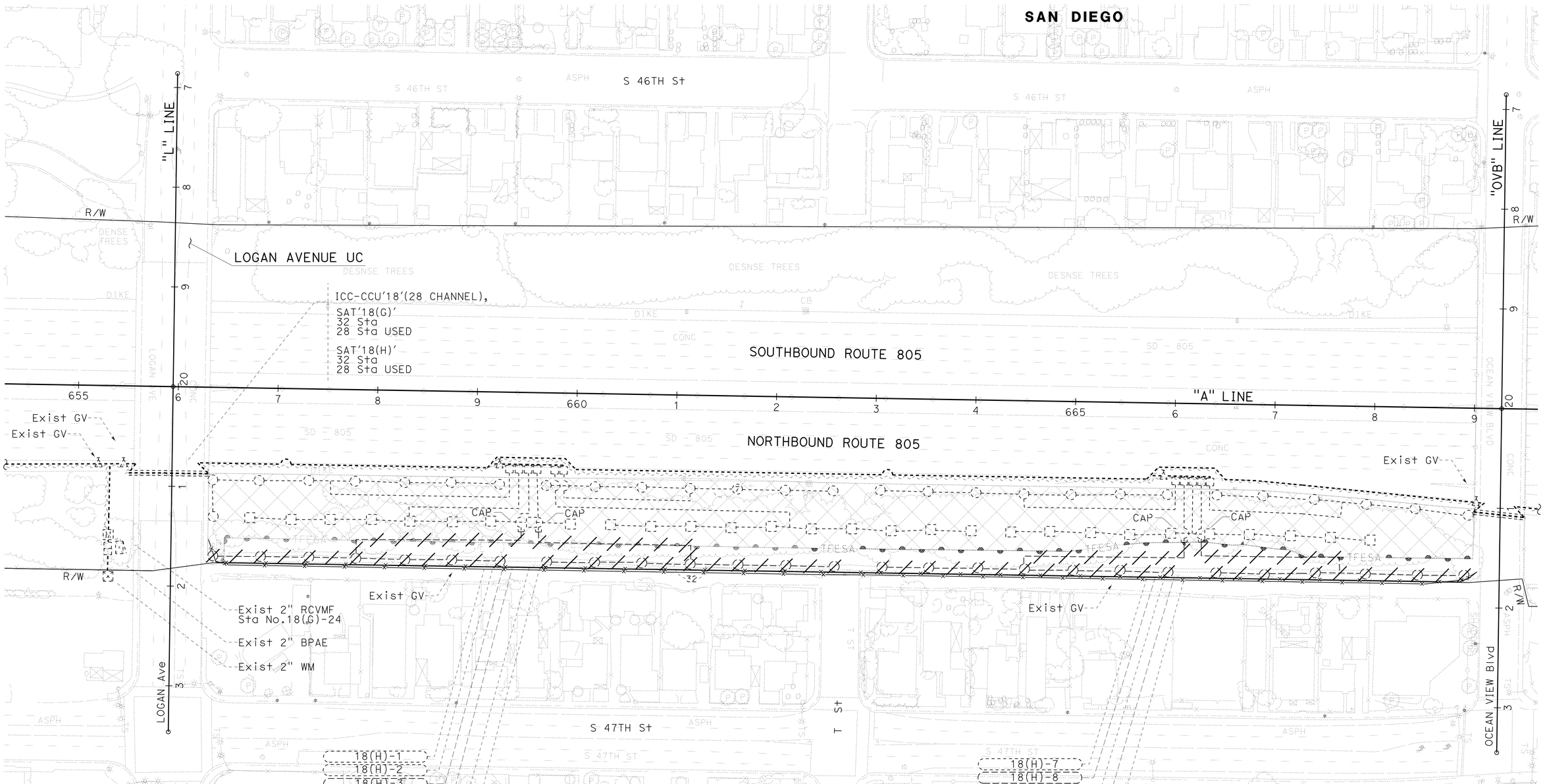

APPROVED FOR IRRIGATION REMOVAL WORK ONLY

IRRIGATION REMOVAL PLAN

SCALE: 1" = 50'

IR-4

STATE OF CALIFORNIA - DEPARTMENT OF TRANSPORTATION
Caltrans® LANDSCAPE ARCHITECTURE

SENIOR LANDSCAPE ARCHITECT: STEPHEN ALVAREZ
CALCULATED-DESIGNED BY: JOHN NEWLON
CHECKED BY: MARLENE GROS
REVISED BY
DATE REVISED

LAST REVISION 02-19-13
DATE PLOTTED => 28-FEB-2013
TIME PLOTTED => 15:43

Dist	COUNTY	ROUTE	POST MILES TOTAL PROJECT	SHEET No.	TOTAL SHEETS
11	SD	805	5.8/13.0	189	216

LICENSED LANDSCAPE ARCHITECT

02-25-13
PLANS APPROVAL DATE

LICENSED LANDSCAPE ARCHITECT
MARLENE J. GROS No. 2917
09-19-13
09-19-13
02-19-13
STATE OF CALIFORNIA

THE STATE OF CALIFORNIA OR ITS OFFICERS OR AGENTS SHALL NOT BE RESPONSIBLE FOR THE ACCURACY OR COMPLETENESS OF SCANNED COPIES OF THIS PLAN SHEET.

NOTE:

FOR ACCURATE RIGHT OF WAY DATA,
CONTACT RIGHT OF WAY ENGINEERING AT THE DISTRICT OFFICE.

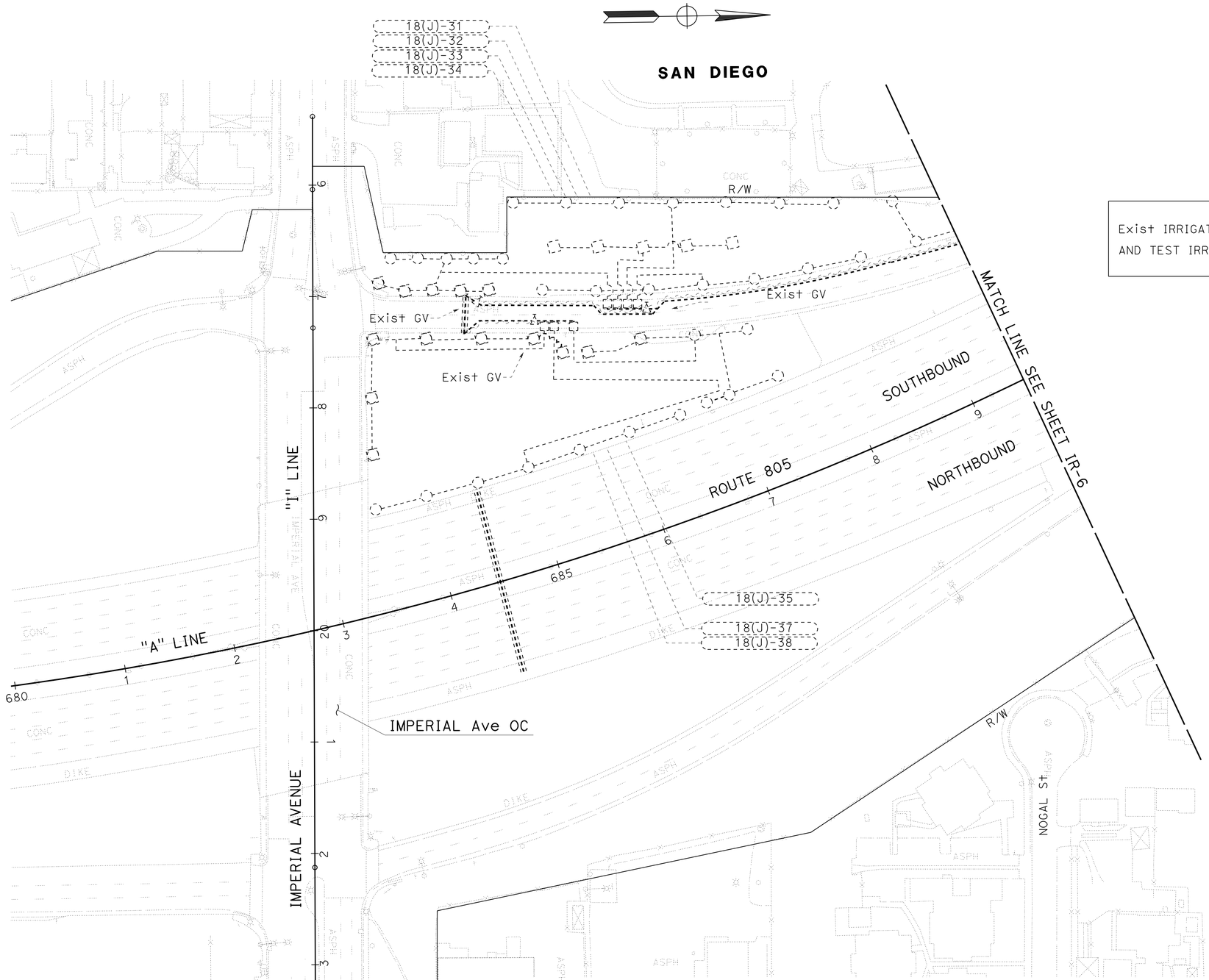

Exist IRRIGATION SHOWN FOR CHECK AND TEST IRRIGATION FACILITIES WORK

IRRIGATION REMOVAL PLAN

APPROVED FOR IRRIGATION REMOVAL WORK ONLY

SCALE: 1" = 50'

IR-5

STATE OF CALIFORNIA - DEPARTMENT OF TRANSPORTATION
Caltrans® LANDSCAPE ARCHITECTURE

SENIOR LANDSCAPE ARCHITECT: STEPHEN ALVAREZ
CALCULATED-DESIGNED BY: JOHN NEWLON
CHECKED BY: MARLENE GROS
REVISED BY
DATE REVISED

LAST REVISION 02-19-13
DATE PLOTTED => 28-FEB-2013
TIME PLOTTED => 15:43

Dist	COUNTY	ROUTE	POST MILES TOTAL PROJECT	SHEET No.	TOTAL SHEETS
11	SD	805	5.8/13.0	190	216

LICENSED LANDSCAPE ARCHITECT

02-25-13
PLANS APPROVAL DATE

MARLENE J. GROS No. 2917 LICENSED LANDSCAPE ARCHITECT
09-19-13 EXPIRATION DATE
02-19-13 DATE
STATE OF CALIFORNIA

THE STATE OF CALIFORNIA OR ITS OFFICERS OR AGENTS SHALL NOT BE RESPONSIBLE FOR THE ACCURACY OR COMPLETENESS OF SCANNED COPIES OF THIS PLAN SHEET.

NOTE:

FOR ACCURATE RIGHT OF WAY DATA,
CONTACT RIGHT OF WAY ENGINEERING AT THE DISTRICT OFFICE.

REMOVE IRRIGATION FACILITY (QUANTITIES ARE APPROXIMATE)

DESCRIPTION	EA
REMOTE CONTROL VALVE	0
GATE VALVE	0
SPRINKLER	7

SAN DIEGO

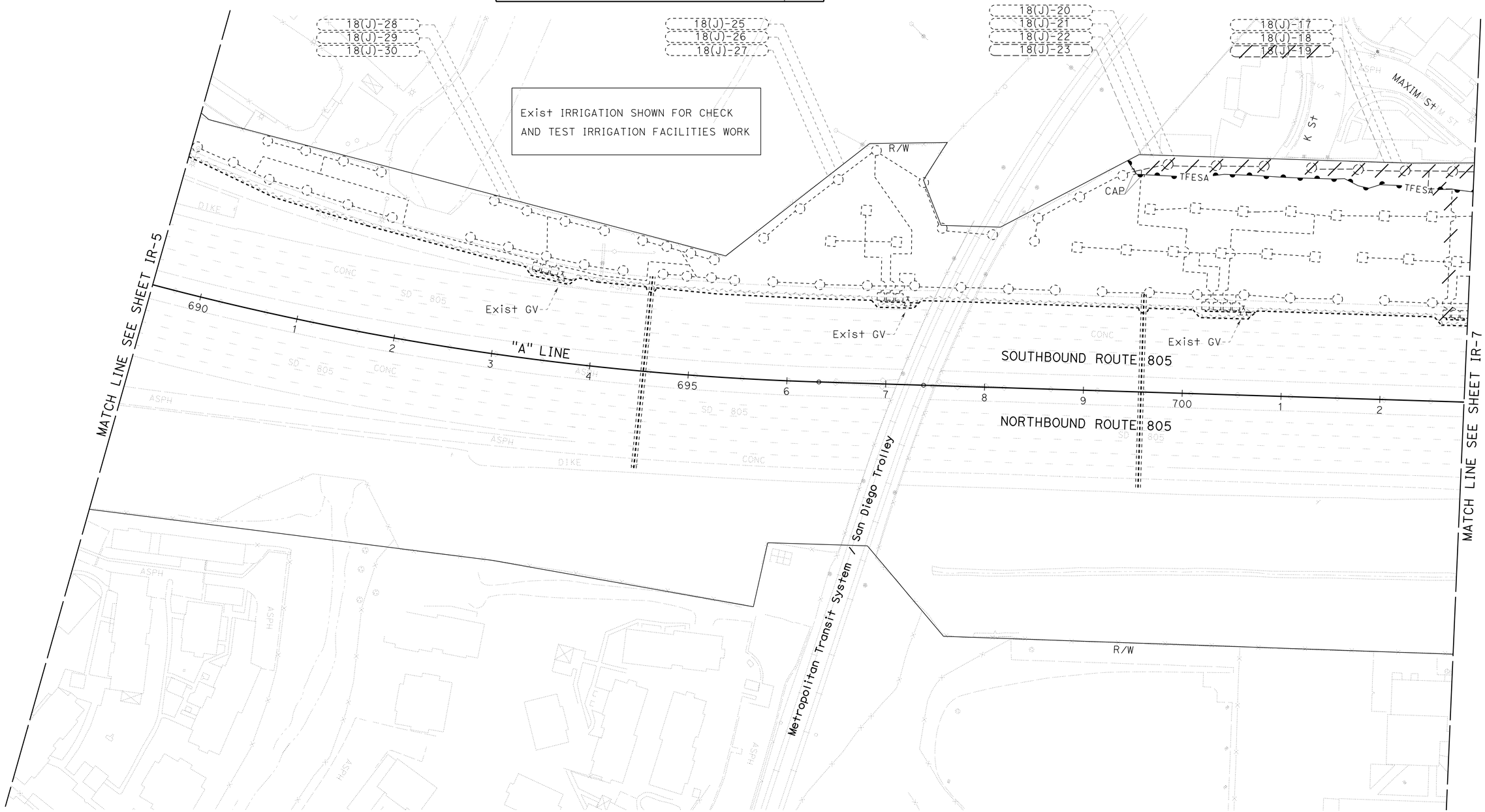

APPROVED FOR IRRIGATION REMOVAL WORK ONLY

IRRIGATION REMOVAL PLAN

SCALE: 1" = 50'

IR-6

STATE OF CALIFORNIA - DEPARTMENT OF TRANSPORTATION
Caltrans® LANDSCAPE ARCHITECTURE

SENIOR LANDSCAPE ARCHITECT: STEPHEN ALVAREZ
CALCULATED-DESIGNED BY: JOHN NEWLON
CHECKED BY: MARLENE GROS
REVISED BY
DATE REVISED

LAST REVISION 02-19-13
DATE PLOTTED => 28-FEB-2013
TIME PLOTTED => 15:43

Dist	COUNTY	ROUTE	POST MILES TOTAL PROJECT	SHEET No.	TOTAL SHEETS
11	SD	805	5.8/13.0	191	216

LICENSED LANDSCAPE ARCHITECT

02-25-13
PLANS APPROVAL DATE

LICENSED LANDSCAPE ARCHITECT MARLENE J. GROS No. 2917 STATE OF CALIFORNIA
09-19-13 EXPIRATION DATE
02-19-13 Date

THE STATE OF CALIFORNIA OR ITS OFFICERS OR AGENTS SHALL NOT BE RESPONSIBLE FOR THE ACCURACY OR COMPLETENESS OF SCANNED COPIES OF THIS PLAN SHEET.

NOTES:

1. FOR ACCURATE RIGHT OF WAY AND ACCESS DATA, CONTACT RIGHT OF WAY ENGINEERING AT THE DISTRICT OFFICE.
2. WM, BPA AND ICC-SAT FOR RCVs 18(I) ARE LOCATED AT IMPERIAL AVE AND NORTH BOUND ON RAMP TO ROUTE 805.
3. WM, BPA AND ICC-SAT FOR RCVs 17(A) ARE LOCATED AT HILLTOP DR AND ROUTE 805 LINE "NW" EAST OF R/W FENCE.

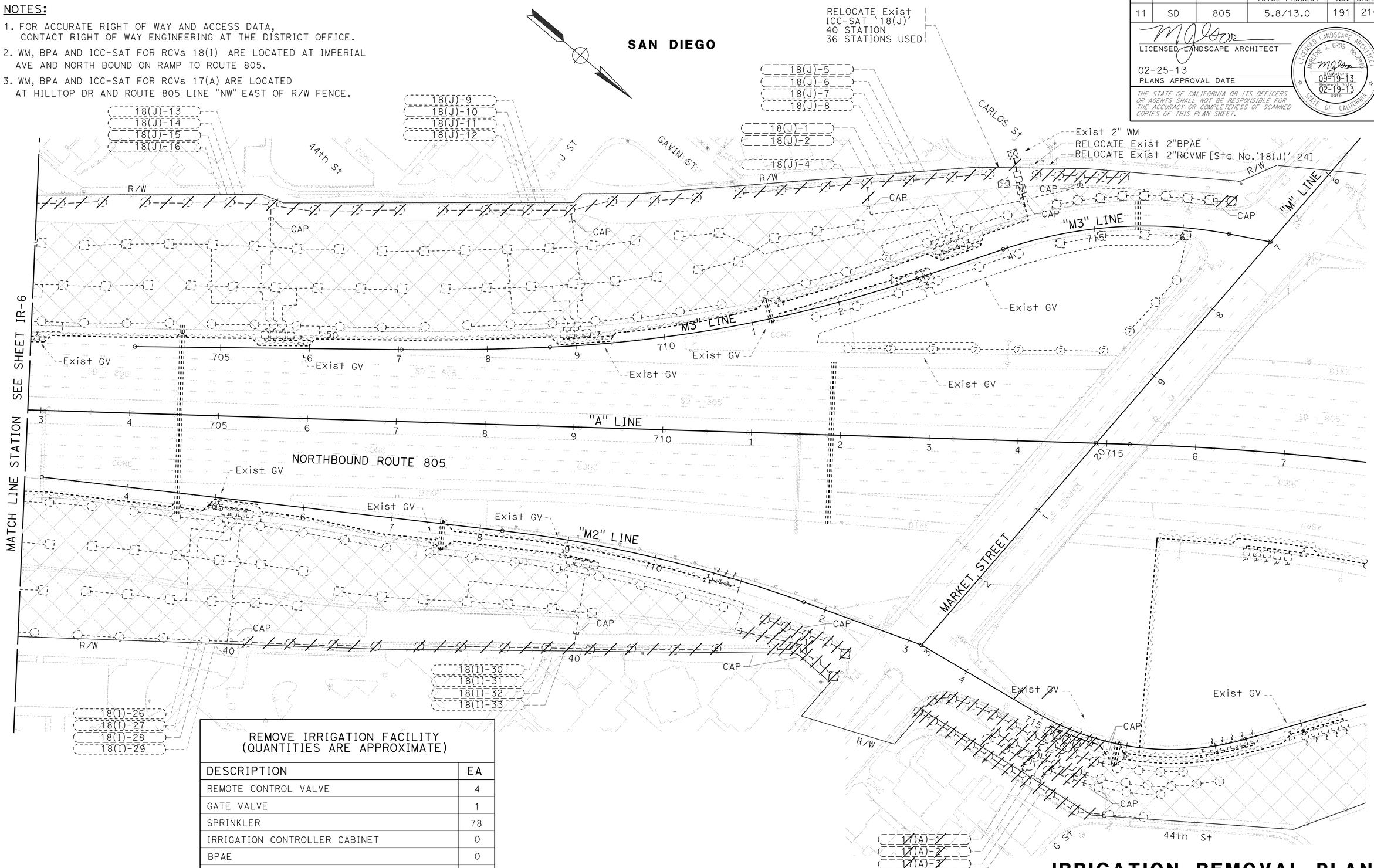

REMOVE IRRIGATION FACILITY
(QUANTITIES ARE APPROXIMATE)

DESCRIPTION	EA
REMOTE CONTROL VALVE	4
GATE VALVE	1
SPRINKLER	78
IRRIGATION CONTROLLER CABINET	0
BPAE	0
RCVMF	0

APPROVED FOR IRRIGATION REMOVAL WORK ONLY

IRRIGATION REMOVAL PLAN

SCALE: 1" = 50'

IR-7

REVISED BY | DATE REVISED
JOHN NEWLON | MARLENE GROS
CALCULATED-DESIGNED BY | CHECKED BY
SENIOR LANDSCAPE ARCHITECT
STEPHEN ALVAREZ

STATE OF CALIFORNIA - DEPARTMENT OF TRANSPORTATION
Caltrans® LANDSCAPE ARCHITECTURE

LAST REVISION 02-19-13 | DATE PLOTTED => 28-FEB-2013 | TIME PLOTTED => 15:43

Dist	COUNTY	ROUTE	POST MILES TOTAL PROJECT	SHEET No.	TOTAL SHEETS
11	SD	805	5.8/13.0	192	216

LICENSED LANDSCAPE ARCHITECT

02-25-13
PLANS APPROVAL DATE

LICENSED LANDSCAPE ARCHITECT
MARLENE J. GROS No. 2917
09-19-13
Expiration Date
02-19-13
Date
STATE OF CALIFORNIA

THE STATE OF CALIFORNIA OR ITS OFFICERS OR AGENTS SHALL NOT BE RESPONSIBLE FOR THE ACCURACY OR COMPLETENESS OF SCANNED COPIES OF THIS PLAN SHEET.

NOTES:

1 FOR ACCURATE RIGHT OF WAY DATA, CONTACT RIGHT OF WAY ENGINEERING AT THE DISTRICT OFFICE.

2. WM AND BPA FOR RCVs I,J,K & L ARE LOCATED AT TELEGRAPH CANYON RD AND SOUTH BOUND ON RAMP TO ROUTE 805.

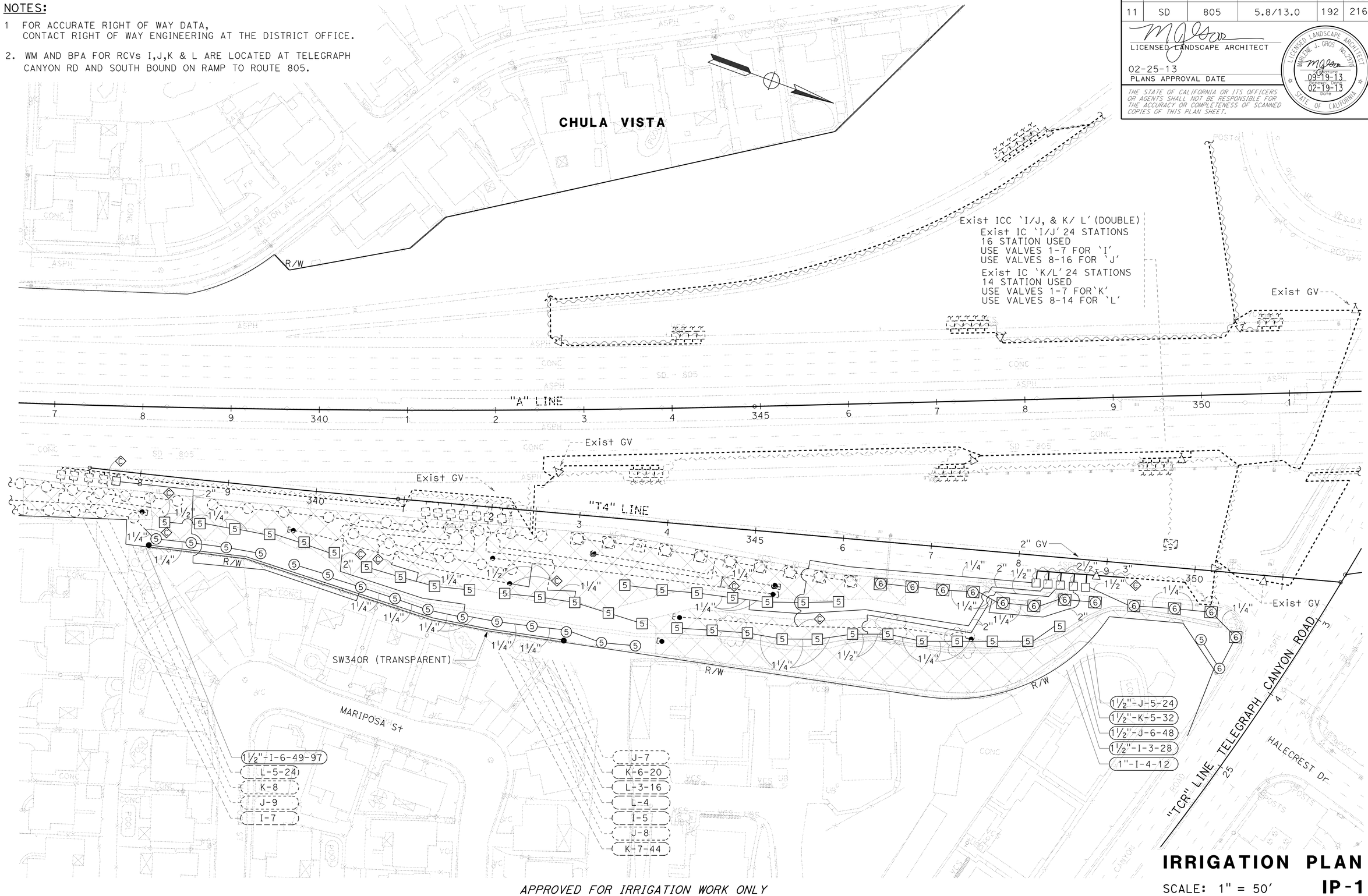

APPROVED FOR IRRIGATION WORK ONLY

IRRIGATION PLAN

SCALE: 1" = 50'

IP-1

STATE OF CALIFORNIA - DEPARTMENT OF TRANSPORTATION
Caltrans® LANDSCAPE ARCHITECTURE

SENIOR LANDSCAPE ARCHITECT: STEPHEN ALVAREZ

CALCULATED-DESIGNED BY: JOHN NEWLON
CHECKED BY: MARLENE GROS

REVISED BY
DATE REVISED

LAST REVISION 02-19-13
DATE PLOTTED => 28-FEB-2013
TIME PLOTTED => 15:43

Dist	COUNTY	ROUTE	POST MILES TOTAL PROJECT	SHEET No.	TOTAL SHEETS
11	SD	805	5.8/13.0	193	216

LICENSED LANDSCAPE ARCHITECT

02-25-13
PLANS APPROVAL DATE

MARLENE J. GROS No. 2917 LICENSED LANDSCAPE ARCHITECT
09-19-13 EXPIRATION DATE
02-19-13 DATE
STATE OF CALIFORNIA

THE STATE OF CALIFORNIA OR ITS OFFICERS OR AGENTS SHALL NOT BE RESPONSIBLE FOR THE ACCURACY OR COMPLETENESS OF SCANNED COPIES OF THIS PLAN SHEET.

NOTE:

FOR ACCURATE RIGHT OF WAY DATA,
CONTACT RIGHT OF WAY ENGINEERING AT THE DISTRICT OFFICE.

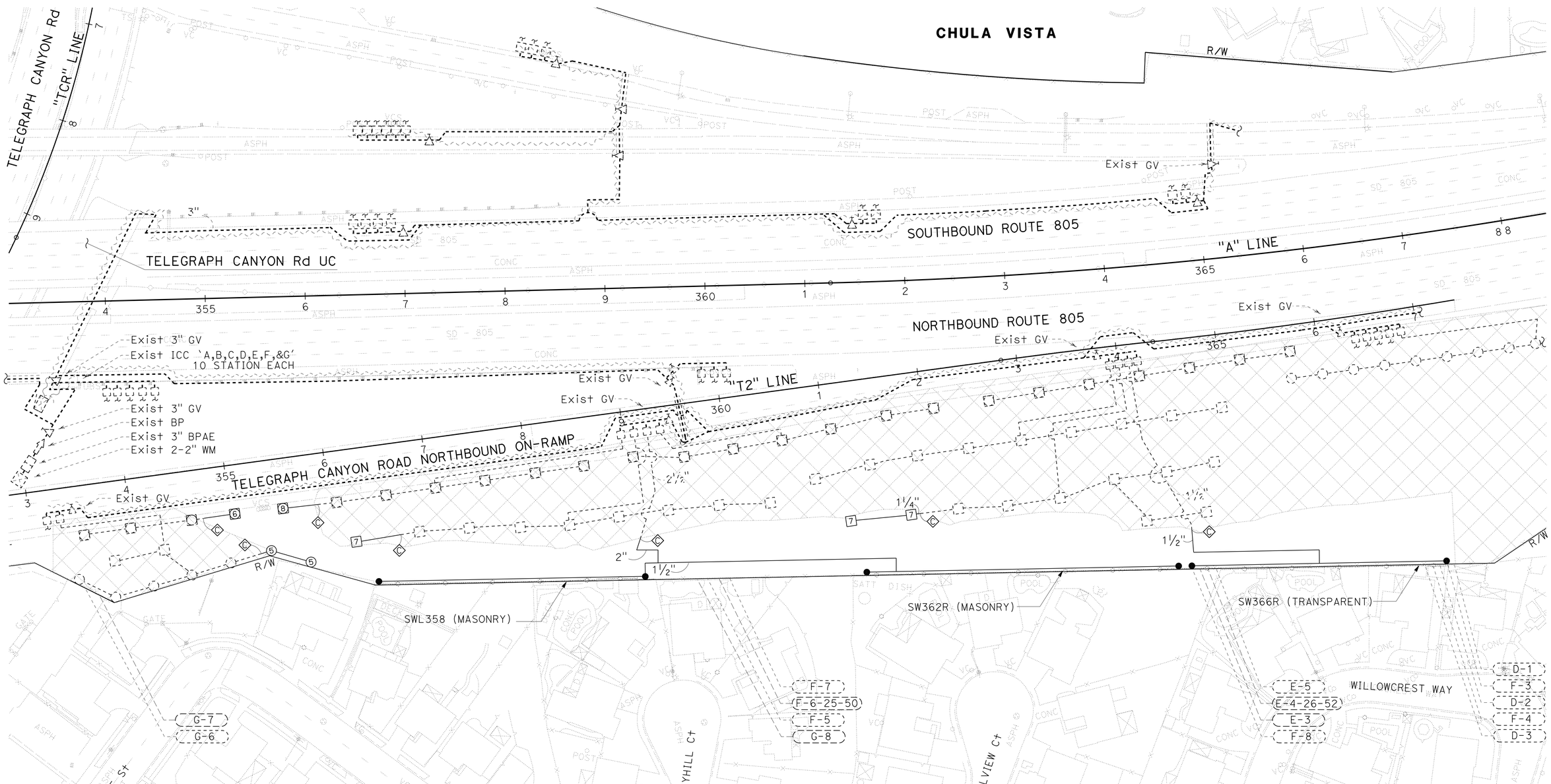

APPROVED FOR IRRIGATION WORK ONLY

IRRIGATION PLAN

SCALE: 1" = 50'

IP-2

STATE OF CALIFORNIA - DEPARTMENT OF TRANSPORTATION
Caltrans® LANDSCAPE ARCHITECTURE

SENIOR LANDSCAPE ARCHITECT: STEPHEN ALVAREZ
CALCULATED-DESIGNED BY: JOHN NEWLON
CHECKED BY: MARLENE GROS
REVISED BY
DATE REVISED

LAST REVISION 02-19-13
DATE PLOTTED => 28-FEB-2013
TIME PLOTTED => 15:43

BORDER LAST REVISED 7/2/2010
USERNAME => s127400
DGN FILE => 1100020048t1002.dgn
RELATIVE BORDER SCALE IS IN INCHES 0 1 2 3
UNIT 2817
PROJECT NUMBER & PHASE 11000200481

Dist	COUNTY	ROUTE	POST MILES TOTAL PROJECT	SHEET No.	TOTAL SHEETS
11	SD	805	5.8/13.0	194	216

LICENSED LANDSCAPE ARCHITECT

02-25-13
PLANS APPROVAL DATE

MARLENE J. GROS No. 2817 LICENSED LANDSCAPE ARCHITECT STATE OF CALIFORNIA
09-19-13 DATE
02-19-13 DATE

THE STATE OF CALIFORNIA OR ITS OFFICERS OR AGENTS SHALL NOT BE RESPONSIBLE FOR THE ACCURACY OR COMPLETENESS OF SCANNED COPIES OF THIS PLAN SHEET.

NOTES:

1. FOR ACCURATE RIGHT OF WAY AND ACCESS DATA, CONTACT RIGHT OF WAY ENGINEERING AT THE DISTRICT OFFICE.
2. WM AND BPA FOR RCVs 18(D) ARE LOCATED AT NORTH BOUND ROUTE 805 NORTH OF 4TH STREET BRIDGE.

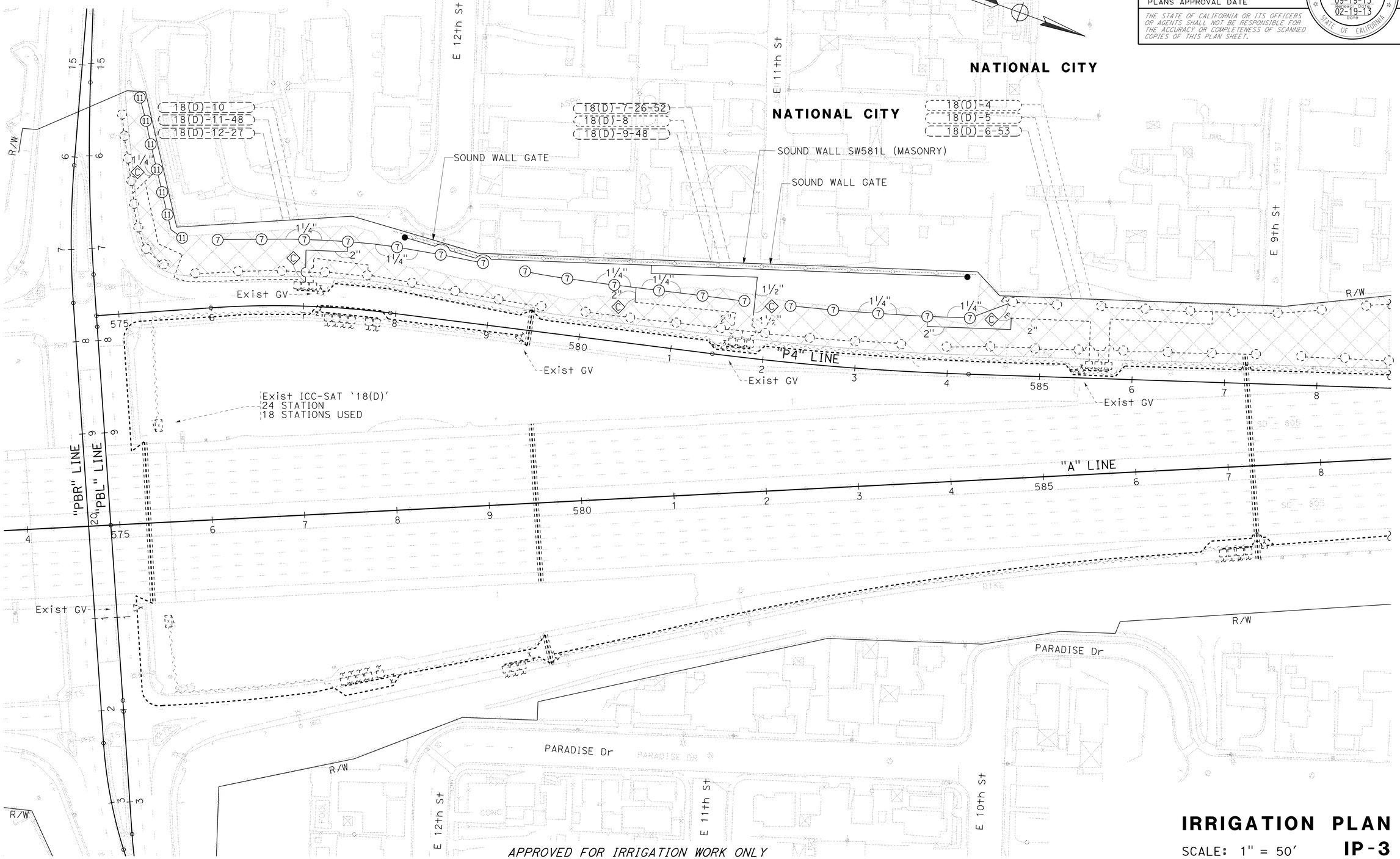

IRRIGATION PLAN

SCALE: 1" = 50'

IP-3

REVISED BY	DATE REVISED

JOHN NEWLON — MARLENE GROS
CALCULATED-DESIGNED BY — CHECKED BY
SENIOR LANDSCAPE ARCHITECT — STEPHEN ALVAREZ

STATE OF CALIFORNIA - DEPARTMENT OF TRANSPORTATION
Caltrans® LANDSCAPE ARCHITECTURE

LAST REVISION 02-19-13
DATE PLOTTED => 28-FEB-2013
TIME PLOTTED => 15:43

Dist	COUNTY	ROUTE	POST MILES TOTAL PROJECT	SHEET No.	TOTAL SHEETS
11	SD	805	5.8/13.0	195	216

LICENSED LANDSCAPE ARCHITECT

02-25-13
PLANS APPROVAL DATE

LICENSED LANDSCAPE ARCHITECT
MARLENE J. GROS No. 2817
09-19-13
PROFESSIONAL EXPIRATION DATE
02-19-13
DATE
STATE OF CALIFORNIA

THE STATE OF CALIFORNIA OR ITS OFFICERS OR AGENTS SHALL NOT BE RESPONSIBLE FOR THE ACCURACY OR COMPLETENESS OF SCANNED COPIES OF THIS PLAN SHEET.

NOTE:

FOR ACCURATE RIGHT OF WAY DATA,
CONTACT RIGHT OF WAY ENGINEERING AT THE DISTRICT OFFICE.

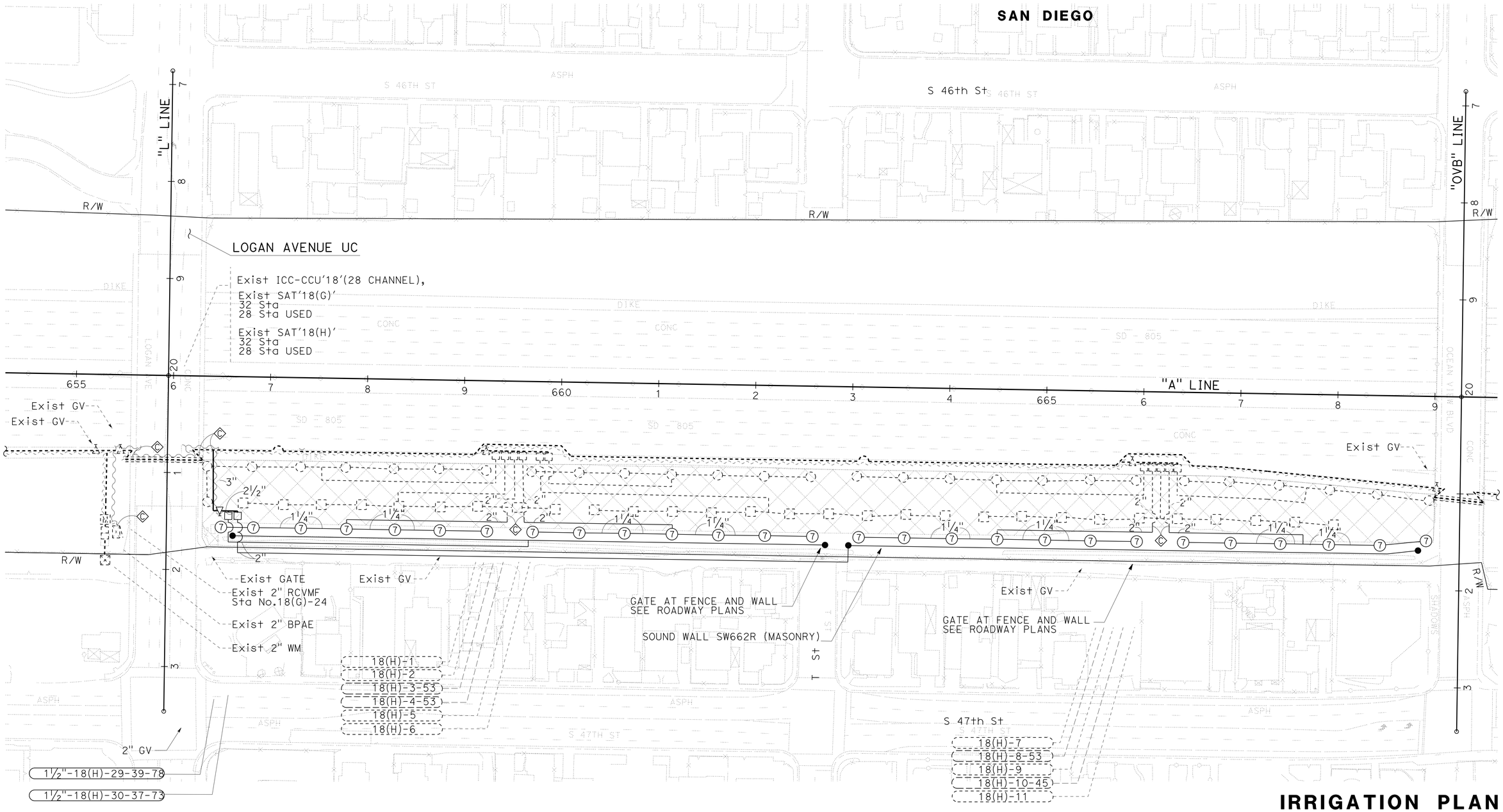

APPROVED FOR IRRIGATION WORK ONLY

IRRIGATION PLAN

SCALE: 1" = 50'

IP-4

STATE OF CALIFORNIA - DEPARTMENT OF TRANSPORTATION
Caltrans® LANDSCAPE ARCHITECTURE

SENIOR LANDSCAPE ARCHITECT: STEPHEN ALVAREZ

CALCULATED-DESIGNED BY: JOHN NEWLON
CHECKED BY: MARLENE GROS

REVISED BY
DATE REVISED

LAST REVISION 02-19-13
DATE PLOTTED => 28-FEB-2013
TIME PLOTTED => 15:43

Dist	COUNTY	ROUTE	POST MILES TOTAL PROJECT	SHEET No.	TOTAL SHEETS
11	SD	805	5.8/13.0	196	216

LICENSED LANDSCAPE ARCHITECT

02-25-13
PLANS APPROVAL DATE

THE STATE OF CALIFORNIA OR ITS OFFICERS OR AGENTS SHALL NOT BE RESPONSIBLE FOR THE ACCURACY OR COMPLETENESS OF SCANNED COPIES OF THIS PLAN SHEET.

LICENSED LANDSCAPE ARCHITECT
MARLENE J. GROS No. 2917
09-19-13
REGISTERED DATE
02-19-13
DATE
STATE OF CALIFORNIA

NOTE:

FOR ACCURATE RIGHT OF WAY DATA,
CONTACT RIGHT OF WAY ENGINEERING AT THE DISTRICT OFFICE.

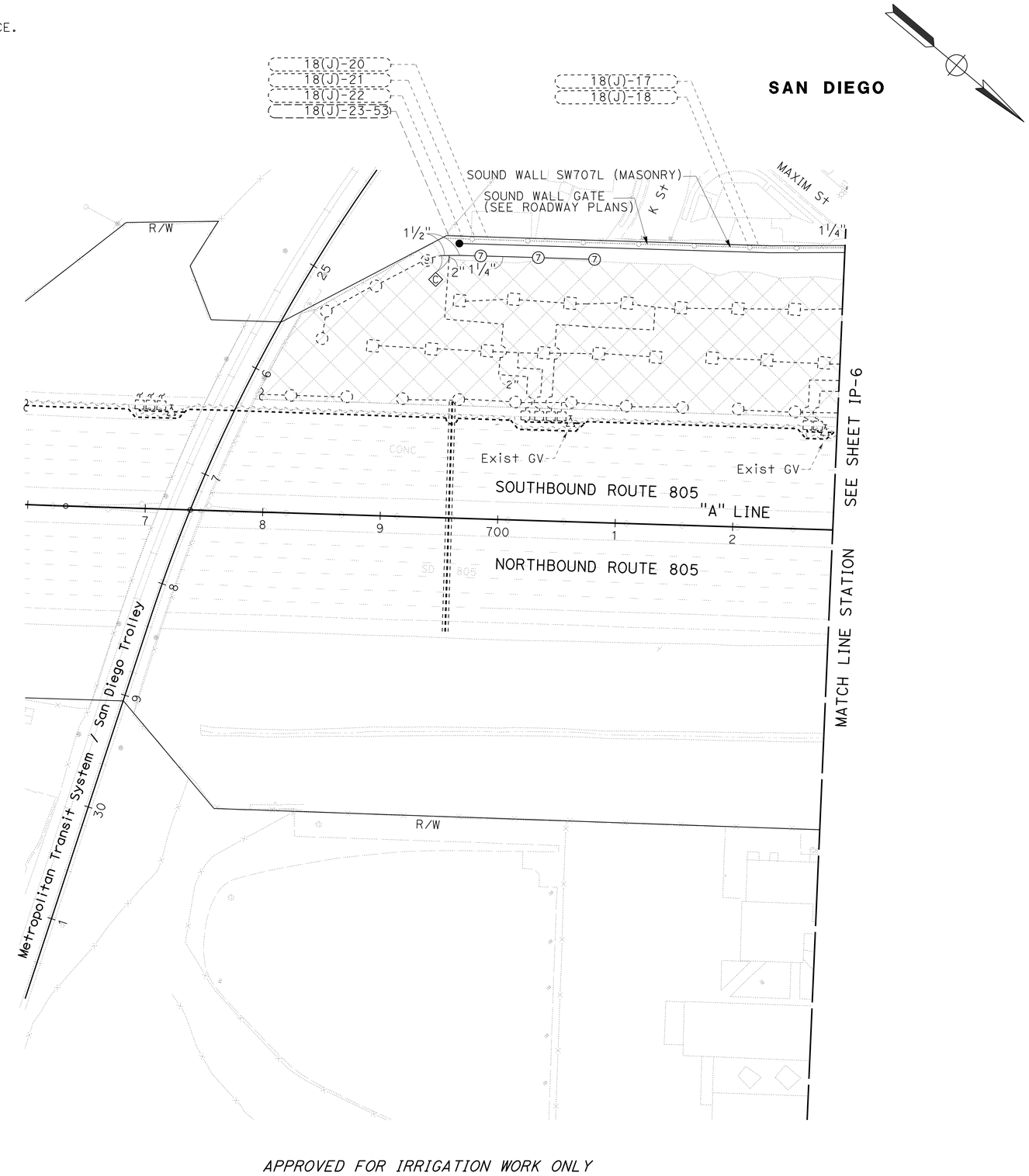

APPROVED FOR IRRIGATION WORK ONLY

IRRIGATION PLAN

SCALE: 1" = 50'

IP-5

STATE OF CALIFORNIA - DEPARTMENT OF TRANSPORTATION
Caltrans® LANDSCAPE ARCHITECTURE

SENIOR LANDSCAPE ARCHITECT: STEPHEN ALVAREZ
CALCULATED-DESIGNED BY: JOHN NEWLON
CHECKED BY: MARLENE GROS
REVISED BY
DATE REVISED

LAST REVISION 02-19-13
DATE PLOTTED => 28-FEB-2013
TIME PLOTTED => 15:43

Dist	COUNTY	ROUTE	POST MILES TOTAL PROJECT	SHEET No.	TOTAL SHEETS
11	SD	805	5.8/13.0	197	216

LICENSED LANDSCAPE ARCHITECT

02-25-13
PLANS APPROVAL DATE

LICENSED LANDSCAPE ARCHITECT MARLENE J. GROS No. 2817 STATE OF CALIFORNIA
09-19-13 REVIEWED DATE
02-19-13 DATE

THE STATE OF CALIFORNIA OR ITS OFFICERS OR AGENTS SHALL NOT BE RESPONSIBLE FOR THE ACCURACY OR COMPLETENESS OF SCANNED COPIES OF THIS PLAN SHEET.

NOTES:

1. FOR ACCURATE RIGHT OF WAY AND ACCESS DATA, CONTACT RIGHT OF WAY ENGINEERING AT THE DISTRICT OFFICE.
2. WM, BPA AND ICC-SAT FOR RCVs 18(I) ARE LOCATED AT IMPERIAL Ave AND NORTH BOUND ON RAMP TO ROUTE 805.
3. WM, BPA AND ICC-SAT FOR RCVs 17(A) ARE LOCATED AT HILLTOP Dr AND ROUTE 805 LINE "NW" EAST OF R/W FENCE.
4. 18(J) RCVs NOT SHOWN ARE LOCATED AT SOUTH BOUND 805 AND NORTH OF IMPERIAL AVENUE. SEE IRRIGATION REMOVAL PLANS.

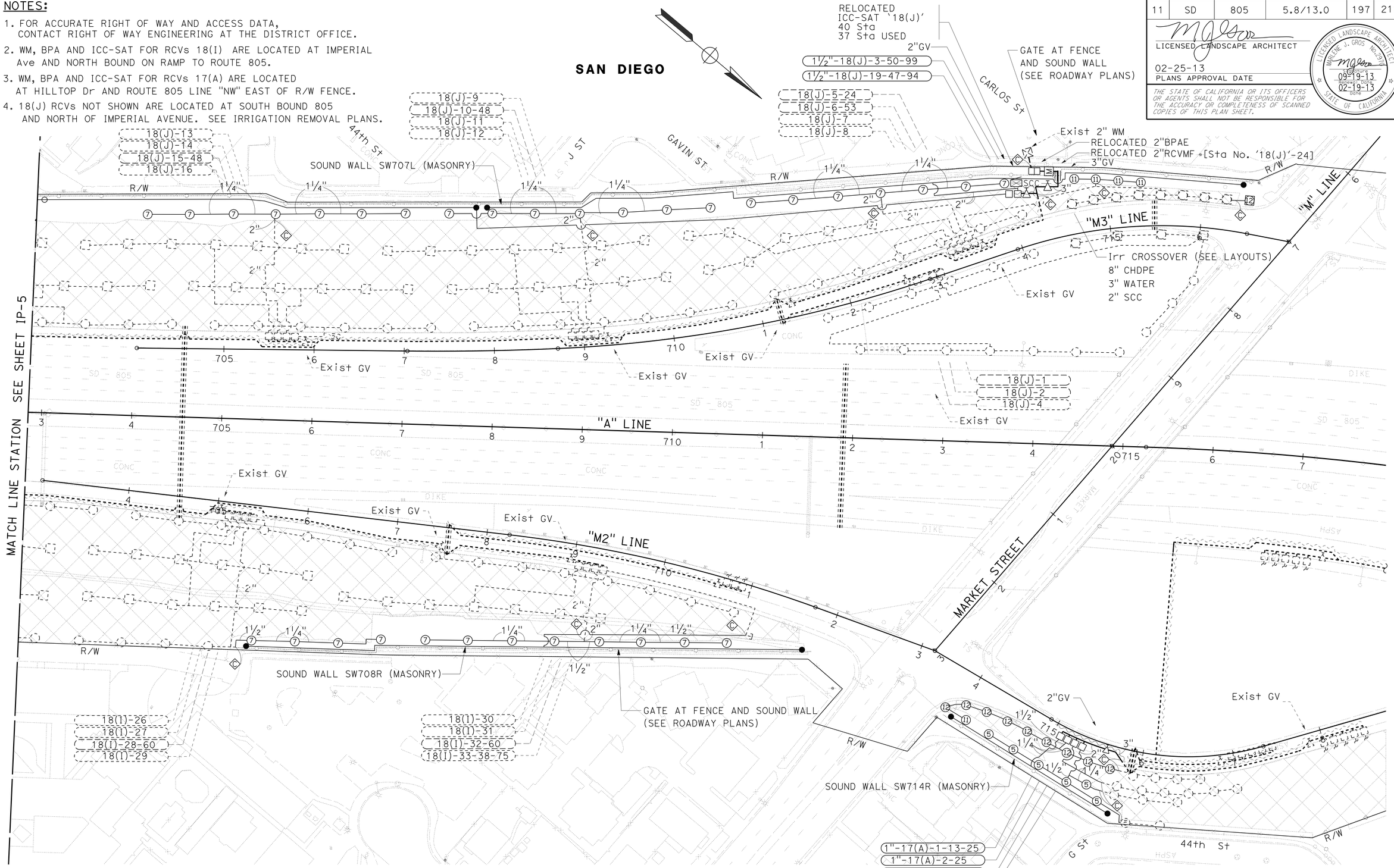

APPROVED FOR IRRIGATION WORK ONLY

IRRIGATION PLAN

SCALE: 1" = 50'

IP-6

STATE OF CALIFORNIA - DEPARTMENT OF TRANSPORTATION
Caltrans® LANDSCAPE ARCHITECTURE

SENIOR LANDSCAPE ARCHITECT: STEPHEN ALVAREZ
CALCULATED-DESIGNED BY: JOHN NEWLON
CHECKED BY: MARLENE GROS
REVISED BY / DATE REVISED

LAST REVISION 02-19-13
DATE PLOTTED => 28-FEB-2013
TIME PLOTTED => 15:43

BORDER LAST REVISED 7/2/2010
USERNAME => s127400
DGN FILE => 1100020048ti006.dgn
RELATIVE BORDER SCALE IS IN INCHES 0 1 2 3
UNIT 2817
PROJECT NUMBER & PHASE 11000200481

Dist	COUNTY	ROUTE	POST MILES TOTAL PROJECT	SHEET No.	TOTAL SHEETS
11	SD	805	5.8/13.0	198	216

LICENSED LANDSCAPE ARCHITECT

02-25-13
PLANS APPROVAL DATE

LICENSED LANDSCAPE ARCHITECT MARLENE J. GROS No. 2917 STATE OF CALIFORNIA
09-19-13 EXPIRATION DATE
02-19-13 DATE

THE STATE OF CALIFORNIA OR ITS OFFICERS OR AGENTS SHALL NOT BE RESPONSIBLE FOR THE ACCURACY OR COMPLETENESS OF SCANNED COPIES OF THIS PLAN SHEET.

SPRINKLER SCHEDULE

SYMBOL	TYPE	DESCRIPTION	SPRAY PATTERN	OPERATING PRESSURE (PSI)	PRESSURE COMPENSATING	PLUS / MINUS 5% ② DISCHARGE: GALLONS PER SECOND (GPS)	GALLONS PER MINUTE (GPM)	GALLONS PER HOUR (GPH)	RADIUS (Ft)	WIDTH x LENGTH (Ft)	MATERIAL	NOZZLE SIZE (INCH)	INLET CONNECTION (NPT) (DN IN INCHES)(INCH)	POSITIVE-LOCKING ADJ ARC STOP	BACKSPLASH PREVENTER	DIFFUSER PIN	DISTANCE CONTROL FLAP	ADJ DISCHARGE	RISER: TYPE	MATERIAL: PLASTIC	MATERIAL: GALVANIZED	SIZE (IPS) (INCH)	HEIGHT (INCH)	FLOW SHUTOFF DEVICE	SWING JOINT (TYPE)	RISER SUPPORT	SPRINKLER PROTECTOR (TYPE)	REMARKS
⑤	A-5	GEAR DRIVEN	P	50	-	-	4	-	40	-	PL	-	¾	-	-	X	-	-	I	X	-	¾	6	-	1	-	-	③⑦
5	A-5	GEAR DRIVEN	F	50	-	-	4	-	40	-	PL	-	¾	-	-	X	-	-	I	X	-	¾	6	-	1	-	-	③
⑥	A-6	GEAR DRIVEN	P	50	-	-	4	-	40	-	PL	-	¾	-	-	X	-	-	-	-	-	-	-	-	1	-	1	③⑦ 12" POP-UP
7	A-7	GEAR DRIVEN	F	50	-	-	6.8	-	48	-	PL	-	¾	-	-	X	-	-	I	X	-	¾	6	-	1	-	-	③
⑦	A-7	GEAR DRIVEN	P	50	-	-	6.8	-	48	-	PL	-	¾	-	-	X	-	-	I	X	-	¾	6	-	1	-	-	③⑦
⑧	A-8	GEAR DRIVEN	P	50	-	-	6.8	-	48	-	PL	-	¾	-	-	X	-	-	-	-	-	-	-	-	1	-	1	③⑦ 12" POP-UP
⑪	A-11	GEAR DRIVEN	P	50	-	-	1.8	-	25	-	PL	-	¾	-	-	X	-	-	-	-	-	-	-	-	1	-	1	③⑦
⑫	A-12	GEAR DRIVEN	P	50	-	-	1.8	-	25	-	PL	-	¾	-	-	X	-	-	-	-	-	-	-	-	1	-	1	③⑦ 12" POP-UP
•	C-2 Mod	MODIFIED FLOOD BUBBLER	-	30	X	-	0.5	-	-	-	PL	-	½	-	-	-	-	-	⑩	X	-	½	-	-	1	-	-	④⑨

X IN BOX DENOTES REQUIREMENT

APPLICABLE WHEN CIRCLED BELOW:

1 - SEE SPECIAL PROVISIONS.
② - IF A PRESSURE COMPENSATING DEVICE IS SPECIFIED, THE DISCHARGE AND RADII SHOWN REFLECT ITS USE.
③ - SHALL HAVE AN INTERNAL OR EXTERNAL CHECK VALVE.
④ - NON-ADJUSTABLE DISCHARGE RATE.
5 - REQUIRED ADJACENT TO SHOULDERS, CURBS, SIDEWALKS, AND DIKES.
6 - UNLESS OTHERWISE SHOWN ON PLANS.
⑦ - ADJUSTABLE ARC.
8 - MATCHED PRECIPITATION RATE NOZZLES.
⑨ - REFER TO PIPE SIZING CHARTS.
⑩ - SEE DETAIL

ABBREVIATIONS:

ADJ — ADJUSTABLE
B/B — BRASS/BRONZE
B/B/PL - BRASS/BRONZE/PLASTIC
B/PL — BRASS/PLASTIC
CST — CENTER STRIP
DN — DIAMETER NOMINAL
EST — END STRIP
Ft — FEET
F — FULL CIRCLE
F/P — FULL/PART CIRCLE
GPM — GALLONS PER MINUTE
H — HALF CIRCLE
IPS — IRON PIPE SIZE
NPT — NATIONAL PIPE THREAD
P — PART CIRCLE
PL — PLASTIC
PSI — POUNDS PER SQUARE INCH
Q — QUARTER CIRCLE
SST — SIDE STRIP
T — THIRD CIRCLE
VD — VALVE DECODER
HD — HYDROMETER

LEGEND:

M — Exist REMOTE CONTROL MASTER WITH FLOW SENSOR (RCVMF)
SAT — IRRIGATION SATELLITE CONTROLLER
CCU — IRRIGATION CLUSTER CONTROL UNIT

IRRIGATION CONTROLLER
CONTROLLER STATION
32-4
REMOVE EXISTING VALVE

IRRIGATION CLUSTER CONTROL UNIT - (CCU)
IRRIGATION SATELLITE CONTROLLER - (SAT)
CONTROL VALVE STATION
XX(X)-X
EXISTING VALVE CODE

RCV SIZE
IRRIGATION CLUSTER CONTROL UNIT - (CCU)
IRRIGATION SATELLITE CONTROLLER - (SAT)
CONTROL VALVE STATION
GALLONS PER MINUTE (GPM)
QUANTITY OF SPRINKLERS (WHEN SHOWN)
X-X(X)-XX-XX-XX
PROPOSED VALVE CODE SAT CONTROLLED VALVES

NOTES:

1. ALL NEW LATERAL PIPE NOT LABELED SHALL BE 1", OR AS SHOWN ON PIPE SIZING CHARTS.
2. ALL SPRINKLERS, VALVES, PLASTIC PIPE SUPPLY LINE (MAIN) AND LATERAL LINE NEAR MVP LOCATIONS ARE TO BE INSTALLED OUTSIDE OF THE MVP AREA. VALVES TO BE INSTALLED AT EXITING END OF MVP. SPRINKLERS TO BE INSTALLED 6.5' FROM AT ENTRANCE AND EXIT EDGES.
3. LOCATE VALVE MANIFOLDS AND PLASTIC PIPE SUPPLY LINE (MAIN) OUTSIDE OF MAINTENANCE ACCESS AREAS.
4. ALL NEW PLASTIC PIPE SUPPLY LINE (MAIN) PIPE WHICH HAS A CHANGE IN DIRECTION OF 90 DEGREES OR MORE SHALL HAVE (2)-45 DEGREE ELBOWS.

SCHEDULE 40 PIPE
PIPE SIZE (INCHES)

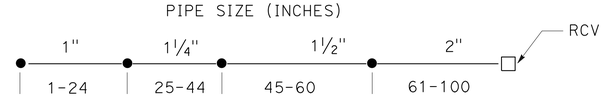

NUMBER OF SPRINKLERS @ 0.5 GPM

PIPE SIZING CHART
C-2 (Mod) SPRINKLERS
(FLOOD BUBBLER)

LANDSCAPE DETAILS

NO SCALE

LD-1

REVISED BY | DATE REVISED
JOHN NEWLON | MARLENE GROS
CALCULATED-DESIGNED BY | CHECKED BY
SENIOR LANDSCAPE ARCHITECT | STEPHEN ALVAREZ

STATE OF CALIFORNIA - DEPARTMENT OF TRANSPORTATION
Caltrans® LANDSCAPE ARCHITECTURE

LAST REVISION 02-19-13 | DATE PLOTTED => 28-FEB-2013 | TIME PLOTTED => 15:43

Dist	COUNTY	ROUTE	POST MILES TOTAL PROJECT	SHEET No.	TOTAL SHEETS
11	SD	805	5.8/13.0	199	216

LICENSED LANDSCAPE ARCHITECT

02-25-13
PLANS APPROVAL DATE

MARLENE J. GROS No. 2517 LICENSED LANDSCAPE ARCHITECT
09-19-13 EXPIRATION DATE
02-19-13 Date
STATE OF CALIFORNIA

THE STATE OF CALIFORNIA OR ITS OFFICERS OR AGENTS SHALL NOT BE RESPONSIBLE FOR THE ACCURACY OR COMPLETENESS OF SCANNED COPIES OF THIS PLAN SHEET.

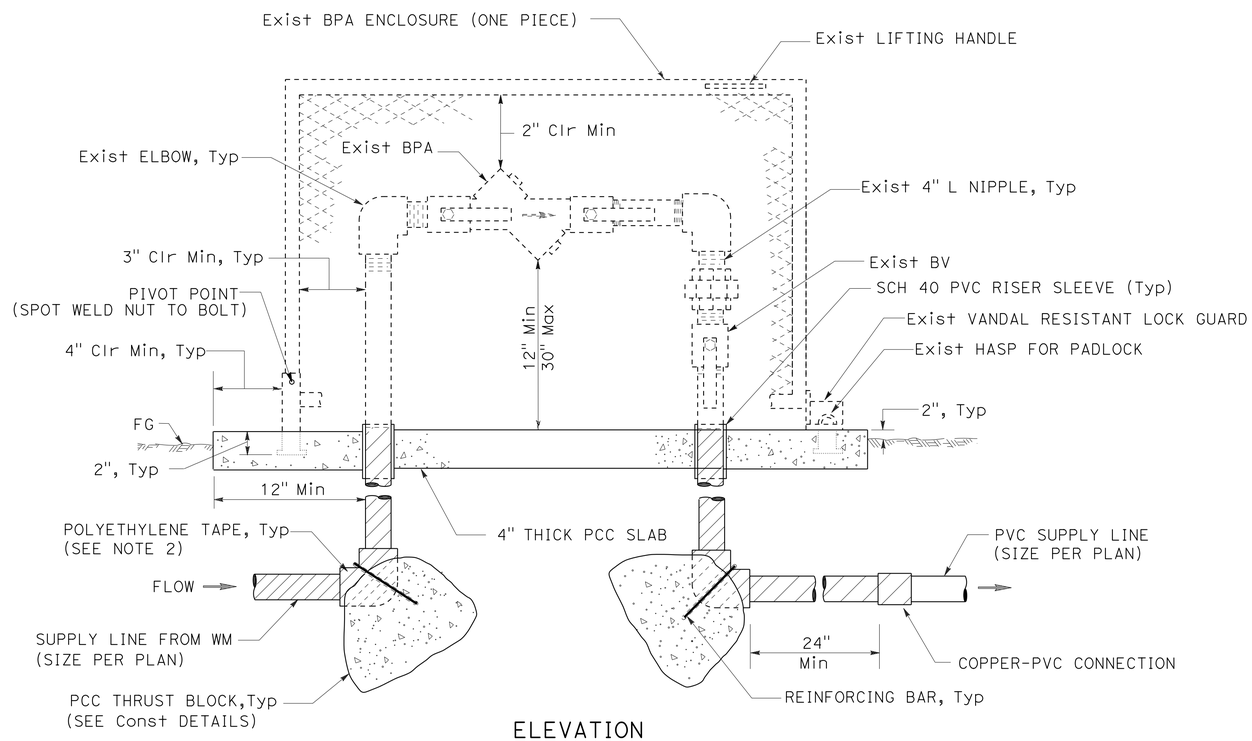

ELEVATION

NOTES:

1. WS AND FITTINGS SHALL BE SAME SIZE AS BACKFLOW PREVENTER SHOWN ON PLANS. BPA SHALL BE CONSTRUCTED WITH COPPER PIPE FROM WM THROUGH BPA TO CONNECTION TO PVC AS SHOWN ON DETAIL.
2. ALL METAL IN CONTACT WITH SOIL AND PCC SHALL BE POLYETHYLENE WRAPPED USING 2 INCH WIDE PLASTIC ADHESIVE TAPE 0.020 INCH THICK WITH 12 INCH OVERLAP.
3. EXPOSED COPPER PIPE SHALL BE PAINTED A TAN OR LIGHT BROWN COLOR TO MATCH ENCLOSURE.

RELOCATE BACKFLOW PREVENTER ASSEMBLY IN ENCLOSURE (BPAE) (MODIFIED)

LANDSCAPE DETAILS

NO SCALE

LD-2

STATE OF CALIFORNIA - DEPARTMENT OF TRANSPORTATION
Caltrans® LANDSCAPE ARCHITECTURE

SENIOR LANDSCAPE ARCHITECT: STEPHEN ALVAREZ
CALCULATED-DESIGNED BY: JOHN NEWLON
CHECKED BY: MARLENE GROS
REVISED BY
DATE REVISED

LAST REVISION 02-19-13
DATE PLOTTED => 28-FEB-2013
TIME PLOTTED => 15:43

Dist	COUNTY	ROUTE	POST MILES TOTAL PROJECT	SHEET No.	TOTAL SHEETS
11	SD	805	5.8/13.0	200	216

LICENSED LANDSCAPE ARCHITECT

02-25-13
PLANS APPROVAL DATE

LICENSED LANDSCAPE ARCHITECT MARLENE J. GROS No. 2970 STATE OF CALIFORNIA
09-19-13 Date
02-19-13 Date

THE STATE OF CALIFORNIA OR ITS OFFICERS OR AGENTS SHALL NOT BE RESPONSIBLE FOR THE ACCURACY OR COMPLETENESS OF SCANNED COPIES OF THIS PLAN SHEET.

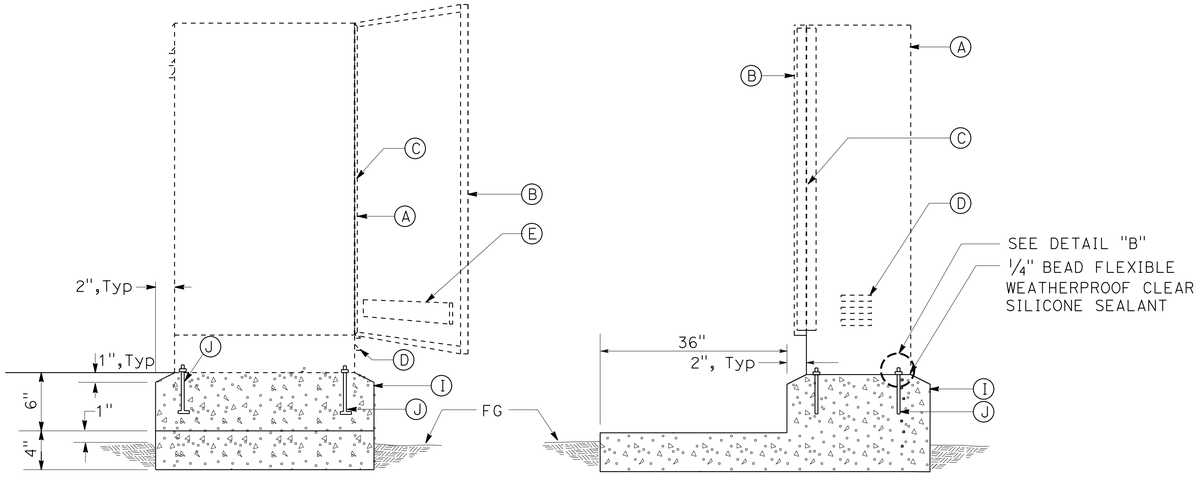

FRONT ELEVATION

SIDE SECTION

CABINET, SECURITY DOOR, AND FOUNDATION

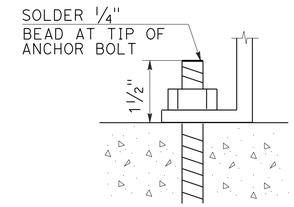

DETAIL "B"

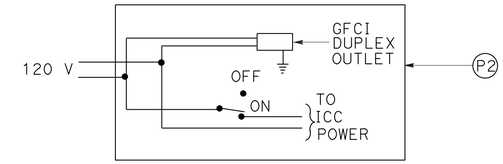

DETAIL "A"

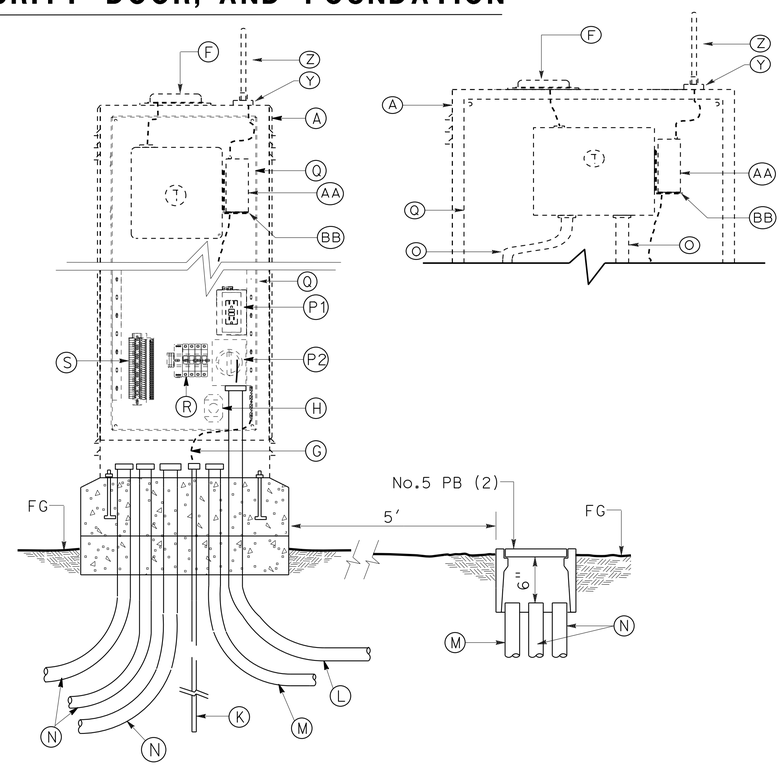

SAT 18(J)' LAYOUT

LEGEND:

- (A) Exist STAINLESS STEEL CONTROLLER ENCLOSURE CABINET (RELACATED)
- (B) Exist DOOR WITH THREE POINT LOCKING MECHANISM, FLUSH-MOUNTED ACCESS HANDLE FOR PADLOCK, AND STORAGE FOR PLANS
- (C) Exist CONTINUOUS STAINLESS STEEL PIANO HINGE
- (D) Exist LOUVERS AT TOP AND BOTTOM FOR CROSS VENTILATION
- (E) Exist STORAGE COMPARTMENT
- (F) Exist LOW PRO ANTENNA AND CABLE (FOR COMMUNICATION BETWEEN CCU AND SAT)
- (G) Exist No. 8 AWG GROUND CONDUCTOR
- (H) Exist SURGE PROTECTION
- (I) PCC PAD AND FOUNDATION
- (J) 3/8" DIAMETER, 2 3/4" LONG, WINGED STAINLESS STEEL ANCHOR BOLTS WITH WASHERS AND HEX HEAD LOCKNUTS (4 BOLTS FOR SINGLE CABINET)
- (K) 5/8" X 10' LONG COPPER CLAD STEEL ROD GROUND ELECTRODE AND GROUND CLAMP WITH No. 8 AWG GROUND CONDUCTOR.
- (L) SIZE 1", TYPE 3 CONDUIT FOR ELECTRICAL SERVICE
- (M) SIZE 1 1/2", TYPE 3 CONDUIT FOR RCVMF INPUT WIRING
- (N) SIZE 2", TYPE 3 CONDUIT FOR LOW VOLTAGE WIRING (2 FOR SINGLE CABINET)
- (O) SIZE 13, TYPE 4 CONDUIT
- (P1) Exist 2 GANG WEATHER PROOF BOX WITH GROUND FAULT PROTECTED RECEPTACLE
- (P2) Exist ON-OFF SWITCH, SEE DETAIL "A" ON THIS SHEET
- (Q) Exist STAINLESS STEEL BACK BOARD (3/16" Min THICKNESS), ATTACHED TO ENCLOSURE
- (R) Exist CIRCUIT BREAKERS
- (S) Exist TERMINAL STRIPS FOR LOW VOLTAGE WIRE CONNECTIONS
- (T) Exist SATELLITE IRRIGATION CONTROLLER (SAT) WITH TWO WAY RADIO CONNECTIONS
- (Y) Exist TRC ANTENNA CONNECTION PORT AND CABLE (FOR CONNECTION TO TRC RECEIVER)
- (Z) Exist REMOVABLE TRC ANTENNA (SIZE DETERMINED BY FIELD RADIO CHECK)
- (AA) Exist REMOVABLE TRC RECEIVER
- (BB) Exist TRC RECEIVER MOUNTING DEVICE

RELOCATE Exist IRRIGATION CONTROLLER ENCLOSURE CABINET

LANDSCAPE DETAILS

NO SCALE

LD-3

STATE OF CALIFORNIA - DEPARTMENT OF TRANSPORTATION
Caltrans LANDSCAPE ARCHITECTURE

SENIOR LANDSCAPE ARCHITECT: STEPHEN ALVAREZ
CALCULATED-DESIGNED BY: JOHN NEWLON
CHECKED BY: MARLENE GROS
REVISED BY / DATE REVISED

LAST REVISION 02-19-13
DATE PLOTTED => 28-FEB-2013
TIME PLOTTED => 15:43

Dist	COUNTY	ROUTE	POST MILES TOTAL PROJECT	SHEET No.	TOTAL SHEETS
11	SD	805	5.8/13.0	201	216

LICENSED LANDSCAPE ARCHITECT

02-25-13
PLANS APPROVAL DATE

LICENSED LANDSCAPE ARCHITECT MARLENE J. GROS No. 2917 STATE OF CALIFORNIA
09-19-13 EXPIRATION DATE
02-19-13 Date

THE STATE OF CALIFORNIA OR ITS OFFICERS OR AGENTS SHALL NOT BE RESPONSIBLE FOR THE ACCURACY OR COMPLETENESS OF SCANNED COPIES OF THIS PLAN SHEET.

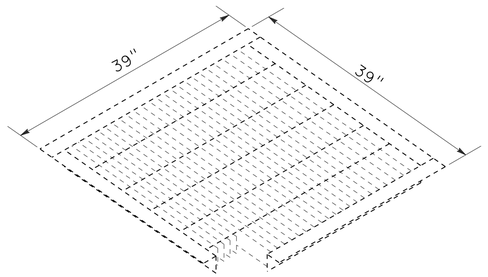

Exist STEEL GRATE

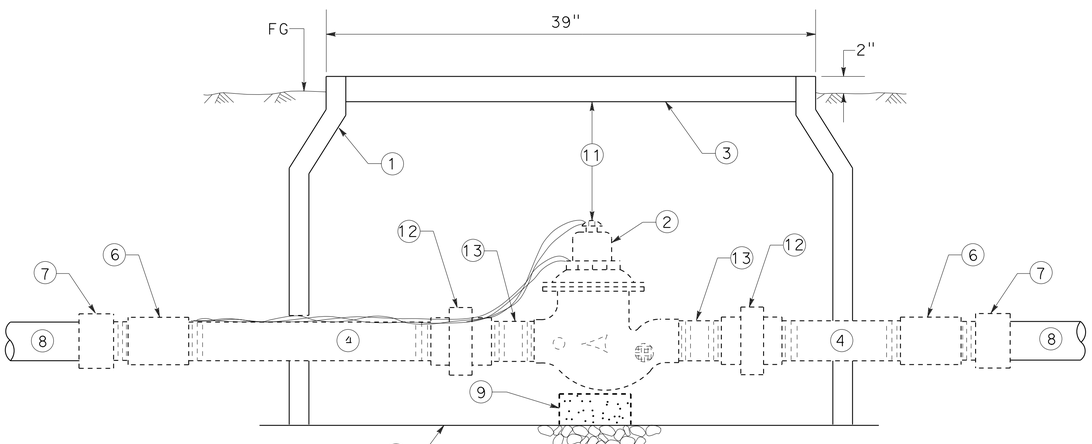

RELOCATE 2" REMOTE CONTROL VALVE (MASTER) WITH FLOW METER (RCVMF)

1. NEW 39"X 39"X 30"DEEP POLY VAULT
2. 2" REMOTE CONTROL VALVE (MASTER) WITH FLOW METER (RCVMF)
3. 39"X 39" GALV STEEL GRATE
4. COPPER OR B/B (LENGTH AS REQUIRED) (SIZE PER PLAN)
5. ¾" CRUSHED GRAVEL SUMP (12" DEEP)
6. COPPER OR B/B COUPLING
7. T X S ADAPTER
8. PVC PIPE (SIZE PER PLAN) (DEPTH PER SPECIFICATIONS)
9. 4"X8"X16" PCC BLOCK
10. WOVEN WIRE CLOTH
11. 4" Min-7" Max
12. COPPER OR B/B UNION
13. COPPER OR B/B NIPPLE (6" LONG)

LANDSCAPE DETAILS

NO SCALE

LD-4

STATE OF CALIFORNIA - DEPARTMENT OF TRANSPORTATION
Caltrans® LANDSCAPE ARCHITECTURE

SENIOR LANDSCAPE ARCHITECT: STEPHEN ALVAREZ
CALCULATED-DESIGNED BY: JOHN NEWLON
CHECKED BY: MARLENE GROS
REVISED BY
DATE REVISED

LAST REVISION 02-19-13
DATE PLOTTED => 28-FEB-2013
TIME PLOTTED => 15:43

Dist	COUNTY	ROUTE	POST MILES TOTAL PROJECT	SHEET No.	TOTAL SHEETS
11	SD	805	5.8/13.0	202	216

LICENSED LANDSCAPE ARCHITECT

02-25-13
PLANS APPROVAL DATE

LICENSED LANDSCAPE ARCHITECT
MARLENE J. GROS No. 2517
09-19-13
02-19-13
STATE OF CALIFORNIA

THE STATE OF CALIFORNIA OR ITS OFFICERS OR AGENTS SHALL NOT BE RESPONSIBLE FOR THE ACCURACY OR COMPLETENESS OF SCANNED COPIES OF THIS PLAN SHEET.

NOTES:

1. DO NOT STAKE VINES WHERE VINES ARE PLANTED AT WALL OPENINGS. USE GREEN TREE PLASTIC TIE TAPE AT THREE PLACES. ATTACH TO WALL WITH EPOXYED VINE TIE SUPPORT.
2. SEE PLANS FOR LIMITS OF MULCH AREA.

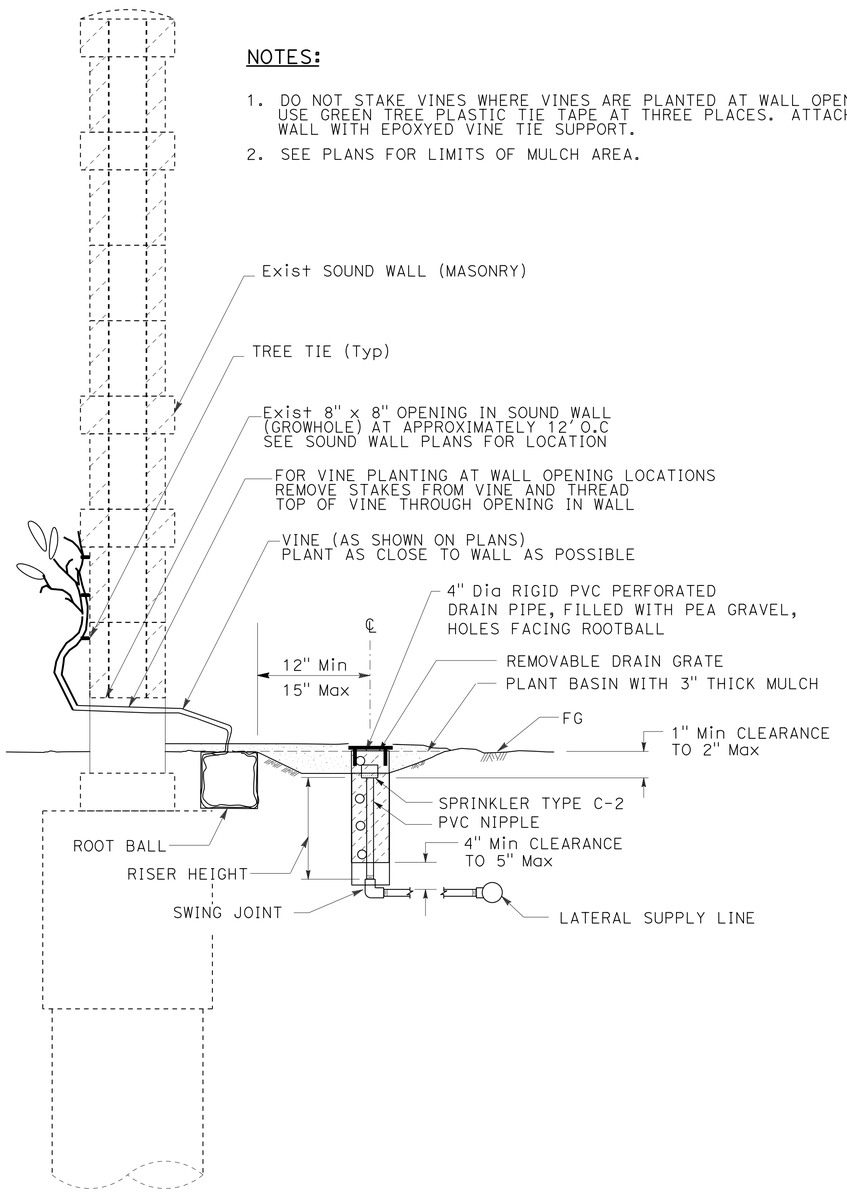

SECTION

VINE PLANTING AT SOUND WALL (MASONRY)

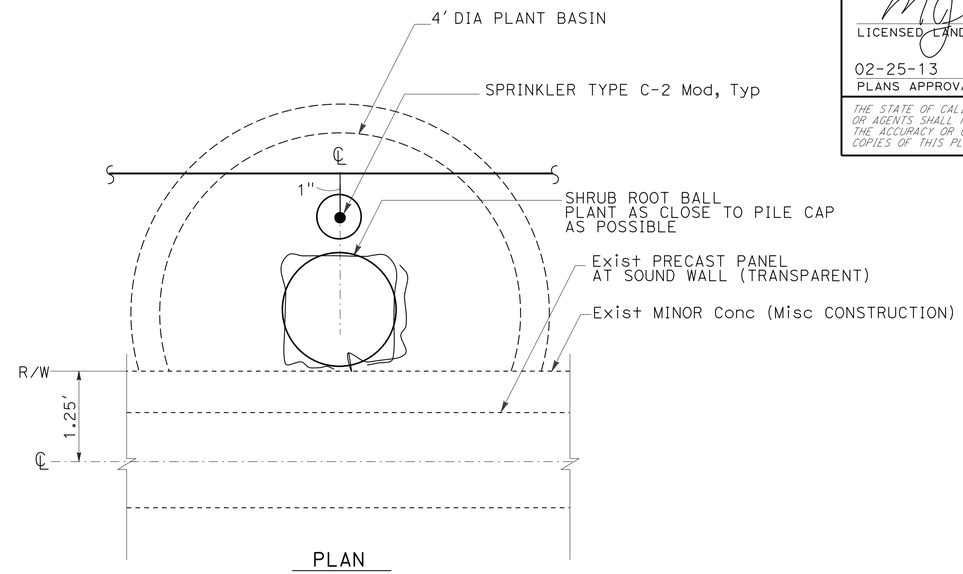

PLAN

SHRUB PLANTING AT SOUND WALL (TRANSPARENT)

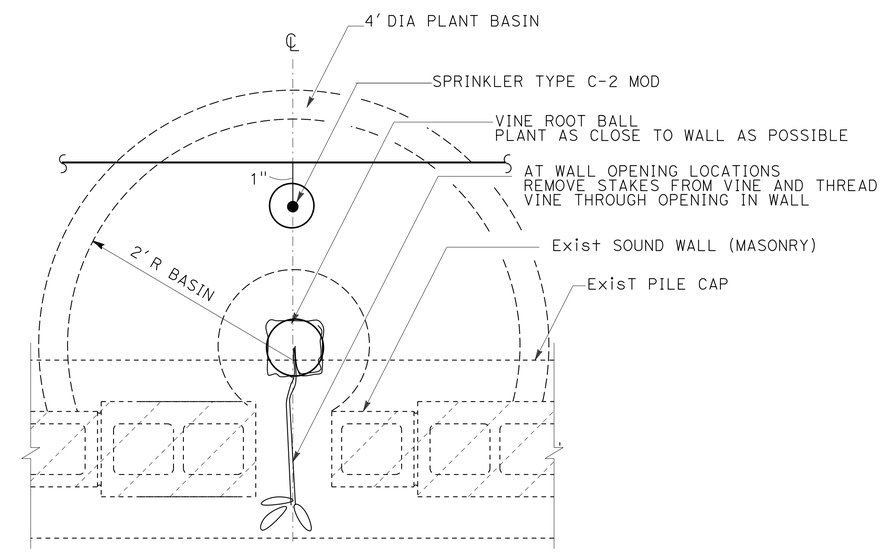

PLAN

VINE PLANTING AT MASONRY WALL OPENING

LANDSCAPE DETAILS

NO SCALE

LD-5

STATE OF CALIFORNIA - DEPARTMENT OF TRANSPORTATION
Caltrans® LANDSCAPE ARCHITECTURE

SENIOR LANDSCAPE ARCHITECT: STEPHEN ALVAREZ
CALCULATED-DESIGNED BY: JOHN NEWLON
CHECKED BY: MARLENE GROS
REVISED BY
DATE REVISED

LAST REVISION 02-19-13
DATE PLOTTED => 28-FEB-2013
TIME PLOTTED => 15:43

Dist	COUNTY	ROUTE	POST MILES TOTAL PROJECT	SHEET No.	TOTAL SHEETS
11	SD	805	5.8/13.0	203	216

LICENSED LANDSCAPE ARCHITECT

02-25-13
PLANS APPROVAL DATE

LICENSED LANDSCAPE ARCHITECT
MARLENE J. GROS No. 2917
09-19-13
EXPIRATION DATE
02-19-13
DATE
STATE OF CALIFORNIA

THE STATE OF CALIFORNIA OR ITS OFFICERS OR AGENTS SHALL NOT BE RESPONSIBLE FOR THE ACCURACY OR COMPLETENESS OF SCANNED COPIES OF THIS PLAN SHEET.

PRUNE Exist PLANTS (TREE)

SHEET	PARCEL	TREE (EA) *
PR-1	-	3
PR-2	-	3
C-16	34928	1
C-17	34928	4

* QUANTITIES ARE FOR INFORMATION ONLY

PLANTING, LANDSCAPE AND EROSION CONTROL QUANTITIES

SHEET	MULCH (WOOD CHIP) CY	WEED GERMINATION SQYD	CULTIVATE SQYD	EROSION CONTROL SQFT (N)	HYDROMULCH SQFT	HYDROSEED SQFT
PP-1	53	3,300	3,300	-	-	-
PP-2	41	3,788	5,650	45,110	45,110	45,110
PP-3	33	-	-	-	-	-
PP-4	167	760	760	-	-	-
PP-5	76	1,240	1,240	-	-	-
PP-6	53	-	-	-	-	-
PP-7	283	1,344	1,344	-	-	-
BASIN	6.36	-	-	-	-	-
TOTAL	718.72	10,462	12,324		45,100	45,100

(N) NOT A SEPARATE PAY ITEM FOR INFORMATION ONLY

LANDSCAPE QUANTITIES

SCALE: 1" = 50'

LQ-1

STATE OF CALIFORNIA - DEPARTMENT OF TRANSPORTATION
Caltrans® LANDSCAPE ARCHITECTURE

SENIOR LANDSCAPE ARCHITECT: STEPHEN ALVAREZ
CALCULATED-DESIGNED BY: MARLENE GROS
CHECKED BY: JASON GROS
REVISED BY
DATE REVISED

LAST REVISION 02-19-13
DATE PLOTTED => 28-FEB-2013
TIME PLOTTED => 15:43

Dist	COUNTY	ROUTE	POST MILES TOTAL PROJECT	SHEET No.	TOTAL SHEETS
11	SD	805	5.8/13.0	204	216

LICENSED LANDSCAPE ARCHITECT

02-25-13
PLANS APPROVAL DATE

LICENSED LANDSCAPE ARCHITECT
MARLENE J. GROS No. 2817
09-19-13 REGISTRATION EXPIRES
02-19-13 DATE
STATE OF CALIFORNIA

THE STATE OF CALIFORNIA OR ITS OFFICERS OR AGENTS SHALL NOT BE RESPONSIBLE FOR THE ACCURACY OR COMPLETENESS OF SCANNED COPIES OF THIS PLAN SHEET.

SUBTOTALS PER VALVE ON LATERAL SUPPLY SIDE OF CONTROL VALVE

DESCRIPTION		UNIT	VALVE NUMBER FOR CONTROLLER 'I'									VALVE NUMBER FOR CONTROLLER 'J'									VALVE NUMBER FOR CONTROLLER 'K'									VALVE NUMBER FOR CONTROLLER 'L'									SUBTOTALS	UNIT	DESCRIPTION		
			1	2	3	4	5	6	7	8	9	1	2	3	4	5	6	7	8	9	1	2	3	4	5	6	7	8	9	1	2	3	4	5	6	7	8	9					
PLASTIC PIPE SUPPLY LINE SCH 40	1"	LF	-	-	160	370	-	531	-	-	-	-	-	-	-	80	160	-	-	-	-	-	-	-	160	160	160	80	-	-	-	120	-	80	-	-	-	-	2,061	LF	1"	SCH 40	PLASTIC PIPE SUPPLY LINE
	1¼"	LF	-	-	80	-	20	190	-	-	-	-	-	-	-	120	240	-	-	-	-	-	-	-	120	50	240	60	-	-	-	50	-	120	-	-	-	-	1,290	LF	1¼"		
	1½"	LF	-	-	-	-	50	55	-	-	-	-	-	-	-	80	40	-	-	-	-	-	-	-	-	-	-	-	-	-	-	-	-	5	-	-	-	-	230	LF	1½"		
	2"	LF	-	-	400	-	-	352	-	-	-	-	-	-	-	90	280	-	-	-	-	-	-	-	-	-	180	-	-	-	-	-	-	-	-	-	-	-	1,302	LF	2"		
SPRINKLER TYPE	A-5	EA	-	-	7	-	-	-	-	-	-	-	-	-	-	1	12	-	-	-	-	-	-	-	-	5	11	4	-	-	-	4	-	6	-	-	-	-	50	EA	A-5	SPRINKLER TYPE	
	A-6	EA	-	-	-	-	-	-	-	-	-	-	-	-	-	5	-	-	-	-	-	-	-	-	8	-	-	-	-	-	-	-	-	-	-	-	-	-	13	EA	A-6		
	A-7	EA	-	-	-	-	-	-	-	-	-	-	-	-	-	-	-	-	-	-	-	-	-	-	-	-	-	-	-	-	-	-	-	-	-	-	-	-	0	EA	A-7		
	A-8	EA	-	-	-	-	-	-	-	-	-	-	-	-	-	-	-	-	-	-	-	-	-	-	-	-	-	-	-	-	-	-	-	-	-	-	-	-	0	EA	A-8		
	A-11	EA	-	-	-	-	-	-	-	-	-	-	-	-	-	-	-	-	-	-	-	-	-	-	-	-	-	-	-	-	-	-	-	-	-	-	-	-	0	EA	A-11		
	A-12	EA	-	-	-	-	-	-	-	-	-	-	-	-	-	-	-	-	-	-	-	-	-	-	-	-	-	-	-	-	-	-	-	-	-	-	-	-	0	EA	A-12		
	C-2 Mod	EA	-	-	-	-	-	97	-	-	-	-	-	-	-	-	-	-	-	-	-	-	-	-	-	-	-	-	-	-	-	-	-	-	-	-	-	-	97	EA	C-2 Mod		

DESCRIPTION		UNIT	VALVE NUMBER FOR CONTROLLER 'E'									VALVE NUMBER FOR CONTROLLER 'F'									VALVE NUMBER FOR CONTROLLER 'G'									VALVE NUMBER FOR CONTROLLER'17(A)'									SUBTOTALS	UNIT	DESCRIPTION		
			1	2	3	4	5	6	7	8	9	1	2	3	4	5	6	7	8	9	1	2	3	4	5	6	7	8	9	1	2	3	4	5	6	7	8	9					
PLASTIC PIPE SUPPLY LINE SCH 40	1"	LF	-	-	70	440	-	-	-	-	-	-	-	-	-	45	760	-	-	-	-	-	-	-	-	-	83	35	-	290	210	10	200	-	-	-	-	-	2,143	LF	1"	SCH 40	PLASTIC PIPE SUPPLY LINE
	1¼"	LF	-	-	-	-	-	-	-	-	-	-	-	-	-	-	-	-	-	-	-	-	-	-	-	-	-	-	-	40	25	65	20	-	-	-	-	-	150	LF	1¼"		
	1½"	LF	-	-	-	160	-	-	-	-	-	-	-	-	-	-	255	-	-	-	-	-	-	-	-	-	-	-	-	-	20	-	10	-	-	-	-	-	445	LF	1½"		
	2"	LF	-	-	-	-	-	-	-	-	-	-	-	-	-	-	45	-	-	-	-	-	-	-	-	-	-	-	-	-	-	-	30	-	-	-	-	-	75	LF	2"		
SPRINKLER TYPE	A-5	EA	-	-	-	-	-	-	-	-	-	-	-	-	-	-	-	-	-	-	-	-	-	-	-	-	2	-	-	-	-	-	6	-	-	-	-	-	8	EA	A-5	SPRINKLER TYPE	
	A-6	EA	-	-	-	-	-	-	-	-	-	-	-	-	-	-	-	-	-	-	-	-	-	-	-	-	1	-	-	-	-	-	-	-	-	-	-	-	1	EA	A-6		
	A-7	EA	-	-	2	-	-	-	-	-	-	-	-	-	-	1	-	-	-	-	-	-	-	-	-	-	-	-	-	-	-	-	-	-	-	-	-	-	3	EA	A-7		
	A-8	EA	-	-	-	-	-	-	-	-	-	-	-	-	-	-	-	-	-	-	-	-	-	-	-	-	-	1	-	-	-	-	-	-	-	-	-	-	1	EA	A-8		
	A-11	EA	-	-	-	-	-	-	-	-	-	-	-	-	-	-	-	-	-	-	-	-	-	-	-	-	-	-	-	-	1	1	-	-	-	-	-	-	1	EA	A-11		
	A-12	EA	-	-	-	-	-	-	-	-	-	-	-	-	-	-	-	-	-	-	-	-	-	-	-	-	-	-	-	-	9	-	-	-	-	-	-	-	9	EA	A-12		
	C-2 Mod	EA	-	-	-	52	-	-	-	-	-	-	-	-	-	-	50	-	-	-	-	-	-	-	-	-	-	-	-	25	-	-	-	-	-	-	-	-	127	EA	C-2 Mod		

IRRIGATION QUANTITIES
IQ-1

STATE OF CALIFORNIA - DEPARTMENT OF TRANSPORTATION
Caltrans® LANDSCAPE ARCHITECTURE

SENIOR LANDSCAPE ARCHITECT: STEPHEN ALVAREZ
CALCULATED-DESIGNED BY: JOHN NEWLON
CHECKED BY: MARLENE GROS
REVISED BY
DATE REVISED

LAST REVISION 02-19-13
DATE PLOTTED => 28-FEB-2013
TIME PLOTTED => 15:43

Dist	COUNTY	ROUTE	POST MILES TOTAL PROJECT	SHEET No.	TOTAL SHEETS
11	SD	805	5.8/13.0	205	216

LICENSED LANDSCAPE ARCHITECT

02-25-13
PLANS APPROVAL DATE

LICENSED LANDSCAPE ARCHITECT MARLENE J. GROS No. 2817 STATE OF CALIFORNIA
09-19-13 EXPIRATION DATE
02-19-13 DATE

THE STATE OF CALIFORNIA OR ITS OFFICERS OR AGENTS SHALL NOT BE RESPONSIBLE FOR THE ACCURACY OR COMPLETENESS OF SCANNED COPIES OF THIS PLAN SHEET.

SUBTOTALS PER VALVE ON LATERAL SUPPLY SIDE OF CONTROL VALVE

DESCRIPTION		UNIT	VALVE NUMBER FOR CONTROLLER '18(D)'												SUBTOTALS	UNIT	DESCRIPTION	
			1	2	3	4	5	6	7	8	9	10	11	12				
PLASTIC PIPE SUPPLY LINE	SCH 40	1"	LF	-	-	-	-	-	48	690	-	96	-	96	162	3,283	LF	1"
		1¼"	LF	-	-	-	-	-	192	84	-	144	-	192	10	2,210	LF	1¼"
		1½"	LF	-	-	-	-	-	-	170	-	-	-	-	-	608	LF	1½"
		2"	LF	-	-	-	-	-	114	-	-	20	-	85	-	2,042	LF	2"
				-														
SPRINKLER TYPE		A-5	EA	-	-	-	-	-	-	-	-	-	-	-	-	0	EA	A-5
		A-6	EA	-	-	-	-	-	-	-	-	-	-	-	-	0	EA	A-6
		A-7	EA	-	-	-	-	-	5	-	-	6	-	7	-	57	EA	A-7
		A-8	EA	-	-	-	-	-	-	-	-	-	-	-	-	0	EA	A-8
		A-11	EA	-	-	-	-	-	-	-	-	-	-	-	7	7	EA	A-11
		A-12	EA	-	-	-	-	-	-	-	-	-	-	-	-	0	EA	A-12
		C-2 Mod	EA	-	-	-	-	-	-	54	-	-	-	-	-	202	EA	C-2 Mod

DESCRIPTION		UNIT	VALVE NUMBER FOR CONTROLLER '18(H)'														SUBTOTALS	UNIT	DESCRIPTION	
			1	2	3	4	5	6	7	8	9	10	11	29	30					
PLASTIC PIPE SUPPLY LINE	SCH 40	1"	LF	-	-	96	96	-	-	-	96	-	96	-	618	411	3,283	LF	1"	SCH 40 PLASTIC PIPE SUPPLY LINE
		1¼"	LF	-	-	192	192	-	-	-	192	-	144	-	216	144	2,210	LF	1¼"	
		1½"	LF	-	-	-	-	-	-	-	-	-	-	-	-	120	608	LF	1½"	
		2"	LF	-	-	182	169	-	-	-	182	-	160	-	340	780	2,042	LF	2"	
SPRINKLER TYPE		A-5	EA	-	-	-	-	-	-	-	-	-	-	-	-	-	0	EA	A-5	SPRINKLER TYPE
		A-6	EA	-	-	-	-	-	-	-	-	-	-	-	-	-	0	EA	A-6	
		A-7	EA	-	-	7	7	-	-	-	7	-	6	-	-	-	57	EA	A-7	
		A-8	EA	-	-	-	-	-	-	-	-	-	-	-	-	-	0	EA	A-8	
		A-11	EA	-	-	-	-	-	-	-	-	-	-	-	-	-	7	EA	A-11	
		A-12	EA	-	-	-	-	-	-	-	-	-	-	-	-	-	0	EA	A-12	
		C-2 Mod	EA	-	-	-	-	-	-	-	-	-	-	-	73	-	202	EA	C-2 Mod	

DESCRIPTION		UNIT	VALVE NUMBER FOR CONTROLLER '18(I)'								SUBTOTALS	UNIT	DESCRIPTION	
			26	27	28	29	30	31	32	33				
PLASTIC PIPE SUPPLY LINE	SCH 40	1"	LF	-	-	48	-	-	-	96	634	3,283	LF	1"
		1¼"	LF	-	-	96	-	-	-	192	220	2,210	LF	1¼"
		1½"	LF	-	-	30	-	-	-	48	240	608	LF	1½"
		2"	LF	-	-	-	-	-	-	10	-	2,042	LF	2"
SPRINKLER TYPE		A-5	EA	-	-	-	-	-	-	-	-	0	EA	A-5
		A-6	EA	-	-	-	-	-	-	-	-	0	EA	A-6
		A-7	EA	-	-	4	-	-	-	8	-	57	EA	A-7
		A-8	EA	-	-	-	-	-	-	-	-	0	EA	A-8
		A-11	EA	-	-	-	-	-	-	-	-	7	EA	A-11
		A-12	EA	-	-	-	-	-	-	-	-	0	EA	A-12
		C-2 Mod	EA	-	-	-	-	-	-	-	75	202	EA	C-2 Mod

DESCRIPTION		UNIT	VALVE NUMBER FOR CONTROLLER '18(J)'																																						SUBTOTALS	UNIT	DESCRIPTION	
			1	2	3	4	5	6	7	8	9	10	11	12	13	14	15	16	17	18	19	20	21	22	23	24	25	26	27	28	29	30	31	32	33	34	35	36	37	38				
PLASTIC PIPE SUPPLY LINE	SCH 40	1"	LF	-	-	608	-	95	96	-	-	-	96	-	-	-	-	96	-	-	-	531	-	-	-	48	-	-	-	-	-	-	-	-	-	-	-	-	-	-	-	1,570	LF	1"	SCH 40 PLASTIC PIPE SUPPLY LINE
		1¼"	LF	-	-	307	-	-	192	-	-	-	192	-	-	-	-	192	-	-	-	104	-	-	-	-	-	-	-	-	-	-	-	-	-	-	-	-	-	-	-	987	LF	1¼"	
		1½"	LF	-	-	240	-	-	-	-	-	-	-	-	-	-	-	-	-	-	-	120	-	-	-	48	-	-	-	-	-	-	-	-	-	-	-	-	-	-	-	408	LF	1½"	
		2"	LF	-	-	110	-	-	15	-	-	-	10	-	-	-	-	10	-	-	-	334	-	-	-	10	-	-	-	-	-	-	-	-	-	-	-	-	-	-	-	489	LF	2"	
SPRINKLER TYPE		A-5	EA	-	-	-	-	-	-	-	-	-	-	-	-	-	-	-	-	-	-	-	-	-	-	-	-	-	-	-	-	-	-	-	-	-	-	-	-	-	-	0	EA	A-5	SPRINKLER TYPE
		A-6	EA	-	-	-	-	-	-	-	-	-	-	-	-	-	-	-	-	-	-	-	-	-	-	-	-	-	-	-	-	-	-	-	-	-	-	-	-	-	-	0	EA	A-6	
		A-7	EA	-	-	-	-	-	7	-	-	-	7	-	-	-	-	7	-	-	-	-	-	-	-	3	-	-	-	-	-	-	-	-	-	-	-	-	-	-	-	24	EA	A-7	
		A-8	EA	-	-	-	-	-	-	-	-	-	-	-	-	-	-	-	-	-	-	-	-	-	-	-	-	-	-	-	-	-	-	-	-	-	-	-	-	-	-	0	EA	A-8	
		A-11	EA	-	-	-	-	4	-	-	-	-	-	-	-	-	-	-	-	-	-	-	-	-	-	-	-	-	-	-	-	-	-	-	-	-	-	-	-	-	-	4	EA	A-11	
		A-12	EA	-	-	-	-	1	-	-	-	-	-	-	-	-	-	-	-	-	-	-	-	-	-	-	-	-	-	-	-	-	-	-	-	-	-	-	-	-	-	1	EA	A-12	
		C-2 Mod	EA	-	-	99	-	-	-	-	-	-	-	-	-	-	-	-	-	-	-	94	-	-	-	-	-	-	-	-	-	-	-	-	-	-	-	-	-	-	-	193	EA	C-2 Mod	

IRRIGATION QUANTITIES
IQ-2

STATE OF CALIFORNIA - DEPARTMENT OF TRANSPORTATION
Caltrans® LANDSCAPE ARCHITECTURE

SENIOR LANDSCAPE ARCHITECT: STEPHEN ALVAREZ
CALCULATED-DESIGNED BY: JOHN NEWLON
CHECKED BY: MARLENE GROS
REVISED BY
DATE REVISED

LAST REVISION 02-19-13
DATE PLOTTED => 28-FEB-2013
TIME PLOTTED => 15:43

Dist	COUNTY	ROUTE	POST MILES TOTAL PROJECT	SHEET No.	TOTAL SHEETS
11	SD	805	5.8/13.0	206	216

LICENSED LANDSCAPE ARCHITECT

02-25-13
PLANS APPROVAL DATE

LICENSED LANDSCAPE ARCHITECT
MARLENE J. GROS No. 2917
09-19-13 PROFESSIONAL DATE
02-19-13 DATE
STATE OF CALIFORNIA

THE STATE OF CALIFORNIA OR ITS OFFICERS OR AGENTS SHALL NOT BE RESPONSIBLE FOR THE ACCURACY OR COMPLETENESS OF SCANNED COPIES OF THIS PLAN SHEET.

SUBTOTALS PER PLAN SHEET ON MAIN SUPPLY SIDE OF CONTROL VALVE

DESCRIPTION			UNIT	SHEET NUMBER IP-1	IP-2	IP-3	IP-4	IP-5	IP-6	SUBTOTALS
BPA		RELOCATE Exist 2 INCH BPA AND ENCLOSURE	EA	-	-	-	-	-	1	1
WATER METER		1 INCH	EA	-	-	-	-	-	-	-
WATER METER		2 INCH	EA	-	-	-	-	-	-	-
WATER METER		3 INCH	EA	-	-	-	-	-	-	-
BOOSTER PUMP			EA	-	-	-	-	-	-	-
IRRIGATION CONTROLLER	CCU	6 CHANNEL	EA	-	-	-	-	-	-	-
IRRIGATION CONTROLLER	CCU	28 CHANNEL	EA	-	-	-	-	-	-	-
IRRIGATION CONTROLLER	SAT CEC	RELOCATE Exist 40 STATION SAT AND Exist SINGLE CEC	EA	-	-	-	-	-	1	1
VALVES AND ASSEMBLIES	RCVMF	RELOCATE Exist 2 INCH	EA	-	-	-	-	-	1	1
VALVES AND ASSEMBLIES	RCV	1 INCH	EA	1	-	-	-	-	3	4
VALVES AND ASSEMBLIES	RCV	1½ INCH	EA	5	-	-	2	-	3	10
VALVES AND ASSEMBLIES	RCV	2 INCH	EA	-	-	-	-	-	-	-
VALVES AND ASSEMBLIES	GV	1 INCH	EA	-	-	-	-	-	-	-
VALVES AND ASSEMBLIES	GV	1¼ INCH	EA	-	-	-	-	-	-	-
VALVES AND ASSEMBLIES	GV	1½ INCH	EA	-	-	-	-	-	-	-
VALVES AND ASSEMBLIES	GV	2 INCH	EA	1	-	-	1	-	2	4
VALVES AND ASSEMBLIES	GV	3 INCH	EA		-	-	-	-	1	1
VALVES AND ASSEMBLIES	QCV	1 INCH	EA	-	-	-	-	-	-	-
VALVES AND ASSEMBLIES	QCV	1½ INCH	EA	-	-	-	-	-	-	-
VALVES AND ASSEMBLIES	FIA									
VALVES AND ASSEMBLIES	FAU									
CONDUIT	CSP									
CONDUIT	WSP									
PLASTIC PIPE SUPPLY LINE	SCH 40	1 INCH	LF	-	-	-	-	-	-	-
PLASTIC PIPE SUPPLY LINE	SCH 40	1¼ INCH	LF	-	-	-	-	-	-	-
PLASTIC PIPE SUPPLY LINE	SCH 40	1½ INCH	LF	-	-	-	-	-	-	-
PLASTIC PIPE SUPPLY LINE	SCH 40	2 INCH	LF	-	-	-	-	-	-	-
PLASTIC PIPE SUPPLY LINE	SCH 40	2½ INCH	LF	70	-	-	10	-	60	140
PLASTIC PIPE SUPPLY LINE	SCH 40	3 INCH	LF	60	-	-	70	-	60	190
DIP	GSP									

TOTAL QUANTITIES

TOTALS	UNIT	DESCRIPTION		
1	EA	RELOCATE Exist 2 INCH BPA AND ENCLOSURE	BPA	
-	EA	1 INCH	WATER METER	
-	EA	2 INCH	WATER METER	
-	EA	3 INCH	WATER METER	
-	EA	BOOSTER PUMP		
-	EA	6 CHANNEL	CCU	IRRIGATION CONTROLLER
-	EA	28 CHANNEL	CCU	IRRIGATION CONTROLLER
1	EA	RELOCATE Exist 40 STATION SAT AND Exist SINGLE CEC	SAT CEC	IRRIGATION CONTROLLER
1	EA	RELOCATE Exist 3 INCH	RCVMF	VALVES AND ASSEMBLIES
4	EA	1 INCH	RCV	VALVES AND ASSEMBLIES
10	EA	1½ INCH	RCV	VALVES AND ASSEMBLIES
-	EA	2 INCH	RCV	VALVES AND ASSEMBLIES
-	EA	1 INCH	GV	VALVES AND ASSEMBLIES
-	EA	1¼ INCH	GV	VALVES AND ASSEMBLIES
-	EA	1½ INCH	GV	VALVES AND ASSEMBLIES
4	EA	2 INCH	GV	VALVES AND ASSEMBLIES
1	EA	3 INCH	GV	VALVES AND ASSEMBLIES
-	EA	1 INCH	QCV	VALVES AND ASSEMBLIES
-	EA	1½ INCH	QCV	VALVES AND ASSEMBLIES
			FIA	VALVES AND ASSEMBLIES
			FAU	VALVES AND ASSEMBLIES
			CSP	CONDUIT
			WSP	CONDUIT
9,057	LF	1 INCH	SCH 40	PLASTIC PIPE SUPPLY LINE
4,637	LF	1¼ INCH	SCH 40	PLASTIC PIPE SUPPLY LINE
1,691	LF	1½ INCH	SCH 40	PLASTIC PIPE SUPPLY LINE
3,908	LF	2 INCH	SCH 40	PLASTIC PIPE SUPPLY LINE
140	LF	2½ INCH	SCH 40	PLASTIC PIPE SUPPLY LINE
190	LF	3 INCH	SCH 40	PLASTIC PIPE SUPPLY LINE
			GSP	DIP
58	EA	A-5		SPRINKLER TYPE
14	EA	A-6		SPRINKLER TYPE
84	EA	A-7		SPRINKLER TYPE
1	EA	A-8		SPRINKLER TYPE
12	EA	A-11		SPRINKLER TYPE
10	EA	A-12		SPRINKLER TYPE
619	EA	C-2 Mod		SPRINKLER TYPE

IRRIGATION QUANTITIES

NO SCALE

IQ-3

STATE OF CALIFORNIA - DEPARTMENT OF TRANSPORTATION
Caltrans® LANDSCAPE ARCHITECTURE

SENIOR LANDSCAPE ARCHITECT: STEPHEN ALVAREZ
CALCULATED-DESIGNED BY: MARLENE GROS
CHECKED BY: JOHN NEWLON
REVISED BY
DATE REVISED

LAST REVISION 02-19-13
DATE PLOTTED => 28-FEB-2013
TIME PLOTTED => 15:43

Dist	COUNTY	ROUTE	POST MILES TOTAL PROJECT	SHEET No.	TOTAL SHEETS
11	SD	805	5.8/13.0	207	216

REGISTERED ELECTRICAL ENGINEER 02-14-13 DATE

02-25-13
PLANS APPROVAL DATE

REGISTERED PROFESSIONAL ENGINEER DANNY D. McCLURE No. 16074 Exp. 12-31-13 ELECTRICAL STATE OF CALIFORNIA

THE STATE OF CALIFORNIA OR ITS OFFICERS OR AGENTS SHALL NOT BE RESPONSIBLE FOR THE ACCURACY OR COMPLETENESS OF SCANNED COPIES OF THIS PLAN SHEET.

FOR ACCURATE RIGHT OF WAY AND ACCESS DATA, CONTACT RIGHT OF WAY ENGINEERING AT THE DISTRICT OFFICE.

NOTES:

1 - REUSE TELEPHONE SIC.

2 - AB CONDUIT.

3 - COIL EXCESS TELEPHONE SIC CABLE IN PULL BOX.

CONDUIT NOTES:

1 - Exist 2"C, 1 sic

2 - 2"C, 1 SIC (REUSED)

3 - Exist 2"C, 1 sic

N 4 C - Exist 2"C, service conductors

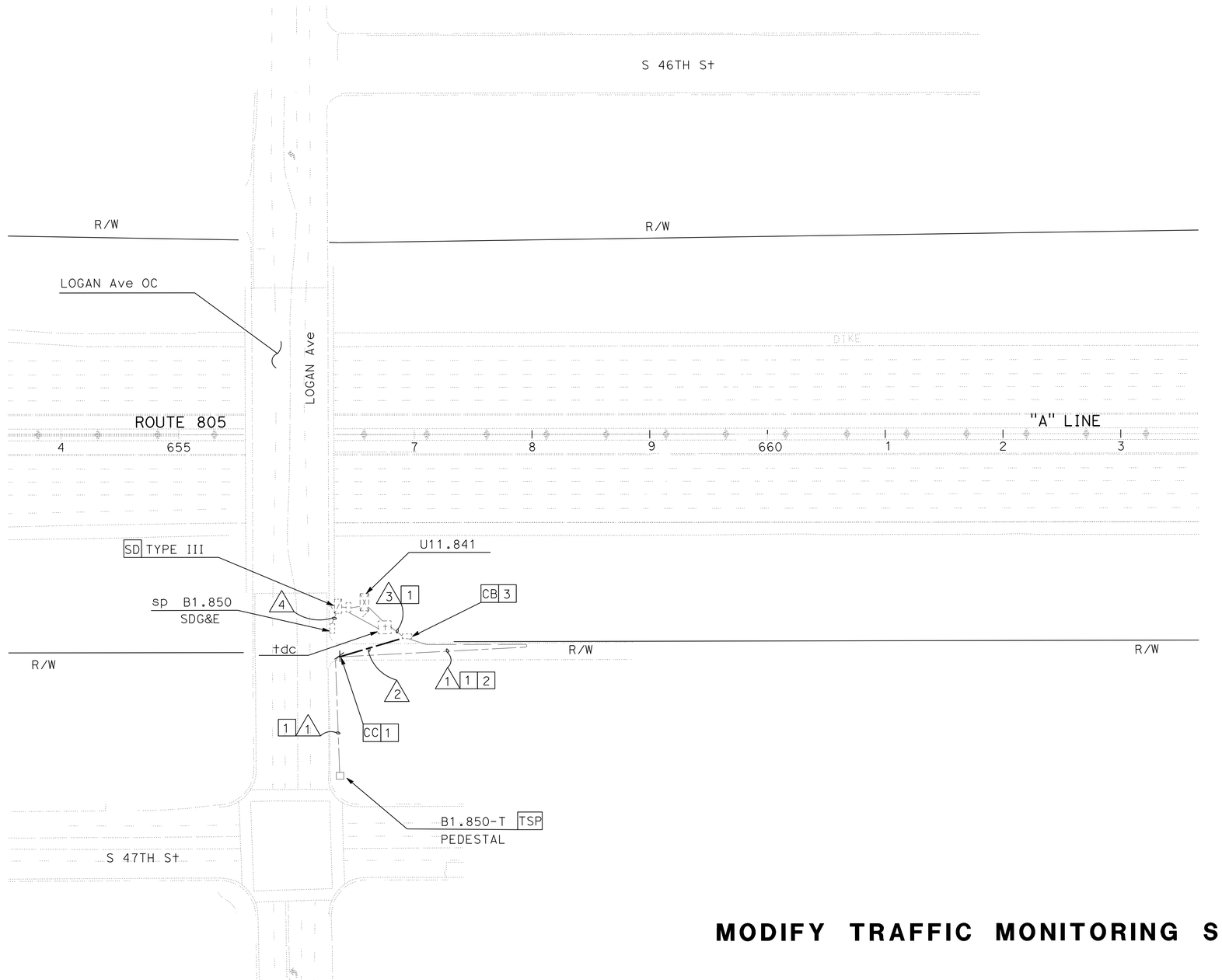

MODIFY TRAFFIC MONITORING STATION

E-1

SCALE: 1"= 50'

APPROVED FOR ELECTRICAL WORK ONLY

STATE OF CALIFORNIA - DEPARTMENT OF TRANSPORTATION
Caltrans® TRAFFIC ELECTRICAL

FUNCTIONAL SUPERVISOR: BRIAN PECUS
CALCULATED-DESIGNED BY: DANNY MCCLURE
CHECKED BY: JOSEPH RAND
REVISED BY
DATE REVISED

LAST REVISION 02-19-2013 | DATE PLOTTED => 28-FEB-2013 | TIME PLOTTED => 15:43

Dist	COUNTY	ROUTE	POST MILES TOTAL PROJECT	SHEET No.	TOTAL SHEETS
11	SD	805	5.8/13.0	208	216

REGISTERED ELECTRICAL ENGINEER 02-14-13 DATE

02-25-13
PLANS APPROVAL DATE

REGISTERED PROFESSIONAL ENGINEER DANNY D. McCLURE No. 16074 Exp. 12-31-13 ELECTRICAL STATE OF CALIFORNIA

THE STATE OF CALIFORNIA OR ITS OFFICERS OR AGENTS SHALL NOT BE RESPONSIBLE FOR THE ACCURACY OR COMPLETENESS OF SCANNED COPIES OF THIS PLAN SHEET.

FOR ACCURATE RIGHT OF WAY AND ACCESS DATA, CONTACT RIGHT OF WAY ENGINEERING AT THE DISTRICT OFFICE.

CONDUIT NOTES:

1 - 2"C, 2#12 (CEC)

N C 2 - Exist 2"C, 2#6(signal), 3#14(peu), 2#12 (CEC)

N C 3 - Exist 2"C, service conductors

4 - Exist 2"C with 2#12 (CEC)

5 - Exist 2"C with 2#6(signal), 3#14(peu)

NOTES:

1 - REMOVE SERVICE CONDUCTORS.
SEE LANDSCAPE PLAN FOR CABINET DETAILS.

2 - IRRIGATION CONTROLLER CABINET
SEE IRRIGATION PLAN.ADD SERVICE CONDUCTORS.

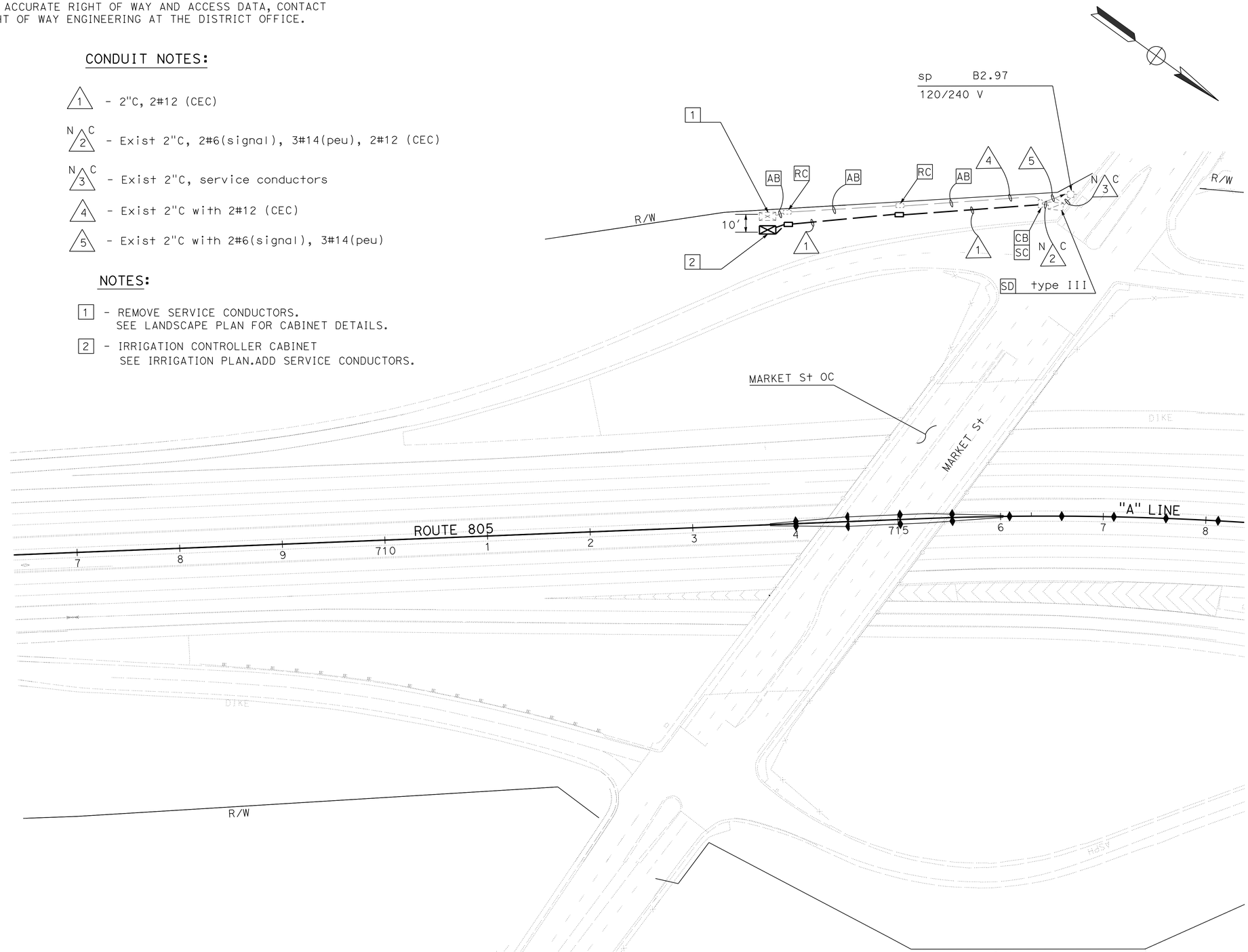

ELECTRIC SERVICE (IRRIGATION)

E-2

APPROVED FOR ELECTRICAL WORK ONLY

SCALE: 1"= 50'

STATE OF CALIFORNIA - DEPARTMENT OF TRANSPORTATION
Caltrans® TRAFFIC ELECTRICAL

FUNCTIONAL SUPERVISOR: BRIAN PECUS
CALCULATED-DESIGNED BY: ENRIQUE BERNAL
CHECKED BY: DANNY MCCLURE
REVISED BY
DATE REVISED

LAST REVISION DATE PLOTTED => 28-FEB-2013
TIME PLOTTED => 15:43
02-19-2013

Dist	COUNTY	ROUTE	POST MILES TOTAL PROJECT	SHEET No.	TOTAL SHEETS
11	SD	805	5.8/13.0	209	216

REGISTERED CIVIL ENGINEER 12-7-12 DATE

02-25-13
PLANS APPROVAL DATE

REGISTERED PROFESSIONAL ENGINEER Gurinderpal Bhullar No. C48815 Exp. 9-30-14 CIVIL STATE OF CALIFORNIA

THE STATE OF CALIFORNIA OR ITS OFFICERS OR AGENTS SHALL NOT BE RESPONSIBLE FOR THE ACCURACY OR COMPLETENESS OF SCANNED COPIES OF THIS PLAN SHEET.

NOTES:

Unless otherwise specified in the special provisions, all temporary warning signs shall have black legend on orange background.

California code are designated by (CA). Otherwise, Federal (MUTCD) codes are shown.

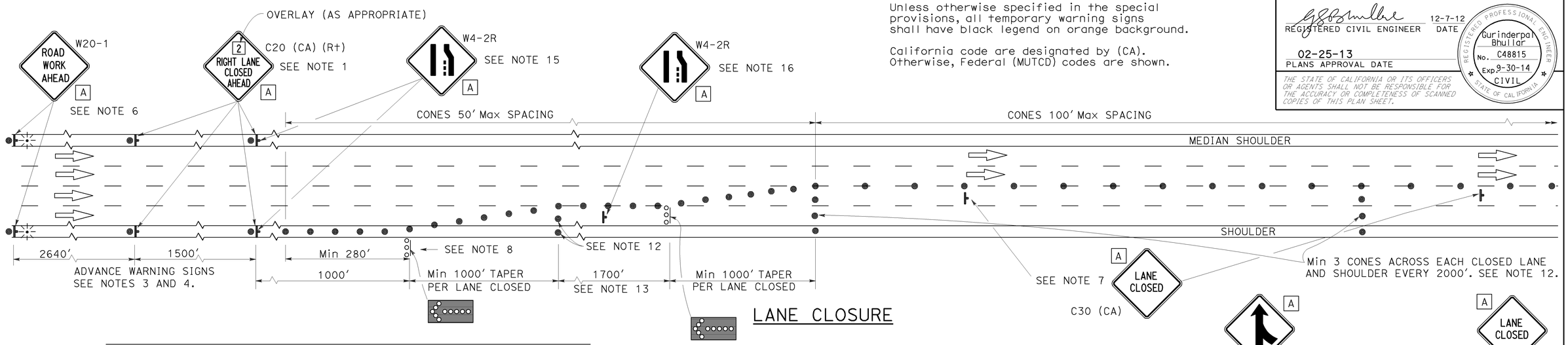

LANE CLOSURE

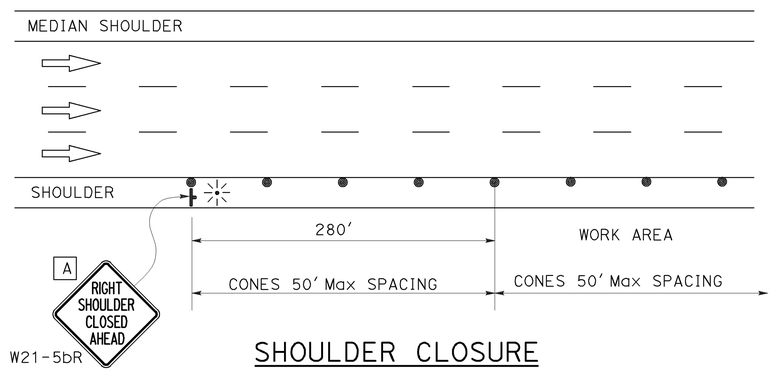

SHOULDER CLOSURE

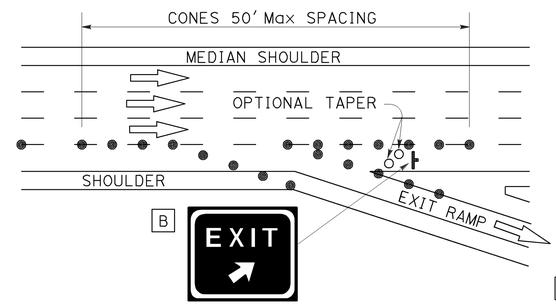

LANE CLOSURE AT EXIT RAMP

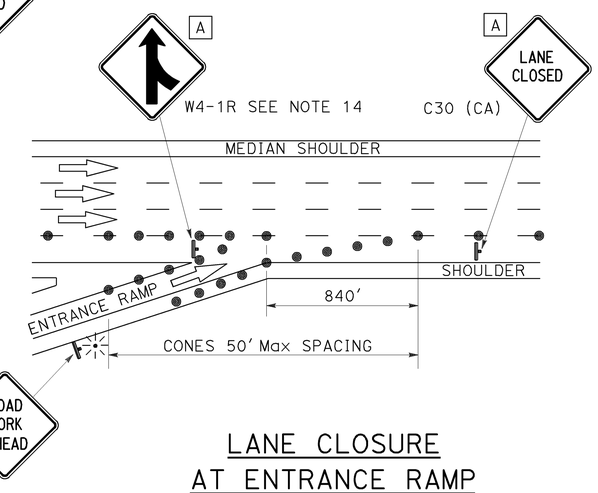

LANE CLOSURE AT ENTRANCE RAMP

NOTES:

1. Median lane closures shall conform to the details for outside lane closures except that C20 (CA) (Lt) signs shall be used.
2. At least one person shall be assigned to provide full time maintenance of traffic control devices for lane closures.
3. Duplicate sign installations are not required:
   a) On opposite shoulder if at least one-half of the available lanes remain open to traffic.
   b) In the median if the width of the median shoulder is less than 8' and the outside lanes are to be closed.
4. Each advance warning sign on each side of the roadway shall be equipped with at least two flags for daytime closure. Each flag shall be at least 16" x 16" in size and shall be orange or fluorescent red-orange in color. Flashing beacons shall be placed at the locations indicated for lane closure during hours of darkness.
5. A C14 (CA) "END ROAD WORK" sign, as appropriate, shall be placed at the end of the lane closure unless the end of work area is obvious or ends within a larger project's limits.
6. If the W20-1 sign would follow within 2000' of a stationary W20-1 or C11 (CA) "ROAD WORK NEXT _____ MILES", use a C20 (CA) sign for the first advance warning sign.
7. Place a C30 (CA) sign every 2000' throughout length of lane closure.
8. One flashing arrow sign for each lane closed. The first flashing arrow sign shall be Type I. All others may be either Type I or Type II.
9. A minimum 1500' of sight distance shall be provided where possible for vehicles approaching the first flashing arrow sign. Lane closures shall not begin at top of crest vertical curve or on a horizontal curve.
10. All cones used for lane closures during the hours of darkness shall be fitted with retroreflective bands (or sleeves) as specified in the specifications.
11. Portable delineators, placed at one-half the spacing indicated for traffic cones may be used instead of cones for daytime closures only.
12. Unless otherwise specified in the special provisions, a minimum of 3 cones shall be placed transversely across each closed lane and shoulder at each location where a taper across a traffic lane ends and every 2000' as shown on the "Lane Closure" detail. Two Type II barricades may be used instead of the 3 cones. The transverse alignment of the cones or barricades on the closed shoulder may be shifted from the transverse alignment to provide access to the work.
13. Unless otherwise specified in the special provisions, the 1700' tangent shown along lane lines shall be used between the 1000' tapers required for each closed traffic lane.
14. Unless otherwise specified in the special provisions, the G84 (CA) and W4-1 signs shall be used as shown.
15. When specified in the special provisions, a W4-2 "LANE ENDS" symbol sign is to be used in place of the C20 (CA) "RIGHT LANE CLOSED AHEAD" sign.
16. The W4-2 "LANE ENDS" symbol sign shown at this location is to be used where the W4-2 sign is used as advance warning as described in Note 15.

SIGN PANEL SIZE (Min)

A	48" x 48"
B	54" x 48"

LEGEND

- TRAFFIC CONE
- TRAFFIC CONE (OPTIONAL TAPER)
- TEMPORARY SIGN
- FLASHING ARROW SIGN (FAS)
- FAS SUPPORT OR TRAILER
- PORTABLE FLASHING BEACON

STATE OF CALIFORNIA
DEPARTMENT OF TRANSPORTATION

TRAFFIC CONTROL SYSTEM FOR LANE CLOSURE ON FREEWAYS AND EXPRESSWAYS

NO SCALE

TCS-1

REVISED BY | DATE REVISED | CALCULATED-DESIGNED BY | CHECKED BY | FUNCTIONAL SUPERVISOR

STATE OF CALIFORNIA - DEPARTMENT OF TRANSPORTATION

Caltrans

LAST REVISION 02-25-13 | DATE PLOTTED => 10-DEC-2012 | TIME PLOTTED => 09:45

Dist	COUNTY	ROUTE	POST MILES TOTAL PROJECT	SHEET No.	TOTAL SHEETS
11	SD	805	5.8/13.0	210	216

REGISTERED CIVIL ENGINEER 12-7-12 DATE

02-25-13
PLANS APPROVAL DATE

REGISTERED PROFESSIONAL ENGINEER Gurinderpal Bhullar No. C48815 Exp. 9-30-14 CIVIL STATE OF CALIFORNIA

THE STATE OF CALIFORNIA OR ITS OFFICERS OR AGENTS SHALL NOT BE RESPONSIBLE FOR THE ACCURACY OR COMPLETENESS OF SCANNED COPIES OF THIS PLAN SHEET.

TYPICAL RAMP CLOSURES

SIGN PANEL SIZE (Min)

- A 48" x 48"
- B 48" x 30"
- C 30" x 30"
- D 48" x 48" - SPEED OF 50 mph OR MORE
  36" x 36" - SPEED LESS THAN 50 mph
- E 48" x 36"

LEGEND

- TRAFFIC CONE
- TEMPORARY SIGN
- BARRICADES

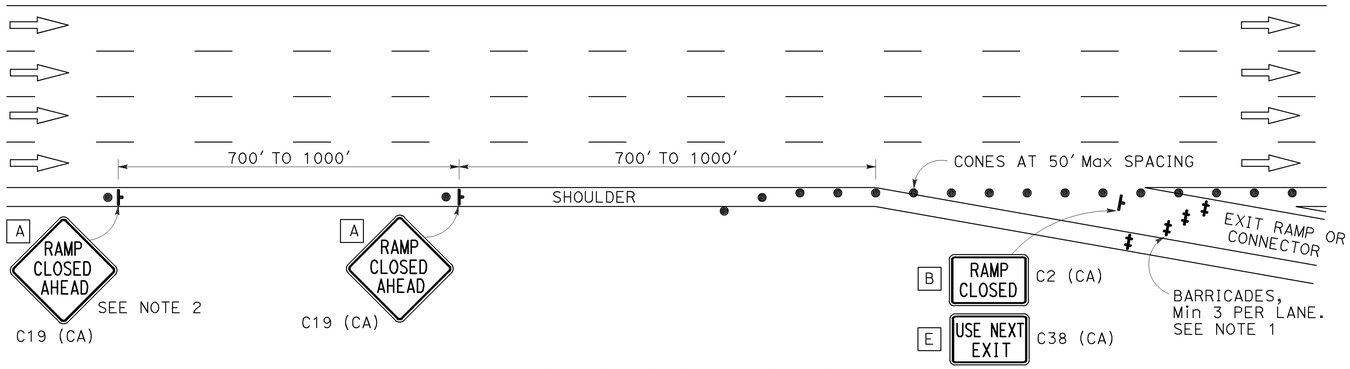

EXIT RAMP OR CONNECTOR

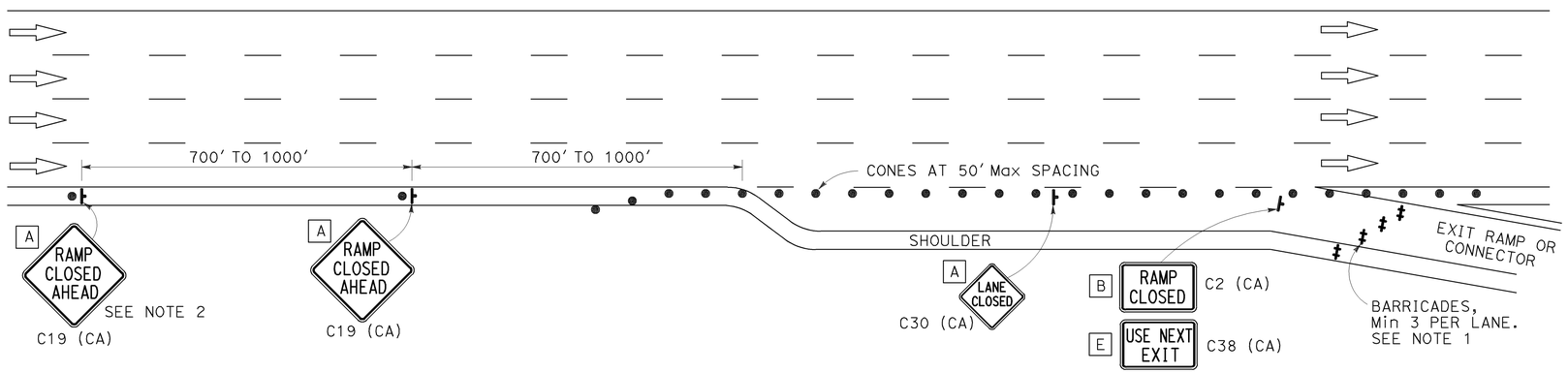

EXIT RAMP OR CONNECTOR WITH ADDITIONAL LANE

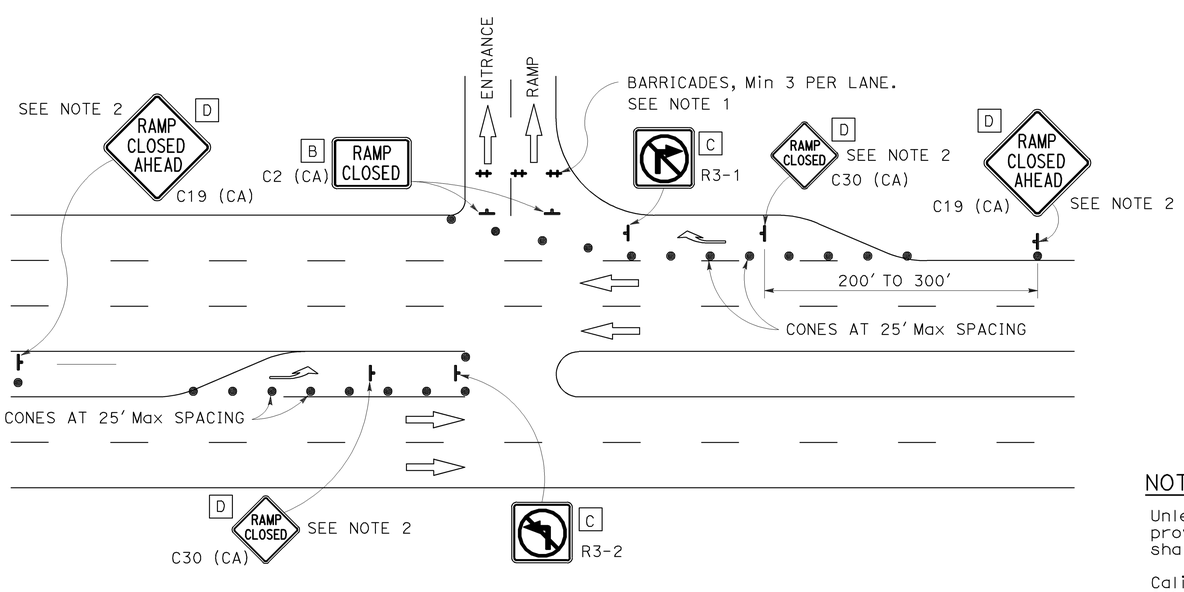

ENTRANCE RAMP WITH TURNING POCKETS

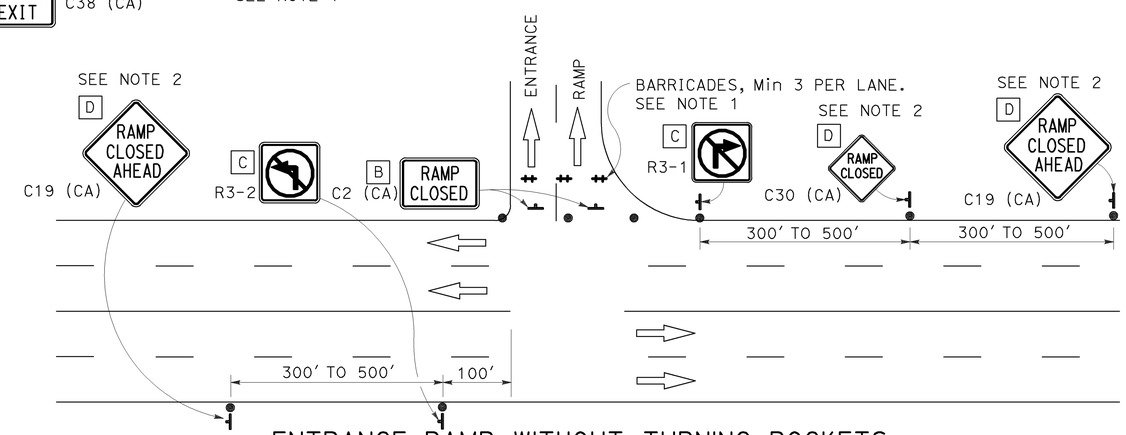

ENTRANCE RAMP WITHOUT TURNING POCKETS

NOTES:

1. Barricades shall be Type I, II, or III for closures lasting one week or less and Type III for closures lasting longer than one week.
2. In addition to placing the C19 (CA) "RAMP CLOSED AHEAD" and C30 (CA) "RAMP CLOSED" signs, black on orange overlay plates with the word "CLOSED" may be mounted, as directed by the Engineer, on all guide signs that refer to the closed ramp. The letter size on the overlay shall be the same as the guide sign.
3. Each advance C19 (CA) "RAMP CLOSED AHEAD" sign shall be equipped with at least two flags for daytime closure. Each flag shall be at least 16" x 16" in size and shall be orange or fluorescent red-orange in color.
4. All cones used for ramp closures during the hours of darkness shall be fitted with retroreflective bands (or sleeves) as specified in the specifications.
5. Portable delineators, placed at one-half the spacing indicated for traffic cones, may be used instead of cones for daytime ramp closures only.
6. At least one person shall be assigned to provide full time maintenance of traffic control devices, unless otherwise directed by the Engineer.
7. The existing "EXIT" sign in the gore area shall be covered during ramp closures.

NOTES:

Unless otherwise specified in the special provisions, all temporary warning signs shall have black legend on orange background.

California code are designated by (CA). Otherwise, Federal (MUTCD) codes are shown.

STATE OF CALIFORNIA
DEPARTMENT OF TRANSPORTATION

TRAFFIC CONTROL SYSTEM FOR RAMP CLOSURE

NO SCALE

TCS-2

STATE OF CALIFORNIA - DEPARTMENT OF TRANSPORTATION

Caltrans

FUNCTIONAL SUPERVISOR | CALCULATED-DESIGNED BY | CHECKED BY | REVISED BY | DATE REVISED

LAST REVISION 02-25-13 | DATE PLOTTED => 10-DEC-2012 | TIME PLOTTED => 09:45

Dist	COUNTY	ROUTE	POST MILES TOTAL PROJECT	SHEET No.	TOTAL SHEETS
11	SD	805	5.8/13.0	211	216

REGISTERED CIVIL ENGINEER

October 19, 2012
PLANS APPROVAL DATE

REGISTERED PROFESSIONAL ENGINEER
Glenn DeCou
No. C34547
Exp. 9-30-13
CIVIL
STATE OF CALIFORNIA

THE STATE OF CALIFORNIA OR ITS OFFICERS OR AGENTS SHALL NOT BE RESPONSIBLE FOR THE ACCURACY OR COMPLETENESS OF SCANNED COPIES OF THIS PLAN SHEET.

TO ACCOMPANY PLANS DATED 02-25-13

2010 REVISED STANDARD PLAN RSP A85B

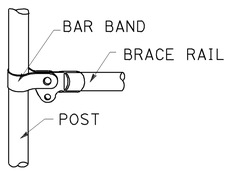

BRACE RAIL

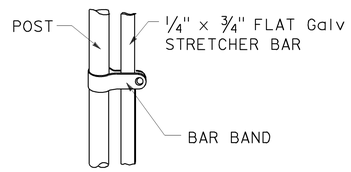

STRETCHER BAR

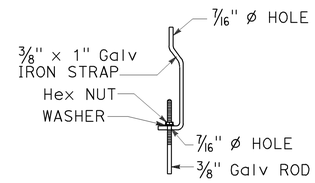

TRUSS TIGHTENER

NOTES:

1. All material for abutment connection to be galvanized.
2. The chain link fabric shall be replaced by barbed wire strands at 12" maximum centers between the double posts.
3. When the width of the culvert makes it necessary to anchor a post to the top of the culvert, a cast iron shoe or other device approved by the Engineer shall be used.
4. Fencing over stream and around headwall may also use Barbed Wire or Wire Mesh fencing with either wood post or steel post installation.
5. See Standard Plan A85 for Chain Link fence dimensions. See Standard Plan A86 for Barbed Wire and Wire Mesh fence dimensions and for wood post and steel post installation.

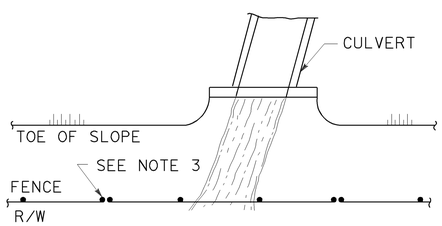

PLAN

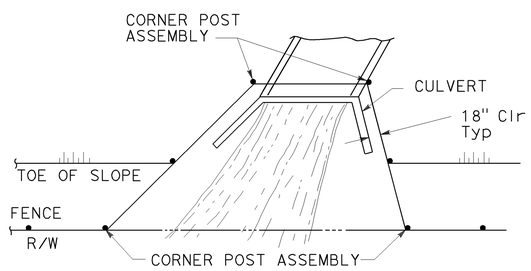

PLAN

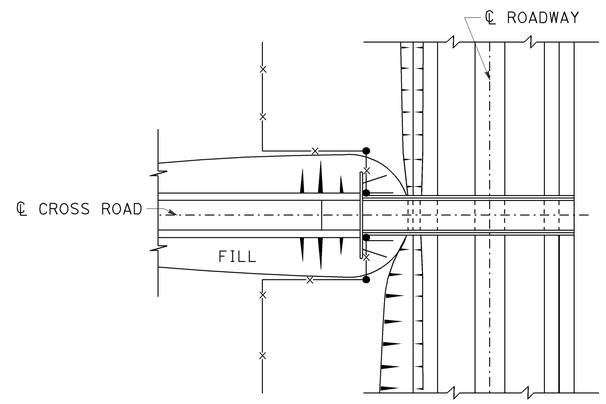

PLAN OF ROADWAY - OVERCROSSING

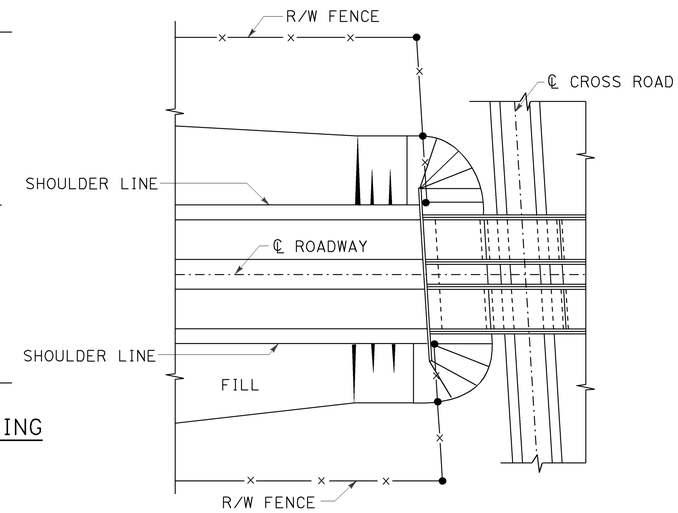

PLAN OF ROADWAY - UNDERCROSSING

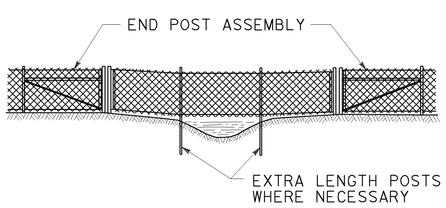

ELEVATION

INSTALLATION OVER STREAM

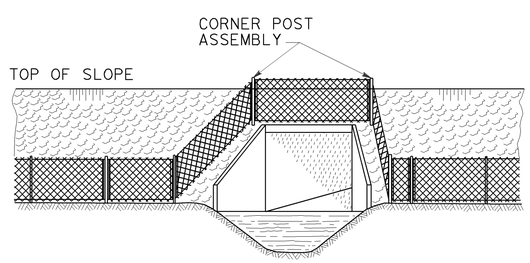

ELEVATION

INSTALLATION AROUND HEADWALL

See Note 4

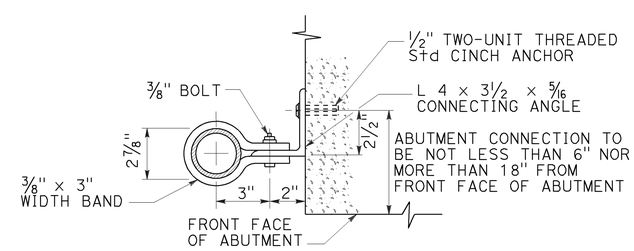

ABUTMENT CONNECTION

TYPICAL INSTALLATION AT BRIDGES

STATE OF CALIFORNIA
DEPARTMENT OF TRANSPORTATION

CHAIN LINK FENCE DETAILS

NO SCALE

RSP A85B DATED OCTOBER 19, 2012 SUPERSEDES STANDARD PLAN A85B
DATED MAY 20, 2011 - PAGE 114 OF THE STANDARD PLANS BOOK DATED 2010.

REVISED STANDARD PLAN RSP A85B

7-19-12

TO ACCOMPANY PLANS DATED 02-25-13

Dist	COUNTY	ROUTE	POST MILES TOTAL PROJECT	SHEET No.	TOTAL SHEETS
11	SD	805	5.8/13.0	212	216

REGISTERED CIVIL ENGINEER

October 19, 2012
PLANS APPROVAL DATE

REGISTERED PROFESSIONAL ENGINEER Glenn DeCou No. C34547 Exp. 9-30-13 CIVIL STATE OF CALIFORNIA

THE STATE OF CALIFORNIA OR ITS OFFICERS OR AGENTS SHALL NOT BE RESPONSIBLE FOR THE ACCURACY OR COMPLETENESS OF SCANNED COPIES OF THIS PLAN SHEET.

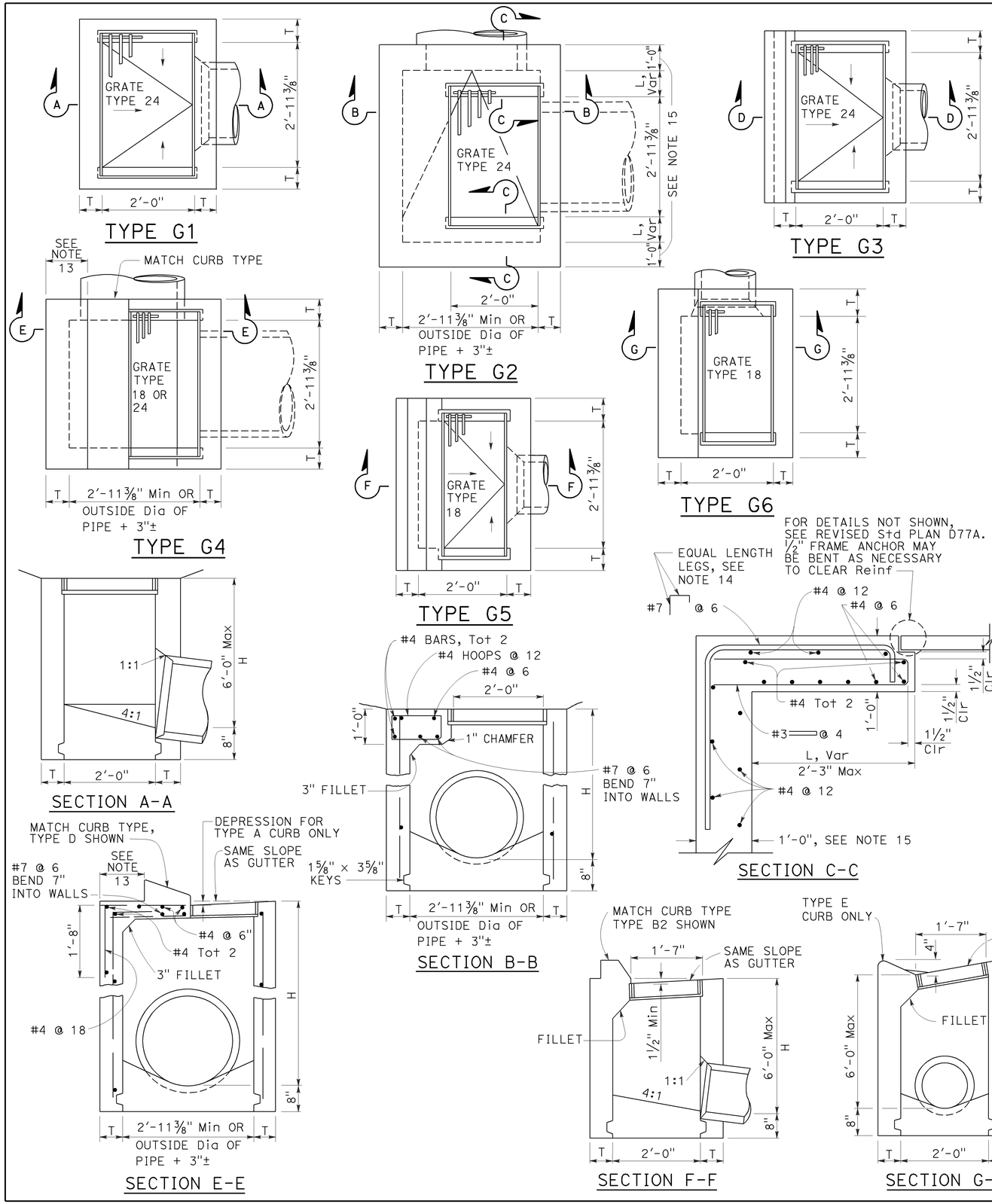

NOTES:

1. "H" is the difference in elevation between the outlet pipe flow line and the normal gutter grade line undepressed.
2. For "T" wall thickness, see Table A below.
3. Wall reinforcing not required when "H" is 8'-0" or less and the unsupported width or length is 7'-0" or less. Walls exceeding these limits shall be reinforced with #4 bars @ 1'-6" ± centers placed 1½" clear to inside of box unless otherwise shown.
4. Inlet bottom reinforcing not required. See Standard Plan D74C for alternative reinforced bottom and alternative half round bottom.
5. Steps-None required where "H" is less than 2'-6". Where "H" is 2'-6" or more, install steps with lowest rung 1'-0" above the floor and highest rung not more than 6" below top of inlet. The distance between steps shall not exceed 1'-0" and shall be uniform throughout the length of the wall. Place steps in the wall without an opening. Steps inserts may be substituted for the bar steps. Step inserts shall comply with State Industrial Safety requirements. See Standard Plan D74C for step details.
6. Details shown apply to both metal and concrete pipe.
7. Pipe(s) can be placed in any wall.
8. Curb section shall match adjacent curb.
9. Basin floors shall have wood trowel finish and a minimum slope of 12:3 from all directions toward outlet pipe.
10. Set inlet so that grate bars are parallel to direction of principal surface flow.
11. See Revised Standard Plans D77A and D77B for grate and frame details and weights of miscellaneous iron and steel.
12. See Standard Plan D78A for gutter depression details.
13. This dimenison will vary with different grates, curbs types, box width and wall thickness.
14. Bar may be rotated as necessary to clear opening. Where "L" is 6" or less, bar may be omitted.
15. Where "L" is 6" or less, wall thickness shall be as shown in Table A.
16. Cast-in-place inlets to be formed around all pipes/stubs intersecting the inlet, and concrete poured in one continuous operation. Precast inlets shall have mortared connections conforming to details for Type GCP Inlet shown on Standard Plan D75B. See Standard Specifications for mortar composition.

TABLE A

CONCRETE QUANTITIES				
TYPE	H=3'-0" TO 8'-0" (T=6")		H=8'-1" TO 20'-0" (T=8")	
	H=3'-0" (CY)	ADDITIONAL PCC PER FOOT (CY)	H=8'-1" (CY)	ADDITIONAL PCC PER FOOT (CY)
G-1	0.95	0.220	See Note A	SEE NOTE A
G-2*	1.31	0.255	3.50	0.357
G-3	1.03	0.220	See Note A	SEE NOTE A
G-4* (TYPE 24)	1.27	0.255	3.48	0.357
G-4* (TYPE 18)	1.30	0.255	3.50	0.357
G-5	1.02	0.220	SEE NOTE A	SEE NOTE A
G-6	1.04	0.220	SEE NOTE A	SEE NOTE A

TABLE BASED ON 8" FLOOR SLAB. NO DEDUCTIONS ARE TO BE MADE TO THESE QUANTITIES BECAUSE OF PIPE OPENINGS, DIFFERENT FLOOR ALTERNATIVES OR DIFFERENT CURB TYPES. * QUANTITIES FOR TYPE G-2 AND G-4 INLETS BASED ON THE MINIMUM INTERIOR DIMENSIONS.

NOTE A:

Maximum allowable height 6'-0".

STATE OF CALIFORNIA
DEPARTMENT OF TRANSPORTATION

DRAINAGE INLETS

NO SCALE

RSP D73 DATED OCTOBER 19, 2012 SUPERSEDES STANDARD PLAN D73 DATED MAY 20, 2011 - PAGE 156 OF THE STANDARD PLANS BOOK DATED 2010.

REVISED STANDARD PLAN RSP D73

2010 REVISED STANDARD PLAN RSP D73

7-19-12

Dist	COUNTY	ROUTE	POST MILES TOTAL PROJECT	SHEET No.	TOTAL SHEETS
11	SD	805	5.8/13.0	213	216

Raymond Don Tsztoo
REGISTERED CIVIL ENGINEER

July 20, 2012
PLANS APPROVAL DATE

REGISTERED PROFESSIONAL ENGINEER Raymond Don Tsztoo No. C37332 Exp. 6-30-14 CIVIL STATE OF CALIFORNIA

THE STATE OF CALIFORNIA OR ITS OFFICERS OR AGENTS SHALL NOT BE RESPONSIBLE FOR THE ACCURACY OR COMPLETENESS OF SCANNED COPIES OF THIS PLAN SHEET.

TO ACCOMPANY PLANS DATED 02-25-13

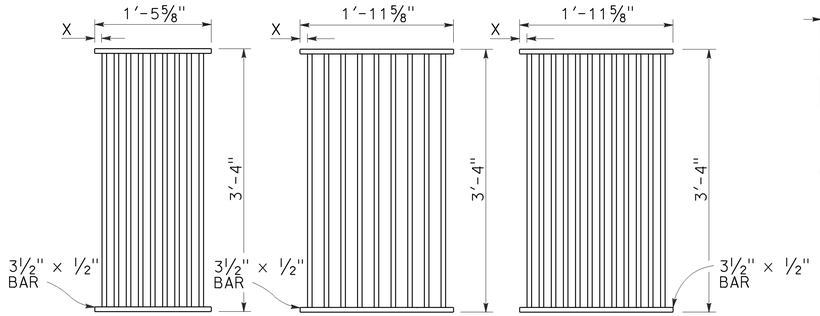

TYPE 18-9

1⅜" Clear spacing. Use within the roadbed on highways where bicycles and pedestrians are excluded.

TYPE 24-9

2" Clear spacing. Use in locations off the roadbed on all types of highways.

TYPE 24-12

1⅜" Clear spacing. Use within the roadbed on highways where bicycles and pedestrians are excluded.

RECTANGULAR GRATE DETAILS

(See table below)

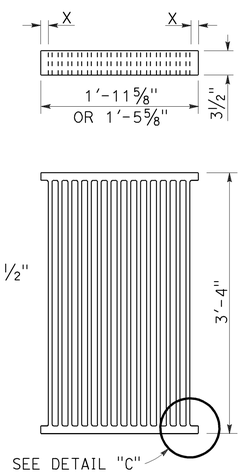

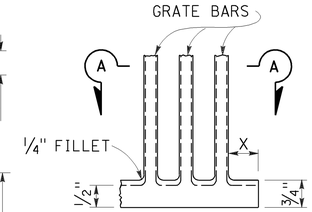

DETAIL "C"

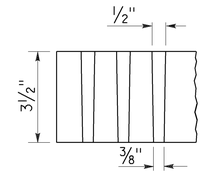

SECTION A-A

ALTERNATIVE CAST DUCTILE IRON GRATE OR CAST CARBON STEEL GRATE

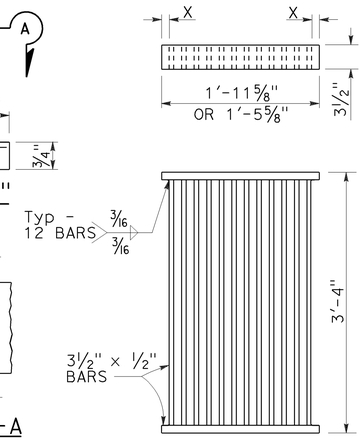

ALTERNATIVE WELDED GRATE

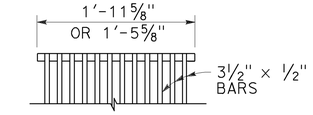

CAST END BLOCK

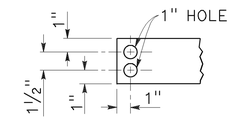

END OF BAR

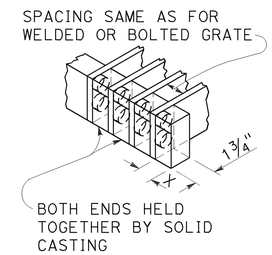

ALTERNATIVE CAST DUCTILE IRON OR CAST CARBON STEEL END BLOCK GRATE

NOTES:

1. Grate type numbers refer to approximate width of grate in inches and number of bars, respectively.
2. Contractor has the option of using cast ductile iron, cast carbon steel, welded, bolted, or cast end block grate.
3. Rounded top of bars optional on all grates.
4. Pipe inlets with a grate shall be placed so that bars parallel direction of principle surface flow.
5. Complete joint penetration butt welds may be substituted for the fillet welds on all anchors.
6. Standard square, hexagon, round or equivalent headed anchors may be substituted for the right angle hooks on the anchors shown on this plan.
7. Grate and frame weights are based on welded grates (weights of face angles, steps, protection bars, etc. are not included).
8. Connect chain to grate and frame only at locations shown on the plans. When chain is required, do not use cast ductile iron grates.

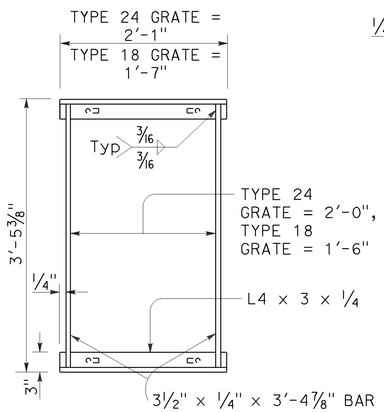

TYPICAL FRAME

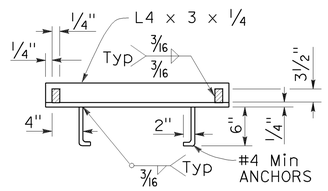

CROSS SECTION

(Thru frame)

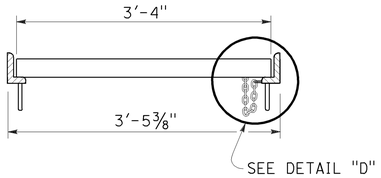

LONGITUDINAL SECTION

(Thru frame and grate)

RECTANGULAR FRAME DETAILS

(For all rectangular grates)

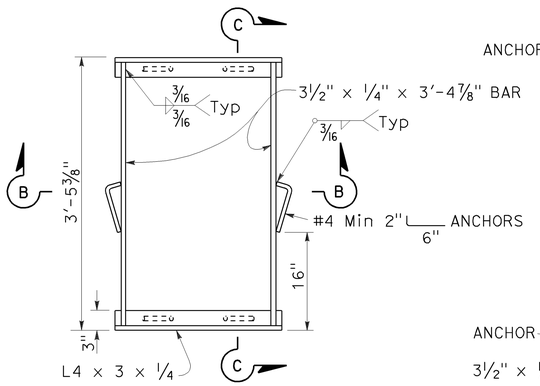

TYPICAL FRAME

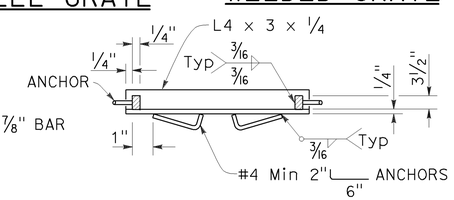

SECTION B-B

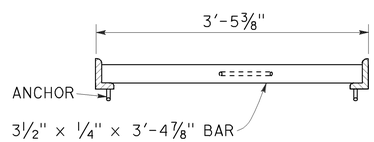

SECTION C-C

ALTERNATIVE ANCHOR FOR RECTANGULAR FRAME

(For details not shown, See Rectangular Frame Details)

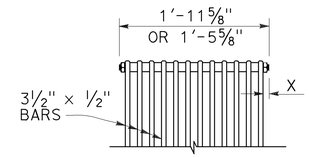

BOLTED END BLOCK

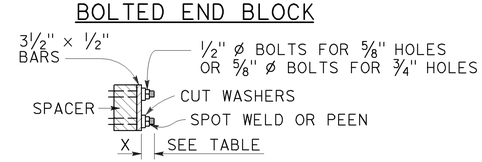

BOLTING DETAIL

ALTERNATIVE BOLTED GRATE

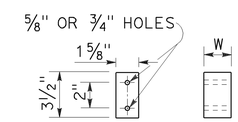

BAR SPACER

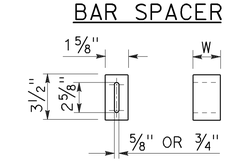

ALTERNATIVE SPACER

W = 1⅜" or 2"

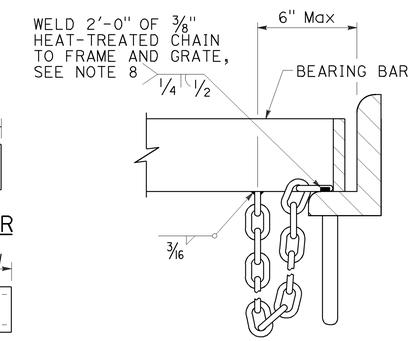

DETAIL "D"

(Steel grates only)

GRATE BAR SPACING TABLE

TYPE	No. OF BARS	CLEAR BAR SPACING	X
18-9	9	1⅜"	1 1/16"
24-9	9	2"	1 9/16"
24-12	12	1⅜"	1¼"

INLET TYPE	COVER TYPE	WEIGHT LB
OS	PLATE	174
OL-7	PLATE	170
OL-10	PLATE	170
OL-14	PLATE	170
OL-21	PLATE	170
OCP	PLATE	112
OCPI	PLATE	112
OCPI	REDWOOD	42
OMP	PLATE	177
OMPI	PLATE	177

INLET TYPE	GRATE TYPE	No. OF GRATES	WEIGHT LB
GDO	24-12	2	634
GOL-7	24-12	1	326
GOL-10	24-12	1	326
GO,G1,G2,G3,G4 (TYPE 24)	24-9	1	263
	24-12	1	326
G4 (TYPE 18),G5,G6	18-9	1	249
GT1	18-9	2	498
GT2	18-9	2	498
GT3	24-12	2	652
GT4	24-12	2	652
TRASH RACK			22
GRATE CHAIN			3

BASIS FOR Misc IRON & STEEL FINAL PAY WEIGHTS FOR DRAINAGE INLETS

(See Note 7)

STATE OF CALIFORNIA
DEPARTMENT OF TRANSPORTATION

GRATE DETAILS

NO SCALE

RSP D77A DATED JULY 20, 2012 SUPERSEDES STANDARD PLAN D77A
DATED MAY 20, 2011 - PAGE 164 OF THE STANDARD PLANS BOOK DATED 2010.

REVISED STANDARD PLAN RSP D77A

2010 REVISED STANDARD PLAN RSP D77A

6-13-12

Dist	COUNTY	ROUTE	POST MILES TOTAL PROJECT	SHEET No.	TOTAL SHEETS
11	SD	805	5.8/13.0	214	216

Raymond Don Tsztoo
REGISTERED CIVIL ENGINEER

July 20, 2012
PLANS APPROVAL DATE

REGISTERED PROFESSIONAL ENGINEER Raymond Don Tsztoo No. C37332 Exp. 6-30-14 CIVIL STATE OF CALIFORNIA

THE STATE OF CALIFORNIA OR ITS OFFICERS OR AGENTS SHALL NOT BE RESPONSIBLE FOR THE ACCURACY OR COMPLETENESS OF SCANNED COPIES OF THIS PLAN SHEET.

TO ACCOMPANY PLANS DATED 02-25-13

2010 REVISED STANDARD PLAN RSP D77B

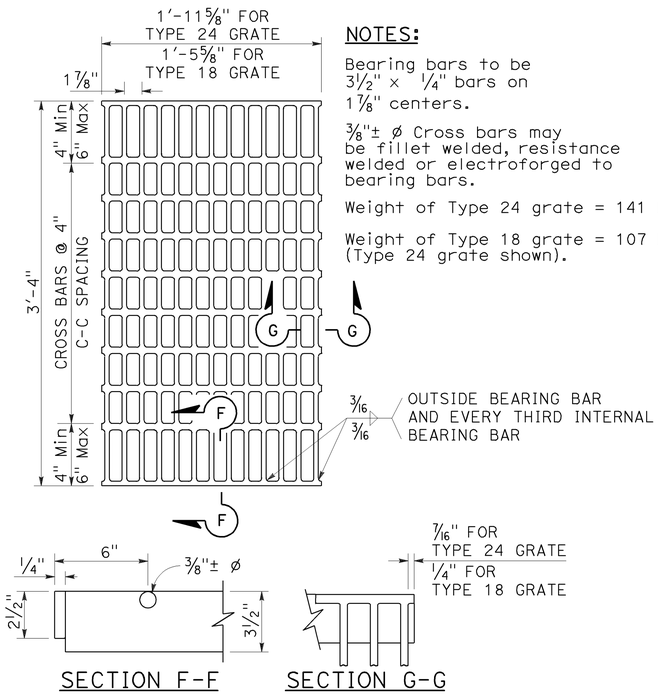

SECTION F-F SECTION G-G

TYPE 18-10 AND 24-13 GRATE

(Welded Steel)

NOTES:

Bearing bars to be 3½" × ¼" bars on 1⅞" centers.

⅜"± ø Cross bars may be fillet welded, resistance welded or electroforged to bearing bars.

Weight of Type 24 grate = 141 LBS.

Weight of Type 18 grate = 107 LBS. (Type 24 grate shown).

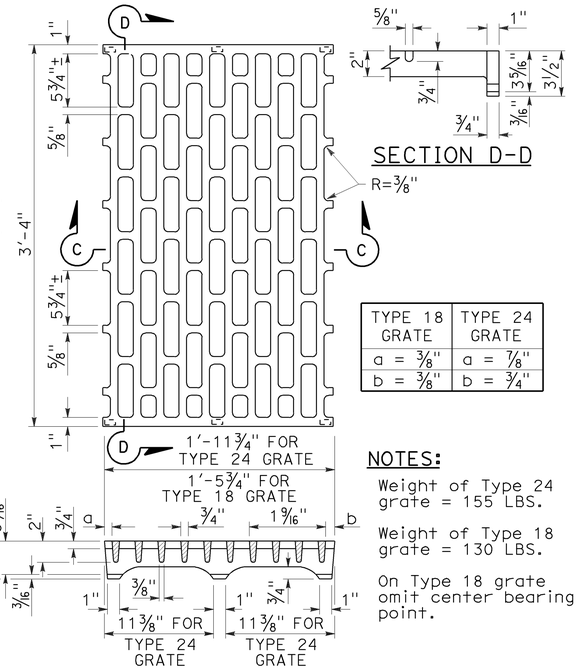

SECTION D-D

TYPE 18 GRATE	TYPE 24 GRATE
a = ⅜"	a = ⅞"
b = ⅜"	b = ¾"

NOTES:

Weight of Type 24 grate = 155 LBS.

Weight of Type 18 grate = 130 LBS.

On Type 18 grate omit center bearing point.

SECTION C-C

TYPE 18-8C AND 24-10C GRATE

(Cast ductile iron)

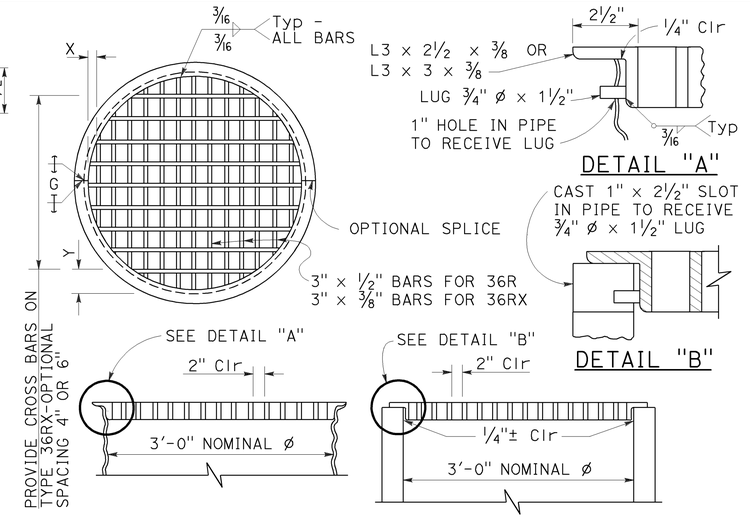

TYPE 36R AND 36RX GRATE DETAILS

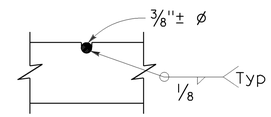

⅜"± ø Cross bars may be fillet welded, resistance welded or electroforged to bearing bars.

CROSS BAR DETAIL TYPE 36RX GRATE (WELDED STEEL)

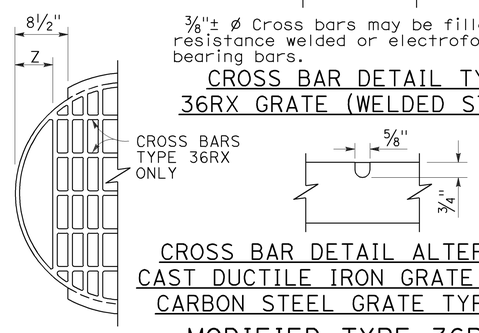

CROSS BAR DETAIL ALTERNATIVE CAST DUCTILE IRON GRATE OR CAST CARBON STEEL GRATE TYPE 36RX

MODIFIED TYPE 36R AND 36RX GRATE FOR ODI INLET

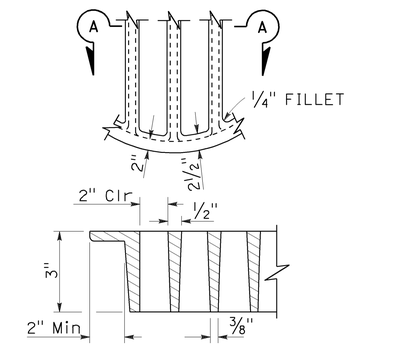

SECTION A-A

ALTERNATIVE CAST DUCTILE IRON GRATE OR CAST CARBON STEEL GRATE TYPE 36R AND 36RX

BASIS FOR Misc IRON AND STEEL FINAL PAY WEIGHTS FOR DRAINAGE INLETS

INLET TYPE	GRATE TYPE	No. OF GRATES	WEIGHT LB
GDO (SEE NOTE 4)	24-10C	2	391
	24-10S	2	456
	24-12X	2	473
	24-13	2	374
GO,GOL,G1,G2, G3,G4 (TYPE 24)	24-10C	1	202
	24-10S	1	229
	24-12X	1	239
	24-13	1	188
G4 (TYPE 18) G5,G6	18-8S	1	187
	18-9X	1	187
	18-10	1	149
GT1,GT2	18-8S	2	374
	18-9X	2	374
	18-10	2	298
GT3,GT4	24-10C	2	404
	24-10S	2	458
	24-12X	2	478
	24-13	2	376
ODI	36RX (Mod)	1	196
GMP,GCP,GCPI	36RX	1	215
ODI	36R (Mod)	1	220
GMP,GCP,GCPI	36R	1	236
TRASH RACK			22
GRATE CHAIN			3

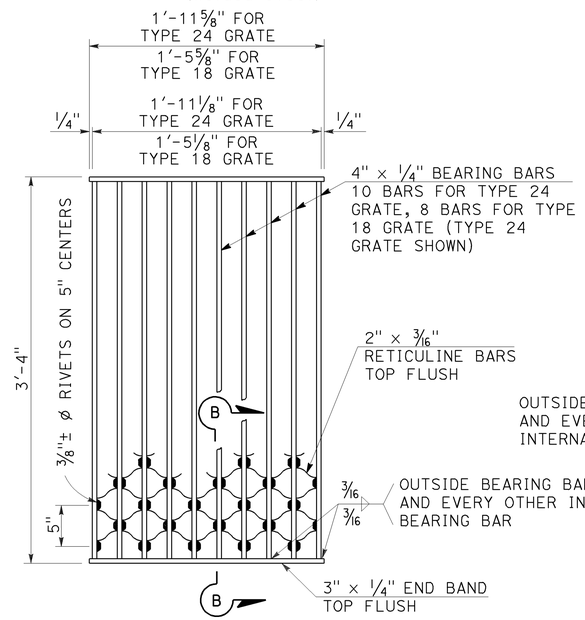

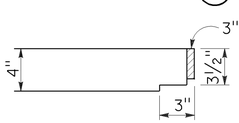

SECTION B-B

NOTES:

Weight of Type 24 grate = 182 LBS.
Weight of Type 18 grate = 145 LBS.

TYPE 18-8S AND 24-10S GRATE

(Welded Steel) Reticuline type

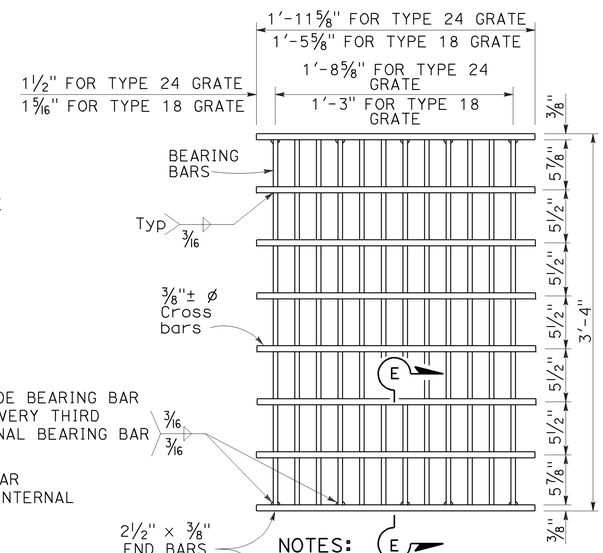

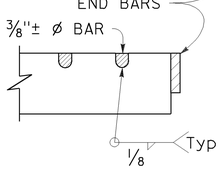

SECTION E-E

NOTES:

Bearing bars to be 3½" × ⅜" bars on 1⅞" centers.

12 Bars for Type 24 grate - 9 bars for Type 18 grates. (Type 24 grate shown).

Weight of Type 24 grate = 192 LBS.

Weight of Type 18 grate = 145 LBS.

⅜"± ø Cross bars may be fillet welded, resistance welded or electroforged to bearing bars.

TYPE 18-9X AND 24-12X GRATE

(Welded Steel)

NOTES:

1. When alternative grates are allowed - Final pay based on alternative with the lesser weight.
2. Use frame shown on Standard Plan D74A, D74B or RSP D77A as appropriate.
3. When Type 24-10S, 24-12X or 24-13 grates are used with GDO Inlets, a ¼" × 3½" × 3'-4⅞" steel bar shall be welded across the center of inlet frame to separate the individual grates.
4. See Revised Standard Plan RSP D77A for connecting chain to welded grate and frame. When chain is required, do not use cast ductile iron grate.

GRATE BAR SPACING TABLE

TYPE	No. OF BARS	CLEAR BAR SPACING	X	Y 4" SPACING	Y 6" SPACING	Z
36R	13	2"	2⅛"	-	-	-
36RX (STEEL)	15	2"	9/16"	3¾"	5¾"	-
36RX (CAST)	13	2"	2⅛"	3¾"	5¾"	-
36R Mod	12	2"	2⅛"	-	-	5"
36RX Mod (STEEL)	13	2"	9/16"	3¾"	5¾"	5 11/16"
36RX Mod (CAST)	12	2"	2⅛"	3¾"	5¾"	5"

STATE OF CALIFORNIA
DEPARTMENT OF TRANSPORTATION

BICYCLE TRAVERSABLE GRATE DETAILS

NO SCALE

RSP D77B DATED JULY 20, 2012 SUPERSEDES STANDARD PLAN D77B DATED MAY 20, 2011 - PAGE 165 OF THE STANDARD PLANS BOOK DATED 2010.

REVISED STANDARD PLAN RSP D77B

4-17-12

Dist	COUNTY	ROUTE	POST MILES TOTAL PROJECT	SHEET No.	TOTAL SHEETS
11	SD	805	5.8/13.0	215	216

REGISTERED CIVIL ENGINEER

October 21, 2011
PLANS APPROVAL DATE

REGISTERED PROFESSIONAL ENGINEER Tillat Satter No. C42892 Exp. 3-31-12 CIVIL STATE OF CALIFORNIA

THE STATE OF CALIFORNIA OR ITS OFFICERS OR AGENTS SHALL NOT BE RESPONSIBLE FOR THE ACCURACY OR COMPLETENESS OF SCANNED COPIES OF THIS PLAN SHEET.

TO ACCOMPANY PLANS DATED 02-25-13

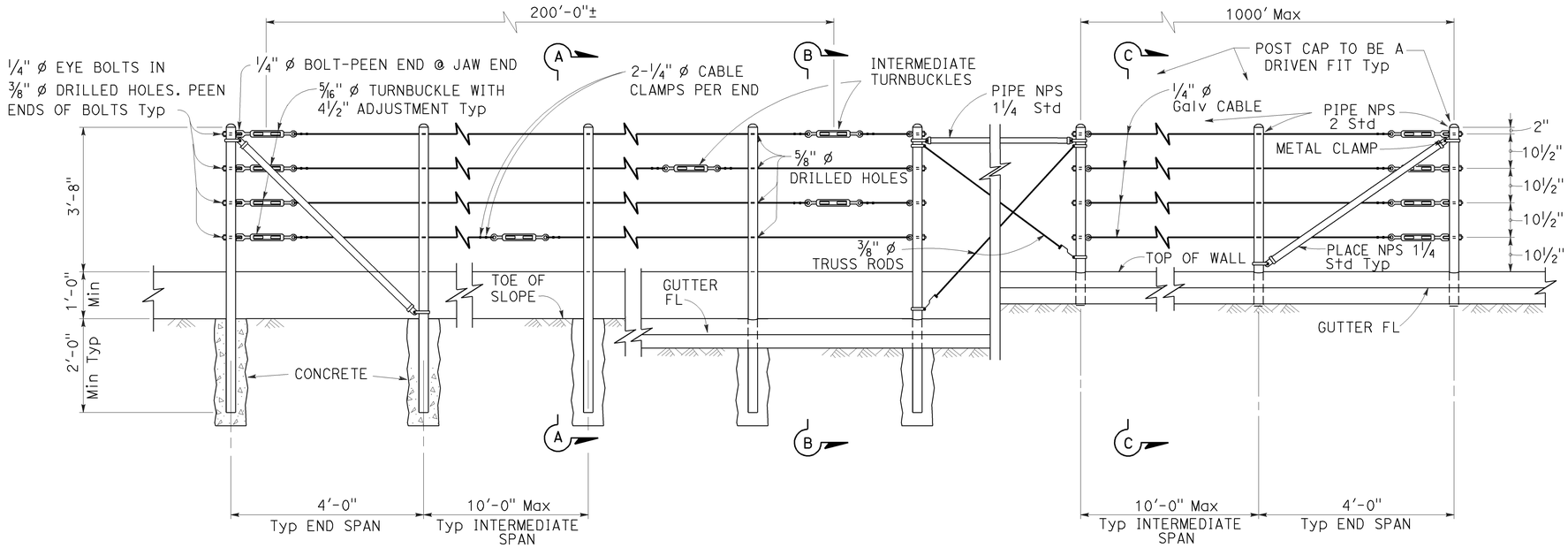

EXISTING WALL (WITHOUT GUTTER)
Existing

RETAINING WALL (WITH GUTTER)
Existing

RETAINING WALL (WITH GUTTER)
New construction

ELEVATION

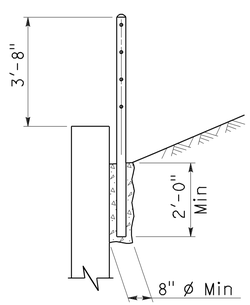

SECTION A-A
Existing

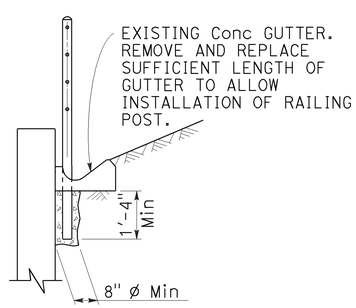

SECTION B-B
Existing

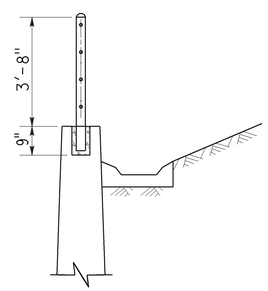

SECTION C-C
New construction

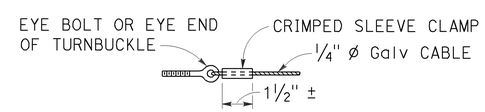

ALTERNATIVE CABLE CONNECTION

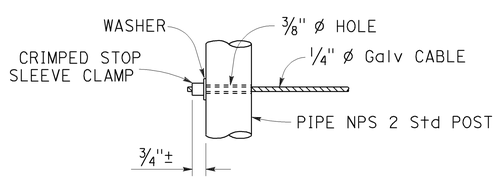

ALTERNATIVE DEAD END ANCHORAGE

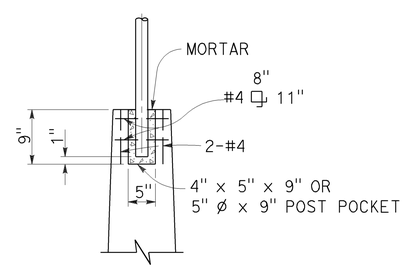

POST POCKET

NOTES:

1. Maximum distance between turnbuckles shall be 200'-0"±.
2. Intermediate turnbuckles to be placed in adjacent spans.
3. Cable shall not be spliced between intermediate turnbuckles and end posts.
4. Posts to be vertical.
5. Alignment of holes in posts may vary to conform to slope of top of retaining wall.
6. The Contractor shall verify all dependent dimensions in the field before ordering or fabricating any material.
7. Line posts shall be braced horizontally and trussed diagonally in both directions at intervals not to exceed 1000'.
8. Post pockets to be centered in top of wall.
9. Typical end spans, braced in both directions, shall be constructed at changes in line where the angle of deflection is 15° or more.
10. Provide thimbles at all cable loops.

STATE OF CALIFORNIA
DEPARTMENT OF TRANSPORTATION

CABLE RAILING

NO SCALE

RSP B11-47 DATED OCTOBER 21, 2011 SUPERSEDES STANDARD PLAN B11-47 DATED MAY 20, 2011 - PAGE 293 OF THE STANDARD PLANS BOOK DATED 2010.

REVISED STANDARD PLAN RSP B11-47

2010 REVISED STANDARD PLAN RSP B11-47

9-14-11

DIST	COUNTY	ROUTE	POST MILES TOTAL PROJECT	SHEET NO.	TOTAL SHEETS
11	SD	805	5.8/13.0	216	216

REGISTERED ELECTRICAL ENGINEER

January 20, 2012
PLANS APPROVAL DATE

REGISTERED PROFESSIONAL ENGINEER
Jeffery G. McRae
No. E14512
Exp. 6-30-12
ELECTRICAL
STATE OF CALIFORNIA

THE STATE OF CALIFORNIA OR ITS OFFICERS OR AGENTS SHALL NOT BE RESPONSIBLE FOR THE ACCURACY OR COMPLETENESS OF SCANNED COPIES OF THIS PLAN SHEET.

TO ACCOMPANY PLANS DATED 02-25-13

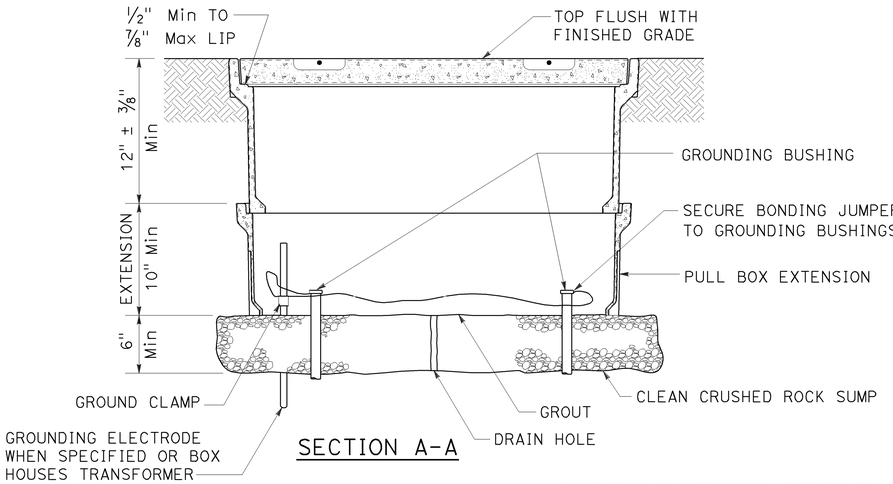

SECTION A-A

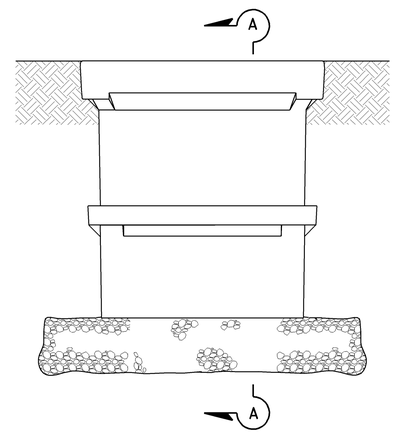

SIDE VIEW

INSTALLATION DETAILS

DETAIL A

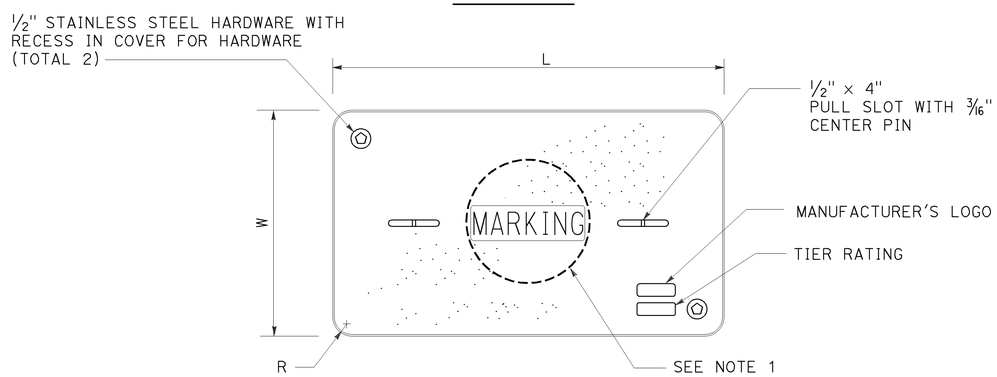

COVER TOP VIEW

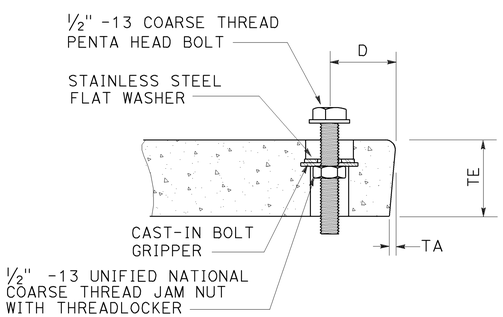

TYPICAL COVER CAPTIVE BOLT

OR SIMILAR

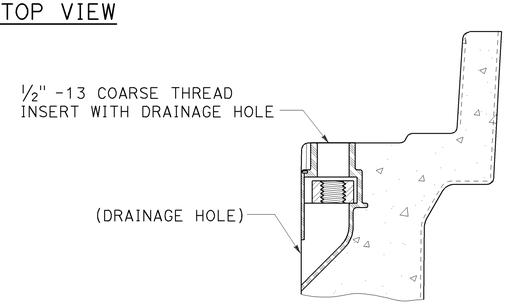

TYPICAL THREADED INSERT

OR SIMILAR

DIMENSION TABLE

PULL BOX	PULL BOX			COVER						
	MINIMUM DEPTH BOX	MINIMUM DEPTH EXTENSION	MAXIMUM WEIGHT	L	W	R	TE	TA	D	MAXIMUM WEIGHT
No. 3½	12"	N/A	40 lb	1′ - 3⅜"	10⅛"	1⅜"	2"	⅛"	1¾"	30 lb
No. 5	12"	10"	55 lb	1′ - 11¼"	1′ - 1¾"	1⅜"	2"	⅛"	1¾"	60 lb
No. 6	12"	10"	70 lb	2′ - 6½"	1′ - 5½"	1⅜"	2"	⅛"	2"	85 lb

NOTES ON PULL BOXES:

1. Pull box covers must be marked as follows: "SERVICE" Service circuits between service point and service disconnect; "SPRINKLER-CONTROL" sprinkler control circuits, 50 V or less; "CALTRANS" on all pull boxes, except pull boxes marked "SPRINKLER-CONTROL"; and "TELEPHONE" Telephone service;

   A) No. 3½ pull box.
      1) "SIGNAL" - Traffic signal circuits with or without street or sign lighting circuits.
      2) "ST LIGHTING" - Street or sign lighting circuits where voltage is under 600 V.

   B) No. 5, 6, 9 or 9A pull box.
      1) "TRAFFIC SIGNAL" - Traffic signal circuits with or without street or sign lighting circuits.
      2) "STREET LIGHTING" - Street or sign lighting circuits where voltage is under 600 V.
      3) "STREET LIGHTING-HIGH VOLTAGE" - Street or sign lighting circuits where voltage is above 600 V.
      4) "IRRIGATION" - Circuits to irrigation controller 120 V or more.
      5) "RAMP METER" - Ramp meter circuits.
      6) "COUNT STATION" - Count or speed monitor circuits.
      7) "COMMUNICATIONS" - Communication circuits.
      8) "TOS COMMUNICATIONS" - TOS communication line.
      9) "TOS POWER" - TOS power.
      10) "TDC POWER" - Telephone demarcation cabinet power.
      11) "CCTV" - Closed circuit television circuits.
      12) "TMS" - Traffic monitoring station circuits.
      13) "CMS" - Changeable message sign circuits.
      14) "HAR" - Highway advisory radio circuits.

2. The nominal dimensions of the opening in which the cover sets must be the same as the cover dimensions (L and W) plus ⅛" or greater.
3. Covers and boxes must be interchangeable with California Standard. When interchanged with a standard, the top surfaces must be flush within ⅛". Top outside radius of covers and pull boxes must have a ⅛" radius.
4. Pull box extension may be another pull box as long as the bottom edge of the pull box can fit into the cover opening.

STATE OF CALIFORNIA
DEPARTMENT OF TRANSPORTATION

ELECTRICAL SYSTEMS (PULL BOX)

NO SCALE

RSP ES-8A DATED JANUARY 20, 2012 SUPPLEMENTS THE STANDARD PLANS BOOK DATED 2010.

REVISED STANDARD PLAN RSP ES-8A

2010 REVISED STANDARD PLAN RSP ES-8A

01-09-12