DIST	COUNTY	ROUTE	POST MILES TOTAL PROJECT	SHEET No	TOTAL SHEETS
11	SD	805	4.7/5.6	601	650

REGISTERED CIVIL ENGINEER 4-26-12

06-25-12
PLANS APPROVAL DATE

REGISTERED PROFESSIONAL ENGINEER
David T-M Liao
No. C59838
Exp. 12-31-13
CIVIL
STATE OF CALIFORNIA

The State of California or its officers or agents shall not be responsible for the accuracy or completeness of electronic copies of this plan sheet.

This LOTB sheet was prepared in accordance with the Caltrans Soil & Rock Logging, Classification, & Presentation Manual (2007 Edition).

FOR PLAN VIEW, SEE
"LOG OF TEST BORINGS 1 OF 14"

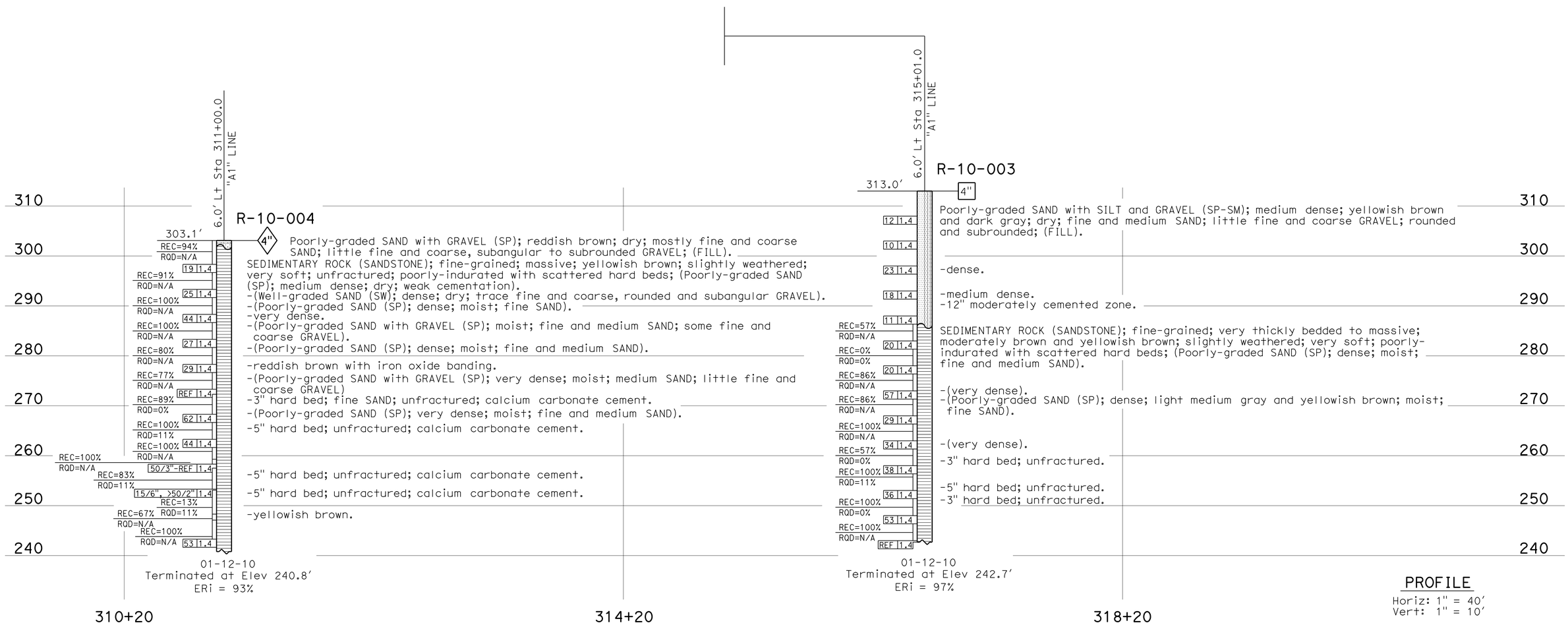

ENGINEERING SERVICES	GEOTECHNICAL SERVICES	STATE OF CALIFORNIA DEPARTMENT OF TRANSPORTATION	DIVISION OF ENGINEERING SERVICES STRUCTURE DESIGN DESIGN BRANCH X	BRIDGE NO. 57E0111 POST MILE 5.07	RETAINING WALL NO. 301L
FUNCTIONAL SUPERVISOR NAME: M. DeSalvatore	DRAWN BY: F. Nguyen 07/11 CHECKED BY: E. Neupert	FIELD INVESTIGATION BY: TM Liao/J. Klamecki			LOG OF TEST BORINGS 10 OF 14

OGS CIVIL LOG OF TEST BORINGS SHEET

ORIGINAL SCALE IN INCHES FOR REDUCED PLANS 0 1 2 3

UNIT: 3643
PROJECT NUMBER & PHASE: 11000200511 CONTRACT NO.: 11-2T1821

DISREGARD PRINTS BEARING EARLIER REVISION DATES

REVISION DATES: 4-26-12 06-30-11 08-24-11 11-4-11

SHEET 22 OF 26

FILE => RW301L-z-ltb10.dgn

USERNAME => s127400 DATE PLOTTED => 13-SEP-2012 TIME PLOTTED => 08:03

REGISTERED CIVIL ENGINEER 8-11-11

06-25-12
PLANS APPROVAL DATE

REGISTERED PROFESSIONAL ENGINEER
David T-M Liao
No. C59838
Exp. 12-31-13
CIVIL
STATE OF CALIFORNIA

The State of California or its officers or agents shall not be responsible for the accuracy or completeness of electronic copies of this plan sheet.

REFERENCE: CALTRANS SOIL & ROCK LOGGING, CLASSIFICATION, AND PRESENTATION MANUAL (JUNE 2007)

CEMENTATION

Description	Criteria
Weak	Crumbles or breaks with handling or little finger pressure.
Moderate	Crumbles or breaks with considerable finger pressure.
Strong	Will not crumble or break with finger pressure.

CONSISTENCY OF COHESIVE SOILS

Description	Unconfined Compressive Strength (tsf)	Pocket Penetrometer Measurement (tsf)	Torvane Measurement (tsf)	Field Approximation
Very Soft	< 0.25	< 0.25	< 0.12	Easily penetrated several inches by fist
Soft	0.25 to 0.50	0.25 to 0.50	0.12 to 0.25	Easily penetrated several inches by thumb
Medium Stiff	0.50 to 1.0	0.50 to 1.0	0.25 to 0.50	Penetrated several inches by thumb with moderate effort
Stiff	1 to 2	1 to 2	0.50 to 1.0	Readily indented by thumb but penetrated only with great effort
Very Stiff	2 to 4	2 to 4	1.0 to 2.0	Readily indented by thumbnail
Hard	> 4.0	> 4.0	> 2.0	Indented by thumbnail with difficulty

BOREHOLE IDENTIFICATION

Symbol	Hole Type	Description
Size	A	Auger Boring
Size	R P	Rotary drilled boring Rotary percussion boring (air)
Size	R	Rotary drilled diamond core
Size	HD HA	Hand driven (1-inch soil tube) Hand Auger
●	D	Dynamic Cone Penetration Boring
▲	CPT	Cone Penetration Test (ASTM D 5778-95)
⬚	O	Other

Note: Size in inches.

PLASTICITY OF FINE-GRAINED SOILS

Description	Criteria
Nonplastic	A 1/8-inch thread cannot be rolled at any water content.
Low	The thread can barely be rolled and the lump cannot be formed when drier than the plastic limit.
Medium	The thread is easy to roll and not much time is required to reach the plastic limit. The thread cannot be rerolled after reaching the plastic limit. The lump crumbles when drier than the plastic limit.
High	It takes considerable time rolling and kneading to reach the plastic limit. The thread can be rerolled several times after reaching the plastic limit. The lump can be formed without crumbling when drier than the plastic limit.

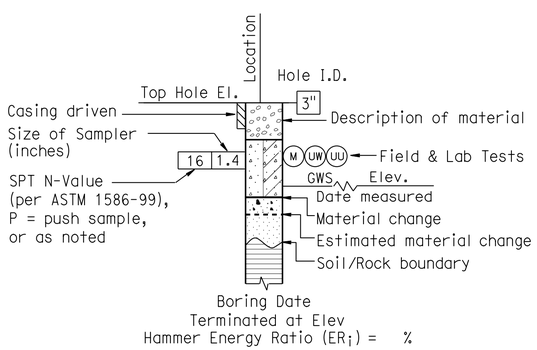

ROTARY BORING

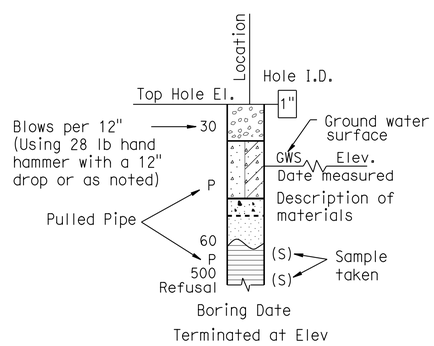

HAND BORING

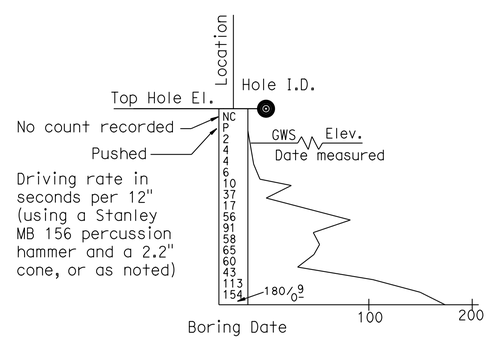

DYNAMIC CONE PENETRATION BORING

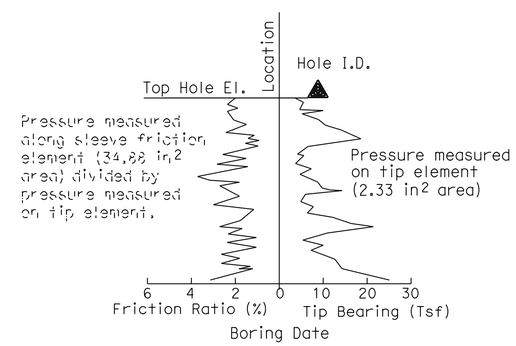

CONE PENETRATION TEST (CPT) SOUNDING

ENGINEERING SERVICES	MATERIALS AND GEOTECHNICAL SERVICES	STATE OF CALIFORNIA DEPARTMENT OF TRANSPORTATION	DIVISION OF ENGINEERING SERVICES STRUCTURE DESIGN DESIGN BRANCH X	BRIDGE NO. 57E0111 POST MILE 5.07	RETAINING WALL NO. 301L LOG OF TEST BORINGS 11 OF 14
	PREPARED BY: F. Nguyen 7/11				

REFERENCE: CALTRANS SOIL & ROCK LOGGING, CLASSIFICATION, AND PRESENTATION MANUAL (JUNE 2007)

DIST	COUNTY	ROUTE	POST MILES TOTAL PROJECT	SHEET No	TOTAL SHEETS
11	SD	805	4.7/5.6	603	650

REGISTERED CIVIL ENGINEER 8-11-11

06-25-12
PLANS APPROVAL DATE

The State of California or its officers or agents shall not be responsible for the accuracy or completeness of electronic copies of this plan sheet.

REGISTERED PROFESSIONAL ENGINEER
David T-M Liao
No. C59838
Exp. 12-31-13
CIVIL
STATE OF CALIFORNIA

GROUP SYMBOLS AND NAMES

Graphic/Symbol	Group Names	Graphic/Symbol	Group Names
GW	Well-graded GRAVEL Well-graded GRAVEL with SAND	CL	Lean CLAY Lean CLAY with SAND Lean CLAY with GRAVEL SANDY lean CLAY SANDY lean CLAY with GRAVEL GRAVELLY lean CLAY GRAVELLY lean CLAY with SAND
GP	Poorly graded GRAVEL Poorly graded GRAVEL with SAND		
GW-GM	Well-graded GRAVEL with SILT Well-graded GRAVEL with SILT and SAND	CL-ML	SILTY CLAY SILTY CLAY with SAND SILTY CLAY with GRAVEL SANDY SILTY CLAY SANDY SILTY CLAY with GRAVEL GRAVELLY SILTY CLAY GRAVELLY SILTY CLAY with SAND
GW-GC	Well-graded GRAVEL with CLAY (or SILTY CLAY) Well-graded GRAVEL with CLAY and SAND (or SILTY CLAY and SAND)		
GP-GM	Poorly graded GRAVEL with SILT Poorly graded GRAVEL with SILT and SAND	ML	SILT SILT with SAND SILT with GRAVEL SANDY SILT SANDY SILT with GRAVEL GRAVELLY SILT GRAVELLY SILT with SAND
GP-GC	Poorly graded GRAVEL with CLAY (or SILTY CLAY) Poorly graded GRAVEL with CLAY and SAND (or SILTY CLAY and SAND)		
GM	SILTY GRAVEL SILTY GRAVEL with SAND	OL	ORGANIC lean CLAY ORGANIC lean CLAY with SAND ORGANIC lean CLAY with GRAVEL SANDY ORGANIC lean CLAY SANDY ORGANIC lean CLAY with GRAVEL GRAVELLY ORGANIC lean CLAY GRAVELLY ORGANIC lean CLAY with SAND
GC	CLAYEY GRAVEL CLAYEY GRAVEL with SAND		
GC-GM	SILTY, CLAYEY GRAVEL SILTY, CLAYEY GRAVEL with SAND	OL	ORGANIC SILT ORGANIC SILT with SAND ORGANIC SILT with GRAVEL SANDY ORGANIC SILT SANDY ORGANIC SILT with GRAVEL GRAVELLY ORGANIC SILT GRAVELLY ORGANIC SILT with SAND
SW	Well-graded SAND Well-graded SAND with GRAVEL		
SP	Poorly graded SAND Poorly graded SAND with GRAVEL	CH	Fat CLAY Fat CLAY with SAND Fat CLAY with GRAVEL SANDY fat CLAY SANDY fat CLAY with GRAVEL GRAVELLY fat CLAY GRAVELLY fat CLAY with SAND
SW-SM	Well-graded SAND with SILT Well-graded SAND with SILT and GRAVEL		
SW-SC	Well-graded SAND with CLAY (or SILTY CLAY) Well-graded SAND with CLAY and GRAVEL (or SILTY CLAY and GRAVEL)	MH	Elastic SILT Elastic SILT with SAND Elastic SILT with GRAVEL SANDY elastic SILT SANDY elastic SILT with GRAVEL GRAVELLY elastic SILT GRAVELLY elastic SILT with SAND
SP-SM	Poorly graded SAND with SILT Poorly graded SAND with SILT and GRAVEL		
SP-SC	Poorly graded SAND with CLAY (or SILTY CLAY) Poorly graded SAND with CLAY and GRAVEL (or SILTY CLAY and GRAVEL)	OH	ORGANIC fat CLAY ORGANIC fat CLAY with SAND ORGANIC fat CLAY with GRAVEL SANDY ORGANIC fat CLAY SANDY ORGANIC fat CLAY with GRAVEL GRAVELLY ORGANIC fat CLAY GRAVELLY ORGANIC fat CLAY with SAND
SM	SILTY SAND SILTY SAND with GRAVEL		
SC	CLAYEY SAND CLAYEY SAND with GRAVEL	OH	ORGANIC elastic SILT ORGANIC elastic SILT with SAND ORGANIC elastic SILT with GRAVEL SANDY ORGANIC elastic SILT SANDY ORGANIC elastic SILT with GRAVEL GRAVELLY ORGANIC elastic SILT GRAVELLY ORGANIC elastic SILT with SAND
SC-SM	SILTY, CLAYEY SAND SILTY, CLAYEY SAND with GRAVEL		
PT	PEAT	OL/OH	ORGANIC SOIL ORGANIC SOIL with SAND ORGANIC SOIL with GRAVEL SANDY ORGANIC SOIL SANDY ORGANIC SOIL with GRAVEL GRAVELLY ORGANIC SOIL GRAVELLY ORGANIC SOIL with SAND
	COBBLES COBBLES and BOULDERS BOULDERS		

FIELD AND LABORATORY TESTING

- (C) Consolidation (ASTM D 2435)
- (CL) Collapse Potential (ASTM D 5333)
- (CP) Compaction Curve (CTM 216)
- (CR) Corrosivity Testing (CTM 643, CTM 422, CTM 417)
- (CU) Consolidated Undrained Triaxial (ASTM D 4767)
- (DS) Direct Shear (ASTM D 3080)
- (EI) Expansion Index (ASTM D 4829)
- (M) Moisture Content (ASTM D 2216)
- (OC) Organic Content-% (ASTM D 2974)
- (P) Permeability (CTM 220)
- (PA) Particle Size Analysis (ASTM D 422)
- (PI) Plasticity Index (AASHTO T 90) Liquid Limit (AASHTO T 89)
- (PL) Point Load Index (ASTM D 5731)
- (PM) Pressure Meter
- (PP) Pocket Penetrometer
- (R) R-Value (CTM 301)
- (SE) Sand Equivalent (CTM 217)
- (SG) Specific Gravity (AASHTO T 100)
- (SL) Shrinkage Limit (ASTM D 427)
- (SW) Swell Potential (ASTM D 4546)
- (TV) Pocket Torvane
- (UC) Unconfined Compression-Soil (ASTM D 2166) Unconfined Compression-Rock (ASTM D 2938)
- (UU) Unconsolidated Undrained Triaxial (ASTM D 2850)
- (UW) Unit Weight (ASTM D 4767)
- (VS) Vane Shear (AASHTO T 223)

APPARENT DENSITY OF COHESIONLESS SOILS

Description	SPT N_{60} (Blows / 12 inches)
Very loose	0 - 4
Loose	5 - 10
Medium Dense	11 - 30
Dense	31 - 50
Very Dense	> 50

MOISTURE

Description	Criteria
Dry	Absence of moisture, dusty, dry to the touch
Moist	Damp but no visible water
Wet	Visible free water, usually soil is below water table

PERCENT OR PROPORTION OF SOILS

Description	Criteria
Trace	Particles are present but estimated to be less than 5%
Few	5 to 10%
Little	15 to 25%
Some	30 to 45%
Mostly	50 to 100%

PARTICLE SIZE

Description		Size
Boulder		> 12"
Cobble		3" to 12"
Gravel	Coarse	3/4" to 3"
	Fine	No. 4 to 3/4"
Sand	Coarse	No. 10 to No. 4
	Medium	No. 40 to No. 10
	Fine	No. 200 to No. 40

ENGINEERING SERVICES

MATERIALS AND GEOTECHNICAL SERVICES

PREPARED BY: F. Nguyen 7/11

STATE OF CALIFORNIA
DEPARTMENT OF TRANSPORTATION

DIVISION OF ENGINEERING SERVICES
STRUCTURE DESIGN
DESIGN BRANCH X

BRIDGE NO. 57E0111
POST MILE 5.07

RETAINING WALL NO. 301L
LOG OF TEST BORINGS 12 OF 14

GS LOTB SOIL LEGEND

ORIGINAL SCALE IN INCHES FOR REDUCED PLANS 0 1 2 3

UNIT: 3643
PROJECT NUMBER & PHASE: 11000200511
CONTRACT NO.: 11-2T1821

DISREGARD PRINTS BEARING EARLIER REVISION DATES

REVISION DATES 06-24-11 06-30-11 08-11-11 11-4-11

SHEET 24 OF 26

FILE => RW301L-z-ltb12.dgn

USERNAME => s127400 DATE PLOTTED => 13-SEP-2012 TIME PLOTTED => 08:03

DIST	COUNTY	ROUTE	POST MILES TOTAL PROJECT	SHEET No	TOTAL SHEETS
11	SD	805	4.7/5.6	604	650

REGISTERED CIVIL ENGINEER 8-11-11

06-25-12
PLANS APPROVAL DATE

The State of California or its officers or agents shall not be responsible for the accuracy or completeness of electronic copies of this plan sheet.

REGISTERED PROFESSIONAL ENGINEER David T-M Liao No. C59838 Exp. 12-31-13 CIVIL STATE OF CALIFORNIA

REFERENCE: CALTRANS SOIL & ROCK LOGGING, CLASSIFICATION, AND PRESENTATION MANUAL (JUNE 2007)

PERCENT CORE RECOVERY (REC) & ROCK QUALITY DESIGNATION (RQD)

$$REC = \frac{\sum \text{Length of the recovered core pieces (inches)}}{\text{Total length of core run (inches)}} \times 100\%$$

$$RQD = \frac{\sum \text{Length of intact core pieces} \geq 4''}{\text{Total length of core run (inches)}} \times 100\%$$

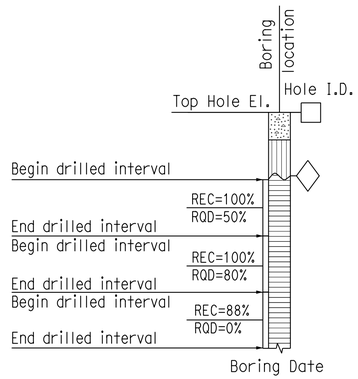

RELATIVE STRENGTH OF INTACT ROCK

Term	Uniaxial Compressive Strength (PSI)
Extremely Strong	> 30,000
Very Strong	14,500 - 30,000
Strong	7,000 - 14,500
Medium Strong	3,500 - 7,000
Weak	700 - 3,500
Very Weak	150 - 700
Extremely Weak	< 150

BEDDING SPACING

Description	Thickness / Spacing
Massive	Greater than 10 ft
Very thickly bedded	3 to 10 ft
Thickly bedded	1 to 3 ft
Moderately bedded	3-5/8" to 1 ft
Thinly bedded	1-1/4" to 3-5/8"
Very thinly bedded	3/8" to 1-1/4"
Laminated	Less than 3/8"

LEGEND OF ROCK MATERIALS

- IGNEOUS ROCK
- SEDIMENTARY ROCK
- METAMORPHIC ROCK

ROCK HARDNESS

Description	Criteria
Extremely Hard	Specimen cannot be scratched with a pocket knife or sharp pick; can only be chipped with repeated heavy hammer blows.
Very Hard	Specimen cannot be scratched with a pocket knife or sharp pick. Breaks with repeated heavy hammer blows.
Hard	Specimen can be scratched with a pocket knife or sharp pick with difficulty (heavy pressure). Heavy hammer blows required to break specimen.
Moderately Hard	Specimen can be scratched with pocket knife or sharp pick with light or moderate pressure. Core breaks with moderate hammer blows.
Moderately Soft	Specimen can be grooved 1/6" deep with a pocket knife or sharp pick with moderate or heavy pressure. Breaks with light hammer blow or heavy manual pressure.
Soft	Specimen can be grooved or gouged easily by a pocket knife or sharp pick with light pressure, can be scratched with fingernail. Breaks with light to moderate manual pressure.
Very Soft	Specimen can be readily indented, grooved or gouged with fingernail, or carved with a pocket knife. Breaks with light manual pressure.

FRACTURE DENSITY

Description	Observed Fracture Density
Unfractured	No fractures.
Very slightly fractured	Lengths greater than 3 feet.
Slightly fractured	Lengths from 1 to 3 feet with few lengths less than 1 foot or greater than 3 feet.
Moderately fractured	Lengths mostly in 4" to 1 foot range with most lengths about 8"
Intensely fractured	Lengths average from 1 to 4" with scattered fragmented intervals with lengths less than 4"
Very intensely fractured	Mostly chips and fragments with a few scattered short core lengths.

Combination descriptors (such as "Very intensely to intensely fractured") are used where equal distribution of both fracture density characteristics is present over a significant interval or exposure, or where characteristics are "in between" the descriptor definitions. Only two adjacent descriptors may be combined.

WEATHERING DESCRIPTORS FOR INTACT ROCK

Description	Diagnostic features					General Characteristics
	Chemical Weathering-Discoloration and/or oxidation		Mechanical Weathering-Grain boundary conditions (disaggregation) primarily for granitics and some coarse-grained sediments	Texture and Solutioning		
	Body of Rock	Fracture Surfaces		Texture	Solutioning	
Fresh	No discoloration, not oxidized.	No discoloration or oxidation.	No separation, intact (tight).	No change.	No solutioning.	Hammer rings when crystalline rocks are struck.
Slightly Weathered	Discoloration or oxidation is limited to surface of, or short distance from, fractures; some feldspar crystals are dull.	Minor to complete discoloration or oxidation of most surfaces.	No visible separation, intact (tight).	Preserved.	Minor leaching of some soluble minerals may be noted.	Hammer rings when crystalline rocks are struck. Body of rock not weakened.
Moderately Weathered	Discoloration or oxidation extends from fractures usually throughout; Fe-Mg minerals are "rusty," feldspar crystals are "cloudy."	All fracture surfaces are discolored or oxidized.	Partial separation of boundaries visible.	Generally preserved.	Soluble minerals may be mostly leached.	Hammer does not ring when rock is struck. Body of rock is slightly weakened.
Intensely Weathered	Discoloration or oxidation throughout; all feldspars and Fe-Mg minerals are altered to clay to some extent; or chemical alteration produces in-situ disaggregation, see grain boundary conditions.	All fracture surfaces are discolored or oxidized, surfaces friable.	Partial separation, rock is friable; in semiarid conditions granitics are disaggregated.	Texture altered by chemical disintegration (hydration, argillation).	Leaching of soluble minerals may be complete.	Dull sound when struck with hammer, usually can be broken with moderate to heavy manual pressure or by light hammer blow without reference to planes of weakness such as incipient or hairline fractures, or veinlets. Rock is significantly weakened.
Decomposed	Discolored or oxidized throughout, but resistant minerals such as quartz may be unaltered; all feldspars and Fe-Mg minerals are completely altered to clay.		Complete separation of grain boundaries (disaggregated).	Resembles a soil, partial or complete remnant rock structure may be preserved; leaching of soluble minerals usually complete.		Can be granulated by hand. Resistant minerals such as quartz may be present as "stringers" or "dikes."

Combination descriptors (such as "slightly weathered to fresh") are permissible where equal distribution of both weathering characteristics is present over significant intervals or where characteristics present are "in between" the diagnostic feature. However, combination descriptors should not be used where significant, identifiable zones can be delineated. Only two adjacent descriptors may be combined. "Very intensely weathered" is the combination descriptor for "intensely weathered to decomposed."

ENGINEERING SERVICES

MATERIALS AND GEOTECHNICAL SERVICES

PREPARED BY: F. Nguyen 07/11

STATE OF CALIFORNIA DEPARTMENT OF TRANSPORTATION

DIVISION OF ENGINEERING SERVICES STRUCTURE DESIGN DESIGN BRANCH X

BRIDGE NO. 57E0111
POST MILE 5.07

RETAINING WALL NO. 301L
LOG OF TEST BORINGS 13 OF 14

GS LOTB SOIL LEGEND

ORIGINAL SCALE IN INCHES FOR REDUCED PLANS 0 1 2 3

UNIT: 3643
PROJECT NUMBER & PHASE: 11000200511
CONTRACT NO.: 11-2T1821

DISREGARD PRINTS BEARING EARLIER REVISION DATES

REVISION DATES 06-24-11 06-30-11 08-11-11 11-4-11

SHEET 25 OF 26

FILE => RW301L-z-ltb13.dgn

USERNAME => s127400 DATE PLOTTED => 13-SEP-2012 TIME PLOTTED => 08:03

DIST.	COUNTY	ROUTE	POST MILES—TOTAL PROJECT	SHEET NO.	TOTAL SHEETS
11	SD	805	5.1/8.8	187	285

SENIOR BRIDGE SUPERVISOR — REGISTERED CIVIL ENGINEER NO. 18624

DATE APPROVED April 23, 1973

BENCH MARK

B.M. 11-SD-805 Post Mile 5.085 Elev. 267.35
C.O.H. Tag on top of D.I. Station 290 + 52.03 "A" C.L.

PLAN

Scale 1" = 20'

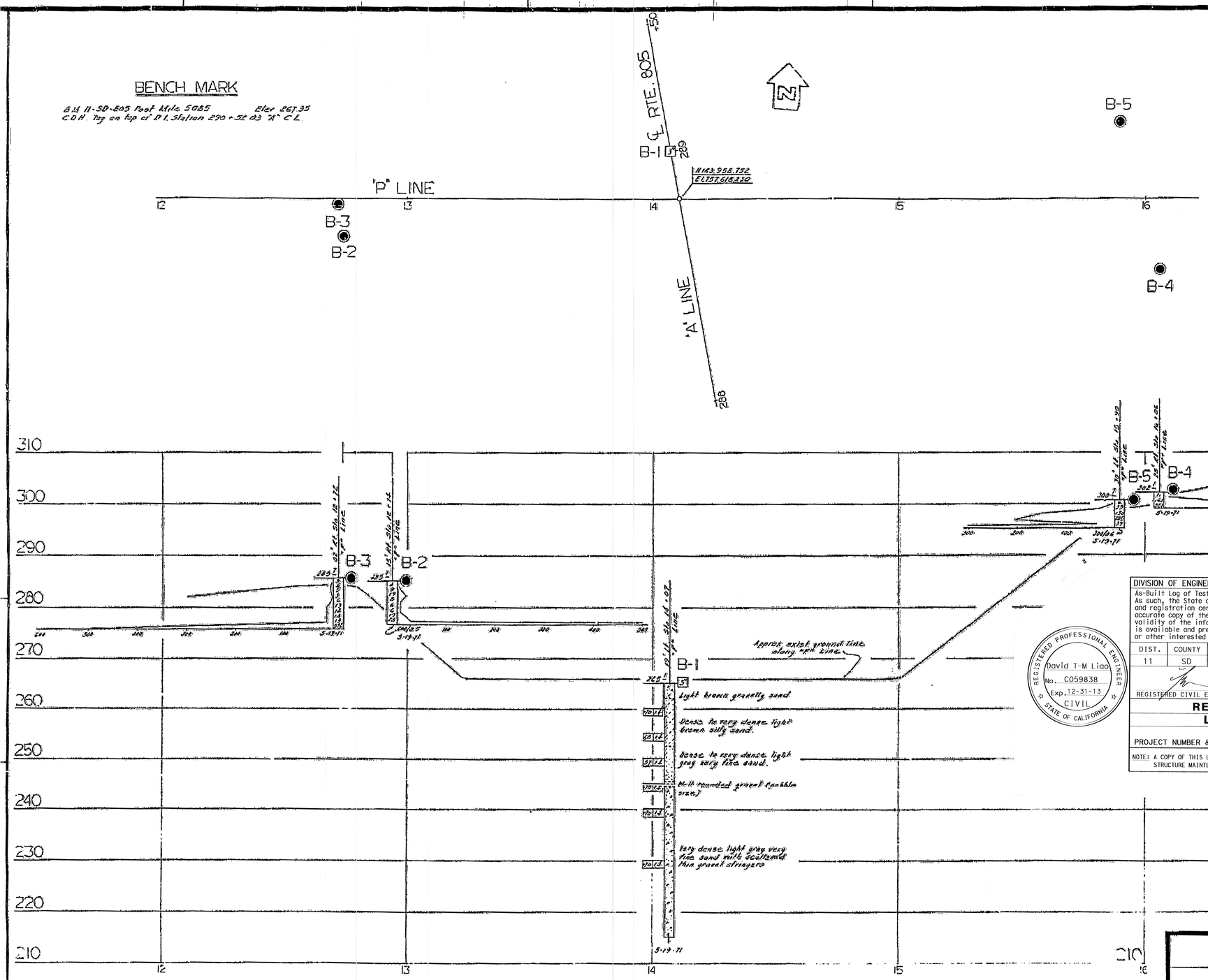

PROFILE

Scale Vert 1" = 10'
Horiz 1" = 20'

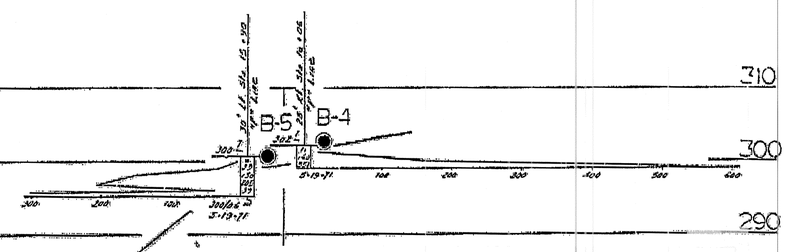

LEGEND OF BORING OPERATIONS

- Penetrometer
- 2½" Core Penetrometer
- Sampler Boring (Dry)
- Sampler Boring (Wet)
- Rotary Boring (Wet)
- Auger Boring (Dry)
- Jet Boring
- Core Boring
- Test Pit

Penetration Boring — Rotary Boring — 1" Soil Tube

LEGEND OF EARTH MATERIALS

Gravel · Sand · Silt · Clay · Sandy Clay or Clayey Sand · Peat and/or Organic Matter · Fill Material · Igneous Rock · Sedimentary Rock · Metamorphic Rock · Sandy Silt or Silty Sand

CLASSIFICATION OF MATERIAL BASED ON STANDARD GRADE SIZE LIMITS

Diagram showing the basis for estimates of grade size distribution used in estimating the proportion of class names, viz. "Gravelly Sand" or "Sandy Gravel" may be added to the class name, viz. "Gravelly Sand" the terms "Gravel" and "Sand" are used when used to describe sand, silt and gravel. Refer to standard grade size limits.

NOTE: Classification of earth material as shown on this sheet is based upon field inspection and is not to be construed to imply mechanical analysis.

FIELD STUDY	By O. Alkire	5-21-71
DRAWN	By J. Lane	6-10-71
CHECKED	By W. Cox	6-28-71

Approval Recommended by: Supervising Geologist

BRIDGE DEPARTMENT
ENGINEERING GEOLOGY SECTION

187

DIVISION OF ENGINEERING SERVICES - MATERIALS AND GEOTECHNICAL SERVICES

As-Built Log of Test Borings sheet is considered an informational document only. As such, the State of California registration seal with signature, license number and registration certificate expiration date confirm that this is a true and accurate copy of the original document. It does not attest to the accuracy or validity of the information contained in the original document. This drawing is available and presented only for the convenience of any bidder, contractor or other interested party.

DIST.	COUNTY	ROUTE	POST MILE-TOTAL PROJECT	Sheet No.	Total Sheets
11	SD	805	4.7/5.6	605	650

REGISTERED CIVIL ENGINEER — 06-25-12 — DATE 8/11/11

REGISTERED PROFESSIONAL ENGINEER — David T-M Liao — No. C059838 — Exp. 12-31-13 — CIVIL — STATE OF CALIFORNIA

RETAINING WALL NO. 301L
LOG OF TEST BORINGS 14 OF 14

UNIT: 3643 — CONTRACT No. 11-211821 — BRIDGE No.
PROJECT NUMBER & PHASE: 11000200511

NOTE: A COPY OF THIS LOG OF TEST BORINGS IS AVAILABLE AT OFFICE OF STRUCTURE MAINTENANCE AND INVESTIGATIONS, SACRAMENTO, CALIFORNIA — Sheet 26 of 26

AS BUILT - NO CHANGES
CORRECTIONS BY R. D. McKenzie
CONTRACT NO. 11-110114
DATE 7-31-75
CMW 11/3/75

AS BUILT PLANS
Contract No. 11-110114
Date Completed —
Document No. 40006298

NO GROUND WATER ENCOUNTERED
DIVISION OF ENGINEERING SERVICES
BRIDGE DEPARTMENT GEOLOGY SECTION
DATE May 1971

STATE OF CALIFORNIA

PALOMAR STREET OVERCROSSING

LOG OF TEST BORINGS

BRIDGE NO.	POST MILE	DRAWING NO.	SHEET	OF
57-801	5.1		11	11

REVISION DATES — (PRELIMINARY STAGE ONLY)

WO 11011
CU 1120

Disregard prints bearing earlier revision dates

DIST	COUNTY	ROUTE	POST MILES TOTAL PROJECT	SHEET No	TOTAL SHEETS
11	SD	805	4.7/5.6	606	650

REGISTERED CIVIL ENGINEER — DATE 4-26-12

06-25-12
PLANS APPROVAL DATE

REGISTERED PROFESSIONAL ENGINEER — MASON LEE HANCOCK — No. 75048 — Exp. 12-31-13 — CIVIL — STATE OF CALIFORNIA

The State of California or its officers or agents shall not be responsible for the accuracy or completeness of electronic copies of this plan sheet.

Dokken Engineering
2365 Iron Point Rd, Suite 200
Folsom, CA 95630 (916) 858-0642

SANDAG
401 B St, Suite 800
San Diego, CA 92101

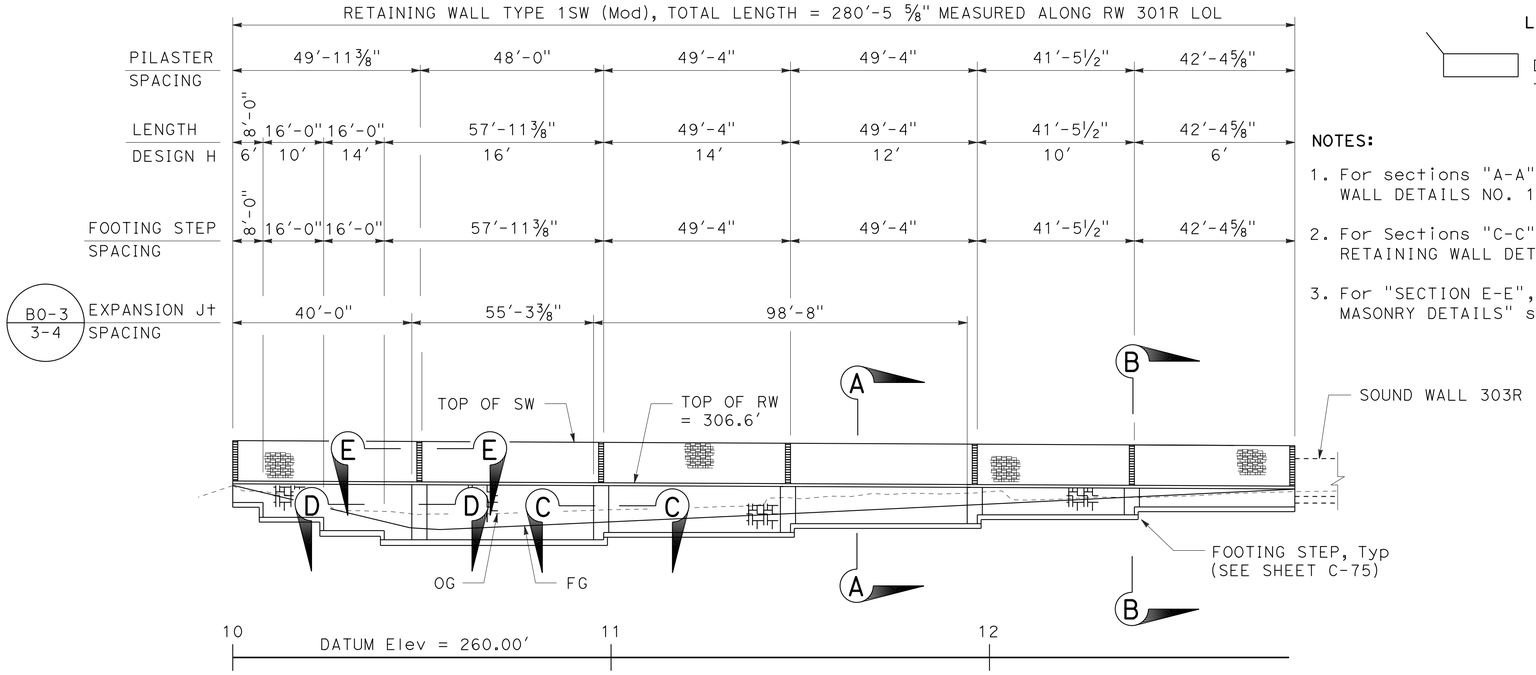

DEVELOPED MIRROR ELEVATION

1" = 20'

LEGEND:

Denotes bottom of footing elevation

NOTES:

1. For sections "A-A" and "B-B", see "RETAINING WALL DETAILS NO. 1" sheet.
2. For Sections "C-C" and "D-D", see " RETAINING WALL DETAILS NO. 2" sheet.
3. For "SECTION E-E", see "SOUND WALL MASONRY DETAILS" sheet.

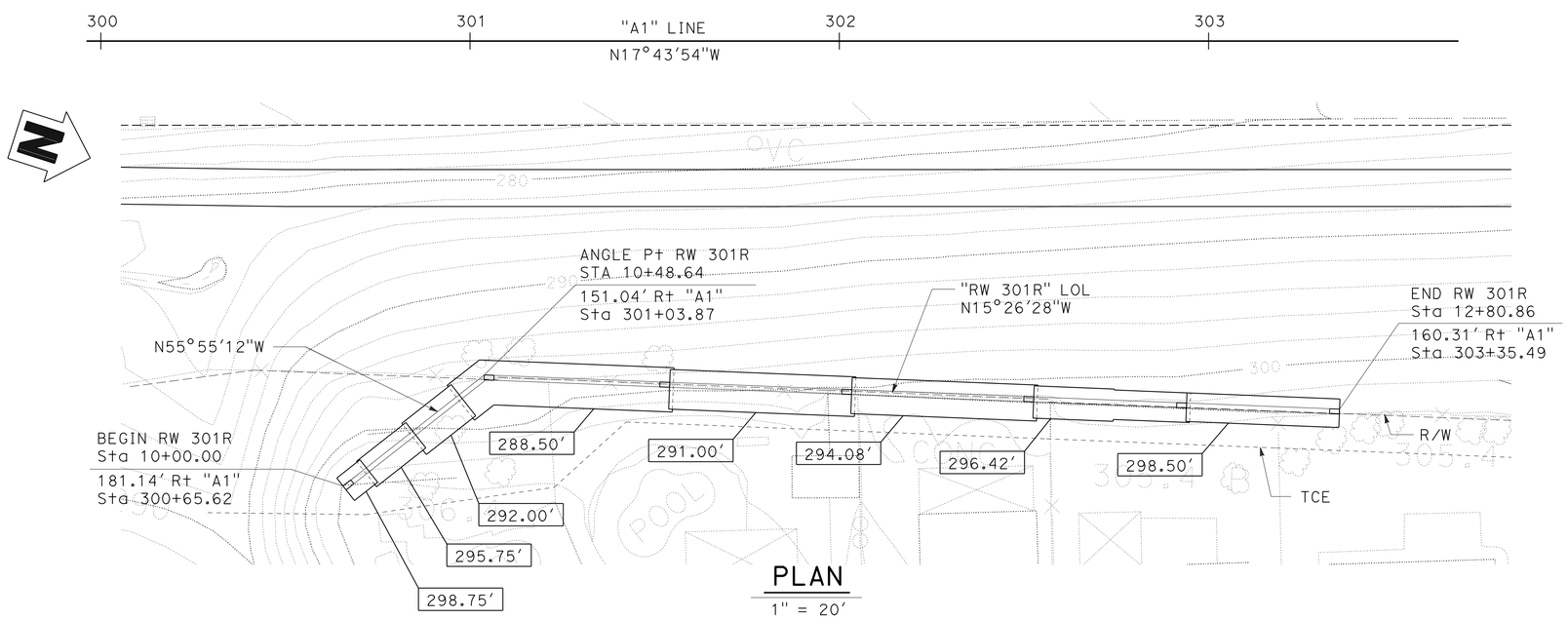

PLAN

1" = 20'

INDEX TO PLANS

Sheet No.	Title
1	GENERAL PLAN
2	RETAINING WALL DETAILS NO. 1
3	RETAINING WALL DETAILS NO. 2
4	SOUND WALL MASONRY DETAILS
5	RETAINING WALL TYPE 1SW (MOD)
6	LOG OF TEST BORINGS 1 OF 5
7	LOG OF TEST BORINGS 2 OF 5
8	LOG OF TEST BORINGS 3 OF 5
9	LOG OF TEST BORINGS 4 OF 5
10	LOG OF TEST BORINGS 5 OF 5

STANDARD PLANS DATED 2010

Sheet No.	Title
A10A	ABBREVIATIONS (SHEET 1 OF 2)
A10B	ABBREVIATIONS (SHEET 2 OF 2)
A10C	LINES AND SYMBOLS (SHEET 1 OF 3)
A10D	LINES AND SYMBOLS (SHEET 2 OF 3)
A10E	LINES AND SYMBOLS (SHEET 3 OF 3)
A62B	LIMITS OF PAYMENT FOR EXCAVATION AND BACKFILL BRIDGE SURCHARGE AND WALL
B0-3	BRIDGE DETAILS
B15-3	SOUND WALL MASONRY BLOCK ON PILE CAP DETAILS (1)
B15-4	SOUND WALL MASONRY BLOCK ON PILE CAP DETAILS (2)

STANDARD PLAN SHEET NO.

DETAIL NO.

RETAINING WALL 301R #57E0112

QUANTITIES

STRUCTURE EXCAVATION (RETAINING WALL)	880	CY
STRUCTURE BACKFILL (RETAINING WALL)	970	CY
STRUCTURAL CONCRETE, RETAINING WALL	350	CY
ARCHITECTURAL TREATMENT (ASHLAR TILE TEXTURE)	3,030	SQFT
MASONRY BLOCK WALL	2,880	SQFT
BAR REINFORCING STEEL (RETAINING WALL)	28,100	LB

DESIGN OVERSIGHT — Norbert Gee — 5-4-12 SIGN OFF DATE

	BY	CHECKED			
DESIGN	M. Hancock	R. Burns	LOAD & RESISTANCE FACTORDESIGN		
DETAILS	C. Houghton	M. Hancock	LAYOUT	M. Hancock	R. Burns
QUANTITIES	M. Hancock	R. Burns	SPECIFICATIONS	A. Powers	PLANS AND SPECS COMPARED C. Tornaci

DESIGN GENERAL PLAN SHEET (ENGLISH) (REV.7/16/10)

ORIGINAL SCALE IN INCHES FOR REDUCED PLANS 0 1 2 3

PREPARED FOR THE STATE OF CALIFORNIA DEPARTMENT OF TRANSPORTATION

C. Tornaci
PROJECT ENGINEER

UNIT: 2762
PROJECT NUMBER & PHASE: 1100020051

BRIDGE NO. 57E0112
POST MILES 5.1

RETAINING WALL NO. 301R
GENERAL PLAN

DISREGARD PRINTS BEARING EARLIER REVISION DATES

REVISION DATES (PRELIMINARY STAGE ONLY): 1-31-11 4-26-11 8-5-11 11-14-11 11-14-11 2-15-12 4-26-12 6-5-12

SHEET 1 OF 10

FILE => RW301R-a-gp01.dgn

CONTRACT NO.: X PROJECT ID: X

USERNAME => s127400 DATE PLOTTED => 13-SEP-2012 TIME PLOTTED => 08:03

DIST	COUNTY	ROUTE	POST MILES TOTAL PROJECT	SHEET No	TOTAL SHEETS
11	SD	805	4.7/5.6	607	650

REGISTERED CIVIL ENGINEER — DATE 4-26-12

06-25-12
PLANS APPROVAL DATE

REGISTERED PROFESSIONAL ENGINEER — MASON LEE HANCOCK — No. 75048 — Exp. 12-31-13 — CIVIL — STATE OF CALIFORNIA

The State of California or its officers or agents shall not be responsible for the accuracy or completeness of electronic copies of this plan sheet.

Dokken Engineering
2365 Iron Point Rd, Suite 200
Folsom, CA 95630 (916) 858-0642

SANDAG
401 B St, Suite 800
San Diego, CA 92101

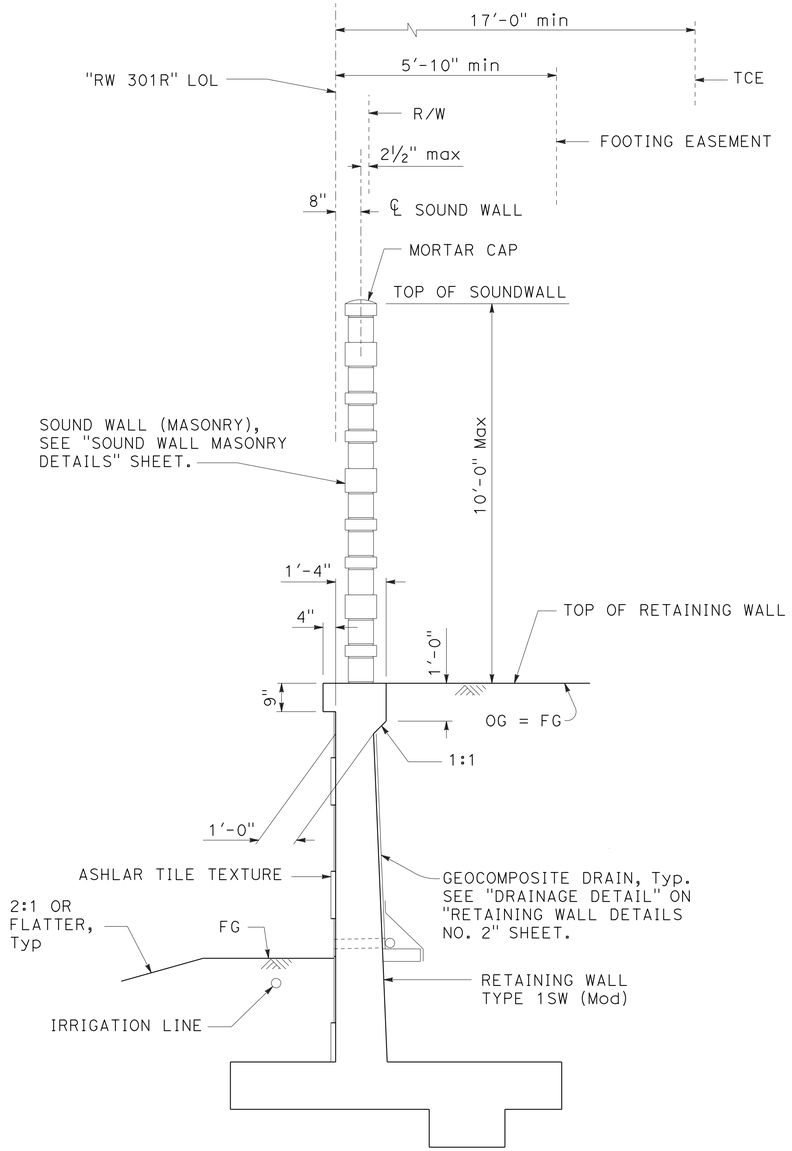

SECTION A-A

½" = 1'-0"

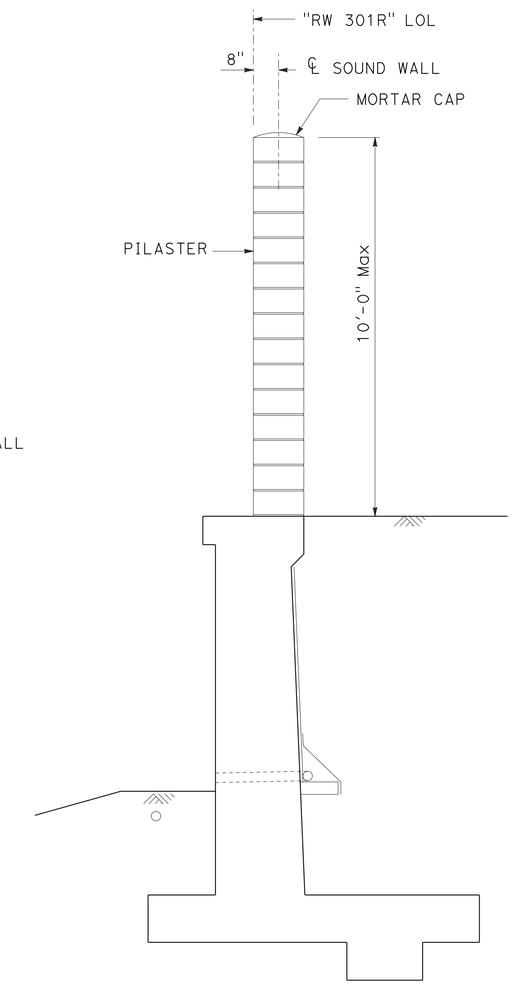

SECTION B-B

½" = 1'-0"

(For details not shown, see "SECTION A-A")

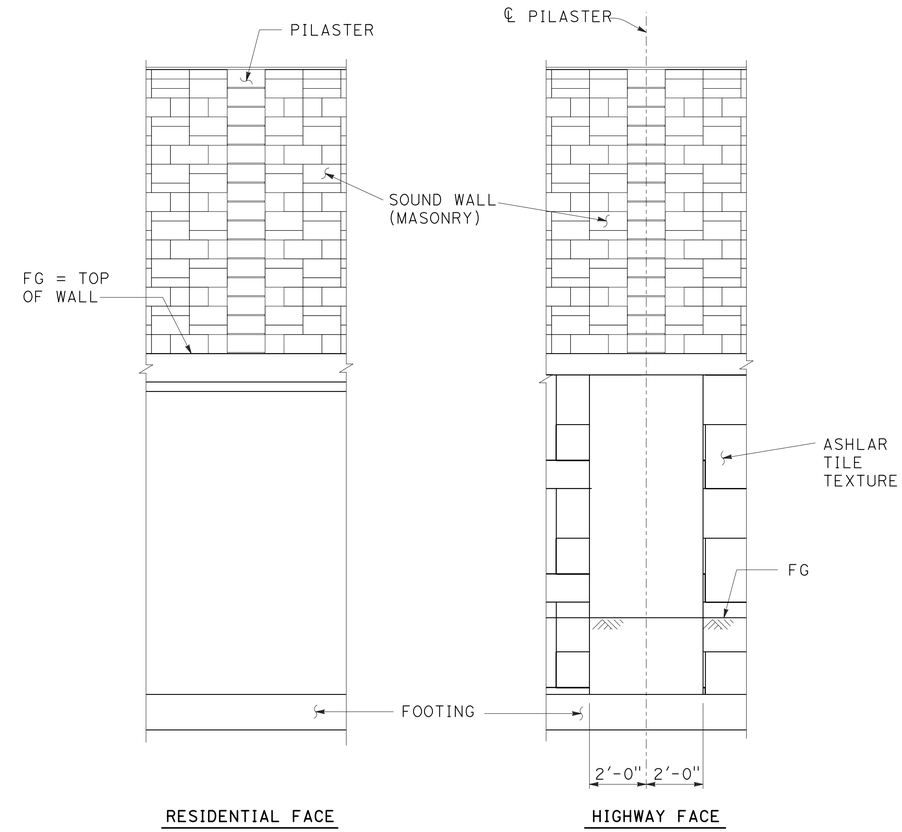

PARTIAL ELEVATION - ARCHITECTURAL TREATMENT

⅜" = 1'-0"

DESIGN OVERSIGHT — Norbert Gee	DESIGN	BY M. Hancock	CHECKED R. Burns
5-4-12 SIGN OFF DATE	DETAILS	BY C. Houghton	CHECKED M. Hancock
	QUANTITIES	BY M. Hancock	CHECKED R. Burns

PREPARED FOR THE STATE OF CALIFORNIA DEPARTMENT OF TRANSPORTATION

C. Tornaci
PROJECT ENGINEER

BRIDGE NO. 57E0112
POST MILES 5.1

RETAINING WALL NO. 301R
RETAINING WALL DETAILS NO. 1

DESIGN DETAIL SHEET (ENGLISH) (REV.7/16/10)

ORIGINAL SCALE IN INCHES FOR REDUCED PLANS 0 1 2 3

UNIT: 2762
PROJECT NUMBER & PHASE: 1100020051

DISREGARD PRINTS BEARING EARLIER REVISION DATES

REVISION DATES (PRELIMINARY STAGE ONLY): 4-26-11 8-5-11 11-4-11 11-18-11 2-10-12 4-26-12

SHEET 2 OF 10

FILE => RW301R-g-rwdt01.dgn

CONTRACT NO.: X PROJECT ID: X

USERNAME => s127400 DATE PLOTTED => 13-SEP-2012 TIME PLOTTED => 08:03

DIST	COUNTY	ROUTE	POST MILES TOTAL PROJECT	SHEET No	TOTAL SHEETS
11	SD	805	4.7/5.6	608	650

REGISTERED CIVIL ENGINEER — DATE 4-26-12

06-25-12
PLANS APPROVAL DATE

REGISTERED PROFESSIONAL ENGINEER — MASON LEE HANCOCK — No. 75048 — Exp. 12-31-13 — CIVIL — STATE OF CALIFORNIA

The State of California or its officers or agents shall not be responsible for the accuracy or completeness of electronic copies of this plan sheet.

Dokken Engineering
2365 Iron Point Rd, Suite 200
Folsom, CA 95630 (916) 858-0642

SANDAG
401 B St, Suite 800
San Diego, CA 92101

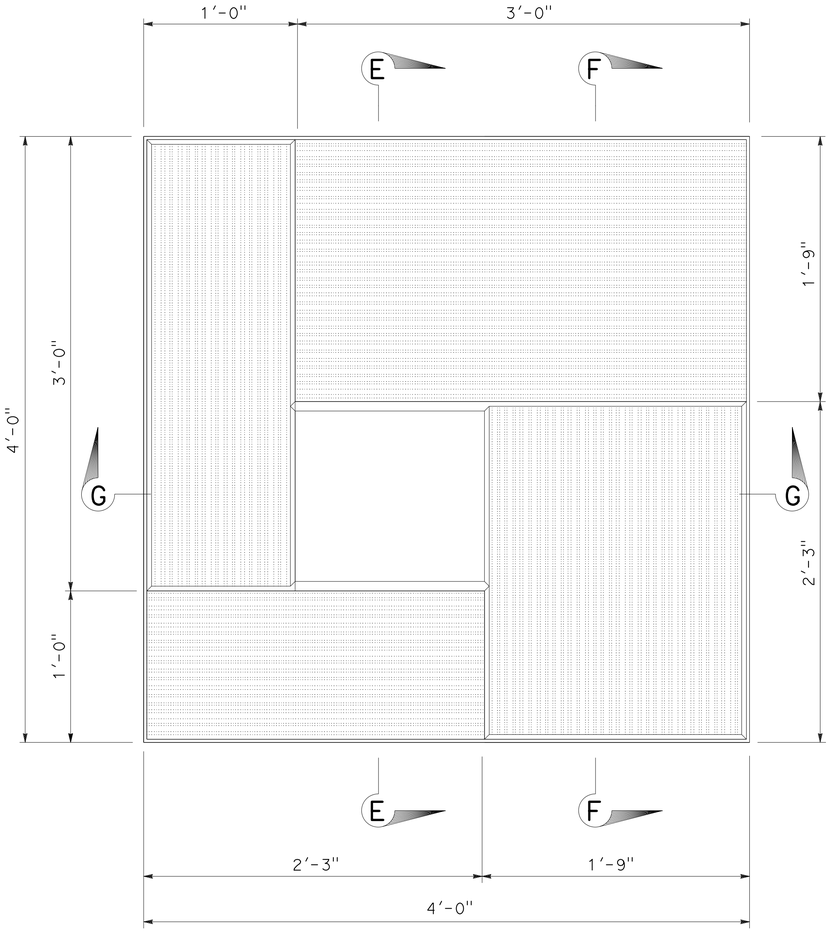

ASHLAR TILE TEXTURE DETAIL

2" = 1'-0"

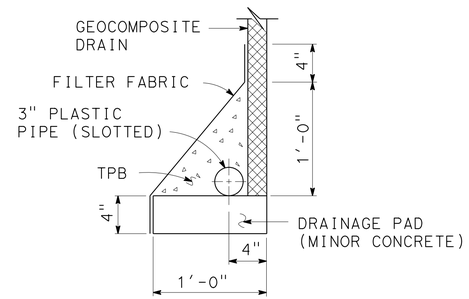

DRAINAGE DETAIL

NO SCALE

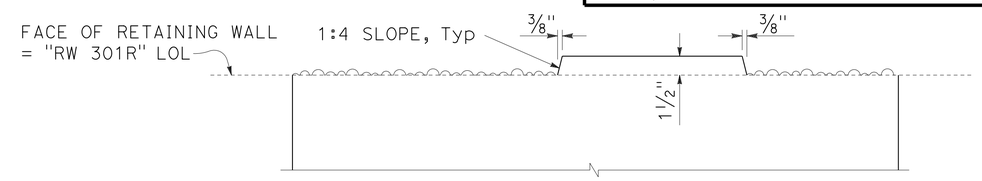

SECTION E-E

2" = 1'-0"

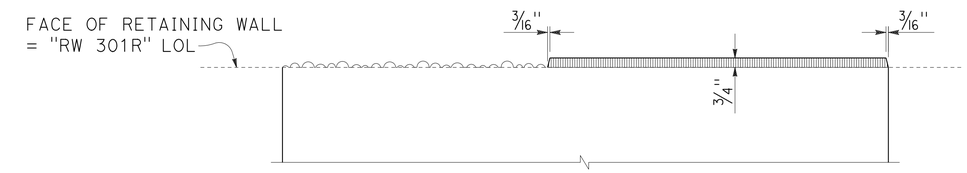

SECTION F-F

2" = 1'-0"

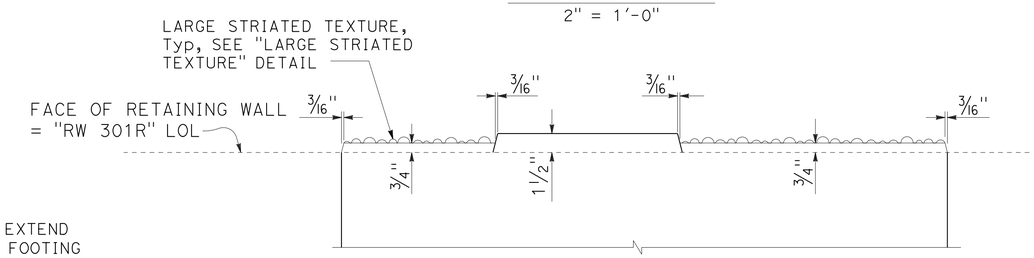

SECTION G-G

2" = 1'-0"

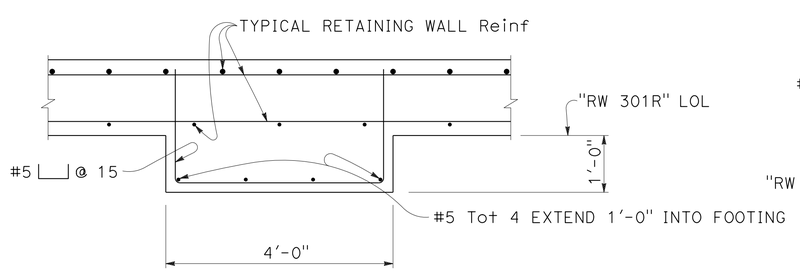

SECTION C-C

3/4" = 1'-0"

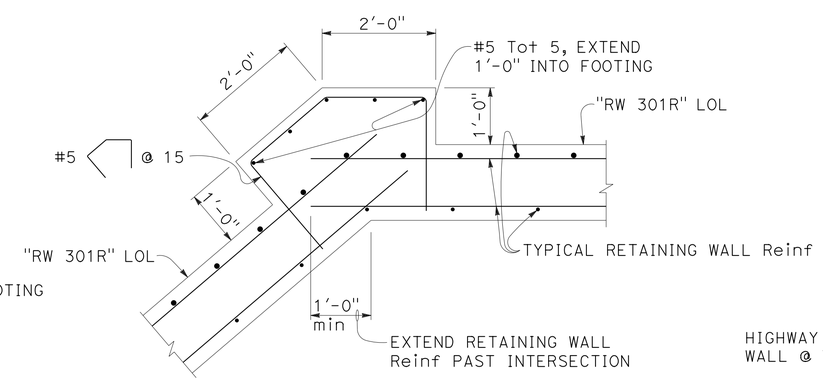

SECTION D-D

3/4" = 1'-0"

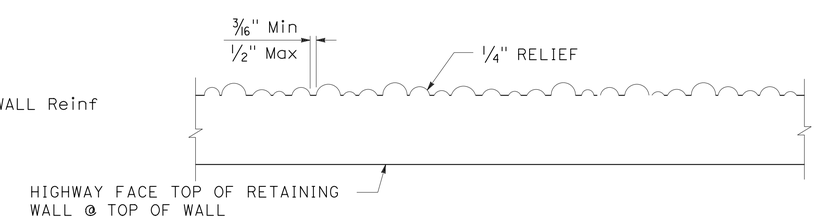

LARGE STRIATED TEXTURE DETAIL

4" = 1'-0"

DESIGN OVERSIGHT — Norbert Gee
5-4-12
SIGN OFF DATE

	BY	CHECKED
DESIGN	M. Hancock	R. Burns
DETAILS	C. Houghton	M. Hancock
QUANTITIES	M. Hancock	R. Burns

PREPARED FOR THE STATE OF CALIFORNIA DEPARTMENT OF TRANSPORTATION

C. Tornaci
PROJECT ENGINEER

BRIDGE NO. 57E0112
POST MILES 5.1

RETAINING WALL NO. 301R
RETAINING WALL DETAILS NO. 2

DESIGN DETAIL SHEET (ENGLISH) (REV.7/16/10)

ORIGINAL SCALE IN INCHES FOR REDUCED PLANS 0 1 2 3

UNIT: 2762
PROJECT NUMBER & PHASE: 1100020051

DISREGARD PRINTS BEARING EARLIER REVISION DATES

REVISION DATES (PRELIMINARY STAGE ONLY): 4-26-11 8-5-11 11-14-11 11-16-11 2-10-12 4-26-12

SHEET 3 OF 10

FILE => RW301R-g-rwdt02.dgn

CONTRACT NO.: X PROJECT ID: X

USERNAME => s127400 DATE PLOTTED => 13-SEP-2012 TIME PLOTTED => 08:04

DIST	COUNTY	ROUTE	POST MILES TOTAL PROJECT	SHEET No	TOTAL SHEETS
11	SD	805	4.7/5.6	609	650

REGISTERED CIVIL ENGINEER — DATE 4-26-12

06-25-12
PLANS APPROVAL DATE

REGISTERED PROFESSIONAL ENGINEER — MASON LEE HANCOCK — No. 75048 — Exp. 12-31-13 — CIVIL — STATE OF CALIFORNIA

The State of California or its officers or agents shall not be responsible for the accuracy or completeness of electronic copies of this plan sheet.

Dokken Engineering
2365 Iron Point Rd, Suite 200
Folsom, CA 95630 (916) 858-0642

SANDAG
401 B St, Suite 800
San Diego, CA 92101

LEGEND:

- Block A - 10" x 8" x 8" smooth face all exposed sides. Block will project 1" on both sides of wall.
- Block B - 8" x 8" x 8" split face all exposed sides.
- Block C - 10" x 4" x 16" split face all exposed sides. Block will project 1" on both sides of wall.
- Block D - 8" x 8" x 16" split face all exposed sides.
- Block E - 16" x 8" x 16" split face all exposed sides except where face meets field wall.
- Cap Block - 10" x 4" x 16" precision block for pilaster.

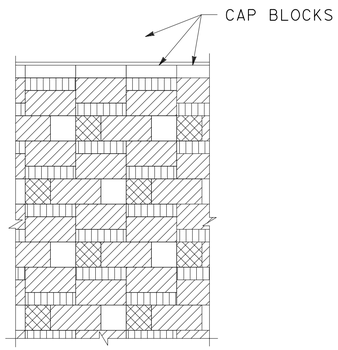

PART PLAN

MASONRY BLOCK PATTERN

NO SCALE

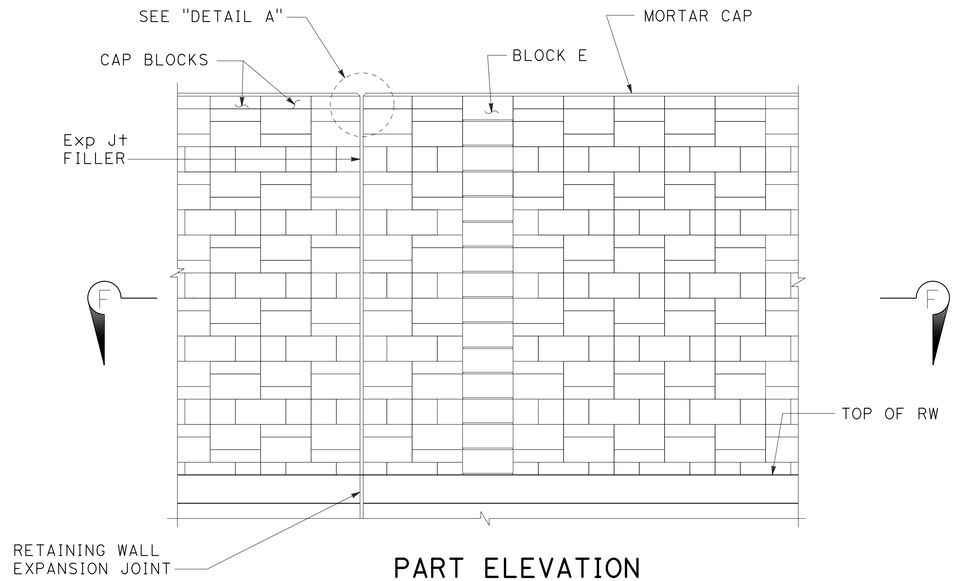

PART ELEVATION

½" = 1'-0"

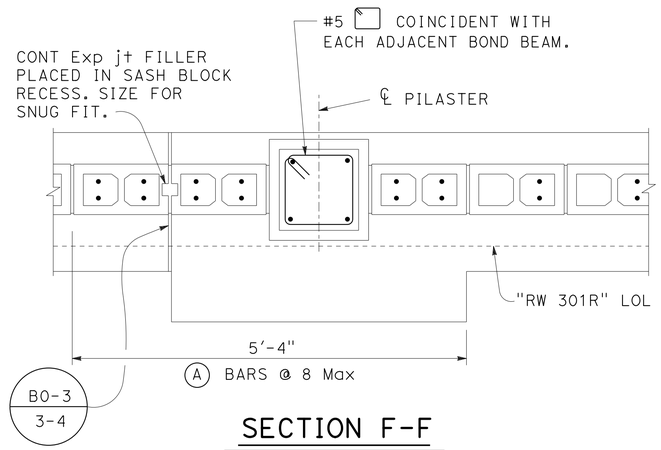

SECTION F-F

1" = 1'-0"

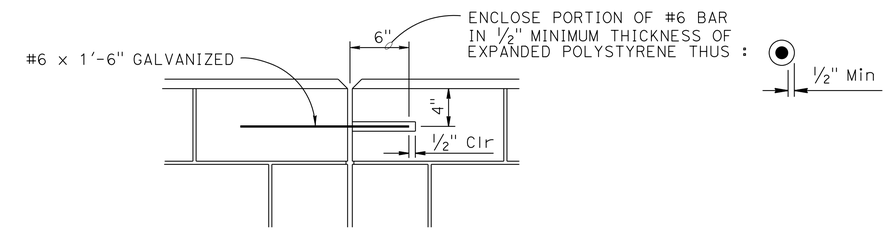

DETAIL A

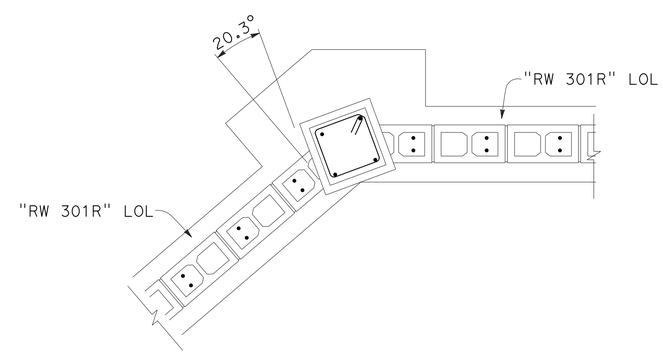

SECTION E-E

1" = 1'-0"

DESIGN NOTES:

DESIGN

Uniform Building Code, 1997 Edition and the Bridge Design Specifications.

DESIGN WIND LOAD

33 psf

DESIGN SEISMIC LOAD

0.57 Dead load

REINFORCED CONCRETE

f'c = 3.6 ksi
fy = 60 ksi

CONCRETE MASONRY

REGULAR STRENGTH	HIGH STRENGTH	
f'm = 1500 psi	f'm = 2000 psi	f'm = 2500 psi
fb = 495 psi	fb = 660 psi	fb = 830 psi
fs = 24,000 psi	fs = 24,000 psi	fs = 24,000 psi
n = 25.8	n = 19.3	n = 15.5

NOTES:

1. Core size for 10" wide block shall match the core size for 8" wide blocks.
2. All pilasters shall be plumb.
3. For details not shown, see Standard Plans B15-3 and B15-4.

DESIGN OVERSIGHT — Norbert Gee
5-4-12
SIGN OFF DATE

	BY	CHECKED
DESIGN	M. Hancock	R. Burns
DETAILS	C. Houghton	M. Hancock
QUANTITIES	M. Hancock	R. Burns

PREPARED FOR THE STATE OF CALIFORNIA DEPARTMENT OF TRANSPORTATION

C. Tornaci
PROJECT ENGINEER

BRIDGE NO. 57E0112
POST MILES 5.1

RETAINING WALL NO. 301R
SOUND WALL MASONRY DETAILS

DESIGN DETAIL SHEET (ENGLISH) (REV.7/16/10)

ORIGINAL SCALE IN INCHES FOR REDUCED PLANS 0 1 2 3

UNIT: 2762
PROJECT NUMBER & PHASE: 1100020051

DISREGARD PRINTS BEARING EARLIER REVISION DATES

REVISION DATES (PRELIMINARY STAGE ONLY): 4-26-11 8-5-11 11-14-11 11-16-11 2-15-12 4-26-12

SHEET 4 OF 10

FILE => RW301R-g-rwdt03.dgn
CONTRACT NO.: X
PROJECT ID: X

USERNAME => s127400 DATE PLOTTED => 13-SEP-2012 TIME PLOTTED => 08:04

DIST	COUNTY	ROUTE	POST MILES TOTAL PROJECT	SHEET No	TOTAL SHEETS
11	SD	805	4.7/5.6	610	650

REGISTERED CIVIL ENGINEER — DATE 4-26-12

06-25-12
PLANS APPROVAL DATE

REGISTERED PROFESSIONAL ENGINEER — MASON LEE HANCOCK — No. 75048 — Exp. 12-31-13 — CIVIL — STATE OF CALIFORNIA

The State of California or its officers or agents shall not be responsible for the accuracy or completeness of electronic copies of this plan sheet.

Dokken Engineering
2365 Iron Point Rd, Suite 200
Folsom, CA 95630 (916) 858-0642

SANDAG
401 B St, Suite 800
San Diego, CA 92101

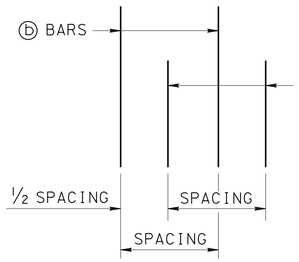

DETAIL B

NO SCALE

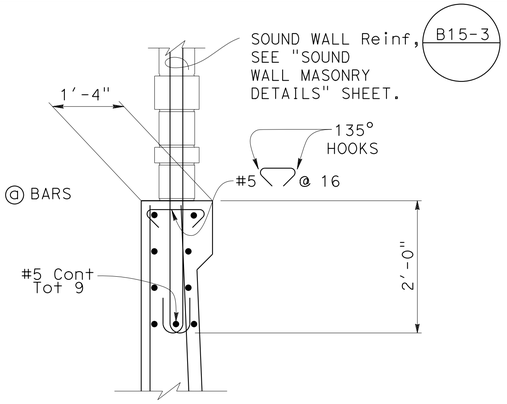

DETAIL A

NO SCALE

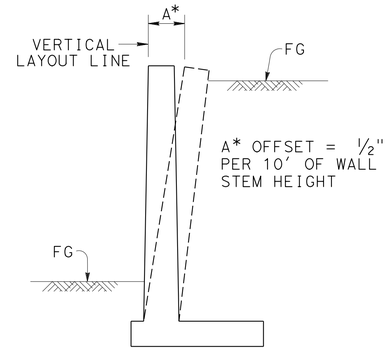

WALL OFFSET

NO SCALE

VALUES FOR OFFSETTING FORMS TO BE DETERMINED BY THE ENGINEER

TABLE OF REINFORCING STEEL DIMENSIONS AND DATA												
DESIGN H	6'		8'		10'		12'		14'		16'	
W	7'-9"		8'-0"		8'-9"		9'-9"		10'-9"		12'-0"	
C	2'-9"		2'-9"		3'-0"		3'-3"		3'-6"		4'-0"	
B	5'-0"		5'-3"		5'-9"		6'-6"		7'-3"		8'-0"	
F SPREAD FOOTING	1'-3"		1'-3"		1'-3"		1'-6"		2'-0"		2'-3"	
K	-		-		1'-0"		1'-3"		1'-6"		2'-0"	
BATTER	½:12		½:12		½:12		½:12		½:12		½:12	
ⓐ BARS							#6 @18**		#7@18**		#8 @18**	
X							Cont		Cont		Cont	
Y							8'-0"		6'-6"		7'-6"	
ⓑ BARS	#5 @12		#5 @ 9		#6 @ 9		#6 @18**		#7 @18**		#8 @18**	
X	Cont		Cont		Cont		Cont		Cont		Cont	
Y	Cont		Cont		Cont		Cont		Cont		11'-6"	
ⓒ BARS											#6 @18	
ⓓ BARS	#5 @12		#5 @12		#5 @12		#5 @ 9		#6 @ 9		#6 @ 9	
SER I: B' (ft), q'o (ksf)	6.8	0.5	7.4	0.7	8.6	0.9	9.4	1.1	10.6	1.2	11.5	1.4
STR I: B'(ft), qo (ksf)	7.0	0.8	7.8	1.0	8.3	1.2	8.9	2.4	10.1	2.6	11.5	2.9
STR III: B'(ft), qo (ksf)	7.6	1.0	7.7	1.3	8.2	1.6	8.9	1.9	10.3	2.0	11.4	2.3
STR V: B'(ft), qo (ksf)	7.4	0.8	7.8	0.9	8.3	2.0	9.2	2.2	10.3	2.4	11.7	2.7
EXT I: B'(ft), qo (ksf)	6.2	1.0	5.9	1.3	5.5	1.9	5.2	2.5	5.6	3.0	5.6	3.9

Note: Load Case 1 of the 2010 Standard Plan B3-5 was used.

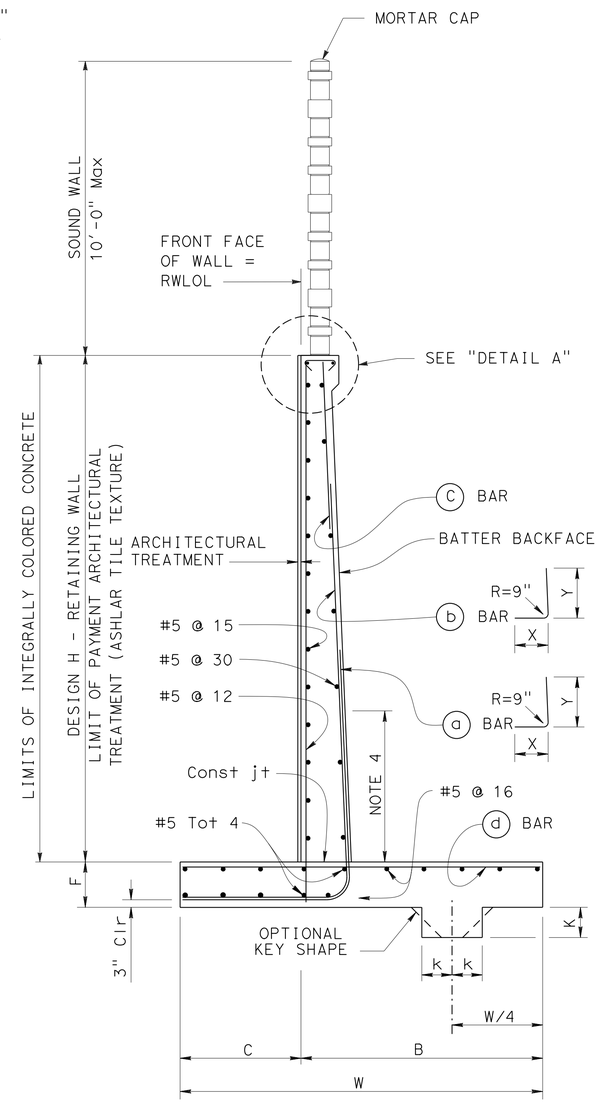

SPREAD FOOTING SECTION

NO SCALE

DESIGN DATA (RETAINING WALL)

DESIGN: AASHTO LRFD Bridge Design Specification, 4th Edition with California Amendments

WS: 33 psf on soundwall

LS: 240 psf surcharge on level ground surface

EQE: Mononabe-okabe Method
$K_h = 0.3$
$K_v = 0.0$

Soil: $\phi = 34°$ $\gamma = 120$ pcf

Reinforced Concrete, f'c = 3.6 ksi
fy = 60 ksi

Load Combinations and Limit States

Service I: Q=1.00DC+1.00EV+1.00EH+1.00LS+0.30WS

Service II: Q=1.00DC+1.00EV+1.00EH+1.00WS

Strength I: Q=aDC+βEV+1.50EH+1.75LS

Strength III: Q=aDC+βEV+1.50EH+1.40WS

Strength V: Q=aDC+βEV+1.50EH+1.35LS+0.40WS

Extreme I: Q=1.00DC+1.00EV+1.00EH+1.00EQD+1.00EQE

Where:
- Q: Force effects
- a: 1.25 or 0.90, Which ever Controls Design
- β: 1.35 or 1.00, Which ever Controls Design
- DC: Dead Load of Structure Components
- EV: Vertical Earth Fill Pressure
- EH: Horizontal Earth Fill Pressure
- LS: Live Load Surcharge
- EQE: Seismic Earth Pressure
- EQD: Soil and Structure Components Inertia. Soil Intertia ignored for stem design
- WS: Wind Load on Soundwall and Barrier

SYMBOLS:
- SER: service limit state
- STR: strength limit state
- EXT: extreme event limit state
- B' : effective footing width (ft)
- q'o : net bearing stress (ksf)
- qo : gross uniform bearing stress (ksf)
- ⅋ : 2 bar bundle

GENERAL NOTES:

1. For sound wall and retaining wall architectural finish or texture, see details elsewhere in project plans.
2. For details not shown and drainage notes, see SHEET C-75.
3. Footing cover, 1'-6" minimum.
4. Limit of no splicing rebars = 3 times the bottom thickness of the stem.
5. Placement of reinforcements:

ⓑ & ⓒ bars are spliced together.
* ⓐ & ⓑ bars are bundled together.
** Alternate ⓐ & ⓑ bars are shown in "Detail B".
Cont = Continuous.

NOTE:

Retaining wall to be constructed with integrally colored concrete. Color shall conform to Davis color "Mesa Buff".

DESIGN OVERSIGHT: Norbert Gee
5-4-12
SIGN OFF DATE

	BY	CHECKED
DESIGN	M. Hancock	R. Burns
DETAILS	C. Houghton	M. Hancock
QUANTITIES	M. Hancock	R. Burns

PREPARED FOR THE STATE OF CALIFORNIA DEPARTMENT OF TRANSPORTATION

C. Tornaci
PROJECT ENGINEER

BRIDGE NO. 57E0112
POST MILES 5.1

RETAINING WALL NO. 301R
RETAINING WALL TYPE 1SW (MOD)

DESIGN DETAIL SHEET (ENGLISH) (REV.7/16/10)

ORIGINAL SCALE IN INCHES FOR REDUCED PLANS 0 1 2 3

UNIT: 2762
PROJECT NUMBER & PHASE: 1100020051

DISREGARD PRINTS BEARING EARLIER REVISION DATES

REVISION DATES (PRELIMINARY STAGE ONLY): 4-26-11 8-5-11 11-4-11 11-14-11 12-13-12 4-26-12 6-5-12

SHEET 5 OF 10

FILE => RW301R-g-rwdt04.dgn

CONTRACT NO.: X PROJECT ID: X

USERNAME => s127400 DATE PLOTTED => 13-SEP-2012 TIME PLOTTED => 08:04

DIST	COUNTY	ROUTE	KILOMETER POST TOTAL PROJECT	SHEET No	TOTAL SHEETS
11	SD	805	4.7/5.6	611	650

REGISTERED CIVIL ENGINEER 4-26-12

06-25-12
PLANS APPROVAL DATE

REGISTERED PROFESSIONAL ENGINEER Cuong Nguyen No. C32414 Exp. 12-31-12 CIVIL STATE OF CALIFORNIA

The State of California or its officers or agents shall not be responsible for the accuracy or completeness of electronic copies of this plan sheet.

This LOTB sheet was prepared in accordance with the Caltrans Soil & Rock Logging, Classification, & Presentation Manual (2007 Edition).

BENCH MARK

BM 805-5.00, Brass disk in sidewalk on north side of E. Palomar St. OC bridge, at Station 298+46.0, Right 60 feet of "DAR" Line/"A1" Line.
Elevation: 300.93 feet
NAVD 1988 (Vertical)
NAD83 (Horizontal)

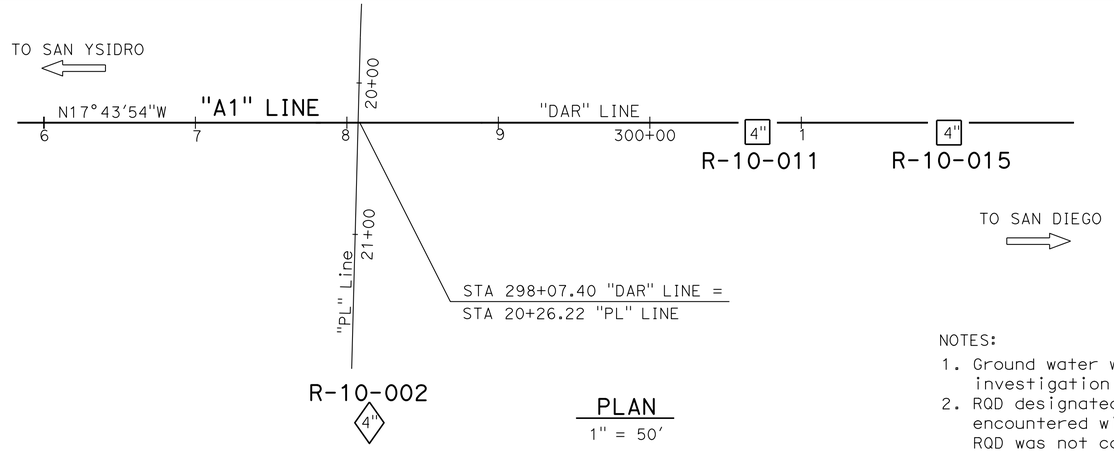

PLAN
1" = 50'

NOTES:
1. Ground water was not encountered during the 2010 subsurface investigation.
2. RQD designated with "NA" (not applicable) indicates that the rock encountered within the drill interval was not sound rock, therefore RQD was not calculated.
3. Plan sheets provided by Design, show that "A1" Line = "DAR" Line.

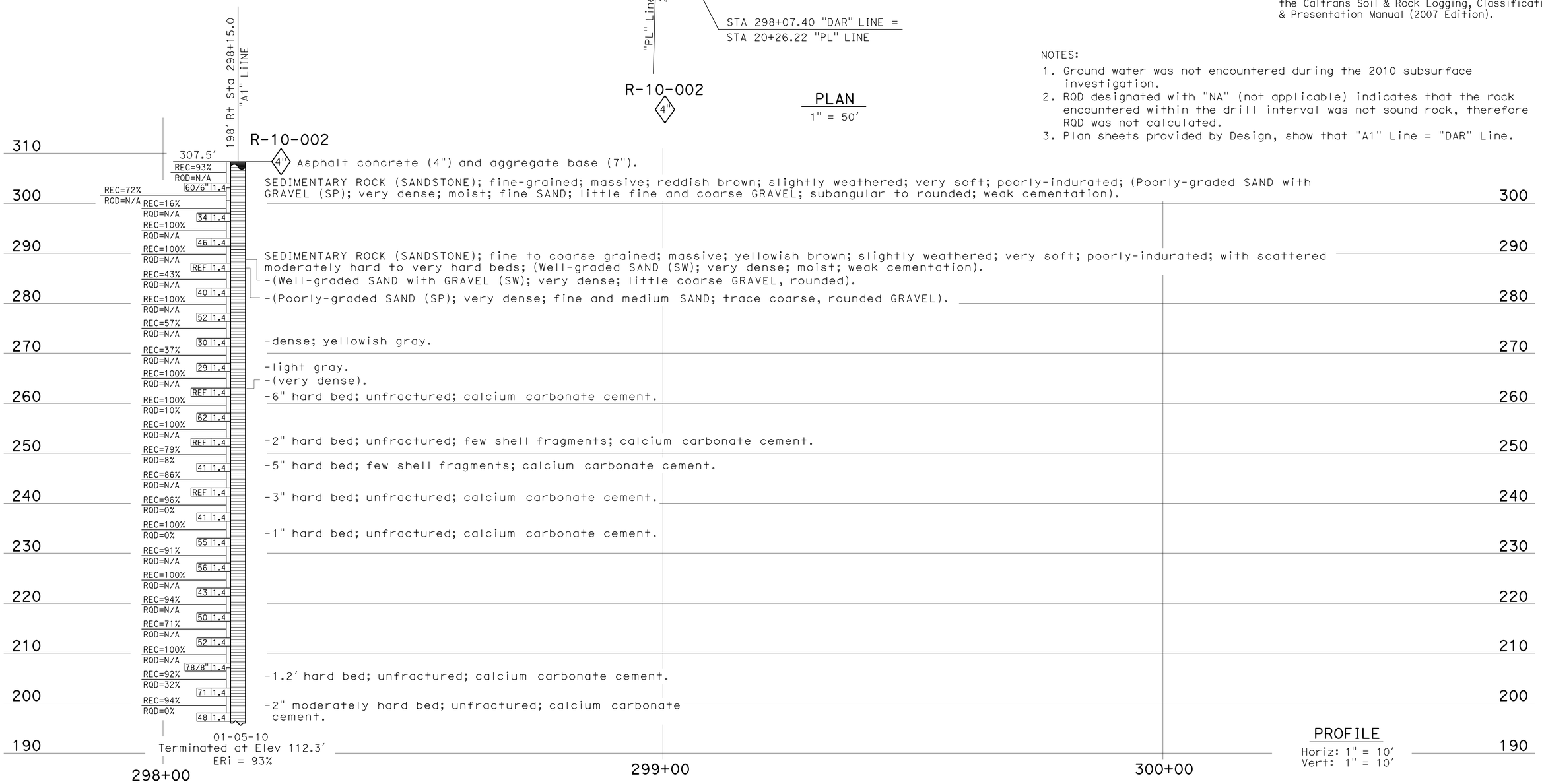

PROFILE
Horiz: 1" = 10'
Vert: 1" = 10'

ENGINEERING SERVICES	GEOTECHNICAL SERVICES	STATE OF CALIFORNIA DEPARTMENT OF TRANSPORTATION	DIVISION OF ENGINEERING SERVICES STRUCTURE DESIGN DESIGN BRANCH X	BRIDGE NO. 57E0112 POST MILE 5.07	RETAINING WALL 301R LOG OF TEST BORINGS 1 OF 5
FUNCTIONAL SUPERVISOR NAME: S. Wei	DRAWN BY: F. Nguyen, I.G-Remmen CHECKED BY: B. Gutierrez	FIELD INVESTIGATION BY: TM Liao/J. Klamecki			

OGS CIVIL LOG OF TEST BORINGS SHEET

ORIGINAL SCALE IN INCHES FOR REDUCED PLANS 0 1 2 3

UNIT: 3643
PROJECT NUMBER & PHASE: 11000200511 CONTRACT NO.: 11-2T1821

DISREGARD PRINTS BEARING EARLIER REVISION DATES 4-26-12

REVISION DATES | SHEET 6 | OF 10

FILE => RW301R-z-ltb01.dgn

USERNAME => s127400 DATE PLOTTED => 13-SEP-2012 TIME PLOTTED => 08:04

DIST	COUNTY	ROUTE	KILOMETER POST TOTAL PROJECT	SHEET No	TOTAL SHEETS
11	SD	805	4.7/5.6	612	650

REGISTERED CIVIL ENGINEER 4-26-12

06-25-12
PLANS APPROVAL DATE

REGISTERED PROFESSIONAL ENGINEER Cuong Nguyen No. C32414 Exp. 12-31-12 CIVIL STATE OF CALIFORNIA

The State of California or its officers or agents shall not be responsible for the accuracy or completeness of electronic copies of this plan sheet.

This LOTB sheet was prepared in accordance with the Caltrans Soil & Rock Logging, Classification, & Presentation Manual (2007 Edition).

FOR PLAN VIEW, SEE
"LOG OF TEST BORINGS 1 OF 5"

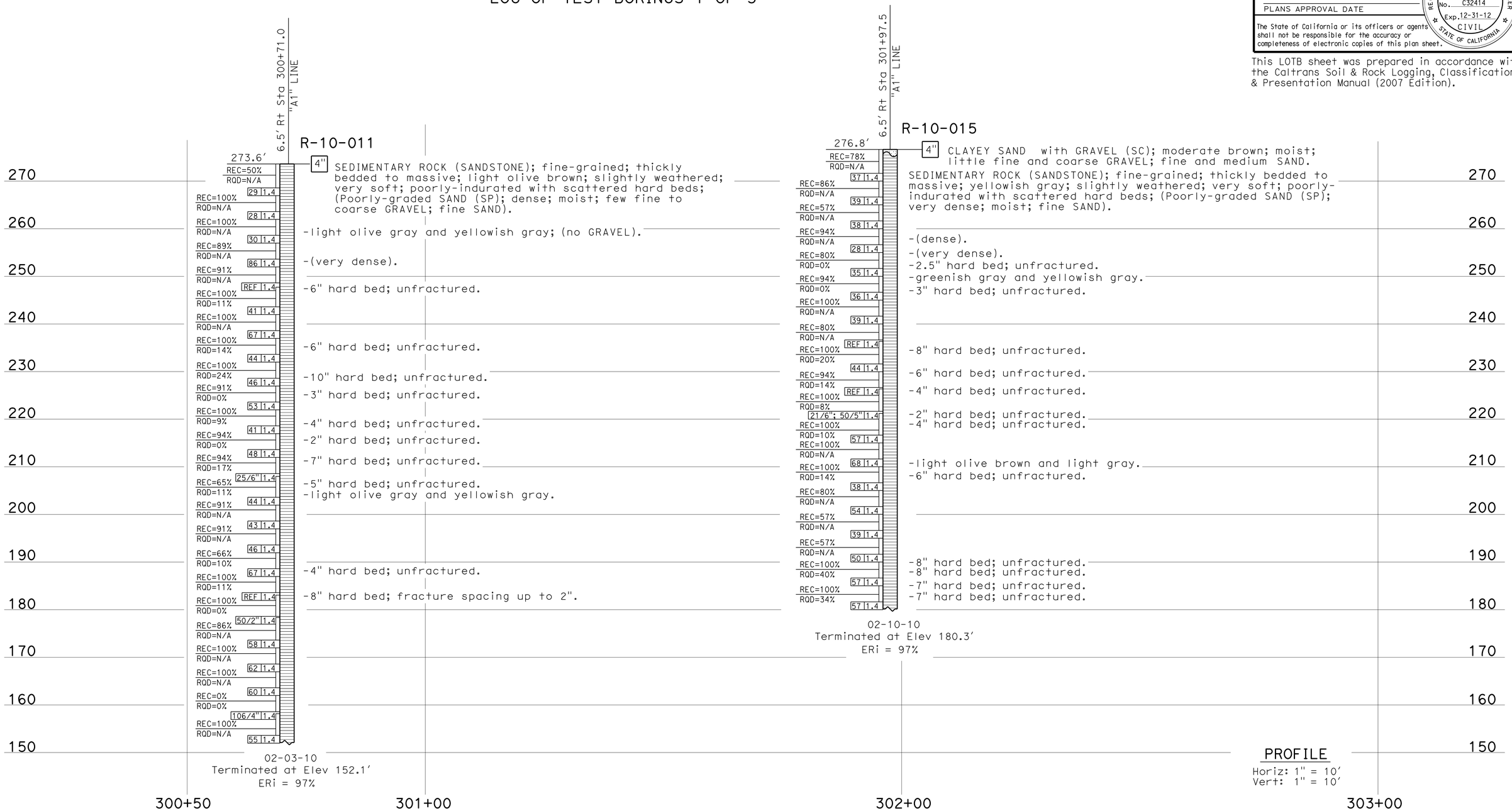

ENGINEERING SERVICES	GEOTECHNICAL SERVICES	STATE OF CALIFORNIA DEPARTMENT OF TRANSPORTATION	DIVISION OF ENGINEERING SERVICES STRUCTURE DESIGN DESIGN BRANCH X	BRIDGE NO. 57E0112 POST MILE 5.07	RETAINING WALL 301R LOG OF TEST BORINGS 2 OF 5
FUNCTIONAL SUPERVISOR NAME: S. Wei	DRAWN BY: F. Nguyen, I.G-Remmen CHECKED BY: B. Gutierrez	FIELD INVESTIGATION BY: TM Liao/J. Klamecki			

OGS CIVIL LOG OF TEST BORINGS SHEET

ORIGINAL SCALE IN INCHES FOR REDUCED PLANS 0 1 2 3

UNIT: 3643
PROJECT NUMBER & PHASE: 11000200511 CONTRACT NO.: 11-2T1821

DISREGARD PRINTS BEARING EARLIER REVISION DATES 4-26-12

REVISION DATES | SHEET 7 | OF 10

FILE => RW301R-z-lltb02.dgn

USERNAME => s127400 DATE PLOTTED => 13-SEP-2012 TIME PLOTTED => 08:04

DIST	COUNTY	ROUTE	KILOMETER POST TOTAL PROJECT	SHEET No	TOTAL SHEETS
11	SD	805	4.7/5.6	613	650

REGISTERED CIVIL ENGINEER 12-8-11

06-25-12
PLANS APPROVAL DATE

REGISTERED PROFESSIONAL ENGINEER Cuong Nguyen No. C32414 Exp. 12-31-12 CIVIL STATE OF CALIFORNIA

The State of California or its officers or agents shall not be responsible for the accuracy or completeness of electronic copies of this plan sheet.

REFERENCE: CALTRANS SOIL & ROCK LOGGING, CLASSIFICATION, AND PRESENTATION MANUAL (JUNE 2007)

CEMENTATION

Description	Criteria
Weak	Crumbles or breaks with handling or little finger pressure.
Moderate	Crumbles or breaks with considerable finger pressure.
Strong	Will not crumble or break with finger pressure.

CONSISTENCY OF COHESIVE SOILS

Description	Unconfined Compressive Strength (tsf)	Pocket Penetrometer Measurement (tsf)	Torvane Measurement (tsf)	Field Approximation
Very Soft	< 0.25	< 0.25	< 0.12	Easily penetrated several inches by fist
Soft	0.25 to 0.50	0.25 to 0.50	0.12 to 0.25	Easily penetrated several inches by thumb
Medium Stiff	0.50 to 1.0	0.50 to 1.0	0.25 to 0.50	Penetrated several inches by thumb with moderate effort
Stiff	1 to 2	1 to 2	0.50 to 1.0	Readily indented by thumb but penetrated only with great effort
Very Stiff	2 to 4	2 to 4	1.0 to 2.0	Readily indented by thumbnail
Hard	> 4.0	> 4.0	> 2.0	Indented by thumbnail with difficulty

BOREHOLE IDENTIFICATION

Symbol	Hole Type	Description
Size	A	Auger Boring
Size	R P	Rotary drilled boring Rotary percussion boring (air)
Size	R	Rotary drilled diamond core
Size	HD HA	Hand driven (1-inch soil tube) Hand Auger
●	D	Dynamic Cone Penetration Boring
▲	CPT	Cone Penetration Test (ASTM D 5778-95)
⬚	O	Other

Note: Size in inches.

PLASTICITY OF FINE-GRAINED SOILS

Description	Criteria
Nonplastic	A 1/8-inch thread cannot be rolled at any water content.
Low	The thread can barely be rolled and the lump cannot be formed when drier than the plastic limit.
Medium	The thread is easy to roll and not much time is required to reach the plastic limit. The thread cannot be rerolled after reaching the plastic limit. The lump crumbles when drier than the plastic limit.
High	It takes considerable time rolling and kneading to reach the plastic limit. The thread can be rerolled several times after reaching the plastic limit. The lump can be formed without crumbling when drier than the plastic limit.

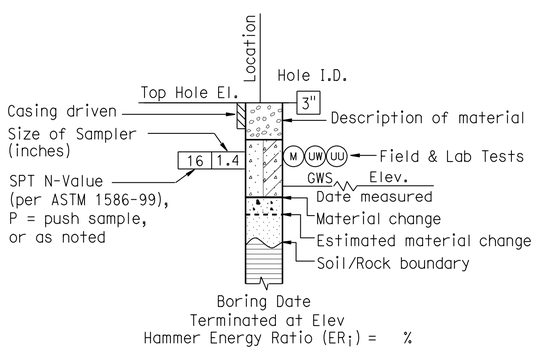

ROTARY BORING

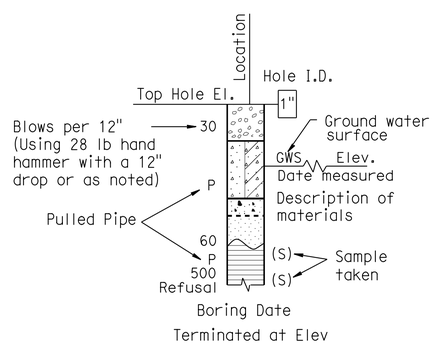

HAND BORING

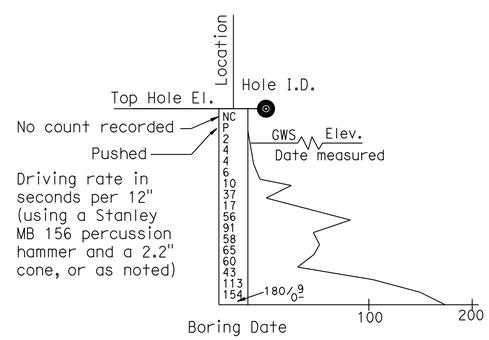

DYNAMIC CONE PENETRATION BORING

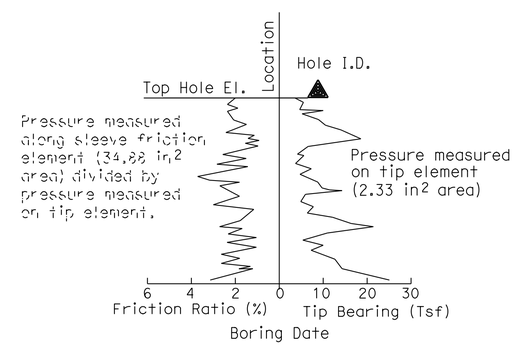

CONE PENETRATION TEST (CPT) SOUNDING

ENGINEERING SERVICES	MATERIALS AND GEOTECHNICAL SERVICES	STATE OF CALIFORNIA DEPARTMENT OF TRANSPORTATION	DIVISION OF ENGINEERING SERVICES STRUCTURE DESIGN DESIGN BRANCH X	BRIDGE NO. 57E0112 POST MILE 5.07	RETAINING WALL 301R LOG OF TEST BORINGS 3 OF 5
	PREPARED BY: I.G-Remmen				

GS LOTB SOIL LEGEND

ORIGINAL SCALE IN INCHES FOR REDUCED PLANS 0 1 2 3

UNIT: 3643
PROJECT NUMBER & PHASE: 11000200511 CONTRACT NO.: 11-2T1821

DISREGARD PRINTS BEARING EARLIER REVISION DATES

REVISION DATES

SHEET 8 OF 10

FILE => RW301R-z-lltb03.dgn

USERNAME => s127400 DATE PLOTTED => 13-SEP-2012 TIME PLOTTED => 08:04

REFERENCE: CALTRANS SOIL & ROCK LOGGING, CLASSIFICATION, AND PRESENTATION MANUAL (JUNE 2007)

DIST	COUNTY	ROUTE	KILOMETER POST TOTAL PROJECT	SHEET No	TOTAL SHEETS
11	SD	805	4.7/5.6	614	650

REGISTERED CIVIL ENGINEER 12-8-11

06-25-12
PLANS APPROVAL DATE

REGISTERED PROFESSIONAL ENGINEER Cuong Nguyen No. C32414 Exp. 12-31-12 CIVIL STATE OF CALIFORNIA

The State of California or its officers or agents shall not be responsible for the accuracy or completeness of electronic copies of this plan sheet.

GROUP SYMBOLS AND NAMES

Graphic/Symbol	Group Names	Graphic/Symbol	Group Names
GW	Well-graded GRAVEL Well-graded GRAVEL with SAND	CL	Lean CLAY Lean CLAY with SAND Lean CLAY with GRAVEL SANDY lean CLAY SANDY lean CLAY with GRAVEL GRAVELLY lean CLAY GRAVELLY lean CLAY with SAND
GP	Poorly graded GRAVEL Poorly graded GRAVEL with SAND		
GW-GM	Well-graded GRAVEL with SILT Well-graded GRAVEL with SILT and SAND	CL-ML	SILTY CLAY SILTY CLAY with SAND SILTY CLAY with GRAVEL SANDY SILTY CLAY SANDY SILTY CLAY with GRAVEL GRAVELLY SILTY CLAY GRAVELLY SILTY CLAY with SAND
GW-GC	Well-graded GRAVEL with CLAY (or SILTY CLAY) Well-graded GRAVEL with CLAY and SAND (or SILTY CLAY and SAND)		
GP-GM	Poorly graded GRAVEL with SILT Poorly graded GRAVEL with SILT and SAND	ML	SILT SILT with SAND SILT with GRAVEL SANDY SILT SANDY SILT with GRAVEL GRAVELLY SILT GRAVELLY SILT with SAND
GP-GC	Poorly graded GRAVEL with CLAY (or SILTY CLAY) Poorly graded GRAVEL with CLAY and SAND (or SILTY CLAY and SAND)		
GM	SILTY GRAVEL SILTY GRAVEL with SAND	OL	ORGANIC lean CLAY ORGANIC lean CLAY with SAND ORGANIC lean CLAY with GRAVEL SANDY ORGANIC lean CLAY SANDY ORGANIC lean CLAY with GRAVEL GRAVELLY ORGANIC lean CLAY GRAVELLY ORGANIC lean CLAY with SAND
GC	CLAYEY GRAVEL CLAYEY GRAVEL with SAND		
GC-GM	SILTY, CLAYEY GRAVEL SILTY, CLAYEY GRAVEL with SAND	OL	ORGANIC SILT ORGANIC SILT with SAND ORGANIC SILT with GRAVEL SANDY ORGANIC SILT SANDY ORGANIC SILT with GRAVEL GRAVELLY ORGANIC SILT GRAVELLY ORGANIC SILT with SAND
SW	Well-graded SAND Well-graded SAND with GRAVEL		
SP	Poorly graded SAND Poorly graded SAND with GRAVEL	CH	Fat CLAY Fat CLAY with SAND Fat CLAY with GRAVEL SANDY fat CLAY SANDY fat CLAY with GRAVEL GRAVELLY fat CLAY GRAVELLY fat CLAY with SAND
SW-SM	Well-graded SAND with SILT Well-graded SAND with SILT and GRAVEL		
SW-SC	Well-graded SAND with CLAY (or SILTY CLAY) Well-graded SAND with CLAY and GRAVEL (or SILTY CLAY and GRAVEL)	MH	Elastic SILT Elastic SILT with SAND Elastic SILT with GRAVEL SANDY elastic SILT SANDY elastic SILT with GRAVEL GRAVELLY elastic SILT GRAVELLY elastic SILT with SAND
SP-SM	Poorly graded SAND with SILT Poorly graded SAND with SILT and GRAVEL		
SP-SC	Poorly graded SAND with CLAY (or SILTY CLAY) Poorly graded SAND with CLAY and GRAVEL (or SILTY CLAY and GRAVEL)	OH	ORGANIC fat CLAY ORGANIC fat CLAY with SAND ORGANIC fat CLAY with GRAVEL SANDY ORGANIC fat CLAY SANDY ORGANIC fat CLAY with GRAVEL GRAVELLY ORGANIC fat CLAY GRAVELLY ORGANIC fat CLAY with SAND
SM	SILTY SAND SILTY SAND with GRAVEL		
SC	CLAYEY SAND CLAYEY SAND with GRAVEL	OH	ORGANIC elastic SILT ORGANIC elastic SILT with SAND ORGANIC elastic SILT with GRAVEL SANDY ORGANIC elastic SILT SANDY ORGANIC elastic SILT with GRAVEL GRAVELLY ORGANIC elastic SILT GRAVELLY ORGANIC elastic SILT with SAND
SC-SM	SILTY, CLAYEY SAND SILTY, CLAYEY SAND with GRAVEL		
PT	PEAT	OL/OH	ORGANIC SOIL ORGANIC SOIL with SAND ORGANIC SOIL with GRAVEL SANDY ORGANIC SOIL SANDY ORGANIC SOIL with GRAVEL GRAVELLY ORGANIC SOIL GRAVELLY ORGANIC SOIL with SAND
	COBBLES COBBLES and BOULDERS BOULDERS		

FIELD AND LABORATORY TESTING

- (C) Consolidation (ASTM D 2435)
- (CL) Collapse Potential (ASTM D 5333)
- (CP) Compaction Curve (CTM 216)
- (CR) Corrosivity Testing (CTM 643, CTM 422, CTM 417)
- (CU) Consolidated Undrained Triaxial (ASTM D 4767)
- (DS) Direct Shear (ASTM D 3080)
- (EI) Expansion Index (ASTM D 4829)
- (M) Moisture Content (ASTM D 2216)
- (OC) Organic Content-% (ASTM D 2974)
- (P) Permeability (CTM 220)
- (PA) Particle Size Analysis (ASTM D 422)
- (PI) Plasticity Index (AASHTO T 90) Liquid Limit (AASHTO T 89)
- (PL) Point Load Index (ASTM D 5731)
- (PM) Pressure Meter
- (PP) Pocket Penetrometer
- (R) R-Value (CTM 301)
- (SE) Sand Equivalent (CTM 217)
- (SG) Specific Gravity (AASHTO T 100)
- (SL) Shrinkage Limit (ASTM D 427)
- (SW) Swell Potential (ASTM D 4546)
- (TV) Pocket Torvane
- (UC) Unconfined Compression-Soil (ASTM D 2166) Unconfined Compression-Rock (ASTM D 2938)
- (UU) Unconsolidated Undrained Triaxial (ASTM D 2850)
- (UW) Unit Weight (ASTM D 4767)
- (VS) Vane Shear (AASHTO T 223)

APPARENT DENSITY OF COHESIONLESS SOILS

Description	SPT N_{60} (Blows / 12 inches)
Very loose	0 - 4
Loose	5 - 10
Medium Dense	11 - 30
Dense	31 - 50
Very Dense	> 50

MOISTURE

Description	Criteria
Dry	Absence of moisture, dusty, dry to the touch
Moist	Damp but no visible water
Wet	Visible free water, usually soil is below water table

PERCENT OR PROPORTION OF SOILS

Description	Criteria
Trace	Particles are present but estimated to be less than 5%
Few	5 to 10%
Little	15 to 25%
Some	30 to 45%
Mostly	50 to 100%

PARTICLE SIZE

Description		Size
Boulder		> 12"
Cobble		3" to 12"
Gravel	Coarse	3/4" to 3"
	Fine	No. 4 to 3/4"
Sand	Coarse	No. 10 to No. 4
	Medium	No. 40 to No. 10
	Fine	No. 200 to No. 40

ENGINEERING SERVICES

MATERIALS AND GEOTECHNICAL SERVICES

PREPARED BY: I.G-Remmen

STATE OF CALIFORNIA DEPARTMENT OF TRANSPORTATION

DIVISION OF ENGINEERING SERVICES STRUCTURE DESIGN DESIGN BRANCH X

BRIDGE NO. 57E0112

POST MILE 5.07

RETAINING WALL 301R

LOG OF TEST BORINGS 4 OF 5

GS LOTB SOIL LEGEND

ORIGINAL SCALE IN INCHES FOR REDUCED PLANS 0 1 2 3

UNIT: 3643
PROJECT NUMBER & PHASE: 11000200511
CONTRACT NO.: 11-2T1821

DISREGARD PRINTS BEARING EARLIER REVISION DATES

REVISION DATES

SHEET 9 OF 10

FILE => RW301R-z-ltb04.dgn

USERNAME => s127400 DATE PLOTTED => 13-SEP-2012 TIME PLOTTED => 08:04

REFERENCE: CALTRANS SOIL & ROCK LOGGING, CLASSIFICATION, AND PRESENTATION MANUAL (JUNE 2007)

DIST	COUNTY	ROUTE	KILOMETER POST TOTAL PROJECT	SHEET No	TOTAL SHEETS
11	SD	805	4.7/5.6	615	650

REGISTERED CIVIL ENGINEER 12-8-11

06-25-12
PLANS APPROVAL DATE

REGISTERED PROFESSIONAL ENGINEER Cuong Nguyen No. C32414 Exp. 12-31-12 CIVIL STATE OF CALIFORNIA

The State of California or its officers or agents shall not be responsible for the accuracy or completeness of electronic copies of this plan sheet.

PERCENT CORE RECOVERY (REC) & ROCK QUALITY DESIGNATION (RQD)

$$REC = \frac{\sum \text{Length of the recovered core pieces (inches)}}{\text{Total length of core run (inches)}} \times 100\%$$

$$RQD = \frac{\sum \text{Length of intact core pieces} \geq 4''}{\text{Total length of core run (inches)}} \times 100\%$$

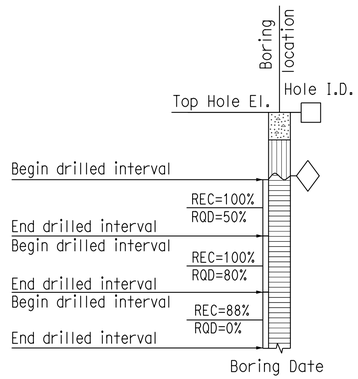

RELATIVE STRENGTH OF INTACT ROCK

Term	Uniaxial Compressive Strength (PSI)
Extremely Strong	> 30,000
Very Strong	14,500 - 30,000
Strong	7,000 - 14,500
Medium Strong	3,500 - 7,000
Weak	700 - 3,500
Very Weak	150 - 700
Extremely Weak	< 150

BEDDING SPACING

Description	Thickness / Spacing
Massive	Greater than 10 ft
Very thickly bedded	3 to 10 ft
Thickly bedded	1 to 3 ft
Moderately bedded	3-5/8" to 1 ft
Thinly bedded	1-1/4" to 3-5/8"
Very thinly bedded	3/8" to 1-1/4"
Laminated	Less than 3/8"

LEGEND OF ROCK MATERIALS

- IGNEOUS ROCK
- SEDIMENTARY ROCK
- METAMORPHIC ROCK

ROCK HARDNESS

Description	Criteria
Extremely Hard	Specimen cannot be scratched with a pocket knife or sharp pick; can only be chipped with repeated heavy hammer blows.
Very Hard	Specimen cannot be scratched with a pocket knife or sharp pick. Breaks with repeated heavy hammer blows.
Hard	Specimen can be scratched with a pocket knife or sharp pick with difficulty (heavy pressure). Heavy hammer blows required to break specimen.
Moderately Hard	Specimen can be scratched with pocket knife or sharp pick with light or moderate pressure. Core breaks with moderate hammer blows.
Moderately Soft	Specimen can be grooved 1/6" deep with a pocket knife or sharp pick with moderate or heavy pressure. Breaks with light hammer blow or heavy manual pressure.
Soft	Specimen can be grooved or gouged easily by a pocket knife or sharp pick with light pressure, can be scratched with fingernail. Breaks with light to moderate manual pressure.
Very Soft	Specimen can be readily indented, grooved or gouged with fingernail, or carved with a pocket knife. Breaks with light manual pressure.

FRACTURE DENSITY

Description	Observed Fracture Density
Unfractured	No fractures.
Very slightly fractured	Lengths greater than 3 feet.
Slightly fractured	Lengths from 1 to 3 feet with few lengths less than 1 foot or greater than 3 feet.
Moderately fractured	Lengths mostly in 4" to 1 foot range with most lengths about 8"
Intensely fractured	Lengths average from 1 to 4" with scattered fragmented intervals with lengths less than 4"
Very intensely fractured	Mostly chips and fragments with a few scattered short core lengths.

Combination descriptors (such as "Very intensely to intensely fractured") are used where equal distribution of both fracture density characteristics is present over a significant interval or exposure, or where characteristics are "in between" the descriptor definitions. Only two adjacent descriptors may be combined.

WEATHERING DESCRIPTORS FOR INTACT ROCK

Description	Diagnostic features					General Characteristics
	Chemical Weathering-Discoloration and/or oxidation		Mechanical Weathering-Grain boundary conditions (disaggregation) primarily for granitics and some coarse-grained sediments	Texture and Solutioning		
	Body of Rock	Fracture Surfaces		Texture	Solutioning	
Fresh	No discoloration, not oxidized.	No discoloration or oxidation.	No separation, intact (tight).	No change.	No solutioning.	Hammer rings when crystalline rocks are struck.
Slightly Weathered	Discoloration or oxidation is limited to surface of, or short distance from, fractures; some feldspar crystals are dull.	Minor to complete discoloration or oxidation of most surfaces.	No visible separation, intact (tight).	Preserved.	Minor leaching of some soluble minerals may be noted.	Hammer rings when crystalline rocks are struck. Body of rock not weakened.
Moderately Weathered	Discoloration or oxidation extends from fractures usually throughout; Fe-Mg minerals are "rusty," feldspar crystals are "cloudy."	All fracture surfaces are discolored or oxidized.	Partial separation of boundaries visible.	Generally preserved.	Soluble minerals may be mostly leached.	Hammer does not ring when rock is struck. Body of rock is slightly weakened.
Intensely Weathered	Discoloration or oxidation throughout; all feldspars and Fe-Mg minerals are altered to clay to some extent; or chemical alteration produces in-situ disaggregation, see grain boundary conditions.	All fracture surfaces are discolored or oxidized, surfaces friable.	Partial separation, rock is friable; in semiarid conditions granitics are disaggregated.	Texture altered by chemical disintegration (hydration, argillation).	Leaching of soluble minerals may be complete.	Dull sound when struck with hammer, usually can be broken with moderate to heavy manual pressure or by light hammer blow without reference to planes of weakness such as incipient or hairline fractures, or veinlets. Rock is significantly weakened.
Decomposed	Discolored or oxidized throughout, but resistant minerals such as quartz may be unaltered; all feldspars and Fe-Mg minerals are completely altered to clay.		Complete separation of grain boundaries (disaggregated).	Resembles a soil, partial or complete remnant rock structure may be preserved; leaching of soluble minerals usually complete.		Can be granulated by hand. Resistant minerals such as quartz may be present as "stringers" or "dikes."

Combination descriptors (such as "slightly weathered to fresh") are permissible where equal distribution of both weathering characteristics is present over significant intervals or where characteristics present are "in between" the diagnostic feature. However, combination descriptors should not be used where significant, identifiable zones can be delineated. Only two adjacent descriptors may be combined. "Very intensely weathered" is the combination descriptor for "intensely weathered to decomposed."

ENGINEERING SERVICES

MATERIALS AND GEOTECHNICAL SERVICES
PREPARED BY: I.G-Remmen

STATE OF CALIFORNIA DEPARTMENT OF TRANSPORTATION

DIVISION OF ENGINEERING SERVICES STRUCTURE DESIGN
DESIGN BRANCH X

BRIDGE NO. 57E0112
POST MILE 5.07

RETAINING WALL NO. 301R
LOG OF TEST BORINGS 5 OF 5

GS LOTB SOIL LEGEND

ORIGINAL SCALE IN INCHES FOR REDUCED PLANS 0 1 2 3

UNIT: 3643
PROJECT NUMBER & PHASE: 11000200511
CONTRACT NO.: 11-2T1821

DISREGARD PRINTS BEARING EARLIER REVISION DATES

REVISION DATES

SHEET 10 OF 10

FILE => RW301R-z-ltb05.dgn

USERNAME => s127400 DATE PLOTTED => 13-SEP-2012 TIME PLOTTED => 08:04

DIST	COUNTY	ROUTE	POST MILES TOTAL PROJECT	SHEET No	TOTAL SHEETS
11	SD	805	4.7/5.6	616	650

REGISTERED CIVIL ENGINEER — DATE 4-26-12

06-25-12
PLANS APPROVAL DATE

The State of California or its officers or agents shall not be responsible for the accuracy or completeness of electronic copies of this plan sheet.

REGISTERED PROFESSIONAL ENGINEER — MASON LEE HANCOCK — No. 75048 — Exp. 12-31-13 — CIVIL — STATE OF CALIFORNIA

Dokken Engineering
2365 Iron Point Rd, Suite 200
Folsom, CA 95630 (916) 858-0642

SANDAG
401 B St, Suite 800
San Diego, CA 92101

TOP OF RETAINING WALL ELEVATIONS

STATION (1)	ELEVATION	STATION (2)	ELEVATION
10+17.40	316.50′	10+18.73	316.50′
10+65.94	316.61′	10+68.61	316.62′
11+15.81	316.73′	11+18.48	316.73′
11+65.69	316.84′	11+68.36	316.85′
12+15.56	316.95′	12+18.23	316.96′
12+65.44	317.07′	12+68.11	316.99′
13+15.31	317.45′	13+17.98	317.47′
13+65.19	317.95′	13+67.86	317.97′
14+15.06	318.30′	14+17.73	318.30′

RETAINING WALL 311R #57E0114

QUANTITIES

STRUCTURE EXCAVATION (RETAINING WALL)	1,870	CY
STRUCTURE BACKFILL (RETAINING WALL)	1,000	CY
STRUCTURAL CONCRETE, RETAINING WALL	630	CY
STRUCTURAL CONCRETE, SOUND WALL	120	CY
ARCHITECTURAL TREATMENT (ASHLAR TILE TEXTURE)	7,100	SQFT
ARCHITECTURAL TREATMENT (LOUVER TEXTURE)	5,800	SQFT
BAR REINFORCING STEEL (RETAINING WALL)	63,000	LB

INDEX TO PLANS

Sheet No.	Title
1	GENERAL PLAN
2	RETAINING WALL DETAILS NO. 1
3	RETAINING WALL DETAILS NO. 2
4	RETAINING WALL DETAILS NO. 3
5	RETAINING WALL DETAILS NO. 4
6	RETAINING WALL DETAILS NO. 5
7	RETAINING WALL TYPE 1SW (MOD)
8	RETAINING WALL TYPE 1 (MOD)
9	RETAINING WALL TYPE 1A (MOD)
10	LOG OF TEST BORINGS 1 OF 4
11	LOG OF TEST BORINGS 2 OF 4
12	LOG OF TEST BORINGS 3 OF 4
13	LOG OF TEST BORINGS 4 OF 4

LEGEND:

Denotes bottom of footing elevation

(A) Retaining Wall Type 1 (Mod)
Total length = 18′-10" measured along RW 311R LOL

(B) Retaining Wall Type 1A (Mod)
Total length = 97′-1" measured along RW 311R LOL

(C) Footing step SEE SHEET C-75.

(D) 3" Ø utility opening B3-6

NOTES:

1. For "SECTION A-A", see "RETAINING WALL DETAILS NO. 1" sheet.
2. For Sections "B-B" and "C-C", see "RETAINING WALL DETAILS NO. 5" sheet.
3. For Standard Plans List, see "RETAINING WALL DETAILS NO. 3" sheet.

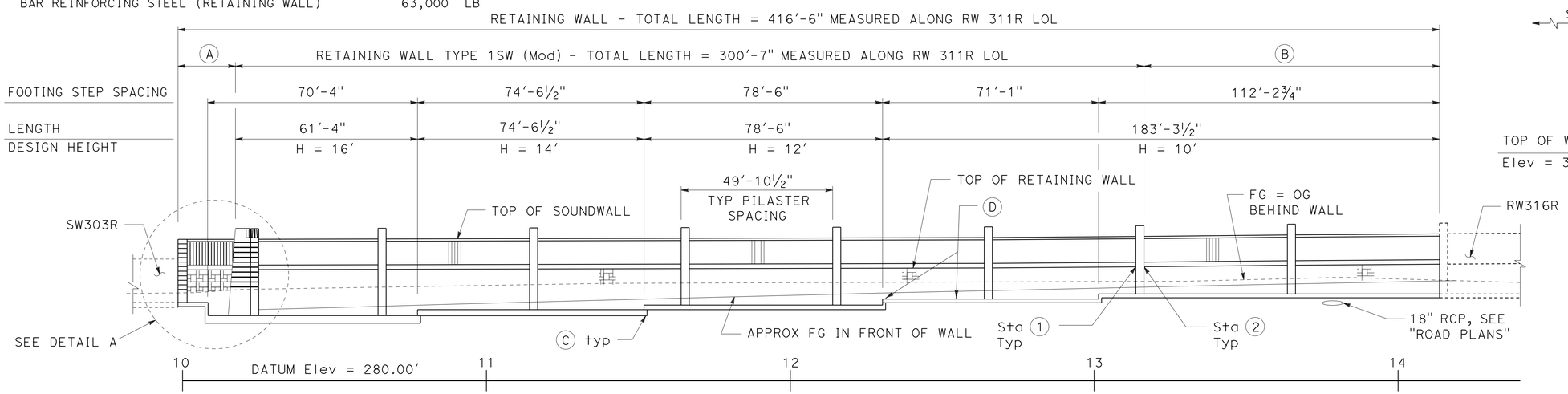

DEVELOPED MIRROR ELEVATION

1" = 20′

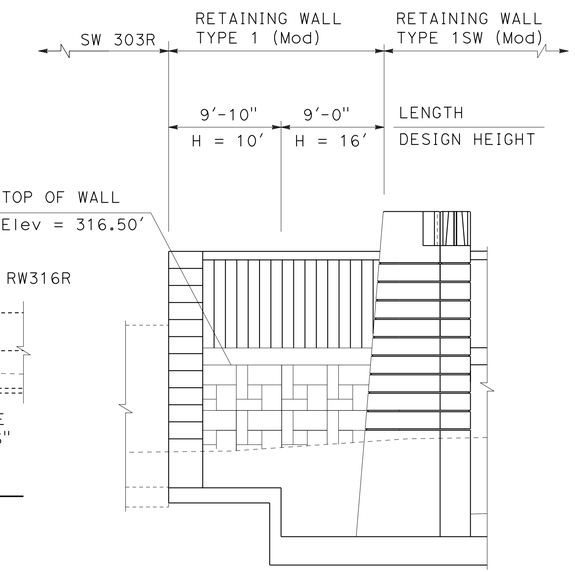

DETAIL A

No Scale

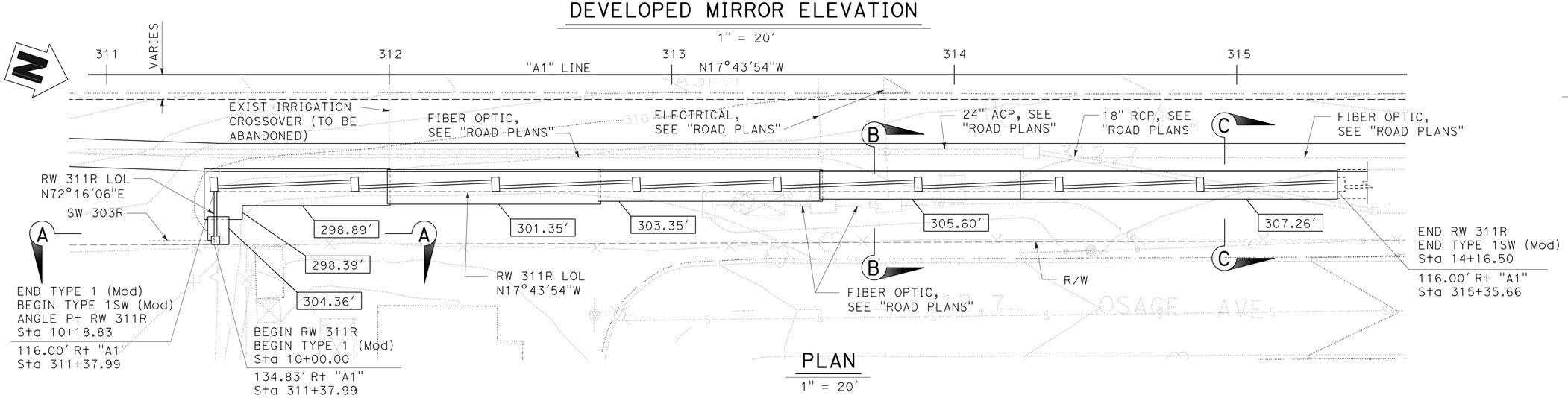

PLAN

1" = 20′

DESIGN OVERSIGHT: Norbert Gee — 5-4-12 SIGN OFF DATE	DESIGN	BY M. Hancock	CHECKED R. Burns	LOAD & RESISTANCE FACTORDESIGN			
	DETAILS	BY C. Houghton	CHECKED M. Hancock	LAYOUT	BY M. Hancock	CHECKED R. Burns	
	QUANTITIES	BY M. Hancock	CHECKED R. Burns	SPECIFICATIONS	BY A. Powers	PLANS AND SPECS COMPARED C. Tornaci	

DESIGN GENERAL PLAN SHEET (ENGLISH) (REV.7/16/10)

ORIGINAL SCALE IN INCHES FOR REDUCED PLANS 0 1 2 3

PREPARED FOR THE STATE OF CALIFORNIA DEPARTMENT OF TRANSPORTATION

C. Tornaci
PROJECT ENGINEER

UNIT: 2762
PROJECT NUMBER & PHASE: 1100020051

BRIDGE NO. 57E0114
POST MILES 5.1

RETAINING WALL NO. 311R
GENERAL PLAN

DISREGARD PRINTS BEARING EARLIER REVISION DATES

REVISION DATES (PRELIMINARY STAGE ONLY): 1-31-11 4-28-11 8-5-11 11-11-11 2-15-12 4-26-12 6-5-12

SHEET 1 OF 13

FILE => RW311R-a-gp01.dgn

CONTRACT NO.: X PROJECT ID: X

USERNAME => s12400 DATE PLOTTED => 13-SEP-2012 TIME PLOTTED => 08:04

DIST	COUNTY	ROUTE	POST MILES TOTAL PROJECT	SHEET No	TOTAL SHEETS
11	SD	805	4.7/5.6	617	650

REGISTERED CIVIL ENGINEER — DATE 4-26-12

06-25-12
PLANS APPROVAL DATE

REGISTERED PROFESSIONAL ENGINEER — MASON LEE HANCOCK — No. 75048 — Exp. 12-31-13 — CIVIL — STATE OF CALIFORNIA

The State of California or its officers or agents shall not be responsible for the accuracy or completeness of electronic copies of this plan sheet.

Dokken Engineering
2365 Iron Point Rd, Suite 200
Folsom, CA 95630 (916) 858-0642

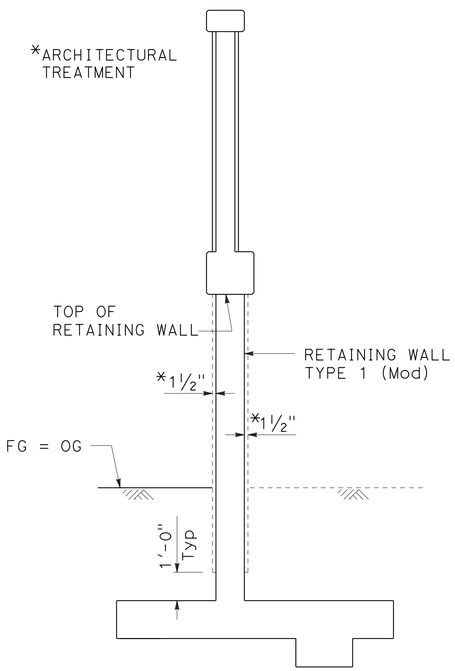

SECTION A-A

⅜" = 1'-0"

(For details not shown, see "RETAINING WALL TYPE 1 (MOD)" sheet

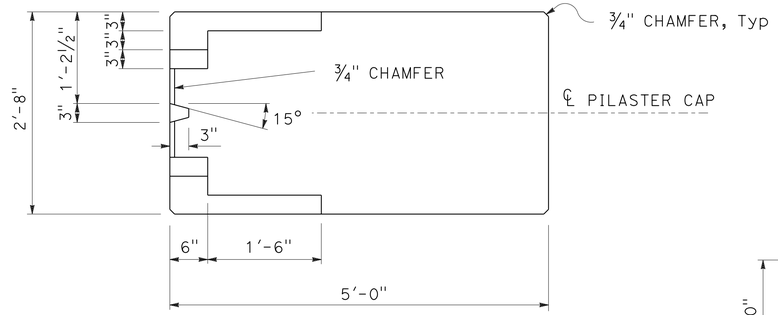

PILASTER CAP PLAN

1" = 1'-0"
(DETAILS ARE SYMMETRICAL ABOUT ℄ PILASTER CAP)

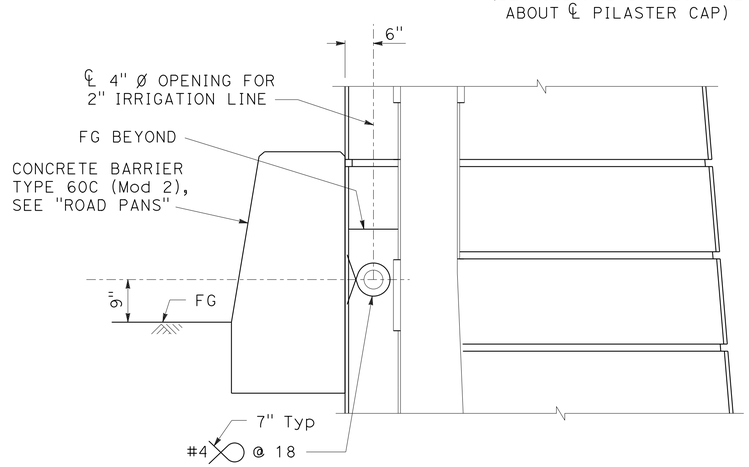

UTILITY OPENING AT PILASTER

¾" = 1'-0"

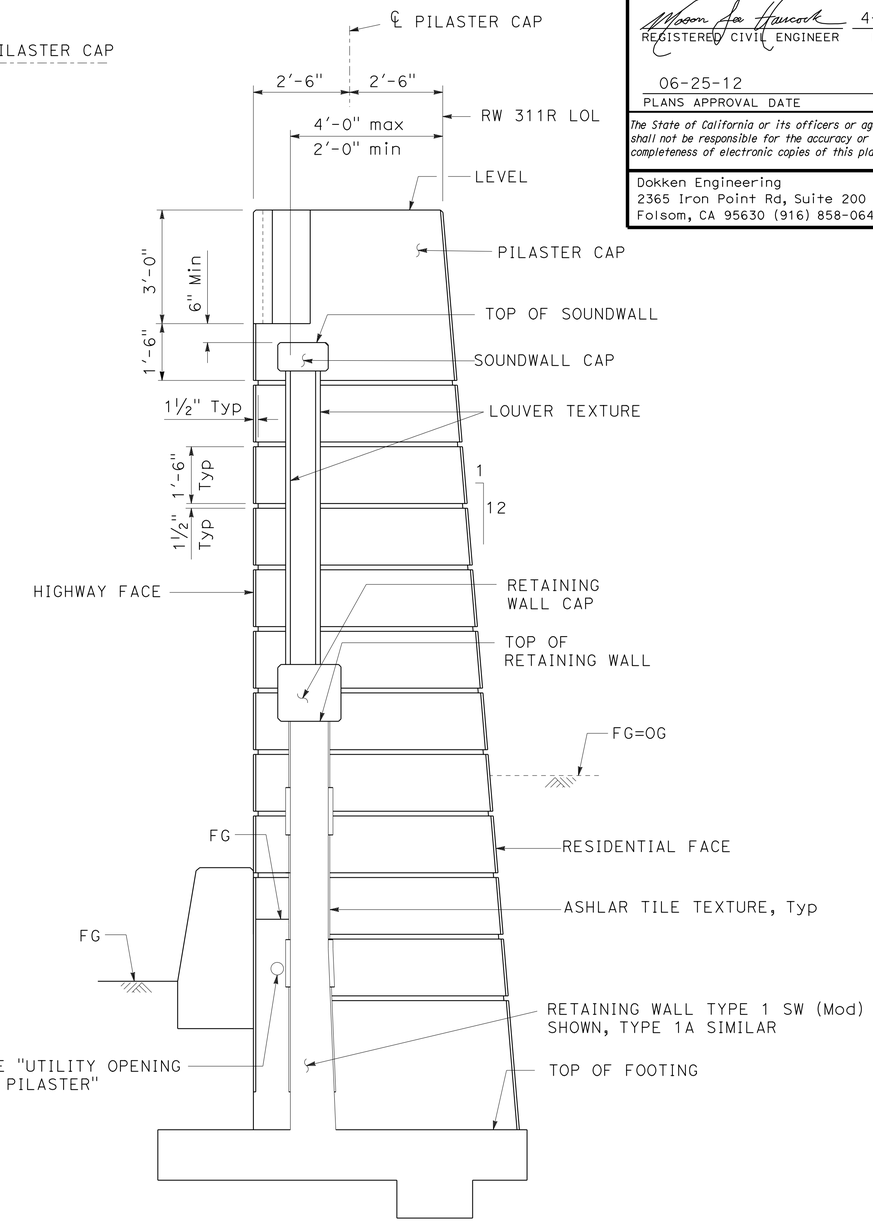

PILASTER SECTION AT FACE OF WALL

½" = 1'-0"

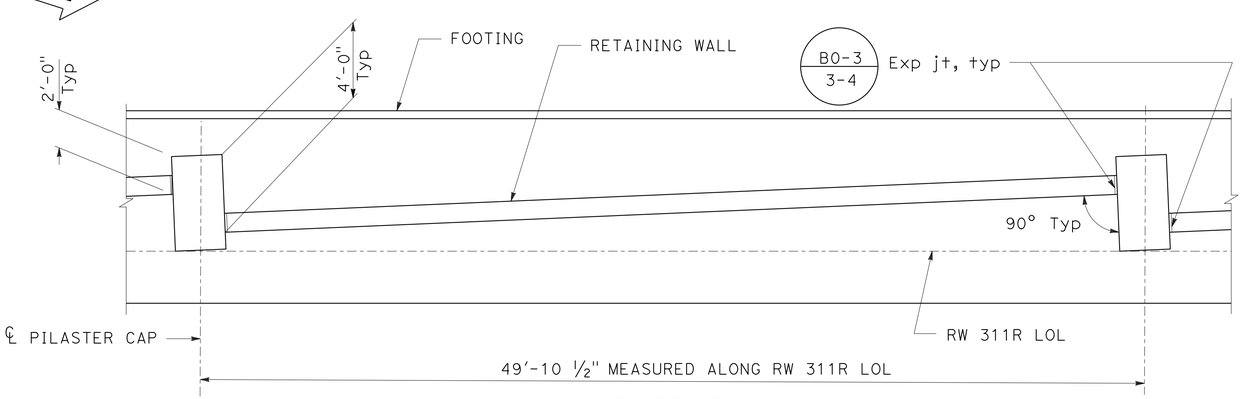

PART PLAN

NO SCALE

Norbert Gee
DESIGN OVERSIGHT — Norbert Gee
5-4-12
SIGN OFF DATE

	BY	CHECKED
DESIGN	M. Hancock	R. Burns
DETAILS	C. Houghton	M. Hancock
QUANTITIES	M. Hancock	R. Burns

PREPARED FOR THE STATE OF CALIFORNIA DEPARTMENT OF TRANSPORTATION

C. Tornaci
PROJECT ENGINEER

BRIDGE NO. 57E0114
POST MILES 5.1

RETAINING WALL NO. 311R
RETAINING WALL DETAILS NO. 1

DESIGN DETAIL SHEET (ENGLISH) (REV.7/16/10)

ORIGINAL SCALE IN INCHES FOR REDUCED PLANS 0 1 2 3

UNIT: 2762
PROJECT NUMBER & PHASE: 1100020051

DISREGARD PRINTS BEARING EARLIER REVISION DATES

REVISION DATES (PRELIMINARY STAGE ONLY): 4-26-11 8-5-11 11-4-11 11-15-11 2-16-12 4-26-12

SHEET 2 OF 13

CONTRACT NO.: X PROJECT ID: X

FILE => RW311R-g-rwdt01.dgn

USERNAME => s127400 DATE PLOTTED => 13-SEP-2012 TIME PLOTTED => 08:04

DIST	COUNTY	ROUTE	POST MILES TOTAL PROJECT	SHEET No	TOTAL SHEETS
11	SD	805	4.7/5.6	618	650

REGISTERED CIVIL ENGINEER — DATE 4-26-12

06-25-12
PLANS APPROVAL DATE

REGISTERED PROFESSIONAL ENGINEER — MASON LEE HANCOCK — No. 75048 — Exp. 12-31-13 — CIVIL — STATE OF CALIFORNIA

The State of California or its officers or agents shall not be responsible for the accuracy or completeness of electronic copies of this plan sheet.

Dokken Engineering
2365 Iron Point Rd, Suite 200
Folsom, CA 95630 (916) 858-0642

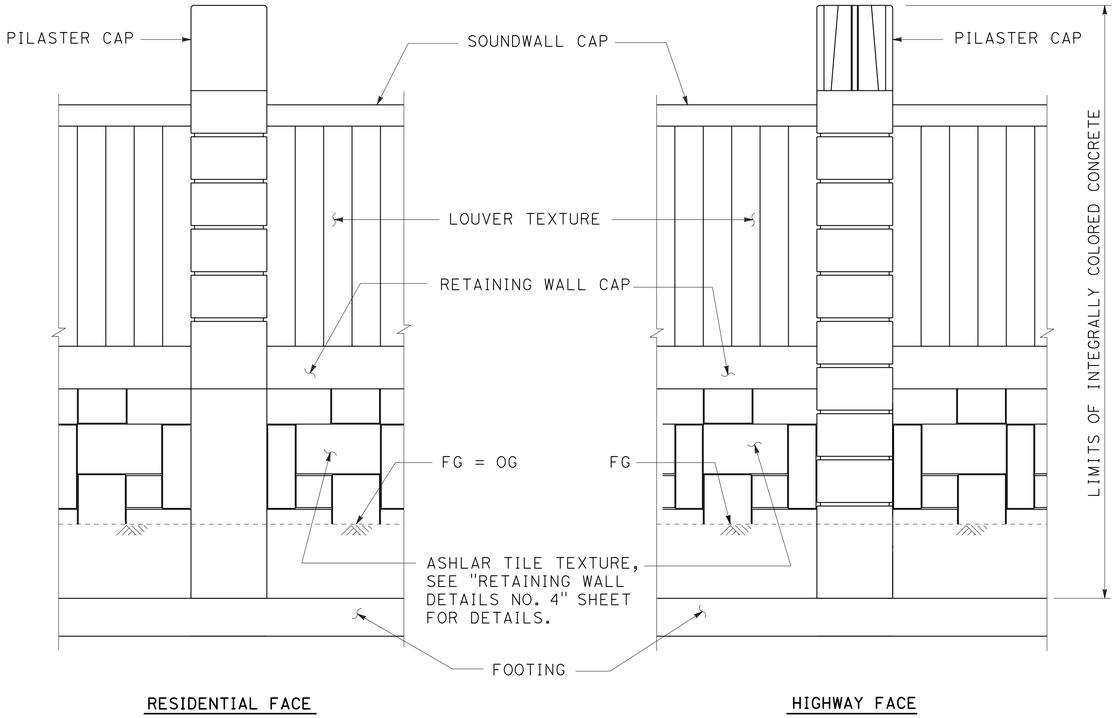

PARTIAL ELEVATION - ARCHITECTURAL TREATMENT

3/8" = 1'-0"

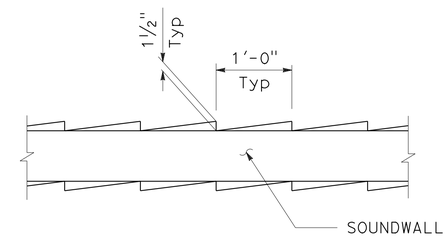

LOUVER TEXTURE DETAIL

1" = 1'-0"

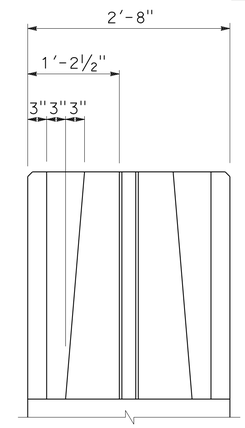

PILASTER CAP ELEVATION

1" = 1'-0"

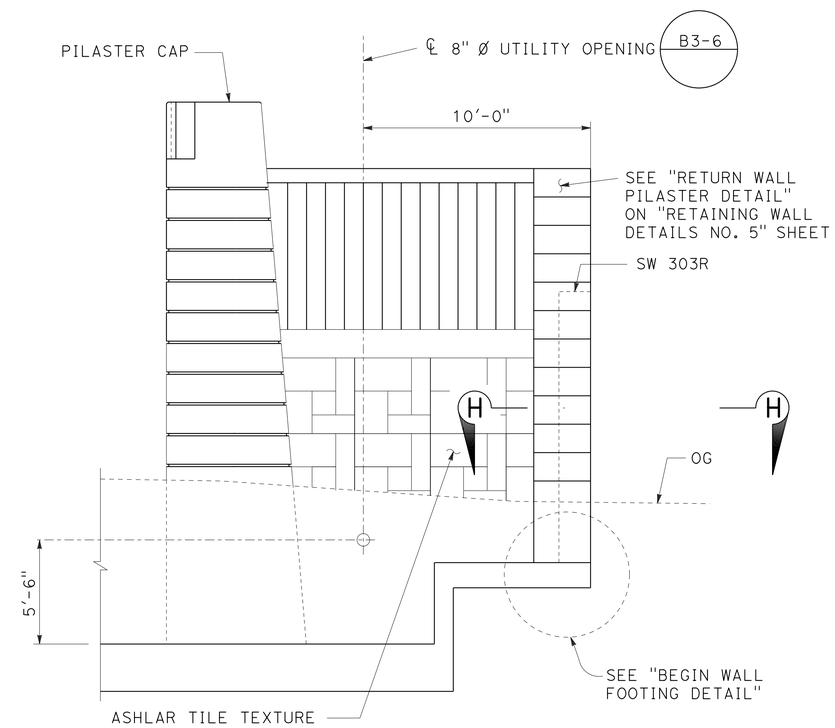

RETURN WALL

1/4" = 1'-0"

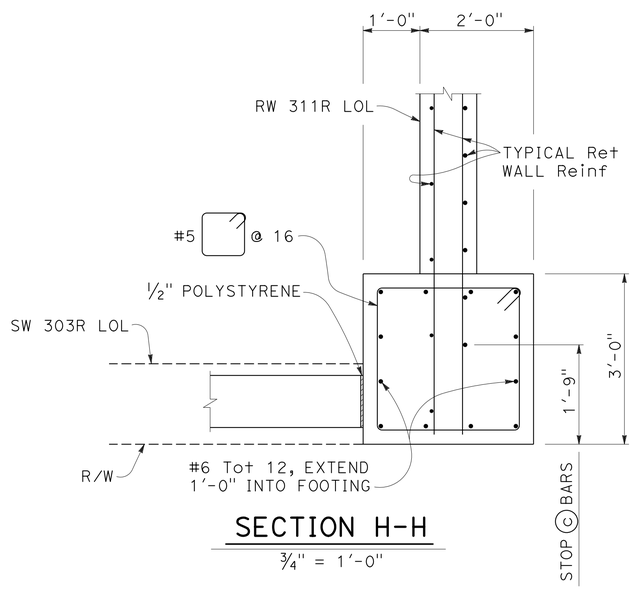

SECTION H-H

3/4" = 1'-0"

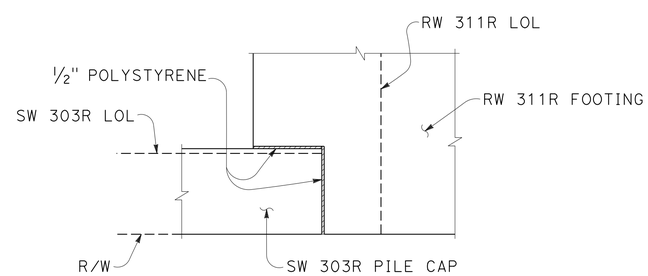

BEGIN WALL FOOTING DETAIL

3/4" = 1'-0"

DESIGN OVERSIGHT — Norbert Gee
5-4-12
SIGN OFF DATE

	BY	CHECKED
DESIGN	M. Hancock	R. Burns
DETAILS	C. Houghton	M. Hancock
QUANTITIES	M. Hancock	R. Burns

PREPARED FOR THE STATE OF CALIFORNIA DEPARTMENT OF TRANSPORTATION

C. Tornaci
PROJECT ENGINEER

BRIDGE NO. 57E0114
POST MILES 5.1

RETAINING WALL NO. 311R
RETAINING WALL DETAILS NO. 2

DESIGN DETAIL SHEET (ENGLISH) (REV.7/16/10)

ORIGINAL SCALE IN INCHES FOR REDUCED PLANS 0 1 2 3

UNIT: 2762
PROJECT NUMBER & PHASE: 1100020051

DISREGARD PRINTS BEARING EARLIER REVISION DATES

REVISION DATES (PRELIMINARY STAGE ONLY): 4-26-11 8-5-11 11-14-11 11-16-11 2-16-12 4-26-12

SHEET 3 OF 13

FILE => RW311R-g-rwdt02.dgn

CONTRACT NO.: X PROJECT ID: X

USERNAME => s127400 DATE PLOTTED => 13-SEP-2012 TIME PLOTTED => 08:04

DIST	COUNTY	ROUTE	POST MILES TOTAL PROJECT	SHEET No	TOTAL SHEETS
11	SD	805	4.7/5.6	619	650

REGISTERED CIVIL ENGINEER — DATE 4-26-12

06-25-12
PLANS APPROVAL DATE

REGISTERED PROFESSIONAL ENGINEER — MASON LEE HANCOCK — No. 75048 — Exp. 12-31-13 — CIVIL — STATE OF CALIFORNIA

The State of California or its officers or agents shall not be responsible for the accuracy or completeness of electronic copies of this plan sheet.

Dokken Engineering
2365 Iron Point Rd, Suite 200
Folsom, CA 95630 (916) 858-0642

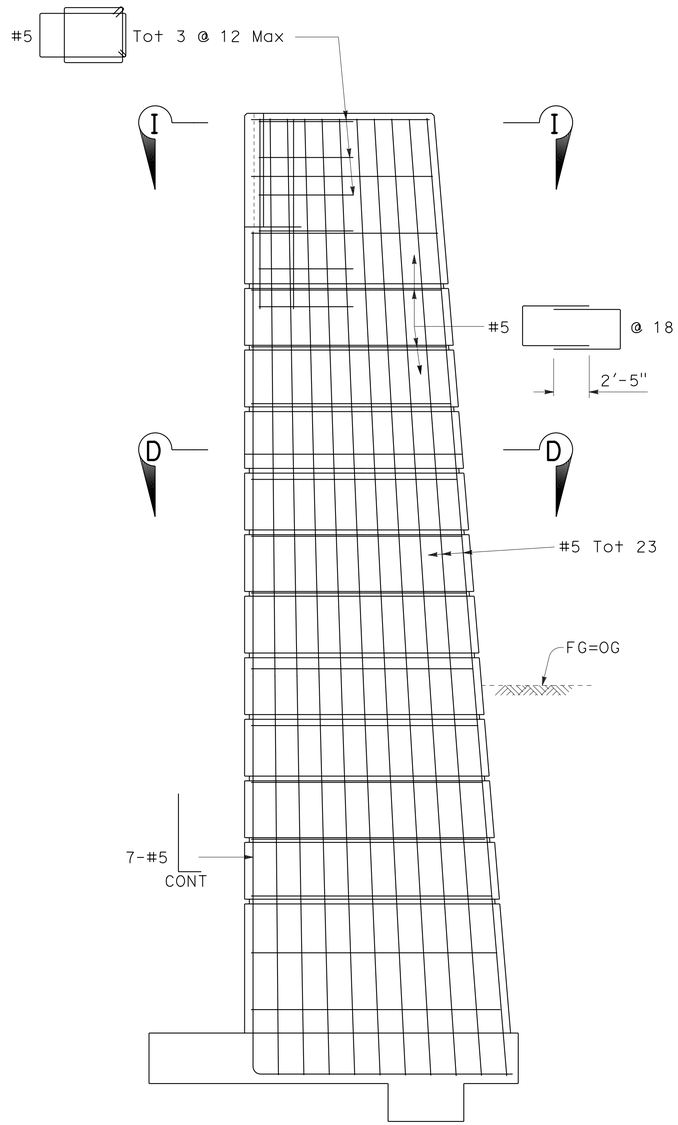

PILASTER TYPICAL SECTION

1/2" = 1'-0"

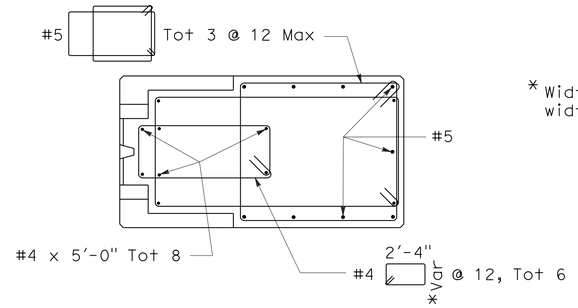

SECTION I-I

3/4" = 1'-0"

* Width of stirrup shall vary with width of tapered section of pilaster

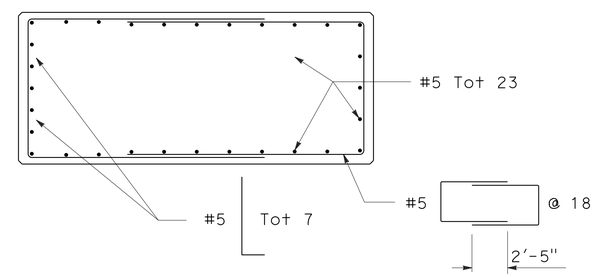

SECTION D-D

3/4" = 1'-0"

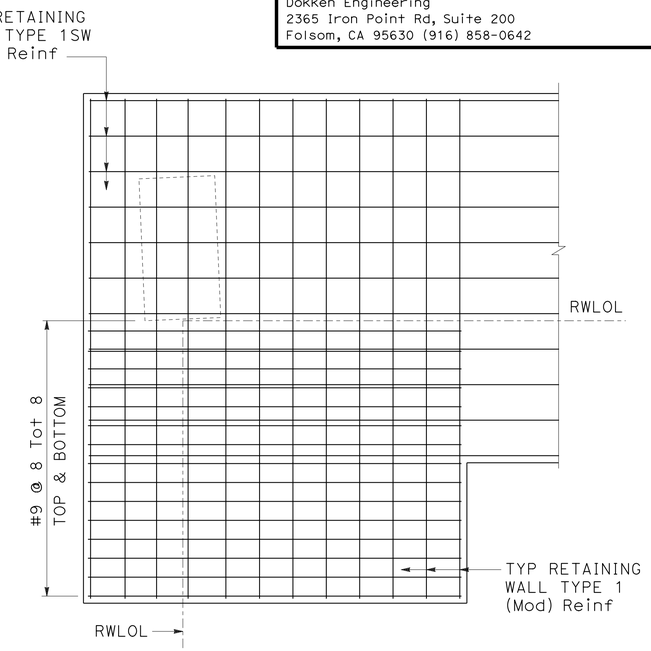

FOOTING CORNER DETAIL

3/8" = 1'-0"

STANDARD PLANS DATED 2010

Sheet No.	Title
A10A	ABBREVIATIONS (SHEET 1 OF 2)
A10B	ABBREVIATIONS (SHEET 2 OF 2)
A10C	LINES AND SYMBOLS (SHEET 1 OF 3)
A10D	LINES AND SYMBOLS (SHEET 2 OF 3)
A10E	LINES AND SYMBOLS (SHEET 3 OF 3)
A62B	LIMITS OF PAYMENT FOR EXCAVATION AND BACKFILL BRIDGE SURCHARGE AND WALL
B0-1	BRIDGE DETAILS
B0-3	BRIDGE DETAILS
B3-6	RETAINING WALL DETAILS NO. 2

STANDARD PLAN SHEET NO.

DETAIL NO.

DESIGN OVERSIGHT — Norbert Gee
5-4-12
SIGN OFF DATE

	BY	CHECKED
DESIGN	M. Hancock	R. Burns
DETAILS	C. Houghton	M. Hancock
QUANTITIES	M. Hancock	R. Burns

PREPARED FOR THE STATE OF CALIFORNIA DEPARTMENT OF TRANSPORTATION

C. Tornaci
PROJECT ENGINEER

BRIDGE NO. 57E0114
POST MILES 5.1

RETAINING WALL NO. 311R
RETAINING WALL DETAILS NO. 3

DESIGN DETAIL SHEET (ENGLISH) (REV.7/16/10)

ORIGINAL SCALE IN INCHES FOR REDUCED PLANS 0 1 2 3

UNIT: 2762
PROJECT NUMBER & PHASE: 1100020051

DISREGARD PRINTS BEARING EARLIER REVISION DATES

REVISION DATES (PRELIMINARY STAGE ONLY): 4-26-11 8-5-11 11-14-11 11-14-11 2-15-12 4-26-12 6-5-12

SHEET 4 OF 13

FILE => RW311R-g-rwdt03.dgn

CONTRACT NO.: X PROJECT ID: X

USERNAME => s127400 DATE PLOTTED => 13-SEP-2012 TIME PLOTTED => 08:04

DIST	COUNTY	ROUTE	POST MILES TOTAL PROJECT	SHEET No	TOTAL SHEETS
11	SD	805	4.7/5.6	620	650

REGISTERED CIVIL ENGINEER — DATE: 4-26-12

06-25-12
PLANS APPROVAL DATE

REGISTERED PROFESSIONAL ENGINEER — MASON LEE HANCOCK — No. 75048 — Exp. 12-31-13 — CIVIL — STATE OF CALIFORNIA

The State of California or its officers or agents shall not be responsible for the accuracy or completeness of electronic copies of this plan sheet.

Dokken Engineering
2365 Iron Point Rd, Suite 200
Folsom, CA 95630 (916) 858-0642

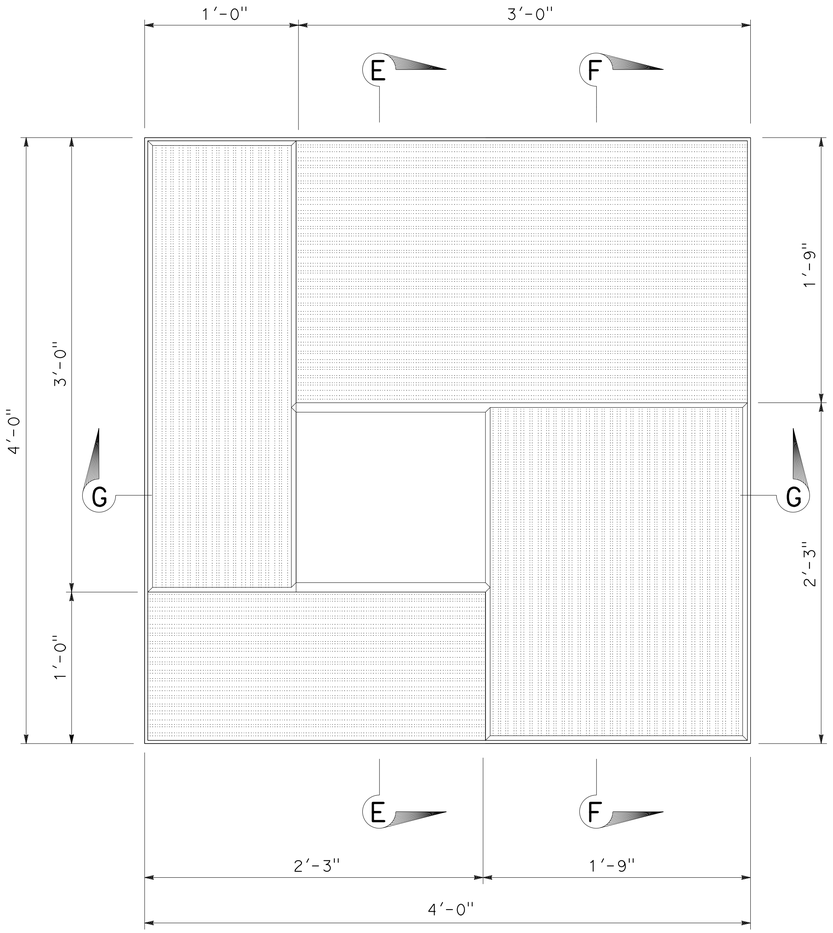

ASHLAR TILE TEXTURE DETAIL

2" = 1'-0"

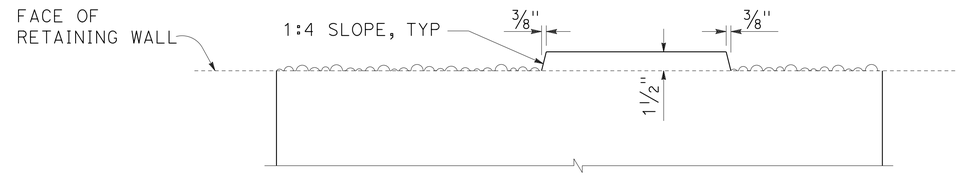

SECTION E-E

2" = 1'-0"

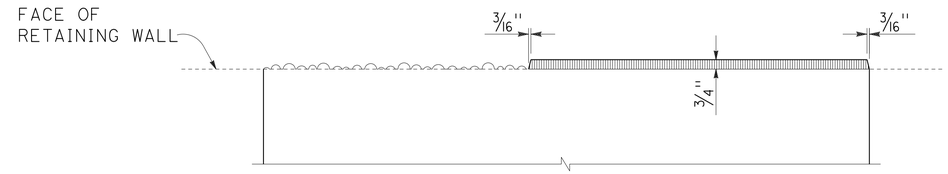

SECTION F-F

2" = 1'-0"

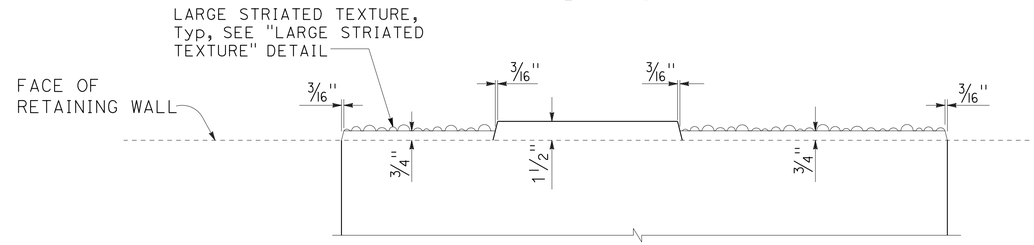

SECTION G-G

2" = 1'-0"

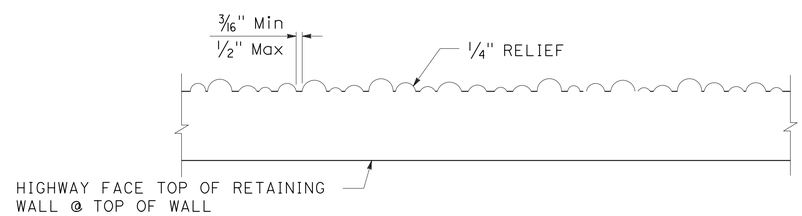

LARGE STRIATED TEXTURE DETAIL

4" = 1'-0"

DESIGN OVERSIGHT: Norbert Gee — 5-4-12 SIGN OFF DATE	DESIGN	BY M. Hancock	CHECKED R. Burns
	DETAILS	BY C. Houghton	CHECKED M. Hancock
	QUANTITIES	BY M. Hancock	CHECKED R. Burns

PREPARED FOR THE STATE OF CALIFORNIA DEPARTMENT OF TRANSPORTATION

C. Tornaci — PROJECT ENGINEER

BRIDGE NO. 57E0114 — POST MILES 5.1

RETAINING WALL NO. 311R
RETAINING WALL DETAILS NO. 4

DESIGN DETAIL SHEET (ENGLISH) (REV.7/16/10)

ORIGINAL SCALE IN INCHES FOR REDUCED PLANS 0 1 2 3

UNIT: 2762
PROJECT NUMBER & PHASE: 1100020051

DISREGARD PRINTS BEARING EARLIER REVISION DATES

REVISION DATES (PRELIMINARY STAGE ONLY): 4-26-11 8-5-11 11-14-11 11-14-11 2-15-12 4-26-12

SHEET 5 OF 13

FILE => RW311R-g-rwdt04.dgn

CONTRACT NO.: X PROJECT ID: X

USERNAME => s127400 DATE PLOTTED => 13-SEP-2012 TIME PLOTTED => 08:04

DIST	COUNTY	ROUTE	POST MILES TOTAL PROJECT	SHEET No	TOTAL SHEETS
11	SD	805	4.7/5.6	621	650

REGISTERED CIVIL ENGINEER — DATE 4-26-12

06-25-12
PLANS APPROVAL DATE

REGISTERED PROFESSIONAL ENGINEER — MASON LEE HANCOCK — No. 75048 — Exp. 12-31-13 — CIVIL — STATE OF CALIFORNIA

The State of California or its officers or agents shall not be responsible for the accuracy or completeness of electronic copies of this plan sheet.

Dokken Engineering
2365 Iron Point Rd, Suite 200
Folsom, CA 95630 (916) 858-0642

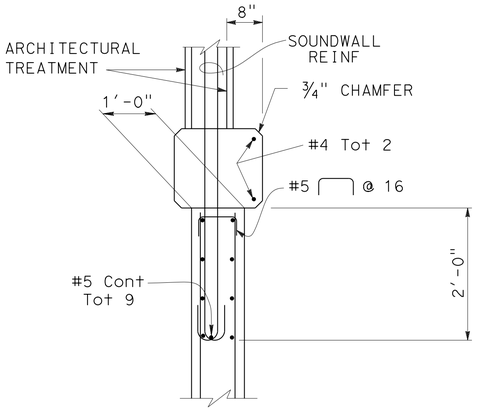

DETAIL A

No Scale

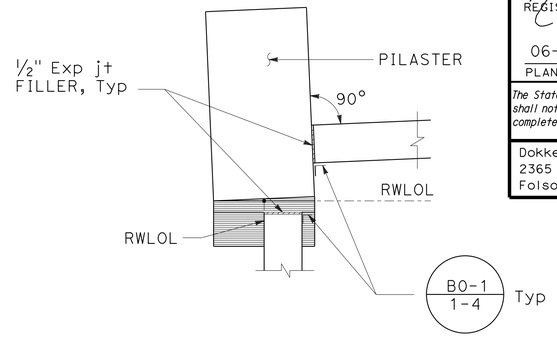

WALL CORNER DETAIL

1/2" = 1'-0"

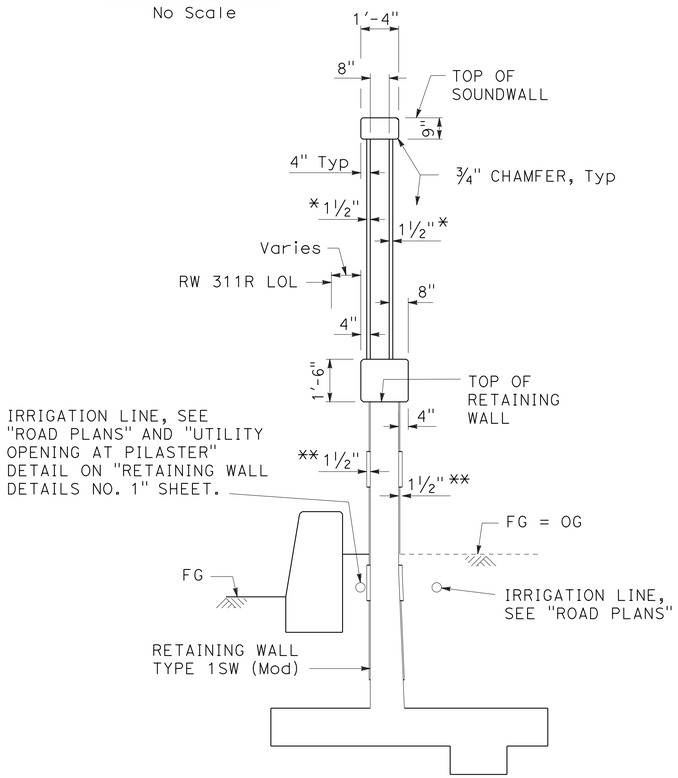

SECTION B-B

3/8" = 1'-0"

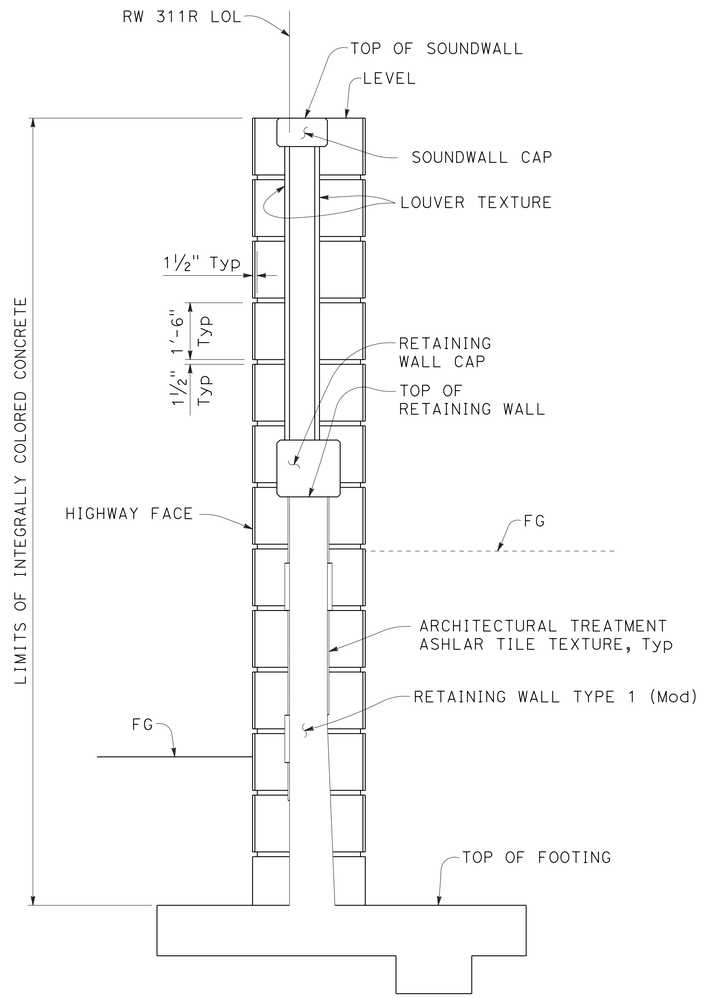

RETURN WALL PILASTER DETAIL

1/2" = 1'-0"

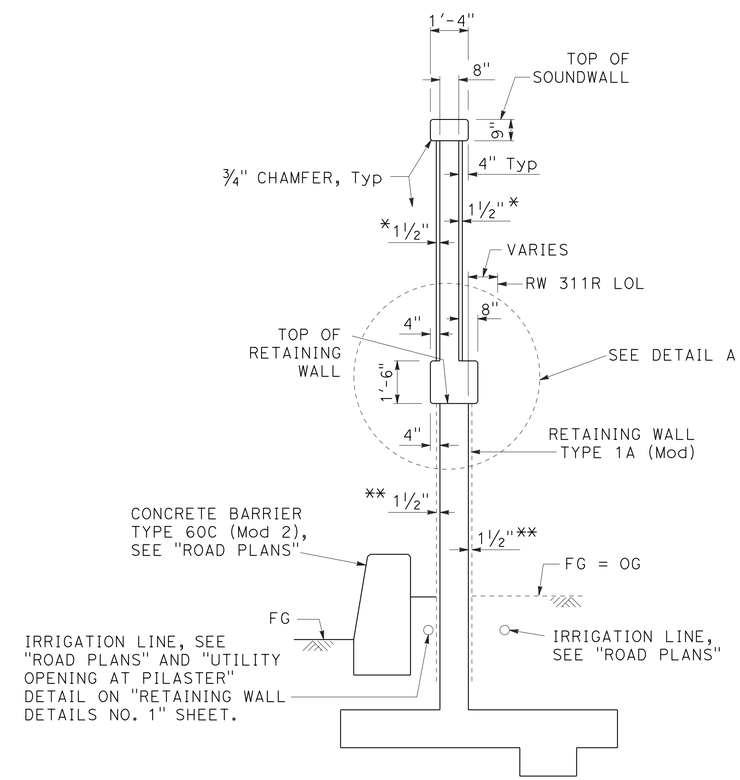

SECTION C-C

3/8" = 1'-0"

* Architectural treatment (louver texture)

** Architectural treatment (Ashlar tile texture)

DESIGN OVERSIGHT — Norbert Gee
5-4-12
SIGN OFF DATE

	BY	CHECKED
DESIGN	M. Hancock	R. Burns
DETAILS	C. Houghton	M. Hancock
QUANTITIES	M. Hancock	R. Burns

PREPARED FOR THE STATE OF CALIFORNIA DEPARTMENT OF TRANSPORTATION

C. Tornaci
PROJECT ENGINEER

BRIDGE NO. 57E0114
POST MILES 5.1

RETAINING WALL NO. 311R
RETAINING WALL DETAILS NO. 5

DESIGN DETAIL SHEET (ENGLISH) (REV.7/16/10)

ORIGINAL SCALE IN INCHES FOR REDUCED PLANS 0 1 2 3

UNIT: 2762
PROJECT NUMBER & PHASE: 1100020051

DISREGARD PRINTS BEARING EARLIER REVISION DATES

REVISION DATES (PRELIMINARY STAGE ONLY) 4-26-11 8-5-11 11-14-11 11-14-11 4-26-12

SHEET 6 OF 13

FILE => RW311R-g-rwdt05.dgn

CONTRACT NO.: X PROJECT ID: X

USERNAME => s127400 DATE PLOTTED => 13-SEP-2012 TIME PLOTTED => 08:04

DIST	COUNTY	ROUTE	POST MILES TOTAL PROJECT	SHEET No	TOTAL SHEETS
11	SD	805	4.7/5.6	622	650

REGISTERED CIVIL ENGINEER — DATE 4-26-12

06-25-12
PLANS APPROVAL DATE

REGISTERED PROFESSIONAL ENGINEER — MASON LEE HANCOCK — No. 75048 — Exp. 12-31-13 — CIVIL — STATE OF CALIFORNIA

The State of California or its officers or agents shall not be responsible for the accuracy or completeness of electronic copies of this plan sheet.

Dokken Engineering
2365 Iron Point Rd, Suite 200
Folsom, CA 95630 (916) 858-0642

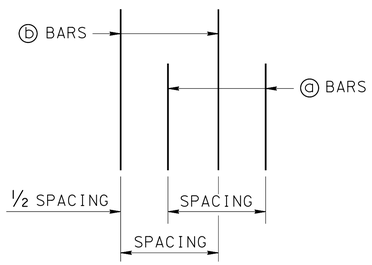

DETAIL B

NO SCALE

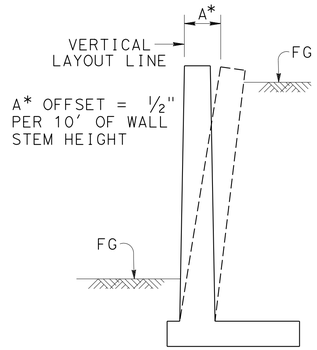

WALL OFFSET

NO SCALE

Values for offsetting forms to be determined by the Engineer

(CONSTANT TOP OF WALL THICKNESS) TABLE OF REINFORCING STEEL DIMENSIONS AND DATA								
DESIGN H	10′		12′		14′		16′	
W	10′-2"		11′-2"		12′-3"		13′-0"	
C	7′-5"		7′-8"		7′-9"		8′-0"	
B	2′-9"		3′-6"		4′-6"		5′-0"	
F SPREAD FOOTING	1′-3"		1′-6"		2′-0"		2′-6"	
K	1′-6"		1′-6"		1′-6"		2′-6"	
BATTER	½:12		½:12		1:12		1:12	
STEM THICKNESS @ TOP	1′-0"		1′-0"		1′-0"		1′-0"	
ⓐ BARS			#7@18**		#7@18**		#9 @ 18**	
X			Cont		Cont		Cont	
Y			8′-0"		6′-6"		7′-6"	
ⓑ BARS	#6 @ 9		#7@18**		#7@18**		#9 @ 18**	
X	Cont		Cont		Cont		Cont	
Y	Cont		Cont		10′-6"		13′-0"	
ⓒ BARS					#6 @18		#6 @18	
ⓓ BARS	#6 @ 9		#6 @ 6		#6 @ 6		#6 @ 6	
SER I: B′ (ft), q′o (ksf)	9.6	0.9	10.8	1.1	11.9	1.3	12.8	1.4
STR I: B′(ft), qo (ksf)	8.9	2.3	10.4	1.4	11.8	1.5	12.6	1.8
STR III: B′(ft), qo (ksf)	10.0	1.6	11.0	1.8	11.7	2.1	12.7	2.4
STR V: B′(ft), qo (ksf)	9.3	1.2	10.6	1.6	11.3	2.6	12.4	2.9
EXT I: B′(ft), qo (ksf)	7.8	1.5	7.8	2.0	7.7	2.5	7.6	3.1

Note: Load Case 1 of the 2010 Standard Plan B3-5 was used.

SYMBOLS:
SER: service limit state
STR: strength limit state
EXT: extreme event limit state
B′ : effective footing width (ft)
q′o : net bearing stress (ksf)
qo : gross uniform bearing stress (ksf)
ɤ : 2 bar bundle

GENERAL NOTES

1. For soundwall and retaining wall architectural finish or texture, see details elsewhere in project plans.
2. For details not shown and drainage notes, see SHEET C-75.
3. Footing cover, 1′-6" minimum.
4. Limit of no splicing rebars = 3 times the bottom thickness of the stem.
5. Placement of reinforcements:
   ⓑ & ⓒ bars are spliced together.
   * ⓐ & ⓑ bars are bundled together.
   ** Alternate ⓐ & ⓑ bars are shown in "Detail B".
   *** For Detail A, see "RETAINING WALL DETAILS No. 5" sheet.
   Cont = Continuous.

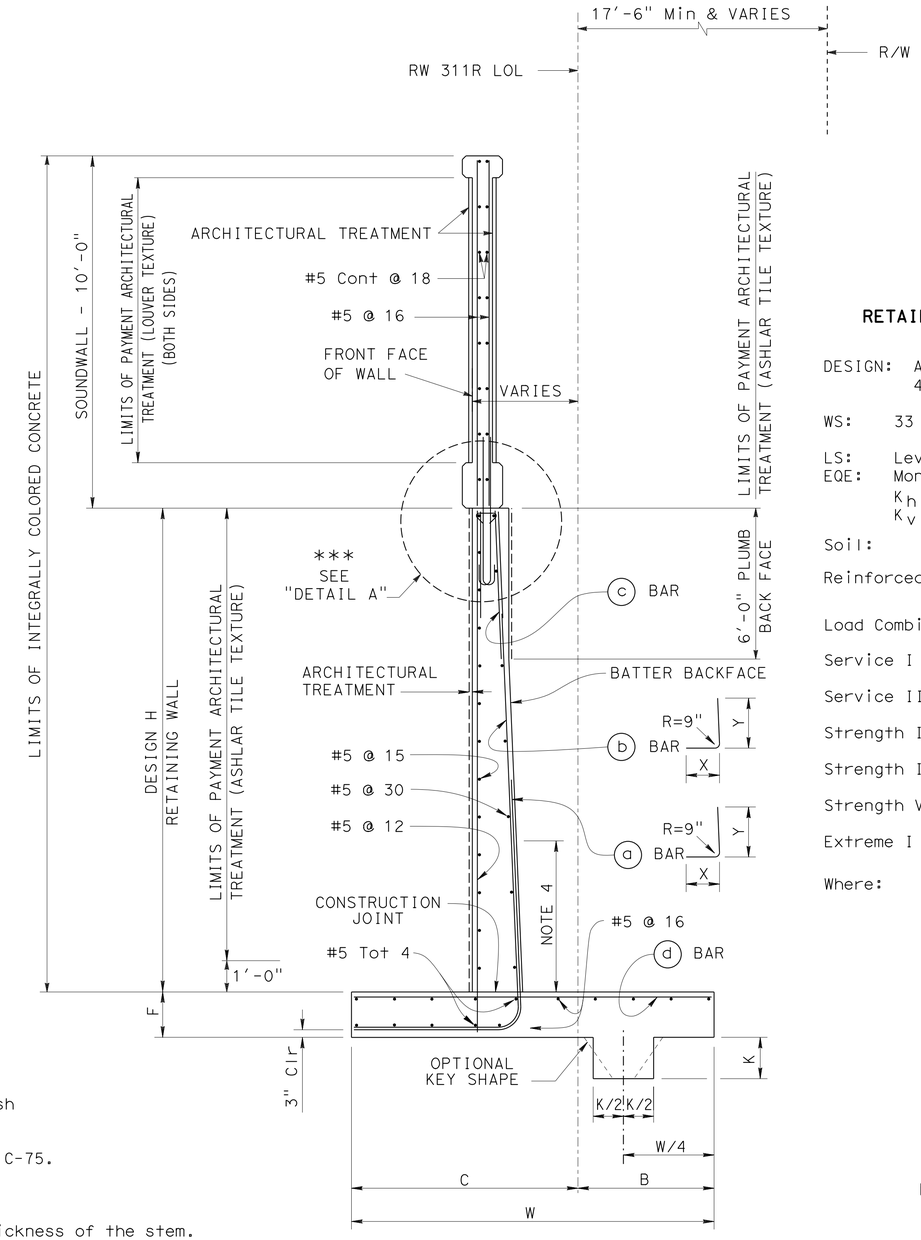

SPREAD FOOTING SECTION

NO SCALE

RETAINING WALL, SOUND WALL AND PILASTER DESIGN DATA

DESIGN: AASHTO LRFD Bridge Design Specification, 4th Edition with California Amendments

WS: 33 psf on soundwall

LS: Level ground with 240 psf and 10′ sound wall

EQE: Mononabe-okabe Method
$K_h = 0.3$
$K_v = 0.0$

Soil: $\phi = 34°$ $\gamma = 120$ pcf

Reinforced Concrete, f′c = 3.6 ksi
fy = 60 ksi

Load Combinations and Limit States

Service I	Q=1.00DC+1.00EV+1.00EH+1.00LS+0.30WS
Service II	Q=1.00DC+1.00EV+1.00EH+1.00WS
Strength I	Q=αDC+βEV+1.50EH+1.75LS
Strength III	Q=αDC+βEV+1.50EH+1.40WS
Strength V	Q=αDC+βEV+1.50EH+1.35LS+0.40WS
Extreme I	Q=1.00DC+1.00EV+1.00EH+1.00EQE+1.00EQD

Where:
Q: Force effects
α: 1.25 or 0.90, Which ever Controls Design
β: 1.35 or 1.00, Which ever Controls Design
DC: Dead Load of Structure Components
EV: Vertical Earth Fill Pressure
EH: Horizontal Earth Fill Pressure
LS: Live Load Surcharge
EQE: Seismic Earth Pressure
EQD: Soil and Structure Components Inertia. Soil Intertia ignored for stem design
WS: Wind Load on Soundwall and Barrier

NOTE:
Retaining wall, sound wall, pilaster and pilaster cap to be constructed with integrally colored concrete. Color shall conform to Davis color "Mesa Buff".

DESIGN OVERSIGHT — Norbert Gee — 5-4-12 — SIGN OFF DATE

	BY	CHECKED
DESIGN	M. Hancock	R. Burns
DETAILS	C. Houghton	M. Hancock
QUANTITIES	M. Hancock	R. Burns

PREPARED FOR THE STATE OF CALIFORNIA DEPARTMENT OF TRANSPORTATION

C. Tornaci — PROJECT ENGINEER

BRIDGE NO. 57E0114 — POST MILES 5.1

RETAINING WALL NO. 311R
RETAINING WALL TYPE 1SW (MOD)

DESIGN DETAIL SHEET (ENGLISH) (REV.7/16/10)

ORIGINAL SCALE IN INCHES FOR REDUCED PLANS 0 1 2 3

UNIT: 2762
PROJECT NUMBER & PHASE: 1100020051

DISREGARD PRINTS BEARING EARLIER REVISION DATES

REVISION DATES (PRELIMINARY STAGE ONLY): 4-26-11 8-5-11 11-14-11 11-30-11 2-10-12 4-26-12 6-5-12

SHEET 7 OF 13

FILE => RW311R-g-rwdt06.dgn

CONTRACT NO.: X PROJECT ID: X

USERNAME => s127400 DATE PLOTTED => 13-SEP-2012 TIME PLOTTED => 08:04

DIST	COUNTY	ROUTE	POST MILES TOTAL PROJECT	SHEET No	TOTAL SHEETS
11	SD	805	4.7/5.6	623	650

REGISTERED CIVIL ENGINEER — DATE 4-26-12

06-25-12
PLANS APPROVAL DATE

REGISTERED PROFESSIONAL ENGINEER — MASON LEE HANCOCK — No. 75048 — Exp. 12-31-13 — CIVIL — STATE OF CALIFORNIA

The State of California or its officers or agents shall not be responsible for the accuracy or completeness of electronic copies of this plan sheet.

Dokken Engineering
2365 Iron Point Rd, Suite 200
Folsom, CA 95630 (916) 858-0642

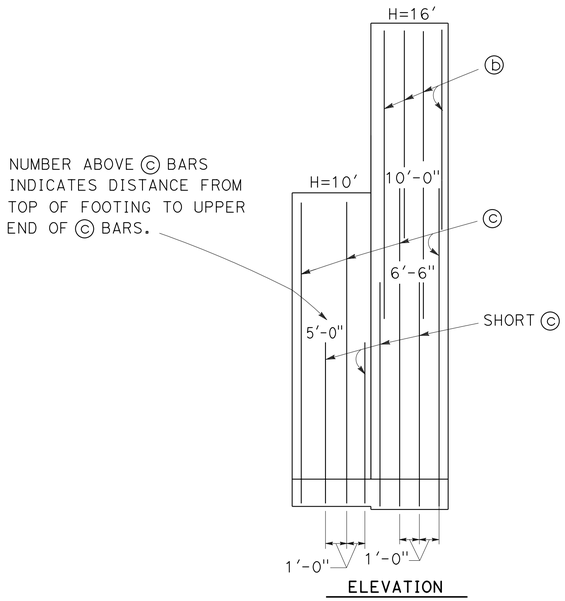

ELEVATION

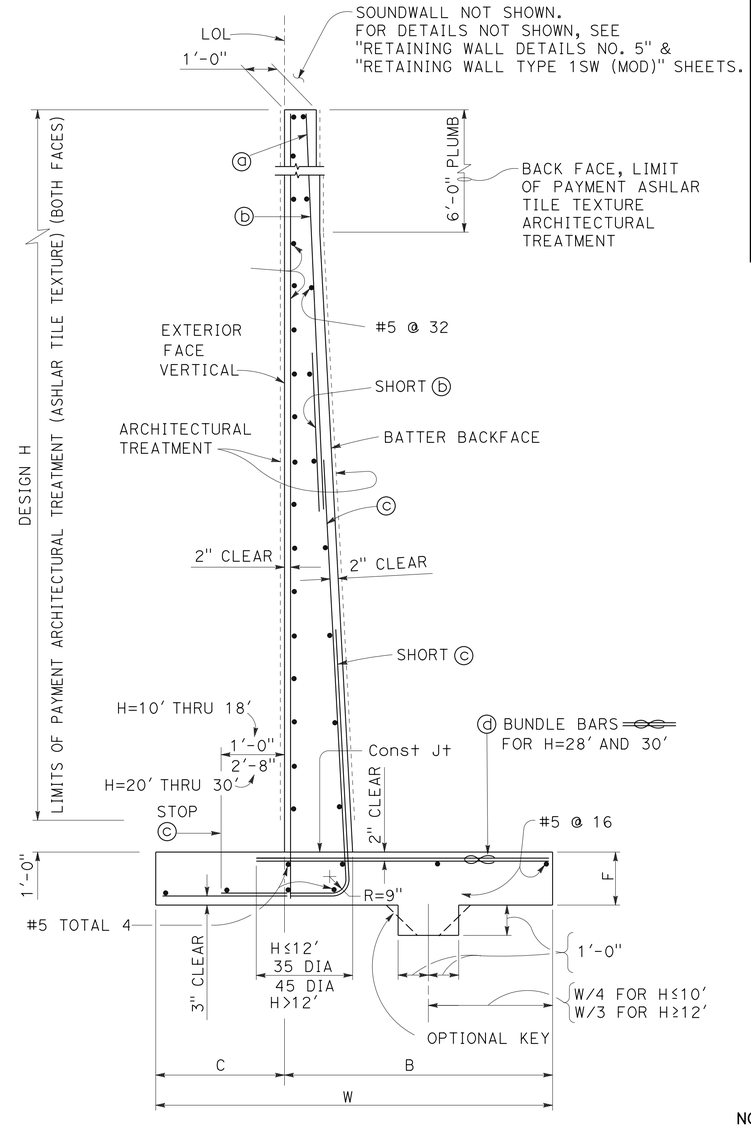

SPREAD FOOTING SECTION

TABLE OF REINFORCING STEEL DIMENSIONS AND DATA				
DESIGN H	10′		16′	
W	8′-0″		11′-6″	
C	2′-8″		3′-10″	
B	5′-4″		7′-8″	
F	1′-4″		1′-9″	
BATTER	½:12		1:12	
ⓐ BARS	——		——	
ⓑ BARS	——		#9 @ 7.5	
ⓒ BARS	#5 @ 6		#8 @ 7.5	
ⓓ BARS	#5 @ 6		#8 @ 7.5	
SER I: B′ (ft), q_o' (ksf)	6.5	1.6	9.7	2.0
STR I: B′(ft), q_o (ksf)	6.7	2.5	9.5	3.2
STR III: B′(ft), q_o (ksf)	4.3	2.5	4.3	3.0
STR V: B′(ft), q_o (ksf)	5.9	2.6	5.9	3.2
EXT I: B′(ft), q_o (ksf)	2.5	6.4	2.5	12.4

Note: Load Case 1 of the 2010 Standard Plan B3-5 was used.

NOTE:

Retaining wall to be constructed with integrally colored concrete. Color shall conform to Davis color "Mesa Buff".

NOTES:

1. For details not shown and drainage notes see SHEETS C-73 AND C-75.
2. For wall stem joint details see (B0-3 / 3-3) and (B0-3 / 3-4)
3. For design data, see "RETAINING WALL TYPE 1 SW (MOD)" sheet.

DESIGN OVERSIGHT Norbert Gee
5-4-12
SIGN OFF DATE

	BY	CHECKED
DESIGN	M. Hancock	R. Burns
DETAILS	C. Houghton	M. Hancock
QUANTITIES	M. Hancock	R. Burns

PREPARED FOR THE STATE OF CALIFORNIA DEPARTMENT OF TRANSPORTATION

C. Tornaci
PROJECT ENGINEER

BRIDGE NO. 57E0114
POST MILES 5.1

RETAINING WALL NO. 311R
RETAINING WALL TYPE 1 (MOD)

DESIGN DETAIL SHEET (ENGLISH) (REV.7/16/10)

ORIGINAL SCALE IN INCHES FOR REDUCED PLANS 0 1 2 3

UNIT: 2762
PROJECT NUMBER & PHASE: 1100020051

DISREGARD PRINTS BEARING EARLIER REVISION DATES

REVISION DATES (PRELIMINARY STAGE ONLY): 4-26-11 8-5-11 11-4-11 12-16-11 2-13-12 4-26-12 6-5-12

SHEET 8 OF 13

FILE => RW311R-g-rwdt07.dgn

CONTRACT NO.: X PROJECT ID: X

USERNAME => s127400 DATE PLOTTED => 13-SEP-2012 TIME PLOTTED => 08:04

DIST	COUNTY	ROUTE	POST MILES TOTAL PROJECT	SHEET No	TOTAL SHEETS
11	SD	805	4.7/5.6	624	650

REGISTERED CIVIL ENGINEER — DATE 4-26-12

06-25-12
PLANS APPROVAL DATE

The State of California or its officers or agents shall not be responsible for the accuracy or completeness of electronic copies of this plan sheet.

REGISTERED PROFESSIONAL ENGINEER — MASON LEE HANCOCK — No. 75048 — Exp. 12-31-13 — CIVIL — STATE OF CALIFORNIA

Dokken Engineering
2365 Iron Point Rd, Suite 200
Folsom, CA 95630 (916) 858-0642

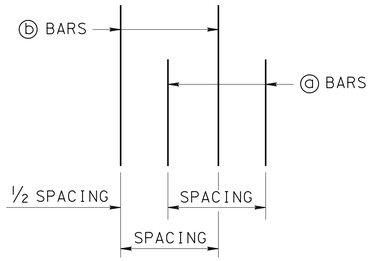

DETAIL B

NO SCALE

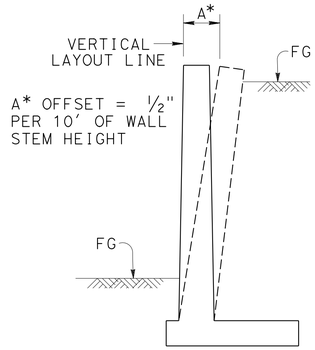

WALL OFFSET

NO SCALE

Values for offsetting forms to be determined by the Engineer

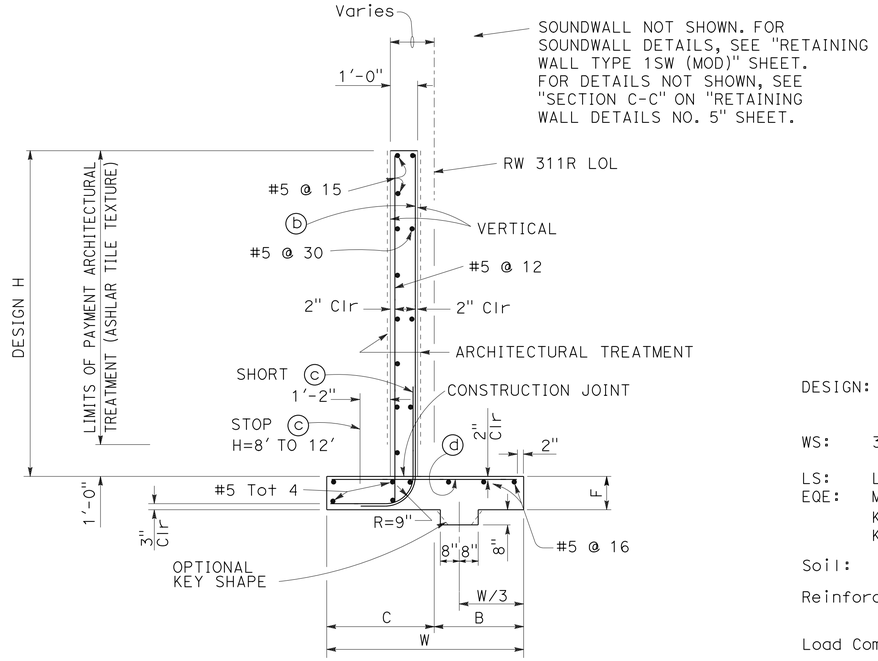

SPREAD FOOTING SECTION

Place concrete in toe, against undisturbed material, except as permitted by the Engineer.

TABLE OF REINFORCING STEEL DIMENSIONS AND DATA		
DESIGN H	10'	
W	10'-2"	
C	7'-5"	
B	2'-9"	
F SPREAD FOOTING	1'-3"	
STEM THICKNESS @ TOP	1'-0"	
ⓐ BARS		
X		
Y		
ⓑ BARS	#6 @ 9	
X	Cont	
Y	Cont	
ⓒ BARS		
ⓓ BARS	#6 @ 9	
SER I: B' (ft), q'_o (ksf)	9.6	0.9
STR I: B'(ft), q_o (ksf)	8.9	2.3
STR III: B'(ft), q_o (ksf)	10.0	1.6
STR V: B'(ft), q_o (ksf)	9.3	1.2
EXT I: B'(ft), q_o (ksf)	7.8	1.5

Note: Load Case 1 of the 2010 Standard Plan B3-5 was used.

SYMBOLS:
SER: service limit state
STR: strength limit state
EXT: extreme event limit state
B' : effective footing width (ft)
q'_o : net bearing stress (ksf)
q_o : gross uniform bearing stress (ksf)
ϑ : 2 bar bundle

GENERAL NOTES

1. For soundwall and retaining wall architectural finish or texture, see details elsewhere in project plans.
2. For details not shown and drainage notes, see SEE SHEET C-75.
3. Footing cover, 1'-6" minimum.
4. Limit of no splicing rebars = 3 times the bottom thickness of the stem.
5. Placement of reinforcements:
   ⓑ & ⓒ bars are spliced together.
   * ⓐ & ⓑ bars are bundled together.
   ** Alternate ⓐ & ⓑ bars are shown in "Detail B".
   *** For Detail A, see "Retaining Wall Details No. 5" sheet.
   Cont = Continuous.

NOTE:

Retaining wall to be constructed with integrally colored concrete. Color shall conform to Davis color "Mesa Buff".

RETAINING WALL AND SOUND WALL DESIGN DATA

DESIGN: AASHTO LRFD Bridge Design Specification, 4th Edition with California Amendments

WS: 33 psf on soundwall

LS: Level ground with 240 psf and 10' sound wall
EQE: Mononabe-okabe Method
$K_h = 0.3$
$K_v = 0.0$

Soil: $\varnothing = 34°$ $\gamma = 120$ pcf

Reinforced Concrete, f'c = 3.6 ksi
fy = 60 ksi

Load Combinations and Limit States

Service I Q=1.00DC+1.00EV++1.00EH+1.00LS+0.30WS

Service II Q=1.00DC+1.00EV+1.00EH+1.00WS

Strength I Q=aDC+βEV+1.50EH+1.75LS

Strength III Q=aDC+βEV+1.50EH+1.40WS

Strength V Q=aDC+βEV+1.50EH+1.35LS+0.40WS

Extreme I Q=1.00DC+1.00EV+1.00EH+1.00EQE+1.00EQD

Where:
Q: Force effects
a: 1.25 or 0.90, Which ever Controls Design
β 1.35 or 1.00, Which ever Controls Design
DC: Dead Load of Structure Components
EV: Vertical Earth Fill Pressure
EH: Horizontal Earth Fill Pressure
LS: Live Load Surcharge
EQE: Seismic Earth Pressure
EQD: Soil and Structure Components Inertia. Soil Intertia ignored for stem design
WS: Wind Load on Soundwall and Barrier

NOTES:

1. For details not shown and drainage notes see SHEET C-75.
2. For wall stem joint details see (B0-3 / 3-3) and (B0-3 / 3-4)
3. For design data, see "RETAINING WALL TYPE 1 SW (MOD)" sheet.

DESIGN OVERSIGHT Norbert Gee
5-4-12
SIGN OFF DATE

	BY	CHECKED
DESIGN	M. Hancock	R. Burns
DETAILS	C. Houghton	M. Hancock
QUANTITIES	M. Hancock	R. Burns

PREPARED FOR THE STATE OF CALIFORNIA DEPARTMENT OF TRANSPORTATION

C. Tornaci
PROJECT ENGINEER

BRIDGE NO. 57E0114
POST MILES 5.1

RETAINING WALL NO. 311R
RETAINING WALL TYPE 1A (MOD)

DESIGN DETAIL SHEET (ENGLISH) (REV.7/16/10)

ORIGINAL SCALE IN INCHES FOR REDUCED PLANS 0 1 2 3

UNIT: 2762
PROJECT NUMBER & PHASE: 1100020051

DISREGARD PRINTS BEARING EARLIER REVISION DATES

REVISION DATES (PRELIMINARY STAGE ONLY): 4-26-11 8-5-11 11-14-11 11-15-11 2-10-12 4-26-12 6-5-12

SHEET 9 OF 13

FILE => RW311R-g-rwdt08.dgn

CONTRACT NO.: X PROJECT ID: X

USERNAME => s127400 DATE PLOTTED => 13-SEP-2012 TIME PLOTTED => 08:04

DIST	COUNTY	ROUTE	KILOMETER POST TOTAL PROJECT	SHEET No	TOTAL SHEETS
11	SD	805	4.7/5.6	625	650

REGISTERED CIVIL ENGINEER 4-26-12

06-25-12
PLANS APPROVAL DATE

REGISTERED PROFESSIONAL ENGINEER Cuong Nguyen No. C32414 Exp. 12-31-12 CIVIL STATE OF CALIFORNIA

The State of California or its officers or agents shall not be responsible for the accuracy or completeness of electronic copies of this plan sheet.

This LOTB sheet was prepared in accordance with the Caltrans Soil & Rock Logging, Classification, & Presentation Manual (2007 Edition).

BENCH MARK

BM 805-5.00, Brass disk in sidewalk on north side of E. Palomar St. OC bridge, at Station 298+46.0, Right 60 feet of "DAR" Line/"A1" Line.
Elevation: 300.93 feet
NAVD 1988 (Vertical)
NAD83 (Horizontal)

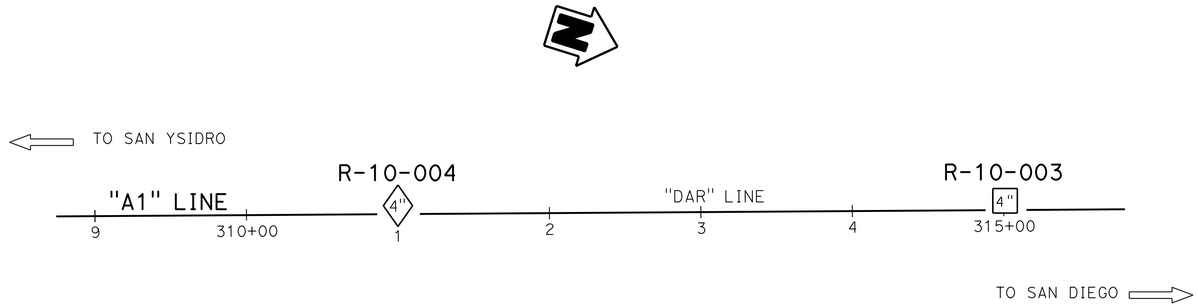

PLAN

1" = 50'

NOTES:

1. Ground water was not encountered during the 2010 subsurface investigation.
2. RQD designated with "NA" (not applicable) indicates that the rock encountered within the drill interval was not sound rock, therefore RQD was not calculated.
3. Plan sheets provided by Design, show that "A1" Line = "DAR" Line.

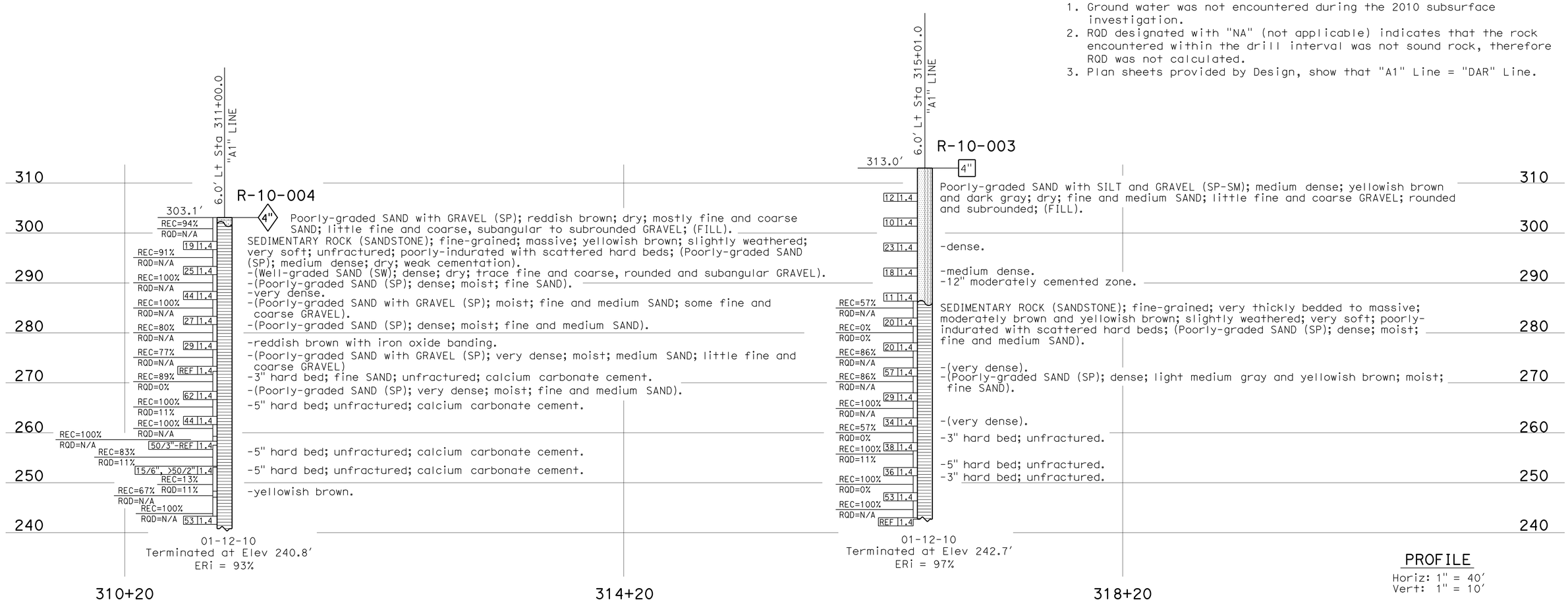

PROFILE

Horiz: 1" = 40'
Vert: 1" = 10'

ENGINEERING SERVICES	GEOTECHNICAL SERVICES	STATE OF CALIFORNIA DEPARTMENT OF TRANSPORTATION	DIVISION OF ENGINEERING SERVICES STRUCTURE DESIGN	BRIDGE NO. 57E0114	RETAINING WALL NO. 311R
FUNCTIONAL SUPERVISOR	DRAWN BY: F. Nguyen, I.G-Remmen	FIELD INVESTIGATION BY:	DESIGN BRANCH X	POST MILE 5.07	LOG OF TEST BORINGS 1 OF 4
NAME: S. Wei	CHECKED BY: B. Gutierrez	TM Liao/J. Klamecki			

OGS CIVIL LOG OF TEST BORINGS SHEET

ORIGINAL SCALE IN INCHES FOR REDUCED PLANS 0 1 2 3

UNIT: 3643
PROJECT NUMBER & PHASE: 11000200511 CONTRACT NO.: 11-2T1821

DISREGARD PRINTS BEARING EARLIER REVISION DATES → 4-26-12

REVISION DATES | SHEET 10 | OF 13

FILE => RW311R-z-ltb01.dgn

USERNAME => s127400 DATE PLOTTED => 13-SEP-2012 TIME PLOTTED => 08:04

DIST	COUNTY	ROUTE	KILOMETER POST TOTAL PROJECT	SHEET No	TOTAL SHEETS
11	SD	805	4.7/5.6	626	650

REGISTERED CIVIL ENGINEER 12-8-11

06-25-12
PLANS APPROVAL DATE

REGISTERED PROFESSIONAL ENGINEER Cuong Nguyen No. C32414 Exp. 12-31-12 CIVIL STATE OF CALIFORNIA

The State of California or its officers or agents shall not be responsible for the accuracy or completeness of electronic copies of this plan sheet.

REFERENCE: CALTRANS SOIL & ROCK LOGGING, CLASSIFICATION, AND PRESENTATION MANUAL (JUNE 2007)

CEMENTATION

Description	Criteria
Weak	Crumbles or breaks with handling or little finger pressure.
Moderate	Crumbles or breaks with considerable finger pressure.
Strong	Will not crumble or break with finger pressure.

CONSISTENCY OF COHESIVE SOILS

Description	Unconfined Compressive Strength (tsf)	Pocket Penetrometer Measurement (tsf)	Torvane Measurement (tsf)	Field Approximation
Very Soft	< 0.25	< 0.25	< 0.12	Easily penetrated several inches by fist
Soft	0.25 to 0.50	0.25 to 0.50	0.12 to 0.25	Easily penetrated several inches by thumb
Medium Stiff	0.50 to 1.0	0.50 to 1.0	0.25 to 0.50	Penetrated several inches by thumb with moderate effort
Stiff	1 to 2	1 to 2	0.50 to 1.0	Readily indented by thumb but penetrated only with great effort
Very Stiff	2 to 4	2 to 4	1.0 to 2.0	Readily indented by thumbnail
Hard	> 4.0	> 4.0	> 2.0	Indented by thumbnail with difficulty

BOREHOLE IDENTIFICATION

Symbol	Hole Type	Description
Size	A	Auger Boring
Size	R P	Rotary drilled boring Rotary percussion boring (air)
Size	R	Rotary drilled diamond core
Size	HD HA	Hand driven (1-inch soil tube) Hand Auger
●	D	Dynamic Cone Penetration Boring
▲	CPT	Cone Penetration Test (ASTM D 5778-95)
⬚	O	Other

Note: Size in inches.

PLASTICITY OF FINE-GRAINED SOILS

Description	Criteria
Nonplastic	A 1/8-inch thread cannot be rolled at any water content.
Low	The thread can barely be rolled and the lump cannot be formed when drier than the plastic limit.
Medium	The thread is easy to roll and not much time is required to reach the plastic limit. The thread cannot be rerolled after reaching the plastic limit. The lump crumbles when drier than the plastic limit.
High	It takes considerable time rolling and kneading to reach the plastic limit. The thread can be rerolled several times after reaching the plastic limit. The lump can be formed without crumbling when drier than the plastic limit.

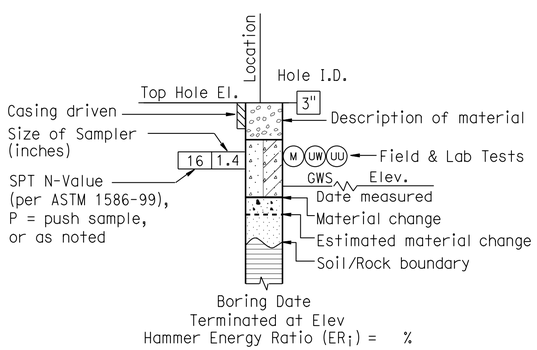

ROTARY BORING

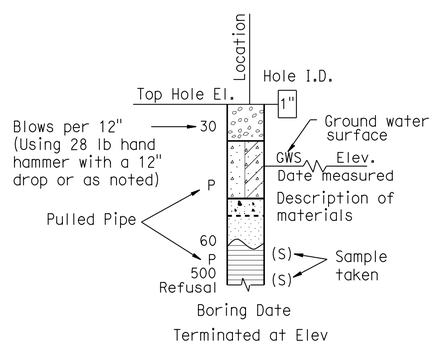

HAND BORING

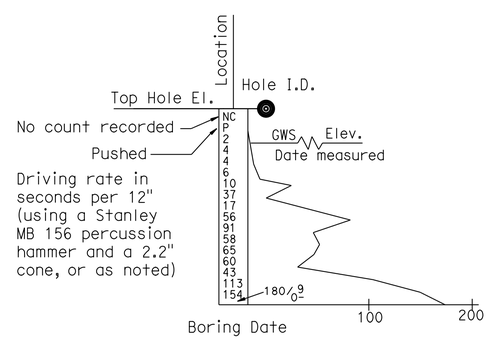

DYNAMIC CONE PENETRATION BORING

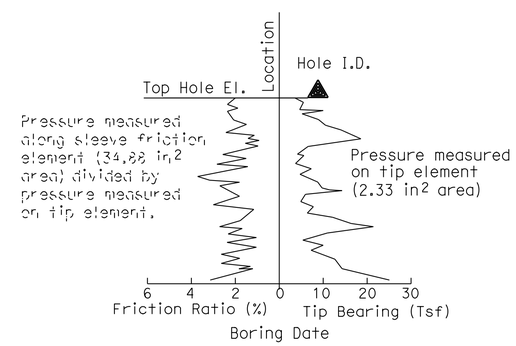

CONE PENETRATION TEST (CPT) SOUNDING

ENGINEERING SERVICES	MATERIALS AND GEOTECHNICAL SERVICES	STATE OF CALIFORNIA DEPARTMENT OF TRANSPORTATION	DIVISION OF ENGINEERING SERVICES STRUCTURE DESIGN DESIGN BRANCH X	BRIDGE NO. 57E0114 POST MILE 5.07	RETAINING WALL NO. 311R LOG OF TEST BORINGS 2 OF 4
	PREPARED BY: I.G-Remmen				

GS LOTB SOIL LEGEND

ORIGINAL SCALE IN INCHES FOR REDUCED PLANS 0 1 2 3

UNIT: 3643
PROJECT NUMBER & PHASE: 11000200511 CONTRACT NO.: 11-2T1821

DISREGARD PRINTS BEARING EARLIER REVISION DATES

REVISION DATES

SHEET 11 OF 13

FILE => RW311R-z-ltb02.dgn

USERNAME => s127400 DATE PLOTTED => 13-SEP-2012 TIME PLOTTED => 08:04

REFERENCE: CALTRANS SOIL & ROCK LOGGING, CLASSIFICATION, AND PRESENTATION MANUAL (JUNE 2007)

DIST	COUNTY	ROUTE	KILOMETER POST TOTAL PROJECT	SHEET No	TOTAL SHEETS
11	SD	805	4.7/5.6	627	650

REGISTERED CIVIL ENGINEER 12-8-11

06-25-12
PLANS APPROVAL DATE

REGISTERED PROFESSIONAL ENGINEER Cuong Nguyen No. C32414 Exp. 12-31-12 CIVIL STATE OF CALIFORNIA

The State of California or its officers or agents shall not be responsible for the accuracy or completeness of electronic copies of this plan sheet.

GROUP SYMBOLS AND NAMES

Graphic/Symbol	Group Names	Graphic/Symbol	Group Names
GW	Well-graded GRAVEL Well-graded GRAVEL with SAND	CL	Lean CLAY Lean CLAY with SAND Lean CLAY with GRAVEL SANDY lean CLAY SANDY lean CLAY with GRAVEL GRAVELLY lean CLAY GRAVELLY lean CLAY with SAND
GP	Poorly graded GRAVEL Poorly graded GRAVEL with SAND		
GW-GM	Well-graded GRAVEL with SILT Well-graded GRAVEL with SILT and SAND	CL-ML	SILTY CLAY SILTY CLAY with SAND SILTY CLAY with GRAVEL SANDY SILTY CLAY SANDY SILTY CLAY with GRAVEL GRAVELLY SILTY CLAY GRAVELLY SILTY CLAY with SAND
GW-GC	Well-graded GRAVEL with CLAY (or SILTY CLAY) Well-graded GRAVEL with CLAY and SAND (or SILTY CLAY and SAND)		
GP-GM	Poorly graded GRAVEL with SILT Poorly graded GRAVEL with SILT and SAND	ML	SILT SILT with SAND SILT with GRAVEL SANDY SILT SANDY SILT with GRAVEL GRAVELLY SILT GRAVELLY SILT with SAND
GP-GC	Poorly graded GRAVEL with CLAY (or SILTY CLAY) Poorly graded GRAVEL with CLAY and SAND (or SILTY CLAY and SAND)		
GM	SILTY GRAVEL SILTY GRAVEL with SAND	OL	ORGANIC lean CLAY ORGANIC lean CLAY with SAND ORGANIC lean CLAY with GRAVEL SANDY ORGANIC lean CLAY SANDY ORGANIC lean CLAY with GRAVEL GRAVELLY ORGANIC lean CLAY GRAVELLY ORGANIC lean CLAY with SAND
GC	CLAYEY GRAVEL CLAYEY GRAVEL with SAND		
GC-GM	SILTY, CLAYEY GRAVEL SILTY, CLAYEY GRAVEL with SAND	OL	ORGANIC SILT ORGANIC SILT with SAND ORGANIC SILT with GRAVEL SANDY ORGANIC SILT SANDY ORGANIC SILT with GRAVEL GRAVELLY ORGANIC SILT GRAVELLY ORGANIC SILT with SAND
SW	Well-graded SAND Well-graded SAND with GRAVEL		
SP	Poorly graded SAND Poorly graded SAND with GRAVEL	CH	Fat CLAY Fat CLAY with SAND Fat CLAY with GRAVEL SANDY fat CLAY SANDY fat CLAY with GRAVEL GRAVELLY fat CLAY GRAVELLY fat CLAY with SAND
SW-SM	Well-graded SAND with SILT Well-graded SAND with SILT and GRAVEL		
SW-SC	Well-graded SAND with CLAY (or SILTY CLAY) Well-graded SAND with CLAY and GRAVEL (or SILTY CLAY and GRAVEL)	MH	Elastic SILT Elastic SILT with SAND Elastic SILT with GRAVEL SANDY elastic SILT SANDY elastic SILT with GRAVEL GRAVELLY elastic SILT GRAVELLY elastic SILT with SAND
SP-SM	Poorly graded SAND with SILT Poorly graded SAND with SILT and GRAVEL		
SP-SC	Poorly graded SAND with CLAY (or SILTY CLAY) Poorly graded SAND with CLAY and GRAVEL (or SILTY CLAY and GRAVEL)	OH	ORGANIC fat CLAY ORGANIC fat CLAY with SAND ORGANIC fat CLAY with GRAVEL SANDY ORGANIC fat CLAY SANDY ORGANIC fat CLAY with GRAVEL GRAVELLY ORGANIC fat CLAY GRAVELLY ORGANIC fat CLAY with SAND
SM	SILTY SAND SILTY SAND with GRAVEL		
SC	CLAYEY SAND CLAYEY SAND with GRAVEL	OH	ORGANIC elastic SILT ORGANIC elastic SILT with SAND ORGANIC elastic SILT with GRAVEL SANDY ORGANIC elastic SILT SANDY ORGANIC elastic SILT with GRAVEL GRAVELLY ORGANIC elastic SILT GRAVELLY ORGANIC elastic SILT with SAND
SC-SM	SILTY, CLAYEY SAND SILTY, CLAYEY SAND with GRAVEL		
PT	PEAT	OL/OH	ORGANIC SOIL ORGANIC SOIL with SAND ORGANIC SOIL with GRAVEL SANDY ORGANIC SOIL SANDY ORGANIC SOIL with GRAVEL GRAVELLY ORGANIC SOIL GRAVELLY ORGANIC SOIL with SAND
	COBBLES COBBLES and BOULDERS BOULDERS		

FIELD AND LABORATORY TESTING

- (C) Consolidation (ASTM D 2435)
- (CL) Collapse Potential (ASTM D 5333)
- (CP) Compaction Curve (CTM 216)
- (CR) Corrosivity Testing (CTM 643, CTM 422, CTM 417)
- (CU) Consolidated Undrained Triaxial (ASTM D 4767)
- (DS) Direct Shear (ASTM D 3080)
- (EI) Expansion Index (ASTM D 4829)
- (M) Moisture Content (ASTM D 2216)
- (OC) Organic Content-% (ASTM D 2974)
- (P) Permeability (CTM 220)
- (PA) Particle Size Analysis (ASTM D 422)
- (PI) Plasticity Index (AASHTO T 90) Liquid Limit (AASHTO T 89)
- (PL) Point Load Index (ASTM D 5731)
- (PM) Pressure Meter
- (PP) Pocket Penetrometer
- (R) R-Value (CTM 301)
- (SE) Sand Equivalent (CTM 217)
- (SG) Specific Gravity (AASHTO T 100)
- (SL) Shrinkage Limit (ASTM D 427)
- (SW) Swell Potential (ASTM D 4546)
- (TV) Pocket Torvane
- (UC) Unconfined Compression-Soil (ASTM D 2166) Unconfined Compression-Rock (ASTM D 2938)
- (UU) Unconsolidated Undrained Triaxial (ASTM D 2850)
- (UW) Unit Weight (ASTM D 4767)
- (VS) Vane Shear (AASHTO T 223)

APPARENT DENSITY OF COHESIONLESS SOILS

Description	SPT N_{60} (Blows / 12 inches)
Very loose	0 - 4
Loose	5 - 10
Medium Dense	11 - 30
Dense	31 - 50
Very Dense	> 50

MOISTURE

Description	Criteria
Dry	Absence of moisture, dusty, dry to the touch
Moist	Damp but no visible water
Wet	Visible free water, usually soil is below water table

PERCENT OR PROPORTION OF SOILS

Description	Criteria
Trace	Particles are present but estimated to be less than 5%
Few	5 to 10%
Little	15 to 25%
Some	30 to 45%
Mostly	50 to 100%

PARTICLE SIZE

Description		Size
Boulder		> 12"
Cobble		3" to 12"
Gravel	Coarse	3/4" to 3"
	Fine	No. 4 to 3/4"
Sand	Coarse	No. 10 to No. 4
	Medium	No. 40 to No. 10
	Fine	No. 200 to No. 40

ENGINEERING SERVICES

MATERIALS AND GEOTECHNICAL SERVICES

PREPARED BY: I.G-Remmen

STATE OF CALIFORNIA DEPARTMENT OF TRANSPORTATION

DIVISION OF ENGINEERING SERVICES STRUCTURE DESIGN DESIGN BRANCH X

BRIDGE NO. 57E0114

POST MILE 5.07

RETAINING WALL NO. 311R

LOG OF TEST BORINGS 3 OF 4

GS LOTB SOIL LEGEND

ORIGINAL SCALE IN INCHES FOR REDUCED PLANS 0 1 2 3

UNIT: 3643
PROJECT NUMBER & PHASE: 11000200511
CONTRACT NO.: 11-2T1821

DISREGARD PRINTS BEARING EARLIER REVISION DATES

REVISION DATES

SHEET 12 OF 13

FILE => RW311R-z-ltb03.dgn

USERNAME => s127400 DATE PLOTTED => 13-SEP-2012 TIME PLOTTED => 08:04

DIST	COUNTY	ROUTE	KILOMETER POST TOTAL PROJECT	SHEET No	TOTAL SHEETS
11	SD	805	4.7/5.6	628	650

REGISTERED CIVIL ENGINEER 12-8-11

06-25-12
PLANS APPROVAL DATE

REGISTERED PROFESSIONAL ENGINEER Cuong Nguyen No. C32414 Exp. 12-31-12 CIVIL STATE OF CALIFORNIA

The State of California or its officers or agents shall not be responsible for the accuracy or completeness of electronic copies of this plan sheet.

REFERENCE: CALTRANS SOIL & ROCK LOGGING, CLASSIFICATION, AND PRESENTATION MANUAL (JUNE 2007)

PERCENT CORE RECOVERY (REC) & ROCK QUALITY DESIGNATION (RQD)

$$REC = \frac{\sum \text{Length of the recovered core pieces (inches)}}{\text{Total length of core run (inches)}} \times 100\%$$

$$RQD = \frac{\sum \text{Length of intact core pieces} \geq 4''}{\text{Total length of core run (inches)}} \times 100\%$$

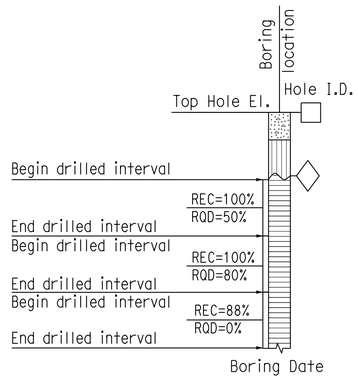

RELATIVE STRENGTH OF INTACT ROCK

Term	Uniaxial Compressive Strength (PSI)
Extremely Strong	> 30,000
Very Strong	14,500 - 30,000
Strong	7,000 - 14,500
Medium Strong	3,500 - 7,000
Weak	700 - 3,500
Very Weak	150 - 700
Extremely Weak	< 150

BEDDING SPACING

Description	Thickness / Spacing
Massive	Greater than 10 ft
Very thickly bedded	3 to 10 ft
Thickly bedded	1 to 3 ft
Moderately bedded	3-5/8" to 1 ft
Thinly bedded	1-1/4" to 3-5/8"
Very thinly bedded	3/8" to 1-1/4"
Laminated	Less than 3/8"

LEGEND OF ROCK MATERIALS

- IGNEOUS ROCK
- SEDIMENTARY ROCK
- METAMORPHIC ROCK

ROCK HARDNESS

Description	Criteria
Extremely Hard	Specimen cannot be scratched with a pocket knife or sharp pick; can only be chipped with repeated heavy hammer blows.
Very Hard	Specimen cannot be scratched with a pocket knife or sharp pick. Breaks with repeated heavy hammer blows.
Hard	Specimen can be scratched with a pocket knife or sharp pick with difficulty (heavy pressure). Heavy hammer blows required to break specimen.
Moderately Hard	Specimen can be scratched with pocket knife or sharp pick with light or moderate pressure. Core breaks with moderate hammer blows.
Moderately Soft	Specimen can be grooved 1/6" deep with a pocket knife or sharp pick with moderate or heavy pressure. Breaks with light hammer blow or heavy manual pressure.
Soft	Specimen can be grooved or gouged easily by a pocket knife or sharp pick with light pressure, can be scratched with fingernail. Breaks with light to moderate manual pressure.
Very Soft	Specimen can be readily indented, grooved or gouged with fingernail, or carved with a pocket knife. Breaks with light manual pressure.

FRACTURE DENSITY

Description	Observed Fracture Density
Unfractured	No fractures.
Very slightly fractured	Lengths greater than 3 feet.
Slightly fractured	Lengths from 1 to 3 feet with few lengths less than 1 foot or greater than 3 feet.
Moderately fractured	Lengths mostly in 4" to 1 foot range with most lengths about 8"
Intensely fractured	Lengths average from 1 to 4" with scattered fragmented intervals with lengths less than 4"
Very intensely fractured	Mostly chips and fragments with a few scattered short core lengths.

Combination descriptors (such as "Very intensely to intensely fractured") are used where equal distribution of both fracture density characteristics is present over a significant interval or exposure, or where characteristics are "in between" the descriptor definitions. Only two adjacent descriptors may be combined.

WEATHERING DESCRIPTORS FOR INTACT ROCK

Description	Diagnostic features					General Characteristics
	Chemical Weathering-Discoloration and/or oxidation		Mechanical Weathering-Grain boundary conditions (disaggregation) primarily for granitics and some coarse-grained sediments	Texture and Solutioning		
	Body of Rock	Fracture Surfaces		Texture	Solutioning	
Fresh	No discoloration, not oxidized.	No discoloration or oxidation.	No separation, intact (tight).	No change.	No solutioning.	Hammer rings when crystalline rocks are struck.
Slightly Weathered	Discoloration or oxidation is limited to surface of, or short distance from, fractures; some feldspar crystals are dull.	Minor to complete discoloration or oxidation of most surfaces.	No visible separation, intact (tight).	Preserved.	Minor leaching of some soluble minerals may be noted.	Hammer rings when crystalline rocks are struck. Body of rock not weakened.
Moderately Weathered	Discoloration or oxidation extends from fractures usually throughout; Fe-Mg minerals are "rusty," feldspar crystals are "cloudy."	All fracture surfaces are discolored or oxidized.	Partial separation of boundaries visible.	Generally preserved.	Soluble minerals may be mostly leached.	Hammer does not ring when rock is struck. Body of rock is slightly weakened.
Intensely Weathered	Discoloration or oxidation throughout; all feldspars and Fe-Mg minerals are altered to clay to some extent; or chemical alteration produces in-situ disaggregation, see grain boundary conditions.	All fracture surfaces are discolored or oxidized, surfaces friable.	Partial separation, rock is friable; in semiarid conditions granitics are disaggregated.	Texture altered by chemical disintegration (hydration, argillation).	Leaching of soluble minerals may be complete.	Dull sound when struck with hammer, usually can be broken with moderate to heavy manual pressure or by light hammer blow without reference to planes of weakness such as incipient or hairline fractures, or veinlets. Rock is significantly weakened.
Decomposed	Discolored or oxidized throughout, but resistant minerals such as quartz may be unaltered; all feldspars and Fe-Mg minerals are completely altered to clay.		Complete separation of grain boundaries (disaggregated).	Resembles a soil, partial or complete remnant rock structure may be preserved; leaching of soluble minerals usually complete.		Can be granulated by hand. Resistant minerals such as quartz may be present as "stringers" or "dikes."

Combination descriptors (such as "slightly weathered to fresh") are permissible where equal distribution of both weathering characteristics is present over significant intervals or where characteristics present are "in between" the diagnostic feature. However, combination descriptors should not be used where significant, identifiable zones can be delineated. Only two adjacent descriptors may be combined. "Very intensely weathered" is the combination descriptor for "intensely weathered to decomposed."

ENGINEERING SERVICES

MATERIALS AND GEOTECHNICAL SERVICES

PREPARED BY: I.G-Remmen

STATE OF CALIFORNIA DEPARTMENT OF TRANSPORTATION

DIVISION OF ENGINEERING SERVICES STRUCTURE DESIGN DESIGN BRANCH X

BRIDGE NO. 57E0114
POST MILE 5.07

RETAINING WALL NO. 311R

LOG OF TEST BORINGS 4 OF 4

GS LOTB SOIL LEGEND

ORIGINAL SCALE IN INCHES FOR REDUCED PLANS 0 1 2 3

UNIT: 3643
PROJECT NUMBER & PHASE: 11000200511
CONTRACT NO.: 11-2T1821

DISREGARD PRINTS BEARING EARLIER REVISION DATES

REVISION DATES

SHEET 13 OF 13

FILE => RW311R-z-ltb04.dgn

USERNAME => s127400 DATE PLOTTED => 13-SEP-2012 TIME PLOTTED => 08:04

DIST	COUNTY	ROUTE	POST MILES TOTAL PROJECT	SHEET No	TOTAL SHEETS
11	SD	805	4.7/5.6	629	650

REGISTERED CIVIL ENGINEER — DATE 4-26-12

06-25-12
PLANS APPROVAL DATE

REGISTERED PROFESSIONAL ENGINEER — MASON LEE HANCOCK — No. 75048 — Exp. 12-31-13 — CIVIL — STATE OF CALIFORNIA

The State of California or its officers or agents shall not be responsible for the accuracy or completeness of electronic copies of this plan sheet.

Dokken Engineering
2365 Iron Point Rd, Suite 200
Folsom, CA 95630 (916) 858-0642

SANDAG
401 B St, Suite 800
San Diego, CA 92101

TOP OF RETAINING WALL ELEVATIONS

STATION ①	ELEVATION	STATION ②	ELEVATION
10+00.00	318.30′	10+02.67	318.30′
10+49.88	318.65′	10+52.55	318.67′
10+99.75	319.00′	11+02.42	319.02′
11+49.63	319.17′	11+52.30	319.18′
11+99.50	319.27′	12+12.17	319.28′
12+49.38	319.37′	12+52.05	319.38′
12+99.25	319.60′	13+01.92	319.61′
13+49.13	319.88′	13+51.80	319.90′
13+99.00	320.16′	14+01.67	320.18′
14+48.88	320.45′	14+51.55	320.46′
14+98.75	320.73′	15+01.42	320.74′
15+48.63	321.01′	15+51.30	321.03′
15+98.50	321.29′	16+01.17	321.31′
16+48.38	321.58′	16+51.05	321.59′
16+98.25	321.86′	17+00.92	321.87′
17+48.13	322.14′	17+50.80	322.16′
17+99.50	322.42′		

LEGEND:

Denotes bottom of footing elevation

① FOOTING STEP SEE SHEET C-75.

INDEX TO PLANS

Sheet No.	Title
1	GENERAL PLAN
2	RETAINING WALL DETAILS NO. 1
3	RETAINING WALL DETAILS NO. 2
4	RETAINING WALL DETAILS NO. 3
5	RETAINING WALL DETAILS NO. 4
6	RETAINING WALL DETAILS NO. 5
7	Retaining Wall Type 1SW (Mod)
8	RETAINING WALL TYPE 1 (MOD)
9	LOG OF TEST BORINGS 1 OF 4
10	LOG OF TEST BORINGS 2 OF 4
11	LOG OF TEST BORINGS 3 OF 4
12	LOG OF TEST BORINGS 4 OF 4

RETAINING WALL 316R #57E0113

QUANTITIES

STRUCTURE EXCAVATION (RETAINING WALL)	4,000	CY
STRUCTURE BACKFILL (RETAINING WALL)	3,900	CY
STRUCTURAL CONCRETE, RETAINING WALL	2,260	CY
STRUCTURAL CONCRETE, SOUND WALL	240	CY
ARCHITECTURAL TREATMENT (ASHLAR TILE TEXTURE)	14,500	SQFT
ARCHITECTURAL TREATMENT (LOUVER TEXTURE)	12,400	SQFT
BAR REINFORCING STEEL (RETAINING WALL)	202,000	LB

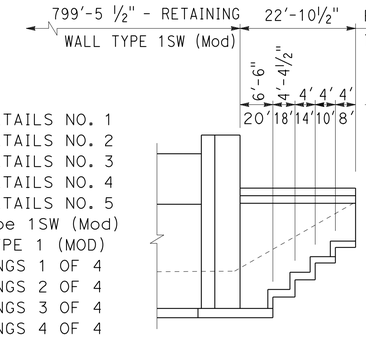

DETAIL A

NO SCALE

NOTE:

For location of Station ① and Station ②, see "RETAINING WALL DETAILS NO. 1" sheet. For Standard Plans List, see "RETAINING WALL DETAILS NO. 3" sheet.

TOP OF RETAINING WALL ELEVATIONS

STATION	ELEVATION
17+99.80	320.21′
18+22.68	320.04′

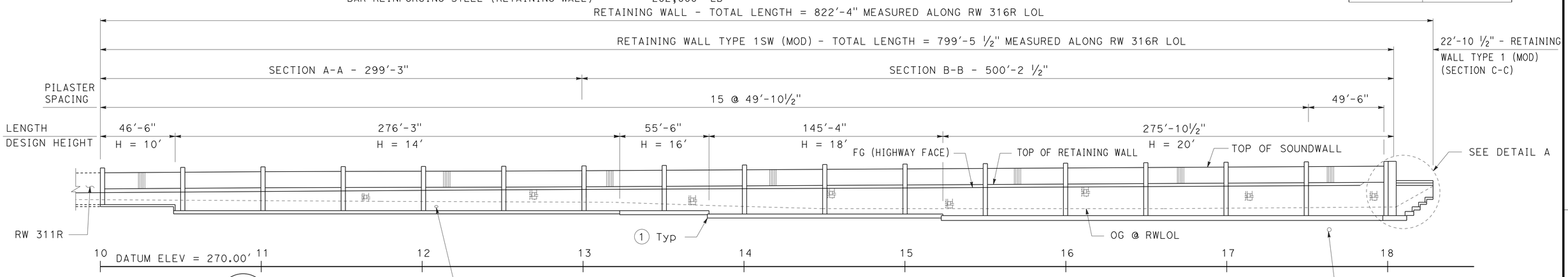

DEVELOPED MIRROR ELEVATION

1" = 30′

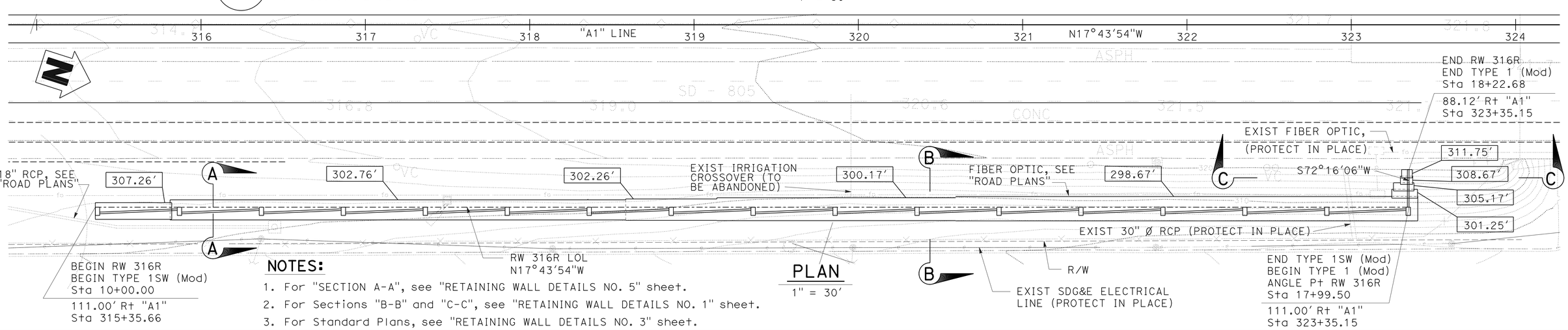

PLAN

1" = 30′

NOTES:

1. For "SECTION A-A", see "RETAINING WALL DETAILS NO. 5" sheet.
2. For Sections "B-B" and "C-C", see "RETAINING WALL DETAILS NO. 1" sheet.
3. For Standard Plans, see "RETAINING WALL DETAILS NO. 3" sheet.

DESIGN OVERSIGHT — Norbert Gee
5-4-12
SIGN OFF DATE

	BY	CHECKED			
DESIGN	M. Hancock	R. Burns	LOAD & RESISTANCE FACTORDESIGN		
DETAILS	C. Houghton	M. Hancock	LAYOUT	M. Hancock	R. Burns
QUANTITIES	M. Hancock	R. Burns	SPECIFICATIONS	A. Powers	PLANS AND SPECS COMPARED C. Tornaci

DESIGN GENERAL PLAN SHEET (ENGLISH) (REV.7/16/10)

ORIGINAL SCALE IN INCHES FOR REDUCED PLANS 0 1 2 3

PREPARED FOR THE STATE OF CALIFORNIA DEPARTMENT OF TRANSPORTATION

C. Tornaci
PROJECT ENGINEER

UNIT: 2762
PROJECT NUMBER & PHASE: 1100020051

BRIDGE NO. 57E0113
POST MILES 5.1

RETAINING WALL NO. 316R
GENERAL PLAN

DISREGARD PRINTS BEARING EARLIER REVISION DATES

REVISION DATES (PRELIMINARY STAGE ONLY): 1-31-11 4-28-11 8-5-11 11-14-11 11-18-11 2-16-12 4-26-12 6-5-12

SHEET 1 OF 12

FILE => RW316R-a-gp01.dgn

CONTRACT NO.: X PROJECT ID: X

USERNAME => s127400 DATE PLOTTED => 13-SEP-2012 TIME PLOTTED => 08:04

DIST	COUNTY	ROUTE	POST MILES TOTAL PROJECT	SHEET No	TOTAL SHEETS
11	SD	805	4.7/5.6	630	650

REGISTERED CIVIL ENGINEER — DATE 4-26-12

06-25-12
PLANS APPROVAL DATE

REGISTERED PROFESSIONAL ENGINEER — MASON LEE HANCOCK — No. 75048 — Exp. 12-31-13 — CIVIL — STATE OF CALIFORNIA

The State of California or its officers or agents shall not be responsible for the accuracy or completeness of electronic copies of this plan sheet.

Dokken Engineering
2365 Iron Point Rd, Suite 200
Folsom, CA 95630 (916) 858-0642

* Architectural treatment (louver texture)

** Architectural treatment (Ashlar tile texture)

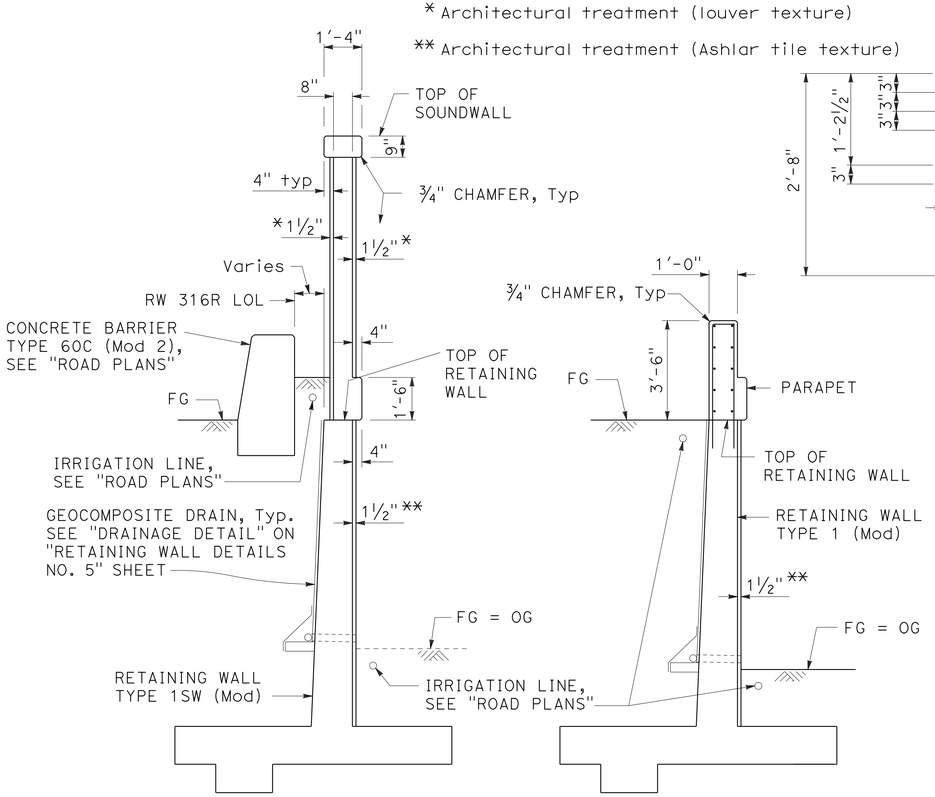

SECTION B-B
⅜" = 1'-0"

SECTION C-C
⅜" = 1'-0"

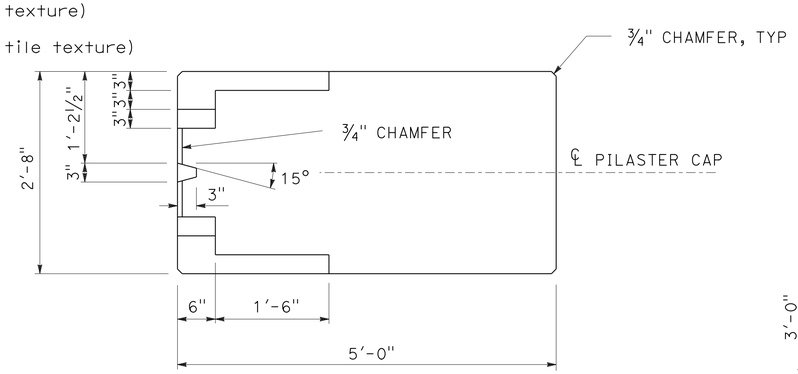

PILASTER CAP PLAN
1" = 1'-0"

(DETAILS ARE SYMMETRICAL ABOUT ℄ PILASTER CAP)

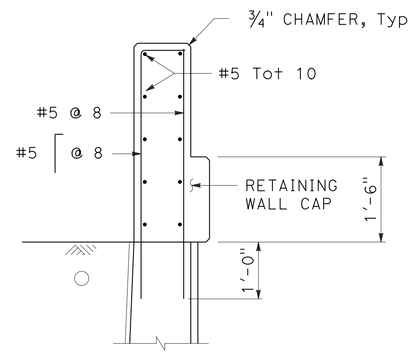

PARAPET DETAIL
¾" = 1'-0"

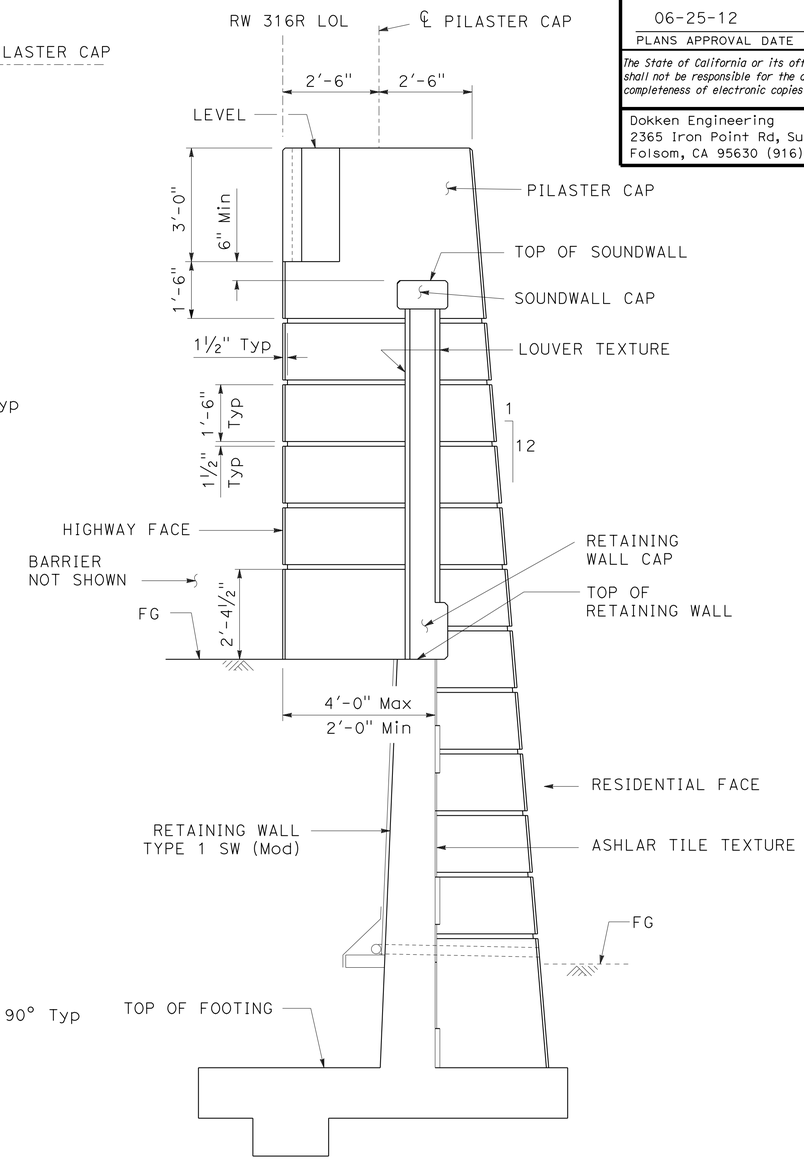

PILASTER SECTION AT FACE OF WALL
½" = 1'-0"

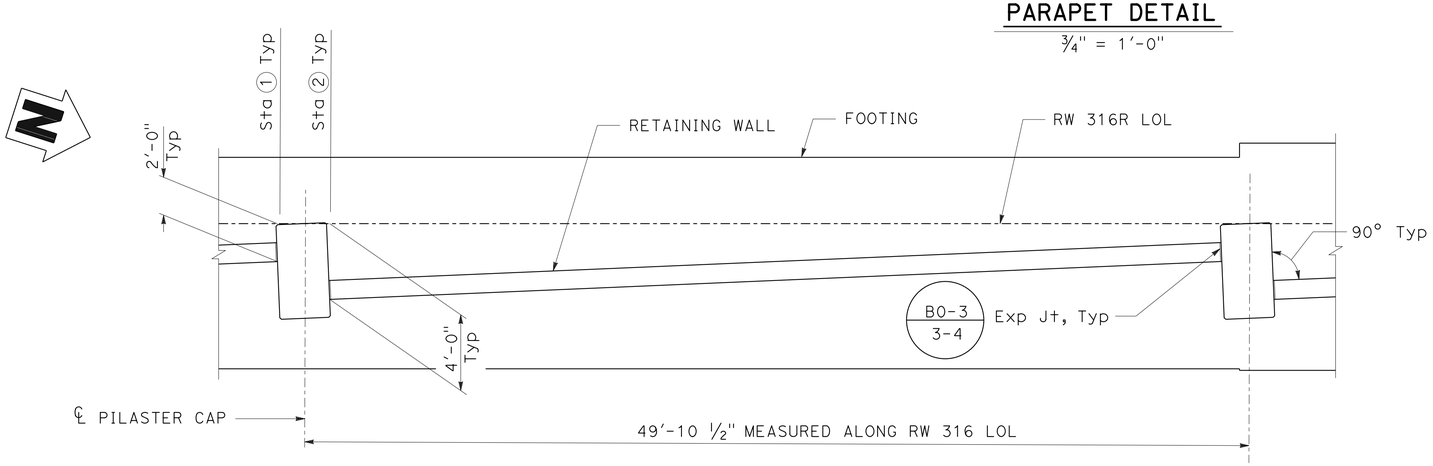

PART PLAN
¼" = 1'-0"

DESIGN OVERSIGHT — Norbert Gee	DESIGN	BY M. Hancock	CHECKED R. Burns
5-4-12 SIGN OFF DATE	DETAILS	BY C. Houghton	CHECKED M. Hancock
	QUANTITIES	BY M. Hancock	CHECKED R. Burns

PREPARED FOR THE STATE OF CALIFORNIA DEPARTMENT OF TRANSPORTATION

C. Tornaci — PROJECT ENGINEER

BRIDGE NO. 57E0113 — POST MILES 5.1

RETAINING WALL NO. 316R
RETAINING WALL DETAILS NO. 1

DESIGN DETAIL SHEET (ENGLISH) (REV.7/16/10)

ORIGINAL SCALE IN INCHES FOR REDUCED PLANS 0 1 2 3

UNIT: 2762
PROJECT NUMBER & PHASE: 1100020051

DISREGARD PRINTS BEARING EARLIER REVISION DATES

REVISION DATES (PRELIMINARY STAGE ONLY): 4-26-11 8-5-11 11-14-11 11-16-11 2-10-12 4-26-12

SHEET 2 OF 12

FILE => RW316R-g-rwdt01.dgn

CONTRACT NO.: X PROJECT ID: X

USERNAME => s127400 DATE PLOTTED => 13-SEP-2012 TIME PLOTTED => 08:04

DIST	COUNTY	ROUTE	POST MILES TOTAL PROJECT	SHEET No	TOTAL SHEETS
11	SD	805	4.7/5.6	631	650

REGISTERED CIVIL ENGINEER — DATE 4-26-12

06-25-12
PLANS APPROVAL DATE

REGISTERED PROFESSIONAL ENGINEER — MASON LEE HANCOCK — No. 75048 — Exp. 12-31-13 — CIVIL — STATE OF CALIFORNIA

The State of California or its officers or agents shall not be responsible for the accuracy or completeness of electronic copies of this plan sheet.

Dokken Engineering
2365 Iron Point Rd, Suite 200
Folsom, CA 95630 (916) 858-0642

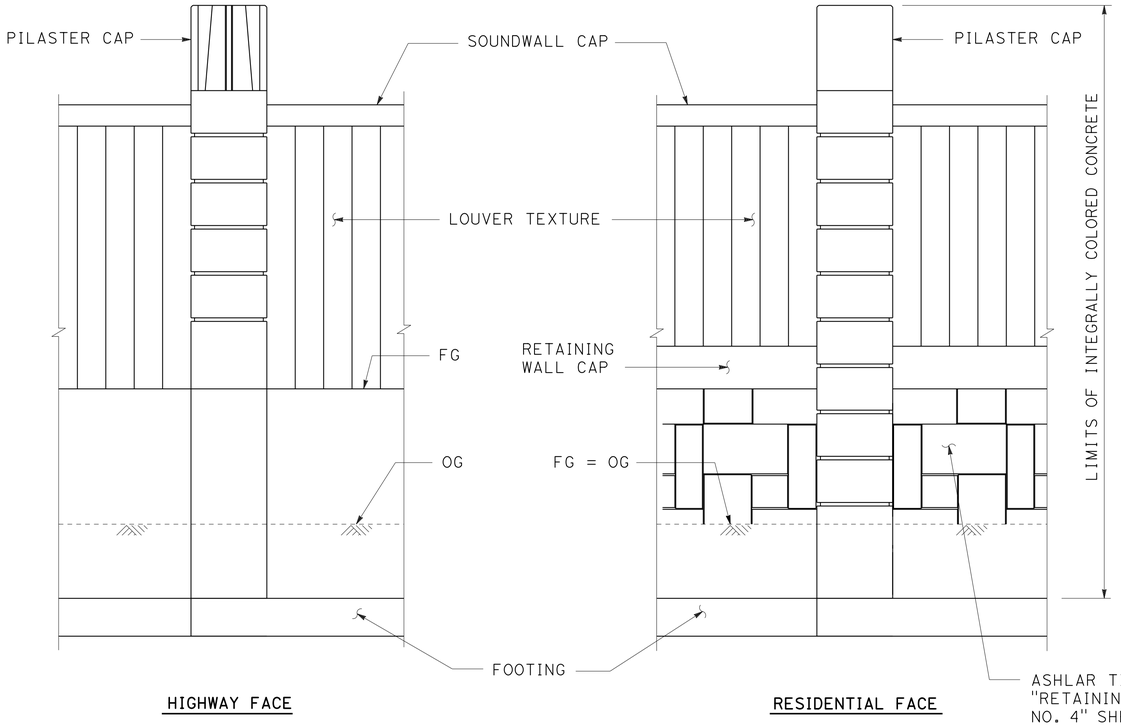

PARTIAL ELEVATION - ARCHITECTURAL TREATMENT

3/8" = 1'-0"

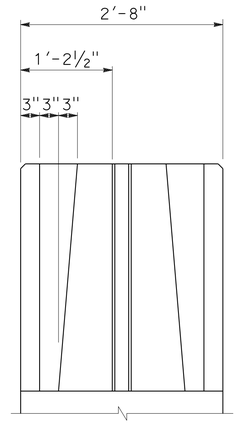

PILASTER CAP ELEVATION

1" = 1'-0"

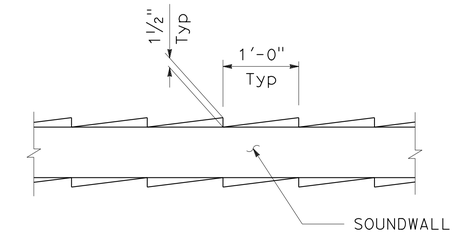

LOUVER TEXTURE DETAIL

1" = 1'-0"

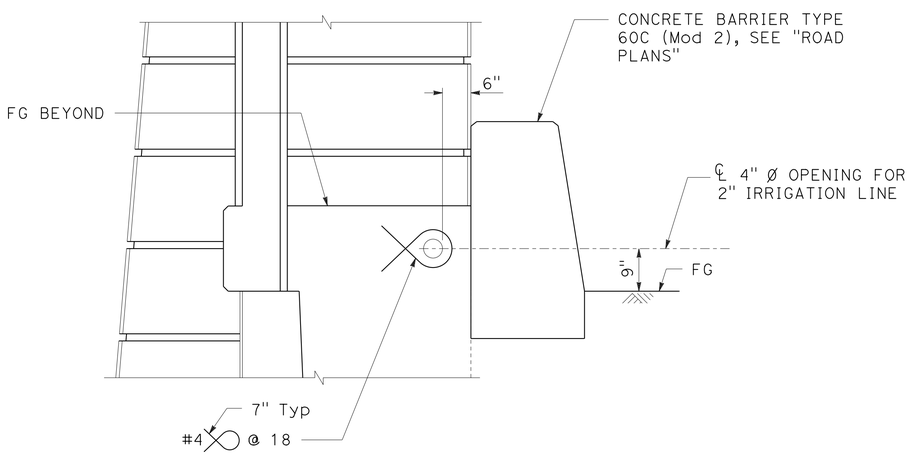

UTILITY OPENING AT PILASTER

3/4" = 1'-0"

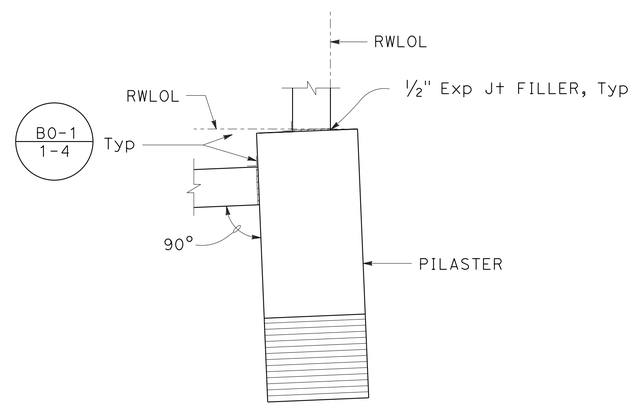

WALL CORNER DETAIL

1/2" = 1'-0"

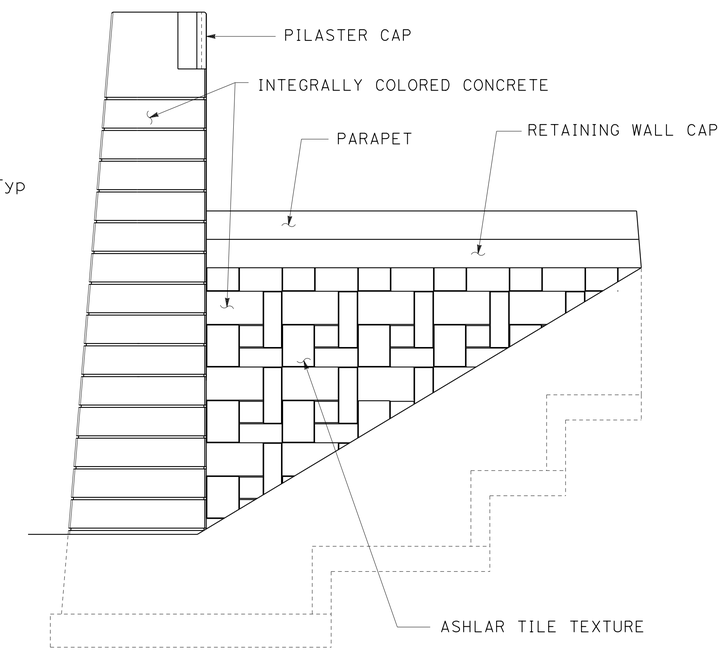

TEMPORARY END WALL

1/4" = 1'-0"

DESIGN OVERSIGHT — Norbert Gee
5-4-12
SIGN OFF DATE

	BY	CHECKED
DESIGN	M. Hancock	R. Burns
DETAILS	C. Houghton	M. Hancock
QUANTITIES	M. Hancock	R. Burns

PREPARED FOR THE STATE OF CALIFORNIA DEPARTMENT OF TRANSPORTATION

C. Tornaci
PROJECT ENGINEER

BRIDGE NO. 57E0113
POST MILES 5.1

RETAINING WALL NO. 316R
RETAINING WALL DETAILS NO. 2

DESIGN DETAIL SHEET (ENGLISH) (REV.7/16/10)

ORIGINAL SCALE IN INCHES FOR REDUCED PLANS 0 1 2 3

UNIT: 2762
PROJECT NUMBER & PHASE: 1100020051

DISREGARD PRINTS BEARING EARLIER REVISION DATES

REVISION DATES (PRELIMINARY STAGE ONLY): 4-26-11 8-5-11 11-14-11 11-14-11 2-15-12 4-26-12

SHEET 3 OF 12

CONTRACT NO.: X PROJECT ID: X

FILE => RW316R-g-rwdt02.dgn

USERNAME => s127400 DATE PLOTTED => 13-SEP-2012 TIME PLOTTED => 08:04

DIST	COUNTY	ROUTE	POST MILES TOTAL PROJECT	SHEET No	TOTAL SHEETS
11	SD	805	4.7/5.6	632	650

REGISTERED CIVIL ENGINEER — DATE 4-26-12

06-25-12
PLANS APPROVAL DATE

REGISTERED PROFESSIONAL ENGINEER — MASON LEE HANCOCK — No. 75048 — Exp. 12-31-13 — CIVIL — STATE OF CALIFORNIA

The State of California or its officers or agents shall not be responsible for the accuracy or completeness of electronic copies of this plan sheet.

Dokken Engineering
2365 Iron Point Rd, Suite 200
Folsom, CA 95630 (916) 858-0642

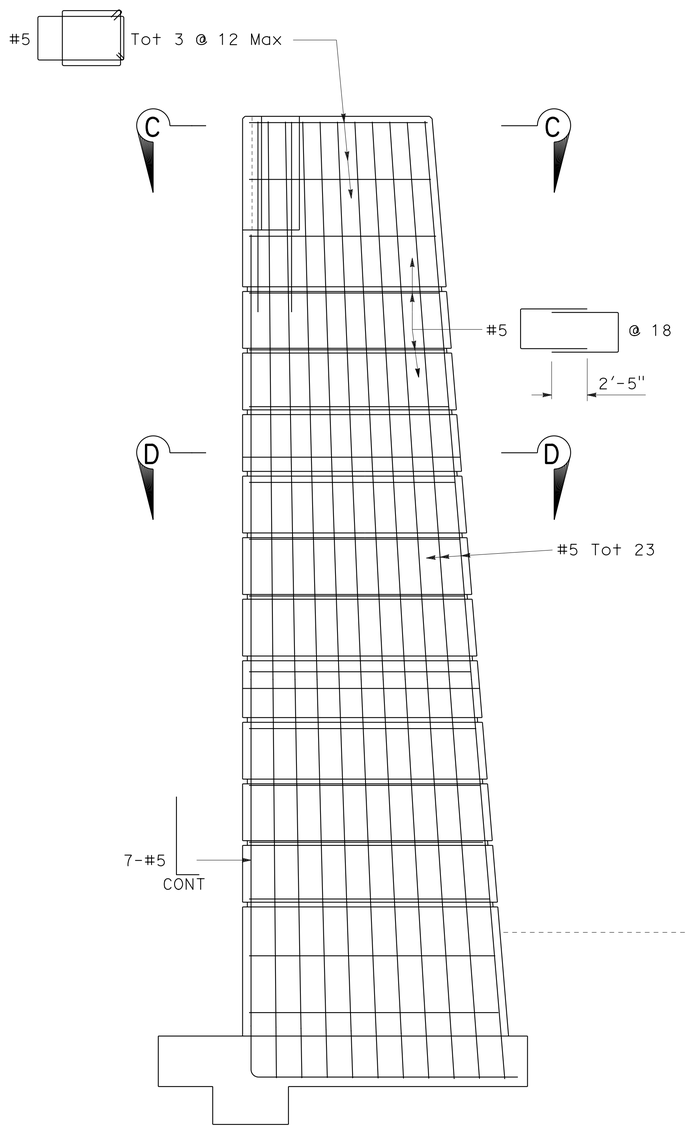

PILASTER TYPICAL SECTION

1/2" = 1'-0"

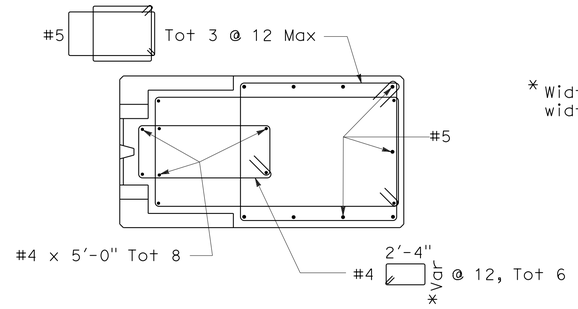

SECTION C-C

3/4" = 1'-0"

* Width of stirrup shall vary with width of tapered section of pilaster

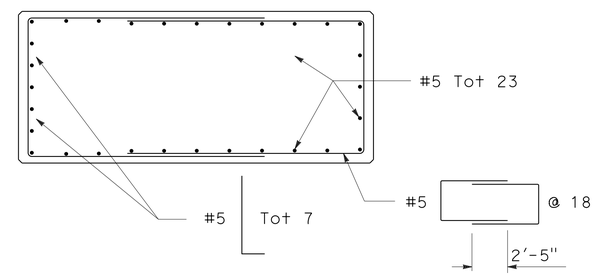

SECTION D-D

3/4" = 1'-0"

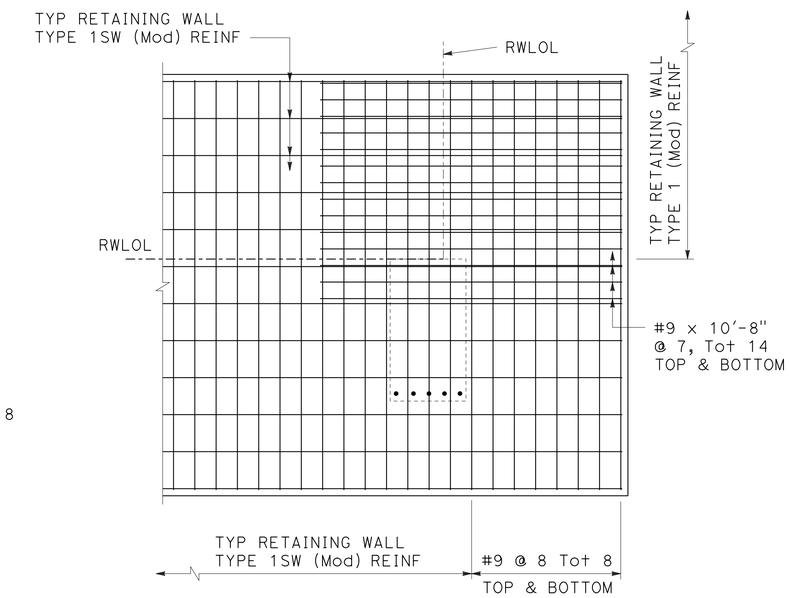

FOOTING CORNER DETAIL

3/8" = 1'-0"

STANDARD PLANS DATED 2010

Sheet No.	Title
A10A	ABBREVIATIONS (SHEET 1 OF 2)
A10B	ABBREVIATIONS (SHEET 2 OF 2)
A10C	LINES AND SYMBOLS (SHEET 1 OF 3)
A10D	LINES AND SYMBOLS (SHEET 2 OF 3)
A10E	LINES AND SYMBOLS (SHEET 3 OF 3)
A62B	LIMITS OF PAYMENT FOR EXCAVATION AND BACKFILL BRIDGE SURCHARGE AND WALL
B0-1	BRIDGE DETAILS
B0-3	BRIDGE DETAILS
B3-6	RETAINING WALL DETAILS NO. 2

STANDARD PLAN SHEET NO.
DETAIL NO.

DESIGN OVERSIGHT — Norbert Gee
5-4-12
SIGN OFF DATE

	BY	CHECKED
DESIGN	M. Hancock	R. Burns
DETAILS	C. Houghton	M. Hancock
QUANTITIES	M. Hancock	R. Burns

PREPARED FOR THE STATE OF CALIFORNIA DEPARTMENT OF TRANSPORTATION

C. Tornaci
PROJECT ENGINEER

BRIDGE NO. 57E0113
POST MILES 5.1

RETAINING WALL NO. 316R
RETAINING WALL DETAILS NO. 3

DESIGN DETAIL SHEET (ENGLISH) (REV.7/16/10)

ORIGINAL SCALE IN INCHES FOR REDUCED PLANS 0 1 2 3

UNIT: 2762
PROJECT NUMBER & PHASE: 1100020051

DISREGARD PRINTS BEARING EARLIER REVISION DATES

REVISION DATES (PRELIMINARY STAGE ONLY) 4-29-11 9-23-11 11-14-11 11-14-11 2-15-12 4-26-12 6-5-12

SHEET 4 OF 12

FILE => RW316R-g-rwdt03.dgn

CONTRACT NO.: X PROJECT ID: X

USERNAME => s127400 DATE PLOTTED => 13-SEP-2012 TIME PLOTTED => 08:05

DIST	COUNTY	ROUTE	POST MILES TOTAL PROJECT	SHEET No	TOTAL SHEETS
11	SD	805	4.7/5.6	633	650

REGISTERED CIVIL ENGINEER — DATE: 4-26-12

06-25-12
PLANS APPROVAL DATE

REGISTERED PROFESSIONAL ENGINEER — MASON LEE HANCOCK — No. 75048 — Exp. 12-31-13 — CIVIL — STATE OF CALIFORNIA

The State of California or its officers or agents shall not be responsible for the accuracy or completeness of electronic copies of this plan sheet.

Dokken Engineering
2365 Iron Point Rd, Suite 200
Folsom, CA 95630 (916) 858-0642

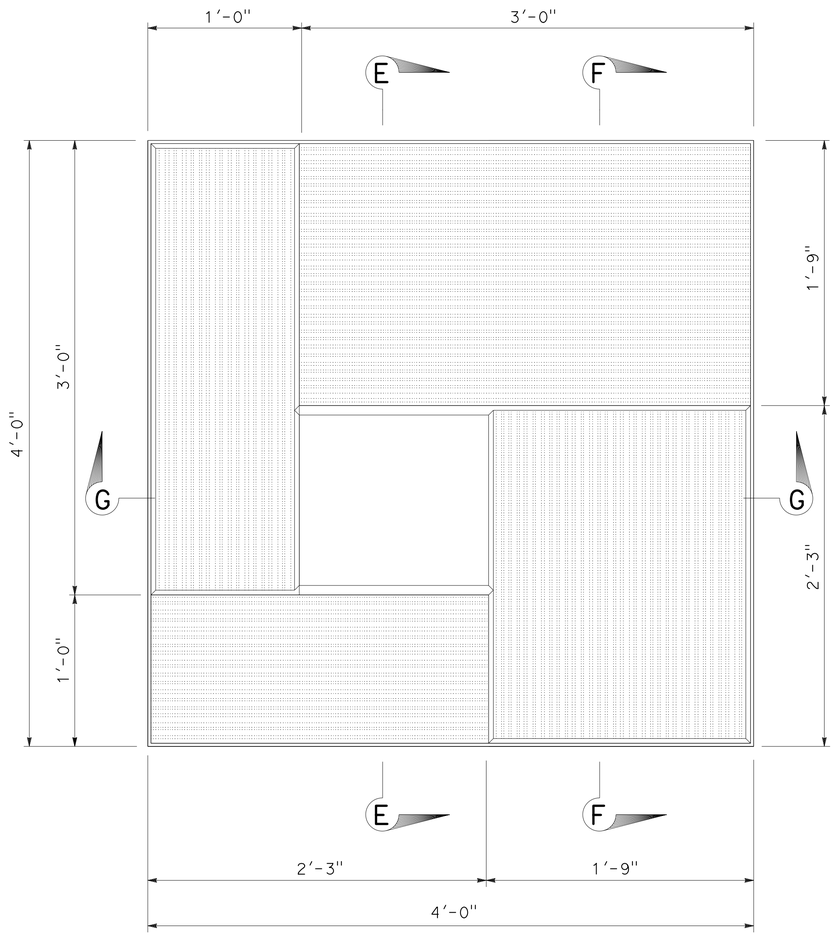

ASHLAR TILE TEXTURE DETAIL

2" = 1'-0"

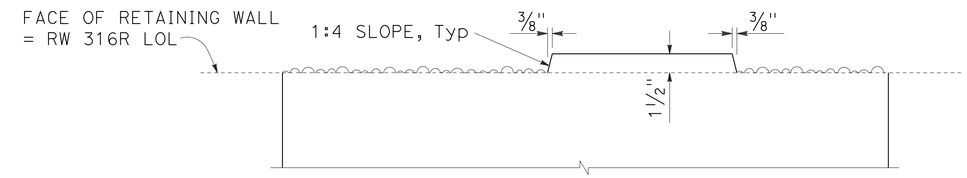

SECTION E-E

2" = 1'-0"

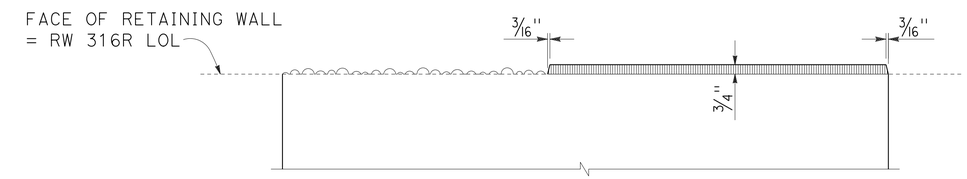

SECTION F-F

2" = 1'-0"

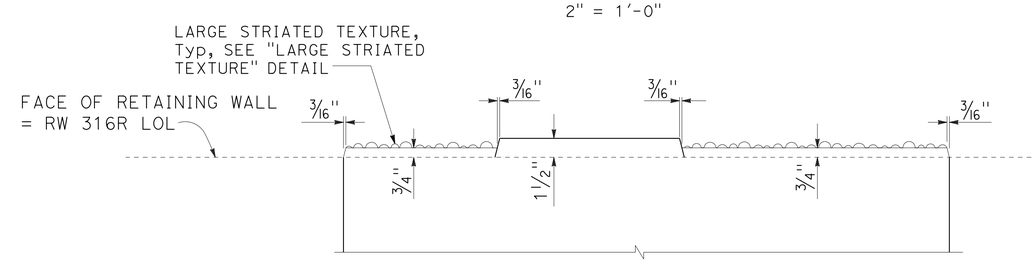

SECTION G-G

2" = 1'-0"

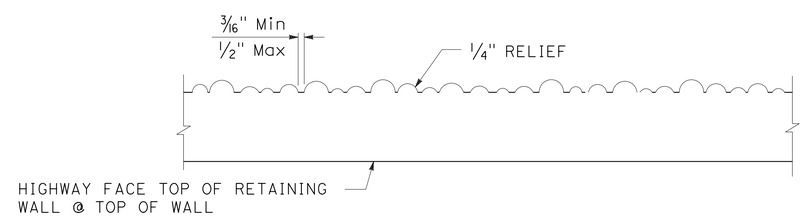

LARGE STRIATED TEXTURE DETAIL

4" = 1'-0"

DESIGN OVERSIGHT — Norbert Gee
5-4-12
SIGN OFF DATE

	BY	CHECKED
DESIGN	M. Hancock	R. Burns
DETAILS	C. Houghton	M. Hancock
QUANTITIES	M. Hancock	R. Burns

PREPARED FOR THE STATE OF CALIFORNIA DEPARTMENT OF TRANSPORTATION

C. Tornaci
PROJECT ENGINEER

BRIDGE NO. 57E0113
POST MILES 5.1

RETAINING WALL NO. 316R
RETAINING WALL DETAILS NO. 4

DESIGN DETAIL SHEET (ENGLISH) (REV.7/16/10)

ORIGINAL SCALE IN INCHES FOR REDUCED PLANS 0 1 2 3

UNIT: 2762
PROJECT NUMBER & PHASE: 1100020051

DISREGARD PRINTS BEARING EARLIER REVISION DATES

REVISION DATES (PRELIMINARY STAGE ONLY): 4-26-11 8-5-11 11-14-11 11-14-11 2-15-12 4-26-12

SHEET 5 OF 12

CONTRACT NO.: X PROJECT ID: X

FILE => RW316R-g-rwdt04.dgn

USERNAME => s127400 DATE PLOTTED => 13-SEP-2012 TIME PLOTTED => 08:05

DIST	COUNTY	ROUTE	POST MILES TOTAL PROJECT	SHEET No	TOTAL SHEETS
11	SD	805	4.7/5.6	634	650

REGISTERED CIVIL ENGINEER — DATE: 4-26-12

06-25-12
PLANS APPROVAL DATE

REGISTERED PROFESSIONAL ENGINEER — MASON LEE HANCOCK — No. 75048 — Exp. 12-31-13 — CIVIL — STATE OF CALIFORNIA

The State of California or its officers or agents shall not be responsible for the accuracy or completeness of electronic copies of this plan sheet.

Dokken Engineering
2365 Iron Point Rd, Suite 200
Folsom, CA 95630 (916) 858-0642

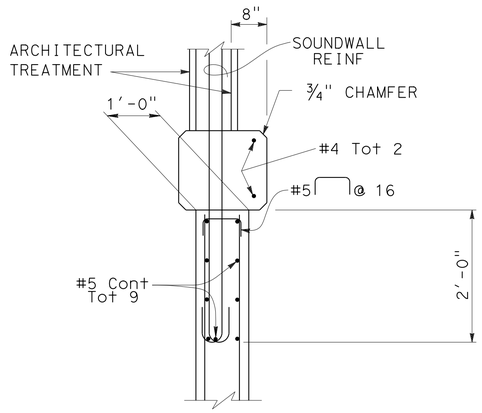

DETAIL A AT SECTION A-A

NO SCALE

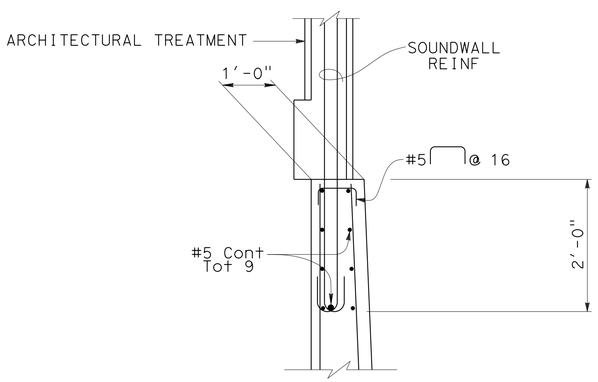

DETAIL A AT SECTION B-B

No Scale

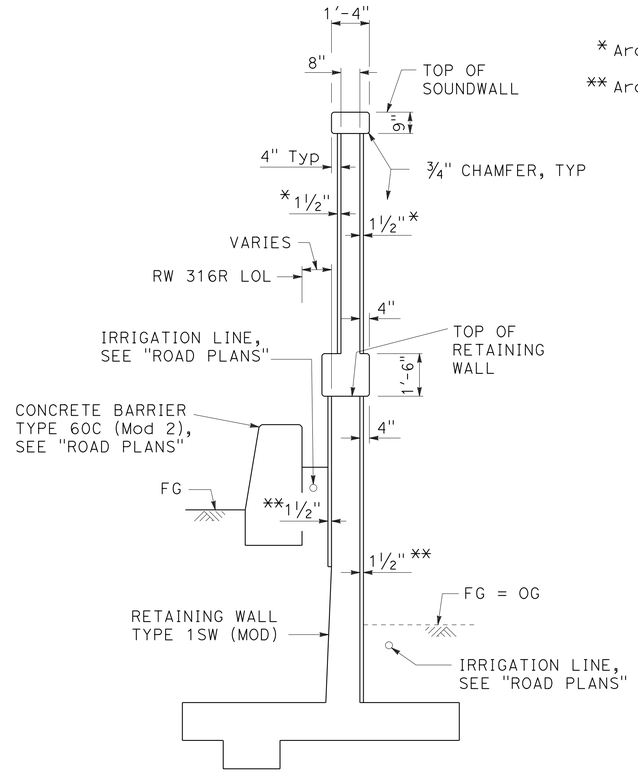

* Architectural treatment (louver texture)

** Architectural treatment (Ashlar tile texture)

SECTION A-A

3/8" = 1'-0"

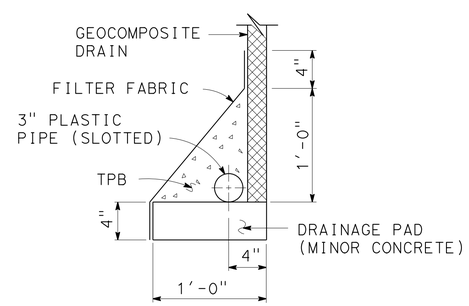

DRAINAGE DETAIL

No Scale

DESIGN OVERSIGHT: Norbert Gee — 5-4-12 — SIGN OFF DATE

	BY	CHECKED
DESIGN	M. Hancock	R. Burns
DETAILS	C. Houghton	M. Hancock
QUANTITIES	M. Hancock	R. Burns

PREPARED FOR THE STATE OF CALIFORNIA DEPARTMENT OF TRANSPORTATION

C. Tornaci — PROJECT ENGINEER

BRIDGE NO. 57E0113 — POST MILES 5.1

RETAINING WALL NO. 316R
RETAINING WALL DETAILS NO. 5

DESIGN DETAIL SHEET (ENGLISH) (REV.7/16/10)

ORIGINAL SCALE IN INCHES FOR REDUCED PLANS: 0 1 2 3

UNIT: 2762
PROJECT NUMBER & PHASE: 1100020051

DISREGARD PRINTS BEARING EARLIER REVISION DATES

REVISION DATES (PRELIMINARY STAGE ONLY): 4-26-11 8-5-11 11-4-11 11-18-11 2-10-12 4-26-12

SHEET 6 OF 12

FILE => RW316R-g-rwdt05.dgn

CONTRACT NO.: X — PROJECT ID: X

USERNAME => s127400 DATE PLOTTED => 13-SEP-2012 TIME PLOTTED => 08:05

DIST	COUNTY	ROUTE	POST MILES TOTAL PROJECT	SHEET No	TOTAL SHEETS
11	SD	805	4.7/5.6	635	650

REGISTERED CIVIL ENGINEER — DATE 4-26-12

06-25-12
PLANS APPROVAL DATE

The State of California or its officers or agents shall not be responsible for the accuracy or completeness of electronic copies of this plan sheet.

REGISTERED PROFESSIONAL ENGINEER — MASON LEE HANCOCK — No. 75048 — Exp. 12-31-13 — CIVIL — STATE OF CALIFORNIA

Dokken Engineering
2365 Iron Point Rd, Suite 200
Folsom, CA 95630 (916) 858-0642

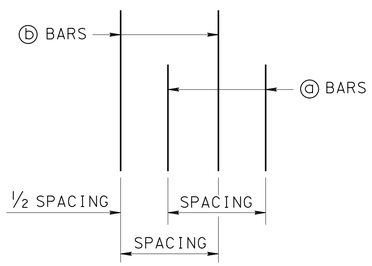

DETAIL B

No Scale

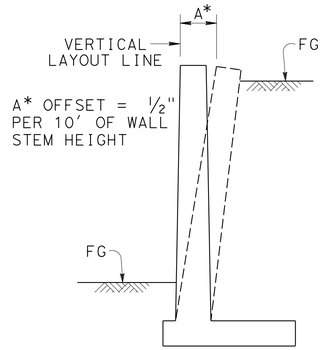

WALL OFFSET

NO SCALE

Values for offsetting forms to be determined by the Engineer

(CONSTANT TOP OF WALL THICKNESS) TABLE OF REINFORCING STEEL DIMENSIONS AND DATA										
DESIGN H	10'		14'		16'		18'		20'	
W	10'-2"		12'-3"		13'-0"		13'-11"		14'-10"	
C	7'-5"		7'-9"		8'-0"		8'-2"		8'-4"	
B	2'-9"		4'-6"		5'-0"		5'-9"		6'-6"	
F	1'-3"		2'-0"		2'-6"		2'-6"		3'-0"	
K	1'-6"		1'-6"		2'-6"		2'-6"		2'-9"	
BATTER	½:12		1:12		1:12		1:12		1:12	
STEM THICKNESS @ TOP	1'-0"		1'-0"		1'-0"		1'-0"		1'-0"	
ⓐ BARS			#7@18**		#9 @ 18**		#9 @ 12**		#9 @ 9**	
X			Cont		Cont		Cont		Cont	
Y			6'-6"		7'-6"		8'-6"		9'-6"	
ⓑ BARS	#6 @ 9		#7@18**		#9 @ 18**		#9 @ 12**		#9 @ 9**	
X	Cont		Cont		Cont		Cont		Cont	
Y	Cont		10'-6"		13'-0"		15'-0"		17'-6"	
ⓒ BARS			#6 @18		#6 @18		#6 @18		#6 @18	
ⓓ BARS	#6 @ 9		#6 @ 6		#6 @ 6		#6 @ 6		#8 @ 9	
SER I: B' (ft), q'o (ksf)	9.6	0.9	11.9	1.3	12.8	1.4	13.4	1.6	13.8	2.1
STR I: B'(ft), qo (ksf)	8.9	2.3	11.8	1.5	12.6	1.8	13.2	3.3	14.5	3.6
STR III: B'(ft), qo (ksf)	10.0	1.6	11.7	2.1	12.7	2.4	13.5	2.7	14.1	3.1
STR V: B'(ft), qo (ksf)	9.3	1.2	11.3	2.6	12.4	2.9	13.4	3.1	14.7	3.4
EXT I: B'(ft), qo (ksf)	7.8	1.5	7.7	2.5	7.6	3.1	7.6	3.6	7.1	4.7

Note: Load Case 1 of the 2010 Standard Plan B3-5 was used.

SYMBOLS:
SER: service limit state
STR: strength limit state
EXT: extreme event limit state
B' : effective footing width (ft)
q'o : net bearing stress (ksf)
qo : gross uniform bearing stress (ksf)
ⓧ : 2 bar bundle

GENERAL NOTES

1. For soundwall and retaining wall architectural finish or texture, see details elsewhere in project plans.
2. For details not shown and drainage notes, see SHEET C-75.
3. Footing cover, 1'-6" minimum.
4. Limit of no splicing rebars = 3 times the bottom thickness of the stem.
5. Placement of reinforcements:
   ⓑ & ⓒ bars are spliced together.
   * ⓐ & ⓑ bars are bundled together.
   ** Alternate ⓐ & ⓑ bars are shown in "Detail B".
   *** For Detail A, see "RETAINING WALL DETAILS NO. 5" sheet.
   Cont = Continuous.

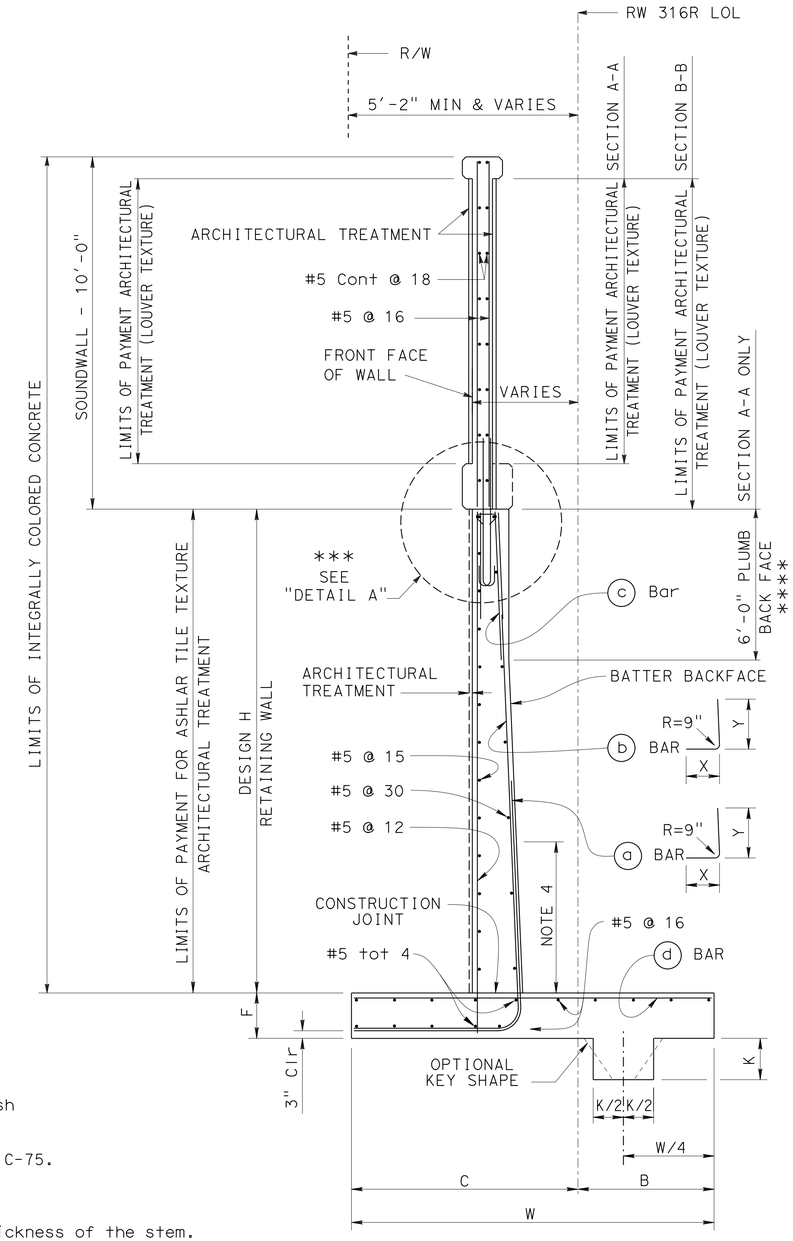

SPREAD FOOTING SECTION

NO SCALE

RETAINING WALL, SOUND WALL AND PILASTER DESIGN DATA

DESIGN: AASHTO LRFD Bridge Design Specification, 4th Edition with California Amendments

WS: 33 psf on soundwall

LS: Level ground with 240 psf and 10' sound wall

EQE: Mononabe-okabe Method
$K_h = 0.3$
$K_v = 0.0$

Soil: $\phi = 34°$ $\gamma = 120$ pcf

Reinforced Concrete, f'c = 3.6 ksi
fy = 60 ksi

Load Combinations and Limit States

Service I Q=1.00DC+1.00EV+1.00EH+1.00LS+0.30WS

Service II Q=1.00DC+1.00EV+1.00EH+1.00WS

Strength I Q=aDC+βEV+1.50EH+1.75LS

Strength III Q=aDC+βEV+1.50EH+1.40WS

Strength V Q=aDC+βEV+1.50EH+1.35LS+0.40WS

Extreme I Q=1.00DC+1.00EV+1.00EH+1.00EQD+1.00EQE

Where:
Q: Force effects
a: 1.25 or 0.90, Which ever Controls Design
β 1.35 or 1.00, Which ever Controls Design
DC: Dead Load of Structure Components
EV: Vertical Earth Fill Pressure
EH: Horizontal Earth Fill Pressure
LS: Live Load Surcharge
EQE: Seismic Earth Pressure
EQD: Soil and Structure Components Inertia. Soil Intertia ignored for stem design
WS: Wind Load on Soundwall and Barrier

**** Limit of payment Ashlar Tile Texture Architectural Treatment

NOTE:
Retaining wall, sound wall, pilaster and pilaster cap to be constructed with integrally colored concrete. Color shall conform to Davis color "Mesa Buff".

DESIGN OVERSIGHT Norbert Gee
5-4-12
SIGN OFF DATE

	BY	CHECKED
DESIGN	M. Hancock	R. Burns
DETAILS	C. Houghton	M. Hancock
QUANTITIES	M. Hancock	R. Burns

PREPARED FOR THE STATE OF CALIFORNIA DEPARTMENT OF TRANSPORTATION

C. Tornaci
PROJECT ENGINEER

BRIDGE NO. 57E0113
POST MILES 5.1

RETAINING WALL NO. 316R
RETAINING WALL TYPE 1SW (MOD)

DESIGN DETAIL SHEET (ENGLISH) (REV.7/16/10)

ORIGINAL SCALE IN INCHES FOR REDUCED PLANS 0 1 2 3

UNIT: 2762
PROJECT NUMBER & PHASE: 1100020051

DISREGARD PRINTS BEARING EARLIER REVISION DATES

REVISION DATES (PRELIMINARY STAGE ONLY) 4-26-11 8-5-11 11-14-11 11-18-11 12-12-12 4-26-12 6-5-12

SHEET 7 OF 12

FILE => RW316R-g-rwdt06.dgn

CONTRACT NO.: X PROJECT ID: X

USERNAME => s127400 DATE PLOTTED => 13-SEP-2012 TIME PLOTTED => 08:05

DIST	COUNTY	ROUTE	POST MILES TOTAL PROJECT	SHEET No	TOTAL SHEETS
11	SD	805	4.7/5.6	636	650

REGISTERED CIVIL ENGINEER — DATE 4-26-12

06-25-12
PLANS APPROVAL DATE

REGISTERED PROFESSIONAL ENGINEER — MASON LEE HANCOCK — No. 75048 — Exp. 12-31-13 — CIVIL — STATE OF CALIFORNIA

The State of California or its officers or agents shall not be responsible for the accuracy or completeness of electronic copies of this plan sheet.

Dokken Engineering
2365 Iron Point Rd, Suite 200
Folsom, CA 95630 (916) 858-0642

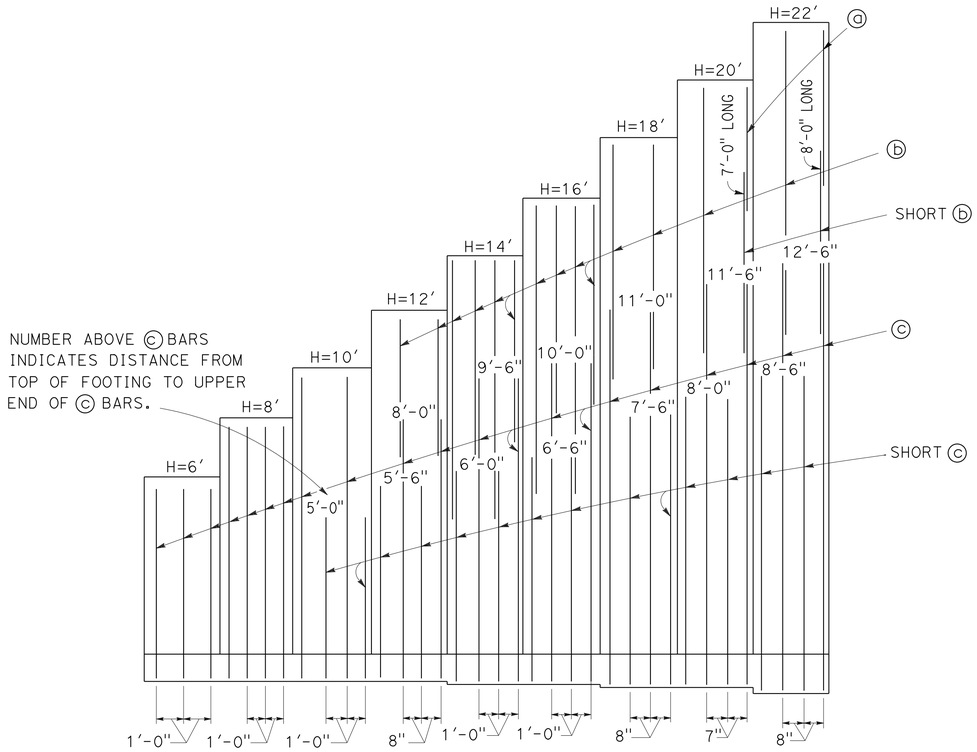

ELEVATION

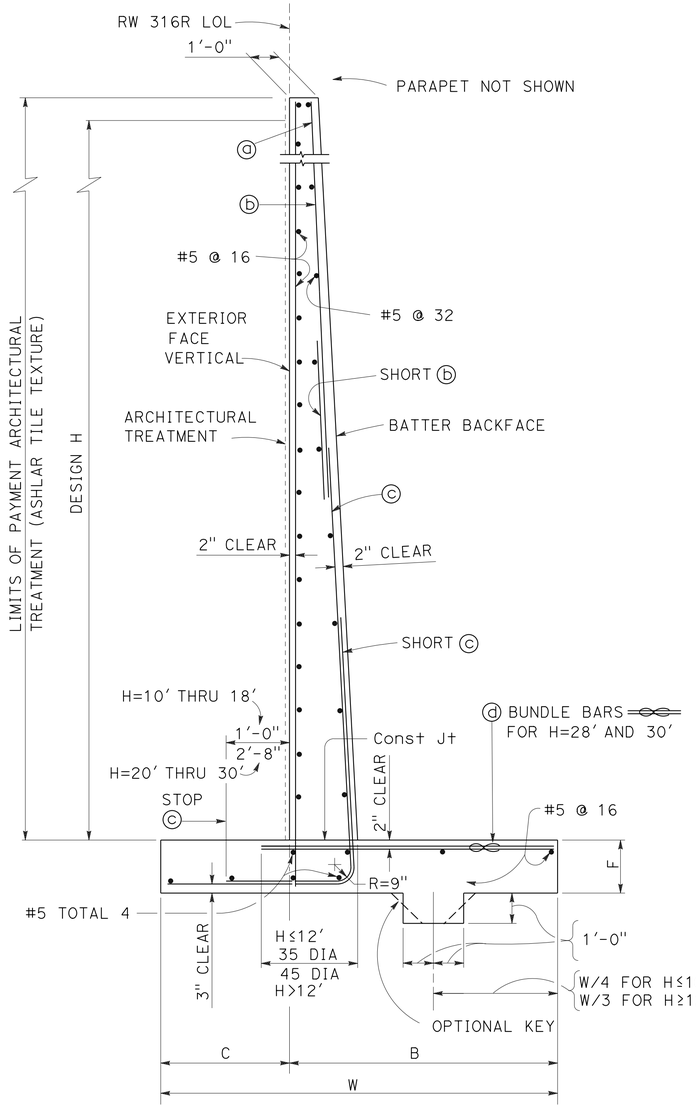

SPREAD FOOTING SECTION

TABLE OF REINFORCING STEEL DIMENSIONS AND DATA					
DESIGN H		8′	14′	18′	20′
W		6′-6"	12′-6"	15′-8"	16′-0"
C		2′-0"	3′-0"	5′-2"	5′-4"
B		4′-6"	9′-6"	10′-6"	10′-8"
F		1′-4"	2′-0"	2′-6"	3′-0"
BATTER		½:12	1:12	1:12	1:12
ⓐ BARS		——	——	——	#5 @ 28
ⓑ BARS		——	#5 @ 12	#6 @ 16	#8 @ 14
ⓒ BARS		#5 @ 12	#9 @ 12	#9 @ 8	#9 @ 7
ⓓ BARS		#5 @ 12	#9 @ 12	#9 @ 8	#10 @ 7
LOADING CASE I	Ser: B′, q'_o	5.4, 1.2	11.8, 1.6	13.8, 1.8	13.9, 2.0
	Str: B′, q_o	5.1, 2.2	11.5, 2.6	13.3, 3.1	13.4, 3.4
LOADING CASE II	Ser: B′, q'_o	6.2, 1.0	12.3, 1.8	14.0, 2.3	14.2, 2.6
	Str: B′, q_o	6.0, 1.8	12.0, 3.1	13.6, 3.7	13.7, 4.2
LOADING CASE III	Ser: B′, q'_o	4.7, 1.4	8.7, 2.3	10.5, 2.6	10.5, 2.9
	Str: B′, q_o	4.5, 2.4	8.0, 4.0	9.9, 4.4	9.7, 4.9

NOTE:

Retaining wall to be constructed with integrally colored concrete. Color shall conform to Davis color "Mesa Buff".

NOTES:

1. For details not shown and drainage notes see SHEET C-75.
2. For wall stem joint details see (B0-3 / 3-3) and (B0-3 / 3-4)
3. For design data, see "RETAINING WALL TYPE 1 SW (MOD)" sheet.

DESIGN OVERSIGHT — Norbert Gee
5-4-12
SIGN OFF DATE

	BY	CHECKED
DESIGN	M. Hancock	R. Burns
DETAILS	C. Houghton	M. Hancock
QUANTITIES	M. Hancock	R. Burns

PREPARED FOR THE STATE OF CALIFORNIA DEPARTMENT OF TRANSPORTATION

C. Tornaci
PROJECT ENGINEER

BRIDGE NO. 57E0113
POST MILES 5.1

RETAINING WALL NO. 316R
RETAINING WALL TYPE 1 (MOD)

DESIGN DETAIL SHEET (ENGLISH) (REV.7/16/10)

ORIGINAL SCALE IN INCHES FOR REDUCED PLANS 0 1 2 3

UNIT: 2762
PROJECT NUMBER & PHASE: 1100020051

DISREGARD PRINTS BEARING EARLIER REVISION DATES

REVISION DATES (PRELIMINARY STAGE ONLY): 4-26-11 8-5-11 11-14-11 11-16-11 2-15-12 4-26-12 6-5-12

SHEET 8 OF 12

FILE => RW316R-g-rwdt07.dgn

CONTRACT NO.: X PROJECT ID: X

USERNAME => s127400 DATE PLOTTED => 13-SEP-2012 TIME PLOTTED => 08:05

DIST	COUNTY	ROUTE	KILOMETER POST TOTAL PROJECT	SHEET No	TOTAL SHEETS
11	SD	805	4.7/5.6	637	650

REGISTERED CIVIL ENGINEER 4-26-12

06-25-12
PLANS APPROVAL DATE

REGISTERED PROFESSIONAL ENGINEER Cuong Nguyen No. C32414 Exp. 12-31-12 CIVIL STATE OF CALIFORNIA

The State of California or its officers or agents shall not be responsible for the accuracy or completeness of electronic copies of this plan sheet.

This LOTB sheet was prepared in accordance with the Caltrans Soil & Rock Logging, Classification, & Presentation Manual (2007 Edition).

BENCH MARK

BM 805-5.00, Brass disk in sidewalk on north side of E. Palomar St. OC bridge, at Station 298+46.0, Right 60 feet of "DAR" Line/"A1" Line.
Elevation: 300.93 feet
NAVD 1988 (Vertical)
NAD83 (Horizontal)

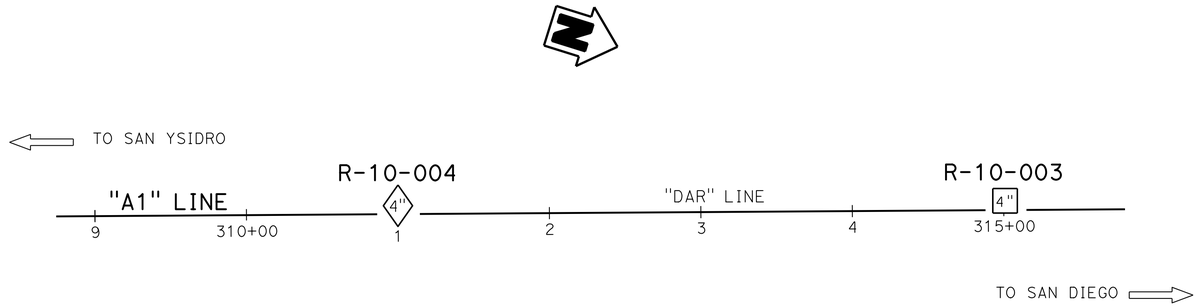

PLAN

1" = 50'

NOTES:

1. Ground water was not encountered during the 2010 subsurface investigation.
2. RQD designated with "NA" (not applicable) indicates that the rock encountered within the drill interval was not sound rock, therefore RQD was not calculated.
3. Plan sheets provided by Design, show that "A1" Line = "DAR" Line.

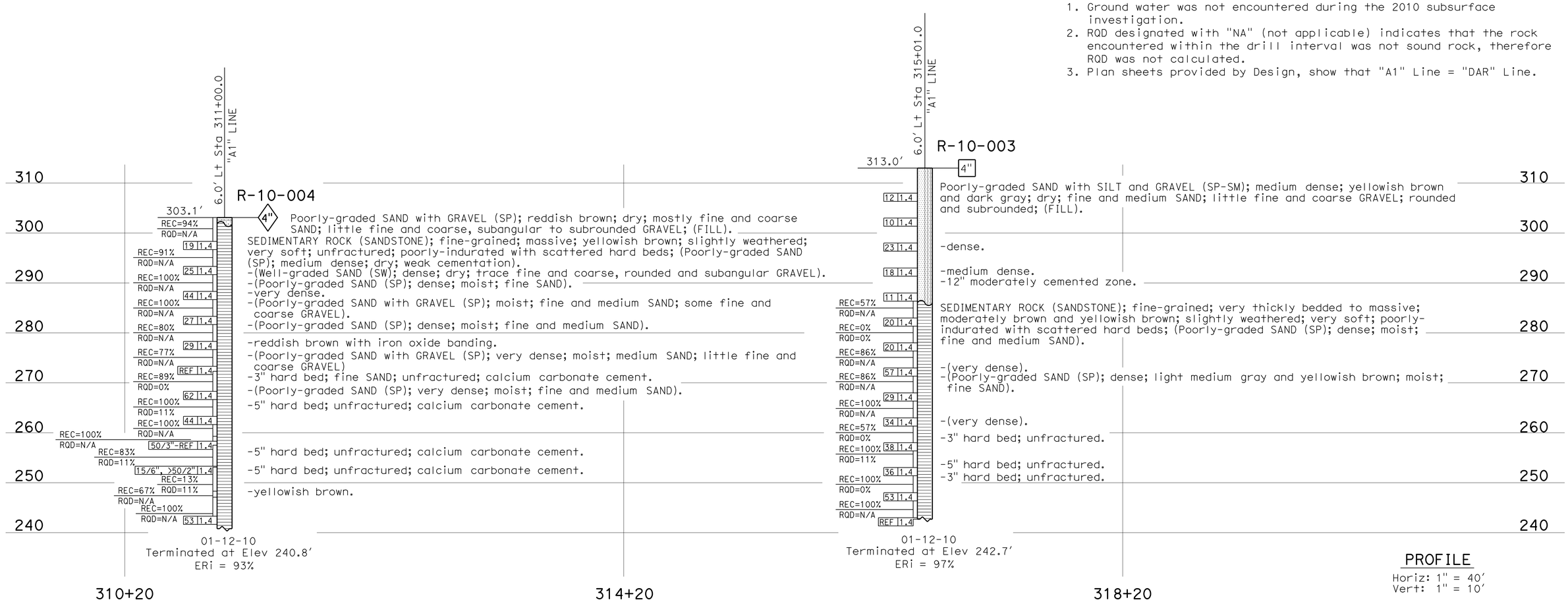

PROFILE

Horiz: 1" = 40'
Vert: 1" = 10'

ENGINEERING SERVICES	GEOTECHNICAL SERVICES	STATE OF CALIFORNIA DEPARTMENT OF TRANSPORTATION	DIVISION OF ENGINEERING SERVICES STRUCTURE DESIGN	BRIDGE NO. 57E0113	RETAINING WALL NO. 316R
FUNCTIONAL SUPERVISOR	DRAWN BY: F. Nguyen, I.G-Remmen	FIELD INVESTIGATION BY:	DESIGN BRANCH X	POST MILE 5.07	LOG OF TEST BORINGS 1 OF 4
NAME: S. Wei	CHECKED BY: B. Gutierrez	TM Liao/J. Klamecki			

OGS CIVIL LOG OF TEST BORINGS SHEET

ORIGINAL SCALE IN INCHES FOR REDUCED PLANS 0 1 2 3

UNIT: 3643
PROJECT NUMBER & PHASE: 11000200511 CONTRACT NO.: 11-2T1821

DISREGARD PRINTS BEARING EARLIER REVISION DATES 4-26-12

REVISION DATES | SHEET 9 | OF 12

FILE => RW316R-z-ltb01.dgn

USERNAME => s127400 DATE PLOTTED => 13-SEP-2012 TIME PLOTTED => 08:05

DIST	COUNTY	ROUTE	KILOMETER POST TOTAL PROJECT	SHEET No	TOTAL SHEETS
11	SD	805	4.7/5.6	638	650

REGISTERED CIVIL ENGINEER 12-8-11

06-25-12
PLANS APPROVAL DATE

REGISTERED PROFESSIONAL ENGINEER Cuong Nguyen No. C32414 Exp. 12-31-12 CIVIL STATE OF CALIFORNIA

The State of California or its officers or agents shall not be responsible for the accuracy or completeness of electronic copies of this plan sheet.

REFERENCE: CALTRANS SOIL & ROCK LOGGING, CLASSIFICATION, AND PRESENTATION MANUAL (JUNE 2007)

CEMENTATION

Description	Criteria
Weak	Crumbles or breaks with handling or little finger pressure.
Moderate	Crumbles or breaks with considerable finger pressure.
Strong	Will not crumble or break with finger pressure.

CONSISTENCY OF COHESIVE SOILS

Description	Unconfined Compressive Strength (tsf)	Pocket Penetrometer Measurement (tsf)	Torvane Measurement (tsf)	Field Approximation
Very Soft	< 0.25	< 0.25	< 0.12	Easily penetrated several inches by fist
Soft	0.25 to 0.50	0.25 to 0.50	0.12 to 0.25	Easily penetrated several inches by thumb
Medium Stiff	0.50 to 1.0	0.50 to 1.0	0.25 to 0.50	Penetrated several inches by thumb with moderate effort
Stiff	1 to 2	1 to 2	0.50 to 1.0	Readily indented by thumb but penetrated only with great effort
Very Stiff	2 to 4	2 to 4	1.0 to 2.0	Readily indented by thumbnail
Hard	> 4.0	> 4.0	> 2.0	Indented by thumbnail with difficulty

BOREHOLE IDENTIFICATION

Symbol	Hole Type	Description
Size	A	Auger Boring
Size	R P	Rotary drilled boring Rotary percussion boring (air)
Size	R	Rotary drilled diamond core
Size	HD HA	Hand driven (1-inch soil tube) Hand Auger
●	D	Dynamic Cone Penetration Boring
▲	CPT	Cone Penetration Test (ASTM D 5778-95)
⬚	O	Other

Note: Size in inches.

PLASTICITY OF FINE-GRAINED SOILS

Description	Criteria
Nonplastic	A 1/8-inch thread cannot be rolled at any water content.
Low	The thread can barely be rolled and the lump cannot be formed when drier than the plastic limit.
Medium	The thread is easy to roll and not much time is required to reach the plastic limit. The thread cannot be rerolled after reaching the plastic limit. The lump crumbles when drier than the plastic limit.
High	It takes considerable time rolling and kneading to reach the plastic limit. The thread can be rerolled several times after reaching the plastic limit. The lump can be formed without crumbling when drier than the plastic limit.

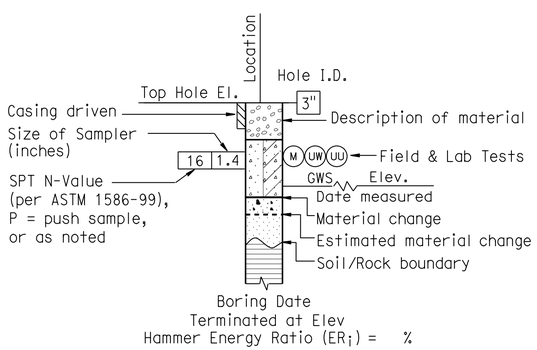

ROTARY BORING

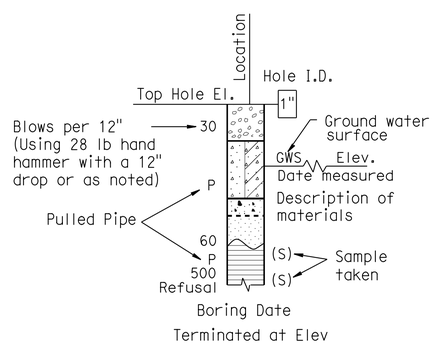

HAND BORING

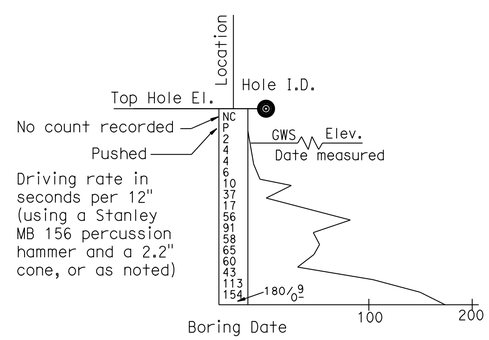

DYNAMIC CONE PENETRATION BORING

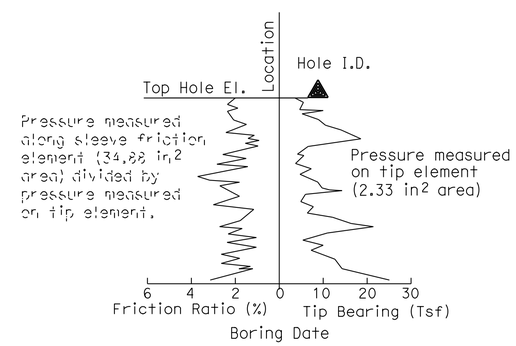

CONE PENETRATION TEST (CPT) SOUNDING

ENGINEERING SERVICES	MATERIALS AND GEOTECHNICAL SERVICES	STATE OF CALIFORNIA DEPARTMENT OF TRANSPORTATION	DIVISION OF ENGINEERING SERVICES STRUCTURE DESIGN DESIGN BRANCH X	BRIDGE NO. 57E0113 POST MILE 5.07	RETAINING WALL NO. 316R LOG OF TEST BORINGS 2 OF 4
	PREPARED BY: I.G-Remmen				

GS LOTB SOIL LEGEND

ORIGINAL SCALE IN INCHES FOR REDUCED PLANS 0 1 2 3

UNIT: 3643
PROJECT NUMBER & PHASE: 11000200511 CONTRACT NO.: 11-2T1821

DISREGARD PRINTS BEARING EARLIER REVISION DATES

REVISION DATES

SHEET 10 OF 12

FILE => RW316R-z-1tb02.dgn

USERNAME => s127400 DATE PLOTTED => 13-SEP-2012 TIME PLOTTED => 08:05

REFERENCE: CALTRANS SOIL & ROCK LOGGING, CLASSIFICATION, AND PRESENTATION MANUAL (JUNE 2007)

DIST	COUNTY	ROUTE	KILOMETER POST TOTAL PROJECT	SHEET No	TOTAL SHEETS
11	SD	805	4.7/5.6	639	650

REGISTERED CIVIL ENGINEER 12-8-11

06-25-12
PLANS APPROVAL DATE

REGISTERED PROFESSIONAL ENGINEER Cuong Nguyen No. C32414 Exp. 12-31-12 CIVIL STATE OF CALIFORNIA

The State of California or its officers or agents shall not be responsible for the accuracy or completeness of electronic copies of this plan sheet.

GROUP SYMBOLS AND NAMES

Graphic/Symbol	Group Names	Graphic/Symbol	Group Names
GW	Well-graded GRAVEL Well-graded GRAVEL with SAND	CL	Lean CLAY Lean CLAY with SAND Lean CLAY with GRAVEL SANDY lean CLAY SANDY lean CLAY with GRAVEL GRAVELLY lean CLAY GRAVELLY lean CLAY with SAND
GP	Poorly graded GRAVEL Poorly graded GRAVEL with SAND		
GW-GM	Well-graded GRAVEL with SILT Well-graded GRAVEL with SILT and SAND	CL-ML	SILTY CLAY SILTY CLAY with SAND SILTY CLAY with GRAVEL SANDY SILTY CLAY SANDY SILTY CLAY with GRAVEL GRAVELLY SILTY CLAY GRAVELLY SILTY CLAY with SAND
GW-GC	Well-graded GRAVEL with CLAY (or SILTY CLAY) Well-graded GRAVEL with CLAY and SAND (or SILTY CLAY and SAND)		
GP-GM	Poorly graded GRAVEL with SILT Poorly graded GRAVEL with SILT and SAND	ML	SILT SILT with SAND SILT with GRAVEL SANDY SILT SANDY SILT with GRAVEL GRAVELLY SILT GRAVELLY SILT with SAND
GP-GC	Poorly graded GRAVEL with CLAY (or SILTY CLAY) Poorly graded GRAVEL with CLAY and SAND (or SILTY CLAY and SAND)		
GM	SILTY GRAVEL SILTY GRAVEL with SAND	OL	ORGANIC lean CLAY ORGANIC lean CLAY with SAND ORGANIC lean CLAY with GRAVEL SANDY ORGANIC lean CLAY SANDY ORGANIC lean CLAY with GRAVEL GRAVELLY ORGANIC lean CLAY GRAVELLY ORGANIC lean CLAY with SAND
GC	CLAYEY GRAVEL CLAYEY GRAVEL with SAND		
GC-GM	SILTY, CLAYEY GRAVEL SILTY, CLAYEY GRAVEL with SAND	OL	ORGANIC SILT ORGANIC SILT with SAND ORGANIC SILT with GRAVEL SANDY ORGANIC SILT SANDY ORGANIC SILT with GRAVEL GRAVELLY ORGANIC SILT GRAVELLY ORGANIC SILT with SAND
SW	Well-graded SAND Well-graded SAND with GRAVEL		
SP	Poorly graded SAND Poorly graded SAND with GRAVEL	CH	Fat CLAY Fat CLAY with SAND Fat CLAY with GRAVEL SANDY fat CLAY SANDY fat CLAY with GRAVEL GRAVELLY fat CLAY GRAVELLY fat CLAY with SAND
SW-SM	Well-graded SAND with SILT Well-graded SAND with SILT and GRAVEL		
SW-SC	Well-graded SAND with CLAY (or SILTY CLAY) Well-graded SAND with CLAY and GRAVEL (or SILTY CLAY and GRAVEL)	MH	Elastic SILT Elastic SILT with SAND Elastic SILT with GRAVEL SANDY elastic SILT SANDY elastic SILT with GRAVEL GRAVELLY elastic SILT GRAVELLY elastic SILT with SAND
SP-SM	Poorly graded SAND with SILT Poorly graded SAND with SILT and GRAVEL		
SP-SC	Poorly graded SAND with CLAY (or SILTY CLAY) Poorly graded SAND with CLAY and GRAVEL (or SILTY CLAY and GRAVEL)	OH	ORGANIC fat CLAY ORGANIC fat CLAY with SAND ORGANIC fat CLAY with GRAVEL SANDY ORGANIC fat CLAY SANDY ORGANIC fat CLAY with GRAVEL GRAVELLY ORGANIC fat CLAY GRAVELLY ORGANIC fat CLAY with SAND
SM	SILTY SAND SILTY SAND with GRAVEL		
SC	CLAYEY SAND CLAYEY SAND with GRAVEL	OH	ORGANIC elastic SILT ORGANIC elastic SILT with SAND ORGANIC elastic SILT with GRAVEL SANDY ORGANIC elastic SILT SANDY ORGANIC elastic SILT with GRAVEL GRAVELLY ORGANIC elastic SILT GRAVELLY ORGANIC elastic SILT with SAND
SC-SM	SILTY, CLAYEY SAND SILTY, CLAYEY SAND with GRAVEL		
PT	PEAT	OL/OH	ORGANIC SOIL ORGANIC SOIL with SAND ORGANIC SOIL with GRAVEL SANDY ORGANIC SOIL SANDY ORGANIC SOIL with GRAVEL GRAVELLY ORGANIC SOIL GRAVELLY ORGANIC SOIL with SAND
	COBBLES COBBLES and BOULDERS BOULDERS		

FIELD AND LABORATORY TESTING

- (C) Consolidation (ASTM D 2435)
- (CL) Collapse Potential (ASTM D 5333)
- (CP) Compaction Curve (CTM 216)
- (CR) Corrosivity Testing (CTM 643, CTM 422, CTM 417)
- (CU) Consolidated Undrained Triaxial (ASTM D 4767)
- (DS) Direct Shear (ASTM D 3080)
- (EI) Expansion Index (ASTM D 4829)
- (M) Moisture Content (ASTM D 2216)
- (OC) Organic Content-% (ASTM D 2974)
- (P) Permeability (CTM 220)
- (PA) Particle Size Analysis (ASTM D 422)
- (PI) Plasticity Index (AASHTO T 90) Liquid Limit (AASHTO T 89)
- (PL) Point Load Index (ASTM D 5731)
- (PM) Pressure Meter
- (PP) Pocket Penetrometer
- (R) R-Value (CTM 301)
- (SE) Sand Equivalent (CTM 217)
- (SG) Specific Gravity (AASHTO T 100)
- (SL) Shrinkage Limit (ASTM D 427)
- (SW) Swell Potential (ASTM D 4546)
- (TV) Pocket Torvane
- (UC) Unconfined Compression-Soil (ASTM D 2166) Unconfined Compression-Rock (ASTM D 2938)
- (UU) Unconsolidated Undrained Triaxial (ASTM D 2850)
- (UW) Unit Weight (ASTM D 4767)
- (VS) Vane Shear (AASHTO T 223)

APPARENT DENSITY OF COHESIONLESS SOILS

Description	SPT N_{60} (Blows / 12 inches)
Very loose	0 - 4
Loose	5 - 10
Medium Dense	11 - 30
Dense	31 - 50
Very Dense	> 50

MOISTURE

Description	Criteria
Dry	Absence of moisture, dusty, dry to the touch
Moist	Damp but no visible water
Wet	Visible free water, usually soil is below water table

PERCENT OR PROPORTION OF SOILS

Description	Criteria
Trace	Particles are present but estimated to be less than 5%
Few	5 to 10%
Little	15 to 25%
Some	30 to 45%
Mostly	50 to 100%

PARTICLE SIZE

Description		Size
Boulder		> 12"
Cobble		3" to 12"
Gravel	Coarse	3/4" to 3"
	Fine	No. 4 to 3/4"
Sand	Coarse	No. 10 to No. 4
	Medium	No. 40 to No. 10
	Fine	No. 200 to No. 40

ENGINEERING SERVICES

MATERIALS AND GEOTECHNICAL SERVICES

PREPARED BY: I.G-Remmen

STATE OF CALIFORNIA DEPARTMENT OF TRANSPORTATION

DIVISION OF ENGINEERING SERVICES STRUCTURE DESIGN DESIGN BRANCH X

BRIDGE NO. 57E0113

POST MILE 5.07

RETAINING WALL NO. 316R

LOG OF TEST BORINGS 3 OF 4

GS LOTB SOIL LEGEND

ORIGINAL SCALE IN INCHES FOR REDUCED PLANS 0 1 2 3

UNIT: 3643
PROJECT NUMBER & PHASE: 11000200511
CONTRACT NO.: 11-2T1821

DISREGARD PRINTS BEARING EARLIER REVISION DATES

REVISION DATES

SHEET 11 OF 12

FILE => RW316R-z-ltb03.dgn

USERNAME => s127400 DATE PLOTTED => 13-SEP-2012 TIME PLOTTED => 08:05

DIST	COUNTY	ROUTE	KILOMETER POST TOTAL PROJECT	SHEET No	TOTAL SHEETS
11	SD	805	4.7/5.6	640	650

REGISTERED CIVIL ENGINEER 12-8-11

06-25-12
PLANS APPROVAL DATE

REGISTERED PROFESSIONAL ENGINEER Cuong Nguyen No. C32414 Exp. 12-31-12 CIVIL STATE OF CALIFORNIA

The State of California or its officers or agents shall not be responsible for the accuracy or completeness of electronic copies of this plan sheet.

REFERENCE: CALTRANS SOIL & ROCK LOGGING, CLASSIFICATION, AND PRESENTATION MANUAL (JUNE 2007)

PERCENT CORE RECOVERY (REC) & ROCK QUALITY DESIGNATION (RQD)

$$REC = \frac{\sum \text{Length of the recovered core pieces (inches)}}{\text{Total length of core run (inches)}} \times 100\%$$

$$RQD = \frac{\sum \text{Length of intact core pieces} \geq 4''}{\text{Total length of core run (inches)}} \times 100\%$$

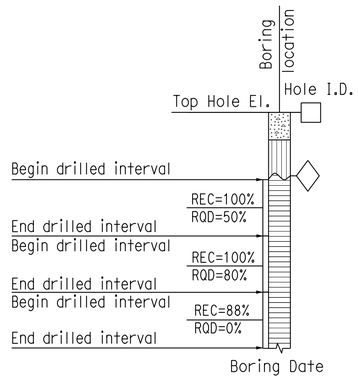

RELATIVE STRENGTH OF INTACT ROCK

Term	Uniaxial Compressive Strength (PSI)
Extremely Strong	> 30,000
Very Strong	14,500 - 30,000
Strong	7,000 - 14,500
Medium Strong	3,500 - 7,000
Weak	700 - 3,500
Very Weak	150 - 700
Extremely Weak	< 150

BEDDING SPACING

Description	Thickness / Spacing
Massive	Greater than 10 ft
Very thickly bedded	3 to 10 ft
Thickly bedded	1 to 3 ft
Moderately bedded	3-5/8" to 1 ft
Thinly bedded	1-1/4" to 3-5/8"
Very thinly bedded	3/8" to 1-1/4"
Laminated	Less than 3/8"

LEGEND OF ROCK MATERIALS

- IGNEOUS ROCK
- SEDIMENTARY ROCK
- METAMORPHIC ROCK

ROCK HARDNESS

Description	Criteria
Extremely Hard	Specimen cannot be scratched with a pocket knife or sharp pick; can only be chipped with repeated heavy hammer blows.
Very Hard	Specimen cannot be scratched with a pocket knife or sharp pick. Breaks with repeated heavy hammer blows.
Hard	Specimen can be scratched with a pocket knife or sharp pick with difficulty (heavy pressure). Heavy hammer blows required to break specimen.
Moderately Hard	Specimen can be scratched with pocket knife or sharp pick with light or moderate pressure. Core breaks with moderate hammer blows.
Moderately Soft	Specimen can be grooved 1/6" deep with a pocket knife or sharp pick with moderate or heavy pressure. Breaks with light hammer blow or heavy manual pressure.
Soft	Specimen can be grooved or gouged easily by a pocket knife or sharp pick with light pressure, can be scratched with fingernail. Breaks with light to moderate manual pressure.
Very Soft	Specimen can be readily indented, grooved or gouged with fingernail, or carved with a pocket knife. Breaks with light manual pressure.

FRACTURE DENSITY

Description	Observed Fracture Density
Unfractured	No fractures.
Very slightly fractured	Lengths greater than 3 feet.
Slightly fractured	Lengths from 1 to 3 feet with few lengths less than 1 foot or greater than 3 feet.
Moderately fractured	Lengths mostly in 4" to 1 foot range with most lengths about 8"
Intensely fractured	Lengths average from 1 to 4" with scattered fragmented intervals with lengths less than 4"
Very intensely fractured	Mostly chips and fragments with a few scattered short core lengths.

Combination descriptors (such as "Very intensely to intensely fractured") are used where equal distribution of both fracture density characteristics is present over a significant interval or exposure, or where characteristics are "in between" the descriptor definitions. Only two adjacent descriptors may be combined.

WEATHERING DESCRIPTORS FOR INTACT ROCK

Description	Diagnostic features					General Characteristics
	Chemical Weathering-Discoloration and/or oxidation		Mechanical Weathering-Grain boundary conditions (disaggregation) primarily for granitics and some coarse-grained sediments	Texture and Solutioning		
	Body of Rock	Fracture Surfaces		Texture	Solutioning	
Fresh	No discoloration, not oxidized.	No discoloration or oxidation.	No separation, intact (tight).	No change.	No solutioning.	Hammer rings when crystalline rocks are struck.
Slightly Weathered	Discoloration or oxidation is limited to surface of, or short distance from, fractures; some feldspar crystals are dull.	Minor to complete discoloration or oxidation of most surfaces.	No visible separation, intact (tight).	Preserved.	Minor leaching of some soluble minerals may be noted.	Hammer rings when crystalline rocks are struck. Body of rock not weakened.
Moderately Weathered	Discoloration or oxidation extends from fractures usually throughout; Fe-Mg minerals are "rusty," feldspar crystals are "cloudy."	All fracture surfaces are discolored or oxidized.	Partial separation of boundaries visible.	Generally preserved.	Soluble minerals may be mostly leached.	Hammer does not ring when rock is struck. Body of rock is slightly weakened.
Intensely Weathered	Discoloration or oxidation throughout; all feldspars and Fe-Mg minerals are altered to clay to some extent; or chemical alteration produces in-situ disaggregation, see grain boundary conditions.	All fracture surfaces are discolored or oxidized, surfaces friable.	Partial separation, rock is friable; in semiarid conditions granitics are disaggregated.	Texture altered by chemical disintegration (hydration, argillation).	Leaching of soluble minerals may be complete.	Dull sound when struck with hammer, usually can be broken with moderate to heavy manual pressure or by light hammer blow without reference to planes of weakness such as incipient or hairline fractures, or veinlets. Rock is significantly weakened.
Decomposed	Discolored or oxidized throughout, but resistant minerals such as quartz may be unaltered; all feldspars and Fe-Mg minerals are completely altered to clay.		Complete separation of grain boundaries (disaggregated).	Resembles a soil, partial or complete remnant rock structure may be preserved; leaching of soluble minerals usually complete.		Can be granulated by hand. Resistant minerals such as quartz may be present as "stringers" or "dikes."

Combination descriptors (such as "slightly weathered to fresh") are permissible where equal distribution of both weathering characteristics is present over significant intervals or where characteristics present are "in between" the diagnostic feature. However, combination descriptors should not be used where significant, identifiable zones can be delineated. Only two adjacent descriptors may be combined. "Very intensely weathered" is the combination descriptor for "intensely weathered to decomposed."

ENGINEERING SERVICES

MATERIALS AND GEOTECHNICAL SERVICES

PREPARED BY: I.G-Remmen

STATE OF CALIFORNIA DEPARTMENT OF TRANSPORTATION

DIVISION OF ENGINEERING SERVICES STRUCTURE DESIGN DESIGN BRANCH X

BRIDGE NO. 57E0113

POST MILE 5.07

RETAINING WALL NO. 316R

LOG OF TEST BORINGS 4 OF 4

GS LOTB SOIL LEGEND

ORIGINAL SCALE IN INCHES FOR REDUCED PLANS 0 1 2 3

UNIT: 3643
PROJECT NUMBER & PHASE: 11000200511
CONTRACT NO.: 11-2T1821

DISREGARD PRINTS BEARING EARLIER REVISION DATES

REVISION DATES

SHEET 12 OF 12

FILE => RW316R-z-ltb04.dgn

USERNAME => s127400 DATE PLOTTED => 13-SEP-2012 TIME PLOTTED => 08:05

DIST	COUNTY	ROUTE	POST MILES TOTAL PROJECT	SHEET No	TOTAL SHEETS
11	SD	805	4.7/5.6	641	650

REGISTERED CIVIL ENGINEER — DATE 4-26-12

06-25-12
PLANS APPROVAL DATE

REGISTERED PROFESSIONAL ENGINEER — MASON LEE HANCOCK — No. 75048 — Exp. 12-31-13 — CIVIL — STATE OF CALIFORNIA

The State of California or its officers or agents shall not be responsible for the accuracy or completeness of electronic copies of this plan sheet.

Dokken Engineering
2365 Iron Point Rd, Suite 200
Folsom, CA 95630 (916) 858-0642

SANDAG
401 B St, Suite 800
San Diego, CA 92101

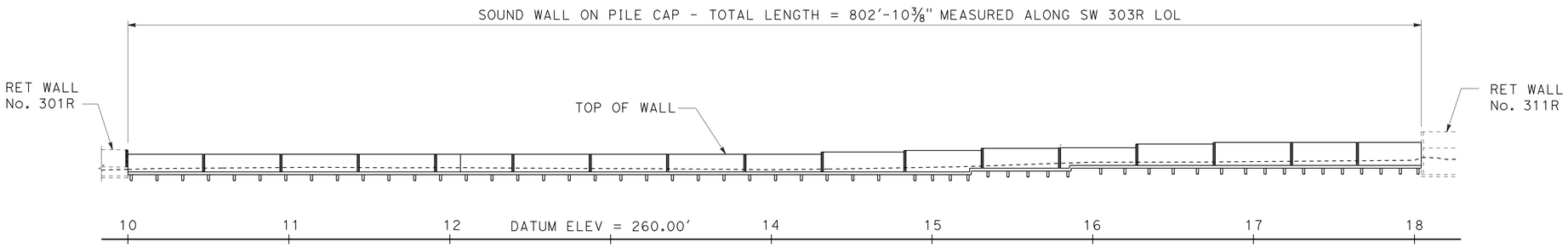

DEVELOPED MIRROR ELEVATION

1" = 40'

STANDARD PLANS DATED 2010

Sheet No.	Title
A10A	ABBREVIATIONS (SHEET 1 OF 2)
A10B	ABBREVIATIONS (SHEET 2 OF 2)
A10C	LINES AND SYMBOLS (SHEET 1 OF 3)
A10D	LINES AND SYMBOLS (SHEET 2 OF 3)
A10E	LINES AND SYMBOLS (SHEET 3 OF 3)
A62B	LIMITS OF PAYMENT FOR EXCAVATION AND BACKFILL BRIDGE SURCHARGE AND WALL
B15-3	SOUNDWALL MASONRY BLOCK ON PILE CAP DETAILS (1)
B15-4	SOUNDWALL MASONRY BLOCK ON PILE CAP DETAILS (2)
B15-5	SOUNDWALL MASONRY BLOCK ON PILE CAP DETAILS (3)

STANDARD PLAN SHEET NO.

DETAIL NO.

INDEX TO PLANS

Sheet No.	Title
1	GENERAL PLAN
2	STRUCTURE PLAN NO. 1
3	STRUCTURE PLAN NO. 2
4	SOUND WALL MASONRY DETAILS NO. 1
5	SOUND WALL MASONRY DETAILS NO. 2
6	LOG OF TEST BORINGS 1 OF 5
7	LOG OF TEST BORINGS 2 OF 5
8	LOG OF TEST BORINGS 3 OF 5
9	LOG OF TEST BORINGS 4 OF 5
10	LOG OF TEST BORINGS 5 OF 5

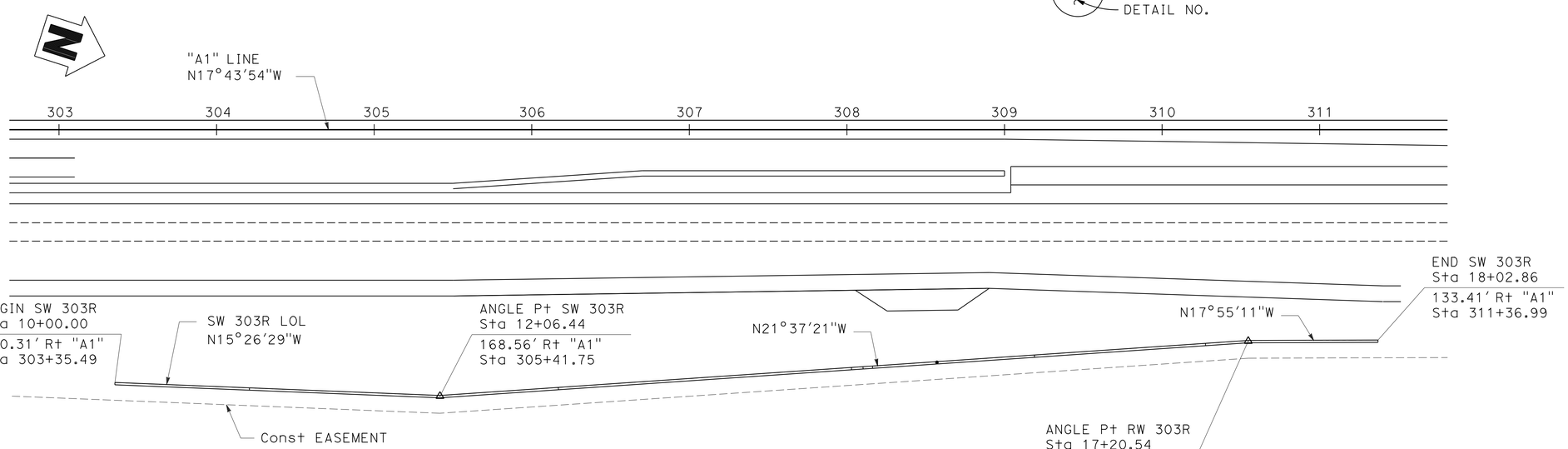

PLAN

1" = 40'

SOUND WALL 303R

QUANTITIES

16" CAST-IN-DRILLED-HOLE CONCRETE PILING	1,184	LF
MINOR CONCRETE (MINOR STRUCTURE)	80	CY
MASONRY BLOCK WALL	9,560	SQFT

DESIGN OVERSIGHT — Norbert Gee
5-4-12
SIGN OFF DATE

	BY	CHECKED			
DESIGN	M. Hancock	R. Burns	LOAD & RESISTANCE FACTORDESIGN		
DETAILS	C. Houghton	M. Hancock	LAYOUT	M. Hancock	R. Burns
QUANTITIES	M. Hancock	R. Burns	SPECIFICATIONS	A. Powers	PLANS AND SPECS COMPARED C. Tornaci

DESIGN GENERAL PLAN SHEET (ENGLISH) (REV.7/16/10)

ORIGINAL SCALE IN INCHES FOR REDUCED PLANS 0 1 2 3

PREPARED FOR THE STATE OF CALIFORNIA DEPARTMENT OF TRANSPORTATION

C. Tornaci
PROJECT ENGINEER

UNIT: 2762
PROJECT NUMBER & PHASE: 1100020051

BRIDGE NO. -
POST MILES 5.1

SOUND WALL NO. 303R
GENERAL PLAN

DISREGARD PRINTS BEARING EARLIER REVISION DATES

REVISION DATES (PRELIMINARY STAGE ONLY): 1-31-11, 4-26-11, 8-5-11, 11-4-11, 11-18-11, 2-10-12, 4-26-12

SHEET 1 OF 10

FILE => SW303-a-GP01.dgn

CONTRACT NO.: X PROJECT ID: X

USERNAME => s127400 DATE PLOTTED => 13-SEP-2012 TIME PLOTTED => 08:05

DIST	COUNTY	ROUTE	POST MILES TOTAL PROJECT	SHEET No	TOTAL SHEETS
11	SD	805	4.7/5.6	642	650

REGISTERED CIVIL ENGINEER — DATE: 4-26-12

06-25-12
PLANS APPROVAL DATE

REGISTERED PROFESSIONAL ENGINEER — MASON LEE HANCOCK — No. 75048 — Exp. 12-31-13 — CIVIL — STATE OF CALIFORNIA

The State of California or its officers or agents shall not be responsible for the accuracy or completeness of electronic copies of this plan sheet.

Dokken Engineering
2365 Iron Point Rd, Suite 200
Folsom, CA 95630 (916) 858-0642

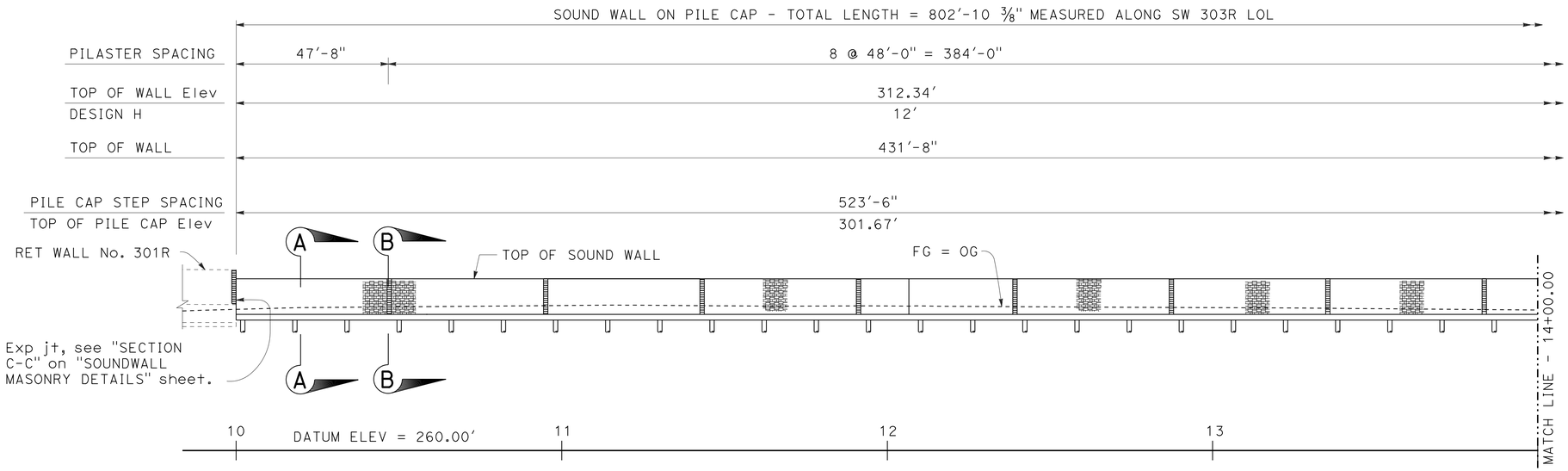

DEVELOPED ELEVATION

1" = 20'

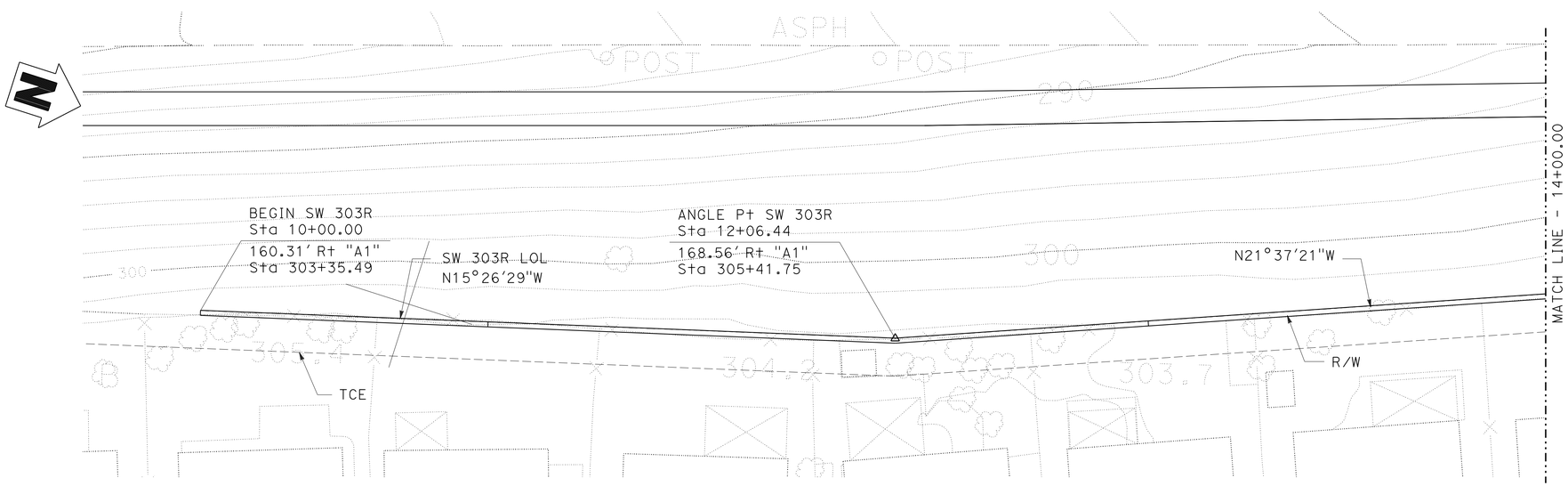

PLAN

1" = 20'

NOTE:

1. For Sections "A-A" and "B-B", see "SOUND WALL MASONRY DETAILS NO. 1" sheet.

DESIGN	BY M. Hancock	CHECKED R. Burns	
DETAILS	BY C. Houghton	CHECKED M. Hancock	
QUANTITIES	BY M. Hancock	CHECKED R. Burns	

DESIGN OVERSIGHT

SIGN OFF DATE

DESIGN DETAIL SHEET (ENGLISH) (REV.7/16/10)

ORIGINAL SCALE IN INCHES FOR REDUCED PLANS 0 1 2 3

PREPARED FOR THE STATE OF CALIFORNIA DEPARTMENT OF TRANSPORTATION

C. Tornaci
PROJECT ENGINEER

BRIDGE NO. -
POST MILES 5.1

UNIT: 2762
PROJECT NUMBER & PHASE: 1100020051

DISREGARD PRINTS BEARING EARLIER REVISION DATES

REVISION DATES (PRELIMINARY STAGE ONLY): 4-26-11 8-5-11 11-4-11 11-18-11 2-10-12 4-26-12

SOUND WALL NO. 303R
STRUCTURE PLAN NO. 1

SHEET 2 OF 10

FILE => SW303-c-SP01.dgn

CONTRACT NO.: X PROJECT ID: X

USERNAME => s127400 DATE PLOTTED => 13-SEP-2012 TIME PLOTTED => 08:05

DIST	COUNTY	ROUTE	POST MILES TOTAL PROJECT	SHEET No	TOTAL SHEETS
11	SD	805	4.7/5.6	643	650

REGISTERED CIVIL ENGINEER — 4-26-12 DATE

06-25-12
PLANS APPROVAL DATE

REGISTERED PROFESSIONAL ENGINEER — MASON LEE HANCOCK — No. 75048 — Exp. 12-31-13 — CIVIL — STATE OF CALIFORNIA

The State of California or its officers or agents shall not be responsible for the accuracy or completeness of electronic copies of this plan sheet.

Dokken Engineering
2365 Iron Point Rd, Suite 200
Folsom, CA 95630 (916) 858-0642

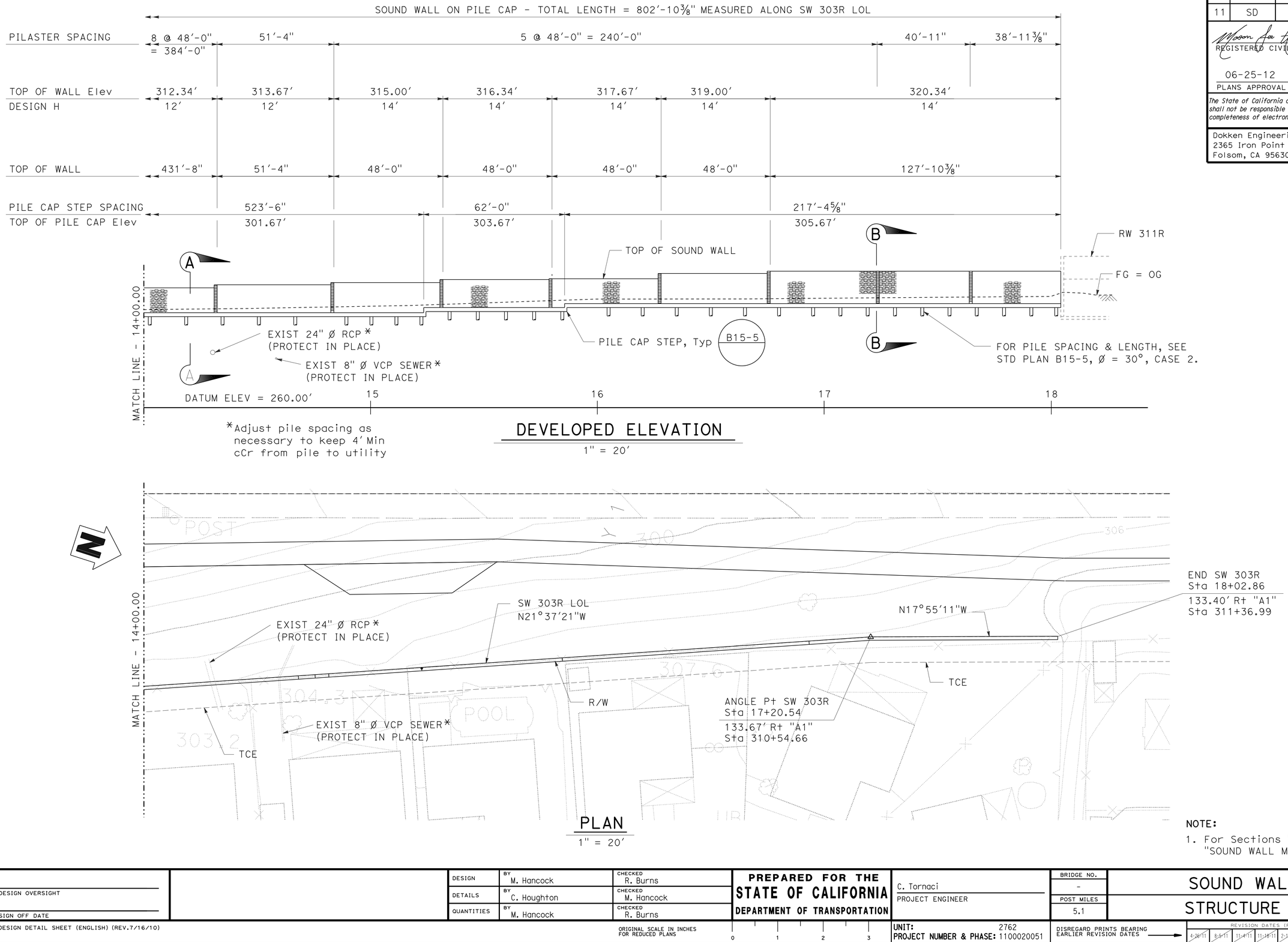

NOTE:

1. For Sections "A-A" and "B-B", see "SOUND WALL MASONRY DETAILS NO. 1" sheet.

DESIGN	BY M. Hancock	CHECKED R. Burns	
DETAILS	BY C. Houghton	CHECKED M. Hancock	
QUANTITIES	BY M. Hancock	CHECKED R. Burns	

DESIGN OVERSIGHT

SIGN OFF DATE

DESIGN DETAIL SHEET (ENGLISH) (REV.7/16/10)

ORIGINAL SCALE IN INCHES FOR REDUCED PLANS 0 1 2 3

PREPARED FOR THE STATE OF CALIFORNIA DEPARTMENT OF TRANSPORTATION

C. Tornaci
PROJECT ENGINEER

BRIDGE NO. -
POST MILES 5.1

UNIT: 2762
PROJECT NUMBER & PHASE: 1100020051

DISREGARD PRINTS BEARING EARLIER REVISION DATES

REVISION DATES (PRELIMINARY STAGE ONLY): 4-26-11 8-5-11 11-4-11 11-18-11 2-10-12 4-26-12

SOUND WALL NO. 303R
STRUCTURE PLAN NO. 2

SHEET 3 OF 10

FILE => SW303-c-SP02.dgn

CONTRACT NO.: X PROJECT ID: X

USERNAME => s127400 DATE PLOTTED => 13-SEP-2012 TIME PLOTTED => 08:05

DIST	COUNTY	ROUTE	POST MILES TOTAL PROJECT	SHEET No	TOTAL SHEETS
11	SD	805	4.7/5.6	644	650

REGISTERED CIVIL ENGINEER — DATE: 4-26-12

06-25-12
PLANS APPROVAL DATE

REGISTERED PROFESSIONAL ENGINEER — MASON LEE HANCOCK — No. 75048 — Exp. 12-31-13 — CIVIL — STATE OF CALIFORNIA

The State of California or its officers or agents shall not be responsible for the accuracy or completeness of electronic copies of this plan sheet.

Dokken Engineering
2365 Iron Point Rd, Suite 200
Folsom, CA 95630 (916) 858-0642

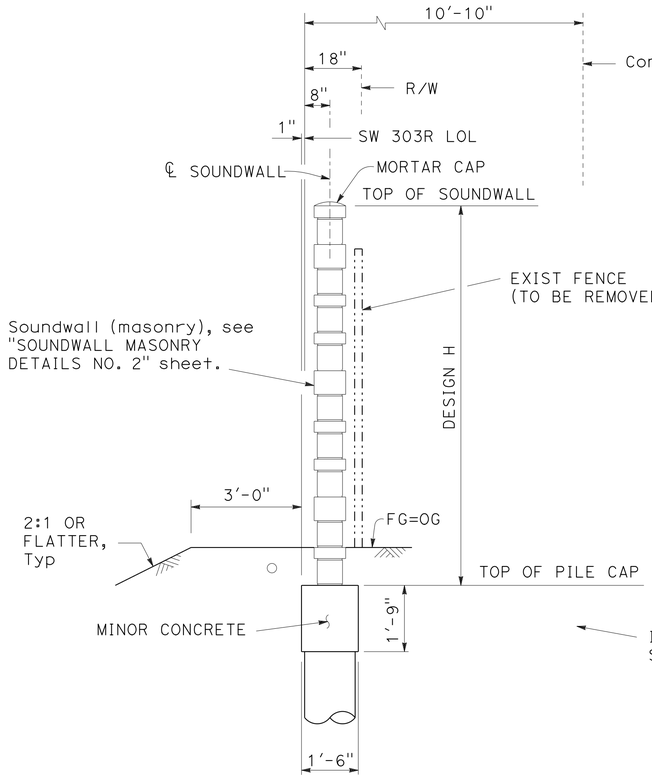

SECTION A-A
½" = 1'-0"
B15-3 B15-4 B15-5

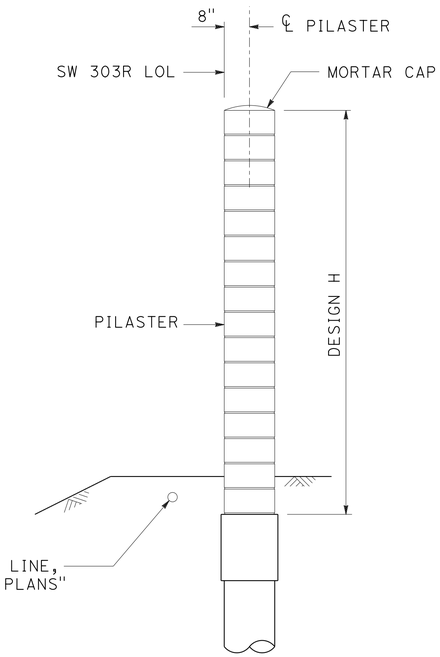

SECTION B-B
½" = 1'-0"
B15-3 B15-4 B15-5

(For details not shown, see "SECTION A-A")

DESIGN	BY M. Hancock	CHECKED R. Burns	
DETAILS	BY C. Houghton	CHECKED M. Hancock	
QUANTITIES	BY M. Hancock	CHECKED R. Burns	

DESIGN OVERSIGHT

SIGN OFF DATE

DESIGN DETAIL SHEET (ENGLISH) (REV.7/16/10)

ORIGINAL SCALE IN INCHES FOR REDUCED PLANS 0 1 2 3

PREPARED FOR THE STATE OF CALIFORNIA DEPARTMENT OF TRANSPORTATION

C. Tornaci
PROJECT ENGINEER

UNIT: 2762
PROJECT NUMBER & PHASE: 1100020051

BRIDGE NO. -
POST MILES 5.1

SOUND WALL NO. 303R
SOUND WALL MASONRY DETAILS NO. 1

DISREGARD PRINTS BEARING EARLIER REVISION DATES

REVISION DATES (PRELIMINARY STAGE ONLY): 4-26-11 8-5-11 11-4-11 11-18-11 2-10-12 4-26-12

SHEET 4 OF 10

FILE => SW303-u-miscdt01.dgn

CONTRACT NO.: X PROJECT ID: X

USERNAME => s127400 DATE PLOTTED => 13-SEP-2012 TIME PLOTTED => 08:05

DIST	COUNTY	ROUTE	POST MILES TOTAL PROJECT	SHEET No	TOTAL SHEETS
11	SD	805	4.7/5.6	645	650

REGISTERED CIVIL ENGINEER 4-26-12 DATE

06-25-12
PLANS APPROVAL DATE

REGISTERED PROFESSIONAL ENGINEER MASON LEE HANCOCK No. 75048 Exp. 12-31-13 CIVIL STATE OF CALIFORNIA

The State of California or its officers or agents shall not be responsible for the accuracy or completeness of electronic copies of this plan sheet.

Dokken Engineering
2365 Iron Point Rd, Suite 200
Folsom, CA 95630 (916) 858-0642

LEGEND:

- Block A - 10" x 8" x 8" smooth face all exposed sides. Block will project 1" on both sides of wall.
- Block B - 8" x 8" x 8" split face all exposed sides.
- Block C - 10" x 4" x 16" split face all exposed sides. Block will project 1" on both sides of wall.
- Block D - 8" x 8" x 16" split face all exposed sides.
- Block E - 16" x 8" x 16" split face all exposed sides except where face meets field wall..
- Cap Block - 10" x 4" x 16" precision block for pilaster.

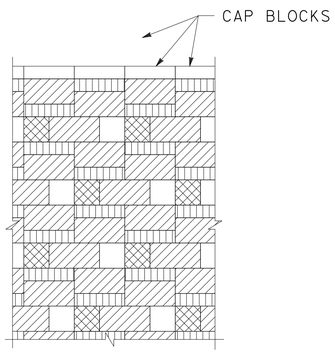

PART PLAN

MASONRY BLOCK PATTERN

NO SCALE

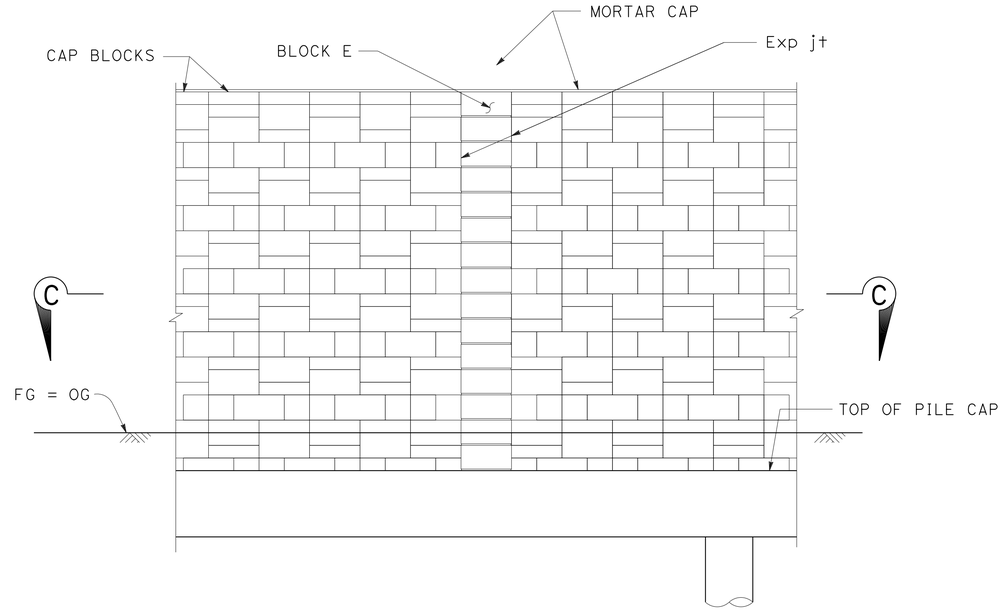

PART ELEVATION

1/2" = 1'-0"

NOTES:

1. Core size for 10" wide block shall match the core size for 8" wide blocks.
2. All pilasters shall be plumb.
3. For details not shown, see Standard Plans B15-3, B15-4 and B15-5.

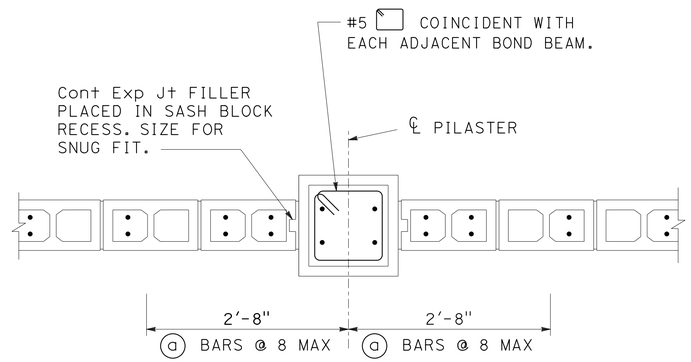

SECTION C-C

1" = 1'-0"

DESIGN OVERSIGHT	DESIGN	BY M. Hancock	CHECKED R. Burns
SIGN OFF DATE	DETAILS	BY C. Houghton	CHECKED M. Hancock
	QUANTITIES	BY M. Hancock	CHECKED R. Burns

PREPARED FOR THE STATE OF CALIFORNIA DEPARTMENT OF TRANSPORTATION

C. Tornaci
PROJECT ENGINEER

BRIDGE NO. -
POST MILES 5.1

SOUND WALL NO. 303R
SOUNDWALL MASONRY DETAILS NO. 2

DESIGN DETAIL SHEET (ENGLISH) (REV.7/16/10)

ORIGINAL SCALE IN INCHES FOR REDUCED PLANS 0 1 2 3

UNIT: 2762
PROJECT NUMBER & PHASE: 1100020051

DISREGARD PRINTS BEARING EARLIER REVISION DATES

REVISION DATES (PRELIMINARY STAGE ONLY) 4-26-11 8-5-11 11-4-11 11-18-11 2-10-12 4-26-12

SHEET 5 OF 10

FILE => SW303-u-miscdt02.dgn

CONTRACT NO.: X PROJECT ID: X

USERNAME => s127400 DATE PLOTTED => 13-SEP-2012 TIME PLOTTED => 08:05

DIST	COUNTY	ROUTE	KILOMETER POST TOTAL PROJECT	SHEET No	TOTAL SHEETS
11	SD	805	4.7/5.6	646	650

REGISTERED CIVIL ENGINEER 4-26-12

06-25-12
PLANS APPROVAL DATE

REGISTERED PROFESSIONAL ENGINEER Cuong Nguyen No. C32414 Exp. 12-31-12 CIVIL STATE OF CALIFORNIA

The State of California or its officers or agents shall not be responsible for the accuracy or completeness of electronic copies of this plan sheet.

This LOTB sheet was prepared in accordance with the Caltrans Soil & Rock Logging, Classification, & Presentation Manual (2007 Edition).

BENCH MARK

BM 805-5.00, Brass disk in sidewalk on north side of E. Palomar St. OC bridge, at Station 298+46.0, Right 60 feet of "DAR" Line/"A1" Line.
Elevation: 300.93 feet
NAVD 1988 (Vertical)
NAD83 (Horizontal)

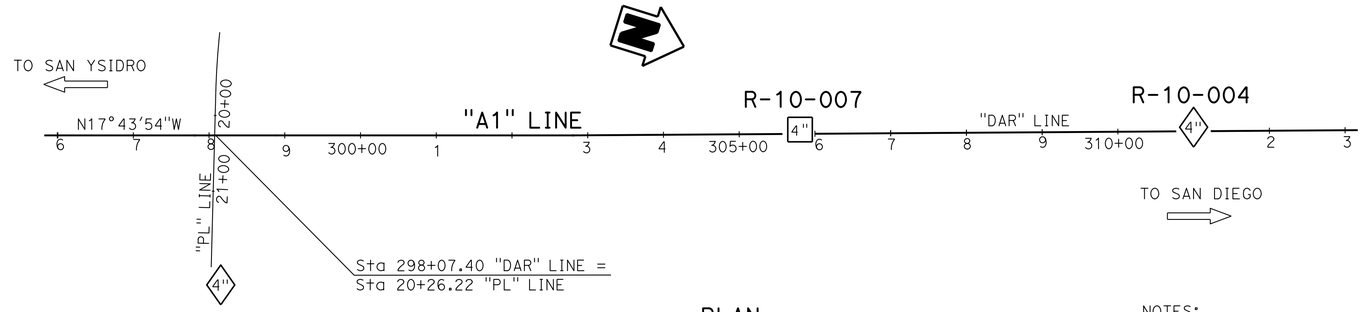

PLAN
1" = 100'

NOTES:
1. Ground water was not encountered during the 2010 subsurface investigation.
2. RQD designated with "NA" (not applicable) indicates that the rock encountered within the drill interval was not sound rock, therefore RQD was not calculated.
3. Plan sheets provided by Design, show that "A1" Line = "DAR" Line.

PROFILE
Horiz: 1" = 10'
Vert: 1" = 10'

ENGINEERING SERVICES	GEOTECHNICAL SERVICES	STATE OF CALIFORNIA DEPARTMENT OF TRANSPORTATION	DIVISION OF ENGINEERING SERVICES STRUCTURE DESIGN DESIGN BRANCH X	BRIDGE NO. / POST MILE 5.07	SOUND WALL 303R LOG OF TEST BORINGS 1 OF 5
FUNCTIONAL SUPERVISOR NAME: S. Wei	DRAWN BY: F. Nguyen, I.G-Remmen / CHECKED BY: B. Gutierrez	FIELD INVESTIGATION BY: TM Liao/J. Klamecki			

OGS CIVIL LOG OF TEST BORINGS SHEET

ORIGINAL SCALE IN INCHES FOR REDUCED PLANS 0 1 2 3

UNIT: 3643
PROJECT NUMBER & PHASE: 11000200511 CONTRACT NO.: 11-2T1821

DISREGARD PRINTS BEARING EARLIER REVISION DATES 4-26-12

REVISION DATES | SHEET 6 OF 10

FILE => SW303-z-1tb01.dgn

USERNAME => s127400 DATE PLOTTED => 13-SEP-2012 TIME PLOTTED => 08:05

DIST	COUNTY	ROUTE	KILOMETER POST TOTAL PROJECT	SHEET No	TOTAL SHEETS
11	SD	805	4.7/5.6	647	650

REGISTERED CIVIL ENGINEER 4-26-12

06-25-12
PLANS APPROVAL DATE

REGISTERED PROFESSIONAL ENGINEER Cuong Nguyen No. C32414 Exp. 12-31-12 CIVIL STATE OF CALIFORNIA

The State of California or its officers or agents shall not be responsible for the accuracy or completeness of electronic copies of this plan sheet.

This LOTB sheet was prepared in accordance with the Caltrans Soil & Rock Logging, Classification, & Presentation Manual (2007 Edition).

FOR PLAN VIEW, SEE
"LOG OF TEST BORINGS 1 OF 5"

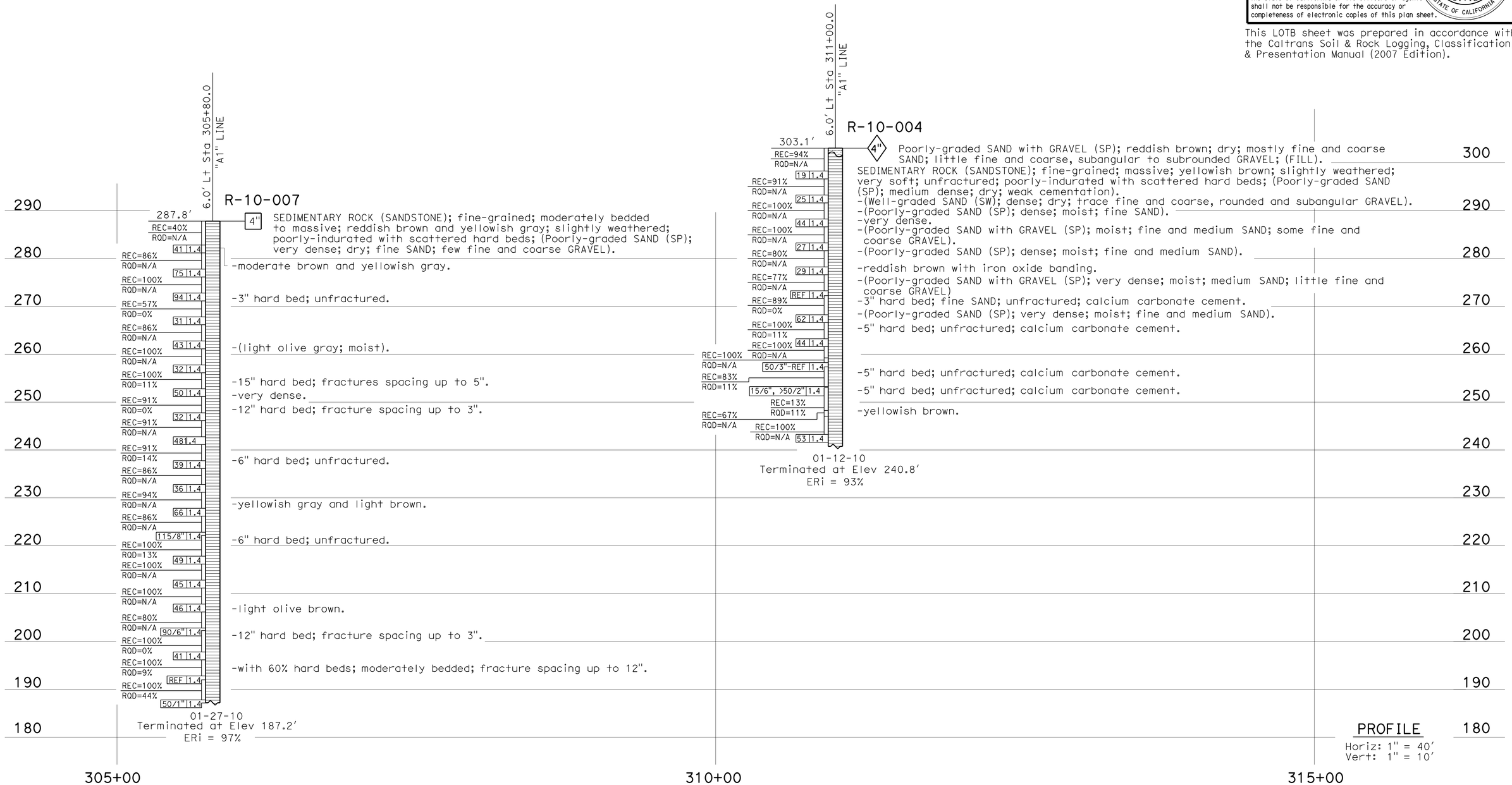

ENGINEERING SERVICES	GEOTECHNICAL SERVICES	STATE OF CALIFORNIA DEPARTMENT OF TRANSPORTATION	DIVISION OF ENGINEERING SERVICES STRUCTURE DESIGN DESIGN BRANCH X	BRIDGE NO. / POST MILE 5.07	SOUND WALL 303R LOG OF TEST BORINGS 2 OF 5
FUNCTIONAL SUPERVISOR NAME: S. Wei	DRAWN BY: F. Nguyen, I.G-Remmen CHECKED BY: B. Gutierrez	FIELD INVESTIGATION BY: TM Liao/J. Klamecki			

OGS CIVIL LOG OF TEST BORINGS SHEET

ORIGINAL SCALE IN INCHES FOR REDUCED PLANS 0 1 2 3

UNIT: 3643
PROJECT NUMBER & PHASE: 11000200511 CONTRACT NO.: 11-2T1821

DISREGARD PRINTS BEARING EARLIER REVISION DATES 4-26-12

REVISION DATES | SHEET 7 | OF 10

FILE => SW303-z-ltb02.dgn

USERNAME => s127400 DATE PLOTTED => 13-SEP-2012 TIME PLOTTED => 08:05

REGISTERED CIVIL ENGINEER 12-8-11

06-25-12
PLANS APPROVAL DATE

REGISTERED PROFESSIONAL ENGINEER Cuong Nguyen No. C32414 Exp. 12-31-12 CIVIL STATE OF CALIFORNIA

The State of California or its officers or agents shall not be responsible for the accuracy or completeness of electronic copies of this plan sheet.

REFERENCE: CALTRANS SOIL & ROCK LOGGING, CLASSIFICATION, AND PRESENTATION MANUAL (JUNE 2007)

CEMENTATION

Description	Criteria
Weak	Crumbles or breaks with handling or little finger pressure.
Moderate	Crumbles or breaks with considerable finger pressure.
Strong	Will not crumble or break with finger pressure.

CONSISTENCY OF COHESIVE SOILS

Description	Unconfined Compressive Strength (tsf)	Pocket Penetrometer Measurement (tsf)	Torvane Measurement (tsf)	Field Approximation
Very Soft	< 0.25	< 0.25	< 0.12	Easily penetrated several inches by fist
Soft	0.25 to 0.50	0.25 to 0.50	0.12 to 0.25	Easily penetrated several inches by thumb
Medium Stiff	0.50 to 1.0	0.50 to 1.0	0.25 to 0.50	Penetrated several inches by thumb with moderate effort
Stiff	1 to 2	1 to 2	0.50 to 1.0	Readily indented by thumb but penetrated only with great effort
Very Stiff	2 to 4	2 to 4	1.0 to 2.0	Readily indented by thumbnail
Hard	> 4.0	> 4.0	> 2.0	Indented by thumbnail with difficulty

BOREHOLE IDENTIFICATION

Symbol	Hole Type	Description
Size	A	Auger Boring
Size	R P	Rotary drilled boring Rotary percussion boring (air)
Size	R	Rotary drilled diamond core
Size	HD HA	Hand driven (1-inch soil tube) Hand Auger
●	D	Dynamic Cone Penetration Boring
▲	CPT	Cone Penetration Test (ASTM D 5778-95)
⬚	O	Other

Note: Size in inches.

PLASTICITY OF FINE-GRAINED SOILS

Description	Criteria
Nonplastic	A 1/8-inch thread cannot be rolled at any water content.
Low	The thread can barely be rolled and the lump cannot be formed when drier than the plastic limit.
Medium	The thread is easy to roll and not much time is required to reach the plastic limit. The thread cannot be rerolled after reaching the plastic limit. The lump crumbles when drier than the plastic limit.
High	It takes considerable time rolling and kneading to reach the plastic limit. The thread can be rerolled several times after reaching the plastic limit. The lump can be formed without crumbling when drier than the plastic limit.

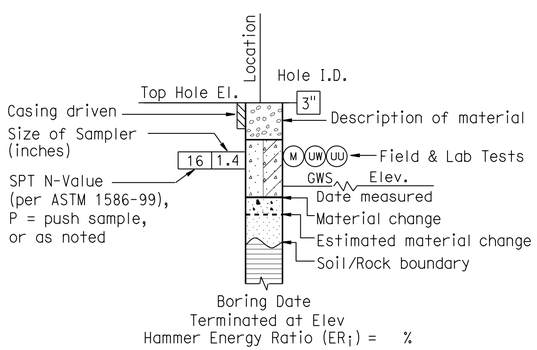

ROTARY BORING

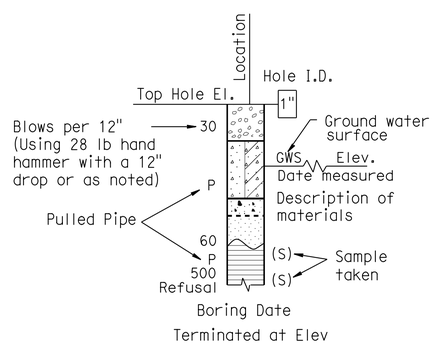

HAND BORING

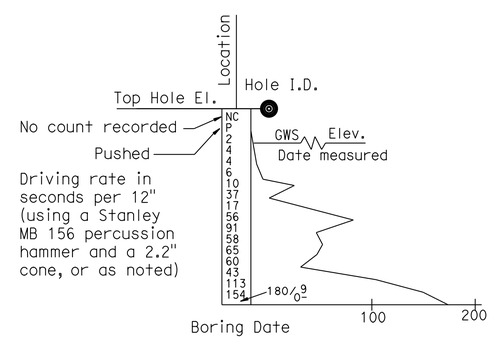

DYNAMIC CONE PENETRATION BORING

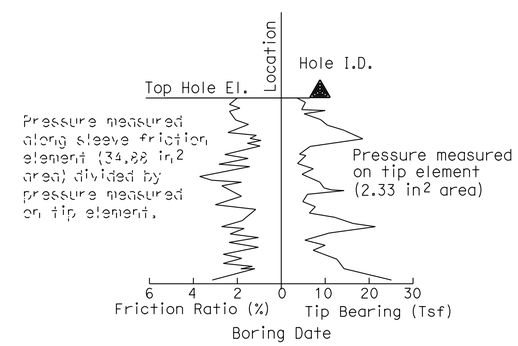

CONE PENETRATION TEST (CPT) SOUNDING

ENGINEERING SERVICES	MATERIALS AND GEOTECHNICAL SERVICES	STATE OF CALIFORNIA DEPARTMENT OF TRANSPORTATION	DIVISION OF ENGINEERING SERVICES STRUCTURE DESIGN DESIGN BRANCH X	BRIDGE NO. / POST MILE 5.07	SOUND WALL 303R LOG OF TEST BORINGS 3 OF 5
	PREPARED BY: I.G-Remmen				

GS LOTB SOIL LEGEND

ORIGINAL SCALE IN INCHES FOR REDUCED PLANS 0 1 2 3

UNIT: 3643
PROJECT NUMBER & PHASE: 11000200511
CONTRACT NO.: 11-2T1821

DISREGARD PRINTS BEARING EARLIER REVISION DATES

REVISION DATES

SHEET 8 OF 10

FILE => SW303-z-1tb03.dgn

USERNAME => s127400 DATE PLOTTED => 13-SEP-2012 TIME PLOTTED => 08:05

REFERENCE: CALTRANS SOIL & ROCK LOGGING, CLASSIFICATION, AND PRESENTATION MANUAL (JUNE 2007)

DIST	COUNTY	ROUTE	KILOMETER POST TOTAL PROJECT	SHEET No	TOTAL SHEETS
11	SD	805	4.7/5.6	649	650

REGISTERED CIVIL ENGINEER 12-8-11

06-25-12
PLANS APPROVAL DATE

REGISTERED PROFESSIONAL ENGINEER Cuong Nguyen No. C32414 Exp. 12-31-12 CIVIL STATE OF CALIFORNIA

The State of California or its officers or agents shall not be responsible for the accuracy or completeness of electronic copies of this plan sheet.

GROUP SYMBOLS AND NAMES

Graphic/Symbol	Group Names	Graphic/Symbol	Group Names
GW	Well-graded GRAVEL Well-graded GRAVEL with SAND	CL	Lean CLAY Lean CLAY with SAND Lean CLAY with GRAVEL SANDY lean CLAY SANDY lean CLAY with GRAVEL GRAVELLY lean CLAY GRAVELLY lean CLAY with SAND
GP	Poorly graded GRAVEL Poorly graded GRAVEL with SAND		
GW-GM	Well-graded GRAVEL with SILT Well-graded GRAVEL with SILT and SAND	CL-ML	SILTY CLAY SILTY CLAY with SAND SILTY CLAY with GRAVEL SANDY SILTY CLAY SANDY SILTY CLAY with GRAVEL GRAVELLY SILTY CLAY GRAVELLY SILTY CLAY with SAND
GW-GC	Well-graded GRAVEL with CLAY (or SILTY CLAY) Well-graded GRAVEL with CLAY and SAND (or SILTY CLAY and SAND)		
GP-GM	Poorly graded GRAVEL with SILT Poorly graded GRAVEL with SILT and SAND	ML	SILT SILT with SAND SILT with GRAVEL SANDY SILT SANDY SILT with GRAVEL GRAVELLY SILT GRAVELLY SILT with SAND
GP-GC	Poorly graded GRAVEL with CLAY (or SILTY CLAY) Poorly graded GRAVEL with CLAY and SAND (or SILTY CLAY and SAND)		
GM	SILTY GRAVEL SILTY GRAVEL with SAND	OL	ORGANIC lean CLAY ORGANIC lean CLAY with SAND ORGANIC lean CLAY with GRAVEL SANDY ORGANIC lean CLAY SANDY ORGANIC lean CLAY with GRAVEL GRAVELLY ORGANIC lean CLAY GRAVELLY ORGANIC lean CLAY with SAND
GC	CLAYEY GRAVEL CLAYEY GRAVEL with SAND		
GC-GM	SILTY, CLAYEY GRAVEL SILTY, CLAYEY GRAVEL with SAND	OL	ORGANIC SILT ORGANIC SILT with SAND ORGANIC SILT with GRAVEL SANDY ORGANIC SILT SANDY ORGANIC SILT with GRAVEL GRAVELLY ORGANIC SILT GRAVELLY ORGANIC SILT with SAND
SW	Well-graded SAND Well-graded SAND with GRAVEL		
SP	Poorly graded SAND Poorly graded SAND with GRAVEL	CH	Fat CLAY Fat CLAY with SAND Fat CLAY with GRAVEL SANDY fat CLAY SANDY fat CLAY with GRAVEL GRAVELLY fat CLAY GRAVELLY fat CLAY with SAND
SW-SM	Well-graded SAND with SILT Well-graded SAND with SILT and GRAVEL		
SW-SC	Well-graded SAND with CLAY (or SILTY CLAY) Well-graded SAND with CLAY and GRAVEL (or SILTY CLAY and GRAVEL)	MH	Elastic SILT Elastic SILT with SAND Elastic SILT with GRAVEL SANDY elastic SILT SANDY elastic SILT with GRAVEL GRAVELLY elastic SILT GRAVELLY elastic SILT with SAND
SP-SM	Poorly graded SAND with SILT Poorly graded SAND with SILT and GRAVEL		
SP-SC	Poorly graded SAND with CLAY (or SILTY CLAY) Poorly graded SAND with CLAY and GRAVEL (or SILTY CLAY and GRAVEL)	OH	ORGANIC fat CLAY ORGANIC fat CLAY with SAND ORGANIC fat CLAY with GRAVEL SANDY ORGANIC fat CLAY SANDY ORGANIC fat CLAY with GRAVEL GRAVELLY ORGANIC fat CLAY GRAVELLY ORGANIC fat CLAY with SAND
SM	SILTY SAND SILTY SAND with GRAVEL		
SC	CLAYEY SAND CLAYEY SAND with GRAVEL	OH	ORGANIC elastic SILT ORGANIC elastic SILT with SAND ORGANIC elastic SILT with GRAVEL SANDY ORGANIC elastic SILT SANDY ORGANIC elastic SILT with GRAVEL GRAVELLY ORGANIC elastic SILT GRAVELLY ORGANIC elastic SILT with SAND
SC-SM	SILTY, CLAYEY SAND SILTY, CLAYEY SAND with GRAVEL		
PT	PEAT	OL/OH	ORGANIC SOIL ORGANIC SOIL with SAND ORGANIC SOIL with GRAVEL SANDY ORGANIC SOIL SANDY ORGANIC SOIL with GRAVEL GRAVELLY ORGANIC SOIL GRAVELLY ORGANIC SOIL with SAND
	COBBLES COBBLES and BOULDERS BOULDERS		

FIELD AND LABORATORY TESTING

- (C) Consolidation (ASTM D 2435)
- (CL) Collapse Potential (ASTM D 5333)
- (CP) Compaction Curve (CTM 216)
- (CR) Corrosivity Testing (CTM 643, CTM 422, CTM 417)
- (CU) Consolidated Undrained Triaxial (ASTM D 4767)
- (DS) Direct Shear (ASTM D 3080)
- (EI) Expansion Index (ASTM D 4829)
- (M) Moisture Content (ASTM D 2216)
- (OC) Organic Content-% (ASTM D 2974)
- (P) Permeability (CTM 220)
- (PA) Particle Size Analysis (ASTM D 422)
- (PI) Plasticity Index (AASHTO T 90) Liquid Limit (AASHTO T 89)
- (PL) Point Load Index (ASTM D 5731)
- (PM) Pressure Meter
- (PP) Pocket Penetrometer
- (R) R-Value (CTM 301)
- (SE) Sand Equivalent (CTM 217)
- (SG) Specific Gravity (AASHTO T 100)
- (SL) Shrinkage Limit (ASTM D 427)
- (SW) Swell Potential (ASTM D 4546)
- (TV) Pocket Torvane
- (UC) Unconfined Compression-Soil (ASTM D 2166) Unconfined Compression-Rock (ASTM D 2938)
- (UU) Unconsolidated Undrained Triaxial (ASTM D 2850)
- (UW) Unit Weight (ASTM D 4767)
- (VS) Vane Shear (AASHTO T 223)

APPARENT DENSITY OF COHESIONLESS SOILS

Description	SPT N_{60} (Blows / 12 inches)
Very loose	0 - 4
Loose	5 - 10
Medium Dense	11 - 30
Dense	31 - 50
Very Dense	> 50

MOISTURE

Description	Criteria
Dry	Absence of moisture, dusty, dry to the touch
Moist	Damp but no visible water
Wet	Visible free water, usually soil is below water table

PERCENT OR PROPORTION OF SOILS

Description	Criteria
Trace	Particles are present but estimated to be less than 5%
Few	5 to 10%
Little	15 to 25%
Some	30 to 45%
Mostly	50 to 100%

PARTICLE SIZE

Description		Size
Boulder		> 12"
Cobble		3" to 12"
Gravel	Coarse	3/4" to 3"
	Fine	No. 4 to 3/4"
Sand	Coarse	No. 10 to No. 4
	Medium	No. 40 to No. 10
	Fine	No. 200 to No. 40

ENGINEERING SERVICES

MATERIALS AND GEOTECHNICAL SERVICES
PREPARED BY: I.G-Remmen

STATE OF CALIFORNIA DEPARTMENT OF TRANSPORTATION

DIVISION OF ENGINEERING SERVICES STRUCTURE DESIGN
DESIGN BRANCH X

BRIDGE NO.
POST MILE 5.07

SOUND WALL 303R
LOG OF TEST BORINGS 4 OF 5

GS LOTB SOIL LEGEND

ORIGINAL SCALE IN INCHES FOR REDUCED PLANS 0 1 2 3

UNIT: 3643
PROJECT NUMBER & PHASE: 11000200511
CONTRACT NO.: 11-2T1821

DISREGARD PRINTS BEARING EARLIER REVISION DATES

REVISION DATES

SHEET 9 OF 10

FILE => SW303-z-ltb04.dgn

USERNAME => s127400 DATE PLOTTED => 13-SEP-2012 TIME PLOTTED => 08:05

DIST	COUNTY	ROUTE	KILOMETER POST TOTAL PROJECT	SHEET No	TOTAL SHEETS
11	SD	805	4.7/5.6	650	650

REGISTERED CIVIL ENGINEER 12-8-11

06-25-12
PLANS APPROVAL DATE

REGISTERED PROFESSIONAL ENGINEER Cuong Nguyen No. C32414 Exp. 12-31-12 CIVIL STATE OF CALIFORNIA

The State of California or its officers or agents shall not be responsible for the accuracy or completeness of electronic copies of this plan sheet.

REFERENCE: CALTRANS SOIL & ROCK LOGGING, CLASSIFICATION, AND PRESENTATION MANUAL (JUNE 2007)

PERCENT CORE RECOVERY (REC) & ROCK QUALITY DESIGNATION (RQD)

$$REC = \frac{\sum \text{Length of the recovered core pieces (inches)}}{\text{Total length of core run (inches)}} \times 100\%$$

$$RQD = \frac{\sum \text{Length of intact core pieces} \geq 4''}{\text{Total length of core run (inches)}} \times 100\%$$

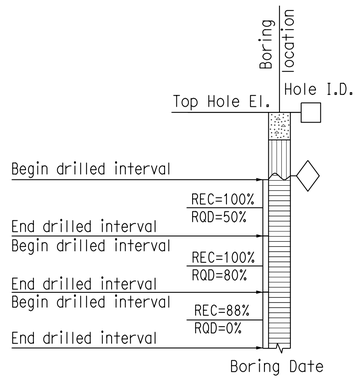

RELATIVE STRENGTH OF INTACT ROCK

Term	Uniaxial Compressive Strength (PSI)
Extremely Strong	> 30,000
Very Strong	14,500 - 30,000
Strong	7,000 - 14,500
Medium Strong	3,500 - 7,000
Weak	700 - 3,500
Very Weak	150 - 700
Extremely Weak	< 150

BEDDING SPACING

Description	Thickness / Spacing
Massive	Greater than 10 ft
Very thickly bedded	3 to 10 ft
Thickly bedded	1 to 3 ft
Moderately bedded	3-5/8" to 1 ft
Thinly bedded	1-1/4" to 3-5/8"
Very thinly bedded	3/8" to 1-1/4"
Laminated	Less than 3/8"

LEGEND OF ROCK MATERIALS

- IGNEOUS ROCK
- SEDIMENTARY ROCK
- METAMORPHIC ROCK

ROCK HARDNESS

Description	Criteria
Extremely Hard	Specimen cannot be scratched with a pocket knife or sharp pick; can only be chipped with repeated heavy hammer blows.
Very Hard	Specimen cannot be scratched with a pocket knife or sharp pick. Breaks with repeated heavy hammer blows.
Hard	Specimen can be scratched with a pocket knife or sharp pick with difficulty (heavy pressure). Heavy hammer blows required to break specimen.
Moderately Hard	Specimen can be scratched with pocket knife or sharp pick with light or moderate pressure. Core breaks with moderate hammer blows.
Moderately Soft	Specimen can be grooved 1/6" deep with a pocket knife or sharp pick with moderate or heavy pressure. Breaks with light hammer blow or heavy manual pressure.
Soft	Specimen can be grooved or gouged easily by a pocket knife or sharp pick with light pressure, can be scratched with fingernail. Breaks with light to moderate manual pressure.
Very Soft	Specimen can be readily indented, grooved or gouged with fingernail, or carved with a pocket knife. Breaks with light manual pressure.

FRACTURE DENSITY

Description	Observed Fracture Density
Unfractured	No fractures.
Very slightly fractured	Lengths greater than 3 feet.
Slightly fractured	Lengths from 1 to 3 feet with few lengths less than 1 foot or greater than 3 feet.
Moderately fractured	Lengths mostly in 4" to 1 foot range with most lengths about 8"
Intensely fractured	Lengths average from 1 to 4" with scattered fragmented intervals with lengths less than 4"
Very intensely fractured	Mostly chips and fragments with a few scattered short core lengths.

Combination descriptors (such as "Very intensely to intensely fractured") are used where equal distribution of both fracture density characteristics is present over a significant interval or exposure, or where characteristics are "in between" the descriptor definitions. Only two adjacent descriptors may be combined.

WEATHERING DESCRIPTORS FOR INTACT ROCK

Description	Diagnostic features					General Characteristics
	Chemical Weathering-Discoloration and/or oxidation		Mechanical Weathering-Grain boundary conditions (disaggregation) primarily for granitics and some coarse-grained sediments	Texture and Solutioning		
	Body of Rock	Fracture Surfaces		Texture	Solutioning	
Fresh	No discoloration, not oxidized.	No discoloration or oxidation.	No separation, intact (tight).	No change.	No solutioning.	Hammer rings when crystalline rocks are struck.
Slightly Weathered	Discoloration or oxidation is limited to surface of, or short distance from, fractures; some feldspar crystals are dull.	Minor to complete discoloration or oxidation of most surfaces.	No visible separation, intact (tight).	Preserved.	Minor leaching of some soluble minerals may be noted.	Hammer rings when crystalline rocks are struck. Body of rock not weakened.
Moderately Weathered	Discoloration or oxidation extends from fractures usually throughout; Fe-Mg minerals are "rusty," feldspar crystals are "cloudy."	All fracture surfaces are discolored or oxidized.	Partial separation of boundaries visible.	Generally preserved.	Soluble minerals may be mostly leached.	Hammer does not ring when rock is struck. Body of rock is slightly weakened.
Intensely Weathered	Discoloration or oxidation throughout; all feldspars and Fe-Mg minerals are altered to clay to some extent; or chemical alteration produces in-situ disaggregation, see grain boundary conditions.	All fracture surfaces are discolored or oxidized, surfaces friable.	Partial separation, rock is friable; in semiarid conditions granitics are disaggregated.	Texture altered by chemical disintegration (hydration, argillation).	Leaching of soluble minerals may be complete.	Dull sound when struck with hammer, usually can be broken with moderate to heavy manual pressure or by light hammer blow without reference to planes of weakness such as incipient or hairline fractures, or veinlets. Rock is significantly weakened.
Decomposed	Discolored or oxidized throughout, but resistant minerals such as quartz may be unaltered; all feldspars and Fe-Mg minerals are completely altered to clay.		Complete separation of grain boundaries (disaggregated).	Resembles a soil, partial or complete remnant rock structure may be preserved; leaching of soluble minerals usually complete.		Can be granulated by hand. Resistant minerals such as quartz may be present as "stringers" or "dikes."

Combination descriptors (such as "slightly weathered to fresh") are permissible where equal distribution of both weathering characteristics is present over significant intervals or where characteristics present are "in between" the diagnostic feature. However, combination descriptors should not be used where significant, identifiable zones can be delineated. Only two adjacent descriptors may be combined. "Very intensely weathered" is the combination descriptor for "intensely weathered to decomposed."

ENGINEERING SERVICES

MATERIALS AND GEOTECHNICAL SERVICES
PREPARED BY: I.G-Remmen

STATE OF CALIFORNIA DEPARTMENT OF TRANSPORTATION

DIVISION OF ENGINEERING SERVICES STRUCTURE DESIGN
DESIGN BRANCH X

BRIDGE NO.
POST MILE 5.07

SOUND WALL NO. 303R
LOG OF TEST BORINGS 5 OF 5

GS LOTB SOIL LEGEND

ORIGINAL SCALE IN INCHES FOR REDUCED PLANS 0 1 2 3

UNIT: 3643
PROJECT NUMBER & PHASE: 11000200511
CONTRACT NO.: 11-2T1821

DISREGARD PRINTS BEARING EARLIER REVISION DATES

REVISION DATES | SHEET 10 OF 10

FILE => SW303-z-ltb05.dgn

USERNAME => s127400 DATE PLOTTED => 13-SEP-2012 TIME PLOTTED => 08:05