Dist	COUNTY	ROUTE	POST MILES TOTAL PROJECT	SHEET No.	TOTAL SHEETS
11	SD	805	4.7/5.6	18	650

REGISTERED CIVIL ENGINEER 6/1/12 DATE

06-25-12
PLANS APPROVAL DATE

REGISTERED PROFESSIONAL ENGINEER PAUL E. KOSINSKI No. C73254 Exp. 12/31/12 CIVIL STATE OF CALIFORNIA

THE STATE OF CALIFORNIA OR ITS OFFICERS OR AGENTS SHALL NOT BE RESPONSIBLE FOR THE ACCURACY OR COMPLETENESS OF SCANNED COPIES OF THIS PLAN SHEET.

DOKKEN ENGINEERING
5675 RUFFIN Rd
SUITE 250
SAN DIEGO, CA 92123

SANDAG
401 B St
SUITE 800
SAN DIEGO, CA 92101

1 REVISED PER ADDENDUM No. 1 DATED NOVEMBER 19, 2012

NOTE:

FOR ACCURATE RIGHT OF WAY DATA, CONTACT RIGHT OF WAY ENGINEERING AT THE DISTRICT OFFICE.

LEGEND (THIS SHEET ONLY):

- (A) "NC" 50+00.00 POT= "PL" 17+38.77 POT
- (B) "NC" 50+21.47 BC
- (C) "PL" 17+66.65 BC
- (D) BB "PL" 19+00 PALOMAR St OC Br No. 57-1222 (SEE STRUCTURE PLANS)
- (E) "PL" 19+69.68 EC
- (F) "PL" 20+26.22 POT= "A1" 298+07.40 POT= "DAR" 298+07.40 POT
- (G) N73°45'48"E 206.14'
- (H) EB "PL" 21+50 PALOMAR St OC Br No. 57-1222 (SEE STRUCTURE PLANS)
- (I) "PL" 21+75.82 BC
- (J) 36.42' Lt "A1" 301+50 ECB#6 (60C Mod 2) BCB#12 (60 Mod)
- (K) 36.42' Rt "A1" 301+50 ECB#2 (60C Mod2) BCB#11 (60 Mod)
- (L) "A1" 301+48.19 36.39' Lt CB ANGLE POINT
- (M) "A1" 301+48.19 36.39' Rt CB ANGLE POINT
- (N) N85°23'46"E 414.80'
- (O) 123.42' Lt "A1" 300+53.16 END RW No. 299L Beg RW No. 301L
- (P) 44.5' Rt "PL" 18+57.05 Beg TAPER END A1-6 Mod CURB Beg A2-6 CURB
- (Q) 70.67'
- (R) 37.5' Rt "PL" 18+97.05 END TAPER
- (S) 42.5' Lt "PL" 18+95.74 END A2-6 CURB END SW
- (T) 37.5' Rt "PL" 19+03.47 END A2-6 CURB END SW
- (U) "DAR" 299+28.72 Beg CB (SEE STRUCTURE PLANS)
- (V) 70.67'
- (W) 32.13' Lt "A1" 297+50 ECB#5 (60C Mod 3) BCB#6 (60C Mod 2)
- (X) 59.63' Rt "PLA" 20' 77.52' Rt "PLA" 20' CL-6 FENCE
- (Y) 167.11' Lt "A1" 296+09.21 END CL-6 FENCE
- (Z) 76.69' Rt "PL" 18+19.81 END CL-4 FENCE
- (AA) EXTEND FENCE (TOTAL 36)
- (AB) 118.02' Lt "A1" 297+42.12 ECB#7 (60C Mod 4) BCB#8 (60C Mod 2)

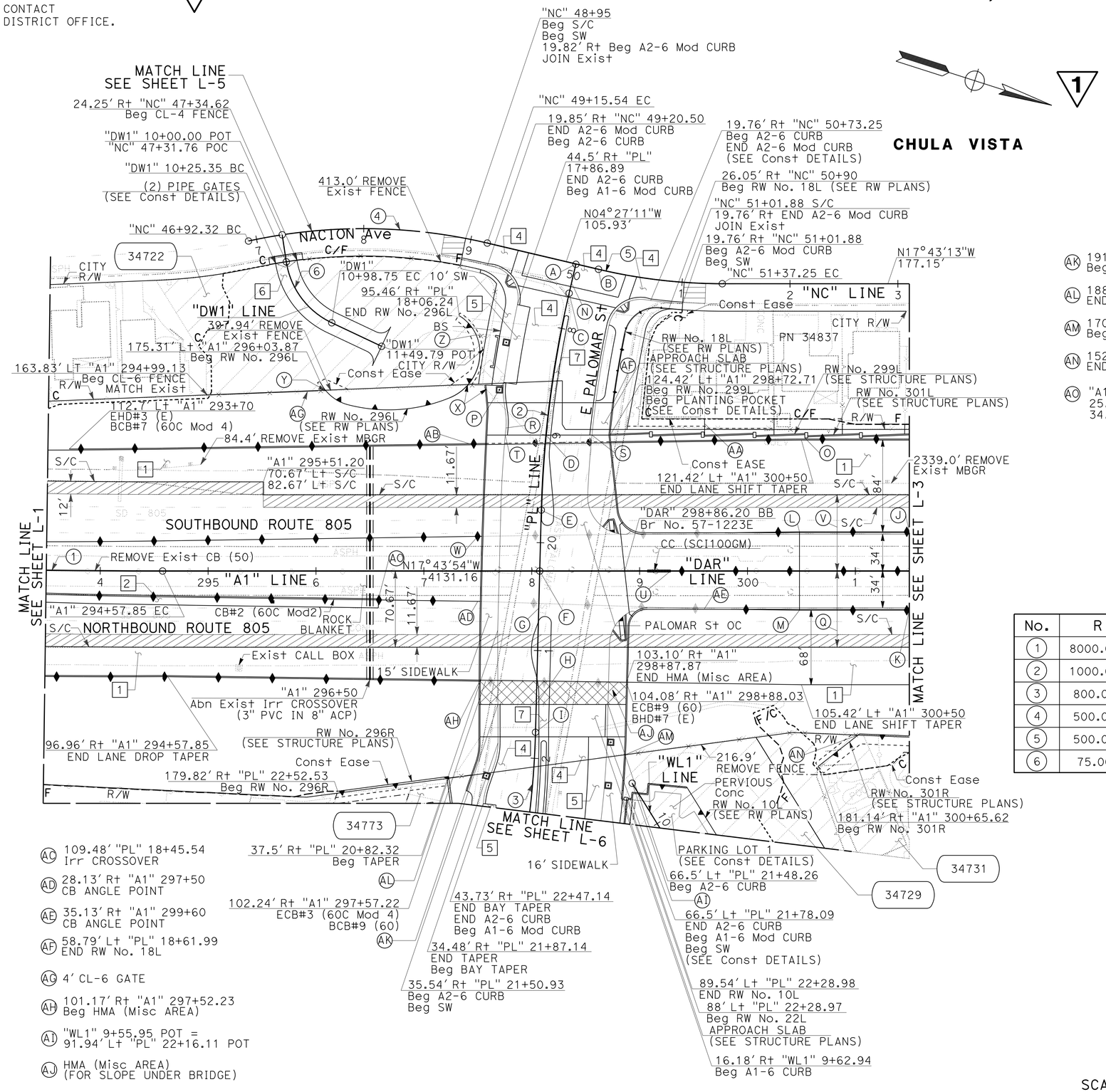

- (AC) 109.48' "PL" 18+45.54 Irr CROSSOVER
- (AD) 28.13' Rt "A1" 297+50 CB ANGLE POINT
- (AE) 35.13' Rt "A1" 299+60 CB ANGLE POINT
- (AF) 58.79' Lt "PL" 18+61.99 END RW No. 18L
- (AG) 4' CL-6 GATE
- (AH) 101.17' Rt "A1" 297+52.23 Beg HMA (Misc AREA)
- (AI) "WL1" 9+55.95 POT = 91.94' Lt "PL" 22+16.11 POT
- (AJ) HMA (Misc AREA) (FOR SLOPE UNDER BRIDGE)
- (AK) 191.7' Rt "A1" 297+23.12 Beg CL-6 FENCE
- (AL) 188.9' Rt "A1" 297+44.06 END CL-6 FENCE
- (AM) 170.4' Rt "A1" 298+86.91 Beg CL-6 FENCE
- (AN) 152.2' Rt "A1" 301+02.42 END CL-6 FENCE
- (AO) "A1" 296+57.84 25.73' Rt S/C 34.23' Rt S/C

CURVE DATA

No.	R	Δ	T	L
1	8000.00'	18°11'23"	1280.66'	2539.77'
2	1000.00'	11°37'58"	101.87'	203.03'
3	800.00'	28°36'27"	203.97'	399.44'
4	500.00'	25°34'45"	113.50'	223.22'
5	500.00'	13°16'02"	58.15'	115.78'
6	75.00'	56°04'24"	39.94'	73.40'

SCALE: 1" = 50'

LAYOUT L-2

STATE OF CALIFORNIA - DEPARTMENT OF TRANSPORTATION
Caltrans

CONSULTANT FUNCTIONAL SUPERVISOR: GERARD LUMABAS
CALCULATED-DESIGNED BY: MATTHEW P. MAECHLER
CHECKED BY: DARWIN CRUZ
REVISED BY / DATE REVISED

LAST REVISION 06-22-12
DATE PLOTTED => 15-NOV-2012
TIME PLOTTED => 14:50

NOTE:

FOR ACCURATE RIGHT OF WAY DATA, CONTACT RIGHT OF WAY ENGINEERING AT THE DISTRICT OFFICE.

1 REVISED PER ADDENDUM No. 1 DATED NOVEMBER 19, 2012

Dist	COUNTY	ROUTE	POST MILES TOTAL PROJECT	SHEET No.	TOTAL SHEETS
11	SD	805	4.7/5.6	19	650

REGISTERED CIVIL ENGINEER 6/1/12 DATE

06-25-12
PLANS APPROVAL DATE

REGISTERED PROFESSIONAL ENGINEER PAUL E. KOSINSKI No. C73254 Exp. 12/31/12 CIVIL STATE OF CALIFORNIA

THE STATE OF CALIFORNIA OR ITS OFFICERS OR AGENTS SHALL NOT BE RESPONSIBLE FOR THE ACCURACY OR COMPLETENESS OF SCANNED COPIES OF THIS PLAN SHEET.

DOKKEN ENGINEERING
5675 RUFFIN Rd
SUITE 250
SAN DIEGO, CA 92123

SANDAG
401 B St
SUITE 800
SAN DIEGO, CA 92101

1

MINOR IMPROVEMENTS TO BE PROTECTED IN PLACE

No.	PARCEL No.	ITEM DESCRIPTION
1	34744	Exist CHIMNEY
2	34745	Exist PATIO AND Conc SLAB

LEGEND (THIS SHEET ONLY):

(A) "A1" 305+19
ECB#10 (60)
BCB#35 (60P) (SEE SIGN DETAILS)

(B) "A1" 305+31
ECB#35 (60P) (SEE SIGN DETAILS)
BCB#36 (60)

(C) "A1" 310+24
ECB#36 (60)
BCB#19 (60GA (Mod)) (SEE Const DETAILS)

(D) "A1" 310+56
ECB#19 (60GA (Mod)) (SEE Const DETAILS)
BCB#20 (60)

(E) "A1" 312+04
ECB#20 (60)
BCB#23 (60GA (Mod)) (SEE Const DETAILS)

(F) "A1" 312+36
ECB#23 (60GA (Mod)) (SEE Const DETAILS)
BCB#24 (60)

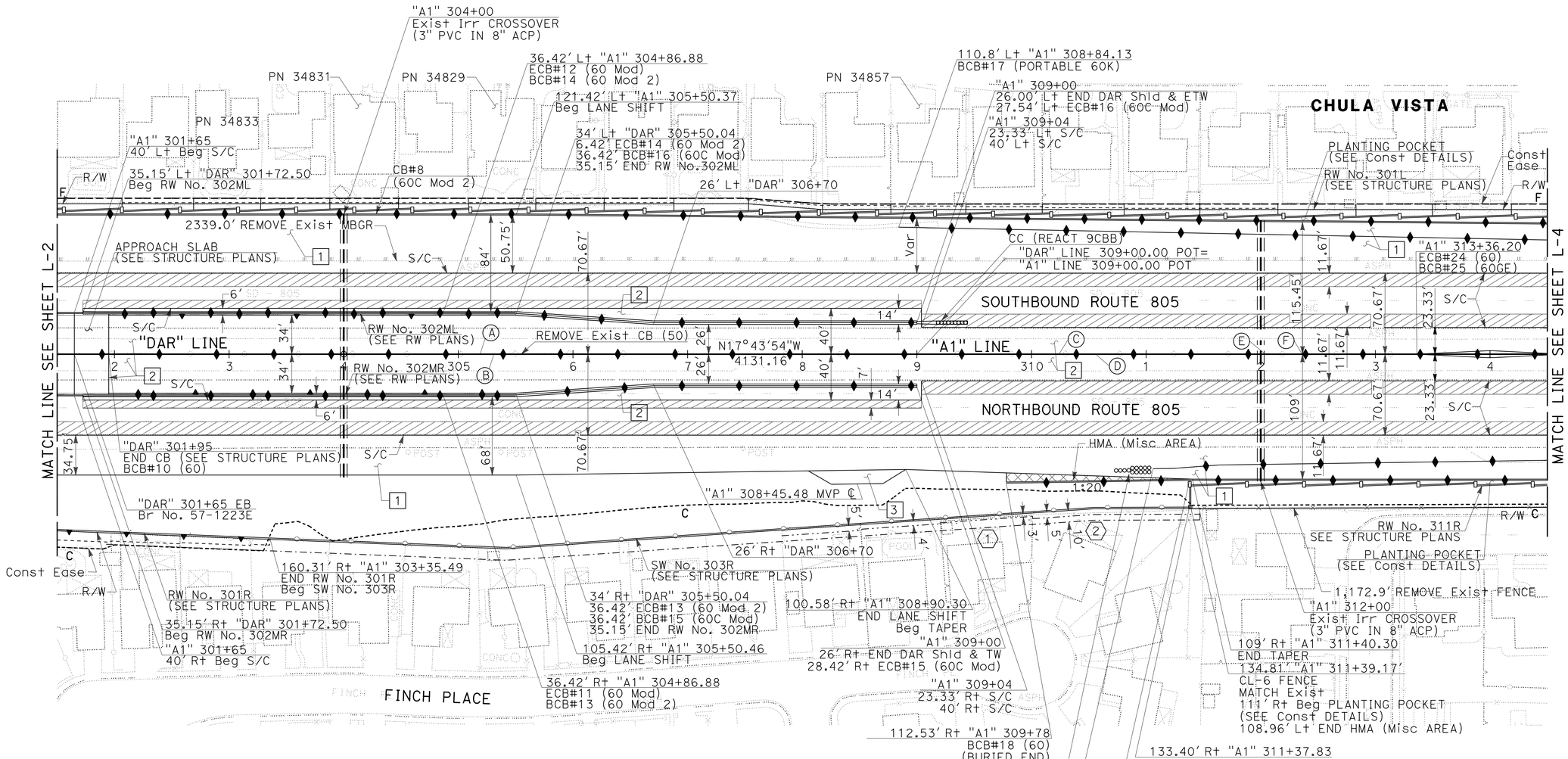

SCALE: 1" = 50'

LAYOUT

L-3

STATE OF CALIFORNIA - DEPARTMENT OF TRANSPORTATION

Caltrans

CONSULTANT FUNCTIONAL SUPERVISOR: GERARD LUMABAS

CALCULATED-DESIGNED BY: MATTHEW P. MAECHLER

CHECKED BY: DARWIN CRUZ

REVISED BY / DATE REVISED

LAST REVISION 06-27-12 | DATE PLOTTED => 15-NOV-2012 | TIME PLOTTED => 14:50

1 REVISED PER ADDENDUM No. 1 DATED NOVEMBER 19, 2012

Dist	COUNTY	ROUTE	POST MILES TOTAL PROJECT	SHEET No.	TOTAL SHEETS
11	SD	805	4.7/5.6	321	650

REGISTERED CIVIL ENGINEER 6/1/12 DATE

06-25-12
PLANS APPROVAL DATE

REGISTERED PROFESSIONAL ENGINEER PAUL E. KOSINSKI No. C73254 Exp. 12/31/12 CIVIL STATE OF CALIFORNIA

THE STATE OF CALIFORNIA OR ITS OFFICERS OR AGENTS SHALL NOT BE RESPONSIBLE FOR THE ACCURACY OR COMPLETENESS OF SCANNED COPIES OF THIS PLAN SHEET.

1

DOKKEN ENGINEERING
5675 RUFFIN Rd
SUITE 250
SAN DIEGO, CA 92123

SANDAG
401 B St
SUITE 800
SAN DIEGO, CA 92101

MINOR CONCRETE (MISCELLANEOUS CONSTRUCTION)

SHEET NUMBER	LINE	L+/R+	STATION	LF (N)	SQFT (N)	CY	DESCRIPTION
L-2	"NC"	R+	48+95.00 TO 49+20.50	-	123.61	1.60	SIDEWALK
L-2	"PL"	L+	17+95.17 TO 18+64.19	-	532.60	6.60	SIDEWALK
L-2	"PL"	R+	17+86.89 TO 18+74.96	-	1,008.34	12.50	SIDEWALK
L-2	"PL"	L+	21+78.09 TO 22+21.90	-	908.09	11.20	SIDEWALK
L-2	"DW1"	-	10+18.76 TO 10+25.35	-	196.58	2.50	SIDEWALK
L-2, L-6	"PL"	R+	21+81.17 TO 23+11.59	-	1,534.43	19.00	SIDEWALK
L-5	"PL"	R+	12+52.37 TO 12+58.48	-	24.48	0.40	SIDEWALK
L-5	"PL"	R+	12+59.22 TO 16+81.74	-	3,185.28	39.30	SIDEWALK
L-5	"PL"	L+	13+08.48 TO 14+54.72	-	1,398.60	17.30	SIDEWALK
L-5	"PL"	L+	14+79.51 TO 16+79.07	-	2,314.43	28.60	SIDEWALK
L-5	"NC"	L+	48+95.00 TO 49+20.50	-	132.61	1.70	SIDEWALK
L-6	"PL"	R+	25+19.95 TO 27+44.10	-	1,104.49	13.70	SIDEWALK
L-6	"PL"	L+	25+30.04 TO 26+08.02	-	694.60	8.60	SIDEWALK
L-6	"PL"	R+	28+17.67 TO 28+29.09	-	53.28	0.70	SIDEWALK
L-6	"OR"	L+	69+37.63 TO 69+50.75	-	61.82	0.80	SIDEWALK
L-6	"OR"	R+	69+38.27 TO 69+49.69	-	53.28	0.70	SIDEWALK
L-6	"RV"	L+	58+99.15 TO 59+25.75	-	131.88	1.70	SIDEWALK
L-6	"RV"	R+	59+03.75 TO 59+38.82	-	171.64	2.20	SIDEWALK
L-6	"RV"	L+	60+97.06 TO 62+91.56	-	1,533.85	19.00	SIDEWALK
L-6	"RV"	R+	61+18.41 TO 62+86.95	-	1,108.56	13.70	SIDEWALK
L-6	"RV"	L+	65+43.32 TO 66+36.88	-	720.18	8.90	SIDEWALK
L-6	"RV"	R+	65+20.01 TO 66+36.88	-	995.24	12.30	SIDEWALK
L-6	"PL"	L+	26+45.00 TO 29+29.02	-	1,427.03	17.70	SIDEWALK
L-6	"WL1"	-	PARKING LOT	-	187.79	2.40	SIDEWALK
L-6	"PL"	R+	24+04.36 TO 24+30.79	-	248.35	3.10	SIDEWALK
L-6, L-7	"RV2"	R+	10+66.75 TO 17+29.92	-	9,904.70	122.20	SIDEWALK
L-7	"OL"	L+	92+92.62 TO 93+27.00	-	196.89	2.50	SIDEWALK
L-7	"OL"	L+	91+06.86 TO 92+67.37	-	1,572.96	19.40	SIDEWALK
			SIDEWALK SUBTOTAL	0.00	31,525.59	390.30	
L-5	"PL"	R+	11+82.38 TO 12+10.82	-	146.42	1.81	CASE C
L-5	"PL"	L+	12+38.87 TO 12+55.37	-	92.00	1.14	CASE C
L-5	"PL"	R+	12+57.90 TO 12+63.47	-	126.32	1.56	CASE C
L-5	"PL"	L+	14+36.40 TO 14+48.60	-	69.71	0.86	CASE A
L-5	"PL"	L+	14+98.21 TO 15+09.91	-	69.51	0.86	CASE A
L-6	"PL"	R+	25+09.32 TO 25+23.58	-	111.90	1.37	CASE C
L-6	"PL"	R+	27+42.11 TO 27+60.61	-	126.40	1.56	CASE C
L-6	"PL"	R+	28+01.57 TO 28+19.79	-	127.16	1.57	CASE C
L-6	"RV"	R+	62+76.97 TO 62+86.33	-	69.89	0.86	CASE A
L-7	"RV2"	R+	12+58.24 TO 12+65.24	-	53.69	0.66	CASE F
L-7	"RV2"	R+	13+98.91 TO 14+05.91	-	53.69	0.66	CASE F
L-7	"RV2"	R+	15+39.57 TO 15+46.57	-	53.69	0.66	CASE F
L-7	"RV2"	R+	16+80.23 TO 16+87.23	-	53.69	0.66	CASE F
L-7	"OL"	L+	92+58.37 TO 92+67.95	-	61.68	0.76	CASE A
L-7	"OL"	L+	92+92.04 TO 93+02.00	-	61.68	0.76	CASE A
			CURB RAMP SUBTOTAL	0.00	1,277.43	15.75	
L-5	"PC"	R+	40+93.98 TO 41+15.35	-	193.38	3.28	DRIVEWAY
L-5	"PC"	R+	41+18.86 TO 41+29.97	-	99.45	1.69	DRIVEWAY
L-5	"PC"	L+	41+10.86 TO 41+40.08	-	308.28	5.23	DRIVEWAY
			DRIVEWAY SUBTOTAL	0.00	601.11	10.20	
L-6	"RV"	L+	63+58.87 TO 64+33.95	-	580.21	10.74	SS #8
L-6	"RV"	R+	63+58.87 TO 64+33.95	-	637.15	11.80	SS #8
			Misc CONSTRUCTION SUBTOTAL	0.00	1,217.36	22.54	

SS = STRUCTURAL SECTION

MINOR CONCRETE (MISCELLANEOUS CONSTRUCTION) Cont

SHEET NUMBER	LINE	R+/L+	STATION	LF (N)	SQFT (N)	CY	DESCRIPTION
C-34	-	-	-	186.00	-	1.72	Conc BAND
C-39	"RV"/"RV2"	L+	-	135.44	-	1.25	Conc BAND
C-40, C-42, C-45	"RV2"/"OL"	L+	-	870.25	-	8.06	Conc BAND
C-43	-	-	-	80.00	-	0.74	Conc BAND
C-44	-	-	-	44.00	-	0.41	Conc BAND
			CONCRETE BAND SUBTOTAL	1,315.69	-	12.18	
L-5	"PL"	L+	14+25.61 TO 15+22.12	-	895.44	19.40	CROSS GUTTER
L-7	"OL"	L+	92+53.00 TO 93+07.07	-	342.47	4.30	GUTTER
			GUTTER SUBTOTAL	0.00	1,237.91	23.70	
C-34	"PL"	L+	22+83.64 TO 23+91.24	-	128.04	5.55	STAIRS
			STAIRS SUBTOTAL	0.00	128.04	5.55	
			SHEET Q-2 SUBTOTAL	1,315.69	35,987.44	480.22	

(N) NOT A SEPARATE PAY ITEM FOR INFORMATION ONLY

SUMMARY OF QUANTITIES

Q-2

REVISED BY | DATE REVISED
DARWIN CRUZ | PAUL KOSINSKI
CALCULATED-DESIGNED BY | CHECKED BY
CONSULTANT FUNCTIONAL SUPERVISOR | GERARD LUMABAS
STATE OF CALIFORNIA - DEPARTMENT OF TRANSPORTATION
Caltrans

LAST REVISION 6-18-12 | DATE PLOTTED => 15-NOV-2012 | TIME PLOTTED => 14:50

Dist	COUNTY	ROUTE	POST MILES TOTAL PROJECT	SHEET No.	TOTAL SHEETS
11	SD	805	4.7/5.6	322	650

REGISTERED CIVIL ENGINEER 6/1/12 DATE

06-25-12
PLANS APPROVAL DATE

REGISTERED PROFESSIONAL ENGINEER PAUL E. KOSINSKI No. C73254 Exp. 12/31/12 CIVIL STATE OF CALIFORNIA

THE STATE OF CALIFORNIA OR ITS OFFICERS OR AGENTS SHALL NOT BE RESPONSIBLE FOR THE ACCURACY OR COMPLETENESS OF SCANNED COPIES OF THIS PLAN SHEET.

DOKKEN ENGINEERING
5675 RUFFIN Rd
SUITE 250
SAN DIEGO, CA 92123

SANDAG
401 B St
SUITE 800
SAN DIEGO, CA 92101

1 REVISED PER ADDENDUM No. 1 DATED NOVEMBER 19, 2012

1

MINOR CONCRETE (MISCELLANEOUS CONSTRUCTION) Cont

SHEET NUMBER	LINE	L+/R+	STATION	LF (N)	SQFT (N)	CY	DESCRIPTION
L-2	"PL"	RT	17+86.89 TO 18+57.06	73.29	-	3.10	A1-6 Mod
L-2	"NC"/"PL"	-	50+73.25 TO 18+95.74	153.54	-	9.10	A2-6
L-2	"NC"/"PL"	RT	49+20.50 TO 17+86.89	51.79	-	3.10	A2-6
L-2	"PL"	RT	18+57.05 TO 19+03.74	49.04	-	2.90	A2-6
L-2	"PL"	LT	21+48.26 TO 21+78.09	30.01	-	1.80	A2-6
L-2	"PL"	RT	21+50.93 TO 22+47.14	93.81	-	5.60	A2-6
L-2	"NC"	RT	48+95.00 TO 49+20.50	24.69	-	1.30	A2-6 Mod
L-2	"NC"	RT	50+73.25 TO 51+01.88	29.75	-	1.50	A2-6 Mod
L-2, L-6	"PL"	RT	22+47.14 TO 23+87.14	132.55	-	5.60	A1-6 Mod
L-2, L-6	"PL"	LT	21+78.09 TO 24+34.94	278.21	-	11.60	A1-6 Mod
L-5	"PL"	LT	16+05.00 TO 16+65.00	60.00	-	2.60	A1-6 Mod
L-5	"PL"/"NC"	-	12+52.37 TO 49+27.40	514.49	-	30.40	A2-6
L-5	"PL"/"NC"	LT	16+65.00 TO 50+91.22	84.08	-	5.00	A2-6
L-5	"NC"	LT	50+91.22 TO 51+01.88	10.23	-	0.60	A2-6 Mod
L-5	"PL"	LT	12+39.22 TO 12+55.38	17.00	-	0.90	A2-6 Mod
L-5	"NC"	LT	48+95.00 TO 49+27.37	33.18	-	1.70	A2-6 Mod
L-5	"PC"/"PL"	LT	41+45.04 TO 15+05.00	206.44	-	10.20	A2-6 Mod
L-5	"PL"/"PC"	LT	13+08.48 TO 41+45.04	231.89	-	11.50	A2-6 Mod
L-6	"PL"	LT	26+05.69 TO 26+75.69	70.04	-	3.00	A1-6 Mod
L-6	"RV"	RT	63+58.87 TO 64+33.94	83.98	-	2.20	A1-6 Mod2
L-6	"RV"	LT	63+58.87 TO 64+33.94	77.63	-	2.00	A1-6 Mod2
L-6	"PL"/"RV"	-	23+87.14 TO 59+24.52	42.76	-	2.60	A2-6
L-6	"PL"/"RV"	-	24+35.48 TO 60+90.67	99.06	-	5.90	A2-6
L-6	"RV"/"PL"	-	61+01.42 TO 26+05.69	144.75	-	8.60	A2-6
L-6	"RV"/"OR"	-	59+28.00 TO 69+37.63	295.45	-	17.50	A2-6
L-6	"PL"	LT	26+75.69 TO 29+29.02	255.04	-	15.10	A2-6
L-6	"RV"	RT	59+03.75 TO 59+28.00	24.24	-	1.20	A2-6 Mod
L-6	"RV"	LT	58+99.15 TO 59+24.52	25.37	-	1.30	A2-6 Mod
L-6	"OR"/"PL"	RT	69+38.27 TO 28+29.09	46.99	-	2.40	A2-6 Mod
L-6	"RW"/"RV"	LT	100+44.61 TO 63+58.87	77.44	-	3.90	A2-6 Mod
L-6	"RV"	LT	60+90.67 TO 63+58.87	212.71	-	10.50	A2-6 Mod
L-6	"RV"/"RW"	RT	61+01.42 TO 100+44.61	267.43	-	13.20	A2-6 Mod
L-6	"RV"/"RV1"	-	64+33.95 TO 9+89.43	321.81	-	15.90	A2-6 Mod
L-6	"RV1"/"RV"	LT	9+87.43 TO 66+36.88	428.65	-	21.20	A2-6 Mod
L-6, L-7	"RV"/"RV2"	RT	64+33.95 TO 12+29.75	258.87	-	12.80	A2-6 Mod
L-6, L-7	"RV"/"RV2"	-	66+36.88 TO 12+29.75	306.03	-	15.10	A2-6 Mod
L-6	"RV"	-	64+91.45 TO 65+35.46	138.23	-	3.10	B1-4 Mod
L-7	"RV2"/"DW3"	RT	12+29.75 TO 11+62.72	703.84	-	29.40	A1-6 Mod
L-7	"RV2"/"DW3"	LT	12+29.75 TO 11+62.72	813.60	-	34.00	A1-6 Mod
L-7	"OL"	LT	90+76.27 TO 92+68.00	203.91	-	10.10	A2-6 Mod
L-7	"OL"	LT	92+92.00 TO 93+27.00	47.18	-	2.40	A2-6 Mod
C-1, C-2	"PL"	-	15+17.85 TO 16+87.11	356.53	-	9.30	A1-6
C-2	"PL"	LT	17+87.39 TO 18+69.24	166.09	-	9.90	A2-6
C-3, C-4	"PL"	LT	21+79.91 TO 24+20.27	522.11	-	13.50	A1-6
C-3, C-4	"PL"	LT	21+83.39 TO 24+07.70	230.85	-	9.70	A1-6 Mod
C-4	"PL"	-	25+34.35 TO 27+33.27	412.96	-	10.70	A1-6
C-6	"RV"	-	65+04.45 TO 65+22.45	56.55	-	1.50	A1-6
C-8	"WL1"	RT	11+17.71 TO 12+69.84	367.51	-	15.40	A1-6 Mod
C-8	"WL1"	RT	10+45.32 TO 11+84.67	404.02	-	16.90	A1-6 Mod
C-8	"WL1"	RT	12+15.33 TO 13+58.08	412.28	-	17.20	A1-6 Mod
C-8	"WL1"	-	11+84.67 TO 12+15.33	1,118.86	-	46.70	A1-6 Mod
C-9	"RV2"	LT	12+73.75 TO 13+20.08	377.59	-	15.80	A1-6 Mod
C-9	"RV2"	LT	13+20.08 TO 13+90.41	377.59	-	15.80	A1-6 Mod
C-9	"RV2"	LT	14+14.41 TO 14+60.74	377.59	-	15.80	A1-6 Mod
C-9	"RV2"	LT	14+84.80 TO 15+31.07	393.45	-	16.40	A1-6 Mod
C-10	"RV2"	LT	15+55.07 TO 16+01.40	400.82	-	16.80	A1-6 Mod
C-10	"RV2"	LT	16+25.40 TO 16+71.73	400.82	-	16.80	A1-6 Mod
C-10	"RV2"	LT	16+95.73 TO 17+77.31	434.94	-	18.20	A1-6 Mod
C-14	"RV1"	-	12+44.15 TO 12+56.14	39.58	-	0.90	B1-4 Mod
C-14	"RV1"	-	12+66.14 TO 12+84.47	62.16	-	1.40	B1-4 Mod
C-14	"RV"	-	65+53.02 TO 65+70.96	58.14	-	1.30	B1-4 Mod
C-14	"RV"	-	65+80.96 TO 65+92.96	37.51	-	0.90	B1-4 Mod
C-14	"RV2"	-	10+38.90 TO 10+56.75	49.45	-	1.10	B1-4 Mod
C-14	"RV2"	-	10+66.75 TO 10+78.46	32.15	-	0.80	B1-4 Mod
C-14	"RV"	-	10+55.94 TO 10+73.83	55.37	-	1.30	B1-4 Mod

(N) NOT A SEPARATE PAY ITEM FOR INFORMATION ONLY

MINOR CONCRETE (MISCELLANEOUS CONSTRUCTION) Cont

SHEET NUMBER	LINE	L+/R+	STATION	LF (N)	SQFT (N)	CY	DESCRIPTION
C-14	"RV"	-	64+33.95 TO 64+45.94	29.08	-	0.70	B1-4 Mod
C-58	"PL"	LT	21+83.39 TO 24+07.70	229.32	-	5.70	A1-8 Mod
C-58	"RV"	LT	60+90.68 TO 63+03.27	216.34	-	5.40	A1-8 Mod
C-58	"RV2"	RT	10+66.75 TO 12+58.25	220.53	-	5.50	A1-8 Mod
CURB AND GUTTER SUBTOTAL (Q-3)				14,859.17	0.00	633.30	
SHEET Q-2 SUBTOTAL				1,315.69	35,987.44	480.22	
TOTAL						1113.52	

PLACE HOT MIX ASPHALT DIKE

NUMBER	SHEET NUMBER	LINE	L+/R+	STATION	TYPE C	TYPE D	TYPE E	TYPE F	CY (N)	MINOR HOT MIX ASPHALT
					LF	LF	LF	LF		TON *
1	L-1	"A1"	L+	280+60.00 TO 280+94.57	34.17	-	-	-	0.20	0.50
2	L-1	"A1"	L+	280+94.57 TO 284+75.00	-	-	375.97	-	4.90	10.00
3	L-1,L-2	"A1"	L+	288+50.58 TO 293+70.00	-	-	512.33	-	6.70	13.60
4	L-1	"A1"	R+	283+02.19 TO 283+66.45	65.06	-	-	-	0.30	0.70
5	L-1	"A1"	R+	283+66.45 TO 284+02.01	-	-	-	36.00	0.30	0.70
6	L-1	"A1"	R+	284+02.01 TO 284+98.75	-	98.11	-	-	2.90	5.90
7	L-2,L-3	"A1"	R+	298+88.03 TO 311+38.00	-	-	1,250.32	-	16.30	33.10
TOTAL					99.23	98.11	2,138.62	36.00	31.60	64.50 *

*: QUANTITY ADDED TO MINOR HMA QUANTITY TABLE.

PLACE HOT MIX ASPHALT (Misc AREA)

SHEET NUMBER	LINE	R+/L+	STATION	PLACE HOT MIX ASPHALT (Misc AREA)	MINOR HOT MIX ASPHALT
				SQYD	TON *
L-1	"A1"	L+	284+75.00 TO 285+14.90	11.15	1.9
L-1	"A1"	R+	283+40.00 TO 285+00.00	75.76	12.8
L-1	"A1"	L+	286+90.02 TO 288+50.58	47.21	8.0
L-2	"A1"	R+	297+52.23 TO 298+87.87	325.10	54.9
L-3	"A1"	R+	309+78.27 TO 311+39.17	71.73	12.2
TOTAL				530.95	89.8 *

*: QUANTITY ADDED TO MINOR HMA QUANTITY TABLE.

SUMMARY OF QUANTITIES
Q-3

STATE OF CALIFORNIA - DEPARTMENT OF TRANSPORTATION
Caltrans

CONSULTANT FUNCTIONAL SUPERVISOR: GERARD LUMABAS
CALCULATED-DESIGNED BY: DARWIN CRUZ
CHECKED BY: PAUL KOSINSKI
REVISED BY
DATE REVISED

LAST REVISION 6-27-12
DATE PLOTTED => 15-NOV-2012
TIME PLOTTED => 14:50

Dist	COUNTY	ROUTE	POST MILES TOTAL PROJECT	SHEET No.	TOTAL SHEETS
11	SD	805	4.7/5.6	324	650

REGISTERED CIVIL ENGINEER 6/1/12 DATE

06-25-12
PLANS APPROVAL DATE

REGISTERED PROFESSIONAL ENGINEER PAUL E. KOSINSKI No. C73254 Exp. 12/31/12 CIVIL STATE OF CALIFORNIA

THE STATE OF CALIFORNIA OR ITS OFFICERS OR AGENTS SHALL NOT BE RESPONSIBLE FOR THE ACCURACY OR COMPLETENESS OF SCANNED COPIES OF THIS PLAN SHEET.

DOKKEN ENGINEERING
5675 RUFFIN Rd
SUITE 250
SAN DIEGO, CA 92123

SANDAG
401 B St
SUITE 800
SAN DIEGO, CA 92101

1 **REVISED PER ADDENDUM No. 1 DATED NOVEMBER 19, 2012**

RETAINING WALLS

RETAINING WALL No.	STRUCTURE EXCAVATION (Ret WALL)	STRUCTURE BACKFILL (Ret WALL)	PERVIOUS BACKFILL MATERIAL (Ret WALL)	STRUCTURAL CONCRETE, Ret WALL	BAR REINFORCING STEEL (Ret WALL)	CONCRETE BARRIER (TYPE 736B MOD)	CONCRETE BARRIER (TYPE 26 MOD)	CONCRETE BARRIER (TYPE 26 MOD2)	MASONRY BLOCK WALL	ARCHITECTURAL TREATMENT (DRY STACK TEXTURE)	PREPARE AND STAIN CONCRETE	ARCHITECTURAL TREATMENT (LOUVER TEXTURE)	ARCHITECTURAL TREATMENT (ASHLAR TILE TEXTURE)	ARCHITECTURAL TREATMENT (ASHLAR TILE TEXTURE) (SMALL)	ANTI-GRAFFITI COATING	TUBULAR HANDRAILING (Mod)	TUBULAR HANDRAILING (Mod 2)	MINOR CONCRETE (GUTTER)	WEATHERING STEEL PLATE
	CY	CY	CY	CY	LB	LF	LF	LF	SQFT	SQFT	SQFT	SQFT	SQFT	SQFT	SQFT	LF	LF	LF	EA
RW10L	590	600	28	230	24,500	-	258	-	-	-	-	475	-	1,380	-	-	260	-	-
RW12R	830	1,300	81	480	91,000	-	-	376	1,130	3,180	3,180	690	-	-	4,665	-	-	-	-
RW18L	290	230	15	100	10,000	-	118	-	-	-	-	-	670	-	-	120	-	-	-
RW22L	310	240	-	150	25,900	-	-	-	-	-	-	-	-	1,350	-	-	-	-	22
RW27L	722	308	-	255	25,386	-	226	-	-	-	-	414	-	1,739	-	-	-	-	-
RW61L	4,680	3,630	220	1,120	210,900	-	563	-	-	-	-	1,035	-	6,715	-	-	564	-	-
RW285L	880	780	45	330	37,600	-	368	-	-	-	-	675	1,665	-	-	-	-	368	-
RW296L	1,300	1,010	50	320	65,100	-	226	-	-	-	-	415	1,985	-	-	-	-	-	-
RW302ML	800	1,270	67	440	48,800	378	-	-	-	-	-	-	1,855	-	-	-	-	-	-
RW302MR	800	1,270	67	440	48,800	378	-	-	-	-	-	-	1,855	-	-	-	-	-	-
TOTAL	11,202	10,638	573	3,865	587,986	756	1,759	376	1,130	3,180	3,180	3,704	8,030	11,184	4,665	120	824	368	22

CONCRETE BARRIER

SHEET NUMBER	LINE	R+/L+	STATION	TYPE 60	TYPE 60 Mod	TYPE 60 Mod2	TYPE 60C Mod	TYPE 60C Mod2	TYPE 60C Mod3	TYPE 60C Mod4	TYPE 60GE	TYPE 60GA Mod	TYPE 60P	PORTABLE TYPE 60K	NOTES
				LF	LF	LF	LF	LF	LF	LF	LF	LF	LF	LF	
L-1	"A1"	L+	283+65.00 TO 289+30.04	-	-	-	-	564.52	-	-	-	-	-	-	CB 1
L-1	"A1"	L+	284+75.00 TO 288+50.58	-	372.10	-	-	-	-	-	-	-	-	-	CB 4
L-1, L-2	"A1"	R+	283+25.00 TO 301+50.00	-	-	-	-	1,827.63	-	-	-	-	-	-	CB 2
L-1, L-2	"A1"	R+	284+50.00 TO 297+57.22	-	-	-	-	-	-	1,320.48	-	-	-	-	CB 3
L-1, L-2	"A1"	L+	289+30.04 TO 297+50.00	-	-	-	-	-	818.45	-	-	-	-	-	CB 5
L-2	"A1"	L+	297+50.00 TO 301+50.00	-	-	-	-	400.03	-	-	-	-	-	-	CB 6
L-2	"A1"	L+	293+70.00 TO 297+42.12	-	-	-	-	-	-	370.93	-	-	-	-	CB 7
L-2	"A1"	R+	297+57.22 TO 298+88.03	130.83	-	-	-	-	-	-	-	-	-	-	CB 9
L-3	"DAR"/"A1"	-	301+95.00 TO 305+19.00	324.00	-	-	-	-	-	-	-	-	-	-	CB 10
L-2, L-3	"A1"	R+	301+50.00 TO 304+86.88	-	336.88	-	-	-	-	-	-	-	-	-	CB 11
L-2, L-3	"A1"	L+	301+50.00 TO 304+86.88	-	336.88	-	-	-	-	-	-	-	-	-	CB 12
L-2, L-4	"A1"	L+	297+42.12 TO 319+31.50	-	-	-	-	2,189.46	-	-	-	-	-	-	CB 8
L-3	"DAR"/"A1"	R+	304+86.88 TO 305+50.04	-	-	63.16	-	-	-	-	-	-	-	-	CB 13
L-3	"DAR"/"A1"	L+	304+86.88 TO 305+50.04	-	-	63.16	-	-	-	-	-	-	-	-	CB 14
L-3	"DAR"/"A1"	R+	305+50.04 TO 309+00.00	-	-	-	350.18	-	-	-	-	-	-	-	CB 15
L-3	"DAR"/"A1"	L+	305+50.04 TO 309+00.00	-	-	-	350.18	-	-	-	-	-	-	-	CB 16
L-3, L-4	"A1"	L+	308+84.13 TO 323+23.48	-	-	-	-	-	-	-	-	-	-	1,439.35	CB 17
L-3	"A1"	R+	309+78.00 TO 311+38.00	160.02	-	-	-	-	-	-	-	-	-	-	CB 18
L-3	"A1"	-	310+24.00 TO 310+56.00	-	-	-	-	-	-	-	-	32.00	-	-	CB 19
L-3	"A1"	-	310+56.00 TO 312+04.00	147.99	-	-	-	-	-	-	-	-	-	-	CB 20
L-3, L-4	"A1"	R+	311+06.10 TO 323+23.08	-	-	-	-	-	-	-	-	-	-	1,216.98	CB 21
L-3, L-4	"A1"	R+	311+38.00 TO 323+34.14	-	-	-	-	1,196.13	-	-	-	-	-	-	CB 22
L-3	"A1"	-	312+04.00 TO 312+36.00	-	-	-	-	-	-	-	-	32.00	-	-	CB 23
L-3	"A1"	-	312+36.00 TO 313+36.20	100.20	-	-	-	-	-	-	-	-	-	-	CB 24
L-3, L-4	"A1"	-	313+36.20 TO 314+63.80	-	-	-	-	-	-	-	127.75	-	-	-	CB 25
L-4	"A1"	-	314+63.80 TO 315+64.00	100.20	-	-	-	-	-	-	-	-	-	-	CB 26
L-4	"A1"	-	315+64.00 TO 315+96.00	-	-	-	-	-	-	-	-	32.00	-	-	CB 27
L-4	"A1"	-	315+96.00 TO 317+43.00	148.00	-	-	-	-	-	-	-	-	-	-	CB 28
L-4	"A1"	L+	317+43.00 TO 317+77.00	-	-	-	-	-	-	-	-	32.00	-	-	CB 29
L-4	"A1"	-	317+77.00 TO 321+86.20	410.20	-	-	-	-	-	-	-	-	-	-	CB 30
L-4	"A1"	-	319+31.50 TO 323+34.14	402.66	-	-	-	-	-	-	-	-	-	-	CB 31
L-4	"A1"	-	321+86.20 TO 323+13.80	-	-	-	-	-	-	-	127.75	-	-	-	CB 32
L-4	"A1"	R+	323+23.08 TO 323+83.08	60.00	-	-	-	-	-	-	-	-	-	-	CB 33
L-4	"A1"	L+	323+23.48 TO 323+83.48	60.00	-	-	-	-	-	-	-	-	-	-	CB 34
L-3	"A1"	-	305+19.00 TO 305+31.00	-	-	-	-	-	-	-	-	-	12.00	-	CB 35
L-3	"A1"	-	305+31.00 TO 310+24.00	493.00	-	-	-	-	-	-	-	-	-	-	CB 36
			TOTAL	2,537.10	1,045.86	126.32	700.36	6,177.77	818.45	1,691.41	255.50	128.00	12.00	2,656.33	

MASONRY BLOCK WALL (PRIVACY WALL)

PRIVACY WALL No.	MASONRY BLOCK WALL (PRIVACY WALL)	STRUCTURAL CONCRETE, PRIVACY WALL	16" CIDH CONCRETE PILING
	SQFT	CY	LF
PW10L	2,110	30	200
PW16R	1,397	20	80
PW64R	1,830	30	180
PW66R	6,402	80	570
TOTAL	11,739	160	1,030

SUMMARY OF QUANTITIES

Q-5

STATE OF CALIFORNIA - DEPARTMENT OF TRANSPORTATION

Caltrans

CONSULTANT FUNCTIONAL SUPERVISOR: GERARD LUMABAS

CALCULATED-DESIGNED BY: DARWIN CRUZ

CHECKED BY: PAUL KOSINSKI

REVISED BY / DATE REVISED

LAST REVISION DATE PLOTTED => 15-NOV-2012
TIME PLOTTED => 14:50
6-27-12

1 REVISED PER ADDENDUM No. 1 DATED NOVEMBER 19, 2012

Dist	COUNTY	ROUTE	POST MILES TOTAL PROJECT	SHEET No.	TOTAL SHEETS
11	SD	805	4.7/5.6	325	650

REGISTERED CIVIL ENGINEER 6/1/12 DATE

06-25-12
PLANS APPROVAL DATE

REGISTERED PROFESSIONAL ENGINEER PAUL E. KOSINSKI No. C73254 Exp. 12/31/12 CIVIL STATE OF CALIFORNIA

THE STATE OF CALIFORNIA OR ITS OFFICERS OR AGENTS SHALL NOT BE RESPONSIBLE FOR THE ACCURACY OR COMPLETENESS OF SCANNED COPIES OF THIS PLAN SHEET.

DOKKEN ENGINEERING
5675 RUFFIN Rd
SUITE 250
SAN DIEGO, CA 92123

SANDAG
401 B St
SUITE 800
SAN DIEGO, CA 92101

1

MINOR CONCRETE

SHEET NUMBER	DEPTH (FT)	(TYPE 1) (EXPOSED AGGREGATE)		(TYPE 2) (SEEDED AGGREGATE)		(TYPE 3) (COLORED)	
		SQFT (N)	CY	SQFT (N)	CY	SQFT (N)	CY
C-31	0.33	237.95	2.91	-	-	-	-
C-32	0.33	645.93	7.89	2,589.11	31.64	-	-
C-32	0.5	-	-	3,943.87	73.03	-	-
C-33	0.33	1,677.83	20.51	-	-	-	-
C-34	0.33	911.00	11.13	-	-	3,550.56	43.40
C-35	0.33	-	-	-	-	635.34	7.77
C-36	0.33	370.38	4.53	1,793.61	21.92	112.34	1.37
C-36	0.5	-	-	4,824.05	89.33	-	-
C-37	0.33	777.33	9.50	-	-	473.40	5.79
C-38	0.33	-	-	3,264.38	39.90	-	-
C-38	0.5	-	-	731.70	13.55	-	-
C-39	0.33	211.95	2.59	1,847.10	22.58	-	-
C-39	0.5	-	-	2,534.01	46.93	2,253.51	41.73
C-40	0.33	0.83	0.01	-	-	-	-
C-42	0.33	-	-	429.29	5.25	-	-
C-43	0.5	-	-	-	-	3,139.22	58.13
TOTAL		4,833.19	59.07	21,957.12	344.13	10,164.37	158.19

EARTHWORK

LINE	LOCATION	ROADWAY EXCAVATION	EMBANKMENT (N)
		CY	CY
"A1"	NB OUTSIDE WIDEN	32,279	14,852
"A1"	SB OUTSIDE WIDEN	19,973	7,360
"A1"	NB & SB INSIDE WIDEN	3,635	8,618
"PL"	LOCAL ROADWAY	13,008	10,191
"NC"	LOCAL ROADWAY	175	-
"PC"	LOCAL ROADWAY	98	-
"RV"	LOCAL ROADWAY	1,351	109
"RW"	LOCAL ROADWAY	45	4
"RV1"	PARKING LOT 1 DRIVEWAY	1,099	243
"RV2"	PARKING LOT 2 DRIVEWAY	5,827	123
"WL1"	PARKING LOT 1	30,924	608
"RV2"	PARKING LOT 2	15,179	1,708
"DAR"	NB & SB	974	5,112
"DW1"	SDG&E DRIVEWAY 1	608	708
"DW2"	SDG&E DRIVEWAY 2	191	-
	TOTAL	125,367	49,637

MINOR CONCRETE (MINOR STRUCTURE)

SHEET NUMBER	LINE	L+/R+	STATION	LF (N)	SQFT (N)	CY	DESCRIPTION
L-6, C-8	"PL"	100L+	24+21.70 TO 24+40.06	34		12.70	MONUMENT SIGN
MONUMENT SIGN SUBTOTAL				34		12.70	
C-38	"RV"	L+	63+72.87 TO 64+14.07	-	12.12	2.69	CUBE SEAT
C-38, C-39	"RV"	R+	63+87.13 TO 64+23.02	-	12.12	2.69	CUBE SEAT
CUBE SEAT SUBTOTAL				0.00	24.24	5.39	
C-32	"PL"	R+	18+17.14 TO 18+45.58	-	45.00	5.00	SEAT WALL
C-32	"PL"	L+	16+00.00 TO 16+45.00	-	52.53	5.84	SEAT WALL
C-35	"PL"	R+	23+11.58 TO 24+04.36	-	174.40	19.38	SEAT WALL
C-37	"PL"	L+	26+04.83 TO 26+48.75	-	85.58	9.51	SEAT WALL
SEAT WALL SUBTOTAL				0.00	357.51	39.72	
C-61	"PL"	L+	22+76.81 TO 22+83.63	19.41	-	1.44	STEM WALL
C-61	"PL"	L+	22+90.90 TO 23+08.52	28.80	-	2.31	STEM WALL
C-61	"PL"	L+	23+15.79 TO 23+33.67	29.07	-	2.37	STEM WALL
C-61	"PL"	L+	23+40.94 TO 23+58.50	28.73	-	2.70	STEM WALL
C-61	"PL"	L+	23+65.77 TO 23+83.98	29.44	-	3.05	STEM WALL
C-61	"PL"	L+	23+91.25 TO 24+09.03	31.47	-	3.27	STEM WALL
STEM WALL SUBTOTAL				166.92	0.00	15.14	
TOTAL						72.95*	

* FOR ADDITIONAL QUANTITIES, SEE DRAINAGE QUANTITIES.

ROCK BLANKET

SHEET NUMBER	LINE	STATION	SQFT (N)	SQYD
L-1, L-2, L-3	"A1"	283+60.03 TO 301+65.00	78,528.79	8,725.42
C-39	"RV"	64+34.57 TO 64+45.32	21.62	2.40
C-39	"RV"	64+56.57 TO 64+74.71	144.54	16.06
C-39	"RV"	65+52.56 TO 65+70.34	177.33	19.70
C-39	"RV"	65+81.59 TO 65+92.34	74.96	8.33
C-39	"RV1"	12+44.77 TO 12+55.52	86.94	9.66
C-39	"RV1"	12+66.77 TO 12+84.88	209.65	23.29
C-39	"RV2"	10+39.24 TO 10+56.12	108.78	12.09
C-39	"RV2"	10+67.37 TO 10+77.83	47.75	5.31
		TOTAL	79,400.36	8,822.26

(N) NOT A SEPARATE PAY ITEM FOR INFORMATION ONLY

SUMMARY OF QUANTITIES

Q-6

STATE OF CALIFORNIA - DEPARTMENT OF TRANSPORTATION
Caltrans
CONSULTANT FUNCTIONAL SUPERVISOR: GERARD LUMABAS
CALCULATED-DESIGNED BY: DARWIN CRUZ
CHECKED BY: PAUL KOSINSKI
REVISED BY
DATE REVISED

LAST REVISION 6-18-12
DATE PLOTTED => 15-NOV-2012
TIME PLOTTED => 14:50

1 REVISED PER ADDENDUM No. 1 DATED NOVEMBER 19, 2012

Dist	COUNTY	ROUTE	POST MILES TOTAL PROJECT	SHEET No.	TOTAL SHEETS
11	SD	805	4.7/5.6	402	650

LICENSED LANDSCAPE ARCHITECT

06-25-12
PLANS APPROVAL DATE

LICENSED LANDSCAPE ARCHITECT VICKI ESTRADA No. 1685 — Expiration Date 4/30/14 — Signature 5/24/12 Date — STATE OF CALIFORNIA

THE STATE OF CALIFORNIA OR ITS OFFICERS OR AGENTS SHALL NOT BE RESPONSIBLE FOR THE ACCURACY OR COMPLETENESS OF SCANNED COPIES OF THIS PLAN SHEET.

DOKKEN ENGINEERING
5675 RUFFIN Rd
SUITE 250
SAN DIEGO, CA 92123

SANDAG
401 B St
SUITE 800
SAN DIEGO, CA 92101

ABBREVIATIONS:

AMEND – AMENDMENT
B&B — BALLED AND BURLAPPED
Dia — DIAMETER
CF — CUBIC FEET
EA — EACH
Ft — FOOT
in — INCH
LB — POUND
Max — MAXIMUM
Min — MINIMUM
NCN — NO COMMON NAME
No. — NUMBER
Oz — OUNCE
Pkt — PACKET (S)
PLT ESTB – PLANT ESTABLISHMENT
Pvmt — PAVEMENT
RBR — ROOT BARRIER
RM — ROCK MULCH
R/W — RIGHT OF WAY
SF — STATE-FURNISHED
SQFT — SQUARE FEET
SQYD — SQUARE YARD
TRVD — TRAVELED
Typ — TYPICAL

NOTE:

1. UNDERLINED PORTIONS OF BOTANICAL NAMES INDICATE ABBREVIATIONS USED ON PLANTING PLANS.

PLANT LIST AND PLANTING SPECIFICATIONS

PLANT GROUP	PLANT No.	SYMBOL	BOTANICAL NAME	COMMON NAME	SIZE	QUANTITY EACH	HOLE SIZE (INCH) Dia	HOLE SIZE (INCH) DEPTH	BASIN TYPE	IRON SULFATE (1)	SOIL AMEND (CY) (1)	FERTILIZER (1) PLANTING	FERTILIZER (1) PLT ESTB	BASIN MULCH (CY)	STAKING	PLANTING LIMITS MINIMUM DISTANCE (Ft) FROM TRVD WAY	PVMT	FENCE	WALL	PAVED DITCH	EARTH DITCH	CENTER (Ft)	REMARKS
A	1		ALOE VERA	BARBADOS ALOE	No. 1	352	(2)	(2)	I	-	-	1 Pkt	4.0 OZ		-	-	-	-	-	-	-	(4)	SHRUB
	2		BACCHARIS SAROTHROIDES	BACCHARIS BROOM	No. 1	53	(2)	(2)	I	-	-	-	-	0.02	-	-	-	-	-	-	-	10	SHRUB (11)
	3		ENCELIA CALIFORNICA	COAST SUNFLOWER	No. 1	53	(2)	(2)	I	-	-	-	-	0.02	-	-	-	-	-	-	-	10	SHRUB (11)
	4		MIMULUS AURANTIACUS	STICKY MONKEY FLOWER	No. 1	53	(2)	(2)	I	-	-	-	-	0.02	-	-	-	-	-	-	-	10	SHRUB (11)
	5		PARTHENOCISSUS TRICUSPIDATA	BOSTON IVY	No. 1	711	2X	(2)	I	0.25 LBS	0.02	1 Pkt	4.0 OZ	0.02 (3)	(6)	-	-	-	-	4	15	12	VINE
	6		RHUS INTEGRIFOLIA	LEMONADE BERRY	No. 1	68	(2)	(2)	I	-	-	-	-	0.02	-	-	15	10	10	10	12	(4)	SHRUB
	7		VIGUIERA LACINIATA	SAN DIEGO SUNFLOWER	No. 1	53	(2)	(2)	I	-	-	-	-	0.02	-	-	-	-	-	-	-	10	SHRUB (11)
B	8		AGAVE ATTENUATA	FOXTAIL AGAVE	No. 5	121	2X	(2)	I	-	0.02	2 Pkt	4.0 OZ	0.04 (3)	-	-	-	-	-	-	-	(4)	SHRUB
	9		ALOE ARBORESCENS	TREE ALOE	No. 5	78	2X	(2)	I	-	0.02	2 Pkt	4.0 OZ	0.04 (3)	-	-	-	-	-	-	-	(4)	SHRUB
	10		ALOE STRIATA	CORAL ALOE	No. 5	1,184	2X	(2)	I	-	0.02	2 Pkt	4.0 OZ		-	-	-	-	-	-	-	(4)	SHRUB
	11		BOUGAINVILLEA SPP. 'OOH LA LA'	BOUGAINVILLEA	No. 5	18	2X	(2)	I	0.25 LBS	0.02	2 Pkt	4.0 OZ		-	-	-	-	-	-	-	(4)	SHRUB
	12		CALLISTEMON VIMINALIS 'LITTLE JOHN'	DWARF BOTTLEBRUSH	No. 5	453	2X	(2)	I	0.25 LBS	0.02	2 Pkt	4.0 OZ		-		6	6	6	6	6	(4)	SHRUB
	13		CISTUS 'SUNSET'	ORCHID ROCKROSE	No. 5	89	2X	(2)	I	0.25 LBS	0.02	2 Pkt	4.0 OZ	0.04	-	-	6	6	6	6	6	(4)	SHRUB
	14		HETEROMELES ARBUTIFOLIA	TOYON	No. 5	94	2X	(2)	I	0.25 LBS	0.02	2 Pkt	4.0 Oz	0.04	-	-	15	15	10	10	12	(4)	SHRUB
	15		RHAPHIOLEPIS INDICA 'BALLERINA'	INDIA HAWTHORN	No. 5	930	2X	(2)	I	0.25 LBS	0.02	2 Pkt	4.0 OZ		-	-	3	3	3	6	6	(4)	SHRUB
	16		RHAPHIOLEPIS INDICA 'JACK EVANS'	INDIA HAWTHORN	No. 5	387	2X	(2)	I	0.25 LBS	0.02	2 Pkt	4.0 OZ		-	-	8	10	10	8	10	(4)	SHRUB
	17		ROSMARINUS OFFICINALIS 'TUSCAN BLUE'	ROSEMARY	No. 5	502	2X	(2)	I	0.25 LBS	0.02	2 Pkt	4.0 OZ		-	-	6	6	6	6	8	(4)	SHRUB

APPLICABLE WHEN CIRCLED:

(1) - QUANTITIES SHOW ARE "PER PLANT" UNLESS SHOWN AS SQFT OR SQYD APPLICATION RATES.
(2) - SUFFICIENT TO RECEIVE ROOT BALL.
(3) - DOES NOT APPLY WITHIN ROCK MULCH AREAS.
(4) - AS SHOWN ON PLANS.
5 - UNLESS OTHERWISE SHOWN ON PLANS.
(6) - SEE STANDARD DETAIL.
(7) - SEE SPECIAL PROVISIONS.
(8) - SEE STANDARD SPECIFICATION
9 - RANDOMLY MIXED WITHIN AREA SPECIFIED.
(10) - ALL TREES ADJACENT TO ROADWAY, DRIVEWAY AND ROUNDABOUTS MUST MAINTAIN A MINIMUM CLEARANCE OF 6' FROM FINISH GRADE TO BOTTOM OF CANOPY.
(11) - RANDOMLY PLANTED IN GROUPS OF THREES, FIVES AND SEVENS THROUGHOUT DESIGNATED AREA.
(12) - NO STAKING AT TREE GRATES.
(13) - PLANT IN PRECAST CONCRETE PLANTER.
(14) - 20-25% NASSELLA PULCHRA (PURPLE NEEDLEGRASS), 20-25% NASELLA CERNUA (NODDING NEEDLEGRASS), 20-25% KOELERIA MACRANTHA (JUNEGRASS) AND 35-40% FESTUCA RUBRE (MOLATA FESCUE) VARIETIES.

LEGEND:

ESA — ENVIRONMENTALLY SENSITIVE AREA
NATIVE PLANTING
PLANT REMOVAL AREA
TURF (SOD) MATCH EXISTING
ROOT BARRIER
EXISTING TREES TO REMAIN (SYMBOL DIAMETER VARIES)
EXISTING HEDGE PROTECT IN PLACE
ROCK MULCH (TYPE 1) 4"-6" DEEP FILTER FABRIC
ROCK MULCH (TYPE 2) 3" DEEP FILTER FABRIC
ROCK MULCH (TYPE 3) 3" DEEP FILTER FABRIC
MULCH
TREE TO BE REMOVED (Typ)

PLANT LIST PL-1

REVISED BY | DATE REVISED
JOE ESPOSITO | VICKI ESTRADA
CALCULATED-DESIGNED BY | CHECKED BY
CONSULTANT FUNCTIONAL SUPERVISOR | GERARD LUMABAS
STATE OF CALIFORNIA - DEPARTMENT OF TRANSPORTATION

LAST REVISION 6-15-12 | DATE PLOTTED => 15-NOV-2012 | TIME PLOTTED => 14:50

1 REVISED PER ADDENDUM No. 1 DATED NOVEMBER 19, 2012

Dist	COUNTY	ROUTE	POST MILES TOTAL PROJECT	SHEET No.	TOTAL SHEETS
11	SD	805	4.7/5.6	403	650

LICENSED LANDSCAPE ARCHITECT

06-25-12
PLANS APPROVAL DATE

LICENSED LANDSCAPE ARCHITECT VICKI ESTRADA No.1685 — 4/30/14 Renewal Date — 5/24/12 Date — STATE OF CALIFORNIA

THE STATE OF CALIFORNIA OR ITS OFFICERS OR AGENTS SHALL NOT BE RESPONSIBLE FOR THE ACCURACY OR COMPLETENESS OF SCANNED COPIES OF THIS PLAN SHEET.

DOKKEN ENGINEERING
5675 RUFFIN Rd
SUITE 250
SAN DIEGO, CA 92123

SANDAG
401 B St
SUITE 800
SAN DIEGO, CA 92101

PLANT LIST AND PLANTING SPECIFICATIONS

PLANT GROUP	PLANT No.	SYMBOL	BOTANICAL NAME	COMMON NAME	SIZE	QUANTITY EACH	HOLE SIZE (INCH) Dia	HOLE SIZE (INCH) DEPTH	BASIN TYPE	IRON SULFATE (1)	SOIL AMEND (CY) (1)	FERTILIZER (1) PLANTING	FERTILIZER (1) PLT ESTB	BASIN MULCH (CY)	STAKING	PLANTING LIMITS MINIMUM DISTANCE (Ft) FROM TRVD WAY	PVMT	FENCE	WALL	PAVED DITCH	EARTH DITCH	CENTER (Ft)	REMARKS
F	18		BACCHARIS PILULARIS 'PIGEON POINT'	DWARF COYOTE BRUSH	IN FLATS	7,249	(2)	(2)	-	-	-	8 LBS/ 1000 SQFT	4 LBS/ 1000 SQFT	-	-	-	4	1	1	1	1	1.5	GROUND COVER
F	19		MALEPHORA LUTEA	ROCKY POINT ICEPLANT	IN FLATS	7,727	(2)	(2)	-	-	-	8 LBS/ 1000 SQFT	4 LBS/ 1000 SQFT	-	-	-	4	1	1	1	1	1	GROUND COVER
F	20		SENECIO MANDRALISCAE	BLUE STICKS	IN FLATS	16,881	(2)	(2)	-	-	-	8 LBS/ 1000 SQFT	4 LBS/ 1000 SQFT	-	-	-	4	1	1	1	1	1	GROUND COVER 80% MIX
F	21		SEDUM DENDROIDEUM	DENDROIDEUM SEDUM	IN FLATS	4,219	(2)	(2)	-	-	-	8 LBS/ 1000 SQFT	4 LBS/ 1000 SQFT	-	-	-	4	1	1	1	1	1	GROUND COVER 20% MIX (11)
K	22		CASSIA LEPTOPHYLLA	GOLD MEDALLION TREE	24" BOX	22	2X	(2)	I	0.5 LBS	0.075	20 Pkt	8.0 OZ	0.075	(6)	30	-	5	5	5	-	(4)	TREE
K	23		CHIONANTHUS RETUSUS	CHINESE FRINGE TREE	24" BOX	31	2X	(2)	I	0.5 LBS	0.075	20 Pkt	8.0 OZ	-	(6)	30	-	5	5	5	-	(4)	TREE
K	24		KOELREUTERIA BIPINNATA	CHINESE FLAME TREE	24" BOX	13	2X	(2)	I	0.5 LBS	0.075	20 Pkt	8.0 OZ	0.075	(6)	30	-	10	10	10	12	(4)	TREE (10)
K	25		LAGERSTROEMIA HYBRIDS 'BILOXI'	CRAPE MYRTLE	24" BOX	53	2X	(2)	I	0.5 LBS	0.075	20 Pkt	8.0 OZ	0.075 (3)	(6) (12)	30	-	15	15	15	17	(4)	TREE - 20' TALL (10)
K	26		LAGERSTROEMIA HYBRIDS 'COMANCHE'	CRAPE MYRTLE	24" BOX	125	2X	(2)	I	0.5 LBS	0.075	20 Pkt	8.0 OZ	-	(6)	30	-	10	10	10	12	(4)	TREE - 12' TALL (10)
K	27		LAGERSTROEMIA HYBRIDS 'TONTO'	CRAPE MYRTLE	24" BOX	19	2X	(2)	I	0.5 LBS	0.075	20 Pkt	8.0 OZ	0.075 (3)	(6) (12)	30	-	10	10	10	12	(4)	TREE - 15' TALL (10)
K	28		LAGERSTROEMIA HYBRIDS 'TONTO'	CRAPE MYRTLE	24" BOX	9	-	(2)	-	-	-	20 Pkt	8.0 OZ	-	-	-	-	-	-	-	-	(4)	TREE - 15' TALL (13)
K	29		RHUS LANCEA	AFRICAN SUMAC	24" BOX	53	2X	(2)	I	0.5 LBS	0.075	20 Pkt	8.0 OZ	-	(6)	30	-	10	10	10	12	(4)	TREE - 15' TALL (10)
K	30		TIPUANA TIPU	TIPU TREE	24" BOX	5	2X	(2)	I	0.5 LBS	0.075	20 Pkt	8.0 OZ	0.075	(6)	30	-	20	22	20	22	(4)	TREE
K	31		LAGERSTROEMIA HYBRIDS 'TONTO'	CRAPE MYRTLE	36" BOX	12	2X	(2)	I	0.5 LBS	0.075	20 Pkt	8.0 OZ	-	(6)	30	-	10	10	10	12	(4)	TREE 15' TALL MULTI (10)
K	32		PLATANUS ACERIFLOIA "BLOODGOOD"	LONDON PLANE TREE	36" BOX	1	2X	(2)	I	0.5 LBS	0.075	20 Pkt	8.0 OZ	-	(6)	30	-	20	22	20	22	(4)	TREE (10)
U	33		EUCALYPTUS TORQUATA	CORAL GUM	15 GAL	37	2X	(2)	I	0.5 LBS	0.075	10 Pkt	8.0 OZ	0.075	(6)	30	-	4	15	15	17	(4)	TREE
U	34		STRELITZIA REGINAE	BIRD OF PARADISE	15 GAL	52	2X	(2)	I	0.5 LBS	0.075	10 Pkt	8.0 OZ	-	-	-	4	4	4	4	4	(4)	SHRUB (13) 2 IN POTS
T	35		TURF (SOD)	SOD	SQFT	340	-	-	-	-	4 CY/ 1000 SQFT	8 LBS/ 1000 SQFT	4 LBS/ 1000 SQFT	-	-	-	-	-	-	-	-	-	MATCH EXISTING LAWN (SOD)
T	36		NATIVE SOD	NATIVE SOD	SQFT	4,825	-	-	-	-	4 CY/ 1000 SQFT	-	-	-	-	-	-	-	-	-	-	-	NATIVE SOD (14)

PLANTING AND LANDSCAPE QUANTITIES

SHEET NUMBER	ROCK MULCH (CY) TYPE 1 SQYD	TYPE 2 SQYD	TYPE 3 SQYD	MULCH SHREDDED BARK CY	ROOT BARRIER LF	WEED GERMINATION SQYD	CULTIVATE SQYD	POTTING SOIL CY
PP-1	-	-	110	-	-	110.0	-	-
PP-2	-	-	553	-	-	1,010.0	457	-
PP-3	-	-	1,023	-	-	1,102.0	79	-
PP-4	122	2	-	39.8	700	988.0	38	-
PP-5	12	4	-	2.3	101	12.7	-	7.7
PP-6	250	28	-	33.0	906	1,435.6	-	-
PP-7	-	10	-	31.4	320	1,773.6	-	-
PP-8	163	1,460	-	13.0	950	1,782.8	-	-
PP-9	601	1,855	-	26.7	2,035	3,044.6	-	-
PP-10	213	2,102	-	-	2,240	2,585.2	-	-
PLANT BASINS	-	-	-	48.0	-	-	-	-
TOTAL	1,361	5,461	1,686	193.8	7,252	12,158.5	574	7.7

REVISED BY | DATE REVISED
JOE ESPOSITO | VICKI ESTRADA
CALCULATED-DESIGNED BY | CHECKED BY
CONSULTANT FUNCTIONAL SUPERVISOR: GERARD LUMABAS
STATE OF CALIFORNIA - DEPARTMENT OF TRANSPORTATION
Caltrans

PLANT LIST
PL-2

LAST REVISION 6-15-12 | DATE PLOTTED => 15-NOV-2012 | TIME PLOTTED => 14:50

Dist	COUNTY	ROUTE	POST MILES TOTAL PROJECT	SHEET No.	TOTAL SHEETS
11	SD	805	4.7/5.6	447	650

REGISTERED CIVIL ENGINEER — DATE 6/01/12

06-25-12
PLANS APPROVAL DATE

REGISTERED PROFESSIONAL ENGINEER — JOSE OSTDIEK — No. C65334 — Exp. 9/30/13 — CIVIL — STATE OF CALIFORNIA

THE STATE OF CALIFORNIA OR ITS OFFICERS OR AGENTS SHALL NOT BE RESPONSIBLE FOR THE ACCURACY OR COMPLETENESS OF SCANNED COPIES OF THIS PLAN SHEET.

DOKKEN ENGINEERING
5675 RUFFIN Rd
SUITE 250
SAN DIEGO, CA 92123

SANDAG
401 B St
SUITE 800
SAN DIEGO, CA 92101

1

NOTE:

FOR ACCURATE RIGHT OF WAY AND ACCESS DATA, CONTACT RIGHT OF WAY ENGINEERING AT THE DISTRICT OFFICE.

NOTES (THIS SHEET ONLY):

1. RL CITY STREET LIGHT AS SHOWN. SEE FOUNDATION DETAIL ON SHEET E-29.
2. RECONNECT TO EXISTING STREET LIGHT CIRCUIT.
3. SDG&E PULL BOX.
4. PEC TYPE V. SEE ES-2E, COMPONENTS 10, 21, 24, 25 AND 27. IN NAMEPLATE DESCRIPTION USE "LIGHTING" NOT "IISNS".

CONDUIT NOTES (THIS SHEET ONLY):

1 - 2"C, 2#8 (LTG)

N/C 2 - Exist CONDUIT, 2#8 (ltg)

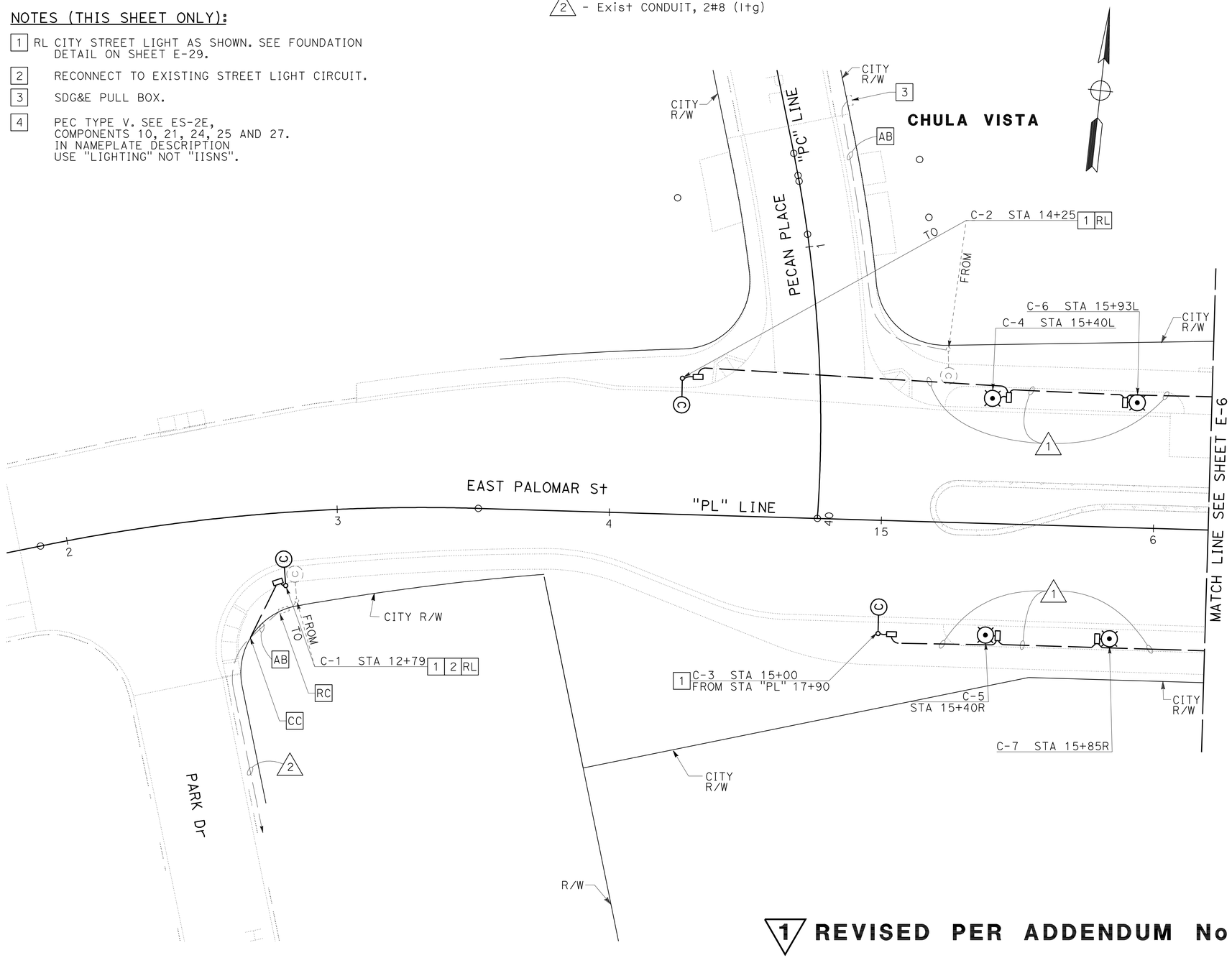

CIRCUIT BREAKERS

MAIN-2P-100 A
A-1P-15 A - PEU
B-1P-30 A - LIGHTING
C-1P-15 A
D-1P-15 A - SPARE

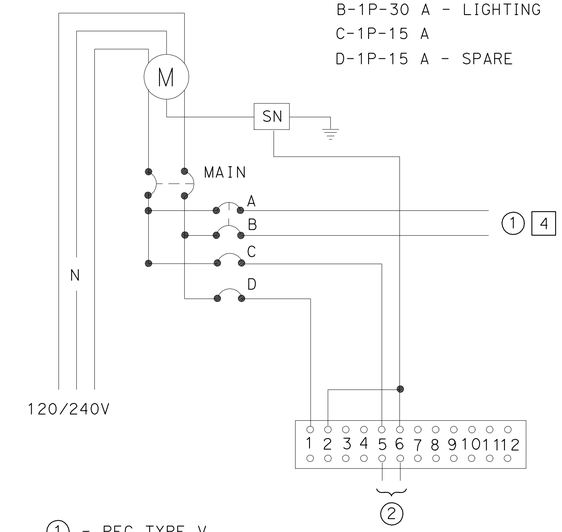

1 - PEC TYPE V (LIGHTING (120V))

2 - CEC "V" (FOR CITY #1) CEC "M" (FOR CITY #3)

WIRING DIAGRAM - CITY #1 & #3

TYPE III-BF SERVICE EQUIPMENT
ENCLOSURE SEE ES-2C AND ES-2E

1 REVISED PER ADDENDUM No. 1 DATED NOVEMBER 19, 2012

LIGHTING (CITY STREET)

SCALE: 1" = 20'

E-5

APPROVED FOR ELECTRICAL WORK ONLY

STATE OF CALIFORNIA - DEPARTMENT OF TRANSPORTATION — Caltrans

CONSULTANT FUNCTIONAL SUPERVISOR: GERARD LUMABAS

CALCULATED-DESIGNED BY: MICHAEL GREER — CHECKED BY: JOSE OSTDIEK — REVISED BY — DATE REVISED

LAST REVISION 06-18-12 — DATE PLOTTED => 16-NOV-2012 — TIME PLOTTED => 06:59

Dist	COUNTY	ROUTE	POST MILES TOTAL PROJECT	SHEET No.	TOTAL SHEETS
11	SD	805	4.7/5.6	450	650

REGISTERED CIVIL ENGINEER 6/01/12 DATE

06-25-12
PLANS APPROVAL DATE

REGISTERED PROFESSIONAL ENGINEER JOSE OSTDIEK No. C65334 Exp. 9/30/13 CIVIL STATE OF CALIFORNIA

THE STATE OF CALIFORNIA OR ITS OFFICERS OR AGENTS SHALL NOT BE RESPONSIBLE FOR THE ACCURACY OR COMPLETENESS OF SCANNED COPIES OF THIS PLAN SHEET.

DOKKEN ENGINEERING
5675 RUFFIN Rd
SUITE 250
SAN DIEGO, CA 92123

SANDAG
401 B St
SUITE 800
SAN DIEGO, CA 92101

1 REVISED PER ADDENDUM No. 1 DATED NOVEMBER 19, 2012

NOTE:

FOR ACCURATE RIGHT OF WAY AND ACCESS DATA, CONTACT RIGHT OF WAY ENGINEERING AT THE DISTRICT OFFICE.

NOTES (THIS SHEET ONLY):

1. Exist CITY STREET LIGHT TO REMAIN.
2. SDG&E SERVICE POINT.
3. CABINET PER LANDSCAPE DETAIL PLANS. CONNECT 2#10 (CEC).
4. TYPE III-BF SERVICE EQUIPMENT ENCLOSURE. SEE WIRING DIAGRAM THIS SHEET.
5. CONDUIT PER LANDSCAPE DETAIL PLANS. INSTALL 2#10 (CEC).
6. PEC TYPE V. SEE ES-2E, COMPONENTS 10, 21, 24, 25 AND 27. IN NAMEPLATE DESCRIPTION USE "LIGHTING" NOT "IISNS".

CONDUIT NOTES (THIS SHEET ONLY):

1. - 2"C, 2#8 (LTG), 2#10 (CEC)
2. - 2"C, 2#10 (CEC)
3. - 2"C, CONDUCTORS BY SDG&E
4. - 2"C, 2#4 (LTG), 4#10 (CEC)
5. - 2"C, 2#4 (LTG), 2#10 (CEC)

CIRCUIT BREAKERS

MAIN-2P-100 A
A-1P-15 A
B-1P-15 A - SPARE
C-1P-15 A
D-1P-15 A - PEU
E-1P-30 A - LIGHTING

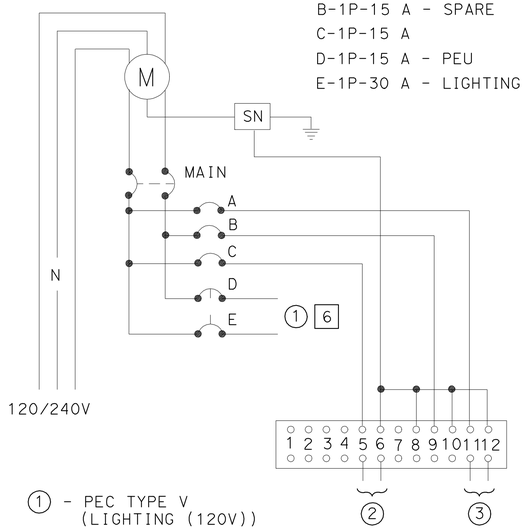

1 - PEC TYPE V (LIGHTING (120V))
2 - CEC "D"
3 - CEC "N"

WIRING DIAGRAM - CITY #2

TYPE III-BF SERVICE EQUIPMENT ENCLOSURE SEE ES-2C AND ES-2E

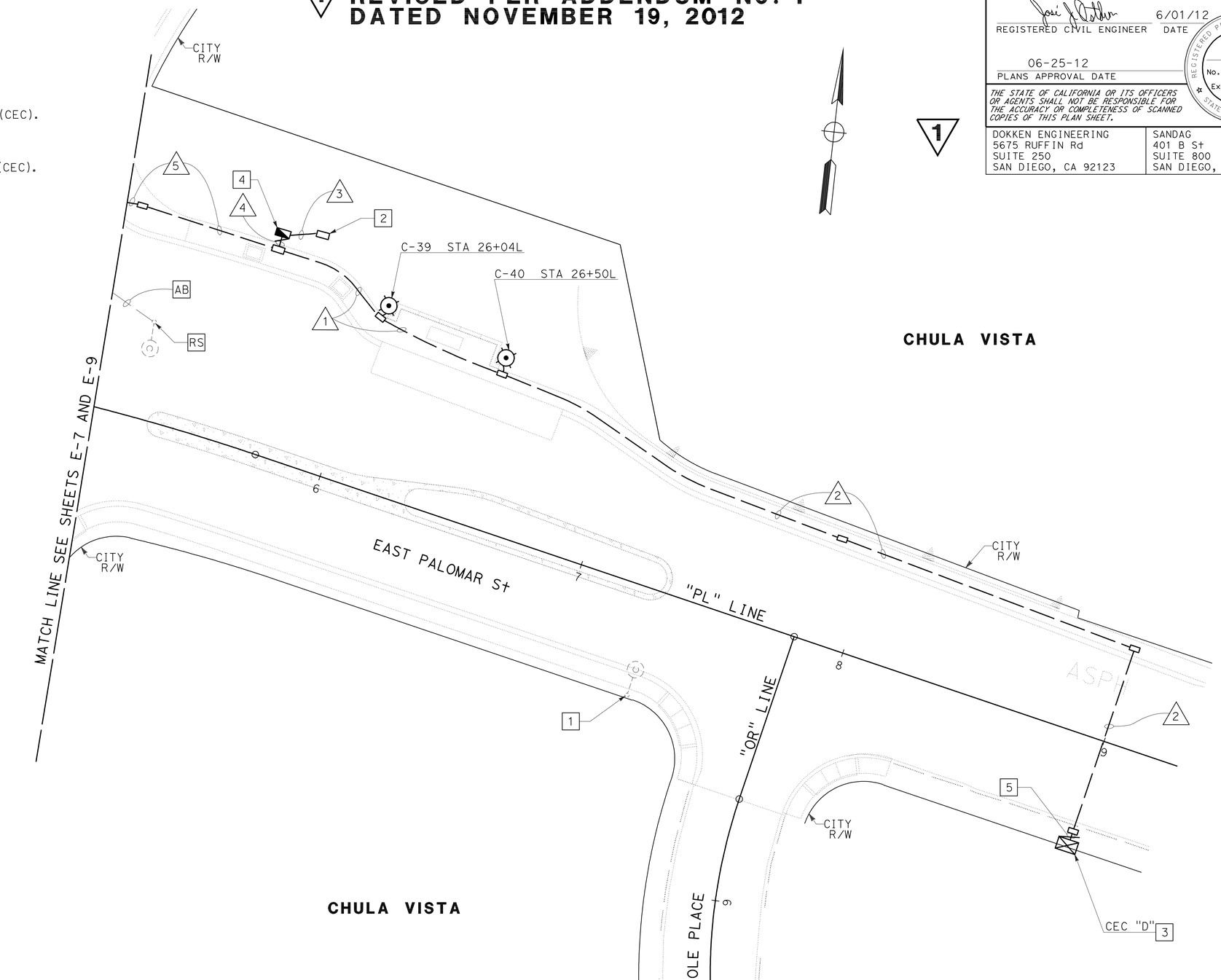

LIGHTING (CITY STREET) ELECTRIC SERVICE (IRRIGATION)

SCALE: 1" = 20'

E-8

APPROVED FOR ELECTRICAL WORK ONLY

STATE OF CALIFORNIA - DEPARTMENT OF TRANSPORTATION
Caltrans
CONSULTANT FUNCTIONAL SUPERVISOR: GERARD LUMABAS
CALCULATED-DESIGNED BY: MICHAEL GREER
CHECKED BY: JOSE OSTDIEK
REVISED BY / DATE REVISED

LAST REVISION 06-18-12
DATE PLOTTED => 16-NOV-2012
TIME PLOTTED => 06:59

Dist	COUNTY	ROUTE	POST MILES TOTAL PROJECT	SHEET No.	TOTAL SHEETS
11	SD	805	4.7/5.6	472	650

REGISTERED CIVIL ENGINEER 5/29/12 DATE

06-25-12
PLANS APPROVAL DATE

ROBERT BURNS No. C79091 Exp. 3/31/14 CIVIL — REGISTERED PROFESSIONAL ENGINEER — STATE OF CALIFORNIA

THE STATE OF CALIFORNIA OR ITS OFFICERS OR AGENTS SHALL NOT BE RESPONSIBLE FOR THE ACCURACY OR COMPLETENESS OF SCANNED COPIES OF THIS PLAN SHEET.

DOKKEN ENGINEERING
5675 RUFFIN Rd
SUITE 250
SAN DIEGO, CA 92123

SANDAG
401 B St
SUITE 800
SAN DIEGO, CA 92101

1 REVISED PER ADDENDUM No. 1 DATED NOVEMBER 19, 2012

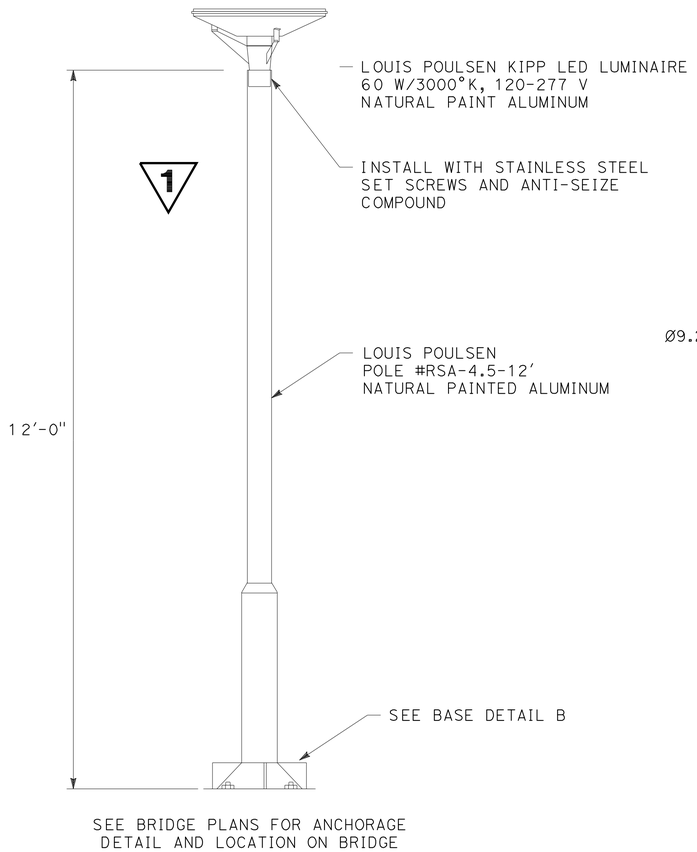

CITY DECORATIVE STREET LIGHT

NOTE: IN SIDEWALK AREAS PLACE LIGHT STANDARD 3.5' FROM FACE OF CURB. IN LANDSCAPED AREA PLACE LIGHT STANDARD IN MIDDLE OF LANDSCAPED AREA.

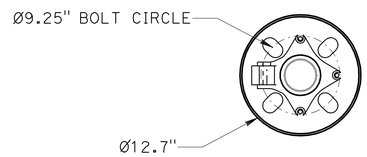

BASE DETAIL B

NO SCALE

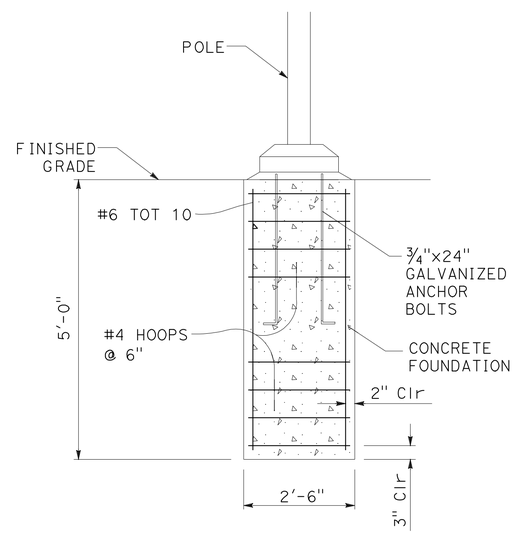

FOUNDATION DETAIL FOR CITY DECORATIVE STREET LIGHT

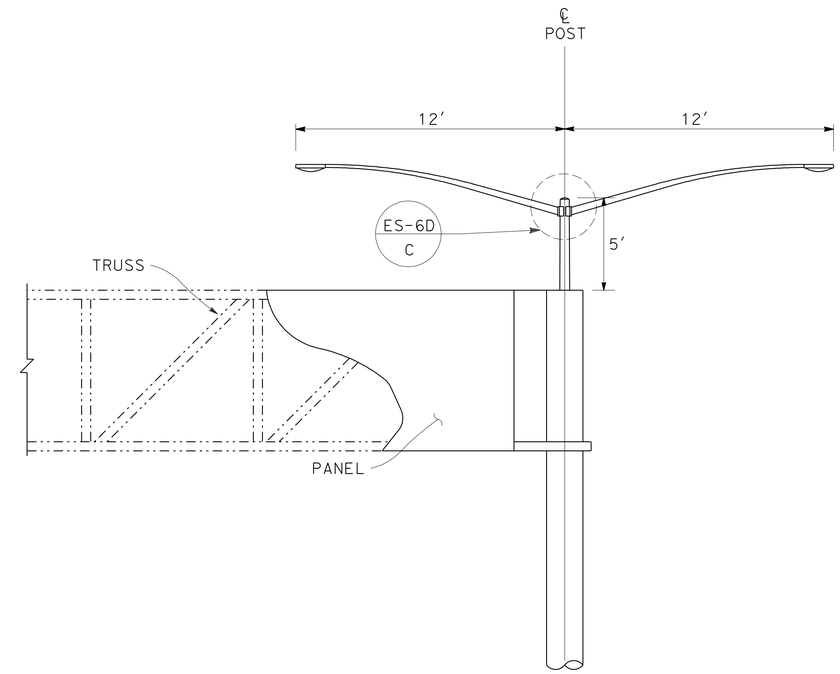

LIGHTING STANDARD TYPE 5 MODIFIED OVERHEAD SIGN MOUNTED

LUMINAIRE ARM DATA			
PROJECTED LENGTH	N RISE	Min OD AT POLE	NOMINAL THICKNESS
12'-0"	4'-3"±	3 7/8"	0.1196"

POLE EXTENSION TYPE	POLE DATA			
	HEIGHT "H"	Min OD		THICKNESS
		BASE	TOP	
TYPE 5 Mod	5'-0"	6 1/2"	6"	0.1793"

LIGHTING ELECTRICAL DETAILS

NO SCALE

E-30

APPROVED FOR ELECTRICAL WORK ONLY

REVISED BY | DATE REVISED
JOSE OSTDIEK | ROBERT BURNS
CALCULATED-DESIGNED BY | CHECKED BY
CONSULTANT FUNCTIONAL SUPERVISOR | GERARD LUMABAS
STATE OF CALIFORNIA - DEPARTMENT OF TRANSPORTATION
Caltrans

LAST REVISION 06-20-12 | DATE PLOTTED => 16-NOV-2012 | TIME PLOTTED => 06:59

DIST	COUNTY	ROUTE	POST MILES TOTAL PROJECT	SHEET No	TOTAL SHEETS
11	SD	805	4.7/5.6	526	650

Craig Shannon 4-27-12
REGISTERED CIVIL ENGINEER DATE

06-25-12
PLANS APPROVAL DATE

REGISTERED PROFESSIONAL ENGINEER Craig Shannon No. 66998 Exp. 9-30-12 CIVIL STATE OF CALIFORNIA

The State of California or its officers or agents shall not be responsible for the accuracy or completeness of electronic copies of this plan sheet.

SANDAG
401 "B" STREET, SUITE 800
SAN DIEGO, CALIFORNIA 92101

SIMON WONG ENGINEERING, INC.
9968 HIBERT STREET, SECOND FLOOR
SAN DIEGO, CALIFORNIA 92131

PROFILE GRADE

No Scale

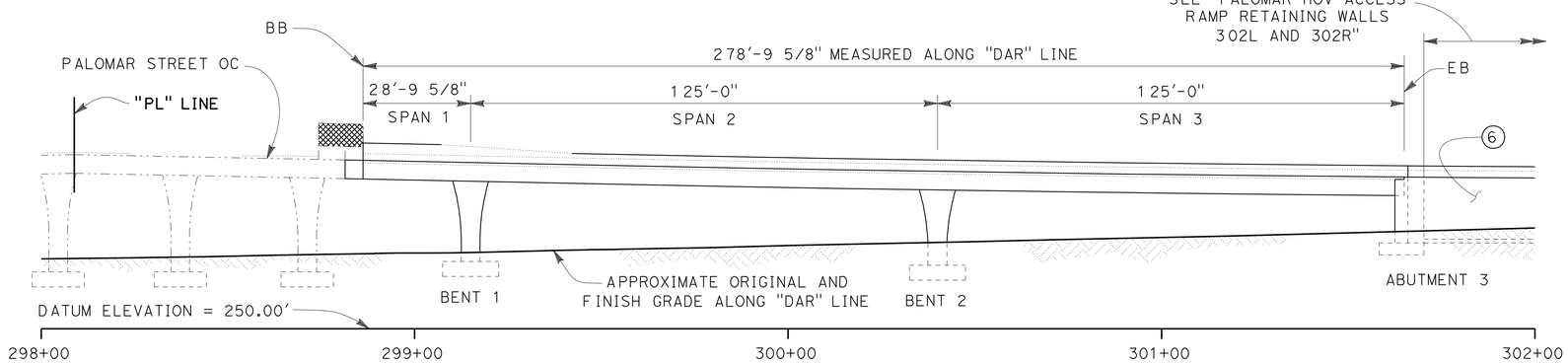

NOTES:

1. Paint "BRIDGE No. 57-1223E" and the year completed
2. Paint "PALOMAR STREET HOV ACCESS RAMP"
3. Structure Approach Type N (30S)
4. Concrete Barrier Type 736
5. Concrete Barrier Type 60A
6. Type 1 Retaining Walls 302 L/R
7. Crash Cushion (SCI100GM) - see "Roadway Plans"
8. Utility Opening for drainage
9. Electrical Conduits - see "Roadway Plans"
10. Sidewalk Texture Treatment (Sandblast and Stain) 3' x 3' Sawcut Diamond Pattern with 6" banding
11. Concrete Barrier Type 60PA

LEGEND:

⇦ Indicates direction of traffic

▫ Indicates Deck Drain

ELEVATION

1" = 20'-0"

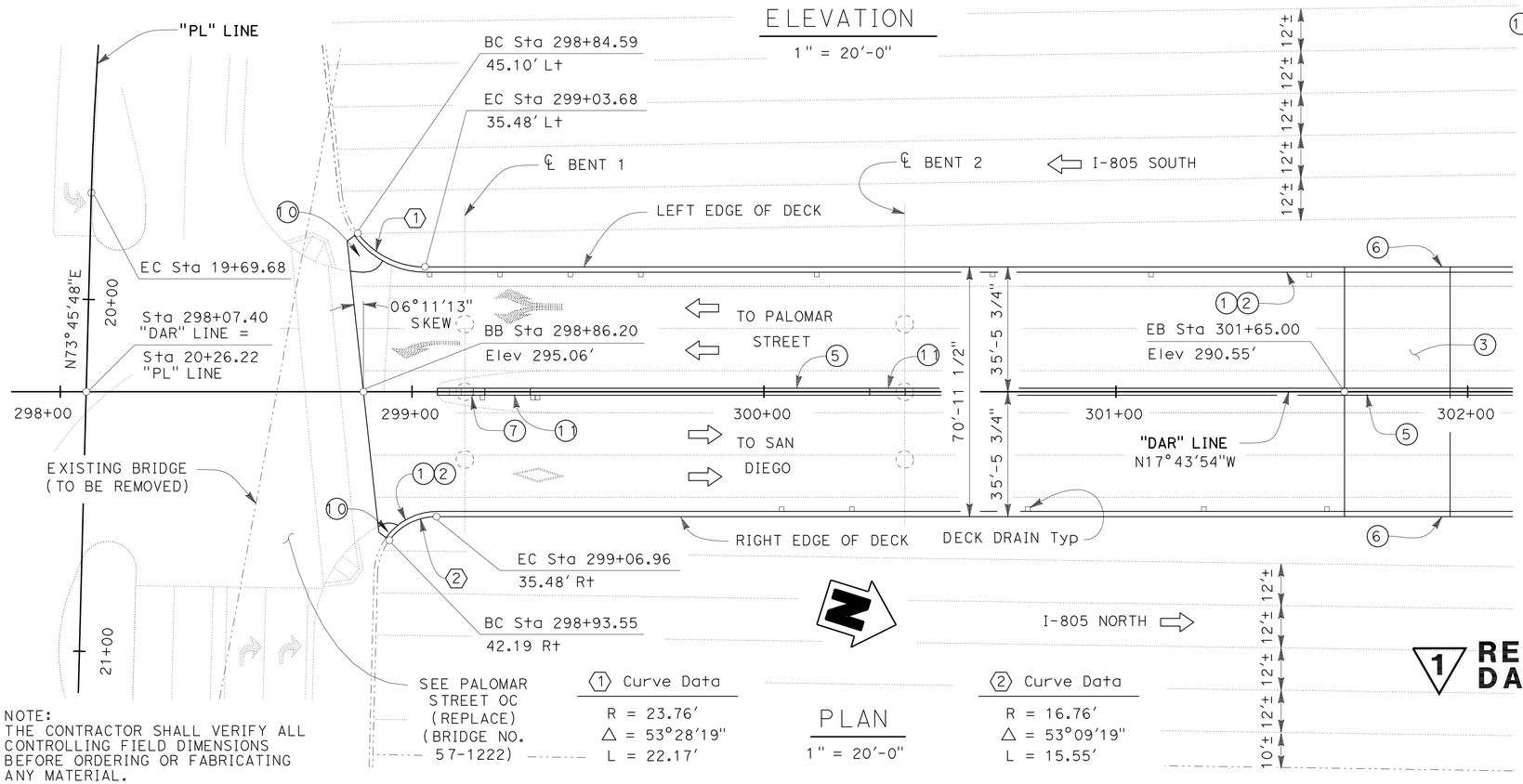

1 Curve Data

R = 23.76'
Δ = 53°28'19"
L = 22.17'

2 Curve Data

R = 16.76'
Δ = 53°09'19"
L = 15.55'

PLAN

1" = 20'-0"

NOTE:
THE CONTRACTOR SHALL VERIFY ALL CONTROLLING FIELD DIMENSIONS BEFORE ORDERING OR FABRICATING ANY MATERIAL.

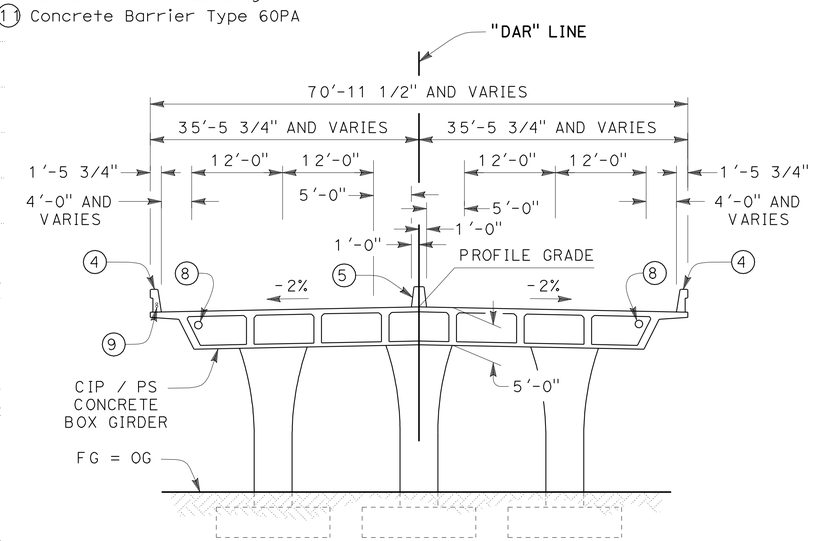

TYPICAL SECTION

1" = 10'-0"

1 REVISED PER ADDENDUM No. 1 DATED NOVEMBER 19, 2012

NOTE: For "INDEX TO PLANS", "GENERAL NOTES", "STANDARD PLANS", and "QUANTITIES", see "INDEX TO PLANS" sheet.

Nabil Gee — DESIGN OVERSIGHT Norbert Gee; 5-4-12 SIGN OFF DATE	DESIGN	BY L. Muco	CHECKED C. Tornaci	LOAD & RESISTANCE FACTOR DESIGN	LIVE LOADING: HL93 W/"LOW-BOY"; PERMIT DESIGN VEHICLE
	DETAILS	BY T. Brittain	CHECKED L. Muco	LAYOUT BY T. Brittain	CHECKED L. Muco
	QUANTITIES	BY L. Muco	CHECKED C. Tornaci	SPECIFICATIONS BY A. Powers	PLANS AND SPECS COMPARED C. Tornaci

PREPARED FOR THE STATE OF CALIFORNIA DEPARTMENT OF TRANSPORTATION

Craig Shannon
PROJECT ENGINEER

BRIDGE NO. 57-1223E
POST MILES 5.07

PALOMAR STREET HOV ACCESS RAMP
GENERAL PLAN

DESIGN GENERAL PLAN SHEET (ENGLISH) (REV.7/16/10)

ORIGINAL SCALE IN INCHES FOR REDUCED PLANS 0 1 2 3

UNIT: 2762
PROJECT NUMBER & PHASE: 1100020051
CONTRACT NO.: 11-2T1821

DISREGARD PRINTS BEARING EARLIER REVISION DATES

REVISION DATES: 4-14-11 4-27-12 2-18-12

SHEET 1 OF 34

FILE => 57-1223E-a-gp01.add

USERNAME => s127284 DATE PLOTTED => 15-NOV-2012 TIME PLOTTED => 17:15

DIST	COUNTY	ROUTE	POST MILES TOTAL PROJECT	SHEET No	TOTAL SHEETS
11	SD	805	4.7/5.6	527	650

Craig Shannon 4-27-12
REGISTERED CIVIL ENGINEER DATE

06-25-12
PLANS APPROVAL DATE

REGISTERED PROFESSIONAL ENGINEER Craig Shannon No. 66998 Exp. 9-30-12 CIVIL STATE OF CALIFORNIA

The State of California or its officers or agents shall not be responsible for the accuracy or completeness of electronic copies of this plan sheet.

SANDAG
401 "B" STREET, SUITE 800
SAN DIEGO, CALIFORNIA 92101

SIMON WONG ENGINEERING, INC.
9968 HIBERT STREET, SECOND FLOOR
SAN DIEGO, CALIFORNIA 92131

1 REVISED PER ADDENDUM No. 1 DATED NOVEMBER 19, 2012

PLAN SYMBOLS

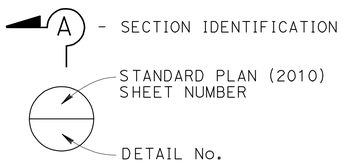

PALOMAR STREET HOV ACCESS RAMP BRIDGE #57-1223E

QUANTITIES

STRUCTURE EXCAVATION (BRIDGE)	650	CY
STRUCTURE BACKFILL (BRIDGE)	575	CY
PRESTRESSING CAST-IN-PLACE CONCRETE	LUMP	SUM
STRUCTURAL CONCRETE, BRIDGE FOOTING	255	CY
STRUCTURAL CONCRETE, BRIDGE	1,560	CY
STRUCTURAL CONCRETE, APPROACH SLAB (TYPE N)	80	CY
JOINT SEAL ASSEMBLY (MR 4")	75	LF
JOINT SEAL (MR 2")	71	LF
BAR REINFORCING STEEL (BRIDGE)	484,000	LB
BRIDGE DECK DRAINAGE SYSTEM	15,500	LB
CONCRETE BARRIER (TYPE 26 MODIFIED)	38	LF
CONCRETE BARRIER (TYPE 60A)	243	LF
CONCRETE BARRIER (TYPE 736)	532	LF
CONCRETE BARRIER (TYPE 60PA)	24	LF

GENERAL NOTES
LOAD AND RESISTANCE FACTOR DESIGN

DESIGN: AASHTO LRFD BRIDGE DESIGN SPECIFICATIONS, 4th EDITION, with 2008 interim revisions and the CALTRANS Amendments, preface dated December 2008; except that wingwalls, abutments, bridge barriers, and railing details are designed using Bridge Design Specifications ('96 AASHTO w/Revisions by Caltrans).

SEISMIC DESIGN: CALTRANS Seismic Design Criteria (SDC), Version 1.6, dated November 2010.

DEAD LOAD: Includes 35 psf for future wearing surface.

LIVE LOADING: HL93 with "Low Boy" and permit design load.

SEISMIC LOADING: Soil Profile: V_{S30}= 450 m/s
(M_{MAX} = 7.50), see curve below
(Peak Rock Acceleration = 0.3g)

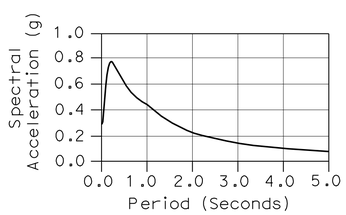

REINFORCED CONCRETE: f_y = 60 ksi
f'_c = 3.6 ksi (Unless Otherwise Noted)
n = 8

PRESTRESSED CONCRETE: See "PRESTRESSING NOTES" on "GIRDER LAYOUT" sheet.

STANDARD PLANS DATED 2010

A10A	ABBREVIATIONS (SHEET 1 OF 2)
A10B	ABBREVIATIONS (SHEET 2 OF 2)
A10C	LINES AND SYMBOLS (SHEET 1 OF 3)
A10D	LINES AND SYMBOLS (SHEET 2 OF 3)
A10E	LINES AND SYMBOLS (SHEET 3 OF 3)
A62C	LIMITS OF PAYMENT FOR EXCAVATION AND BACKFILL - BRIDGE
A76A	CONCRETE BARRIER TYPE 60
B0-1	BRIDGE DETAILS
B0-3	BRIDGE DETAILS
B0-5	BRIDGE DETAILS
B0-13	BRIDGE DETAILS
B6-21	JOINT SEALS (MAXIMUM MOVEMENT RATING = 2")
B7-1	BOX GIRDER DETAILS
B7-6	DECK DRAINS - TYPES D-1 AND D-2
B7-7	DECK DRAINS - TYPE D-3
B7-10	UTILITY OPENING BOX GIRDER
B8-5	CAST-IN-PLACE PRESTRESSED GIRDER DETAILS
B11-54	CONCRETE BARRIER TYPE 26
B11-56	CONCRETE BARRIER TYPE 736

INDEX TO PLANS

SHEET NO.	TITLE
1	GENERAL PLAN
2	INDEX TO PLANS
3	DECK CONTOURS
4	FOUNDATION PLAN
5	ABUTMENT 3 LAYOUT
6	ABUTMENT DETAILS
7	BENT DETAILS NO. 1
8	BENT DETAILS NO. 2
9	BENT DETAILS NO. 3
10	TYPICAL SECTION
11	DECK AND SOFFIT REINFORCEMENT DETAILS
12	GIRDER LAYOUT
13	GIRDER DETAILS
14	SLAB REINFORCEMENT
15	BARRIER DETAILS
16	STRUCTURAL DRAINAGE DETAILS
17	JOINT SEAL ASSEMBLY (MAX MR = 4")
18	JOINT ARMOR - EXPANSION DETAILS (MAX MR = 4")
19	STRUCTURE APPROACH TYPE N (30S)
20	STRUCTURE APPROACH DRAINAGE DETAILS
21	LOG OF TEST BORINGS 1 OF 14
22	LOG OF TEST BORINGS 2 OF 14
23	LOG OF TEST BORINGS 3 OF 14
24	LOG OF TEST BORINGS 4 OF 14
25	LOG OF TEST BORINGS 5 OF 14
26	LOG OF TEST BORINGS 6 OF 14
27	LOG OF TEST BORINGS 7 OF 14
28	LOG OF TEST BORINGS 8 OF 14
29	LOG OF TEST BORINGS 9 OF 14
30	LOG OF TEST BORINGS 10 OF 14
31	LOG OF TEST BORINGS 11 OF 14
32	LOG OF TEST BORINGS 12 OF 14
33	LOG OF TEST BORINGS 13 OF 14
34	LOG OF TEST BORINGS 14 OF 14

NOTE:
THE CONTRACTOR SHALL VERIFY ALL CONTROLLING FIELD DIMENSIONS BEFORE ORDERING OR FABRICATING ANY MATERIAL.

Norbert Gee 5-4-12
DESIGN OVERSIGHT Norbert Gee
SIGN OFF DATE

	BY	CHECKED
DESIGN	L. Muco	C. Tornaci
DETAILS	T. Brittain	L. Muco
QUANTITIES	L. Muco	C. Tornaci

PREPARED FOR THE STATE OF CALIFORNIA DEPARTMENT OF TRANSPORTATION

Craig Shannon
PROJECT ENGINEER

BRIDGE NO. 57-1223E
POST MILES 5.07

PALOMAR STREET HOV ACCESS RAMP
INDEX TO PLANS

DESIGN DETAIL SHEET (ENGLISH) (REV.7/16/10)

ORIGINAL SCALE IN INCHES FOR REDUCED PLANS 0 1 2 3

UNIT: 2762
PROJECT NUMBER & PHASE: 1100020051 CONTRACT NO.: 11-2T1821

DISREGARD PRINTS BEARING EARLIER REVISION DATES
REVISION DATES 4-26-11 4-27-12 2-10-12
SHEET 2 OF 34

FILE => 57-1223E-a-itp01.add

USERNAME => s127284 DATE PLOTTED => 15-NOV-2012 TIME PLOTTED => 17:16

DIST	COUNTY	ROUTE	POST MILES TOTAL PROJECT	SHEET No	TOTAL SHEETS
11	SD	805	4.7/5.6	540	650

Craig Shannon 4-27-12
REGISTERED CIVIL ENGINEER DATE

06-25-12
PLANS APPROVAL DATE

REGISTERED PROFESSIONAL ENGINEER Craig Shannon No. 66998 Exp. 9-30-12 CIVIL STATE OF CALIFORNIA

The State of California or its officers or agents shall not be responsible for the accuracy or completeness of electronic copies of this plan sheet.

SANDAG
401 "B" STREET, SUITE 800
SAN DIEGO, CALIFORNIA 92101

SIMON WONG ENGINEERING, INC.
9968 HIBERT STREET, SECOND FLOOR
SAN DIEGO, CALIFORNIA 92131

1 REVISED PER ADDENDUM No. 1 DATED NOVEMBER 19, 2012

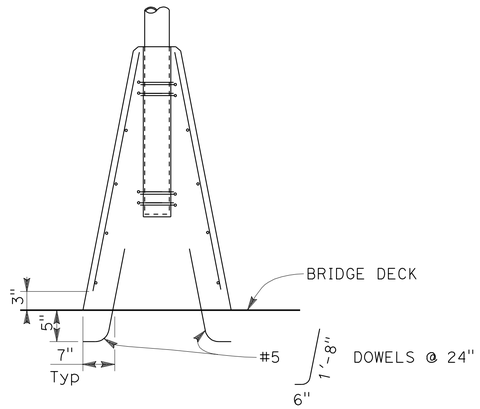

CONCRETE BARRIER TYPE 60PA

DETAILS SIMILAR TO CB TYPE 60P EXCEPT AS SHOWN (SEE ROADWAY PLANS, SD-9)

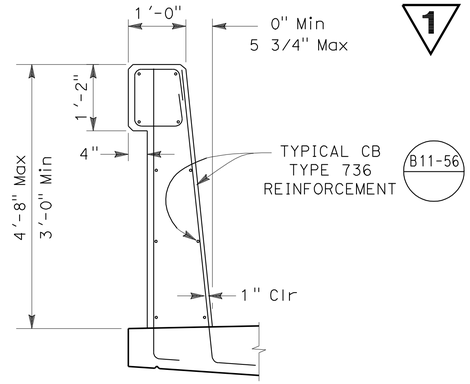

SECTION B-B
3/4" = 1'-0"

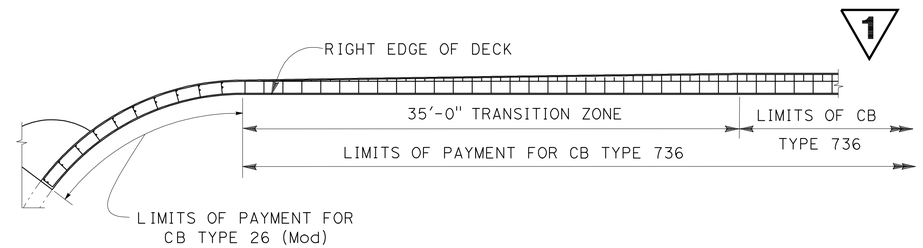

DETAIL A
3/16" = 1'-0"

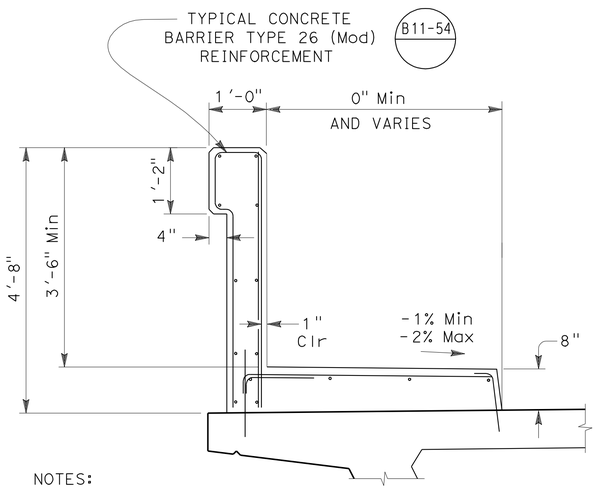

NOTES:

1. For curb layout, see "Roadway Plans".
2. Match curb and sidewalk to PALOMAR STREET OC (REPLACE) BRIDGE No. 57-1222.
3. For architectural treatment and texture details, see "BRIDGE TEXTURE DETAILS" on "Roadway Plans".

SECTION A-A
3/4" = 1'-0"

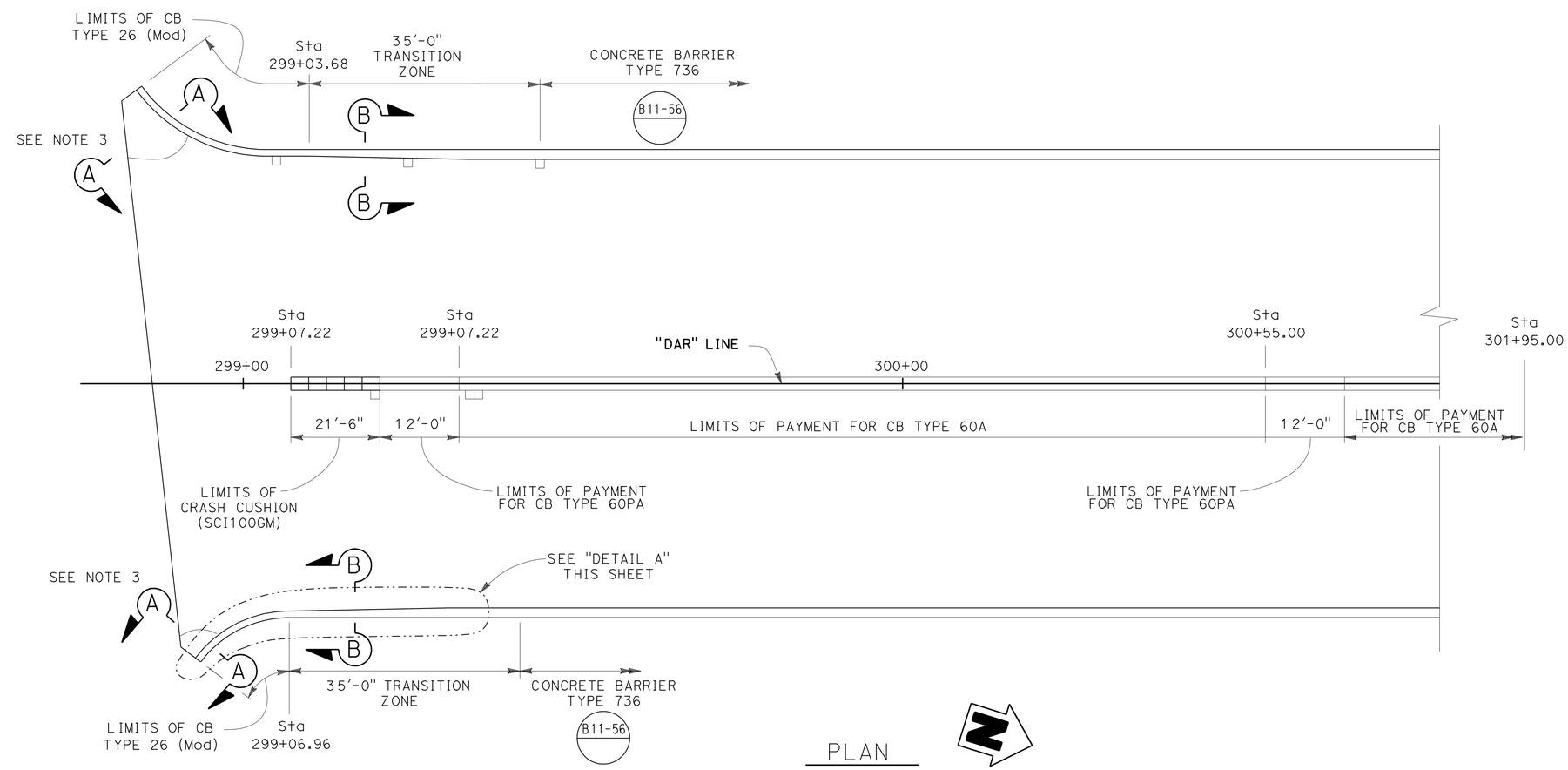

PLAN
1" = 10'-0"

NOTE:
THE CONTRACTOR SHALL VERIFY ALL CONTROLLING FIELD DIMENSIONS BEFORE ORDERING OR FABRICATING ANY MATERIAL.

Norbert Gee
DESIGN OVERSIGHT Norbert Gee
5-4-12
SIGN OFF DATE

	BY	CHECKED
DESIGN	L. Muco	C. Tornaci
DETAILS	T. Brittain	L. Muco
QUANTITIES	L. Muco	C. Tornaci

PREPARED FOR THE STATE OF CALIFORNIA DEPARTMENT OF TRANSPORTATION

Craig Shannon
PROJECT ENGINEER

BRIDGE NO. 57-1223E
POST MILES 5.07

PALOMAR STREET HOV ACCESS RAMP
BARRIER DETAILS

DESIGN DETAIL SHEET (ENGLISH) (REV.7/16/10)

ORIGINAL SCALE IN INCHES FOR REDUCED PLANS 0 1 2 3

UNIT: 2762
PROJECT NUMBER & PHASE: 1100020051
CONTRACT NO.: 11-2T1821

DISREGARD PRINTS BEARING EARLIER REVISION DATES

REVISION DATES: 4-26-11 4-27-12 2-10-12

SHEET 15 OF 34

FILE => 57-1223E-n-bdet01.add

USERNAME => s127284 DATE PLOTTED => 15-NOV-2012 TIME PLOTTED => 17:16