DIST	COUNTY	ROUTE	POST MILES TOTAL PROJECT	SHEET No	TOTAL SHEETS
11	SD	15	M15.0/M16.4	501	610

REGISTERED CIVIL ENGINEER — DATE 10-15-10

10-24-11
PLANS APPROVAL DATE

REGISTERED PROFESSIONAL ENGINEER — ROBERT E. HAWTHORNE — No. 40075 — Exp. 03/31/12 — CIVIL — STATE OF CALIFORNIA

The State of California or its officers or agents shall not be responsible for the accuracy or completeness of scanned copies of this plan sheet.

SANDAG
401 B STREET, SUITE 800
SAN DIEGO, CA 92101

AECOM
7807 CONVOY COURT, SUITE 200
SAN DIEGO, CA 92111

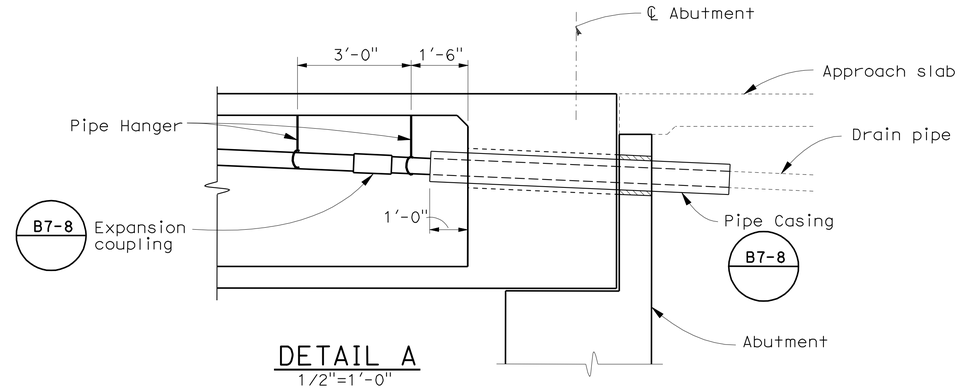

DETAIL A
1/2"=1'-0"

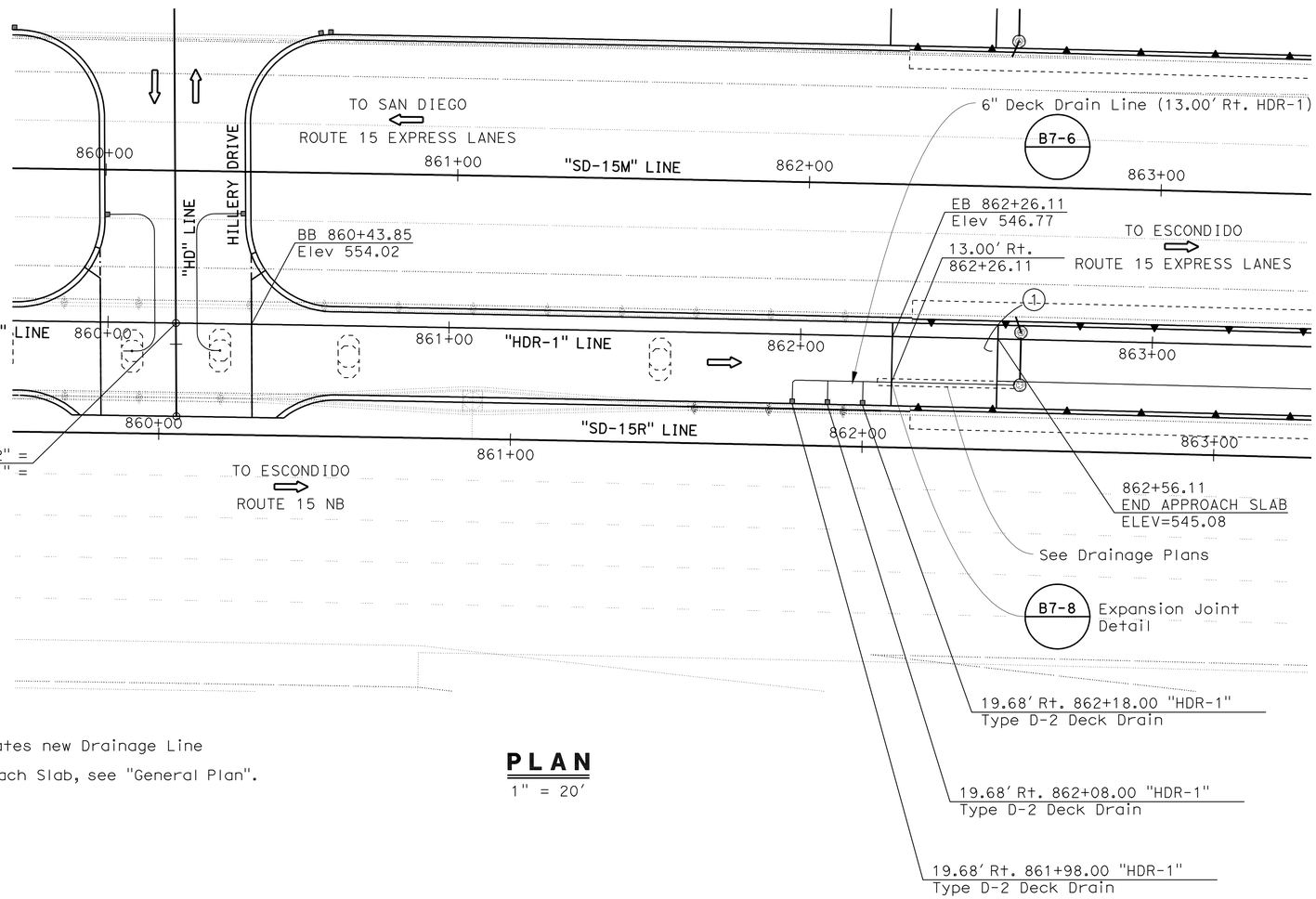

PLAN
1" = 20'

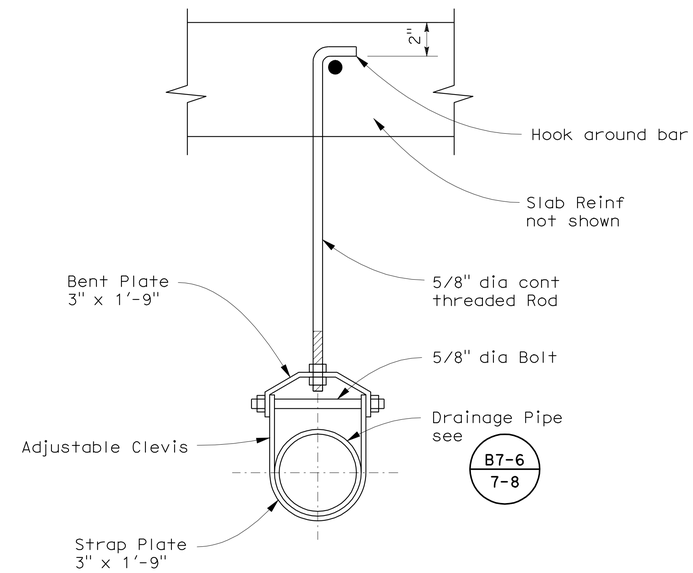

DRAINAGE PIPE SUPPORT
NTS

LEGEND:

——— - Indicates new Drainage Line

(1) - Approach Slab, see "General Plan".

HILLERY DIRECT ACCESS RAMPS
NORTHBOUND ON-RAMP
DECK DRAINS

DESIGN OVERSIGHT — Norbert Gee
10-25-10
SIGN OFF DATE

	BY	CHECKED
DESIGN	R Ramoso/H Mai	John Powell
DETAILS	C Morgan/C Lente	John Powell
QUANTITIES	R Ramoso/H Mai	Janice Reguyal

PREPARED FOR THE STATE OF CALIFORNIA DEPARTMENT OF TRANSPORTATION

Robert E. Hawthorne
PROJECT ENGINEER

BRIDGE NO. 57-1214
POST MILE R15.7

DISREGARD PRINTS BEARING EARLIER REVISION DATES

REVISION DATES (PRELIMINARY STAGE ONLY): 01/22/10 03/08/10 05/18/10 05/21/10 07/01/10 08/21/10

SHEET 22 OF 33

DESIGN DETAIL SHEET (ENGLISH) (REV. 06-01-09)

ORIGINAL SCALE IN INCHES FOR REDUCED PLANS 0 1 2 3

CU 11269
EA 2T0951

FILE => 57-1214-r-dd01.dgn

USERNAME => s124496 DATE PLOTTED => 27-OCT-2011 TIME PLOTTED => 08:48

DIST	COUNTY	ROUTE	POST MILES TOTAL PROJECT	SHEET No	TOTAL SHEETS
11	SD	15	M15.0/M16.4	502	610

Robert E Hawthorne 10-15-10
REGISTERED CIVIL ENGINEER DATE

10-24-11
PLANS APPROVAL DATE

REGISTERED PROFESSIONAL ENGINEER ROBERT E. HAWTHORNE No. 40075 Exp. 03/31/12 CIVIL STATE OF CALIFORNIA

The State of California or its officers or agents shall not be responsible for the accuracy or completeness of scanned copies of this plan sheet.

SANDAG
401 B STREET, SUITE 800
SAN DIEGO, CA 92101

AECOM
7807 CONVOY COURT, SUITE 200
SAN DIEGO, CA 92111

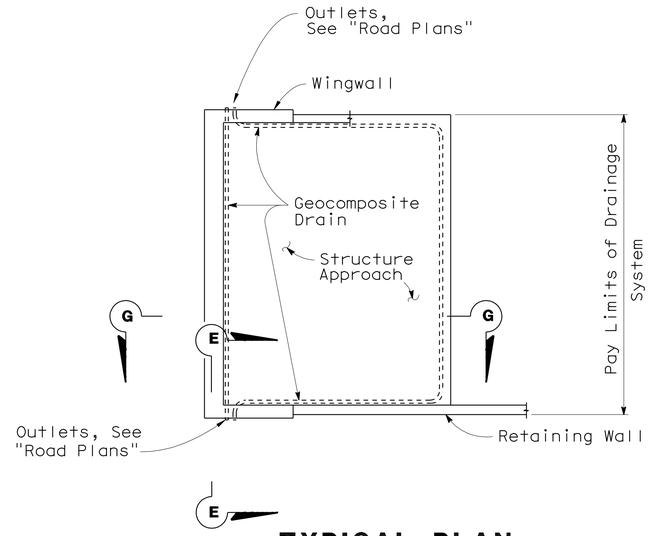

TYPICAL PLAN
1" = 10'

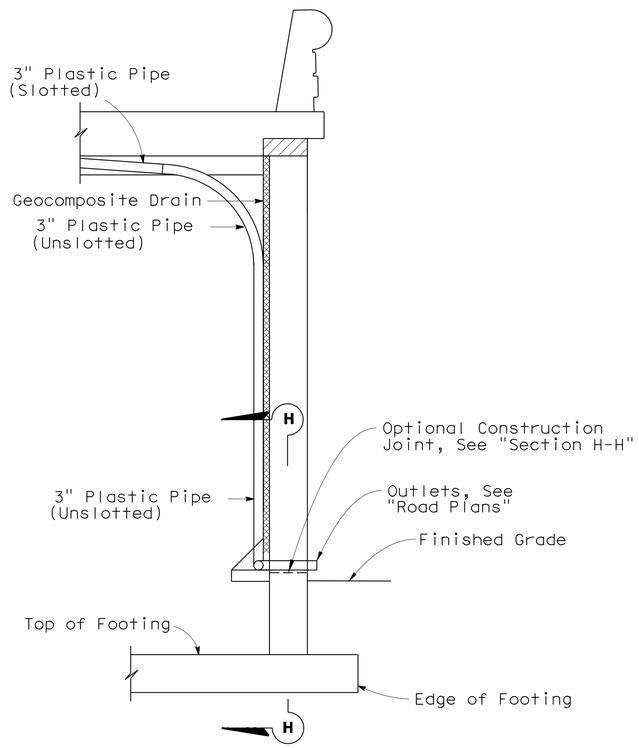

SECTION E-E
½" = 1'-0"

Note: Bends and Junctions in 3" Plastic Pipe are 30" Radius Min

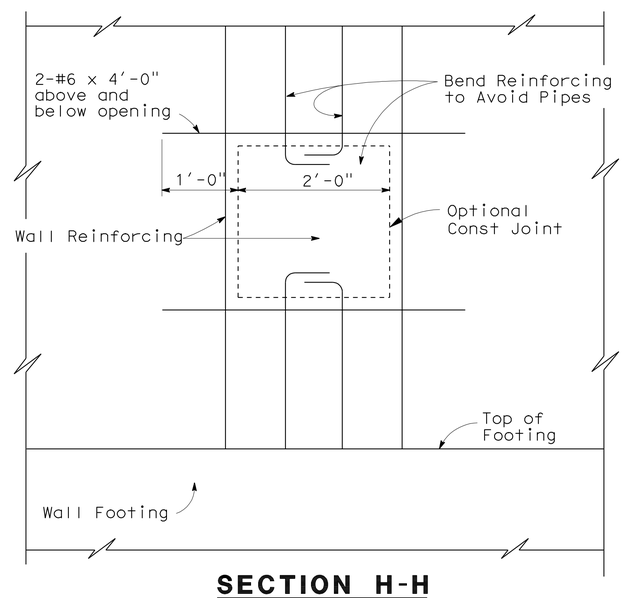

SECTION H-H
1" = 1'-0"

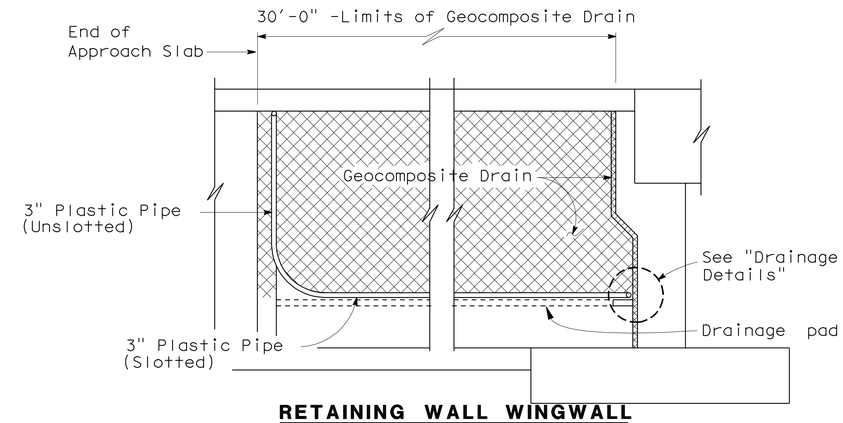

RETAINING WALL WINGWALL
SECTION G-G
¼" = 1'-0"

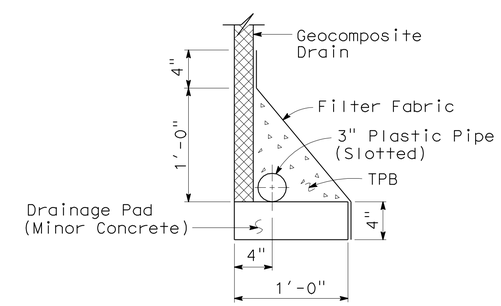

WITHOUT FOOTING
DRAINAGE DETAILS
1½" = 1'-0"

Robert Gee
DESIGN OVERSIGHT Norbert Gee
10-25-10
SIGN OFF DATE

	BY	CHECKED
DESIGN	R Ramoso/H Mai	John Powell
DETAILS	C Morgan/C Lente	John Powell
QUANTITIES	R Ramoso/H Mai	Janice Reguyal

PREPARED FOR THE STATE OF CALIFORNIA DEPARTMENT OF TRANSPORTATION

Robert E. Hawthorne
PROJECT ENGINEER

BRIDGE NO. 57-1214
POST MILE R15.7

HILLERY DIRECT ACCESS RAMPS
NORTHBOUND ON-RAMP
STRUCTURE APPROACH DRAINAGE DETAILS

DESIGN DETAIL SHEET (ENGLISH) (REV. 06-01-09)

ORIGINAL SCALE IN INCHES FOR REDUCED PLANS 0 1 2 3

CU 11269
EA 2T0951

DISREGARD PRINTS BEARING EARLIER REVISION DATES

REVISION DATES (PRELIMINARY STAGE ONLY) 01/22/10 03/08/10 05/27/10 07/01/10 08/27/10

SHEET 23 OF 33

FILE => 57-1214-s-sadd.dgn

USERNAME => s124496 DATE PLOTTED => 27-OCT-2011 TIME PLOTTED => 08:48

DIST	COUNTY	ROUTE	POST MILES TOTAL PROJECT	SHEET No	TOTAL SHEETS
11	SD	15	M15.0/M16.4	503	610

REGISTERED CIVIL ENGINEER — DATE 10-15-10

10-24-11
PLANS APPROVAL DATE

REGISTERED PROFESSIONAL ENGINEER — ROBERT E. HAWTHORNE — No. 40075 — Exp. 03/31/12 — CIVIL — STATE OF CALIFORNIA

The State of California or its officers or agents shall not be responsible for the accuracy or completeness of scanned copies of this plan sheet.

SANDAG
401 B STREET, SUITE 800
SAN DIEGO, CA 92101

AECOM
7807 CONVOY COURT, SUITE 200
SAN DIEGO, CA 92111

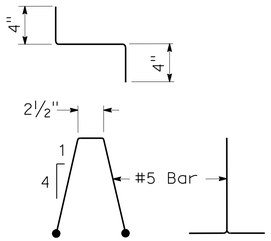

BAR CHAIR DETAIL

1½"=1'-0"

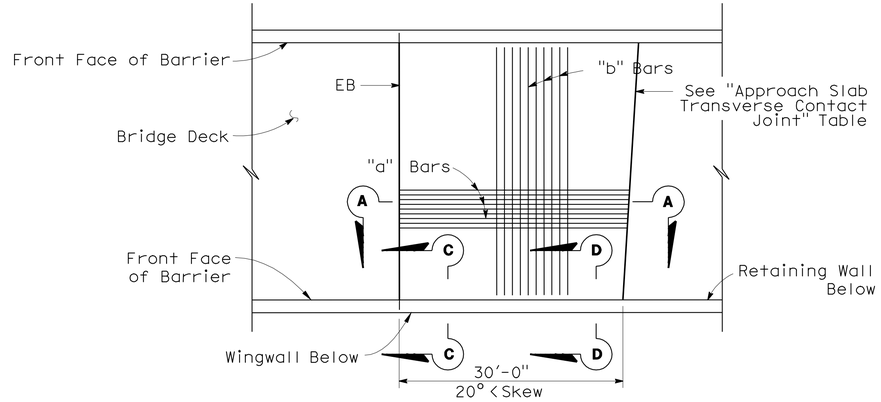

PLAN

1" = 10'

APPROACH SLAB TRANSVERSE CONTACT JOINT		
APPROACH SKEW	WITH AC ROADWAY PAVEMENT	WITH PCC ROADWAY PAVEMENT
< 20°	Parallel to face of paving notch	Parallel to face of paving notch

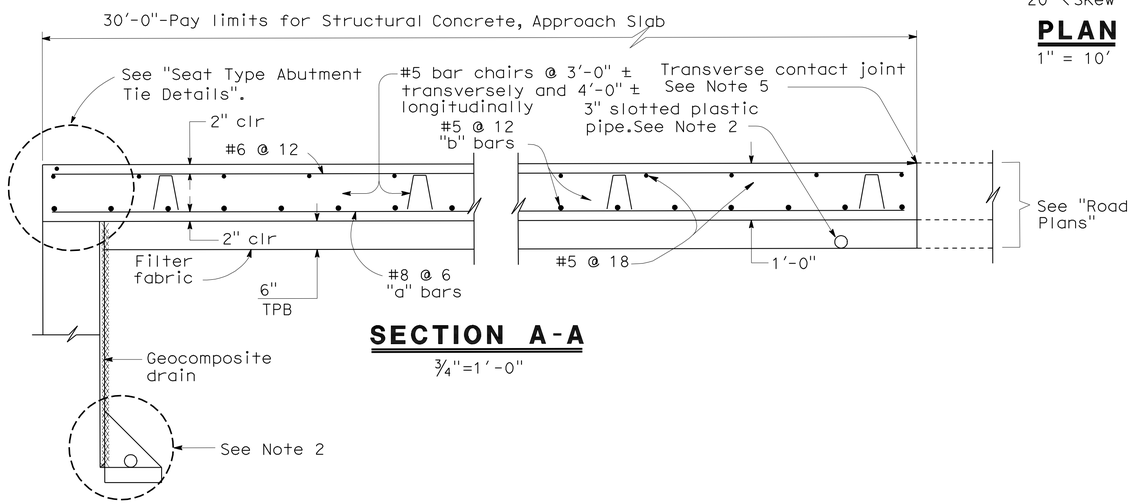

SECTION A-A

¾"=1'-0"

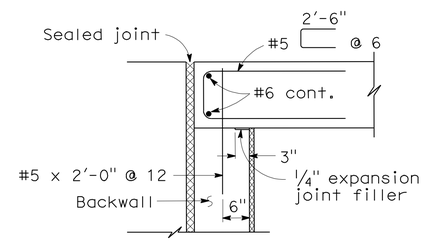

MR ≤ 2"

SEAT TYPE ABUTMENT TIE DETAILS (SEE NOTE 1)

¾"=1'-0"

NOTES:

1. For details not shown, see Structure Plans. For MR ≤ 2", adjust bar reinforcement to clear a sawcut for sealed joint, when required.
2. For drainage details, see "Structure Approach Drainage Details" sheet.
3. Longitudinal construction joints, when permitted by the Engineer, shall be located on lane lines.
4. End angle or plate at beginning of barrier transition, end of wingwall or end of structure approach as applicable.
5. For transverse contact joint with new PCC paving, refer to RSP P10.
6. At the contractor's option, approach slab transverse reinforcement may be placed parallel to paving notch. Spacing of transverse reinforcement is measured along ℄ of roadway.

Remove all polystyrene.

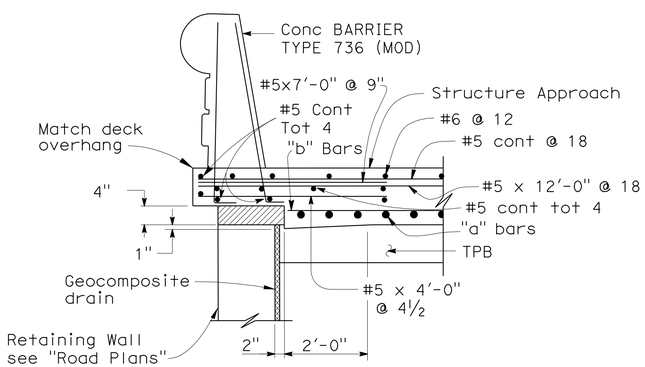

SECTION C-C

¾"=1'-0"

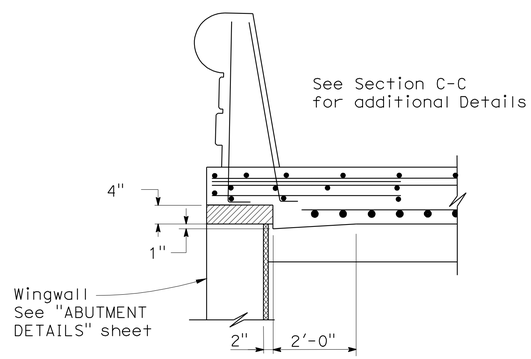

SECTION D-D

¾"=1'-0"

HILLERY DIRECT ACCESS RAMPS

NORTHBOUND ON-RAMP

STRUCTURE APPROACH TYPE N(30S)

DESIGN OVERSIGHT — Norbert Gee
10-25-10
SIGN OFF DATE

	BY	CHECKED
DESIGN	R Ramoso/H Mai	John Powell
DETAILS	C Morgan/C Lente	John Powell
QUANTITIES	R Ramoso/H Mai	Janice Reguyal

PREPARED FOR THE STATE OF CALIFORNIA DEPARTMENT OF TRANSPORTATION

Robert E. Hawthorne
PROJECT ENGINEER

BRIDGE NO. 57-1214
POST MILE R15.7

CU 11269
EA 2T0951

DISREGARD PRINTS BEARING EARLIER REVISION DATES — 01/22/10 03/08/10 05/24/10 05/27/10 07/01/10 08/27/10

SHEET 24 OF 33

DESIGN DETAIL SHEET (ENGLISH) (REV. 06-01-09)

ORIGINAL SCALE IN INCHES FOR REDUCED PLANS 0 1 2 3

FILE => 57-1214-s-satn.dgn

USERNAME => s6124496 DATE PLOTTED => 27-OCT-2011 TIME PLOTTED => 08:48

DIST	COUNTY	ROUTE	POST MILES TOTAL PROJECT	SHEET No	TOTAL SHEETS
11	SD	15	M15.0/M16.4	504	610

REGISTERED CIVIL ENGINEER — DATE 10-15-10

10-24-11
PLANS APPROVAL DATE

REGISTERED PROFESSIONAL ENGINEER — ROBERT E. HAWTHORNE — No. 40075 — Exp. 03/31/12 — CIVIL — STATE OF CALIFORNIA

The State of California or its officers or agents shall not be responsible for the accuracy or completeness of scanned copies of this plan sheet.

SANDAG
401 B STREET, SUITE 800
SAN DIEGO, CA 92101

AECOM
7807 CONVOY COURT, SUITE 200
SAN DIEGO, CA 92111

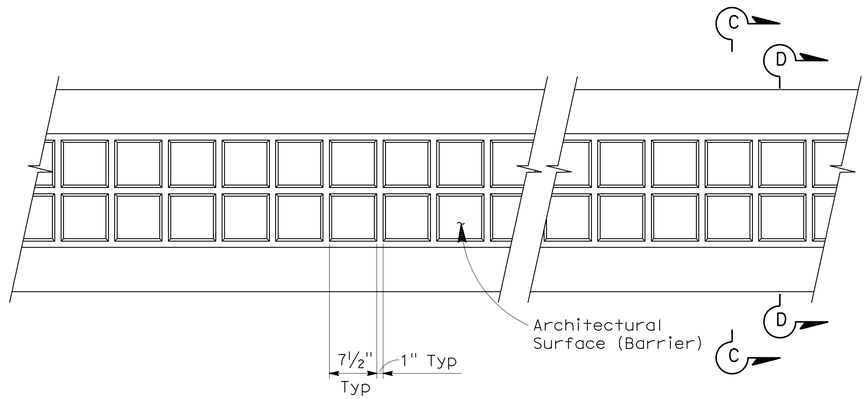

ELEVATION

1"=1'-0"

Notes:
(1) Alternate "Section C-C" and "Section D-D" along the full length of barrier rail.
(2) For other details of barrier rail not shown or noted, see B11-56

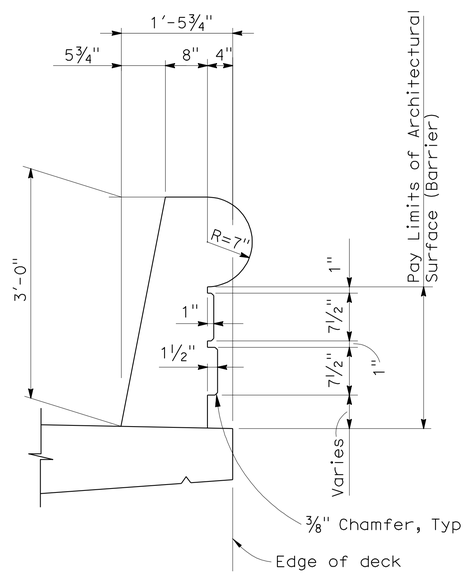

SECTION C-C

1"=1'-0"

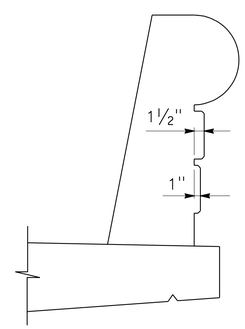

SECTION D-D

1"=1'-0"

Note:
For dimensions not shown, see "Section C-C"

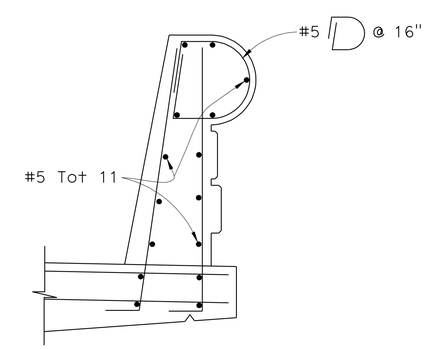

PART SECTION

1"=1'-0"

DESIGN OVERSIGHT — Norbert Gee
10-25-10
SIGN OFF DATE

	BY	CHECKED
DESIGN	R Ramoso/H Mai	John Powell
DETAILS	C Morgan/C Lente	John Powell
QUANTITIES	R Ramoso/H Mai	Janice Reguyal

PREPARED FOR THE STATE OF CALIFORNIA DEPARTMENT OF TRANSPORTATION

Robert E. Hawthorne
PROJECT ENGINEER

BRIDGE NO. 57-1214
POST MILE R15.7

HILLERY DIRECT ACCESS RAMPS
NORTHBOUND ON-RAMP
CONC BARRIER TYPE 736 (Mod)

DESIGN DETAIL SHEET (ENGLISH) (REV. 06-01-09)

ORIGINAL SCALE IN INCHES FOR REDUCED PLANS 0 1 2 3

CU 11269
EA 2T0951

DISREGARD PRINTS BEARING EARLIER REVISION DATES

REVISION DATES (PRELIMINARY STAGE ONLY): 01/22/10 03/08/10 05/27/10 07/01/10 08/27/10 10/06/10

SHEET 25 OF 33

FILE => 57-1214-t-brdt.dgn

USERNAME => s124196 DATE PLOTTED => 27-OCT-2011 TIME PLOTTED => 08:48

DIST	COUNTY	ROUTE	POST MILES TOTAL PROJECT	SHEET No	TOTAL SHEETS
11	SD	15	M15.0/M16.4	505	610

REGISTERED CIVIL ENGINEER 10-15-10

10-24-11
PLANS APPROVAL DATE

The State of California or its officers or agents shall not be responsible for the accuracy or completeness of electronic copies of this plan sheet.

REGISTERED PROFESSIONAL ENGINEER David T-M Liao No. 59838 Exp. 12-31-11 CIVIL STATE OF CALIFORNIA

This LOTB sheet was prepared in accordance with the Caltrans Soil & Rock Logging, Classification, & Presentation Manual (June 2007).

BENCH MARK

BM WP100 Elev 524.77′
Fd Pk/Wshr in gutter
N 1913007.270
E 6295232.971
NAVD 1988

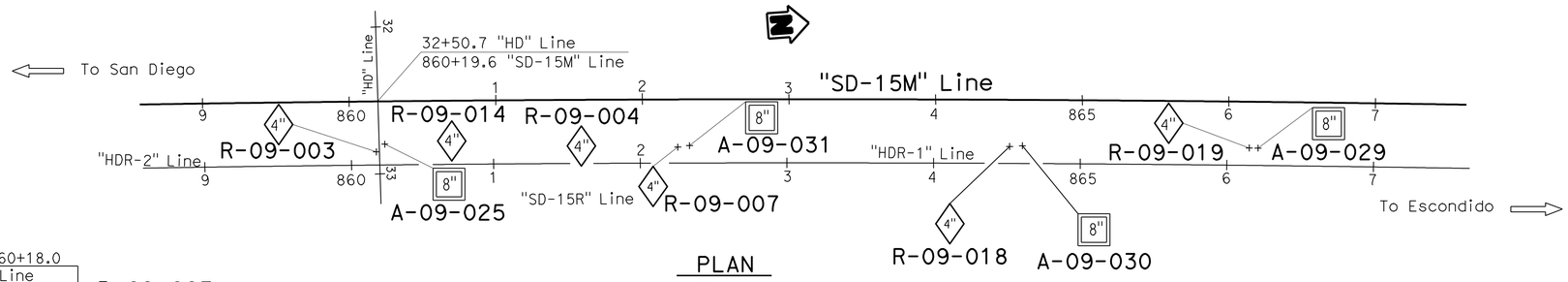

PLAN
1" = 50′

Notes:

1. Core samples are available for viewing at the California Department of Transportation,Transpotation Laboratory, 5900 Folsom Blvd, Sacramento, CA 95819.
2. Attempt was made to measure groundwater in Boring R-09-003. Please refer to the elevation view of this boring for measured groundwater elevations.
3. Attempt was made to measure groundwater in Boring R-09-014, A-09-025, A-09-029, A-09-030, A-09-031. Grounwater was not encountered in these borings.
4. Attempt was not made to measure groundwater in Boring R-09-004, R-09-007, R-09-018, R-09-019. These borings were immediately backfilled after completion of drilling operations.
5. For additional groundwater information, refer to Borings R-09-016, R-09-020, R-09-021 of Hillery Dr. OC (Br. No. 57-1213), and R-09-005, R-09-006, A-09-026, A-09-027, A-09-028 of Northbound Off-Ramp (Br. No. 57-1215) Logs of Test Borings.
6. RQD designated with "N/A" (not applicable) infers that the rock encountered with the drilled interval was not sound rock, therefore, RQD was not calculated.

PROFILE
HOR. 1" = 10′
VER. 1" = 10′

HILLERY DIRECT ACCESS RAMPS
NORTHBOUND ON-RAMP
LOG OF TEST BORINGS 1 OF 8

ENGINEERING SERVICES	GEOTECHNICAL SERVICES	STATE OF CALIFORNIA DEPARTMENT OF TRANSPORTATION	DIVISION OF ENGINEERING SERVICES STRUCTURE DESIGN DESIGN BRANCH	BRIDGE NO. 57-1214 / POST MILES R15.7
FUNCTIONAL SUPERVISOR NAME: M. DeSalvatore	DRAWN BY: B. Huddleston 12/09, I.G-Remmen 1/10 / CHECKED BY: E. Neupert	FIELD INVESTIGATION BY: J. Klamecki	CU 11 EA 2T0951	

OGS CIVIL LOG OF TEST BORINGS SHEET

ORIGINAL SCALE IN INCHES FOR REDUCED PLANS 0 1 2 3

DISREGARD PRINTS BEARING EARLIER REVISION DATES 01-28-10 07-01-10 08-16-10 09-01-10

REVISION DATES

SHEET 26 OF 33

FILE => 57-1214-z-lltb01.dgn

USERNAME => s124496 DATE PLOTTED => 27-OCT-2011 TIME PLOTTED => 08:49

DIST	COUNTY	ROUTE	POST MILES TOTAL PROJECT	SHEET No	TOTAL SHEETS
11	SD	15	M15.0/M16.4	506	610

REGISTERED CIVIL ENGINEER 10-15-10

10-24-11
PLANS APPROVAL DATE

REGISTERED PROFESSIONAL ENGINEER
David T-M Liao
No. 59838
Exp. 12-31-11
CIVIL
STATE OF CALIFORNIA

The State of California or its officers or agents shall not be responsible for the accuracy or completeness of electronic copies of this plan sheet.

This LOTB sheet was prepared in accordance with the Caltrans Soil & Rock Logging, Classification, & Presentation Manual (June 2007).

FOR PLAN VIEW, SEE
"LOG OF TEST BORINGS 1 OF 8"

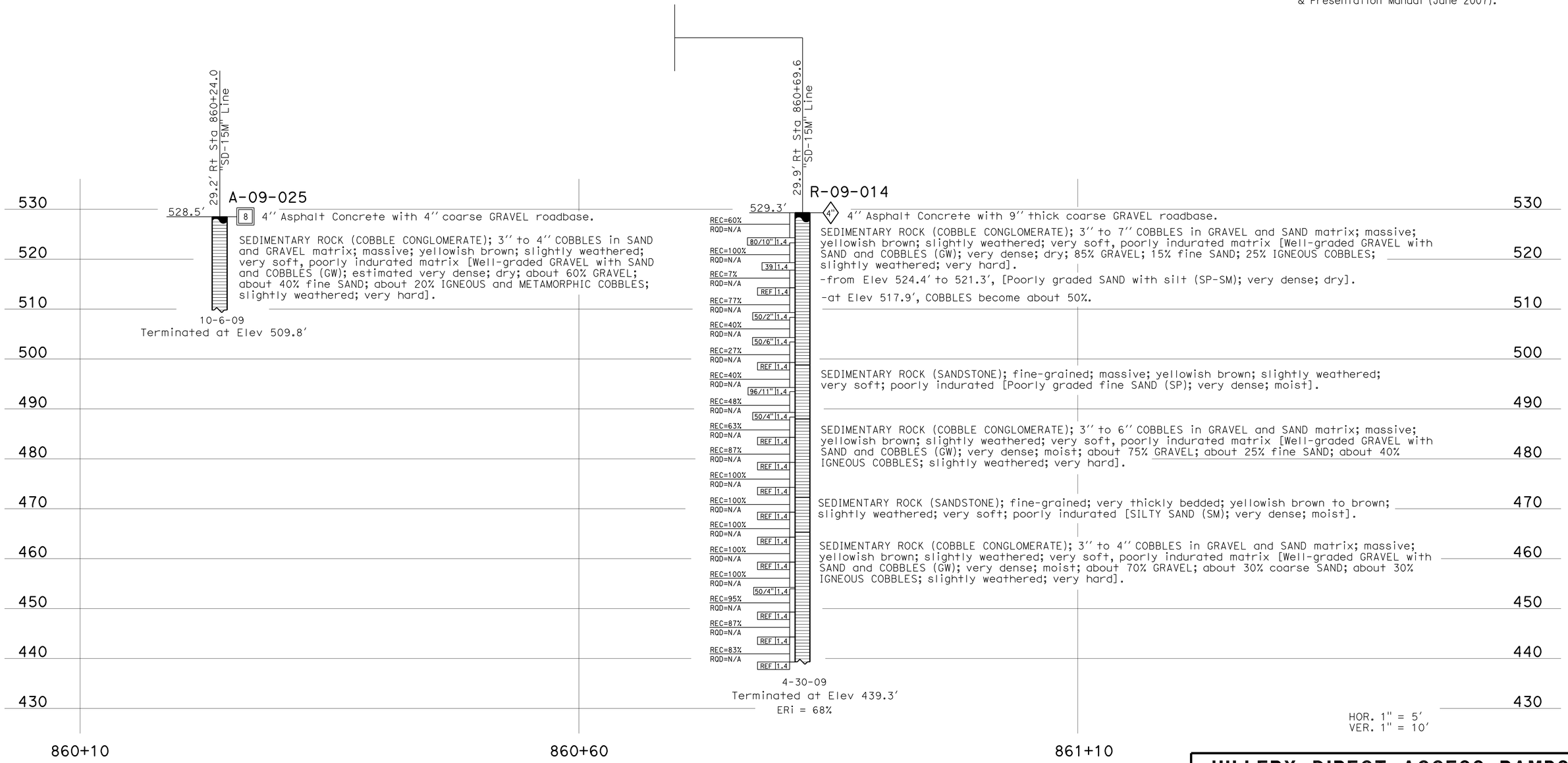

ENGINEERING SERVICES	GEOTECHNICAL SERVICES		STATE OF CALIFORNIA DEPARTMENT OF TRANSPORTATION	DIVISION OF ENGINEERING SERVICES STRUCTURE DESIGN	BRIDGE NO. 57-1214	HILLERY DIRECT ACCESS RAMPS
FUNCTIONAL SUPERVISOR	DRAWN BY: B. Huddleston 12/09, I.G-Remmen 1/10	FIELD INVESTIGATION BY:		DESIGN BRANCH	POST MILES R15.7	NORTHBOUND ON-RAMP
NAME: M. DeSalvatore	CHECKED BY: E. Neupert	T-M Liao, J. Klamecki		CU 11 EA 2T0951		LOG OF TEST BORINGS 2 OF 8

OGS CIVIL LOG OF TEST BORINGS SHEET

ORIGINAL SCALE IN INCHES FOR REDUCED PLANS 0 1 2 3

DISREGARD PRINTS BEARING EARLIER REVISION DATES

REVISION DATES: 01-26-10 07-01-10 08-16-10 09-01-10 09-07-10

SHEET 27 OF 33

FILE => 57-1214-z-ltb02.dgn

USERNAME => s124496 DATE PLOTTED => 27-OCT-2011 TIME PLOTTED => 08:49

DIST	COUNTY	ROUTE	POST MILES TOTAL PROJECT	SHEET No	TOTAL SHEETS
11	SD	15	M15.0/M16.4	507	610

REGISTERED CIVIL ENGINEER 10-15-10

10-24-11
PLANS APPROVAL DATE

The State of California or its officers or agents shall not be responsible for the accuracy or completeness of electronic copies of this plan sheet.

REGISTERED PROFESSIONAL ENGINEER
David T-M Liao
No. C59838
Exp. 12-31-11
CIVIL
STATE OF CALIFORNIA

This LOTB sheet was prepared in accordance with the Caltrans Soil & Rock Logging, Classification, & Presentation Manual (June 2007).

FOR PLAN VIEW, SEE
"LOG OF TEST BORINGS 1 OF 8"

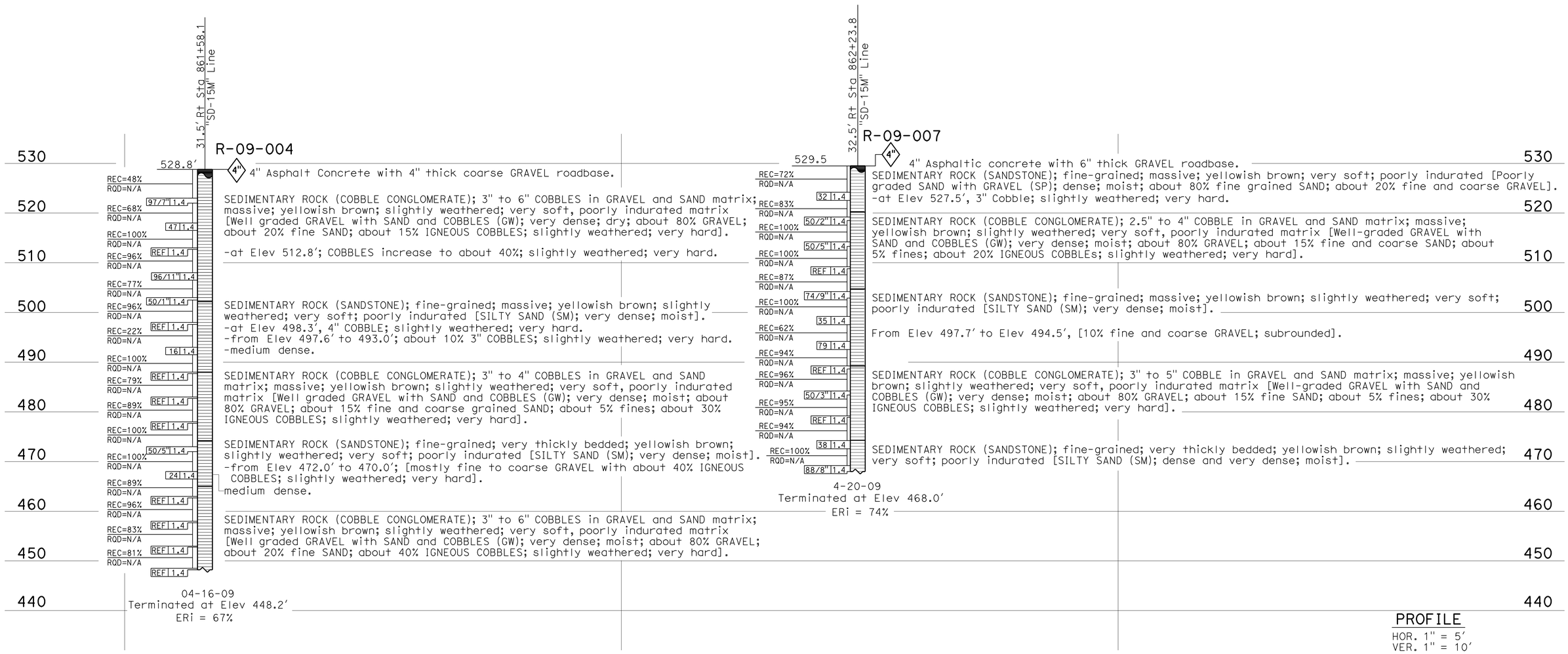

PROFILE
HOR. 1" = 5'
VER. 1" = 10'

ENGINEERING SERVICES	GEOTECHNICAL SERVICES	STATE OF CALIFORNIA DEPARTMENT OF TRANSPORTATION	DIVISION OF ENGINEERING SERVICES STRUCTURE DESIGN	BRIDGE NO. 57-1214	HILLERY DIRECT ACCESS RAMPS
FUNCTIONAL SUPERVISOR	DRAWN BY: G. Dickerson 11/09, I.G-Remmen 1/10		DESIGN BRANCH	POST MILES R15.7	NORTHBOUND ON-RAMP
NAME: M. DeSalvatore	CHECKED BY: E. Neupert	FIELD INVESTIGATION BY: T-M Liao, F. DeHaro			LOG OF TEST BORINGS 3 OF 8

OGS CIVIL LOG OF TEST BORINGS SHEET

ORIGINAL SCALE IN INCHES FOR REDUCED PLANS 0 1 2 3

CU 11
EA 2T0951

DISREGARD PRINTS BEARING EARLIER REVISION DATES

REVISION DATES: 01-29-10 07-08-10 08-06-10 09-04-10 09-07-10

SHEET 28 OF 33

FILE => 57-1214-z-ltb03.dgn

USERNAME => s124496 DATE PLOTTED => 27-OCT-2011 TIME PLOTTED => 08:49

DIST	COUNTY	ROUTE	POST MILES TOTAL PROJECT	SHEET No	TOTAL SHEETS
11	SD	15	M15.0/M16.4	508	610

REGISTERED CIVIL ENGINEER 10-15-10

10-24-11
PLANS APPROVAL DATE

REGISTERED PROFESSIONAL ENGINEER
David T-M Liao
No. C59838
Exp. 12-31-11
CIVIL
STATE OF CALIFORNIA

The State of California or its officers or agents shall not be responsible for the accuracy or completeness of electronic copies of this plan sheet.

This LOTB sheet was prepared in accordance with the Caltrans Soil & Rock Logging, Classification, & Presentation Manual (June 2007).

FOR PLAN VIEW, SEE
"LOG OF TEST BORINGS 1 OF 8"

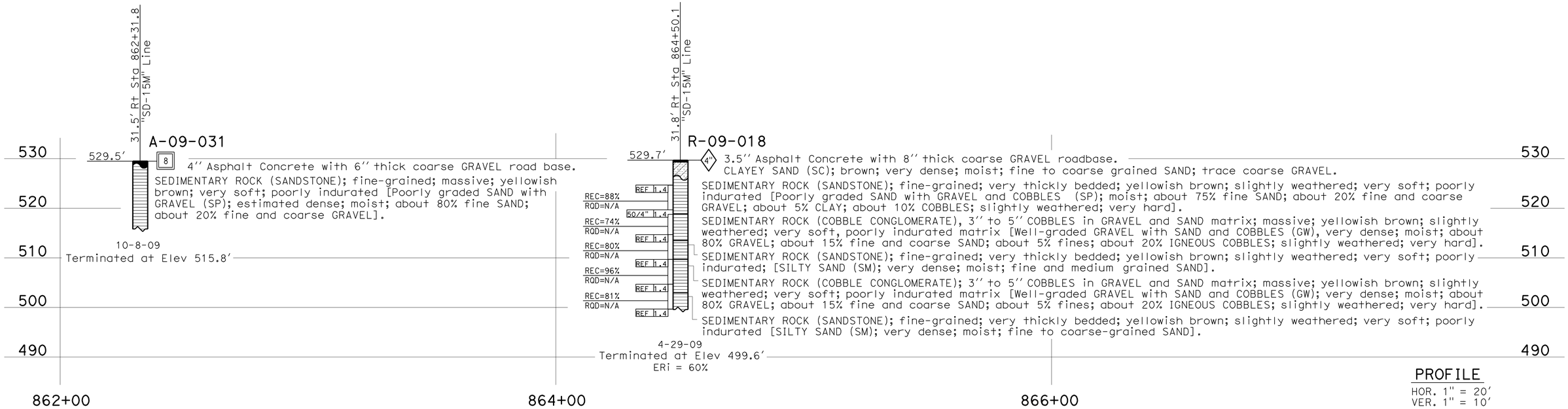

PROFILE
HOR. 1" = 20'
VER. 1" = 10'

ENGINEERING SERVICES	GEOTECHNICAL SERVICES	STATE OF CALIFORNIA DEPARTMENT OF TRANSPORTATION	DIVISION OF ENGINEERING SERVICES STRUCTURE DESIGN DESIGN BRANCH	BRIDGE NO. 57-1214 POST MILES R15.7	HILLERY DIRECT ACCESS RAMPS NORTHBOUND ON-RAMP LOG OF TEST BORINGS 4 OF 8
FUNCTIONAL SUPERVISOR NAME: M. DeSalvatore	DRAWN BY: G. Dickerson 11/09, I.G-Remmen 1/10 CHECKED BY: E. Neupert	FIELD INVESTIGATION BY: T-M Liao, F. DeHaro			

OGS CIVIL LOG OF TEST BORINGS SHEET

ORIGINAL SCALE IN INCHES FOR REDUCED PLANS 0 1 2 3

CU 11
EA 2T0951

DISREGARD PRINTS BEARING EARLIER REVISION DATES

REVISION DATES: 01-28-10 07-08-10 08-06-10 09-01-10 09-07-10

SHEET 29 OF 33

FILE => 57-1214-z-ltb04.dgn

USERNAME => s124496 DATE PLOTTED => 27-OCT-2011 TIME PLOTTED => 08:49

DIST	COUNTY	ROUTE	POST MILES TOTAL PROJECT	SHEET No	TOTAL SHEETS
11	SD	15	M15.0/M16.4	509	610

REGISTERED CIVIL ENGINEER 10-15-10

10-24-11
PLANS APPROVAL DATE

REGISTERED PROFESSIONAL ENGINEER
David T-M Liao
No. C59838
Exp. 12-31-11
CIVIL
STATE OF CALIFORNIA

The State of California or its officers or agents shall not be responsible for the accuracy or completeness of electronic copies of this plan sheet.

This LOTB sheet was prepared in accordance with the Caltrans Soil & Rock Logging; Classification; & Presentation Manual (June 2007).

FOR PLAN VIEW; SEE
"LOG OF TEST BORINGS 1 OF 8"

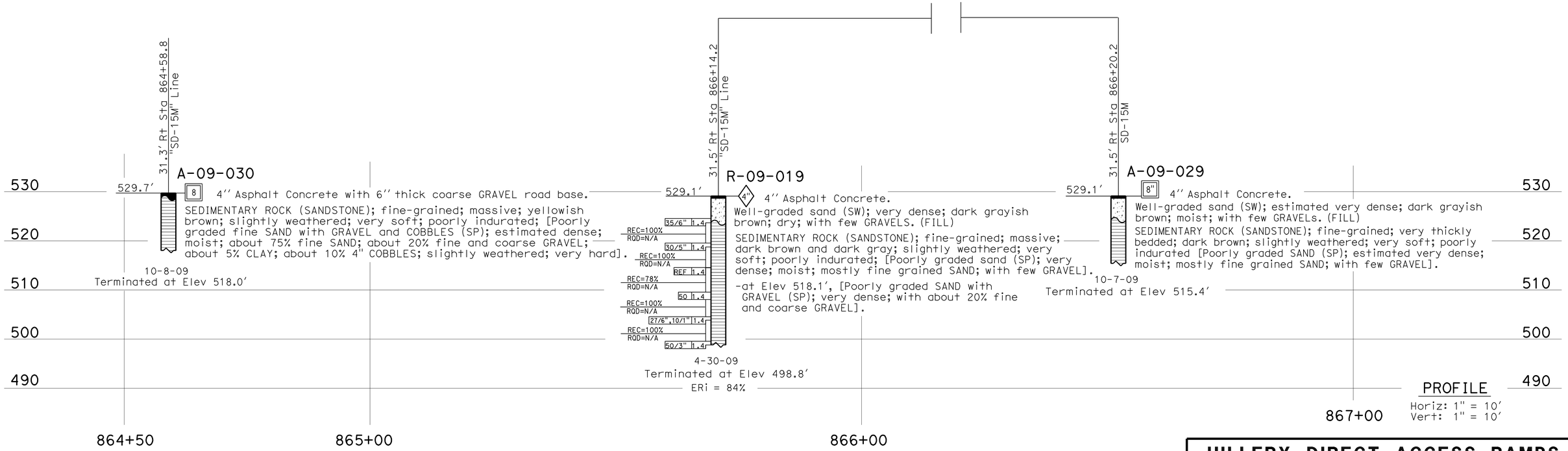

ENGINEERING SERVICES	GEOTECHNICAL SERVICES	STATE OF CALIFORNIA DEPARTMENT OF TRANSPORTATION	DIVISION OF ENGINEERING SERVICES STRUCTURE DESIGN DESIGN BRANCH	BRIDGE NO. 57-1214 / POST MILES R15.7	HILLERY DIRECT ACCESS RAMPS NORTHBOUND ON-RAMP LOG OF TEST BORINGS 5 OF 8
FUNCTIONAL SUPERVISOR NAME: M. DeSalvatore	DRAWN BY: W. Tang 11/09; I.G-Remmen 1/10 CHECKED BY: E. Neupert	FIELD INVESTIGATION BY: T-M Liao			

OGS CIVIL LOG OF TEST BORINGS SHEET

ORIGINAL SCALE IN INCHES FOR REDUCED PLANS 0 1 2 3

CU 11
EA 2T0951

DISREGARD PRINTS BEARING EARLIER REVISION DATES

REVISION DATES: 01-29-10 07-08-10 08-06-10 09-01-10 09-07-10

SHEET 30 OF 33

FILE => 57-1214-z-ltb05.dgn

USERNAME => s124496 DATE PLOTTED => 27-OCT-2011 TIME PLOTTED => 08:49

DIST	COUNTY	ROUTE	POST MILES TOTAL PROJECT	SHEET No	TOTAL SHEETS
11	SD	15	M15.0/M16.4	510	610

REGISTERED CIVIL ENGINEER 10-15-10 DATE

10-24-11
PLANS APPROVAL DATE

REGISTERED PROFESSIONAL ENGINEER David T-M Liao No. C59838 Exp. 12-31-11 CIVIL STATE OF CALIFORNIA

The State of California or its officers or agents shall not be responsible for the accuracy or completeness of electronic copies of this plan sheet.

REFERENCE: CALTRANS SOIL & ROCK LOGGING, CLASSIFICATION, AND PRESENTATION MANUAL (JUNE 2007)

CEMENTATION

Description	Criteria
Weak	Crumbles or breaks with handling or little finger pressure.
Moderate	Crumbles or breaks with considerable finger pressure.
Strong	Will not crumble or break with finger pressure.

CONSISTENCY OF COHESIVE SOILS

Description	Unconfined Compressive Strength (tsf)	Pocket Penetrometer Measurement (tsf)	Torvane Measurement (tsf)	Field Approximation
Very Soft	< 0.25	< 0.25	< 0.12	Easily penetrated several inches by fist
Soft	0.25 to 0.50	0.25 to 0.50	0.12 to 0.25	Easily penetrated several inches by thumb
Medium Stiff	0.50 to 1.0	0.50 to 1.0	0.25 to 0.50	Penetrated several inches by thumb with moderate effort
Stiff	1 to 2	1 to 2	0.50 to 1.0	Readily indented by thumb but penetrated only with great effort
Very Stiff	2 to 4	2 to 4	1.0 to 2.0	Readily indented by thumbnail
Hard	> 4.0	> 4.0	> 2.0	Indented by thumbnail with difficulty

BOREHOLE IDENTIFICATION

Symbol	Hole Type	Description
Size	A	Auger Boring
Size	R P	Rotary drilled boring Rotary percussion boring (air)
Size	R	Rotary drilled diamond core
Size	HD HA	Hand driven (1-inch soil tube) Hand Auger
●	D	Dynamic Cone Penetration Boring
▲	CPT	Cone Penetration Test (ASTM D 5778-95)
⬚	O	Other

Note: Size in inches.

PLASTICITY OF FINE-GRAINED SOILS

Description	Criteria
Nonplastic	A 1/8-inch thread cannot be rolled at any water content.
Low	The thread can barely be rolled and the lump cannot be formed when drier than the plastic limit.
Medium	The thread is easy to roll and not much time is required to reach the plastic limit. The thread cannot be rerolled after reaching the plastic limit. The lump crumbles when drier than the plastic limit.
High	It takes considerable time rolling and kneading to reach the plastic limit. The thread can be rerolled several times after reaching the plastic limit. The lump can be formed without crumbling when drier than the plastic limit.

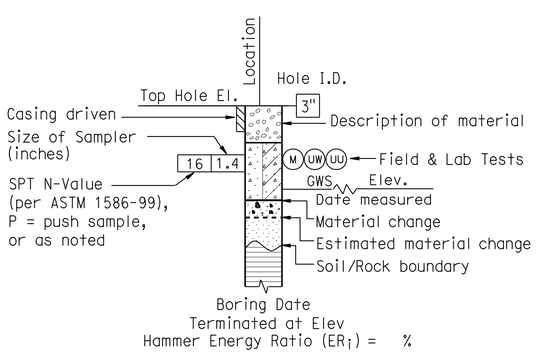

ROTARY BORING

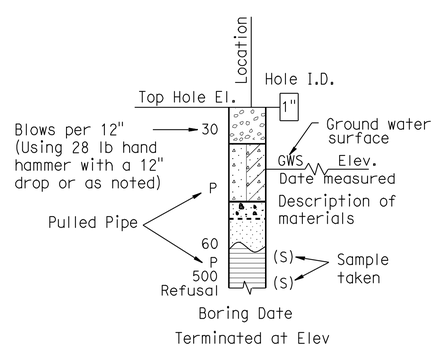

HAND BORING

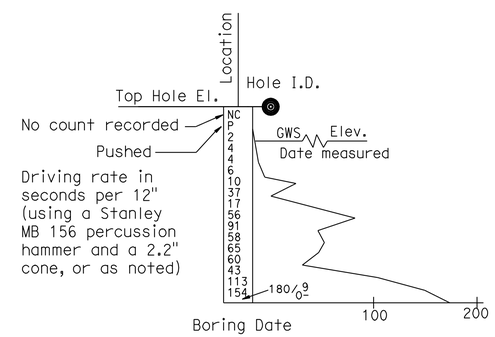

DYNAMIC CONE PENETRATION BORING

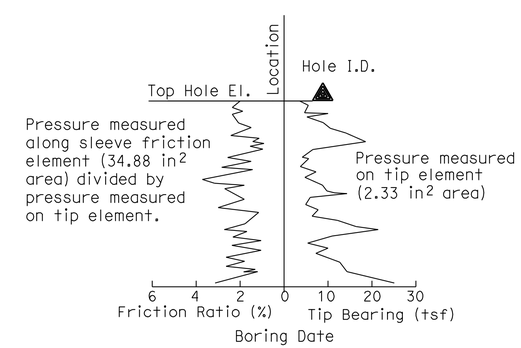

CONE PENETRATION TEST (CPT) SOUNDING

ENGINEERING SERVICES	GEOTECHNICAL SERVICES	STATE OF CALIFORNIA DEPARTMENT OF TRANSPORTATION	DIVISION OF ENGINEERING SERVICES STRUCTURE DESIGN DESIGN BRANCH	BRIDGE NO. 57-1214 / POST MILE R15.7	HILLERY DIRECT ACCESS RAMPS NORTHBOUND ON-RAMP LOG OF TEST BORINGS 6 OF 8
	PREPARED BY: I.G-Remmen 1/10				

GS LOTB SOIL LEGEND

ORIGINAL SCALE IN INCHES FOR REDUCED PLANS 0 1 2 3

CU 11
EA 2T0951

DISREGARD PRINTS BEARING EARLIER REVISION DATES 07-08-10 09-01-10

REVISION DATES

SHEET 31 OF 33

FILE => 57-1214-z-lttb06.dgn

USERNAME => s124496 DATE PLOTTED => 27-OCT-2011 TIME PLOTTED => 08:49

REFERENCE: CALTRANS SOIL & ROCK LOGGING, CLASSIFICATION, AND PRESENTATION MANUAL (JUNE 2007)

DIST	COUNTY	ROUTE	POST MILES TOTAL PROJECT	SHEET No	TOTAL SHEETS
11	SD	15	M15.0/M16.4	511	610

REGISTERED CIVIL ENGINEER 10-15-10 DATE

10-24-11
PLANS APPROVAL DATE

REGISTERED PROFESSIONAL ENGINEER David T-M Liao No. C59838 Exp. 12-31-11 CIVIL STATE OF CALIFORNIA

The State of California or its officers or agents shall not be responsible for the accuracy or completeness of electronic copies of this plan sheet.

GROUP SYMBOLS AND NAMES

Graphic/Symbol	Group Names	Graphic/Symbol	Group Names
GW	Well-graded GRAVEL Well-graded GRAVEL with SAND	CL	Lean CLAY Lean CLAY with SAND Lean CLAY with GRAVEL SANDY lean CLAY SANDY lean CLAY with GRAVEL GRAVELLY lean CLAY GRAVELLY lean CLAY with SAND
GP	Poorly graded GRAVEL Poorly graded GRAVEL with SAND		
GW-GM	Well-graded GRAVEL with SILT Well-graded GRAVEL with SILT and SAND	CL-ML	SILTY CLAY SILTY CLAY with SAND SILTY CLAY with GRAVEL SANDY SILTY CLAY SANDY SILTY CLAY with GRAVEL GRAVELLY SILTY CLAY GRAVELLY SILTY CLAY with SAND
GW-GC	Well-graded GRAVEL with CLAY (or SILTY CLAY) Well-graded GRAVEL with CLAY and SAND (or SILTY CLAY and SAND)		
GP-GM	Poorly graded GRAVEL with SILT Poorly graded GRAVEL with SILT and SAND	ML	SILT SILT with SAND SILT with GRAVEL SANDY SILT SANDY SILT with GRAVEL GRAVELLY SILT GRAVELLY SILT with SAND
GP-GC	Poorly graded GRAVEL with CLAY (or SILTY CLAY) Poorly graded GRAVEL with CLAY and SAND (or SILTY CLAY and SAND)		
GM	SILTY GRAVEL SILTY GRAVEL with SAND	OL	ORGANIC lean CLAY ORGANIC lean CLAY with SAND ORGANIC lean CLAY with GRAVEL SANDY ORGANIC lean CLAY SANDY ORGANIC lean CLAY with GRAVEL GRAVELLY ORGANIC lean CLAY GRAVELLY ORGANIC lean CLAY with SAND
GC	CLAYEY GRAVEL CLAYEY GRAVEL with SAND		
GC-GM	SILTY, CLAYEY GRAVEL SILTY, CLAYEY GRAVEL with SAND	OL	ORGANIC SILT ORGANIC SILT with SAND ORGANIC SILT with GRAVEL SANDY ORGANIC SILT SANDY ORGANIC SILT with GRAVEL GRAVELLY ORGANIC SILT GRAVELLY ORGANIC SILT with SAND
SW	Well-graded SAND Well-graded SAND with GRAVEL		
SP	Poorly graded SAND Poorly graded SAND with GRAVEL	CH	Fat CLAY Fat CLAY with SAND Fat CLAY with GRAVEL SANDY fat CLAY SANDY fat CLAY with GRAVEL GRAVELLY fat CLAY GRAVELLY fat CLAY with SAND
SW-SM	Well-graded SAND with SILT Well-graded SAND with SILT and GRAVEL		
SW-SC	Well-graded SAND with CLAY (or SILTY CLAY) Well-graded SAND with CLAY and GRAVEL (or SILTY CLAY and GRAVEL)	MH	Elastic SILT Elastic SILT with SAND Elastic SILT with GRAVEL SANDY elastic SILT SANDY elastic SILT with GRAVEL GRAVELLY elastic SILT GRAVELLY elastic SILT with SAND
SP-SM	Poorly graded SAND with SILT Poorly graded SAND with SILT and GRAVEL		
SP-SC	Poorly graded SAND with CLAY (or SILTY CLAY) Poorly graded SAND with CLAY and GRAVEL (or SILTY CLAY and GRAVEL)	OH	ORGANIC fat CLAY ORGANIC fat CLAY with SAND ORGANIC fat CLAY with GRAVEL SANDY ORGANIC fat CLAY SANDY ORGANIC fat CLAY with GRAVEL GRAVELLY ORGANIC fat CLAY GRAVELLY ORGANIC fat CLAY with SAND
SM	SILTY SAND SILTY SAND with GRAVEL		
SC	CLAYEY SAND CLAYEY SAND with GRAVEL	OH	ORGANIC elastic SILT ORGANIC elastic SILT with SAND ORGANIC elastic SILT with GRAVEL SANDY ORGANIC elastic SILT SANDY ORGANIC elastic SILT with GRAVEL GRAVELLY ORGANIC elastic SILT GRAVELLY ORGANIC elastic SILT with SAND
SC-SM	SILTY, CLAYEY SAND SILTY, CLAYEY SAND with GRAVEL		
PT	PEAT	OL/OH	ORGANIC SOIL ORGANIC SOIL with SAND ORGANIC SOIL with GRAVEL SANDY ORGANIC SOIL SANDY ORGANIC SOIL with GRAVEL GRAVELLY ORGANIC SOIL GRAVELLY ORGANIC SOIL with SAND
	COBBLES COBBLES and BOULDERS BOULDERS		

FIELD AND LABORATORY TESTING

- (C) Consolidation (ASTM D 2435)
- (CL) Collapse Potential (ASTM D 5333)
- (CP) Compaction Curve (CTM 216)
- (CR) Corrosivity Testing (CTM 643, CTM 422, CTM 417)
- (CU) Consolidated Undrained Triaxial (ASTM D 4767)
- (DS) Direct Shear (ASTM D 3080)
- (EI) Expansion Index (ASTM D 4829)
- (M) Moisture Content (ASTM D 2216)
- (OC) Organic Content-% (ASTM D 2974)
- (P) Permeability (CTM 220)
- (PA) Particle Size Analysis (ASTM D 422)
- (PI) Plasticity Index (AASHTO T 90) Liquid Limit (AASHTO T 89)
- (PL) Point Load Index (ASTM D 5731)
- (PM) Pressure Meter
- (PP) Pocket Penetrometer
- (R) R-Value (CTM 301)
- (SE) Sand Equivalent (CTM 217)
- (SG) Specific Gravity (AASHTO T 100)
- (SL) Shrinkage Limit (ASTM D 427)
- (SW) Swell Potential (ASTM D 4546)
- (TV) Pocket Torvane
- (UC) Unconfined Compression-Soil (ASTM D 2166) Unconfined Compression-Rock (ASTM D 2938)
- (UU) Unconsolidated Undrained Triaxial (ASTM D 2850)
- (UW) Unit Weight (ASTM D 4767)
- (VS) Vane Shear (AASHTO T 223)

APPARENT DENSITY OF COHESIONLESS SOILS

Description	SPT N_{60} (Blows / 12 inches)
Very loose	0 - 4
Loose	5 - 10
Medium Dense	11 - 30
Dense	31 - 50
Very Dense	> 50

MOISTURE

Description	Criteria
Dry	Absence of moisture, dusty, dry to the touch
Moist	Damp but no visible water
Wet	Visible free water, usually soil is below water table

PERCENT OR PROPORTION OF SOILS

Description	Criteria
Trace	Particles are present but estimated to be less than 5%
Few	5 to 10%
Little	15 to 25%
Some	30 to 45%
Mostly	50 to 100%

PARTICLE SIZE

Description		Size
Boulder		> 12"
Cobble		3" to 12"
Gravel	Coarse	3/4" to 3"
	Fine	No. 4 to 3/4"
Sand	Coarse	No. 10 to No. 4
	Medium	No. 40 to No. 10
	Fine	No. 200 to No. 40

HILLERY DIRECT ACCESS RAMPS
NORTHBOUND ON-RAMP
LOG OF TEST BORINGS 7 OF 8

ENGINEERING SERVICES

GEOTECHNICAL SERVICES
PREPARED BY: I.G-Remmen 1/10

STATE OF CALIFORNIA DEPARTMENT OF TRANSPORTATION

DIVISION OF ENGINEERING SERVICES STRUCTURE DESIGN
DESIGN BRANCH

BRIDGE NO. 57-1214
POST MILE R15.7

GS LOTB SOIL LEGEND

ORIGINAL SCALE IN INCHES FOR REDUCED PLANS 0 1 2 3

CU 11
EA 2T0951

DISREGARD PRINTS BEARING EARLIER REVISION DATES 07-08-10 09-01-10

REVISION DATES

SHEET 32 OF 33

FILE => 57-1214-z-ltb07.dgn

USERNAME => s124096 DATE PLOTTED => 27-OCT-2011 TIME PLOTTED => 09:57

REFERENCE: CALTRANS SOIL & ROCK LOGGING, CLASSIFICATION, AND PRESENTATION MANUAL (JUNE 2007)

DIST	COUNTY	ROUTE	POST MILES TOTAL PROJECT	SHEET No	TOTAL SHEETS
11	SD	15	M15.0/M16.4	512	610

REGISTERED CIVIL ENGINEER 10-15-10 DATE

10-24-11
PLANS APPROVAL DATE

The State of California or its officers or agents shall not be responsible for the accuracy or completeness of electronic copies of this plan sheet.

REGISTERED PROFESSIONAL ENGINEER David T-M Liao No. C59838 Exp. 12-31-11 CIVIL STATE OF CALIFORNIA

PERCENT CORE RECOVERY (REC) & ROCK QUALITY DESIGNATION (RQD)

$$REC = \frac{\sum \text{Length of the recovered core pieces (inches)}}{\text{Total length of core run (inches)}} \times 100\%$$

$$RQD = \frac{\sum \text{Length of intact core pieces} \geq 4''}{\text{Total length of core run (inches)}} \times 100\%$$

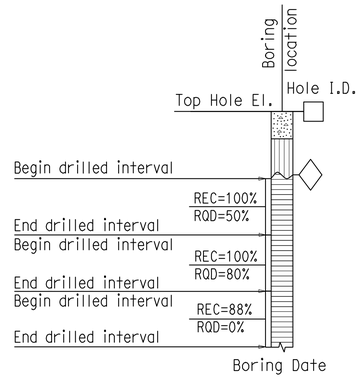

RELATIVE STRENGTH OF INTACT ROCK

Term	Uniaxial Compressive Strength (PSI)
Extremely Strong	> 30,000
Very Strong	14,500 - 30,000
Strong	7,000 - 14,500
Medium Strong	3,500 - 7,000
Weak	700 - 3,500
Very Weak	150 - 700
Extremely Weak	< 150

BEDDING SPACING

Description	Thickness / Spacing
Massive	Greater than 10 ft
Very thickly bedded	3 to 10 ft
Thickly bedded	1 to 3 ft
Moderately bedded	3-5/8" to 1 ft
Thinly bedded	1-1/4" to 3-5/8"
Very thinly bedded	3/8" to 1-1/4"
Laminated	Less than 3/8"

LEGEND OF ROCK MATERIALS

- IGNEOUS ROCK
- SEDIMENTARY ROCK
- METAMORPHIC ROCK

ROCK HARDNESS

Description	Criteria
Extremely Hard	Specimen cannot be scratched with a pocket knife or sharp pick; can only be chipped with repeated heavy hammer blows.
Very Hard	Specimen cannot be scratched with a pocket knife or sharp pick. Breaks with repeated heavy hammer blows.
Hard	Specimen can be scratched with a pocket knife or sharp pick with difficulty (heavy pressure). Heavy hammer blows required to break specimen.
Moderately Hard	Specimen can be scratched with pocket knife or sharp pick with light or moderate pressure. Core breaks with moderate hammer blows.
Moderately Soft	Specimen can be grooved 1/6" deep with a pocket knife or sharp pick with moderate or heavy pressure. Breaks with light hammer blow or heavy manual pressure.
Soft	Specimen can be grooved or gouged easily by a pocket knife or sharp pick with light pressure, can be scratched with fingernail. Breaks with light to moderate manual pressure.
Very Soft	Specimen can be readily indented, grooved or gouged with fingernail, or carved with a pocket knife. Breaks with light manual pressure.

FRACTURE DENSITY

Description	Observed Fracture Density
Unfractured	No fractures.
Very slightly fractured	Lengths greater than 3 feet.
Slightly fractured	Lengths from 1 to 3 feet with few lengths less than 1 foot or greater than 3 feet.
Moderately fractured	Lengths mostly in 4" to 1 foot range with most lengths about 8"
Intensely fractured	Lengths average from 1 to 4" with scattered fragmented intervals with lengths less than 4"
Very intensely fractured	Mostly chips and fragments with a few scattered short core lengths.

Combination descriptors (such as "Very intensely to intensely fractured") are used where equal distribution of both fracture density characteristics is present over a significant interval or exposure, or where characteristics are "in between" the descriptor definitions. Only two adjacent descriptors may be combined.

WEATHERING DESCRIPTORS FOR INTACT ROCK

Description	Diagnostic features					General Characteristics
	Chemical Weathering-Discoloration and/or oxidation		Mechanical Weathering-Grain boundary conditions (disaggregation) primarily for granitics and some coarse-grained sediments	Texture and Solutioning		
	Body of Rock	Fracture Surfaces		Texture	Solutioning	
Fresh	No discoloration, not oxidized.	No discoloration or oxidation.	No separation, intact (tight).	No change.	No solutioning.	Hammer rings when crystalline rocks are struck.
Slightly Weathered	Discoloration or oxidation is limited to surface of, or short distance from, fractures; some feldspar crystals are dull.	Minor to complete discoloration or oxidation of most surfaces.	No visible separation, intact (tight).	Preserved.	Minor leaching of some soluble minerals may be noted.	Hammer rings when crystalline rocks are struck. Body of rock not weakened.
Moderately Weathered	Discoloration or oxidation extends from fractures usually throughout; Fe-Mg minerals are "rusty," feldspar crystals are "cloudy."	All fracture surfaces are discolored or oxidized.	Partial separation of boundaries visible.	Generally preserved.	Soluble minerals may be mostly leached.	Hammer does not ring when rock is struck. Body of rock is slightly weakened.
Intensely Weathered	Discoloration or oxidation throughout; all feldspars and Fe-Mg minerals are altered to clay to some extent; or chemical alteration produces in-situ disaggregation, see grain boundary conditions.	All fracture surfaces are discolored or oxidized, surfaces friable.	Partial separation, rock is friable; in semiarid conditions granitics are disaggregated.	Texture altered by chemical disintegration (hydration, argillation).	Leaching of soluble minerals may be complete.	Dull sound when struck with hammer, usually can be broken with moderate to heavy manual pressure or by light hammer blow without reference to planes of weakness such as incipient or hairline fractures, or veinlets. Rock is significantly weakened.
Decomposed	Discolored or oxidized throughout, but resistant minerals such as quartz may be unaltered; all feldspars and Fe-Mg minerals are completely altered to clay.		Complete separation of grain boundaries (disaggregated).	Resembles a soil, partial or complete remnant rock structure may be preserved; leaching of soluble minerals usually complete.		Can be granulated by hand. Resistant minerals such as quartz may be present as "stringers" or "dikes."

Combination descriptors (such as "slightly weathered to fresh") are permissible where equal distribution of both weathering characteristics is present over significant intervals or where characteristics present are "in between" the diagnostic feature. However, combination descriptors should not be used where significant, identifiable zones can be delineated. Only two adjacent descriptors may be combined. "Very intensely weathered" is the combination descriptor for "intensely weathered to decomposed."

ENGINEERING SERVICES

GEOTECHNICAL SERVICES
PREPARED BY: I.G-Remmen 1/10

STATE OF CALIFORNIA
DEPARTMENT OF TRANSPORTATION

DIVISION OF ENGINEERING SERVICES
STRUCTURE DESIGN
DESIGN BRANCH

BRIDGE NO. 57-1214
POST MILE R15.7

HILLERY DIRECT ACCESS RAMPS
NORTHBOUND ON-RAMP
LOG OF TEST BORINGS 8 OF 8

ORIGINAL SCALE IN INCHES FOR REDUCED PLANS 0 1 2 3

CU 11
EA 2T0951

DISREGARD PRINTS BEARING EARLIER REVISION DATES

REVISION DATES 07-08-10 09-01-10

SHEET 33 OF 33

FILE => 57-1214-z-1tb08.dgn

USERNAME => s124496 DATE PLOTTED => 27-OCT-2011 TIME PLOTTED => 09:57

DIST	COUNTY	ROUTE	POST MILES TOTAL PROJECT	SHEET No	TOTAL SHEETS
11	SD	15	M15.0/M16.4	513	610

REGISTERED CIVIL ENGINEER — DATE 10-15-10

10-24-11
PLANS APPROVAL DATE

REGISTERED PROFESSIONAL ENGINEER — ROBERT E. HAWTHORNE — No. 40075 — Exp. 03/31/12 — CIVIL — STATE OF CALIFORNIA

The State of California or its officers or agents shall not be responsible for the accuracy or completeness of scanned copies of this plan sheet.

SANDAG
401 B STREET, SUITE 800
SAN DIEGO, CA 92101

AECOM
7807 CONVOY COURT, SUITE 200
SAN DIEGO, CA 92111

Notes:

1. For "Index To Plans", "Quantities", "General Notes", & "Pile Data Table", See "INDEX TO PLANS No. 1" sheets.
2. Paint "Northbound Off-Ramp"
3. Paint "Br. No. 57-1215"
4. Paint Bent No.
5. Structure Approach Slab Type N (30S)
6. Isolation Casing, see "ISOLATION CASING DETAILS No. 1"and "ISOLATION CASING DETAILS No. 2" sheets.
7. Deck Drain Location (Type D-2) see "DECK DRAINS" sheet.

◐ Indicates Point of Minimum Vertical Clearance

⇨ Indicates direction of traffic.

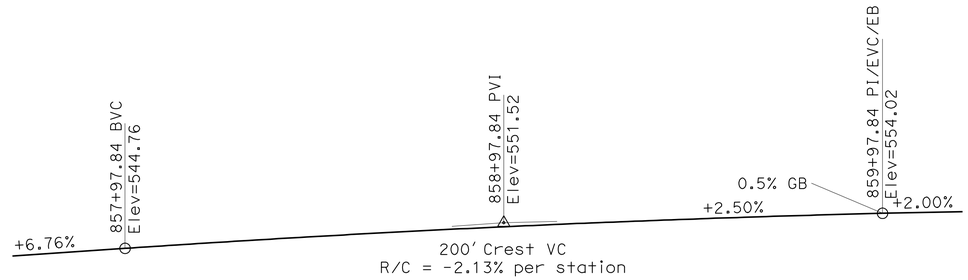

PROFILE GRADE

1" = 20'

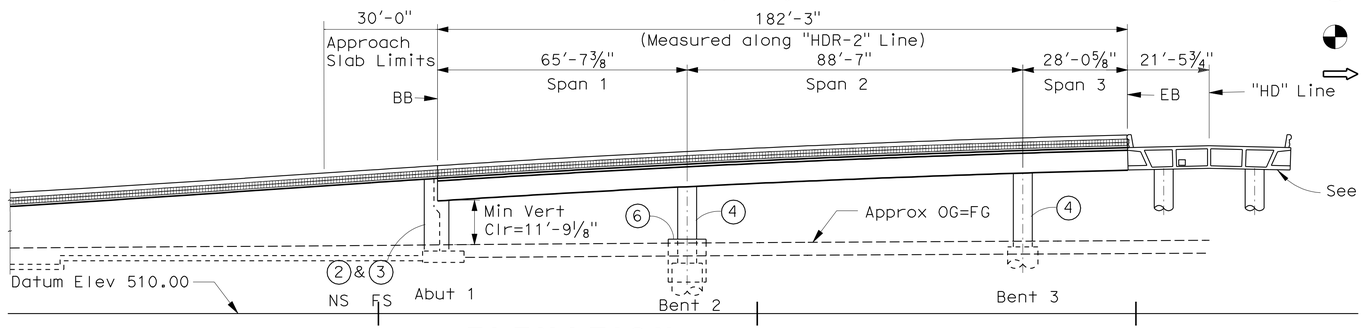

ELEVATION

1" = 20'

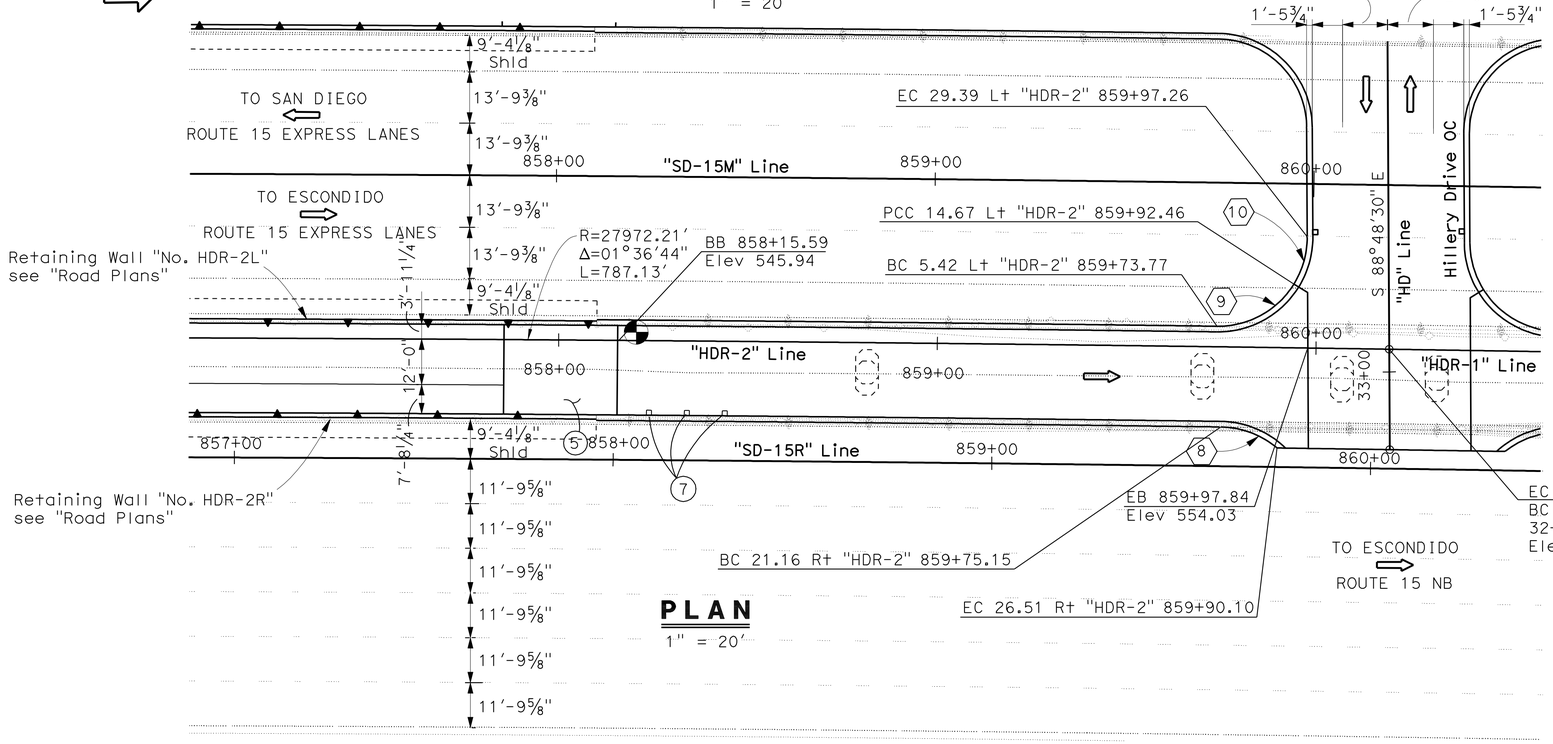

PLAN

1" = 20'

Curve Data:

8 Curve	10 Curve	9 Curve
R=23.52	R=23.52	R=23.52
Δ=39°24'18"	Δ=38°25'40"	Δ=52°38'46"
T=8.42	T=8.19	T=11.63
L=16.17	L=15.77	L=21.61

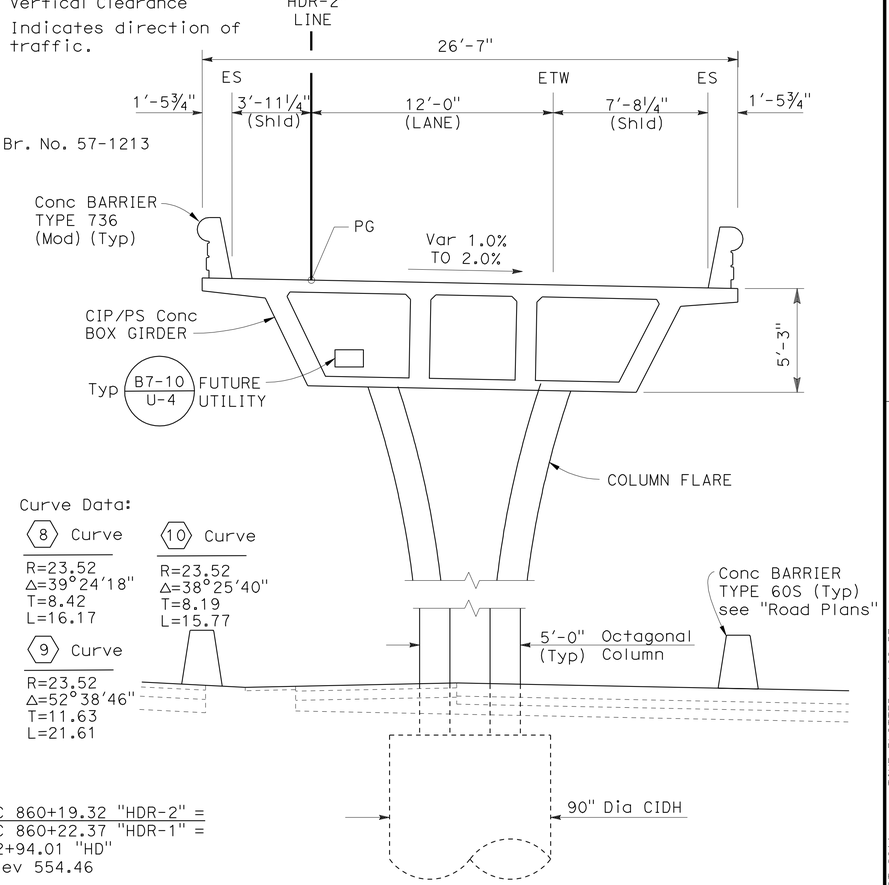

TYPICAL SECTION

¼" = 1'-0"

HILLERY DIRECT ACCESS RAMPS
NORTHBOUND OFF-RAMP
GENERAL PLAN

DESIGN OVERSIGHT — Norbert Gee
10-25-10
SIGN OFF DATE

	BY	CHECKED			
DESIGN	R Ramoso/H Mai	John Powell	LOAD & RESISTANCE FACTOR DESIGN	LIVE LOADING: HL93 W/"LOW-BOY"; PERMIT DESIGN VEHICLE	
DETAILS	C Morgan/C Lente	John Powell	LAYOUT	R Ramoso/H Mai	R Hawthorne
QUANTITIES	R Ramoso/H Mai	Janice Reguyal	SPECIFICATIONS	H Strandgaard	PLANS AND SPECS COMPARED R Hawthorne

PREPARED FOR THE STATE OF CALIFORNIA DEPARTMENT OF TRANSPORTATION

Robert E. Hawthorne
PROJECT ENGINEER

BRIDGE NO. 57-1215
POST MILES R15.7

CU 11269
EA 2T0951

DISREGARD PRINTS BEARING EARLIER REVISION DATES

REVISION DATES (PRELIMINARY STAGE ONLY): 01/22/10 03/08/10 05/18/10 05/27/10 06/15/10 07/1/10 08/27/10 10/06/10

SHEET 1 OF 33

DESIGN GENERAL PLAN SHEET (ENGLISH) (REV. 06-01-09)

ORIGINAL SCALE IN INCHES FOR REDUCED PLANS 0 1 2 3

FILE => 57-1215-a-gp01.dgn

USERNAME => s124496 DATE PLOTTED => 27-OCT-2011 TIME PLOTTED => 09:57

DIST	COUNTY	ROUTE	POST MILES TOTAL PROJECT	SHEET No	TOTAL SHEETS
11	SD	15	M15.0/M16.4	514	610

REGISTERED CIVIL ENGINEER 10-15-10 DATE

10-24-11
PLANS APPROVAL DATE

REGISTERED PROFESSIONAL ENGINEER ROBERT E. HAWTHORNE No. 40075 Exp. 03/31/12 CIVIL STATE OF CALIFORNIA

The State of California or its officers or agents shall not be responsible for the accuracy or completeness of scanned copies of this plan sheet.

SANDAG
401 B STREET, SUITE 800
SAN DIEGO, CA 92101

AECOM
7807 CONVOY COURT, SUITE 200
SAN DIEGO, CA 92111

INDEX TO PLANS

SHEET No.	TITLE
1.	GENERAL PLAN
2.	INDEX TO PLANS No. 1
3.	INDEX TO PLANS No. 2
4.	DECK CONTOURS
5.	FOUNDATION PLAN
6.	ABUTMENT LAYOUT
7.	ABUTMENT DETAILS
8.	BENT LAYOUT
9.	COLUMN DETAILS
10.	ISOLATION CASING DETAILS No. 1
11.	ISOLATION CASING DETAILS No. 2
12.	TYPICAL SECTION No. 1
13.	TYPICAL SECTION No. 2
14.	GIRDER LAYOUT
15.	GIRDER DETAILS No. 1
16.	GIRDER DETAILS No. 2
17.	GIRDER DETAILS No. 3
18.	GIRDER DETAILS No. 4
19.	GIRDER REINFORCEMENT
20.	PILE DETAILS
21.	JOINT SEAL ASSEMBLY MOVEMENT RATING GREATER THAN 4"
22.	DECK DRAINS
23.	STRUCTURE APPROACH DRAINAGE DETAILS
24.	STRUCTURE APPROACH TYPE N (30S)
25.	CONCRETE BARRIER TYPE 736 (MOD)
26.	LOG OF TEST BORINGS SHEET 1 OF 8
27.	LOG OF TEST BORINGS SHEET 2 OF 8
28.	LOG OF TEST BORINGS SHEET 3 OF 8
29.	LOG OF TEST BORINGS SHEET 4 OF 8
30.	LOG OF TEST BORINGS SHEET 5 OF 8
31.	LOG OF TEST BORINGS SHEET 6 OF 8
32.	LOG OF TEST BORINGS SHEET 7 OF 8
33.	LOG OF TEST BORINGS SHEET 8 OF 8

PILE DATA TABLE

Support Location	Pile Type	Cut-Off Elevation (ft)	Nominal Resistance (kips) Comp.	Nominal Resistance (kips) Tension	Design Tip Elevation (ft)	Specified Tip Elevation (ft)
Bent 2	90 in Type II CIDH	523.3	2660	0	479.0 (a)	479.0
Bent 3	90 in Type II CIDH	527.0	2760	0	482.0 (a)	482.0

Design tip elevations are controlled by the following demands:
(a) Compression (b) Tension (d) Lateral Loads

SPREAD FOOTING DATA TABLE

Support Location	Working Stress Design (WSD): Permissible Gross Contact Stress (Settlement) (ksf)	Working Stress Design (WSD): Allowable Gross Bearing Capacity (ksf)	Load and Resistance Factor Design (LRFD): Service Permissible Net Contact Stress (Settlement) (ksf)	Load and Resistance Factor Design (LRFD): Strength Factored Gross Nominal Bearing Resistance $\phi_b = X$ (ksf)	Load and Resistance Factor Design (LRFD): Extreme Event Factored Gross Nominal Bearing Resistance $\phi_b = 1.00$ (ksf)
Abut 1	N/A	10.0	N/A	N/A	N/A

HILLARY DRIVE OC DAR
NORTHBOUND OFF-RAMP BR #57-1215
QUANTITIES

STRUCTURE EXCAVATION (TYPE D)	138	CY
STRUCTURE BACKFILL (BRIDGE)	135	CY
90" CAST-IN-DRILLED-HOLE CONCRETE PILING	90	LF
PRESTRESSING CAST-IN-PLACE CONCRETE	LUMP	SUM
STRUCTURAL CONCRETE, BRIDGE FOOTING	46	CY
STRUCTURAL CONCRETE, BRIDGE	490	CY
STRUCTURAL CONCRETE, APPROACH SLAB (TYPE N)	30	CY
MINOR CONCRETE (BACKFILL)	25	CY
ARCHITECTURAL SURFACE (BARRIER)	775	SQFT
JOINT SEAL (MR 2")	27	LF
JOINT SEAL ASSEMBLY (SWIVILING)(MR 9 1/2 ")	44	LF
BAR REINFORCING STEEL (BRIDGE)	187,000	LB
WELDED STEEL PIPE CASING (BRIDGE)	40	LF
ISOLATION CASING	4,300	LB
BRIDGE DECK DRAINAGE SYSTEM	2,200	LB
CONCRETE BARRIER (TYPE 736 MODIFIED)	423	LF

GENERAL NOTES
LOAD AND RESISTANCE FACTOR DESIGN

DESIGN: AASHTO LRFD Bridge Design Specifications 4th edition with Caltrans Amendments preface dated: December 2008

SEISMIC DESIGN: Caltrans Seismic Design Criteria (SDC), Version 1.4, June 2006.

DEAD LOAD: Includes 35 psf for Future Wearing Surface

LIVE LOADING: HL-93 and Permit (P-15) Design Load.

SEISMIC LOADING: Peak Rock Acceleration = 0.25 g
ARS Soil Type C

Site Specific Displacement Time History

REINFORCED CONCRETE:
fy = 60 Ksi
f'c = 3.6 Ksi (Min)
n = 8

PRESTRESSED CONCRETE: See Prestressing Notes on "Girder Layout No. 1" sheet

DESIGN OVERSIGHT Norbert Gee
10-25-10
SIGN OFF DATE

	BY	CHECKED
DESIGN	R Ramoso/H Mai	R Hawthorne
DETAILS	C Morgan/C Lente	R Hawthorne
QUANTITIES	R Ramoso/H Mai	R Hawthorne

PREPARED FOR THE STATE OF CALIFORNIA DEPARTMENT OF TRANSPORTATION

Robert E. Hawthorne
PROJECT ENGINEER

BRIDGE NO. 57-1215
POST MILE R15.7

HILLERY DIRECT ACCESS RAMPS
NORTHBOUND OFF-RAMP
INDEX TO PLANS No.1

DESIGN DETAIL SHEET (ENGLISH) (REV. 06-01-09)

ORIGINAL SCALE IN INCHES FOR REDUCED PLANS 0 1 2 3

CU 11269
EA 2T0951

DISREGARD PRINTS BEARING EARLIER REVISION DATES

REVISION DATES (PRELIMINARY STAGE ONLY) 01/22/10 03/08/10 05/18/10 05/27/10 06/15/10 07/1/10 08/27/10

SHEET 2 OF 33

FILE => 57-1215-a-itp01.dgn

USERNAME => s124496 DATE PLOTTED => 27-OCT-2011 TIME PLOTTED => 09:27

DIST	COUNTY	ROUTE	POST MILES TOTAL PROJECT	SHEET No	TOTAL SHEETS
11	SD	15	M15.0/M16.4	515	610

REGISTERED CIVIL ENGINEER 10-15-10 DATE

10-24-11
PLANS APPROVAL DATE

REGISTERED PROFESSIONAL ENGINEER ROBERT E. HAWTHORNE No. 40075 Exp. 03/31/12 CIVIL STATE OF CALIFORNIA

The State of California or its officers or agents shall not be responsible for the accuracy or completeness of scanned copies of this plan sheet.

SANDAG
401 B STREET, SUITE 800
SAN DIEGO, CA 92101

AECOM
7807 CONVOY COURT, SUITE 200
SAN DIEGO, CA 92111

Bridge No. 57-1215

Period (sec)	Acceleration
0.010	0.267
0.020	0.325
0.030	0.365
0.050	0.421
0.075	0.473
0.100	0.513
0.120	0.538
0.150	0.571
0.200	0.616
0.250	0.576
0.300	0.546
0.400	0.462
0.500	0.406
0.750	0.330
1.000	0.284
1.500	0.194
2.000	0.148
3.000	0.094
4.000	0.068
5.000	0.056

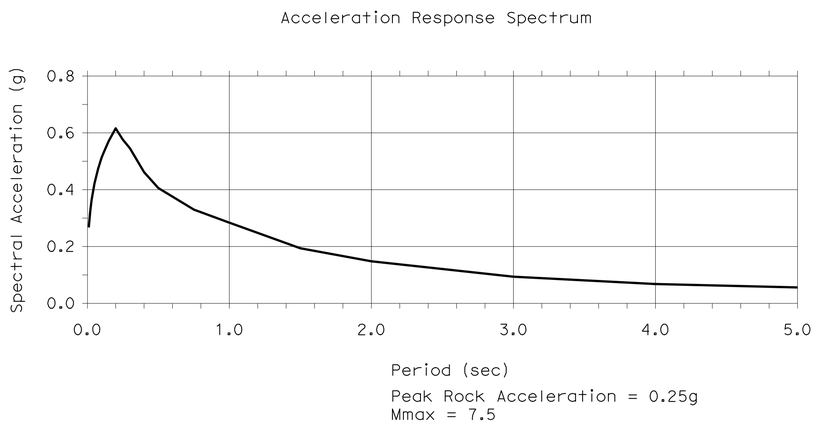

Note:
ARS curve was modified for Near Fault Directivity Effect (SDC Ver. 1.4 Section 6.1.2.1)

SITE SPECIFIC ACCELERATION RESPONSE SPECTRA CURVE

STANDARD PLANS DATED MAY 2006

	A10A	ACRONYMS AND ABBREVIATIONS (SHEET 1 OF 2)
	A10B	ACRONYMS AND ABBREVIATIONS (SHEET 2 OF 2)
	A10C	SYMBOLS (SHEET 1 OF 2)
	A10D	SYMBOLS (SHEET 2 OF 2)
	A62C	LIMITS OF PAYMENT FOR EXCAVATION AND BACKFILL - BRIDGE
RSP	P10	CONCRETE PAVEMENT DOWEL BAR DETAILS
	T3	TEMPORARY RAILING (TYPE K)
	BO-1	BRIDGE DETAILS
	BO-3	BRIDGE DETAILS
	BO-5	BRIDGE DETAILS
	BO-13	BRIDGE DETAILS
RSP	B6-21	JOINT SEALS (MAXIMUM MOVEMENT RATING = 2")
	B7-1	BOX GIRDER DETAILS
	B7-6	DECK DRAINS TYPES D-1 AND D-2
	B7-8	DECK DRAINAGE DETAILS
	B7-10	UTILITY OPENING BOX GIRDER
	B8-5	CAST-IN-PLACE PRESTRESSED GIRDER DETAILS
	B11-56	CONCRETE BARRIER TYPE 736
	B14-3	COMMUNICATION AND SPRINKLER CONTROL CONDUITS (CONDUITS LESS THAN 4")

STANDARD PLAN SHEET No.

DETAIL No.

DESIGN OVERSIGHT Norbert Gee
10-25-10
SIGN OFF DATE

	BY	CHECKED
DESIGN	R Ramoso/H Mai	R Hawthorne
DETAILS	C Morgan/C Lente	R Hawthorne
QUANTITIES	R Ramoso/H Mai	R Hawthorne

PREPARED FOR THE STATE OF CALIFORNIA DEPARTMENT OF TRANSPORTATION

Robert E. Hawthorne
PROJECT ENGINEER

BRIDGE NO. 57-1215
POST MILE R15.7

HILLERY DIRECT ACCESS RAMPS
NORTHBOUND OFF-RAMP
INDEX TO PLANS No. 2

DESIGN DETAIL SHEET (ENGLISH) (REV. 06-01-09)

ORIGINAL SCALE IN INCHES FOR REDUCED PLANS 0 1 2 3

CU 11269
EA 2T0951

DISREGARD PRINTS BEARING EARLIER REVISION DATES

REVISION DATES (PRELIMINARY STAGE ONLY) 01/22/10 03/08/10 05/18/10 05/27/10 06/15/10 07/01/10 08/27/10

SHEET 3 OF 33

FILE => 57-1215-a-itp02.dgn

USERNAME => s124496 DATE PLOTTED => 27-OCT-2011 TIME PLOTTED => 08:28

DIST	COUNTY	ROUTE	POST MILES TOTAL PROJECT	SHEET No	TOTAL SHEETS
11	SD	15	M15.0/M16.4	516	610

REGISTERED CIVIL ENGINEER — DATE 10-15-10

10-24-11
PLANS APPROVAL DATE

REGISTERED PROFESSIONAL ENGINEER — ROBERT E. HAWTHORNE — No. 40075 — Exp. 03/31/12 — CIVIL — STATE OF CALIFORNIA

The State of California or its officers or agents shall not be responsible for the accuracy or completeness of scanned copies of this plan sheet.

SANDAG
401 B STREET, SUITE 800
SAN DIEGO, CA 92101

AECOM
7807 CONVOY COURT, SUITE 200
SAN DIEGO, CA 92111

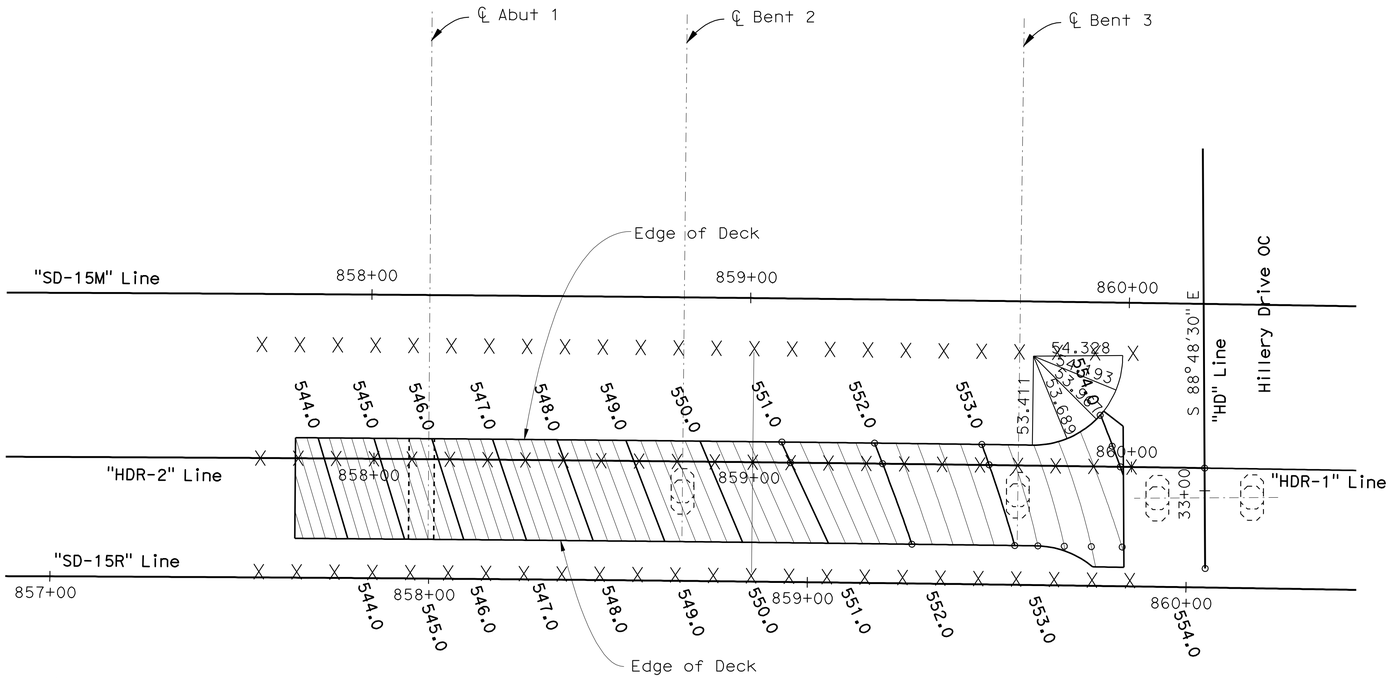

PLAN

1" = 20'

Notes:

X - Indicates 10 foot intervals, along "HDR-2" Line

Contour interval is 0.20 ft.
Contours do not include camber.

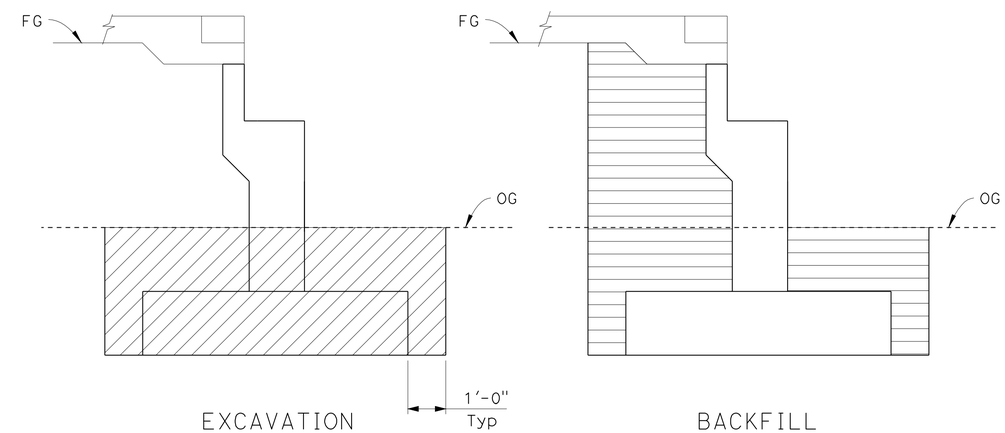

Structure Excavation (Type D)

Structure Backfill (Bridge)

PAY LIMITS FOR STRUCTURE EXCAVATION AND BACKFILL ABUTMENT

No Scale

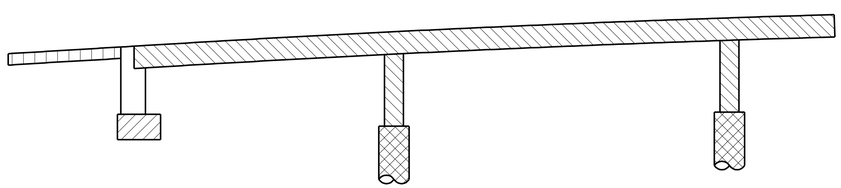

Structural Concrete, Bridge

Structural Concrete, Bridge (f'c=4 ksi @ 28 days)

Structural Concrete, Bridge Footing

Cast-In-Drilled-Hole Concrete Pile (f'c=4 ksi @ 28 days)

Structural Concrete, Approach Slab

CONCRETE STRENGTH AND TYPE LIMITS

No Scale

HILLERY DIRECT ACCESS RAMPS
NORTHBOUND OFF-RAMP
DECK CONTOURS

DESIGN OVERSIGHT — Norbert Gee
10-25-10
SIGN OFF DATE

	BY	CHECKED
DESIGN	R Ramoso/H Mai	R Hawthorne
DETAILS	C Morgan/C Lente	R Hawthorne
QUANTITIES	R Ramoso/H Mai	R Hawthorne

PREPARED FOR THE STATE OF CALIFORNIA DEPARTMENT OF TRANSPORTATION

Robert E. Hawthorne
PROJECT ENGINEER

BRIDGE NO. 57-1215
POST MILE R15.7

CU 11269
EA 2T0951

DISREGARD PRINTS BEARING EARLIER REVISION DATES

REVISION DATES (PRELIMINARY STAGE ONLY): 01/22/10 03/08/10 05/18/10 05/27/10 06/15/10 07/01/10 08/27/10

SHEET 4 OF 33

DESIGN DETAIL SHEET (ENGLISH) (REV. 06-01-09)

ORIGINAL SCALE IN INCHES FOR REDUCED PLANS 0 1 2 3

FILE => 57-1215-d-dc01.dgn

USERNAME => s124496 DATE PLOTTED => 27-OCT-2011 TIME PLOTTED => 09:57

DIST	COUNTY	ROUTE	POST MILES TOTAL PROJECT	SHEET No	TOTAL SHEETS
11	SD	15	M15.0/M16.4	517	610

REGISTERED CIVIL ENGINEER — DATE 10-15-10

10-24-11
PLANS APPROVAL DATE

The State of California or its officers or agents shall not be responsible for the accuracy or completeness of scanned copies of this plan sheet.

REGISTERED PROFESSIONAL ENGINEER — ROBERT E. HAWTHORNE — No. 40075 — Exp. 03/31/12 — CIVIL — STATE OF CALIFORNIA

SANDAG
401 B STREET, SUITE 800
SAN DIEGO, CA 92101

AECOM
7807 CONVOY COURT, SUITE 200
SAN DIEGO, CA 92111

LEGEND

- Indicates CIDH Pile
- XXX.XX — Indicates bottom of footing elevation
- Structure Excavation (Type D)
- Structure Backfill (Bridge)
- Minor Concrete (Backfill)

ISOLATION CASING	
Location	Length of Payment (ft)
Bent 2	11′-4″

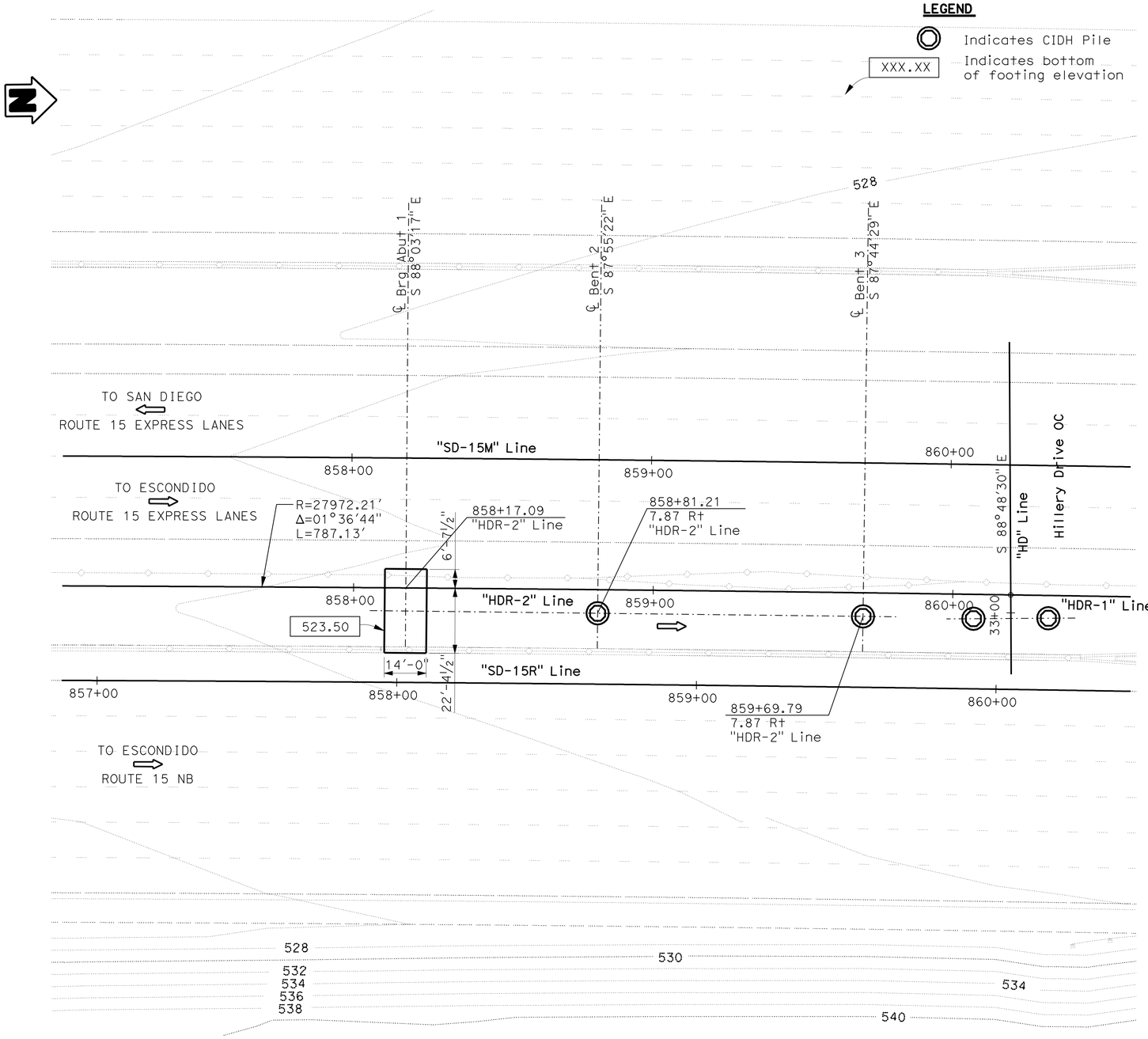

PLAN
1″ = 20′

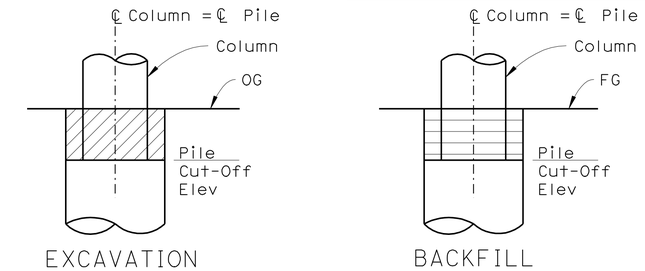

PAY LIMITS FOR STRUCTURE EXCAVATION AND BACKFILL BENT 3
No Scale

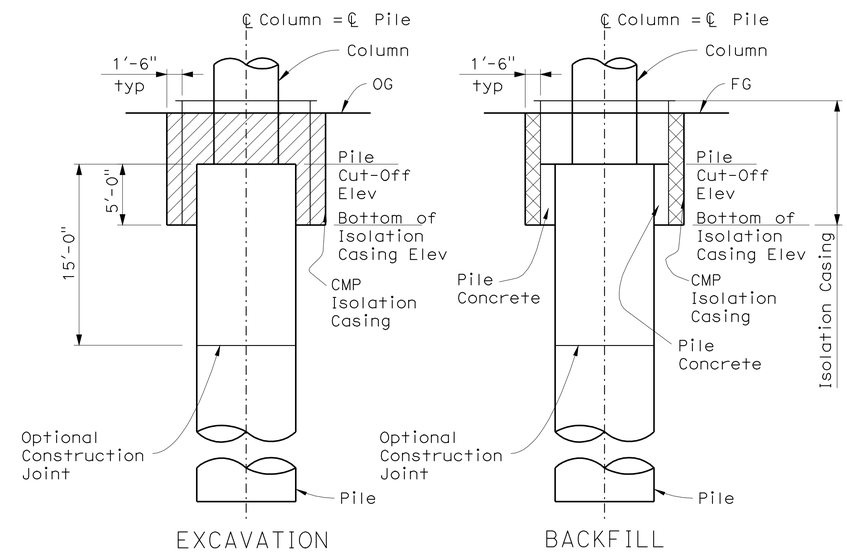

PAY LIMITS FOR STRUCTURE EXCAVATION AND BACKFILL BENT 2
No Scale

GEOTECHNICAL PROFESSIONAL APPROVAL DATE

DESIGN OVERSIGHT Norbert Gee
10-25-10
SIGN OFF DATE

SCALE: 1″=20′	VERT.DATUM NAVD 88	HORZ.DATUM NAD 83	
PHOTOGRAMMETRY AS OF: 05-29-2006	ALIGNMENT TIES AECOM Control Lines		
SURVEYED BY Diego Alvarado	DRAFTED BY Nicholas Haigh		
FIELD CHECKED BY Diego Alvarado	CHECKED BY Michael Crull		

	BY	CHECKED
DESIGN	R Ramoso/H Mai	John Powell
DETAILS	C Morgan/C Lente	John Powell
QUANTITIES	R Ramoso/H Mai	Janice Reguyal

PREPARED FOR THE STATE OF CALIFORNIA DEPARTMENT OF TRANSPORTATION

Robert E. Hawthorne
PROJECT ENGINEER

BRIDGE NO. 57-1215
POST MILE R15.7

HILLERY DIRECT ACCESS RAMPS
NORTHBOUND OFF-RAMP
FOUNDATION PLAN

FOUNDATION PLAN SHEET (ENGLISH) (REV. 06-01-09)

ORIGINAL SCALE IN INCHES FOR REDUCED PLANS 0 1 2 3

CU 11269
EA 2T0951

DISREGARD PRINTS BEARING EARLIER REVISION DATES

REVISION DATES (PRELIMINARY STAGE ONLY): 01/22/10 03/08/10 05/18/10 05/27/10 06/15/10 07/01/10 08/27/10 10/06/10

SHEET 5 OF 33

FILE => 57-1215-e-fp101.dgn

USERNAME => s124496 DATE PLOTTED => 27-OCT-2011 TIME PLOTTED => 09:57

DIST	COUNTY	ROUTE	POST MILES TOTAL PROJECT	SHEET No	TOTAL SHEETS
11	SD	15	M15.0/M16.4	518	610

Robert E Hawthorne 10-15-10
REGISTERED CIVIL ENGINEER DATE

10-24-11
PLANS APPROVAL DATE

REGISTERED PROFESSIONAL ENGINEER ROBERT E. HAWTHORNE No. 40075 Exp. 03/31/12 CIVIL STATE OF CALIFORNIA

The State of California or its officers or agents shall not be responsible for the accuracy or completeness of scanned copies of this plan sheet.

SANDAG
401 B STREET, SUITE 800
SAN DIEGO, CA 92101

AECOM
7807 CONVOY COURT, SUITE 200
SAN DIEGO, CA 92111

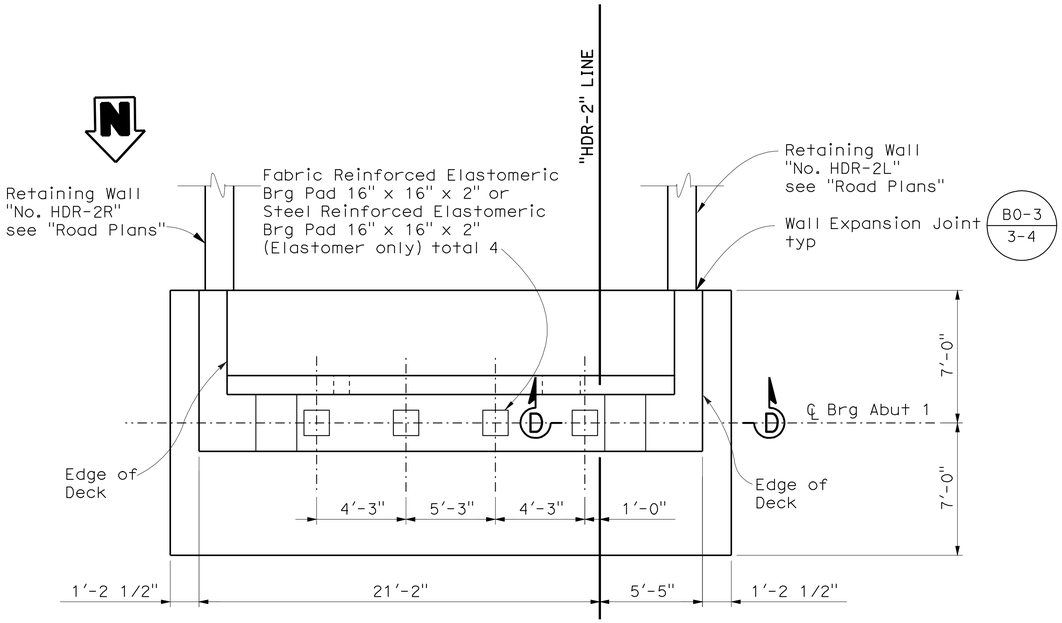

PLAN
1/4" = 1'-0"

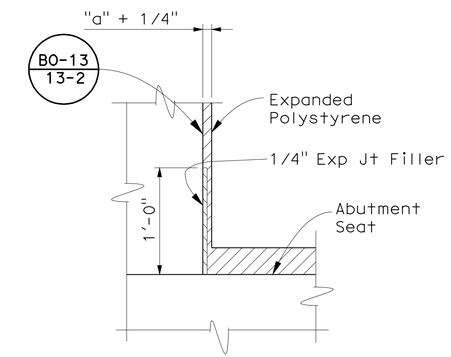

BACKWALL BASE DETAIL
No Scale

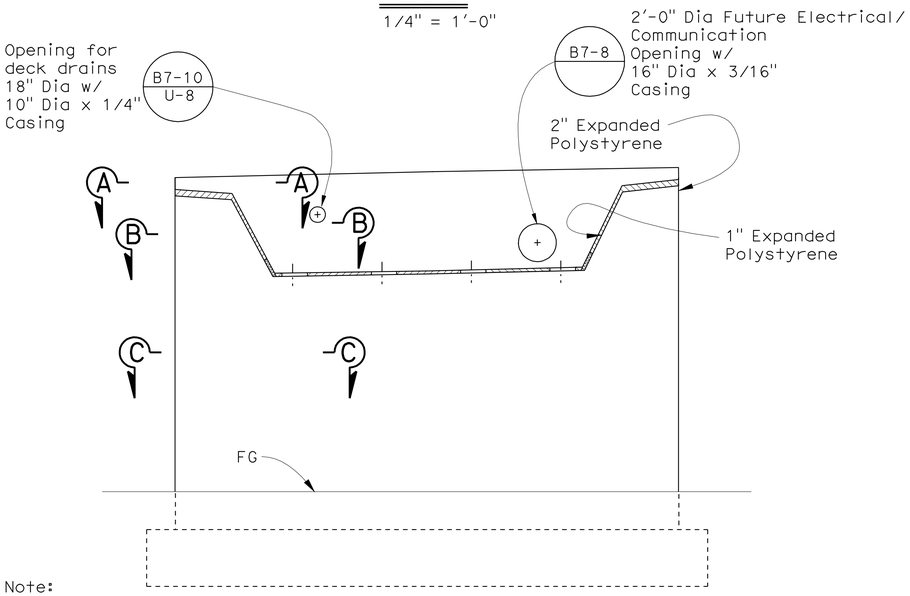

Note:
For Sections A-A, B-B, C-C, and D-D see "ABUTMENT DETAILS"

ELEVATION
1/4" = 1'-0"

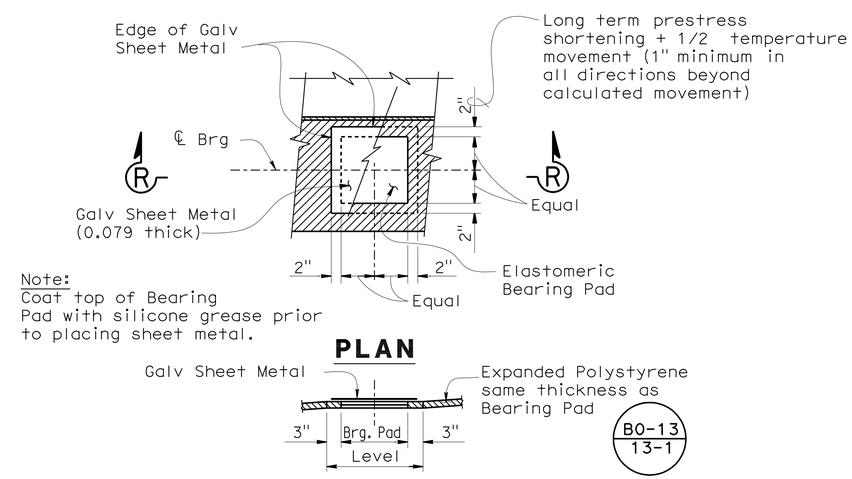

Note:
Coat top of Bearing Pad with silicone grease prior to placing sheet metal.

PLAN

SECTION R-R

BEARING PAD DETAIL
No Scale
Details typical at all bearing pads

HILLERY DIRECT ACCESS RAMPS
NORTHBOUND OFF-RAMP
ABUTMENT LAYOUT

Norbert Gee
DESIGN OVERSIGHT Norbert Gee

10-25-10
SIGN OFF DATE

	BY	CHECKED
DESIGN	R Ramoso/H Mai	John Powell
DETAILS	C Morgan/C Lente	John Powell
QUANTITIES	R Ramoso/H Mai	Janice Reguyal

PREPARED FOR THE STATE OF CALIFORNIA DEPARTMENT OF TRANSPORTATION

Robert E. Hawthorne
PROJECT ENGINEER

BRIDGE NO. 57-1215
POST MILE R15.7

DESIGN DETAIL SHEET (ENGLISH) (REV. 06-01-09)

ORIGINAL SCALE IN INCHES FOR REDUCED PLANS 0 1 2 3

CU 11269
EA 2T0951

DISREGARD PRINTS BEARING EARLIER REVISION DATES

REVISION DATES (PRELIMINARY STAGE ONLY): 01/22/10 03/08/10 05/18/10 05/27/10 06/15/10 07/01/10 08/27/10

SHEET 6 OF 33

FILE => 57-1215-f-a01_lo1.dgn

USERNAME => s124496 DATE PLOTTED => 27-OCT-2011 TIME PLOTTED => 09:57

DIST	COUNTY	ROUTE	POST MILES TOTAL PROJECT	SHEET No	TOTAL SHEETS
11	SD	15	M15.0/M16.4	519	610

REGISTERED CIVIL ENGINEER — DATE 10-15-10

10-24-11
PLANS APPROVAL DATE

REGISTERED PROFESSIONAL ENGINEER — ROBERT E. HAWTHORNE — No. 40075 — Exp. 03/31/12 — CIVIL — STATE OF CALIFORNIA

The State of California or its officers or agents shall not be responsible for the accuracy or completeness of scanned copies of this plan sheet.

SANDAG
401 B STREET, SUITE 800
SAN DIEGO, CA 92101

AECOM
7807 CONVOY COURT, SUITE 200
SAN DIEGO, CA 92111

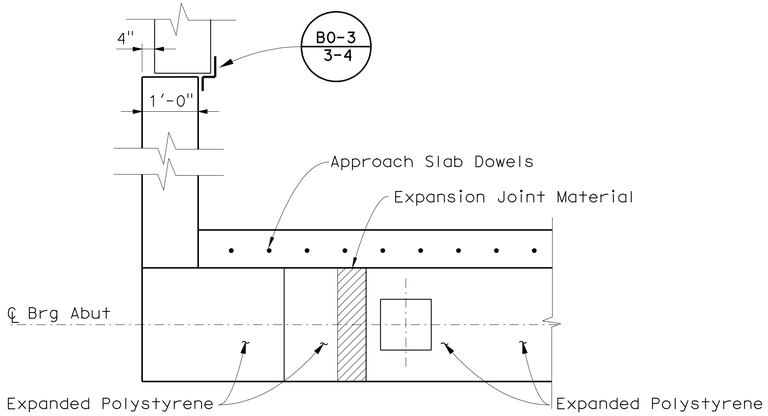

SECTION A-A
1/2"=1'-0"

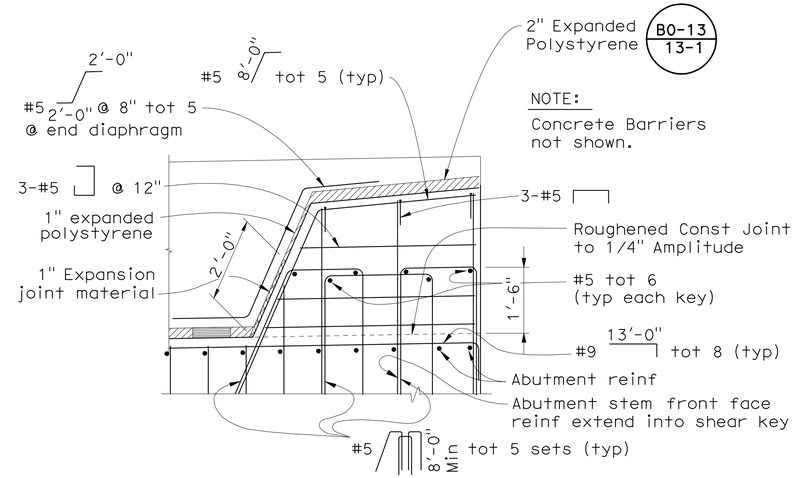

SECTION D-D
1/2"=1'-0"

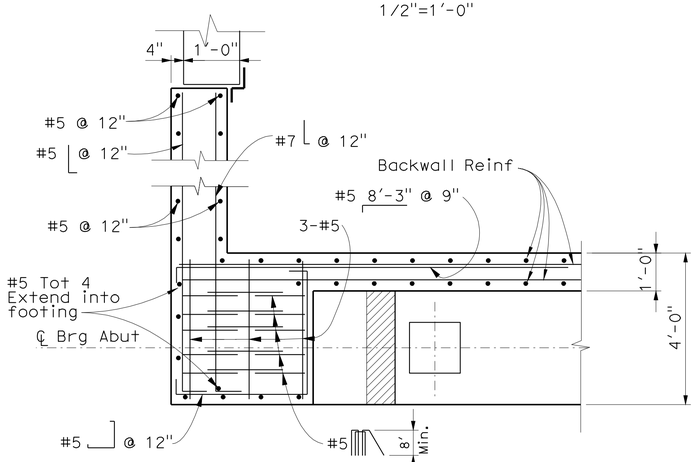

SECTION B-B
1/2"=1'-0"

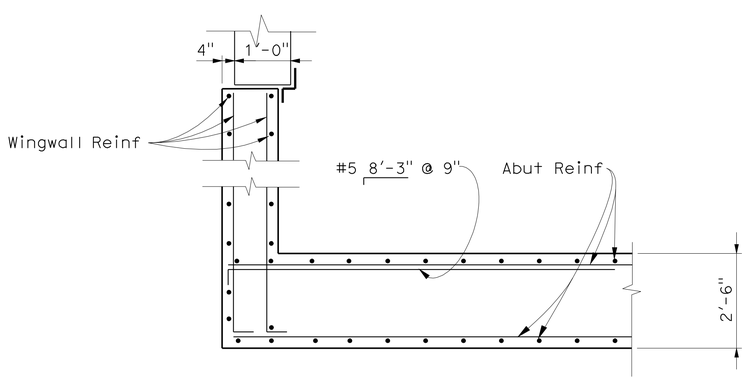

SECTION C-C
1/2"=1'-0"

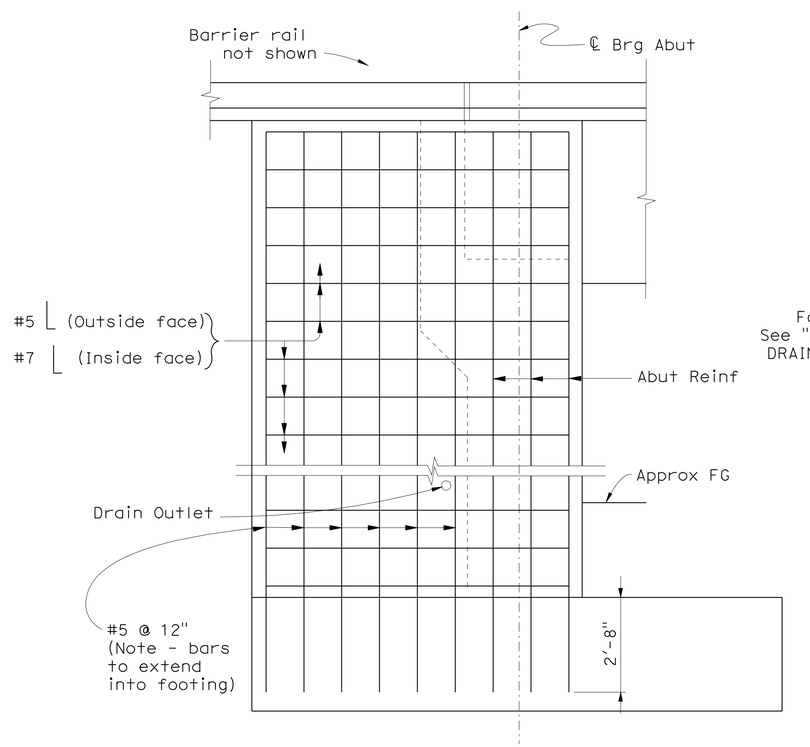

WING WALL ELEVATION
1/2"=1'-0"

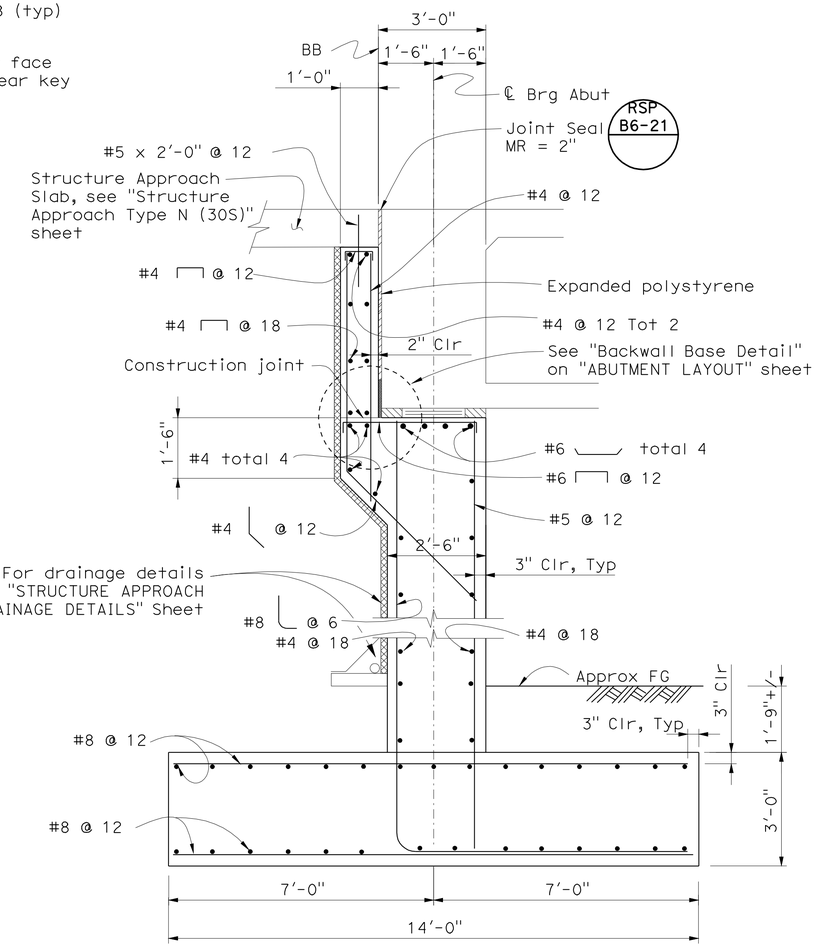

ABUTMENT SECTION
1/2"=1'-0"

HILLERY DIRECT ACCESS RAMPS
NORTHBOUND OFF-RAMP
ABUTMENT DETAILS

DESIGN OVERSIGHT — Norbert Gee
10-25-10
SIGN OFF DATE

	BY	CHECKED
DESIGN	R Ramoso/H Mai	John Powell
DETAILS	C Morgan/C Lente	John Powell
QUANTITIES	R Ramoso/H Mai	Janice Reguyal

PREPARED FOR THE STATE OF CALIFORNIA DEPARTMENT OF TRANSPORTATION

Robert E. Hawthorne
PROJECT ENGINEER

BRIDGE NO. 57-1215
POST MILE R15.7

CU 11269
EA 2T0951

DISREGARD PRINTS BEARING EARLIER REVISION DATES — REVISION DATES (PRELIMINARY STAGE ONLY): 01/22/10 03/08/10 05/18/10 05/27/10 06/15/10 07/01/10 08/27/10

SHEET 7 OF 33

DESIGN DETAIL SHEET (ENGLISH) (REV. 06-01-09)

ORIGINAL SCALE IN INCHES FOR REDUCED PLANS 0 1 2 3

FILE => 57-1215-f-a01dt01.dgn

USERNAME => s124496 DATE PLOTTED => 27-OCT-2011 TIME PLOTTED => 09:57

DIST	COUNTY	ROUTE	POST MILES TOTAL PROJECT	SHEET No	TOTAL SHEETS
11	SD	15	M15.0/M16.4	520	610

REGISTERED CIVIL ENGINEER — DATE 10-15-10

10-24-11
PLANS APPROVAL DATE

REGISTERED PROFESSIONAL ENGINEER — ROBERT E. HAWTHORNE — No. 40075 — Exp. 03/31/12 — CIVIL — STATE OF CALIFORNIA

The State of California or its officers or agents shall not be responsible for the accuracy or completeness of scanned copies of this plan sheet.

SANDAG
401 B STREET, SUITE 800
SAN DIEGO, CA 92101

AECOM
7807 CONVOY COURT, SUITE 200
SAN DIEGO, CA 92111

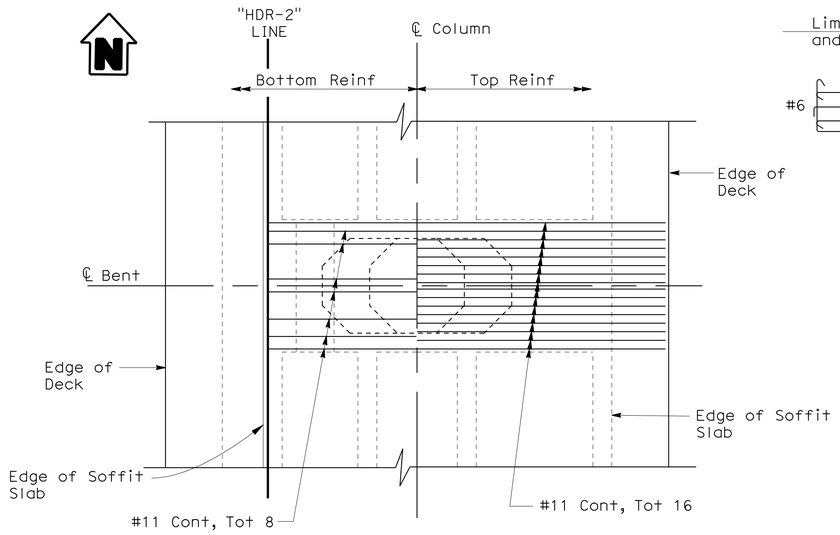

PLAN

SCALE 1/4" = 1'-0"

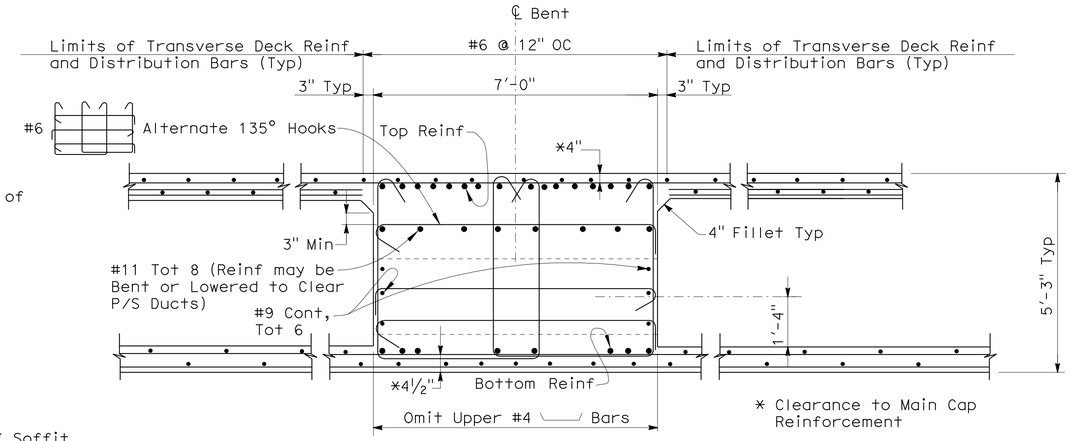

SECTION A-A (Bent 2)

1/2" = 1'-0"

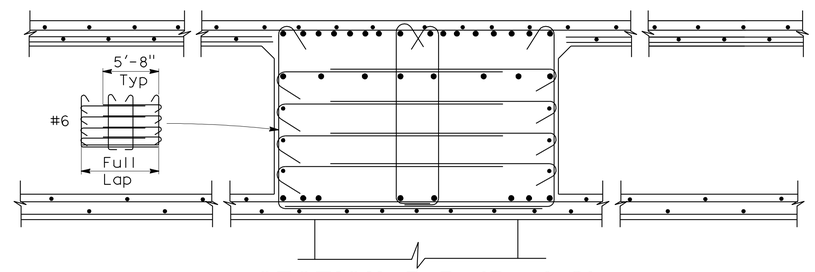

SECTION B-B (Bent 2)

1/2" = 1'-0"

Note: For Details Not Noted, See "Section A-A" (Bent 2)

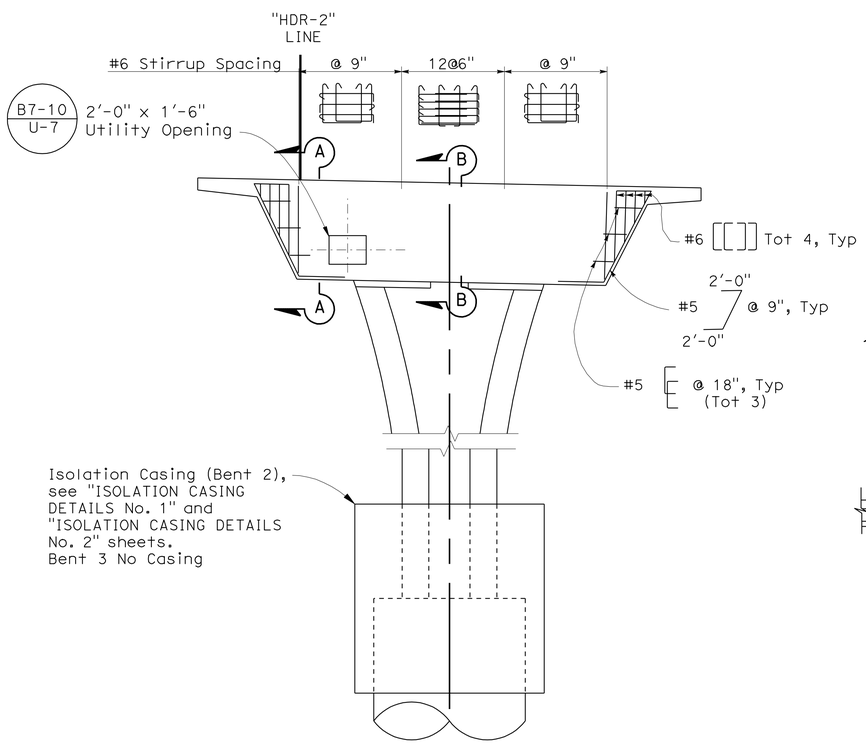

ELEVATION

SCALE 1/4" = 1'-0"

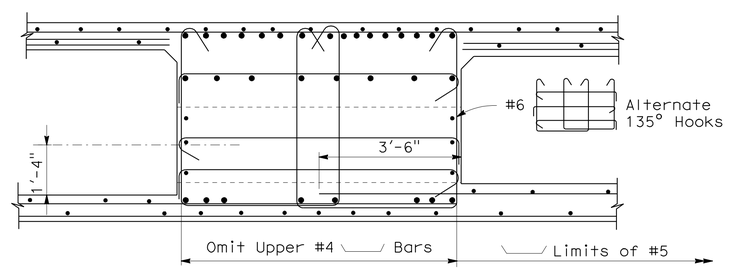

SECTION A-A (Bent 3)

1/2" = 1'-0"

Note: For Details Not Noted, See "Section A-A" (Bent 2)

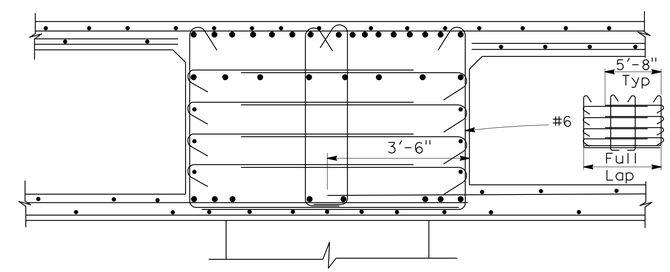

SECTION B-B (Bent 3)

1/2" = 1'-0"

Note: For Details Not Noted, See "Section A-A" (Bent 3) & Section A-A (Bent 2)

HILLERY DIRECT ACCESS RAMPS
NORTHBOUND OFF-RAMP
BENT LAYOUT

DESIGN OVERSIGHT — Norbert Gee
10-25-10
SIGN OFF DATE

	BY	CHECKED
DESIGN	R Ramoso/H Mai	R Hawthorne
DETAILS	C Morgan/C Lente	R Hawthorne
QUANTITIES	R Ramoso/H Mai	R Hawthorne

PREPARED FOR THE STATE OF CALIFORNIA DEPARTMENT OF TRANSPORTATION

Robert E. Hawthorne
PROJECT ENGINEER

BRIDGE NO. 57-1215
POST MILE R15.7

CU 11269
EA 2T0951

DISREGARD PRINTS BEARING EARLIER REVISION DATES

REVISION DATES (PRELIMINARY STAGE ONLY): 01/22/10 03/08/10 05/18/10 05/27/10 07/1/10 08/27/10

SHEET 8 OF 33

DESIGN DETAIL SHEET (ENGLISH) (REV. 06-01-09)

ORIGINAL SCALE IN INCHES FOR REDUCED PLANS 0 1 2 3

FILE => 57-1215-h-b01_lo01.dgn

USERNAME => s124496 DATE PLOTTED => 27-OCT-2011 TIME PLOTTED => 03:58

DIST	COUNTY	ROUTE	POST MILES TOTAL PROJECT	SHEET No	TOTAL SHEETS
11	SD	15	M15.0/M16.4	521	610

Robert E. Hawthorne 10-15-10
REGISTERED CIVIL ENGINEER DATE

10-24-11
PLANS APPROVAL DATE

REGISTERED PROFESSIONAL ENGINEER ROBERT E. HAWTHORNE No. 40075 Exp. 03/31/12 CIVIL STATE OF CALIFORNIA

The State of California or its officers or agents shall not be responsible for the accuracy or completeness of scanned copies of this plan sheet.

SANDAG
401 B STREET, SUITE 800
SAN DIEGO, CA 92101

AECOM
7807 CONVOY COURT, SUITE 200
SAN DIEGO, CA 92111

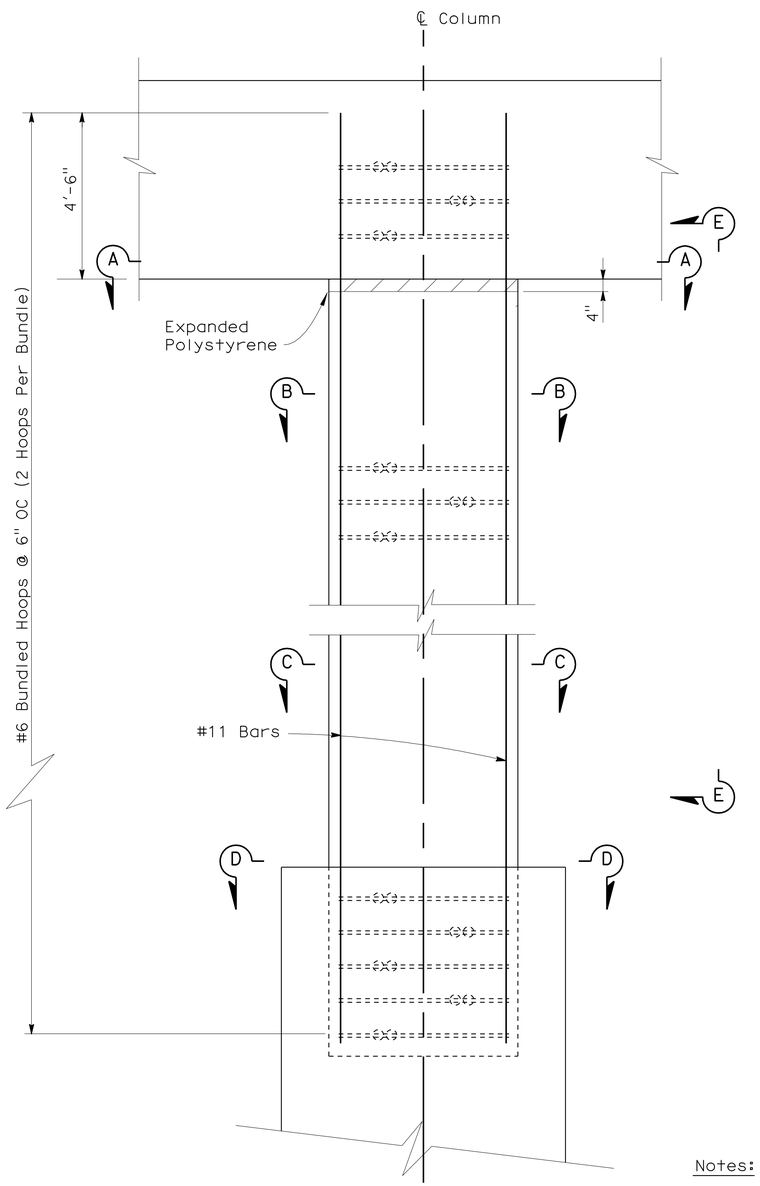

ELEVATION
½" = 1'-0"

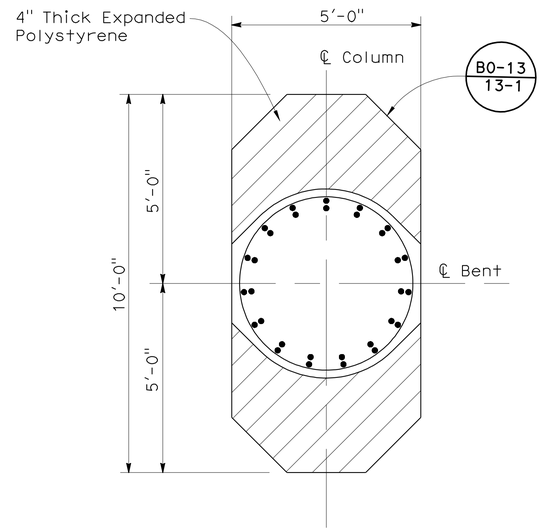

SECTION A-A
½" = 1'-0"

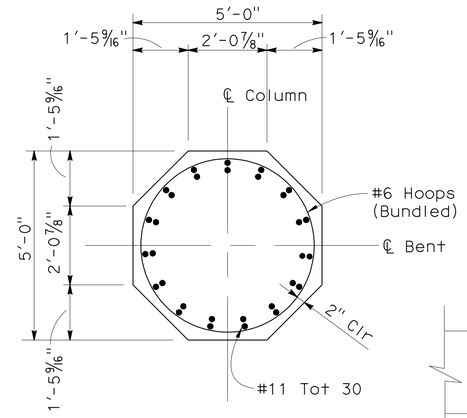

SECTION C-C
½" = 1'-0"

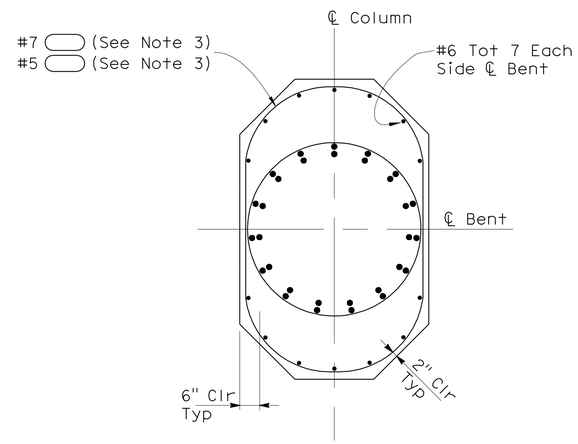

SECTION B-B
½" = 1'-0"

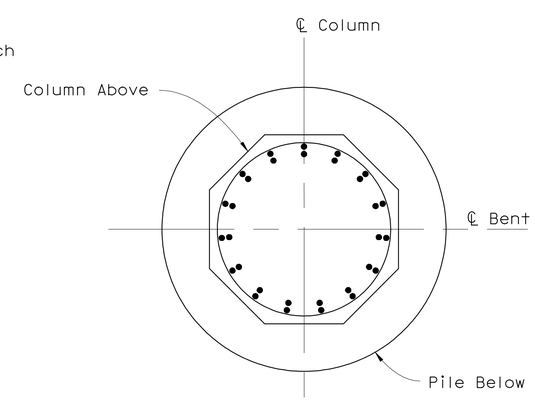

SECTION D-D
SCALE ½" = 1'-0"

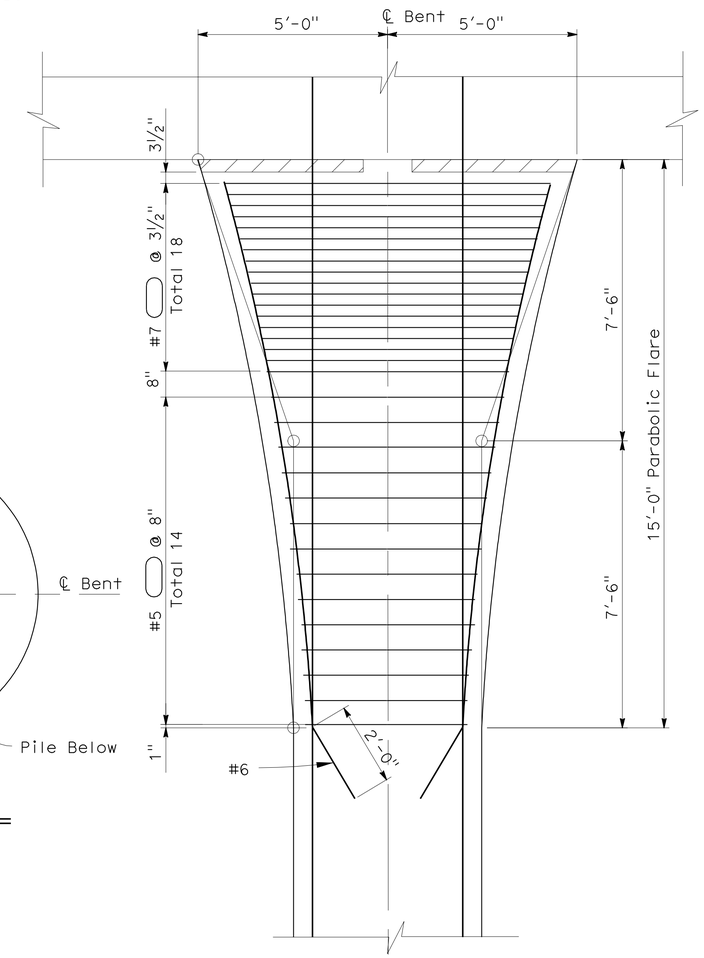

VIEW E-E
½" = 1'-0"

Notes:

1. No Splices Allowed in Main Column Reinforcement.
2. All Hoops are "Ultimate" Butt Spliced Continuous Except as Noted.
3. Transverse Flare Reinforcement Hoops are "Service" Butt Spliced.

HILLERY DIRECT ACCESS RAMPS
HDR-2 NORTHBOUND OFF-RAMP
COLUMN DETAILS

Norbert Gee
DESIGN OVERSIGHT Norbert Gee
10-25-10
SIGN OFF DATE

	BY	CHECKED
DESIGN	R Ramoso/H Mai	R Hawthorne
DETAILS	C Morgan/C Lente	R Hawthorne
QUANTITIES	R Ramoso/H Mai	R Hawthorne

PREPARED FOR THE STATE OF CALIFORNIA DEPARTMENT OF TRANSPORTATION

Robert E. Hawthorne
PROJECT ENGINEER

BRIDGE NO. 57-1215
POST MILE R15.7

DISREGARD PRINTS BEARING EARLIER REVISION DATES

REVISION DATES (PRELIMINARY STAGE ONLY): 01/22/10 03/08/10 05/18/10 05/21/10 07/01/10 08/27/10

SHEET 9 OF 33

DESIGN DETAIL SHEET (ENGLISH) (REV. 06-01-09)

ORIGINAL SCALE IN INCHES FOR REDUCED PLANS 0 1 2 3

CU 11269
EA 2T0951

FILE => 57-1215-j-cdet01.dgn

USERNAME => s119571 DATE PLOTTED => 27-OCT-2011 TIME PLOTTED => 13:28

DIST	COUNTY	ROUTE	POST MILES TOTAL PROJECT	SHEET No	TOTAL SHEETS
11	SD	15	M15.0/M16.4	522	610

REGISTERED CIVIL ENGINEER 10-15-10 DATE

10-24-11
PLANS APPROVAL DATE

REGISTERED PROFESSIONAL ENGINEER ROBERT E. HAWTHORNE No. 40075 Exp. 03/31/12 CIVIL STATE OF CALIFORNIA

The State of California or its officers or agents shall not be responsible for the accuracy or completeness of scanned copies of this plan sheet.

SANDAG
401 B STREET, SUITE 800
SAN DIEGO, CA 92101

AECOM
7807 CONVOY COURT, SUITE 200
SAN DIEGO, CA 92111

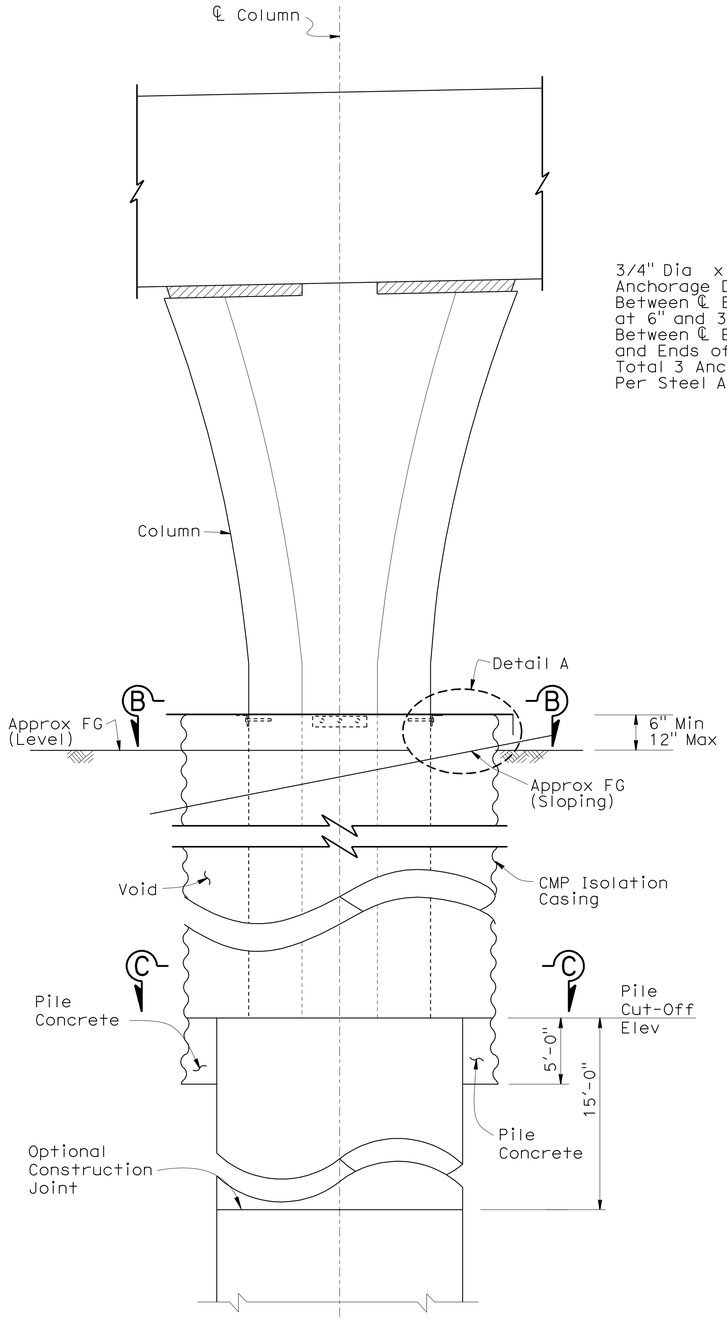

ELEVATION BENT 2

NTS

Note:
Cut Top of Casing 6" Minimum, 12" Maximum.

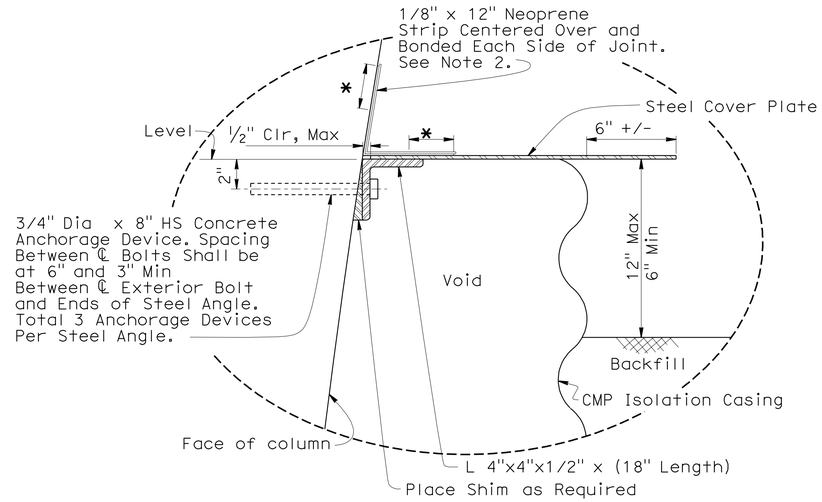

DETAIL A

NTS

* 3" To 4" of Bonding

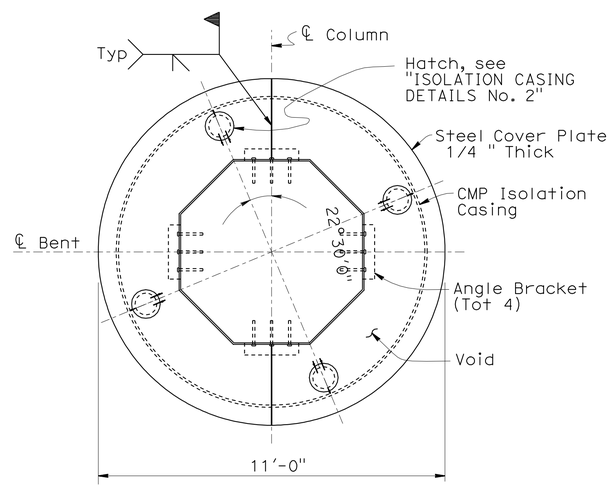

SECTION B-B

NTS
Note: Neoprene Strip Not Shown

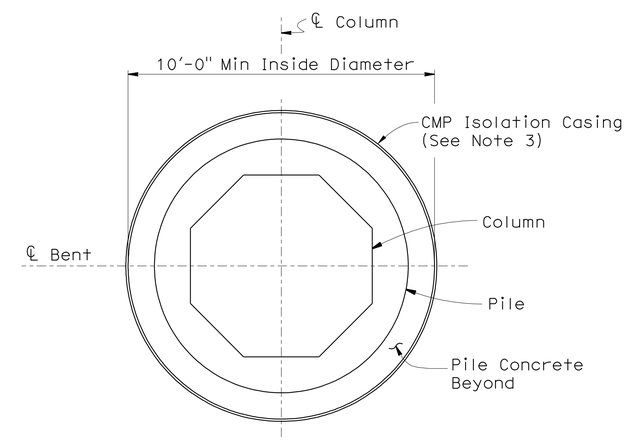

SECTION C-C

NTS

Notes:

1. Steel Cover Plate, Angles and All Hardware Shall be Galvanized.
2. Neoprene Strip may be Cut and Overlapped as Required to Fit Against Column and Steel Cover Plate. Entire Joint Between Column and Steel Cover Plate shall be Sealed.
3. Minimum Properties and Dimensions of Galvanized Corrugated Metal Pipe:

Thickness	0.168"
Area	63.4 in^2
Radius of Gyration	42.5 in
Moment of Inertia	114,481 in^4
Diameter	10'-0"
Section Modulus	1903 in^3
Length	11'-8"

4. If Permanent Casing is used, Casing shall be CMP and shall not extend more than 5'-0" below Optional Construction Joint indicated

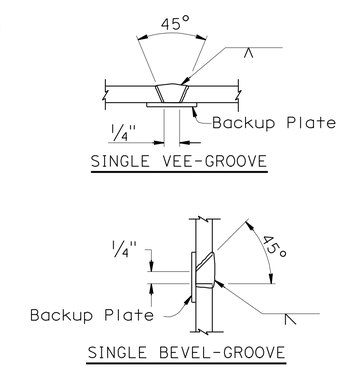

CASING WELDING DETAIL (BUTT JOINTS)

Notes:

1. Single Vee-Groove and Square Groove Permitted for All Positions.
2. Single Bevel-Groove Permitted for Horizontal Joints Only.

DESIGN OVERSIGHT Norbert Gee
10-25-10
SIGN OFF DATE

	BY	CHECKED
DESIGN	R Ramoso/H Mai	R Hawthorne
DETAILS	C Morgan/C Lente	R Hawthorne
QUANTITIES	R Ramoso/H Mai	R Hawthorne

PREPARED FOR THE STATE OF CALIFORNIA DEPARTMENT OF TRANSPORTATION

Robert E. Hawthorne
PROJECT ENGINEER

BRIDGE NO. 57-1215
POST MILE R15.7

HILLERY DIRECT ACCESS RAMPS
NORTHBOUND OFF-RAMP
ISOLATION CASING DETAILS No. 1

DESIGN DETAIL SHEET (ENGLISH) (REV. 06-01-09)

ORIGINAL SCALE IN INCHES FOR REDUCED PLANS 0 1 2 3

CU 11269
EA 2T0951

DISREGARD PRINTS BEARING EARLIER REVISION DATES

REVISION DATES (PRELIMINARY STAGE ONLY) 01/22/10 03/08/10 05/27/10 07/01/10 08/27/10 10/06/10

SHEET 10 OF 33

FILE => 57-1215-j-ciso01.dgn

USERNAME => s121614 DATE PLOTTED => 31-OCT-2011 TIME PLOTTED => 06:28

DIST	COUNTY	ROUTE	POST MILES TOTAL PROJECT	SHEET No	TOTAL SHEETS
11	SD	15	M15.0/M16.4	523	610

REGISTERED CIVIL ENGINEER — DATE 10-15-10

10-24-11
PLANS APPROVAL DATE

REGISTERED PROFESSIONAL ENGINEER — ROBERT E. HAWTHORNE — No. 40075 — Exp. 03/31/12 — CIVIL — STATE OF CALIFORNIA

The State of California or its officers or agents shall not be responsible for the accuracy or completeness of scanned copies of this plan sheet.

SANDAG
401 B STREET, SUITE 800
SAN DIEGO, CA 92101

AECOM
7807 CONVOY COURT, SUITE 200
SAN DIEGO, CA 92111

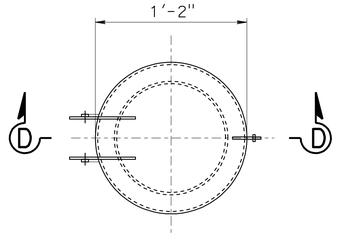

HATCH - PLAN VIEW

1 1/2"=1'-0"

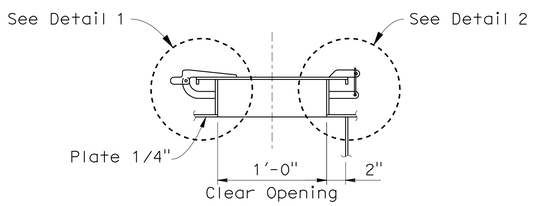

SECTION D-D

1 1/2"=1'-0"

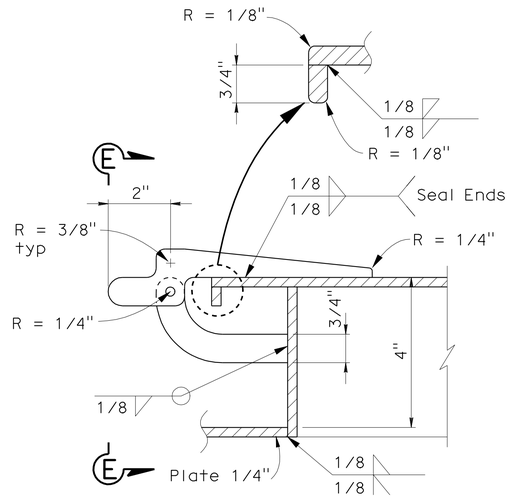

DETAIL 1

NTS

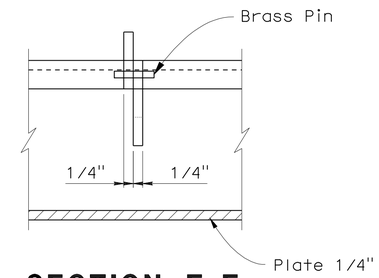

SECTION E-E

NTS

Notes:

1. For Additional Details, see "ISOLATION CASING DETAILS No. 1"
2. For Detail A, Section B-B & C-C, see "ISOLATION CASING DETAILS No. 1"

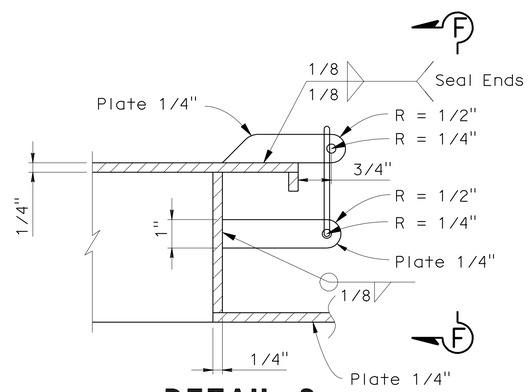

DETAIL 2

NTS

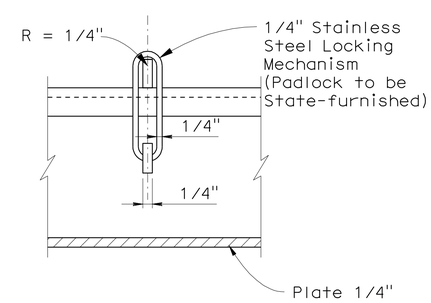

SECTION F-F

NTS

DESIGN OVERSIGHT — Norbert Gee
10-25-10
SIGN OFF DATE

	BY	CHECKED
DESIGN	R Ramoso/H Mai	R Hawthorne
DETAILS	C Morgan/C Lente	R Hawthorne
QUANTITIES	R Ramoso/H Mai	R Hawthorne

PREPARED FOR THE STATE OF CALIFORNIA DEPARTMENT OF TRANSPORTATION

Robert E. Hawthorne
PROJECT ENGINEER

BRIDGE NO. 57-1215
POST MILE R15.7

HILLERY DIRECT ACCESS RAMPS
NORTHBOUND OFF-RAMP
ISOLATION CASING DETAILS No. 2

DESIGN DETAIL SHEET (ENGLISH) (REV. 06-01-09)

ORIGINAL SCALE IN INCHES FOR REDUCED PLANS 0 1 2 3

CU 11269
EA 2T0951

DISREGARD PRINTS BEARING EARLIER REVISION DATES

REVISION DATES (PRELIMINARY STAGE ONLY): 01/22/10 03/08/10 05/27/10 07/01/10 08/27/10

SHEET 11 OF 33

FILE => 57-1215-j-ciso02.dgn

USERNAME => s12614 DATE PLOTTED => 31-OCT-2011 TIME PLOTTED => 06:28

DIST	COUNTY	ROUTE	POST MILES TOTAL PROJECT	SHEET No	TOTAL SHEETS
11	SD	15	M15.0/M16.4	524	610

REGISTERED CIVIL ENGINEER — DATE 10-15-10

10-24-11
PLANS APPROVAL DATE

REGISTERED PROFESSIONAL ENGINEER — ROBERT E. HAWTHORNE — No. 40075 — Exp. 03/31/12 — CIVIL — STATE OF CALIFORNIA

The State of California or its officers or agents shall not be responsible for the accuracy or completeness of scanned copies of this plan sheet.

SANDAG
401 B STREET, SUITE 800
SAN DIEGO, CA 92101

AECOM
7807 CONVOY COURT, SUITE 200
SAN DIEGO, CA 92111

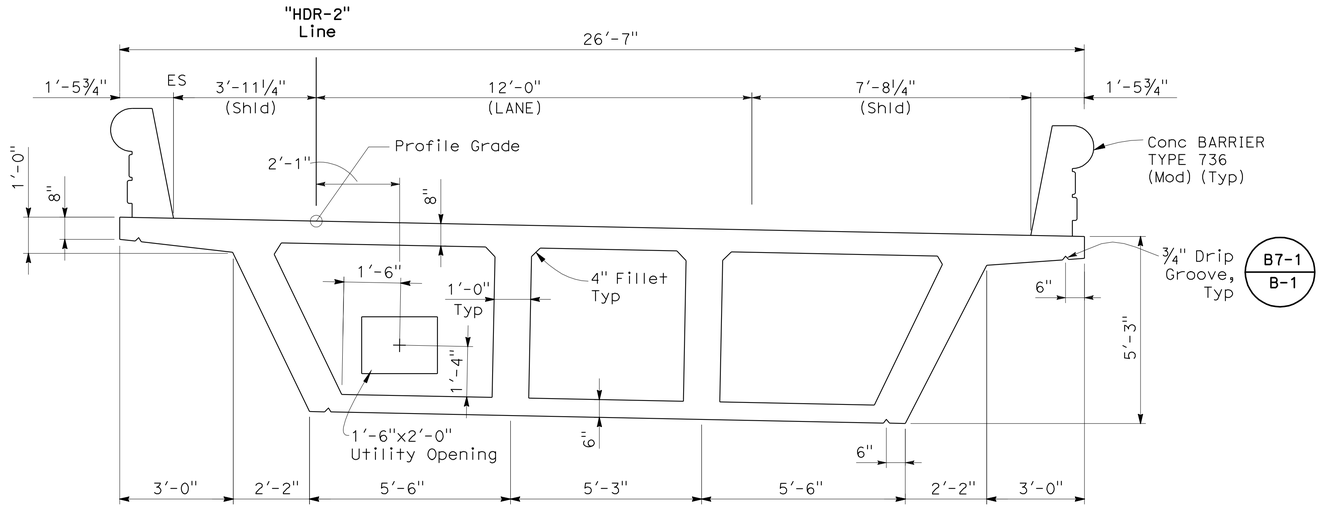

TYPICAL SECTION (SPANS 1 & 2)

1/2"=1'-0"

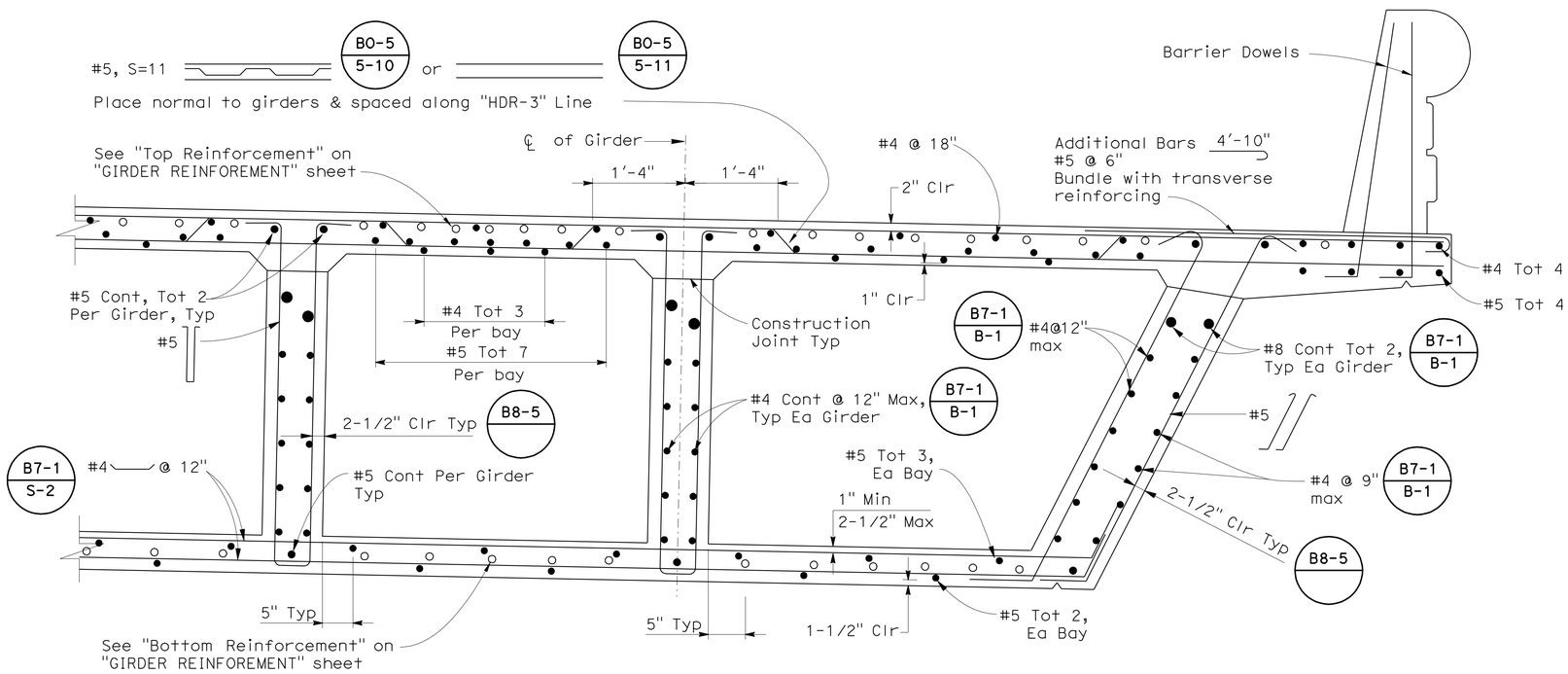

Notes:
1. Dimensions shown are normal to Girder.

PART TYPICAL SECTION (SPANS 1 & 2)

1"=1'-0"

B0-5 B7-1 B8-5

HILLERY DIRECT ACCESS RAMPS
NORTHBOUND OFF-RAMP
TYPICAL SECTION No. 1

DESIGN OVERSIGHT — Norbert Gee
10-25-10
SIGN OFF DATE

	BY	CHECKED
DESIGN	R Ramoso/H Mai	John Powell
DETAILS	C Morgan/C Lente	John Powell
QUANTITIES	R Ramoso/H Mai	Janice Reguyal

PREPARED FOR THE STATE OF CALIFORNIA DEPARTMENT OF TRANSPORTATION

Robert E. Hawthorne
PROJECT ENGINEER

BRIDGE NO. 57-1215
POST MILE R15.7

CU 11269
EA 2T0951

DISREGARD PRINTS BEARING EARLIER REVISION DATES

REVISION DATES (PRELIMINARY STAGE ONLY): 01/22/10 03/08/10 05/18/10 05/24/10 05/27/10 07/01/10 08/27/10

SHEET 12 OF 33

DESIGN DETAIL SHEET (ENGLISH) (REV. 06-01-09)

ORIGINAL SCALE IN INCHES FOR REDUCED PLANS 0 1 2 3

FILE => 57-1215-k-ts01.dgn

USERNAME => s613571 DATE PLOTTED => 27-OCT-2011 TIME PLOTTED => 13:28

DIST	COUNTY	ROUTE	POST MILES TOTAL PROJECT	SHEET No	TOTAL SHEETS
11	SD	15	M15.0/M16.4	525	610

REGISTERED CIVIL ENGINEER 10-15-10 DATE

10-24-11
PLANS APPROVAL DATE

REGISTERED PROFESSIONAL ENGINEER ROBERT E. HAWTHORNE No. 40075 Exp. 03/31/12 CIVIL STATE OF CALIFORNIA

The State of California or its officers or agents shall not be responsible for the accuracy or completeness of scanned copies of this plan sheet.

SANDAG
401 B STREET, SUITE 800
SAN DIEGO, CA 92101

AECOM
7807 CONVOY COURT, SUITE 200
SAN DIEGO, CA 92111

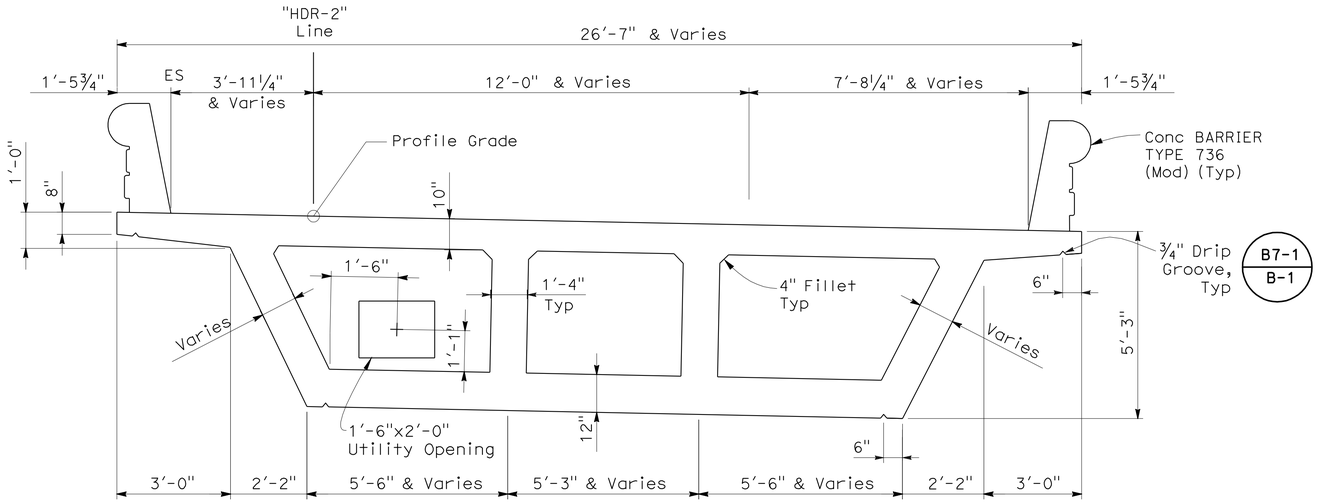

TYPICAL SECTION (CANTILEVER SPAN 3)

1/2"=1'-0"

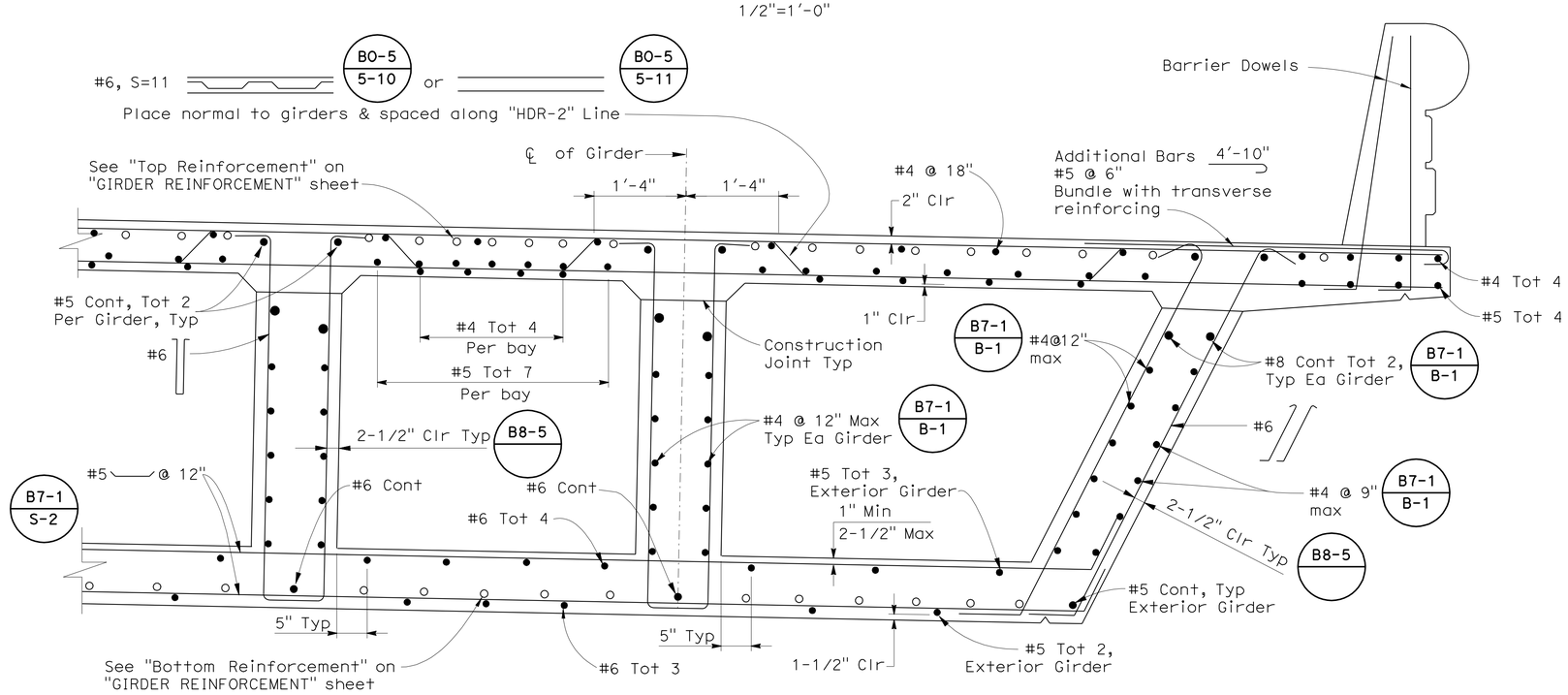

Notes:
1. Dimensions shown are normal to girder.

PART TYPICAL SECTION (CANTILEVER SPAN 3)

1"=1'-0"

B0-5 B7-1 B8-5

HILLERY DIRECT ACCESS RAMPS
NORTHBOUND OFF-RAMP
TYPICAL SECTION No. 2

DESIGN OVERSIGHT Norbert Gee
10-25-10
SIGN OFF DATE

	BY	CHECKED
DESIGN	R Ramoso/H Mai	John Powell
DETAILS	C Morgan/C Lente	John Powell
QUANTITIES	R Ramoso/H Mai	Janice Reguyal

PREPARED FOR THE STATE OF CALIFORNIA DEPARTMENT OF TRANSPORTATION

Robert E. Hawthorne
PROJECT ENGINEER

BRIDGE NO. 57-1215
POST MILE R15.7

CU 11269
EA 2T0951

DESIGN DETAIL SHEET (ENGLISH) (REV. 06-01-09)

ORIGINAL SCALE IN INCHES FOR REDUCED PLANS 0 1 2 3

DISREGARD PRINTS BEARING EARLIER REVISION DATES

REVISION DATES (PRELIMINARY STAGE ONLY) 01/22/10 03/08/10 05/18/10 05/24/10 05/27/10 07/01/10 08/27/10

SHEET 13 OF 33

FILE => 57-1215-k-ts02.dgn

USERNAME => s121614 DATE PLOTTED => 31-OCT-2011 TIME PLOTTED => 06:28

DIST	COUNTY	ROUTE	POST MILES TOTAL PROJECT	SHEET No	TOTAL SHEETS
11	SD	15	M15.0/M16.4	526	610

REGISTERED CIVIL ENGINEER — DATE 10-15-10

10-24-11
PLANS APPROVAL DATE

The State of California or its officers or agents shall not be responsible for the accuracy or completeness of scanned copies of this plan sheet.

REGISTERED PROFESSIONAL ENGINEER — ROBERT E. HAWTHORNE — No. 40075 — Exp. 03/31/12 — CIVIL — STATE OF CALIFORNIA

SANDAG
401 B STREET, SUITE 800
SAN DIEGO, CA 92101

AECOM
7807 CONVOY COURT, SUITE 200
SAN DIEGO, CA 92111

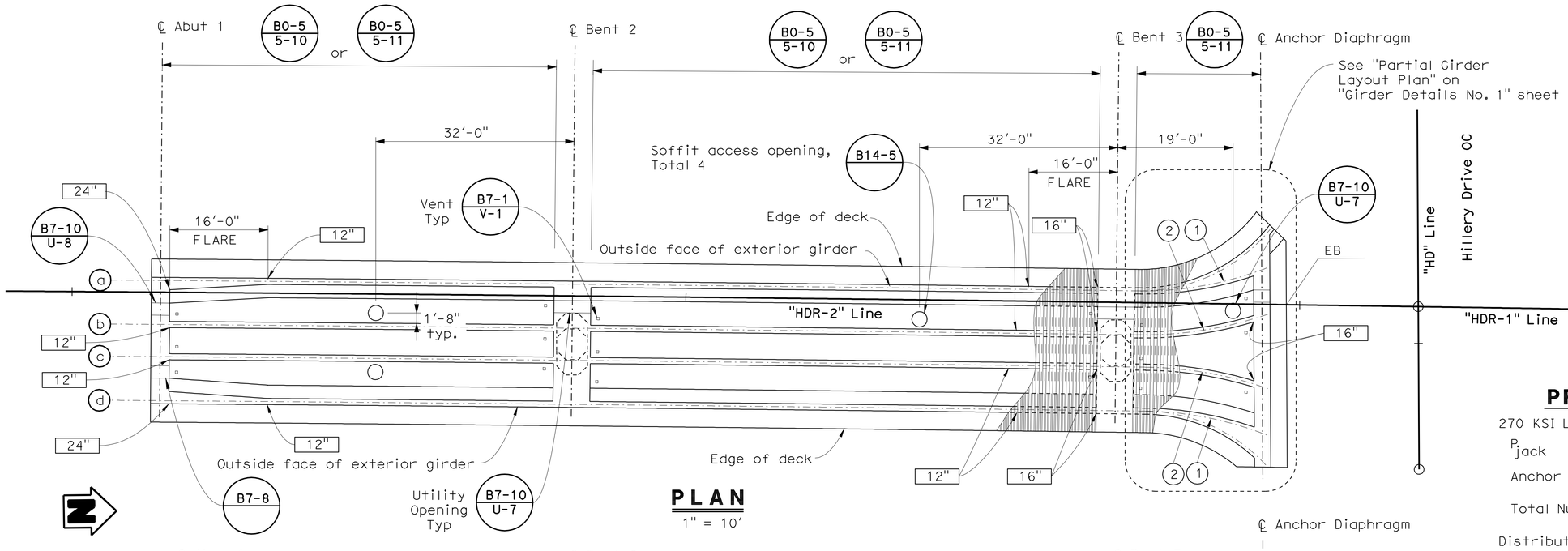

PLAN

1" = 10'

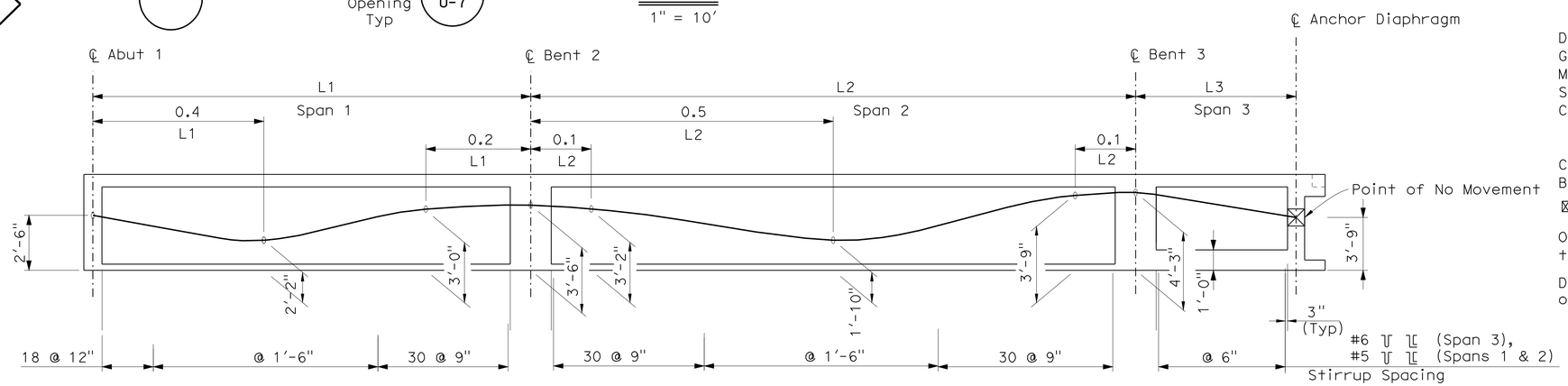

LONGITUDINAL SECTION

No Scale

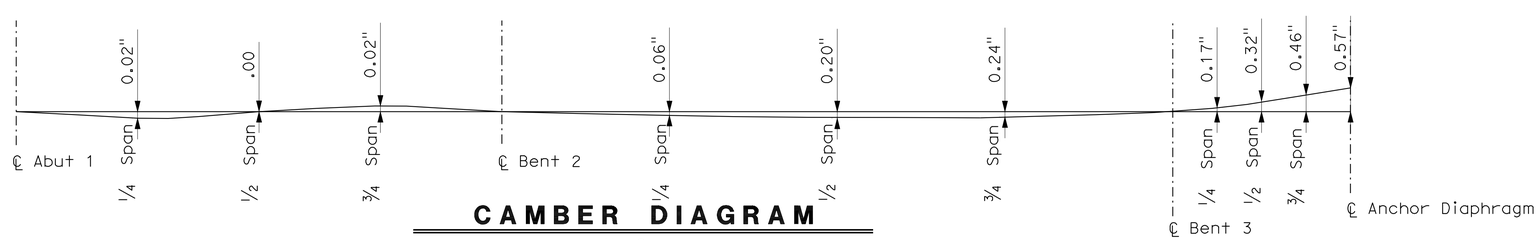

CAMBER DIAGRAM

No Scale

PRESTRESSING NOTES

270 KSI Low Relaxation Strand:

P_{jack} = 3,700 kips

Anchor Set = 3/8 in

Total Number of Girders = 4

Distribution of Prestress Force (Pjack) Between Girders Shall not Exceed the Ratio of 3:2. Maximum Final Force Variation Between Girders Shall Not Exceed 725 kips.

Concrete: f'_c = 4.0 ksi @ 28 Days

f'_{ci} = 3.6 ksi @ Time of Stressing

Contractor Shall Submit Elongation Calculations Based on Initial Stress at

⊠ = 0.889 Times Jacking Stress.

One End Stressing Shall be Performed From the Long-Span End Only.

Design based on μ = 0.15 (Coefficient of Friction) and k = 0.00020/ft (Wobble)

Notes:

Indicates Stem Width in Inches

(1) R=55.75' (℄ Girder)

(2) R=62.68' (℄ Girder)

DESIGN OVERSIGHT — Norbert Gee
10-25-10
SIGN OFF DATE

	BY	CHECKED
DESIGN	R Ramoso/H Mai	John Powell
DETAILS	C Morgan/C Lente	John Powell
QUANTITIES	R Ramoso/H Mai	Janice Reguyal

PREPARED FOR THE STATE OF CALIFORNIA DEPARTMENT OF TRANSPORTATION

Robert E. Hawthorne
PROJECT ENGINEER

BRIDGE NO. 57-1215
POST MILE R15.7

HILLERY DIRECT ACCESS RAMPS
NORTHBOUND OFF-RAMP
GIRDER LAYOUT

DESIGN DETAIL SHEET (ENGLISH) (REV. 06-01-09)

ORIGINAL SCALE IN INCHES FOR REDUCED PLANS 0 1 2 3

CU 11269
EA 2T0951

DISREGARD PRINTS BEARING EARLIER REVISION DATES

REVISION DATES (PRELIMINARY STAGE ONLY): 01/22/10 03/08/10 05/18/10 05/27/10 07/01/10 08/27/10

SHEET 14 OF 33

FILE => 57-1215-1-g_1o01.dgn

USERNAME => s119571 DATE PLOTTED => 27-OCT-2011 TIME PLOTTED => 13:28

DIST	COUNTY	ROUTE	POST MILES TOTAL PROJECT	SHEET No	TOTAL SHEETS
11	SD	15	M15.0/M16.4	527	610

REGISTERED CIVIL ENGINEER — DATE 2-17-11

10-24-11
PLANS APPROVAL DATE

REGISTERED PROFESSIONAL ENGINEER — ROBERT E. HAWTHORNE — No. 40075 — Exp. 03/31/12 — CIVIL — STATE OF CALIFORNIA

The State of California or its officers or agents shall not be responsible for the accuracy or completeness of scanned copies of this plan sheet.

SANDAG
401 B STREET, SUITE 800
SAN DIEGO, CA 92101

AECOM
7807 CONVOY COURT, SUITE 200
SAN DIEGO, CA 92111

Notes:

1. R = 55.75′ (℄ Girder)
2. R = 62.68′ (℄ Girder)
3. R = 27.02′ (℄ Ext. Girder Const Line)

Notes:

For Bottom Section A-A, see "GIRDER DETAILS No. 2" sheet.

For Top Section B-B, see "GIRDER DETAILS No. 3" sheet.

For Sections E-E, F-F, G-G and Detail H see "GIRDER DETAILS No. 4" sheet.

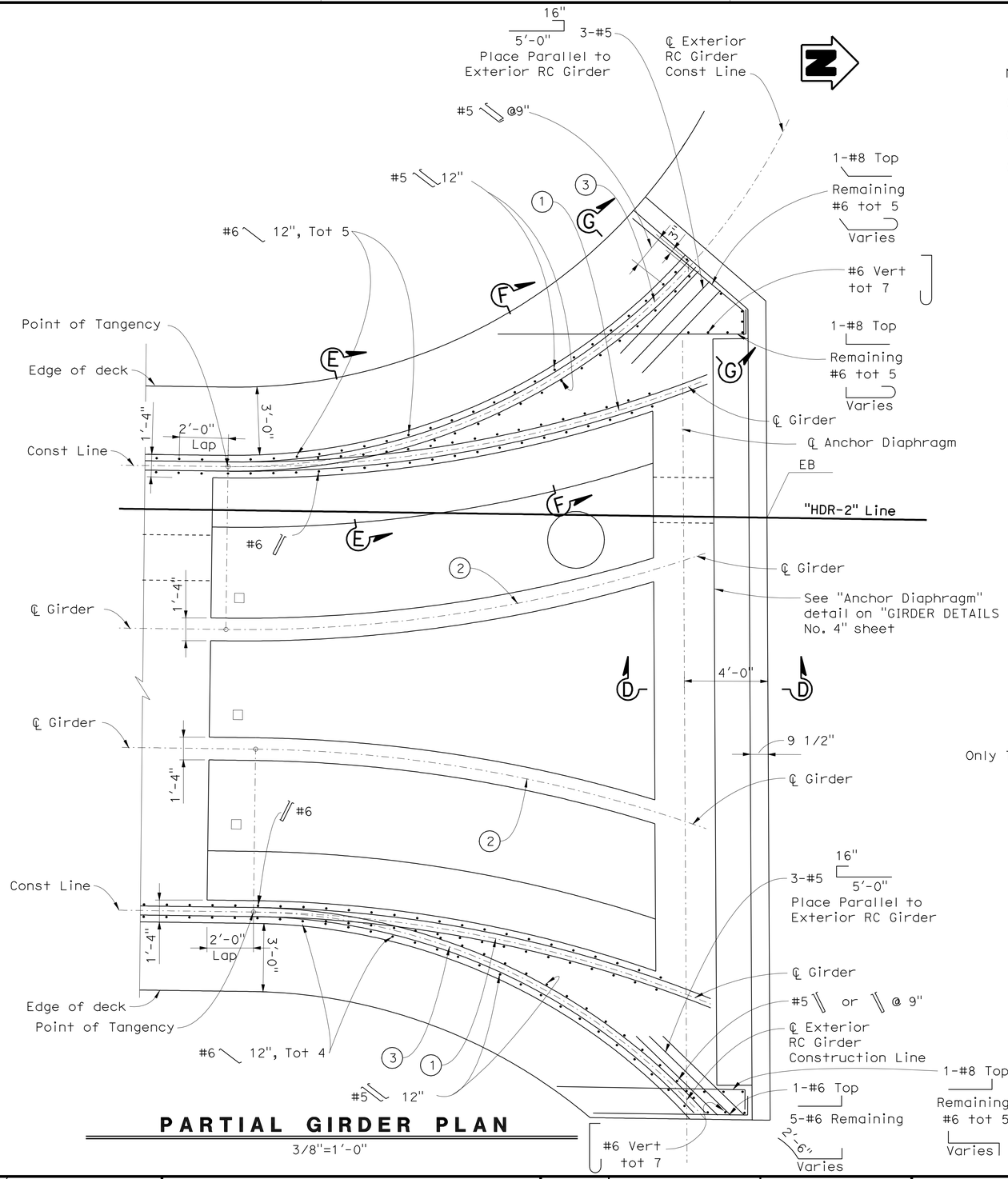

PARTIAL GIRDER PLAN

3/8"=1′-0"

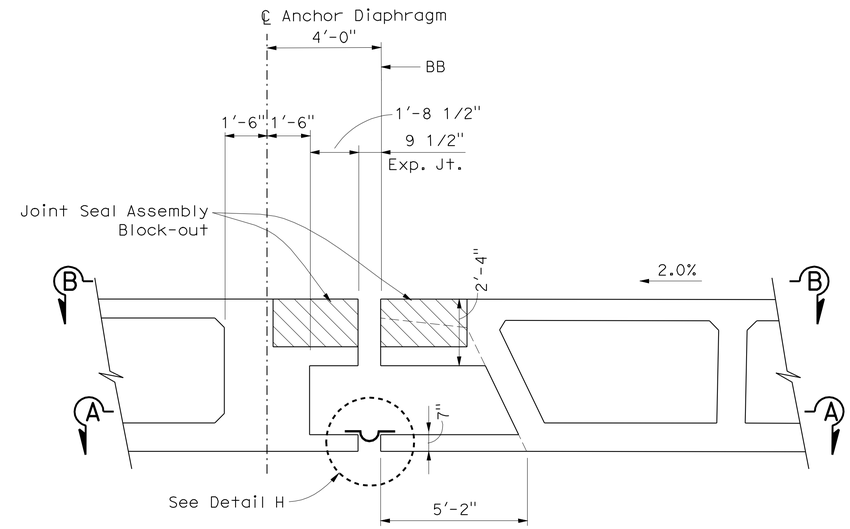

SECTION D-D

3/8"=1′-0"

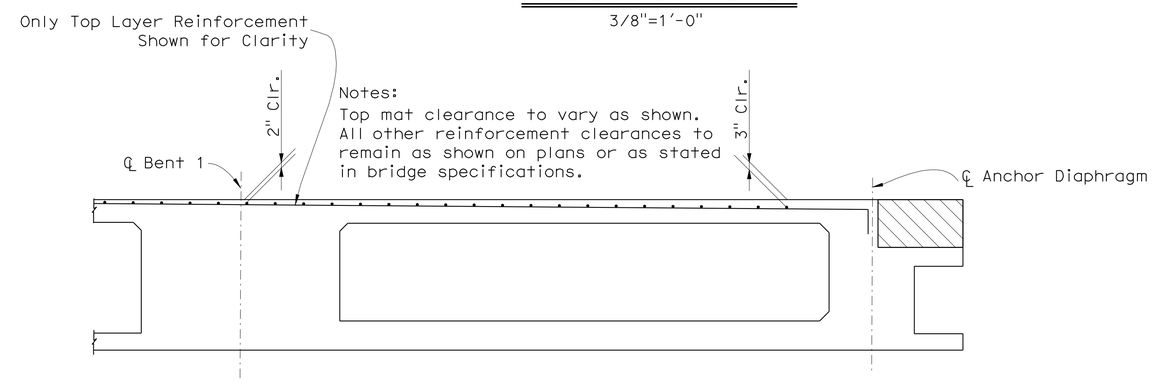

Notes:
Top mat clearance to vary as shown.
All other reinforcement clearances to remain as shown on plans or as stated in bridge specifications.

PART DECK REINFORCEMENT DETAIL

3/8"=1′-0"

DESIGN OVERSIGHT — Norbert Gee
2-22-11
SIGN OFF DATE

	BY	CHECKED
DESIGN	R Ramoso/H Mai	John Powell
DETAILS	C Morgan/C Lente	John Powell
QUANTITIES	R Ramoso/H Mai	Janice Reguyal

PREPARED FOR THE STATE OF CALIFORNIA DEPARTMENT OF TRANSPORTATION

Robert E. Hawthorne
PROJECT ENGINEER

BRIDGE NO. 57-1215
POST MILE R15.7

HILLERY DIRECT ACCESS RAMPS
NORTHBOUND OFF-RAMP
GIRDER DETAILS No. 1

DESIGN DETAIL SHEET (ENGLISH) (REV. 06-01-09)

ORIGINAL SCALE IN INCHES FOR REDUCED PLANS 0 1 2 3

CU 11269
EA 2T0951

DISREGARD PRINTS BEARING EARLIER REVISION DATES

REVISION DATES (PRELIMINARY STAGE ONLY): 01/22/10 03/08/10 05/18/10 05/27/10 07/01/10 08/27/10 10/06/10 2-17-11

SHEET 15 OF 33

FILE => 57-1215-1-gdt01.dgn

USERNAME => s121614 DATE PLOTTED => 31-OCT-2011 TIME PLOTTED => 06:28

DIST	COUNTY	ROUTE	POST MILES TOTAL PROJECT	SHEET No	TOTAL SHEETS
11	SD	15	M15.0/M16.4	528	610

REGISTERED CIVIL ENGINEER — DATE 10-15-10

10-24-11
PLANS APPROVAL DATE

REGISTERED PROFESSIONAL ENGINEER — ROBERT E. HAWTHORNE — No. 40075 — Exp. 03/31/12 — CIVIL — STATE OF CALIFORNIA

The State of California or its officers or agents shall not be responsible for the accuracy or completeness of scanned copies of this plan sheet.

SANDAG
401 B STREET, SUITE 800
SAN DIEGO, CA 92101

AECOM
7807 CONVOY COURT, SUITE 200
SAN DIEGO, CA 92111

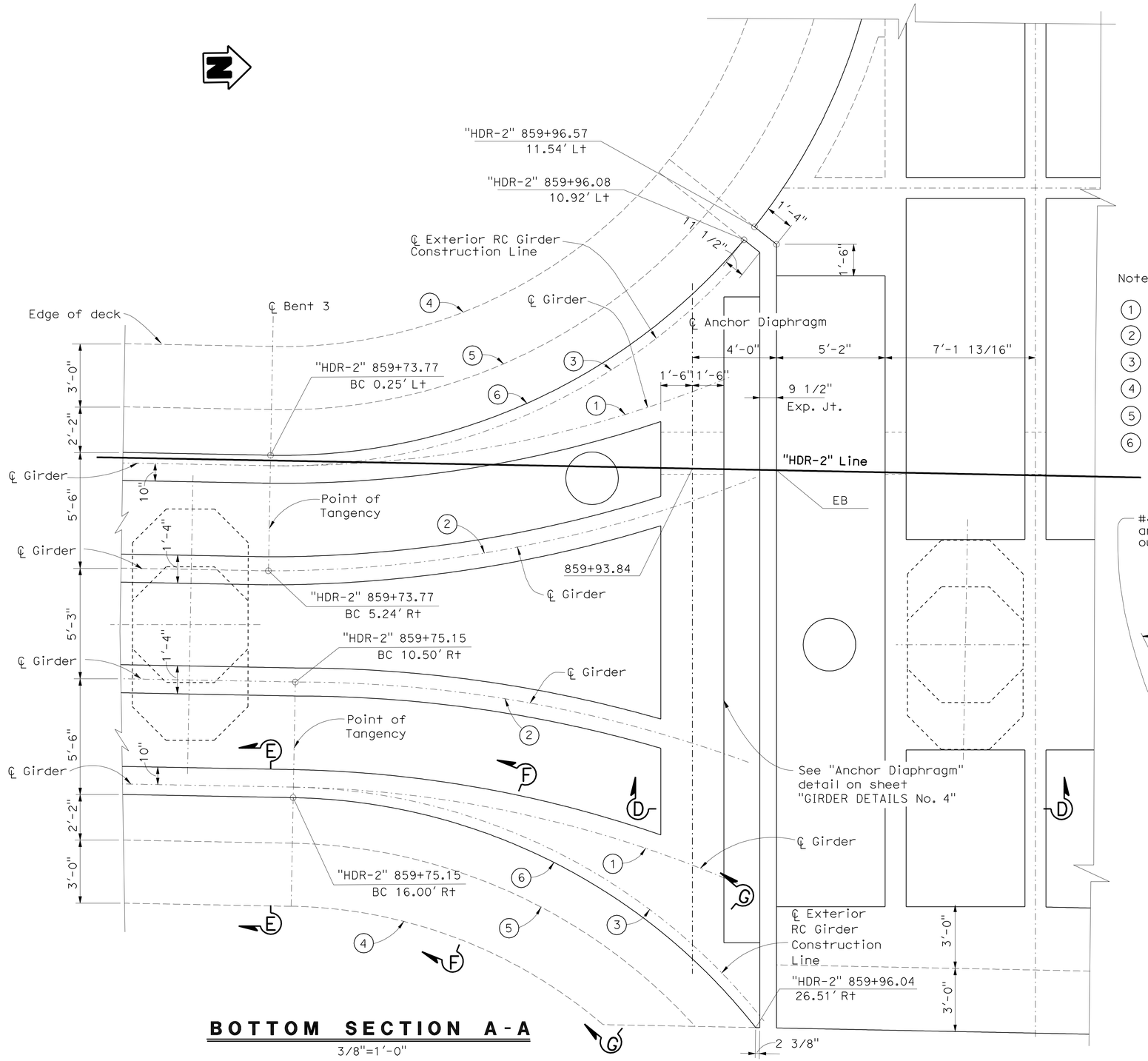

BOTTOM SECTION A-A

3/8"=1'-0"

Notes:

1. R = 55.75' (℄ Girder)
2. R = 62.68' (℄ Girder)
3. R = 29.18' (℄ Exterior RC Girder Const Line)
4. R = 23.52' (Edge of deck above)
5. R = 26.52' (Edge of Soffit Above)
6. R = 28.68' (Outside Edge bottom Girder)

Notes:

For Sections E-E, F-F & G-G, see "GIRDER DETAILS No. 4" sheet.

For Section D-D see "GIRDER DETAILS No. 1" sheet.

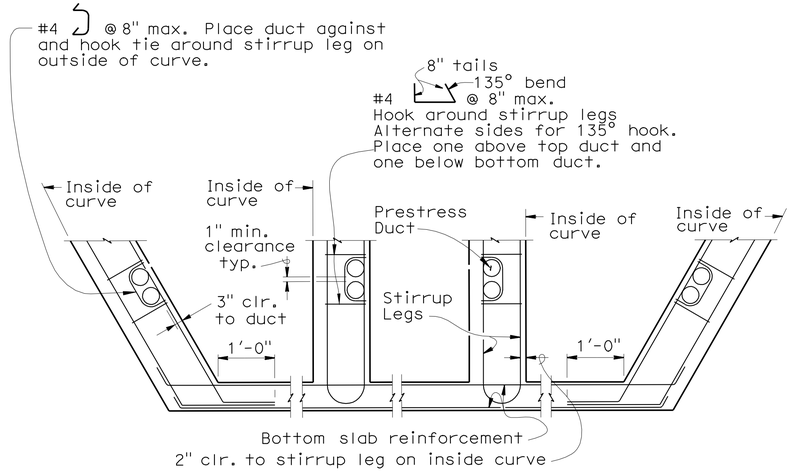

Note: Details shown are for a curve with the section taken looking ahead on station. These details supersede duct patterns shown in Standard Plan B8-5.

PART GIRDER SECTION

NO SCALE

HILLERY DIRECT ACCESS RAMPS
NORTHBOUND OFF-RAMP
GIRDER DETAILS No. 2

DESIGN OVERSIGHT — Norbert Gee
10-25-10
SIGN OFF DATE

	BY	CHECKED
DESIGN	R Ramoso/H Mai	R Hawthorne
DETAILS	C Morgan/C Lente	R Hawthorne
QUANTITIES	R Ramoso/H Mai	R Hawthorne

PREPARED FOR THE STATE OF CALIFORNIA DEPARTMENT OF TRANSPORTATION

Robert E. Hawthorne
PROJECT ENGINEER

BRIDGE NO. 57-1215
POST MILE R15.7

DISREGARD PRINTS BEARING EARLIER REVISION DATES

REVISION DATES (PRELIMINARY STAGE ONLY): 01/22/10 03/08/10 05/18/10 05/27/10 07/01/10 08/27/10

SHEET 16 OF 33

DESIGN DETAIL SHEET (ENGLISH) (REV. 06-01-09)

ORIGINAL SCALE IN INCHES FOR REDUCED PLANS 0 1 2 3

CU 11269
EA 2T0951

FILE => 57-1215-1-gdt02.dgn

USERNAME => s12161 4 DATE PLOTTED => 31-OCT-2011 TIME PLOTTED => 06:28

DIST	COUNTY	ROUTE	POST MILES TOTAL PROJECT	SHEET No	TOTAL SHEETS
11	SD	15	M15.0/M16.4	529	610

REGISTERED CIVIL ENGINEER — DATE 10-15-10

10-24-11
PLANS APPROVAL DATE

REGISTERED PROFESSIONAL ENGINEER — ROBERT E. HAWTHORNE — No. 40075 — Exp. 03/31/12 — CIVIL — STATE OF CALIFORNIA

The State of California or its officers or agents shall not be responsible for the accuracy or completeness of scanned copies of this plan sheet.

SANDAG
401 B STREET, SUITE 800
SAN DIEGO, CA 92101

AECOM
7807 CONVOY COURT, SUITE 200
SAN DIEGO, CA 92111

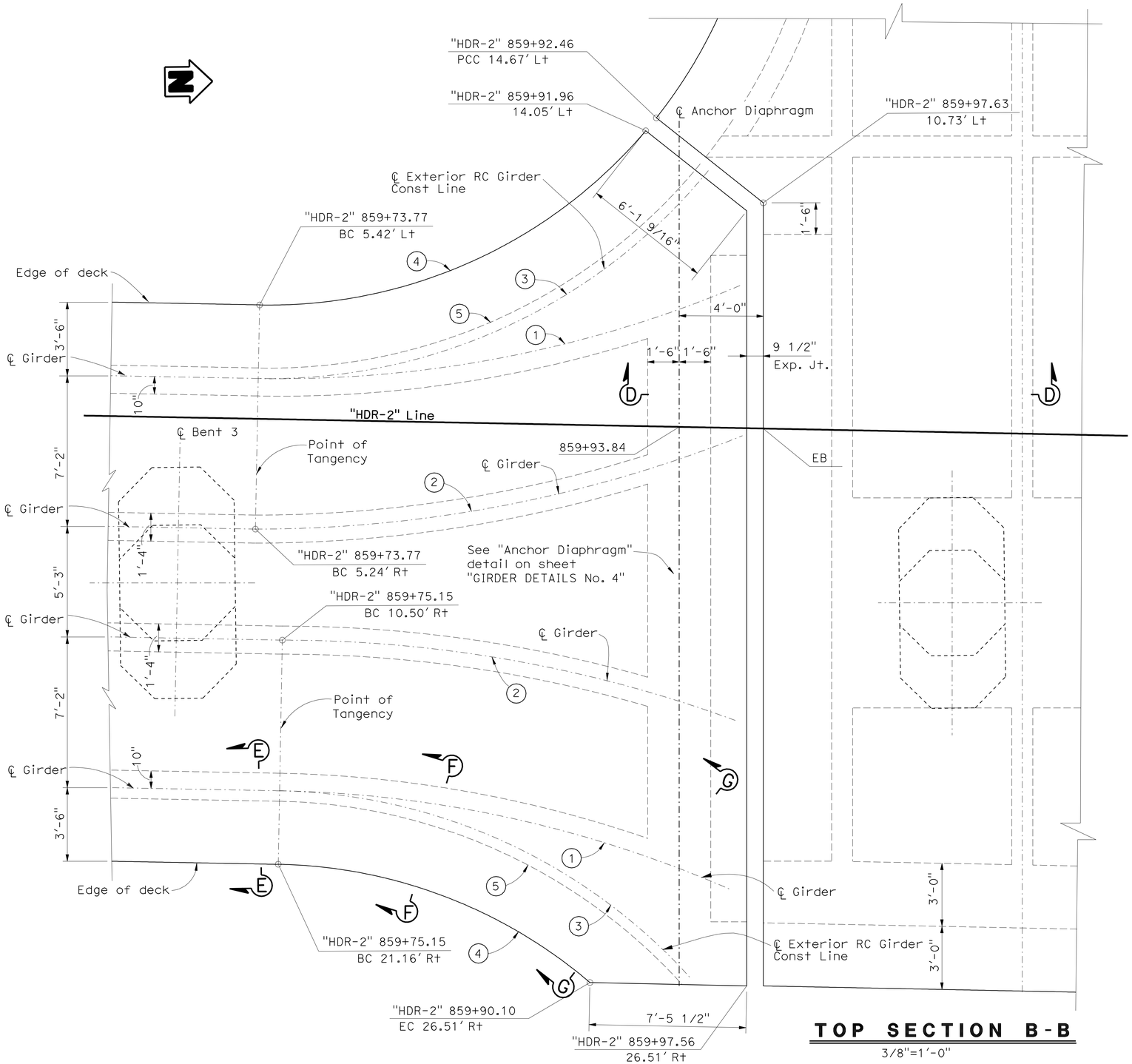

TOP SECTION B-B

3/8"=1'-0"

Notes:

1. R = 55.75' (℄ Girder)
2. R = 62.68' (℄ Girder)
3. R = 27.02' (℄ Exterior RC Girder Const Line)
4. R = 23.52' (Edge of deck)
5. R = 26.52' (Edge of Soffit)

Notes:

For Sections E-E, F-F & G-G, see "GIRDER DETAILS No. 4" sheet.

For Section D-D see "GIRDER DETAILS No. 1" sheet.

HILLERY DIRECT ACCESS RAMPS
NORTHBOUND OFF-RAMP
GIRDER DETAILS No. 3

DESIGN OVERSIGHT — Norbert Gee
10-25-10
SIGN OFF DATE

	BY	CHECKED
DESIGN	R Ramoso/H Mai	R Hawthorne
DETAILS	C Morgan/C Lente	R Hawthorne
QUANTITIES	R Ramoso/H Mai	R Hawthorne

PREPARED FOR THE STATE OF CALIFORNIA DEPARTMENT OF TRANSPORTATION

Robert E. Hawthorne
PROJECT ENGINEER

BRIDGE NO. 57-1215
POST MILE R15.7

CU 11269
EA 2T0951

DESIGN DETAIL SHEET (ENGLISH) (REV. 06-01-09)

ORIGINAL SCALE IN INCHES FOR REDUCED PLANS 0 1 2 3

DISREGARD PRINTS BEARING EARLIER REVISION DATES

REVISION DATES (PRELIMINARY STAGE ONLY): 01/22/10 03/08/10 05/27/10 07/01/10 08/27/10

SHEET 17 OF 33

FILE => 57-1215-1-gdt03.dgn

USERNAME => s121614 DATE PLOTTED => 31-OCT-2011 TIME PLOTTED => 06:28

DIST	COUNTY	ROUTE	POST MILES TOTAL PROJECT	SHEET No	TOTAL SHEETS
11	SD	15	M15.0/M16.4	530	610

REGISTERED CIVIL ENGINEER 2-17-11 DATE

10-24-11
PLANS APPROVAL DATE

REGISTERED PROFESSIONAL ENGINEER ROBERT E. HAWTHORNE No. 40075 Exp. 03/31/12 CIVIL STATE OF CALIFORNIA

The State of California or its officers or agents shall not be responsible for the accuracy or completeness of scanned copies of this plan sheet.

SANDAG
401 B STREET, SUITE 800
SAN DIEGO, CA 92101

AECOM
7807 CONVOY COURT, SUITE 200
SAN DIEGO, CA 92111

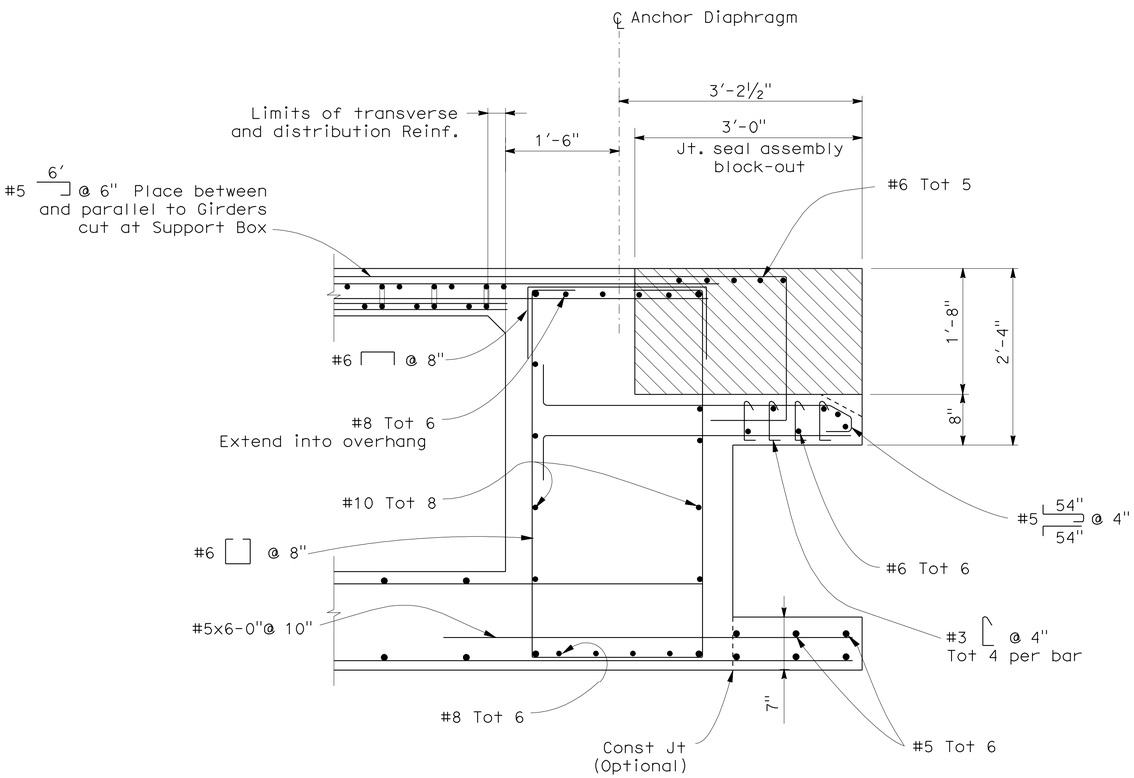

ANCHOR DIAPHRAGM

1"=1'-0"

B8-5

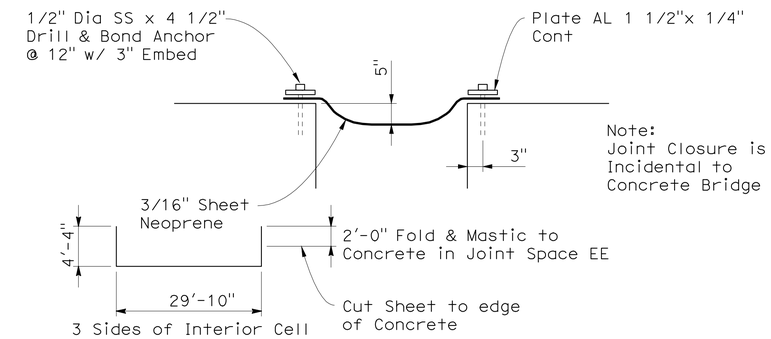

Note:
Joint Closure is Incidental to Concrete Bridge

JOINT CLOSURE DETAIL H

No Scale

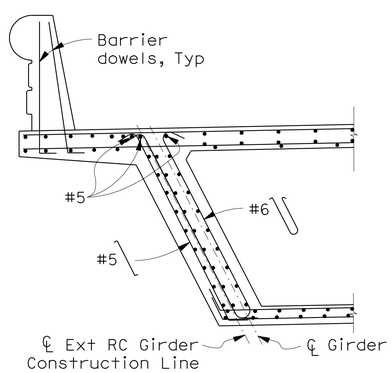

SECTION E-E

½"=1'-0"

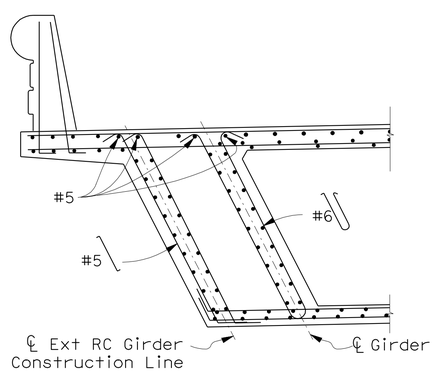

SECTION F-F

½"=1'-0"

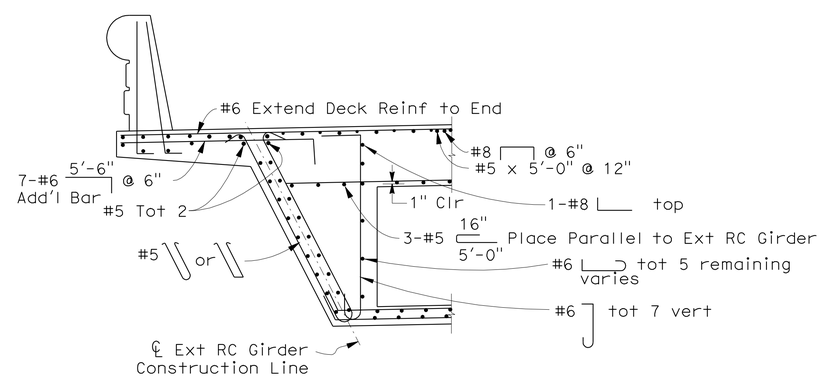

SECTION G-G

½"=1'-0"

HILLERY DIRECT ACCESS RAMPS
NORTHBOUND OFF-RAMP
GIRDER DETAILS No. 4

DESIGN OVERSIGHT Norbert Gee
2-22-11
SIGN OFF DATE

	BY	CHECKED
DESIGN	R Ramoso/H Mai	John Powell
DETAILS	C Morgan/C Lente	John Powell
QUANTITIES	R Ramoso/H Mai	Janice Reguyal

PREPARED FOR THE STATE OF CALIFORNIA DEPARTMENT OF TRANSPORTATION

Robert E. Hawthorne
PROJECT ENGINEER

BRIDGE NO. 57-1215
POST MILE R15.7

CU 11269
EA 2T0951

DISREGARD PRINTS BEARING EARLIER REVISION DATES

REVISION DATES (PRELIMINARY STAGE ONLY): 01/22/10 03/08/10 05/18/10 05/27/10 07/01/10 08/27/10 10/06/10 12-14-10 2-17-11

SHEET 18 OF 33

DESIGN DETAIL SHEET (ENGLISH) (REV. 06-01-09)

ORIGINAL SCALE IN INCHES FOR REDUCED PLANS 0 1 2 3

FILE => 57-1215-1-gdt04.dgn

USERNAME => s119571 DATE PLOTTED => 27-OCT-2011 TIME PLOTTED => 13:23

DIST	COUNTY	ROUTE	POST MILES TOTAL PROJECT	SHEET No	TOTAL SHEETS
11	SD	15	M15.0/M16.4	531	610

Robert E Hawthorne 10-15-10
REGISTERED CIVIL ENGINEER DATE

10-24-11
PLANS APPROVAL DATE

REGISTERED PROFESSIONAL ENGINEER ROBERT E. HAWTHORNE No. 40075 Exp. 03/31/12 CIVIL STATE OF CALIFORNIA

The State of California or its officers or agents shall not be responsible for the accuracy or completeness of scanned copies of this plan sheet.

SANDAG
401 B STREET, SUITE 800
SAN DIEGO, CA 92101

AECOM
7807 CONVOY COURT, SUITE 200
SAN DIEGO, CA 92111

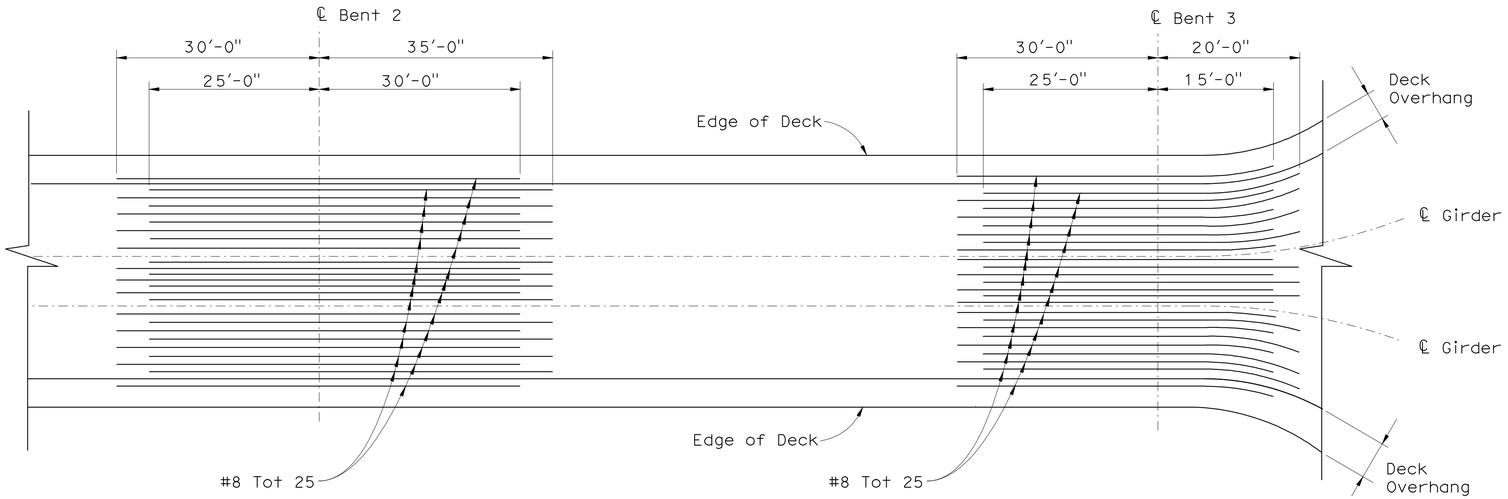

TOP REINFORCEMENT

NTS

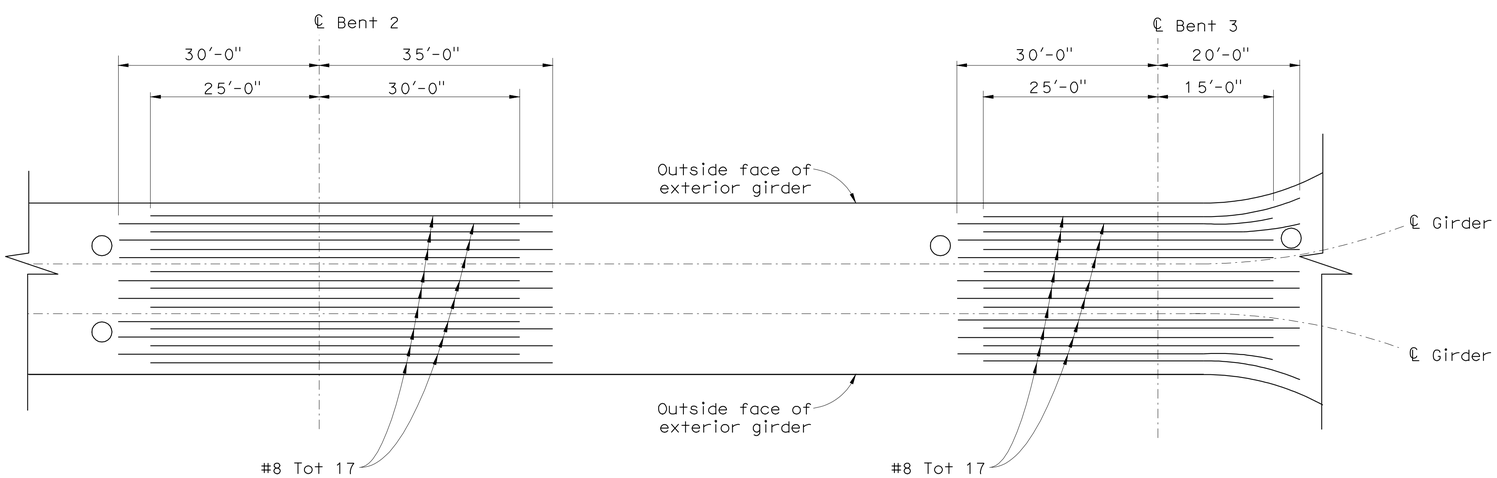

Note:
No splices allowed in #8 Top
& Bottom girder reinforcement

BOTTOM REINFORCEMENT

NTS

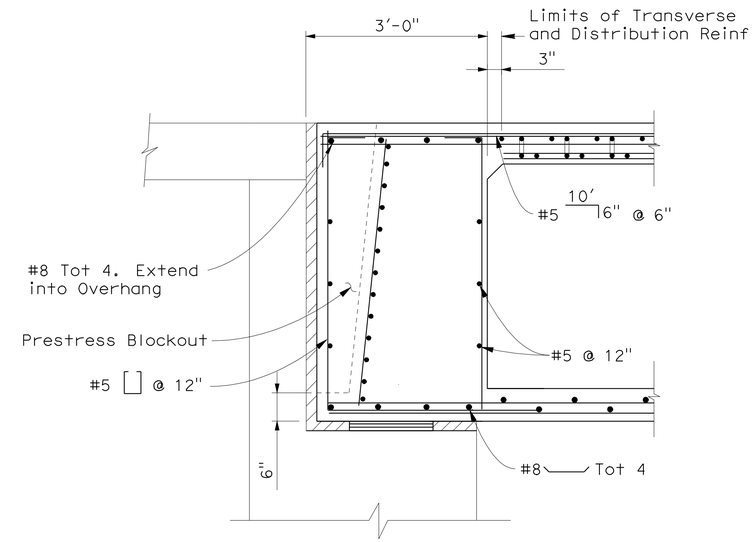

END DIAPHRAGM

3/4"=1'-0"

B8-5

Note:
No splices allowed in #8 Top
& Bottom girder reinforcement

Bela Fee
DESIGN OVERSIGHT Norbert Gee

10-25-10
SIGN OFF DATE

DESIGN	BY R Ramoso/H Mai	CHECKED John Powell	
DETAILS	BY C Morgan/C Lente	CHECKED John Powell	
QUANTITIES	BY R Ramoso/H Mai	CHECKED Janice Reguyal	

PREPARED FOR THE STATE OF CALIFORNIA DEPARTMENT OF TRANSPORTATION

Robert E. Hawthorne
PROJECT ENGINEER

BRIDGE NO. 57-1215
POST MILE R15.7

HILLERY DIRECT ACCESS RAMPS
NORTHBOUND OFF-RAMP
GIRDER REINFORCEMENT

DESIGN DETAIL SHEET (ENGLISH) (REV. 06-01-09)

ORIGINAL SCALE IN INCHES FOR REDUCED PLANS 0 1 2 3

CU 11269
EA 2T0951

DISREGARD PRINTS BEARING EARLIER REVISION DATES

REVISION DATES (PRELIMINARY STAGE ONLY) 01/22/10 03/08/10 05/18/10 05/27/10 07/01/10 08/27/10

SHEET 19 OF 33

FILE => 57-1215-o-gir_rf01.dgn

USERNAME => s128843 DATE PLOTTED => 27-OCT-2011 TIME PLOTTED => 10:23

DIST	COUNTY	ROUTE	POST MILES TOTAL PROJECT	SHEET No	TOTAL SHEETS
11	SD	15	M15.0/M16.4	532	610

REGISTERED CIVIL ENGINEER 10-15-10 DATE

10-24-11
PLANS APPROVAL DATE

REGISTERED PROFESSIONAL ENGINEER ROBERT E. HAWTHORNE No. 40075 Exp. 03/31/12 CIVIL STATE OF CALIFORNIA

The State of California or its officers or agents shall not be responsible for the accuracy or completeness of scanned copies of this plan sheet.

SANDAG
401 B STREET, SUITE 800
SAN DIEGO, CA 92101

AECOM
7807 CONVOY COURT, SUITE 200
SAN DIEGO, CA 92111

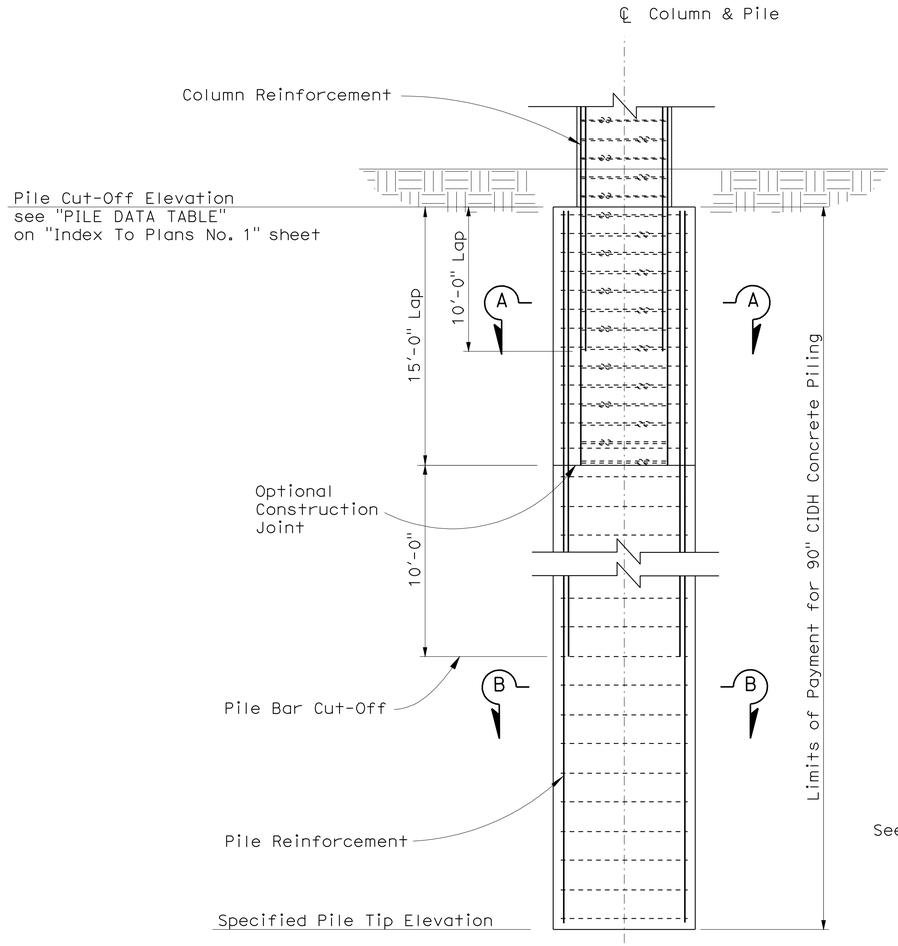

90" DIA CIDH PILE

1/4"=1'-0"

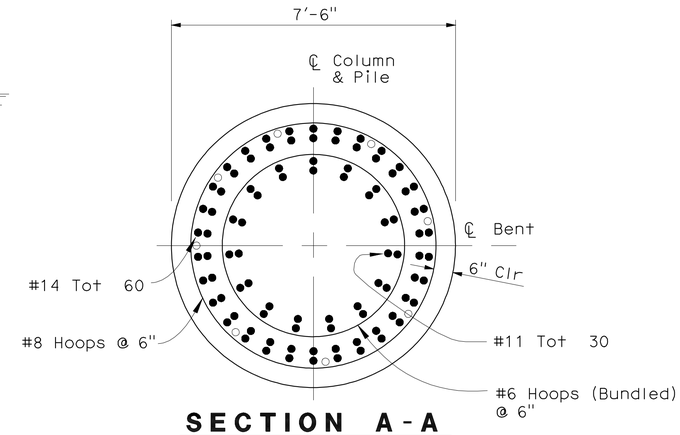

SECTION A-A

1/2"=1'-0"

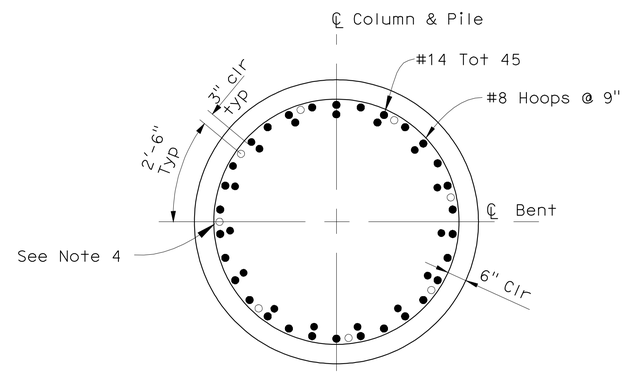

SECTION B-B

1/2"=1'-0"

Notes:
1. For Column Reinf and details, see "Column Details" sheet.
2. All hoops are "ultimate" butt spliced continuous.
3. Not all CIDH Reinforcement shown.
4. Inspection Pipes to be placed against outer Hoop, tot 8 pipes each pile.

HILLERY DIRECT ACCESS RAMPS
NORTHBOUND OFF-RAMP
PILE DETAILS

DESIGN OVERSIGHT Norbert Gee
10-25-10
SIGN OFF DATE

	BY	CHECKED
DESIGN	R Ramoso/H Mai	R Hawthorne
DETAILS	C Morgan/C Lente	R Hawthorne
QUANTITIES	R Ramoso/H Mai	R Hawthorne

PREPARED FOR THE STATE OF CALIFORNIA DEPARTMENT OF TRANSPORTATION

Robert E. Hawthorne
PROJECT ENGINEER

BRIDGE NO. 57-1215
POST MILE R15.7

DESIGN DETAIL SHEET (ENGLISH) (REV. 06-01-09)

ORIGINAL SCALE IN INCHES FOR REDUCED PLANS 0 1 2 3

CU 11269
EA 2T0951

DISREGARD PRINTS BEARING EARLIER REVISION DATES

REVISION DATES (PRELIMINARY STAGE ONLY): 01/22/10 03/08/10 05/18/10 05/27/10 07/01/10 08/27/10 10/06/10

SHEET 20 OF 33

FILE => 57-1215-p-pdt01.dgn

USERNAME => s128843 DATE PLOTTED => 27-OCT-2011 TIME PLOTTED => 10:24

DIST	COUNTY	ROUTE	POST MILES TOTAL PROJECT	SHEET No	TOTAL SHEETS
11	SD	15	M15.0/M16.4	533	610

REGISTERED CIVIL ENGINEER — DATE: 2-17-11

PLANS APPROVAL DATE: 10-24-11

REGISTERED PROFESSIONAL ENGINEER — ROBERT E. HAWTHORNE — No. 40075 — Exp. 03/31/12 — CIVIL — STATE OF CALIFORNIA

The State of California or its officers or agents shall not be responsible for the accuracy or completeness of scanned copies of this plan sheet.

SANDAG
401 B STREET, SUITE 800
SAN DIEGO, CA 92101

AECOM
7807 CONVOY COURT, SUITE 200
SAN DIEGO, CA 92111

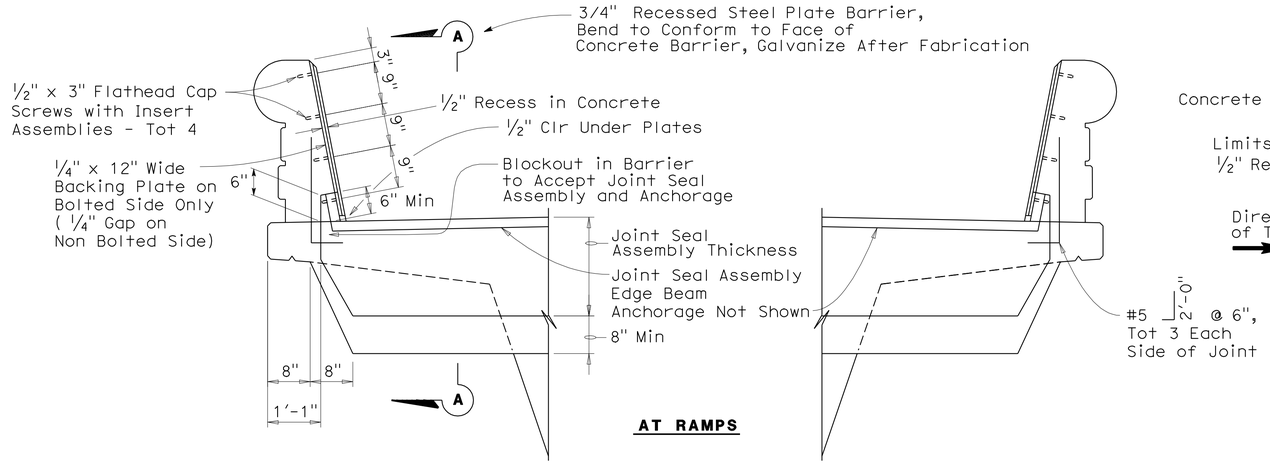

AT RAMPS

SEAL INSTALLATION

3/4" = 1'-0"

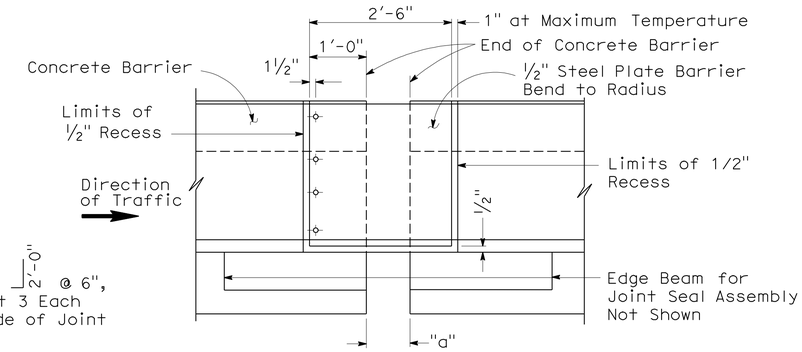

ELEVATION A-A

3/4" = 1'-0"

JOINT INFORMATION		"a" DIMENSIONS			
LOCATION	MOVEMENT RATING (M.R.)	SKEW	WINTER	SPRING & FALL	SUMMER
EB	9 1/2 *	1.21°	10.0"	9.5"	9.0"

* Movement Rating includes Seismic Movement
Joint shall consist of 4 Neoprene cell and beam modular Joint Seal Assemblies (Swiveling)

Note: For details not shown, see Bridge Plans

Note:
Wrack OC Support Box 3/4" away from Abutment. Field verify OC Structure Shrinkage.

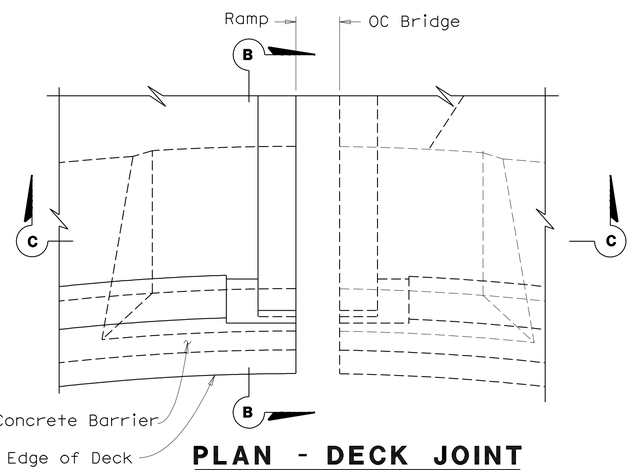

PLAN - DECK JOINT

3/4" = 1'-0"

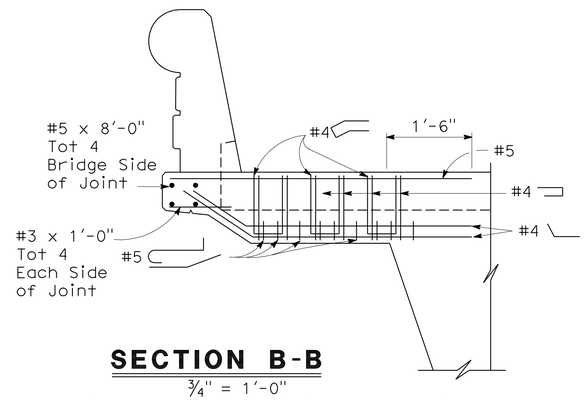

SECTION B-B

3/4" = 1'-0"

Reinf Shown is in Addition to Slab Reinf

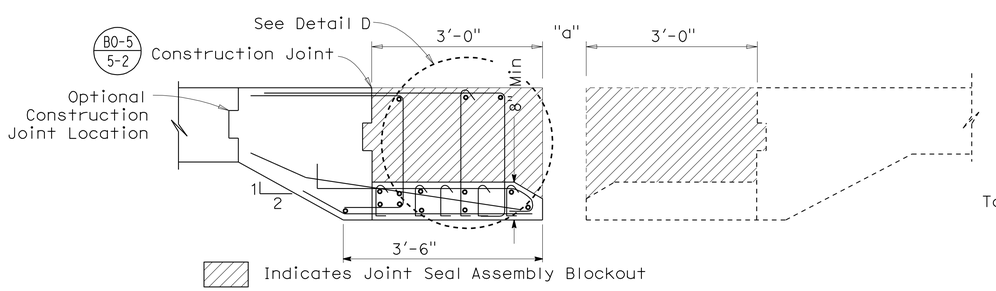

SECTION C-C

3/4" = 1'-0"

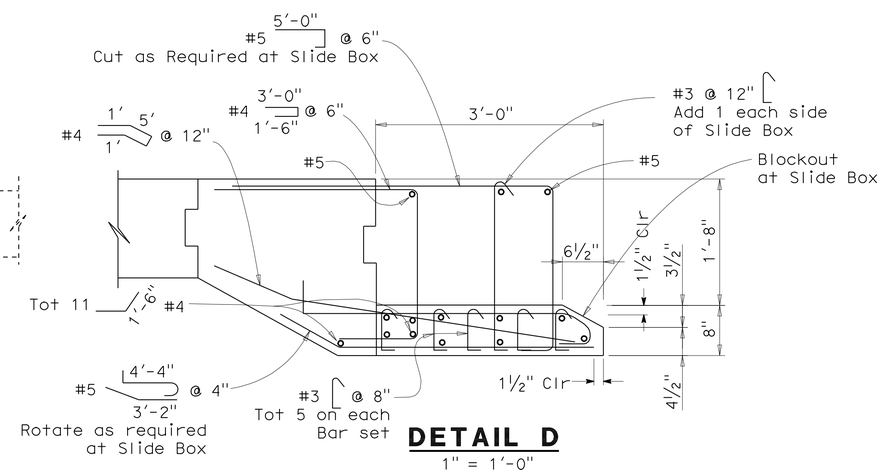

DETAIL D

1" = 1'-0"

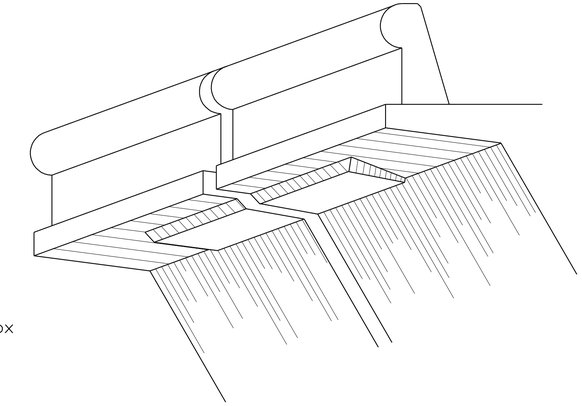

DECK OVERHANG

No Scale

HILLERY DIRECT ACCESS RAMPS

NORTHBOUND OFF-RAMP

JOINT SEAL ASSEMBLY MOVEMENT RATING GREATER THAN 4"

DESIGN OVERSIGHT: Norbert Gee — 2-22-11 — SIGN OFF DATE

	BY	CHECKED
DESIGN	R Ramoso/H Mai	John Powell
DETAILS	C Morgan/C Lente	John Powell
QUANTITIES	R Ramoso/H Mai	Janice Reguyal

PREPARED FOR THE STATE OF CALIFORNIA DEPARTMENT OF TRANSPORTATION

Robert E. Hawthorne — PROJECT ENGINEER

BRIDGE NO. 57-1215 — POST MILE R15.7

CU 11269
EA 2T0951

DISREGARD PRINTS BEARING EARLIER REVISION DATES

REVISION DATES (PRELIMINARY STAGE ONLY): 01/22/10 03/08/10 05/27/10 07/01/10 08/27/10 2-17-11

SHEET 21 OF 33

DESIGN DETAIL SHEET (ENGLISH) (REV. 06-01-09)

ORIGINAL SCALE IN INCHES FOR REDUCED PLANS 0 1 2 3

FILE => 57-1215-q-jntdt02.dgn

USERNAME => s128843 DATE PLOTTED => 27-OCT-2011 TIME PLOTTED => 10:24

DIST	COUNTY	ROUTE	POST MILES TOTAL PROJECT	SHEET No	TOTAL SHEETS
11	SD	15	M15.0/M16.4	534	610

REGISTERED CIVIL ENGINEER — DATE 10-15-10

10-24-11
PLANS APPROVAL DATE

REGISTERED PROFESSIONAL ENGINEER — ROBERT E. HAWTHORNE — No. 40075 — Exp. 03/31/12 — CIVIL — STATE OF CALIFORNIA

The State of California or its officers or agents shall not be responsible for the accuracy or completeness of scanned copies of this plan sheet.

SANDAG
401 B STREET, SUITE 800
SAN DIEGO, CA 92101

AECOM
7807 CONVOY COURT, SUITE 200
SAN DIEGO, CA 92111

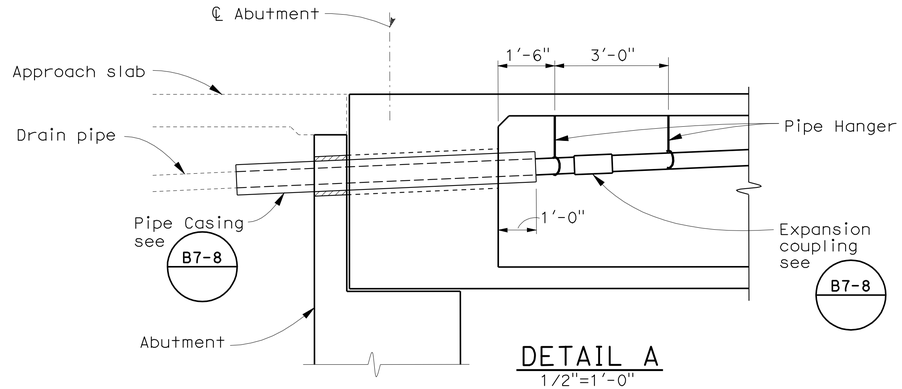

DETAIL A
1/2"=1'-0"

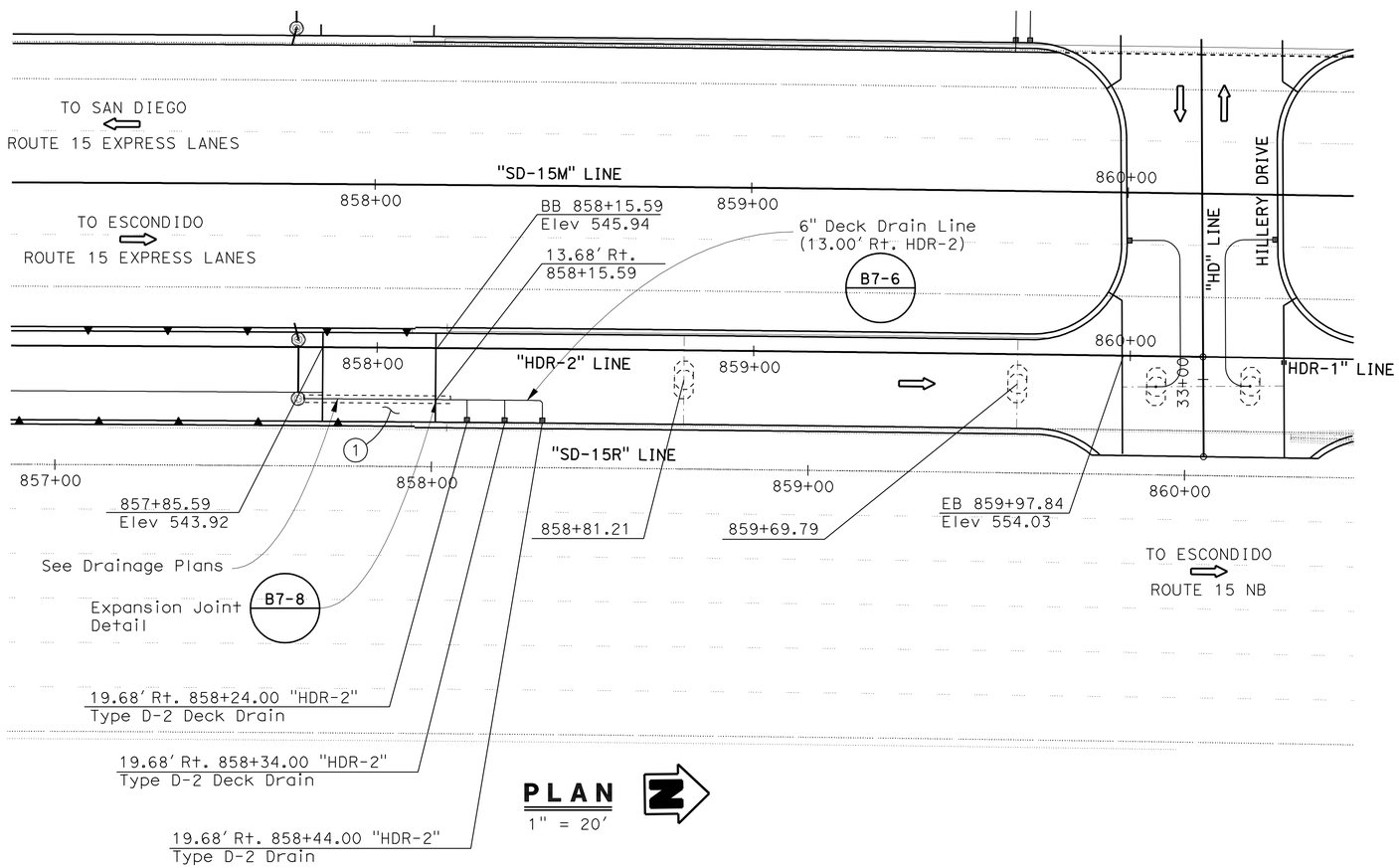

PLAN
1" = 20'

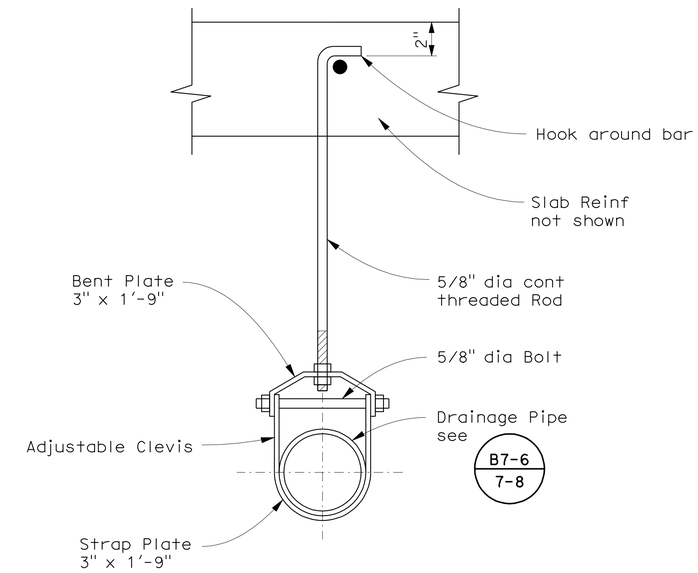

DRAINAGE PIPE SUPPORT
NTS

LEGEND:

- Indicates new Drainage Line

(1) - Approach Slab, see "General Plan"

HILLERY DIRECT ACCESS RAMPS
NORTHBOUND OFF-RAMP
DECK DRAINS

DESIGN OVERSIGHT — Norbert Gee
10-25-10
SIGN OFF DATE

	BY	CHECKED
DESIGN	R Ramoso/H Mai	R Hawthorne
DETAILS	C Morgan/C Lente	R Hawthorne
QUANTITIES	R Ramoso/H Mai	R Hawthorne

PREPARED FOR THE STATE OF CALIFORNIA DEPARTMENT OF TRANSPORTATION

Robert E. Hawthorne
PROJECT ENGINEER

BRIDGE NO. 57-1215
POST MILE R15.7

CU 11269
EA 2T0951

DISREGARD PRINTS BEARING EARLIER REVISION DATES

REVISION DATES (PRELIMINARY STAGE ONLY): 01/22/10 03/08/10 05/18/10 05/21/10 07/01/10 08/27/10

SHEET 22 OF 33

DESIGN DETAIL SHEET (ENGLISH) (REV. 06-01-09)

ORIGINAL SCALE IN INCHES FOR REDUCED PLANS 0 1 2 3

FILE => 57-1215-r-dd01.dgn

USERNAME => s128843 DATE PLOTTED => 27-OCT-2011 TIME PLOTTED => 10:24

DIST	COUNTY	ROUTE	POST MILES TOTAL PROJECT	SHEET No	TOTAL SHEETS
11	SD	15	M15.0/M16.4	535	610

Robert E Hawthorne 10-15-10
REGISTERED CIVIL ENGINEER DATE

10-24-11
PLANS APPROVAL DATE

REGISTERED PROFESSIONAL ENGINEER ROBERT E. HAWTHORNE No. 40075 Exp. 03/31/12 CIVIL STATE OF CALIFORNIA

The State of California or its officers or agents shall not be responsible for the accuracy or completeness of scanned copies of this plan sheet.

SANDAG
401 B STREET, SUITE 800
SAN DIEGO, CA 92101

AECOM
7807 CONVOY COURT, SUITE 200
SAN DIEGO, CA 92111

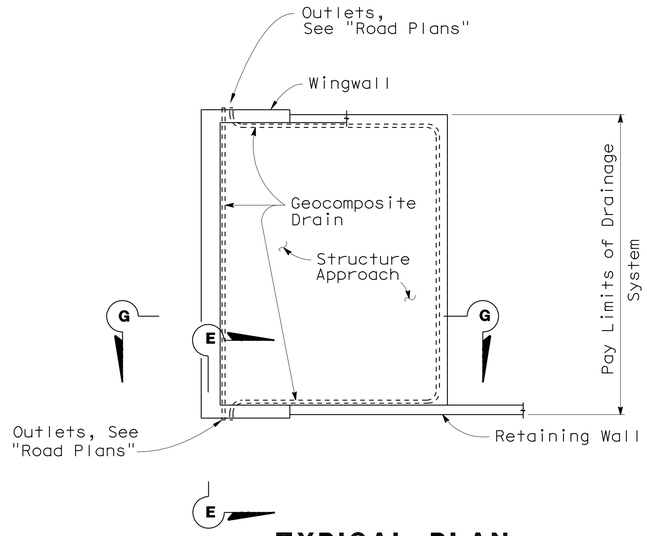

TYPICAL PLAN
1" = 10'

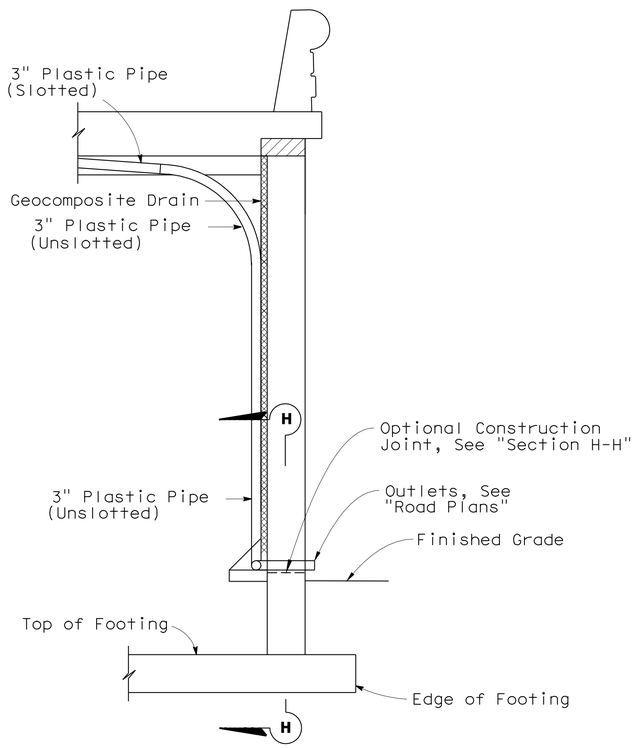

SECTION E-E
½" = 1'-0"

Note: Bends and Junctions in 3" Plastic Pipe are 30" Radius Min

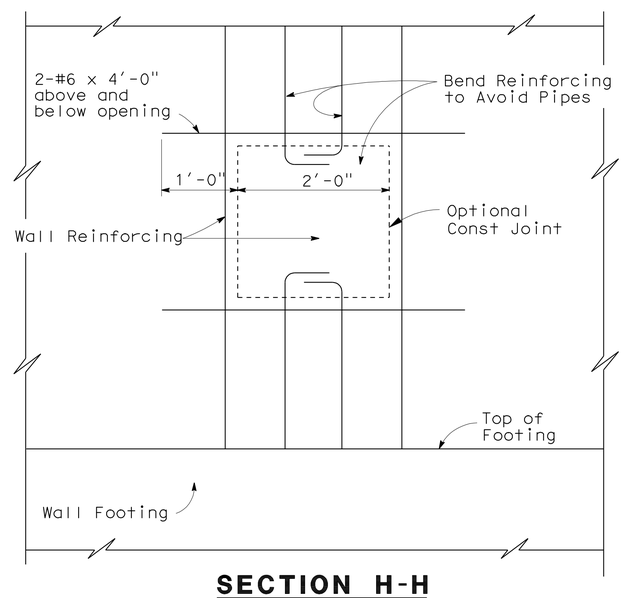

SECTION H-H
1" = 1'-0"

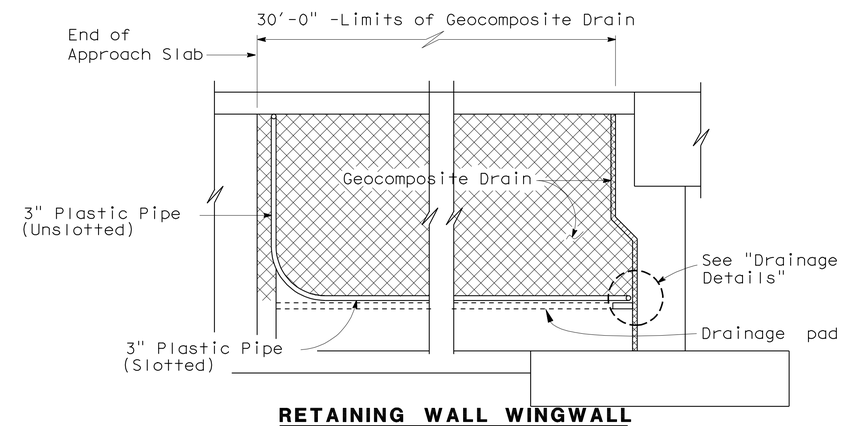

RETAINING WALL WINGWALL
SECTION G-G
¼" = 1'-0"

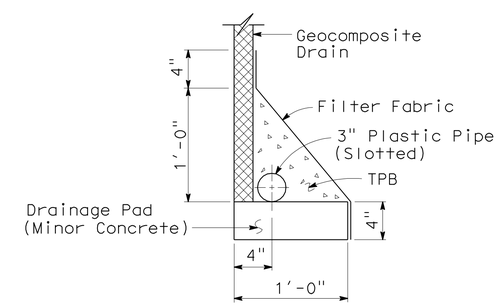

WITHOUT FOOTING
DRAINAGE DETAILS
1½" = 1'-0"

Robert Gee
DESIGN OVERSIGHT Norbert Gee
10-25-10
SIGN OFF DATE

	BY	CHECKED
DESIGN	R Ramoso/H Mai	John Powell
DETAILS	C Morgan/C Lente	John Powell
QUANTITIES	R Ramoso/H Mai	Janice Reguyal

PREPARED FOR THE STATE OF CALIFORNIA DEPARTMENT OF TRANSPORTATION

Robert E. Hawthorne
PROJECT ENGINEER

BRIDGE NO. 57-1215
POST MILE R15.7

HILLERY DIRECT ACCESS RAMPS
NORTHBOUND OFF-RAMP
STRUCTURE APPROACH DRAINAGE DETAILS

DESIGN DETAIL SHEET (ENGLISH) (REV. 06-01-09)

ORIGINAL SCALE IN INCHES FOR REDUCED PLANS 0 1 2 3

CU 11269
EA 2T0951

DISREGARD PRINTS BEARING EARLIER REVISION DATES

REVISION DATES (PRELIMINARY STAGE ONLY) 01/22/10 03/08/10 05/21/10 07/01/10 08/27/10

SHEET 23 OF 33

FILE => 57-1215-s-sadd.dgn

USERNAME => s128843 DATE PLOTTED => 27-OCT-2011 TIME PLOTTED => 10:24

DIST	COUNTY	ROUTE	POST MILES TOTAL PROJECT	SHEET No	TOTAL SHEETS
11	SD	15	M15.0/M16.4	536	610

REGISTERED CIVIL ENGINEER 10-15-10 DATE

10-24-11
PLANS APPROVAL DATE

REGISTERED PROFESSIONAL ENGINEER ROBERT E. HAWTHORNE No. 40075 Exp. 03/31/12 CIVIL STATE OF CALIFORNIA

The State of California or its officers or agents shall not be responsible for the accuracy or completeness of scanned copies of this plan sheet.

SANDAG
401 B STREET, SUITE 800
SAN DIEGO, CA 92101

AECOM
7807 CONVOY COURT, SUITE 200
SAN DIEGO, CA 92111

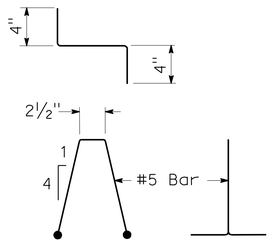

BAR CHAIR DETAIL

1½"=1'-0"

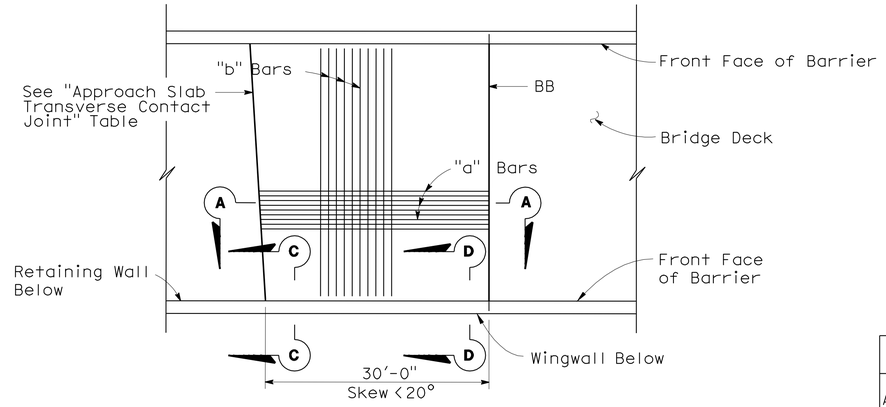

PLAN

1" = 10'

APPROACH SLAB TRANSVERSE CONTACT JOINT		
APPROACH SKEW	WITH AC ROADWAY PAVEMENT	WITH PCC ROADWAY PAVEMENT
< 20°	Parallel to face of paving notch	Parallel to face of paving notch

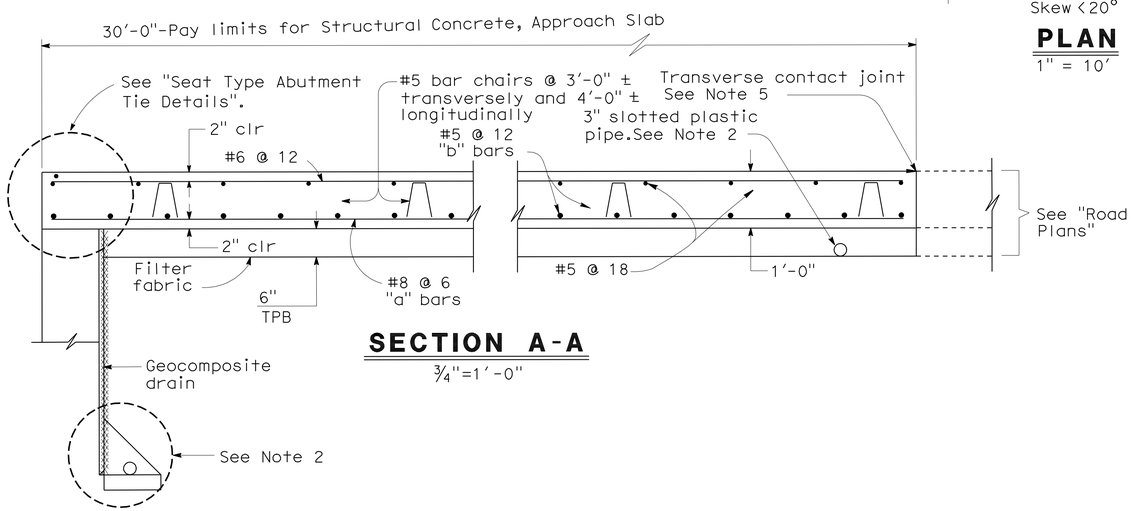

SECTION A-A

¾"=1'-0"

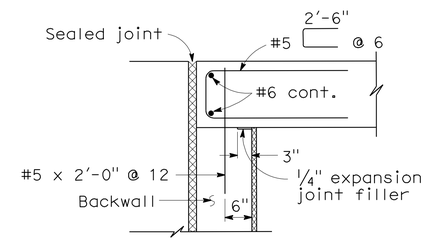

MR ≤ 2"

SEAT TYPE ABUTMENT TIE DETAILS (SEE NOTE 1)

¾"=1'-0"

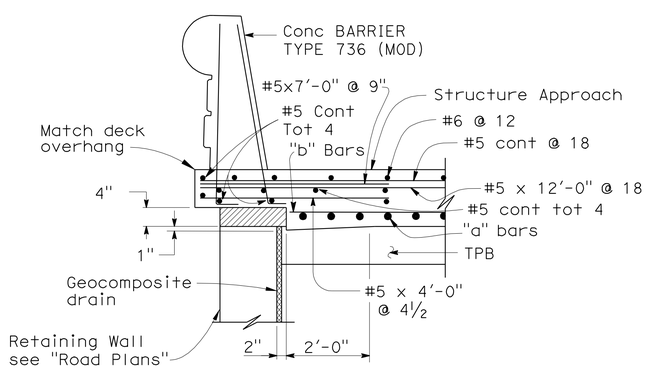

SECTION C-C

¾"=1'-0"

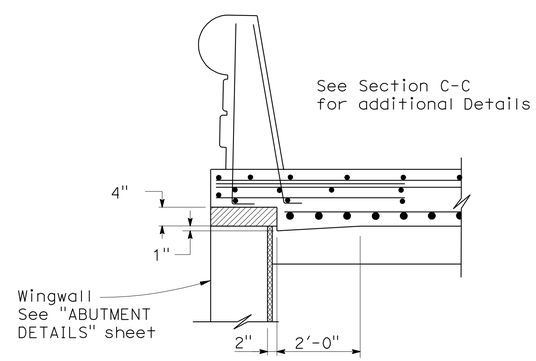

SECTION D-D

¾"=1'-0"

NOTES:

1. For details not shown, see Structure Plans. For MR ≤ 2", adjust bar reinforcement to clear a sawcut for sealed joint, when required.
2. For drainage details, see "Structure Approach Drainage Details" sheet.
3. Longitudinal construction joints, when permitted by the Engineer, shall be located on lane lines.
4. End angle or plate at beginning of barrier transition, end of wingwall or end of structure approach as applicable.
5. For transverse contact joint with new PCC paving, refer to Standard Plan RSP P10.
6. At the contractor's option, approach slab transverse reinforcement may be placed parallel to paving notch. Spacing of transverse reinforcement is measured along ℄ of roadway.

Remove all polystyrene.

HILLERY DIRECT ACCESS RAMPS
NORTHBOUND OFF-RAMP
STRUCTURE APPROACH TYPE N(30S)

DESIGN OVERSIGHT Norbert Gee
10-25-10
SIGN OFF DATE

	BY	CHECKED
DESIGN	R Ramoso/H Mai	John Powell
DETAILS	C Morgan/C Lente	John Powell
QUANTITIES	R Ramoso/H Mai	Janice Reguyal

PREPARED FOR THE STATE OF CALIFORNIA DEPARTMENT OF TRANSPORTATION

Robert E. Hawthorne
PROJECT ENGINEER

BRIDGE NO. 57-1215
POST MILE R15.7

CU 11269
EA 2T0951

DISREGARD PRINTS BEARING EARLIER REVISION DATES

REVISION DATES (PRELIMINARY STAGE ONLY): 01/22/10 03/08/10 05/24/10 05/27/10 07/01/10 08/27/10

SHEET 24 OF 33

DESIGN DETAIL SHEET (ENGLISH) (REV. 06-01-09)

ORIGINAL SCALE IN INCHES FOR REDUCED PLANS 0 1 2 3

FILE => 57-1215-s-satn.dgn

USERNAME => s128843 DATE PLOTTED => 27-OCT-2011 TIME PLOTTED => 10:24

DIST	COUNTY	ROUTE	POST MILES TOTAL PROJECT	SHEET No	TOTAL SHEETS
11	SD	15	M15.0/M16.4	537	610

REGISTERED CIVIL ENGINEER 10-15-10 DATE

10-24-11
PLANS APPROVAL DATE

REGISTERED PROFESSIONAL ENGINEER ROBERT E. HAWTHORNE No. 40075 Exp. 03/31/12 CIVIL STATE OF CALIFORNIA

The State of California or its officers or agents shall not be responsible for the accuracy or completeness of scanned copies of this plan sheet.

SANDAG
401 B STREET, SUITE 800
SAN DIEGO, CA 92101

AECOM
7807 CONVOY COURT, SUITE 200
SAN DIEGO, CA 92111

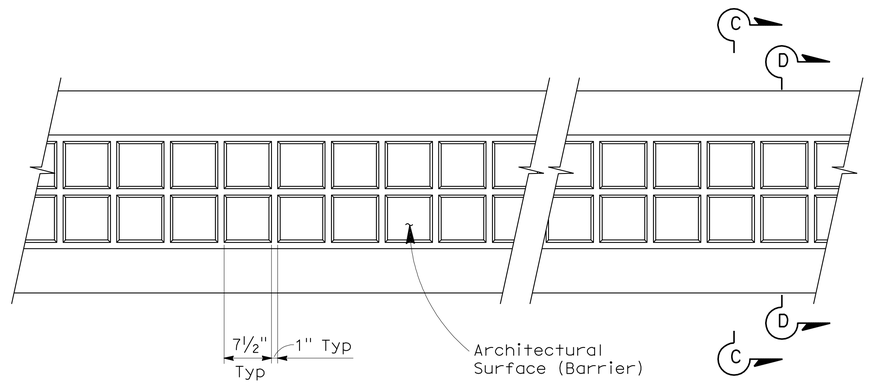

ELEVATION

1"=1'-0"

Notes:
(1) Alternate "Section C-C" and "Section D-D" along the full length of barrier rail.

(2) For other details of barrier rail not shown or noted, see B11-56

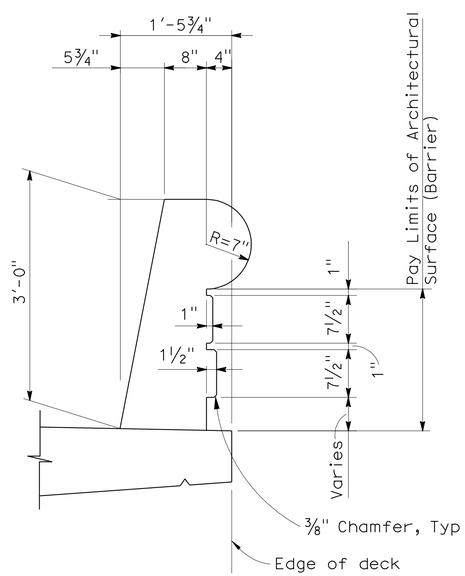

SECTION C-C

1"=1'-0"

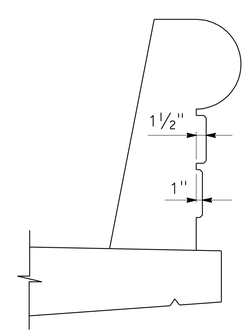

SECTION D-D

1"=1'-0"

Note:
For dimensions not shown, see "Section C-C"

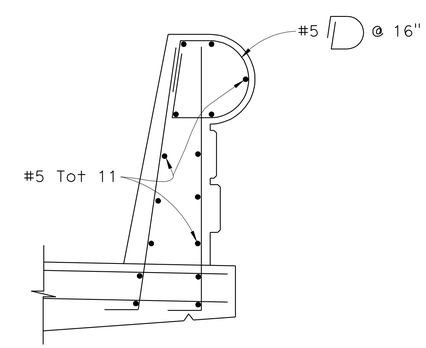

PART SECTION

1"=1'-0"

HILLERY DIRECT ACCESS RAMPS
NORTHBOUND OFF-RAMP
CONC BARRIER TYPE 736 (MOD)

DESIGN OVERSIGHT Norbert Gee
10-25-10
SIGN OFF DATE

	BY	CHECKED
DESIGN	R Ramoso/H Mai	John Powell
DETAILS	C Morgan/C Lente	John Powell
QUANTITIES	R Ramoso/H Mai	Janice Reguyal

PREPARED FOR THE STATE OF CALIFORNIA DEPARTMENT OF TRANSPORTATION

Robert E. Hawthorne
PROJECT ENGINEER

BRIDGE NO. 57-1215
POST MILE R15.7

DESIGN DETAIL SHEET (ENGLISH) (REV. 06-01-09)

ORIGINAL SCALE IN INCHES FOR REDUCED PLANS 0 1 2 3

CU 11269
EA 2T0951

DISREGARD PRINTS BEARING EARLIER REVISION DATES

REVISION DATES (PRELIMINARY STAGE ONLY) 01/22/10 03/08/10 05/27/10 07/01/10 08/27/10 10/06/10

SHEET 25 OF 33

FILE => 57-1215-t-brdt.dgn

USERNAME => s128843 DATE PLOTTED => 27-OCT-2011 TIME PLOTTED => 10:24

DIST	COUNTY	Route	POST MILES TOTAL PROJECT	SHEET No	TOTAL SHEETS
11	SD	15	M15.0/M16.4	538	610

REGISTERED CIVIL ENGINEER 10-15-10

10-24-11
PLANS APPROVAL DATE

The State of California or its officers or agents shall not be responsible for the accuracy or completeness of electronic copies of this plan sheet.

REGISTERED PROFESSIONAL ENGINEER
David T-M Liao
No. C59838
Exp. 12-31-11
CIVIL
STATE OF CALIFORNIA

This LOTB sheet was prepared in accordance with the Caltrans Soil & Rock Logging, Classification, & Presentation Manual (June 2007).

BENCH MARK

BM WP100 Elev 524.77′
Fd Pk/Wshr in gutter
N 1913007.270
E 6295232.971
NAVD 1988

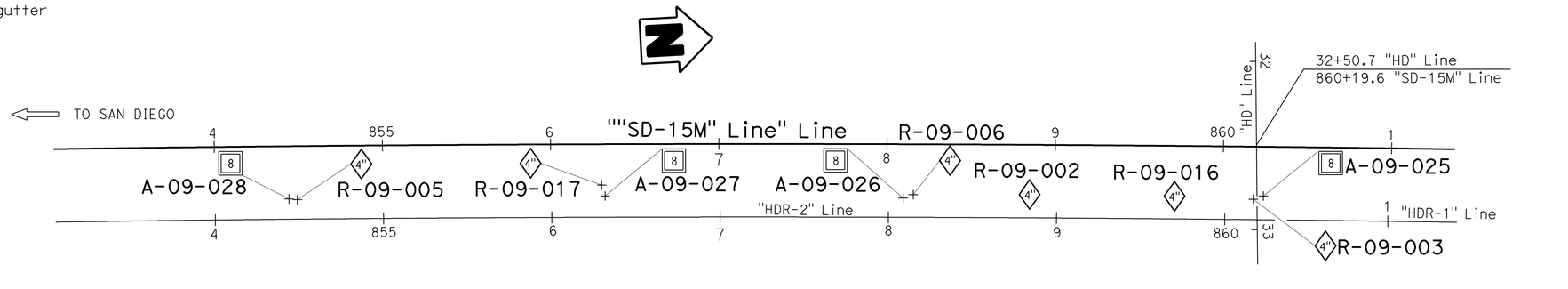

PLAN

1" = 40′

NOTES:

1. Core samples are available for viewing at the California Department of Transportation, Transportation Laboratory, 5900 Folsom Blvd. Sacramento, CA.
2. Attempts were made to measure groundwater in Borings R-09-003 and R-09-005. Please refer to the elevation views of these borings for measured groundwater elevations
3. Attempts were made to measure groundwater in Borings R-09-006, R-09-016, A-09-025, A-09-026, A-09-027, and A-09-028. Groundwater was not encountered in these borings.
4. Attempts were not made to measure groundwater in Borings R-09-002 and R-09-017. These borings were immediately backfilled after completion of drilling operations.
5. For additional groundwater information, refer to Borings R-09-014, R-09-020, R-09-021 of Hillery Dr. OC (Br. No. 57-1213), and A-09-029, A-09-030, 31 A-09-031 of Northbound On-Ramp (Br. No. 57-1214) Logs of Test Borings.
6. RQD designated with "N/A" (not applicable) infers that the rock encountered with the drilled interval was not sound rock, therefore, RQD was not calculated.

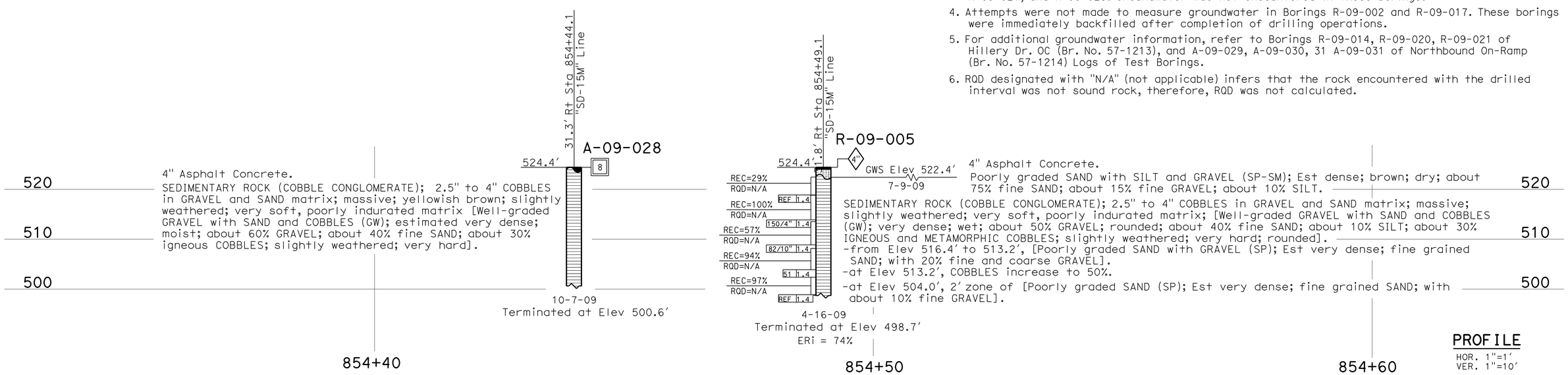

PROFILE

HOR. 1"=1′
VER. 1"=10′

ENGINEERING SERVICES	GEOTECHNICAL SERVICES	STATE OF CALIFORNIA DEPARTMENT OF TRANSPORTATION	DIVISION OF ENGINEERING SERVICES STRUCTURE DESIGN	BRIDGE NO. 57-1215	HILLERY DIRECT ACCESS RAMPS
FUNCTIONAL SUPERVISOR	DRAWN BY: W. Tang 11/09	FIELD INVESTIGATION BY:	DESIGN BRANCH	POST MILES R15.7	NORTHBOUND OFF-RAMP
NAME: M. DeSalvatore	CHECKED BY: E. Neupert	T-M Liao, J. Klamecki			LOG OF TEST BORINGS 1 OF 8

OGS CIVIL LOG OF TEST BORINGS SHEET

ORIGINAL SCALE IN INCHES FOR REDUCED PLANS 0 1 2 3

CU 11
EA 2T0951

DISREGARD PRINTS BEARING EARLIER REVISION DATES

REVISION DATES: 01-19-10 06-16-10 07-07-10 09-01-10 09-03-10

SHEET 26 OF 33

FILE => 57-1215-z-ltb01.dgn

USERNAME => s128843 DATE PLOTTED => 27-OCT-2011 TIME PLOTTED => 10:25

DIST	COUNTY	ROUTE	POST MILES TOTAL PROJECT	SHEET No	TOTAL SHEETS
11	SD	15	M15.0/M16.4	539	610

REGISTERED CIVIL ENGINEER 10-15-10

10-24-11
PLANS APPROVAL DATE

REGISTERED PROFESSIONAL ENGINEER
T-M Liao
No. C59838
Exp. 12-31-11
CIVIL
STATE OF CALIFORNIA

The State of California or its officers or agents shall not be responsible for the accuracy or completeness of electronic copies of this plan sheet.

This LOTB sheet was prepared in accordance with the Caltrans Soil & Rock Logging, Classification, & Presentation Manual (June 2007).

FOR PLAN VIEW, SEE
"LOG OF TEST BORINGS 1 OF 8"

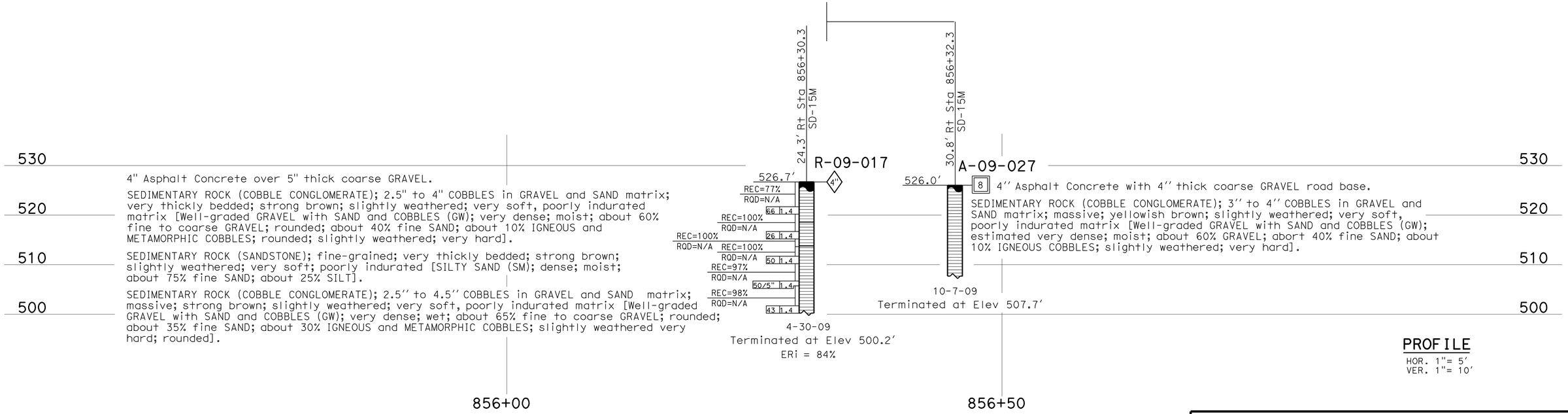

ENGINEERING SERVICES		GEOTECHNICAL SERVICES
FUNCTIONAL SUPERVISOR	DRAWN BY: W. Tang 11/09	FIELD INVESTIGATION BY:
NAME: M. DeSalvatore	CHECKED BY: E. Neupert	T-M Liao, J. Klamecki

STATE OF CALIFORNIA
DEPARTMENT OF TRANSPORTATION

DIVISION OF ENGINEERING SERVICES
STRUCTURE DESIGN
DESIGN BRANCH

BRIDGE NO. 57-1215
POST MILES R15.7

HILLERY DIRECT ACCESS RAMPS
NORTHBOUND OFF-RAMP
LOG OF TEST BORINGS 2 OF 8

OGS CIVIL LOG OF TEST BORINGS SHEET

ORIGINAL SCALE IN INCHES FOR REDUCED PLANS 0 1 2 3

CU 11
EA 2T0951

DISREGARD PRINTS BEARING EARLIER REVISION DATES

REVISION DATES: 01-19-10 07-09-10 09-01-10

SHEET 27 OF 33

FILE => 57-1215-z-ltb02.dgn

USERNAME => s128843 DATE PLOTTED => 27-OCT-2011 TIME PLOTTED => 10:25

DIST	COUNTY	ROUTE	POST MILES TOTAL PROJECT	SHEET No	TOTAL SHEETS
11	SD	15	M15.0/M16.4	540	610

REGISTERED CIVIL ENGINEER 10-15-10

10-24-11
PLANS APPROVAL DATE

REGISTERED PROFESSIONAL ENGINEER David T-M Liao No. C59838 Exp. 12-31-11 CIVIL STATE OF CALIFORNIA

The State of California or its officers or agents shall not be responsible for the accuracy or completeness of electronic copies of this plan sheet.

This LOTB sheet was prepared in accordance with the Caltrans Soil & Rock Logging, Classification, & Presentation Manual (June 2007).

FOR PLAN VIEW, SEE
"LOG OF TEST BORINGS 1 OF 8"

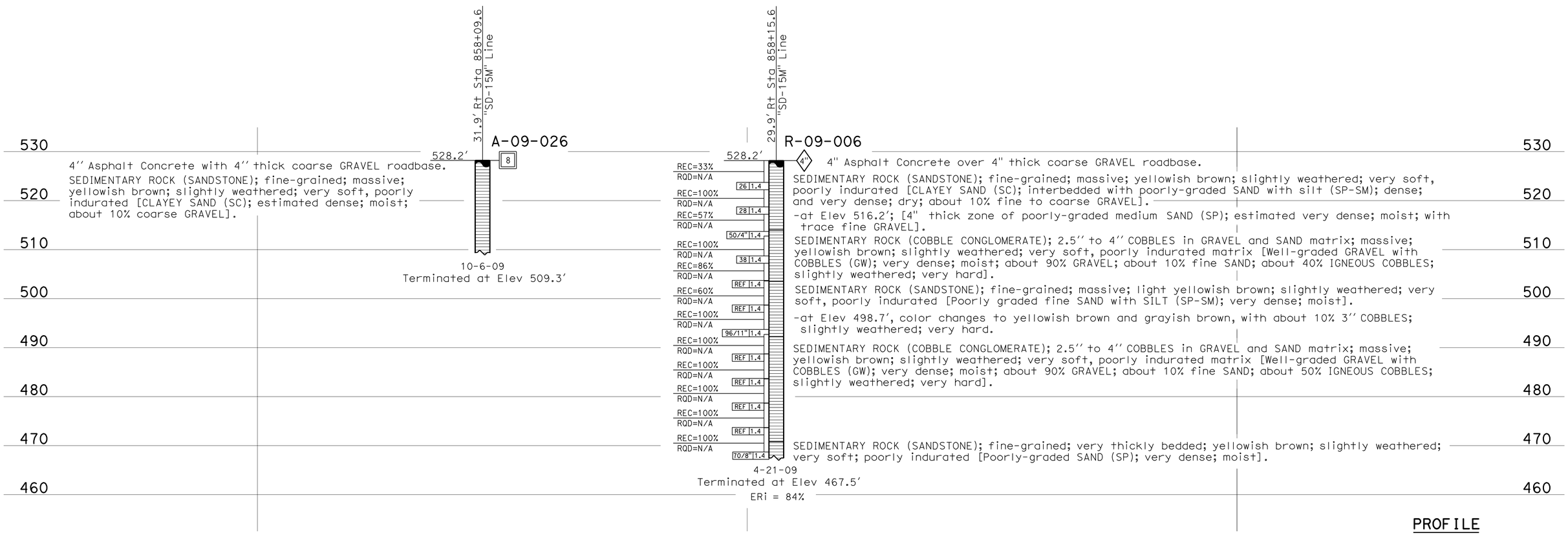

PROFILE
HOR. 1"=1'
VER. 1"=10'

ENGINEERING SERVICES	GEOTECHNICAL SERVICES	STATE OF CALIFORNIA DEPARTMENT OF TRANSPORTATION	DIVISION OF ENGINEERING SERVICES STRUCTURE DESIGN DESIGN BRANCH	BRIDGE NO. 57-1215 POST MILES R15.7	HILLERY DIRECT ACCESS RAMPS NORTHBOUND OFF-RAMP LOG OF TEST BORINGS 3 OF 8
FUNCTIONAL SUPERVISOR NAME: M. DeSalvatore	DRAWN BY: W. Tang 11/09, I.G-Remmen 1/10 CHECKED BY: E. Neupert	FIELD INVESTIGATION BY: T-M Liao			

OGS CIVIL LOG OF TEST BORINGS SHEET

ORIGINAL SCALE IN INCHES FOR REDUCED PLANS 0 1 2 3

CU 11
EA 2T0951

DISREGARD PRINTS BEARING EARLIER REVISION DATES → 01-19-10 06-16-10 07-02-10 09-01-10 09-03-10

REVISION DATES

SHEET 28 OF 33

FILE => 57-1215-z-ltb03.dgn

USERNAME => s128843 DATE PLOTTED => 27-Oct-2011 TIME PLOTTED => 10:25

DIST	COUNTY	ROUTE	POST MILES TOTAL PROJECT	SHEET No	TOTAL SHEETS
11	SD	15	M15.0/M16.4	541	610

REGISTERED CIVIL ENGINEER 10-15-10

10-24-11
PLANS APPROVAL DATE

REGISTERED PROFESSIONAL ENGINEER David T-M Liao No. C59838 Exp. 12-31-11 CIVIL STATE OF CALIFORNIA

The State of California or its officers or agents shall not be responsible for the accuracy or completeness of electronic copies of this plan sheet.

This LOTB sheet was prepared in accordance with the Caltrans Soil & Rock Logging, Classification, & Presentation Manual (June 2007).

FOR PLAN VIEW, SEE
"LOG OF TEST BORINGS 1 OF 8"

ENGINEERING SERVICES		GEOTECHNICAL SERVICES
FUNCTIONAL SUPERVISOR	DRAWN BY: G. Dickerson 11/09	FIELD INVESTIGATION BY:
NAME: M. DeSalvatore	CHECKED BY: E. Neupert	T-M Liao

STATE OF CALIFORNIA
DEPARTMENT OF TRANSPORTATION

DIVISION OF ENGINEERING SERVICES
STRUCTURE DESIGN
DESIGN BRANCH

BRIDGE NO. 57-1215
POST MILES R15.7

HILLERY DIRECT ACCESS RAMPS
NORTHBOUND OFF-RAMP
LOG OF TEST BORINGS 4 OF 8

OGS CIVIL LOG OF TEST BORINGS SHEET

ORIGINAL SCALE IN INCHES FOR REDUCED PLANS 0 1 2 3

CU 11
EA 2T0951

DISREGARD PRINTS BEARING EARLIER REVISION DATES → 12-23-09 | 01-19-10 | 06-16-10 | 07-02-10 | 09-03-10 | 09-03-10 | 09-07-10

SHEET 29 OF 33

FILE => 57-1215-z-ltb04.dgn

USERNAME => s119571 DATE PLOTTED => 27-OCT-2011 TIME PLOTTED => 13:29

DIST	COUNTY	ROUTE	POST MILES TOTAL PROJECT	SHEET No	TOTAL SHEETS
11	SD	15	M15.0/M16.4	542	610

REGISTERED CIVIL ENGINEER 10-15-10

10-24-11
PLANS APPROVAL DATE

REGISTERED PROFESSIONAL ENGINEER David T-M Liao No. C59838 Exp. 12-31-11 CIVIL STATE OF CALIFORNIA

The State of California or its officers or agents shall not be responsible for the accuracy or completeness of electronic copies of this plan sheet.

This LOTB sheet was prepared in accordance with the Caltrans Soil & Rock Logging, Classification, & Presentation Manual (June 2007).

PROFILE
HOR. 1" = 1'
VER. 1" = 10'

HILLERY DIRECT ACCESS RAMPS
NORTHBOUND OFF-RAMP
LOG OF TEST BORINGS 5 OF 8

ENGINEERING SERVICES	GEOTECHNICAL SERVICES	STATE OF CALIFORNIA DEPARTMENT OF TRANSPORTATION	DIVISION OF ENGINEERING SERVICES STRUCTURE DESIGN DESIGN BRANCH	BRIDGE NO. 57-1215 / POST MILES R15.7
FUNCTIONAL SUPERVISOR NAME: M. DeSalvatore	DRAWN BY: G. Dickerson 11/09, I.G-Remmen 1/10 / CHECKED BY: E. Neupert	FIELD INVESTIGATION BY: J. Klamecki, T.M Liao	CU 11 EA 2T0951	

OGS CIVIL LOG OF TEST BORINGS SHEET

ORIGINAL SCALE IN INCHES FOR REDUCED PLANS 0 1 2 3

DISREGARD PRINTS BEARING EARLIER REVISION DATES

REVISION DATES: 12-23-09 01-19-10 06-18-10 07-07-10 09-01-10 09-03-10 09-07-10

SHEET 30 OF 33

FILE => 57-1215-z-ltb05.dgn

USERNAME => s19571 DATE PLOTTED => 27-OCT-2011 TIME PLOTTED => 13:29

REGISTERED CIVIL ENGINEER 10-15-10 DATE

10-24-11
PLANS APPROVAL DATE

REGISTERED PROFESSIONAL ENGINEER David T-M Liao No. C59838 Exp. 12-31-11 CIVIL STATE OF CALIFORNIA

The State of California or its officers or agents shall not be responsible for the accuracy or completeness of electronic copies of this plan sheet.

REFERENCE: CALTRANS SOIL & ROCK LOGGING, CLASSIFICATION, AND PRESENTATION MANUAL (JUNE 2007)

CEMENTATION

Description	Criteria
Weak	Crumbles or breaks with handling or little finger pressure.
Moderate	Crumbles or breaks with considerable finger pressure.
Strong	Will not crumble or break with finger pressure.

CONSISTENCY OF COHESIVE SOILS

Description	Unconfined Compressive Strength (tsf)	Pocket Penetrometer Measurement (tsf)	Torvane Measurement (tsf)	Field Approximation
Very Soft	< 0.25	< 0.25	< 0.12	Easily penetrated several inches by fist
Soft	0.25 to 0.50	0.25 to 0.50	0.12 to 0.25	Easily penetrated several inches by thumb
Medium Stiff	0.50 to 1.0	0.50 to 1.0	0.25 to 0.50	Penetrated several inches by thumb with moderate effort
Stiff	1 to 2	1 to 2	0.50 to 1.0	Readily indented by thumb but penetrated only with great effort
Very Stiff	2 to 4	2 to 4	1.0 to 2.0	Readily indented by thumbnail
Hard	> 4.0	> 4.0	> 2.0	Indented by thumbnail with difficulty

BOREHOLE IDENTIFICATION

Symbol	Hole Type	Description
Size	A	Auger Boring
Size	R P	Rotary drilled boring Rotary percussion boring (air)
Size	R	Rotary drilled diamond core
Size	HD HA	Hand driven (1-inch soil tube) Hand Auger
●	D	Dynamic Cone Penetration Boring
▲	CPT	Cone Penetration Test (ASTM D 5778-95)
⬚	O	Other

Note: Size in inches.

PLASTICITY OF FINE-GRAINED SOILS

Description	Criteria
Nonplastic	A 1/8-inch thread cannot be rolled at any water content.
Low	The thread can barely be rolled and the lump cannot be formed when drier than the plastic limit.
Medium	The thread is easy to roll and not much time is required to reach the plastic limit. The thread cannot be rerolled after reaching the plastic limit. The lump crumbles when drier than the plastic limit.
High	It takes considerable time rolling and kneading to reach the plastic limit. The thread can be rerolled several times after reaching the plastic limit. The lump can be formed without crumbling when drier than the plastic limit.

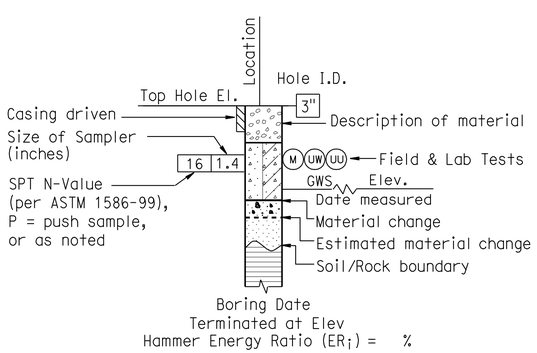

ROTARY BORING

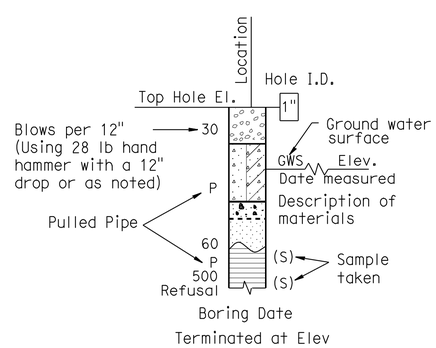

HAND BORING

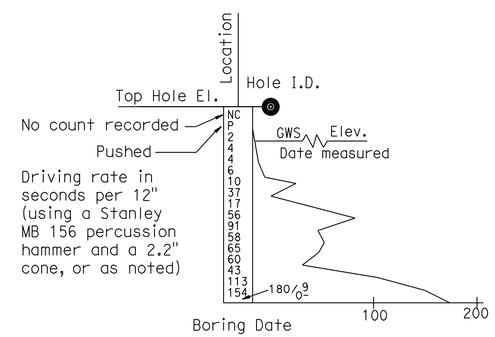

DYNAMIC CONE PENETRATION BORING

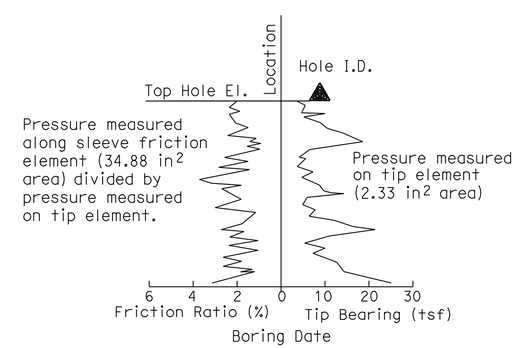

CONE PENETRATION TEST (CPT) SOUNDING

ENGINEERING SERVICES	GEOTECHNICAL SERVICES	STATE OF CALIFORNIA DEPARTMENT OF TRANSPORTATION	DIVISION OF ENGINEERING SERVICES STRUCTURE DESIGN DESIGN BRANCH	BRIDGE NO. 57-1215 / POST MILE R15.7	HILLERY DIRECT ACCESS RAMPS NORTHBOUND OFF-RAMP LOG OF TEST BORINGS 6 OF 8
	PREPARED BY: I.G-Remmen 1/10				

GS LOTB SOIL LEGEND

ORIGINAL SCALE IN INCHES FOR REDUCED PLANS 0 1 2 3

CU 11
EA 2T0951

DISREGARD PRINTS BEARING EARLIER REVISION DATES 07-01-10 09-01-10

REVISION DATES

SHEET 31 OF 33

FILE => 57-1215-z-ltb06.dgn

USERNAME => s119571 DATE PLOTTED => 27-OCT-2011 TIME PLOTTED => 13:29

REFERENCE: CALTRANS SOIL & ROCK LOGGING, CLASSIFICATION, AND PRESENTATION MANUAL (JUNE 2007)

DIST	COUNTY	ROUTE	POST MILES TOTAL PROJECT	SHEET No	TOTAL SHEETS
11	SD	15	M15.0/M16.4	544	610

REGISTERED CIVIL ENGINEER 10-15-10 DATE

10-24-11
PLANS APPROVAL DATE

REGISTERED PROFESSIONAL ENGINEER David T-M Liao No. C59838 Exp. 12-31-11 CIVIL STATE OF CALIFORNIA

The State of California or its officers or agents shall not be responsible for the accuracy or completeness of electronic copies of this plan sheet.

GROUP SYMBOLS AND NAMES

Graphic/Symbol	Group Names
GW	Well-graded GRAVEL Well-graded GRAVEL with SAND
GP	Poorly graded GRAVEL Poorly graded GRAVEL with SAND
GW-GM	Well-graded GRAVEL with SILT Well-graded GRAVEL with SILT and SAND
GW-GC	Well-graded GRAVEL with CLAY (or SILTY CLAY) Well-graded GRAVEL with CLAY and SAND (or SILTY CLAY and SAND)
GP-GM	Poorly graded GRAVEL with SILT Poorly graded GRAVEL with SILT and SAND
GP-GC	Poorly graded GRAVEL with CLAY (or SILTY CLAY) Poorly graded GRAVEL with CLAY and SAND (or SILTY CLAY and SAND)
GM	SILTY GRAVEL SILTY GRAVEL with SAND
GC	CLAYEY GRAVEL CLAYEY GRAVEL with SAND
GC-GM	SILTY, CLAYEY GRAVEL SILTY, CLAYEY GRAVEL with SAND
SW	Well-graded SAND Well-graded SAND with GRAVEL
SP	Poorly graded SAND Poorly graded SAND with GRAVEL
SW-SM	Well-graded SAND with SILT Well-graded SAND with SILT and GRAVEL
SW-SC	Well-graded SAND with CLAY (or SILTY CLAY) Well-graded SAND with CLAY and GRAVEL (or SILTY CLAY and GRAVEL)
SP-SM	Poorly graded SAND with SILT Poorly graded SAND with SILT and GRAVEL
SP-SC	Poorly graded SAND with CLAY (or SILTY CLAY) Poorly graded SAND with CLAY and GRAVEL (or SILTY CLAY and GRAVEL)
SM	SILTY SAND SILTY SAND with GRAVEL
SC	CLAYEY SAND CLAYEY SAND with GRAVEL
SC-SM	SILTY, CLAYEY SAND SILTY, CLAYEY SAND with GRAVEL
PT	PEAT
	COBBLES COBBLES and BOULDERS BOULDERS

Graphic/Symbol	Group Names
CL	Lean CLAY Lean CLAY with SAND Lean CLAY with GRAVEL SANDY lean CLAY SANDY lean CLAY with GRAVEL GRAVELLY lean CLAY GRAVELLY lean CLAY with SAND
CL-ML	SILTY CLAY SILTY CLAY with SAND SILTY CLAY with GRAVEL SANDY SILTY CLAY SANDY SILTY CLAY with GRAVEL GRAVELLY SILTY CLAY GRAVELLY SILTY CLAY with SAND
ML	SILT SILT with SAND SILT with GRAVEL SANDY SILT SANDY SILT with GRAVEL GRAVELLY SILT GRAVELLY SILT with SAND
OL	ORGANIC lean CLAY ORGANIC lean CLAY with SAND ORGANIC lean CLAY with GRAVEL SANDY ORGANIC lean CLAY SANDY ORGANIC lean CLAY with GRAVEL GRAVELLY ORGANIC lean CLAY GRAVELLY ORGANIC lean CLAY with SAND
OL	ORGANIC SILT ORGANIC SILT with SAND ORGANIC SILT with GRAVEL SANDY ORGANIC SILT SANDY ORGANIC SILT with GRAVEL GRAVELLY ORGANIC SILT GRAVELLY ORGANIC SILT with SAND
CH	Fat CLAY Fat CLAY with SAND Fat CLAY with GRAVEL SANDY fat CLAY SANDY fat CLAY with GRAVEL GRAVELLY fat CLAY GRAVELLY fat CLAY with SAND
MH	Elastic SILT Elastic SILT with SAND Elastic SILT with GRAVEL SANDY elastic SILT SANDY elastic SILT with GRAVEL GRAVELLY elastic SILT GRAVELLY elastic SILT with SAND
OH	ORGANIC fat CLAY ORGANIC fat CLAY with SAND ORGANIC fat CLAY with GRAVEL SANDY ORGANIC fat CLAY SANDY ORGANIC fat CLAY with GRAVEL GRAVELLY ORGANIC fat CLAY GRAVELLY ORGANIC fat CLAY with SAND
OH	ORGANIC elastic SILT ORGANIC elastic SILT with SAND ORGANIC elastic SILT with GRAVEL SANDY ORGANIC elastic SILT SANDY ORGANIC elastic SILT with GRAVEL GRAVELLY ORGANIC elastic SILT GRAVELLY ORGANIC elastic SILT with SAND
OL/OH	ORGANIC SOIL ORGANIC SOIL with SAND ORGANIC SOIL with GRAVEL SANDY ORGANIC SOIL SANDY ORGANIC SOIL with GRAVEL GRAVELLY ORGANIC SOIL GRAVELLY ORGANIC SOIL with SAND

FIELD AND LABORATORY TESTING

- (C) Consolidation (ASTM D 2435)
- (CL) Collapse Potential (ASTM D 5333)
- (CP) Compaction Curve (CTM 216)
- (CR) Corrosivity Testing (CTM 643, CTM 422, CTM 417)
- (CU) Consolidated Undrained Triaxial (ASTM D 4767)
- (DS) Direct Shear (ASTM D 3080)
- (EI) Expansion Index (ASTM D 4829)
- (M) Moisture Content (ASTM D 2216)
- (OC) Organic Content-% (ASTM D 2974)
- (P) Permeability (CTM 220)
- (PA) Particle Size Analysis (ASTM D 422)
- (PI) Plasticity Index (AASHTO T 90) Liquid Limit (AASHTO T 89)
- (PL) Point Load Index (ASTM D 5731)
- (PM) Pressure Meter
- (PP) Pocket Penetrometer
- (R) R-Value (CTM 301)
- (SE) Sand Equivalent (CTM 217)
- (SG) Specific Gravity (AASHTO T 100)
- (SL) Shrinkage Limit (ASTM D 427)
- (SW) Swell Potential (ASTM D 4546)
- (TV) Pocket Torvane
- (UC) Unconfined Compression-Soil (ASTM D 2166) Unconfined Compression-Rock (ASTM D 2938)
- (UU) Unconsolidated Undrained Triaxial (ASTM D 2850)
- (UW) Unit Weight (ASTM D 4767)
- (VS) Vane Shear (AASHTO T 223)

APPARENT DENSITY OF COHESIONLESS SOILS

Description	SPT N_{60} (Blows / 12 inches)
Very loose	0 - 4
Loose	5 - 10
Medium Dense	11 - 30
Dense	31 - 50
Very Dense	> 50

MOISTURE

Description	Criteria
Dry	Absence of moisture, dusty, dry to the touch
Moist	Damp but no visible water
Wet	Visible free water, usually soil is below water table

PERCENT OR PROPORTION OF SOILS

Description	Criteria
Trace	Particles are present but estimated to be less than 5%
Few	5 to 10%
Little	15 to 25%
Some	30 to 45%
Mostly	50 to 100%

PARTICLE SIZE

Description		Size
Boulder		> 12"
Cobble		3" to 12"
Gravel	Coarse	3/4" to 3"
	Fine	No. 4 to 3/4"
Sand	Coarse	No. 10 to No. 4
	Medium	No. 40 to No. 10
	Fine	No. 200 to No. 40

HILLERY DIRECT ACCESS RAMPS
NORTHBOUND OFF-RAMP
LOG OF TEST BORINGS 7 OF 8

ENGINEERING SERVICES

GEOTECHNICAL SERVICES
PREPARED BY: I.G-Remmen 1/10

STATE OF CALIFORNIA DEPARTMENT OF TRANSPORTATION

DIVISION OF ENGINEERING SERVICES STRUCTURE DESIGN
DESIGN BRANCH

BRIDGE NO. 57-1215
POST MILE R15.7

GS LOTB SOIL LEGEND

ORIGINAL SCALE IN INCHES FOR REDUCED PLANS 0 1 2 3

CU 11
EA 2T0951

DISREGARD PRINTS BEARING EARLIER REVISION DATES 07-01-10 09-01-10

REVISION DATES

SHEET 32 OF 33

FILE => 57-1215-z-ltb07.dgn

USERNAME => s113571 DATE PLOTTED => 27-OCT-2011 TIME PLOTTED => 13:30

REFERENCE: CALTRANS SOIL & ROCK LOGGING, CLASSIFICATION, AND PRESENTATION MANUAL (JUNE 2007)

DIST	COUNTY	ROUTE	POST MILES TOTAL PROJECT	SHEET No	TOTAL SHEETS
11	SD	15	M15.0/M16.4	545	610

REGISTERED CIVIL ENGINEER 10-15-10 DATE

10-24-11
PLANS APPROVAL DATE

REGISTERED PROFESSIONAL ENGINEER David T-M Liao No. C59838 Exp. 12-31-11 CIVIL STATE OF CALIFORNIA

The State of California or its officers or agents shall not be responsible for the accuracy or completeness of electronic copies of this plan sheet.

PERCENT CORE RECOVERY (REC) & ROCK QUALITY DESIGNATION (RQD)

$$REC = \frac{\sum \text{Length of the recovered core pieces (inches)}}{\text{Total length of core run (inches)}} \times 100\%$$

$$RQD = \frac{\sum \text{Length of intact core pieces} \geq 4''}{\text{Total length of core run (inches)}} \times 100\%$$

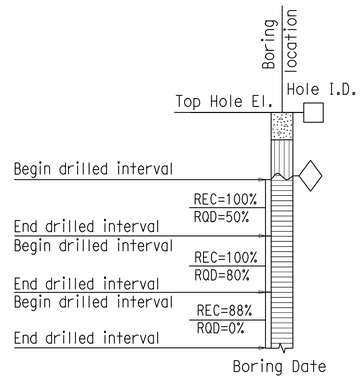

RELATIVE STRENGTH OF INTACT ROCK

Term	Uniaxial Compressive Strength (PSI)
Extremely Strong	> 30,000
Very Strong	14,500 - 30,000
Strong	7,000 - 14,500
Medium Strong	3,500 - 7,000
Weak	700 - 3,500
Very Weak	150 - 700
Extremely Weak	< 150

BEDDING SPACING

Description	Thickness / Spacing
Massive	Greater than 10 ft
Very thickly bedded	3 to 10 ft
Thickly bedded	1 to 3 ft
Moderately bedded	3-5/8" to 1 ft
Thinly bedded	1-1/4" to 3-5/8"
Very thinly bedded	3/8" to 1-1/4"
Laminated	Less than 3/8"

LEGEND OF ROCK MATERIALS

- IGNEOUS ROCK
- SEDIMENTARY ROCK
- METAMORPHIC ROCK

ROCK HARDNESS

Description	Criteria
Extremely Hard	Specimen cannot be scratched with a pocket knife or sharp pick; can only be chipped with repeated heavy hammer blows.
Very Hard	Specimen cannot be scratched with a pocket knife or sharp pick. Breaks with repeated heavy hammer blows.
Hard	Specimen can be scratched with a pocket knife or sharp pick with difficulty (heavy pressure). Heavy hammer blows required to break specimen.
Moderately Hard	Specimen can be scratched with pocket knife or sharp pick with light or moderate pressure. Core breaks with moderate hammer blows.
Moderately Soft	Specimen can be grooved 1/6" deep with a pocket knife or sharp pick with moderate or heavy pressure. Breaks with light hammer blow or heavy manual pressure.
Soft	Specimen can be grooved or gouged easily by a pocket knife or sharp pick with light pressure, can be scratched with fingernail. Breaks with light to moderate manual pressure.
Very Soft	Specimen can be readily indented, grooved or gouged with fingernail, or carved with a pocket knife. Breaks with light manual pressure.

FRACTURE DENSITY

Description	Observed Fracture Density
Unfractured	No fractures.
Very slightly fractured	Lengths greater than 3 feet.
Slightly fractured	Lengths from 1 to 3 feet with few lengths less than 1 foot or greater than 3 feet.
Moderately fractured	Lengths mostly in 4" to 1 foot range with most lengths about 8"
Intensely fractured	Lengths average from 1 to 4" with scattered fragmented intervals with lengths less than 4"
Very intensely fractured	Mostly chips and fragments with a few scattered short core lengths.

Combination descriptors (such as "Very intensely to intensely fractured") are used where equal distribution of both fracture density characteristics is present over a significant interval or exposure, or where characteristics are "in between" the descriptor definitions. Only two adjacent descriptors may be combined.

WEATHERING DESCRIPTORS FOR INTACT ROCK

Description	Diagnostic features					General Characteristics
	Chemical Weathering-Discoloration and/or oxidation		Mechanical Weathering-Grain boundary conditions (disaggregation) primarily for granitics and some coarse-grained sediments	Texture and Solutioning		
	Body of Rock	Fracture Surfaces		Texture	Solutioning	
Fresh	No discoloration, not oxidized.	No discoloration or oxidation.	No separation, intact (tight).	No change.	No solutioning.	Hammer rings when crystalline rocks are struck.
Slightly Weathered	Discoloration or oxidation is limited to surface of, or short distance from, fractures; some feldspar crystals are dull.	Minor to complete discoloration or oxidation of most surfaces.	No visible separation, intact (tight).	Preserved.	Minor leaching of some soluble minerals may be noted.	Hammer rings when crystalline rocks are struck. Body of rock not weakened.
Moderately Weathered	Discoloration or oxidation extends from fractures usually throughout; Fe-Mg minerals are "rusty," feldspar crystals are "cloudy."	All fracture surfaces are discolored or oxidized.	Partial separation of boundaries visible.	Generally preserved.	Soluble minerals may be mostly leached.	Hammer does not ring when rock is struck. Body of rock is slightly weakened.
Intensely Weathered	Discoloration or oxidation throughout; all feldspars and Fe-Mg minerals are altered to clay to some extent; or chemical alteration produces in-situ disaggregation, see grain boundary conditions.	All fracture surfaces are discolored or oxidized, surfaces friable.	Partial separation, rock is friable; in semiarid conditions granitics are disaggregated.	Texture altered by chemical disintegration (hydration, argillation).	Leaching of soluble minerals may be complete.	Dull sound when struck with hammer, usually can be broken with moderate to heavy manual pressure or by light hammer blow without reference to planes of weakness such as incipient or hairline fractures, or veinlets. Rock is significantly weakened.
Decomposed	Discolored or oxidized throughout, but resistant minerals such as quartz may be unaltered; all feldspars and Fe-Mg minerals are completely altered to clay.		Complete separation of grain boundaries (disaggregated).	Resembles a soil, partial or complete remnant rock structure may be preserved; leaching of soluble minerals usually complete.		Can be granulated by hand. Resistant minerals such as quartz may be present as "stringers" or "dikes."

Combination descriptors (such as "slightly weathered to fresh") are permissible where equal distribution of both weathering characteristics is present over significant intervals or where characteristics present are "in between" the diagnostic feature. However, combination descriptors should not be used where significant, identifiable zones can be delineated. Only two adjacent descriptors may be combined. "Very intensely weathered" is the combination descriptor for "intensely weathered to decomposed."

HILLERY DIRECT ACCESS RAMPS

NORTHBOUND OFF-RAMP

LOG OF TEST BORINGS 8 OF 8

ENGINEERING SERVICES

GEOTECHNICAL SERVICES

PREPARED BY: I.G-Remmen 1/10

STATE OF CALIFORNIA DEPARTMENT OF TRANSPORTATION

DIVISION OF ENGINEERING SERVICES STRUCTURE DESIGN

DESIGN BRANCH

BRIDGE NO. 57-1215

POST MILE R15.7

ORIGINAL SCALE IN INCHES FOR REDUCED PLANS 0 1 2 3

CU 11
EA 2T0951

DISREGARD PRINTS BEARING EARLIER REVISION DATES 07-01-10 09-01-10

REVISION DATES

SHEET 33 OF 33

FILE => 57-1215-z-ltb08.dgn

USERNAME => s613571 DATE PLOTTED => 27-OCT-2011 TIME PLOTTED => 13:30

DIST	COUNTY	ROUTE	POST MILES TOTAL PROJECT	SHEET No	TOTAL SHEETS
11	SD	15	M15.0/M16.4	546	610

REGISTERED CIVIL ENGINEER — DATE 10-15-10

10-24-11
PLANS APPROVAL DATE

REGISTERED PROFESSIONAL ENGINEER — ROBERT E. HAWTHORNE — No. 40075 — Exp. 03/31/12 — CIVIL — STATE OF CALIFORNIA

The State of California or its officers or agents shall not be responsible for the accuracy or completeness of scanned copies of this plan sheet.

SANDAG
401 B STREET, SUITE 800
SAN DIEGO, CA 92101

AECOM
7807 CONVOY COURT, SUITE 200
SAN DIEGO, CA 92111

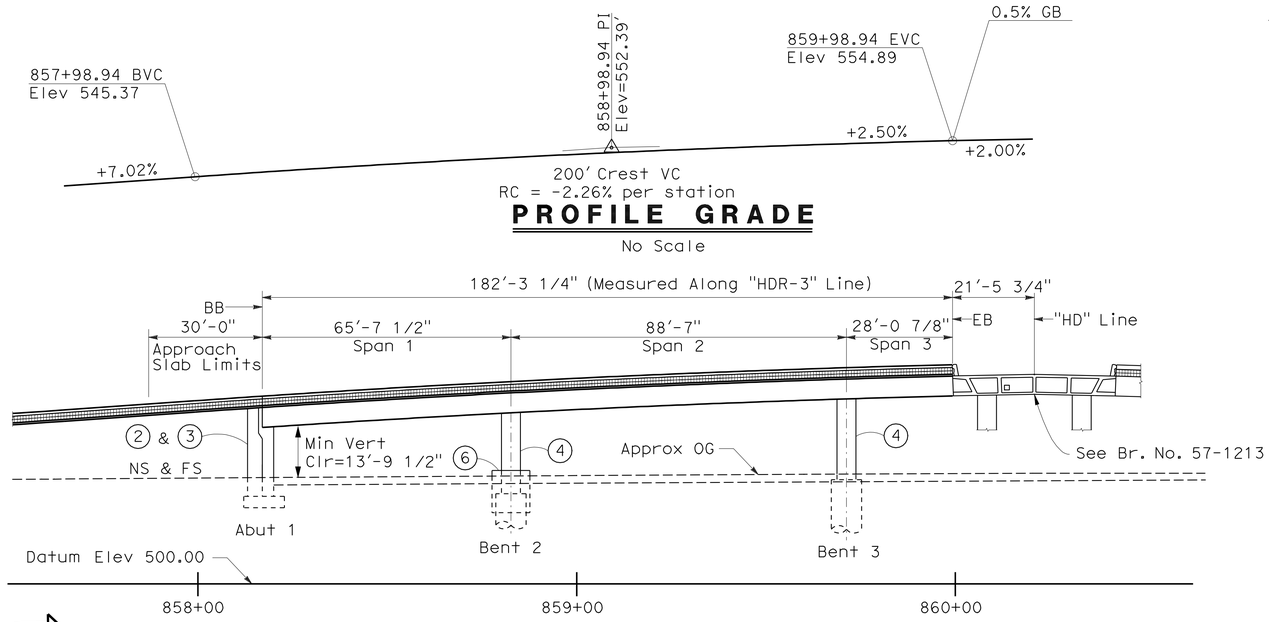

PROFILE GRADE

No Scale

ELEVATION

1" = 20'

Notes:

1. For "Quantities", "Index To Plans", "General Notes", & "Pile Data Table", See "INDEX TO PLANS No. 1" sheets.
2. Paint "Southbound On-Ramp"
3. Paint "Br. No. 57-1216"
4. Paint Bent No.
5. Structure Approach Slab Type N (30S)
6. Isolation Casing, see "ISOLATION CASING DETAILS No. 1"and "ISOLATION CASING DETAILS No. 2" sheets.
7. Deck Drain Location (Type D-2) see "DECK DRAINS" sheet.

◐ Indicates Point of Minimum Vertical Clearance

⇨ Indicates direction of traffic.

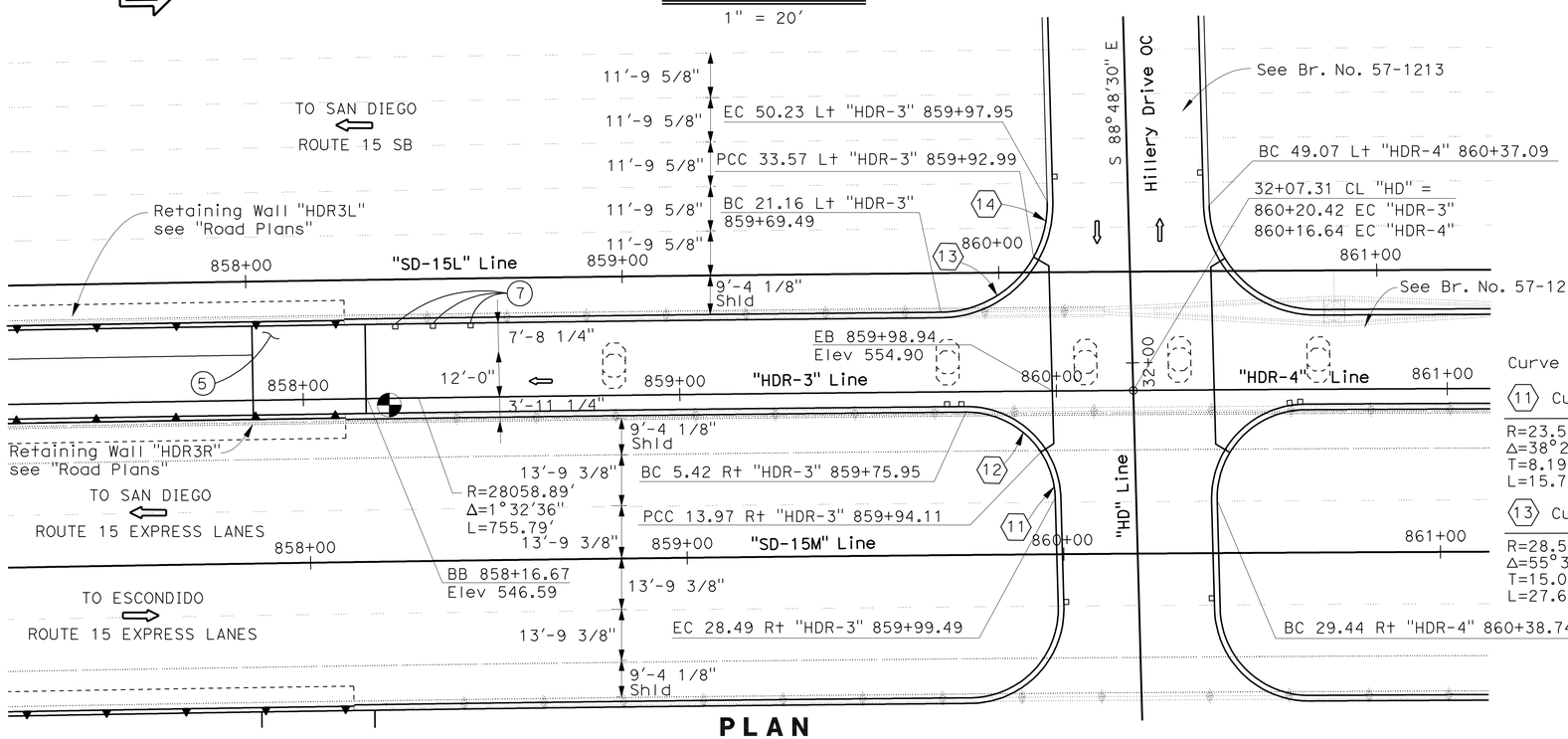

PLAN

1" = 20'

Curve Data:

⑪ Curve	⑫ Curve
R=23.52	R=23.52
Δ=38°24'48"	Δ=50°30'49"
T=8.19	T=11.10
L=15.77	L=20.74

⑬ Curve	⑭ Curve
R=28.52	R=28.52
Δ=55°35'49"	Δ=35°27'47"
T=15.03	T=9.12
L=27.67	L=17.65

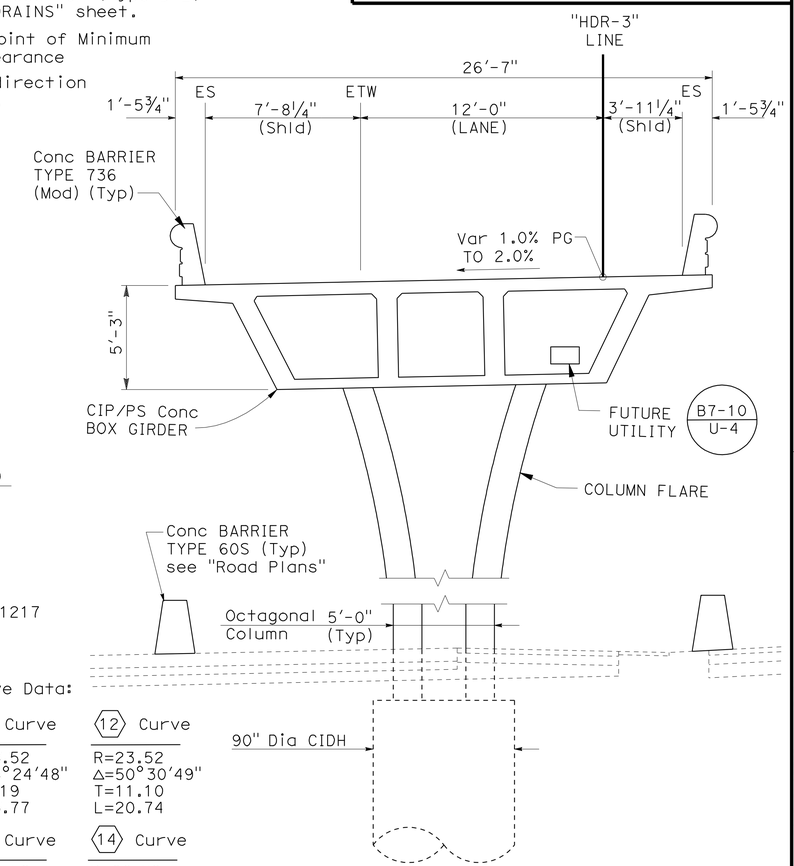

TYPICAL SECTION

¼" = 1'-0"

HILLERY DIRECT ACCESS RAMPS
SOUTHBOUND ON-RAMP
GENERAL PLAN

DESIGN OVERSIGHT: Norbert Gee	DESIGN	BY R Ramoso/H Mai	CHECKED John Powell
10-25-10 SIGN OFF DATE	DETAILS	BY C Morgan/C Lente	CHECKED John Powell
	QUANTITIES	BY R Ramoso/H Mai	CHECKED Janice Reguyal

LOAD & RESISTANCE FACTOR DESIGN — LIVE LOADING: HL93 W/"LOW-BOY"; PERMIT DESIGN VEHICLE

LAYOUT	BY R Ramoso/H Mai	CHECKED R Hawthorne
SPECIFICATIONS	BY H Strandgaard	PLANS AND SPECS COMPARED R Hawthorne

PREPARED FOR THE STATE OF CALIFORNIA DEPARTMENT OF TRANSPORTATION

Robert E. Hawthorne
PROJECT ENGINEER

BRIDGE NO. 57-1216
POST MILES R15.7

DESIGN GENERAL PLAN SHEET (ENGLISH) (REV. 06-01-09)

ORIGINAL SCALE IN INCHES FOR REDUCED PLANS 0 1 2 3

CU 11269
EA 2T0951

DISREGARD PRINTS BEARING EARLIER REVISION DATES → REVISION DATES (PRELIMINARY STAGE ONLY) 01/22/10 03/08/10 05/18/10 05/27/10 06/15/10 06/30/10 08/27/10 10/06/10

SHEET 1 OF 32

FILE => 57-1216-a-gp01.dgn

USERNAME => s119571 DATE PLOTTED => 27-OCT-2011 TIME PLOTTED => 13:30

DIST	COUNTY	ROUTE	POST MILES TOTAL PROJECT	SHEET No	TOTAL SHEETS
11	SD	15	M15.0/M16.4	547	610

REGISTERED CIVIL ENGINEER 10-15-10 DATE

10-24-11
PLANS APPROVAL DATE

REGISTERED PROFESSIONAL ENGINEER ROBERT E. HAWTHORNE No. 40075 Exp. 03/31/12 CIVIL STATE OF CALIFORNIA

The State of California or its officers or agents shall not be responsible for the accuracy or completeness of scanned copies of this plan sheet.

SANDAG
401 B STREET, SUITE 800
SAN DIEGO, CA 92101

AECOM
7807 CONVOY COURT, SUITE 200
SAN DIEGO, CA 92111

INDEX TO PLANS

SHEET No.	TITLE
1.	GENERAL PLAN
2.	INDEX TO PLANS No. 1
3.	INDEX TO PLANS No. 2
4.	DECK CONTOURS
5.	FOUNDATION PLAN
6.	ABUTMENT LAYOUT
7.	ABUTMENT DETAILS
8.	BENT LAYOUT
9.	COLUMN DETAILS
10.	ISOLATION CASING DETAILS No. 1
11.	ISOLATION CASING DETAILS No. 2
12.	TYPICAL SECTION No. 1
13.	TYPICAL SECTION No. 2
14.	GIRDER LAYOUT
15.	GIRDER DETAILS No. 1
16.	GIRDER DETAILS No. 2
17.	GIRDER DETAILS No. 3
18.	GIRDER DETAILS No. 4
19.	GIRDER DETAILS No. 5
20.	GIRDER DETAILS No. 6
21.	GIRDER REINFORCEMENT
22.	PILE DETAILS
23.	JOINT SEAL ASSEMBLY MOVEMENT RATING GREATER THAN 4"
24.	DECK DRAINS
25.	STRUCTURE APPROACH DRAINAGE DETAILS
26.	STRUCTURE APPROACH TYPE N (30S)
27.	CONCRETE BARRIER TYPE 736 (MOD)
28.	LOG OF TEST BORINGS SHEET 1 OF 5
29.	LOG OF TEST BORINGS SHEET 2 OF 5
30.	LOG OF TEST BORINGS SHEET 3 OF 5
31.	LOG OF TEST BORINGS SHEET 4 OF 5
32.	LOG OF TEST BORINGS SHEET 5 OF 5

PILE DATA TABLE

Support Location	Pile Type	Cut-Off Elevation (ft)	Nominal Resistance (kips) Comp.	Nominal Resistance (kips) Tension	Design Tip Elevation (ft)	Specified Tip Elevation (ft)
Bent 2	90 in Type II CIDH	522.0	2660	0	478.0 (a)	478.0
Bent 3	90 in Type II CIDH	526.0	2840	0	482.0 (a)	482.0

Design tip elevations are controlled by the following demands:
(a) Compression (b) Tension (d) Lateral Loads

SPREAD FOOTING DATA TABLE

Support Location	Working Stress Design (WSD): Permissible Gross Contact Stress (Settlement) (ksf)	Working Stress Design (WSD): Allowable Gross Bearing Capacity (ksf)	Load and Resistance Factor Design (LRFD): Service Permissible Net Contact Stress (Settlement) (ksf)	Load and Resistance Factor Design (LRFD): Strength Factored Gross Nominal Bearing Resistance ϕ_b = X (ksf)	Load and Resistance Factor Design (LRFD): Extreme Event Factored Gross Nominal Bearing Resistance ϕ_b = 1.00 (ksf)
Abut 1	N/A	10.0	N/A	N/A	N/A

GENERAL NOTES
LOAD AND RESISTANCE FACTOR DESIGN

DESIGN: AASHTO LRFD Bridge Design Specifications 4th edition with Caltrans Amendments preface dated: December 2008

SEISMIC DESIGN: Caltrans Seismic Design Criteria (SDC), Version 1.4, June 2006.

DEAD LOAD: Includes 35 psf for Future Wearing Surface

LIVE LOADING: HL-93 and Permit (P-15) Design Load.

SEISMIC LOADING: Peak Rock Acceleration = 0.25 g
ARS Soil Type C
Site Specific Displacement Time History

REINFORCED CONCRETE: fy = 60 Ksi
f'c = 3.6 Ksi (Min)
n = 8

PRESTRESSED CONCRETE: See Prestressing Notes on "Girder Layout No. 1" sheet

HILLARY DRIVE OC DAR
SOUTHBOUND ON-RAMP BR #57-1216
QUANTITIES

STRUCTURE EXCAVATION (TYPE D)	150	CY
STRUCTURE BACKFILL (BRIDGE)	150	CY
90" CAST-IN-DRILLED-HOLE CONCRETE PILING	88	LF
PRESTRESSING CAST-IN-PLACE CONCRETE	LUMP	SUM
STRUCTURAL CONCRETE, BRIDGE FOOTING	46	CY
STRUCTURAL CONCRETE, BRIDGE	550	CY
STRUCTURAL CONCRETE, APPROACH SLAB (TYPE N)	30	CY
MINOR CONCRETE (BACKFILL)	25	CY
ARCHITECTURAL SURFACE (BARRIER)	770	SQFT
JOINT SEAL (MR 2")	27	LF
JOINT SEAL ASSEMBLY (SWIVILING)(MR 9 1/2 ")	53	LF
BAR REINFORCING STEEL (BRIDGE)	187,000	LB
WELDED STEEL PIPE CASING (BRIDGE)	40	LF
ISOLATION CASING	4,480	LB
BRIDGE DECK DRAINAGE SYSTEM	2,800	LB
CONCRETE BARRIER (TYPE 736 MODIFIED)	421	LF

DESIGN OVERSIGHT Norbert Gee
10-25-10
SIGN OFF DATE

	BY	CHECKED
DESIGN	R Ramoso/H Mai	John Powell
DETAILS	C Morgan/C Lente	John Powell
QUANTITIES	R Ramoso/H Mai	Janice Reguyal

PREPARED FOR THE STATE OF CALIFORNIA DEPARTMENT OF TRANSPORTATION

Robert E. Hawthorne
PROJECT ENGINEER

BRIDGE NO. 57-1216
POST MILE R15.7

HILLERY DIRECT ACCESS RAMPS
SOUTHBOUND ON-RAMP
INDEX TO PLANS No. 1

DESIGN DETAIL SHEET (ENGLISH) (REV. 06-01-09)

ORIGINAL SCALE IN INCHES FOR REDUCED PLANS 0 1 2 3

CU 11269
EA 2T0951

DISREGARD PRINTS BEARING EARLIER REVISION DATES

REVISION DATES (PRELIMINARY STAGE ONLY) 01/22/10 03/08/10 05/18/10 05/27/10 06/15/10 06/30/10 08/27/10

SHEET 2 OF 32

FILE => 57-1216-a-itp01.dgn

USERNAME => s119571 DATE PLOTTED => 27-Oct-2011 TIME PLOTTED => 13:33

DIST	COUNTY	ROUTE	POST MILES TOTAL PROJECT	SHEET No	TOTAL SHEETS
11	SD	15	M15.0/M16.4	548	610

REGISTERED CIVIL ENGINEER 10-15-10 DATE

10-24-11
PLANS APPROVAL DATE

REGISTERED PROFESSIONAL ENGINEER ROBERT E. HAWTHORNE No. 40075 Exp. 03/31/12 CIVIL STATE OF CALIFORNIA

The State of California or its officers or agents shall not be responsible for the accuracy or completeness of scanned copies of this plan sheet.

SANDAG
401 B STREET, SUITE 800
SAN DIEGO, CA 92101

AECOM
7807 CONVOY COURT, SUITE 200
SAN DIEGO, CA 92111

Bridge No. 57-1216

Period (sec)	Acceleration
0.010	0.267
0.020	0.325
0.030	0.365
0.050	0.421
0.075	0.473
0.100	0.513
0.120	0.538
0.150	0.571
0.200	0.616
0.250	0.576
0.300	0.546
0.400	0.462
0.500	0.406
0.750	0.330
1.000	0.284
1.500	0.194
2.000	0.148
3.000	0.094
4.000	0.068
5.000	0.056

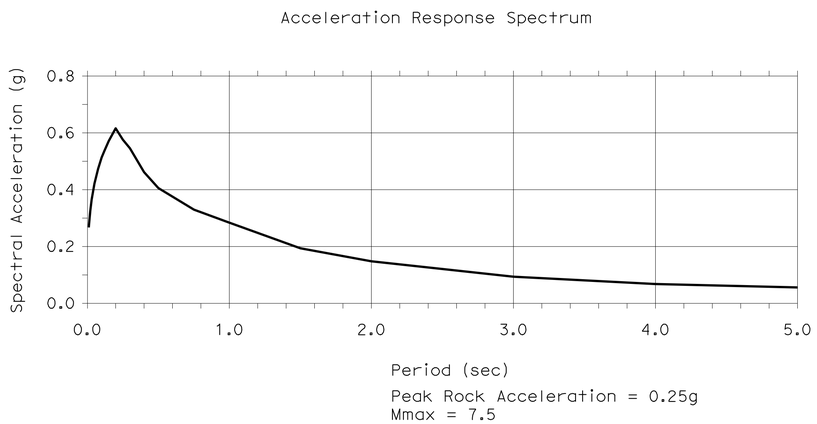

Note:
ARS curve was modified for Near Fault Directivity Effect (SDC Ver. 1.4 Section 6.1.2.1)

SITE SPECIFIC ACCELERATION RESPONSE SPECTRA CURVE

STANDARD PLANS DATED MAY 2006

A10A	ACRONYMS AND ABBREVIATIONS (SHEET 1 OF 2)
A10B	ACRONYMS AND ABBREVIATIONS (SHEET 2 OF 2)
A10C	SYMBOLS (SHEET 1 OF 2)
A10D	SYMBOLS (SHEET 2 OF 2)
A62C	LIMITS OF PAYMENT FOR EXCAVATION AND BACKFILL - BRIDGE
RSP P-10	CONCRETE PAVEMENT DOWEL BAR DETAILS
T3	TEMPORARY RAILING (TYPE K)
BO-1	BRIDGE DETAILS
BO-3	BRIDGE DETAILS
BO-5	BRIDGE DETAILS
BO-13	BRIDGE DETAILS
RSP B6-21	JOINT SEALS (MAXIMUM MOVEMENT RATING = 2")
B7-1	BOX GIRDER DETAILS
B7-6	DECK DRAINS TYPES D-1 AND D-2
B7-8	DECK DRAINAGE DETAILS
B7-10	UTILITY OPENING BOX GIRDER
B8-5	CAST-IN-PLACE PRESTRESSED GIRDER DETAILS
B11-56	CONCRETE BARRIER TYPE 736
B14-3	COMMUNICATION AND SPRINKLER CONTROL CONDUITS (CONDUITS LESS THAN 4")

STANDARD PLAN SHEET No.

DETAIL No.

DESIGN OVERSIGHT Norbert Gee
10-25-10
SIGN OFF DATE

	BY	CHECKED
DESIGN	R Ramoso/H Mai	John Powell
DETAILS	C Morgan/C Lente	John Powell
QUANTITIES	R Ramoso/H Mai	Janice Reguyal

PREPARED FOR THE STATE OF CALIFORNIA DEPARTMENT OF TRANSPORTATION

Robert E. Hawthorne
PROJECT ENGINEER

BRIDGE NO. 57-1216
POST MILE R15.7

HILLERY DIRECT ACCESS RAMPS
SOUTHBOUND ON-RAMP
INDEX TO PLANS No.2

DESIGN DETAIL SHEET (ENGLISH) (REV. 06-01-09)

ORIGINAL SCALE IN INCHES FOR REDUCED PLANS 0 1 2 3

CU 11269
EA 2T0951

DISREGARD PRINTS BEARING EARLIER REVISION DATES

REVISION DATES (PRELIMINARY STAGE ONLY) 01/22/10 03/08/10 05/18/10 05/27/10 06/15/10 06/30/10 08/27/10

SHEET 3 OF 32

FILE => 57-1216-a-itp02.dgn

USERNAME => s119571 DATE PLOTTED => 27-OCT-2011 TIME PLOTTED => 13:38

DIST	COUNTY	ROUTE	POST MILES TOTAL PROJECT	SHEET No	TOTAL SHEETS
11	SD	15	M15.0/M16.4	549	610

REGISTERED CIVIL ENGINEER — DATE 10-15-10

10-24-11
PLANS APPROVAL DATE

REGISTERED PROFESSIONAL ENGINEER — ROBERT E. HAWTHORNE — No. 40075 — Exp. 03/31/12 — CIVIL — STATE OF CALIFORNIA

The State of California or its officers or agents shall not be responsible for the accuracy or completeness of scanned copies of this plan sheet.

SANDAG
401 B STREET, SUITE 800
SAN DIEGO, CA 92101

AECOM
7807 CONVOY COURT, SUITE 200
SAN DIEGO, CA 92111

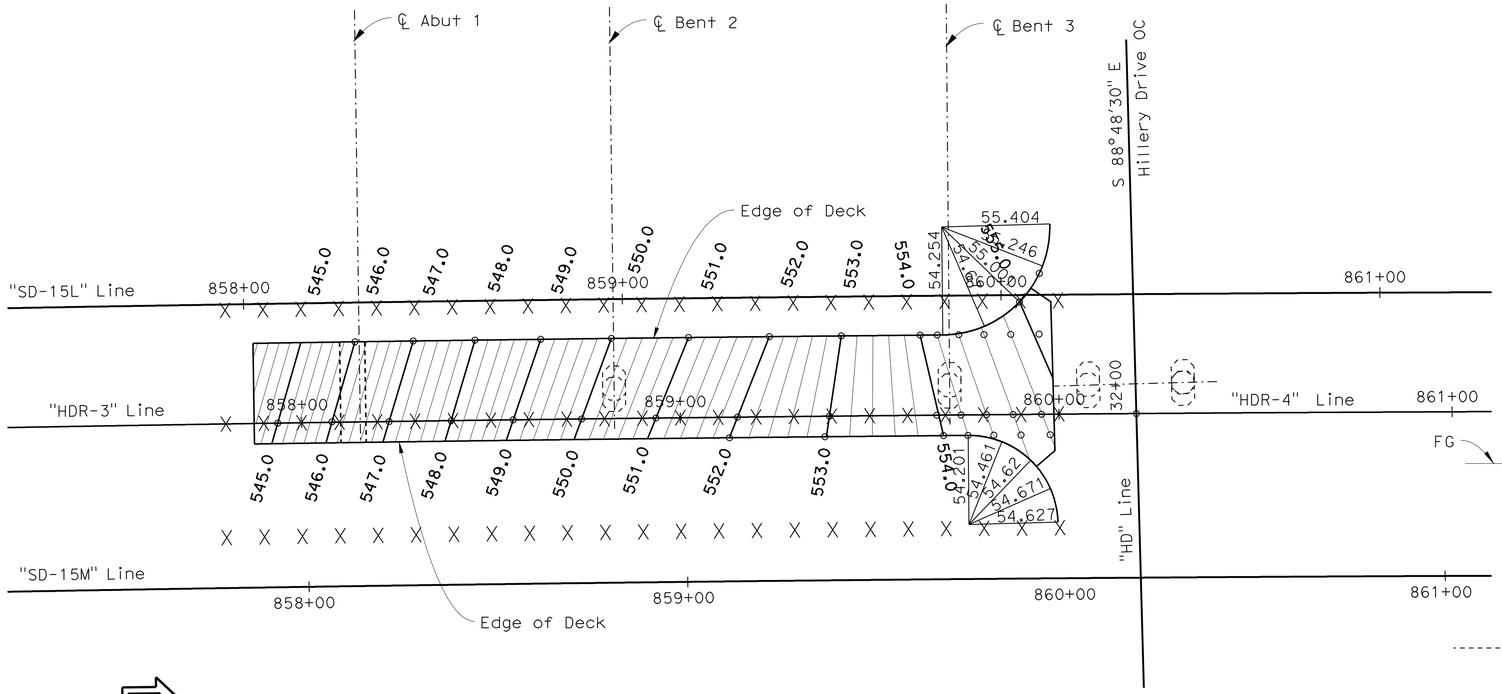

PLAN

1" = 20'

Notes:

X - Indicates 10 foot intervals, along "HDR-3" Line

Contour interval is 0.20 ft.
Contours do not include camber.

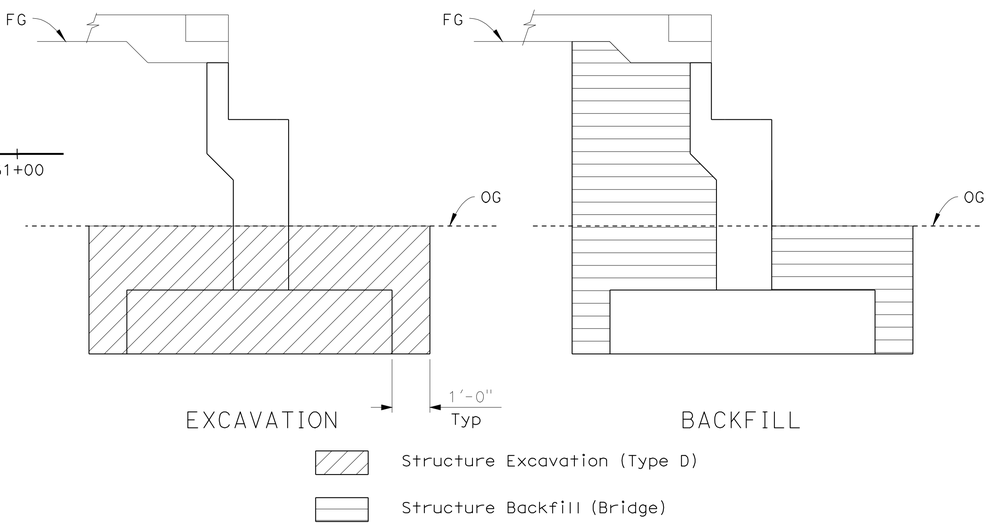

PAY LIMITS FOR STRUCTURE EXCAVATION AND BACKFILL ABUTMENT

No Scale

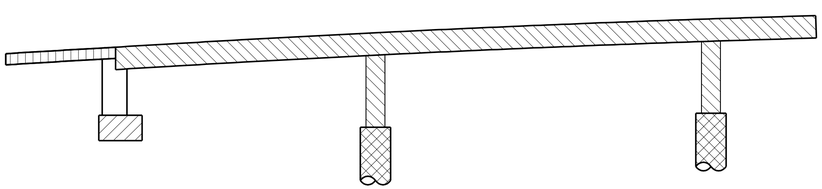

Structural Concrete, Bridge

Structural Concrete, Bridge (f'c=4 ksi @ 28 days)

Structural Concrete, Bridge Footing

Cast-In-Drilled-Hole Concrete Pile (f'c=4 ksi @ 28 days)

Structural Concrete, Approach Slab

CONCRETE STRENGTH AND TYPE LIMITS

No Scale

HILLERY DIRECT ACCESS RAMPS
SOUTHBOUND ON-RAMP
DECK CONTOURS

DESIGN OVERSIGHT — Norbert Gee
10-25-10
SIGN OFF DATE

	BY	CHECKED
DESIGN	R Ramoso/H Mai	John Powell
DETAILS	C Morgan/C Lente	John Powell
QUANTITIES	R Ramoso/H Mai	Janice Reguyal

PREPARED FOR THE STATE OF CALIFORNIA DEPARTMENT OF TRANSPORTATION

Robert E. Hawthorne
PROJECT ENGINEER

BRIDGE NO. 57-1216
POST MILE R15.7

CU 11269
EA 2T0951

DISREGARD PRINTS BEARING EARLIER REVISION DATES

REVISION DATES (PRELIMINARY STAGE ONLY): 01/22/10 03/08/10 05/18/10 05/27/10 06/15/10 06/30/10 08/27/10

SHEET 4 OF 32

DESIGN DETAIL SHEET (ENGLISH) (REV. 06-01-09)

ORIGINAL SCALE IN INCHES FOR REDUCED PLANS 0 1 2 3

FILE => 57-1216-d-dc01.dgn

USERNAME => s613571 DATE PLOTTED => 27-OCT-2011 TIME PLOTTED => 13:30

DIST	COUNTY	ROUTE	POST MILES TOTAL PROJECT	SHEET No	TOTAL SHEETS
11	SD	15	M15.0/M16.4	550	610

Robert E Hawthorne 10-15-10
REGISTERED CIVIL ENGINEER DATE

10-24-11
PLANS APPROVAL DATE

REGISTERED PROFESSIONAL ENGINEER ROBERT E. HAWTHORNE No. 40075 Exp. 03/31/12 CIVIL STATE OF CALIFORNIA

The State of California or its officers or agents shall not be responsible for the accuracy or completeness of scanned copies of this plan sheet.

SANDAG
401 B STREET, SUITE 800
SAN DIEGO, CA 92101

AECOM
7807 CONVOY COURT, SUITE 200
SAN DIEGO, CA 92111

LEGEND

- Indicates CIDH Pile
- XXX.XX — Indicates bottom of footing elevation
- Structure Excavation (Type D)
- Structure Backfill (Bridge)
- Minor Concrete (Backfill)

ISOLATION CASING	
Location	Length of Payment (ft)
Bent 2	12'-4"

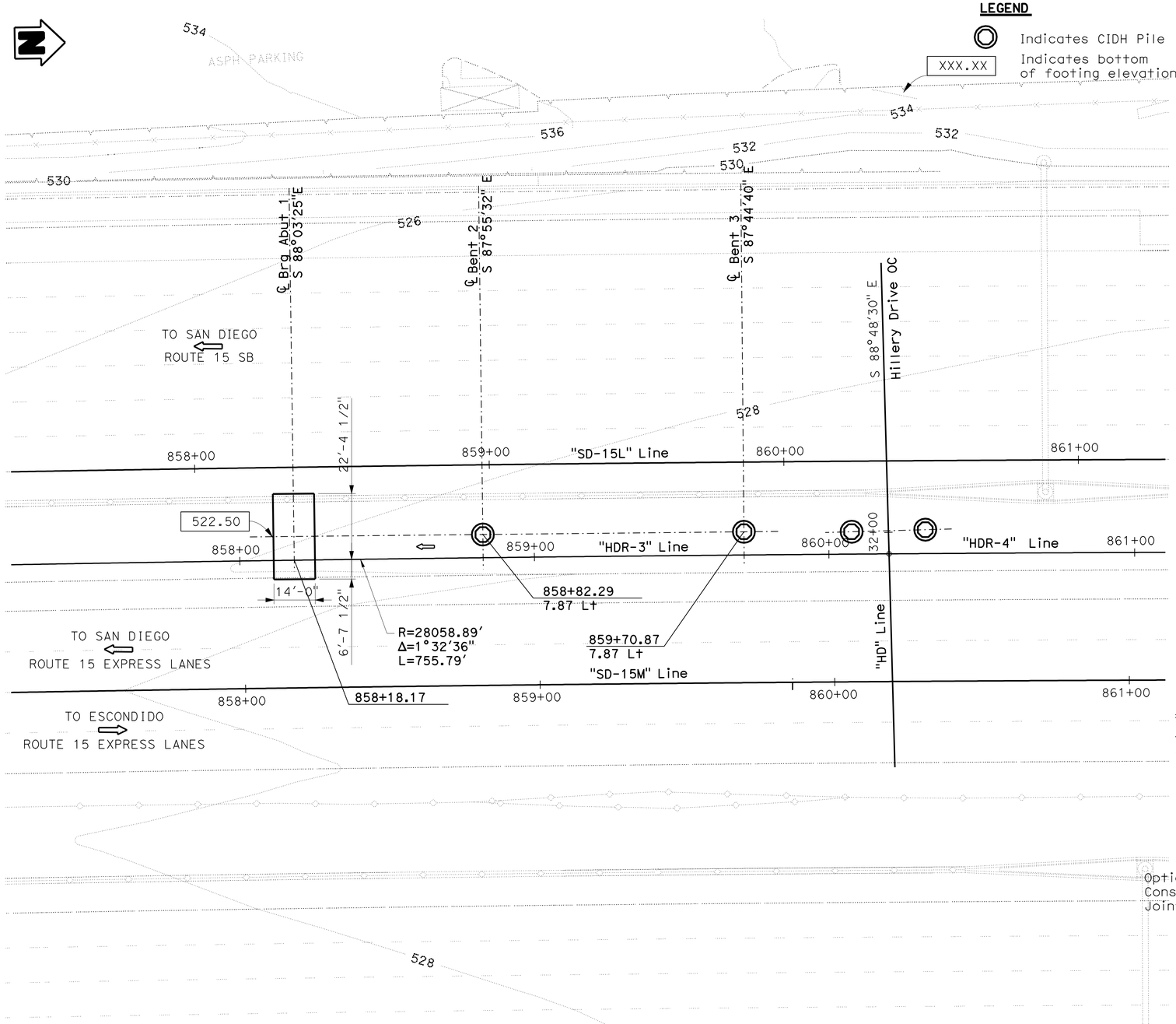

PLAN
1" = 20'

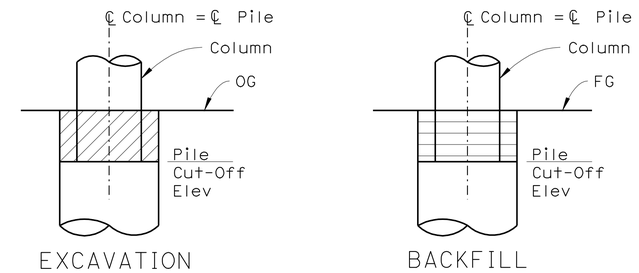

PAY LIMITS FOR STRUCTURE EXCAVATION AND BACKFILL BENT 3
No Scale

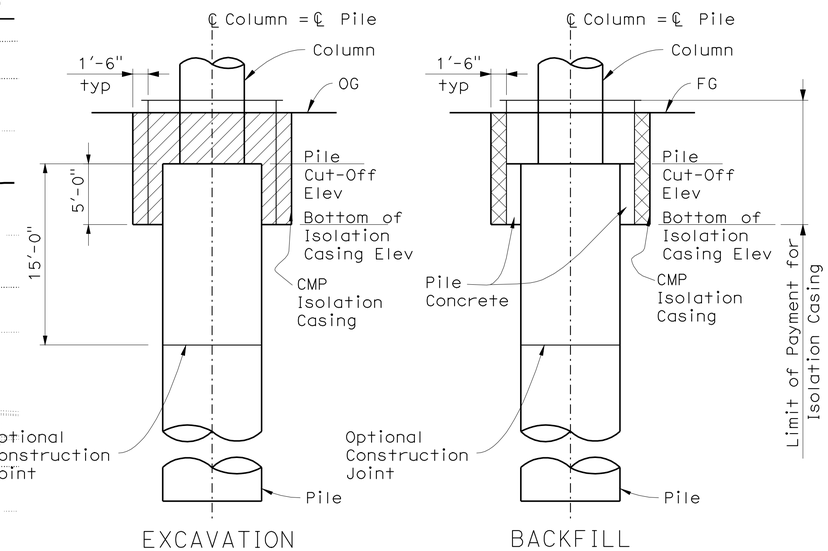

PAY LIMITS FOR STRUCTURE EXCAVATION AND BACKFILL BENT 2
No Scale

GEOTECHNICAL PROFESSIONAL APPROVAL DATE

HILLERY DIRECT ACCESS RAMPS
SOUTHBOUND ON-RAMP
FOUNDATION PLAN

DESIGN OVERSIGHT Norbert Gee	SCALE: 1"=20'	VERT.DATUM NAVD 88	HORZ.DATUM NAD 83	DESIGN	BY R Ramoso/H Mai	CHECKED John Powell	PREPARED FOR THE STATE OF CALIFORNIA DEPARTMENT OF TRANSPORTATION
10-25-10	PHOTOGRAMMETRY AS OF: 05-29-2006	ALIGNMENT TIES AECOM Control Lines		DETAILS	BY C Morgan/C Lente	CHECKED John Powell	
SIGN OFF DATE	SURVEYED BY Diego Alvarado	DRAFTED BY Nicholas Haigh		QUANTITIES	BY R Ramoso/H Mai	CHECKED Janice Reguyal	
	FIELD CHECKED BY Diego Alvarado	CHECKED BY Michael Crull					

Robert E. Hawthorne
PROJECT ENGINEER

BRIDGE NO. 57-1216
POST MILE R15.7

CU 11269
EA 2T0951

FOUNDATION PLAN SHEET (ENGLISH) (REV. 06-01-09)

ORIGINAL SCALE IN INCHES FOR REDUCED PLANS 0 1 2 3

DISREGARD PRINTS BEARING EARLIER REVISION DATES

REVISION DATES (PRELIMINARY STAGE ONLY) 01/22/10 03/08/10 05/18/10 05/27/10 06/15/10 06/30/10 08/27/10 10/06/10

SHEET 5 OF 32

FILE => 57-1216-e-fp101.dgn

USERNAME => s119571 DATE PLOTTED => 27-OCT-2011 TIME PLOTTED => 13:31

DIST	COUNTY	ROUTE	POST MILES TOTAL PROJECT	SHEET No	TOTAL SHEETS
11	SD	15	M15.0/M16.4	551	610

REGISTERED CIVIL ENGINEER 10-15-10 DATE

10-24-11
PLANS APPROVAL DATE

REGISTERED PROFESSIONAL ENGINEER ROBERT E. HAWTHORNE No. 40075 Exp. 03/31/12 CIVIL STATE OF CALIFORNIA

The State of California or its officers or agents shall not be responsible for the accuracy or completeness of scanned copies of this plan sheet.

SANDAG
401 B STREET, SUITE 800
SAN DIEGO, CA 92101

AECOM
7807 CONVOY COURT, SUITE 200
SAN DIEGO, CA 92111

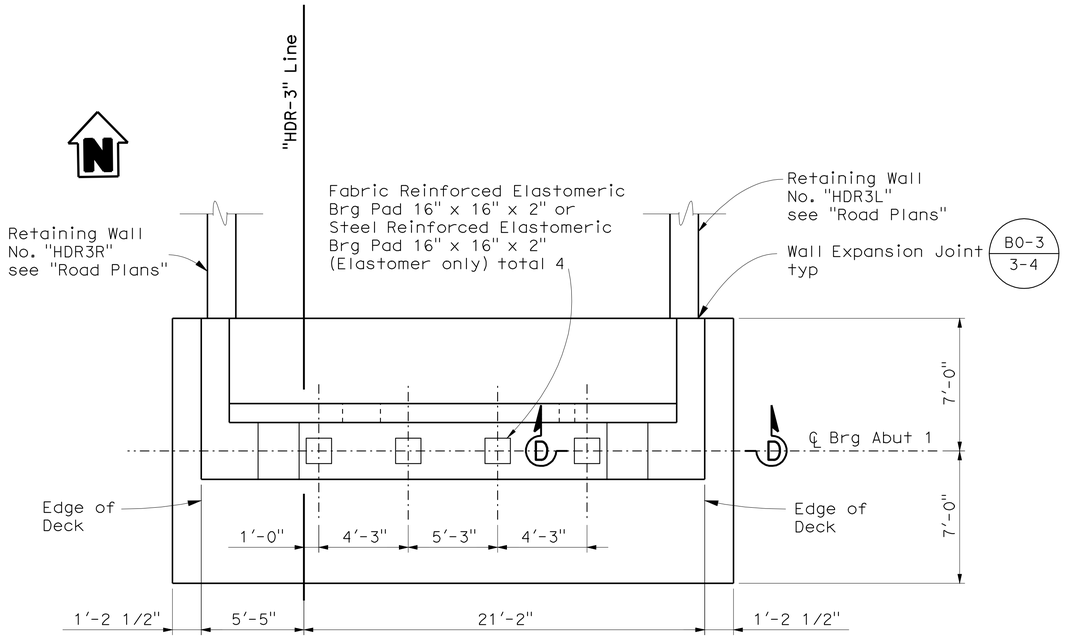

PLAN

1/4" = 1'-0"

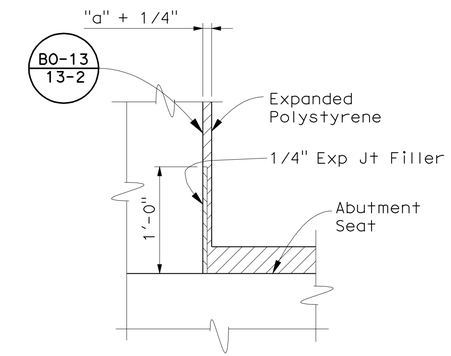

BACKWALL BASE DETAIL

No Scale

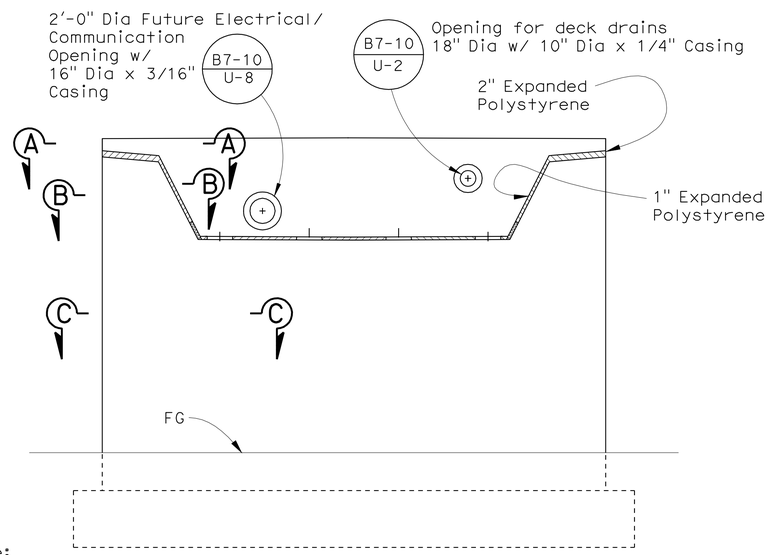

Note:
For Section A-A, B-B, C-C, and D-D see "ABUTMENT DETAILS"

ELEVATION

1/4" = 1'-0"

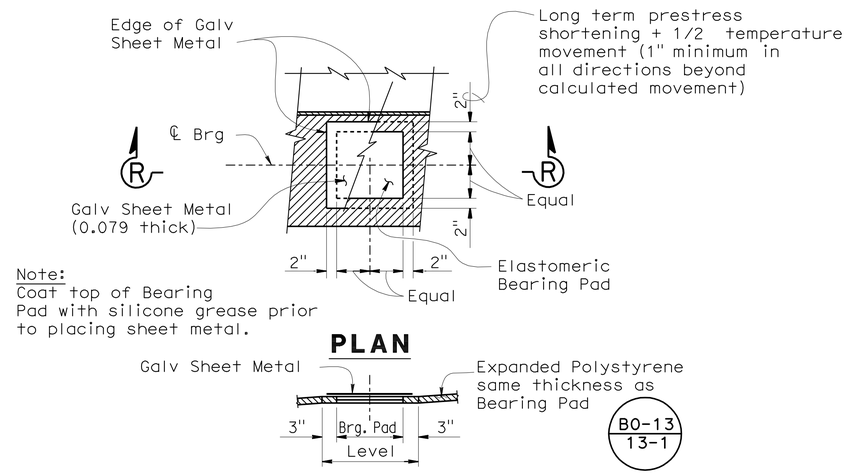

Note:
Coat top of Bearing Pad with silicone grease prior to placing sheet metal.

PLAN

SECTION R-R

BEARING PAD DETAIL

No Scale

Details typical at all bearing pads

HILLERY DIRECT ACCESS RAMPS

SOUTHBOUND ON-RAMP

ABUTMENT LAYOUT

DESIGN OVERSIGHT Norbert Gee

10-25-10
SIGN OFF DATE

	BY	CHECKED
DESIGN	R Ramoso/H Mai	John Powell
DETAILS	C Morgan/C Lente	John Powell
QUANTITIES	R Ramoso/H Mai	Janice Reguyal

PREPARED FOR THE STATE OF CALIFORNIA DEPARTMENT OF TRANSPORTATION

Robert E. Hawthorne
PROJECT ENGINEER

BRIDGE NO. 57-1216
POST MILE R15.7

DISREGARD PRINTS BEARING EARLIER REVISION DATES

REVISION DATES (PRELIMINARY STAGE ONLY): 01/22/10 03/08/10 05/18/10 05/27/10 06/15/10 06/30/10 08/27/10

SHEET 6 OF 32

DESIGN DETAIL SHEET (ENGLISH) (REV. 06-01-09)

ORIGINAL SCALE IN INCHES FOR REDUCED PLANS 0 1 2 3

CU 11269
EA 2T0951

FILE => 57-1216-f-a01_io1.dgn

USERNAME => s119571 DATE PLOTTED => 27-OCT-2011 TIME PLOTTED => 13:31

DIST	COUNTY	ROUTE	POST MILES TOTAL PROJECT	SHEET No	TOTAL SHEETS
11	SD	15	M15.0/M16.4	552	610

REGISTERED CIVIL ENGINEER — DATE 10-15-10

10-24-11
PLANS APPROVAL DATE

REGISTERED PROFESSIONAL ENGINEER — ROBERT E. HAWTHORNE — No. 40075 — Exp. 03/31/12 — CIVIL — STATE OF CALIFORNIA

The State of California or its officers or agents shall not be responsible for the accuracy or completeness of scanned copies of this plan sheet.

SANDAG
401 B STREET, SUITE 800
SAN DIEGO, CA 92101

AECOM
7807 CONVOY COURT, SUITE 200
SAN DIEGO, CA 92111

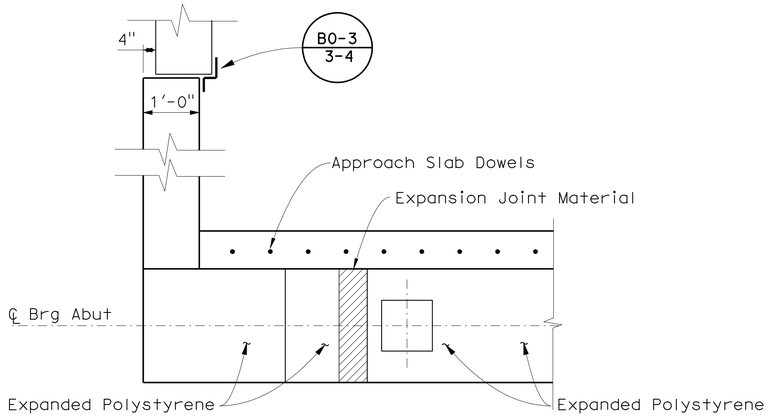

SECTION A-A
1/2"=1'-0"

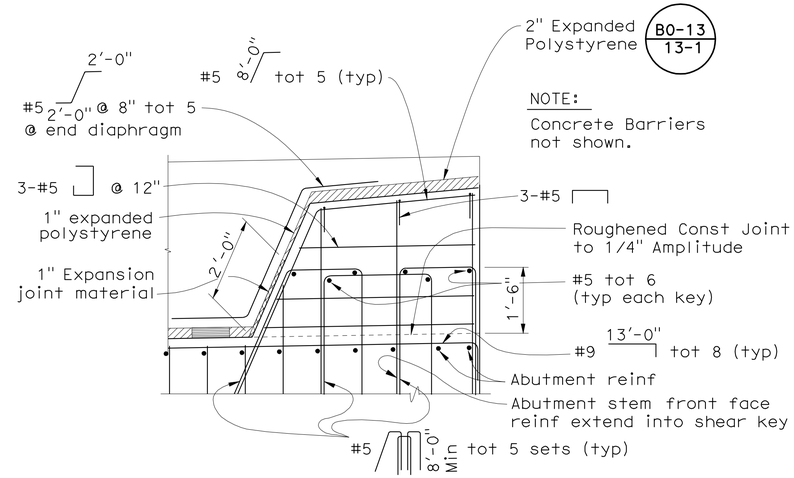

SECTION D-D
1/2"=1'-0"

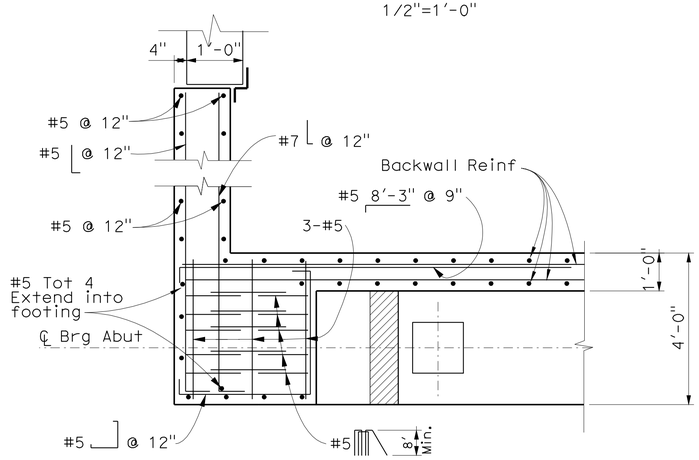

SECTION B-B
1/2"=1'-0"

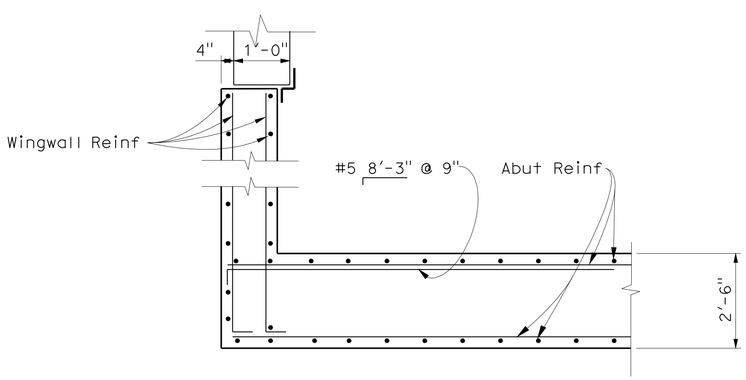

SECTION C-C
1/2"=1'-0"

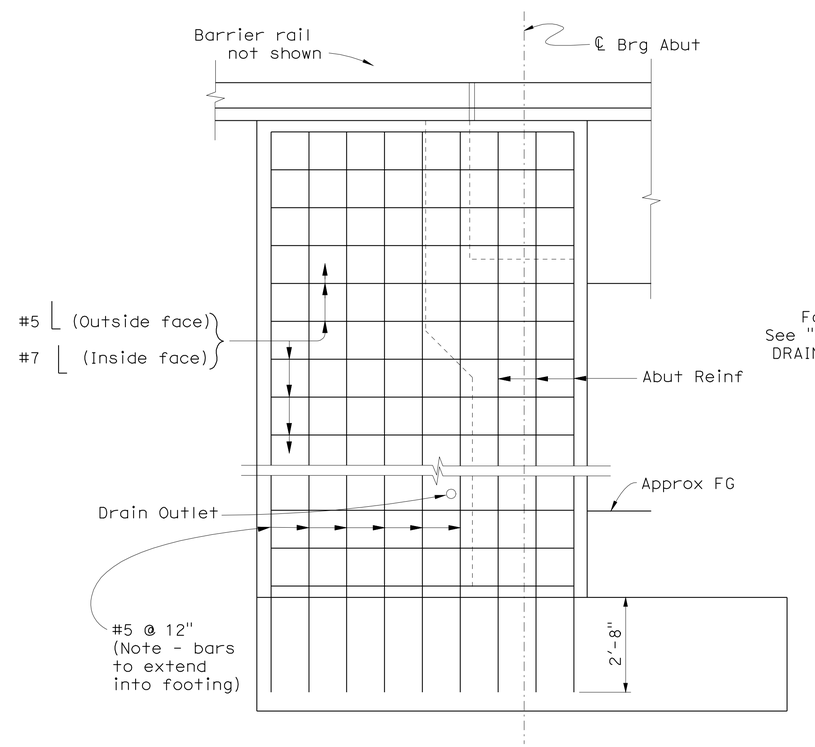

WING WALL ELEVATION
1/2"=1'-0"

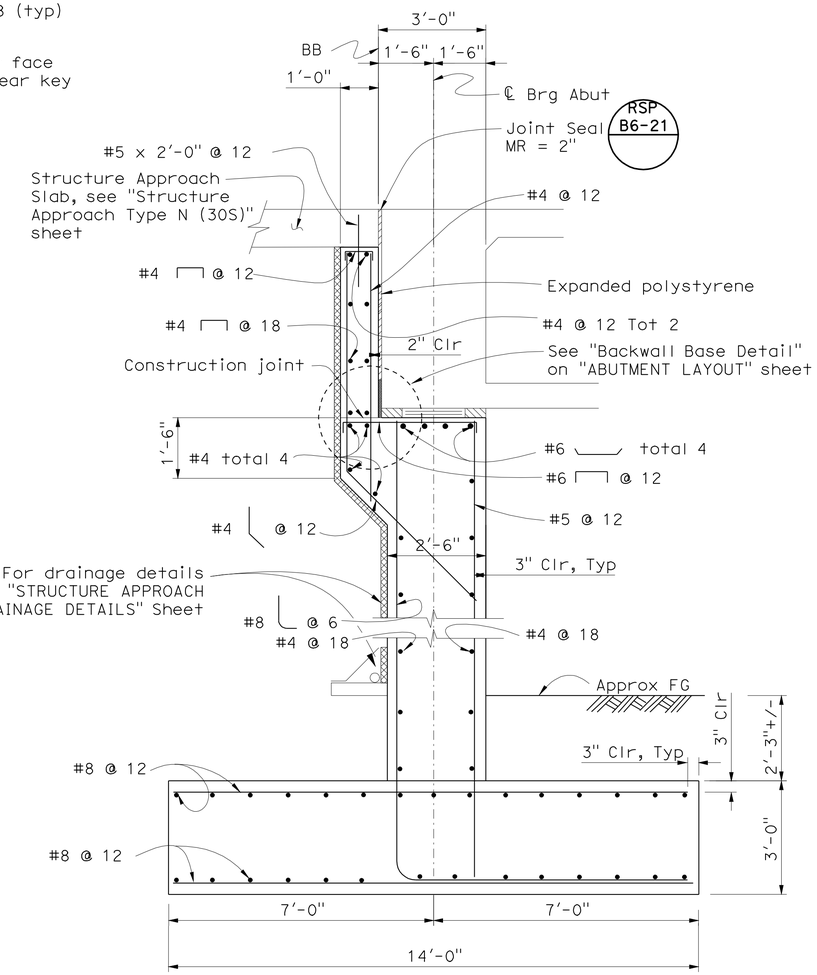

ABUTMENT SECTION
1/2"=1'-0"

HILLERY DIRECT ACCESS RAMPS
OUTHBOUND ON-RAMP
ABUTMENT DETAILS

DESIGN OVERSIGHT — Norbert Gee
10-25-10
SIGN OFF DATE

	BY	CHECKED
DESIGN	R Ramoso/H Mai	John Powell
DETAILS	C Morgan/C Lente	John Powell
QUANTITIES	R Ramoso/H Mai	Janice Reguyal

PREPARED FOR THE STATE OF CALIFORNIA DEPARTMENT OF TRANSPORTATION

Robert E. Hawthorne
PROJECT ENGINEER

BRIDGE NO. 57-1216
POST MILE R15.7

CU 11269
EA 2T0951

DISREGARD PRINTS BEARING EARLIER REVISION DATES — REVISION DATES (PRELIMINARY STAGE ONLY): 01/22/10 03/08/10 05/18/10 05/27/10 06/15/10 06/30/10 08/27/10

SHEET 7 OF 32

DESIGN DETAIL SHEET (ENGLISH) (REV. 06-01-09)

ORIGINAL SCALE IN INCHES FOR REDUCED PLANS 0 1 2 3

FILE => 57-1216-f-a01dt01.dgn

USERNAME => s119571 DATE PLOTTED => 27-OCT-2011 TIME PLOTTED => 13:31

DIST	COUNTY	ROUTE	POST MILES TOTAL PROJECT	SHEET No	TOTAL SHEETS
11	SD	15	M15.0/M16.4	553	610

REGISTERED CIVIL ENGINEER — DATE 10-15-10

10-24-11
PLANS APPROVAL DATE

REGISTERED PROFESSIONAL ENGINEER — ROBERT E. HAWTHORNE — No. 40075 — Exp. 03/31/12 — CIVIL — STATE OF CALIFORNIA

The State of California or its officers or agents shall not be responsible for the accuracy or completeness of scanned copies of this plan sheet.

SANDAG
401 B STREET, SUITE 800
SAN DIEGO, CA 92101

AECOM
7807 CONVOY COURT, SUITE 200
SAN DIEGO, CA 92111

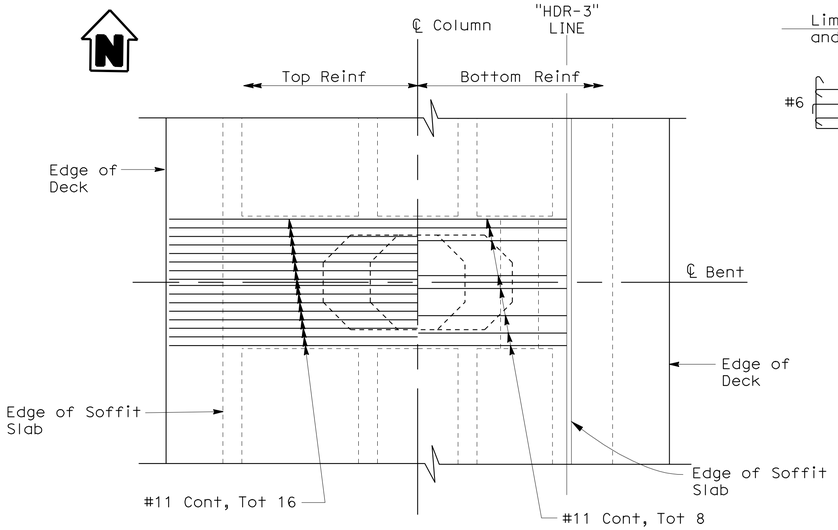

PLAN

SCALE 1/4" = 1'-0"

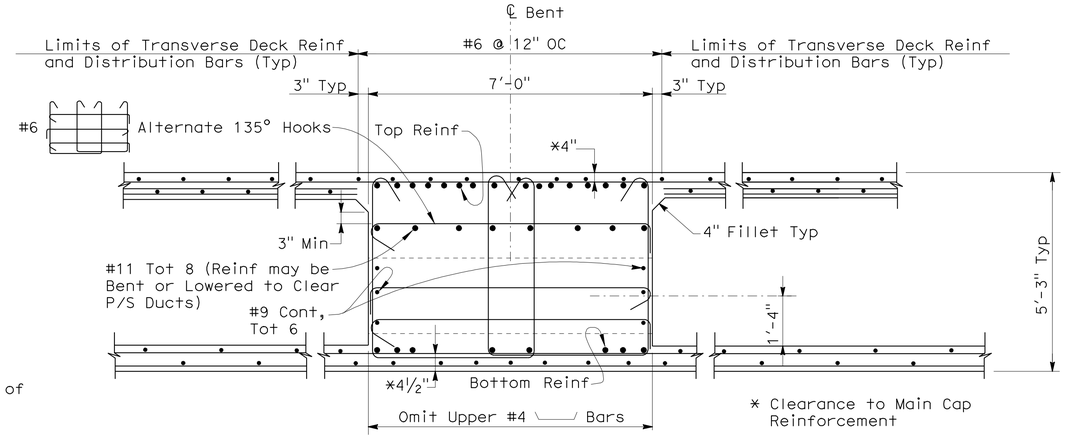

SECTION A-A (Bent 2)

1/2" = 1'-0"

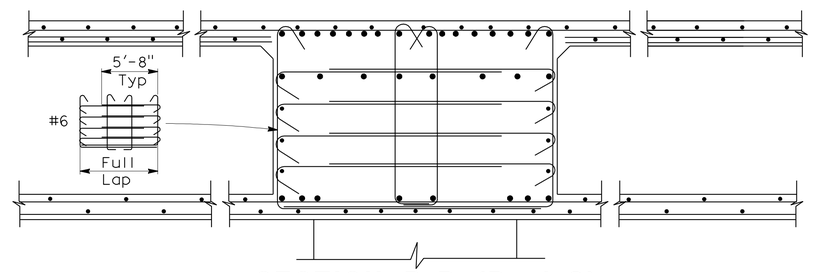

SECTION B-B (Bent 2)

1/2" = 1'-0"

Note: For Details Not Noted, See "Section A-A" (Bent 2)

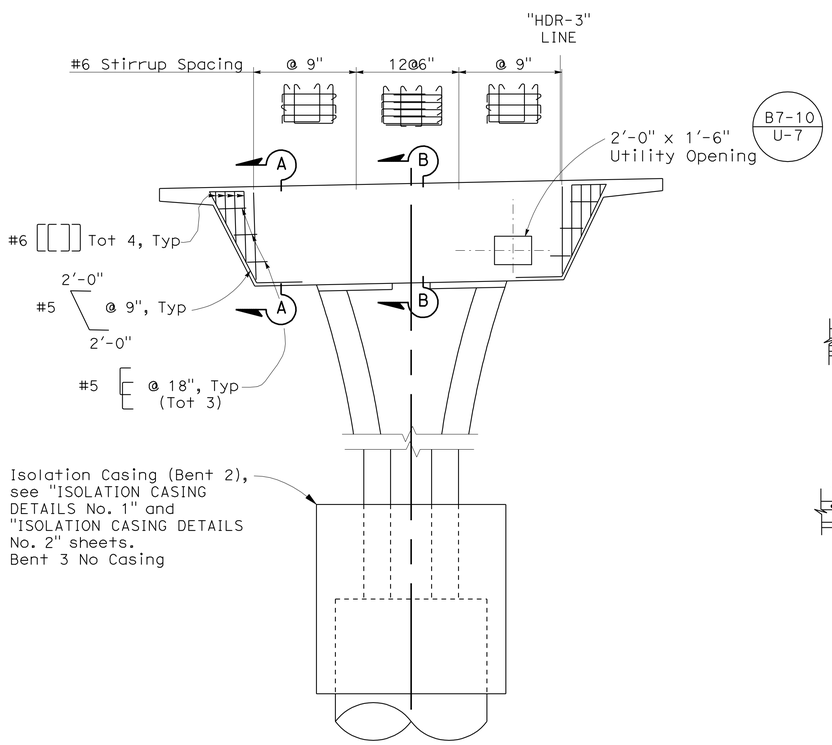

ELEVATION

SCALE 1/4" = 1'-0"

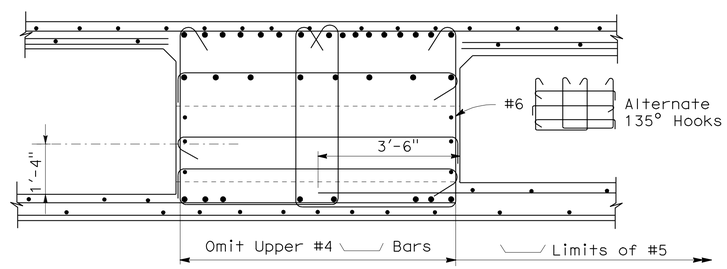

SECTION A-A (Bent 3)

1/2" = 1'-0"

Note: For Details Not Noted, See "Section A-A" (Bent 2)

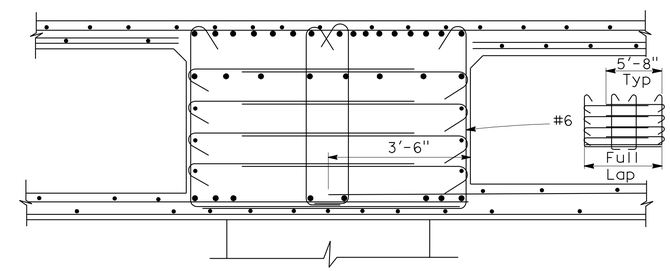

SECTION B-B (Bent 3)

1/2" = 1'-0"

Note: For Details Not Noted, See "Section A-A" (Bent 3) & Section A-A (Bent 2)

HILLERY DIRECT ACCESS RAMPS
SOUTHBOUND ON-RAMP
BENT LAYOUT

DESIGN OVERSIGHT — Norbert Gee
10-25-10
SIGN OFF DATE

	BY	CHECKED
DESIGN	R Ramoso/H Mai	John Powell
DETAILS	C Morgan/C Lente	John Powell
QUANTITIES	R Ramoso/H Mai	Janice Reguyal

PREPARED FOR THE STATE OF CALIFORNIA DEPARTMENT OF TRANSPORTATION

Robert E. Hawthorne
PROJECT ENGINEER

BRIDGE NO. 57-1216
POST MILE R15.7

CU 11269
EA 2T0951

DISREGARD PRINTS BEARING EARLIER REVISION DATES

REVISION DATES (PRELIMINARY STAGE ONLY): 01/22/10 03/08/10 05/18/10 05/27/10 06/15/10 06/30/10 08/27/10

SHEET 8 OF 32

DESIGN DETAIL SHEET (ENGLISH) (REV. 06-01-09)

ORIGINAL SCALE IN INCHES FOR REDUCED PLANS 0 1 2 3

FILE => 57-1216-h-b01_lo01.dgn

USERNAME => s613571 DATE PLOTTED => 27-OCT-2011 TIME PLOTTED => 13:31

DIST	COUNTY	ROUTE	POST MILES TOTAL PROJECT	SHEET No	TOTAL SHEETS
11	SD	15	M15.0/M16.4	554	610

REGISTERED CIVIL ENGINEER — DATE 10-15-10

10-24-11
PLANS APPROVAL DATE

REGISTERED PROFESSIONAL ENGINEER — ROBERT E. HAWTHORNE — No. 40075 — Exp. 03/31/12 — CIVIL — STATE OF CALIFORNIA

The State of California or its officers or agents shall not be responsible for the accuracy or completeness of scanned copies of this plan sheet.

SANDAG
401 B STREET, SUITE 800
SAN DIEGO, CA 92101

AECOM
7807 CONVOY COURT, SUITE 200
SAN DIEGO, CA 92111

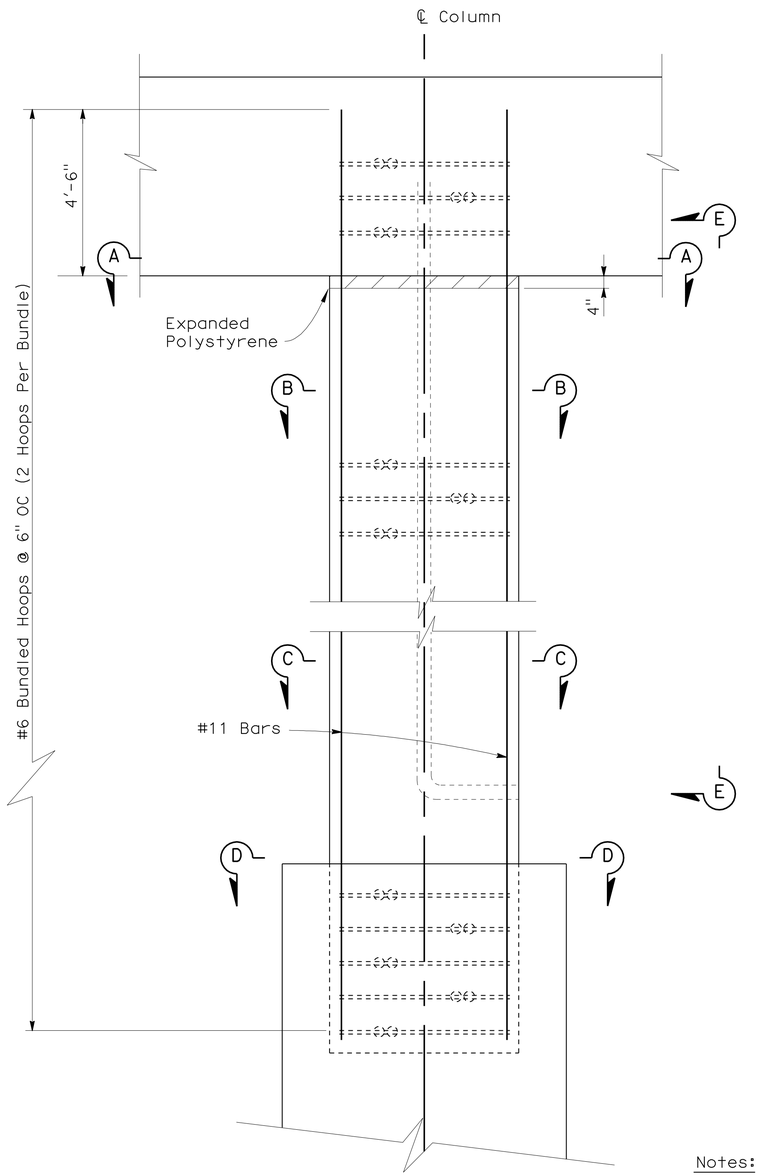

ELEVATION

½" = 1'-0"

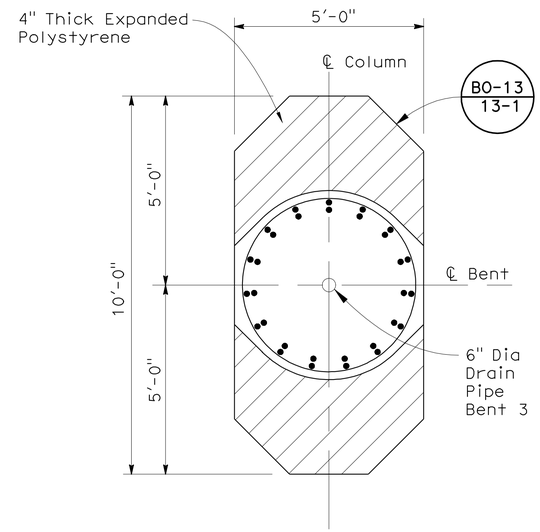

SECTION A-A

½" = 1'-0"

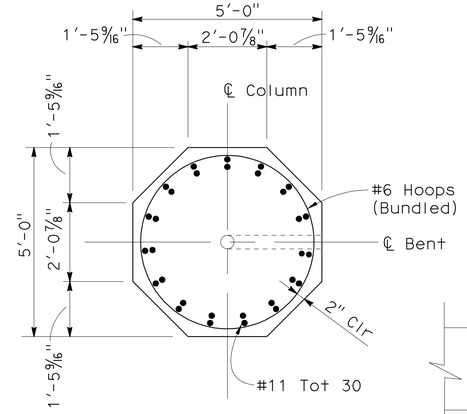

SECTION C-C

½" = 1'-0"

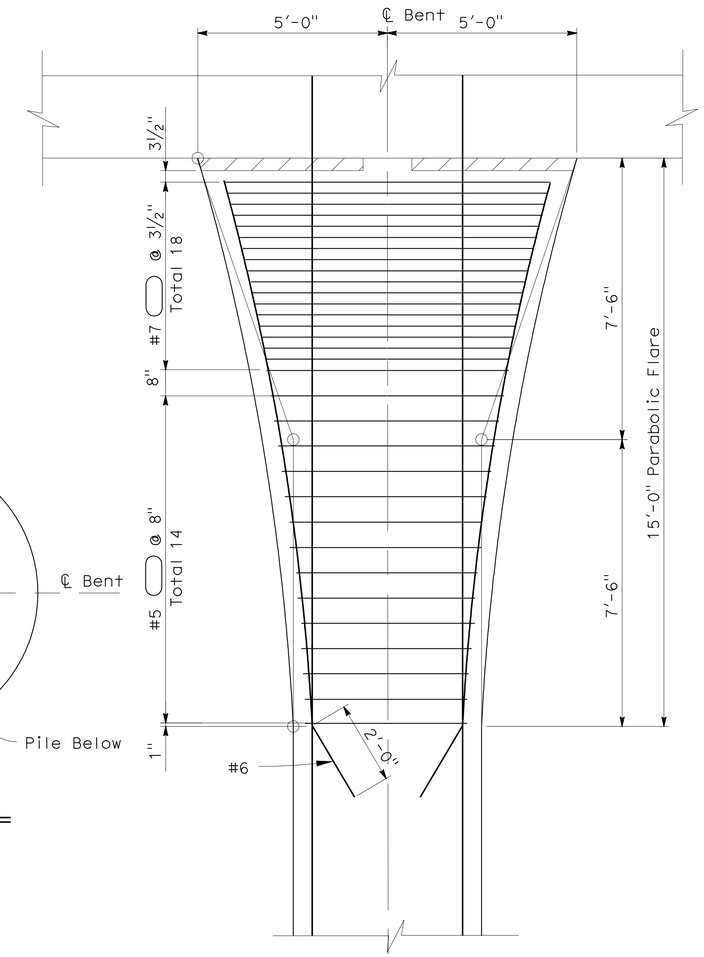

VIEW E-E

½" = 1'-0"

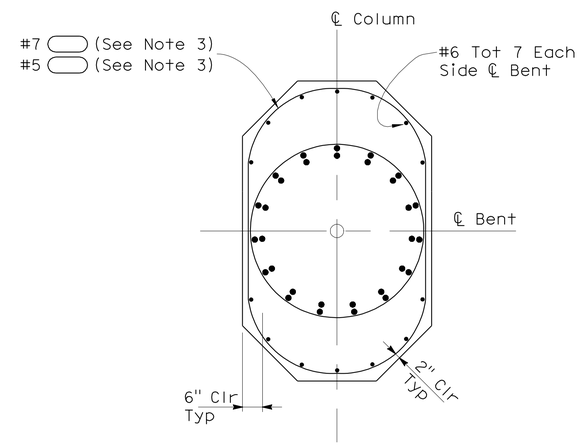

SECTION B-B

½" = 1'-0"

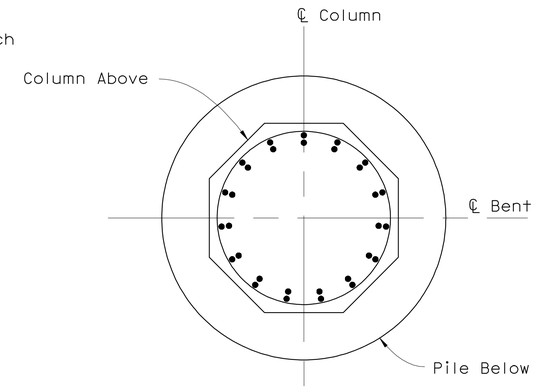

SECTION D-D

SCALE ½" = 1'-0"

Notes:

1. No Splices Allowed in Main Column Reinforcement.
2. All Hoops are "Ultimate" Butt Spliced Continuous Except as Noted.
3. Transverse Flare Reinforcement Hoops are "Service" Butt Spliced.

HILLERY DIRECT ACCESS RAMPS
SOUTHBOUND ON-RAMP
COLUMN DETAILS

DESIGN OVERSIGHT — Norbert Gee
10-25-10
SIGN OFF DATE

	BY	CHECKED
DESIGN	R Ramoso/H Mai	John Powell
DETAILS	C Morgan/C Lente	John Powell
QUANTITIES	R Ramoso/H Mai	Janice Reguyal

PREPARED FOR THE STATE OF CALIFORNIA DEPARTMENT OF TRANSPORTATION

Robert E. Hawthorne
PROJECT ENGINEER

BRIDGE NO. 57-1216
POST MILE R15.7

CU 11269
EA 2T0951

DISREGARD PRINTS BEARING EARLIER REVISION DATES

REVISION DATES (PRELIMINARY STAGE ONLY): 01/22/10 03/08/10 05/18/10 05/27/10 06/15/10 06/30/10 08/27/10

SHEET 9 OF 32

DESIGN DETAIL SHEET (ENGLISH) (REV. 06-01-09)

ORIGINAL SCALE IN INCHES FOR REDUCED PLANS 0 1 2 3

FILE => 57-1216-j-cdet01.dgn

USERNAME => s119571 DATE PLOTTED => 27-OCT-2011 TIME PLOTTED => 13:31

DIST	COUNTY	ROUTE	POST MILES TOTAL PROJECT	SHEET No	TOTAL SHEETS
11	SD	15	M15.0/M16.4	555	610

Robert E. Hawthorne 10-15-10
REGISTERED CIVIL ENGINEER DATE

10-24-11
PLANS APPROVAL DATE

REGISTERED PROFESSIONAL ENGINEER ROBERT E. HAWTHORNE No. 40075 Exp. 03/31/12 CIVIL STATE OF CALIFORNIA

The State of California or its officers or agents shall not be responsible for the accuracy or completeness of scanned copies of this plan sheet.

SANDAG
401 B STREET, SUITE 800
SAN DIEGO, CA 92101

AECOM
7807 CONVOY COURT, SUITE 200
SAN DIEGO, CA 92111

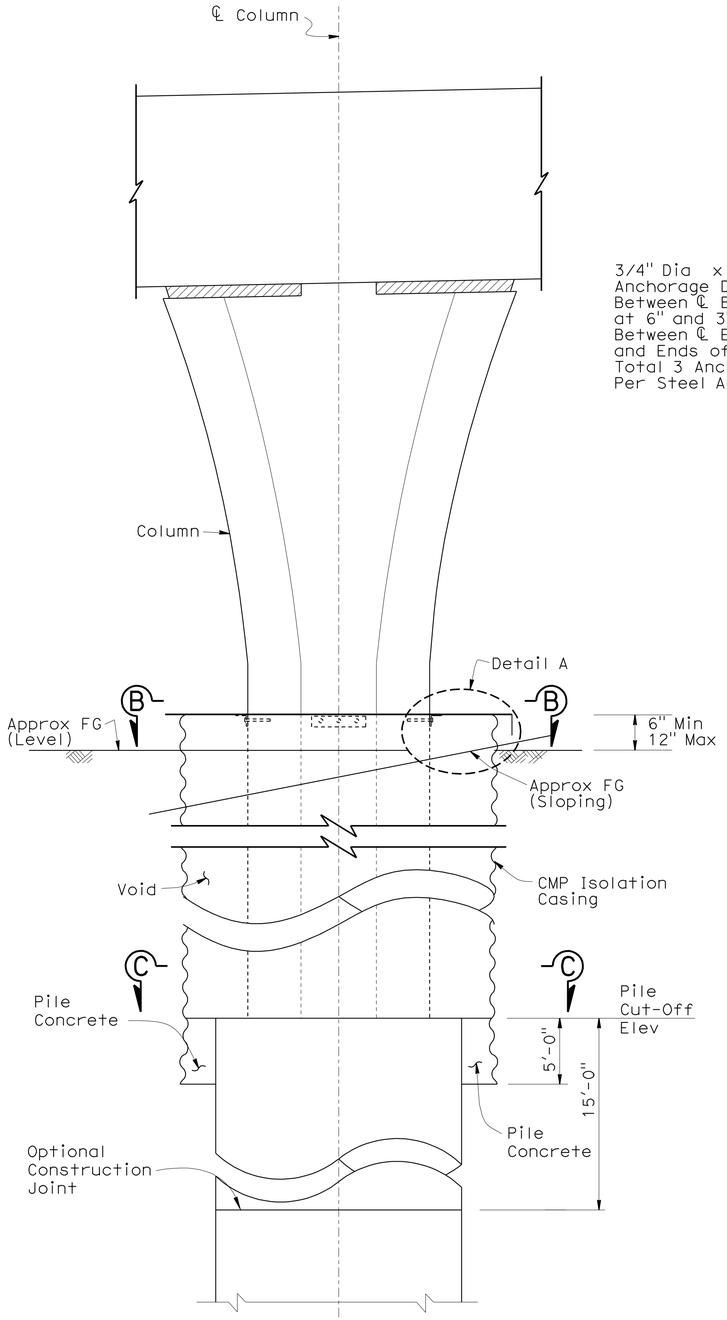

ELEVATION BENT 2

NTS

Note:
Cut Top of Casing 6" Minimum, 12" Maximum.

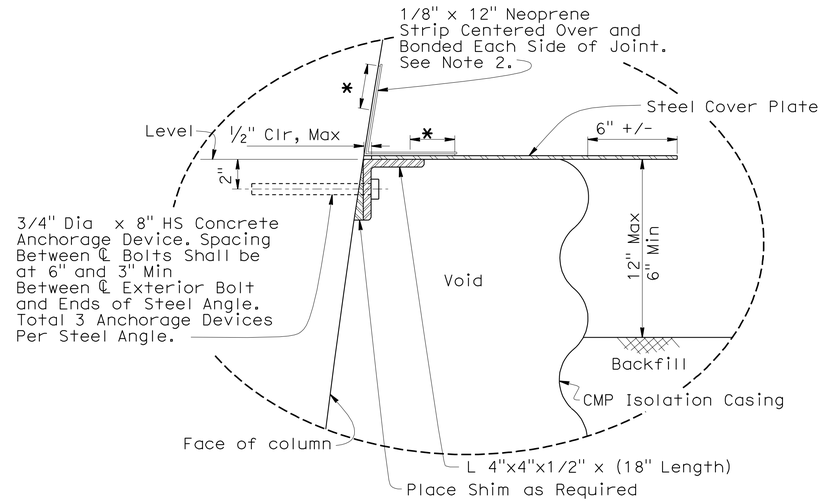

DETAIL A

NTS

* 3" To 4 " of Bonding

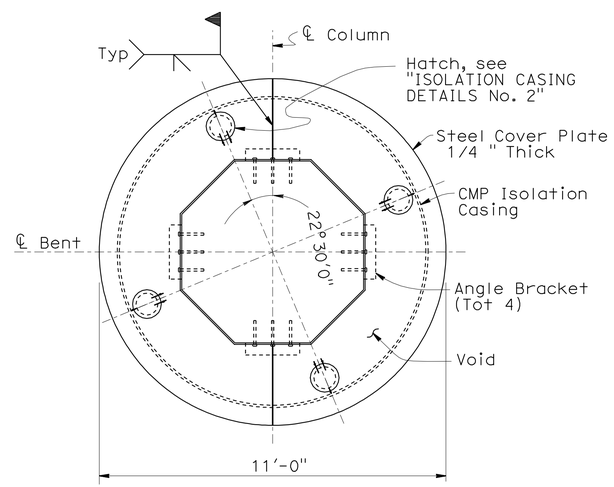

SECTION B-B

NTS
Note: Neoprene Strip Not Shown

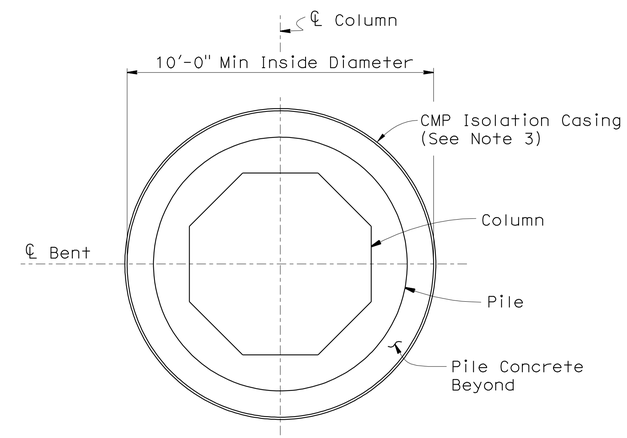

SECTION C-C

NTS

Notes:

1. Steel Cover Plate, Angles and All Hardware Shall be Galvanized.
2. Neoprene Strip may be Cut and Overlapped as Required to Fit Against Column and Steel Cover Plate. Entire Joint Between Column and Steel Cover Plate shall be Sealed.
3. Minimum Properties and Dimensions of Galvanized Corrugated Metal Pipe:

Thickness	0.168"
Area	63.4 in^2
Radius of Gyration	42.5 in
Moment of Inertia	114,481 in^4
Diameter	10'-0"
Section Modulus	1903 in^3
Length	12'-4"

4. If Permanent Casing is used, Casing shall be CMP and shall not extend more than 5'-0" below Optional Construction Joint indicated

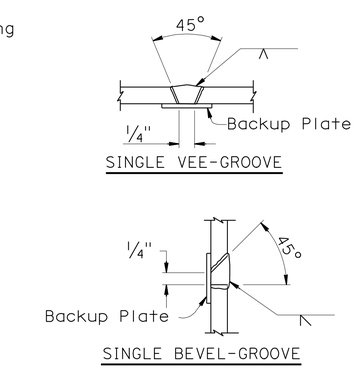

CASING WELDING DETAIL (BUTT JOINTS)

Notes:

1. Single Vee-Groove and Square Groove Permitted for All Positions.
2. Single Bevel-Groove Permitted for Horizontal Joints Only.

Norbert Gee
DESIGN OVERSIGHT Norbert Gee

10-25-10
SIGN OFF DATE

	BY	CHECKED
DESIGN	R Ramoso/H Mai	John Powell
DETAILS	C Morgan/C Lente	John Powell
QUANTITIES	R Ramoso/H Mai	Janice Reguyal

PREPARED FOR THE STATE OF CALIFORNIA DEPARTMENT OF TRANSPORTATION

Robert E. Hawthorne
PROJECT ENGINEER

BRIDGE NO. 57-1216
POST MILE R15.7

HILLERY DIRECT ACCESS RAMPS
SOUTHBOUND ON-RAMP
ISOLATION CASING DETAILS No. 1

DESIGN DETAIL SHEET (ENGLISH) (REV. 06-01-09)

ORIGINAL SCALE IN INCHES FOR REDUCED PLANS 0 1 2 3

CU 11269
EA 2T0951

DISREGARD PRINTS BEARING EARLIER REVISION DATES

REVISION DATES (PRELIMINARY STAGE ONLY) 01/22/10 03/08/10 05/27/10 06/15/10 06/30/10 08/27/10 10/06/10

SHEET 10 OF 32

FILE => 57-1216-j-ciso01.dgn

USERNAME => s119571 DATE PLOTTED => 27-OCT-2011 TIME PLOTTED => 13:31

DIST	COUNTY	ROUTE	POST MILES TOTAL PROJECT	SHEET No	TOTAL SHEETS
11	SD	15	M15.0/M16.4	556	610

REGISTERED CIVIL ENGINEER — DATE 10-15-10

10-24-11
PLANS APPROVAL DATE

REGISTERED PROFESSIONAL ENGINEER — ROBERT E. HAWTHORNE — No. 40075 — Exp. 03/31/12 — CIVIL — STATE OF CALIFORNIA

The State of California or its officers or agents shall not be responsible for the accuracy or completeness of scanned copies of this plan sheet.

SANDAG
401 B STREET, SUITE 800
SAN DIEGO, CA 92101

AECOM
7807 CONVOY COURT, SUITE 200
SAN DIEGO, CA 92111

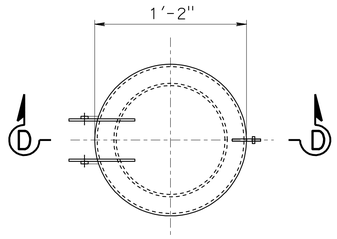

HATCH - PLAN VIEW

1 1/2"=1'-0"

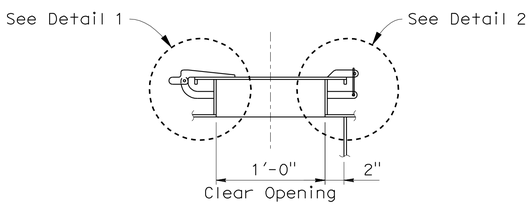

SECTION D-D

1 1/2"=1'-0"

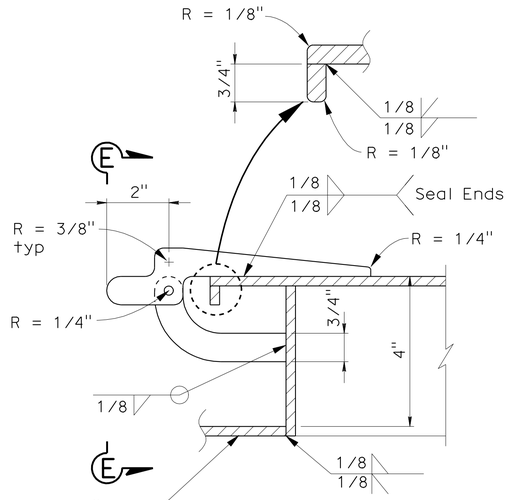

DETAIL 1

NTS

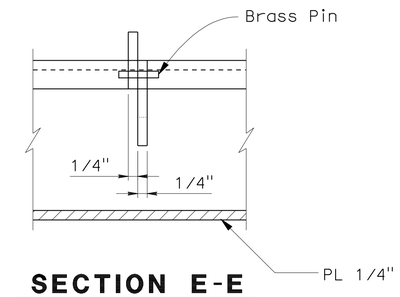

SECTION E-E

NTS

Notes:

1. For Additional Details, see "ISOLATION CASING DETAILS No. 1"
2. For Detail A, Section B-B & C-C, see "ISOLATION CASING DETAILS No. 1"

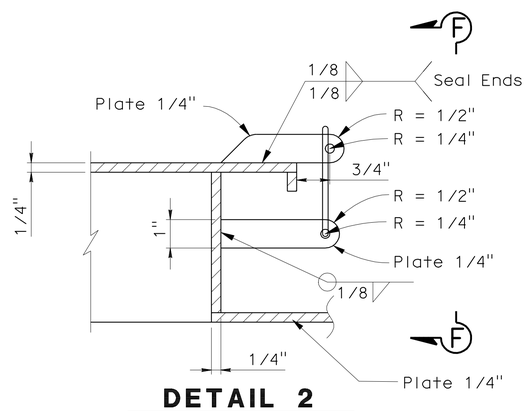

DETAIL 2

NTS

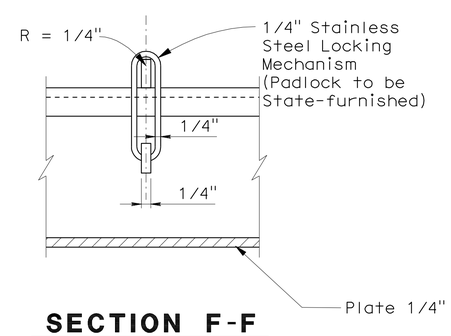

SECTION F-F

NTS

HILLERY DIRECT ACCESS RAMPS

SOUTHBOUND ON-RAMP

ISOLATION CASING DETAILS No. 2

DESIGN OVERSIGHT — Norbert Gee
10-25-10
SIGN OFF DATE

	BY	CHECKED
DESIGN	R Ramoso/H Mai	John Powell
DETAILS	C Morgan/C Lente	John Powell
QUANTITIES	R Ramoso/H Mai	Janice Reguyal

PREPARED FOR THE STATE OF CALIFORNIA DEPARTMENT OF TRANSPORTATION

Robert E. Hawthorne
PROJECT ENGINEER

BRIDGE NO. 57-1216
POST MILE R15.7

DESIGN DETAIL SHEET (ENGLISH) (REV. 06-01-09)

ORIGINAL SCALE IN INCHES FOR REDUCED PLANS 0 1 2 3

CU 11269
EA 2T0951

DISREGARD PRINTS BEARING EARLIER REVISION DATES

REVISION DATES (PRELIMINARY STAGE ONLY): 01/22/10 03/08/10 05/27/10 06/15/10 06/30/10 08/27/10

SHEET 11 OF 32

FILE => 57-1216-j-ciso02.dgn

USERNAME => s119571 DATE PLOTTED => 27-OCT-2011 TIME PLOTTED => 13:31

DIST	COUNTY	ROUTE	POST MILES TOTAL PROJECT	SHEET No	TOTAL SHEETS
11	SD	15	M15.0/M16.4	557	610

REGISTERED CIVIL ENGINEER — DATE 10-15-10

10-24-11
PLANS APPROVAL DATE

REGISTERED PROFESSIONAL ENGINEER — ROBERT E. HAWTHORNE — No. 40075 — Exp. 03/31/12 — CIVIL — STATE OF CALIFORNIA

The State of California or its officers or agents shall not be responsible for the accuracy or completeness of scanned copies of this plan sheet.

SANDAG
401 B STREET, SUITE 800
SAN DIEGO, CA 92101

AECOM
7807 CONVOY COURT, SUITE 200
SAN DIEGO, CA 92111

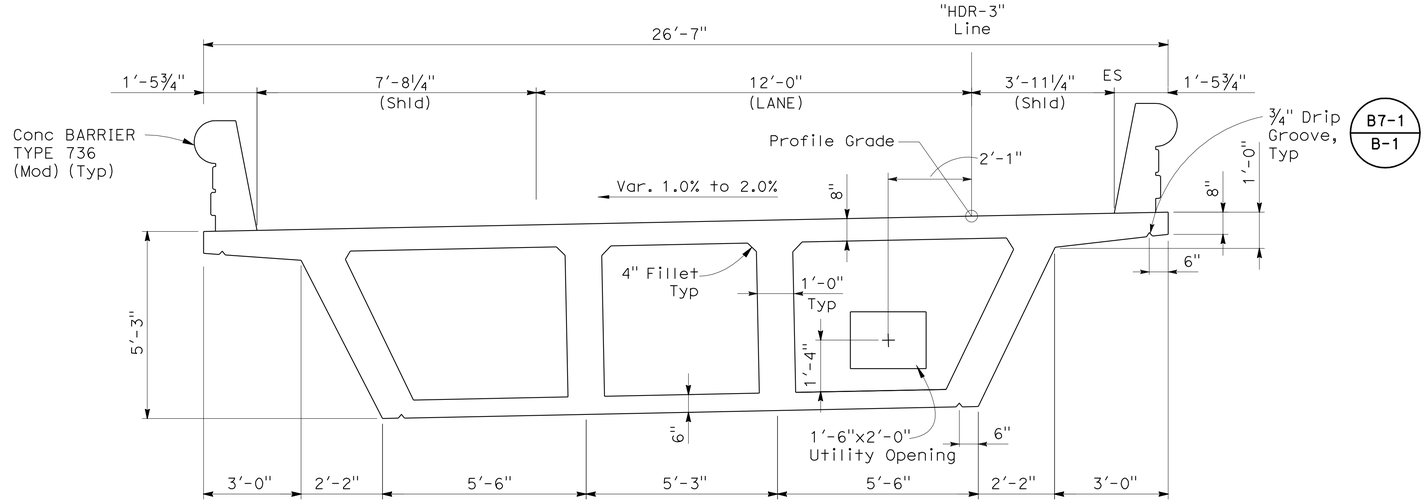

TYPICAL SECTION (SPANS 2 & 3)

1/2"=1'-0"

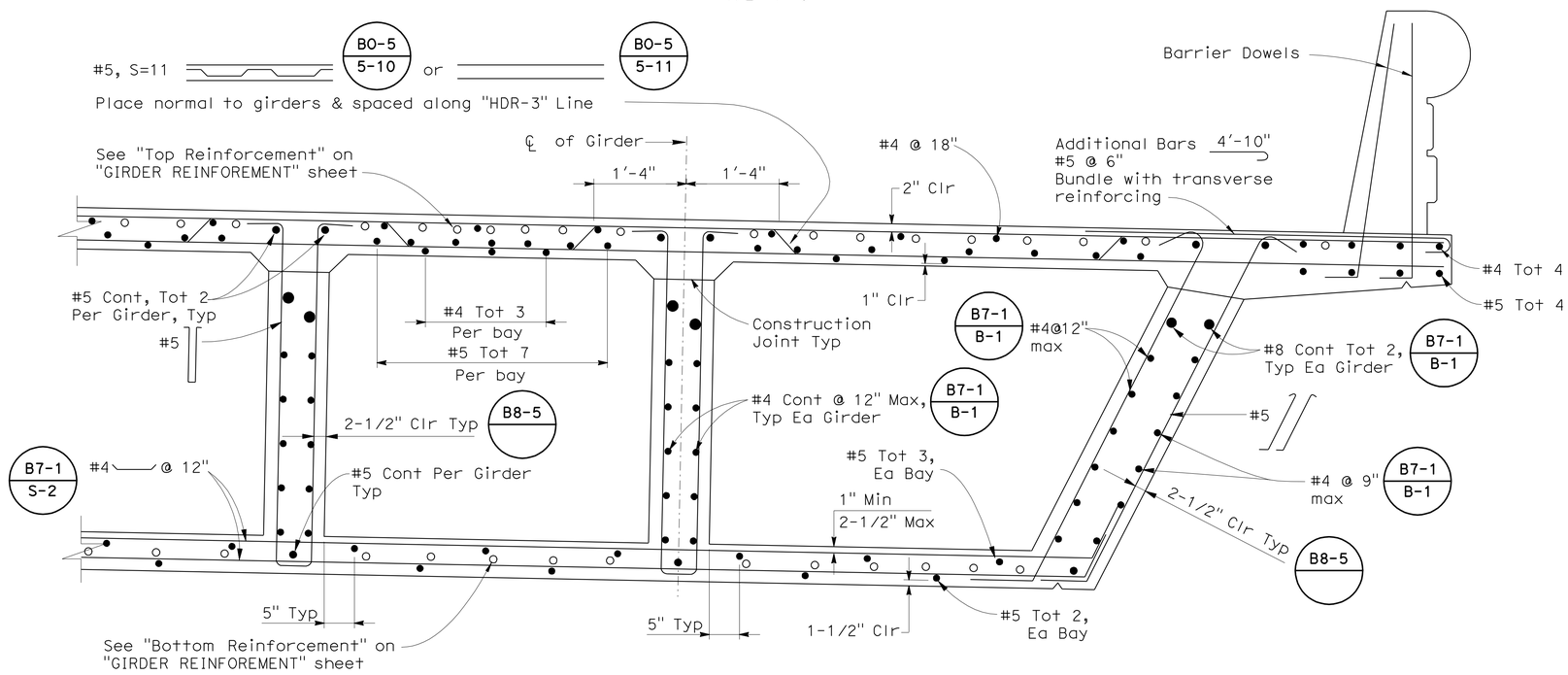

Notes:
1. Dimensions shown are normal to Girder.

PART TYPICAL SECTION (SPANS 1 & 2)

1"=1'-0"

B0-5 B7-1 B8-5

HILLERY DIRECT ACCESS RAMPS
SOUTHBOUND ON-RAMP
TYPICAL SECTION No. 1

DESIGN OVERSIGHT — Norbert Gee
10-25-10
SIGN OFF DATE

	BY	CHECKED
DESIGN	R Ramoso/H Mai	John Powell
DETAILS	C Morgan/C Lente	John Powell
QUANTITIES	R Ramoso/H Mai	Janice Reguyal

PREPARED FOR THE STATE OF CALIFORNIA DEPARTMENT OF TRANSPORTATION

Robert E. Hawthorne
PROJECT ENGINEER

BRIDGE NO. 57-1216
POST MILE R15.7

CU 11269
EA 2T0951

DISREGARD PRINTS BEARING EARLIER REVISION DATES

REVISION DATES (PRELIMINARY STAGE ONLY): 01/22/10 03/08/10 05/18/10 05/24/10 05/27/10 06/15/10 06/30/10 08/27/10

SHEET 12 OF 32

DESIGN DETAIL SHEET (ENGLISH) (REV. 06-01-09)

ORIGINAL SCALE IN INCHES FOR REDUCED PLANS 0 1 2 3

FILE => 57-1216-k-ts01.dgn

USERNAME => s613571 DATE PLOTTED => 27-OCT-2011 TIME PLOTTED => 13:31

DIST	COUNTY	ROUTE	POST MILES TOTAL PROJECT	SHEET No	TOTAL SHEETS
11	SD	15	M15.0/M16.4	558	610

REGISTERED CIVIL ENGINEER — DATE 10-15-10

10-24-11
PLANS APPROVAL DATE

The State of California or its officers or agents shall not be responsible for the accuracy or completeness of scanned copies of this plan sheet.

REGISTERED PROFESSIONAL ENGINEER — ROBERT E. HAWTHORNE — No. 40075 — Exp. 03/31/12 — CIVIL — STATE OF CALIFORNIA

SANDAG
401 B STREET, SUITE 800
SAN DIEGO, CA 92101

AECOM
7807 CONVOY COURT, SUITE 200
SAN DIEGO, CA 92111

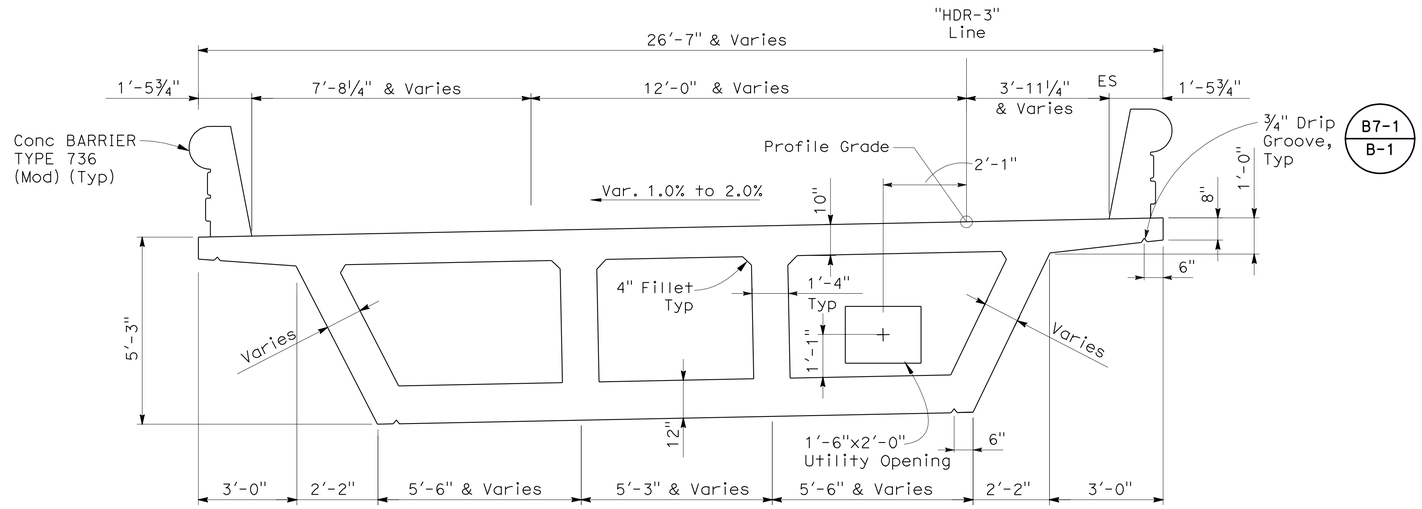

TYPICAL SECTION (CANTILEVER SPAN 1)

1/2"=1'-0"

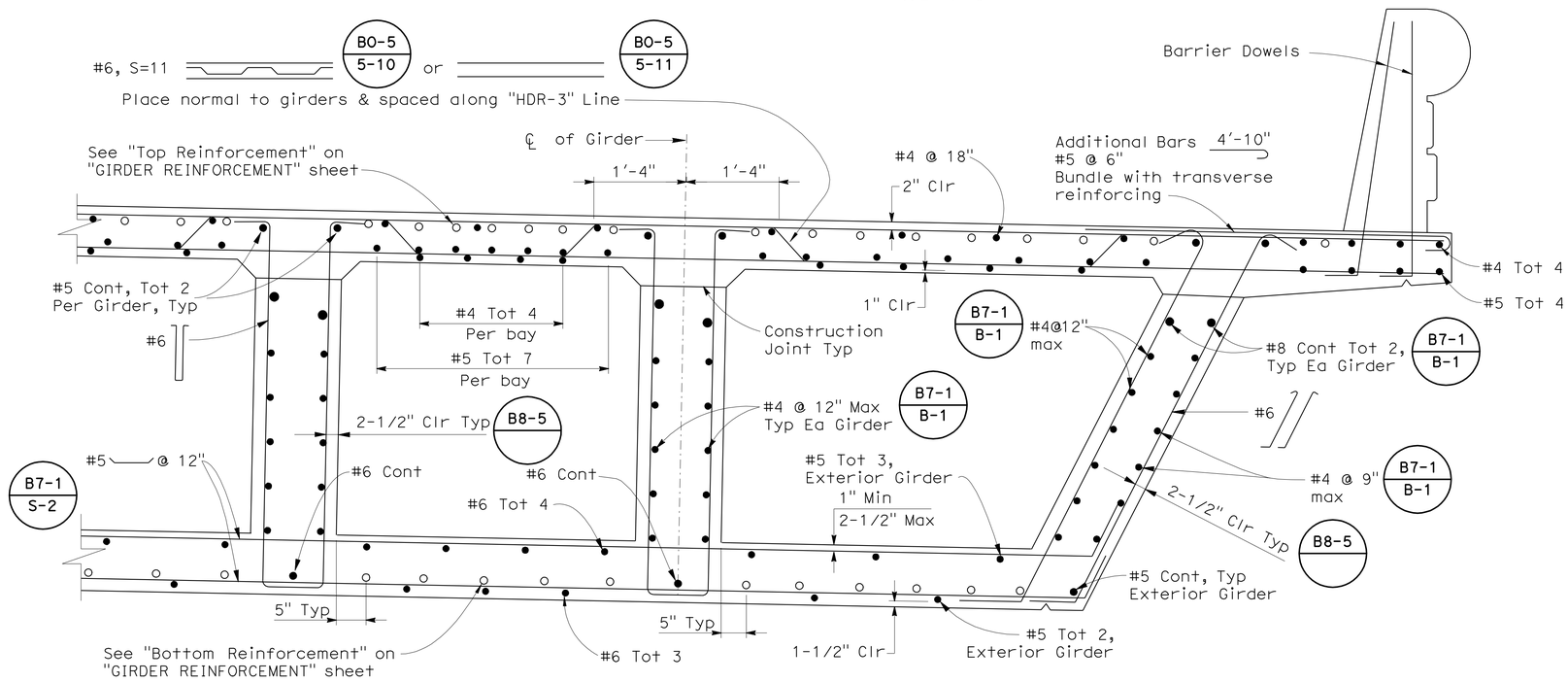

Notes:
1. Dimensions shown are normal to girder.

PART TYPICAL SECTION (CANTILEVER SPAN 3)

1"=1'-0"

B0-5 B7-1 B8-5

HILLERY DIRECT ACCESS RAMPS
SOUTHBOUND ON-RAMP
TYPICAL SECTION No. 2

DESIGN OVERSIGHT — Norbert Gee
10-25-10
SIGN OFF DATE

	BY	CHECKED
DESIGN	R Ramoso/H Mai	John Powell
DETAILS	C Morgan/C Lente	John Powell
QUANTITIES	R Ramoso/H Mai	Janice Reguyal

PREPARED FOR THE STATE OF CALIFORNIA DEPARTMENT OF TRANSPORTATION

Robert E. Hawthorne
PROJECT ENGINEER

BRIDGE NO. 57-1216
POST MILE R15.7

CU 11269
EA 2T0951

DISREGARD PRINTS BEARING EARLIER REVISION DATES

REVISION DATES (PRELIMINARY STAGE ONLY): 01/22/10 03/08/10 05/18/10 05/24/10 05/27/10 06/15/10 06/30/10 08/27/10

SHEET 13 OF 32

DESIGN DETAIL SHEET (ENGLISH) (REV. 06-01-09)

ORIGINAL SCALE IN INCHES FOR REDUCED PLANS 0 1 2 3

FILE => 57-1216-k-ts02.dgn

USERNAME => s613571 DATE PLOTTED => 27-OCT-2011 TIME PLOTTED => 13:32

DIST	COUNTY	ROUTE	POST MILES TOTAL PROJECT	SHEET No	TOTAL SHEETS
11	SD	15	M15.0/M16.4	559	610

REGISTERED CIVIL ENGINEER — DATE 10-15-10

10-24-11
PLANS APPROVAL DATE

REGISTERED PROFESSIONAL ENGINEER — ROBERT E. HAWTHORNE — No. 40075 — Exp. 03/31/12 — CIVIL — STATE OF CALIFORNIA

The State of California or its officers or agents shall not be responsible for the accuracy or completeness of scanned copies of this plan sheet.

SANDAG
401 B STREET, SUITE 800
SAN DIEGO, CA 92101

AECOM
7807 CONVOY COURT, SUITE 200
SAN DIEGO, CA 92111

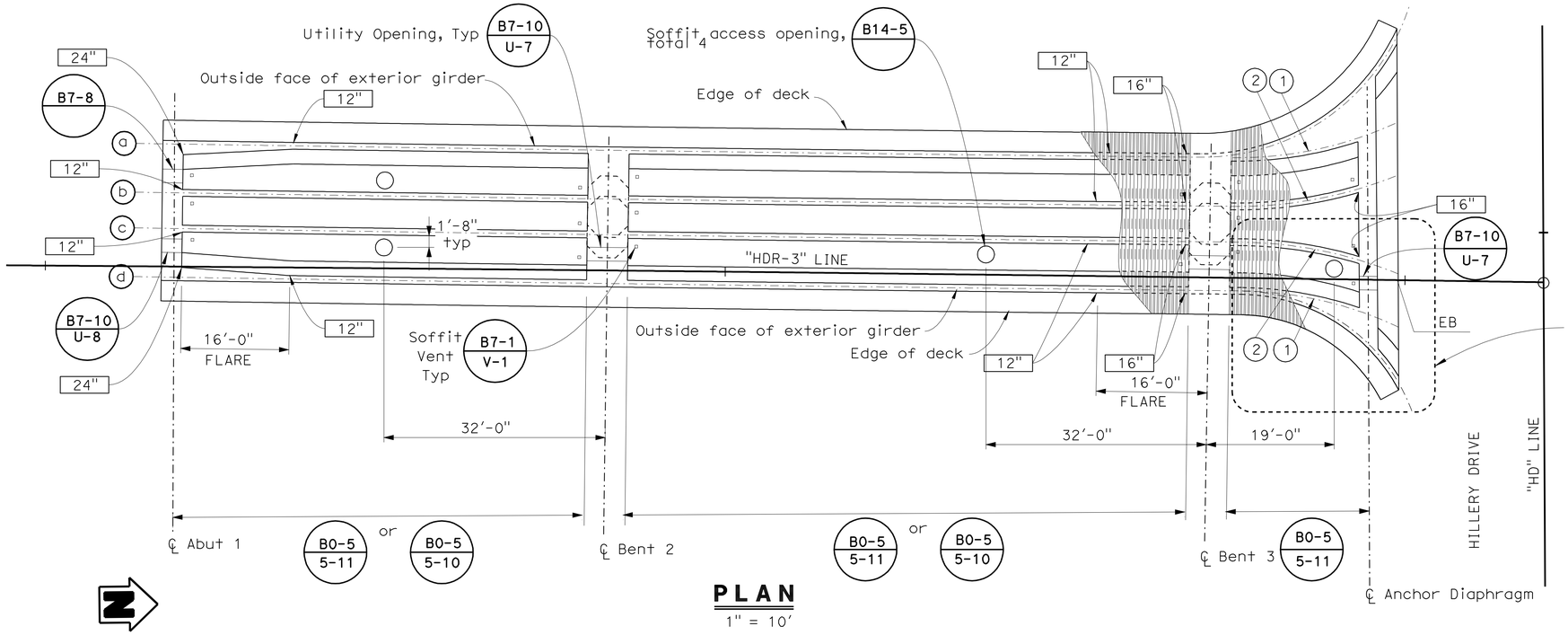

PLAN

1" = 10'

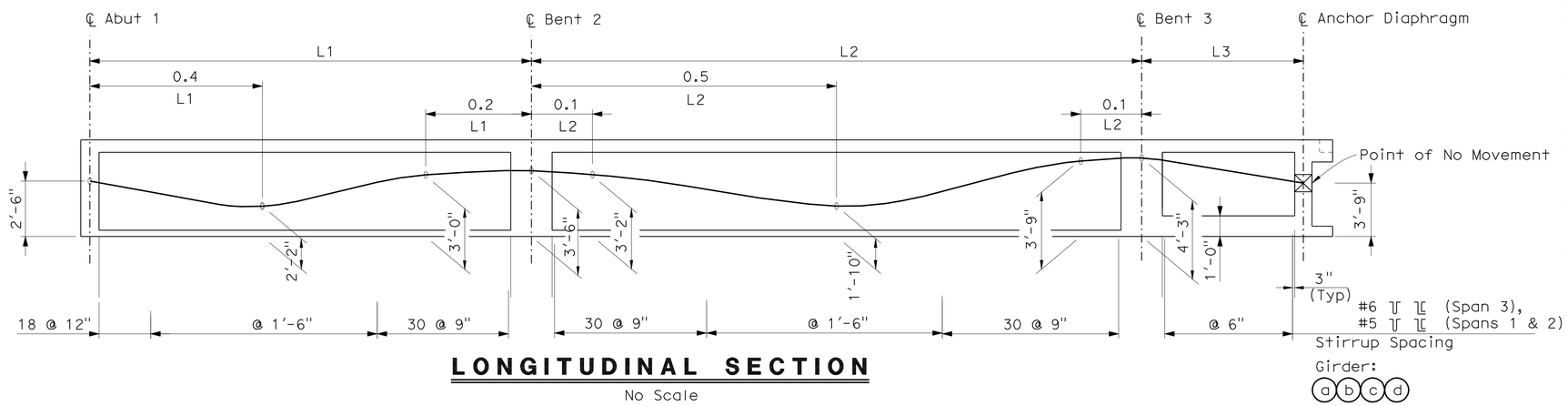

LONGITUDINAL SECTION

No Scale

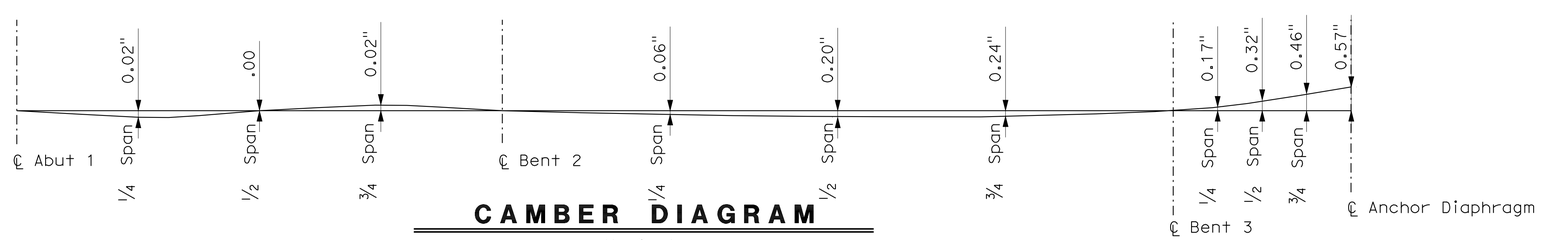

CAMBER DIAGRAM

No Scale

PRESTRESSING NOTES

270 KSI Low Relaxation Strand:

P_{jack} = 3,700 kips

Anchor Set = 3/8 in

Total Number of Girders = 4

Distribution of Prestress Force (Pjack) Between Girders Shall not Exceed the Ratio of 3:2. Maximum Final Force Variation Between Girders Shall Not Exceed 725 kips.

Concrete: f'_c = 4.0 ksi @ 28 Days

f'_{ci} = 3.6 ksi @ Time of Stressing

Contractor Shall Submit Elongation Calculations Based on Initial Stress at

☒ = 0.889 Times Jacking Stress.

One End Stressing Shall be Performed From the Long-Span End Only.

Design based on μ = 0.15 (Coefficient of Friction) and k = 0.00020/ft (Wobble)

Notes:

Indicates Stem Width in Inches

(1) R=55.75' (℄ Girder)

(2) R=62.68' (℄ Girder)

HILLERY DIRECT ACCESS RAMPS
SOUTHBOUND ON-RAMP
GIRDER LAYOUT

DESIGN OVERSIGHT — Norbert Gee
10-25-10
SIGN OFF DATE

	BY	CHECKED
DESIGN	R Ramoso/H Mai	John Powell
DETAILS	C Morgan/C Lente	John Powell
QUANTITIES	R Ramoso/H Mai	Janice Reguyal

PREPARED FOR THE STATE OF CALIFORNIA DEPARTMENT OF TRANSPORTATION

Robert E. Hawthorne
PROJECT ENGINEER

BRIDGE NO. 57-1216
POST MILE R15.7

CU 11269
EA 2T0951

DISREGARD PRINTS BEARING EARLIER REVISION DATES

REVISION DATES (PRELIMINARY STAGE ONLY): 01/22/10 03/08/10 05/18/10 05/27/10 06/15/10 06/30/10 08/27/10

SHEET 14 OF 32

DESIGN DETAIL SHEET (ENGLISH) (REV. 06-01-09)

ORIGINAL SCALE IN INCHES FOR REDUCED PLANS 0 1 2 3

FILE => 57-1216-1-g_lo01.dgn

USERNAME => s119571 DATE PLOTTED => 27-OCT-2011 TIME PLOTTED => 13:32

DIST	COUNTY	ROUTE	POST MILES TOTAL PROJECT	SHEET No	TOTAL SHEETS
11	SD	15	M15.0/M16.4	560	610

REGISTERED CIVIL ENGINEER — DATE 2-17-11

10-24-11
PLANS APPROVAL DATE

REGISTERED PROFESSIONAL ENGINEER — ROBERT E. HAWTHORNE — No. 40075 — Exp. 03/31/12 — CIVIL — STATE OF CALIFORNIA

The State of California or its officers or agents shall not be responsible for the accuracy or completeness of scanned copies of this plan sheet.

SANDAG
401 B STREET, SUITE 800
SAN DIEGO, CA 92101

AECOM
7807 CONVOY COURT, SUITE 200
SAN DIEGO, CA 92111

Notes:

1. R = 55.75′ (℄ Girder)
2. R = 62.68′ (℄ Girder)
3. R = 27.02′ (℄ Ext. RC Girder Right - shown)

Notes:

For Section A-A, see "GIRDER DETAILS No. 2" sheet

For Section B-B, see "GIRDER DETAILS No. 3" sheet

For Sections E-E, F-F, G-G and Detail H see "GIRDER DETAILS No. 6" sheet

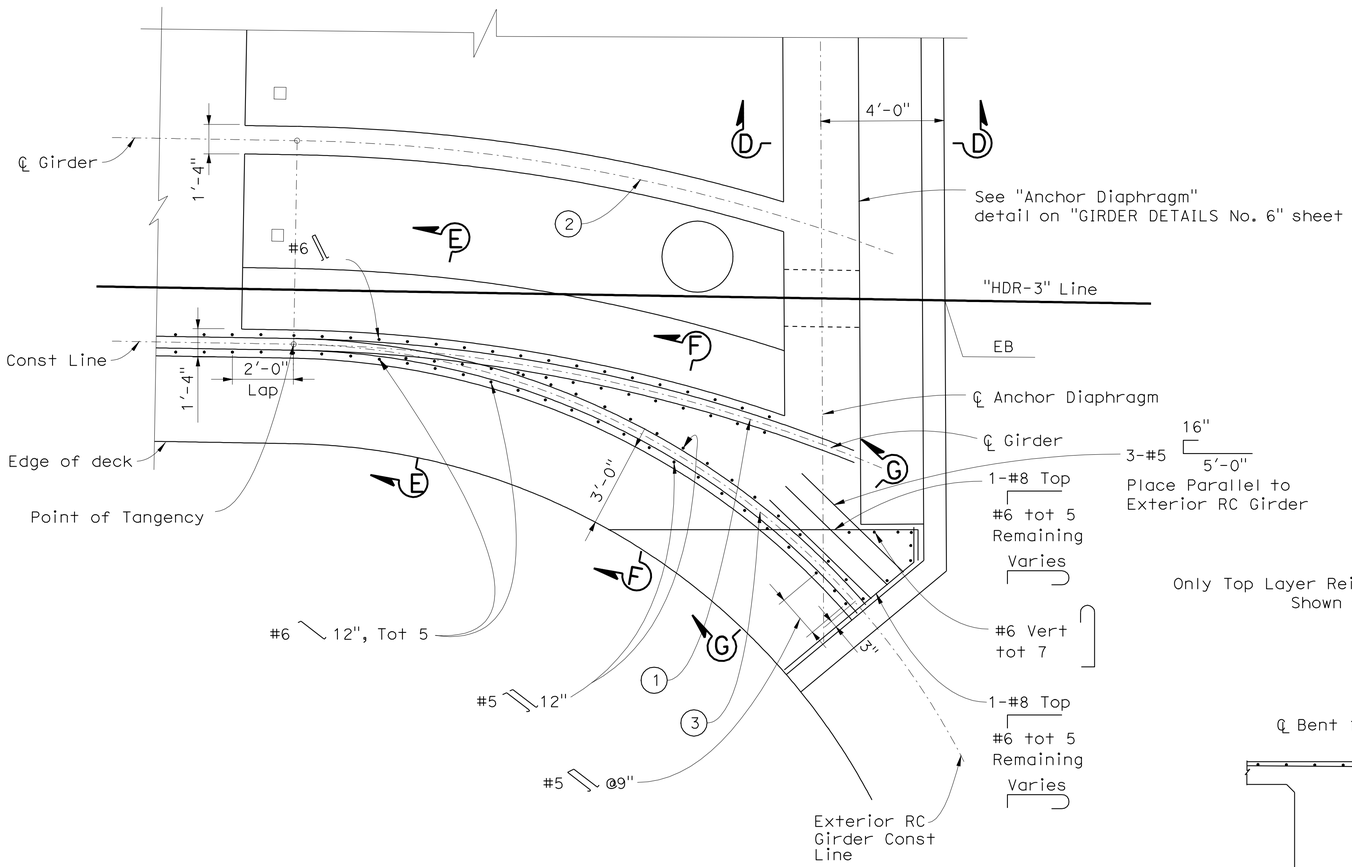

PARTIAL GIRDER LAYOUT PLAN

3/8″=1′-0″

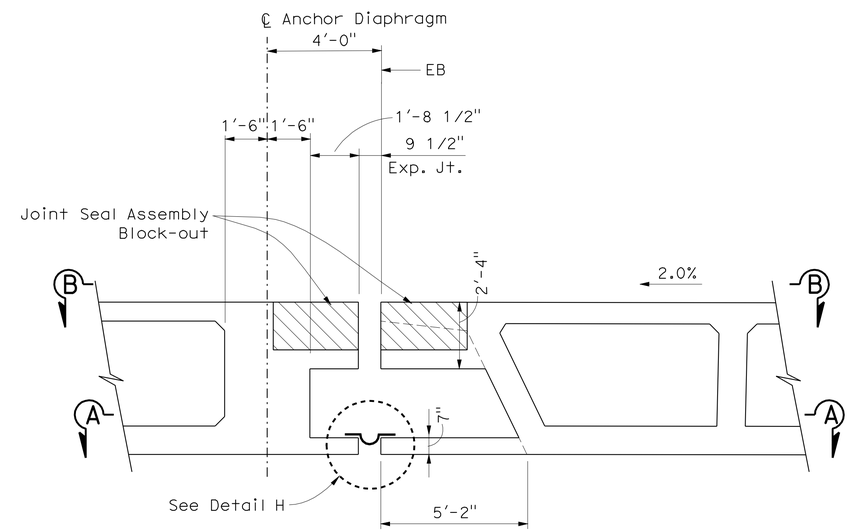

SECTION D-D

3/8″=1′-0″

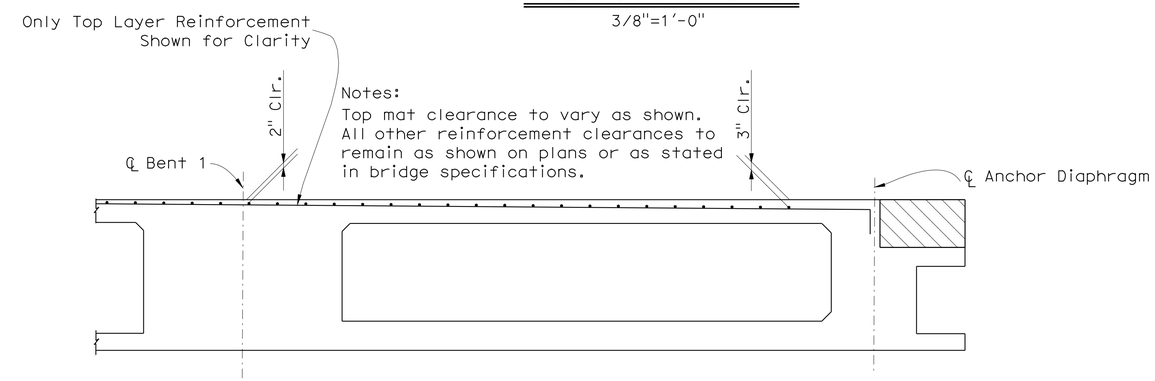

Notes:
Top mat clearance to vary as shown.
All other reinforcement clearances to remain as shown on plans or as stated in bridge specifications.

PART DECK REINFORCEMENT DETAIL

3/8″=1′-0″

DESIGN OVERSIGHT — Norbert Gee
2-22-11
SIGN OFF DATE

	BY	CHECKED
DESIGN	R Ramoso/H Mai	John Powell
DETAILS	C Morgan/C Lente	John Powell
QUANTITIES	R Ramoso/H Mai	Janice Reguyal

PREPARED FOR THE STATE OF CALIFORNIA DEPARTMENT OF TRANSPORTATION

Robert E. Hawthorne
PROJECT ENGINEER

BRIDGE NO. 57-1216
POST MILE R15.7

HILLERY DIRECT ACCESS RAMPS
SOUTHBOUND ON-RAMP
GIRDER DETAILS No. 1

DESIGN DETAIL SHEET (ENGLISH) (REV. 06-01-09)

ORIGINAL SCALE IN INCHES FOR REDUCED PLANS 0 1 2 3

CU 11269
EA 2T0951

DISREGARD PRINTS BEARING EARLIER REVISION DATES

REVISION DATES (PRELIMINARY STAGE ONLY): 01/22/10 03/08/10 05/18/10 05/27/10 06/15/10 06/30/10 08/27/10 10/06/10 2-17-11

SHEET 15 OF 32

FILE => 57-1216-I-gdt01.dgn

USERNAME => s119571 DATE PLOTTED => 27-OCT-2011 TIME PLOTTED => 13:32

DIST	COUNTY	ROUTE	POST MILES TOTAL PROJECT	SHEET No	TOTAL SHEETS
11	SD	15	M15.0/M16.4	561	610

REGISTERED CIVIL ENGINEER — DATE 10-15-10

10-24-11
PLANS APPROVAL DATE

REGISTERED PROFESSIONAL ENGINEER — ROBERT E. HAWTHORNE — No. 40075 — Exp. 03/31/12 — CIVIL — STATE OF CALIFORNIA

The State of California or its officers or agents shall not be responsible for the accuracy or completeness of scanned copies of this plan sheet.

SANDAG
401 B STREET, SUITE 800
SAN DIEGO, CA 92101

AECOM
7807 CONVOY COURT, SUITE 200
SAN DIEGO, CA 92111

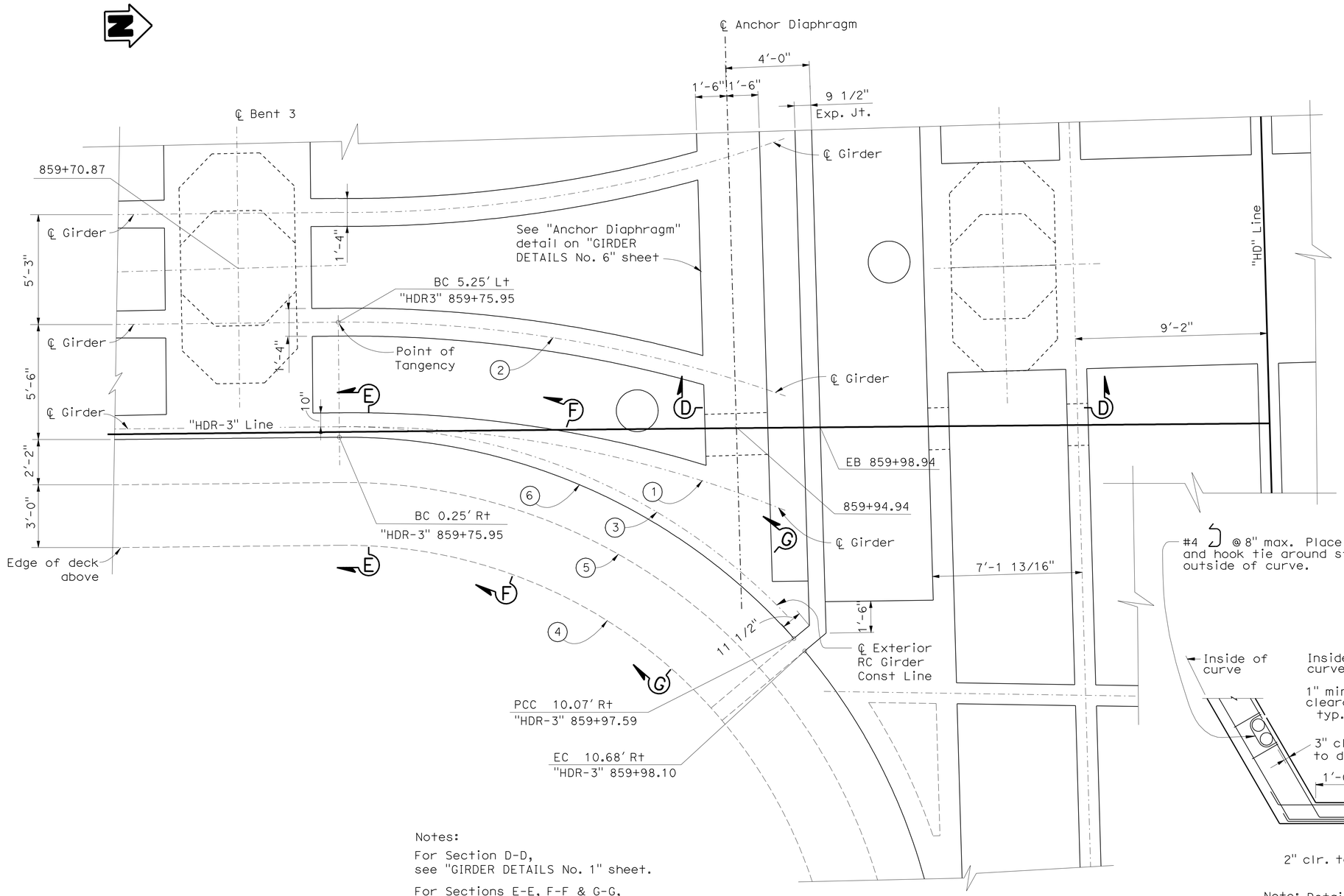

Notes:

For Section D-D, see "GIRDER DETAILS No. 1" sheet.

For Sections E-E, F-F & G-G, see "GIRDER DETAILS No. 6" sheet.

BOTTOM SECTION A-A

3/8"=1'-0"

Notes:

1. R = 55.75' (℄ Girder)
2. R = 62.68' (℄ Girder)
3. R = 29.18' (℄ Exterior RC Girder Const Line)
4. R = 23.52' (Edge of deck above)
5. R = 26.52' (Edge of Soffit Above)
6. R = 28.68' (Outside Edge bottom Girder)

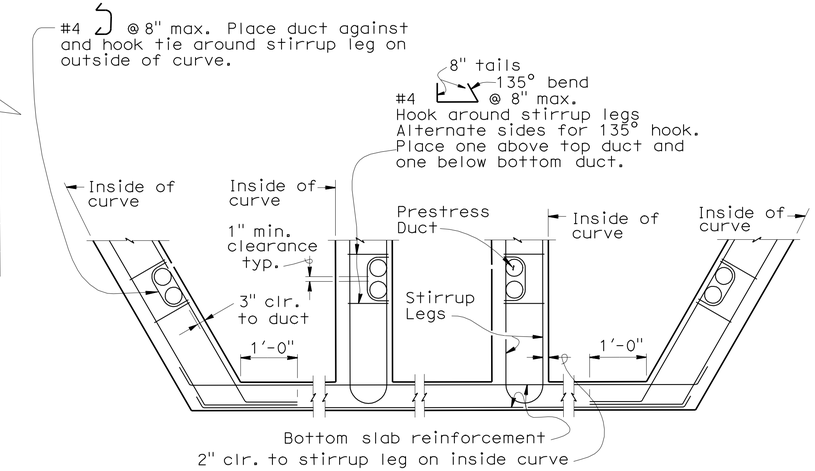

Note: Details shown are for a curve with the section taken looking ahead on station. These details supersede duct patterns shown in Standard Plan B8-5.

PART GIRDER SECTION

NO SCALE

HILLERY DIRECT ACCESS RAMPS
SOUTHBOUND ON-RAMP
GIRDER DETAILS No. 2

DESIGN OVERSIGHT — Norbert Gee
10-25-10
SIGN OFF DATE

	BY	CHECKED
DESIGN	R Ramoso/H Mai	John Powell
DETAILS	C Morgan/C Lente	John Powell
QUANTITIES	R Ramoso/H Mai	Janice Reguyal

PREPARED FOR THE STATE OF CALIFORNIA DEPARTMENT OF TRANSPORTATION

Robert E. Hawthorne
PROJECT ENGINEER

BRIDGE NO. 57-1216
POST MILE R15.7

DESIGN DETAIL SHEET (ENGLISH) (REV. 06-01-09)

ORIGINAL SCALE IN INCHES FOR REDUCED PLANS 0 1 2 3

CU 11269
EA 2T0951

DISREGARD PRINTS BEARING EARLIER REVISION DATES

REVISION DATES (PRELIMINARY STAGE ONLY): 01/22/10 03/08/10 05/18/10 05/27/10 06/15/10 06/30/10 08/27/10

SHEET 16 OF 32

FILE => 57-1216-1-gdt02.dgn

USERNAME => s123631 DATE PLOTTED => 27-OCT-2011 TIME PLOTTED => 10:18

DIST	COUNTY	ROUTE	POST MILES TOTAL PROJECT	SHEET No	TOTAL SHEETS
11	SD	15	M15.0/M16.4	562	610

REGISTERED CIVIL ENGINEER 10-15-10 DATE

10-24-11
PLANS APPROVAL DATE

REGISTERED PROFESSIONAL ENGINEER ROBERT E. HAWTHORNE No. 40075 Exp. 03/31/12 CIVIL STATE OF CALIFORNIA

The State of California or its officers or agents shall not be responsible for the accuracy or completeness of scanned copies of this plan sheet.

SANDAG
401 B STREET, SUITE 800
SAN DIEGO, CA 92101

AECOM
7807 CONVOY COURT, SUITE 200
SAN DIEGO, CA 92111

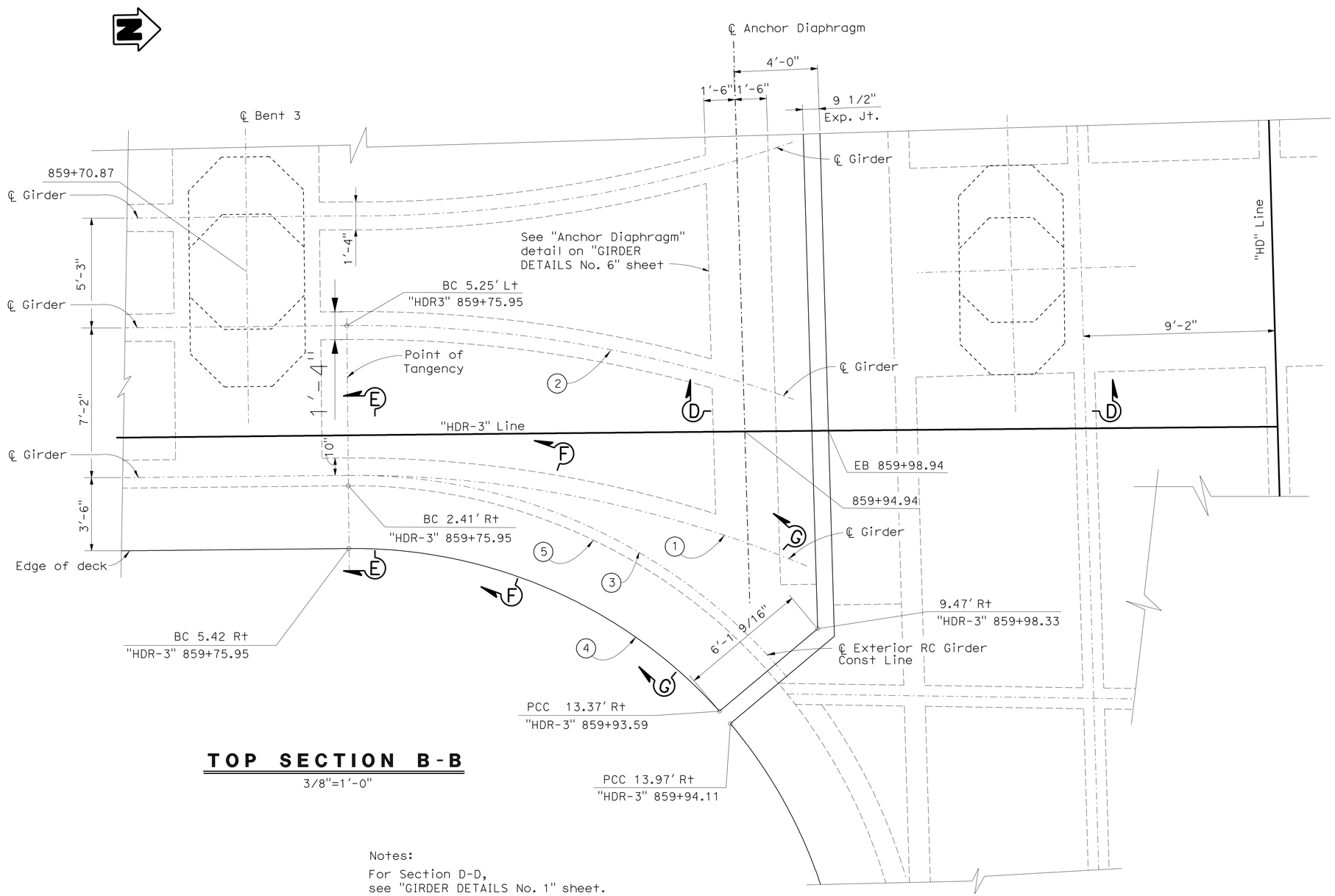

TOP SECTION B-B

3/8"=1'-0"

Notes:

For Section D-D, see "GIRDER DETAILS No. 1" sheet.

For Sections E-E, F-F & G-G, see "GIRDER DETAILS No. 6" sheet.

Notes:

1. R = 55.75' (℄ Girder)
2. R = 62.68' (℄ Girder)
3. R = 27.02' (℄ Exterior RC Girder Const Line)
4. R = 23.52' (Edge of deck)
5. R = 26.52' (Edge of Soffit)

HILLERY DIRECT ACCESS RAMPS
SOUTHBOUND ON-RAMP
GIRDER DETAILS No. 3

DESIGN OVERSIGHT Norbert Gee
10-25-10
SIGN OFF DATE

	BY	CHECKED
DESIGN	R Ramoso/H Mai	John Powell
DETAILS	C Morgan/C Lente	John Powell
QUANTITIES	R Ramoso/H Mai	Janice Reguyal

PREPARED FOR THE STATE OF CALIFORNIA DEPARTMENT OF TRANSPORTATION

Robert E. Hawthorne
PROJECT ENGINEER

BRIDGE NO. 57-1216
POST MILE R15.7

DESIGN DETAIL SHEET (ENGLISH) (REV. 06-01-09)

ORIGINAL SCALE IN INCHES FOR REDUCED PLANS 0 1 2 3

CU 11269
EA 2T0951

DISREGARD PRINTS BEARING EARLIER REVISION DATES

REVISION DATES (PRELIMINARY STAGE ONLY) 01/22/10 03/08/10 05/27/10 06/15/10 06/30/10 08/27/10

SHEET 17 OF 32

FILE => 57-1216-1-gdt03.dgn

USERNAME => s123631 DATE PLOTTED => 27-OCT-2011 TIME PLOTTED => 10:18

DIST	COUNTY	ROUTE	POST MILES TOTAL PROJECT	SHEET No	TOTAL SHEETS
11	SD	15	M15.0/M16.4	563	610

Robert E. Hawthorne 10-15-10
REGISTERED CIVIL ENGINEER DATE

10-24-11
PLANS APPROVAL DATE

REGISTERED PROFESSIONAL ENGINEER ROBERT E. HAWTHORNE No. 40075 Exp. 03/31/12 CIVIL STATE OF CALIFORNIA

The State of California or its officers or agents shall not be responsible for the accuracy or completeness of scanned copies of this plan sheet.

SANDAG
401 B STREET, SUITE 800
SAN DIEGO, CA 92101

AECOM
7807 CONVOY COURT, SUITE 200
SAN DIEGO, CA 92111

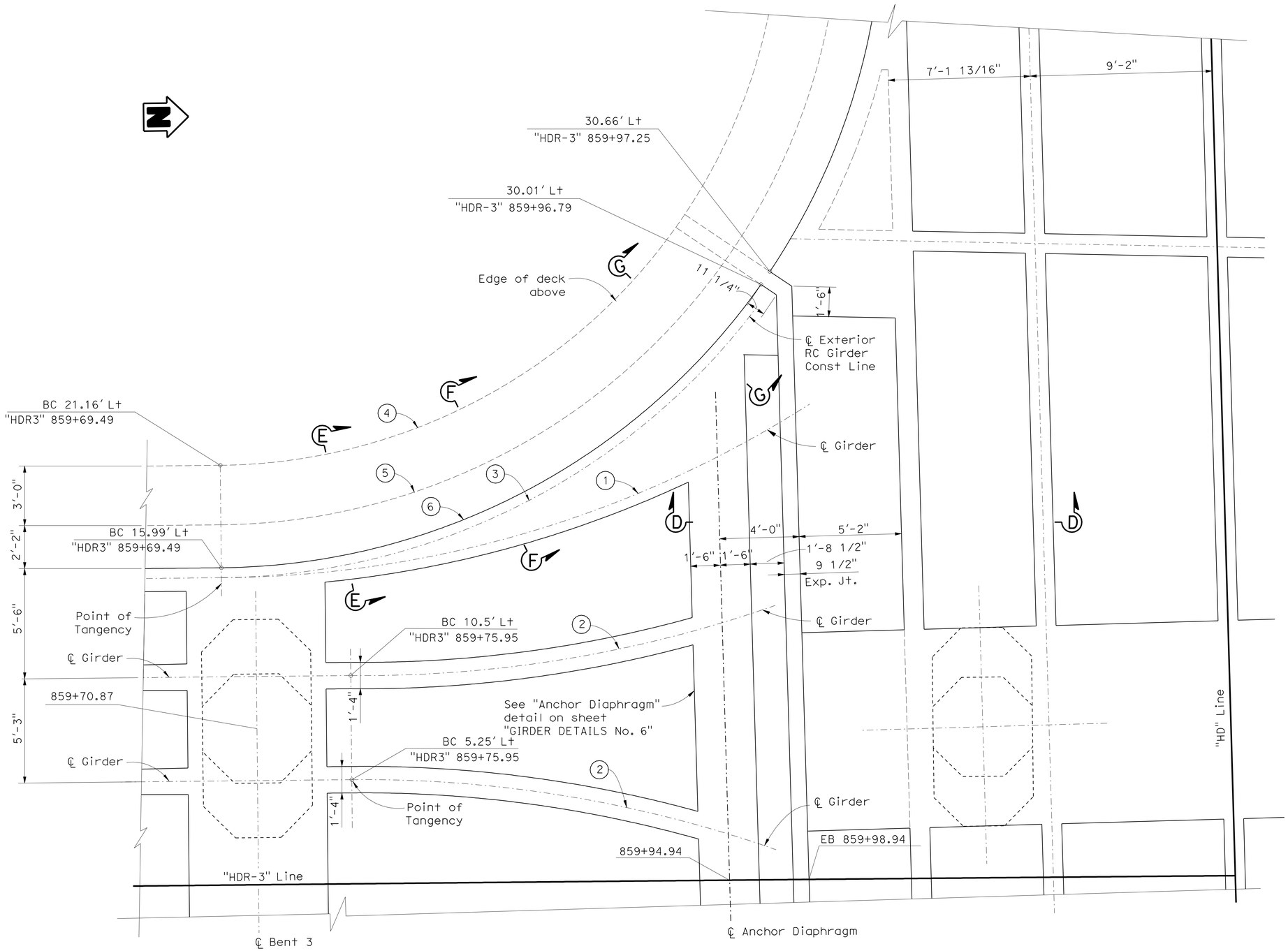

BOTTOM SECTION A-A

3/8"=1'-0"

Notes:

For Section D-D,
see "GIRDER DETAILS No. 1" sheet.

For Sections E-E, F-F & G-G,
see "GIRDER DETAILS No. 6" sheet.

Notes:

1. R = 55.75' (℄ Girder)
2. R = 62.68' (℄ Girder)
3. R = 34.18' (℄ Exterior RC Girder Const Line)
4. R = 28.52' (Edge of deck above)
5. R = 31.52' (Edge of Soffit)
6. R = 33.68' (Outside Edge bottom Girder)

HILLERY DIRECT ACCESS RAMPS
SOUTHBOUND ON-RAMP
GIRDER DETAILS No. 4

Norbert Gee
DESIGN OVERSIGHT

10-25-10
SIGN OFF DATE

	BY	CHECKED
DESIGN	R Ramoso/H Mai	John Powell
DETAILS	C Morgan/C Lente	John Powell
QUANTITIES	R Ramoso/H Mai	Janice Reguyal

PREPARED FOR THE STATE OF CALIFORNIA DEPARTMENT OF TRANSPORTATION

Robert E. Hawthorne
PROJECT ENGINEER

BRIDGE NO. 57-1216
POST MILE R15.7

CU 11269
EA 2T0951

DISREGARD PRINTS BEARING EARLIER REVISION DATES

REVISION DATES (PRELIMINARY STAGE ONLY): 01/22/10 03/08/10 05/27/10 06/15/10 06/30/10 08/27/10

SHEET 18 OF 32

DESIGN DETAIL SHEET (ENGLISH) (REV. 06-01-09)

ORIGINAL SCALE IN INCHES FOR REDUCED PLANS 0 1 2 3

FILE => 57-1216-1-gdt04.dgn

USERNAME => s123631 DATE PLOTTED => 27-OCT-2011 TIME PLOTTED => 10:18

DIST	COUNTY	ROUTE	POST MILES TOTAL PROJECT	SHEET No	TOTAL SHEETS
11	SD	15	M15.0/M16.4	564	610

REGISTERED CIVIL ENGINEER — DATE 10-15-10

10-24-11
PLANS APPROVAL DATE

REGISTERED PROFESSIONAL ENGINEER — ROBERT E. HAWTHORNE — No. 40075 — Exp. 03/31/12 — CIVIL — STATE OF CALIFORNIA

The State of California or its officers or agents shall not be responsible for the accuracy or completeness of scanned copies of this plan sheet.

SANDAG
401 B STREET, SUITE 800
SAN DIEGO, CA 92101

AECOM
7807 CONVOY COURT, SUITE 200
SAN DIEGO, CA 92111

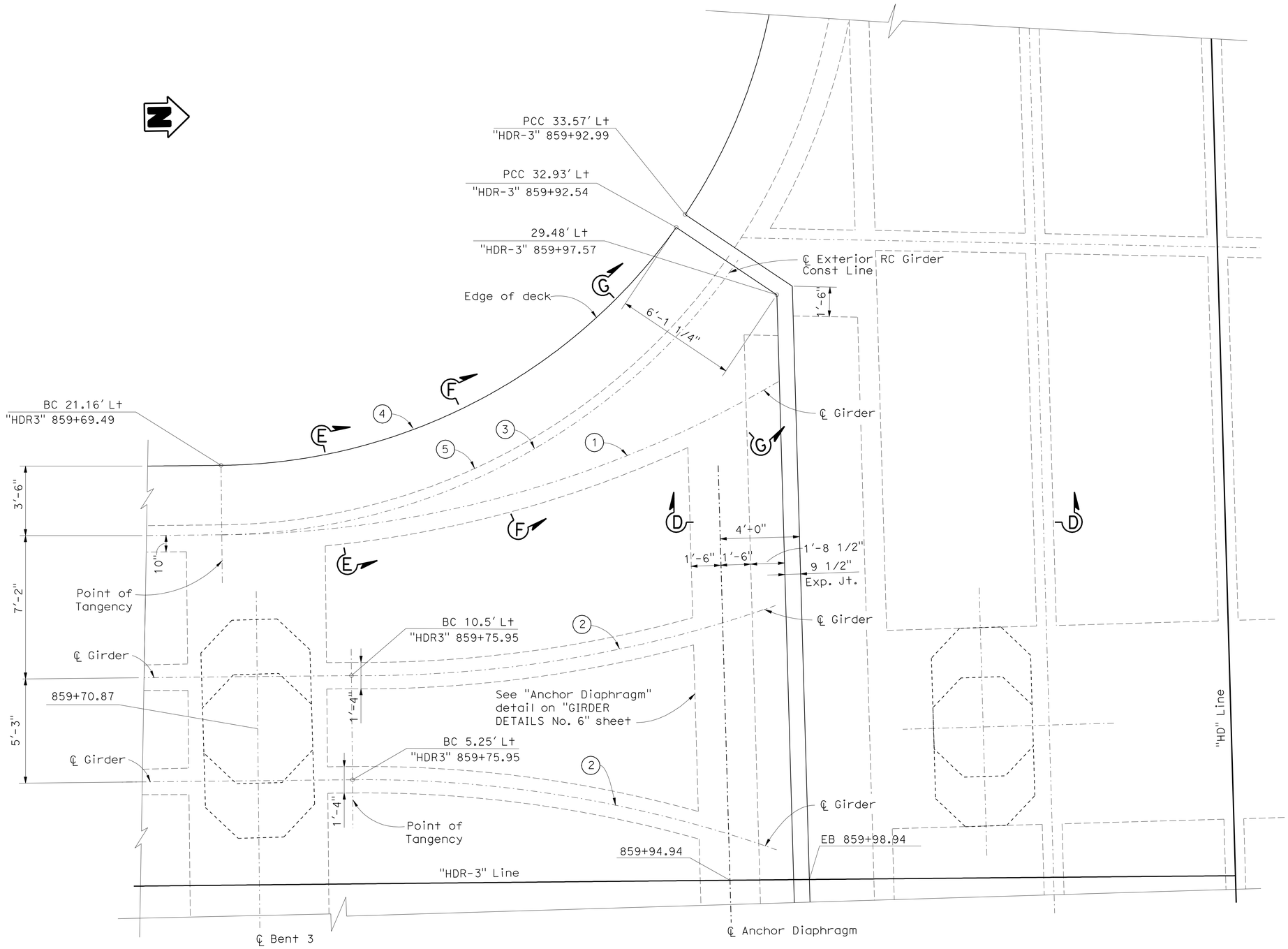

Notes:

For Section D-D,
see "GIRDER DETAILS No. 1" sheet.

For Sections E-E, F-F & G-G,
see "GIRDER DETAILS No. 6" sheet.

Notes:

(1) R = 55.75' (℄ Girder)

(2) R = 62.68' (℄ Girder)

(3) R = 32.02' (℄ Exterior RC Girder Const Line)

(4) R = 28.52' (Edge of deck)

(5) R = 31.52' (Edge of Soffit)

TOP SECTION B-B

3/8"=1'-0"

HILLERY DIRECT ACCESS RAMPS
SOUTHBOUND ON-RAMP
GIRDER DETAILS No. 5

DESIGN OVERSIGHT — Norbert Gee
10-25-10
SIGN OFF DATE

	BY	CHECKED
DESIGN	R Ramoso/H Mai	John Powell
DETAILS	C Morgan/C Lente	John Powell
QUANTITIES	R Ramoso/H Mai	Janice Reguyal

PREPARED FOR THE STATE OF CALIFORNIA DEPARTMENT OF TRANSPORTATION

Robert E. Hawthorne
PROJECT ENGINEER

BRIDGE NO. 57-1216
POST MILE R15.7

CU 11269
EA 2T0951

DISREGARD PRINTS BEARING EARLIER REVISION DATES

REVISION DATES (PRELIMINARY STAGE ONLY): 01/22/10 03/08/10 05/27/10 06/15/10 06/30/10 08/27/10

SHEET 19 OF 32

DESIGN DETAIL SHEET (ENGLISH) (REV. 06-01-09)

ORIGINAL SCALE IN INCHES FOR REDUCED PLANS 0 1 2 3

FILE => 57-1216-1-gdt05.dgn

USERNAME => s123631 DATE PLOTTED => 27-OCT-2011 TIME PLOTTED => 10:18

DIST	COUNTY	ROUTE	POST MILES TOTAL PROJECT	SHEET No	TOTAL SHEETS
11	SD	15	M15.0/M16.4	565	610

REGISTERED CIVIL ENGINEER 2-17-11 DATE

10-24-11
PLANS APPROVAL DATE

The State of California or its officers or agents shall not be responsible for the accuracy or completeness of scanned copies of this plan sheet.

REGISTERED PROFESSIONAL ENGINEER ROBERT E. HAWTHORNE No. 40075 Exp. 03/31/12 CIVIL STATE OF CALIFORNIA

SANDAG
401 B STREET, SUITE 800
SAN DIEGO, CA 92101

AECOM
7807 CONVOY COURT, SUITE 200
SAN DIEGO, CA 92111

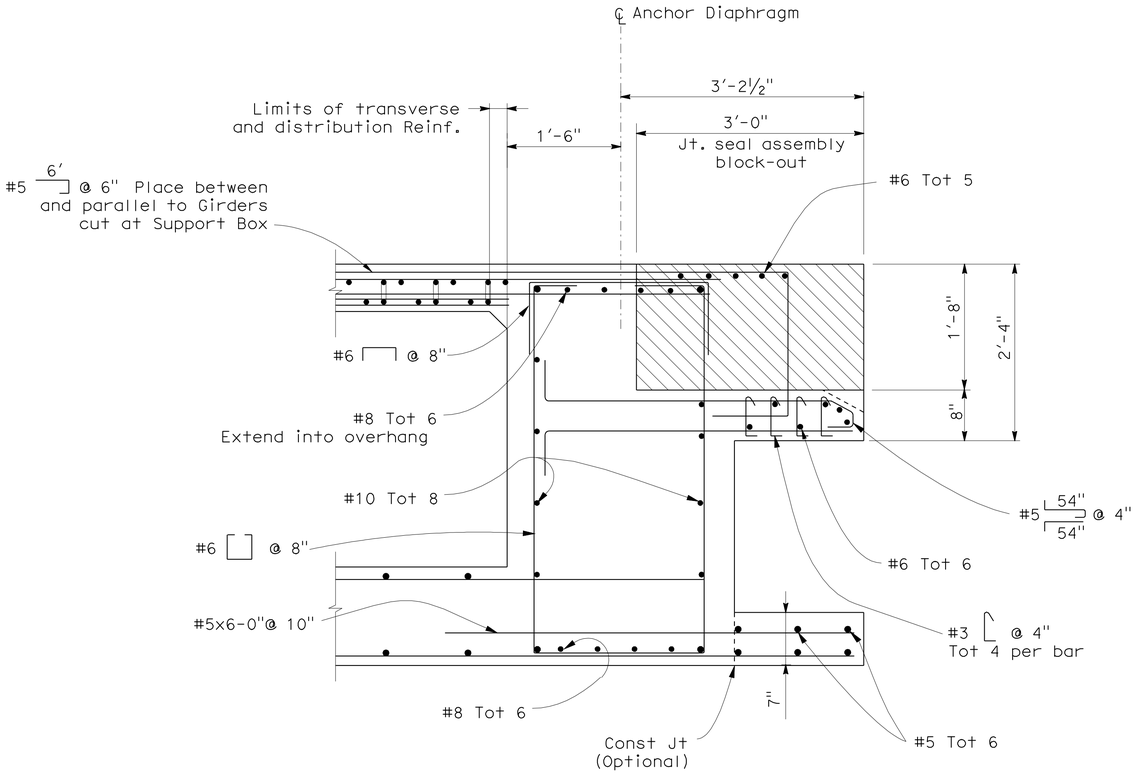

ANCHOR DIAPHRAGM

1"=1'-0"

B8-5

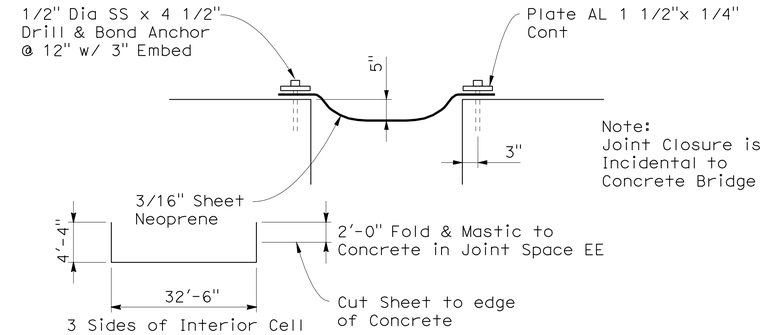

Note:
Joint Closure is Incidental to Concrete Bridge

JOINT CLOSURE DETAIL H

No Scale

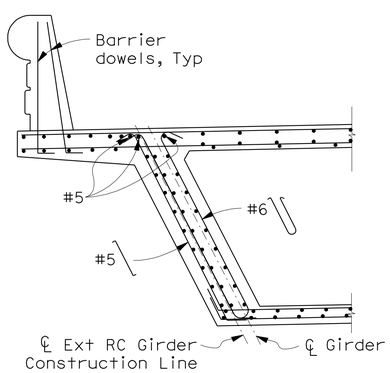

SECTION E-E

½"=1'-0"

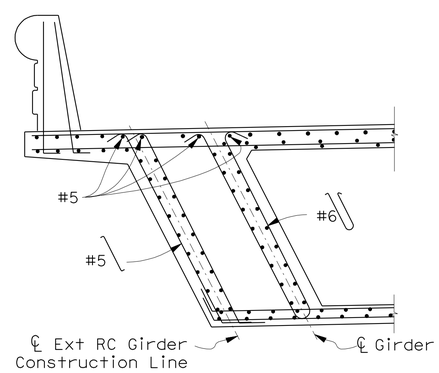

SECTION F-F

½"=1'-0"

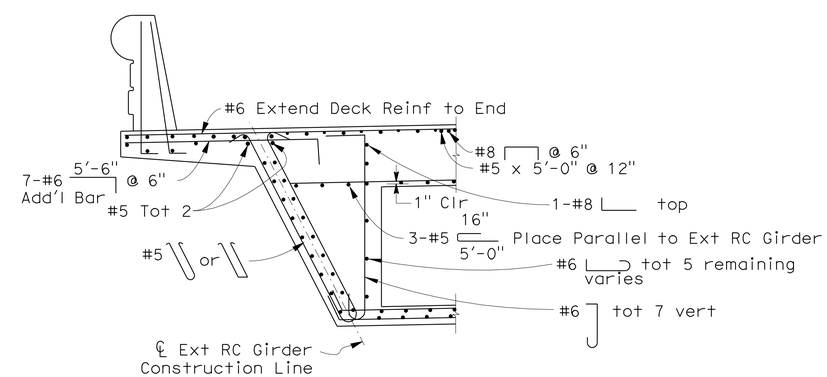

SECTION G-G

½"=1'-0"

DESIGN	BY R Ramoso/H Mai	CHECKED John Powell	
DETAILS	BY C Morgan/C Lente	CHECKED John Powell	
QUANTITIES	BY R Ramoso/H Mai	CHECKED Janice Reguyal	

DESIGN OVERSIGHT Norbert Gee
2-22-11
SIGN OFF DATE

DESIGN DETAIL SHEET (ENGLISH) (REV. 06-01-09)

ORIGINAL SCALE IN INCHES FOR REDUCED PLANS 0 1 2 3

PREPARED FOR THE STATE OF CALIFORNIA DEPARTMENT OF TRANSPORTATION

Robert E. Hawthorne
PROJECT ENGINEER

CU 11269
EA 2T0951

BRIDGE NO. 57-1216
POST MILE R15.7

HILLERY DIRECT ACCESS RAMPS
SOUTHBOUND ON-RAMP
GIRDER DETAILS No. 6

DISREGARD PRINTS BEARING EARLIER REVISION DATES

REVISION DATES (PRELIMINARY STAGE ONLY): 01/22/10 03/08/10 05/18/10 05/27/10 06/15/10 06/30/10 08/27/10 10/06/10 12-14-10 2-17-11

SHEET 20 OF 32

FILE => 57-1216-1-gdt06.dgn

USERNAME => s123631 DATE PLOTTED => 27-OCT-2011 TIME PLOTTED => 10:18

DIST	COUNTY	ROUTE	POST MILES TOTAL PROJECT	SHEET No	TOTAL SHEETS
11	SD	15	M15.0/M16.4	566	610

REGISTERED CIVIL ENGINEER 10-15-10 DATE

10-24-11
PLANS APPROVAL DATE

REGISTERED PROFESSIONAL ENGINEER ROBERT E. HAWTHORNE No. 40075 Exp. 03/31/12 CIVIL STATE OF CALIFORNIA

The State of California or its officers or agents shall not be responsible for the accuracy or completeness of scanned copies of this plan sheet.

SANDAG
401 B STREET, SUITE 800
SAN DIEGO, CA 92101

AECOM
7807 CONVOY COURT, SUITE 200
SAN DIEGO, CA 92111

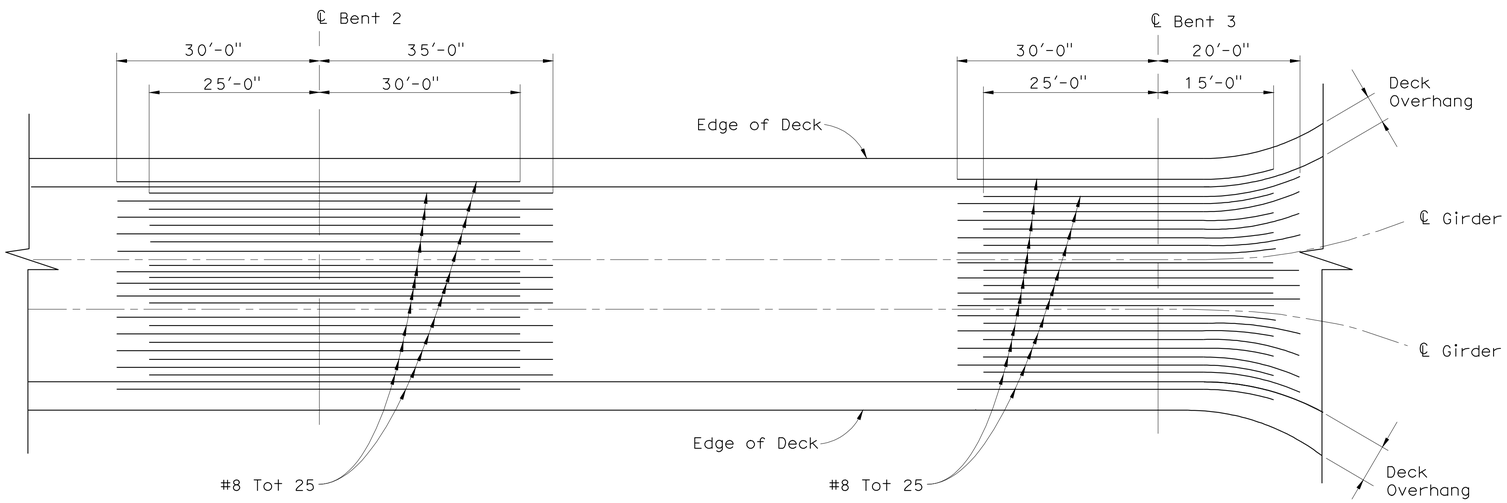

TOP REINFORCEMENT

NTS

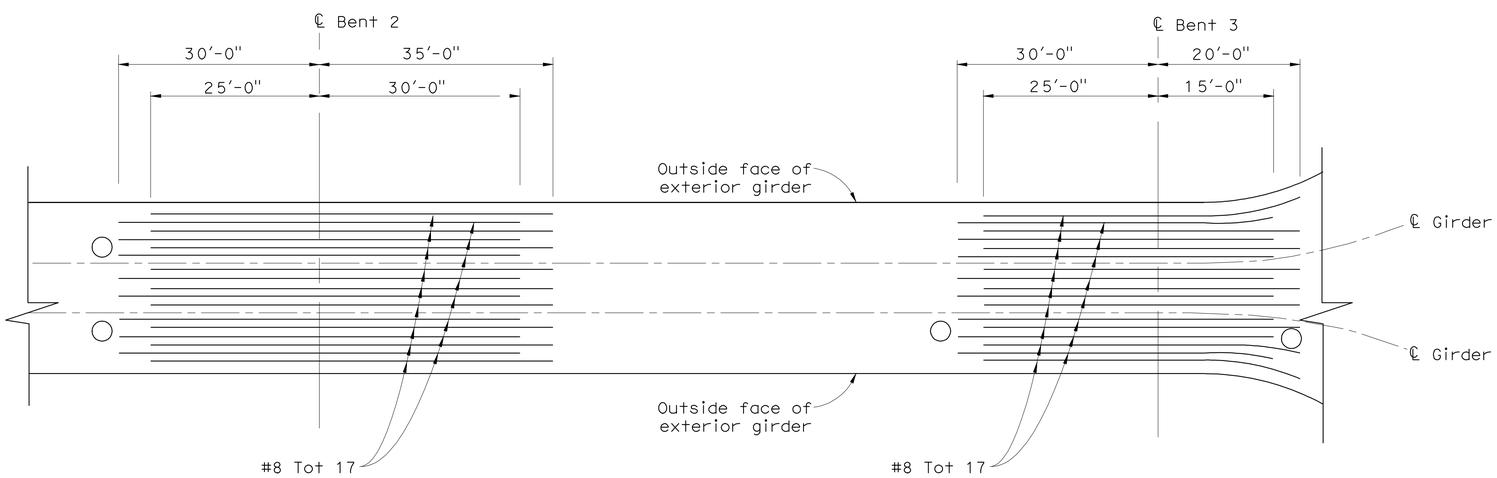

Note:
No splices allowed in #8 Top
& Bottom girder reinforcement

BOTTOM REINFORCEMENT

NTS

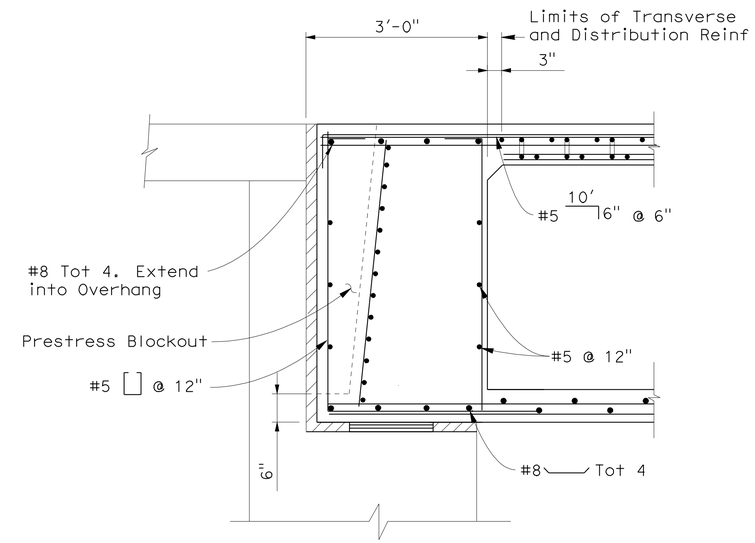

END DIAPHRAGM

3/4"=1'-0"

B8-5

Note:
No splices allowed in #8 Top
& Bottom girder reinforcement

DESIGN OVERSIGHT Norbert Gee
10-25-10
SIGN OFF DATE

	BY	CHECKED
DESIGN	R Ramoso/H Mai	John Powell
DETAILS	C Morgan/C Lente	John Powell
QUANTITIES	R Ramoso/H Mai	Janice Reguyal

PREPARED FOR THE STATE OF CALIFORNIA DEPARTMENT OF TRANSPORTATION

Robert E. Hawthorne
PROJECT ENGINEER

BRIDGE NO. 57-1216
POST MILE R15.7

HILLERY DIRECT ACCESS RAMPS
SOUTHBOUND ON-RAMP
GIRDER REINFORCEMENT

DESIGN DETAIL SHEET (ENGLISH) (REV. 06-01-09)

ORIGINAL SCALE IN INCHES FOR REDUCED PLANS 0 1 2 3

CU 11269
EA 2T0951

DISREGARD PRINTS BEARING EARLIER REVISION DATES

REVISION DATES (PRELIMINARY STAGE ONLY) 01/22/10 03/08/10 05/18/10 05/21/10 06/15/10 06/30/10 08/27/10

SHEET 21 OF 32

FILE => 57-1216-o-gir_rf01.dgn

USERNAME => s123631 DATE PLOTTED => 27-OCT-2011 TIME PLOTTED => 10:18

DIST	COUNTY	ROUTE	POST MILES TOTAL PROJECT	SHEET No	TOTAL SHEETS
11	SD	15	M15.0/M16.4	567	610

REGISTERED CIVIL ENGINEER — DATE 10-15-10

10-24-11
PLANS APPROVAL DATE

REGISTERED PROFESSIONAL ENGINEER — ROBERT E. HAWTHORNE — No. 40075 — Exp. 03/31/12 — CIVIL — STATE OF CALIFORNIA

The State of California or its officers or agents shall not be responsible for the accuracy or completeness of scanned copies of this plan sheet.

SANDAG
401 B STREET, SUITE 800
SAN DIEGO, CA 92101

AECOM
7807 CONVOY COURT, SUITE 200
SAN DIEGO, CA 92111

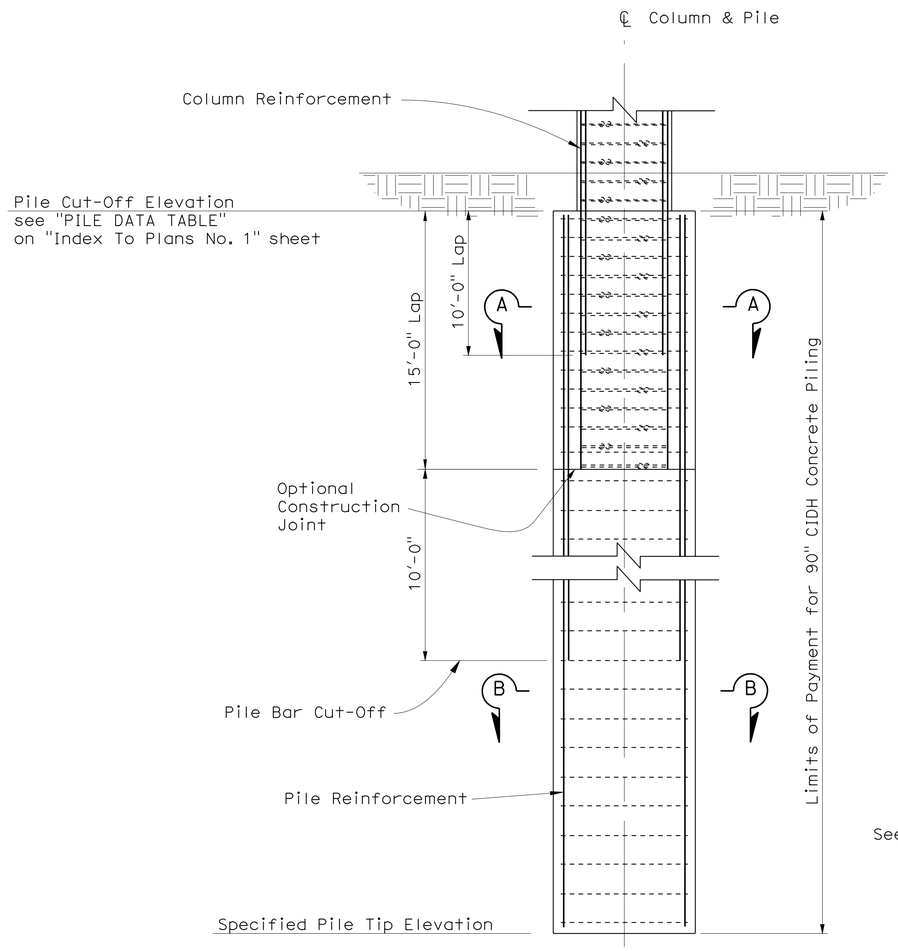

90" DIA CIDH PILE

1/4"=1'-0"

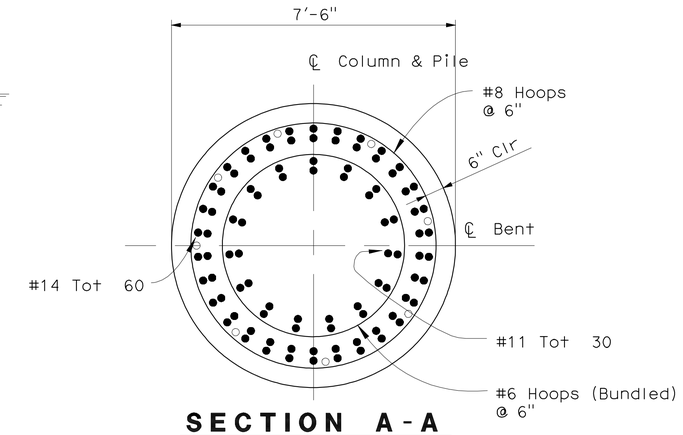

SECTION A-A

1/2"=1'-0"

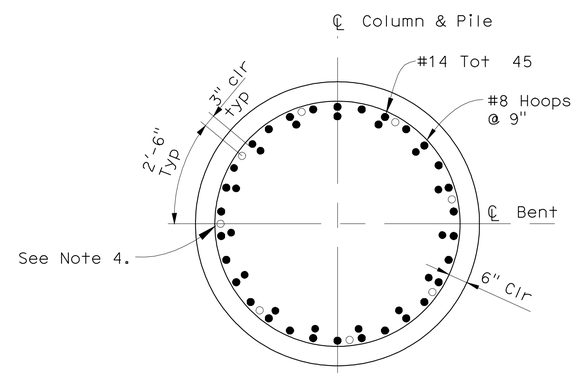

SECTION B-B

1/2"=1'-0"

Notes:
1. For Column Reinf and details, see "Column Details" sheet.
2. All hoops are "ultimate" butt spliced continuous.
3. Not all CIDH Reinforcement shown.
4. Inspection Pipes to be placed against outer Hoop, tot 8 pipes each pile.

DESIGN OVERSIGHT — Norbert Gee
10-25-10
SIGN OFF DATE

	BY	CHECKED
DESIGN	R Ramoso/H Mai	John Powell
DETAILS	C Morgan/C Lente	John Powell
QUANTITIES	R Ramoso/H Mai	Janice Reguyal

PREPARED FOR THE STATE OF CALIFORNIA DEPARTMENT OF TRANSPORTATION

Robert E. Hawthorne
PROJECT ENGINEER

BRIDGE NO. 57-1216
POST MILE R15.7

HILLERY DIRECT ACCESS RAMPS
SOUTHBOUND ON-RAMP
PILE DETAILS

DESIGN DETAIL SHEET (ENGLISH) (REV. 06-01-09)

ORIGINAL SCALE IN INCHES FOR REDUCED PLANS 0 1 2 3

CU 11269
EA 2T0951

DISREGARD PRINTS BEARING EARLIER REVISION DATES

REVISION DATES (PRELIMINARY STAGE ONLY): 01/22/10 03/08/10 05/18/10 05/27/10 06/15/10 06/30/10 08/27/10 10/06/10

SHEET 22 OF 32

FILE => 57-1216-p-pdt01.dgn

USERNAME => s12614 DATE PLOTTED => 31-OCT-2011 TIME PLOTTED => 06:28

DIST	COUNTY	ROUTE	POST MILES TOTAL PROJECT	SHEET No	TOTAL SHEETS
11	SD	15	M15.0/M16.4	568	610

REGISTERED CIVIL ENGINEER — DATE 2-17-11

10-24-11
PLANS APPROVAL DATE

REGISTERED PROFESSIONAL ENGINEER — ROBERT E. HAWTHORNE — No. 40075 — Exp. 03/31/12 — CIVIL — STATE OF CALIFORNIA

The State of California or its officers or agents shall not be responsible for the accuracy or completeness of scanned copies of this plan sheet.

SANDAG
401 B STREET, SUITE 800
SAN DIEGO, CA 92101

AECOM
7807 CONVOY COURT, SUITE 200
SAN DIEGO, CA 92111

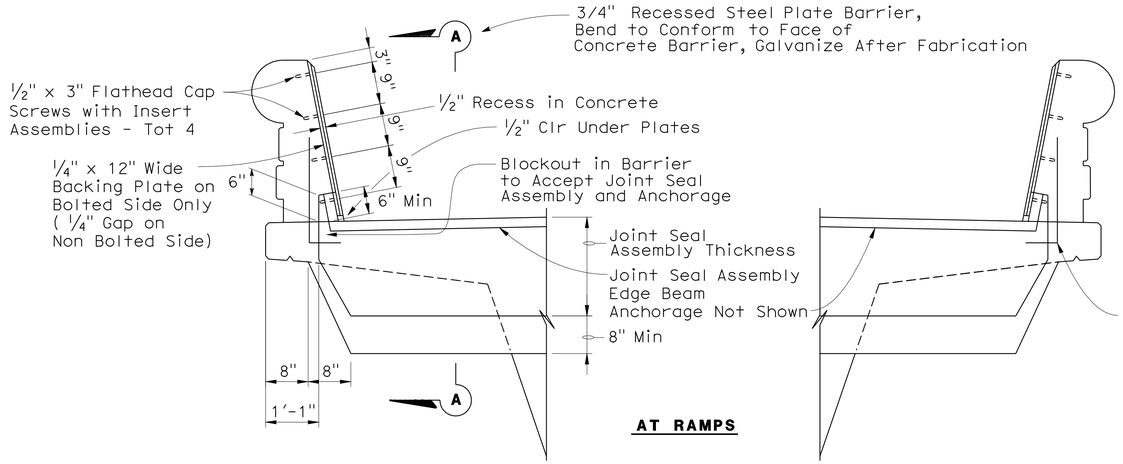

SEAL INSTALLATION
3/4" = 1'-0"

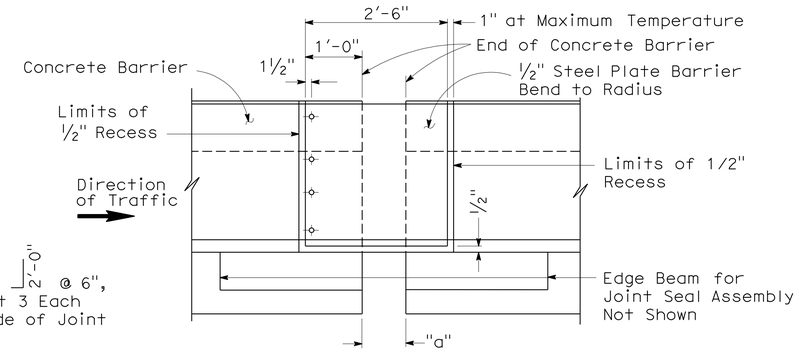

ELEVATION A-A
3/4" = 1'-0"

JOINT INFORMATION		"a" DIMENSIONS			
LOCATION	MOVEMENT RATING (M.R.)	SKEW	WINTER	SPRING & FALL	SUMMER
EB	9 1/2 *	1.21°	10.0"	9.5"	9.0"

* Movement Rating includes Seismic Movement
Joint shall consist of 4 Neoprene cell and beam modular Joint Seal Assemblies (Swiveling)

Note: For details not shown, see Bridge Plans

Note:
Wrack OC Support Box 3/4" away from Abutment. Field verify OC Structure Shrinkage.

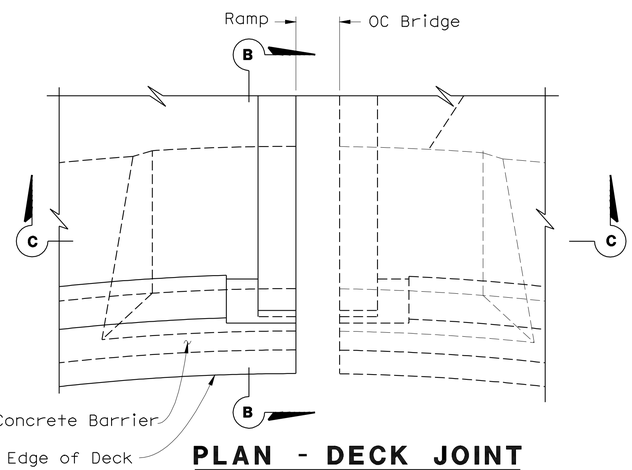

PLAN - DECK JOINT
3/4" = 1'-0"

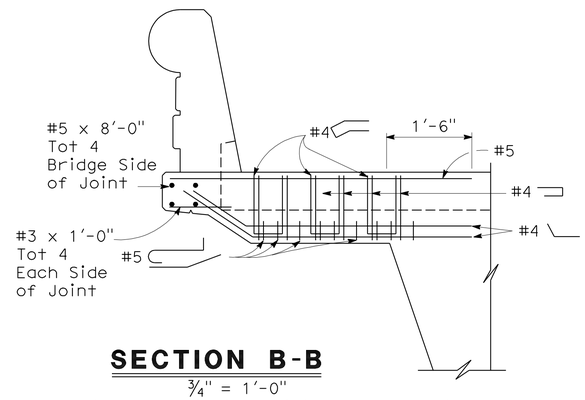

SECTION B-B
3/4" = 1'-0"
Reinf Shown is in Addition to Slab Reinf

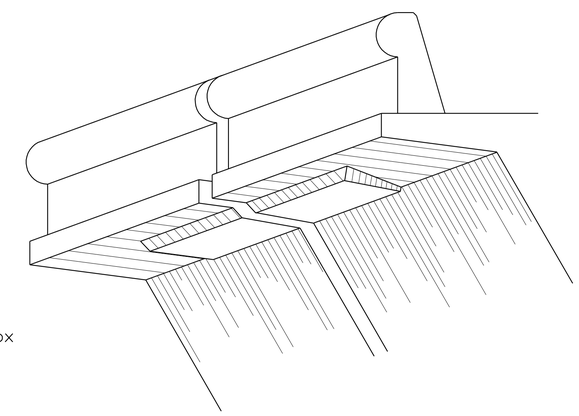

DECK OVERHANG
No Scale

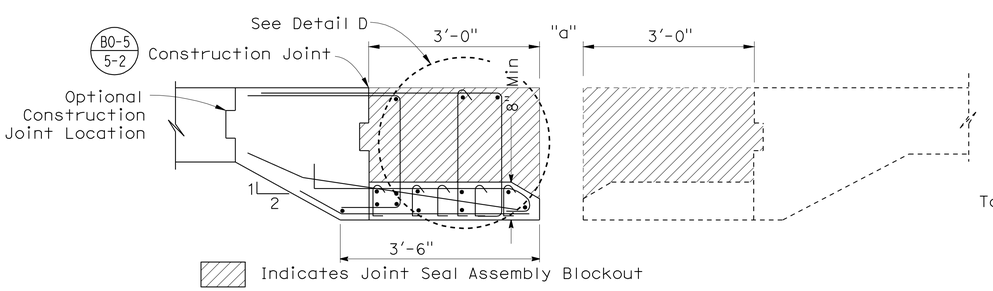

SECTION C-C
3/4" = 1'-0"

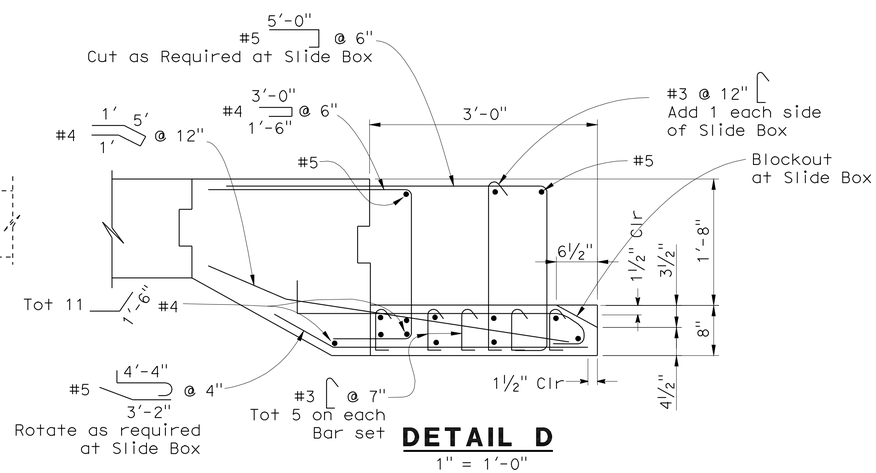

DETAIL D
1" = 1'-0"

HILLERY DIRECT ACCESS RAMPS
SOUTHBOUND ON-RAMP
JOINT SEAL ASSEMBLY MOVEMENT RATING GREATER THAN 4"

DESIGN OVERSIGHT — Norbert Gee
2-22-11
SIGN OFF DATE

	BY	CHECKED
DESIGN	R Ramoso/H Mai	John Powell
DETAILS	C Morgan/C Lente	John Powell
QUANTITIES	R Ramoso/H Mai	Janice Reguyal

PREPARED FOR THE STATE OF CALIFORNIA DEPARTMENT OF TRANSPORTATION

Robert E. Hawthorne
PROJECT ENGINEER

BRIDGE NO. 57-1216
POST MILE R15.7

CU 11269
EA 2T0951

DISREGARD PRINTS BEARING EARLIER REVISION DATES

REVISION DATES (PRELIMINARY STAGE ONLY): 01/22/10 03/08/10 05/21/10 06/15/10 06/30/10 08/21/10 2-17-11

SHEET 23 OF 32

DESIGN DETAIL SHEET (ENGLISH) (REV. 06-01-09)

ORIGINAL SCALE IN INCHES FOR REDUCED PLANS 0 1 2 3

FILE => 57-1216-q-jntdt02.dgn

USERNAME => s123631 DATE PLOTTED => 27-OCT-2011 TIME PLOTTED => 10:19

DIST	COUNTY	ROUTE	POST MILES TOTAL PROJECT	SHEET No	TOTAL SHEETS
11	SD	15	M15.0/M16.4	569	610

Robert E. Hawthorne 10-15-10
REGISTERED CIVIL ENGINEER DATE

10-24-11
PLANS APPROVAL DATE

REGISTERED PROFESSIONAL ENGINEER ROBERT E. HAWTHORNE No. 40075 Exp. 03/31/12 CIVIL STATE OF CALIFORNIA

The State of California or its officers or agents shall not be responsible for the accuracy or completeness of scanned copies of this plan sheet.

SANDAG
401 B STREET, SUITE 800
SAN DIEGO, CA 92101

AECOM
7807 CONVOY COURT, SUITE 200
SAN DIEGO, CA 92111

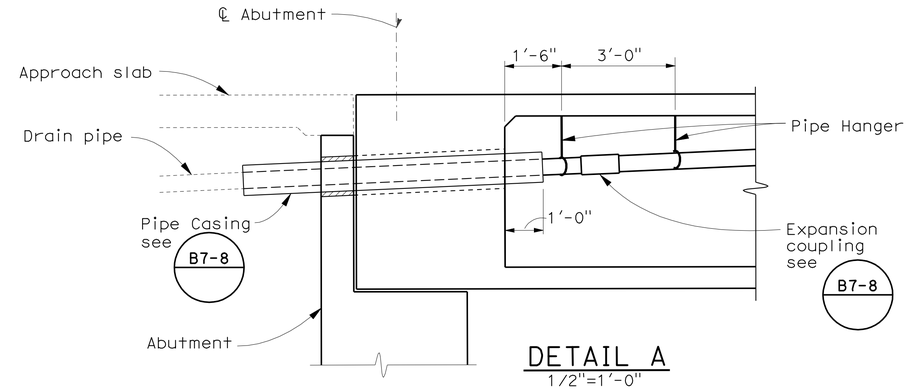

DETAIL A
1/2"=1'-0"

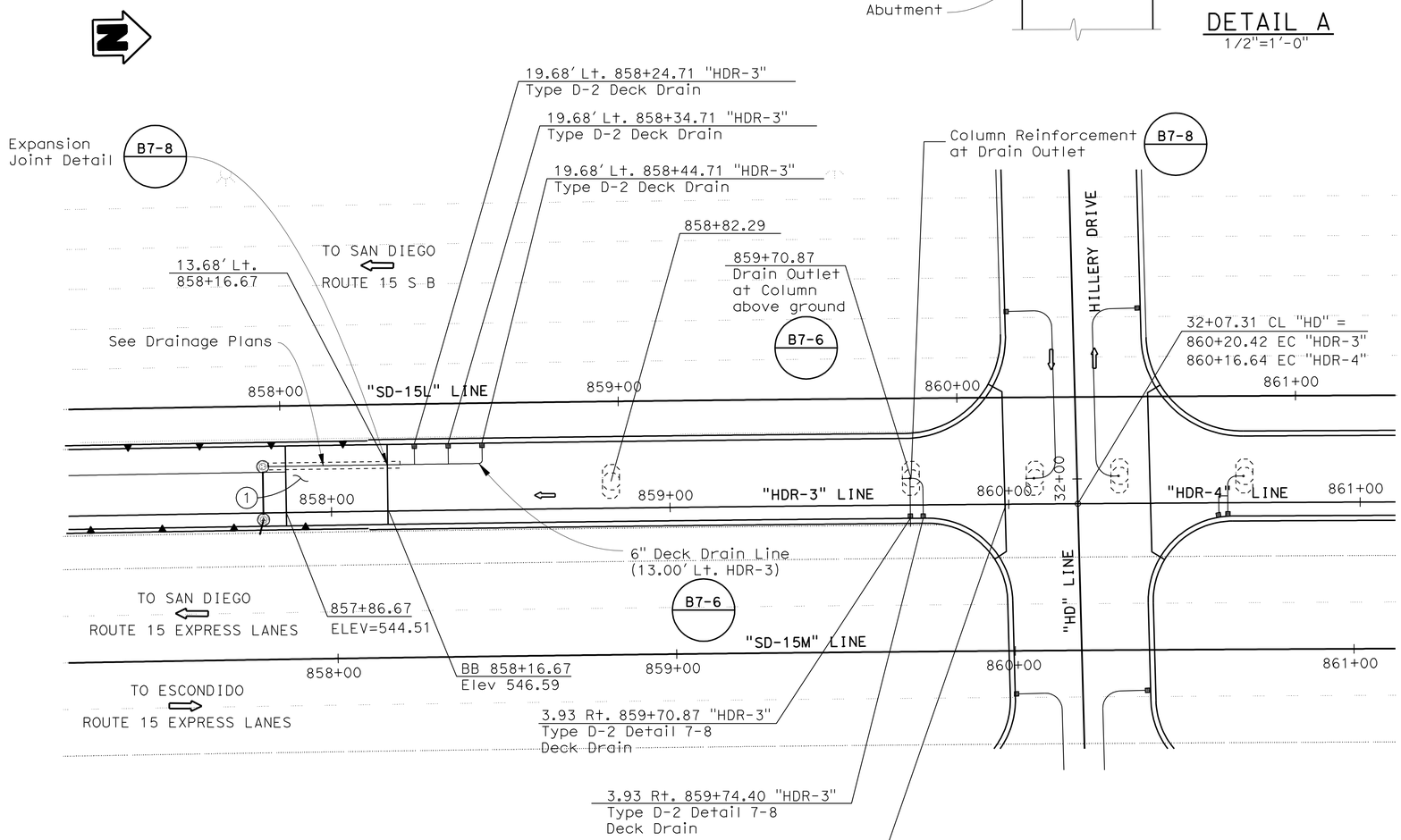

PLAN
1" = 20'

LEGEND:

——— - Indicates new Drainage Line

(1) - Approach Slab, see "General Plan".

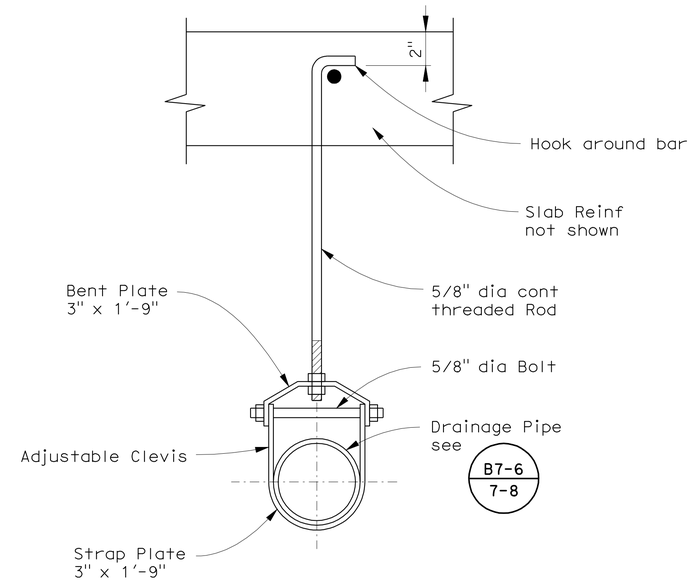

DRAINAGE PIPE SUPPORT
NTS

Norbert Gee
DESIGN OVERSIGHT Norbert Gee
10-25-10
SIGN OFF DATE

	BY	CHECKED
DESIGN	R Ramoso/H Mai	John Powell
DETAILS	C Morgan/C Lente	John Powell
QUANTITIES	R Ramoso/H Mai	Janice Reguyal

PREPARED FOR THE STATE OF CALIFORNIA DEPARTMENT OF TRANSPORTATION

Robert E. Hawthorne
PROJECT ENGINEER

BRIDGE NO. 57-1216
POST MILE R15.7

HILLERY DIRECT ACCESS RAMPS
SOUTHBOUND ON-RAMP
DECK DRAINS

DESIGN DETAIL SHEET (ENGLISH) (REV. 06-01-09)

ORIGINAL SCALE IN INCHES FOR REDUCED PLANS 0 1 2 3

CU 11269
EA 2T0951

DISREGARD PRINTS BEARING EARLIER REVISION DATES

REVISION DATES (PRELIMINARY STAGE ONLY) 01/22/10 03/08/10 05/18/10 05/27/10 06/15/10 06/30/10 08/27/10

SHEET 24 OF 32

FILE => 57-1216-r-dd01.dgn

USERNAME => s123631 DATE PLOTTED => 27-OCT-2011 TIME PLOTTED => 10:19

DIST	COUNTY	ROUTE	POST MILES TOTAL PROJECT	SHEET No	TOTAL SHEETS
11	SD	15	M15.0/M16.4	570	610

REGISTERED CIVIL ENGINEER — DATE 10-15-10

10-24-11
PLANS APPROVAL DATE

REGISTERED PROFESSIONAL ENGINEER — ROBERT E. HAWTHORNE — No. 40075 — Exp. 03/31/12 — CIVIL — STATE OF CALIFORNIA

The State of California or its officers or agents shall not be responsible for the accuracy or completeness of scanned copies of this plan sheet.

SANDAG
401 B STREET, SUITE 800
SAN DIEGO, CA 92101

AECOM
7807 CONVOY COURT, SUITE 200
SAN DIEGO, CA 92111

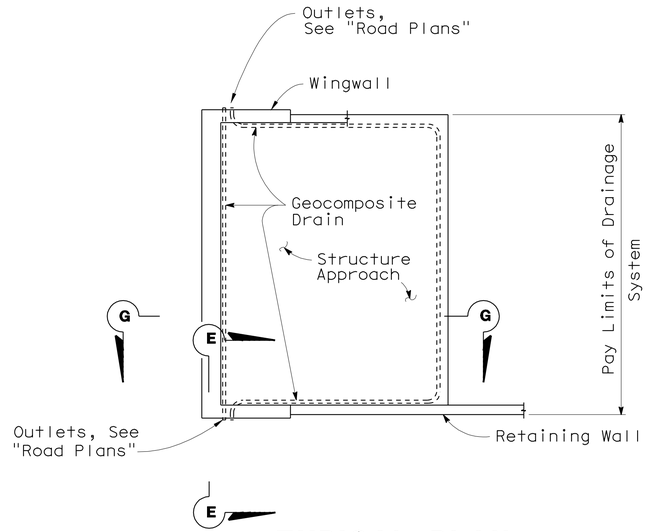

TYPICAL PLAN
1" = 10'

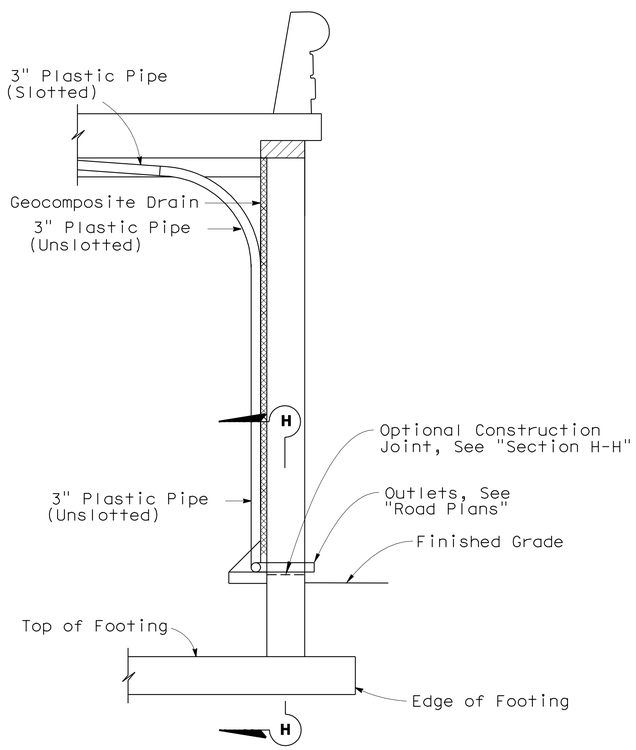

SECTION E-E
1/2" = 1'-0"

Note: Bends and Junctions in 3" Plastic Pipe are 30" Radius Min

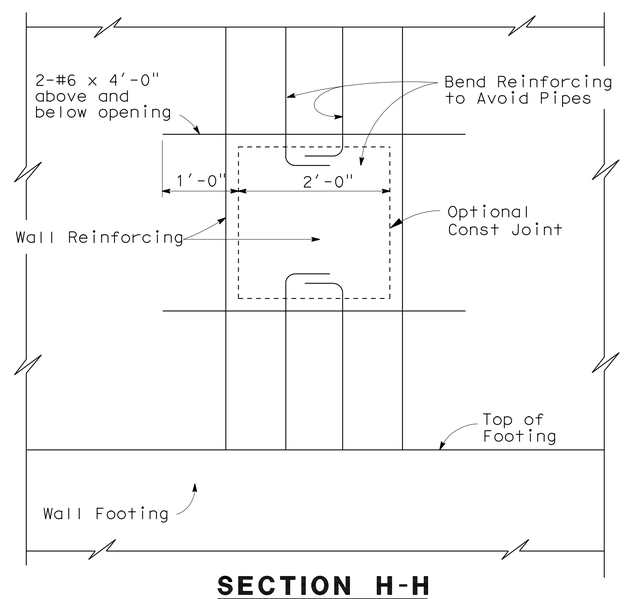

SECTION H-H
1" = 1'-0"

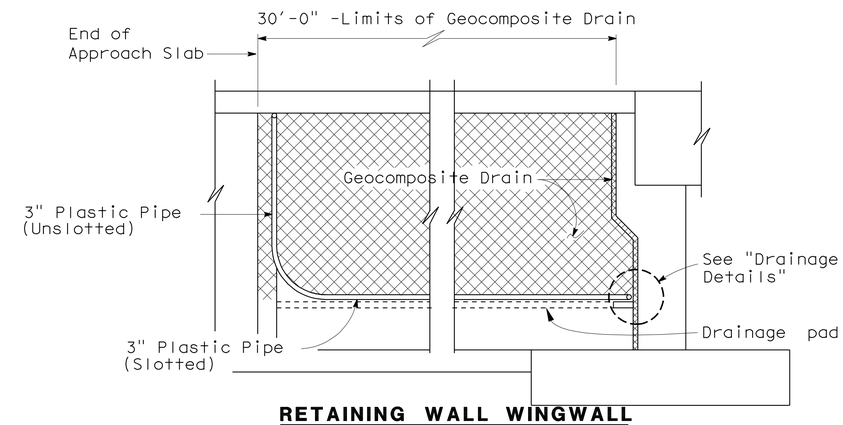

RETAINING WALL WINGWALL
SECTION G-G
1/4" = 1'-0"

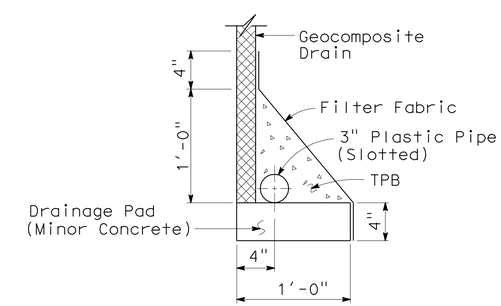

WITHOUT FOOTING
DRAINAGE DETAILS
1 1/2" = 1'-0"

HILLERY DIRECT ACCESS RAMPS
SOUTHBOUND ON-RAMP
STRUCTURE APPROACH DRAINAGE DETAILS

DESIGN OVERSIGHT — Norbert Gee
10-25-10
SIGN OFF DATE

	BY	CHECKED
DESIGN	R Ramoso/H Mai	John Powell
DETAILS	C Morgan/C Lente	John Powell
QUANTITIES	R Ramoso/H Mai	Janice Reguyal

PREPARED FOR THE STATE OF CALIFORNIA DEPARTMENT OF TRANSPORTATION

Robert E. Hawthorne
PROJECT ENGINEER

BRIDGE NO. 57-1216
POST MILE R15.7

CU 11269
EA 2T0951

DISREGARD PRINTS BEARING EARLIER REVISION DATES — REVISION DATES (PRELIMINARY STAGE ONLY): 01/22/10 03/08/10 05/27/10 06/15/10 06/30/10 08/27/10

SHEET 25 OF 32

DESIGN DETAIL SHEET (ENGLISH) (REV. 06-01-09)

ORIGINAL SCALE IN INCHES FOR REDUCED PLANS 0 1 2 3

FILE => 57-1216-s-sadd.dgn

USERNAME => s123631 DATE PLOTTED => 27-OCT-2011 TIME PLOTTED => 10:19

DIST	COUNTY	ROUTE	POST MILES TOTAL PROJECT	SHEET No	TOTAL SHEETS
11	SD	15	M15.0/M16.4	571	610

REGISTERED CIVIL ENGINEER — DATE 10-15-10

10-24-11
PLANS APPROVAL DATE

REGISTERED PROFESSIONAL ENGINEER — ROBERT E. HAWTHORNE — No. 40075 — Exp. 03/31/12 — CIVIL — STATE OF CALIFORNIA

The State of California or its officers or agents shall not be responsible for the accuracy or completeness of scanned copies of this plan sheet.

SANDAG
401 B STREET, SUITE 800
SAN DIEGO, CA 92101

AECOM
7807 CONVOY COURT, SUITE 200
SAN DIEGO, CA 92111

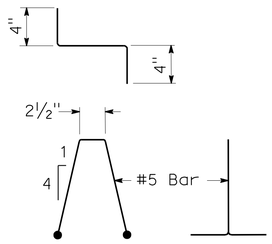

BAR CHAIR DETAIL

1½"=1'-0"

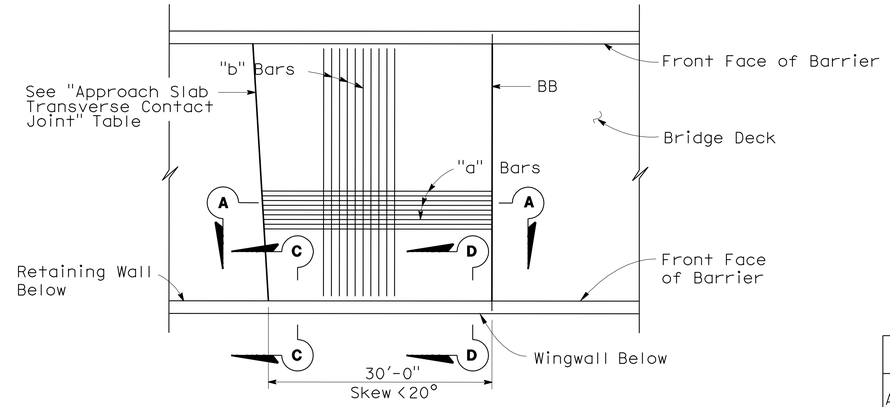

PLAN

1" = 10'

APPROACH SLAB TRANSVERSE CONTACT JOINT		
APPROACH SKEW	WITH AC ROADWAY PAVEMENT	WITH PCC ROADWAY PAVEMENT
< 20°	Parallel to face of paving notch	Parallel to face of paving notch

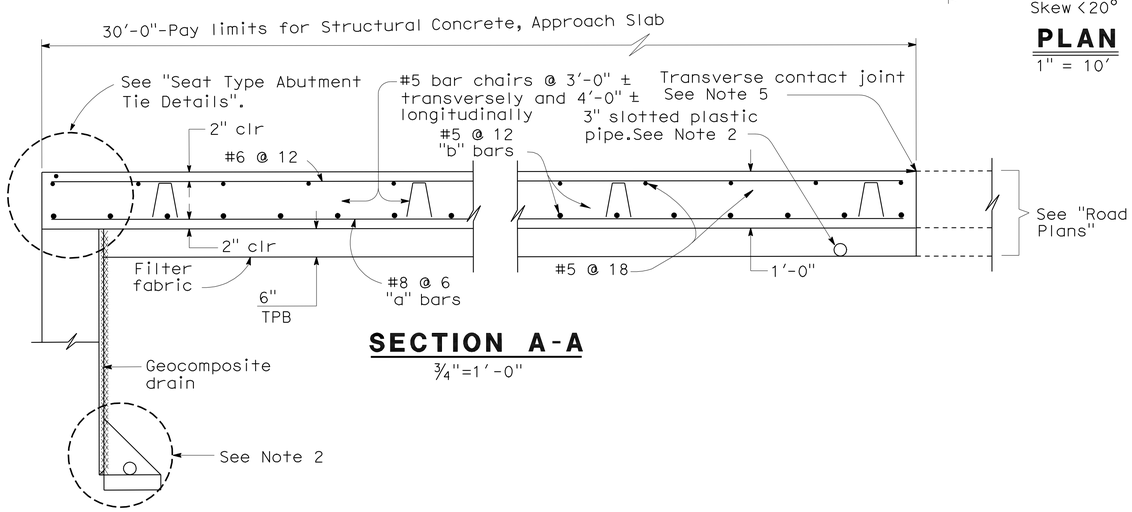

SECTION A-A

¾"=1'-0"

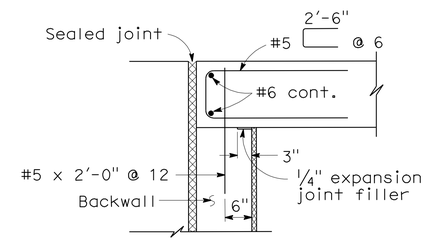

MR ≤ 2"

SEAT TYPE ABUTMENT TIE DETAILS (SEE NOTE 1)

¾"=1'-0"

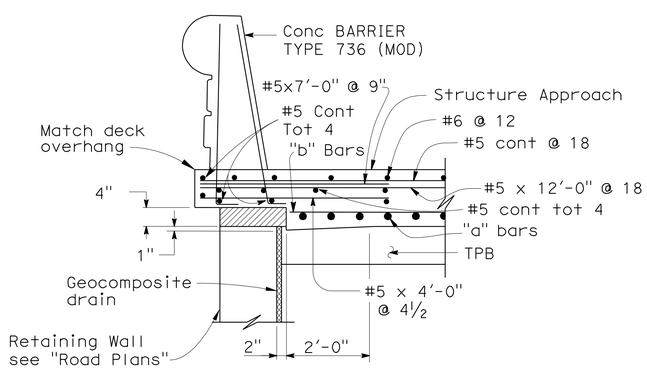

SECTION C-C

¾"=1'-0"

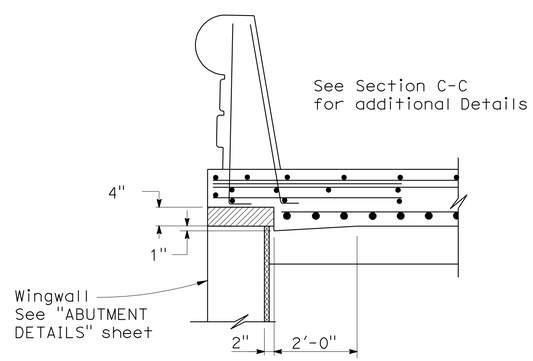

SECTION D-D

¾"=1'-0"

NOTES:

1. For details not shown, see Structure Plans. For MR ≤ 2", adjust bar reinforcement to clear a sawcut for sealed joint, when required.
2. For drainage details, see "Structure Approach Drainage Details" sheet.
3. Longitudinal construction joints, when permitted by the Engineer, shall be located on lane lines.
4. End angle or plate at beginning of barrier transition, end of wingwall or end of structure approach as applicable.
5. For transverse contact joint with new PCC paving, refer to Revised Standard Plan RSP P10.
6. At the contractor's option, approach slab transverse reinforcement may be placed parallel to paving notch. Spacing of transverse reinforcement is measured along ℄ of roadway.

Remove all polystyrene.

HILLERY DIRECT ACCESS RAMPS

SOUTHBOUND ON-RAMP

STRUCTURE APPROACH TYPE N(30S)

DESIGN OVERSIGHT — Norbert Gee
10-25-10
SIGN OFF DATE

	BY	CHECKED
DESIGN	R Ramoso/H Mai	John Powell
DETAILS	C Morgan/C Lente	John Powell
QUANTITIES	R Ramoso/H Mai	Janice Reguyal

PREPARED FOR THE STATE OF CALIFORNIA DEPARTMENT OF TRANSPORTATION

Robert E. Hawthorne
PROJECT ENGINEER

BRIDGE NO. 57-1216
POST MILE R15.7

CU 11269
EA 2T0951

DISREGARD PRINTS BEARING EARLIER REVISION DATES

REVISION DATES (PRELIMINARY STAGE ONLY): 01/22/10 03/08/10 05/27/10 06/15/10 06/30/10 08/27/10

SHEET 26 OF 32

DESIGN DETAIL SHEET (ENGLISH) (REV. 06-01-09)

ORIGINAL SCALE IN INCHES FOR REDUCED PLANS 0 1 2 3

FILE => 57-1216-s-satn.dgn

USERNAME => s12614 DATE PLOTTED => 27-OCT-2011 TIME PLOTTED => 10:24

DIST	COUNTY	ROUTE	POST MILES TOTAL PROJECT	SHEET No	TOTAL SHEETS
11	SD	15	M15.0/M16.4	572	610

Robert E. Hawthorne 10-15-10
REGISTERED CIVIL ENGINEER DATE

10-24-11
PLANS APPROVAL DATE

REGISTERED PROFESSIONAL ENGINEER ROBERT E. HAWTHORNE No. 40075 Exp. 03/31/12 CIVIL STATE OF CALIFORNIA

The State of California or its officers or agents shall not be responsible for the accuracy or completeness of scanned copies of this plan sheet.

SANDAG
401 B STREET, SUITE 800
SAN DIEGO, CA 92101

AECOM
7807 CONVOY COURT, SUITE 200
SAN DIEGO, CA 92111

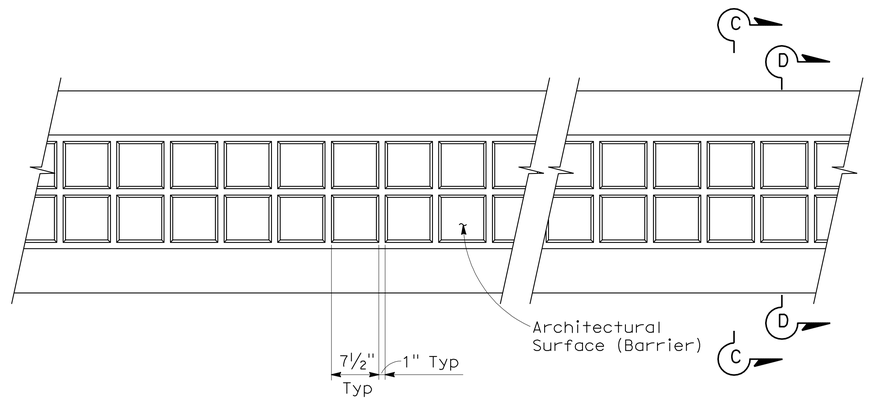

ELEVATION
1"=1'-0"

Notes:
(1) Alternate "Section C-C" and "Section D-D" along the full length of barrier rail.

(2) For other details of barrier rail not shown or noted, see B11-56

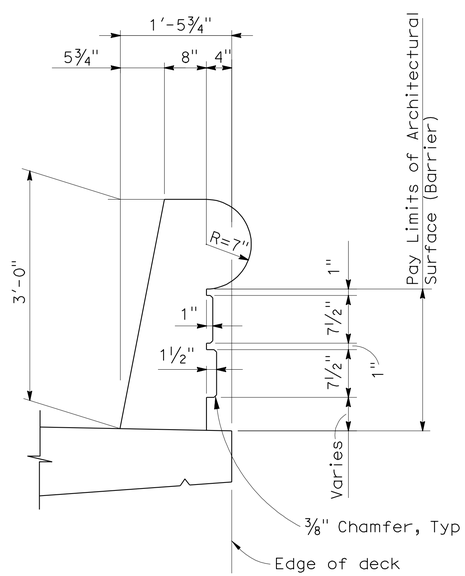

SECTION C-C
1"=1'-0"

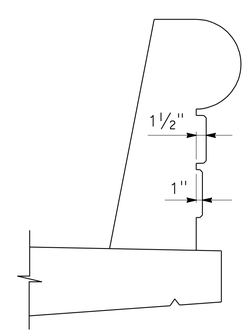

SECTION D-D
1"=1'-0"

Note:
For dimensions not shown, see "Section C-C"

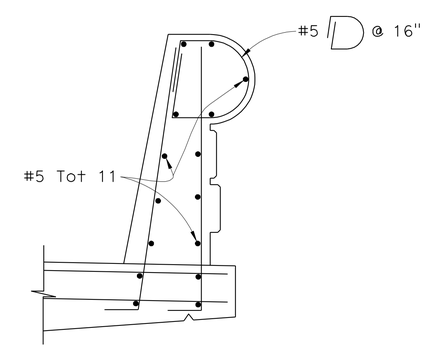

PART SECTION
1"=1'-0"

HILLERY DIRECT ACCESS RAMPS
SOUTHBOUND ON-RAMP
CONC BARRIER TYPE 736 (MOD)

Norbert Gee
DESIGN OVERSIGHT
10-25-10
SIGN OFF DATE

	BY	CHECKED
DESIGN	R Ramoso/H Mai	John Powell
DETAILS	C Morgan/C Lente	John Powell
QUANTITIES	R Ramoso/H Mai	Janice Reguyal

PREPARED FOR THE STATE OF CALIFORNIA DEPARTMENT OF TRANSPORTATION

Robert E. Hawthorne
PROJECT ENGINEER

BRIDGE NO. 57-1216
POST MILE R15.7

CU 11269
EA 2T0951

DISREGARD PRINTS BEARING EARLIER REVISION DATES

REVISION DATES (PRELIMINARY STAGE ONLY): 01/22/10 03/08/10 05/21/10 06/15/10 06/30/10 08/27/10 10/06/10

SHEET 27 OF 32

DESIGN DETAIL SHEET (ENGLISH) (REV. 06-01-09)

ORIGINAL SCALE IN INCHES FOR REDUCED PLANS 0 1 2 3

FILE => 57-1216-t-brdt.dgn

USERNAME => s12161d DATE PLOTTED => 27-OCT-2011 TIME PLOTTED => 10:24

DIST	COUNTY	Route	POST MILES TOTAL PROJECT	SHEET No	TOTAL SHEETS
11	SD	15	M15.0/M16.4	573	610

REGISTERED CIVIL ENGINEER 9-07-10

10-24-11
PLANS APPROVAL DATE

REGISTERED PROFESSIONAL ENGINEER David T-M Liao No. C59838 Exp. 12-31-11 CIVIL STATE OF CALIFORNIA

The State of California or its officers or agents shall not be responsible for the accuracy or completeness of electronic copies of this plan sheet.

This LOTB sheet was prepared in accordance with the Caltrans Soil & Rock Logging, Classification, & Presentation Manual (June 2007).

BENCH MARK

BM WP100 Elev 524.77′
Fd Pk/Wshr in gutter
N 1913007.270
E 6295232.971
NAVD 1988

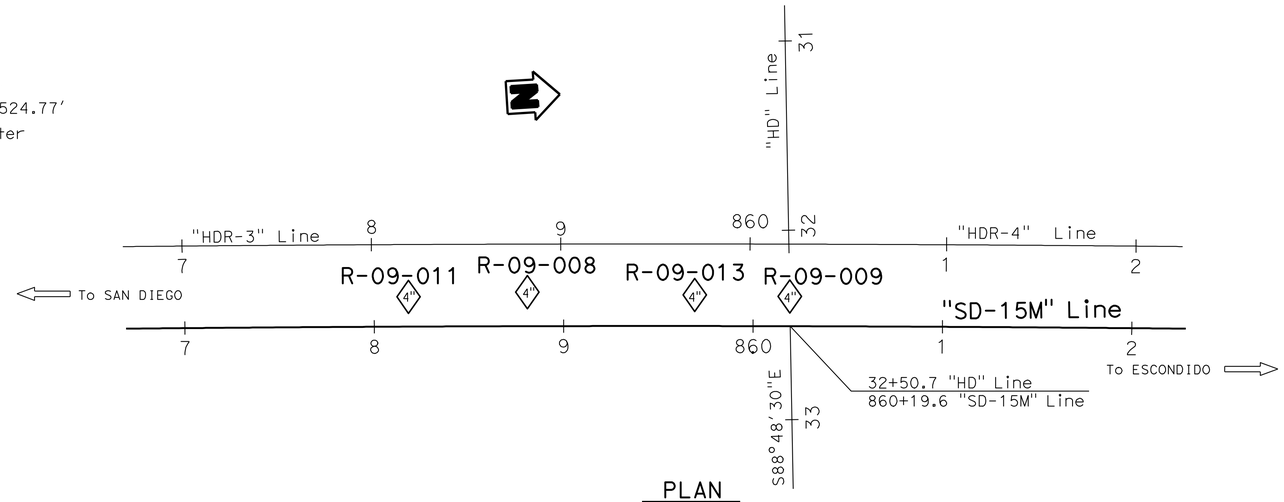

PLAN
1" = 40′

NOTES:

1. Core samples are available for viewing at the California Department of Transportation, Transportation Laboratory, 5900 Folsom Blvd. Sacramento, CA.
2. Attempts were not made to measure groundwater in Borings R-09-008, R-09-009, R-09-011, and R-09-012. Due to lane closure time restrictions, these borings were immediately backfilled after completion of drilling operations.
3. For groundwater information, refer to Borings R-09-003, R-09-014, R-09-016, R-09-020, R-09-021, A-09-025 of Hillery Dr. OC (Br. No. 57-1213), A-09-029, A-09-030, and A-09-031 of Northbound On-Ramp (Br. No. 57-1214), and R-09-005, R-09-006, A-09-026, A-09-027, A-09-028 of Northbound Off-Ramp (Br. No. 57-1215) Logs of Test Borings.
4. RQD designated with "N/A" (not applicable) infers that the rock encountered with the drilled interval was not sound rock, therefore, RQD was not calculated.

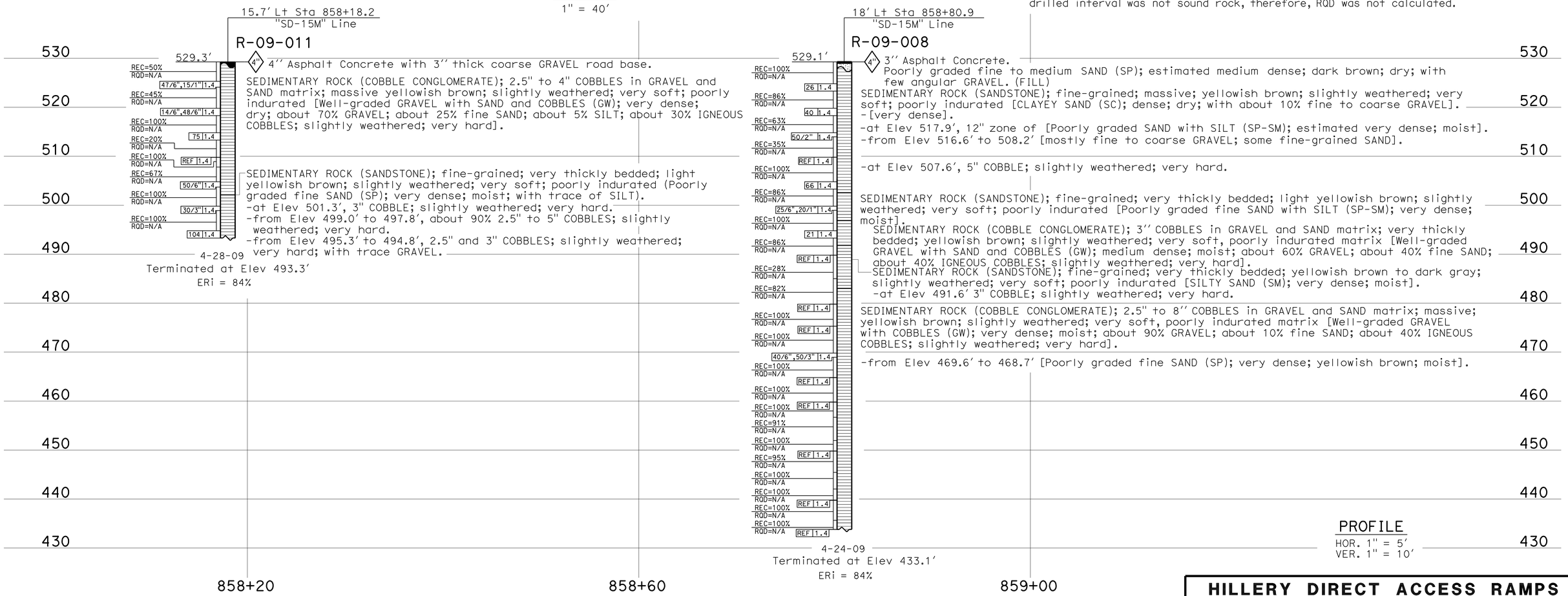

PROFILE
HOR. 1" = 5′
VER. 1" = 10′

ENGINEERING SERVICES	GEOTECHNICAL SERVICES		STATE OF CALIFORNIA DEPARTMENT OF TRANSPORTATION	DIVISION OF ENGINEERING SERVICES STRUCTURE DESIGN DESIGN BRANCH	BRIDGE NO. 57-1216 POST MILES R15.7	HILLERY DIRECT ACCESS RAMPS SOUTHBOUND ON-RAMP LOG OF TEST BORINGS 1 OF 5
FUNCTIONAL SUPERVISOR NAME: M. DeSalvatore	DRAWN BY: W. Tang 11/09, I.G-Remmen 1/10 CHECKED BY: E. Neupert	FIELD INVESTIGATION BY: T-M Liao				

OGS CIVIL LOG OF TEST BORINGS SHEET

ORIGINAL SCALE IN INCHES FOR REDUCED PLANS 0 1 2 3

CU 11
EA 2T0951

DISREGARD PRINTS BEARING EARLIER REVISION DATES

REVISION DATES: 01-04-10, 07-01-10, 07-12-10, 09-01-10, 09-02-10

SHEET 28 OF 32

FILE => 57-1216-z-ltb01.dgn

USERNAME => s126614 DATE PLOTTED => 27-OCT-2011 TIME PLOTTED => 10:24

DIST	COUNTY	ROUTE	POST MILES TOTAL PROJECT	SHEET No	TOTAL SHEETS
11	SD	15	M15.0/M16.4	574	610

REGISTERED CIVIL ENGINEER 9-07-10

10-24-11
PLANS APPROVAL DATE

The State of California or its officers or agents shall not be responsible for the accuracy or completeness of electronic copies of this plan sheet.

REGISTERED PROFESSIONAL ENGINEER David T-M Liao No. C59838 Exp. 12-31-11 CIVIL STATE OF CALIFORNIA

This LOTB sheet was prepared in accordance with the Caltrans Soil & Rock Logging, Classification, & Presentation Manual (June 2007).

FOR PLAN VIEW, SEE
"LOG OF TEST BORINGS 1 OF 5"

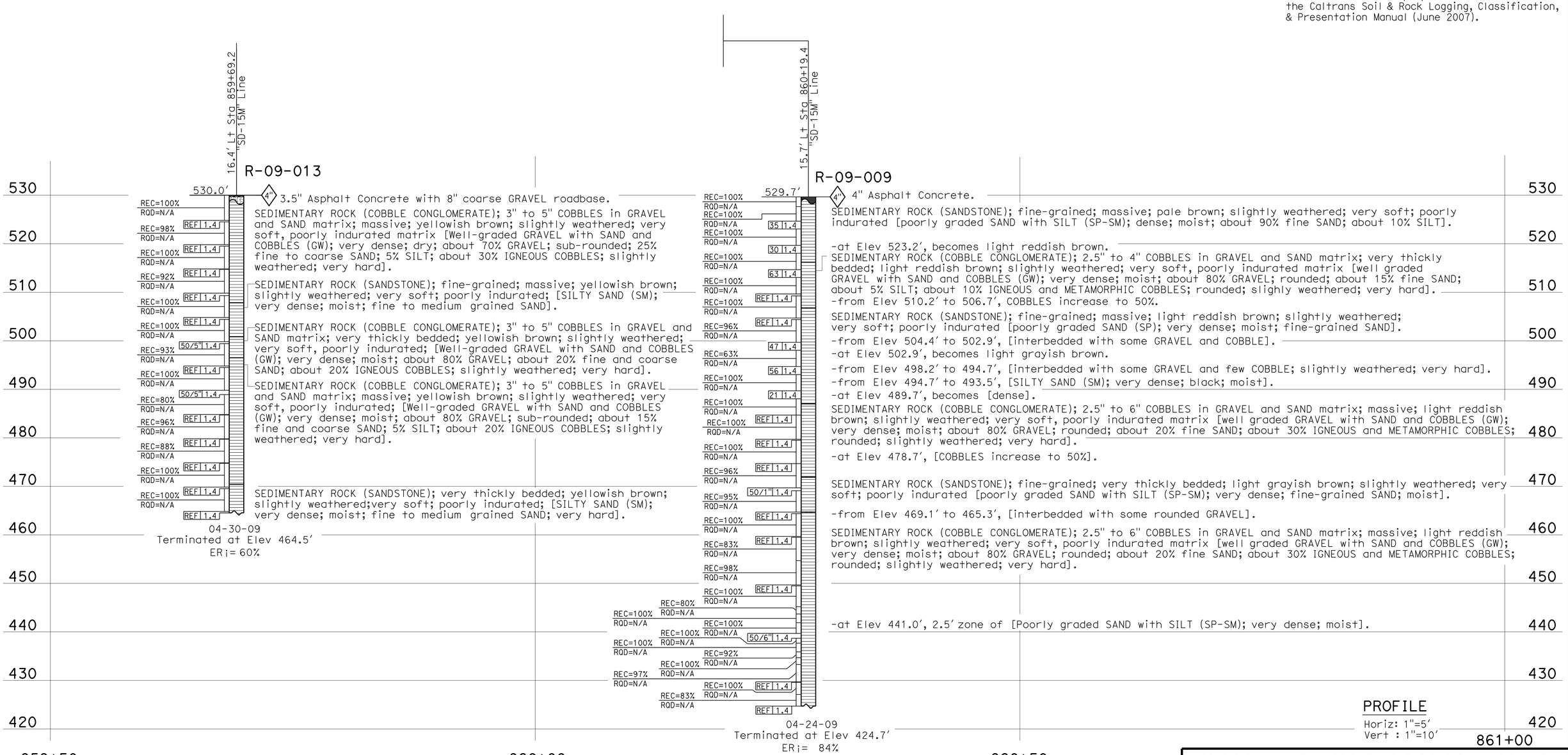

ENGINEERING SERVICES	GEOTECHNICAL SERVICES	STATE OF CALIFORNIA DEPARTMENT OF TRANSPORTATION	DIVISION OF ENGINEERING SERVICES STRUCTURE DESIGN DESIGN BRANCH	BRIDGE NO. 57-1216 / POST MILES R15.7	HILLERY DIRECT ACCESS RAMPS SOUTHBOUND ON-RAMP LOG OF TEST BORINGS 2 OF 5
FUNCTIONAL SUPERVISOR NAME: M. DeSalvatore	DRAWN BY: G. Dickerson 11/09, I.G-Remmen 1/10 CHECKED BY: E. Neupert	FIELD INVESTIGATION BY: J. Klamecki			

OGS CIVIL LOG OF TEST BORINGS SHEET

ORIGINAL SCALE IN INCHES FOR REDUCED PLANS 0 1 2 3

CU 11
EA 2T0951

DISREGARD PRINTS BEARING EARLIER REVISION DATES

REVISION DATES: 12-29-09 01-04-10 06-18-10 07-07-10 09-07-10

SHEET 29 OF 32

FILE => 57-1216-z-ltb02.dgn

USERNAME => s12614 DATE PLOTTED => 27-OCT-2011 TIME PLOTTED => 10:24

REGISTERED CIVIL ENGINEER 9-07-10 DATE

10-24-11
PLANS APPROVAL DATE

REGISTERED PROFESSIONAL ENGINEER David T-M Liao No. C59838 Exp. 12-31-11 CIVIL STATE OF CALIFORNIA

The State of California or its officers or agents shall not be responsible for the accuracy or completeness of electronic copies of this plan sheet.

REFERENCE: CALTRANS SOIL & ROCK LOGGING, CLASSIFICATION, AND PRESENTATION MANUAL (JUNE 2007)

CEMENTATION

Description	Criteria
Weak	Crumbles or breaks with handling or little finger pressure.
Moderate	Crumbles or breaks with considerable finger pressure.
Strong	Will not crumble or break with finger pressure.

CONSISTENCY OF COHESIVE SOILS

Description	Unconfined Compressive Strength (tsf)	Pocket Penetrometer Measurement (tsf)	Torvane Measurement (tsf)	Field Approximation
Very Soft	< 0.25	< 0.25	< 0.12	Easily penetrated several inches by fist
Soft	0.25 to 0.50	0.25 to 0.50	0.12 to 0.25	Easily penetrated several inches by thumb
Medium Stiff	0.50 to 1.0	0.50 to 1.0	0.25 to 0.50	Penetrated several inches by thumb with moderate effort
Stiff	1 to 2	1 to 2	0.50 to 1.0	Readily indented by thumb but penetrated only with great effort
Very Stiff	2 to 4	2 to 4	1.0 to 2.0	Readily indented by thumbnail
Hard	> 4.0	> 4.0	> 2.0	Indented by thumbnail with difficulty

BOREHOLE IDENTIFICATION

Symbol	Hole Type	Description
Size	A	Auger Boring
Size	R P	Rotary drilled boring Rotary percussion boring (air)
Size	R	Rotary drilled diamond core
Size	HD HA	Hand driven (1-inch soil tube) Hand Auger
●	D	Dynamic Cone Penetration Boring
▲	CPT	Cone Penetration Test (ASTM D 5778-95)
⬚	O	Other

Note: Size in inches.

PLASTICITY OF FINE-GRAINED SOILS

Description	Criteria
Nonplastic	A 1/8-inch thread cannot be rolled at any water content.
Low	The thread can barely be rolled and the lump cannot be formed when drier than the plastic limit.
Medium	The thread is easy to roll and not much time is required to reach the plastic limit. The thread cannot be rerolled after reaching the plastic limit. The lump crumbles when drier than the plastic limit.
High	It takes considerable time rolling and kneading to reach the plastic limit. The thread can be rerolled several times after reaching the plastic limit. The lump can be formed without crumbling when drier than the plastic limit.

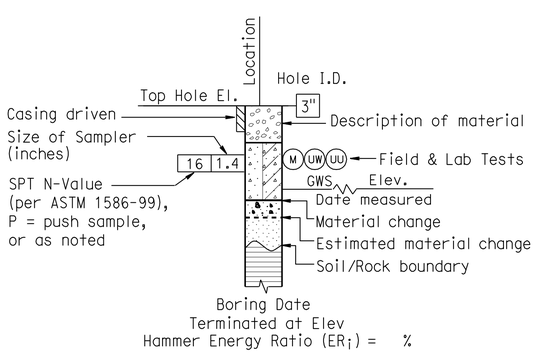

ROTARY BORING

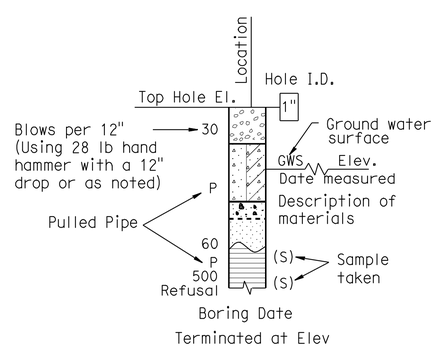

HAND BORING

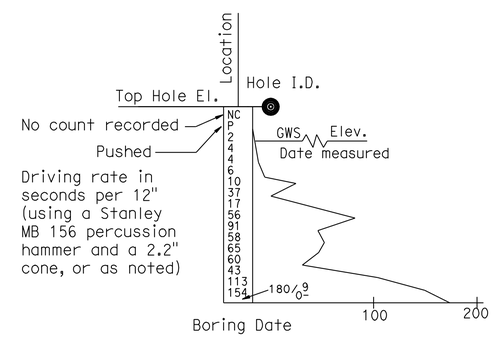

DYNAMIC CONE PENETRATION BORING

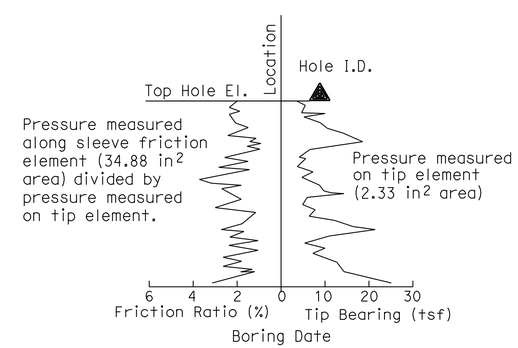

CONE PENETRATION TEST (CPT) SOUNDING

HILLERY DIRECT ACCESS RAMPS

SOUTHBOUND ON-RAMP

LOG OF TEST BORINGS 3 OF 5

ENGINEERING SERVICES	GEOTECHNICAL SERVICES	STATE OF CALIFORNIA DEPARTMENT OF TRANSPORTATION	DIVISION OF ENGINEERING SERVICES STRUCTURE DESIGN DESIGN BRANCH	BRIDGE NO. 57-1216 / POST MILE R15.7
	PREPARED BY: I.G-Remmen 1/10			

GS LOTB SOIL LEGEND

ORIGINAL SCALE IN INCHES FOR REDUCED PLANS 0 1 2 3

CU 11
EA 2T0951

DISREGARD PRINTS BEARING EARLIER REVISION DATES 07-09-10 09-02-10

REVISION DATES

SHEET 30 OF 32

FILE => 57-1216-z-1tb03.dgn

USERNAME => s121614 DATE PLOTTED => 27-OCT-2011 TIME PLOTTED => 10:25

REFERENCE: CALTRANS SOIL & ROCK LOGGING, CLASSIFICATION, AND PRESENTATION MANUAL (JUNE 2007)

DIST	COUNTY	ROUTE	POST MILES TOTAL PROJECT	SHEET No	TOTAL SHEETS
11	SD	15	M15.0/M16.4	576	610

REGISTERED CIVIL ENGINEER 9-07-10 DATE

10-24-11
PLANS APPROVAL DATE

REGISTERED PROFESSIONAL ENGINEER David T-M Liao No. C59838 Exp. 12-31-11 CIVIL STATE OF CALIFORNIA

The State of California or its officers or agents shall not be responsible for the accuracy or completeness of electronic copies of this plan sheet.

GROUP SYMBOLS AND NAMES

Graphic/Symbol	Group Names
GW	Well-graded GRAVEL Well-graded GRAVEL with SAND
GP	Poorly graded GRAVEL Poorly graded GRAVEL with SAND
GW-GM	Well-graded GRAVEL with SILT Well-graded GRAVEL with SILT and SAND
GW-GC	Well-graded GRAVEL with CLAY (or SILTY CLAY) Well-graded GRAVEL with CLAY and SAND (or SILTY CLAY and SAND)
GP-GM	Poorly graded GRAVEL with SILT Poorly graded GRAVEL with SILT and SAND
GP-GC	Poorly graded GRAVEL with CLAY (or SILTY CLAY) Poorly graded GRAVEL with CLAY and SAND (or SILTY CLAY and SAND)
GM	SILTY GRAVEL SILTY GRAVEL with SAND
GC	CLAYEY GRAVEL CLAYEY GRAVEL with SAND
GC-GM	SILTY, CLAYEY GRAVEL SILTY, CLAYEY GRAVEL with SAND
SW	Well-graded SAND Well-graded SAND with GRAVEL
SP	Poorly graded SAND Poorly graded SAND with GRAVEL
SW-SM	Well-graded SAND with SILT Well-graded SAND with SILT and GRAVEL
SW-SC	Well-graded SAND with CLAY (or SILTY CLAY) Well-graded SAND with CLAY and GRAVEL (or SILTY CLAY and GRAVEL)
SP-SM	Poorly graded SAND with SILT Poorly graded SAND with SILT and GRAVEL
SP-SC	Poorly graded SAND with CLAY (or SILTY CLAY) Poorly graded SAND with CLAY and GRAVEL (or SILTY CLAY and GRAVEL)
SM	SILTY SAND SILTY SAND with GRAVEL
SC	CLAYEY SAND CLAYEY SAND with GRAVEL
SC-SM	SILTY, CLAYEY SAND SILTY, CLAYEY SAND with GRAVEL
PT	PEAT
	COBBLES COBBLES and BOULDERS BOULDERS

Graphic/Symbol	Group Names
CL	Lean CLAY Lean CLAY with SAND Lean CLAY with GRAVEL SANDY lean CLAY SANDY lean CLAY with GRAVEL GRAVELLY lean CLAY GRAVELLY lean CLAY with SAND
CL-ML	SILTY CLAY SILTY CLAY with SAND SILTY CLAY with GRAVEL SANDY SILTY CLAY SANDY SILTY CLAY with GRAVEL GRAVELLY SILTY CLAY GRAVELLY SILTY CLAY with SAND
ML	SILT SILT with SAND SILT with GRAVEL SANDY SILT SANDY SILT with GRAVEL GRAVELLY SILT GRAVELLY SILT with SAND
OL	ORGANIC lean CLAY ORGANIC lean CLAY with SAND ORGANIC lean CLAY with GRAVEL SANDY ORGANIC lean CLAY SANDY ORGANIC lean CLAY with GRAVEL GRAVELLY ORGANIC lean CLAY GRAVELLY ORGANIC lean CLAY with SAND
OL	ORGANIC SILT ORGANIC SILT with SAND ORGANIC SILT with GRAVEL SANDY ORGANIC SILT SANDY ORGANIC SILT with GRAVEL GRAVELLY ORGANIC SILT GRAVELLY ORGANIC SILT with SAND
CH	Fat CLAY Fat CLAY with SAND Fat CLAY with GRAVEL SANDY fat CLAY SANDY fat CLAY with GRAVEL GRAVELLY fat CLAY GRAVELLY fat CLAY with SAND
MH	Elastic SILT Elastic SILT with SAND Elastic SILT with GRAVEL SANDY elastic SILT SANDY elastic SILT with GRAVEL GRAVELLY elastic SILT GRAVELLY elastic SILT with SAND
OH	ORGANIC fat CLAY ORGANIC fat CLAY with SAND ORGANIC fat CLAY with GRAVEL SANDY ORGANIC fat CLAY SANDY ORGANIC fat CLAY with GRAVEL GRAVELLY ORGANIC fat CLAY GRAVELLY ORGANIC fat CLAY with SAND
OH	ORGANIC elastic SILT ORGANIC elastic SILT with SAND ORGANIC elastic SILT with GRAVEL SANDY ORGANIC elastic SILT SANDY ORGANIC elastic SILT with GRAVEL GRAVELLY ORGANIC elastic SILT GRAVELLY ORGANIC elastic SILT with SAND
OL/OH	ORGANIC SOIL ORGANIC SOIL with SAND ORGANIC SOIL with GRAVEL SANDY ORGANIC SOIL SANDY ORGANIC SOIL with GRAVEL GRAVELLY ORGANIC SOIL GRAVELLY ORGANIC SOIL with SAND

FIELD AND LABORATORY TESTING

- (C) Consolidation (ASTM D 2435)
- (CL) Collapse Potential (ASTM D 5333)
- (CP) Compaction Curve (CTM 216)
- (CR) Corrosivity Testing (CTM 643, CTM 422, CTM 417)
- (CU) Consolidated Undrained Triaxial (ASTM D 4767)
- (DS) Direct Shear (ASTM D 3080)
- (EI) Expansion Index (ASTM D 4829)
- (M) Moisture Content (ASTM D 2216)
- (OC) Organic Content-% (ASTM D 2974)
- (P) Permeability (CTM 220)
- (PA) Particle Size Analysis (ASTM D 422)
- (PI) Plasticity Index (AASHTO T 90) Liquid Limit (AASHTO T 89)
- (PL) Point Load Index (ASTM D 5731)
- (PM) Pressure Meter
- (PP) Pocket Penetrometer
- (R) R-Value (CTM 301)
- (SE) Sand Equivalent (CTM 217)
- (SG) Specific Gravity (AASHTO T 100)
- (SL) Shrinkage Limit (ASTM D 427)
- (SW) Swell Potential (ASTM D 4546)
- (TV) Pocket Torvane
- (UC) Unconfined Compression-Soil (ASTM D 2166) Unconfined Compression-Rock (ASTM D 2938)
- (UU) Unconsolidated Undrained Triaxial (ASTM D 2850)
- (UW) Unit Weight (ASTM D 4767)
- (VS) Vane Shear (AASHTO T 223)

APPARENT DENSITY OF COHESIONLESS SOILS

Description	SPT N_{60} (Blows / 12 inches)
Very loose	0 - 4
Loose	5 - 10
Medium Dense	11 - 30
Dense	31 - 50
Very Dense	> 50

MOISTURE

Description	Criteria
Dry	Absence of moisture, dusty, dry to the touch
Moist	Damp but no visible water
Wet	Visible free water, usually soil is below water table

PERCENT OR PROPORTION OF SOILS

Description	Criteria
Trace	Particles are present but estimated to be less than 5%
Few	5 to 10%
Little	15 to 25%
Some	30 to 45%
Mostly	50 to 100%

PARTICLE SIZE

Description		Size
Boulder		> 12"
Cobble		3" to 12"
Gravel	Coarse	3/4" to 3"
	Fine	No. 4 to 3/4"
Sand	Coarse	No. 10 to No. 4
	Medium	No. 40 to No. 10
	Fine	No. 200 to No. 40

HILLERY DIRECT ACCESS RAMPS
SOUTHBOUND ON-RAMP
LOG OF TEST BORINGS 4 OF 5

ENGINEERING SERVICES

GEOTECHNICAL SERVICES
PREPARED BY: I.G-Remmen 1/10

STATE OF CALIFORNIA DEPARTMENT OF TRANSPORTATION

DIVISION OF ENGINEERING SERVICES STRUCTURE DESIGN
DESIGN BRANCH

BRIDGE NO. 57-1216
POST MILE R15.7

CU 11
EA 2T0951

GS LOTB SOIL LEGEND

ORIGINAL SCALE IN INCHES FOR REDUCED PLANS 0 1 2 3

DISREGARD PRINTS BEARING EARLIER REVISION DATES 07-09-10 09-01-10

REVISION DATES

SHEET 31 OF 32

FILE => 57-1216-z-ltb04.dgn

USERNAME => s121614 DATE PLOTTED => 27-OCT-2011 TIME PLOTTED => 10:25

REFERENCE: CALTRANS SOIL & ROCK LOGGING, CLASSIFICATION, AND PRESENTATION MANUAL (JUNE 2007)

DIST	COUNTY	ROUTE	POST MILES TOTAL PROJECT	SHEET No	TOTAL SHEETS
11	SD	15	M15.0/M16.4	577	610

REGISTERED CIVIL ENGINEER 9-07-10 DATE

10-24-11
PLANS APPROVAL DATE

REGISTERED PROFESSIONAL ENGINEER T-M Liao No. C59838 Exp. 12-31-11 CIVIL STATE OF CALIFORNIA

The State of California or its officers or agents shall not be responsible for the accuracy or completeness of electronic copies of this plan sheet.

PERCENT CORE RECOVERY (REC) & ROCK QUALITY DESIGNATION (RQD)

$$REC = \frac{\sum \text{Length of the recovered core pieces (inches)}}{\text{Total length of core run (inches)}} \times 100\%$$

$$RQD = \frac{\sum \text{Length of intact core pieces} \geq 4''}{\text{Total length of core run (inches)}} \times 100\%$$

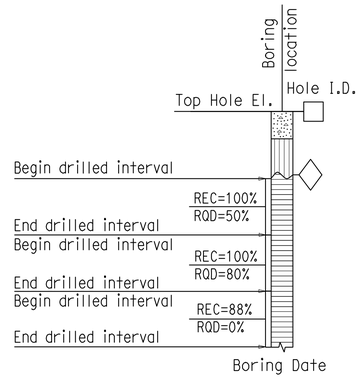

RELATIVE STRENGTH OF INTACT ROCK

Term	Uniaxial Compressive Strength (PSI)
Extremely Strong	> 30,000
Very Strong	14,500 - 30,000
Strong	7,000 - 14,500
Medium Strong	3,500 - 7,000
Weak	700 - 3,500
Very Weak	150 - 700
Extremely Weak	< 150

BEDDING SPACING

Description	Thickness / Spacing
Massive	Greater than 10 ft
Very thickly bedded	3 to 10 ft
Thickly bedded	1 to 3 ft
Moderately bedded	3-5/8" to 1 ft
Thinly bedded	1-1/4" to 3-5/8"
Very thinly bedded	3/8" to 1-1/4"
Laminated	Less than 3/8"

LEGEND OF ROCK MATERIALS

- IGNEOUS ROCK
- SEDIMENTARY ROCK
- METAMORPHIC ROCK

ROCK HARDNESS

Description	Criteria
Extremely Hard	Specimen cannot be scratched with a pocket knife or sharp pick; can only be chipped with repeated heavy hammer blows.
Very Hard	Specimen cannot be scratched with a pocket knife or sharp pick. Breaks with repeated heavy hammer blows.
Hard	Specimen can be scratched with a pocket knife or sharp pick with difficulty (heavy pressure). Heavy hammer blows required to break specimen.
Moderately Hard	Specimen can be scratched with pocket knife or sharp pick with light or moderate pressure. Core breaks with moderate hammer blows.
Moderately Soft	Specimen can be grooved 1/6" deep with a pocket knife or sharp pick with moderate or heavy pressure. Breaks with light hammer blow or heavy manual pressure.
Soft	Specimen can be grooved or gouged easily by a pocket knife or sharp pick with light pressure, can be scratched with fingernail. Breaks with light to moderate manual pressure.
Very Soft	Specimen can be readily indented, grooved or gouged with fingernail, or carved with a pocket knife. Breaks with light manual pressure.

FRACTURE DENSITY

Description	Observed Fracture Density
Unfractured	No fractures.
Very slightly fractured	Lengths greater than 3 feet.
Slightly fractured	Lengths from 1 to 3 feet with few lengths less than 1 foot or greater than 3 feet.
Moderately fractured	Lengths mostly in 4" to 1 foot range with most lengths about 8"
Intensely fractured	Lengths average from 1 to 4" with scattered fragmented intervals with lengths less than 4"
Very intensely fractured	Mostly chips and fragments with a few scattered short core lengths.

Combination descriptors (such as "Very intensely to intensely fractured") are used where equal distribution of both fracture density characteristics is present over a significant interval or exposure, or where characteristics are "in between" the descriptor definitions. Only two adjacent descriptors may be combined.

WEATHERING DESCRIPTORS FOR INTACT ROCK

Description	Diagnostic features					General Characteristics
	Chemical Weathering-Discoloration and/or oxidation		Mechanical Weathering-Grain boundary conditions (disaggregation) primarily for granitics and some coarse-grained sediments	Texture and Solutioning		
	Body of Rock	Fracture Surfaces		Texture	Solutioning	
Fresh	No discoloration, not oxidized.	No discoloration or oxidation.	No separation, intact (tight).	No change.	No solutioning.	Hammer rings when crystalline rocks are struck.
Slightly Weathered	Discoloration or oxidation is limited to surface of, or short distance from, fractures; some feldspar crystals are dull.	Minor to complete discoloration or oxidation of most surfaces.	No visible separation, intact (tight).	Preserved.	Minor leaching of some soluble minerals may be noted.	Hammer rings when crystalline rocks are struck. Body of rock not weakened.
Moderately Weathered	Discoloration or oxidation extends from fractures usually throughout; Fe-Mg minerals are "rusty," feldspar crystals are "cloudy."	All fracture surfaces are discolored or oxidized.	Partial separation of boundaries visible.	Generally preserved.	Soluble minerals may be mostly leached.	Hammer does not ring when rock is struck. Body of rock is slightly weakened.
Intensely Weathered	Discoloration or oxidation throughout; all feldspars and Fe-Mg minerals are altered to clay to some extent; or chemical alteration produces in-situ disaggregation, see grain boundary conditions.	All fracture surfaces are discolored or oxidized, surfaces friable.	Partial separation, rock is friable; in semiarid conditions granitics are disaggregated.	Texture altered by chemical disintegration (hydration, argillation).	Leaching of soluble minerals may be complete.	Dull sound when struck with hammer, usually can be broken with moderate to heavy manual pressure or by light hammer blow without reference to planes of weakness such as incipient or hairline fractures, or veinlets. Rock is significantly weakened.
Decomposed	Discolored or oxidized throughout, but resistant minerals such as quartz may be unaltered; all feldspars and Fe-Mg minerals are completely altered to clay.		Complete separation of grain boundaries (disaggregated).	Resembles a soil, partial or complete remnant rock structure may be preserved; leaching of soluble minerals usually complete.		Can be granulated by hand. Resistant minerals such as quartz may be present as "stringers" or "dikes."

Combination descriptors (such as "slightly weathered to fresh") are permissible where equal distribution of both weathering characteristics is present over significant intervals or where characteristics present are "in between" the diagnostic feature. However, combination descriptors should not be used where significant, identifiable zones can be delineated. Only two adjacent descriptors may be combined. "Very intensely weathered" is the combination descriptor for "intensely weathered to decomposed."

HILLERY DIRECT ACCESS RAMPS

SOUTHBOUND ON-RAMP

LOG OF TEST BORINGS 5 OF 5

ENGINEERING SERVICES

GEOTECHNICAL SERVICES

PREPARED BY: I.G-Remmen 1/10

STATE OF CALIFORNIA DEPARTMENT OF TRANSPORTATION

DIVISION OF ENGINEERING SERVICES STRUCTURE DESIGN

DESIGN BRANCH

BRIDGE NO. 57-1216

POST MILE R15.7

CU 11
EA 2T0951

ORIGINAL SCALE IN INCHES FOR REDUCED PLANS 0 1 2 3

DISREGARD PRINTS BEARING EARLIER REVISION DATES 07-08-10 09-01-10

REVISION DATES

SHEET 32 OF 32

FILE => 57-1216-z-1tb05.dgn

USERNAME => s12614 DATE PLOTTED => 27-OCT-2011 TIME PLOTTED => 10:25

DIST	COUNTY	ROUTE	POST MILES TOTAL PROJECT	SHEET No	TOTAL SHEETS
11	SD	15	M15.0/M16.4	578	610

REGISTERED CIVIL ENGINEER — DATE 10-15-10

10-24-11
PLANS APPROVAL DATE

REGISTERED PROFESSIONAL ENGINEER — ROBERT E. HAWTHORNE — No. 40075 — Exp. 03/31/12 — CIVIL — STATE OF CALIFORNIA

The State of California or its officers or agents shall not be responsible for the accuracy or completeness of scanned copies of this plan sheet.

SANDAG
401 B STREET, SUITE 800
SAN DIEGO, CA 92101

AECOM
7807 CONVOY COURT, SUITE 200
SAN DIEGO, CA 92111

Notes:

1. For "Quantities", "Index To Plans", "General Notes", & "Pile Data Table", See "INDEX TO PLANS No. 1" sheets.
2. Paint "Southbound Off-Ramp"
3. Paint "Br. No. 57-1217"
4. Paint Bent No.
5. Structure Approach Slab Type N (30S)
6. Isolation Casing, see "ISOLATION CASING DETAILS No. 1"and "ISOLATION CASING DETAILS No. 2" sheets.
7. Deck Drain Location (Type D-2) see "DECK DRAINS" sheet.

Indicates Point of Minimum Vertical Clearance

Indicates direction of traffic.

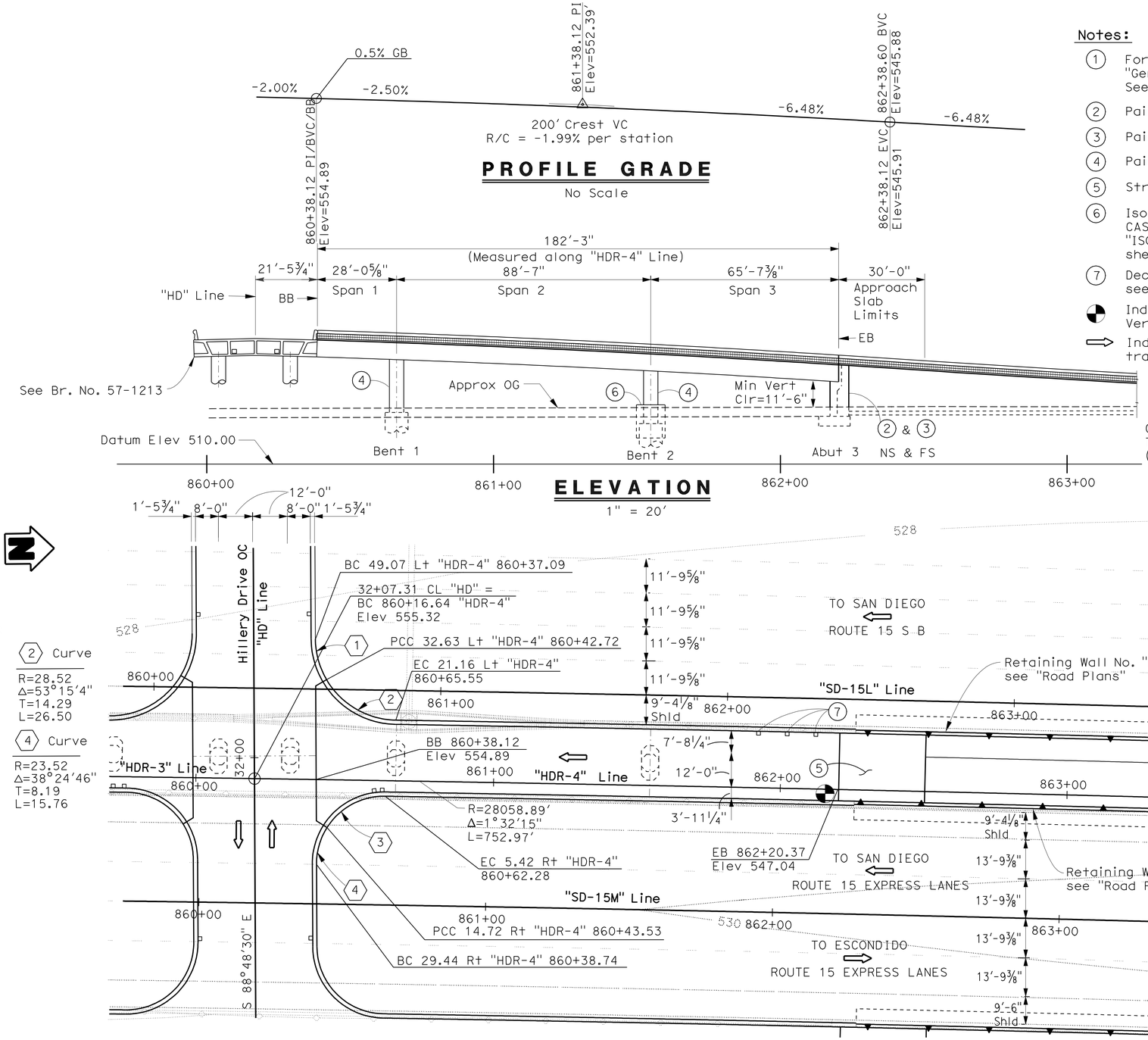

Curve Data:

(1) Curve	(2) Curve	(3) Curve	(4) Curve
R=28.52	R=28.52	R=23.52	R=23.52
Δ=35°29'2"	Δ=53°15'4"	Δ=52°50'40"	Δ=38°24'46"
T=9.12	T=14.29	T=11.68	T=8.19
L=17.66	L=26.50	L=21.69	L=15.76

PLAN
1" = 20'

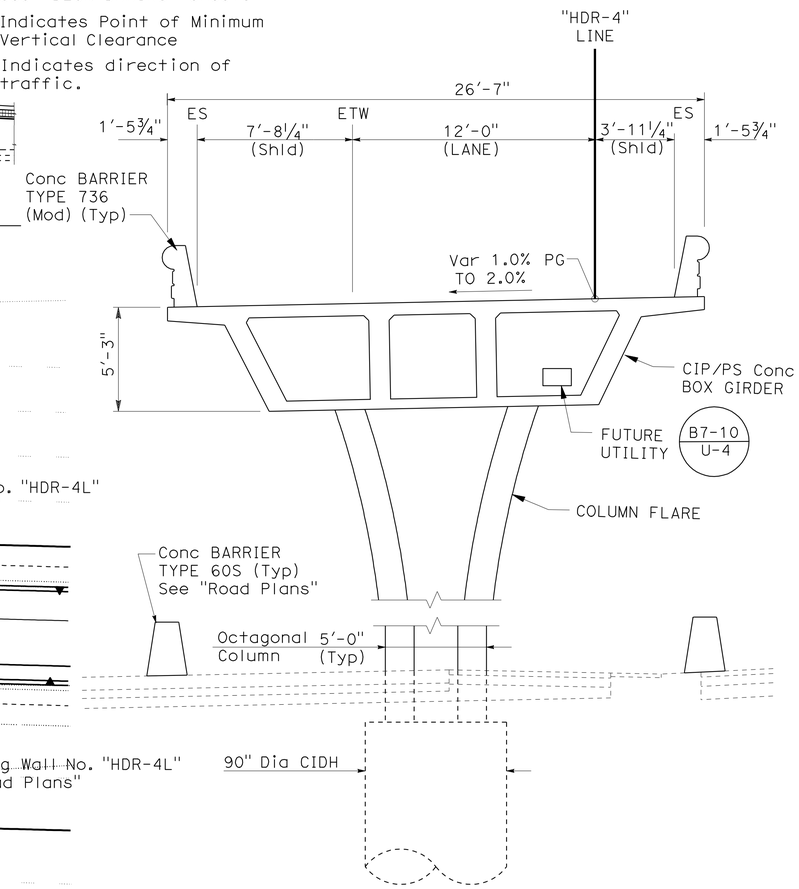

TYPICAL SECTION
¼" = 1'-0"

HILLERY DIRECT ACCESS RAMPS
SOUTHBOUND OFF-RAMP
GENERAL PLAN

DESIGN OVERSIGHT Norbert Gee	DESIGN	BY R Ramoso/H Mai	CHECKED John Powell	LOAD & RESISTANCE FACTOR DESIGN	LIVE LOADING: HL93 W/"LOW-BOY"; PERMIT DESIGN VEHICLE
10-25-10 SIGN OFF DATE	DETAILS	BY C Morgan/C Lente	CHECKED John Powell	LAYOUT BY R Ramoso/H Mai	CHECKED R Hawthorne
	QUANTITIES	BY R Ramoso/H Mai	CHECKED Janice Reguyal	SPECIFICATIONS BY H Strandgaard	PLANS AND SPECS COMPARED R Hawthorne

PREPARED FOR THE STATE OF CALIFORNIA DEPARTMENT OF TRANSPORTATION

Robert E. Hawthorne
PROJECT ENGINEER

BRIDGE NO. 57-1217
POST MILES R15.7

CU 11269
EA 2T0951

DISREGARD PRINTS BEARING EARLIER REVISION DATES

REVISION DATES (PRELIMINARY STAGE ONLY): 01/22/10 03/08/10 05/18/10 05/27/10 06/15/10 06/30/10 08/27/10 10/06/10

SHEET 1 OF 33

DESIGN GENERAL PLAN SHEET (ENGLISH) (REV. 06-01-09)

ORIGINAL SCALE IN INCHES FOR REDUCED PLANS 0 1 2 3

FILE => 57-1217-a-gp01.dgn

USERNAME => s812614 DATE PLOTTED => 27-OCT-2011 TIME PLOTTED => 10:25

DIST	COUNTY	ROUTE	POST MILES TOTAL PROJECT	SHEET No	TOTAL SHEETS
11	SD	15	M15.0/M16.4	579	610

REGISTERED CIVIL ENGINEER 10-15-10 DATE

10-24-11
PLANS APPROVAL DATE

REGISTERED PROFESSIONAL ENGINEER ROBERT E. HAWTHORNE No. 40075 Exp. 03/31/12 CIVIL STATE OF CALIFORNIA

The State of California or its officers or agents shall not be responsible for the accuracy or completeness of scanned copies of this plan sheet.

SANDAG
401 B STREET, SUITE 800
SAN DIEGO, CA 92101

AECOM
7807 CONVOY COURT, SUITE 200
SAN DIEGO, CA 92111

INDEX TO PLANS

SHEET NO.	TITLE
1.	GENERAL PLAN
2.	INDEX TO PLANS No.1
3.	INDEX TO PLANS No.2
4.	DECK CONTOURS
5.	FOUNDATION PLAN
6.	ABUTMENT LAYOUT
7.	ABUTMENT DETAILS
8.	BENT LAYOUT
9.	COLUMN DETAILS
10.	ISOLATION CASING DETAILS No. 1
11.	ISOLATION CASING DETAILS No. 2
12.	TYPICAL SECTION No. 1
13.	TYPICAL SECTION No. 2
14.	GIRDER LAYOUT
15.	GIRDER DETAILS No. 1
16.	GIRDER DETAILS No. 2
17.	GIRDER DETAILS No. 3
18.	GIRDER DETAILS No. 4
19.	GIRDER DETAILS No. 5
20.	GIRDER DETAILS No. 6
21.	GIRDER REINFORCEMENT
22.	PILE DETAILS
23.	JOINT SEAL ASSEMBLY MOVEMENT RATING GREATER THAN 4"
24.	DECK DRAINS
25.	STRUCTURE APPROACH DRAINAGE DETAILS
26.	STRUCTURE APPROACH TYPE N (30S)
27.	CONCRETE BARRIER TYPE 736 (MOD)
28.	LOG OF TEST BORINGS SHEET 1 OF 6
29.	LOG OF TEST BORINGS SHEET 2 OF 6
30.	LOG OF TEST BORINGS SHEET 3 OF 6
31.	LOG OF TEST BORINGS SHEET 4 OF 6
32.	LOG OF TEST BORINGS SHEET 5 OF 6
33.	LOG OF TEST BORINGS SHEET 6 OF 6

PILE DATA TABLE

Support Location	Pile Type	Cut-Off Elevation (ft)	Nominal Resistance (kips)		Design Tip Elevation (ft)	Specified Tip Elevation (ft)
			Comp.	Tension		
Bent 1	90 in Type II CIDH	527.0	2760	0	485.0 (a)	485.0
Bent 2	90 in Type II CIDH	523.3	2660	0	477.0 (a)	477.0

Design tip elevations are controlled by the following demands:
(a) Compression (b) Tension (d) Lateral Loads

SPREAD FOOTING DATA TABLE

Support Location	Working Stress Design (WSD)		Load and Resistance Factor Design (LRFD)		
	Permissible Gross Contact Stress (Settlement) (ksf)	Allowable Gross Bearing Capacity (ksf)	Service Permissible Net Contact Stress (Settlement) (ksf)	Strength Factored Gross Nominal Bearing Resistance ϕ_b = X (ksf)	Extreme Event Factored Gross Nominal Bearing Resistance ϕ_b = 1.00 (ksf)
Abut 3	N/A	10.0	N/A	N/A	N/A

HILLARY DRIVE OC DAR
SOUTHBOUND OFF-RAMP BR #57-1217
QUANTITIES

STRUCTURE EXCAVATION (TYPE D)	135	CY
STRUCTURE BACKFILL (BRIDGE)	130	CY
90" CAST-IN-DRILLED-HOLE CONCRETE PILING	89	LF
PRESTRESSING CAST-IN-PLACE CONCRETE	LUMP	SUM
STRUCTURAL CONCRETE, BRIDGE FOOTING	46	CY
STRUCTURAL CONCRETE, BRIDGE	540	CY
STRUCTURAL CONCRETE, APPROACH SLAB (TYPE N)	30	CY
MINOR CONCRETE (BACKFILL)	25	CY
ARCHITECTURAL SURFACE (BARRIER)	775	SQFT
JOINT SEAL (MR 2")	27	LF
JOINT SEAL ASSEMBLY (SWIVILING)(MR 9 1/2 ")	53	LF
BAR REINFORCING STEEL (BRIDGE)	190,000	LB
WELDED STEEL PIPE CASING (BRIDGE)	40	LF
ISOLATION CASING	4,450	LB
BRIDGE DECK DRAINAGE SYSTEM	2,900	LB
CONCRETE BARRIER (TYPE 736 MODIFIED)	422	LF

GENERAL NOTES
LOAD AND RESISTANCE FACTOR DESIGN

DESIGN: AASHTO LRFD Bridge Design Specifications 4th edition with Caltrans Amendments preface dated: December 2008

SEISMIC DESIGN: Caltrans Seismic Design Criteria (SDC), Version 1.4, June 2006.

DEAD LOAD: Includes 35 psf for Future Wearing Surface

LIVE LOADING: HL-93 and Permit (P-15) Design Load.

SEISMIC LOADING: Peak Rock Acceleration = 0.25 g
ARS Soil Type C

Site Specific Displacement Time History

REINFORCED CONCRETE:
fy = 60 Ksi
f'c = 3.6 Ksi (Min)
n = 8

PRESTRESSED CONCRETE: See Prestressing Notes on "Girder Layout sheet

DESIGN OVERSIGHT Norbert Gee
10-25-10
SIGN OFF DATE

	BY	CHECKED
DESIGN	R Ramoso/H Mai	John Powell
DETAILS	C Morgan/C Lente	John Powell
QUANTITIES	R Ramoso/H Mai	Janice Reguyal

PREPARED FOR THE STATE OF CALIFORNIA DEPARTMENT OF TRANSPORTATION

Robert E. Hawthorne
PROJECT ENGINEER

BRIDGE NO. 57-1217
POST MILE R15.7

HILLERY DIRECT ACCESS RAMPS
SOUTHBOUND OFF-RAMP
INDEX TO PLANS No. 1

DESIGN DETAIL SHEET (ENGLISH) (REV. 06-01-09)

ORIGINAL SCALE IN INCHES FOR REDUCED PLANS 0 1 2 3

CU 11269
EA 2T0951

DISREGARD PRINTS BEARING EARLIER REVISION DATES

REVISION DATES (PRELIMINARY STAGE ONLY) 01/22/10 03/08/10 05/27/10 06/15/10 06/30/10 08/27/10

SHEET 2 OF 33

FILE => 57-1217-a-itp01.dgn

USERNAME => s612614 DATE PLOTTED => 27-OCT-2011 TIME PLOTTED => 10:26

DIST	COUNTY	ROUTE	POST MILES TOTAL PROJECT	SHEET No	TOTAL SHEETS
11	SD	15	M15.0/M16.4	580	610

REGISTERED CIVIL ENGINEER 10-15-10 DATE

10-24-11
PLANS APPROVAL DATE

REGISTERED PROFESSIONAL ENGINEER ROBERT E. HAWTHORNE No. 40075 Exp. 03/31/12 CIVIL STATE OF CALIFORNIA

The State of California or its officers or agents shall not be responsible for the accuracy or completeness of scanned copies of this plan sheet.

SANDAG
401 B STREET, SUITE 800
SAN DIEGO, CA 92101

AECOM
7807 CONVOY COURT, SUITE 200
SAN DIEGO, CA 92111

Bridge No. 57-1217

Period (Sec)	Acceleration
0.010	0.267
0.020	0.325
0.030	0.365
0.050	0.421
0.075	0.473
0.100	0.513
0.120	0.538
0.150	0.571
0.200	0.616
0.250	0.576
0.300	0.546
0.400	0.462
0.500	0.406
0.750	0.330
1.000	0.284
1.500	0.194
2.000	0.148
3.000	0.094
4.000	0.068
5.000	0.056

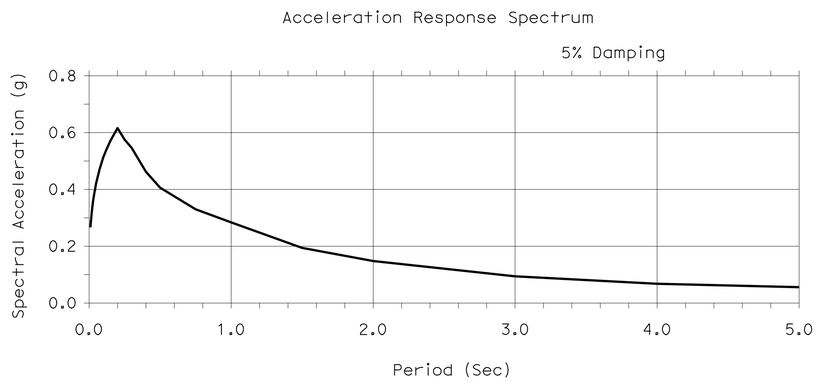

Peak Rock Acceleration = 0.25g
Mmax = 7.5

Note:
ARS curve was modified for Near Fault Directivity Effect (SDC Ver. 1.4 Section 6.1.2.1)

SITE SPECIFIC ACCELERATION RESPONSE SPECTRA CURVE

STANDARD PLANS DATED MAY 2006

A10A	ACRONYMS AND ABBREVIATIONS (SHEET 1 OF 2)
A10B	ACRONYMS AND ABBREVIATIONS (SHEET 2 OF 2)
A10C	SYMBOLS (SHEET 1 OF 2)
A10D	SYMBOLS (SHEET 2 OF 2)
A62C	LIMITS OF PAYMENT FOR EXCAVATION AND BACKFILL - BRIDGE
T3	TEMPORARY RAILING (TYPE K)
RSP P10	CONCRETE PAVEMENT DOWEL BAR DETAILS
BO-1	BRIDGE DETAILS
BO-3	BRIDGE DETAILS
BO-5	BRIDGE DETAILS
BO-13	BRIDGE DETAILS
RSP B6-21	JOINT SEALS (MAXIMUM MOVEMENT RATING = 2")
B7-1	BOX GIRDER DETAILS
B7-6	DECK DRAINS TYPES D-1 AND D-2
B7-8	DECK DRAINAGE DETAILS
B7-10	UTILITY OPENING BOX GIRDER
B8-5	CAST-IN-PLACE PRESTRESSED GIRDER DETAILS
B11-56	CONCRETE BARRIER TYPE 736
B14-3	COMMUNICATION AND SPRINKLER CONTROL CONDUITS (CONDUITS LESS THAN 4")

STANDARD PLAN SHEET No.

DETAIL No.

DESIGN OVERSIGHT Norbert Gee
10-25-10
SIGN OFF DATE

	BY	CHECKED
DESIGN	R Ramoso/H Mai	John Powell
DETAILS	C Morgan/C Lente	John Powell
QUANTITIES	R Ramoso/H Mai	Janice Reguyal

PREPARED FOR THE STATE OF CALIFORNIA DEPARTMENT OF TRANSPORTATION

Robert E. Hawthorne
PROJECT ENGINEER

BRIDGE NO. 57-1217
POST MILE R15.7

HILLERY DIRECT ACCESS RAMPS
SOUTHBOUND OFF-RAMP
INDEX TO PLANS No. 2

DESIGN DETAIL SHEET (ENGLISH) (REV. 06-01-09)

ORIGINAL SCALE IN INCHES FOR REDUCED PLANS 0 1 2 3

CU 11269
EA 2T0951

DISREGARD PRINTS BEARING EARLIER REVISION DATES

REVISION DATES (PRELIMINARY STAGE ONLY) 01/22/10 03/08/10 05/18/10 05/27/10 06/15/10 06/30/10 08/27/10

SHEET 3 OF 33

FILE => 57-1217-a-itp02.dgn

USERNAME => s121614 DATE PLOTTED => 27-OCT-2011 TIME PLOTTED => 10:26

DIST	COUNTY	ROUTE	POST MILES TOTAL PROJECT	SHEET No	TOTAL SHEETS
11	SD	15	M15.0/M16.4	581	610

REGISTERED CIVIL ENGINEER — DATE 10-15-10

10-24-11
PLANS APPROVAL DATE

REGISTERED PROFESSIONAL ENGINEER — ROBERT E. HAWTHORNE — No. 40075 — Exp. 03/31/12 — CIVIL — STATE OF CALIFORNIA

The State of California or its officers or agents shall not be responsible for the accuracy or completeness of scanned copies of this plan sheet.

SANDAG
401 B STREET, SUITE 800
SAN DIEGO, CA 92101

AECOM
7807 CONVOY COURT, SUITE 200
SAN DIEGO, CA 92111

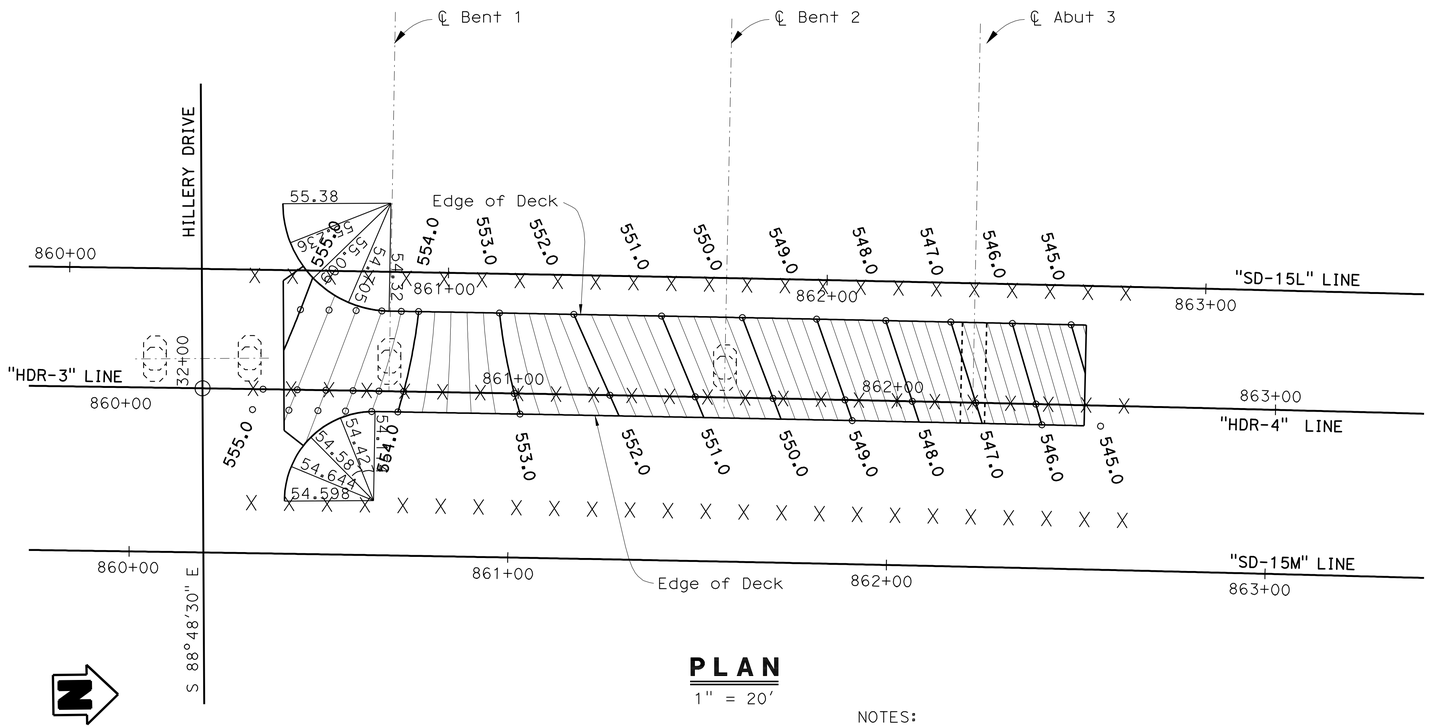

PLAN

1" = 20'

NOTES:

X - Indicates 10 foot intervals, along "HDR-4" Line

Contour interval is 0.20 ft.
Contours do not include camber.

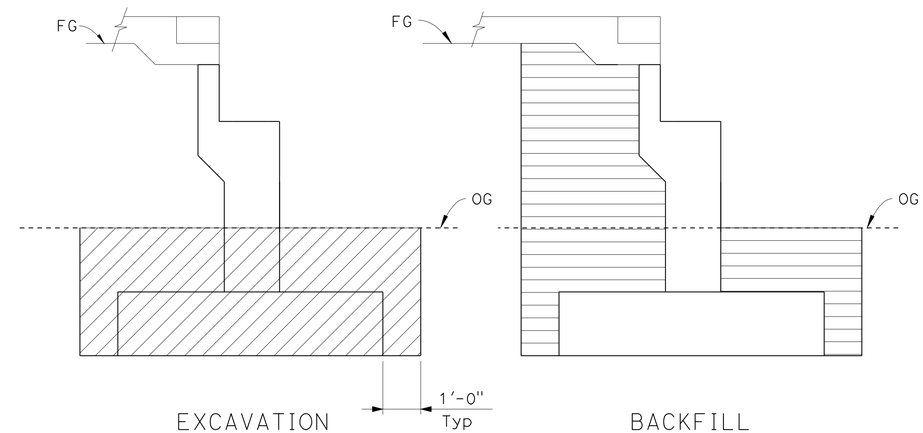

Structure Excavation (Type D)

Structure Backfill (Bridge)

PAY LIMITS FOR STRUCTURE EXCAVATION AND BACKFILL ABUTMENT

No Scale

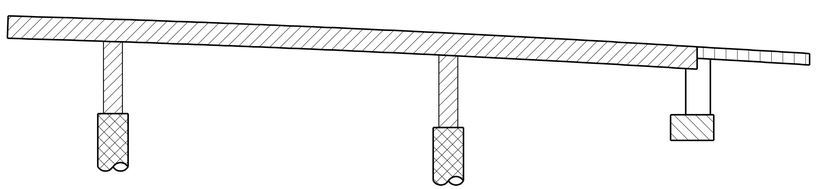

CONCRETE STRENGTH AND TYPE LIMITS

No Scale

LEGEND:

- Structural Concrete, Bridge
- Structural Concrete, Bridge (f'c=4 ksi @ 28 days)
- Structural Concrete, Bridge Footing
- Cast-In-Drilled-Hole Concrete Pile (f'c=4 ksi @ 28 days)
- Structural Concrete, Approach Slab

HILLERY DIRECT ACCESS RAMPS
SOUTHBOUND OFF-RAMP
DECK CONTOURS

DESIGN OVERSIGHT — Norbert Gee
10-25-10
SIGN OFF DATE

	BY	CHECKED
DESIGN	R Ramoso/H Mai	John Powell
DETAILS	C Morgan/C Lente	John Powell
QUANTITIES	R Ramoso/H Mai	Janice Reguyal

PREPARED FOR THE STATE OF CALIFORNIA DEPARTMENT OF TRANSPORTATION

Robert E. Hawthorne
PROJECT ENGINEER

BRIDGE NO. 57-1217
POST MILE R15.7

CU 11269
EA 2T0951

DISREGARD PRINTS BEARING EARLIER REVISION DATES

REVISION DATES (PRELIMINARY STAGE ONLY): 01/22/10 03/08/10 05/18/10 05/21/10 06/15/10 06/30/10 08/27/10

SHEET 4 OF 33

DESIGN DETAIL SHEET (ENGLISH) (REV. 06-01-09)

ORIGINAL SCALE IN INCHES FOR REDUCED PLANS 0 1 2 3

FILE => 57-1217-d-dc01.dgn

USERNAME => s12614 DATE PLOTTED => 28-OCT-2011 TIME PLOTTED => 07:27

DIST	COUNTY	ROUTE	POST MILES TOTAL PROJECT	SHEET No	TOTAL SHEETS
11	SD	15	M15.0/M16.4	582	610

REGISTERED CIVIL ENGINEER — DATE 10-15-10

10-24-11
PLANS APPROVAL DATE

REGISTERED PROFESSIONAL ENGINEER — ROBERT E. HAWTHORNE — No. 40075 — Exp. 03/31/12 — CIVIL — STATE OF CALIFORNIA

The State of California or its officers or agents shall not be responsible for the accuracy or completeness of scanned copies of this plan sheet.

SANDAG
401 B STREET, SUITE 800
SAN DIEGO, CA 92101

AECOM
7807 CONVOY COURT, SUITE 200
SAN DIEGO, CA 92111

LEGEND:

- Indicates CIDH Pile
- XXX.XX — Indicates bottom of footing elevation
- Indicates direction of traffic
- Structure Excavation (Type D)
- Structure Backfill (Bridge)
- Minor Concrete (Backfill)

ISOLATION CASING	
Location	Length of Payment (ft)
Bent 2	12'-2"

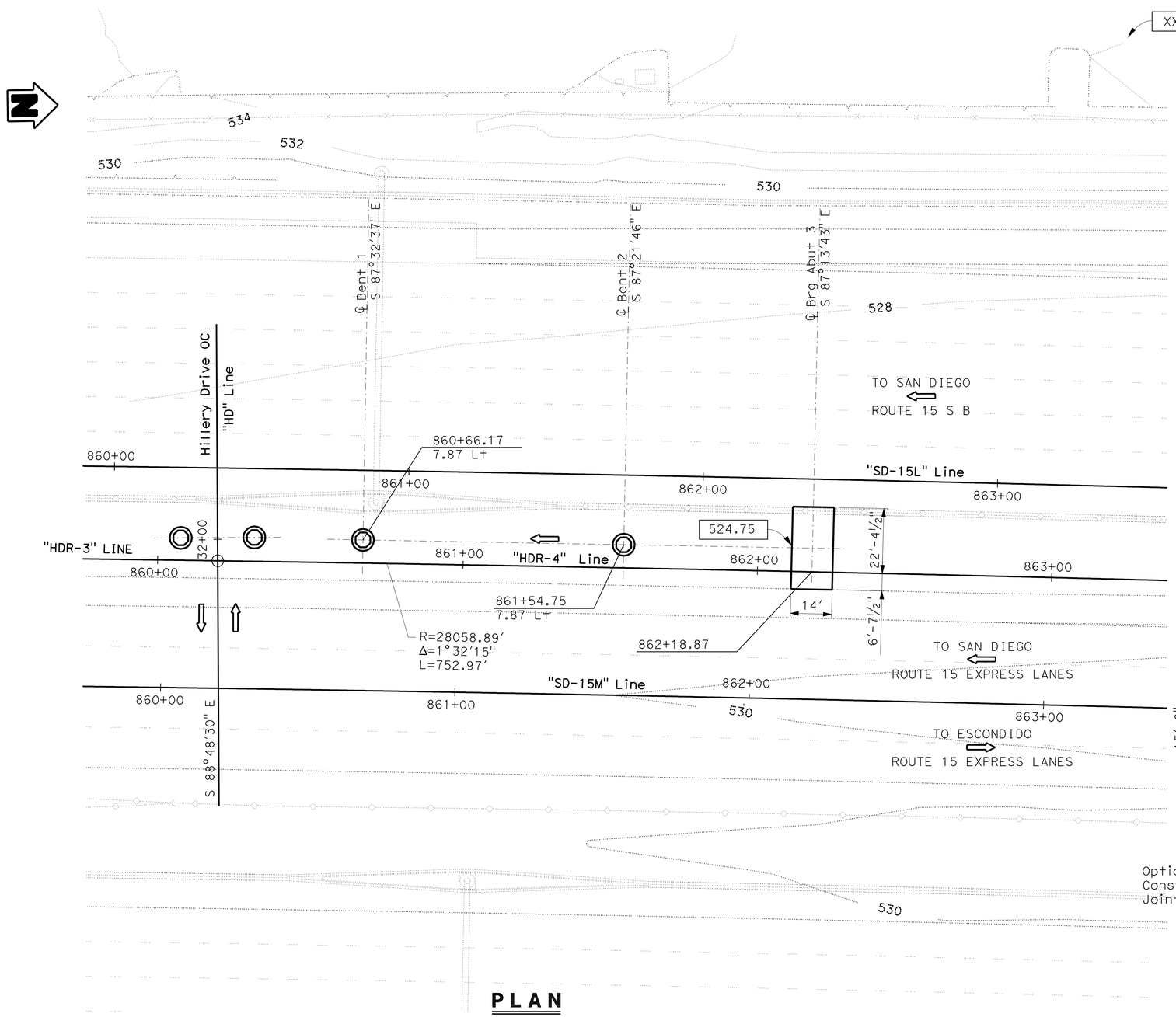

PLAN

1" = 20'

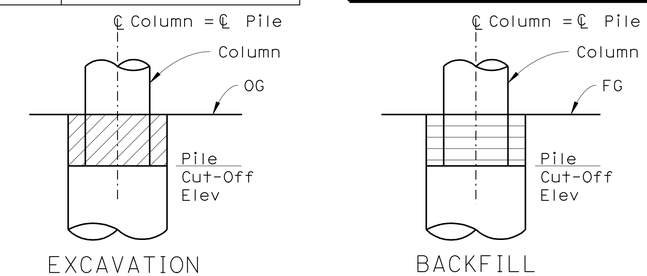

PAY LIMITS FOR STRUCTURE EXCAVATION AND BACKFILL BENT 1

No Scale

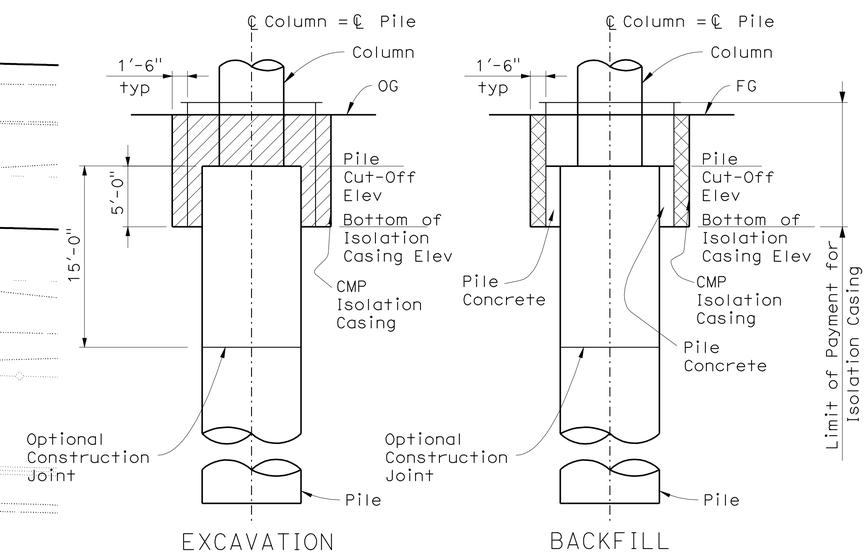

PAY LIMITS FOR STRUCTURE EXCAVATION AND BACKFILL BENT 2

No Scale

GEOTECHNICAL PROFESSIONAL APPROVAL DATE

HILLERY DIRECT ACCESS RAMPS
SOUTHBOUND OFF-RAMP
FOUNDATION PLAN

DESIGN OVERSIGHT Norbert Gee 10-25-10 SIGN OFF DATE	SCALE: 1"=20'	VERT.DATUM NAVD 88	HORZ.DATUM NAD 83	DESIGN	BY R Ramoso/H Mai	CHECKED John Powell	PREPARED FOR THE STATE OF CALIFORNIA DEPARTMENT OF TRANSPORTATION
	PHOTOGRAMMETRY AS OF: 05-29-2006	ALIGNMENT TIES AECOM Control Lines		DETAILS	BY C Morgan/C Lente	CHECKED John Powell	
	SURVEYED BY Diego Alvarado	DRAFTED BY Nicholas Haigh		QUANTITIES	BY R Ramoso/H Mai	CHECKED Janice Reguyal	
	FIELD CHECKED BY Diego Alvarado	CHECKED BY Michael Crull					

Robert E. Hawthorne
PROJECT ENGINEER

BRIDGE NO. 57-1217
POST MILE R15.7

FOUNDATION PLAN SHEET (ENGLISH) (REV. 06-01-09)

ORIGINAL SCALE IN INCHES FOR REDUCED PLANS 0 1 2 3

CU 11269
EA 2T0951

DISREGARD PRINTS BEARING EARLIER REVISION DATES

REVISION DATES (PRELIMINARY STAGE ONLY): 01/22/10 03/08/10 05/18/10 05/27/10 06/15/10 06/30/10 08/27/10 10/06/10

SHEET 5 OF 33

FILE => 57-1217-e-fp101.dgn

USERNAME => s12161 4 DATE PLOTTED => 28-OCT-2011 TIME PLOTTED => 07:27

DIST	COUNTY	ROUTE	POST MILES TOTAL PROJECT	SHEET No	TOTAL SHEETS
11	SD	15	M15.0/M16.4	583	610

REGISTERED CIVIL ENGINEER — DATE 10-15-10

PLANS APPROVAL DATE 10-24-11

REGISTERED PROFESSIONAL ENGINEER — ROBERT E. HAWTHORNE — No. 40075 — Exp. 03/31/12 — CIVIL — STATE OF CALIFORNIA

The State of California or its officers or agents shall not be responsible for the accuracy or completeness of scanned copies of this plan sheet.

SANDAG
401 B STREET, SUITE 800
SAN DIEGO, CA 92101

AECOM
7807 CONVOY COURT, SUITE 200
SAN DIEGO, CA 92111

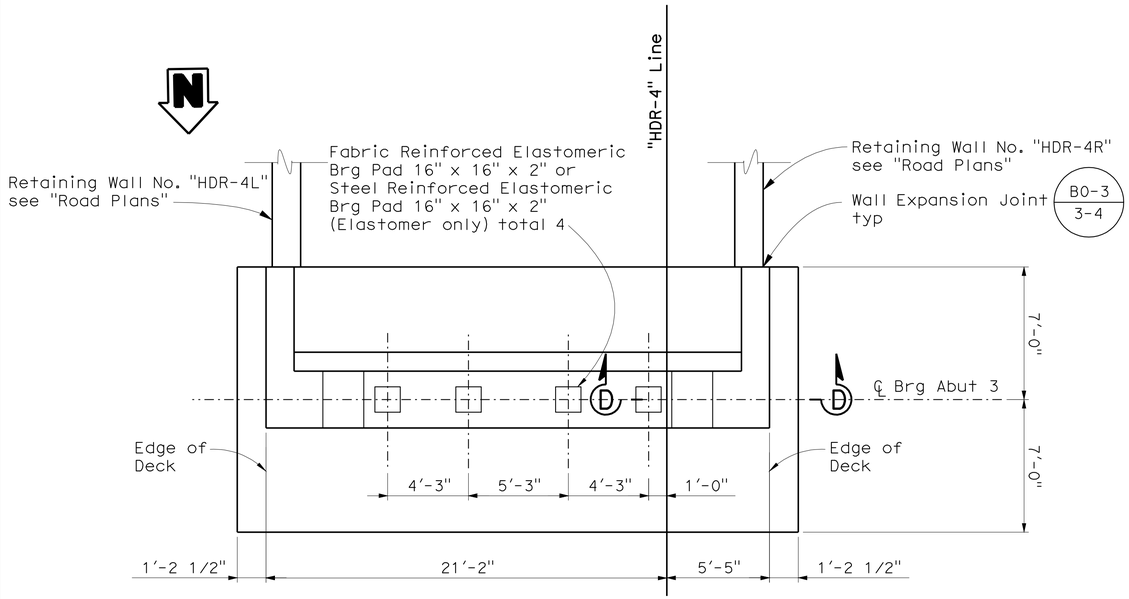

PLAN

1/4" = 1'-0"

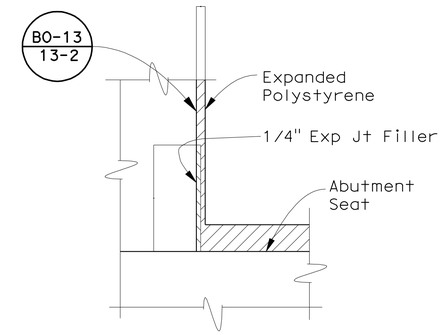

BACKWALL BASE DETAIL

No Scale

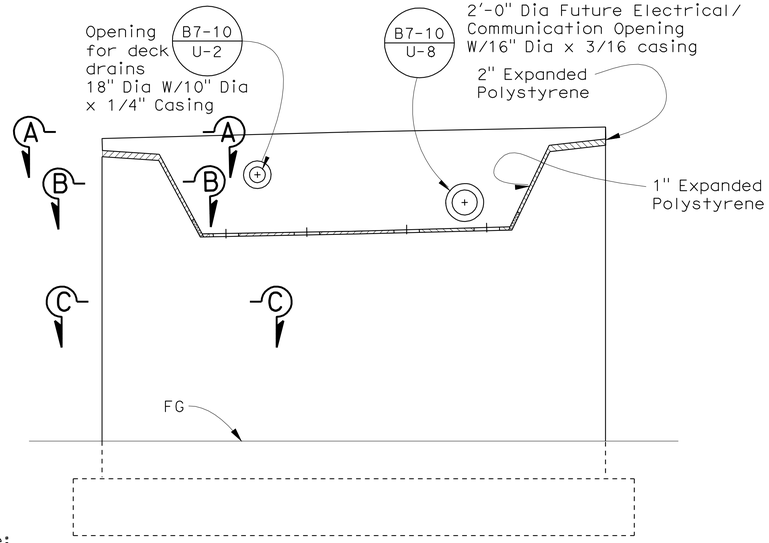

Note:
For Section A-A, B-B, C-C, and D-D see "ABUTMENT DETAILS"

ELEVATION

1/4" = 1'-0"

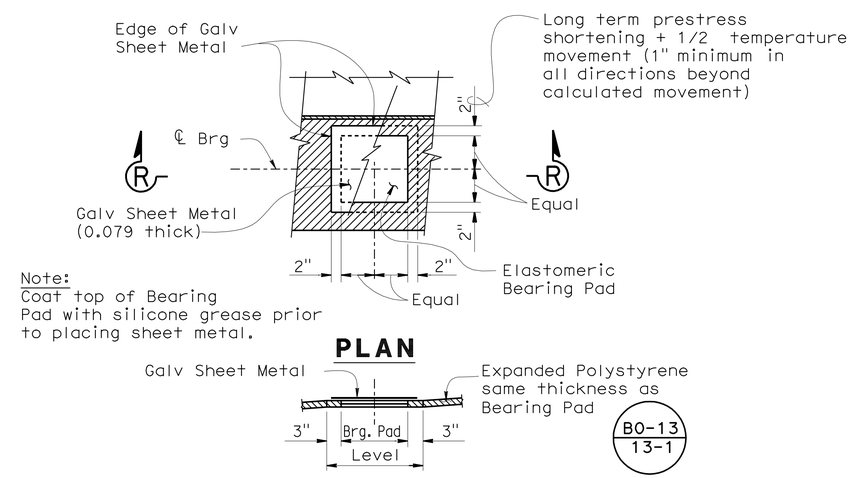

SECTION R-R

BEARING PAD DETAIL

No Scale
Details typical at all bearing pads

HILLERY DIRECT ACCESS RAMPS
SOUTHBOUND OFF-RAMP
ABUTMENT LAYOUT

DESIGN OVERSIGHT — Norbert Gee
10-25-10
SIGN OFF DATE

	BY	CHECKED
DESIGN	R Ramoso/H Mai	John Powell
DETAILS	C Morgan/C Lente	John Powell
QUANTITIES	R Ramoso/H Mai	Janice Reguyal

PREPARED FOR THE STATE OF CALIFORNIA DEPARTMENT OF TRANSPORTATION

Robert E. Hawthorne
PROJECT ENGINEER

BRIDGE NO. 57-1217
POST MILE R15.7

DESIGN DETAIL SHEET (ENGLISH) (REV. 06-01-09)

ORIGINAL SCALE IN INCHES FOR REDUCED PLANS 0 1 2 3

CU 11269
EA 2T0951

DISREGARD PRINTS BEARING EARLIER REVISION DATES

REVISION DATES (PRELIMINARY STAGE ONLY): 01/22/10 03/08/10 05/18/10 05/27/10 06/15/10 06/30/10 08/27/10

SHEET 6 OF 33

FILE => 57-1217-f-a01_lo1.dgn

USERNAME => s121614 DATE PLOTTED => 28-OCT-2011 TIME PLOTTED => 07:27

DIST	COUNTY	ROUTE	POST MILES TOTAL PROJECT	SHEET No	TOTAL SHEETS
11	SD	15	M15.0/M16.4	584	610

REGISTERED CIVIL ENGINEER — DATE 10-15-10

10-24-11
PLANS APPROVAL DATE

REGISTERED PROFESSIONAL ENGINEER — ROBERT E. HAWTHORNE — No. 40075 — Exp. 03/31/12 — CIVIL — STATE OF CALIFORNIA

The State of California or its officers or agents shall not be responsible for the accuracy or completeness of scanned copies of this plan sheet.

SANDAG
401 B STREET, SUITE 800
SAN DIEGO, CA 92101

AECOM
7807 CONVOY COURT, SUITE 200
SAN DIEGO, CA 92111

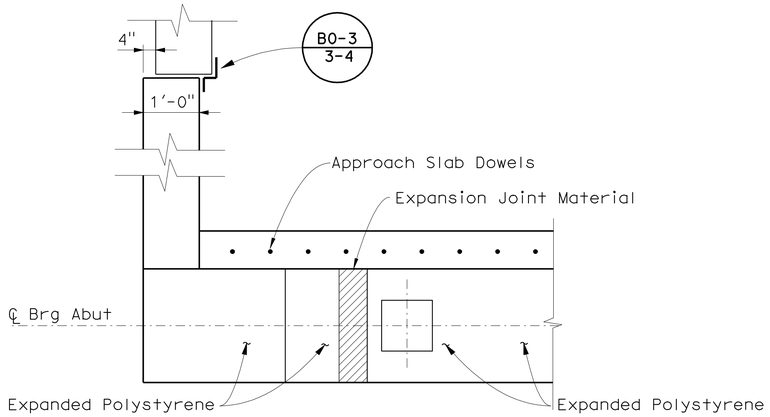

SECTION A-A
1/2" = 1'-0"

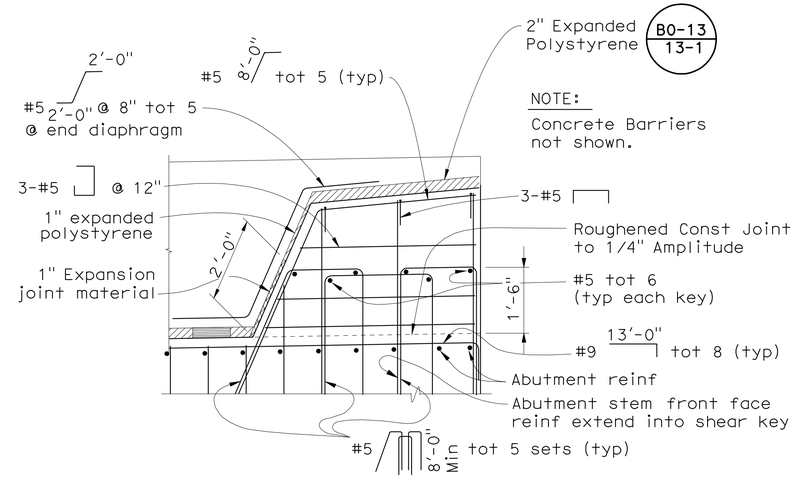

NOTE:
Concrete Barriers not shown.

SECTION D-D
1/2"=1'-0"

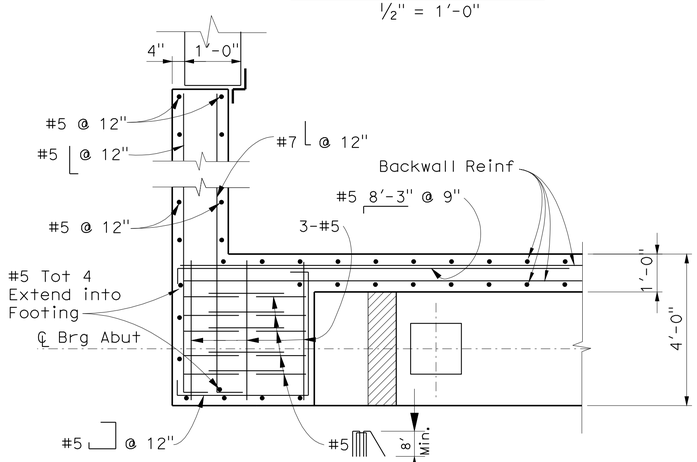

SECTION B-B
1/2" = 1'-0"

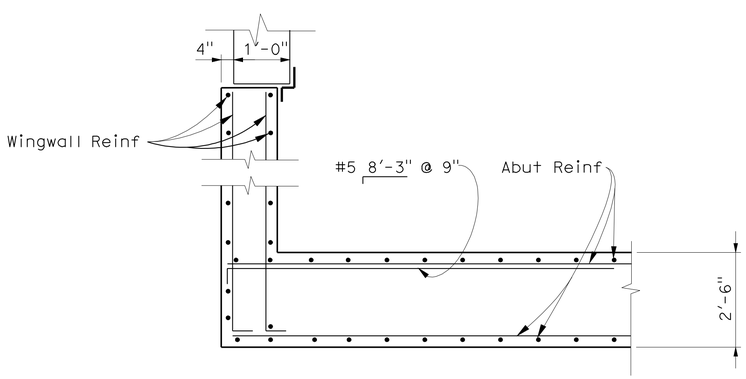

SECTION C-C
1/2" = 1'-0"

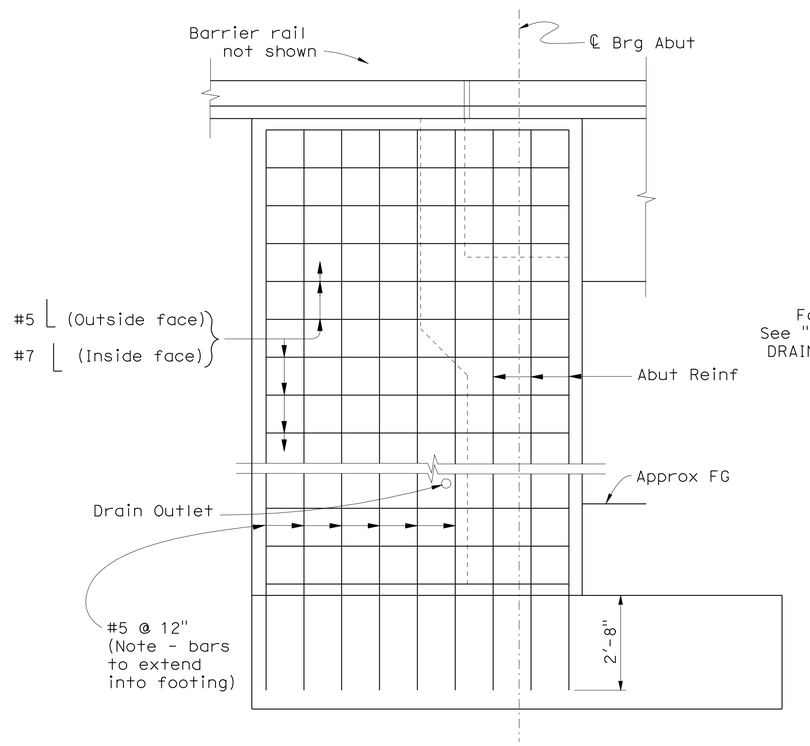

WING WALL ELEVATION
1/2"=1'-0"

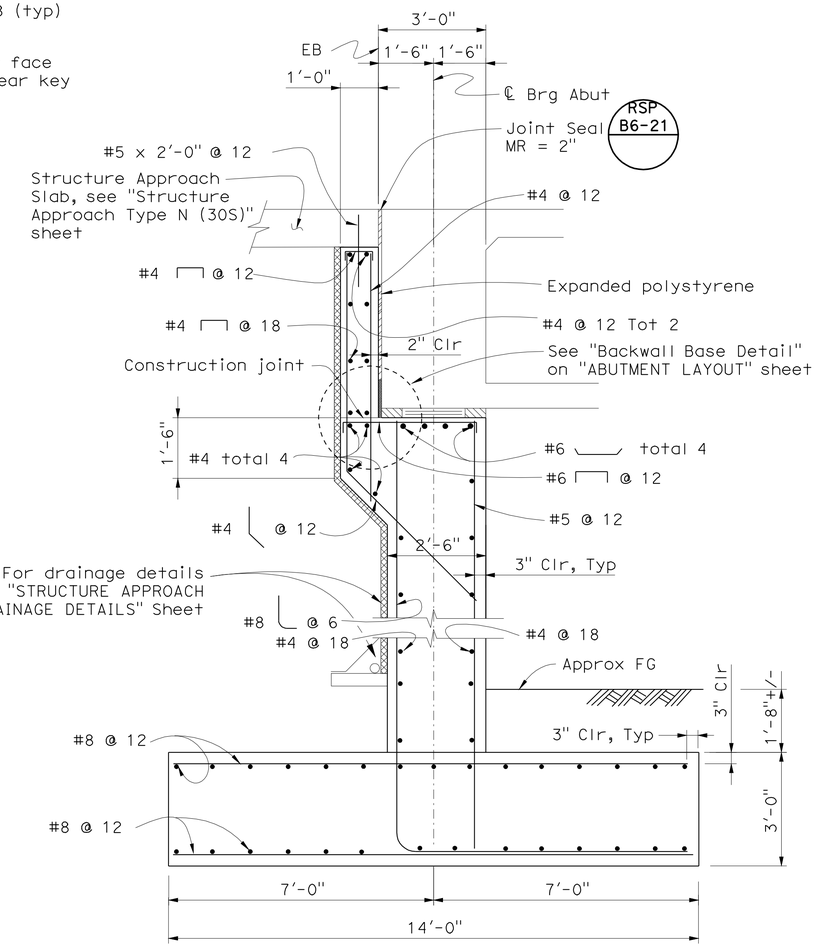

ABUTMENT SECTION
1/2"=1'-0"

DESIGN OVERSIGHT — Norbert Gee
10-25-10
SIGN OFF DATE

	BY	CHECKED
DESIGN	R Ramoso/H Mai	John Powell
DETAILS	C Morgan/C Lente	John Powell
QUANTITIES	R Ramoso/H Mai	Janice Reguyal

PREPARED FOR THE STATE OF CALIFORNIA DEPARTMENT OF TRANSPORTATION

Robert E. Hawthorne
PROJECT ENGINEER

BRIDGE NO. 57-1217
POST MILE R15.7

HILLERY DIRECT ACCESS RAMPS
SOUTHBOUND OFF-RAMP
ABUTMENT DETAILS

DESIGN DETAIL SHEET (ENGLISH) (REV. 06-01-09)

ORIGINAL SCALE IN INCHES FOR REDUCED PLANS 0 1 2 3

CU 11269
EA 2T0951

DISREGARD PRINTS BEARING EARLIER REVISION DATES

REVISION DATES (PRELIMINARY STAGE ONLY): 01/22/10 03/08/10 05/18/10 05/27/10 06/15/10 06/30/10 08/27/10

SHEET 7 OF 33

FILE => 57-1217-f-a01dt01.dgn

USERNAME => s121614 DATE PLOTTED => 28-OCT-2011 TIME PLOTTED => 07:27

DIST	COUNTY	ROUTE	POST MILES TOTAL PROJECT	SHEET No	TOTAL SHEETS
11	SD	15	M15.0/M16.4	585	610

REGISTERED CIVIL ENGINEER — DATE 10-15-10

10-24-11
PLANS APPROVAL DATE

REGISTERED PROFESSIONAL ENGINEER — ROBERT E. HAWTHORNE — No. 40075 — Exp. 03/31/12 — CIVIL — STATE OF CALIFORNIA

The State of California or its officers or agents shall not be responsible for the accuracy or completeness of scanned copies of this plan sheet.

SANDAG
401 B STREET, SUITE 800
SAN DIEGO, CA 92101

AECOM
7807 CONVOY COURT, SUITE 200
SAN DIEGO, CA 92111

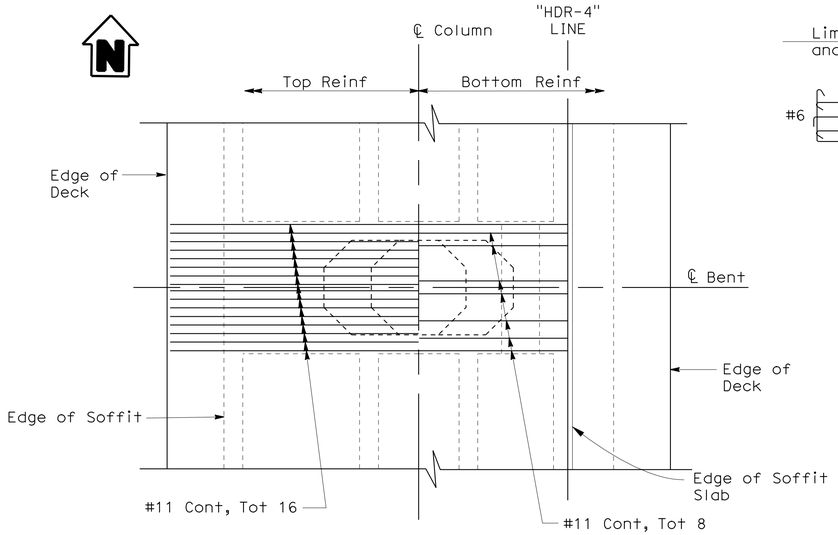

PLAN

SCALE 1/4" = 1'-0"

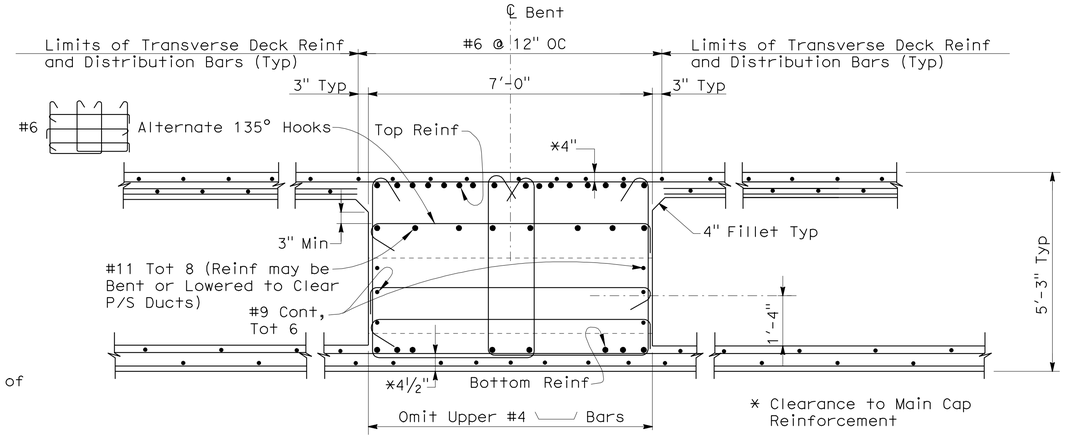

SECTION A-A (Bent 2)

1/2" = 1'-0"

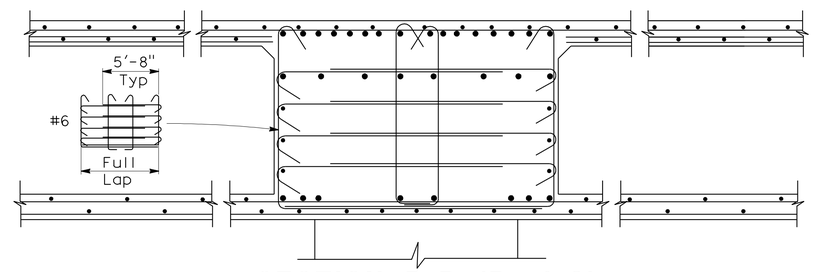

SECTION B-B (Bent 2)

1/2" = 1'-0"

Note: For Details Not Noted, See "Section A-A" (Bent 2)

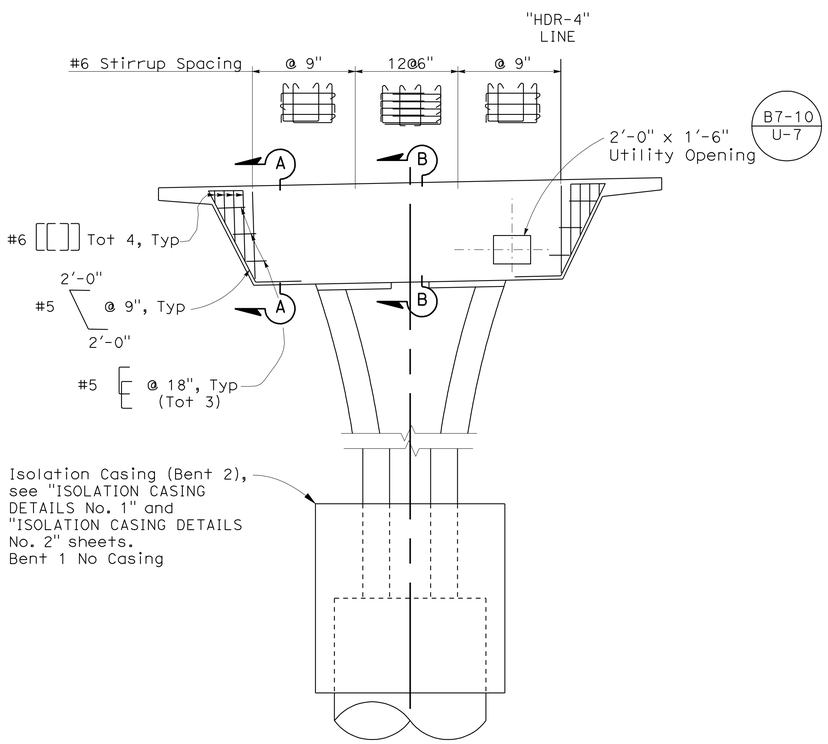

ELEVATION

SCALE 1/4" = 1'-0"

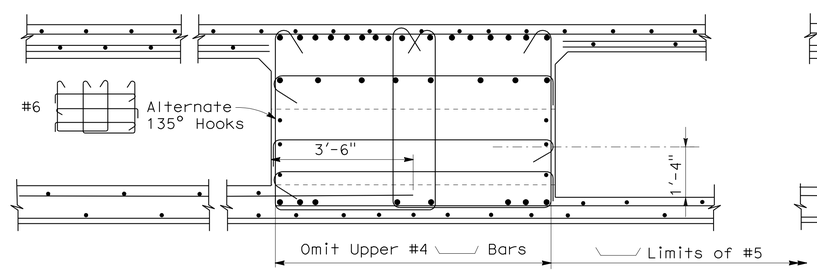

SECTION A-A (Bent 1)

1/2" = 1'-0"

Note: For Details Not Noted, See "Section A-A" (Bent 2)

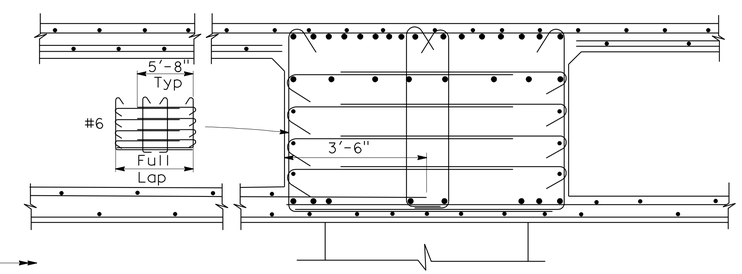

SECTION B-B (Bent 1)

1/2" = 1'-0"

Note: For Details Not Noted, See "Section A-A" (Bent 1) & Section A-A (Bent 2)

HILLERY DIRECT ACCESS RAMPS
SOUTHBOUND OFF-RAMP
BENT LAYOUT

DESIGN OVERSIGHT — Norbert Gee
10-25-10
SIGN OFF DATE

	BY	CHECKED
DESIGN	R Ramoso/H Mai	John Powell
DETAILS	C Morgan/C Lente	John Powell
QUANTITIES	R Ramoso/H Mai	Janice Reguyal

PREPARED FOR THE STATE OF CALIFORNIA DEPARTMENT OF TRANSPORTATION

Robert E. Hawthorne
PROJECT ENGINEER

BRIDGE NO. 57-1217
POST MILE R15.7

CU 11269
EA 2T0951

DISREGARD PRINTS BEARING EARLIER REVISION DATES

REVISION DATES (PRELIMINARY STAGE ONLY): 01/22/10 03/08/10 05/18/10 05/27/10 06/15/10 06/30/10 08/27/10

SHEET 8 OF 33

DESIGN DETAIL SHEET (ENGLISH) (REV. 06-01-09)

ORIGINAL SCALE IN INCHES FOR REDUCED PLANS 0 1 2 3

FILE => 57-1217-h-b01_lo01.dgn

USERNAME => s12614 DATE PLOTTED => 28-OCT-2011 TIME PLOTTED => 07:27

DIST	COUNTY	ROUTE	POST MILES TOTAL PROJECT	SHEET No	TOTAL SHEETS
11	SD	15	M15.0/M16.4	586	610

REGISTERED CIVIL ENGINEER — DATE 10-15-10

10-24-11
PLANS APPROVAL DATE

REGISTERED PROFESSIONAL ENGINEER — ROBERT E. HAWTHORNE — No. 40075 — Exp. 03/31/12 — CIVIL — STATE OF CALIFORNIA

The State of California or its officers or agents shall not be responsible for the accuracy or completeness of scanned copies of this plan sheet.

SANDAG
401 B STREET, SUITE 800
SAN DIEGO, CA 92101

AECOM
7807 CONVOY COURT, SUITE 200
SAN DIEGO, CA 92111

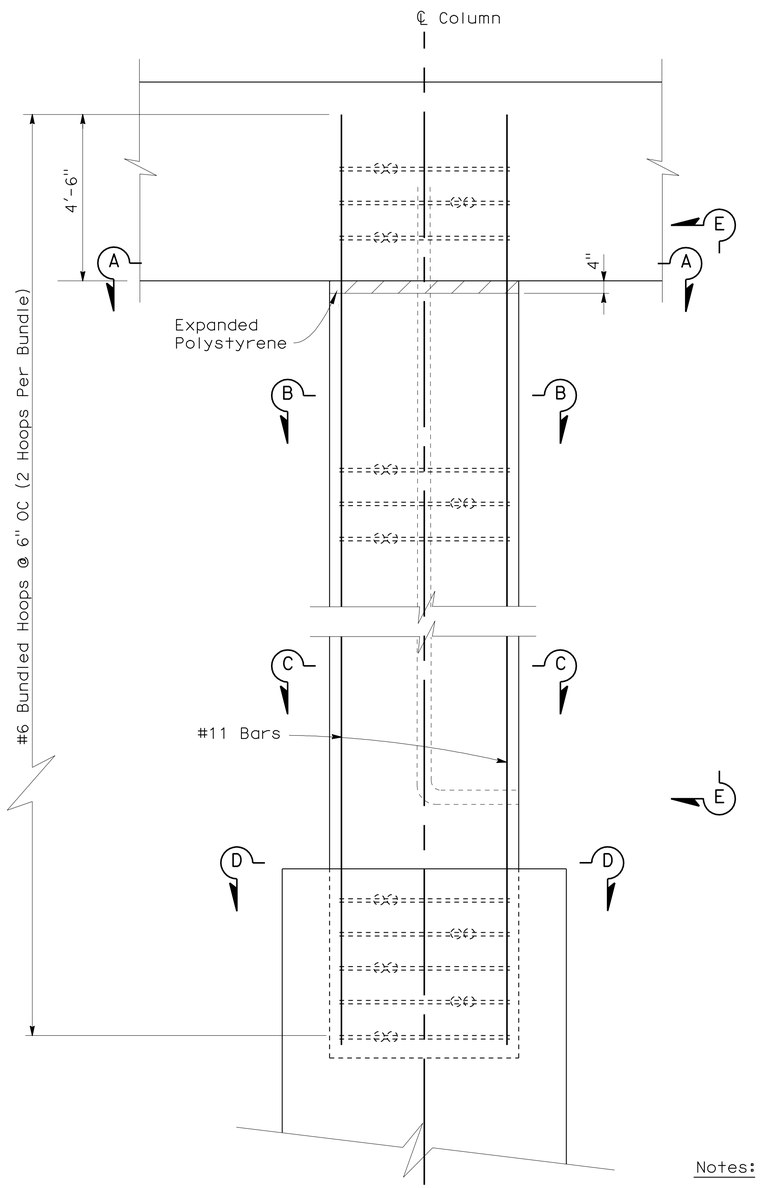

ELEVATION
½" = 1'-0"

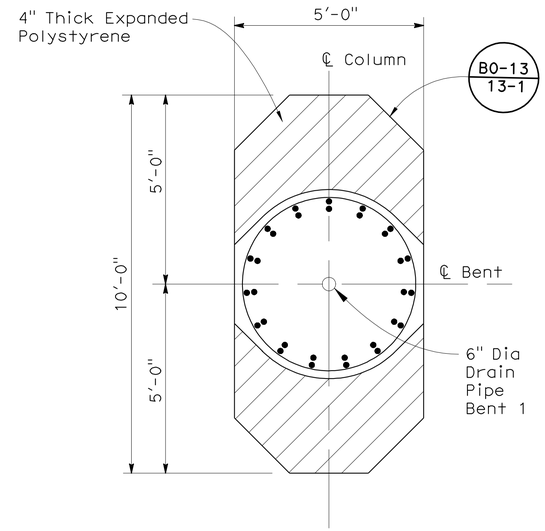

SECTION A-A
½" = 1'-0"

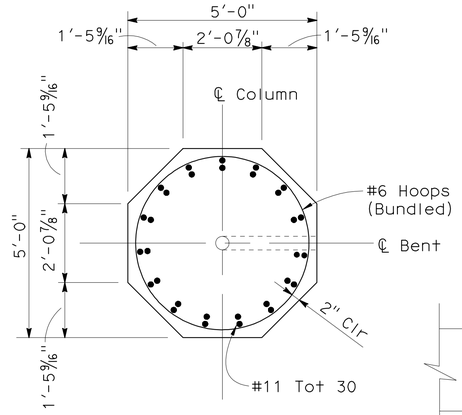

SECTION C-C
½" = 1'-0"

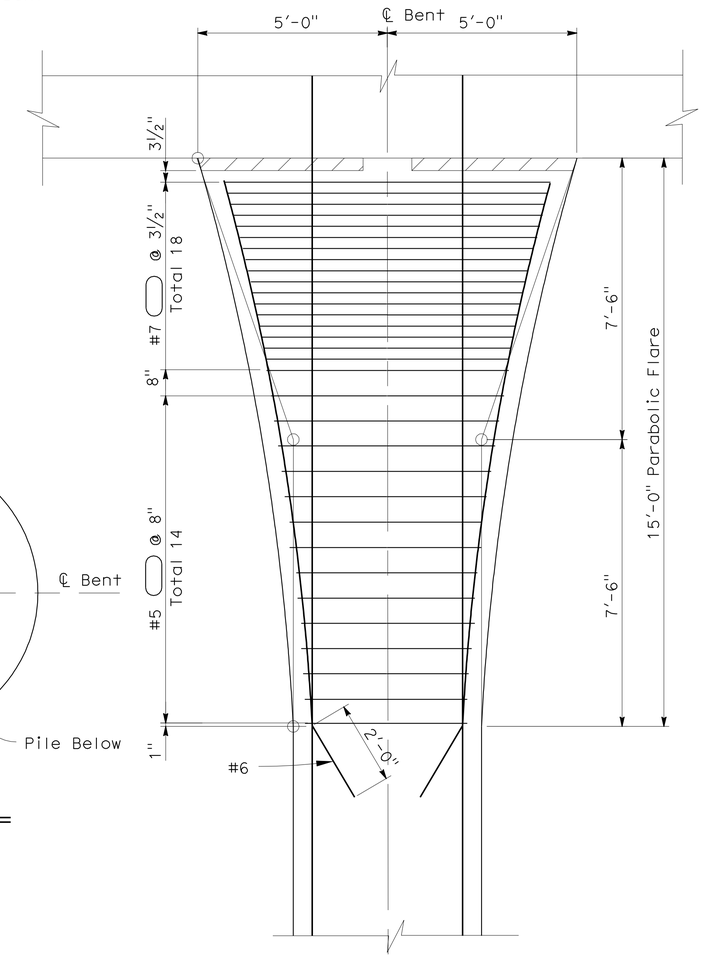

VIEW E-E
½" = 1'-0"

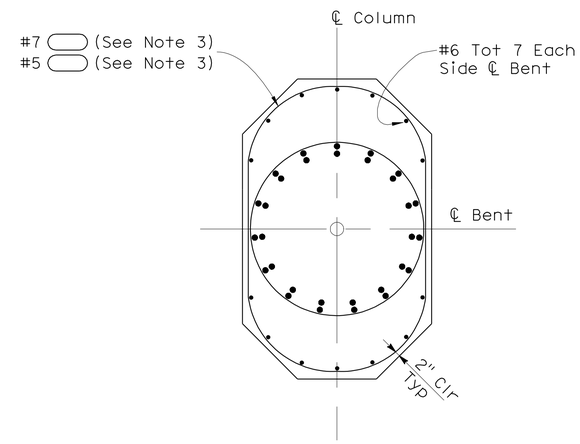

SECTION B-B
½" = 1'-0"

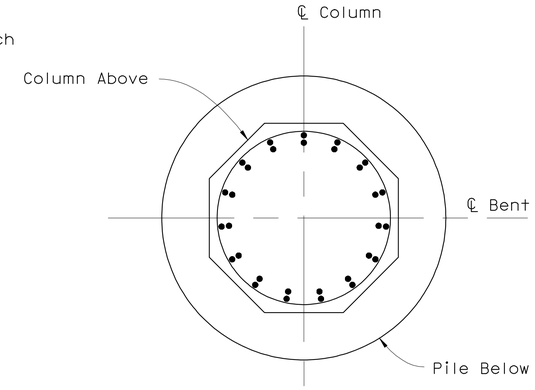

SECTION D-D
SCALE ½" = 1'-0"

Notes:

1. No Splices Allowed in Main Column Reinforcement.
2. All Hoops are "Ultimate" Butt Spliced Continuous Except as Noted.
3. Transverse Flare Reinforcement Hoops are "Service" Butt Spliced.

HILLERY DIRECT ACCESS RAMPS
SOUTHBOUND OFF-RAMP
COLUMN DETAILS

DESIGN OVERSIGHT — Norbert Gee
10-25-10
SIGN OFF DATE

	BY	CHECKED
DESIGN	R Ramoso/H Mai	John Powell
DETAILS	C Morgan/C Lente	John Powell
QUANTITIES	R Ramoso/H Mai	Janice Reguyal

PREPARED FOR THE STATE OF CALIFORNIA DEPARTMENT OF TRANSPORTATION

Robert E. Hawthorne
PROJECT ENGINEER

BRIDGE NO. 57-1217
POST MILE R15.7

CU 11269
EA 2T0951

DISREGARD PRINTS BEARING EARLIER REVISION DATES

REVISION DATES (PRELIMINARY STAGE ONLY): 01/22/10 03/08/10 05/18/10 05/21/10 06/15/10 06/30/10 08/27/10

SHEET 9 OF 33

DESIGN DETAIL SHEET (ENGLISH) (REV. 06-01-09)

ORIGINAL SCALE IN INCHES FOR REDUCED PLANS 0 1 2 3

FILE => 57-1217-j-cdet01.dgn

USERNAME => s812614 DATE PLOTTED => 28-OCT-2011 TIME PLOTTED => 07:27

DIST	COUNTY	ROUTE	POST MILES TOTAL PROJECT	SHEET No	TOTAL SHEETS
11	SD	15	M15.0/M16.4	587	610

Robert E. Hawthorne 10-15-10
REGISTERED CIVIL ENGINEER DATE

10-24-11
PLANS APPROVAL DATE

REGISTERED PROFESSIONAL ENGINEER ROBERT E. HAWTHORNE No. 40075 Exp. 03/31/12 CIVIL STATE OF CALIFORNIA

The State of California or its officers or agents shall not be responsible for the accuracy or completeness of scanned copies of this plan sheet.

SANDAG
401 B STREET, SUITE 800
SAN DIEGO, CA 92101

AECOM
7807 CONVOY COURT, SUITE 200
SAN DIEGO, CA 92111

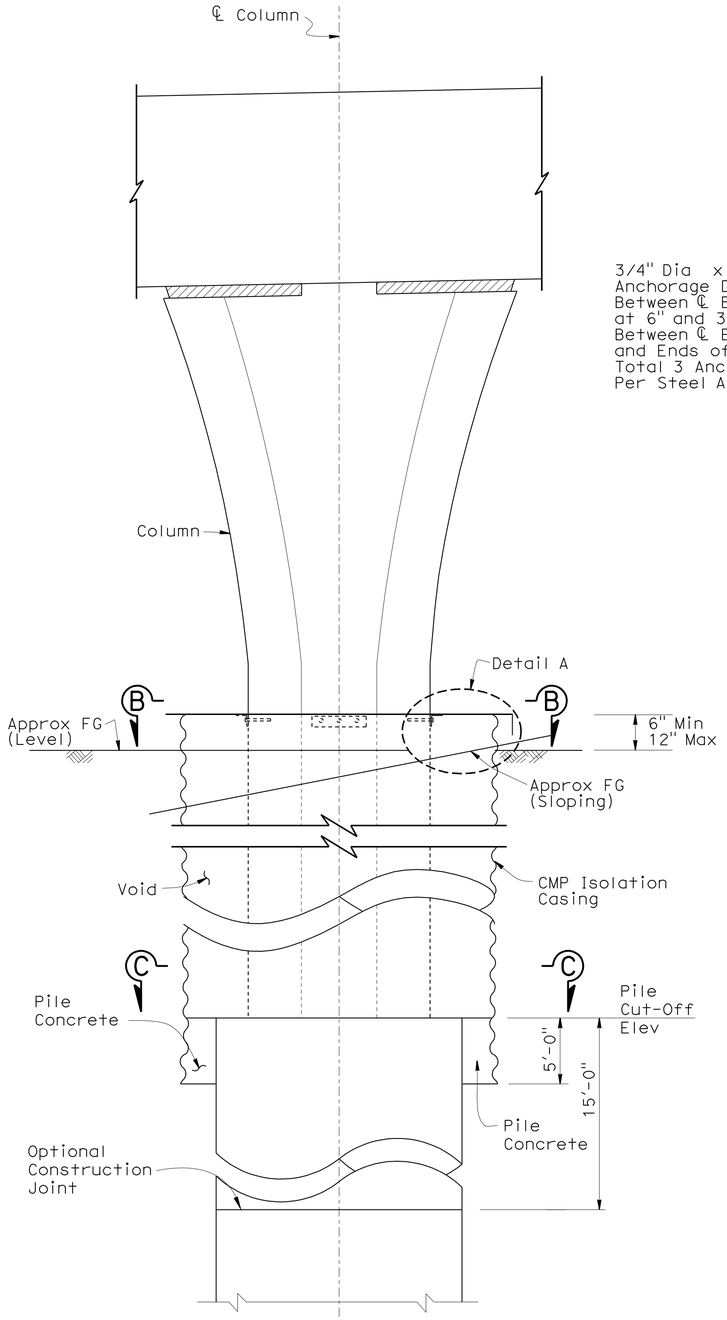

ELEVATION BENT 2

NTS

Note:
Cut Top of Casing 6" Minimum, 12" Maximum, Parallel to Finish Ground.

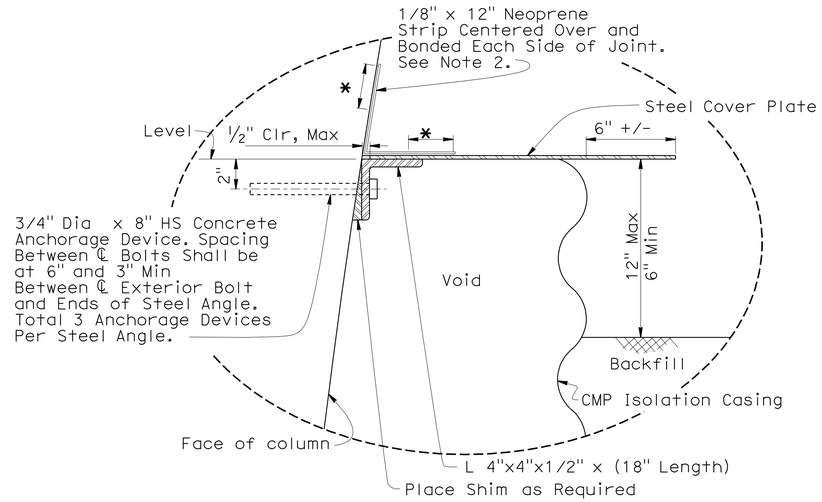

DETAIL A

NTS

* 3" To 4 " of Bonding

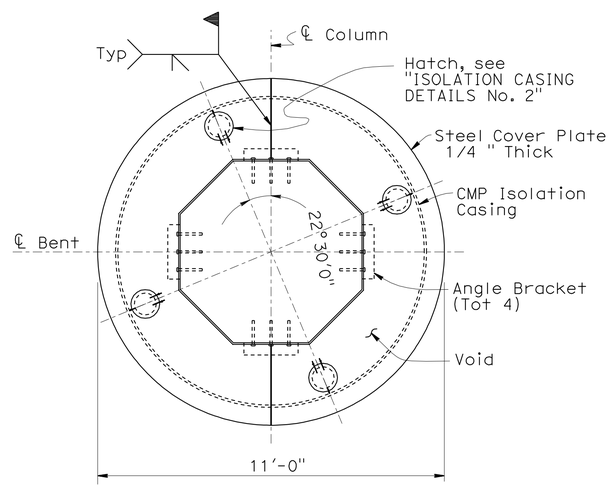

SECTION B-B

NTS
Note: Neoprene Strip Not Shown

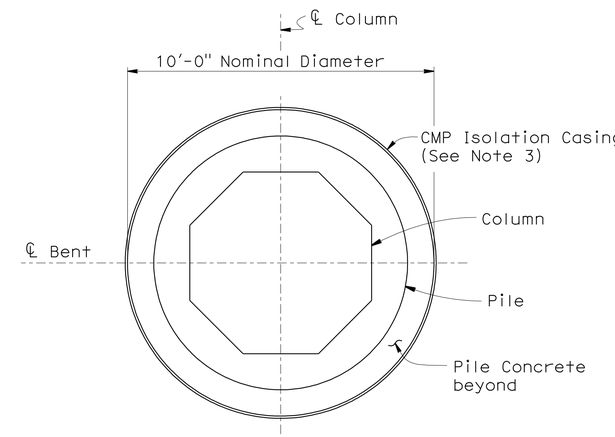

SECTION C-C

NTS

Notes:

1. Steel Cover Plate, Angles and All Hardware Shall be Galvanized.
2. Neoprene Strip may be Cut and Overlapped as Required to Fit Against Column and Steel Cover Plate. Entire Joint Between Column and Steel Cover Plate shall be Sealed.
3. Minimum Properties and Dimensions of Galvanized Corrugated Metal Pipe:

Thickness	0.168"
Area	63.4 in^2
Radius of Gyration	42.5 in
Moment of Inertia	114,481 in^4
Diameter	10'-0"
Section Modulus	1903 in^3
Length	12'-2"

4. If Permanent Casing is used, Casing shall be CMP and shall not extend more than 5'-0" below Optional Construction Joint indicated

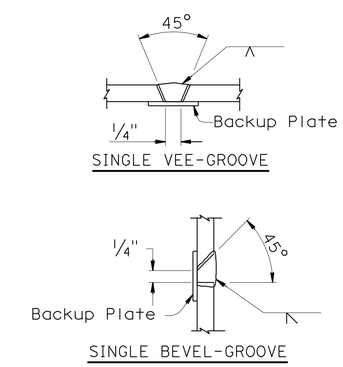

CASING WELDING DETAIL (BUTT JOINTS)

Notes:

1. Single Vee-Groove and Square Groove Permitted for All Positions.
2. Single Bevel-Groove Permitted for Horizontal Joints Only.

Norbert Gee
DESIGN OVERSIGHT Norbert Gee

10-25-10
SIGN OFF DATE

	BY	CHECKED
DESIGN	R Ramoso/H Mai	John Powell
DETAILS	C Morgan/C Lente	John Powell
QUANTITIES	R Ramoso/H Mai	Janice Reguyal

PREPARED FOR THE STATE OF CALIFORNIA DEPARTMENT OF TRANSPORTATION

Robert E. Hawthorne
PROJECT ENGINEER

BRIDGE NO. 57-1217
POST MILE R15.7

HILLERY DIRECT ACCESS RAMPS
SOUTHBOUND OFF-RAMP
ISOLATION CASING DETAILS No. 1

DESIGN DETAIL SHEET (ENGLISH) (REV. 06-01-09)

ORIGINAL SCALE IN INCHES FOR REDUCED PLANS 0 1 2 3

CU 11269
EA 2T0951

DISREGARD PRINTS BEARING EARLIER REVISION DATES

REVISION DATES (PRELIMINARY STAGE ONLY) 01/22/10 03/08/10 05/21/10 06/15/10 06/30/10 08/21/10 10/06/10

SHEET 10 OF 33

FILE => 57-1217-j-ciso01.dgn

USERNAME => s12614 DATE PLOTTED => 28-OCT-2011 TIME PLOTTED => 07:27

DIST	COUNTY	ROUTE	POST MILES TOTAL PROJECT	SHEET No	TOTAL SHEETS
11	SD	15	M15.0/M16.4	588	610

REGISTERED CIVIL ENGINEER — DATE 10-15-10

10-24-11
PLANS APPROVAL DATE

REGISTERED PROFESSIONAL ENGINEER — ROBERT E. HAWTHORNE — No. 40075 — Exp. 03/31/12 — CIVIL — STATE OF CALIFORNIA

The State of California or its officers or agents shall not be responsible for the accuracy or completeness of scanned copies of this plan sheet.

SANDAG
401 B STREET, SUITE 800
SAN DIEGO, CA 92101

AECOM
7807 CONVOY COURT, SUITE 200
SAN DIEGO, CA 92111

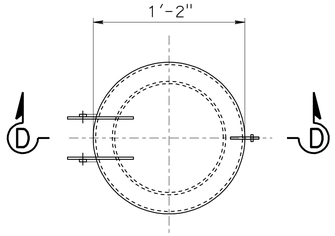

HATCH - PLAN VIEW
1 1/2"=1'-0"

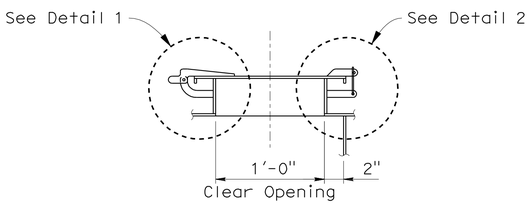

SECTION D-D
1 1/2"=1'-0"

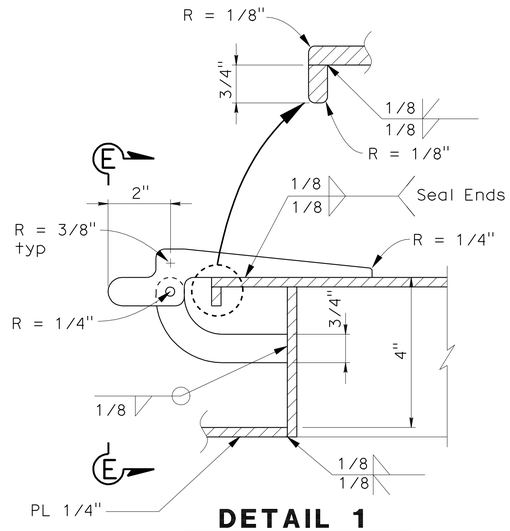

DETAIL 1
NTS

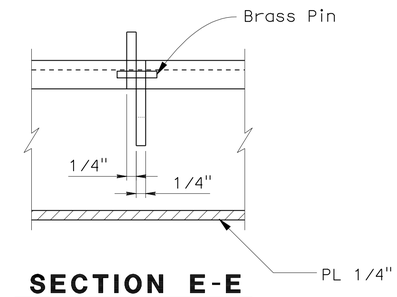

SECTION E-E
NTS

Notes:

1. For Additional Details, see "ISOLATION CASING DETAILS No. 1"
2. For Detail A, Section B-B & C-C, see "ISOLATION CASING DETAILS No. 1"

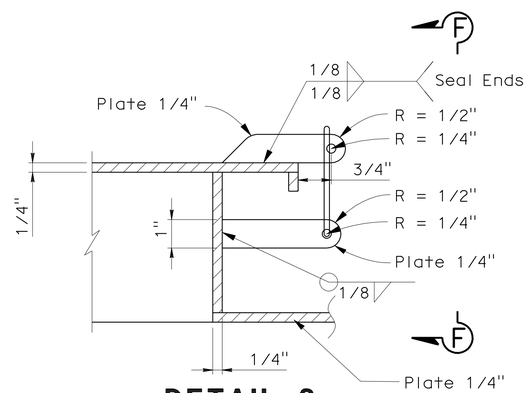

DETAIL 2
NTS

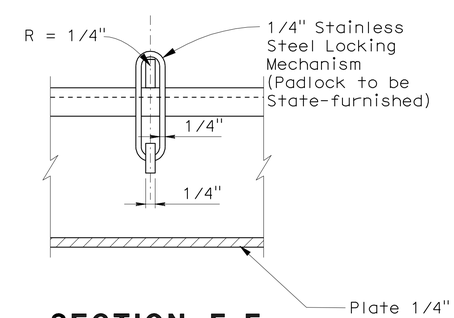

SECTION F-F
NTS

HILLERY DIRECT ACCESS RAMPS
SOUTHBOUND OFF-RAMP
ISOLATION CASING DETAILS No. 2

DESIGN OVERSIGHT — Norbert Gee
10-25-10
SIGN OFF DATE

	BY	CHECKED
DESIGN	R Ramoso/H Mai	John Powell
DETAILS	C Morgan/C Lente	John Powell
QUANTITIES	R Ramoso/H Mai	Janice Reguyal

PREPARED FOR THE STATE OF CALIFORNIA DEPARTMENT OF TRANSPORTATION

Robert E. Hawthorne
PROJECT ENGINEER

BRIDGE NO. 57-1217
POST MILE R15.7

DESIGN DETAIL SHEET (ENGLISH) (REV. 06-01-09)

ORIGINAL SCALE IN INCHES FOR REDUCED PLANS 0 1 2 3

CU 11269
EA 2T0951

DISREGARD PRINTS BEARING EARLIER REVISION DATES

REVISION DATES (PRELIMINARY STAGE ONLY): 01/22/10 03/08/10 05/21/10 06/15/10 06/30/10 08/27/10

SHEET 11 OF 33

FILE => 57-1217-j-ciso02.dgn

USERNAME => s12614 DATE PLOTTED => 28-OCT-2011 TIME PLOTTED => 07:28

DIST	COUNTY	ROUTE	POST MILES TOTAL PROJECT	SHEET No	TOTAL SHEETS
11	SD	15	M15.0/M16.4	589	610

Robert E. Hawthorne 10-15-10
REGISTERED CIVIL ENGINEER DATE

10-24-11
PLANS APPROVAL DATE

REGISTERED PROFESSIONAL ENGINEER ROBERT E. HAWTHORNE No. 40075 Exp. 03/31/12 CIVIL STATE OF CALIFORNIA

The State of California or its officers or agents shall not be responsible for the accuracy or completeness of scanned copies of this plan sheet.

SANDAG
401 B STREET, SUITE 800
SAN DIEGO, CA 92101

AECOM
7807 CONVOY COURT, SUITE 200
SAN DIEGO, CA 92111

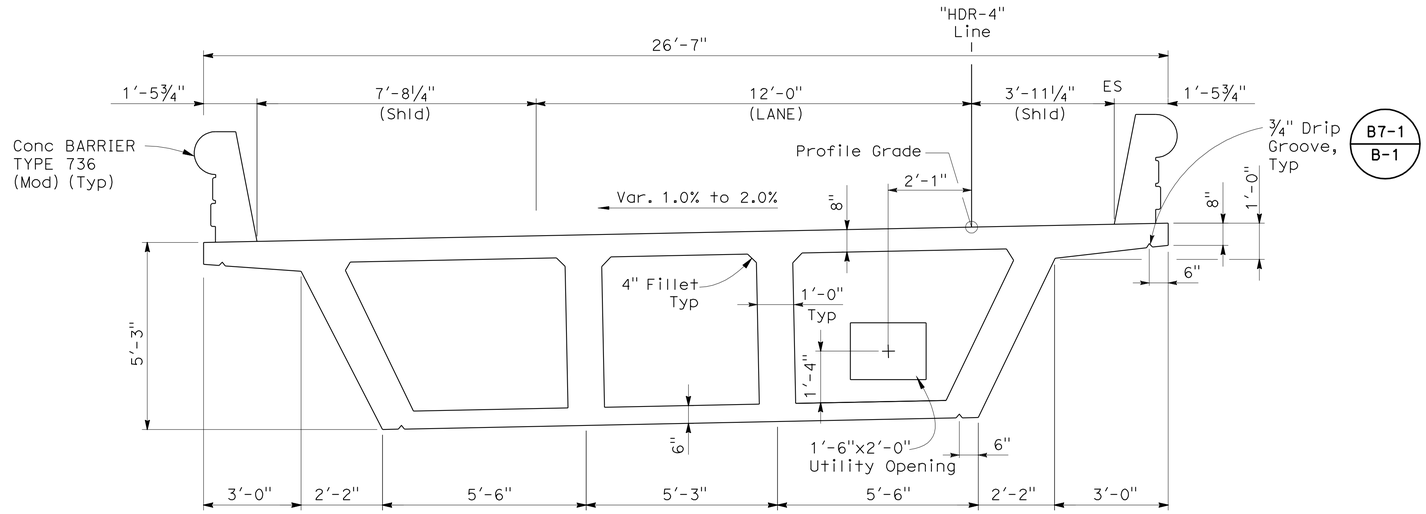

TYPICAL SECTION (SPANS 2 & 3)

1/2"=1'-0"

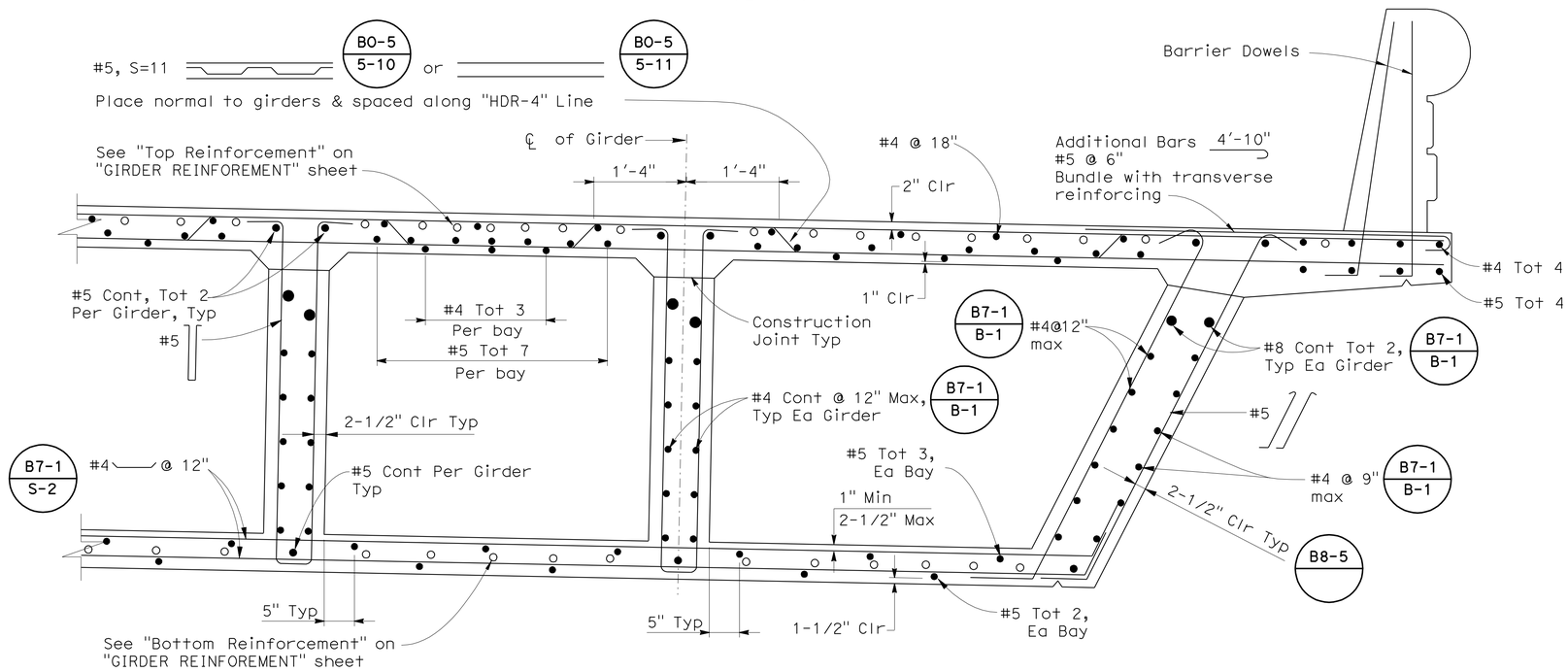

Note:
1. Dimensions shown are normal to Girder.

PART TYPICAL SECTION (SPANS 2 & 3)

1"=1'-0"

B0-5 B7-1 B8-5

HILLERY DIRECT ACCESS RAMPS
SOUTHBOUND OFF-RAMP
TYPICAL SECTION No. 1

DESIGN OVERSIGHT: Norbert Gee			
10-25-10 SIGN OFF DATE			
DESIGN	BY R Ramoso/H Mai	CHECKED John Powell	
DETAILS	BY C Morgan/C Lente	CHECKED John Powell	
QUANTITIES	BY R Ramoso/H Mai	CHECKED Janice Reguyal	

PREPARED FOR THE STATE OF CALIFORNIA DEPARTMENT OF TRANSPORTATION

Robert E. Hawthorne
PROJECT ENGINEER

BRIDGE NO. 57-1217
POST MILE R15.7

CU 11269
EA 2T0951

DESIGN DETAIL SHEET (ENGLISH) (REV. 06-01-09)

ORIGINAL SCALE IN INCHES FOR REDUCED PLANS 0 1 2 3

DISREGARD PRINTS BEARING EARLIER REVISION DATES

REVISION DATES (PRELIMINARY STAGE ONLY): 01/22/10 03/08/10 05/18/10 05/24/10 05/27/10 06/15/10 06/30/10 08/27/10

SHEET 12 OF 33

FILE => 57-1217-k-ts01.dgn

USERNAME => s612614 DATE PLOTTED => 28-OCT-2011 TIME PLOTTED => 07:28

DIST	COUNTY	ROUTE	POST MILES TOTAL PROJECT	SHEET No	TOTAL SHEETS
11	SD	15	M15.0/M16.4	590	610

REGISTERED CIVIL ENGINEER — DATE 10-15-10

PLANS APPROVAL DATE 10-24-11

REGISTERED PROFESSIONAL ENGINEER — ROBERT E. HAWTHORNE — No. 40075 — Exp. 03/31/12 — CIVIL — STATE OF CALIFORNIA

The State of California or its officers or agents shall not be responsible for the accuracy or completeness of scanned copies of this plan sheet.

SANDAG
401 B STREET, SUITE 800
SAN DIEGO, CA 92101

AECOM
7807 CONVOY COURT, SUITE 200
SAN DIEGO, CA 92111

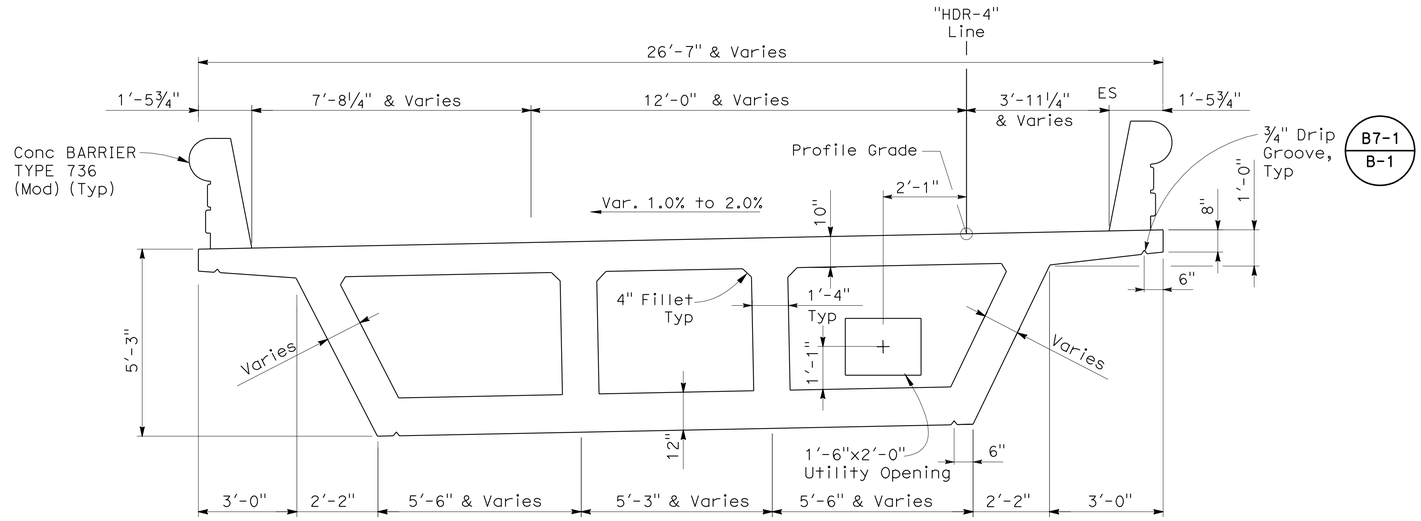

TYPICAL SECTION (CANTILEVER SPAN 1)

1/2"=1'-0"

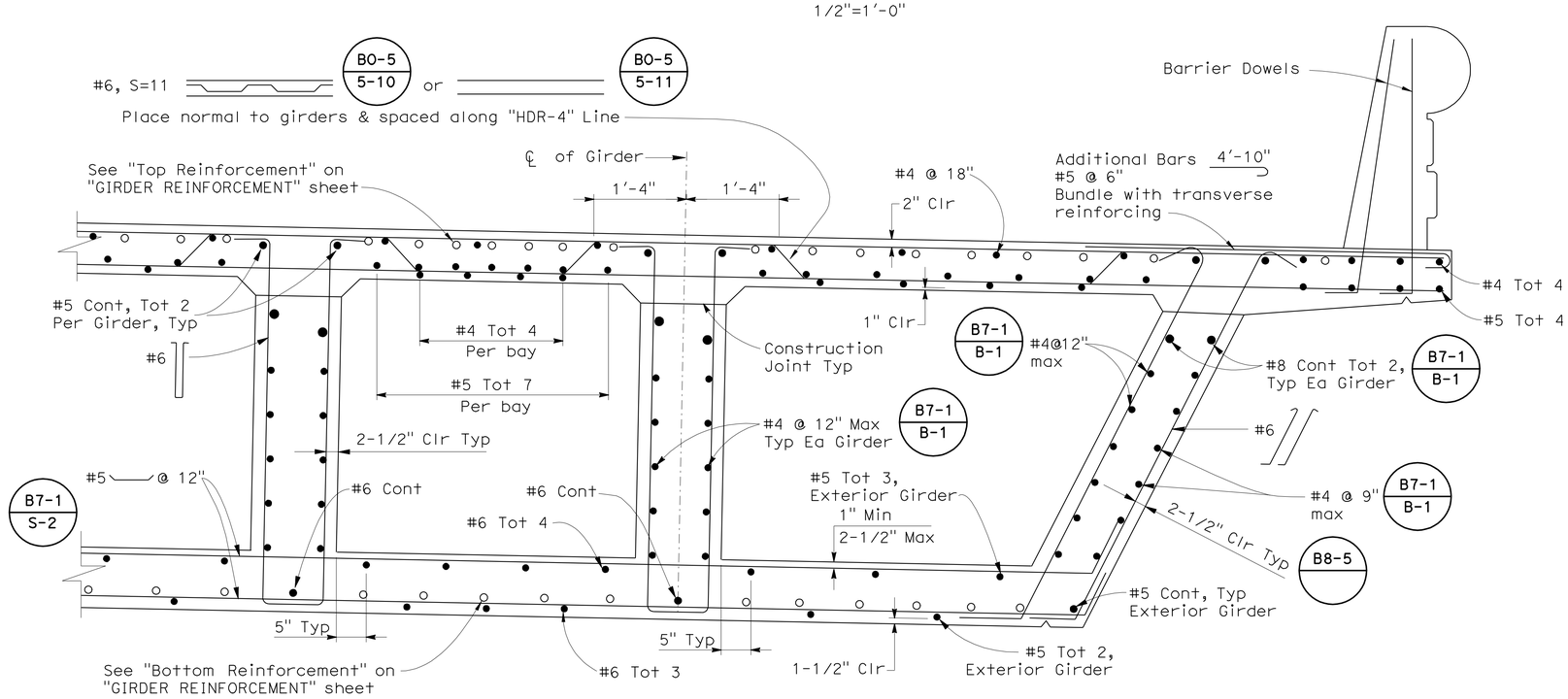

Note:
1. Dimensions shown are normal to girder.

PART TYPICAL SECTION (CANTILEVER SPAN 1)

1"=1'-0"

B0-5 B7-1 B8-5

HILLERY DIRECT ACCESS RAMPS
SOUTHBOUND OFF-RAMP
TYPICAL SECTION No. 2

DESIGN OVERSIGHT — Norbert Gee
SIGN OFF DATE 10-25-10

	BY	CHECKED
DESIGN	R Ramoso/H Mai	John Powell
DETAILS	C Morgan/C Lente	John Powell
QUANTITIES	R Ramoso/H Mai	Janice Reguyal

PREPARED FOR THE STATE OF CALIFORNIA DEPARTMENT OF TRANSPORTATION

Robert E. Hawthorne
PROJECT ENGINEER

BRIDGE NO. 57-1217
POST MILE R15.7

CU 11269
EA 2T0951

DISREGARD PRINTS BEARING EARLIER REVISION DATES

REVISION DATES (PRELIMINARY STAGE ONLY): 01/22/10 03/08/10 05/18/10 05/24/10 05/27/10 06/15/10 06/30/10 08/27/10

SHEET 13 OF 33

DESIGN DETAIL SHEET (ENGLISH) (REV. 06-01-09)

ORIGINAL SCALE IN INCHES FOR REDUCED PLANS 0 1 2 3

FILE => 57-1217-k-ts02.dgn

USERNAME => s121614 DATE PLOTTED => 28-OCT-2011 TIME PLOTTED => 07:28

DIST	COUNTY	ROUTE	POST MILES TOTAL PROJECT	SHEET No	TOTAL SHEETS
11	SD	15	M15.0/M16.4	591	610

REGISTERED CIVIL ENGINEER — DATE 10-15-10

10-24-11
PLANS APPROVAL DATE

REGISTERED PROFESSIONAL ENGINEER — ROBERT E. HAWTHORNE — No. 40075 — Exp. 03/31/12 — CIVIL — STATE OF CALIFORNIA

The State of California or its officers or agents shall not be responsible for the accuracy or completeness of scanned copies of this plan sheet.

SANDAG
401 B STREET, SUITE 800
SAN DIEGO, CA 92101

AECOM
7807 CONVOY COURT, SUITE 200
SAN DIEGO, CA 92111

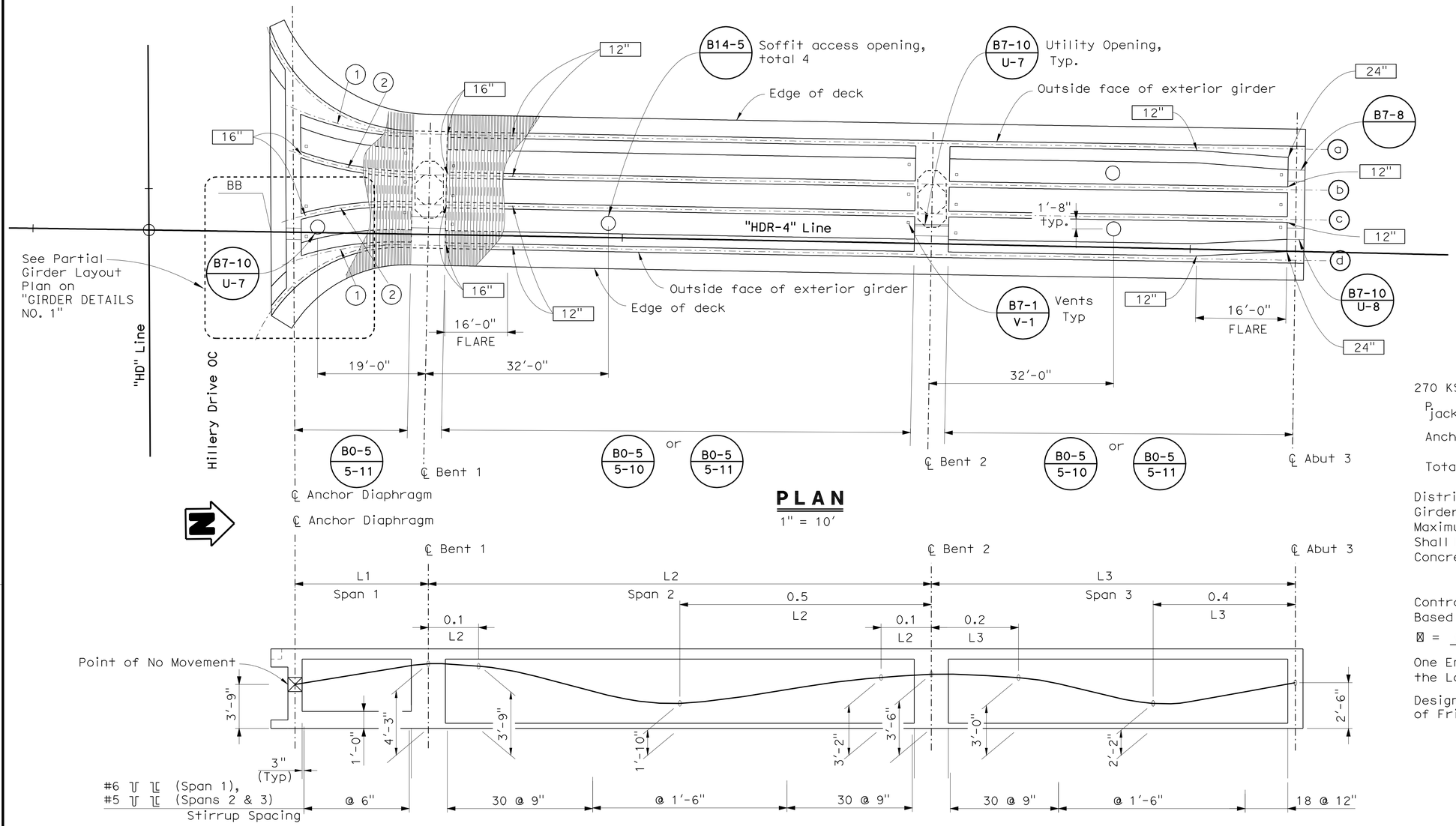

PLAN

1" = 10'

LONGITUDINAL SECTION

No Scale

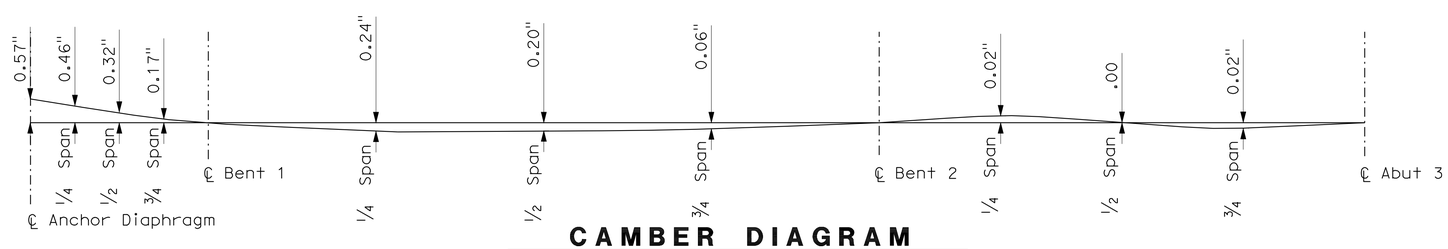

CAMBER DIAGRAM

No Scale

PRESTRESSING NOTES

270 KSI Low Relaxation Strand:

P_{jack} = 3,700 kips

Anchor Set = 3/8 in

Total Number of Girders = 4

Distribution of Prestress Force (Pjack) Between Girders Shall not Exceed the Ratio of 3:2. Maximum Final Force Variation Between Girders Shall Not Exceed 725 kips.

Concrete: f'_c = 4.0 ksi @ 28 Days

f'_{ci} = 3.6 ksi @ Time of Stressing

Contractor Shall Submit Elongation Calculations Based on Initial Stress at

☒ = 0.889 Times Jacking Stress.

One End Stressing Shall be Performed From the Long-Span End Only.

Design based on μ = 0.15 (Coefficient of Friction) and k = 0.00020/ft (Wobble)

Notes:

Indicates Stem Width in Inches

(1) R=55.75' (℄ Girder)

(2) R=62.68' (℄ Girder)

HILLERY DIRECT ACCESS RAMPS
SOUTHBOUND OFF-RAMP
GIRDER LAYOUT

DESIGN OVERSIGHT — Norbert Gee
10-25-10
SIGN OFF DATE

	BY	CHECKED
DESIGN	R Ramoso/H Mai	John Powell
DETAILS	C Morgan/C Lente	John Powell
QUANTITIES	R Ramoso/H Mai	Janice Reguyal

PREPARED FOR THE STATE OF CALIFORNIA DEPARTMENT OF TRANSPORTATION

Robert E. Hawthorne
PROJECT ENGINEER

BRIDGE NO. 57-1217
POST MILE R15.7

DISREGARD PRINTS BEARING EARLIER REVISION DATES

REVISION DATES (PRELIMINARY STAGE ONLY): 01/22/10 03/08/10 05/18/10 05/27/10 06/15/10 06/30/10 08/27/10

SHEET 14 OF 33

CU 11269
EA 2T0951

DESIGN DETAIL SHEET (ENGLISH) (REV. 06-01-09)

ORIGINAL SCALE IN INCHES FOR REDUCED PLANS 0 1 2 3

FILE => 57-1217-1-g_1o01.dgn

USERNAME => s117606 DATE PLOTTED => 27-OCT-2011 TIME PLOTTED => 10:52

DIST	COUNTY	ROUTE	POST MILES TOTAL PROJECT	SHEET No	TOTAL SHEETS
11	SD	15	M15.0/M16.4	592	610

Robert E. Hawthorne 2-17-11
REGISTERED CIVIL ENGINEER DATE

10-24-11
PLANS APPROVAL DATE

REGISTERED PROFESSIONAL ENGINEER ROBERT E. HAWTHORNE No. 40075 Exp. 03/31/12 CIVIL STATE OF CALIFORNIA

The State of California or its officers or agents shall not be responsible for the accuracy or completeness of scanned copies of this plan sheet.

SANDAG
401 B STREET, SUITE 800
SAN DIEGO, CA 92101

AECOM
7807 CONVOY COURT, SUITE 200
SAN DIEGO, CA 92111

Notes:

(1) R = 55.75' (℄ Girder)

(2) R = 62.68' (℄ Girder)

(3) R = 27.02' (℄ Ext. RC Girder Right - shown)

Notes:

For Bottom Sections A-A, see "GIRDER DETAILS No. 2" sheet.

For Top Sections B-B, see "GIRDER DETAILS No. 3" sheet.

For Sections E-E, F-F, G-G and Detail H see "GIRDER DETAILS No. 6" sheet.

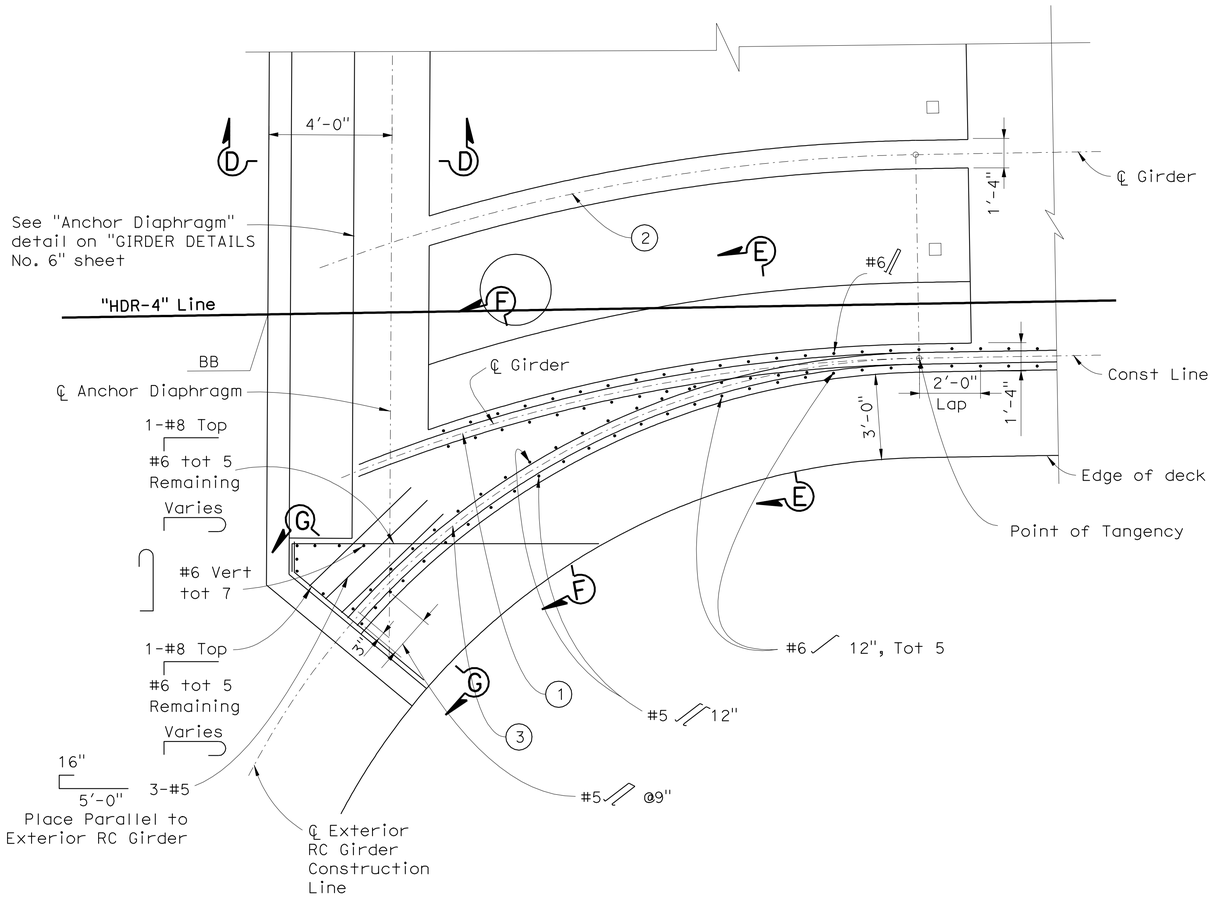

PARTIAL GIRDER LAYOUT PLAN

3/8"=1'-0"

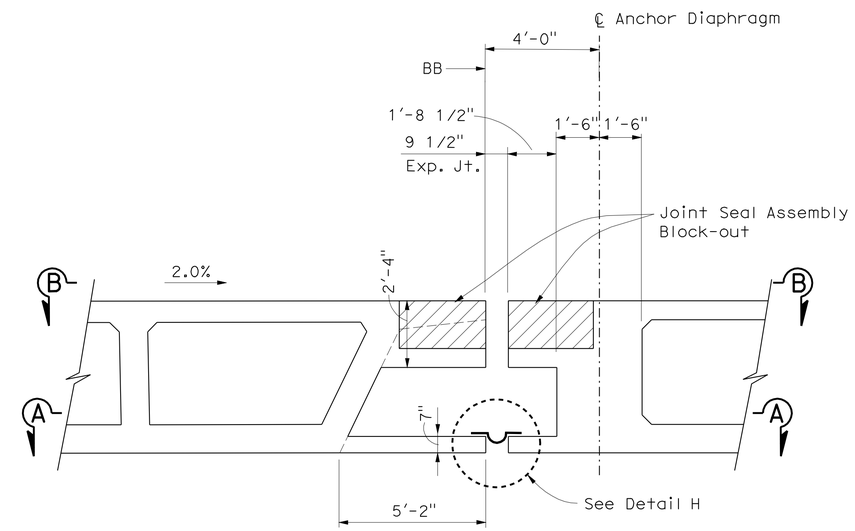

SECTION D-D

3/8"=1'-0"

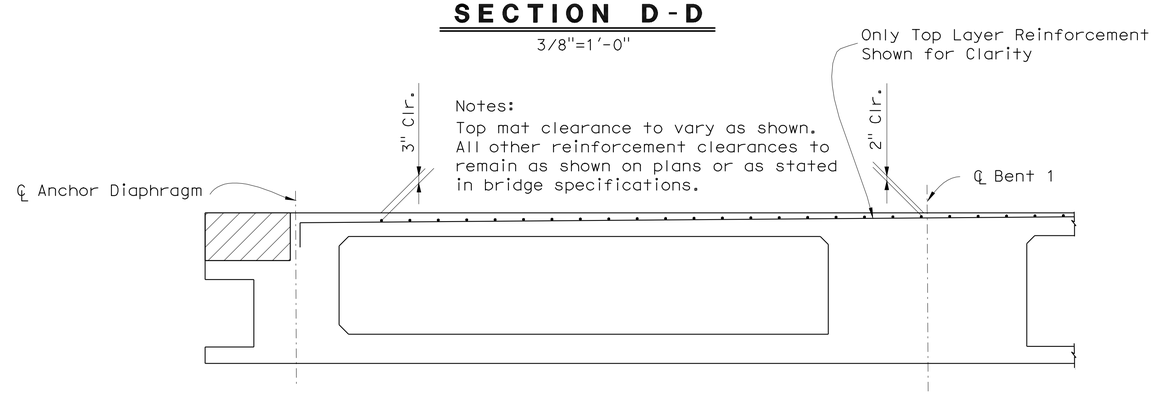

PART DECK REINFORCEMENT DETAIL

3/8"=1'-0"

HILLERY DIRECT ACCESS RAMPS
SOUTHBOUND OFF-RAMP
GIRDER DETAILS No. 1

Norbert Gee
DESIGN OVERSIGHT
2-22-11
SIGN OFF DATE

	BY	CHECKED
DESIGN	R Ramoso/H Mai	John Powell
DETAILS	C Morgan/C Lente	John Powell
QUANTITIES	R Ramoso/H Mai	Janice Reguyal

PREPARED FOR THE STATE OF CALIFORNIA DEPARTMENT OF TRANSPORTATION

Robert E. Hawthorne
PROJECT ENGINEER

BRIDGE NO. 57-1217
POST MILE R15.7

CU 11269
EA 2T0951

DISREGARD PRINTS BEARING EARLIER REVISION DATES

REVISION DATES (PRELIMINARY STAGE ONLY): 01/22/10 03/08/10 05/18/10 05/27/10 06/15/10 06/30/10 08/27/10 10/06/10 2-17-11

SHEET 15 OF 33

DESIGN DETAIL SHEET (ENGLISH) (REV. 06-01-09)

ORIGINAL SCALE IN INCHES FOR REDUCED PLANS 0 1 2 3

FILE => 57-1217-1-gdt01.dgn

USERNAME => s117606 DATE PLOTTED => 27-OCT-2011 TIME PLOTTED => 10:52

DIST	COUNTY	ROUTE	POST MILES TOTAL PROJECT	SHEET No	TOTAL SHEETS
11	SD	15	M15.0/M16.4	593	610

REGISTERED CIVIL ENGINEER — DATE 10-15-10

PLANS APPROVAL DATE 10-24-11

REGISTERED PROFESSIONAL ENGINEER — ROBERT E. HAWTHORNE — No. 40075 — Exp. 03/31/12 — CIVIL — STATE OF CALIFORNIA

The State of California or its officers or agents shall not be responsible for the accuracy or completeness of scanned copies of this plan sheet.

SANDAG
401 B STREET, SUITE 800
SAN DIEGO, CA 92101

AECOM
7807 CONVOY COURT, SUITE 200
SAN DIEGO, CA 92111

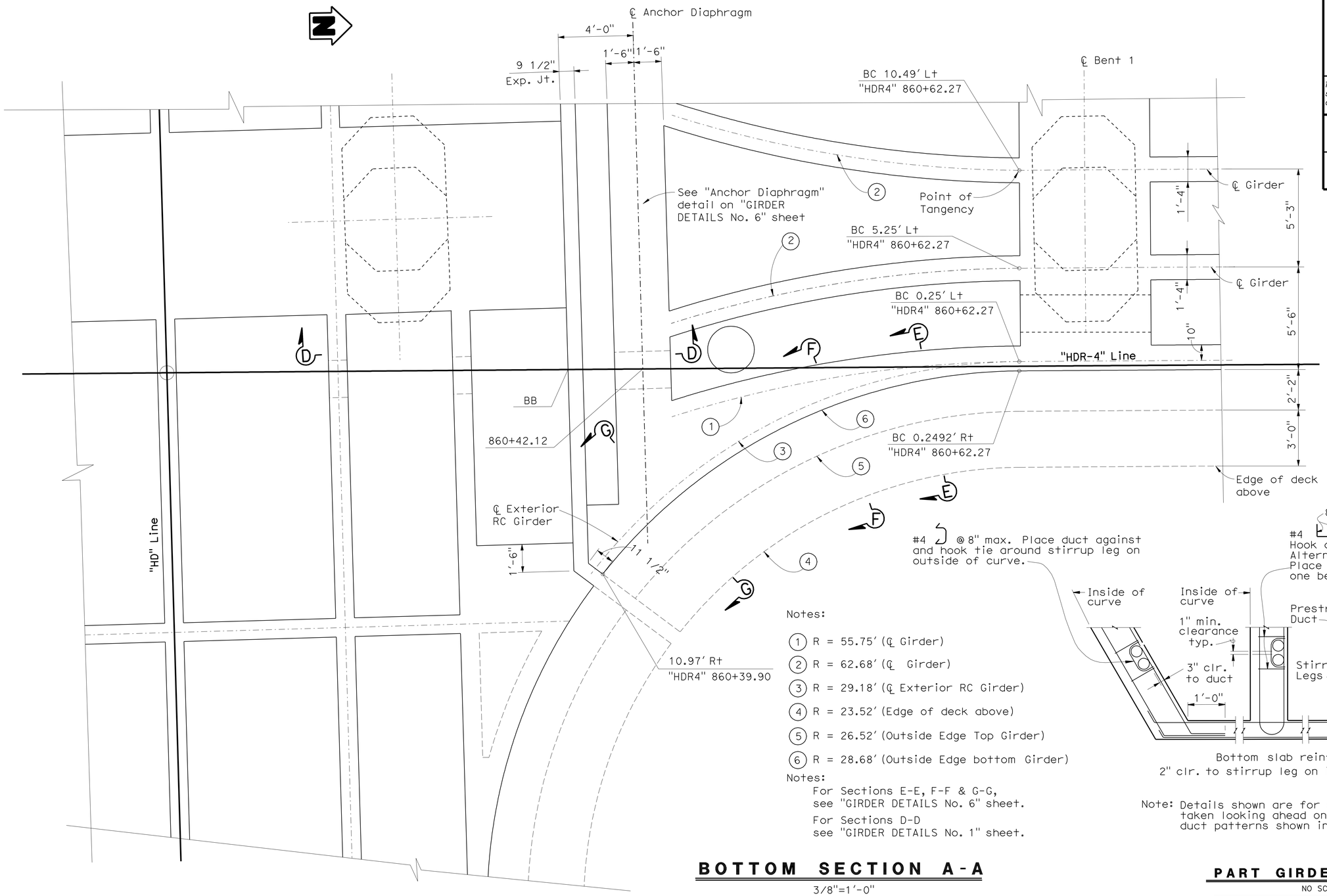

#4 @ 8" max. Place duct against and hook tie around stirrup leg on outside of curve.

Notes:

1. R = 55.75' (℄ Girder)
2. R = 62.68' (℄ Girder)
3. R = 29.18' (℄ Exterior RC Girder)
4. R = 23.52' (Edge of deck above)
5. R = 26.52' (Outside Edge Top Girder)
6. R = 28.68' (Outside Edge bottom Girder)

Notes:

For Sections E-E, F-F & G-G, see "GIRDER DETAILS No. 6" sheet.

For Sections D-D see "GIRDER DETAILS No. 1" sheet.

BOTTOM SECTION A-A

3/8"=1'-0"

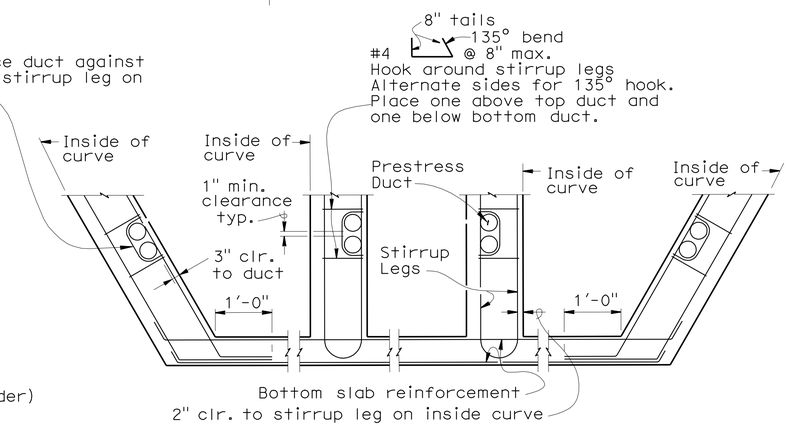

Note: Details shown are for a curve with the section taken looking ahead on station. These details supersede duct patterns shown in Standard Plan B8-5.

PART GIRDER SECTION

NO SCALE

HILLERY DIRECT ACCESS RAMPS
SOUTHBOUND OFF-RAMP
GIRDER DETAILS No. 2

DESIGN OVERSIGHT — Norbert Gee

10-25-10
SIGN OFF DATE

	BY	CHECKED
DESIGN	R Ramoso/H Mai	John Powell
DETAILS	C Morgan/C Lente	John Powell
QUANTITIES	R Ramoso/H Mai	Janice Reguyal

PREPARED FOR THE STATE OF CALIFORNIA DEPARTMENT OF TRANSPORTATION

Robert E. Hawthorne
PROJECT ENGINEER

BRIDGE NO. 57-1217
POST MILE R15.7

CU 11269
EA 2T0951

DISREGARD PRINTS BEARING EARLIER REVISION DATES

REVISION DATES (PRELIMINARY STAGE ONLY): 01/22/10 03/08/10 05/18/10 05/27/10 06/15/10 06/30/10 08/27/10

SHEET 16 OF 33

DESIGN DETAIL SHEET (ENGLISH) (REV. 06-01-09)

ORIGINAL SCALE IN INCHES FOR REDUCED PLANS 0 1 2 3

FILE => 57-1217-1-gdt02.dgn

USERNAME => s117606 DATE PLOTTED => 27-OCT-2011 TIME PLOTTED => 10:52

DIST	COUNTY	ROUTE	POST MILES TOTAL PROJECT	SHEET No	TOTAL SHEETS
11	SD	15	M15.0/M16.4	594	610

REGISTERED CIVIL ENGINEER 10-15-10 DATE

10-24-11
PLANS APPROVAL DATE

REGISTERED PROFESSIONAL ENGINEER ROBERT E. HAWTHORNE No. 40075 Exp. 03/31/12 CIVIL STATE OF CALIFORNIA

The State of California or its officers or agents shall not be responsible for the accuracy or completeness of scanned copies of this plan sheet.

SANDAG
401 B STREET, SUITE 800
SAN DIEGO, CA 92101

AECOM
7807 CONVOY COURT, SUITE 200
SAN DIEGO, CA 92111

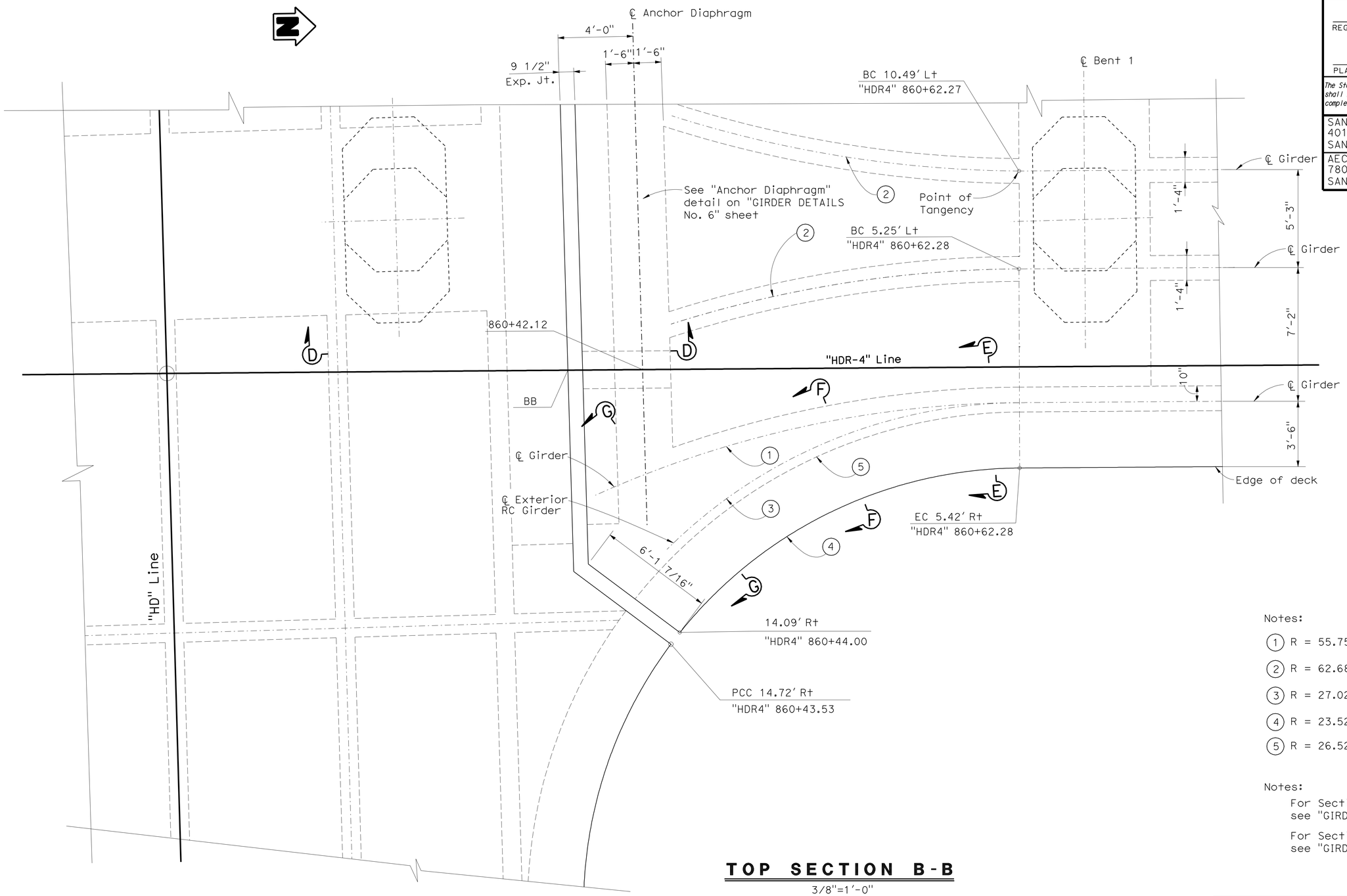

TOP SECTION B-B

3/8"=1'-0"

Notes:

1. R = 55.75' (℄ Girder)
2. R = 62.68' (℄ Girder)
3. R = 27.02' (℄ Exterior RC Girder)
4. R = 23.52' (Edge of deck)
5. R = 26.52' (Edge of Soffit)

Notes:

For Sections E-E, F-F & G-G, see "GIRDER DETAILS No. 6" sheet.

For Sections D-D see "GIRDER DETAILS No. 1" sheet.

HILLERY DIRECT ACCESS RAMPS
SOUTHBOUND OFF-RAMP
GIRDER DETAILS No. 3

DESIGN OVERSIGHT Norbert Gee
10-25-10
SIGN OFF DATE

	BY	CHECKED
DESIGN	R Ramoso/H Mai	John Powell
DETAILS	C Morgan/C Lente	John Powell
QUANTITIES	R Ramoso/H Mai	Janice Reguyal

PREPARED FOR THE STATE OF CALIFORNIA DEPARTMENT OF TRANSPORTATION

Robert E. Hawthorne
PROJECT ENGINEER

BRIDGE NO. 57-1217
POST MILE R15.7

CU 11269
EA 2T0951

DESIGN DETAIL SHEET (ENGLISH) (REV. 06-01-09)

ORIGINAL SCALE IN INCHES FOR REDUCED PLANS 0 1 2 3

DISREGARD PRINTS BEARING EARLIER REVISION DATES

REVISION DATES (PRELIMINARY STAGE ONLY) 01/22/10 03/08/10 05/27/10 06/11/10 06/15/10 06/30/10 08/27/10

SHEET 17 OF 33

FILE => 57-1217-1-gdt03.dgn

USERNAME => s8177606 DATE PLOTTED => 27-OCT-2011 TIME PLOTTED => 10:53

DIST	COUNTY	ROUTE	POST MILES TOTAL PROJECT	SHEET No	TOTAL SHEETS
11	SD	15	M15.0/M16.4	595	610

Robert E. Hawthorne 10-15-10
REGISTERED CIVIL ENGINEER DATE

10-24-11
PLANS APPROVAL DATE

REGISTERED PROFESSIONAL ENGINEER ROBERT E. HAWTHORNE No. 40075 Exp. 03/31/12 CIVIL STATE OF CALIFORNIA

The State of California or its officers or agents shall not be responsible for the accuracy or completeness of scanned copies of this plan sheet.

SANDAG
401 B STREET, SUITE 800
SAN DIEGO, CA 92101

AECOM
7807 CONVOY COURT, SUITE 200
SAN DIEGO, CA 92111

Notes:

1. R = 55.75′ (℄ Girder)
2. R = 62.68′ (℄ Girder)
3. R = 34.18′ (℄ Exterior RC Girder)
4. R = 28.52′ (Edge of deck above)
5. R = 31.52′ (Edge of Soffit Above)
6. R = 33.68′ (Outside Edge bottom Girder)

Notes:

For Sections E-E, F-F & G-G, see "GIRDER DETAILS No. 6" sheet.

For Sections D-D see "GIRDER DETAILS No. 1" sheet.

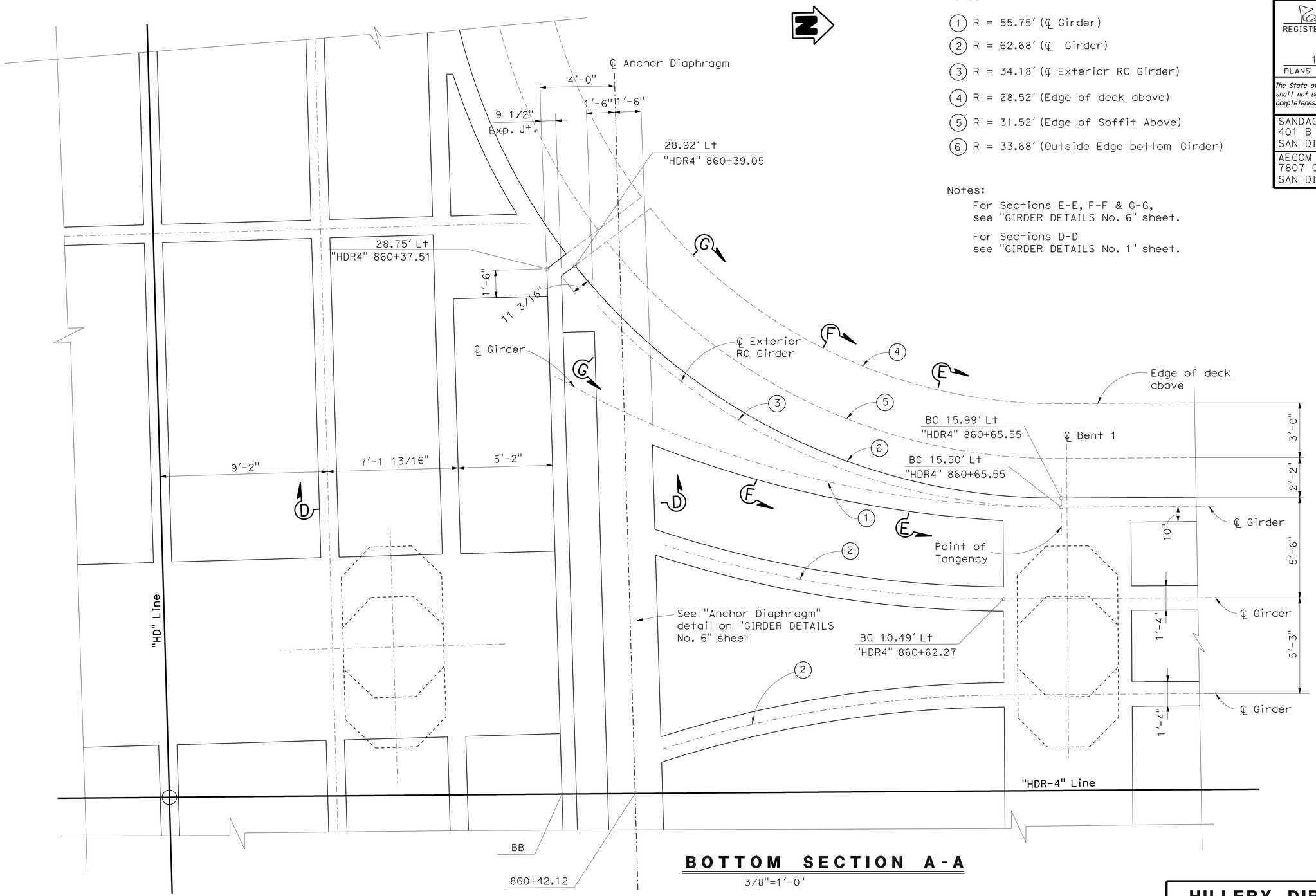

BOTTOM SECTION A-A

3/8"=1′-0"

Norbert Gee
DESIGN OVERSIGHT

10-25-10
SIGN OFF DATE

	BY	CHECKED
DESIGN	R Ramoso/H Mai	John Powell
DETAILS	C Morgan/C Lente	John Powell
QUANTITIES	R Ramoso/H Mai	Janice Reguyal

PREPARED FOR THE STATE OF CALIFORNIA DEPARTMENT OF TRANSPORTATION

Robert E. Hawthorne
PROJECT ENGINEER

BRIDGE NO. 57-1217
POST MILE R15.7

HILLERY DIRECT ACCESS RAMPS
SOUTHBOUND OFF-RAMP
GIRDER DETAILS No. 4

DESIGN DETAIL SHEET (ENGLISH) (REV. 06-01-09)

ORIGINAL SCALE IN INCHES FOR REDUCED PLANS 0 1 2 3

CU 11269
EA 2T0951

DISREGARD PRINTS BEARING EARLIER REVISION DATES

REVISION DATES (PRELIMINARY STAGE ONLY): 01/22/10 03/08/10 05/27/10 06/11/10 06/15/10 06/30/10 08/27/10

SHEET 18 OF 33

FILE => 57-1217-1-gdt04.dgn

USERNAME => s117606 DATE PLOTTED => 27-OCT-2011 TIME PLOTTED => 10:53

DIST	COUNTY	ROUTE	POST MILES TOTAL PROJECT	SHEET No	TOTAL SHEETS
11	SD	15	M15.0/M16.4	596	610

Robert E Hawthorne 10-15-10
REGISTERED CIVIL ENGINEER DATE

10-24-11
PLANS APPROVAL DATE

REGISTERED PROFESSIONAL ENGINEER ROBERT E. HAWTHORNE No. 40075 Exp. 03/31/12 CIVIL STATE OF CALIFORNIA

The State of California or its officers or agents shall not be responsible for the accuracy or completeness of scanned copies of this plan sheet.

SANDAG
401 B STREET, SUITE 800
SAN DIEGO, CA 92101

AECOM
7807 CONVOY COURT, SUITE 200
SAN DIEGO, CA 92111

Notes:

1. R = 55.75′ (℄ Girder)
2. R = 62.68′ (℄ Girder)
3. R = 32.02′ (℄ Exterior RC Girder)
4. R = 28.52′ (Edge of deck)
5. R = 31.52′ (Edge of Soffit)

Notes:

For Sections D-D
see "GIRDER DETAILS No. 1" sheet.

For Sections E-E, F-F & G-G,
see "GIRDER DETAILS No. 6" sheet.

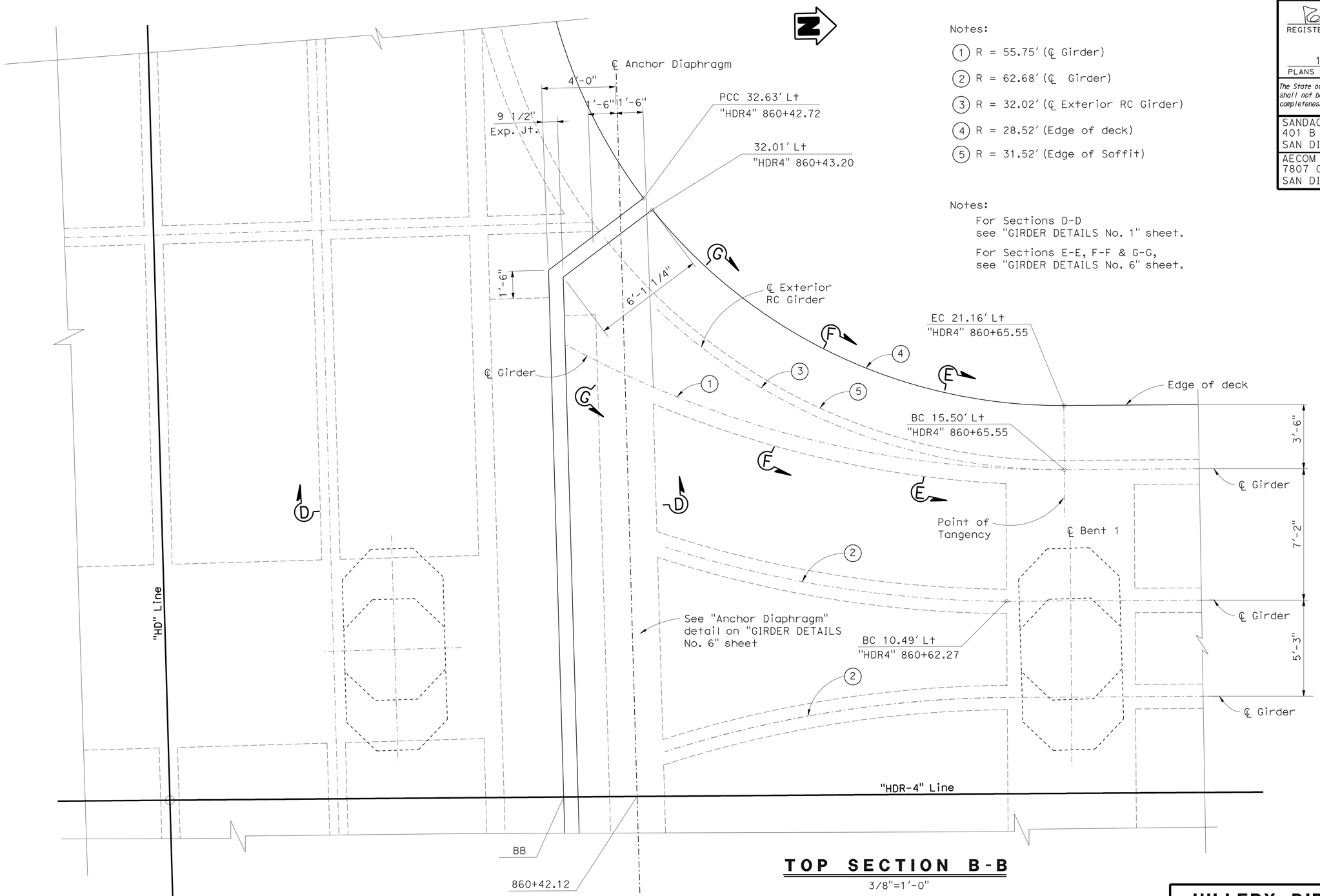

TOP SECTION B-B

3/8"=1′-0"

HILLERY DIRECT ACCESS RAMPS
SOUTHBOUND OFF-RAMP
GIRDER DETAILS No. 5

Robert Gee
DESIGN OVERSIGHT Norbert Gee
10-25-10
SIGN OFF DATE

	BY	CHECKED
DESIGN	R Ramoso/H Mai	John Powell
DETAILS	C Morgan/C Lente	John Powell
QUANTITIES	R Ramoso/H Mai	Janice Reguyal

PREPARED FOR THE STATE OF CALIFORNIA DEPARTMENT OF TRANSPORTATION

Robert E. Hawthorne
PROJECT ENGINEER

BRIDGE NO. 57-1217
POST MILE R15.7

CU 11269
EA 2T0951

DISREGARD PRINTS BEARING EARLIER REVISION DATES

REVISION DATES (PRELIMINARY STAGE ONLY): 01/22/10 03/08/10 05/27/10 06/11/10 06/15/10 06/30/10 08/27/10

SHEET 19 OF 33

DESIGN DETAIL SHEET (ENGLISH) (REV. 06-01-09)

ORIGINAL SCALE IN INCHES FOR REDUCED PLANS 0 1 2 3

FILE => 57-1217-1-gdt05.dgn

USERNAME => s117606 DATE PLOTTED => 27-OCT-2011 TIME PLOTTED => 10:53

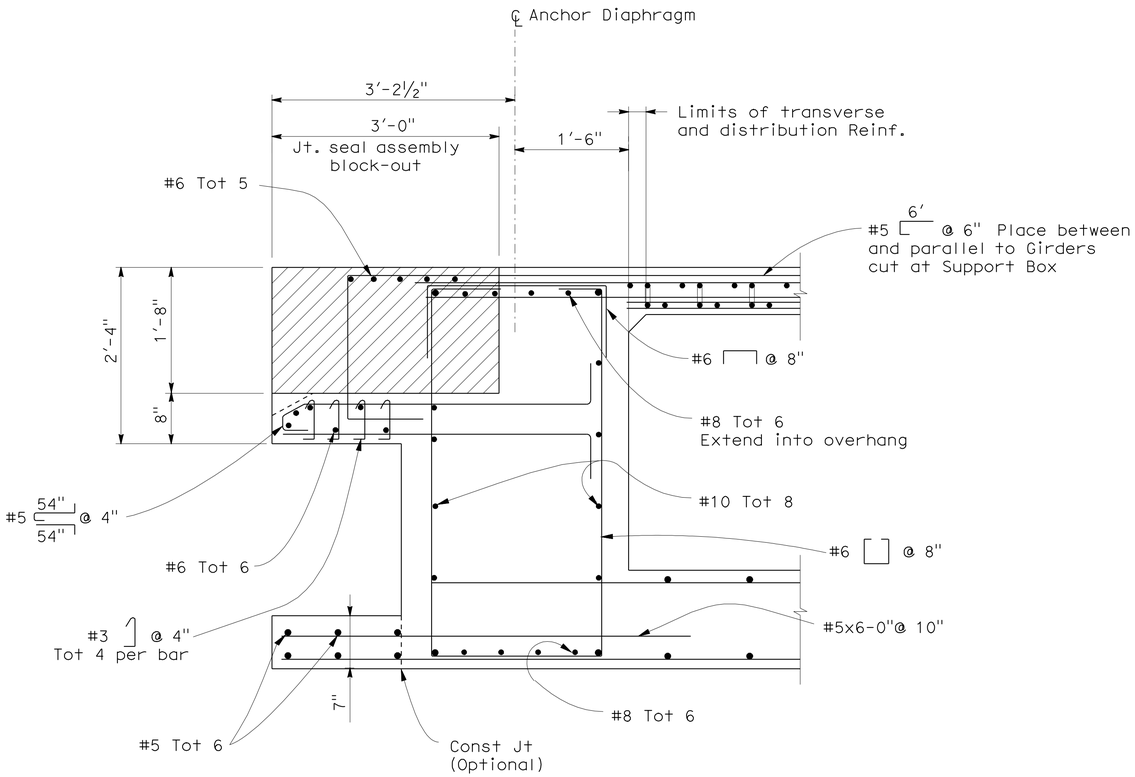

ANCHOR DIAPHRAGM

1"=1'-0"

B8-5

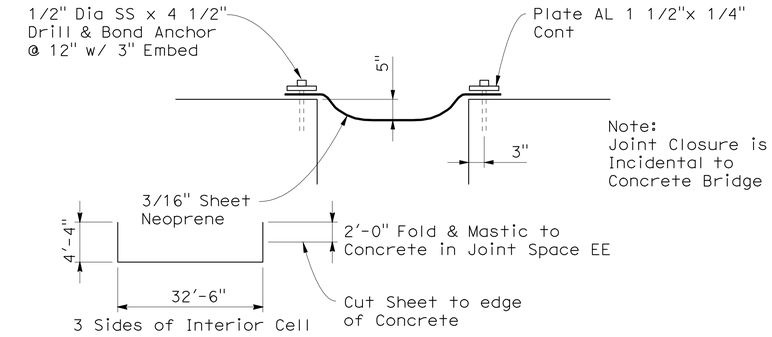

JOINT CLOSURE DETAIL H

No Scale

DIST	COUNTY	ROUTE	POST MILES TOTAL PROJECT	SHEET No	TOTAL SHEETS
11	SD	15	M15.0/M16.4	597	610

REGISTERED CIVIL ENGINEER — DATE 2-17-11

10-24-11
PLANS APPROVAL DATE

REGISTERED PROFESSIONAL ENGINEER — ROBERT E. HAWTHORNE — No. 40075 — Exp. 03/31/12 — CIVIL — STATE OF CALIFORNIA

The State of California or its officers or agents shall not be responsible for the accuracy or completeness of scanned copies of this plan sheet.

SANDAG
401 B STREET, SUITE 800
SAN DIEGO, CA 92101

AECOM
7807 CONVOY COURT, SUITE 200
SAN DIEGO, CA 92111

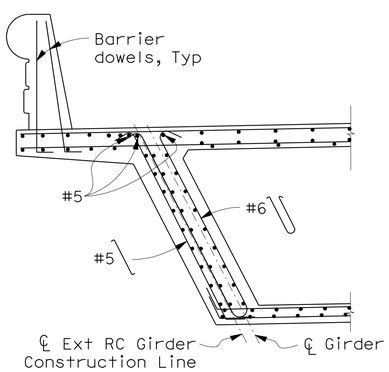

SECTION E-E

½"=1'-0"

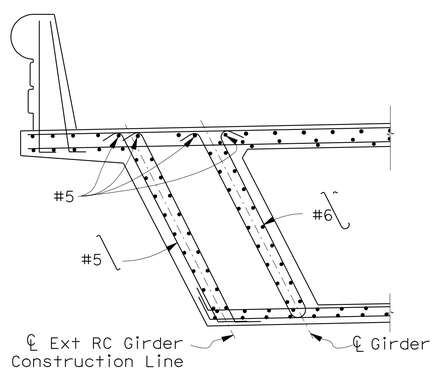

SECTION F-F

½"=1'-0"

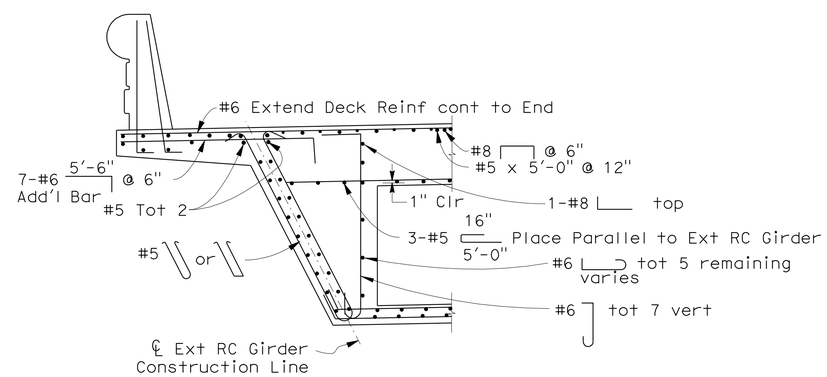

SECTION G-G

½"=1'-0"

HILLERY DIRECT ACCESS RAMPS
SOUTHBOUND OFF-RAMP
GIRDER DETAILS No. 6

DESIGN OVERSIGHT — Norbert Gee
2-22-11
SIGN OFF DATE

	BY	CHECKED
DESIGN	R Ramoso/H Mai	John Powell
DETAILS	C Morgan/C Lente	John Powell
QUANTITIES	R Ramoso/H Mai	Janice Reguyal

PREPARED FOR THE STATE OF CALIFORNIA DEPARTMENT OF TRANSPORTATION

Robert E. Hawthorne
PROJECT ENGINEER

BRIDGE NO. 57-1217
POST MILE R15.7

DESIGN DETAIL SHEET (ENGLISH) (REV. 06-01-09)

ORIGINAL SCALE IN INCHES FOR REDUCED PLANS 0 1 2 3

CU 11269
EA 2T0951

DISREGARD PRINTS BEARING EARLIER REVISION DATES

REVISION DATES (PRELIMINARY STAGE ONLY): 01/22/10 03/08/10 05/27/10 06/11/10 06/15/10 06/30/10 08/27/10 10/06/10 12-14-10 2-17-11

SHEET 20 OF 33

FILE => 57-1217-1-gdt06.dgn

USERNAME => s117606 DATE PLOTTED => 27-OCT-2011 TIME PLOTTED => 10:53

DIST	COUNTY	ROUTE	POST MILES TOTAL PROJECT	SHEET No	TOTAL SHEETS
11	SD	15	M15.0/M16.4	598	610

REGISTERED CIVIL ENGINEER — DATE 10-15-10

10-24-11
PLANS APPROVAL DATE

REGISTERED PROFESSIONAL ENGINEER — ROBERT E. HAWTHORNE — No. 40075 — Exp. 03/31/12 — CIVIL — STATE OF CALIFORNIA

The State of California or its officers or agents shall not be responsible for the accuracy or completeness of scanned copies of this plan sheet.

SANDAG
401 B STREET, SUITE 800
SAN DIEGO, CA 92101

AECOM
7807 CONVOY COURT, SUITE 200
SAN DIEGO, CA 92111

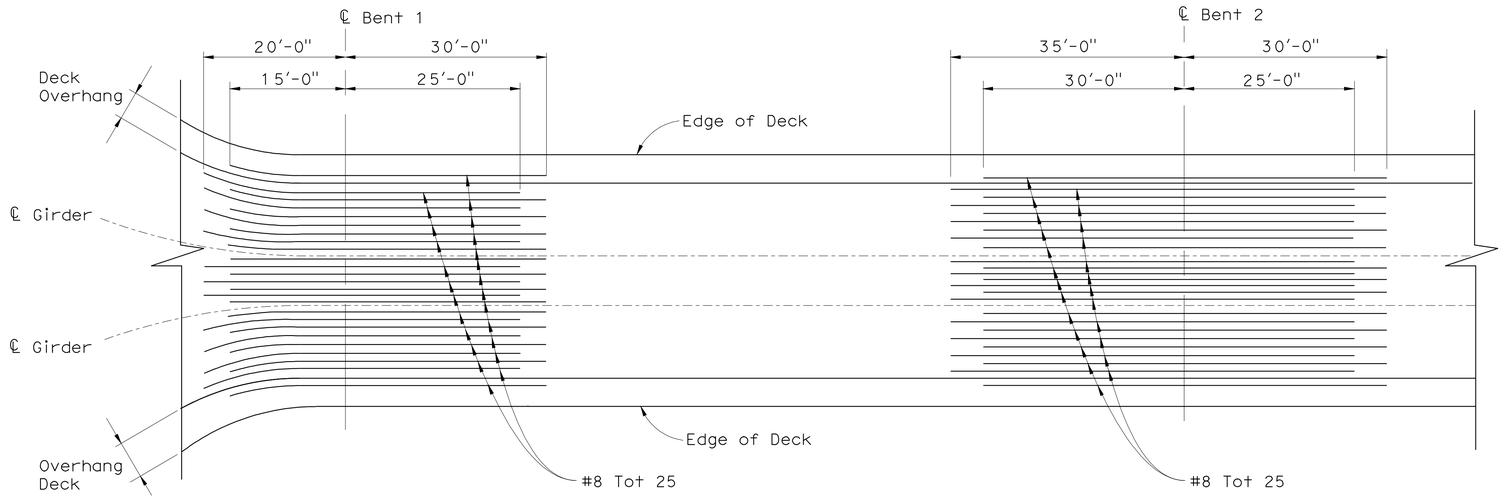

TOP REINFORCEMENT

NTS

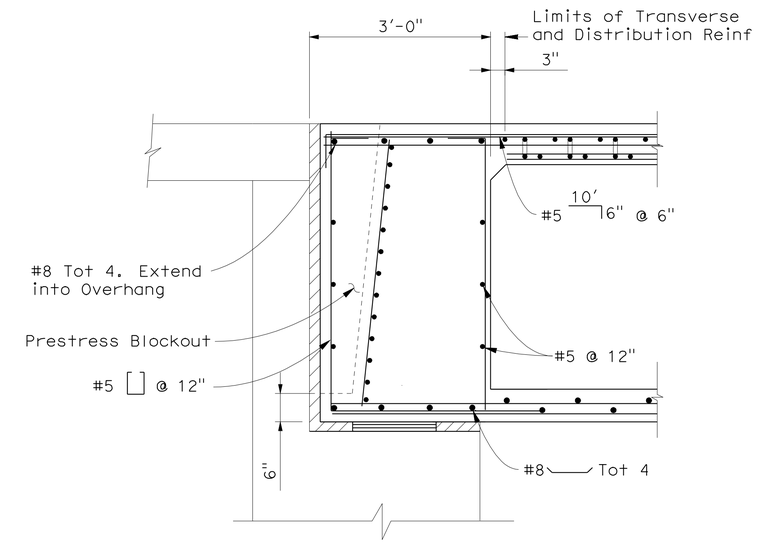

END DIAPHRAGM

3/4"=1'-0"

B8-5

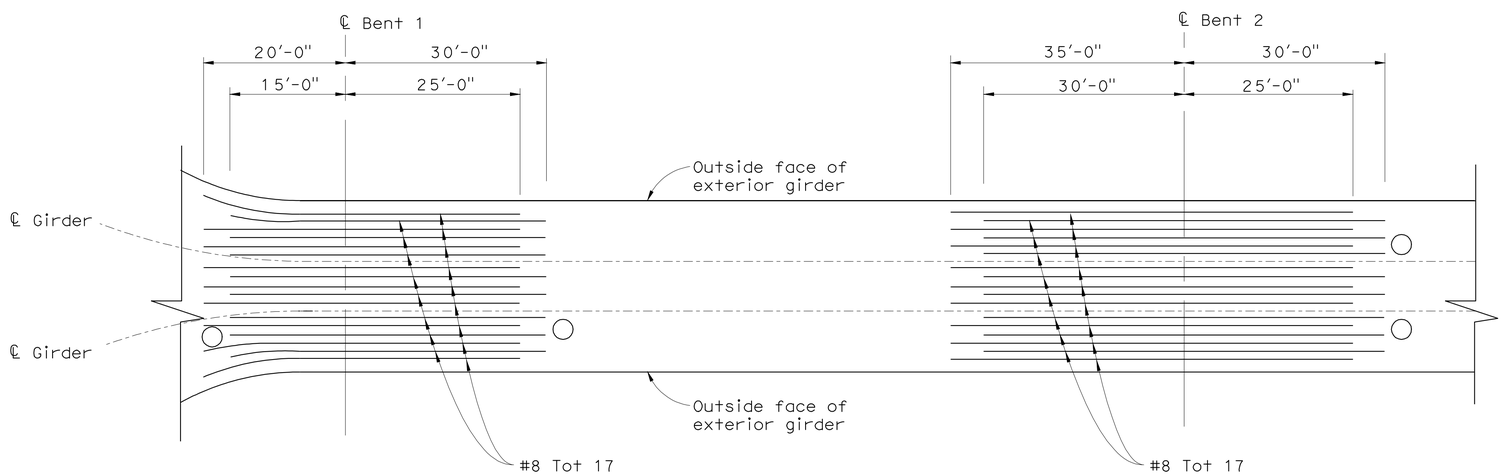

Note:
No splices allowed in #8 Top
& Bottom girder reinforcement

BOTTOM REINFORCEMENT

NTS

HILLERY DIRECT ACCESS RAMPS
SOUTHBOUND OFF-RAMP
GIRDER REINFORCEMENT

DESIGN OVERSIGHT — Norbert Gee
10-25-10
SIGN OFF DATE

	BY	CHECKED
DESIGN	R Ramoso/H Mai	John Powell
DETAILS	C Morgan/C Lente	John Powell
QUANTITIES	R Ramoso/H Mai	Janice Reguyal

PREPARED FOR THE STATE OF CALIFORNIA DEPARTMENT OF TRANSPORTATION

Robert E. Hawthorne
PROJECT ENGINEER

BRIDGE NO. 57-1217
POST MILE R15.7

CU 11269
EA 2T0951

DISREGARD PRINTS BEARING EARLIER REVISION DATES

REVISION DATES (PRELIMINARY STAGE ONLY): 01/22/10 03/08/10 05/18/10 05/27/10 06/11/10 06/15/10 06/30/10 08/27/10

SHEET 21 OF 33

DESIGN DETAIL SHEET (ENGLISH) (REV. 06-01-09)

ORIGINAL SCALE IN INCHES FOR REDUCED PLANS 0 1 2 3

FILE => 57-1217-o-gir_rf01.dgn

USERNAME => s117606 DATE PLOTTED => 27-OCT-2011 TIME PLOTTED => 10:53

DIST	COUNTY	ROUTE	POST MILES TOTAL PROJECT	SHEET No	TOTAL SHEETS
11	SD	15	M15.0/M16.4	599	610

REGISTERED CIVIL ENGINEER — DATE 10-15-10

PLANS APPROVAL DATE 10-24-11

REGISTERED PROFESSIONAL ENGINEER — ROBERT E. HAWTHORNE — No. 40075 — Exp. 03/31/12 — CIVIL — STATE OF CALIFORNIA

The State of California or its officers or agents shall not be responsible for the accuracy or completeness of scanned copies of this plan sheet.

SANDAG
401 B STREET, SUITE 800
SAN DIEGO, CA 92101

AECOM
7807 CONVOY COURT, SUITE 200
SAN DIEGO, CA 92111

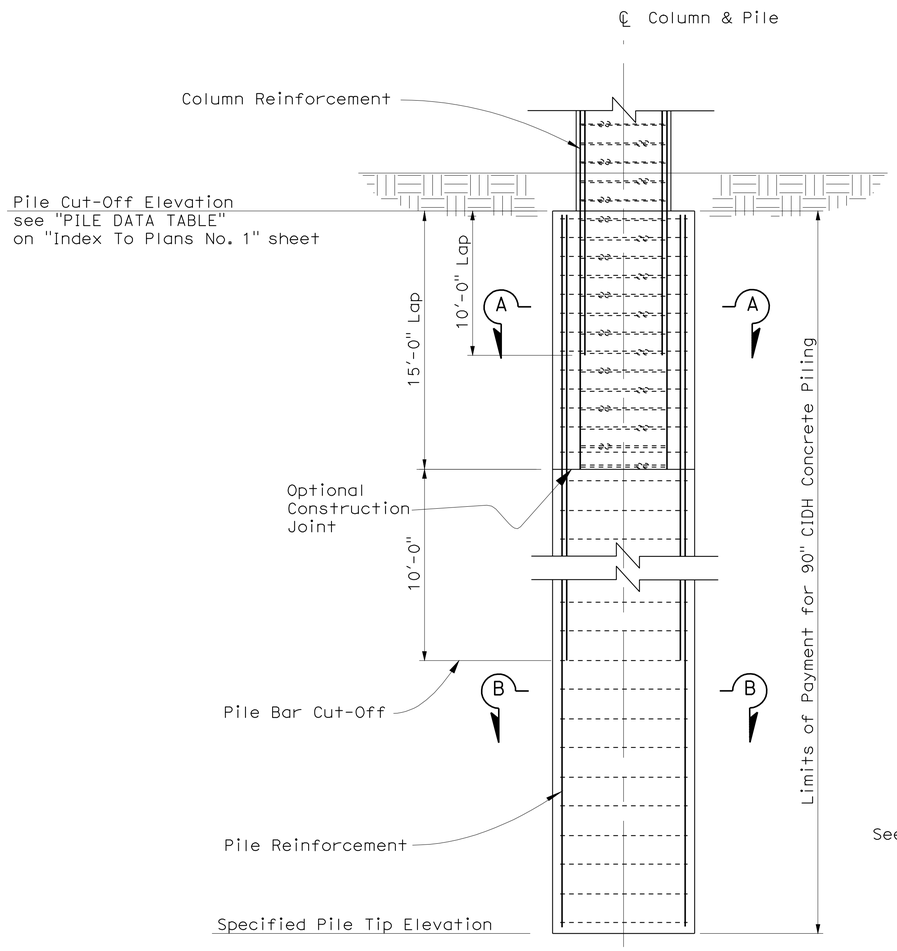

90" DIA CIDH PILE

1/4"=1'-0"

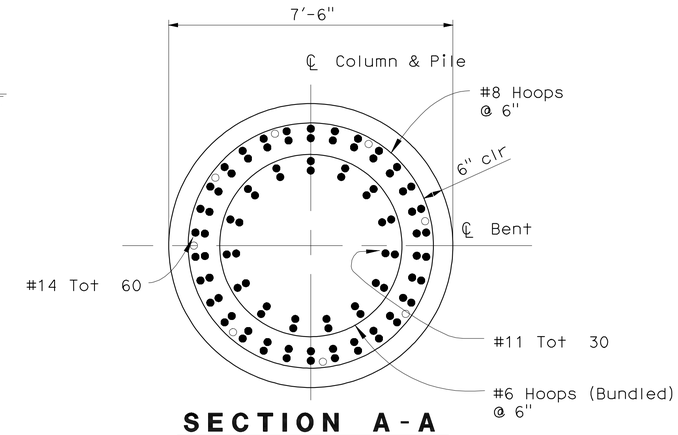

SECTION A-A

1/2"=1'-0"

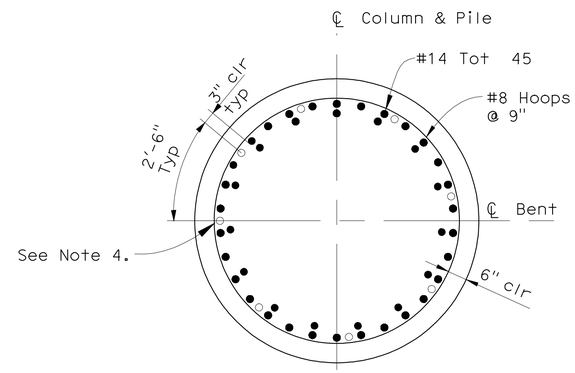

SECTION B-B

1/2"=1'-0"

Notes:
1. For Column Reinf and details, see "Column Details" sheet.
2. All hoops are "ultimate" butt spliced continuous.
3. Not all CIDH Reinforcement shown.
4. Inspection Pipes to be placed against outer Hoop, tot 8 pipes each pile.

HILLERY DIRECT ACCESS RAMPS
SOUTHBOUND OFF-RAMP
PILE DETAILS

DESIGN OVERSIGHT — Norbert Gee
10-25-10
SIGN OFF DATE

	BY	CHECKED
DESIGN	R Ramoso/H Mai	John Powell
DETAILS	C Morgan/C Lente	John Powell
QUANTITIES	R Ramoso/H Mai	Janice Reguyal

PREPARED FOR THE STATE OF CALIFORNIA DEPARTMENT OF TRANSPORTATION

Robert E. Hawthorne
PROJECT ENGINEER

BRIDGE NO. 57-1217
POST MILE R15.7

CU 11269
EA 2T0951

DISREGARD PRINTS BEARING EARLIER REVISION DATES

REVISION DATES (PRELIMINARY STAGE ONLY): 01/22/10 03/08/10 05/27/10 06/11/10 06/15/10 06/30/10 08/27/10 10/06/10

SHEET 22 OF 33

DESIGN DETAIL SHEET (ENGLISH) (REV. 06-01-09)

ORIGINAL SCALE IN INCHES FOR REDUCED PLANS 0 1 2 3

FILE => 57-1217-p-pdt01.dgn

USERNAME => s117606 DATE PLOTTED => 27-OCT-2011 TIME PLOTTED => 10:53

DIST	COUNTY	ROUTE	POST MILES TOTAL PROJECT	SHEET No	TOTAL SHEETS
11	SD	15	M15.0/M16.4	600	610

REGISTERED CIVIL ENGINEER — DATE 2-17-11

10-24-11
PLANS APPROVAL DATE

REGISTERED PROFESSIONAL ENGINEER — ROBERT E. HAWTHORNE — No. 40075 — Exp. 03/31/12 — CIVIL — STATE OF CALIFORNIA

The State of California or its officers or agents shall not be responsible for the accuracy or completeness of scanned copies of this plan sheet.

SANDAG
401 B STREET, SUITE 800
SAN DIEGO, CA 92101

AECOM
7807 CONVOY COURT, SUITE 200
SAN DIEGO, CA 92111

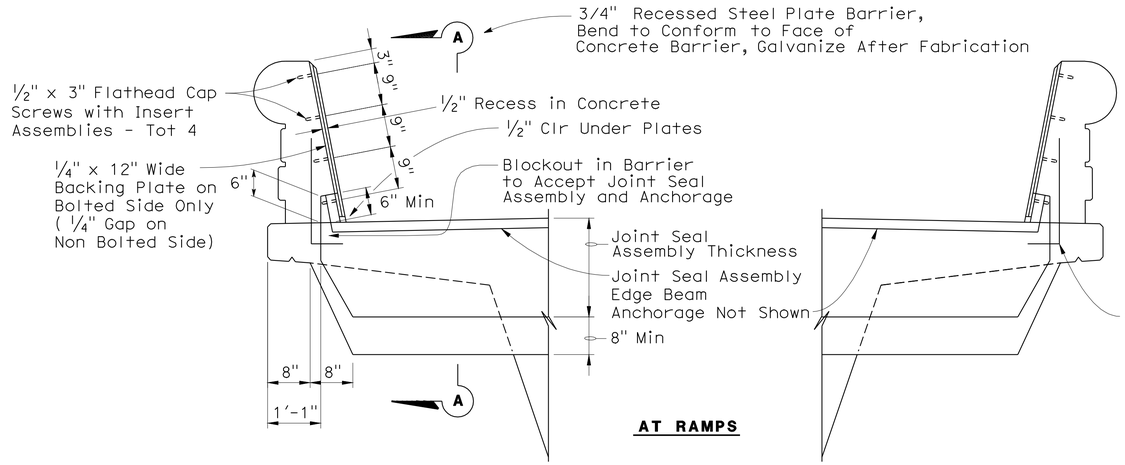

AT RAMPS

SEAL INSTALLATION

3/4" = 1'-0"

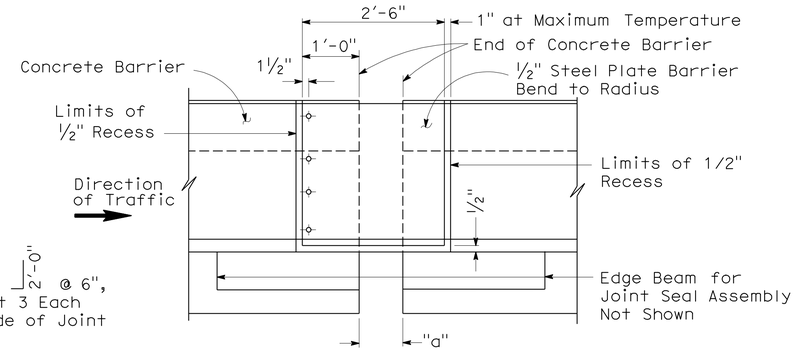

ELEVATION A-A

3/4" = 1'-0"

JOINT INFORMATION		"a" DIMENSIONS			
LOCATION	MOVEMENT RATING (M.R.)	SKEW	WINTER	SPRING & FALL	SUMMER
BB	9 1/2 *	1.21°	10.0"	9.5"	9.0"

* Movement Rating includes Seismic Movement
Joint shall consist of 4 Neoprene cell and beam modular Joint Seal Assemblies (Swiveling)

Note: For details not shown, see Bridge Plans

Note:
Wrack OC Support Box 3/4" away from Abutment. Field verify OC Structure Shrinkage.

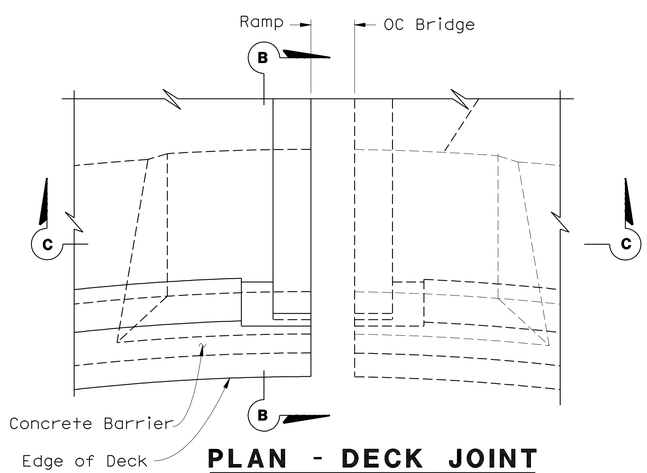

PLAN - DECK JOINT

3/4" = 1'-0"

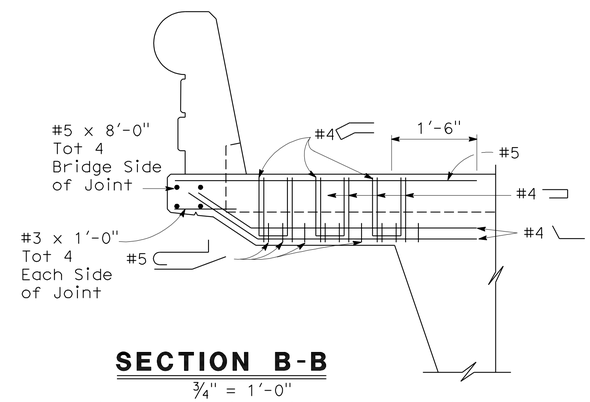

SECTION B-B

3/4" = 1'-0"

Reinf Shown is in Addition to Slab Reinf

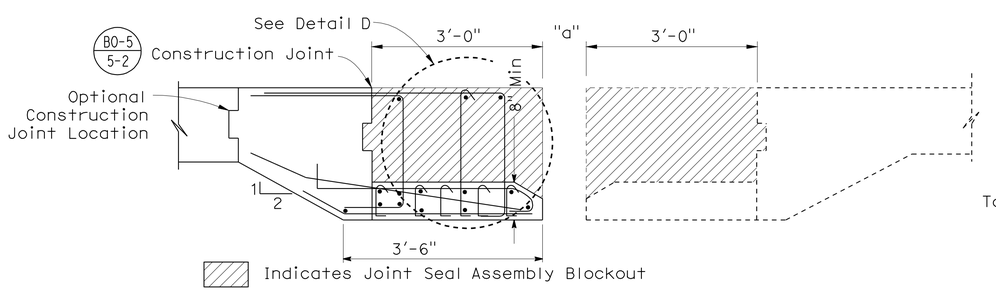

SECTION C-C

3/4" = 1'-0"

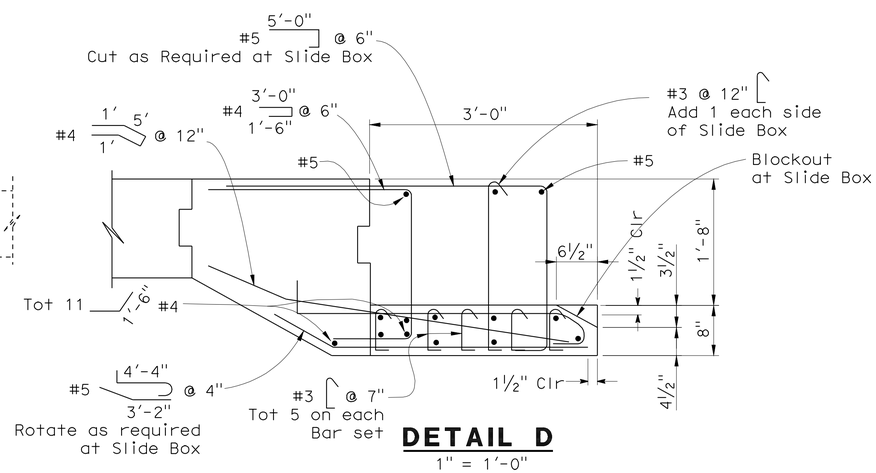

DETAIL D

1" = 1'-0"

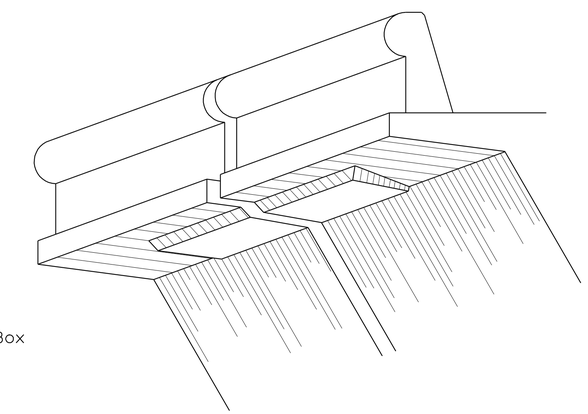

DECK OVERHANG

No Scale

HILLERY DIRECT ACCESS RAMPS

SOUTHBOUND OFF-RAMP

JOINT SEAL ASSEMBLY MOVEMENT RATING GREATER THAN 4"

DESIGN OVERSIGHT — Norbert Gee
2-22-11
SIGN OFF DATE

	BY	CHECKED
DESIGN	R Ramoso/H Mai	John Powell
DETAILS	C Morgan/C Lente	John Powell
QUANTITIES	R Ramoso/H Mai	Janice Reguyal

PREPARED FOR THE STATE OF CALIFORNIA DEPARTMENT OF TRANSPORTATION

Robert E. Hawthorne
PROJECT ENGINEER

BRIDGE NO. 57-1217
POST MILE R15.7

CU 11269
EA 2T0951

DISREGARD PRINTS BEARING EARLIER REVISION DATES

REVISION DATES (PRELIMINARY STAGE ONLY): 01/22/10 03/08/10 05/27/10 06/11/10 06/15/10 06/30/10 08/27/10 2-17-11

SHEET 23 OF 33

DESIGN DETAIL SHEET (ENGLISH) (REV. 06-01-09)

ORIGINAL SCALE IN INCHES FOR REDUCED PLANS 0 1 2 3

FILE => 57-1217-q-jntdt02.dgn

USERNAME => s117606 DATE PLOTTED => 27-OCT-2011 TIME PLOTTED => 10:53

DIST	COUNTY	ROUTE	POST MILES TOTAL PROJECT	SHEET No	TOTAL SHEETS
11	SD	15	M15.0/M16.4	601	610

REGISTERED CIVIL ENGINEER — DATE 10-15-10

10-24-11
PLANS APPROVAL DATE

REGISTERED PROFESSIONAL ENGINEER — ROBERT E. HAWTHORNE — No. 40075 — Exp. 03/31/12 — CIVIL — STATE OF CALIFORNIA

The State of California or its officers or agents shall not be responsible for the accuracy or completeness of scanned copies of this plan sheet.

SANDAG
401 B STREET, SUITE 800
SAN DIEGO, CA 92101

AECOM
7807 CONVOY COURT, SUITE 200
SAN DIEGO, CA 92111

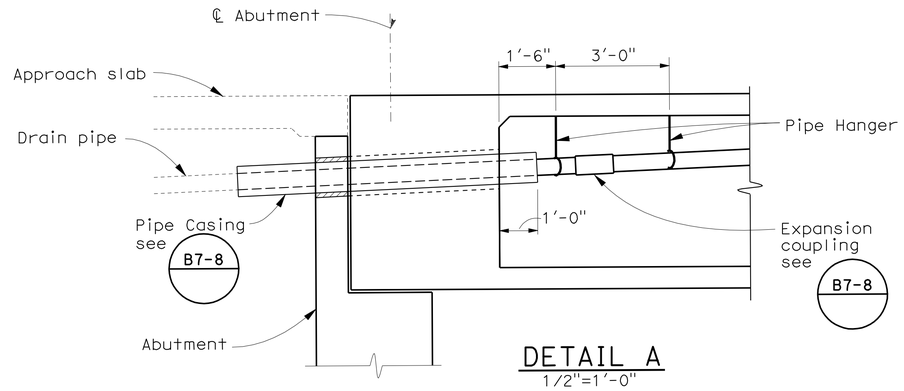

DETAIL A
1/2"=1'-0"

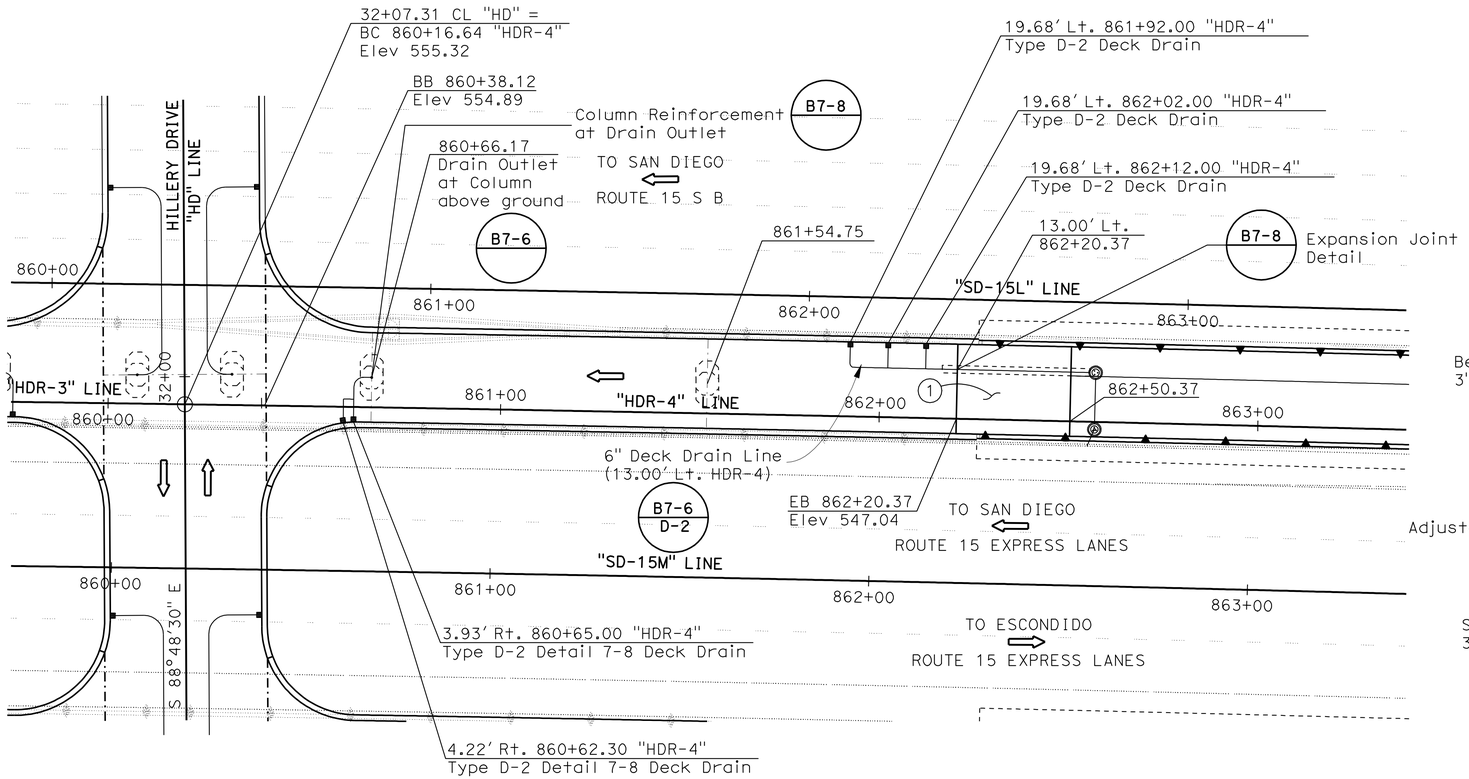

PLAN
1" = 20'

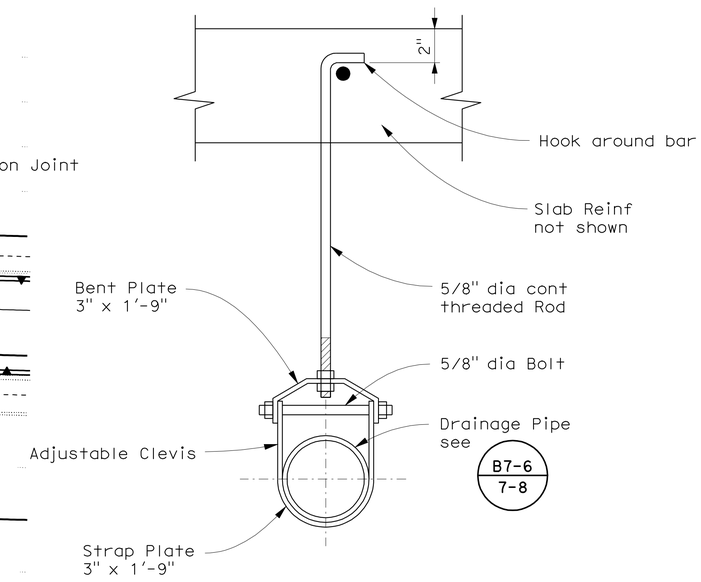

DRAINAGE PIPE SUPPORT
NTS

LEGEND:

- Indicates new Drainage Line

(1) - Approach Slab, see "General Plan".

HILLERY DIRECT ACCESS RAMPS
SOUTHBOUND OFF-RAMP
DECK DRAINS

DESIGN OVERSIGHT — Norbert Gee
10-25-10
SIGN OFF DATE

	BY	CHECKED
DESIGN	R Ramoso/H Mai	John Powell
DETAILS	C Morgan/C Lente	John Powell
QUANTITIES	R Ramoso/H Mai	Janice Reguyal

PREPARED FOR THE STATE OF CALIFORNIA DEPARTMENT OF TRANSPORTATION

Robert E. Hawthorne
PROJECT ENGINEER

BRIDGE NO. 57-1217
POST MILE R15.7

CU 11269
EA 2T0951

DISREGARD PRINTS BEARING EARLIER REVISION DATES

REVISION DATES (PRELIMINARY STAGE ONLY): 01/22/10 03/08/10 05/27/10 06/11/10 06/15/10 06/30/10 08/27/10

SHEET 24 OF 33

DESIGN DETAIL SHEET (ENGLISH) (REV. 06-01-09)

ORIGINAL SCALE IN INCHES FOR REDUCED PLANS 0 1 2 3

FILE => 57-1217-r-dd01.dgn

USERNAME => s124496 DATE PLOTTED => 27-OCT-2011 TIME PLOTTED => 10:19

DIST	COUNTY	ROUTE	POST MILES TOTAL PROJECT	SHEET No	TOTAL SHEETS
11	SD	15	M15.0/M16.4	602	610

REGISTERED CIVIL ENGINEER — DATE 10-15-10

10-24-11
PLANS APPROVAL DATE

REGISTERED PROFESSIONAL ENGINEER — ROBERT E. HAWTHORNE — No. 40075 — Exp. 03/31/12 — CIVIL — STATE OF CALIFORNIA

The State of California or its officers or agents shall not be responsible for the accuracy or completeness of scanned copies of this plan sheet.

SANDAG
401 B STREET, SUITE 800
SAN DIEGO, CA 92101

AECOM
7807 CONVOY COURT, SUITE 200
SAN DIEGO, CA 92111

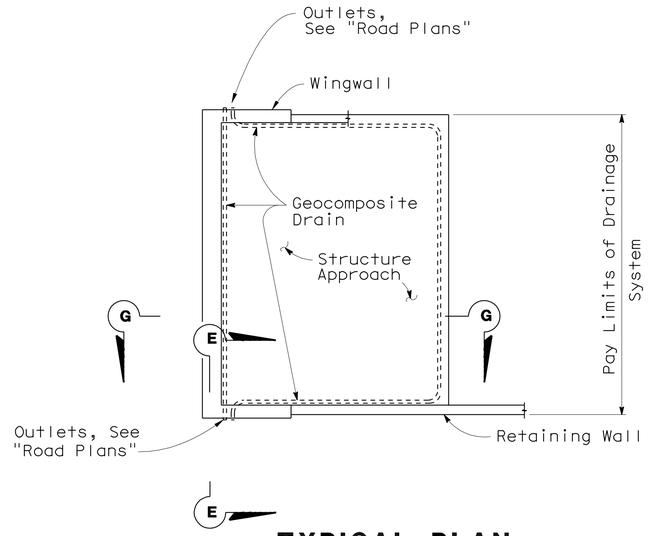

TYPICAL PLAN
1" = 10'

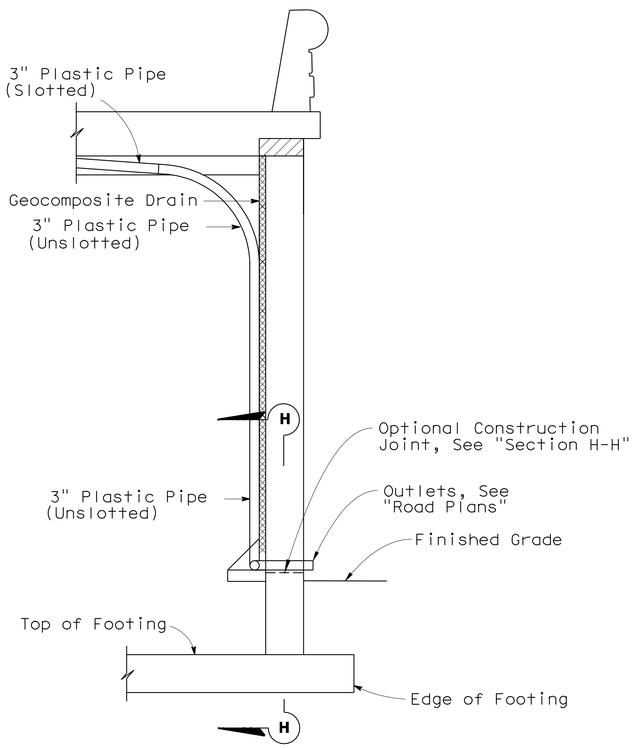

SECTION E-E
½" = 1'-0"

Note: Bends and Junctions in 3" Plastic Pipe are 30" Radius Min

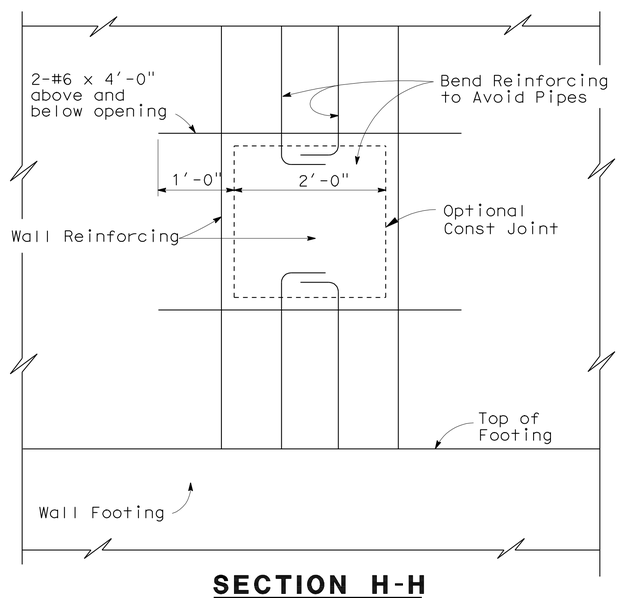

SECTION H-H
1" = 1'-0"

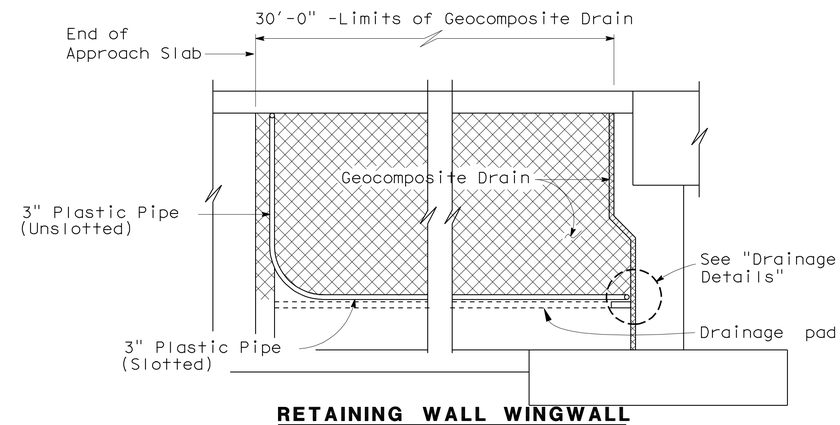

RETAINING WALL WINGWALL
SECTION G-G
¼" = 1'-0"

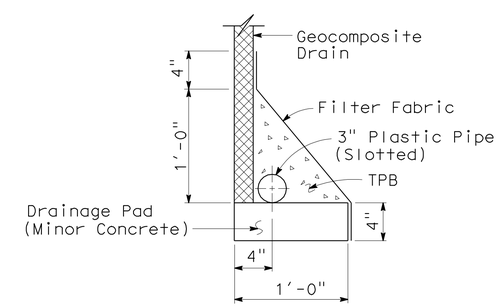

WITHOUT FOOTING
DRAINAGE DETAILS
1½" = 1'-0"

DESIGN OVERSIGHT — Norbert Gee
10-25-10
SIGN OFF DATE

	BY	CHECKED
DESIGN	R Ramoso/H Mai	John Powell
DETAILS	C Morgan/C Lente	John Powell
QUANTITIES	R Ramoso/H Mai	Janice Reguyal

PREPARED FOR THE STATE OF CALIFORNIA DEPARTMENT OF TRANSPORTATION

Robert E. Hawthorne
PROJECT ENGINEER

BRIDGE NO. 57-1217
POST MILE R15.7

HILLERY DIRECT ACCESS RAMPS
SOUTHBOUND OFF-RAMP
STRUCTURE APPROACH DRAINAGE DETAILS

DESIGN DETAIL SHEET (ENGLISH) (REV. 06-01-09)

ORIGINAL SCALE IN INCHES FOR REDUCED PLANS 0 1 2 3

CU 11269
EA 2T0951

DISREGARD PRINTS BEARING EARLIER REVISION DATES

REVISION DATES (PRELIMINARY STAGE ONLY): 01/22/10 03/08/10 05/27/10 06/11/10 06/15/10 06/30/10 08/27/10

SHEET 25 OF 33

FILE => 57-1217-s-sadd.dgn

USERNAME => s124496 DATE PLOTTED => 27-OCT-2011 TIME PLOTTED => 10:19

DIST	COUNTY	ROUTE	POST MILES TOTAL PROJECT	SHEET No	TOTAL SHEETS
11	SD	15	M15.0/M16.4	603	610

REGISTERED CIVIL ENGINEER — DATE 10-15-10

10-24-11
PLANS APPROVAL DATE

REGISTERED PROFESSIONAL ENGINEER — ROBERT E. HAWTHORNE — No. 40075 — Exp. 03/31/12 — CIVIL — STATE OF CALIFORNIA

The State of California or its officers or agents shall not be responsible for the accuracy or completeness of scanned copies of this plan sheet.

SANDAG
401 B STREET, SUITE 800
SAN DIEGO, CA 92101

AECOM
7807 CONVOY COURT, SUITE 200
SAN DIEGO, CA 92111

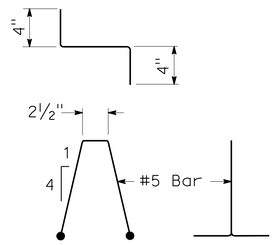

BAR CHAIR DETAIL
1½"=1'-0"

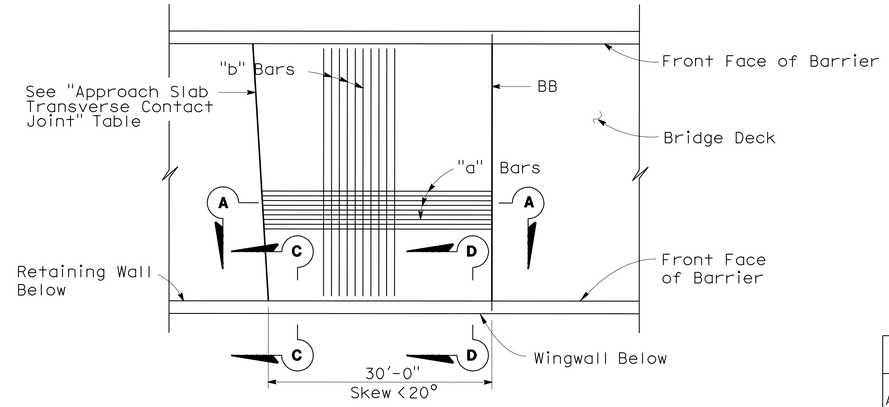

PLAN
1" = 10'

APPROACH SLAB TRANSVERSE CONTACT JOINT		
APPROACH SKEW	WITH AC ROADWAY PAVEMENT	WITH PCC ROADWAY PAVEMENT
< 20°	Parallel to face of paving notch	Parallel to face of paving notch

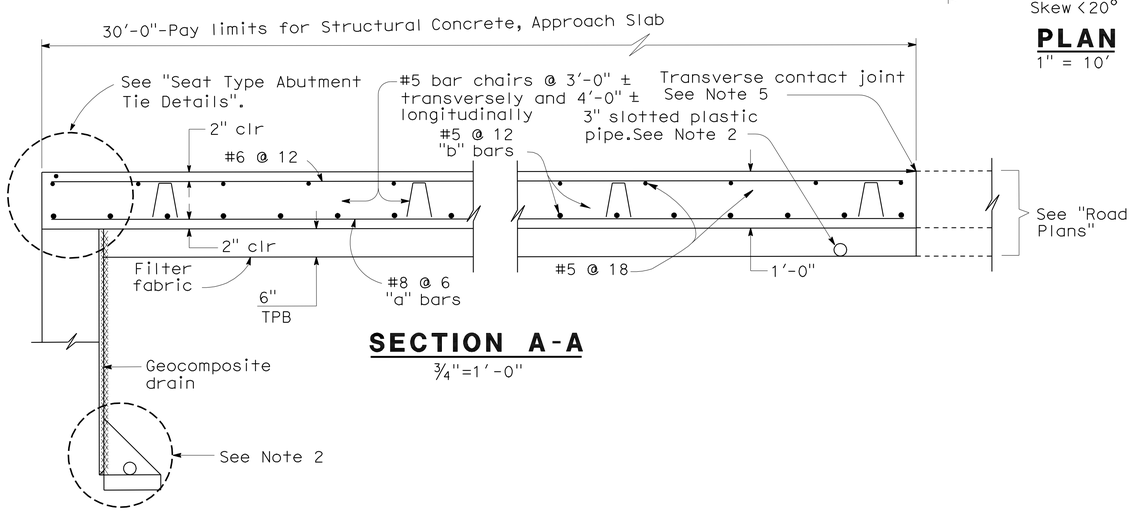

SECTION A-A
¾"=1'-0"

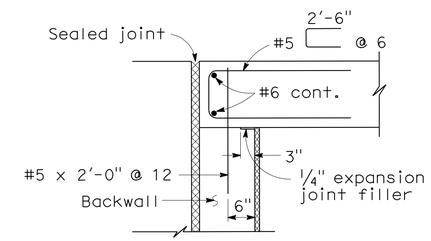

MR ≤ 2"

SEAT TYPE ABUTMENT TIE DETAILS (SEE NOTE 1)
¾"=1'-0"

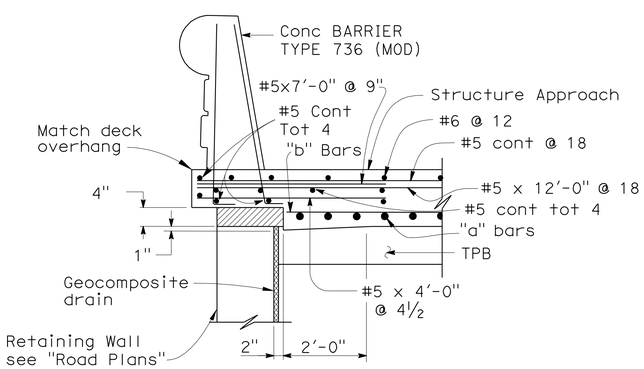

SECTION C-C
¾"=1'-0"

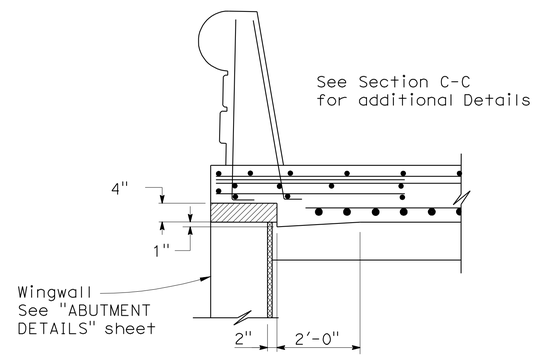

SECTION D-D
¾"=1'-0"

NOTES:

1. For details not shown, see Structure Plans. For MR ≤ 2", adjust bar reinforcement to clear a sawcut for sealed joint, when required.
2. For drainage details, see "Structure Approach Drainage Details" sheet.
3. Longitudinal construction joints, when permitted by the Engineer, shall be located on lane lines.
4. End angle or plate at beginning of barrier transition, end of wingwall or end of structure approach as applicable.
5. For transverse contact joint with new PCC paving, refer to RSP P10.
6. At the contractor's option, approach slab transverse reinforcement may be placed parallel to paving notch. Spacing of transverse reinforcement is measured along ℄ of roadway.

Remove all polystyrene.

HILLERY DIRECT ACCESS RAMPS
SOUTHBOUND OFF-RAMP
STRUCTURE APPROACH TYPE N(30S)

DESIGN OVERSIGHT — Norbert Gee
10-25-10
SIGN OFF DATE

	BY	CHECKED
DESIGN	R Ramoso/H Mai	John Powell
DETAILS	C Morgan/C Lente	John Powell
QUANTITIES	R Ramoso/H Mai	Janice Reguyal

PREPARED FOR THE STATE OF CALIFORNIA DEPARTMENT OF TRANSPORTATION

Robert E. Hawthorne
PROJECT ENGINEER

BRIDGE NO. 57-1217
POST MILE R15.7

CU 11269
EA 2T0951

DISREGARD PRINTS BEARING EARLIER REVISION DATES

REVISION DATES (PRELIMINARY STAGE ONLY): 01/22/10 03/08/10 05/21/10 06/15/10 06/30/10 08/27/10

SHEET 26 OF 33

DESIGN DETAIL SHEET (ENGLISH) (REV. 06-01-09)

ORIGINAL SCALE IN INCHES FOR REDUCED PLANS 0 1 2 3

FILE => 57-1217-s-satn.dgn

USERNAME => s124496 DATE PLOTTED => 27-OCT-2011 TIME PLOTTED => 10:19

DIST	COUNTY	ROUTE	POST MILES TOTAL PROJECT	SHEET No	TOTAL SHEETS
11	SD	15	M15.0/M16.4	604	610

REGISTERED CIVIL ENGINEER — DATE 10-15-10

10-24-11
PLANS APPROVAL DATE

REGISTERED PROFESSIONAL ENGINEER — ROBERT E. HAWTHORNE — No. 40075 — Exp. 03/31/12 — CIVIL — STATE OF CALIFORNIA

The State of California or its officers or agents shall not be responsible for the accuracy or completeness of scanned copies of this plan sheet.

SANDAG
401 B STREET, SUITE 800
SAN DIEGO, CA 92101

AECOM
7807 CONVOY COURT, SUITE 200
SAN DIEGO, CA 92111

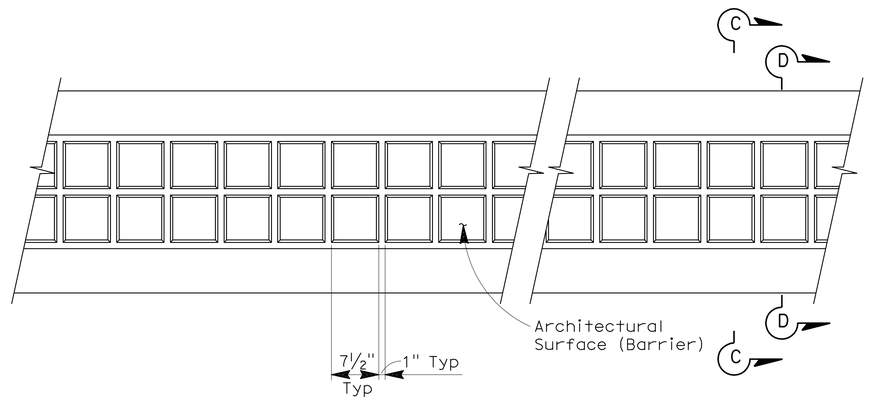

ELEVATION

1"=1'-0"

Notes:
(1) Alternate "Section C-C" and "Section D-D" along the full length of barrier rail.
(2) For other details of barrier rail not shown or noted, see B11-56

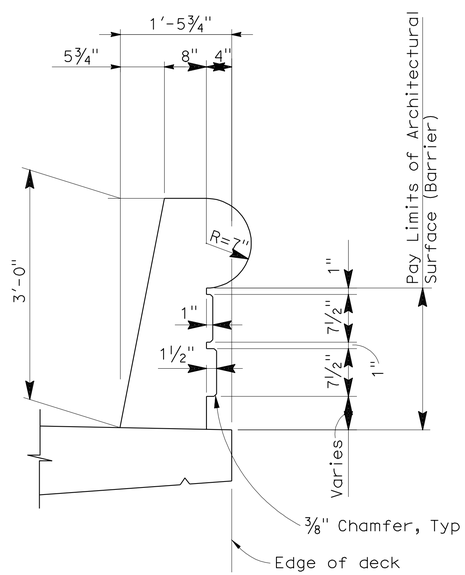

SECTION C-C

1"=1'-0"

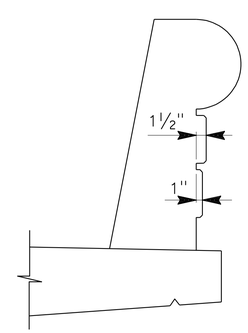

SECTION D-D

1"=1'-0"

Note:
For dimensions not shown, see "Section C-C"

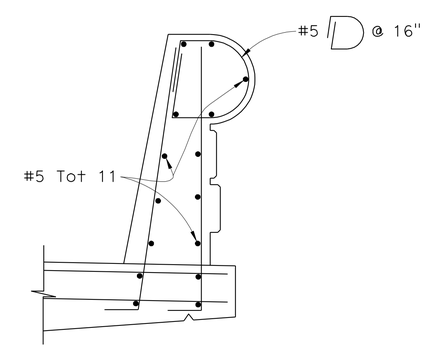

PART SECTION

1"=1'-0"

HILLERY DIRECT ACCESS RAMPS
SOUTHBOUND OFF-RAMP
CONC BARRIER TYPE 736 (MOD)

DESIGN OVERSIGHT — Norbert Gee
10-25-10
SIGN OFF DATE

	BY	CHECKED
DESIGN	R Ramoso/H Mai	John Powell
DETAILS	C Morgan/C Lente	John Powell
QUANTITIES	R Ramoso/H Mai	Janice Reguyal

PREPARED FOR THE STATE OF CALIFORNIA DEPARTMENT OF TRANSPORTATION

Robert E. Hawthorne
PROJECT ENGINEER

BRIDGE NO. 57-1217
POST MILE R15.7

CU 11269
EA 2T0951

DISREGARD PRINTS BEARING EARLIER REVISION DATES

REVISION DATES (PRELIMINARY STAGE ONLY): 01/22/10 03/08/10 05/27/10 06/11/10 06/15/10 06/30/10 08/27/10 10/06/10

SHEET 27 OF 33

DESIGN DETAIL SHEET (ENGLISH) (REV. 06-01-09)

ORIGINAL SCALE IN INCHES FOR REDUCED PLANS 0 1 2 3

FILE => 57-1217-t-brdt.dgn

USERNAME => s124496 DATE PLOTTED => 27-OCT-2011 TIME PLOTTED => 10:19

DIST	COUNTY	Route	POST MILES TOTAL PROJECT	SHEET No	TOTAL SHEETS
11	SD	15	M15.0/M16.4	605	610

REGISTERED CIVIL ENGINEER 9-07-10

10-24-11
PLANS APPROVAL DATE

REGISTERED PROFESSIONAL ENGINEER David T-M Liao No. 59838 Exp. 12-31-11 CIVIL STATE OF CALIFORNIA

The State of California or its officers or agents shall not be responsible for the accuracy or completeness of electronic copies of this plan sheet.

This LOTB sheet was prepared in accordance with the Caltrans Soil & Rock Logging, Classification, & Presentation Manual (June 2007).

BENCH MARK

BM WP100 Elev 524.77′
Fd Pk/Wshr in gutter
N 1913007.270
E 6295232.971
NAVD 1988

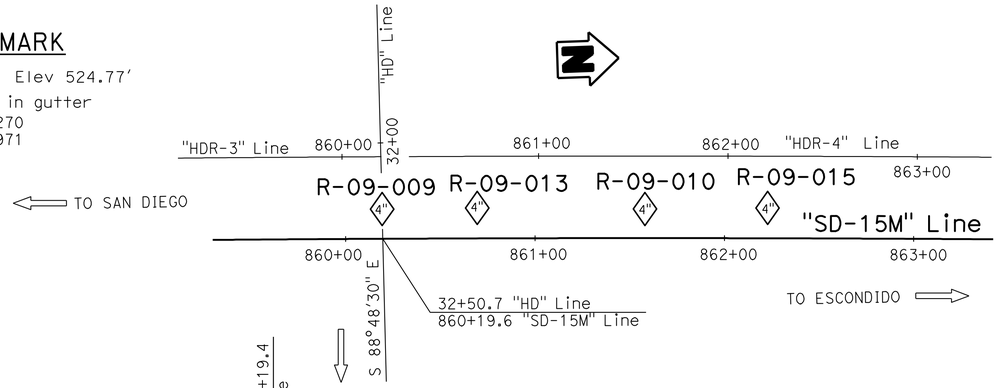

PLAN

1" = 40′

NOTES:

1. Core samples are available for viewing at the California Department of Transportation, Transportation Laboratory, 5900 Folsom Blvd. Sacramento, CA.
2. Attempts were not made to measure groundwater in Borings R-09-009, R-09-010, R-09-013, and R-09-015. Due to lane closure time restrictions, these borings were immediately backfilled after completion of drilling operations.
3. For groundwater information, refer to Borings R-09-003, R-09-014, R-09-016, R-09-020, R-09-021, A-09-025 of Hillery Dr. OC (Br. No. 57-1213), A-09-029, A-09-030, A-09-031 of Northbound On-Ramp (Br. No. 57-1214), and R-09-005, R-09-006, A-09-026, A-09-027, A-09-028 of Northbound Off-Ramp (Br. 57-1215) Logs of Test Borings
4. RQD designated with "N/A" (not applicable) infers that the rock encountered with the drilled interval was not sound rock, therefore, RQD was not calculated.

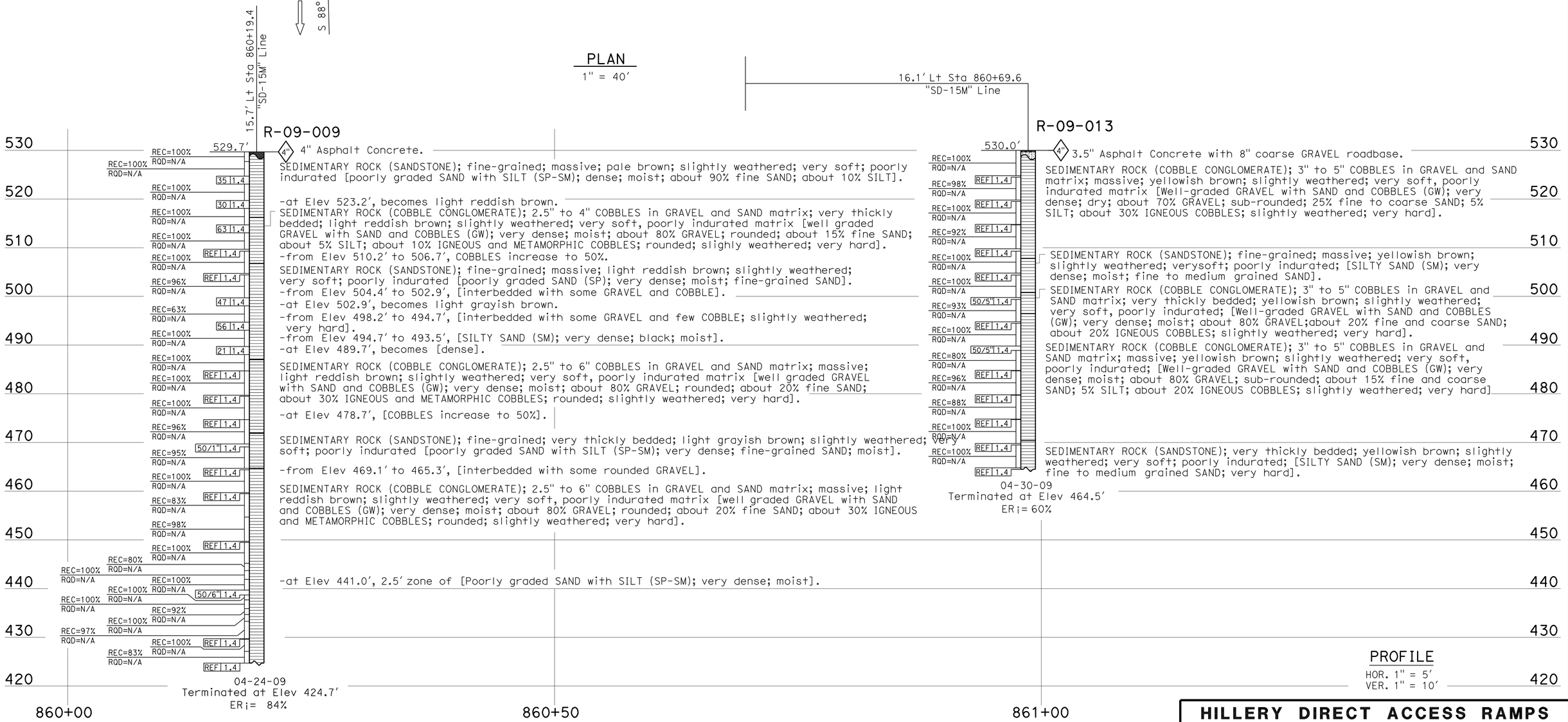

PROFILE

HOR. 1" = 5′
VER. 1" = 10′

ENGINEERING SERVICES	GEOTECHNICAL SERVICES	STATE OF CALIFORNIA DEPARTMENT OF TRANSPORTATION	DIVISION OF ENGINEERING SERVICES STRUCTURE DESIGN	BRIDGE NO. 57-1217	HILLERY DIRECT ACCESS RAMPS
FUNCTIONAL SUPERVISOR	DRAWN BY: B. Huddleston 12/09, I.G-Remmen 1/10	FIELD INVESTIGATION BY:	DESIGN BRANCH	POST MILES R15.7	SOUTHBOUND OFF-RAMP
NAME: M. DeSalvatore	CHECKED BY: E. Neupert	J. Klamecki, F. De Haro			LOG OF TEST BORINGS 1 OF 6

OGS CIVIL LOG OF TEST BORINGS SHEET

ORIGINAL SCALE IN INCHES FOR REDUCED PLANS 0 1 2 3

CU 11
EA 2T0951

DISREGARD PRINTS BEARING EARLIER REVISION DATES

REVISION DATES: 01-26-10 07-06-10 07-12-10 08-16-10 09-06-10 09-07-10

SHEET 28 OF 33

FILE => 57-1217-z-ltb01.dgn

USERNAME => s124936 DATE PLOTTED => 27-OCT-2011 TIME PLOTTED => 10:19

DIST	COUNTY	ROUTE	POST MILES TOTAL PROJECT	SHEET No	TOTAL SHEETS
11	SD	15	M15.0/M16.4	606	610

REGISTERED CIVIL ENGINEER 9-07-10

10-24-11
PLANS APPROVAL DATE

REGISTERED PROFESSIONAL ENGINEER David T-M Liao No. 59838 Exp. 12-31-11 CIVIL STATE OF CALIFORNIA

The State of California or its officers or agents shall not be responsible for the accuracy or completeness of electronic copies of this plan sheet.

This LOTB sheet was prepared in accordance with the Caltrans Soil & Rock Logging, Classification, & Presentation Manual (June 2007).

FOR PLAN VIEW, SEE
"LOG OF TEST BORINGS 1 OF 6"

15.4' Lt Sta 861+58.1
"SD-15M" Line

R-09-010

530.3'

REC=100% RQD=N/A
REC=98% RQD=N/A — 50/5" 1.4
REC=100% RQD=N/A — REF 1.4
REC=100% RQD=N/A — 22 1.4
REC=86% RQD=N/A — 50/2" 1.4
REC=76% RQD=N/A — 92/10" 1.4
REC=91% RQD=N/A — 60 1.4
REC=100% RQD=N/A — 82 1.4
REC=100% RQD=N/A — 45 1.4
REC=89% RQD=N/A — REF 1.4
REC=69% RQD=N/A — 50/1" 1.4
REC=73% RQD=N/A — REF 1.4
REC=94% RQD=N/A — 72 1.4
REC=100% RQD=N/A — REF 1.4
REC=100% RQD=N/A — REF 1.4
REC=98% RQD=N/A — 50/2" 1.4
REC=100% RQD=N/A
REC=83% RQD=N/A — REF 1.4
REC=84% RQD=N/A
REC=81% RQD=N/A — REF 1.4
REC=84% RQD=N/A
REC=84% RQD=N/A — REF 1.4

4"

4" Asphalt concrete with 6" thick coarse GRAVEL roadbase.
SEDIMENTARY ROCK (SANDSTONE); fine-graded; very thickly bedded; yellowish brown; very soft; poorly indurated (SILTY SAND (SM); very dense; dry; with about 10% GRAVEL).
SEDIMENTARY ROCK (COBBLE CONGLOMERATE); 3" to 6" COBBLES in GRAVEL and SAND matrix; very thickly bedded; yellowish brown; slightly weathered; very soft, poorly indurated matrix (Well-graded GRAVEL with SAND and COBBLES (GW); very dense; moist; about 60% GRAVEL; about 35% fine SAND; about 5% fines; about 20% IGNEOUS COBBLES; slightly weathered; very hard).
SEDIMENTARY ROCK (SANDSTONE); fine-grained; massive; yellowish brown; slightly weathered; very soft; poorly indurated (SILTY SAND (SM); medium dense and very dense; moist; trace SILT).
From Elev 510.5′ to Elev 508.5′, mostly fine to coarse GRAVEL with 20% 3" to 5" IGNEOUS COBBLES; slightly weathered; very hard.

-4" COBBLE; slightly weathered; very hard.

SEDIMENTARY ROCK (COBBLE CONGLOMERATE); 3" to 5" COBBLES in GRAVEL and SAND matrix; massive; yellowish brown; slightly weathered; very soft, poorly indurated matrix (Well graded GRAVEL with SAND and COBBLES (GW); very dense; moist; about 80% GRAVEL; about 15% fine and coarse SAND; about 5% SILT; about 30% COBBLES; slightly weathered; very hard).
-from Elev 482.3′ to Elev 479.9′, [SILTY SAND (SM); very dense; moist; fine grained SAND].

SEDIMENTARY ROCK (SANDSTONE); fine-grained; very thickly bedded; yellowish brown; slightly weathered; very soft; poorly indurated; (SILTY SAND (SM); very dense; moist; fine and medium grained SAND).

SEDIMENTARY ROCK (COBBLE CONGLOMERATE); 3" to 5" COBBLES in GRAVEL and SAND matrix; massive; yellowish brown; slightly weathered; very soft, poorly indurated matrix (Well-graded GRAVEL with SAND and COBBLES (GW); very dense; moist; about 80% GRAVEL; about 15% fine and coarse SAND; 5% fines; about 40% COBBLES; slightly weathered; very hard).

-from Elev 457.3′ to Elev 454.8′, SEDIMENTARY ROCK (SANDSTONE); fine-grained; thickly bedded; yellowish brown; slightly weathered; very soft; poorly indurated; [SILTY SAND (SM); very dense; moist; fine and medium grained SAND).

4-23-09
Terminated at Elev 425.7′
ERi = 74% (from Elev 530.3 to Elev 458.3′)
ERi = 68% (from Elev 458.3 to Elev 425.7′)

530 520 510 500 490 480 470 460 450 440 430 420

861+00 862+00 863+00

PROFILE
HOR. 1" = 10′
VER. 1" = 10′

ENGINEERING SERVICES	GEOTECHNICAL SERVICES	STATE OF CALIFORNIA DEPARTMENT OF TRANSPORTATION	DIVISION OF ENGINEERING SERVICES STRUCTURE DESIGN DESIGN BRANCH	BRIDGE NO. 57-1217 POST MILES R15.7	HILLERY DIRECT ACCESS RAMPS SOUTHBOUND OFF-RAMP LOG OF TEST BORINGS 2 OF 6
FUNCTIONAL SUPERVISOR NAME: M. DeSalvatore	DRAWN BY: F. Nguyen 12/09 CHECKED BY: E. Neupert	FIELD INVESTIGATION BY: T-M Liao, F. DeHaro			

OGS CIVIL LOG OF TEST BORINGS SHEET

ORIGINAL SCALE IN INCHES FOR REDUCED PLANS 0 1 2 3

CU 11
EA 2T0951

DISREGARD PRINTS BEARING EARLIER REVISION DATES 01-26-10 07-06-10 07-28-10 09-03-10

REVISION DATES

SHEET 29 OF 33

FILE => 57-1217-z-ltb02.dgn

USERNAME => s124496 DATE PLOTTED => 27-OCT-2011 TIME PLOTTED => 10:19

DIST	COUNTY	ROUTE	POST MILES TOTAL PROJECT	SHEET No	TOTAL SHEETS
11	SD	15	M15.0/M16.4	607	610

REGISTERED CIVIL ENGINEER 9-07-10

10-24-11
PLANS APPROVAL DATE

The State of California or its officers or agents shall not be responsible for the accuracy or completeness of electronic copies of this plan sheet.

REGISTERED PROFESSIONAL ENGINEER
David T-M Liao
No. 59838
Exp. 12-31-11
CIVIL
STATE OF CALIFORNIA

This LOTB sheet was prepared in accordance with the Caltrans Soil & Rock Logging, Classification, & Presentation Manual (June 2007).

FOR PLAN VIEW, SEE
"LOG OF TEST BORINGS 1 OF 6"

HILLERY DIRECT ACCESS RAMPS

SOUTHBOUND OFF-RAMP

LOG OF TEST BORINGS 3 OF 6

ENGINEERING SERVICES		GEOTECHNICAL SERVICES	STATE OF CALIFORNIA DEPARTMENT OF TRANSPORTATION	DIVISION OF ENGINEERING SERVICES STRUCTURE DESIGN DESIGN BRANCH	BRIDGE NO. 57-1217 / POST MILES R15.7
FUNCTIONAL SUPERVISOR	DRAWN BY: F. Nguyen 12/09	FIELD INVESTIGATION BY:			
NAME: M. DeSalvatore	CHECKED BY: E. Neupert	T-M Liao			

OGS CIVIL LOG OF TEST BORINGS SHEET

ORIGINAL SCALE IN INCHES FOR REDUCED PLANS 0 1 2 3

CU 11
EA 2T0951

DISREGARD PRINTS BEARING EARLIER REVISION DATES

REVISION DATES: 01-28-10 07-06-10 07-12-10 09-03-10

SHEET 30 OF 33

FILE => 57-1217-z-ltb03.dgn

USERNAME => s124496 DATE PLOTTED => 27-OCT-2011 TIME PLOTTED => 10:19

DIST	COUNTY	ROUTE	POST MILES TOTAL PROJECT	SHEET No	TOTAL SHEETS
11	SD	15	M15.0/M16.4	608	610

REGISTERED CIVIL ENGINEER 9-07-10 DATE

10-24-11
PLANS APPROVAL DATE

REGISTERED PROFESSIONAL ENGINEER David T-M Liao No. C59838 Exp. 12-31-11 CIVIL STATE OF CALIFORNIA

The State of California or its officers or agents shall not be responsible for the accuracy or completeness of electronic copies of this plan sheet.

REFERENCE: CALTRANS SOIL & ROCK LOGGING, CLASSIFICATION, AND PRESENTATION MANUAL (JUNE 2007)

CEMENTATION

Description	Criteria
Weak	Crumbles or breaks with handling or little finger pressure.
Moderate	Crumbles or breaks with considerable finger pressure.
Strong	Will not crumble or break with finger pressure.

CONSISTENCY OF COHESIVE SOILS

Description	Unconfined Compressive Strength (tsf)	Pocket Penetrometer Measurement (tsf)	Torvane Measurement (tsf)	Field Approximation
Very Soft	< 0.25	< 0.25	< 0.12	Easily penetrated several inches by fist
Soft	0.25 to 0.50	0.25 to 0.50	0.12 to 0.25	Easily penetrated several inches by thumb
Medium Stiff	0.50 to 1.0	0.50 to 1.0	0.25 to 0.50	Penetrated several inches by thumb with moderate effort
Stiff	1 to 2	1 to 2	0.50 to 1.0	Readily indented by thumb but penetrated only with great effort
Very Stiff	2 to 4	2 to 4	1.0 to 2.0	Readily indented by thumbnail
Hard	> 4.0	> 4.0	> 2.0	Indented by thumbnail with difficulty

BOREHOLE IDENTIFICATION

Symbol	Hole Type	Description
Size	A	Auger Boring
Size	R P	Rotary drilled boring Rotary percussion boring (air)
Size	R	Rotary drilled diamond core
Size	HD HA	Hand driven (1-inch soil tube) Hand Auger
●	D	Dynamic Cone Penetration Boring
▲	CPT	Cone Penetration Test (ASTM D 5778-95)
⬚	O	Other

Note: Size in inches.

PLASTICITY OF FINE-GRAINED SOILS

Description	Criteria
Nonplastic	A 1/8-inch thread cannot be rolled at any water content.
Low	The thread can barely be rolled and the lump cannot be formed when drier than the plastic limit.
Medium	The thread is easy to roll and not much time is required to reach the plastic limit. The thread cannot be rerolled after reaching the plastic limit. The lump crumbles when drier than the plastic limit.
High	It takes considerable time rolling and kneading to reach the plastic limit. The thread can be rerolled several times after reaching the plastic limit. The lump can be formed without crumbling when drier than the plastic limit.

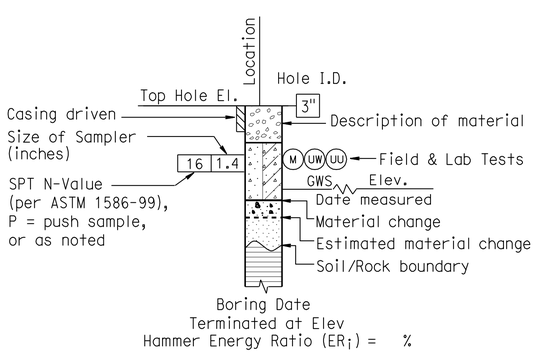

ROTARY BORING

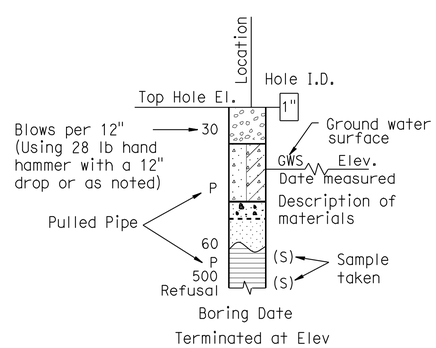

HAND BORING

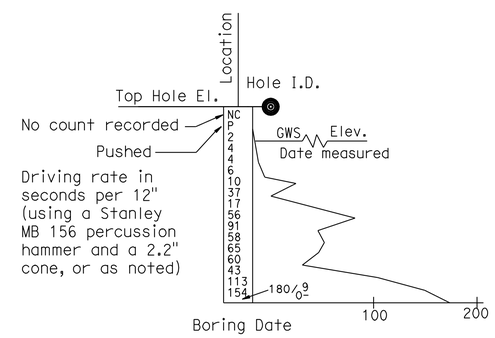

DYNAMIC CONE PENETRATION BORING

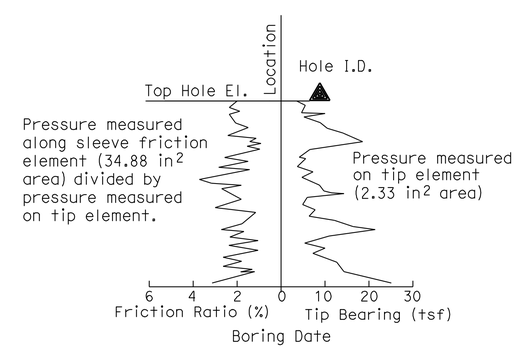

CONE PENETRATION TEST (CPT) SOUNDING

ENGINEERING SERVICES	GEOTECHNICAL SERVICES	STATE OF CALIFORNIA DEPARTMENT OF TRANSPORTATION	DIVISION OF ENGINEERING SERVICES STRUCTURE DESIGN DESIGN BRANCH	BRIDGE NO. 57-1217 / POST MILE R15.7	HILLERY DIRECT ACCESS RAMPS SOUTHBOUND OFF-RAMP LOG OF TEST BORINGS 4 OF 6
	PREPARED BY: I.G-Remmen 1/10				

GS LOTB SOIL LEGEND

ORIGINAL SCALE IN INCHES FOR REDUCED PLANS 0 1 2 3

CU 11
EA 2T0951

DISREGARD PRINTS BEARING EARLIER REVISION DATES

REVISION DATES

SHEET 31 OF 33

FILE => 57-1217-z-lltb04.dgn

USERNAME => s124496 DATE PLOTTED => 27-OCT-2011 TIME PLOTTED => 10:19

REFERENCE: CALTRANS SOIL & ROCK LOGGING, CLASSIFICATION, AND PRESENTATION MANUAL (JUNE 2007)

DIST	COUNTY	ROUTE	POST MILES TOTAL PROJECT	SHEET No	TOTAL SHEETS
11	SD	15	M15.0/M16.4	609	610

REGISTERED CIVIL ENGINEER 9-07-10 DATE

10-24-11
PLANS APPROVAL DATE

REGISTERED PROFESSIONAL ENGINEER David T-M Liao No. C59838 Exp. 12-31-11 CIVIL STATE OF CALIFORNIA

The State of California or its officers or agents shall not be responsible for the accuracy or completeness of electronic copies of this plan sheet.

GROUP SYMBOLS AND NAMES

Graphic/Symbol	Group Names	Graphic/Symbol	Group Names
GW	Well-graded GRAVEL Well-graded GRAVEL with SAND	CL	Lean CLAY Lean CLAY with SAND Lean CLAY with GRAVEL SANDY lean CLAY SANDY lean CLAY with GRAVEL GRAVELLY lean CLAY GRAVELLY lean CLAY with SAND
GP	Poorly graded GRAVEL Poorly graded GRAVEL with SAND		
GW-GM	Well-graded GRAVEL with SILT Well-graded GRAVEL with SILT and SAND	CL-ML	SILTY CLAY SILTY CLAY with SAND SILTY CLAY with GRAVEL SANDY SILTY CLAY SANDY SILTY CLAY with GRAVEL GRAVELLY SILTY CLAY GRAVELLY SILTY CLAY with SAND
GW-GC	Well-graded GRAVEL with CLAY (or SILTY CLAY) Well-graded GRAVEL with CLAY and SAND (or SILTY CLAY and SAND)		
GP-GM	Poorly graded GRAVEL with SILT Poorly graded GRAVEL with SILT and SAND	ML	SILT SILT with SAND SILT with GRAVEL SANDY SILT SANDY SILT with GRAVEL GRAVELLY SILT GRAVELLY SILT with SAND
GP-GC	Poorly graded GRAVEL with CLAY (or SILTY CLAY) Poorly graded GRAVEL with CLAY and SAND (or SILTY CLAY and SAND)		
GM	SILTY GRAVEL SILTY GRAVEL with SAND	OL	ORGANIC lean CLAY ORGANIC lean CLAY with SAND ORGANIC lean CLAY with GRAVEL SANDY ORGANIC lean CLAY SANDY ORGANIC lean CLAY with GRAVEL GRAVELLY ORGANIC lean CLAY GRAVELLY ORGANIC lean CLAY with SAND
GC	CLAYEY GRAVEL CLAYEY GRAVEL with SAND		
GC-GM	SILTY, CLAYEY GRAVEL SILTY, CLAYEY GRAVEL with SAND	OL	ORGANIC SILT ORGANIC SILT with SAND ORGANIC SILT with GRAVEL SANDY ORGANIC SILT SANDY ORGANIC SILT with GRAVEL GRAVELLY ORGANIC SILT GRAVELLY ORGANIC SILT with SAND
SW	Well-graded SAND Well-graded SAND with GRAVEL		
SP	Poorly graded SAND Poorly graded SAND with GRAVEL	CH	Fat CLAY Fat CLAY with SAND Fat CLAY with GRAVEL SANDY fat CLAY SANDY fat CLAY with GRAVEL GRAVELLY fat CLAY GRAVELLY fat CLAY with SAND
SW-SM	Well-graded SAND with SILT Well-graded SAND with SILT and GRAVEL		
SW-SC	Well-graded SAND with CLAY (or SILTY CLAY) Well-graded SAND with CLAY and GRAVEL (or SILTY CLAY and GRAVEL)	MH	Elastic SILT Elastic SILT with SAND Elastic SILT with GRAVEL SANDY elastic SILT SANDY elastic SILT with GRAVEL GRAVELLY elastic SILT GRAVELLY elastic SILT with SAND
SP-SM	Poorly graded SAND with SILT Poorly graded SAND with SILT and GRAVEL		
SP-SC	Poorly graded SAND with CLAY (or SILTY CLAY) Poorly graded SAND with CLAY and GRAVEL (or SILTY CLAY and GRAVEL)	OH	ORGANIC fat CLAY ORGANIC fat CLAY with SAND ORGANIC fat CLAY with GRAVEL SANDY ORGANIC fat CLAY SANDY ORGANIC fat CLAY with GRAVEL GRAVELLY ORGANIC fat CLAY GRAVELLY ORGANIC fat CLAY with SAND
SM	SILTY SAND SILTY SAND with GRAVEL		
SC	CLAYEY SAND CLAYEY SAND with GRAVEL	OH	ORGANIC elastic SILT ORGANIC elastic SILT with SAND ORGANIC elastic SILT with GRAVEL SANDY ORGANIC elastic SILT SANDY ORGANIC elastic SILT with GRAVEL GRAVELLY ORGANIC elastic SILT GRAVELLY ORGANIC elastic SILT with SAND
SC-SM	SILTY, CLAYEY SAND SILTY, CLAYEY SAND with GRAVEL		
PT	PEAT	OL/OH	ORGANIC SOIL ORGANIC SOIL with SAND ORGANIC SOIL with GRAVEL SANDY ORGANIC SOIL SANDY ORGANIC SOIL with GRAVEL GRAVELLY ORGANIC SOIL GRAVELLY ORGANIC SOIL with SAND
	COBBLES COBBLES and BOULDERS BOULDERS		

FIELD AND LABORATORY TESTING

- (C) Consolidation (ASTM D 2435)
- (CL) Collapse Potential (ASTM D 5333)
- (CP) Compaction Curve (CTM 216)
- (CR) Corrosivity Testing (CTM 643, CTM 422, CTM 417)
- (CU) Consolidated Undrained Triaxial (ASTM D 4767)
- (DS) Direct Shear (ASTM D 3080)
- (EI) Expansion Index (ASTM D 4829)
- (M) Moisture Content (ASTM D 2216)
- (OC) Organic Content-% (ASTM D 2974)
- (P) Permeability (CTM 220)
- (PA) Particle Size Analysis (ASTM D 422)
- (PI) Plasticity Index (AASHTO T 90) Liquid Limit (AASHTO T 89)
- (PL) Point Load Index (ASTM D 5731)
- (PM) Pressure Meter
- (PP) Pocket Penetrometer
- (R) R-Value (CTM 301)
- (SE) Sand Equivalent (CTM 217)
- (SG) Specific Gravity (AASHTO T 100)
- (SL) Shrinkage Limit (ASTM D 427)
- (SW) Swell Potential (ASTM D 4546)
- (TV) Pocket Torvane
- (UC) Unconfined Compression-Soil (ASTM D 2166) Unconfined Compression-Rock (ASTM D 2938)
- (UU) Unconsolidated Undrained Triaxial (ASTM D 2850)
- (UW) Unit Weight (ASTM D 4767)
- (VS) Vane Shear (AASHTO T 223)

APPARENT DENSITY OF COHESIONLESS SOILS

Description	SPT N_{60} (Blows / 12 inches)
Very loose	0 - 4
Loose	5 - 10
Medium Dense	11 - 30
Dense	31 - 50
Very Dense	> 50

MOISTURE

Description	Criteria
Dry	Absence of moisture, dusty, dry to the touch
Moist	Damp but no visible water
Wet	Visible free water, usually soil is below water table

PERCENT OR PROPORTION OF SOILS

Description	Criteria
Trace	Particles are present but estimated to be less than 5%
Few	5 to 10%
Little	15 to 25%
Some	30 to 45%
Mostly	50 to 100%

PARTICLE SIZE

Description		Size
Boulder		> 12"
Cobble		3" to 12"
Gravel	Coarse	3/4" to 3"
	Fine	No. 4 to 3/4"
Sand	Coarse	No. 10 to No. 4
	Medium	No. 40 to No. 10
	Fine	No. 200 to No. 40

HILLERY DIRECT ACCESS RAMPS
SOUTHBOUND OFF-RAMP
LOG OF TEST BORINGS 5 OF 6

ENGINEERING SERVICES

GEOTECHNICAL SERVICES
PREPARED BY: I.G-Remmen 1/10

STATE OF CALIFORNIA DEPARTMENT OF TRANSPORTATION

DIVISION OF ENGINEERING SERVICES STRUCTURE DESIGN
DESIGN BRANCH

BRIDGE NO. 57-1217
POST MILE R15.7

CU 11
EA 2T0951

GS LOTB SOIL LEGEND

ORIGINAL SCALE IN INCHES FOR REDUCED PLANS 0 1 2 3

DISREGARD PRINTS BEARING EARLIER REVISION DATES

REVISION DATES

SHEET 32 OF 33

FILE => 57-1217-z-ltb05.dgn

USERNAME => s124096 DATE PLOTTED => 27-OCT-2011 TIME PLOTTED => 10:19

DIST	COUNTY	ROUTE	POST MILES TOTAL PROJECT	SHEET No	TOTAL SHEETS
11	SD	15	M15.0/M16.4	610	610

REGISTERED CIVIL ENGINEER 9-07-10 DATE

10-24-11
PLANS APPROVAL DATE

The State of California or its officers or agents shall not be responsible for the accuracy or completeness of electronic copies of this plan sheet.

REGISTERED PROFESSIONAL ENGINEER T-M Liao No. C59838 Exp. 12-31-11 CIVIL STATE OF CALIFORNIA

REFERENCE: CALTRANS SOIL & ROCK LOGGING, CLASSIFICATION, AND PRESENTATION MANUAL (JUNE 2007)

PERCENT CORE RECOVERY (REC) & ROCK QUALITY DESIGNATION (RQD)

$$REC = \frac{\sum \text{Length of the recovered core pieces (inches)}}{\text{Total length of core run (inches)}} \times 100\%$$

$$RQD = \frac{\sum \text{Length of intact core pieces} \geq 4''}{\text{Total length of core run (inches)}} \times 100\%$$

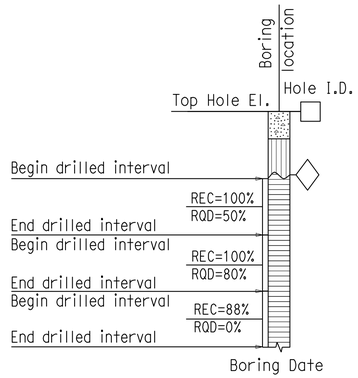

RELATIVE STRENGTH OF INTACT ROCK

Term	Uniaxial Compressive Strength (PSI)
Extremely Strong	> 30,000
Very Strong	14,500 - 30,000
Strong	7,000 - 14,500
Medium Strong	3,500 - 7,000
Weak	700 - 3,500
Very Weak	150 - 700
Extremely Weak	< 150

BEDDING SPACING

Description	Thickness / Spacing
Massive	Greater than 10 ft
Very thickly bedded	3 to 10 ft
Thickly bedded	1 to 3 ft
Moderately bedded	3-5/8" to 1 ft
Thinly bedded	1-1/4" to 3-5/8"
Very thinly bedded	3/8" to 1-1/4"
Laminated	Less than 3/8"

LEGEND OF ROCK MATERIALS

- IGNEOUS ROCK
- SEDIMENTARY ROCK
- METAMORPHIC ROCK

ROCK HARDNESS

Description	Criteria
Extremely Hard	Specimen cannot be scratched with a pocket knife or sharp pick; can only be chipped with repeated heavy hammer blows.
Very Hard	Specimen cannot be scratched with a pocket knife or sharp pick. Breaks with repeated heavy hammer blows.
Hard	Specimen can be scratched with a pocket knife or sharp pick with difficulty (heavy pressure). Heavy hammer blows required to break specimen.
Moderately Hard	Specimen can be scratched with pocket knife or sharp pick with light or moderate pressure. Core breaks with moderate hammer blows.
Moderately Soft	Specimen can be grooved 1/6" deep with a pocket knife or sharp pick with moderate or heavy pressure. Breaks with light hammer blow or heavy manual pressure.
Soft	Specimen can be grooved or gouged easily by a pocket knife or sharp pick with light pressure, can be scratched with fingernail. Breaks with light to moderate manual pressure.
Very Soft	Specimen can be readily indented, grooved or gouged with fingernail, or carved with a pocket knife. Breaks with light manual pressure.

FRACTURE DENSITY

Description	Observed Fracture Density
Unfractured	No fractures.
Very slightly fractured	Lengths greater than 3 feet.
Slightly fractured	Lengths from 1 to 3 feet with few lengths less than 1 foot or greater than 3 feet.
Moderately fractured	Lengths mostly in 4" to 1 foot range with most lengths about 8"
Intensely fractured	Lengths average from 1 to 4" with scattered fragmented intervals with lengths less than 4"
Very intensely fractured	Mostly chips and fragments with a few scattered short core lengths.

Combination descriptors (such as "Very intensely to intensely fractured") are used where equal distribution of both fracture density characteristics is present over a significant interval or exposure, or where characteristics are "in between" the descriptor definitions. Only two adjacent descriptors may be combined.

WEATHERING DESCRIPTORS FOR INTACT ROCK

Description	Diagnostic features					General Characteristics
	Chemical Weathering-Discoloration and/or oxidation		Mechanical Weathering-Grain boundary conditions (disaggregation) primarily for granitics and some coarse-grained sediments	Texture and Solutioning		
	Body of Rock	Fracture Surfaces		Texture	Solutioning	
Fresh	No discoloration, not oxidized.	No discoloration or oxidation.	No separation, intact (tight).	No change.	No solutioning.	Hammer rings when crystalline rocks are struck.
Slightly Weathered	Discoloration or oxidation is limited to surface of, or short distance from, fractures; some feldspar crystals are dull.	Minor to complete discoloration or oxidation of most surfaces.	No visible separation, intact (tight).	Preserved.	Minor leaching of some soluble minerals may be noted.	Hammer rings when crystalline rocks are struck. Body of rock not weakened.
Moderately Weathered	Discoloration or oxidation extends from fractures usually throughout; Fe-Mg minerals are "rusty," feldspar crystals are "cloudy."	All fracture surfaces are discolored or oxidized.	Partial separation of boundaries visible.	Generally preserved.	Soluble minerals may be mostly leached.	Hammer does not ring when rock is struck. Body of rock is slightly weakened.
Intensely Weathered	Discoloration or oxidation throughout; all feldspars and Fe-Mg minerals are altered to clay to some extent; or chemical alteration produces in-situ disaggregation, see grain boundary conditions.	All fracture surfaces are discolored or oxidized, surfaces friable.	Partial separation, rock is friable; in semiarid conditions granitics are disaggregated.	Texture altered by chemical disintegration (hydration, argillation).	Leaching of soluble minerals may be complete.	Dull sound when struck with hammer, usually can be broken with moderate to heavy manual pressure or by light hammer blow without reference to planes of weakness such as incipient or hairline fractures, or veinlets. Rock is significantly weakened.
Decomposed	Discolored or oxidized throughout, but resistant minerals such as quartz may be unaltered; all feldspars and Fe-Mg minerals are completely altered to clay.		Complete separation of grain boundaries (disaggregated).	Resembles a soil, partial or complete remnant rock structure may be preserved; leaching of soluble minerals usually complete.		Can be granulated by hand. Resistant minerals such as quartz may be present as "stringers" or "dikes."

Combination descriptors (such as "slightly weathered to fresh") are permissible where equal distribution of both weathering characteristics is present over significant intervals or where characteristics present are "in between" the diagnostic feature. However, combination descriptors should not be used where significant, identifiable zones can be delineated. Only two adjacent descriptors may be combined. "Very intensely weathered" is the combination descriptor for "intensely weathered to decomposed."

HILLERY DIRECT ACCESS RAMPS
SOUTHBOUND OFF-RAMP
LOG OF TEST BORINGS 6 OF 6

ENGINEERING SERVICES

GEOTECHNICAL SERVICES
PREPARED BY: I.G-Remmen 1/10

STATE OF CALIFORNIA DEPARTMENT OF TRANSPORTATION

DIVISION OF ENGINEERING SERVICES STRUCTURE DESIGN
DESIGN BRANCH

BRIDGE NO. 57-1217
POST MILE R15.7

CU 11
EA 2T0951

ORIGINAL SCALE IN INCHES FOR REDUCED PLANS 0 1 2 3

DISREGARD PRINTS BEARING EARLIER REVISION DATES 09-01-10

REVISION DATES

SHEET 33 OF 33

FILE => 57-1217-z-1tb06.dgn

USERNAME => s124496 DATE PLOTTED => 27-OCT-2011 TIME PLOTTED => 10:20