DIST	COUNTY	ROUTE	KILOMETER POST TOTAL PROJECT	SHEET NO.	TOTAL SHEETS
11	SD	5,805	R49.9/R51.7, 42.6/46.5	601	886

REGISTERED CIVIL ENGINEER

October 5, 2007
PLANS APPROVAL DATE

Registered Professional Engineer — Stanley P. Johnson, No. C57793, Exp. 03-31-08, CIVIL, State of California

The State of California or its officers or agents shall not be responsible for the accuracy or completeness of electronic copies of this plan sheet.

To get to the Caltrans web site, go to: http://www.dot.ca.gov

Caltrans Metric

To accompany plans dated 9-27-10

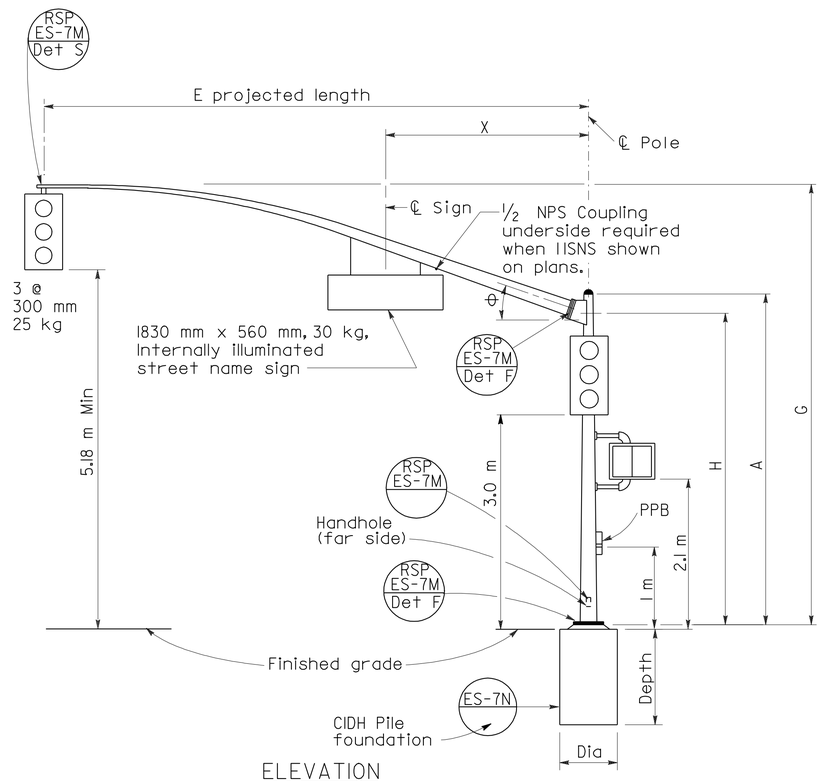

ELEVATION

TYPE 16-2-161, 18-2-161

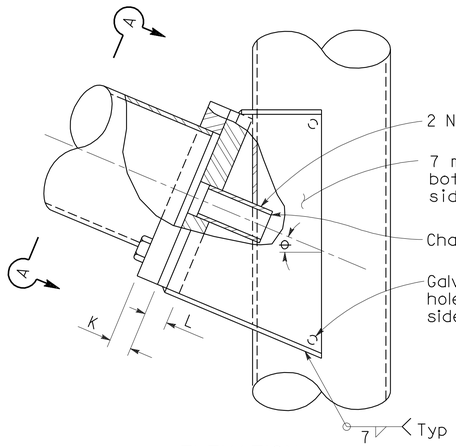

ELEVATION

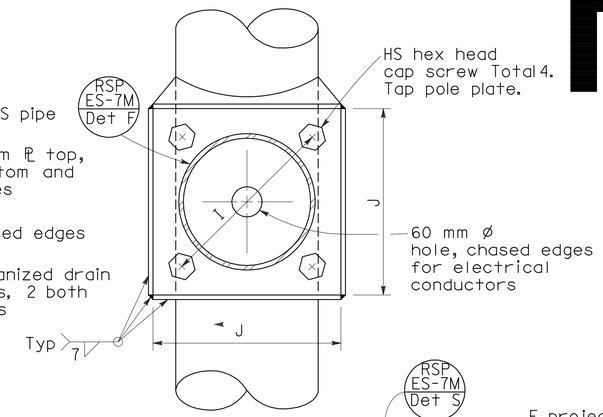

SECTION A-A

SIGNAL ARM CONNECTION DETAILS

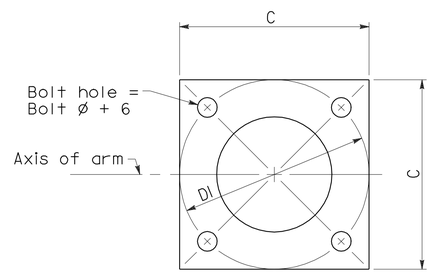

BASE PLATE

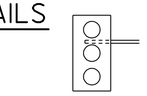

Required for Type 17-2-161 Type 17A-2-161

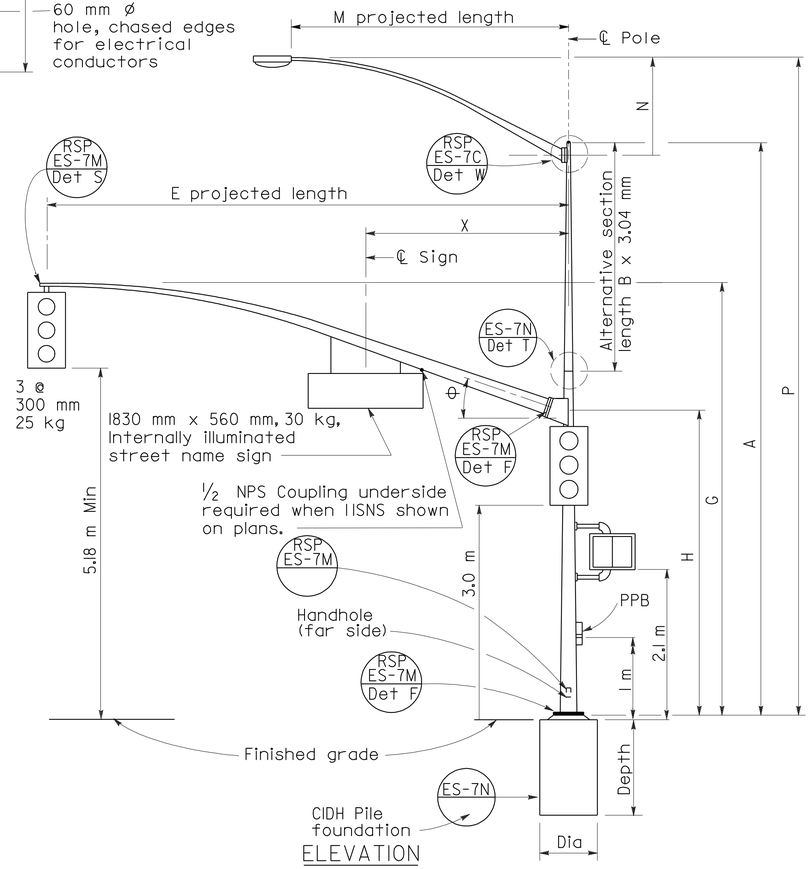

ELEVATION

TYPE 17-2-161, 17A-2-161, 19-2-161, 19A-2-161

SIGNAL ARM DATA											
E Projected Length	G Mounting Height	H	Min OD At Pole	Thickness	I Bolt Circle	HS Cap Screws	J Plate Size	K Arm ℙ Thickness	L Pole ℙ Thickness	⊖	X Max
m			mm								m
4.6	6.6 ±	5.3	168	4.55	305	32-7NC-76	305	32	38	23°	3.2
6.1	6.6 ±		168								
7.6	6.9 ±	4.9	186								
9.1	7.0 ±		203								

LUMINAIRE ARM DATA					
M Projected Length	N Rise	Min OD at Pole	Thickness	P Mounting Height 9.1 Pole	P Mounting Height 10.7 Pole
m	mm			m	
1.8	610 ±	83	3.04	9.5 ±	11.1 ±
2.4	760 ±	89		9.7 ±	11.3 ±
3.1	990 ±	98		9.9 ±	11.5 ±
3.7	1290 ±			10.2 ±	11.8 ±
4.6	1450 ±	108		10.4 ±	12.0 ±

HIGH STRENGTH CAP SCREWS

16 - 11NC - 45

- Length (mm)
- Threads (per inch)
- Size (mm)

Pole Type	Load Case	Wind Velocity km/h	POLE DATA: A Height	Min OD Base	Min OD Top	Thickness	Alternative Section B Length	Alternative Section Bottom	Alternative Section Top	BASE PLATE DATA: C	DI Bolt Circle	Thickness	Anchor Bolts Size	Luminaire Arm	Signal Arm	CIDH PILE FOUNDATION: Diameter	Depth	Reinforced
			m	mm			m	mm		mm				m		mm	m	
16-2-161	2	161	5.6	273	210	4.55	None	203	168	457	445	38	51 ø x 1067 x 152	None	4.6, 6.1	760	2.2	Yes
17-2-161			9.1		168		3.0							1.8-4.6 [3.7]				
17A-2-161			10.7		151		4.6		151					1.8-4.6 [4.6]				
18-2-161			5.2		214	6.07	None	203						None	7.6, 9.1			
19-2-161			9.1		168		3.0		168					1.8-4.6 [3.7]				
19A-2-161			10.7		151		4.6		151					1.8-4.6 [4.6]				

☐ Indicates arm length to be used unless otherwise noted on plans.

STATE OF CALIFORNIA
DEPARTMENT OF TRANSPORTATION

ELECTRICAL SYSTEMS (SIGNAL AND LIGHTING STANDARD CASE 2 ARM LOADING WIND VELOCITY=161 km/h ARM LENGTHS 4.6 m TO 9.1 m)

NO SCALE

ALL DIMENSIONS ARE IN MILLIMETERS UNLESS OTHERWISE SHOWN

RSP ES-7D DATED OCTOBER 5, 2007 SUPERSEDES RSP ES-7D DATED JANUARY 24, 2005 AND STANDARD PLAN ES-7D DATED JULY 1, 2004-PAGE 454 OF THE STANDARD PLANS BOOK DATED JULY 2004.

REVISED STANDARD PLAN RSP ES-7D

2004 REVISED Std PLAN RSP ES-7D

6-19-07

DIST	COUNTY	ROUTE	KILOMETER POST TOTAL PROJECT	SHEET NO.	TOTAL SHEETS
11	SD	5,805	R49.9/R51.7, 42.6/46.5	602	886

To accompany plans dated 9-27-10

Caltrans Metric

REGISTERED CIVIL ENGINEER

October 5, 2007
PLANS APPROVAL DATE

REGISTERED PROFESSIONAL ENGINEER Stanley P. Johnson No. C57793 Exp. 03-31-08 CIVIL STATE OF CALIFORNIA

The State of California or its officers or agents shall not be responsible for the accuracy or completeness of electronic copies of this plan sheet.

To get to the Caltrans web site, go to: http://www.dot.ca.gov

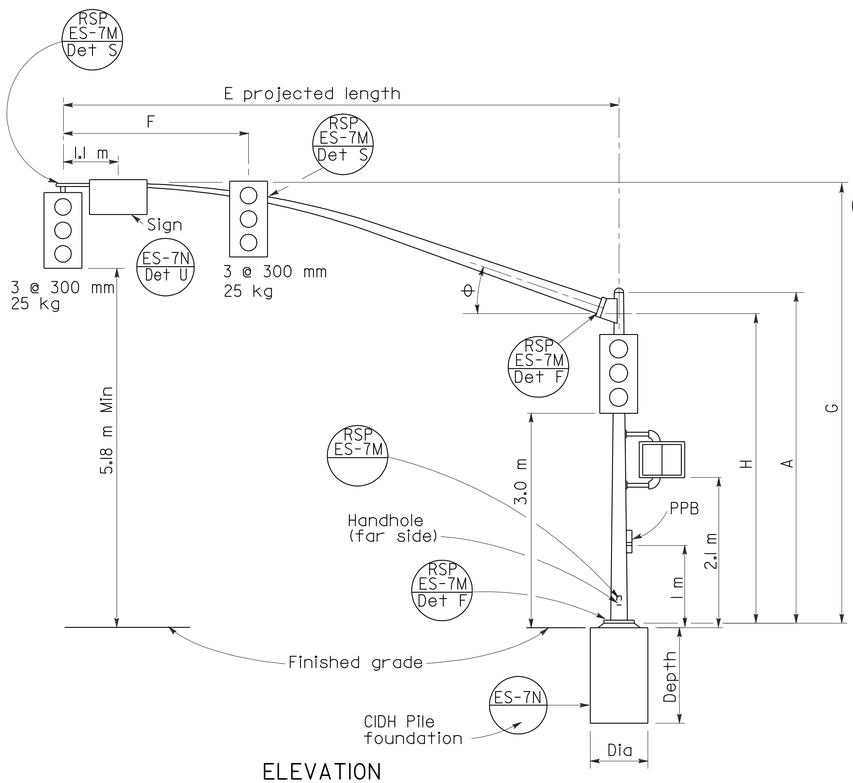

ELEVATION

TYPE 16-3-161, 18-3-161, 23-3-161, 27-3-161

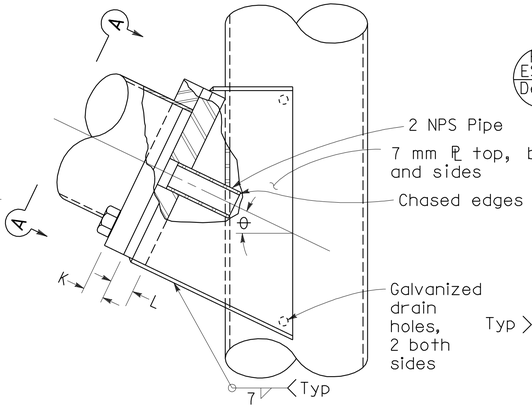

ELEVATION

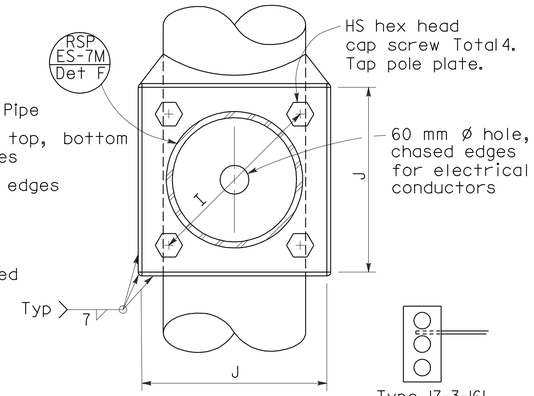

SECTION A-A

Type 17-3-161

SIGNAL ARM CONNECTION DETAILS

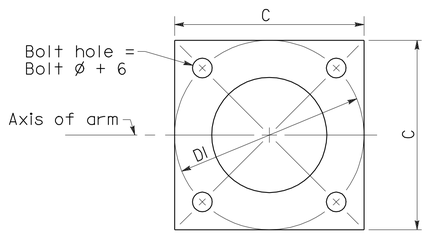

BASE PLATE

HIGH STRENGTH CAP SCREWS

16 - 11NC - 45
- Length (mm)
- Threads (per inch)
- Size (mm)

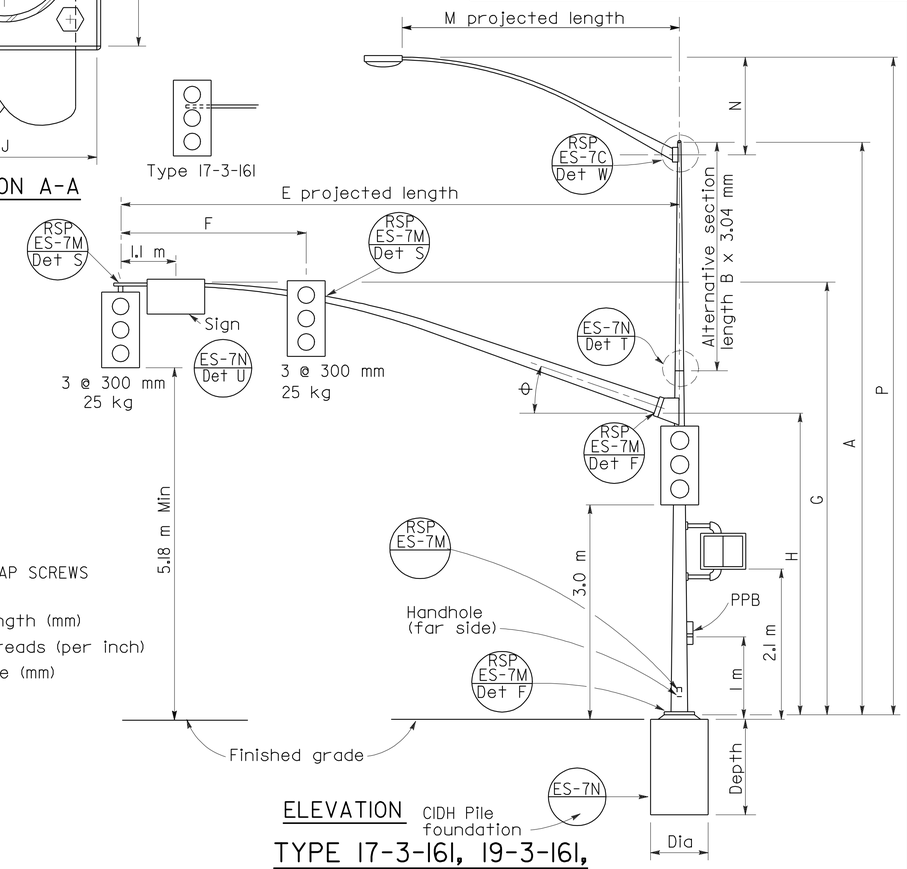

ELEVATION

TYPE 17-3-161, 19-3-161, 19A-3-161, 24-3-161, 24A-3-161, 26-3-161, 26A-3-161

SIGNAL ARM DATA

E Projected Length	F Min Spacing	G Mounting Height	H	Min OD At Pole	Thickness	I Bolt Circle	HS Cap Screws	J Plate Size	K Arm PL Thickness	L Pole PL Thickness	θ
m				mm							
4.6	2.4	6.6 ±	5.3	168	4.55	305	32-7NC-76	305	32	38	23°
6.1		6.6 ±		178							
7.6	3.7	6.9 ±	4.9	186	6.07						
9.1		7.0 ±		203							
10.7	4.3			222		330		330	38	45	21°
12.2	4.6			238							15°
13.7		7.2 ±		256							

LUMINAIRE ARM DATA

M Projected Length	N Rise	Min OD at Pole	Thickness	P Mounting Height 9.1 Pole	P Mounting Height 10.7 Pole
m	mm			m	
1.8	610 ±	83	3.04	9.5 ±	11.1 ±
2.4	760 ±	89		9.7 ±	11.3 ±
3.1	990 ±	98		9.9 ±	11.5 ±
3.7	1290 ±			10.2 ±	11.8 ±
4.6	1450 ±	108		10.4 ±	12.0 ±

Pole Type	Load Case	Wind Velocity km/h	POLE DATA A Height	Min OD Base	Min OD Top	Thickness	Alternative Section B Length	Alternative Section Bottom	Alternative Section Top	BASE PLATE DATA C	DI Bolt Circle	Thickness	Anchor Bolts Size	Luminaire Arm	Signal Arm	CIDH PILE FOUNDATION Diameter	Depth	Reinforced
			m	mm			m	mm		mm				m		mm	m	
16-3-161	3	161	5.6	273	210	4.55	None			457	445	38	51 ø x 1067 x 152	None	4.6, 6.1	914	2.7	Yes
17-3-161			9.1		168		3.1	203	186					1.8-4.6 [3.7]				
18-3-161			5.2	305	214	6.07	None							None	7.6, [9.1]			
19-3-161			9.1		200		3.1	235	200					1.8-4.6 [3.7]				
19A-3-161			10.7		183		4.6		183					1.8-4.6 [4.6]				
23-3-161			5.2		245		None							None	10.7			
24-3-161			9.1		200		3.1	235	200					1.8-4.6 [3.7]				
24A-3-161			10.7		183		4.6		183					1.8-4.6 [4.6]				
26-3-161			9.1	308	203	7.94	3.1	238	203					1.8-4.6 [3.7]	12.2, [13.7]			
26A-3-161			10.7		186		4.6		186					1.8-4.6 [4.6]				
27-3-161			5.2		248		None							None				

[ ] Indicates arm length to be used unless otherwise noted on plans.

STATE OF CALIFORNIA
DEPARTMENT OF TRANSPORTATION

ELECTRICAL SYSTEMS (SIGNAL AND LIGHTING STANDARD CASE 3 ARM LOADING WIND VELOCITY=161 km/h ARM LENGTHS 4.6 m TO 13.7 m)

NO SCALE

ALL DIMENSIONS ARE IN MILLIMETERS UNLESS OTHERWISE SHOWN

RSP ES-7E DATED OCTOBER 5, 2007 SUPERSEDES RSP ES-7E DATED JANUARY 24, 2005 AND STANDARD PLAN ES-7E DATED JULY 1, 2004-PAGE 455 OF THE STANDARD PLANS BOOK DATED JULY 2004.

REVISED STANDARD PLAN RSP ES-7E

2004 REVISED Std PLAN RSP ES-7E

6-19-07

DIST	COUNTY	ROUTE	KILOMETER POST TOTAL PROJECT	SHEET NO.	TOTAL SHEETS
11	SD	5,805	R49.9/R51.7, 42.6/46.5	603	886

REGISTERED CIVIL ENGINEER

October 5, 2007
PLANS APPROVAL DATE

Registered Professional Engineer — Stanley P. Johnson — No. C57793 — Exp. 3-31-08 — CIVIL — State of California

The State of California or its officers or agents shall not be responsible for the accuracy or completeness of electronic copies of this plan sheet.

To get to the Caltrans web site, go to: http://www.dot.ca.gov

Caltrans Metric

To accompany plans dated 9-27-10

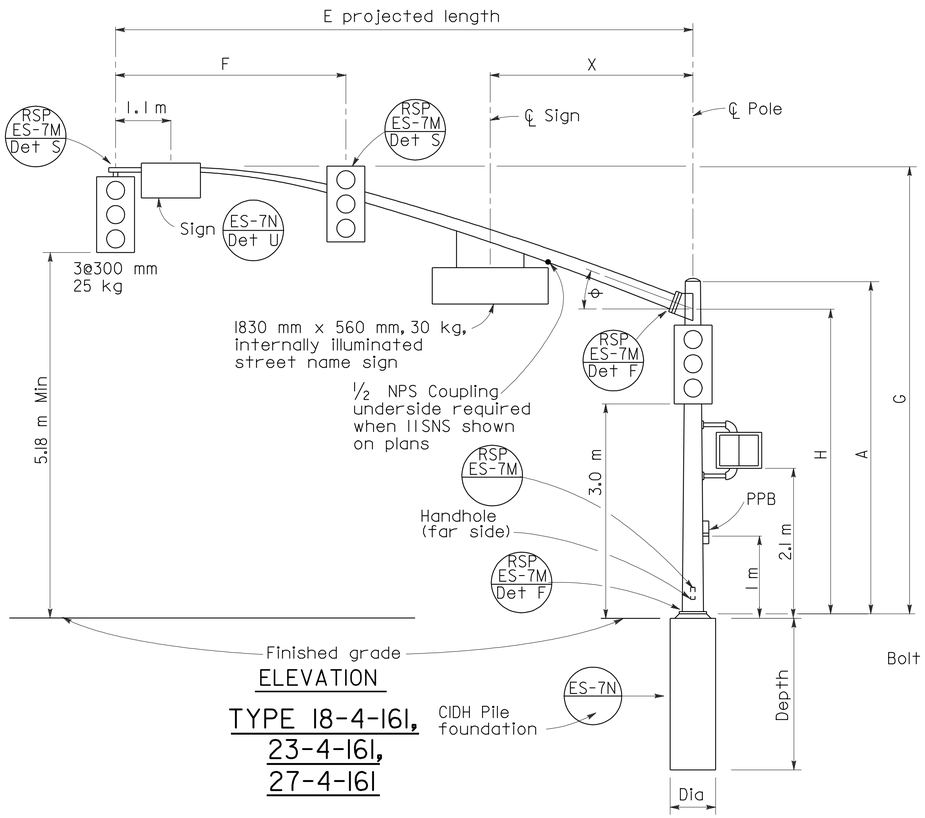

ELEVATION

TYPE 18-4-161, 23-4-161, 27-4-161

HIGH STRENGTH CAP SCREWS

16 - 11NC - 45
Length (mm)
Threads (per inch)
Size (mm)

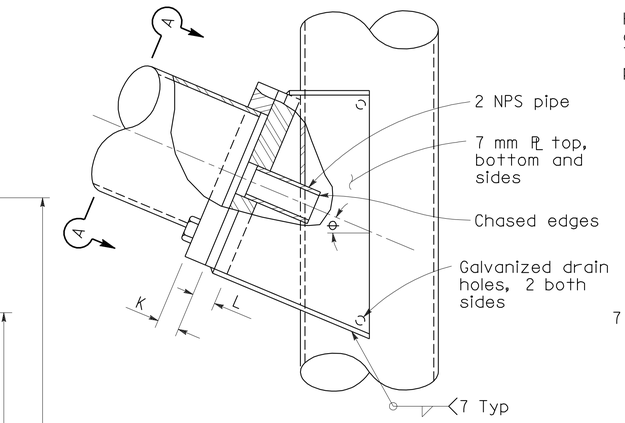

ELEVATION

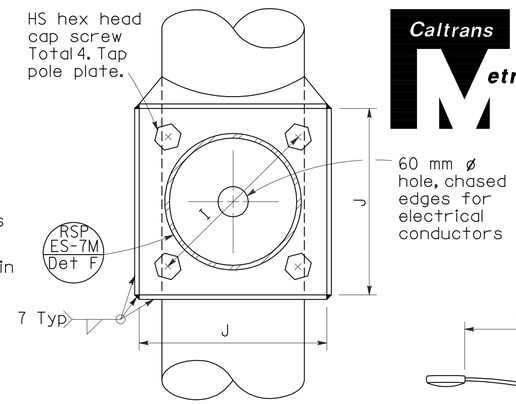

SECTION A-A

SIGNAL ARM CONNECTION DETAILS

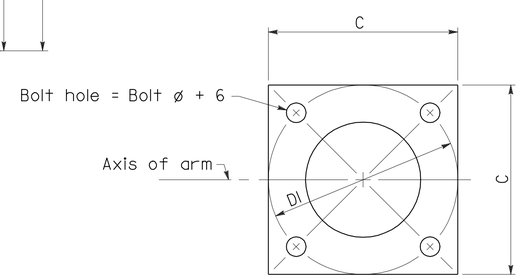

BASE PLATE

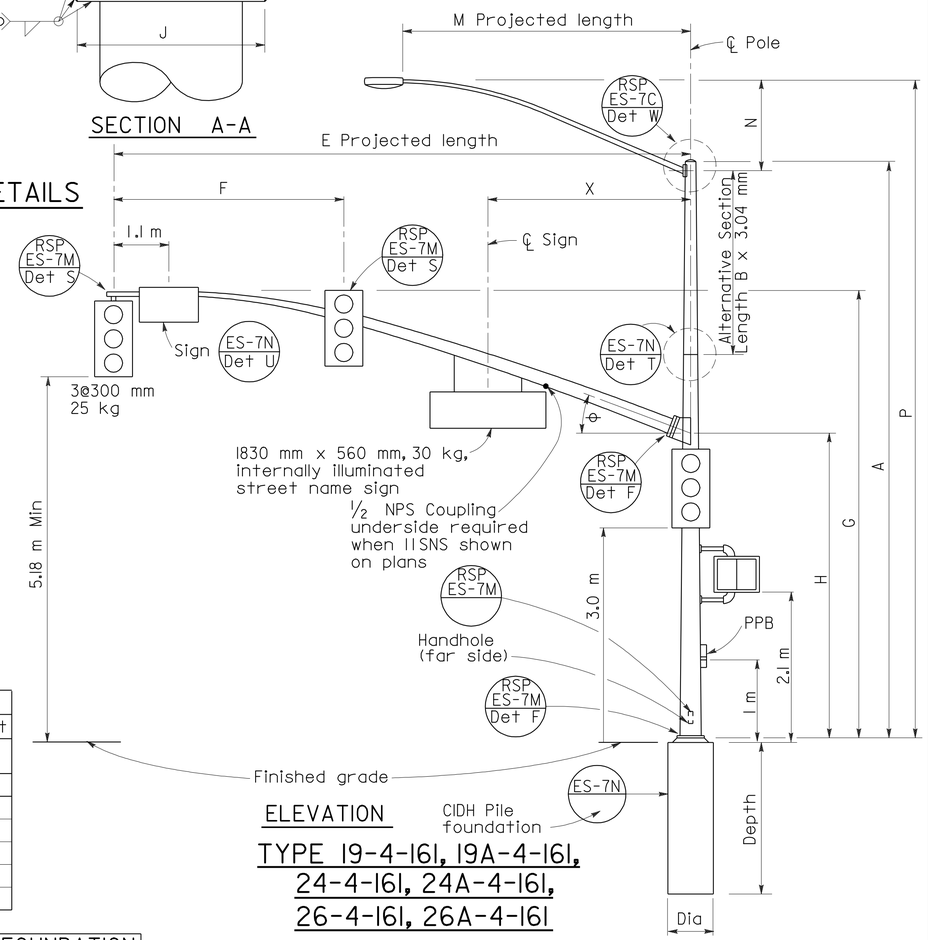

ELEVATION

TYPE 19-4-161, 19A-4-161, 24-4-161, 24A-4-161, 26-4-161, 26A-4-161

SIGNAL ARM DATA												
E Projected Length	F Min Spacing	G Mounting Height	H	Min OD At Pole	Thickness	I Bolt Circle	HS Cap Screws	J Plate Size	K Arm PL Thickness	L Pole PL Thickness	θ	X Max
m				mm								m
7.6	3.1	6.9 ±	4.9	186	6.07	305	32-7NC-76	305	32	38	23°	3.2
9.1	3.7	7.0 ±		203								
10.7	4.3			221		343		343	38	45	21°	
12.2	4.6			238							15°	4.0
13.7		7.2 ±		260								

LUMINAIRE ARM DATA					
M Projected Length	N Rise	Min OD at Pole	Thickness	P Mounting Height 9.1 Pole	P Mounting Height 10.7 Pole
m	mm			m	
1.8	610 ±	83	3.04	9.5 ±	11.1 ±
2.4	760 ±	89		9.7 ±	11.3 ±
3.1	990 ±	98		9.9 ±	11.5 ±
3.7	1290 ±			10.2 ±	11.8 ±
4.6	1450 ±	108		10.4 ±	12.0 ±

Pole Type	Load Case	Wind Velocity km/h	POLE DATA: A Height	Min OD Base	Min OD Top	Thickness	Alternative Section B Length	Alternative Section Bottom	Alternative Section Top	BASE PLATE DATA: C	Dl Bolt Circle	Thickness	Anchor Bolts Size	Luminaire Arm	Signal Arm	CIDH PILE FOUNDATION: Diameter	Depth	Reinforced
			m	mm			m	mm		mm				m		mm	m	
18-4-161	4	161	5.2	305	229	6.07	None	238		457	457	38	51ø x 1067 x 152	None	7.6, 9.1	914	2.7	Yes
19-4-161			9.1		203		3.1		203					1.8-4.6 3.7				
19A-4-161			10.7		186		4.6		186					1.8-4.6 4.6				
23-4-161			5.2		229		None							None	10.7			
24-4-161			9.1		203		3.1	238	203					1.8-4.6 3.7				
24A-4-161			10.7		186		4.6		186					1.8-4.6 4.6				
26-4-161			9.1	318	203	7.94	3.1	248	213					1.8-4.6 3.7	12.2, 13.7			
26A-4-161			10.7		186		4.6		196					1.8-4.6 4.6				
27-4-161			5.2		248		None							None				

☐ Indicates arm length to be used unless otherwise noted on plans.

STATE OF CALIFORNIA
DEPARTMENT OF TRANSPORTATION

ELECTRICAL SYSTEMS (SIGNAL AND LIGHTING STANDARD CASE 4 ARM LOADING WIND VELOCITY=161 km/h ARM LENGTHS 7.6 m TO 13.7 m)

NO SCALE

ALL DIMENSIONS ARE IN MILLIMETERS UNLESS OTHERWISE SHOWN

RSP ES-7F DATED OCTOBER 5, 2007 SUPERSEDES RSP ES-7F DATED JANUARY 24, 2005 AND STANDARD PLAN ES-7F DATED JULY 1, 2004-PAGE 456 OF THE STANDARD PLANS BOOK DATED JULY 2004.

REVISED STANDARD PLAN RSP ES-7F

2004 REVISED Std PLAN RSP ES-7F

6-19-07

DIST	COUNTY	ROUTE	KILOMETER POST TOTAL PROJECT	SHEET NO.	TOTAL SHEETS
11	SD	5,805	R49.9/R51.7, 42.6/46.5	604	886

REGISTERED CIVIL ENGINEER

October 5, 2007
PLANS APPROVAL DATE

REGISTERED PROFESSIONAL ENGINEER Stanley P. Johnson No. C57793 Exp. 3-31-08 CIVIL STATE OF CALIFORNIA

The State of California or its officers or agents shall not be responsible for the accuracy or completeness of electronic copies of this plan sheet.

To get to the Caltrans web site, go to: http://www.dot.ca.gov

To accompany plans dated 9-27-10

2004 REVISED Std PLAN RSP ES-7G

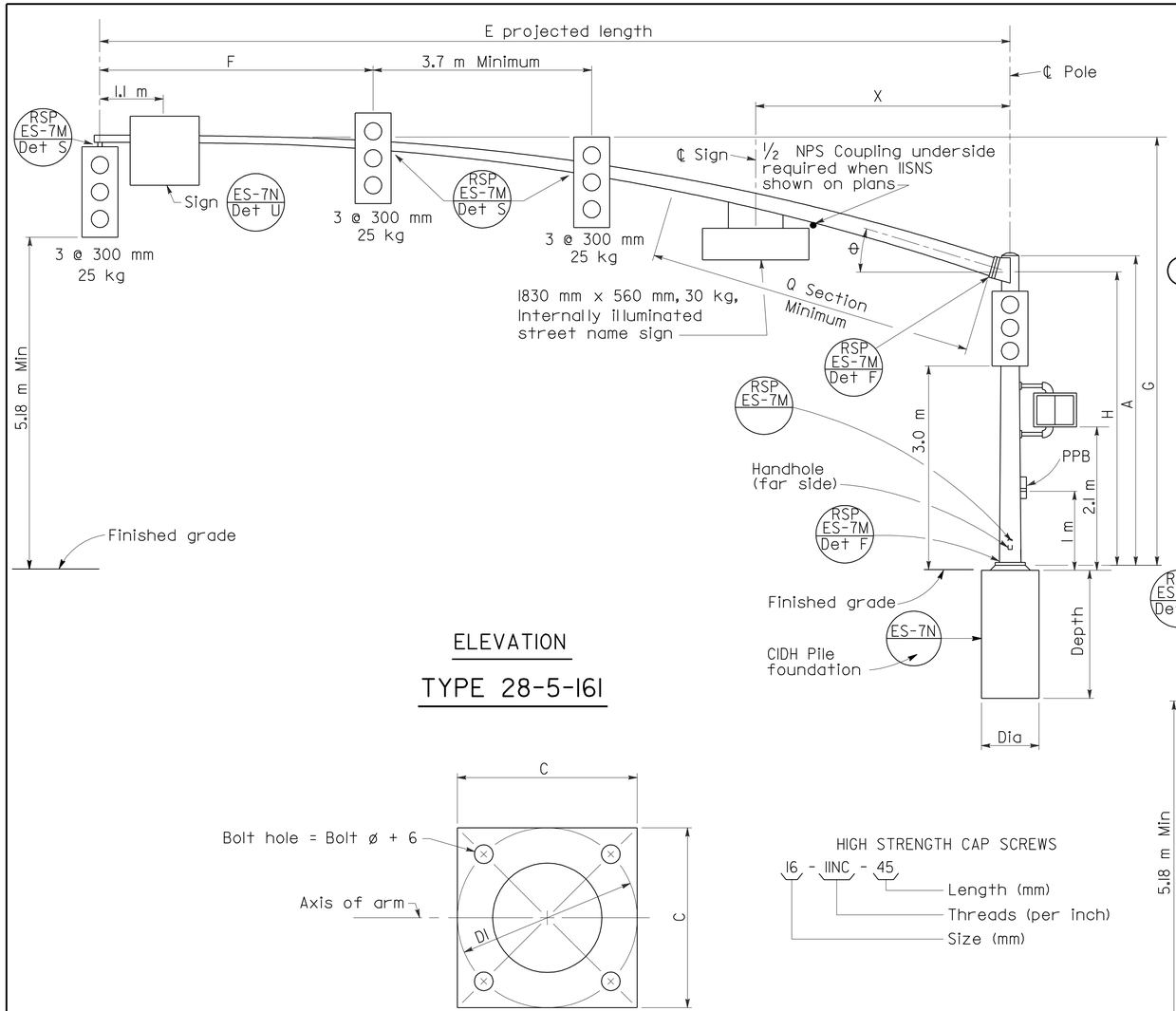

ELEVATION

TYPE 28-5-161

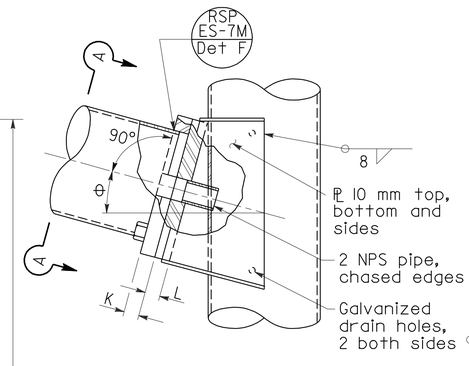

ELEVATION

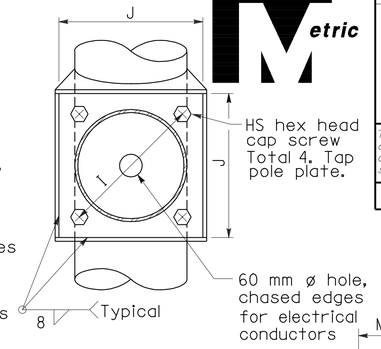

SECTION A-A

SIGNAL ARM CONNECTION DETAILS

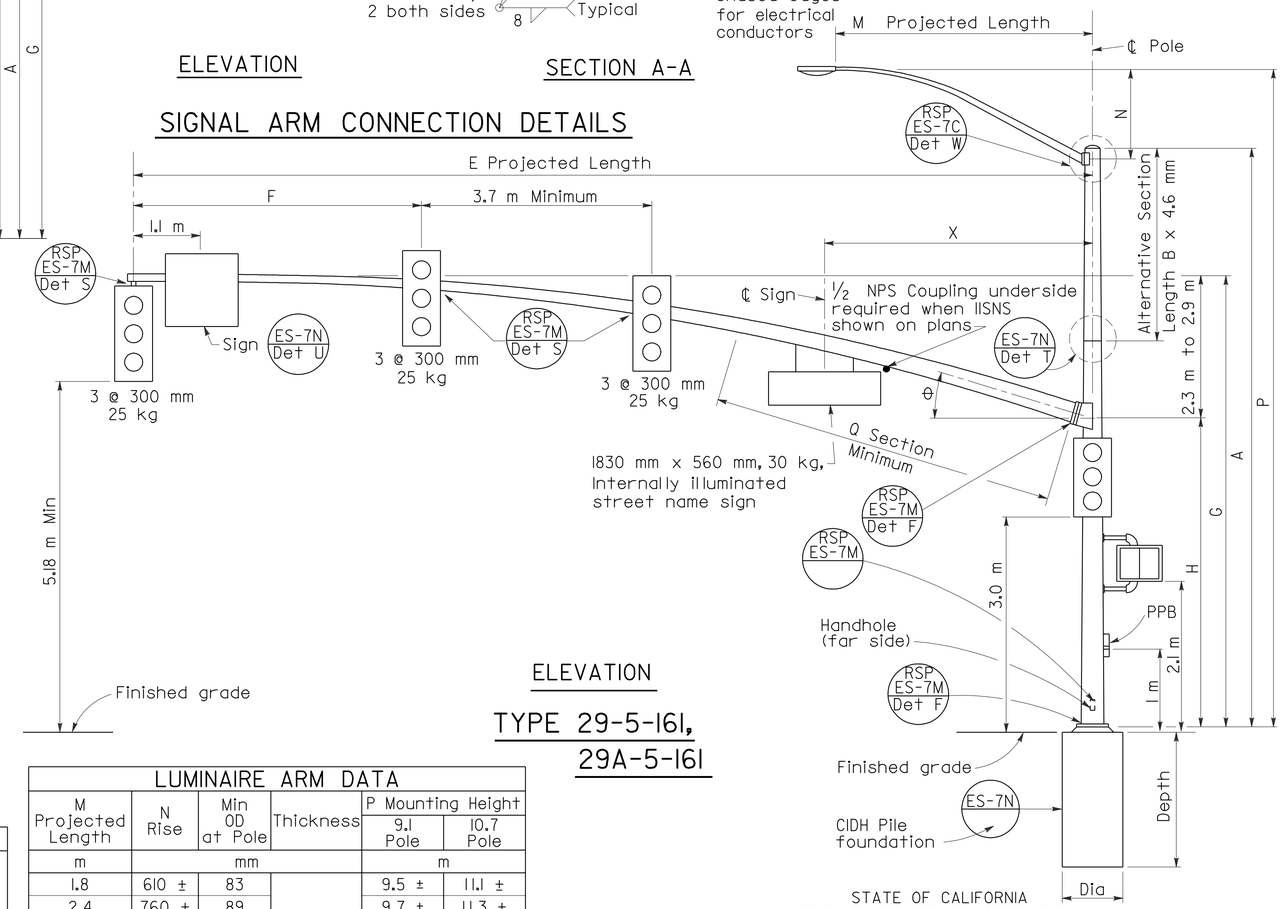

ELEVATION

TYPE 29-5-161, 29A-5-161

BASE PLATE

HIGH STRENGTH CAP SCREWS

16 - 11NC - 45
- Length (mm)
- Threads (per inch)
- Size (mm)

SIGNAL ARM DATA														
E Projected Length	F Min Spacing	G Mounting Height	H	Min OD At Pole	Thickness	I Bolt Circle	HS Cap Screws	J Plate Size	K Arm PL Thickness	L Pole PL Thickness	θ	Q SECTION Length	Q SECTION Thickness	X Max
m				mm								m	mm	m
15.2	4.6	7.2 to 7.8	4.9	291	4.6	406	38-6NC-83	406	45	45	15°	5.5	6.1	4.3
16.8				311								7.0		

LUMINAIRE ARM DATA					
M Projected Length	N Rise	Min OD at Pole	Thickness	P Mounting Height 9.1 Pole	P Mounting Height 10.7 Pole
m	mm			m	
1.8	610 ±	83	3.04	9.5 ±	11.1 ±
2.4	760 ±	89		9.7 ±	11.3 ±
3.1	990 ±	98		9.9 ±	11.5 ±
3.7	1290 ±			10.2 ±	11.8 ±
4.6	1450 ±	108		10.4 ±	12.0 ±

Pole Type	Load Case	Wind Velocity km/h	POLE DATA: A Height	Min OD Base	Min OD Top	Thickness	Alternative Section B Length	Alternative Section Bottom	Alternative Section Top	BASE PLATE DATA: C	DI Bolt Circle	Thickness	Anchor Bolts Size	Luminaire Arm	Signal Arm	CIDH PILE FOUNDATION: Diameter	Depth	Reinforced
			m	mm			m	mm		mm				m		mm	m	
28-5-161	5	161	5.2	356	297	7.94	None	286	251	533	533	45	51 ø x 1067 x 152	None	15.2, 16.8	914	2.8	Yes
29-5-161			9.1		251		3.1							1.8 - 4.6 [4.6]				
29A-5-161			10.7		233		4.6		233	584	584							

☐ Indicates arm length to be used unless otherwise noted on plans.

STATE OF CALIFORNIA
DEPARTMENT OF TRANSPORTATION

ELECTRICAL SYSTEMS (SIGNAL AND LIGHTING STANDARD CASE 5 ARM LOADING WIND VELOCITY=161 km/h ARM LENGTHS 15.2 m TO 16.8 m)

NO SCALE

ALL DIMENSIONS ARE IN MILLIMETERS UNLESS OTHERWISE SHOWN

RSP ES-7G DATED OCTOBER 5, 2007 SUPERSEDES RSP ES-7G DATED JANUARY 24, 2005 AND STANDARD PLAN ES-7G DATED JULY 1, 2004-PAGE 457 OF THE STANDARD PLANS BOOK DATED JULY 2004.

REVISED STANDARD PLAN RSP ES-7G

6-19-07

To accompany plans dated 9-27-10

Caltrans Metric

DIST	COUNTY	ROUTE	KILOMETER POST TOTAL PROJECT	SHEET NO.	TOTAL SHEETS
11	SD	5,805	R49.9/R51.7, 42.6/46.5	605	886

REGISTERED CIVIL ENGINEER

October 5, 2007
PLANS APPROVAL DATE

REGISTERED PROFESSIONAL ENGINEER Stanley P. Johnson No. C57793 Exp. 3-31-08 CIVIL STATE OF CALIFORNIA

The State of California or its officers or agents shall not be responsible for the accuracy or completeness of electronic copies of this plan sheet.

To get to the Caltrans web site, go to: http://www.dot.ca.gov

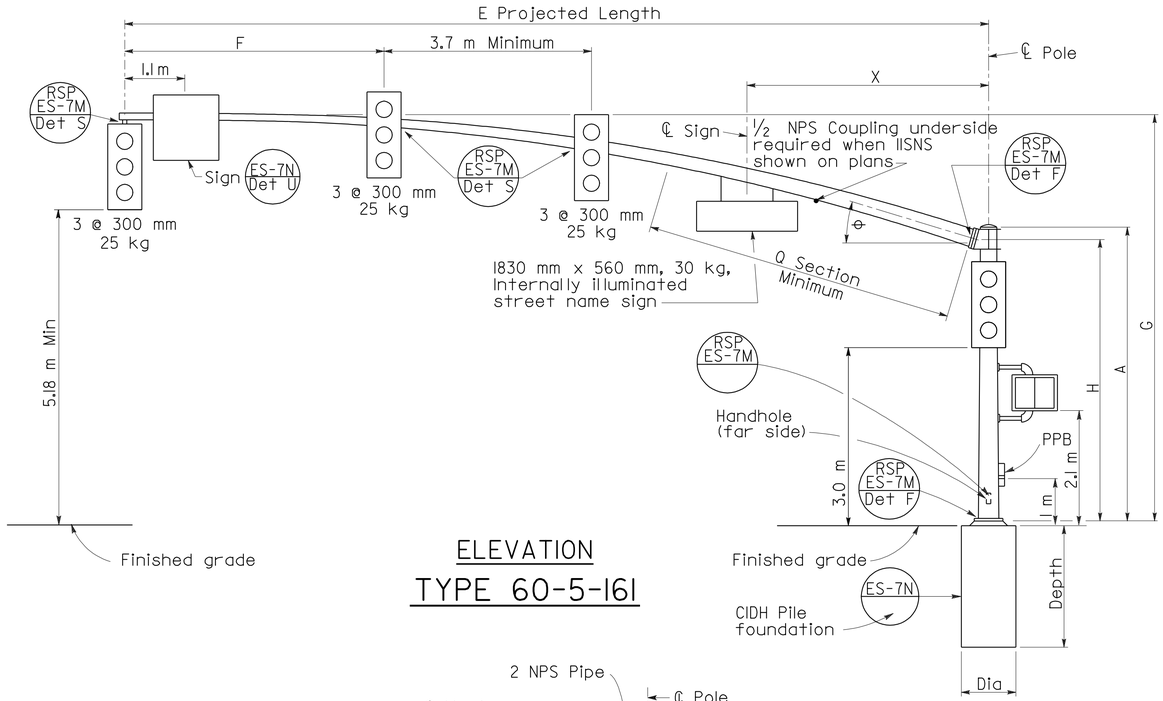

ELEVATION

TYPE 60-5-161

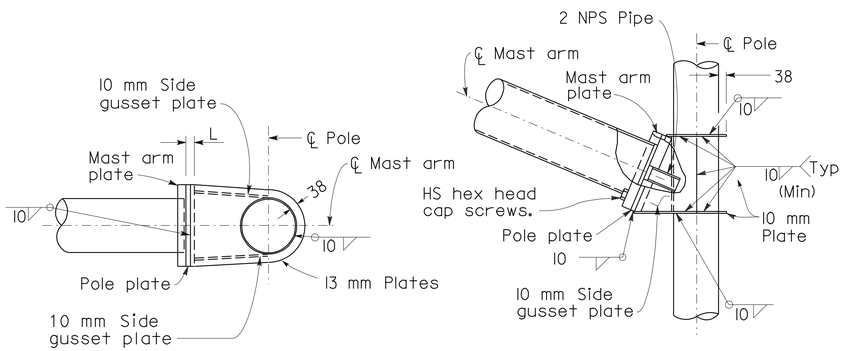

PLAN

ELEVATION

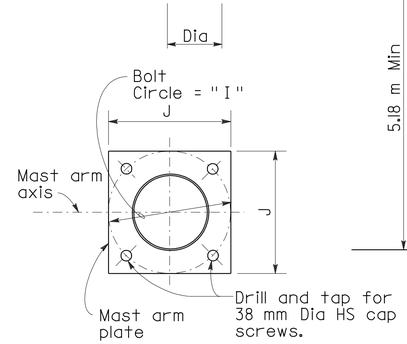

MAST ARM PLATE

SIGNAL ARM CONNECTION DETAIL

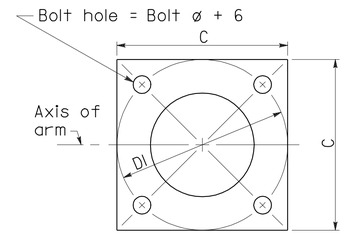

BASE PLATE

HIGH STRENGTH CAP SCREWS

16 - 11NC - 45
- Length (mm)
- Threads (per inch)
- Size (mm)

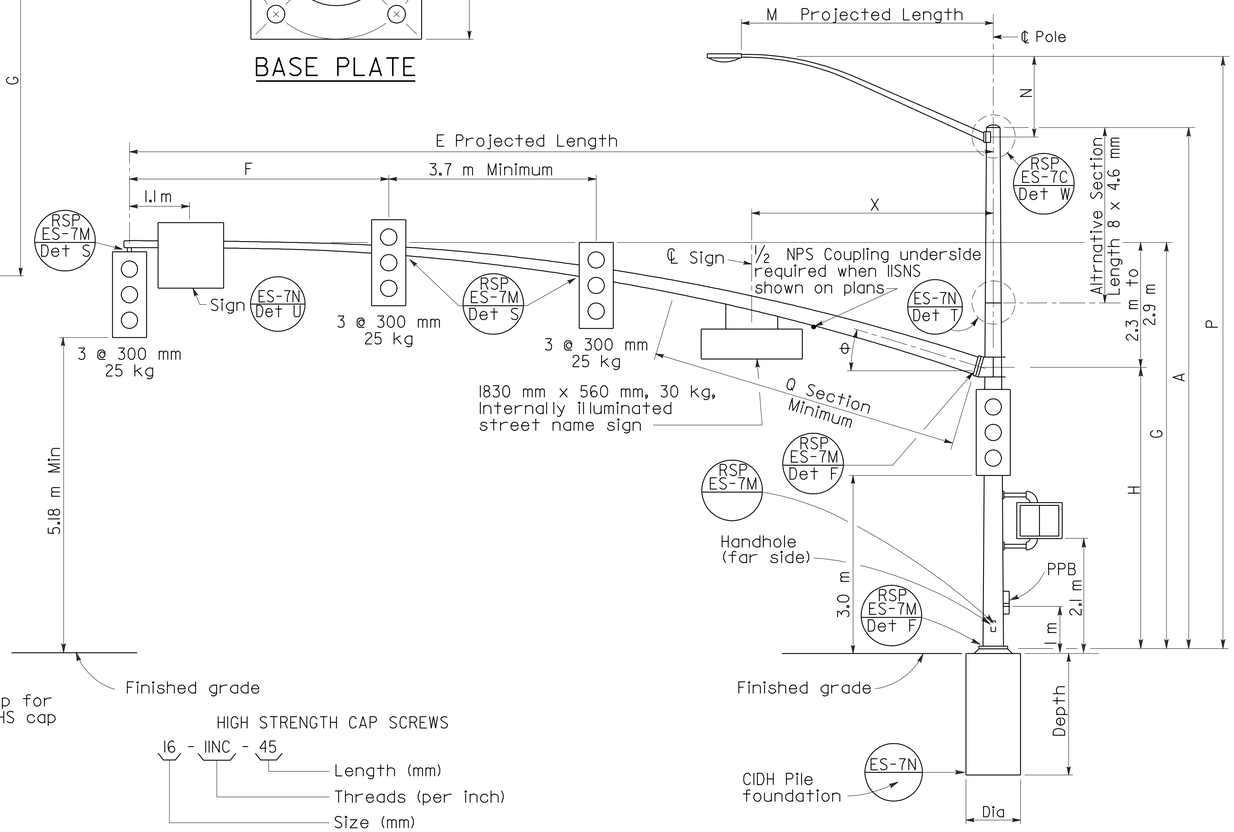

ELEVATION

TYPE 61-5-161, 61A-5-161

NOTE

The radial separation between the face of the pole and the adjacent insides of the top and bottom gusset plates shall not exceed 5 mm. Fillet weld size to be increased by amount of gap.

SIGNAL ARM DATA

E Projected Length	F Min Spacing	G Mounting Height	H	Min OD At Pole	Thickness	I Bolt Circle	HS Cap Screws	J Plate Size	K Arm PL Thickness	L Pole PL Thickness	θ	Q SECTION Length	Q SECTION Thickness	X Max
m				mm								m	mm	m
18.2	4.6	7.2 to 7.8	4.9	343	4.6	508	38-6NC-102	508	51	51	15°	7.3	6.1	4.3
19.8				343	6.1							8.8	7.9	

LUMINAIRE ARM DATA

M Projected Length	N Rise	Min OD at Pole	Thickness	P Mounting Height 9.1 Pole	P Mounting Height 10.7 Pole
m	mm			m	
1.8	610 ±	83	3.04	9.5 ±	11.1 ±
2.4	760 ±	89		9.7 ±	11.3 ±
3.1	990 ±	98		9.9 ±	11.5 ±
3.7	1290 ±			10.2 ±	11.8 ±
4.6	1450 ±	108		10.4 ±	12.0 ±

Pole Type	Load Case	Wind Velocity km/h	POLE DATA A Height	Min OD Base	Min OD Top	Thickness	BASE PLATE DATA C	DI Bolt Circle	Thickness	Anchor Bolts Size	Luminaire Arm	Signal Arm	CIDH PILE FOUNDATION Diameter	Depth	Reinforced
			m	mm			mm				m		mm	m	
60-5-161	5	161	5.2	406	347	7.94	584	584	51	57 ø x 1524 x 152	None	18.2, 19.8	914	4.9	Yes
61-5-161			9.1		301						1.8-4.6 [4.6]				
61A-5-161			10.7		282										

☐ Indicates arm length to be used unless otherwise noted on plans.

ELECTRICAL SYSTEMS (SIGNAL AND LIGHTING STANDARD CASE 5 ARM LOADING WIND VELOCITY=161 km/h ARM LENGTHS 18.2 m TO 19.8 m)

NO SCALE

ALL DIMENSIONS ARE IN MILLIMETERS UNLESS OTHERWISE SHOWN

RSP ES-7H DATED OCTOBER 5, 2007 SUPERSEDES RSP ES-7H DATED JANUARY 24, 2005 AND STANDARD PLAN ES-7H DATED JULY 1, 2004-PAGE 458 OF THE STANDARD PLANS BOOK DATED JULY 2004.

REVISED STANDARD PLAN RSP ES-7H

2004 REVISED Std PLAN RSP ES-7H

10-1-07

To accompany plans dated 9-27-10

DIST	COUNTY	ROUTE	KILOMETER POST TOTAL PROJECT	SHEET NO.	TOTAL SHEETS
11	SD	5,805	R49.9/R51.7, 42.6/46.5	606	886

Caltrans Metric

REGISTERED CIVIL ENGINEER

October 5, 2007
PLANS APPROVAL DATE

REGISTERED PROFESSIONAL ENGINEER Stanley P. Johnson No. C57793 Exp. 03-31-08 CIVIL STATE OF CALIFORNIA

The State of California or its officers or agents shall not be responsible for the accuracy or completeness of electronic copies of this plan sheet.

To get to the Caltrans web site, go to: http://www.dot.ca.gov

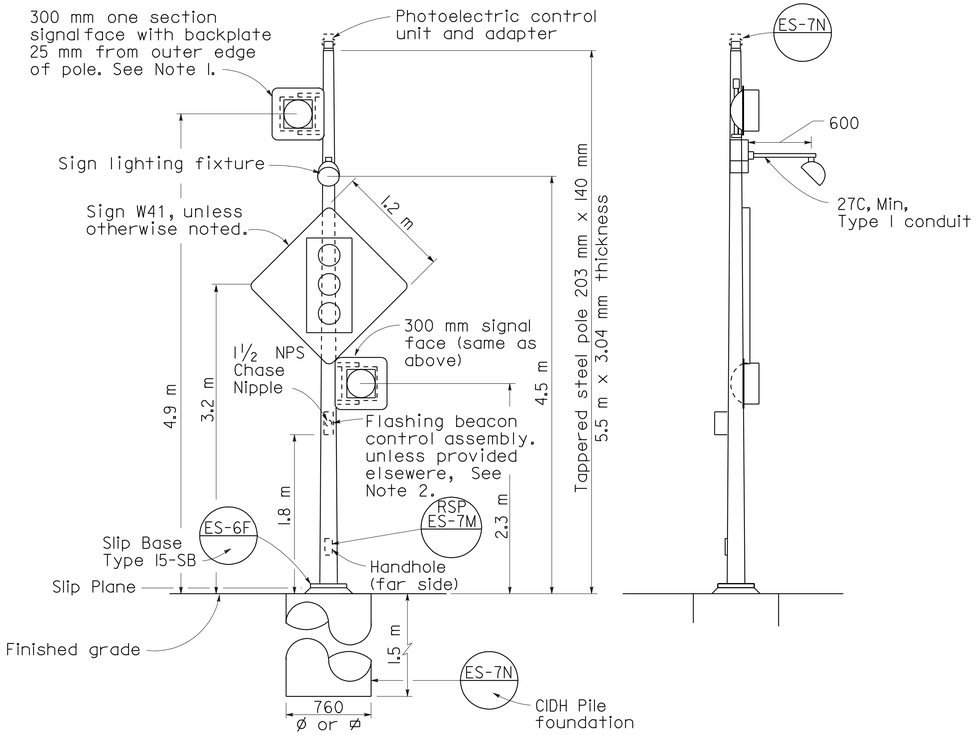

FRONT VIEW

SIDE VIEW

TYPE 15-FBS

ADVANCE FLASHING BEACON WITH SLIP BASE INSTALLATION

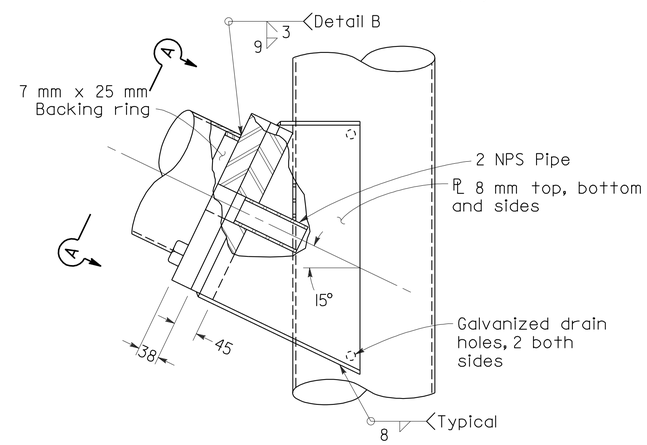

ELEVATION

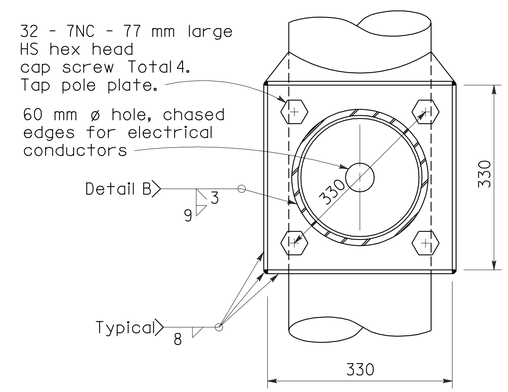

SECTION A-A

SIGNAL ARM CONNECTION DETAILS

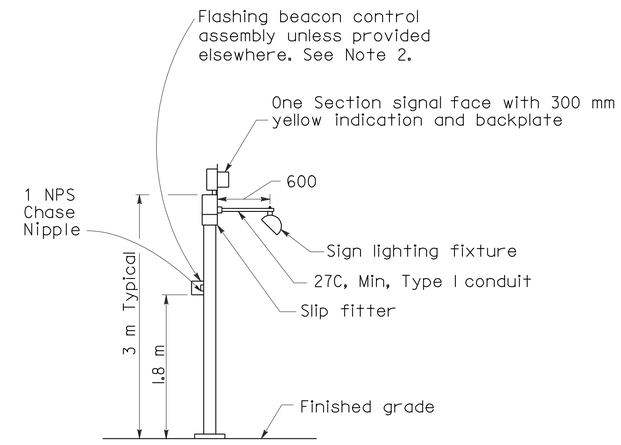

TYPE 1-A, 1-B, 1-C AND 1-D

ADVANCE FLASHING BEACON INSTALLATION

(See Project Plans for type of standard to be installed)

NOTES:

1. See Standard Plans ES-4D and ES-4E for attachment fitting details.
2. For wiring diagram, see Standard Plan ES-3B.

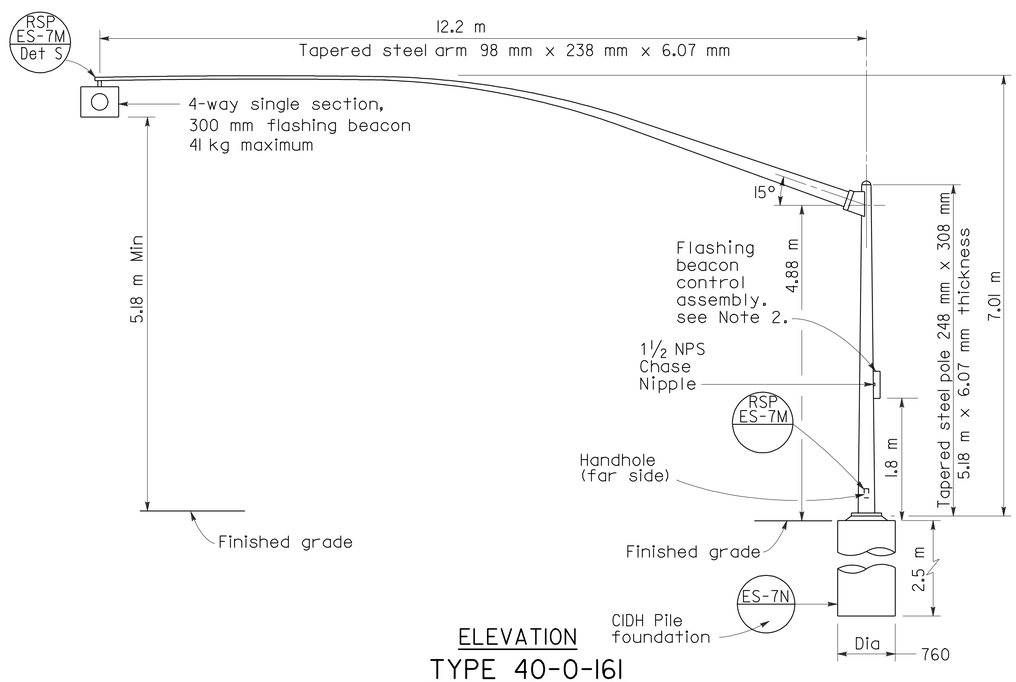

ELEVATION

TYPE 40-0-161

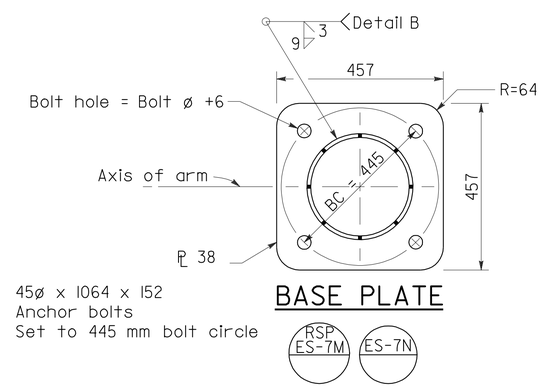

BASE PLATE

HIGH STRENGTH CAP SCREWS

16 - 11NC - 45
- Length (mm)
- Threads (per inch)
- Size (mm)

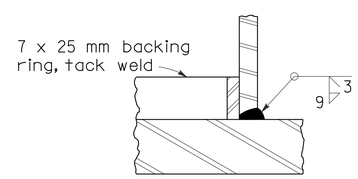

DETAIL B

STATE OF CALIFORNIA
DEPARTMENT OF TRANSPORTATION

ELECTRICAL SYSTEMS (SIGNAL AND LIGHTING STANDARD ADVANCE FLASHING BEACONS)

NO SCALE

ALL DIMENSIONS ARE IN MILLIMETERS UNLESS OTHERWISE SHOWN

RSP ES-7J DATED OCTOBER 5, 2007 SUPERSEDES STANDARD PLAN ES-7J DATED JULY 1, 2004-PAGE 460 OF THE STANDARD PLANS BOOK DATED JULY 2004.

REVISED STANDARD PLAN RSP ES-7J

2004 REVISED Std PLAN RSP ES-7J

10-1-07

To accompany plans dated 9-27-10

Caltrans Metric

DIST	COUNTY	ROUTE	KILOMETER POST TOTAL PROJECT	SHEET NO.	TOTAL SHEETS
11	SD	5,805	R49.9/R51.7, 42.6/46.5	607	886

REGISTERED CIVIL ENGINEER

October 5, 2007
PLANS APPROVAL DATE

REGISTERED PROFESSIONAL ENGINEER Stanley P. Johnson No. C57793 Exp. 03-31-08 CIVIL STATE OF CALIFORNIA

The State of California or its officers or agents shall not be responsible for the accuracy or completeness of electronic copies of this plan sheet.

To get to the Caltrans web site, go to: http://www.dot.ca.gov

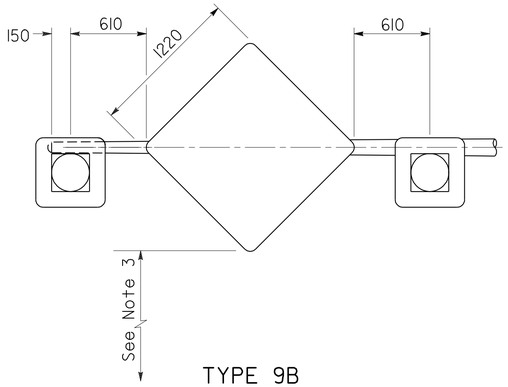

TYPE 9B

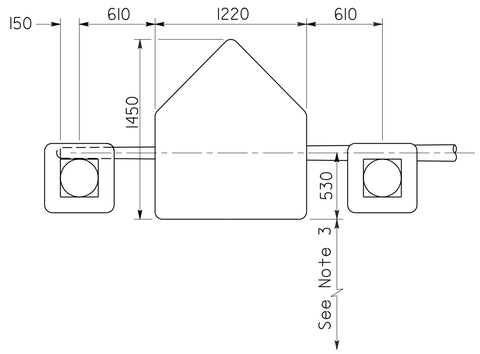

TYPE 9A

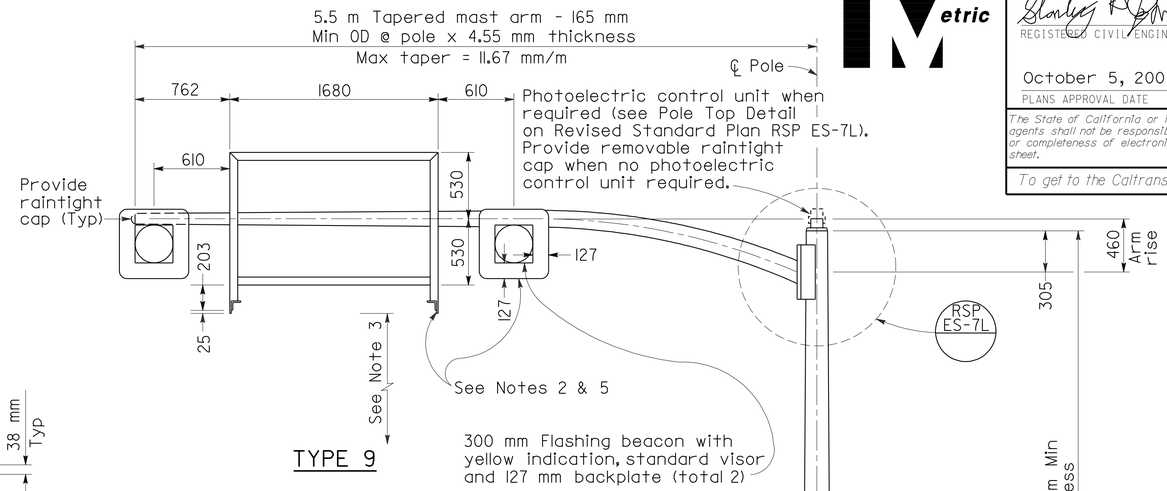

TYPE 9

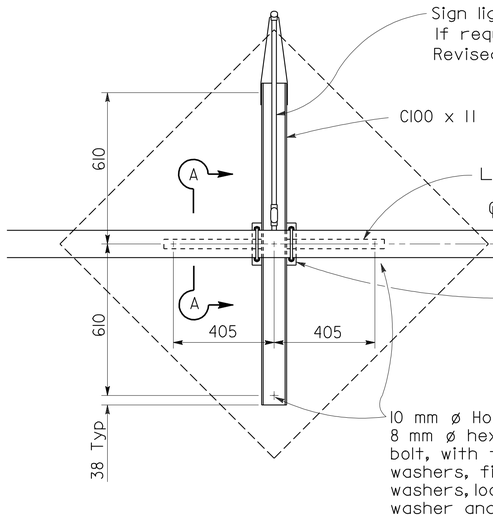

TYPE 9B

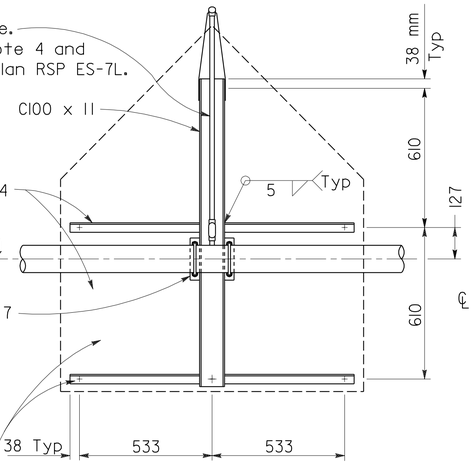

TYPE 9A

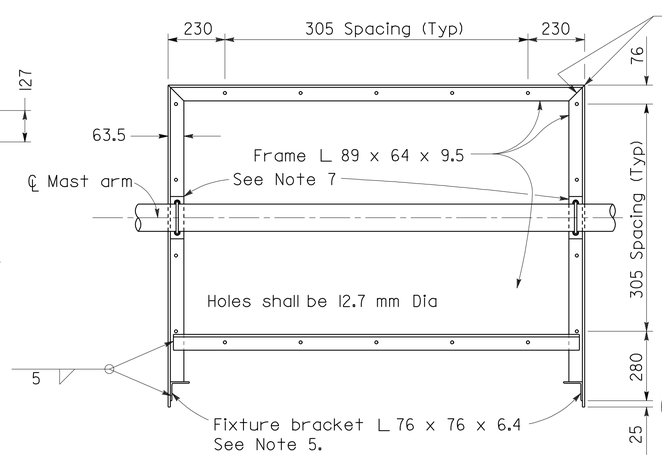

TYPE 9

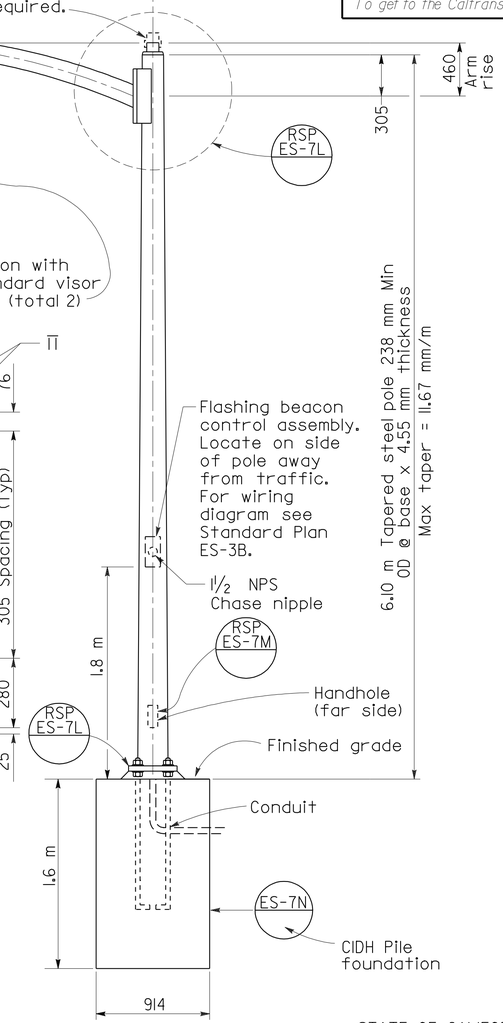

ELEVATION

FRAME DETAILS

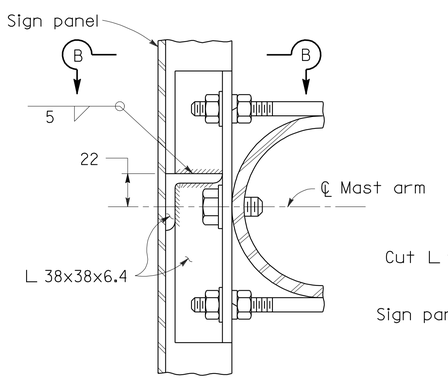

SECTION A-A

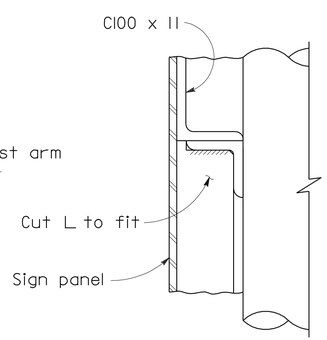

SECTION B-B

TYPE 9B

NOTES:

1. Splices between fluorescent fixture sockets shall be waterproof.
2. Install flashing beacons and sign frame. Flashing beacons shall be MAT mounted on pipe tenon. (See Revised Standard Plan RSP ES-7M, Detail S)
3. Vertical clearance to be 5.2 m minimum between roadway and bottom of signal panel or lighting fixture bracket.
4. Special provisions or plans will indicate when sign lighting fixture is required on Type 9A or 9B sign frames.
5. Type 9 sign frames shall be provided with a 910 mm fluorescent fixture. For fluorescent lighting details see Standard Plan ES-15B.
6. Anchor bolts shall be ASTM A-307.
7. See Revised Standard Plan RSP ES-7L for sign frame mounting details.

STATE OF CALIFORNIA
DEPARTMENT OF TRANSPORTATION

ELECTRICAL SYSTEMS (SIGNAL AND LIGHTING STANDARD CANTILEVER FLASHING BEACON TYPES 9, 9A AND 9B)

NO SCALE

ALL DIMENSIONS ARE IN MILLIMETERS UNLESS OTHERWISE SHOWN

RSP ES-7K DATED OCTOBER 5, 2007 SUPERSEDES STANDARD PLAN ES-7K DATED JULY 1, 2004-PAGE 461 OF THE STANDARD PLANS BOOK DATED JULY 2004.

REVISED STANDARD PLAN RSP ES-7K

2004 REVISED Std PLAN RSP ES-7K

6-19-07

DIST	COUNTY	ROUTE	KILOMETER POST TOTAL PROJECT	SHEET NO.	TOTAL SHEETS
11	SD	5,805	R49.9/R51.7, 42.6/46.5	608	886

REGISTERED CIVIL ENGINEER

October 5, 2007
PLANS APPROVAL DATE

REGISTERED PROFESSIONAL ENGINEER Stanley P. Johnson No. C57793 Exp. 03-31-08 CIVIL STATE OF CALIFORNIA

The State of California or its officers or agents shall not be responsible for the accuracy or completeness of electronic copies of this plan sheet.

To get to the Caltrans web site, go to: http://www.dot.ca.gov

To accompany plans dated 9-27-10

NOTE:
Lighting details not shown see Note 5 on Revised Standard Plan RSP ES-7K. Mounting to channel shown, mounting to angle similar.

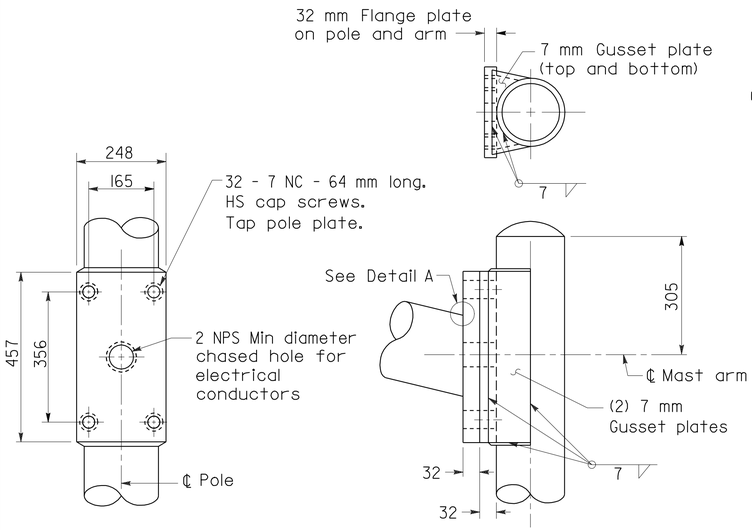

MAST ARM CONNECTION DETAILS

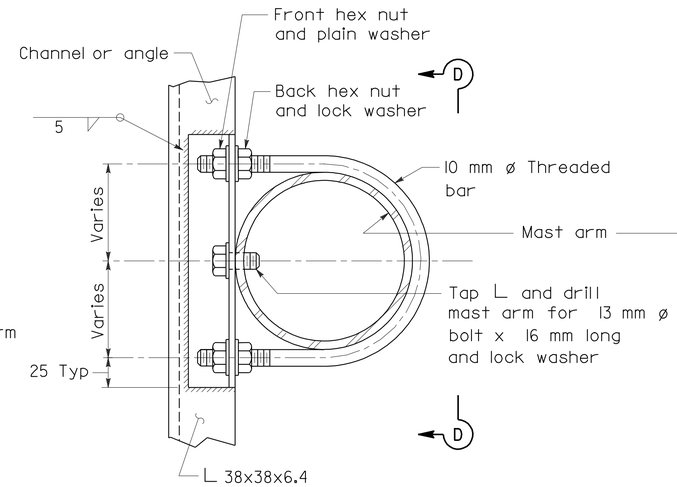

NOTE
Tighten front hex nuts first, then tighten back hex nuts.

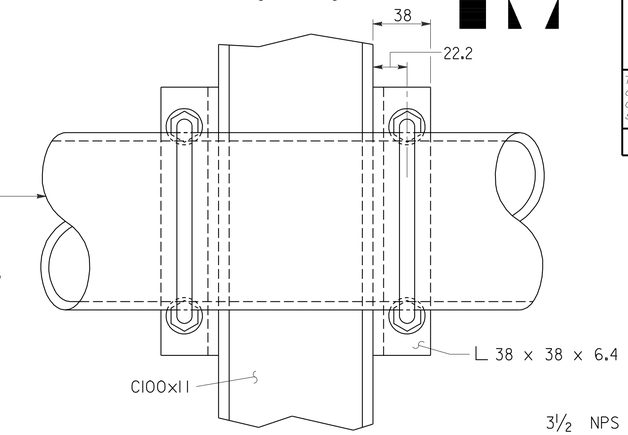

VIEW D-D

SIGN FRAME MOUNTING DETAILS
All types

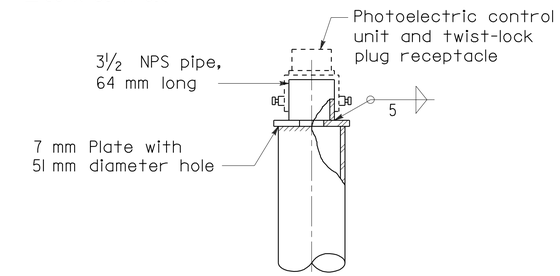

POLE TOP DETAIL

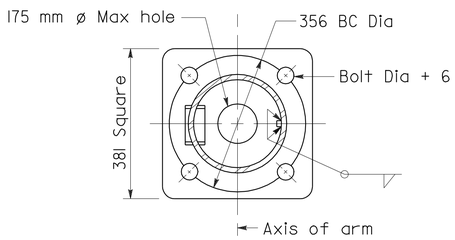

PLAN

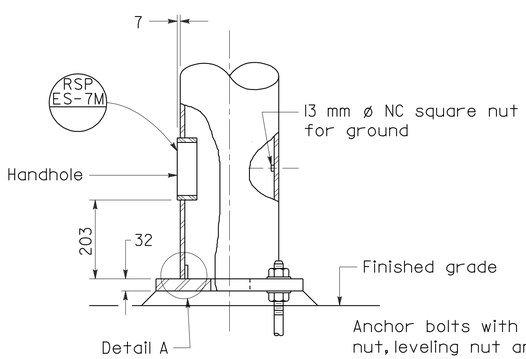

ELEVATION

BASE PLATE AND ANCHORAGE DETAILS

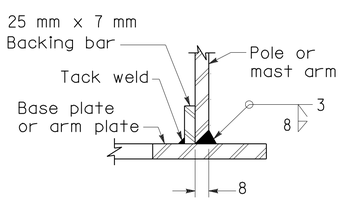

DETAIL A

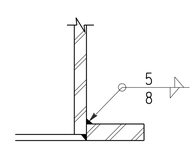

ALTERNATIVE DETAIL A
For pole-base plate only.

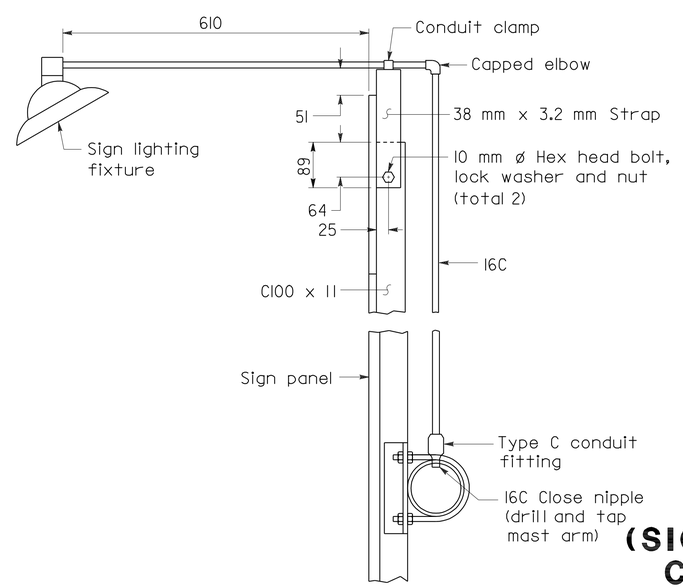

SIGN LIGHTING FIXTURE TYPES 9A AND 9B
See Note 4 on Revised Standard Plan RSP ES-7K.

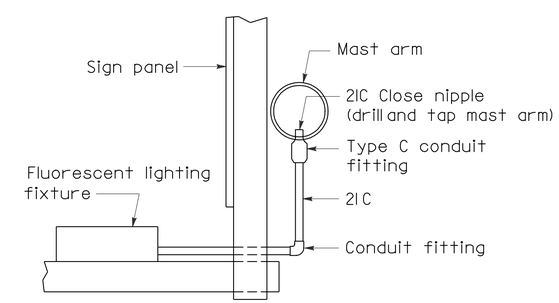

FLUORESCENT LIGHTING FIXTURE TYPE 9 FRAME

STATE OF CALIFORNIA
DEPARTMENT OF TRANSPORTATION

ELECTRICAL SYSTEMS (SIGNAL, AND LIGHTING STANDARD CANTILEVER FLASHING BEACON TYPES 9, 9A AND 9B)

NO SCALE

ALL DIMENSIONS ARE IN MILLIMETERS UNLESS OTHERWISE SHOWN

RSP ES-7L DATED OCTOBER 5, 2007 SUPERSEDES STANDARD PLAN ES-7L DATED JULY 1, 2004-PAGE 462 OF THE STANDARD PLANS BOOK DATED JULY 2004.

REVISED STANDARD PLAN RSP ES-7L

2004 REVISED Std PLAN RSP ES-7L

6-19-07

DIST	COUNTY	ROUTE	KILOMETER POST TOTAL PROJECT	SHEET NO.	TOTAL SHEETS
11	SD	5,805	R49.9/R51.7, 42.6/46.5	609	886

REGISTERED CIVIL ENGINEER

April 28, 2005
PLANS APPROVAL DATE

REGISTERED PROFESSIONAL ENGINEER Tillat Sattar No. C42892 Exp. 03-31-2006 CIVIL STATE OF CALIFORNIA

The State of California or its officers or agents shall not be responsible for the accuracy or completeness of electronic copies of this plan sheet.

To get to the Caltrans web site, go to: http://www.dot.ca.gov

To accompany plans dated 9-27-10

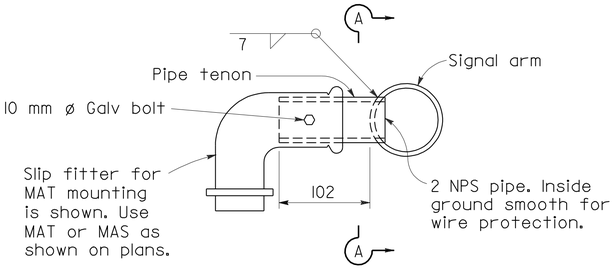

ES-4D

DETAIL S-SIDE TENON

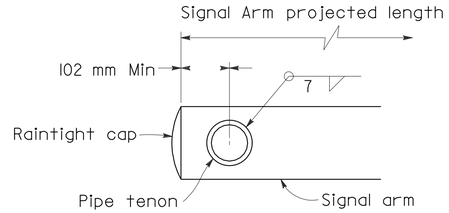

SECTION A-A

PIPE TENONS

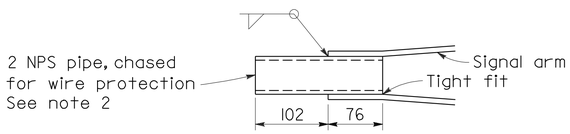

DETAIL TS-TIP TENON

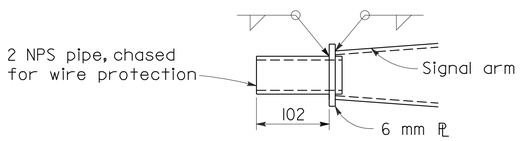

DETAIL TL-TIP TENON

This detail supersedes Detail S when so designated

IDENTIFICATION NUMBER

Attach a stamped metal tag with each pole's indentification number to shaft above handhole. 7 mm high number minimum.

A similar tag shall be attached to the top of the signal mast arm near the pole plate.

Sample Identification Number

Type — Load case — Design wind velocity (km/h) — Signal arm length maximum (m) — Standard plan year — Only for poles with fatigue resistant welds

19A - 3 - 161 - 9.1 - 04 - F

Use SL for special load case

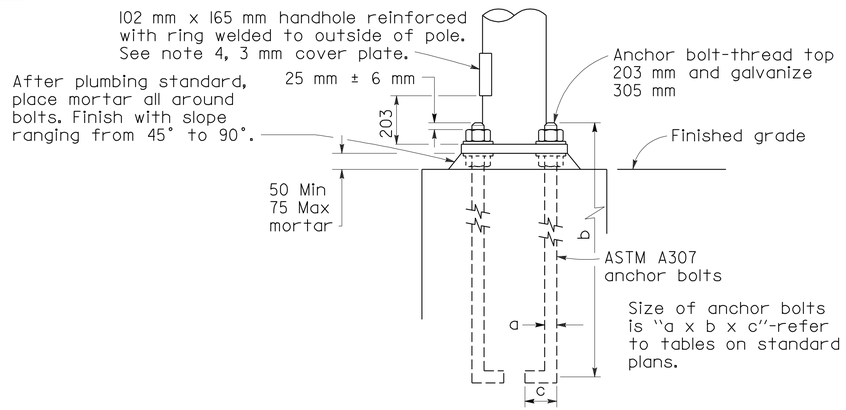

HANDHOLE AND ANCHORAGE DETAILS

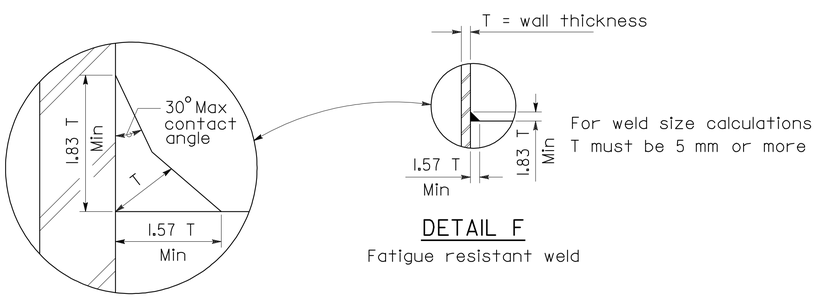

DETAIL F

Fatigue resistant weld

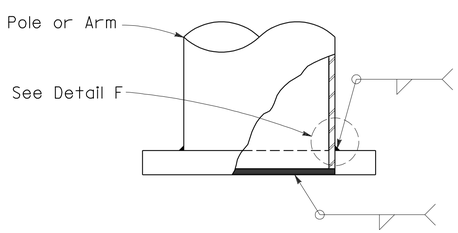

Weld Size	Wall Thickness
7	3.04
8	4.55
10	6.07
11	7.94
4	3.04
5	4.55
7	6.07
8	7.94

ELEVATION A

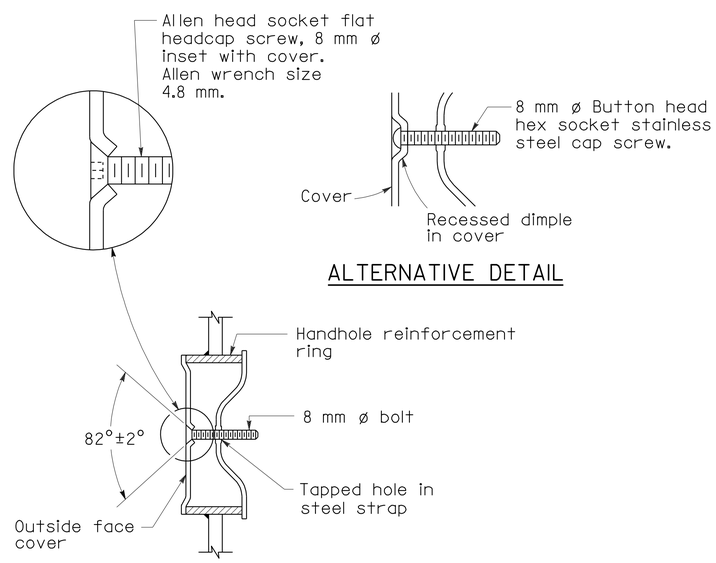

ALTERNATIVE DETAIL

TAMPER RESISTANT HANDHOLE COVER

GENERAL NOTES

SPECIFICATIONS

DESIGN : AASHTO Standard specifications for structural supports for highway signs, luminaires and traffic signals dated 2001.

Loading

WIND LOADINGS : 161 km/h

Unit Stresses

STRUCTURAL STEEL : fy = 330 MPa tapered steel tube
fy = 250 MPa unless otherwise noted

CONSTRUCTION : Standard Specifications and the Special Provisions

NOTES

1. ASTM A307 anchor bolts are required for each pole. Provide a hex nut, leveling nut and 2 washers for each bolt.
2. Luminaire arms shall be round, tapered steel tubes, taper of 11.45 mm/m to 11.66 mm/m with an end section 60 mm OD for mounting hardware. Extensions of 2 NPS Standard pipe and 178 mm long may be used at the option of the manufacturer. When low pressure sodium luminaires are required, the extension shall be 381 mm.
3. Signal arms shall be round, tapered steel tubes, maximum taper 11.66 mm/m.
4. Handhole reinforcement ring shall be 6 mm x 51 mm for 3.04 mm to 6.07 mm poles, 10 mm x 51mm for 7.94 mm.
5. Handholes for lighting standards shall be located on the downstream side of the pole unless otherwise noted on the plans.
6. Detail F, fatigue resistant weld, is required at signal arm plate and pole base plate.
7. Cap screws shall be tightened by the turn-of-nut method 1/3 turn to form a snug tight condition. No washer will be required.
8. During pole erection, the post shall be raked as necessary with the use of leveling nuts to provide a plumb pole axis.
9. When Project Plans show a lesser number of signs and signals, the Project Plans shall prevail.
10. Outside diameter, wall thickness, and corresponding section properties at the base of traffic signal poles and arms as shown in the Standard Plans are minimums. Unless otherwise specified, alternative sections require approval by the Engineer.

STATE OF CALIFORNIA
DEPARTMENT OF TRANSPORTATION

ELECTRICAL SYSTEMS (SIGNAL AND LIGHTING STANDARDS DETAILS No. 1)

NO SCALE

ALL DIMENSIONS ARE IN MILLIMETERS UNLESS OTHERWISE SHOWN

RSP ES-7M DATED APRIL 28, 2005 SUPERSEDES RSP ES-7M DATED JANUARY 24,2005 AND STANDARD PLAN ES-7M DATED JULY 1, 2004-PAGE 463 OF THE STANDARD PLANS BOOK DATED JULY 2004.

REVISED STANDARD PLAN RSP ES-7M

2004 REVISED Std PLAN RSP ES-7M

DIST	COUNTY	ROUTE	KILOMETER POST TOTAL PROJECT	SHEET NO.	TOTAL SHEETS
11	SD	5,805	R49.9/R51.7, 42.6/46.5	610	886

Caltrans Metric

Jeffery G. McRae
REGISTERED ELECTRICAL ENGINEER

October 5, 2007
PLANS APPROVAL DATE

REGISTERED PROFESSIONAL ENGINEER Jeffery G. McRae No. E14512 Exp. 6-30-08 ELECTRICAL STATE OF CALIFORNIA

The State of California or its officers or agents shall not be responsible for the accuracy or completeness of electronic copies of this plan sheet.

To get to the Caltrans web site, go to: http://www.dot.ca.gov

To accompany plans dated 9-27-10

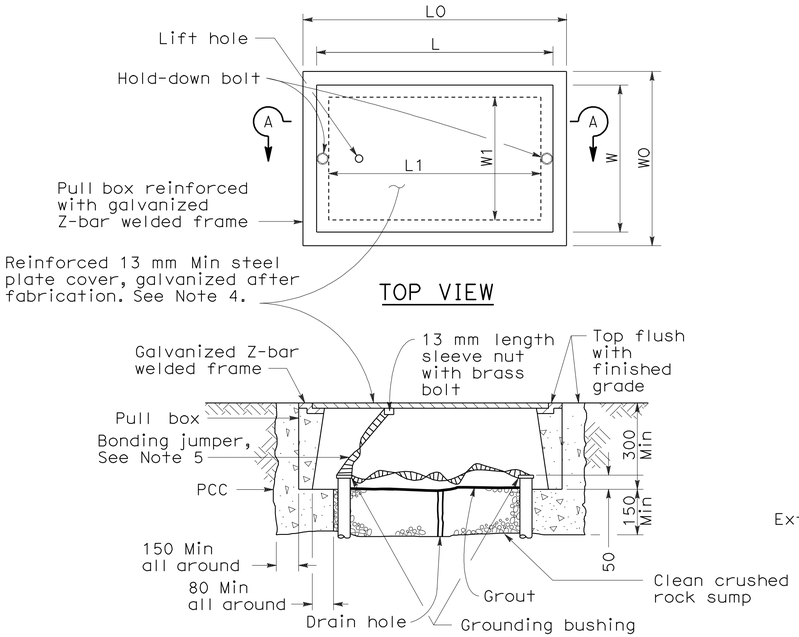

SECTION A-A

No. 3½(T), No. 5(T) AND No. 6(T) TRAFFIC PULL BOX

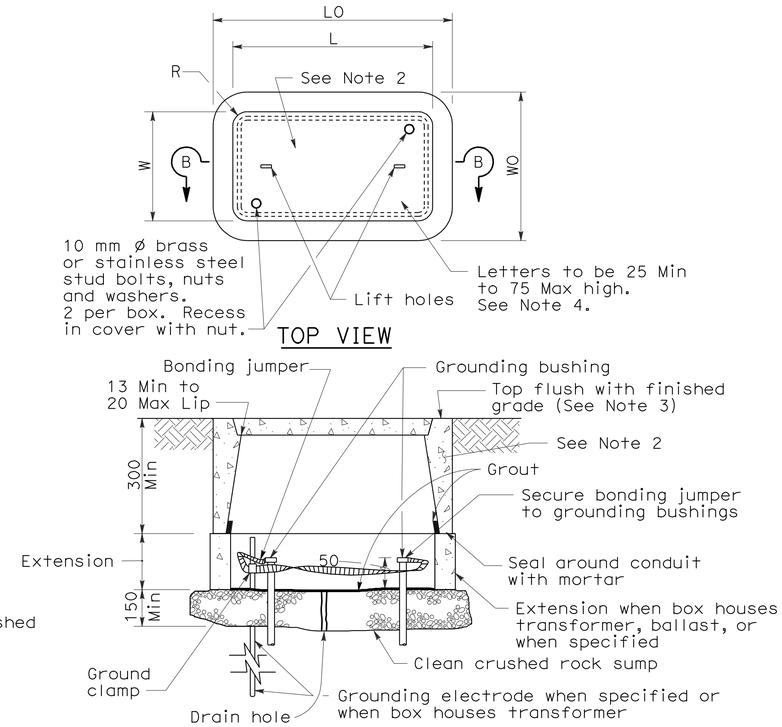

SECTION B-B

INSTALLATION DETAILS

DIMENSION TABLE

PULL BOX	CONCRETE BOX				NON-PCC BOX		CONCRETE OR NON-PCC COVERS				
	Minimum * Thickness	Minimum Depth Box and Extension	LO (mm)	WO (mm)	Minimum ** Thickness	Minimum Depth Box and Extension	L ** (mm)	W ** (mm)	R (mm)	Edge Thickness	Edge Taper
No. 3½	25 mm	No Extension	457	330	8 mm	No Extension	390	260	27	45 mm	3 mm
No. 5	25 mm	560 mm	666	425	8 mm	510 mm	590	350	32	50 mm	3 mm
No. 6	40 mm	610 mm	854	524	10 mm	510 mm	775	444	32	50 mm	3 mm

* Excluding conduit web ** Top dimension

DIMENSION TABLE

PULL BOX	CONCRETE BOX						NON-PCC BOX		CONCRETE OR NON-PCC COVERS				
	Minimum * Thickness	Minimum Depth Box and Extension	LO (mm)	WO (mm)	L1 (mm)	W1 (mm)	Minimum ** Thickness	Minimum Depth Box and Extension	L ** (mm)	W ** (mm)	R (mm)	Edge Thickness	Edge Taper
No. 3½(T)	40 mm	305 mm	530 ±	430 ± 25	370 ±	270 ± 25	Does Not Apply		510 ±	350 ±	0	13 mm	None
No. 5(T)	45 mm	305 mm	750 ±	600 ± 25	480 ±	330 ± 25	Does Not Apply		690 ±	410 ±	0	13 mm	None
No. 6(T)	50 mm	305 mm	900 ±	760 ± 25	600 ±	430 ± 25	Does Not Apply		840 ±	510 ±	0	13 mm	None

* Excluding conduit web ** Top dimension

NOTES ON PULL BOXES:

1. Traffic pull box shall be provided with steel cover and special concrete footing. Steel cover shall have embossed non-skid pattern.

2. Steel reinforcing shall be as regularly used in the standard products of the respective manufacturer.

3. Top of pull boxes shall be flush with surrounding grade or top of adjacent curb, except that in unpaved areas where pull box is not immediately adjacent to and protected by a concrete foundation, pole or other protective construction, the box shall be placed with its top 30 mm above surrounding grade. Where practicable, pull boxes shown in the vicinity of curbs shall be placed adjacent to the back of curb, and pull boxes shown adjacent to standards shall be placed on side of foundation facing away from traffic, unless otherwise noted. When pull box is installed in sidewalk area, the depth of the pull box shall be adjusted so that the top of the pull box is flush with the sidewalk.

4. Pull box covers shall be marked as follows: "SERVICE" Service circuits between service point and service disconnect; "SPRINKLER-CONTROL" Sprinkler control circuits, 50 V or less; "CALTRANS" On all pull boxes, except pull boxes marked "SPRINKLER-CONTROL"; and "TELEPHONE" Telephone service.

   a) No. 3½ pull box.

      1) "SIGNAL" Traffic signal circuits with or without street or sign lighting circuits.

      2) "ST LIGHTING" Street or sign lighting circuits where voltage is under 600 V.

   b) No. 5, 6, 9 or 9A pull box.

      1) "TRAFFIC SIGNAL" Traffic signal circuits with or without street or sign lighting circuits.

      2) "STREET LIGHTING" Street or sign lighting circuits where voltage is under 600 V.

      3) "STREET LIGHTING-HIGH VOLTAGE" Street or sign lighting circuits where voltage is above 600 V.

      4) "IRRIGATION" Circuits to irrigation controller 120 V or more.

      5) "RAMP METER" Ramp meter circuits.

      6) "COUNT STATION" Count or speed monitor circuits.

      7) "COMMUNICATION" Communication circuits.

      8) "TOS COMMUNICATIONS" TOS communications line.

      9) "TOS POWER" TOS power.

      10) "TDC POWER" Telephone demarcation cabinet power.

      11) "CCTV" Closed circuit television circuits.

      12) "TMS" Traffic monitoring station circuits.

      13) "CMS" Changeable message sign circuits.

      14) "HAR" Highway advisory radio circuits.

5. Bonding jumper for metal covers shall be 1 m long, minimum.

6. The nominal dimensions of the opening in which the cover sets shall be the same as the cover dimensions except the length and width dimensions shall be 3 mm greater.

7. Covers and boxes shall be interchangeable with California standard male and female gages. When interchanged with a standard male or female gage, the top surfaces shall be flush within 3 mm. Top outside edge of concrete covers and pull boxes shall have a 6 mm minimum radius.

8. Pull box shall not be installed within the boundaries of new or existing curb ramps.

9. Pull boxes for electroliers, post and signal standards shall be located ± 1.5 m from the station of the adjacent electrolier, post or signal standard. Pull boxes shall be placed adjacent to back of curb or edge of shoulder except where this is impractical, a box may be placed in another suitable protected and accessible location.

STATE OF CALIFORNIA
DEPARTMENT OF TRANSPORTATION

ELECTRICAL SYSTEMS (PULL BOX DETAILS)

NO SCALE

ALL DIMENSIONS ARE IN MILLIMETERS UNLESS OTHERWISE SHOWN

RSP ES-8 DATED OCTOBER 5, 2007 SUPERSEDES STANDARD PLAN ES-8 DATED JULY 1, 2004-PAGE 467 OF THE STANDARD PLANS BOOK DATED JULY 2004.

REVISED STANDARD PLAN RSP ES-8

2004 REVISED Std PLAN RSP ES-8

7-3-07

DIST	COUNTY	ROUTE	KILOMETER POST TOTAL PROJECT	SHEET NO.	TOTAL SHEETS
11	SD	5,805	R49.9/R51.7, 42.6/46.5	611	886

Caltrans Metric

REGISTERED ELECTRICAL ENGINEER

October 5, 2007
PLANS APPROVAL DATE

REGISTERED PROFESSIONAL ENGINEER Jeffery G. McRae No. E14512 Exp. 6-30-08 ELECTRICAL STATE OF CALIFORNIA

The State of California or its officers or agents shall not be responsible for the accuracy or completeness of electronic copies of this plan sheet.

To get to the Caltrans web site, go to: http://www.dot.ca.gov

To accompany plans dated 9-27-10

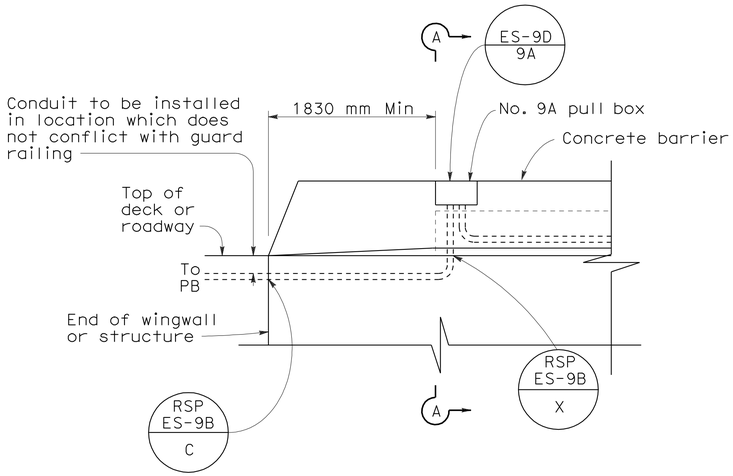

SIDEVIEW

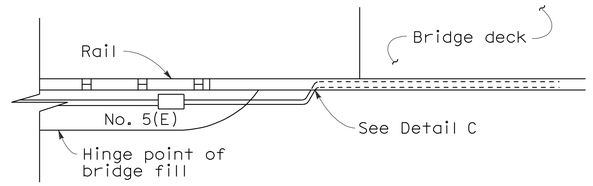

TOP VIEW

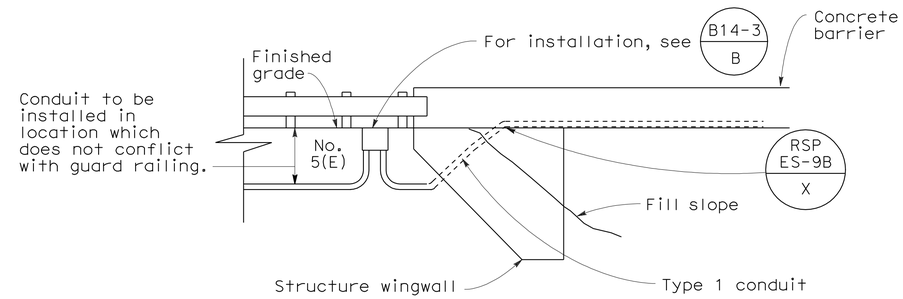

SIDE VIEW
DETAIL I
CONDUIT TERMINATION

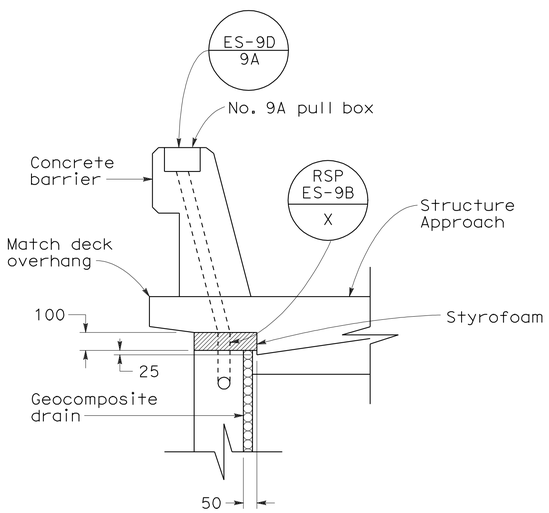

SECTION A-A

DETAIL A
CONDUIT TERMINATION

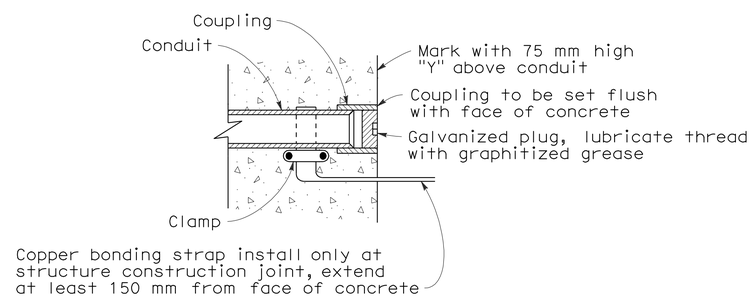

DETAIL C
CONDUIT TERMINATION

STATE OF CALIFORNIA
DEPARTMENT OF TRANSPORTATION

ELECTRICAL SYSTEMS (ELECTRICAL DETAILS STRUCTURE INSTALLATIONS)

NO SCALE

ALL DIMENSIONS ARE IN MILLIMETERS UNLESS OTHERWISE SHOWN

RSP ES-9A DATED OCTOBER 5, 2007 SUPERSEDES STANDARD PLAN ES-9A DATED JULY 1, 2004-PAGE 468 OF THE STANDARD PLANS BOOK DATED JULY 2004.

REVISED STANDARD PLAN RSP ES-9A

2004 REVISED Std PLAN RSP ES-9A

10-1-07

DIST	COUNTY	ROUTE	KILOMETER POST TOTAL PROJECT	SHEET NO.	TOTAL SHEETS
11	SD	5,805	R49.9/R51.7, 42.6/46.5	612	886

Caltrans Metric

Jaswender S Sandhu
REGISTERED ELECTRICAL ENGINEER

October 5, 2007
PLANS APPROVAL DATE

REGISTERED PROFESSIONAL ENGINEER J. S. Sandhu No. E11803 Exp. 9-30-08 ELECTRICAL STATE OF CALIFORNIA

The State of California or its officers or agents shall not be responsible for the accuracy or completeness of electronic copies of this plan sheet.

To get to the Caltrans web site, go to: http://www.dot.ca.gov

To accompany plans dated 9-27-10

2004 REVISED Std PLAN RSP ES-9B

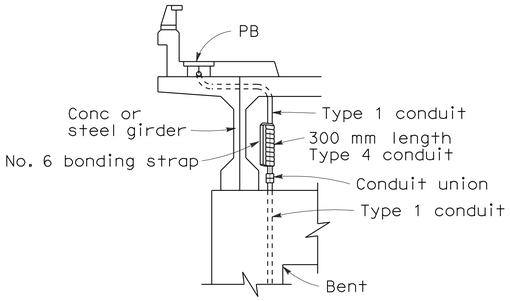

DETAIL R
CONDUIT RISER CONNECTION

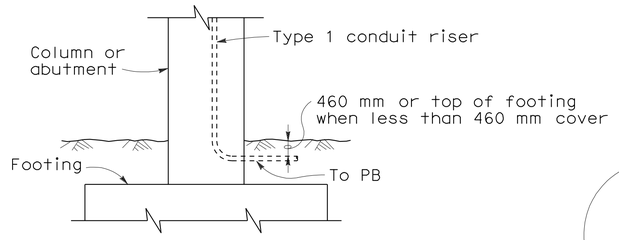

DETAIL T
LOWER END OF CONDUIT RISER AT COLUMN OR ABUTMENT

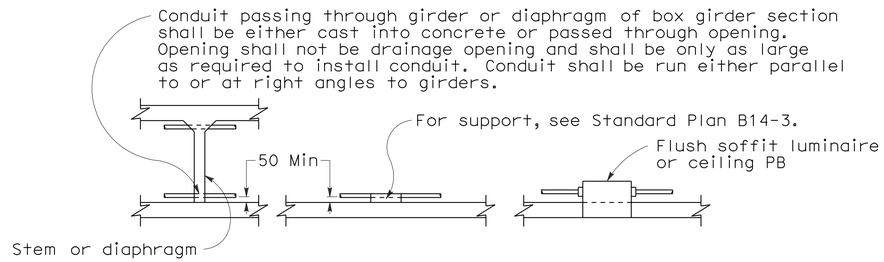

DETAIL S
CONDUIT INSTALLATION WITHIN BOX GIRDER SECTIONS

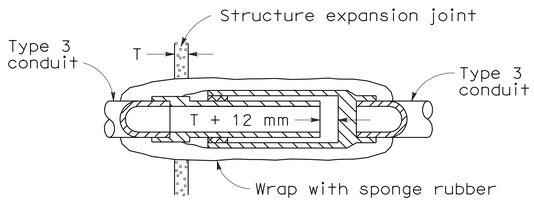

NON-METALLIC CONDUIT EXPANSION FITTING INSTALLATION DETAIL
(To be used only when shown or specified on Project Plans)

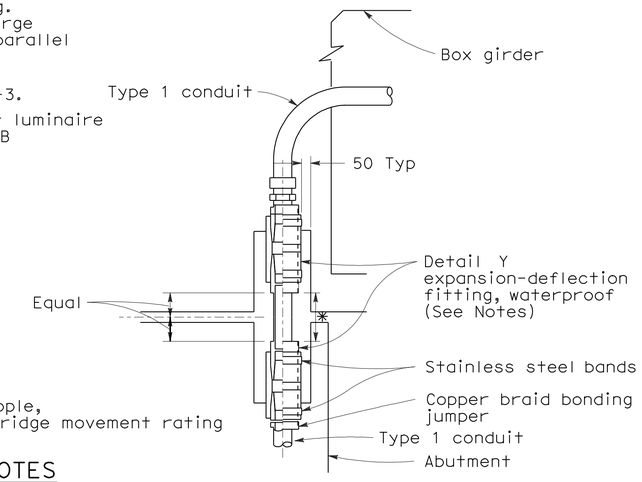

NOTES

1. Fitting and pocket required only where movement can occur between girder and abutment.
2. Fill pocket around fitting with resilient waterproof compound.

DETAIL U
CONDUIT RISER CONNECTION AT COLUMN, ABUTMENT OR STRUCTURE WING WALL

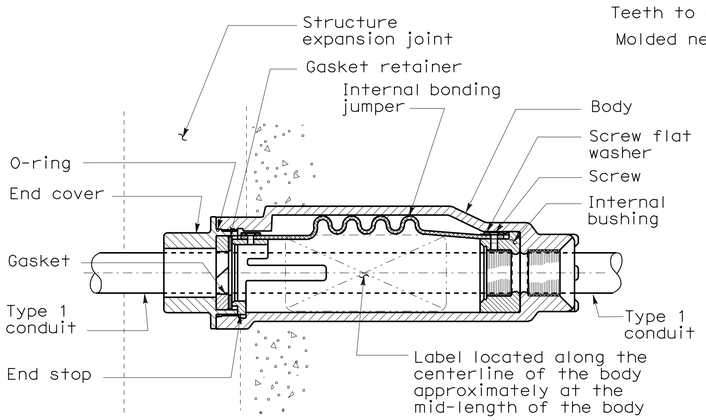

DETAIL X
CONDUIT EXPANSION FITTINGS

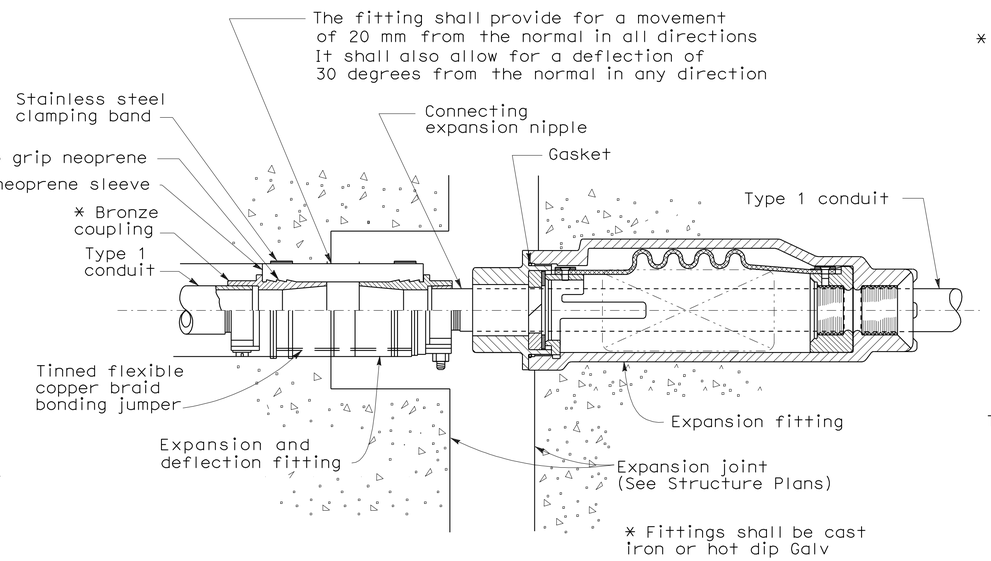

DETAIL XY
COMBINATION EXPANSION-DEFLECTION FITTINGS
METALLIC CONDUIT INSTALLATION

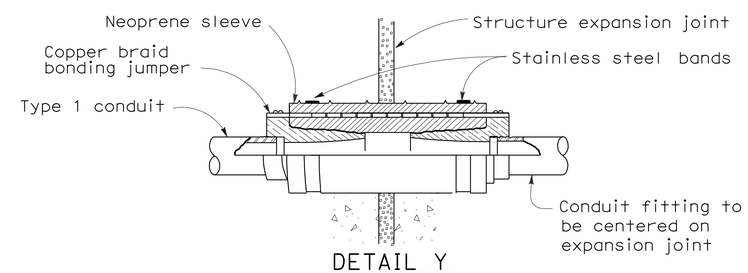

DETAIL Y
CONDUIT EXPANSION-DEFLECTION FITTING

NOTES

1. Except for sidewalk joints, a conduit expansion fitting or expansion-deflection fitting shall be installed at each 13 mm or greater structure joint, hinge or abutment.
2. Fittings or combination of fittings shall be installed to accommodate the movement rating as shown on the structure plans.
3. Fittings shall be installed parallel to superstructure girders.
4. Where lateral movement greater than 6 mm may occur, a neoprene sleeve expansion-deflection fitting shall be installed straddling the joint.

STATE OF CALIFORNIA
DEPARTMENT OF TRANSPORTATION

ELECTRICAL SYSTEMS (ELECTRICAL DETAILS STRUCTURE INSTALLATIONS)

NO SCALE
ALL DIMENSIONS ARE IN MILLIMETERS UNLESS OTHERWISE SHOWN

RSP ES-9B DATED OCTOBER 5, 2007 SUPERSEDES STANDARD PLAN ES-9B DATED JULY 1, 2004-PAGE 469 OF THE STANDARD PLANS BOOK DATED JULY 2004.

REVISED STANDARD PLAN RSP ES-9B

7-2-07

DIST	COUNTY	ROUTE	KILOMETER POST TOTAL PROJECT	SHEET NO.	TOTAL SHEETS
11	SD	5,805	R49.9/R51.7, 42.6/46.5	613	886

Caltrans Metric

Jeffery G. McRae
REGISTERED ELECTRICAL ENGINEER

October 5, 2007
PLANS APPROVAL DATE

REGISTERED PROFESSIONAL ENGINEER Jeffery G. McRae No. E14512 Exp. 6-30-08 ELECTRICAL STATE OF CALIFORNIA

The State of California or its officers or agents shall not be responsible for the accuracy or completeness of electronic copies of this plan sheet.

To get to the Caltrans web site, go to: http://www.dot.ca.gov

To accompany plans dated 9-27-10

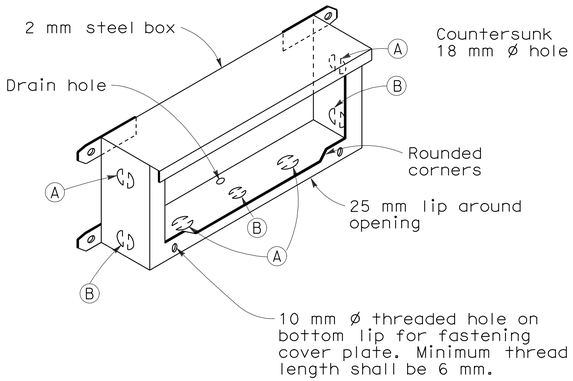

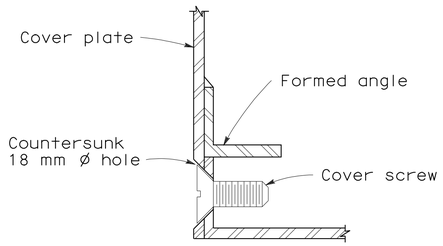

DETAIL J

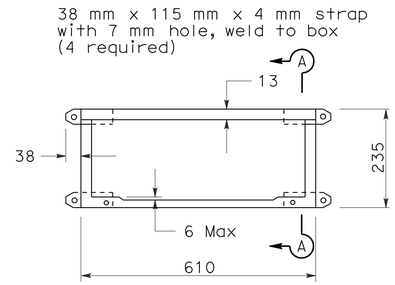

PLAN

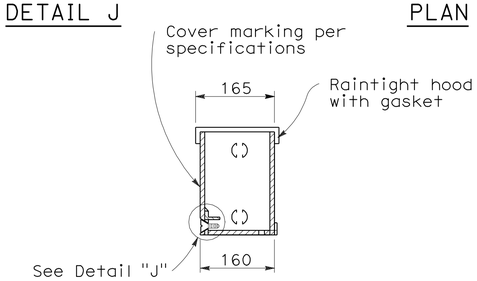

SECTION A-A

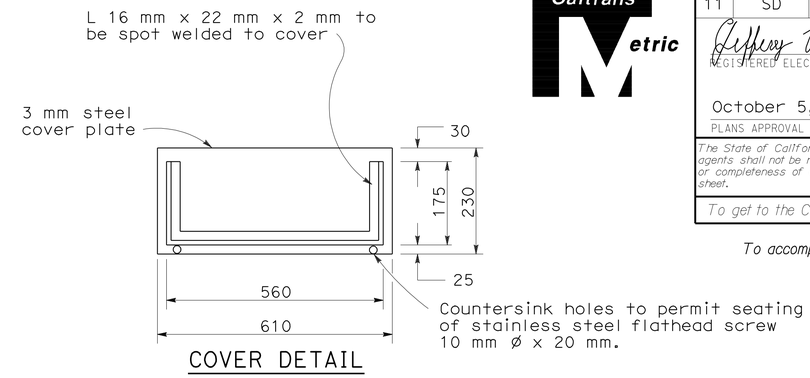

COVER DETAIL

INSTALLATION NOTE

Box shall be parallel to top of railing. Close cover box during pouring with 6 mm plywood of sufficient size to provide 1:1 chamfer on 3 sides of cover. Upper edge of plywood shall fit against lower edge of raintight hood.

No. 9 STRUCTURE PULL BOX

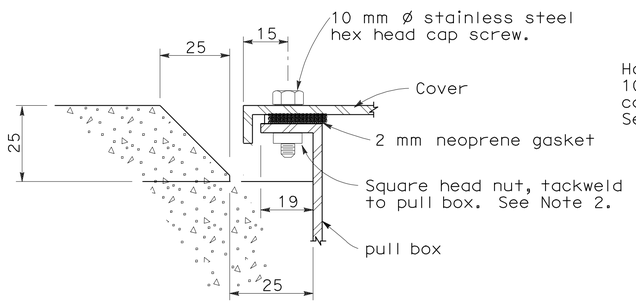

SECTION C-C

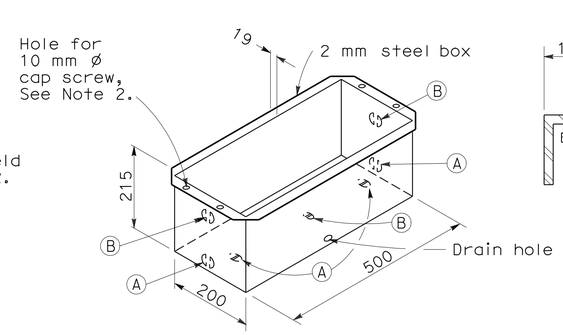

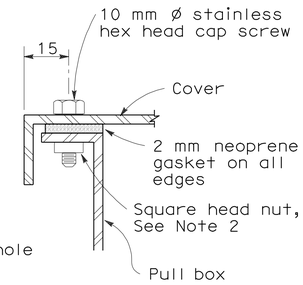

DETAIL A

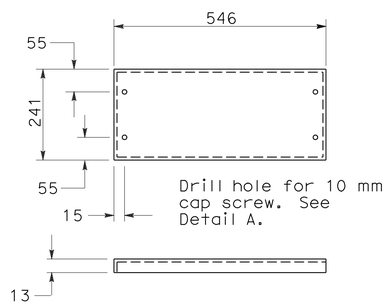

COVER DETAIL

No. 9A STRUCTURE PULL BOX

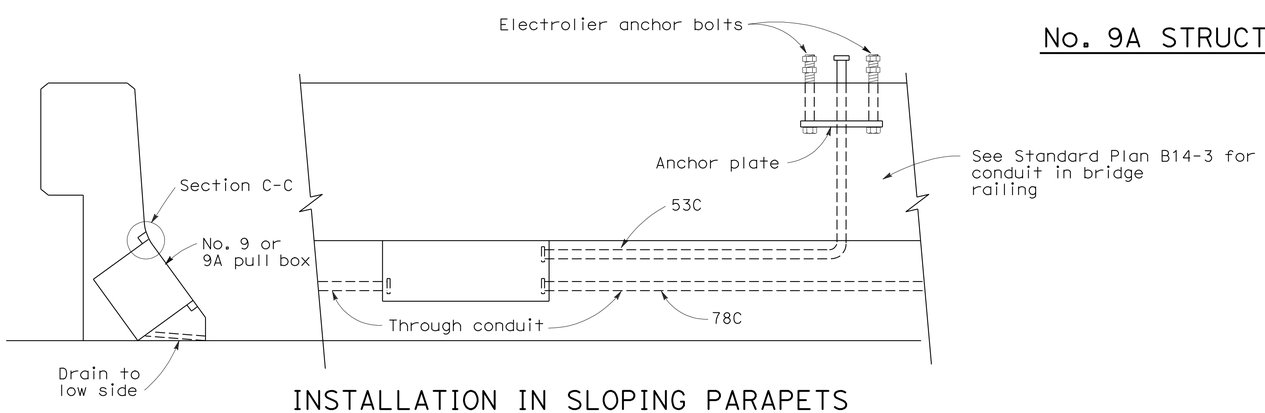

INSTALLATION IN SLOPING PARAPETS

For reinforcement in area of electrolier, see railing sheets. For electrolier anchor bolts, see Standard Plan ES-6B.

NOTES: No. 9 and 9A Pull Box

1. Corner joints shall be lapped and secured by spot welding or riveting.
2. Where cap screws are used to attach cover to box, either of the following methods of providing adequate threading may be used:
   a. Tack weld square nut to bottom of flange (Total 4), or
   b. Tack weld a 6 mm x 16 mm x 200 mm bar beneath flange (Total 2).
3. Pound knockouts flat after punching.
4. Multiple size knockouts shall not be permitted.
5. Pull box covers shall be marked as shown on Revised Standard Plan RSP ES-8.

KNOCKOUT SCHEDULE
No. 9 AND 9A PULL BOX

(A) 53C, 1 each end, 2 on bottom.

(B) 78C, 1 each end, 1 on bottom.

STATE OF CALIFORNIA
DEPARTMENT OF TRANSPORTATION

ELECTRICAL SYSTEMS (ELECTRICAL DETAILS STRUCTURE INSTALLATIONS)

NO SCALE

ALL DIMENSIONS ARE IN MILLIMETERS UNLESS OTHERWISE SHOWN

RSP ES-9C DATED OCTOBER 5, 2007 SUPERSEDES STANDARD PLAN ES-9C DATED JULY 1, 2004-PAGE 470 OF THE STANDARD PLANS BOOK DATED JULY 2004.

REVISED STANDARD PLAN RSP ES-9C

2004 REVISED Std PLAN RSP ES-9C

7-26-07

DIST	COUNTY	ROUTE	KILOMETER POST TOTAL PROJECT	SHEET NO.	TOTAL SHEETS
11	SD	5,805	R49.9/R51.7, 42.6/46.5	614	886

Caltrans Metric

Jeffery G. McRae
REGISTERED ELECTRICAL ENGINEER

October 5, 2007
PLANS APPROVAL DATE

REGISTERED PROFESSIONAL ENGINEER
Jeffery G. McRae
No. E14512
Exp. 6-30-08
ELECTRICAL
STATE OF CALIFORNIA

The State of California or its officers or agents shall not be responsible for the accuracy or completeness of electronic copies of this plan sheet.

To get to the Caltrans web site, go to: http://www.dot.ca.gov

To accompany plans dated 9-27-10

ISOLUX CURVE - MINIMUM

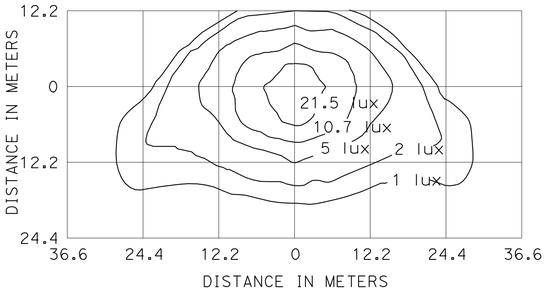

TYPE III MEDIUM CUTOFF

Cutoff Luminaire
10.4 m Mounting Height
LAMP OPERATED AT 22 000 lm
200 W HIGH PRESSURE SODIUM LAMP
ANSI DESIGNATION S66

ISOLUX CURVE - MINIMUM

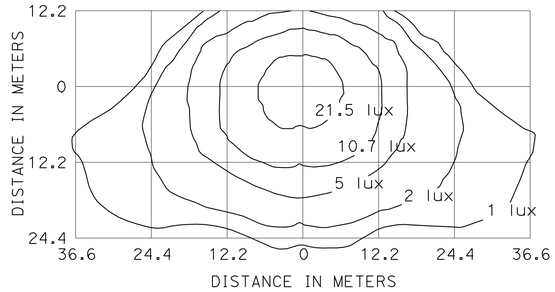

TYPE III MEDIUM CUTOFF

Cutoff Luminaire
12.2 m Mounting Height
LAMP OPERATED AT 37 000 lm
310 W HIGH PRESSURE SODIUM LAMP
ANSI DESIGNATION S67

ISOLUX CURVE - MINIMUM

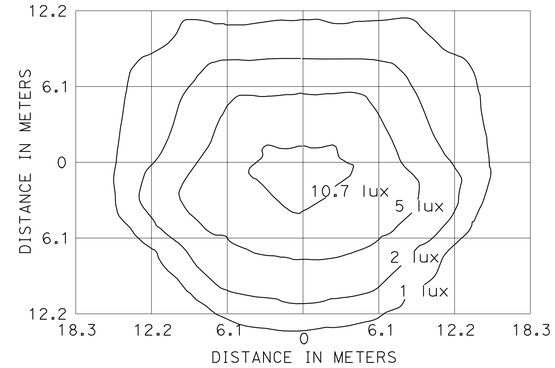

FLUSH SOFFIT LUMINAIRE

5.2 m Mounting Height
LAMP OPERATED AT 5800 lm
70 W HIGH PRESSURE SODIUM LAMP
ANSI DESIGNATION S62

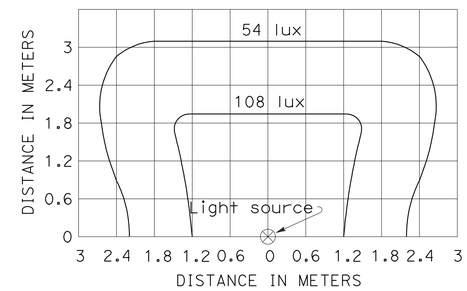

SIGN LIGHTING FIXTURE ISOLUX DIAGRAM

1. Curves represent the minimum lux of initial illumination on a 3 m x 6 m panel.
2. The lux shown are with the fixture attached to the light fixture mounting channel which places the center of the source 1420 mm in front of panel and 300 mm below the bottom edge.
3. Applicable lamp: 85-W fluorescent phosphor coated induction lamp.

ISOLUX CURVE - MINIMUM

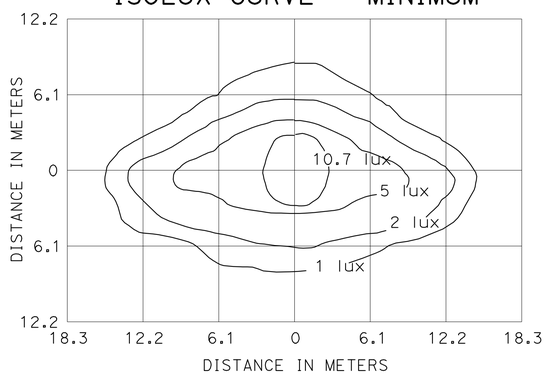

PENDANT SOFFIT LUMINAIRE
TYPE III SHORT

5.2 m Mounting Height
LAMP OPERATED AT 5800 lm
70 W HIGH PRESSURE SODIUM LAMP
ANSI DESIGNATION S62

ISOLUX CURVE - MINIMUM

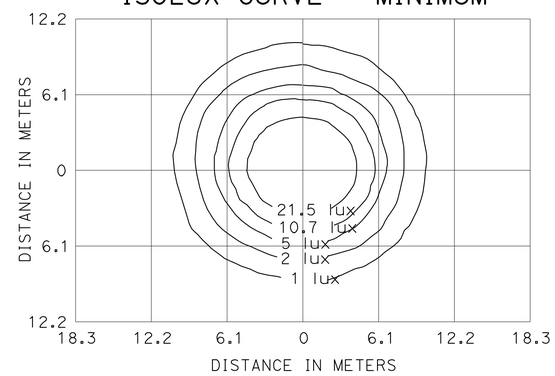

PENDANT SOFFIT LUMINAIRE

5.2 m Mounting Height
LAMP OPERATED AT 5800 lm
70 W HIGH PRESSURE SODIUM LAMP
ANSI DESIGNATION S62

ISOLUX CURVE - MINIMUM

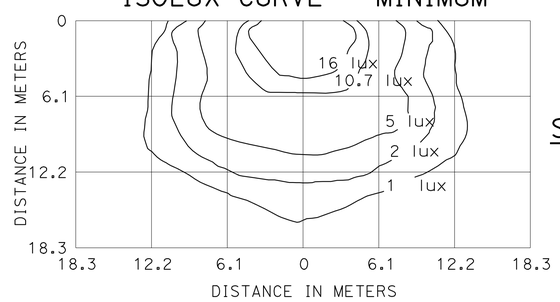

DETAIL ``W'' WALL LUMINAIRE

4.6 m Mounting Height
LAMP OPERATED AT 9500 lm
100 W HIGH PRESSURE SODIUM LAMP
ANSI DESIGNATION S54

NOTE

Isolux diagrams show the minimum horizontal lux required.

ISOLUX CURVE - MINIMUM

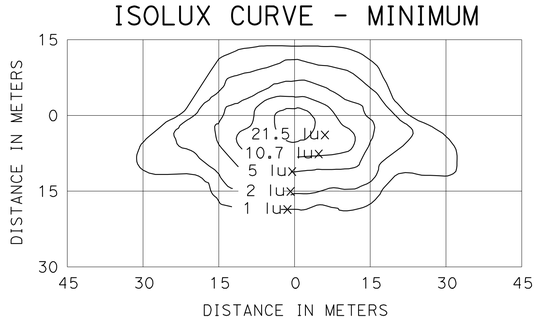

TYPE III MEDIUM CUTOFF

Cutoff Luminaire
9.1 m Mounting Height
LAMP OPERATED AT 16 000 lm
150 W HIGH PRESSURE SODIUM LAMP
ANSI DESIGNATION S55

ISOLUX CURVE - MINIMUM

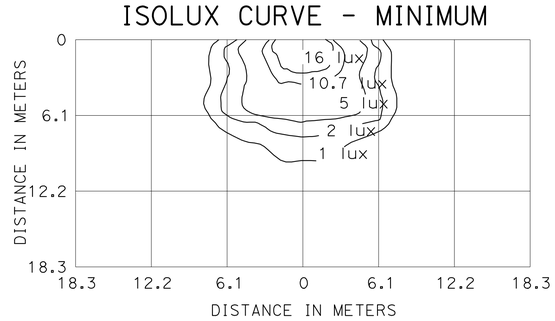

WALL LUMINAIRE

4.6 m Mounting Height
LAMP OPERATED AT 5800 lm
70 W HIGH PRESSURE SODIUM LAMP
ANSI DESIGNATION S62

ISOLUX CURVE - MINIMUM

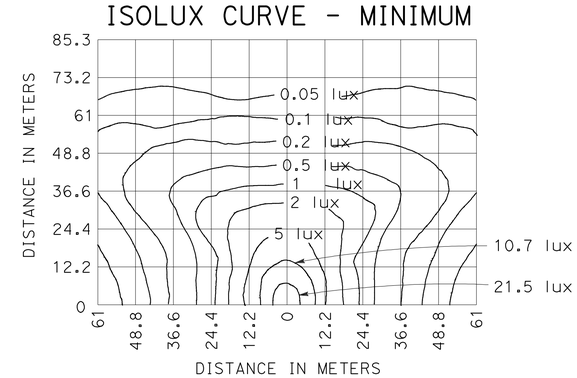

LOW PRESSURE SODIUM LUMINAIRE

12.2 m Mounting Height
LAMP OPERATED AT 33 000 lm
180 W LOW PRESSURE SODIUM LAMP

STATE OF CALIFORNIA
DEPARTMENT OF TRANSPORTATION

ELECTRICAL SYSTEMS (ISOLUX DIAGRAMS)

NO SCALE

ALL DIMENSIONS ARE IN MILLIMETERS UNLESS OTHERWISE SHOWN

RSP ES-10 DATED OCTOBER 5, 2007 SUPERSEDES STANDARD PLAN ES-10 DATED JULY 1, 2004-PAGE 474 OF THE STANDARD PLANS BOOK DATED JULY 2004.

REVISED STANDARD PLAN RSP ES-10

2004 REVISED Std PLAN RSP ES-10

6-27-07

DIST	COUNTY	ROUTE	KILOMETER POST TOTAL PROJECT	SHEET NO.	TOTAL SHEETS
11	SD	5,805	R49.9/R51.7, 42.6/46.5	615	886

REGISTERED CIVIL ENGINEER

October 5, 2007
PLANS APPROVAL DATE

REGISTERED PROFESSIONAL ENGINEER
Stanley P. Johnson
No. C57793
Exp. 03-31-08
CIVIL
STATE OF CALIFORNIA

The State of California or its officers or agents shall not be responsible for the accuracy or completeness of electronic copies of this plan sheet.

To get to the Caltrans web site, go to: http://www.dot.ca.gov

To accompany plans dated 9-27-10

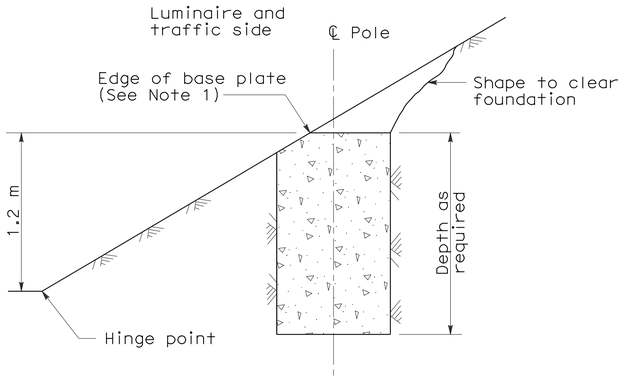

CUT SLOPES
STEEPER THAN 1:4
See Note 2

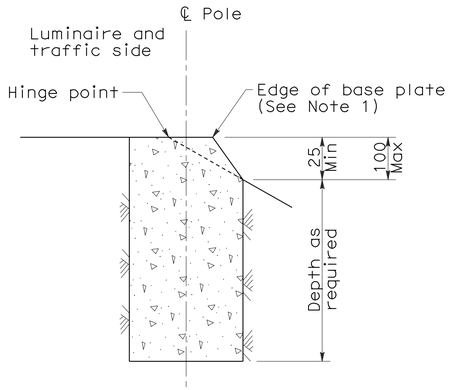

FILL SLOPES
STEEPER THAN 1:4
See Note 2

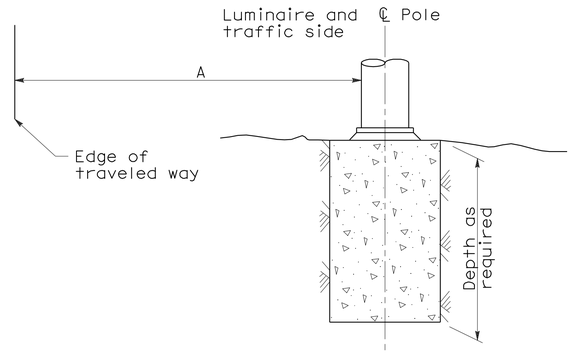

FLAT SECTIONS, CUT OR FILL SLOPES
1:4 OR FLATTER

STANDARD TYPE	SETBACK (DIMENSION A)
32	9 m Min
31, 36-20A	6 m Min
15, 15D, 15-SB, 21, 21D, 30	Mast Arm Length (Min)

FOUNDATIONS ADJACENT TO ALL ROADWAYS EXCEPT IN SIDEWALK, MEDIAN AND ISLAND AREAS

NOTES:

1. Where a portion of the foundation is above grade, the top edges shall have a 25 mm chamfer.
2. Horizontal setbacks on cut and fill slopes steeper than 1:4 shall not exceed the distance shown for flat sections.

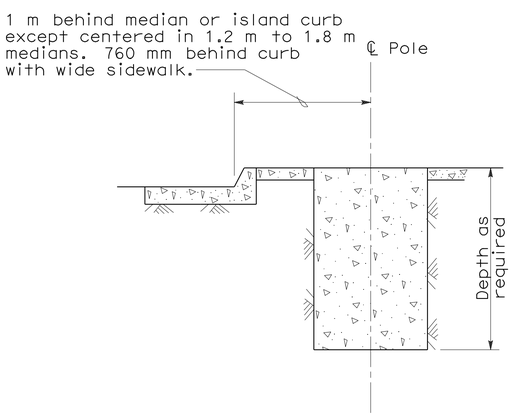

MEDIAN, ISLAND
OR WIDE SIDEWALK
(2 m wide and wider)

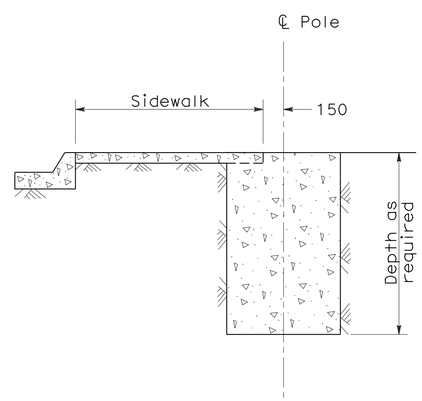

NARROW SIDEWALK
(Less than 2 m wide)

FOUNDATIONS IN SIDEWALK, MEDIAN AND ISLAND AREAS

STATE OF CALIFORNIA
DEPARTMENT OF TRANSPORTATION

ELECTRICAL SYSTEMS (FOUNDATION INSTALLATIONS)

NO SCALE

ALL DIMENSIONS ARE IN MILLIMETERS UNLESS OTHERWISE SHOWN

RSP ES-11 DATED OCTOBER 5, 2007 SUPERSEDES STANDARD PLAN ES-11 DATED JULY 1, 2004-PAGE 475 OF THE STANDARD PLANS BOOK DATED JULY 2004.

REVISED STANDARD PLAN RSP ES-11

2004 REVISED Std PLAN RSP ES-11

10-1-07

DIST	COUNTY	ROUTE	KILOMETER POST TOTAL PROJECT	SHEET NO.	TOTAL SHEETS
11	SD	5,805	R49.9/R51.7, 42.6/46.5	616	886

Caltrans Metric

Jeffery G. McRae
REGISTERED ELECTRICAL ENGINEER

October 5, 2007
PLANS APPROVAL DATE

REGISTERED PROFESSIONAL ENGINEER
Jeffery G. McRae
No. E14512
Exp. 6-30-08
ELECTRICAL
STATE OF CALIFORNIA

The State of California or its officers or agents shall not be responsible for the accuracy or completeness of electronic copies of this plan sheet.

To get to the Caltrans web site, go to: http://www.dot.ca.gov

To accompany plans dated 9-27-10

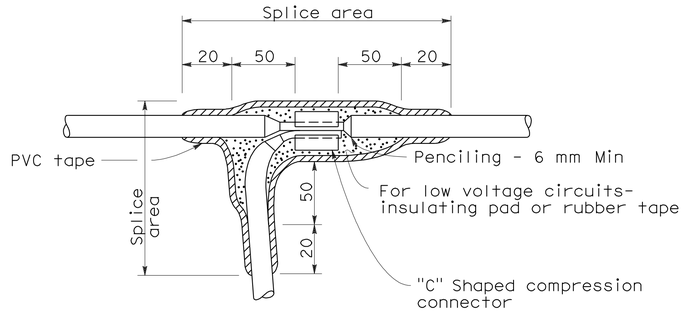

TYPE "C" SPLICE

Between 1 free-end and 1 through conductor

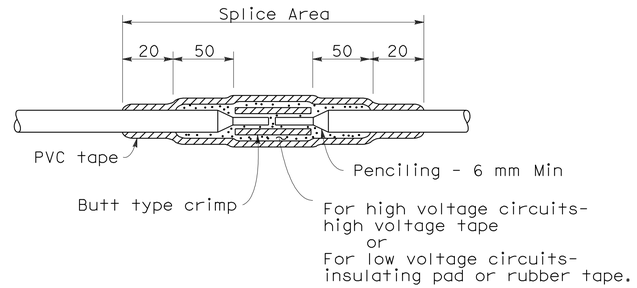

TYPE "S" SPLICE

Between 2 free-ends

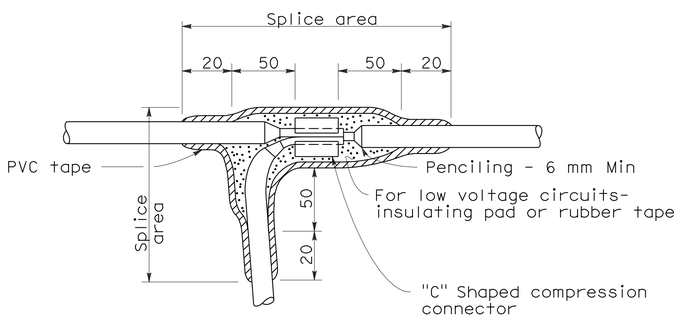

TYPE "T" SPLICE

For 3 free-ends

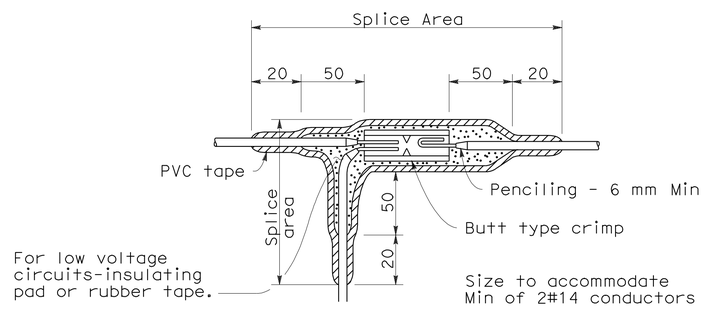

TYPE "ST" SPLICE

NOTES:

1. Dimensions are minimum.
2. Rubber tapes shall be rolled after application.

INSULATION METHODS

Low Voltage Circuits (0-600 V)

METHOD "B"

1. Completely cover the splice area with electrical insulating coating and allow to dry.
2. Apply 2 layers of electrical insulating pad with minimum thickness of 4 mm each layer or 2 layers, half lapped, synthetic oil resistant, self fusing rubber tape.
3. Apply 3 layers half lapped polyvinyl chloride tape.
4. Cover entire splice with electrical insulating coating and allow to dry.

High Voltage Circuits (Over 600 V)

1. Completely cover the splice area with electrical insulating coating and allow to dry.
2. Apply high voltage tape to a minimum thickness equal to original insulation.
3. Apply 3 layers half lapped polyvinyl chloride tape.
4. Cover entire splice with electrical insulating coating and allow to dry.

STATE OF CALIFORNIA
DEPARTMENT OF TRANSPORTATION

ELECTRICAL SYSTEMS (SPLICING DETAILS)

NO SCALE

ALL DIMENSIONS ARE IN
MILLIMETERS UNLESS OTHERWISE SHOWN

RSP ES-13A DATED OCTOBER 5, 2007 SUPERSEDES STANDARD PLAN ES-13A
DATED JULY 1, 2004-PAGE 478 OF THE STANDARD PLANS BOOK DATED JULY 2004.

REVISED STANDARD PLAN RSP ES-13A

2004 REVISED Std PLAN RSP ES-13A

6-27-07

DIST	COUNTY	ROUTE	KILOMETER POST TOTAL PROJECT	SHEET NO.	TOTAL SHEETS
11	SD	5,805	R49.9/R51.7, 42.6/46.5	617	886

Caltrans Metric

REGISTERED ELECTRICAL ENGINEER

October 5, 2007
PLANS APPROVAL DATE

REGISTERED PROFESSIONAL ENGINEER Jeffery G. McRae No. E14512 Exp. 6-30-08 ELECTRICAL STATE OF CALIFORNIA

The State of California or its officers or agents shall not be responsible for the accuracy or completeness of electronic copies of this plan sheet.

To get to the Caltrans web site, go to: http://www.dot.ca.gov

To accompany plans dated 9-27-10

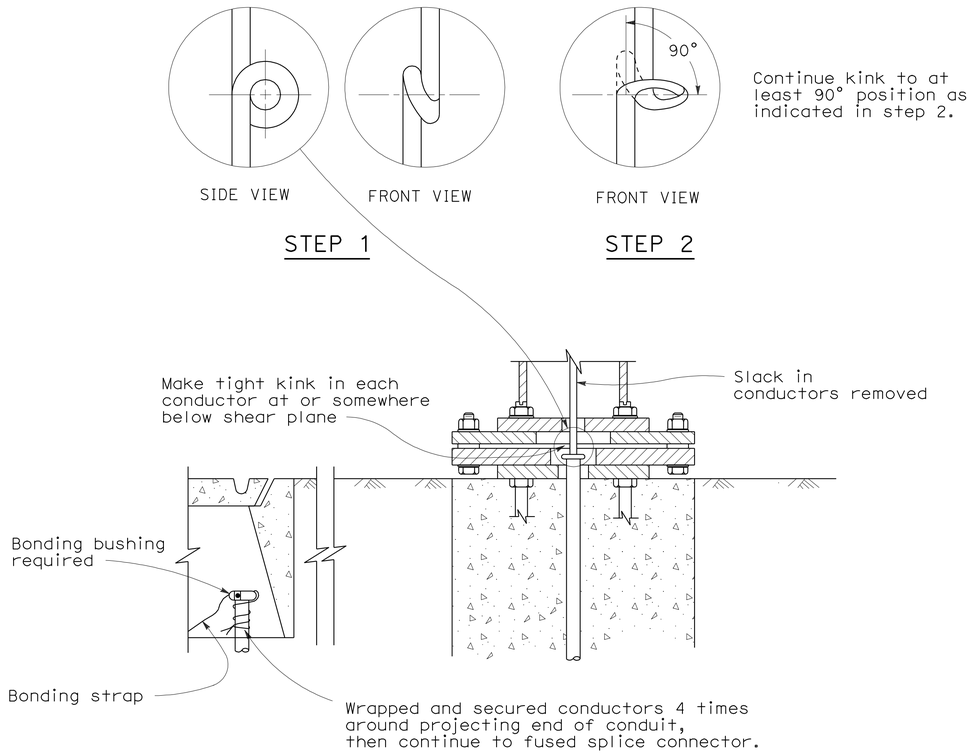

KINKING DETAIL FOR SLIP BASE STANDARDS

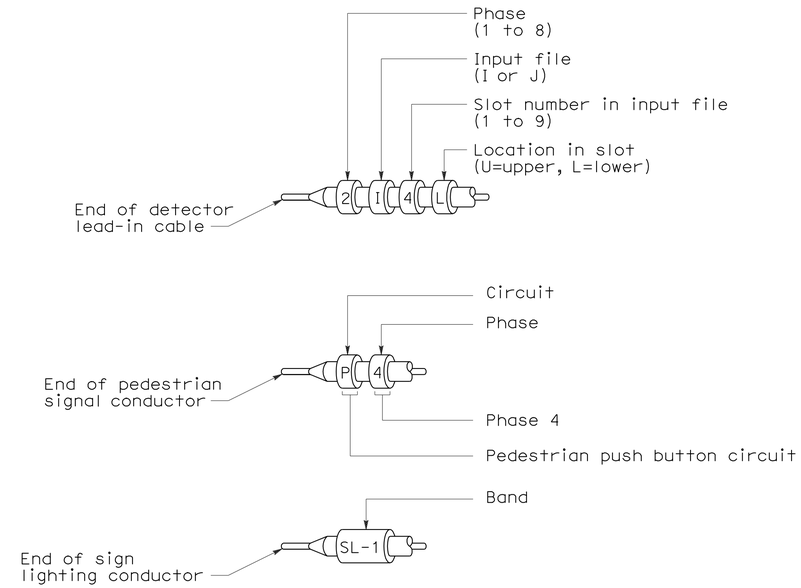

TYPICAL BANDING OF CONDUCTOR ENDS

Primary lines of multiple ballasts shall be provided with fused connectors.
Fuse ratings shall be as noted below.

CIRCUIT VOLTAGE	FUSE VOLTAGE RATING	FUSE CURRENT RATING																
		HPS LAMP BALLAST								LOW PRESSURE SODIUM BALLAST					INDUCTION SIGN LIGHTING	SINGLE PHASE (TWO WIRE) TRANSFORMERS (PRIMARY SIDE)		
		70 W	100 W	150 W	200 W	250 W	310 W	400 W	1000 W	35 W	55 W	90 W	135 W	180 W	85 W	1 kVA	2 kVA	3 kVA
120 V	250 V	5	5	5	5	5	5	5	-	5	5	5	5	5	5	10	20	30
240 V	250 V	5	5	5	5	5	5	5	5	3	3	3	5	5	5	6	10	20
480 V	500-600 V	5	5	5	5	5	5	5	5	2	2	2	3	3	1*	3	6	10

* See Revised Standard Plan RSP ES-15D, Type SC3 Control.

FUSE RATINGS FOR FUSED CONNECTORS

LUMINAIRE BALLAST FUSING

STATE OF CALIFORNIA
DEPARTMENT OF TRANSPORTATION

ELECTRICAL SYSTEMS (WIRING DETAILS AND FUSE RATINGS)

NO SCALE

ALL DIMENSIONS ARE IN MILLIMETERS UNLESS OTHERWISE SHOWN

RSP ES-13B DATED OCTOBER 5, 2007 SUPERSEDES STANDARD PLAN ES-13B DATED JULY 1, 2004-PAGE 479 OF THE STANDARD PLANS BOOK DATED JULY 2004.

REVISED STANDARD PLAN RSP ES-13B

2004 REVISED Std PLAN RSP ES-13B

10-1-07

DIST	COUNTY	ROUTE	KILOMETER POST TOTAL PROJECT	SHEET NO.	TOTAL SHEETS
11	SD	5,805	R49.9/R51.7, 42.6/46.5	618	886

Caltrans Metric

Jeffery G. McRae
REGISTERED ELECTRICAL ENGINEER

October 5, 2007
PLANS APPROVAL DATE

REGISTERED PROFESSIONAL ENGINEER
Jeffery G. McRae
No. E14512
Exp. 6-30-08
ELECTRICAL
STATE OF CALIFORNIA

The State of California or its officers or agents shall not be responsible for the accuracy or completeness of electronic copies of this plan sheet.

To get to the Caltrans web site, go to: http://www.dot.ca.gov

To accompany plans dated 9-27-10

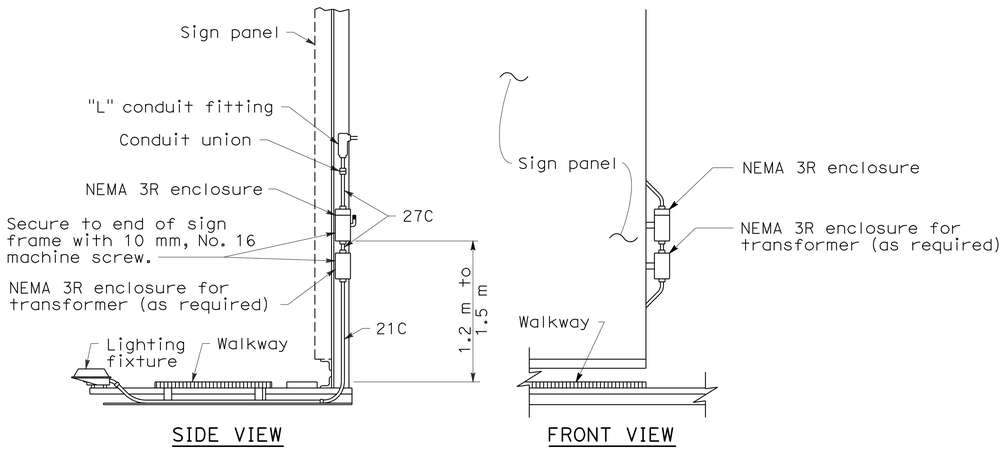

TYPICAL SIGN ILLUMINATION EQUIPMENT INSTALLATION FOR OVERHEAD SIGNS BRIDGE MOUNTED

Contactor and test switch enclosure shall be readily accessible from the sign walkway.

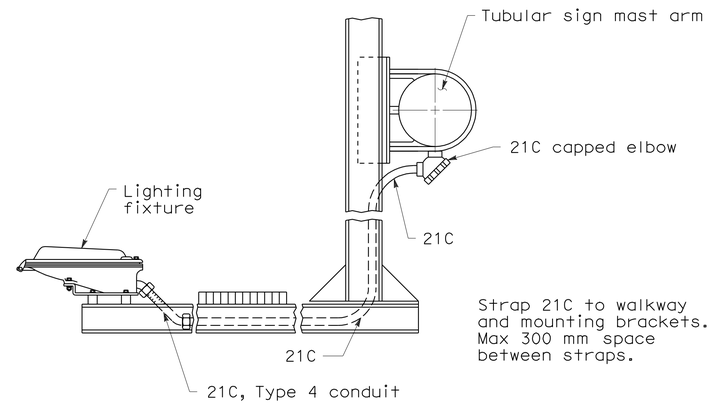

TYPICAL SIGN ILLUMINATION EQUIPMENT INSTALLATION FOR OVERHEAD SIGNS TUBULAR

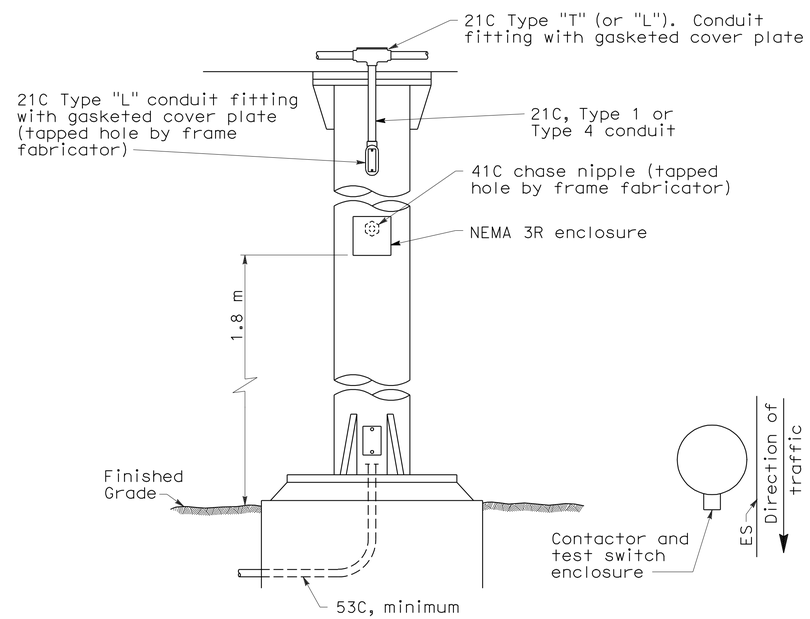

TYPICAL SIGN ILLUMINATION EQUIPMENT INSTALLATION FOR OVERHEAD SIGNS ROUND POST

NOTES:

1. Type 4 conduit shall be secured to the nearest walkway bracket using one-hole galvanized malleable iron or steel straps and brass machine screws tapped into the bracket.
2. See Overhead Signs Standard Plans for overhead signs and frame jucture details for photoelectric unit installation.
3. Enclosures and straps shall be secured by 6 mm maximum size screws.

STATE OF CALIFORNIA
DEPARTMENT OF TRANSPORTATION

ELECTRICAL SYSTEMS (SIGN ILLUMINATION EQUIPMENT)

NO SCALE

ALL DIMENSIONS ARE IN MILLIMETERS UNLESS OTHERWISE SHOWN

RSP ES-15C DATED OCTOBER 5, 2007 SUPERSEDES STANDARD PLAN ES-15C DATED JULY 1, 2004-PAGE 485 OF THE STANDARD PLANS BOOK DATED JULY 2004.

REVISED STANDARD PLAN RSP ES-15C

2004 REVISED Std PLAN RSP ES-15C

6-27-07

DIST	COUNTY	ROUTE	KILOMETER POST TOTAL PROJECT	SHEET NO.	TOTAL SHEETS
11	SD	5,805	R49.9/R51.7, 42.6/46.5	619	886

Caltrans Metric

Jeffery G. McRae
REGISTERED ELECTRICAL ENGINEER

October 5, 2007
PLANS APPROVAL DATE

REGISTERED PROFESSIONAL ENGINEER
Jeffery G. McRae
No. E14512
Exp. 6-30-08
ELECTRICAL
STATE OF CALIFORNIA

The State of California or its officers or agents shall not be responsible for the accuracy or completeness of electronic copies of this plan sheet.

To get to the Caltrans web site, go to: http://www.dot.ca.gov

To accompany plans dated 9-27-10

NOTES: (FOR LIGHTING AND SIGN ILLUMINATION CONTROL)

1. The ballast voltages of lighting fixtures and luminaires shall match line service voltages.
2. Voltage rating of photoelectric controls shall conform to the service voltage indicated on the plans.
3. Terminal strip shall be provided for wiring to fixtures.
4. Type SC1A, SC2A, SC3A controls are similar to Types SC1, SC2, SC3 controls respectively except test switch and wiring are not required.

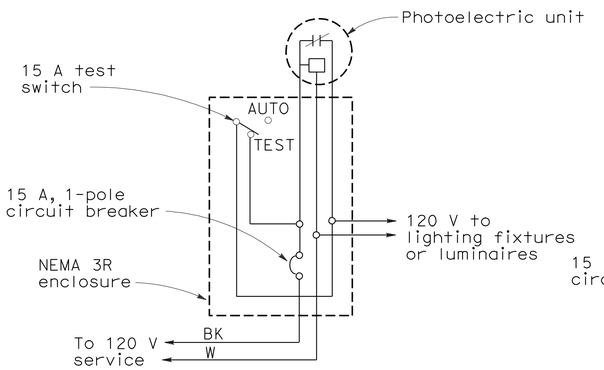

TYPE LC1 CONTROL

For 120 V unswitched circuit with no more than 800 W load.

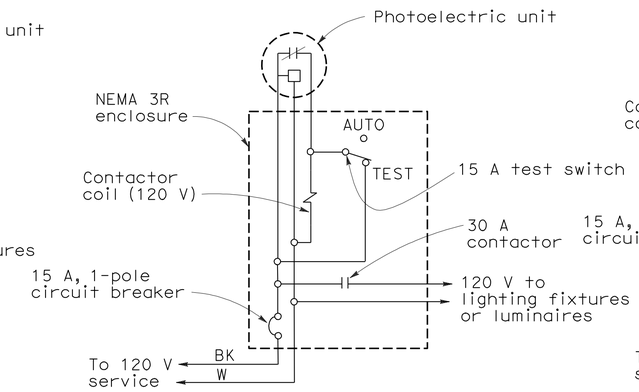

TYPE LC2 CONTROL

For 120 V unswitched circuit

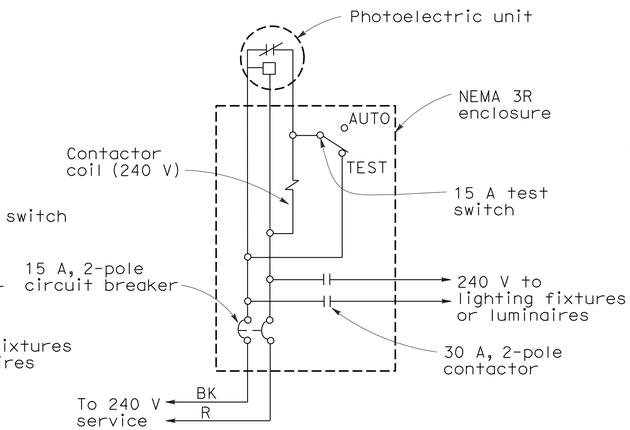

TYPE LC3 CONTROL

For 240 V and 480 V unswitched circuit

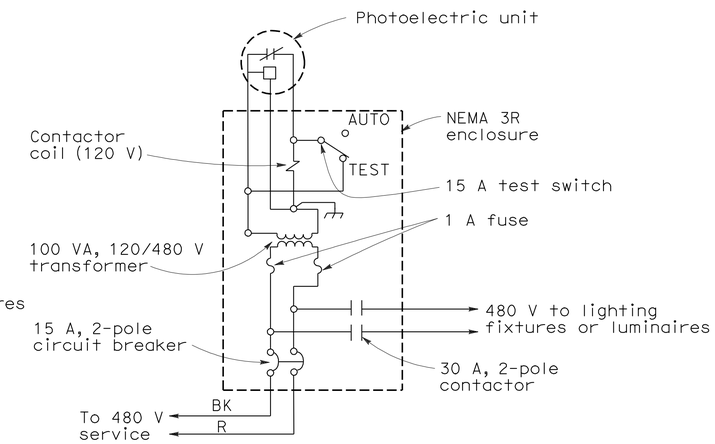

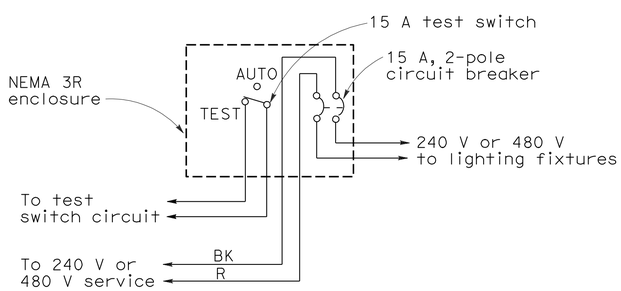

TYPE SC1 CONTROL

For 240 V or 480 V switched circuit, see Note 4 for Type SC1A

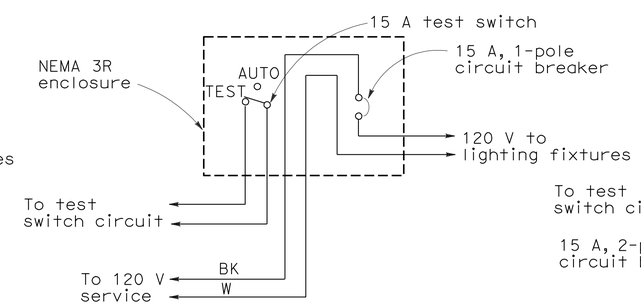

TYPE SC2 CONTROL

For 120 V switched circuit, see Note 4 for Type SC2A

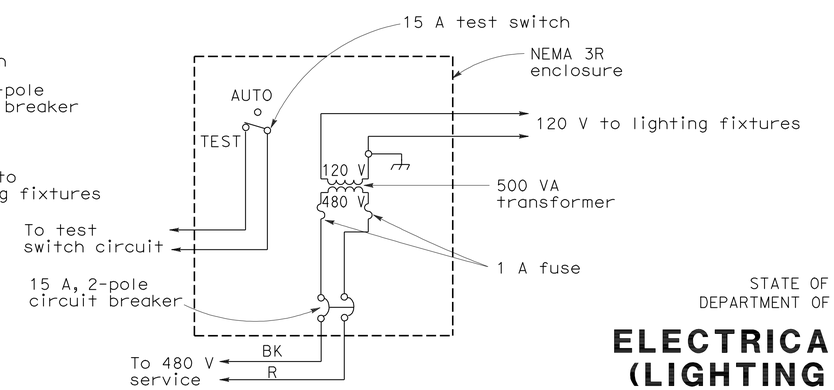

TYPE SC3 CONTROL

For 480 V switched sign circuit, see Note 4 for Type SC3A

STATE OF CALIFORNIA
DEPARTMENT OF TRANSPORTATION

ELECTRICAL SYSTEMS (LIGHTING AND SIGN ILLUMINATION CONTROL)

NO SCALE

ALL DIMENSIONS ARE IN MILLIMETERS UNLESS OTHERWISE SHOWN

RSP ES-15D DATED OCTOBER 5, 2007 SUPERSEDES RSP ES-15D DATED APRIL 28, 2005 AND STANDARD PLAN ES-15D DATED JULY 1, 2004-PAGE 486 OF THE STANDARD PLANS BOOK DATED JULY 2004.

REVISED STANDARD PLAN RSP ES-15D

2004 REVISED Std PLAN RSP ES-15D

10-1-07

DIST	COUNTY	ROUTE	KILOMETER POST TOTAL PROJECT	SHEET No	TOTAL SHEETS
11	SD	5,805	R49.9/R51.7, 42.6/46.5	620	886

REGISTERED CIVIL ENGINEER 04/28/09 DATE

9-27-10
PLANS APPROVAL DATE

REGISTERED PROFESSIONAL ENGINEER KUMAR K. GHOSH No. C 72555 Exp. 06/30/10 CIVIL STATE OF CALIFORNIA

The State of California or its officers or agents shall not be responsible for the accuracy or completeness of electronic copies of this plan sheet.

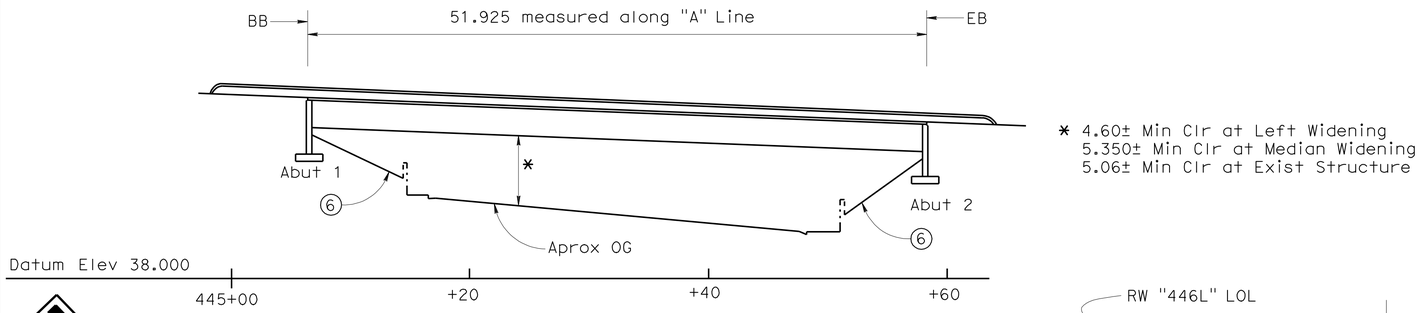

* 4.60± Min Clr at Left Widening
5.350± Min Clr at Median Widening
5.06± Min Clr at Exist Structure

CURVE DATA

	R	Δ	T	L
A	1066.802	51°00'06"	508.858	949.611
B	365.761	14°25'11"	46.270	92.051
C	365.761	08°40'49"	27.759	55.413
D	1280.171	04°06'00"	45.824	91.608

ELEVATION
1:250

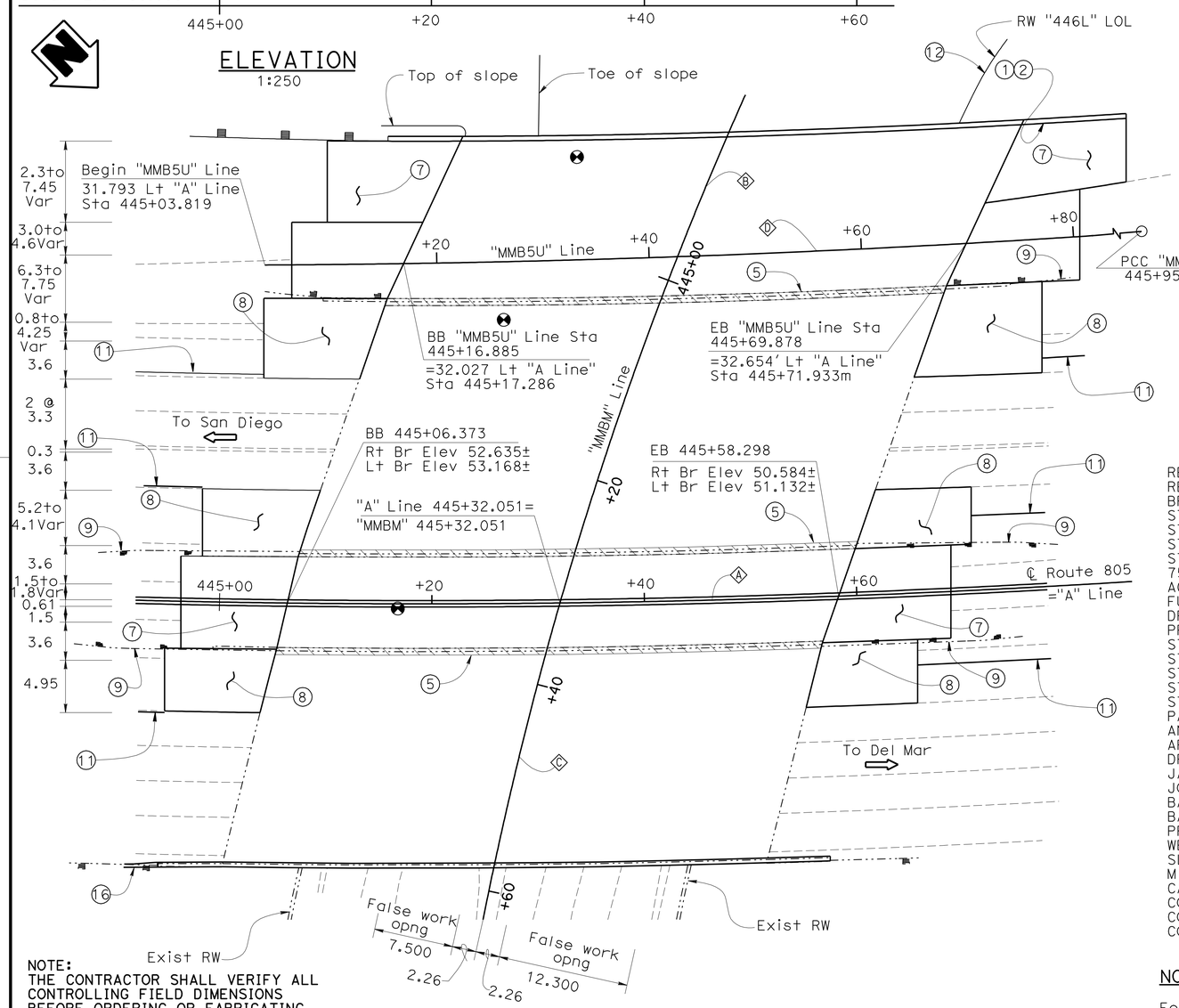

NOTE:
THE CONTRACTOR SHALL VERIFY ALL CONTROLLING FIELD DIMENSIONS BEFORE ORDERING OR FABRICATING ANY MATERIAL.

PLAN
1:250

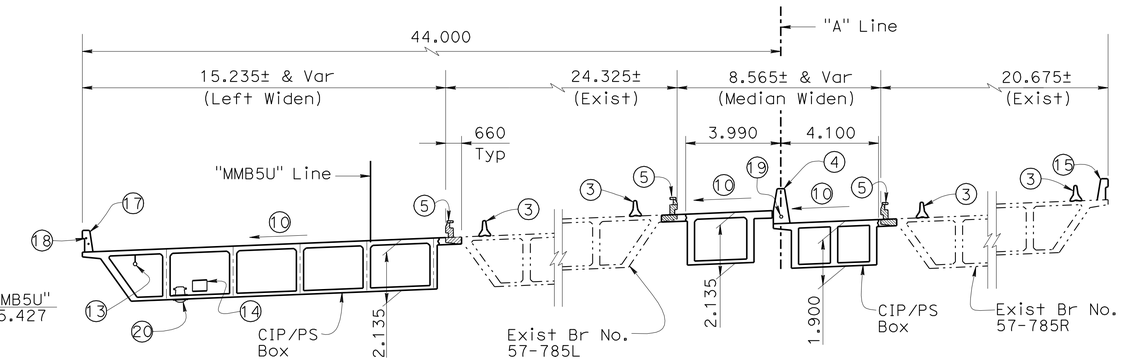

TYPICAL SECTION
1:125

QUANTITIES

REMOVE RETAINING WALL (PORTION)	LUMP	SUM
REMOVE ASPHALT CONCRETE SURFACING	435	m2
BRIDGE REMOVAL (PORTION), LOCATION B	LUMP	SUM
STRUCTURE EXCAVATION (BRIDGE)	465	m3
STRUCTURE EXCAVATION (RETAINING WALL)	295	m3
STRUCTURE BACKFILL (BRIDGE)	415	m3
STRUCTURE BACKFILL (RETAINING WALL)	318	m3
75 MM WATER SUPPLY LINE (BRIDGE)	74	m
AGGREGATE BASE (APPROACH SLAB)	12	m3
FURNISH STEEL PILING (HP 250 X 85)	244	m
DRIVE STEEL PILE (HP 250 X 85)	34	EA
PRESTRESSING CAST-IN-PLACE CONCRETE	LUMP	SUM
STRUCTURAL CONCRETE, BRIDGE FOOTING	110	m3
STRUCTURAL CONCRETE, BRIDGE	978	m3
STRUCTURAL CONCRETE, RETAINING WALL	111	m3
STRUCTURAL CONCRETE, APPROACH SLAB (TYPE N)	150	m3
STRUCTURAL CONCRETE, APPROACH SLAB (TYPE R)	121	m3
PAVING NOTCH EXTENSION	4	m3
ANTI-GRAFFITI COATING	100	m2
ARCHITECTURAL TREATMENT (COBBLESTONE TEXTURE)	100	m2
DRILL AND BOND DOWEL	47	m
JACKING SUPERSTRUCTURE	LUMP	SUM
JOINT SEAL (MR 40 MM)	96	m
BAR REINFORCING STEEL (BRIDGE)	137 900	kg
BAR REINFORCING STEEL (RETAINING WALL)	6600	kg
PREPARE AND STAIN CONCRETE	100	m2
WELDED STEEL PIPE CASING (BRIDGE)	23	m
SLOPE PAVING (CONCRETE)	40	m3
MINOR CONCRETE (GUTTER)	44	m
CABLE RAILING	44	m
CONCRETE BARRIER (TYPE 60C MODIFIED)	71	m
CONCRETE BARRIER (TYPE 736)	71	m
CONCRETE BARRIER (TYPE 736R)	71	m

NOTE:

For General Notes, see "INDEX TO PLANS" sheet

LEGEND

1. Paint " BR NO. 57-0785"
2. Paint "MIRA MESA BLVD UC"
3. Temporary Railing Type K see "ROAD PLANS"
4. Concrete Barrier Type 60C (Mod)
5. Remove existing Barrier Railing Type 9 and overhang (portion)
6. Slope paving
7. Approach Slab Type N(9D)
8. Approach Slab Type R(9D)
9. Remove existing STBB, see "ROAD PLANS"
10. Match existing cross slope
11. Sawcut Line, see "ROAD PLANS"
12. RW "446L", see "RETAINING WALL LAYOUT" sheet
13. 75mm water supply line, see "STRUCTURE APPROACH DRAINAGE DETAILS" sheet
14. Future utility opening
15. Replace Exist Barrier Railing Type 9 with Type 736R
16. Type 60 Barrier, see "ROAD PLANS"
17. Concrete Barrier Type 736
18. 1-53C and 1-53C, MT. Electrical conduits, see "ROAD PLANS"
19. 1-53C Electrical conduit, see "ROAD PLANS"
20. Soffit luminaire installation, see "ROAD PLANS"

—— Indicates new construction
-·-·- Indicates existing Structure
Point of minimum vertical clearance
Bridge Removal (Portion)

Caltrans Metric

CHUNG-YUAN WEN
DESIGN ENGINEER

	BY	CHECKED
DESIGN	K. Kim	K. Ghosh
DETAILS	M. Singh	K. Ghosh
QUANTITIES	K. Kim	H. Win

LOAD FACTOR DESIGN — LIVE LOADING: HS20-44 AND ALTERNATIVE AND PERMIT DESIGN LOAD
LAYOUT — BY M. Singh — CHECKED K. Ghosh
SPECIFICATIONS — BY J. LaHaye — PLANS AND SPECS COMPARED T. Kershell

STATE OF CALIFORNIA
DEPARTMENT OF TRANSPORTATION

DIVISION OF ENGINEERING SERVICES
STRUCTURE DESIGN
DESIGN BRANCH 21

BRIDGE NO. 57-0785
KILOMETER POST KP43.56

MIRA MESA BLVD UC (WIDEN)
GENERAL PLAN

ALL DIMENSIONS ARE IN METERS UNLESS OTHERWISE SHOWN

ORIGINAL SCALE IN MILLIMETERS FOR REDUCED PLANS 0 10 20 30 40 50 60 70 80 90 100

CU 11
EA 2T0401

DISREGARD PRINTS BEARING EARLIER REVISION DATES
REVISION DATES: 9/12/01 12/17/07 02/04/08 09/29/08 11/26/08 04/28/09

SHEET 1 OF 25

FILE => 57-0785-a-gp.dgn

STRUCTURES DESIGN GENERAL PLAN SHEET (METRIC) (REV.03-17-04)

USERNAME => kesl DATE PLOTTED => 29-SEP-2010 TIME PLOTTED => 11:23

DIST	COUNTY	ROUTE	KILOMETER POST TOTAL PROJECT	SHEET No	TOTAL SHEETS
11	SD	5,805	R49.9/R51.7, 42.6/46.5	621	886

REGISTERED CIVIL ENGINEER — DATE 04/28/09

9-27-10
PLANS APPROVAL DATE

REGISTERED PROFESSIONAL ENGINEER — KUMAR K. GHOSH — No. C 72555 — Exp. 06/30/10 — CIVIL — STATE OF CALIFORNIA

The State of California or its officers or agents shall not be responsible for the accuracy or completeness of electronic copies of this plan sheet.

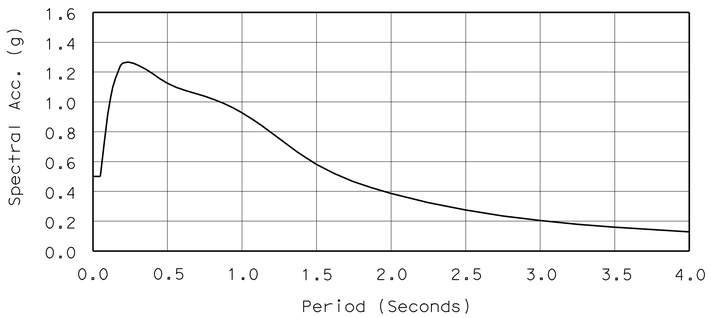

MODIFIED SITE SPECIFIC ARS CURVE

Peak Rock Acceleration = 0.5g
Magnitude, Mw = 7.0±
Type D Soil Profile
5% Damping

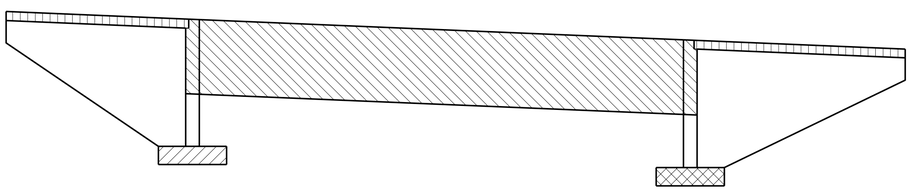

CONCRETE STRENGTH AND TYPE LIMITS

No Scale

GENERAL NOTES
LOAD AND RESISTANCE FACTOR

DESIGN:	AASHTO LRFD BRIDGE DESIGN SPECIFICATIONS 3RD EDITION WITH 2006 INTERIMS AND CALTRANS AMENDMENTS, V0.05
SEISMIC DESIGN:	Caltrans Seismic Design Criteria (SDC) version 1.4 February 2006
LIVE LOADING:	HL-93 Design Truck and Tandem and P15 long deck Permit design load
SEISMIC LOADING:	Modified Site Specific ARS Curve
REINFORCED CONCRETE:	ASTM A706 f_y = 420 MPa f'_c , see "Concrete Strength and Type Limits"
PRESTRESSED CONCRETE:	See "Prestressing Notes" on "Girder Layout" sheet

STANDARD PLANS JULY 2004

	A10A	ACRONYMS AND ABBREVIATIONS (A-L)
	A10B	ACRONYMS AND ABBREVIATIONS (M-Z)
	A10C	SYMBOLS (SHEET 1 OF 2)
	A10D	SYMBOLS (SHEET 2 OF 2)
	A62C	LIMITS OF PAYMENT FOR EXCAVATION AND BACKFILL BRIDGE
RSP	A76A	CONCRETE BARRIER TYPE 60C
	BO-1	BRIDGE DETAILS
	BO-3	BRIDGE DETAILS
	BO-5	BRIDGE DETAILS
	BO-13	BRIDGE DETAILS
	B3-1	RETAINING WALL TYPE 1 H=1M THROUGH H=9M
	B3-9	RETAINING WALL DETAILS NO. 2
RSP	B6-21	JOINT SEALS (MAXIMUM MOVEMENT RATING = 50 MM)
	B7-1	BOX GIRDER DETAILS
	B7-10	UTILITY OPENING BOX GIRDER
RSP	B8-5	CAST-IN-PLACE PRESTRESSED GIRDER DETAILS
	B11-47	CABLE RAILING
	B11-56	CONCRETE BARRIER TYPE 736
	B14-4	WATER SUPPLY LINE (BRIDGE) (PIPE SIZES LESS THAN 100 MM)
	B14-5	WATER SUPPLY LINE (DETAILS) (PIPE SIZES LESS THAN 100 MM)
	ES-9E	ELECTRICAL SYSTEMS
RSP	P10	CONCRETE PAVEMENT - DOWEL BAR DETAILS
	T3	TEMPORARY RAILING (TYPE K)

INDEX TO PLANS

NO.	SHEET NAME
1	GENERAL PLAN
2	INDEX TO PLANS
3	FOUNDATION PLAN
4	REMOVAL PLAN NO. 1
5	REMOVAL PLAN NO. 2
6	ABUTMENT LAYOUT NO. 1
7	ABUTMENT LAYOUT NO. 2
8	ABUTMENT LAYOUT NO. 3
9	ABUTMENT DETAILS NO. 1
10	ABUTMENT DETAILS NO. 2
11	WINGWALL DETAILS
12	BRIDGE JACKING DETAILS
13	TYPICAL SECTION NO. 1
14	TYPICAL SECTION NO. 2
15	GIRDER LAYOUT NO. 1
16	GIRDER LAYOUT NO. 2
17	GIRDER REINFORCEMENT
18	RETAINING WALL LAYOUT
19	STRUCTURE APPROACH TYPE N(9D)
20	STRUCTURE APPROACH TYPE R(9D)
21	STRUCTURE APPROACH DRAINAGE DETAILS
22	SLOPE PAVING DETAILS NO. 1
23	SLOPE PAVING DETAILS NO. 2
24	LOG OF TEST BORINGS 1 OF 2
25	LOG OF TEST BORINGS 2 OF 2

STANDARD PLAN SHEET NO.
DETAIL NO.

LEGEND

- Structural Concrete, Bridge (f'_c = 28 Mpa @ 28 days)
- Structural Concrete, Bridge (f'_c = 38 MPa @ 28 days - Middle Widen) (f'_c = 35 MPa @ 28 days - Left Widen)
- Structural Concrete Bridge Footing (f'_c = 28 MPa @ 28 days)
- Structural Concrete, Approach Slab (f'_c = 25 MPa @ 28 days)

SPREAD FOOTING DATA TABLE (MIDDLE WIDENING)

	WSD	
	Permissible Gross Contact Stress (Settlement)	Allowable Gross Soil Bearing Capacity
Abutment 1	72 KPa	192 KPa
Abutment 2	72 KPa	192 KPa

PILE DATA TABLE (LEFT WIDENING)

Location	Pile Type	Design Loading	Nominal Resistance		Desgin Tip Elevations (M)	Specified Tip Elevations (M)
			Compression	Tension		
Abutment 1	Steel H Piles HP 250x85	625kN	1250kN	0kN	39.4	39.4
Abutment 2	Steel H Piles HP 250x85	625kN	1250kN	0kN	37.3	37.3

NOTE: Design tip elevations are controlled by compression.

NOTE:
THE CONTRACTOR SHALL VERIFY ALL CONTROLLING FIELD DIMENSIONS BEFORE ORDERING OR FABRICATING ANY MATERIAL.

Caltrans Metric

	BY	CHECKED
DESIGN	K. Kim	K. Ghosh
DETAILS	P. Perez	K. Ghosh
QUANTITIES	K. Kim	H. Win

STATE OF CALIFORNIA
DEPARTMENT OF TRANSPORTATION

DIVISION OF ENGINEERING SERVICES
STRUCTURE DESIGN
DESIGN BRANCH 21

BRIDGE NO. 57-0785
KILOMETER POST KP43.56

MIRA MESA BLVD UC (WIDEN)
INDEX TO PLANS

ALL DIMENSIONS ARE IN MILLIMETERS UNLESS OTHERWISE SHOWN

ORIGINAL SCALE IN MILLIMETERS FOR REDUCED PLANS 0 10 20 30 40 50 60 70 80 90 100

CU 11
EA 2T0401

DISREGARD PRINTS BEARING EARLIER REVISION DATES

REVISION DATES: 09/28/08 10/08/08 11/28/08 04/28/09

SHEET 2 OF 25

FILE => 57-0785-a-itp.dgn

STRUCTURES DESIGN DETAIL SHEET (METRIC) (REV.03-17-04)

USERNAME => trmiress1 DATE PLOTTED => 29-SEP-2010 TIME PLOTTED => 11:23

DIST	COUNTY	ROUTE	KILOMETER POST TOTAL PROJECT	SHEET No	TOTAL SHEETS
11	SD	5,805	R49.9/R51.7, 42.6/46.5	622	886

Caltrans Metric

REGISTERED CIVIL ENGINEER 04/28/09 DATE

9-27-10
PLANS APPROVAL DATE

REGISTERED PROFESSIONAL ENGINEER KUMAR K. GHOSH No. C 72555 Exp. 06/30/10 CIVIL STATE OF CALIFORNIA

The State of California or its officers or agents shall not be responsible for the accuracy or completeness of electronic copies of this plan sheet.

Bridge Location

(A) 28.401 M Lt ℄ Route 805, Sta 445+15.598, Elev= 51.681
(B) 28.437 M Lt ℄ Route 805, Sta 445+69.686, Elev= 49.543
(C) 04.712 M Lt ℄ Route 805, Sta 445+07.453, Elev= 52.938
(D) 04.720 M Lt ℄ Route 805, Sta 445+60.147, Elev= 50.869
(E) 04.553 M Rt ℄ Route 805, Sta 445+05.367, Elev= 52.855
(F) 04.495 M Rt ℄ Route 805, Sta 445+56.553, Elev= 50.833
(G) 24.587 M Rt ℄ Route 805, Sta 445+00.715, Elev= 53.813
(H) 24.521 M Rt ℄ Route 805, Sta 445+50.861, Elev= 51.861

(1) Sta 444+97.612, "MMBM" Line =
Sta 445+42.675, "MMB5U" Line
(2) Sta 445+26.295, "MMBM" Line =
Sta 445+32.577, "DAR4" Line
(3) Sta 445+32.051, "MMBM" Line =
Sta 445+32.051, ℄ Route 805, "A" Line
(4) Sta 445+37.681, "MMBM" Line =
Sta 445+31.645, "DAR1" Line

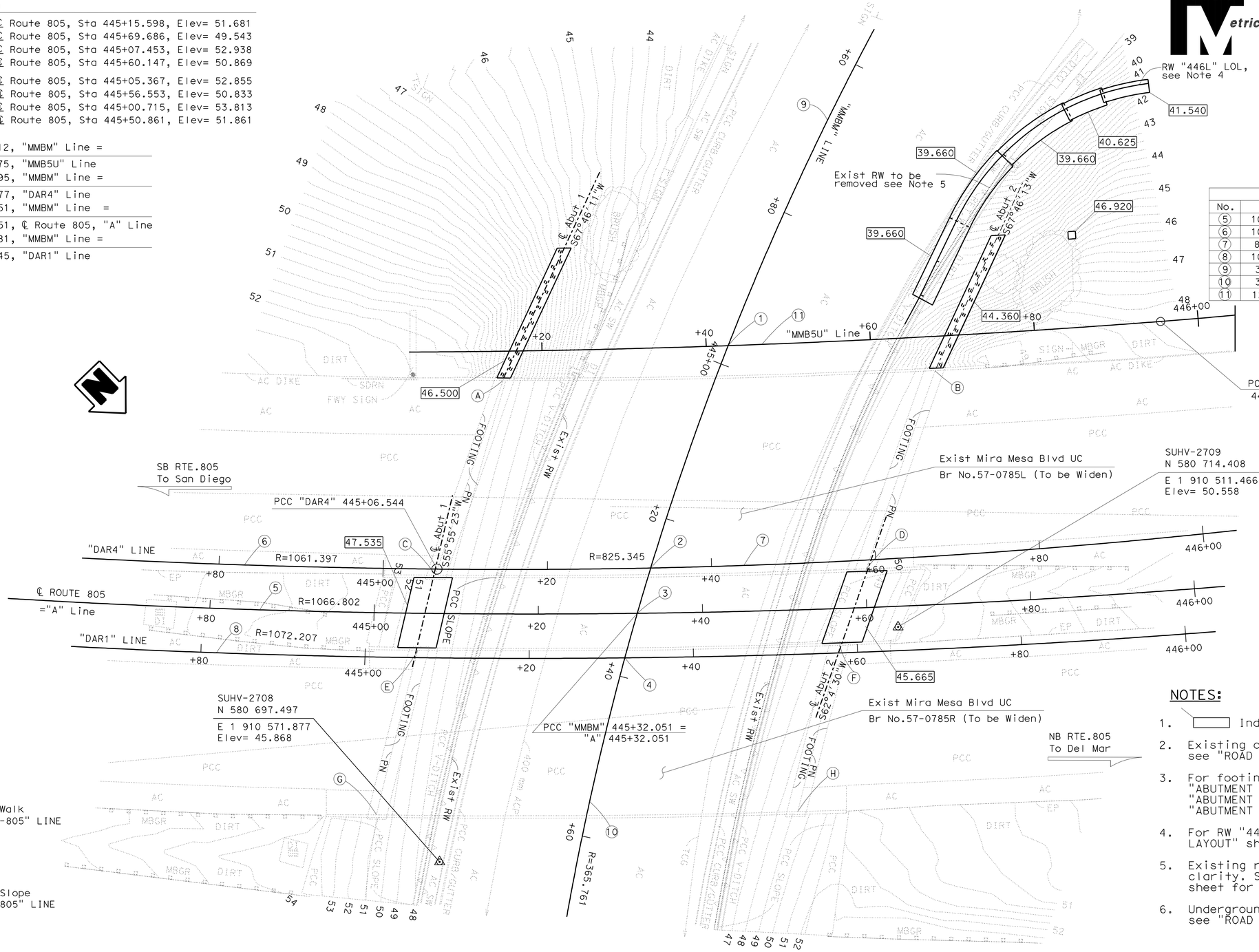

CURVE DATA				
No.	R	Δ	T	L
(5)	1066.802	51°00'06"	508.858	949.611
(6)	1061.397	11°08'58"	103.599	206.544
(7)	825.345	10°31'37"	76.034	151.641
(8)	1072.206	28°53'32"	276.215	540.673
(9)	365.761	14°25'11"	46.270	92.051
(10)	365.761	08°40'49"	27.759	55.413
(11)	1280.171	04°06'00"	45.824	91.608

SURVEY CONTROL

SUHV-2708
FD PK/Wshr./AC SWalk
30.245 M Rt, "SD-805" LINE
Sta 445+08.284
N 580 697.497
E 1 910 571.877
Elev= 45.868

SUHV-2709
FD PK/Wshr./Con.Slope
2.524 M Rt, "SD-805" LINE
Sta 445+63.720
N 580 714.408
E 1 910 511.466
Elev= 50.558

NOTES:

1. ▭ Indicates bottom of footing elevation.
2. Existing contours shown, for final contours see "ROAD PLANS."
3. For footing dimensions and pile layout, see "ABUTMENT LAYOUT NO. 1", "ABUTMENT LAYOUT NO. 2", "ABUTMENT LAYOUT NO. 3", "ABUTMENT DETAILS NO. 1", "ABUTMENT DETAILS NO. 2" sheets.
4. For RW "446L" layout, see "RETAINING WALL LAYOUT" sheet.
5. Existing retaining wall footings not shown for clarity. See "REMOVAL PLAN NO. 2" sheet for limits of existing retaining wall removal.
6. Underground utilities as shown are approximate, see "ROAD PLANS" for details.

ALL DIMENSIONS ARE IN METERS UNLESS OTHERWISE SHOWN

PRELIMINARY INVESTIGATION SECTION

SCALE	VERT. DATUM NGVD29	PHOTOGRAMMETRY AS OF:		
1:250	HORZ. DATUM NAD83(92)	SURVEYED	BY T.PHUNG 01/2008	CHECKED BY C.STEWART 01/2008
ALIGNMENT TIES	Dist. Trav. Sheets	DRAFTED	BY V.PHAM 01/2008	CHECKED BY S.ALIVIO 01/2008

	BY	CHECKED
DESIGN	K. Kim	K. Ghosh
DETAILS	M. Kingra	K. Ghosh
QUANTITIES	K. Kim	H. Win

STATE OF CALIFORNIA
DEPARTMENT OF TRANSPORTATION

DIVISION OF ENGINEERING SERVICES
STRUCTURE DESIGN
DESIGN BRANCH 21

BRIDGE NO. 57-0785
KILOMETER POST KP43.56

MIRA MESA BLVD UC (WIDEN)
FOUNDATION PLAN

STRUCTURES FOUNDATION PLAN SHEET (METRIC) (REV.10-27-05)

ORIGINAL SCALE IN MILLIMETERS FOR REDUCED PLANS 0 10 20 30 40 50 60 70 80 90 100

CU 11-275
EA 2T0401

DISREGARD PRINTS BEARING EARLIER REVISION DATES

REVISION DATES (PRELIMINARY STAGE ONLY) 01/24/08 9/30/08 11/26/08 04/28/09

SHEET 3 OF 25

FILE => 57-0785-c-fp01.dgn

USERNAME => tmikest DATE PLOTTED => 29-SEP-2010 TIME PLOTTED => 11:23

DIST	COUNTY	ROUTE	KILOMETER POST TOTAL PROJECT	SHEET No	TOTAL SHEETS
11	SD	5,805	R49.9/R51.7, 42.6/46.5	623	886

REGISTERED CIVIL ENGINEER 04/28/09 DATE

9-27-10
PLANS APPROVAL DATE

REGISTERED PROFESSIONAL ENGINEER KUMAR K. GHOSH No. C 72555 Exp. 06/30/10 CIVIL STATE OF CALIFORNIA

The State of California or its officers or agents shall not be responsible for the accuracy or completeness of electronic copies of this plan sheet.

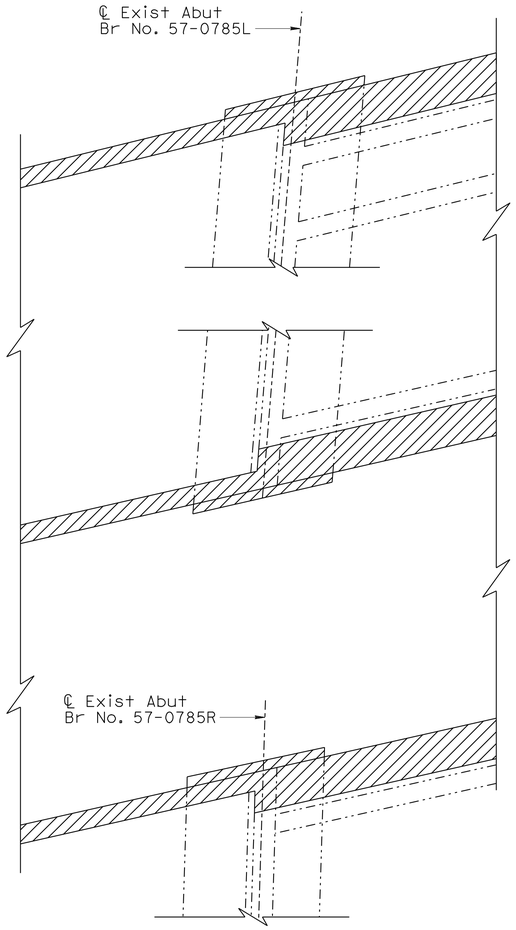

BRIDGE REMOVAL PLAN

No Scale

(Abut 1 shown, Abut 2 similar)

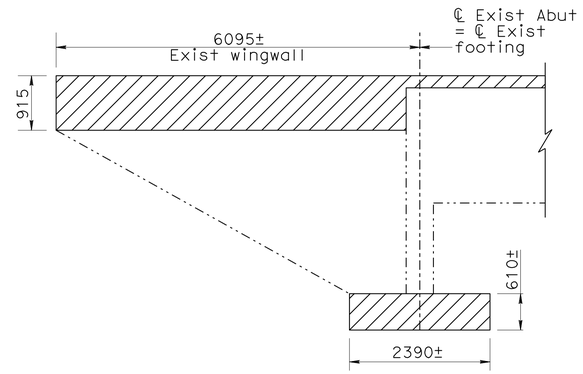

BR NO. 57-0785L REMOVAL ELEVATION

1:50

(Abut 1 shown, Abut 2 similar)

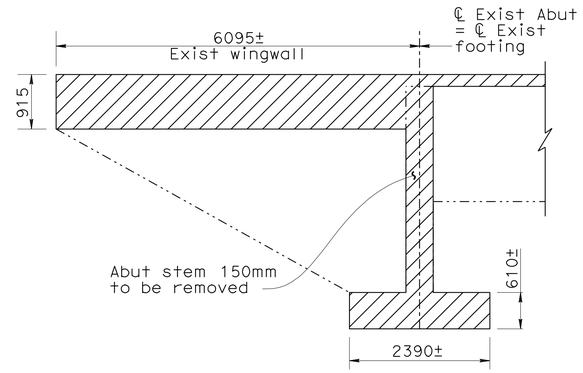

BR NO. 57-0785R REMOVAL ELEVATION

1:50

(Abut 1 shown, Abut 2 similar)

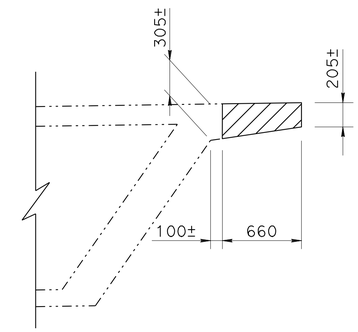

DECK REMOVAL ELEVATION

1:25

LEGEND

Bridge removal (Portion)

NOTE:
THE CONTRACTOR SHALL VERIFY ALL CONTROLLING FIELD DIMENSIONS BEFORE ORDERING OR FABRICATING ANY MATERIAL.

Caltrans Metric

	BY	CHECKED
DESIGN	K. Kim	K. Ghosh
DETAILS	P. Perez	K. Ghosh
QUANTITIES	K. Kim	H. Win

STATE OF CALIFORNIA
DEPARTMENT OF TRANSPORTATION

DIVISION OF ENGINEERING SERVICES
STRUCTURE DESIGN
DESIGN BRANCH 21

BRIDGE NO. 57-0785
KILOMETER POST KP43.56

MIRA MESA BLVD UC (WIDEN)
REMOVAL PLAN NO. 1

ALL DIMENSIONS ARE IN MILLIMETERS UNLESS OTHERWISE SHOWN

ORIGINAL SCALE IN MILLIMETERS FOR REDUCED PLANS 0 10 20 30 40 50 60 70 80 90 100

CU 11
EA 2T0401

DISREGARD PRINTS BEARING EARLIER REVISION DATES → 10/04/08 11/26/08 04/28/09

REVISION DATES

SHEET 4 OF 25

FILE => 57-0785-c-rem_pl01.dgn

STRUCTURES DESIGN DETAIL SHEET (METRIC) (REV.03-17-04)

USERNAME => frmikesl DATE PLOTTED => 29-SEP-2010 TIME PLOTTED => 11:24

DIST	COUNTY	ROUTE	KILOMETER POST TOTAL PROJECT	SHEET No	TOTAL SHEETS
11	SD	5,805	R49.9/R51.7, 42.6/46.5	624	886

REGISTERED CIVIL ENGINEER — DATE 04/28/09

9-27-10
PLANS APPROVAL DATE

REGISTERED PROFESSIONAL ENGINEER — KUMAR K. GHOSH — No. C 72555 — Exp. 06/30/10 — CIVIL — STATE OF CALIFORNIA

The State of California or its officers or agents shall not be responsible for the accuracy or completeness of electronic copies of this plan sheet.

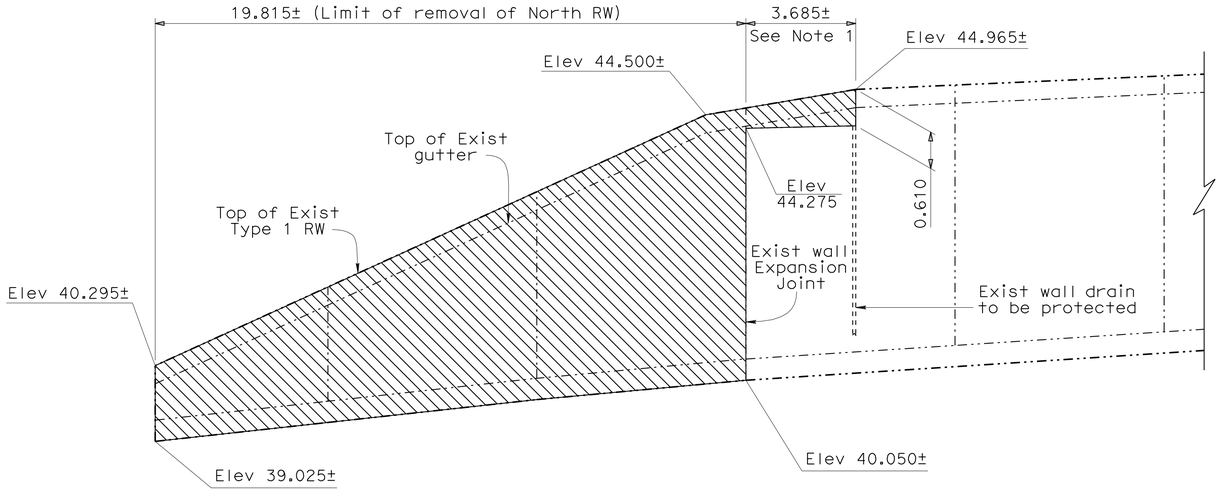

NORTH RW REMOVAL

No Scale

NOTE:

1. Top of Exist RW to be removed and the Exist gutter and cable railing to be reconstructed. See DETAIL-D in "RETAINING WALL LAYOUT" sheet.

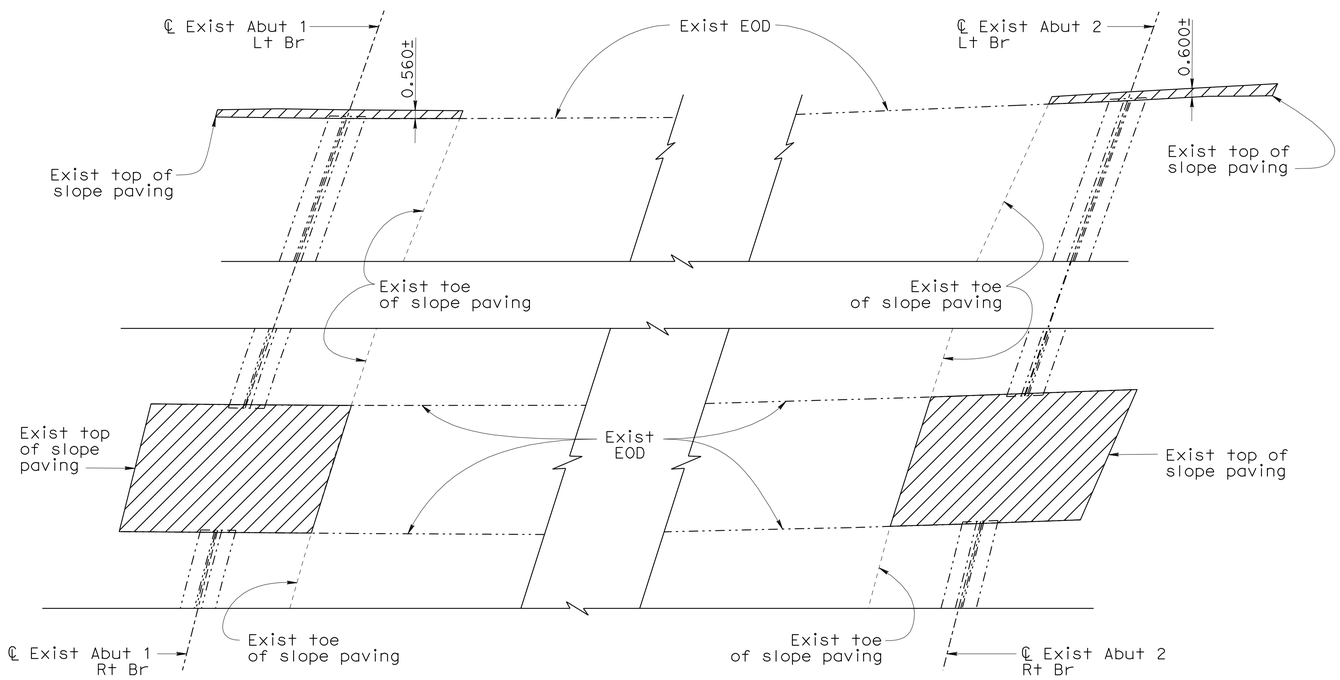

SLOPE PAVING REMOVAL

No Scale

NOTE:

Total slope paving removal area = ±175 m^2

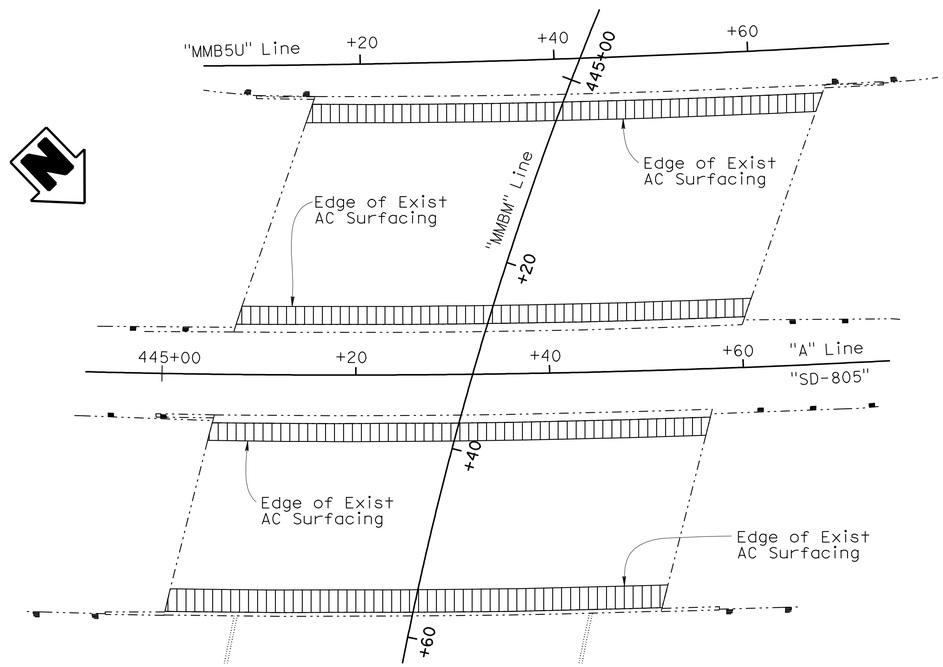

AC SURFACING REMOVAL

No Scale

NOTE:

AC surfacing to be removed without damage to existing deck. Contractor shall submit method of overlay removal for approval by engineer. Estimated depth of AC surfacing = ±20mm

LEGEND

- Bridge Removal (Portion)
- Retaining Wall Removal (Portion)
- Remove Asphalt Concrete Surfacing

NOTE:
THE CONTRACTOR SHALL VERIFY ALL CONTROLLING FIELD DIMENSIONS BEFORE ORDERING OR FABRICATING ANY MATERIAL.

	BY	CHECKED
DESIGN	K. Kim	K. Ghosh
DETAILS	T. Nguyen	K. Ghosh
QUANTITIES	K. Kim	H. Win

STATE OF CALIFORNIA
DEPARTMENT OF TRANSPORTATION

DIVISION OF ENGINEERING SERVICES
STRUCTURE DESIGN
DESIGN BRANCH 21

CU 11
EA 2T0401

BRIDGE NO. 57-0785
KILOMETER POST KP43.56

MIRA MESA BLVD UC (WIDEN)
REMOVAL PLAN NO. 2

ALL DIMENSIONS ARE IN METERS UNLESS OTHERWISE SHOWN

ORIGINAL SCALE IN MILLIMETERS FOR REDUCED PLANS 0 10 20 30 40 50 60 70 80 90 100

DISREGARD PRINTS BEARING EARLIER REVISION DATES 10/08/08 11/26/08 04/28/09

SHEET 5 OF 25

FILE => 57-0785-c-rem_pl02.dgn

STRUCTURES DESIGN DETAIL SHEET (METRIC) (REV.03-17-04)

USERNAME => trmikesl DATE PLOTTED => 29-SEP-2010 TIME PLOTTED => 11:24

DIST	COUNTY	ROUTE	KILOMETER POST TOTAL PROJECT	SHEET No	TOTAL SHEETS
11	SD	5,805	R49.9/R51.7, 42.6/46.5	625	886

REGISTERED CIVIL ENGINEER — DATE 04/28/09

9-27-10
PLANS APPROVAL DATE

The State of California or its officers or agents shall not be responsible for the accuracy or completeness of electronic copies of this plan sheet.

REGISTERED PROFESSIONAL ENGINEER — KUMAR K. GHOSH — No. C 72555 — Exp. 06/30/10 — CIVIL — STATE OF CALIFORNIA

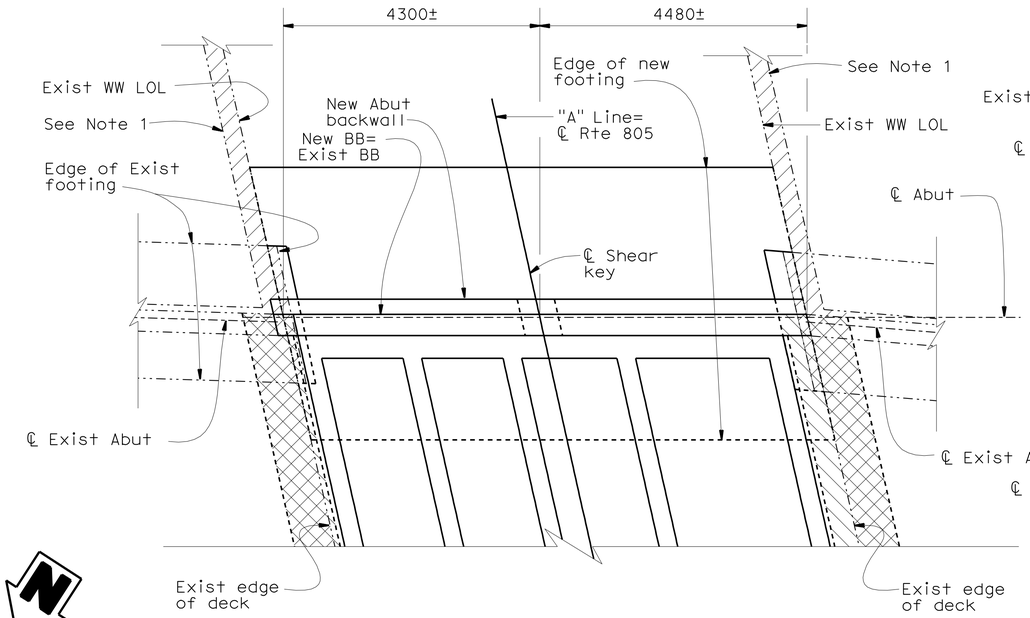

ABUTMENT 1 PLAN (MIDDLE WIDENING)

1:50

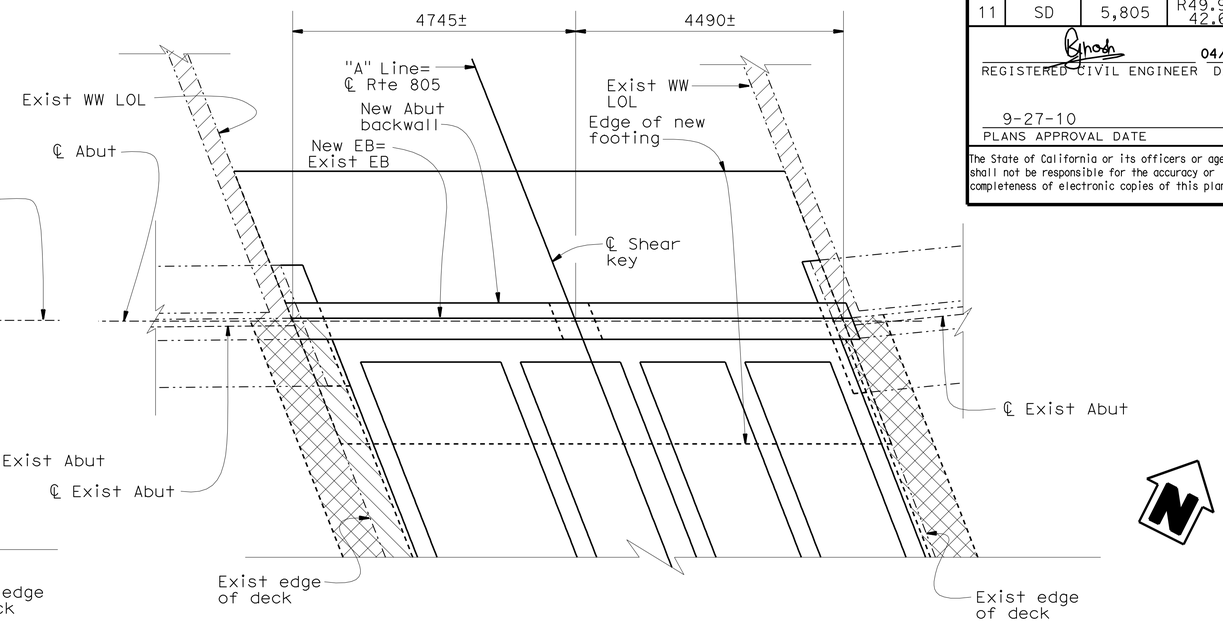

ABUTMENT 2 PLAN (MIDDLE WIDENING)

1:50

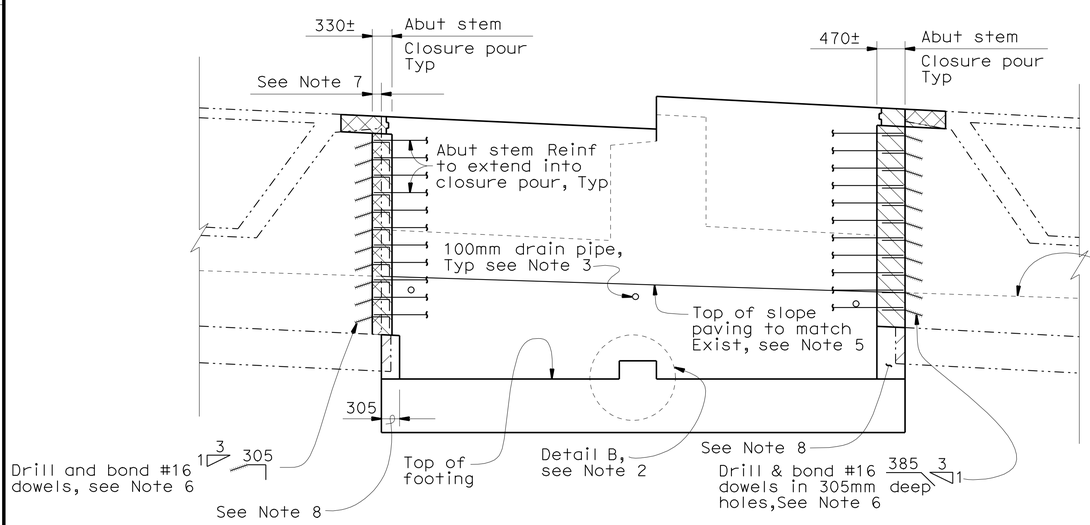

ABUTMENT 1 ELEVATION (MIDDLE WIDENING)

1:50

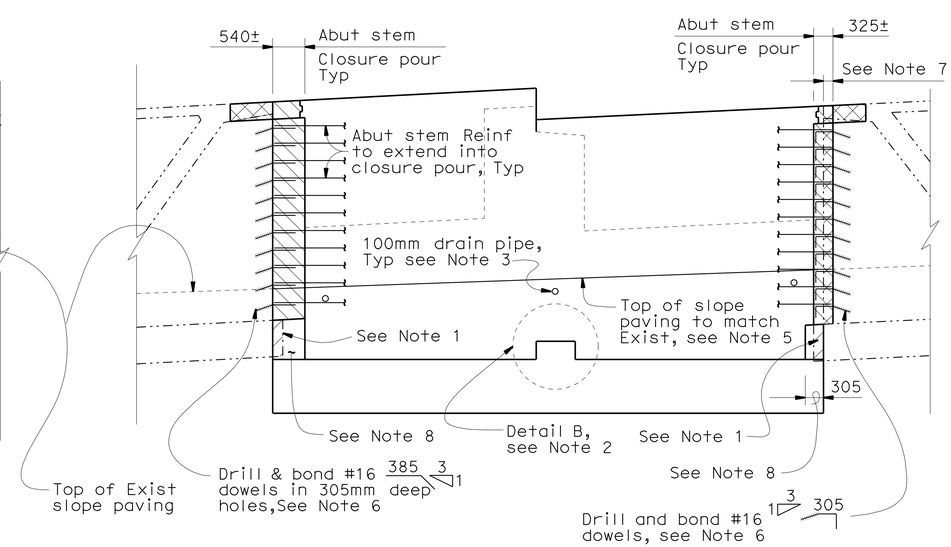

ABUTMENT 2 ELEVATION (MIDDLE WIDENING)

1:50

NOTES:

1. For concrete removal see "REMOVAL PLAN NO. 1" sheet.
2. For "DETAIL-B", see "ABUTMENT DETAILS NO. 1" sheet.
3. See "STRUCTURE APPROACH DRAINAGE DETAILS" sheet.
4. For Abutment Typical Section, see "ABUTMENT DETAILS NO.1" sheet.
5. For limits of slope paving, see "SLOPE PAVING DETAILS NO. 1" sheet.
6. For dowel layout, see "ABUTMENT DETAILS NO.1" sheet.
7. Remove existing abutment stem 150mm, existing horizontal reinforcement to be protected in place.
8. For reinforcement detail in footing step, see "FOOTING STEP DETAILS" in "ABUTMENT DETAIL NO.1" sheet. Exist footing reinforcement to be protected in place.

LEGEND:

- Closure Pour
- Bridge removal (portion)

NOTE:
THE CONTRACTOR SHALL VERIFY ALL CONTROLLING FIELD DIMENSIONS BEFORE ORDERING OR FABRICATING ANY MATERIAL.

Caltrans Metric

	BY	CHECKED
DESIGN	K. Kim	K. Ghosh
DETAILS	M. Singh	K. Ghosh
QUANTITIES	K. Kim	H. Win

STATE OF CALIFORNIA
DEPARTMENT OF TRANSPORTATION

DIVISION OF ENGINEERING SERVICES
STRUCTURE DESIGN
DESIGN BRANCH 21

BRIDGE NO. 57-0785
KILOMETER POST KP43.56

MIRA MESA BLVD UC (WIDEN)
ABUTMENT LAYOUT NO. 1

ALL DIMENSIONS ARE IN MILLIMETERS UNLESS OTHERWISE SHOWN

ORIGINAL SCALE IN MILLIMETERS FOR REDUCED PLANS 0 10 20 30 40 50 60 70 80 90 100

CU 11
EA 2T0401

DISREGARD PRINTS BEARING EARLIER REVISION DATES — REVISION DATES 09/04/08 11/26/08 04/28/09

SHEET 6 OF 25

FILE => 57-0785-d-a01_1o01.dgn

STRUCTURES DESIGN DETAIL SHEET (METRIC) (REV.03-17-04)

USERNAME => trmikes1 DATE PLOTTED => 29-SEP-2010 TIME PLOTTED => 11:24

DIST	COUNTY	ROUTE	KILOMETER POST TOTAL PROJECT	SHEET No	TOTAL SHEETS
11	SD	5,805	R49.9/R51.7, 42.6/46.5	626	886

REGISTERED CIVIL ENGINEER 04/28/09 DATE

9-27-10
PLANS APPROVAL DATE

REGISTERED PROFESSIONAL ENGINEER KUMAR K. GHOSH No. C 72555 Exp. 06/30/10 CIVIL STATE OF CALIFORNIA

The State of California or its officers or agents shall not be responsible for the accuracy or completeness of electronic copies of this plan sheet.

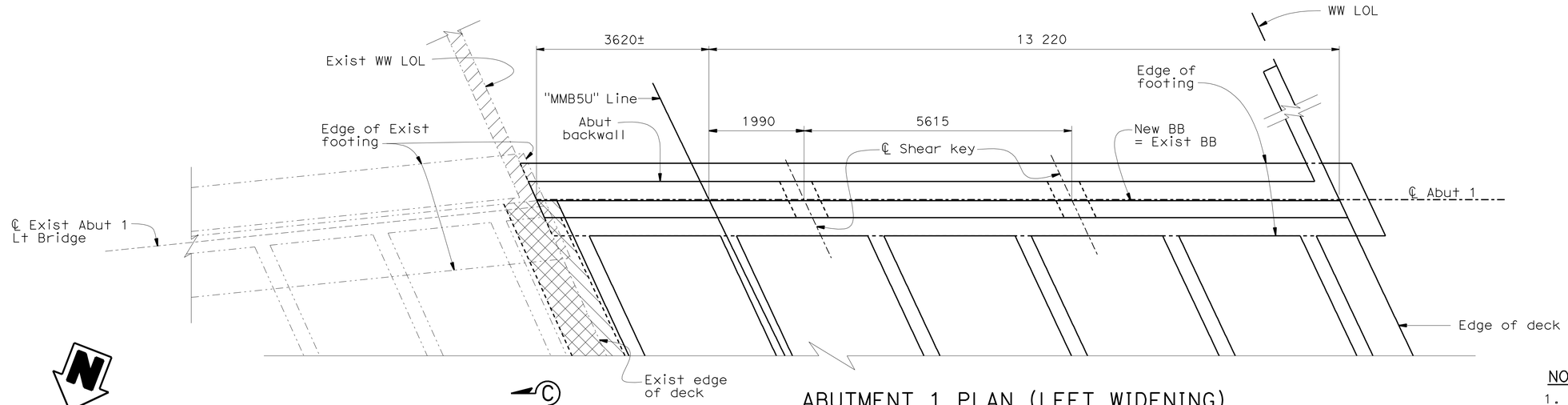

ABUTMENT 1 PLAN (LEFT WIDENING)

1:50

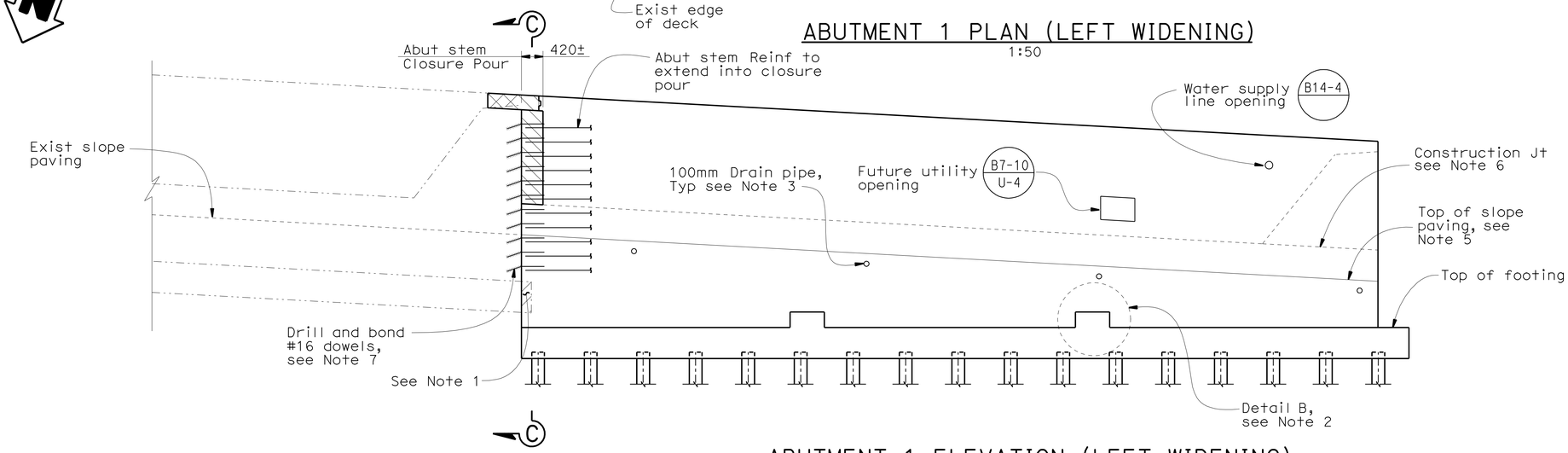

ABUTMENT 1 ELEVATION (LEFT WIDENING)

1:50

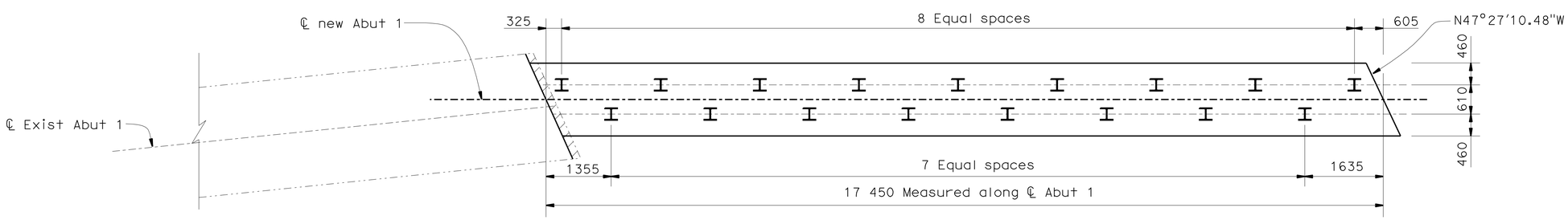

ABUTMENT 1 FOOTING PLAN (LEFT WIDENING)

1:50

NOTES:

1. For concrete removal, see "REMOVAL PLAN NO.1" sheet.
2. For Detail B, see "ABUTMENT DETAILS NO. 1" sheet.
3. See "STRUCTURE APPROACH DRAINAGE DETAILS" sheet.
4. For Abutment Typical Section and Section C-C, see "ABUTMENT DETAILS NO. 2" sheet.
5. For limits of slope paving, see "SLOPE PAVING DETAILS NO. 1" sheet.
6. For construction sequence of abutments, see "BRIDGE JACKING DETAILS" sheet.
7. For dowel layout (Left Widen), see "ABUTMENT DETAILS NO. 2" sheet.

LEGEND:

Closure Pour

Bridge removal (portion)

NOTE:
THE CONTRACTOR SHALL VERIFY ALL CONTROLLING FIELD DIMENSIONS BEFORE ORDERING OR FABRICATING ANY MATERIAL.

Caltrans Metric

	BY	CHECKED
DESIGN	K. Kim	K. Ghosh
DETAILS	M. Singh/P. Perez	K. Ghosh
QUANTITIES	K. Kim	H. Win

STATE OF CALIFORNIA
DEPARTMENT OF TRANSPORTATION

DIVISION OF ENGINEERING SERVICES
STRUCTURE DESIGN
DESIGN BRANCH 21

CU 11
EA 2T0401

BRIDGE NO. 57-0785
KILOMETER POST KP43.56

MIRA MESA BLVD UC (WIDEN)
ABUTMENT LAYOUT NO. 2

ALL DIMENSIONS ARE IN MILLIMETERS UNLESS OTHERWISE SHOWN

ORIGINAL SCALE IN MILLIMETERS FOR REDUCED PLANS 0 10 20 30 40 50 60 70 80 90 100

DISREGARD PRINTS BEARING EARLIER REVISION DATES

REVISION DATES: 09/08/08 09/28/08 10/09/08 11/28/08 04/28/09

SHEET 7 OF 25

FILE => 57-0785-d-a02_lo02.dgn

STRUCTURES DESIGN DETAIL SHEET (METRIC) (REV.03-17-04)

USERNAME => trmikesl DATE PLOTTED => 29-SEP-2010 TIME PLOTTED => 11:24

DIST	COUNTY	ROUTE	KILOMETER POST TOTAL PROJECT	SHEET No	TOTAL SHEETS
11	SD	5,805	R49.9/R51.7, 42.6/46.5	627	886

REGISTERED CIVIL ENGINEER 04/28/09 DATE

9-27-10
PLANS APPROVAL DATE

REGISTERED PROFESSIONAL ENGINEER KUMAR K. GHOSH No. C 72555 Exp. 06/30/10 CIVIL STATE OF CALIFORNIA

The State of California or its officers or agents shall not be responsible for the accuracy or completeness of electronic copies of this plan sheet.

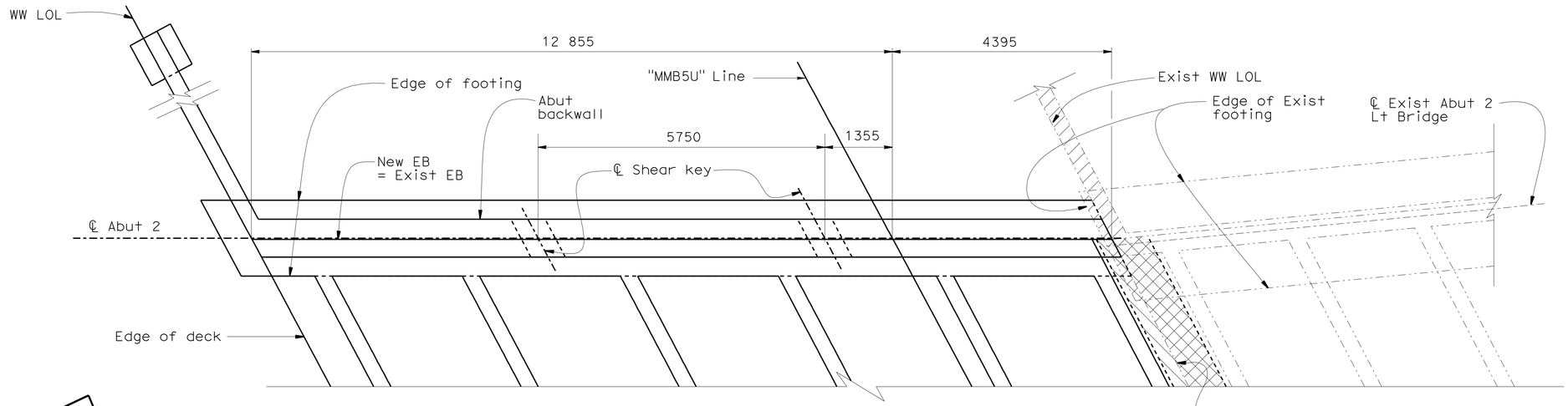

ABUTMENT 2 PLAN (LEFT WIDENING)

1:50

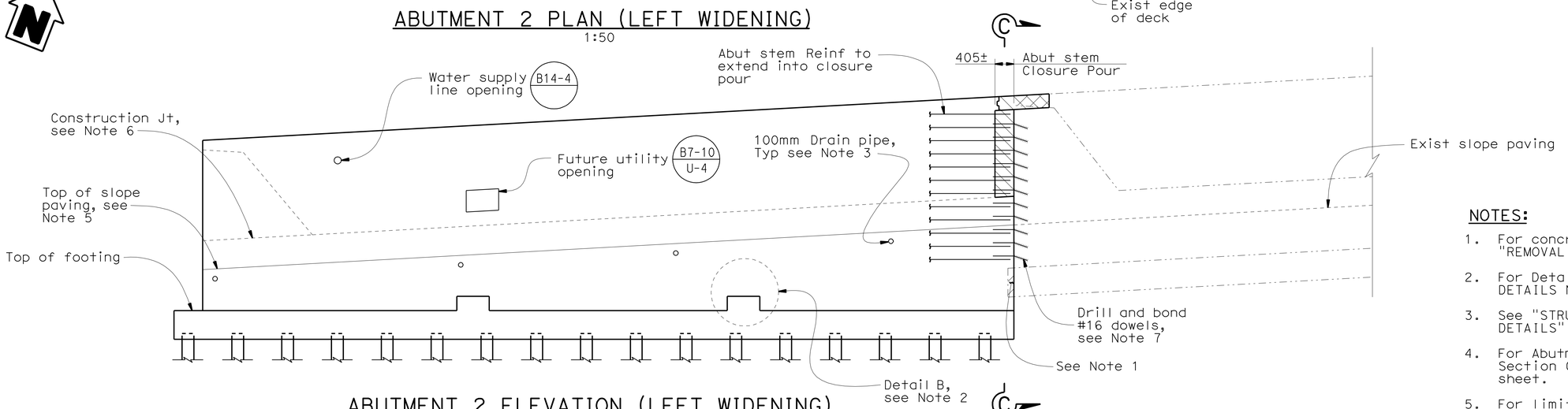

ABUTMENT 2 ELEVATION (LEFT WIDENING)

1:50

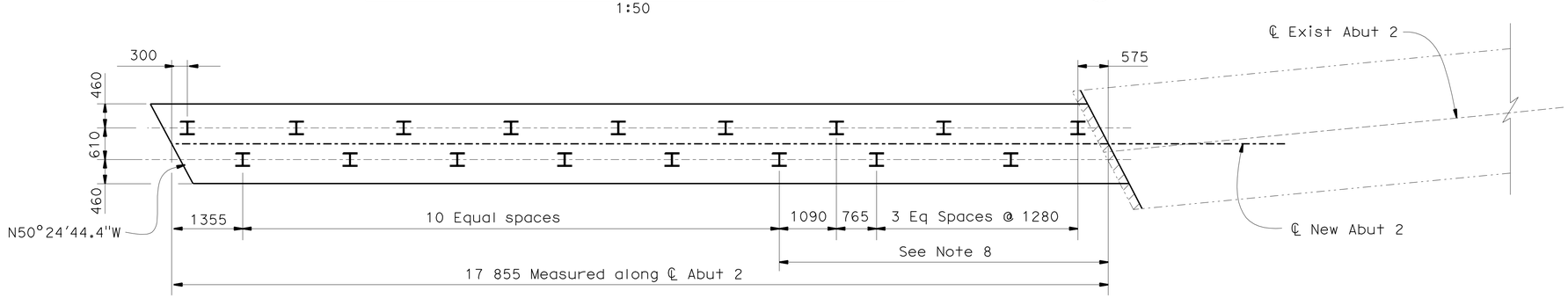

ABUTMENT 2 FOOTING PLAN (LEFT WIDENING)

1:50

NOTE:
THE CONTRACTOR SHALL VERIFY ALL CONTROLLING FIELD DIMENSIONS BEFORE ORDERING OR FABRICATING ANY MATERIAL.

NOTES:

1. For concrete removal, see "REMOVAL PLAN NO.1" sheet.
2. For Detail B, see "ABUTMENT DETAILS NO. 1" sheet.
3. See "STRUCTURE APPROACH DRAINAGE DETAILS" sheet.
4. For Abutment Typical Section and Section C-C, see "ABUTMENT DETAILS NO. 2" sheet.
5. For limits of slope paving, see "SLOPE PAVING DETAILS NO. 1" sheet.
6. For construction sequence of abutments, see "BRIDGE JACKING DETAILS" sheet.
7. For dowel layout (Left Widen), see "ABUTMENT DETAILS NO. 2" sheet.
8. Locations of existing RW 446L tieback anchors are to be verified at site before driving new piles and are to be protected in place.

LEGEND:

Closure Pour

Bridge removal (portion)

Caltrans Metric

ALL DIMENSIONS ARE IN MILLIMETERS UNLESS OTHERWISE SHOWN

ORIGINAL SCALE IN MILLIMETERS FOR REDUCED PLANS 0 10 20 30 40 50 60 70 80 90 100

	BY	CHECKED
DESIGN	K. Kim	K. Ghosh
DETAILS	M. Singh/P. Perez	K. Ghosh
QUANTITIES	K. Kim	H. Win

STATE OF CALIFORNIA DEPARTMENT OF TRANSPORTATION

DIVISION OF ENGINEERING SERVICES STRUCTURE DESIGN
DESIGN BRANCH 21

CU 11
EA 2T0401

BRIDGE NO. 57-0785
KILOMETER POST KP43.56

MIRA MESA BLVD UC (WIDEN)
ABUTMENT LAYOUT NO. 3

DISREGARD PRINTS BEARING EARLIER REVISION DATES

REVISION DATES: 09/05/08 09/18/08 10/07/08 11/26/08 04/28/09

SHEET 8 OF 25

FILE => 57-0785-d-a02_lo03.dgn

STRUCTURES DESIGN DETAIL SHEET (METRIC) (REV.03-17-04)

USERNAME => trmikest DATE PLOTTED => 29-SEP-2010 TIME PLOTTED => 11:24

DIST	COUNTY	ROUTE	KILOMETER POST TOTAL PROJECT	SHEET No	TOTAL SHEETS
11	SD	5,805	R49.9/R51.7, 42.6/46.5	628	886

REGISTERED CIVIL ENGINEER 04/28/09 DATE

9-27-10
PLANS APPROVAL DATE

REGISTERED PROFESSIONAL ENGINEER KUMAR K. GHOSH No. C 72555 Exp. 06/30/10 CIVIL STATE OF CALIFORNIA

The State of California or its officers or agents shall not be responsible for the accuracy or completeness of electronic copies of this plan sheet.

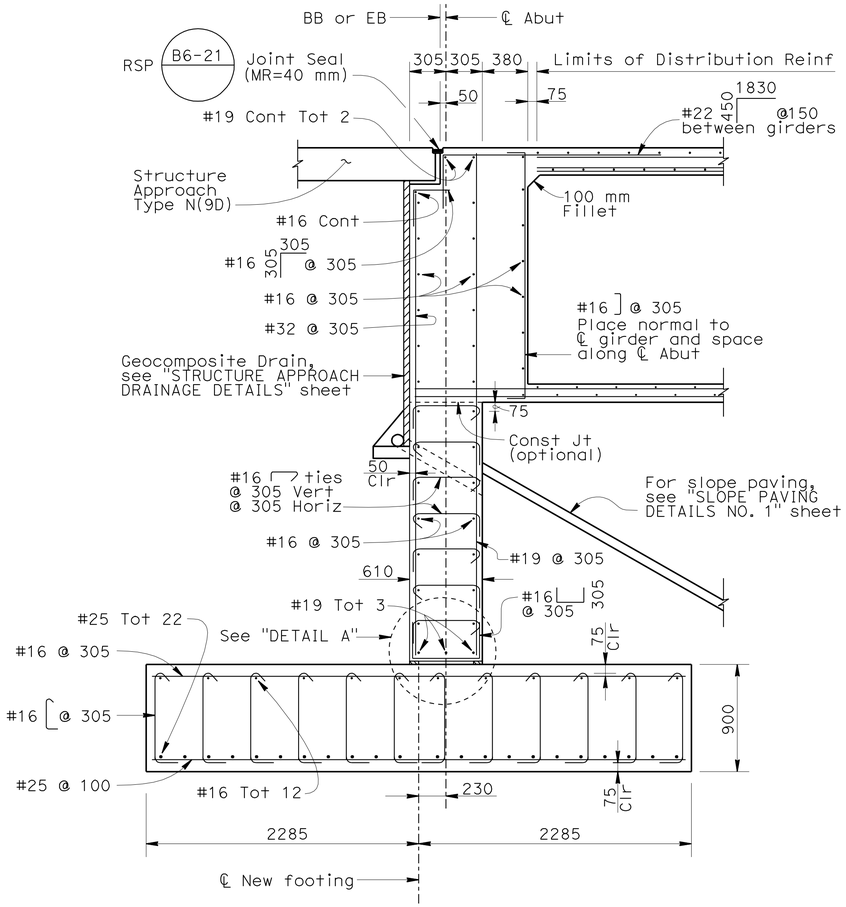

NOTE: For reinforcement not shown, see "END DIAPHRAGM DETAIL (MIDDLE WIDENING)."

TYPICAL SECTION (MIDDLE WIDENING)

1:25

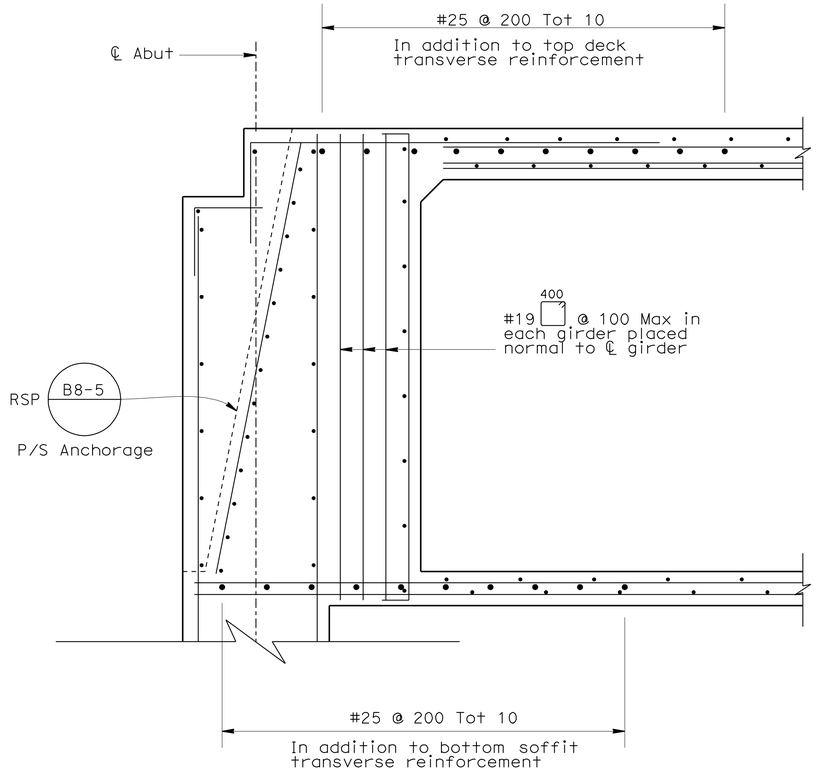

NOTE: For reinforcement not shown, see "TYPICAL SECTION (MIDDLE WIDENING)."

END DIAPHRAGM DETAIL (MIDDLE WIDENING)

No Scale

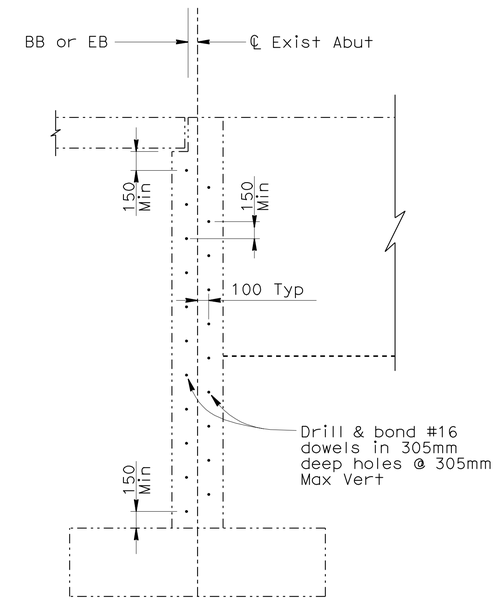

DOWEL LAYOUT (MIDDLE WIDENING)

No Scale

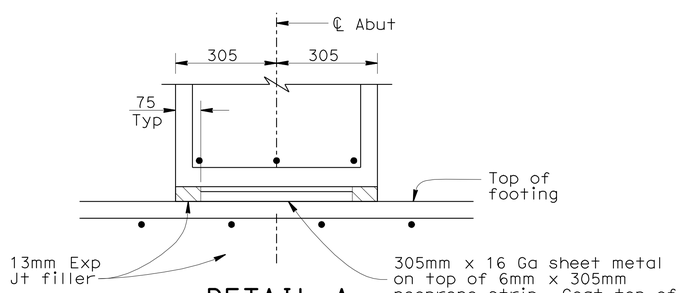

DETAIL A

No Scale

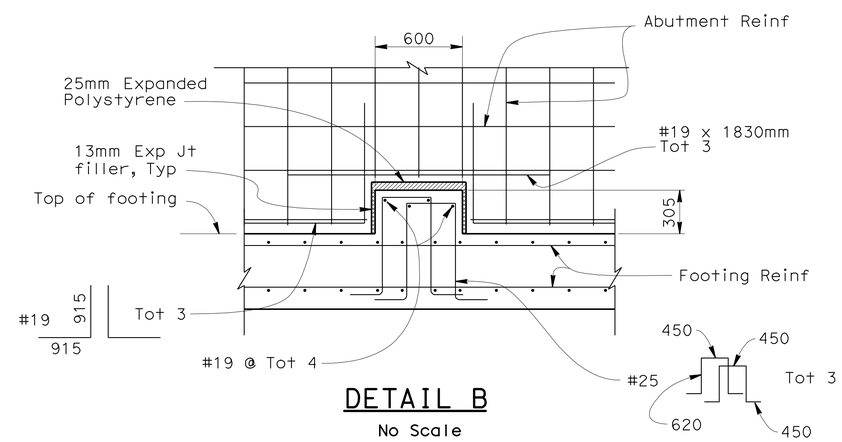

DETAIL B

No Scale

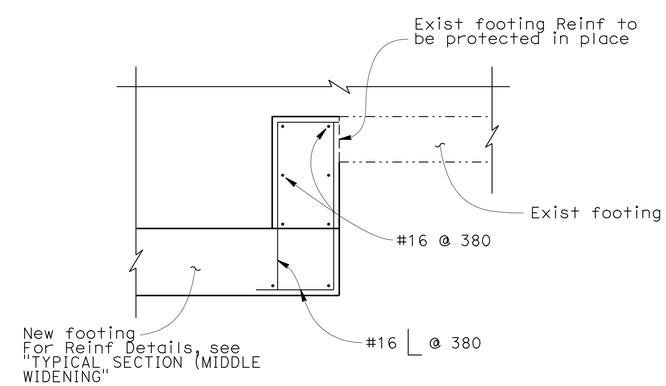

FOOTING STEP DETAILS

No Scale

NOTE:
THE CONTRACTOR SHALL VERIFY ALL CONTROLLING FIELD DIMENSIONS BEFORE ORDERING OR FABRICATING ANY MATERIAL.

	BY	CHECKED
DESIGN	K. Kim	K. Ghosh
DETAILS	P. Perez/M. Singh	K. Ghosh
QUANTITIES	K. Kim	H. Win

STATE OF CALIFORNIA DEPARTMENT OF TRANSPORTATION

DIVISION OF ENGINEERING SERVICES STRUCTURE DESIGN DESIGN BRANCH 21

BRIDGE NO. 57-0785
KILOMETER POST KP43.56

MIRA MESA BLVD UC (WIDEN)

ABUTMENT DETAILS NO. 1

ALL DIMENSIONS ARE IN MILLIMETERS UNLESS OTHERWISE SHOWN

ORIGINAL SCALE IN MILLIMETERS FOR REDUCED PLANS 0 10 20 30 40 50 60 70 80 90 100

CU 11
EA 2T0401

DISREGARD PRINTS BEARING EARLIER REVISION DATES

REVISION DATES 09/08/08 10/05/08 11/26/08 04/28/09

SHEET 9 OF 25

FILE => 57-0785-e-a01dt01.dgn

STRUCTURES DESIGN DETAIL SHEET (METRIC) (REV.03-17-04)

USERNAME => trmikest DATE PLOTTED => 23-SEP-2010 TIME PLOTTED => 11:24

DIST	COUNTY	ROUTE	KILOMETER POST TOTAL PROJECT	SHEET No	TOTAL SHEETS
11	SD	5,805	R49.9/R51.7, 42.6/46.5	629	886

REGISTERED CIVIL ENGINEER — DATE 04/28/09

9-27-10
PLANS APPROVAL DATE

REGISTERED PROFESSIONAL ENGINEER — KUMAR K. GHOSH — No. C 72555 — Exp. 06/30/10 — CIVIL — STATE OF CALIFORNIA

The State of California or its officers or agents shall not be responsible for the accuracy or completeness of electronic copies of this plan sheet.

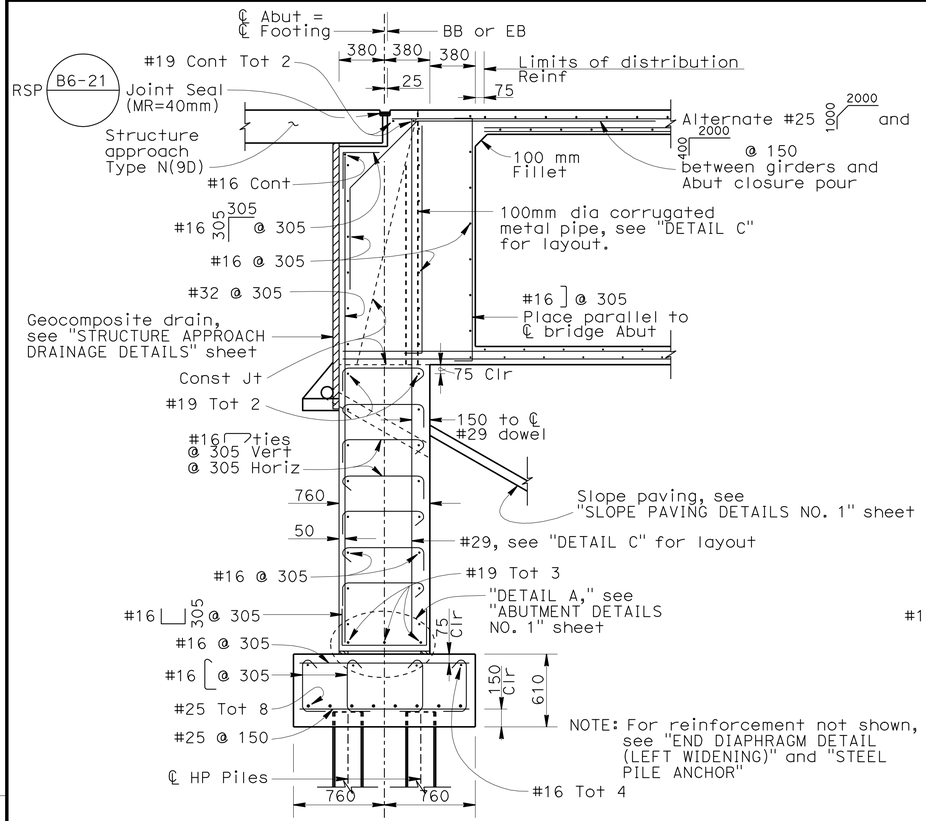

TYPICAL SECTION (LEFT WIDENING)

1:25

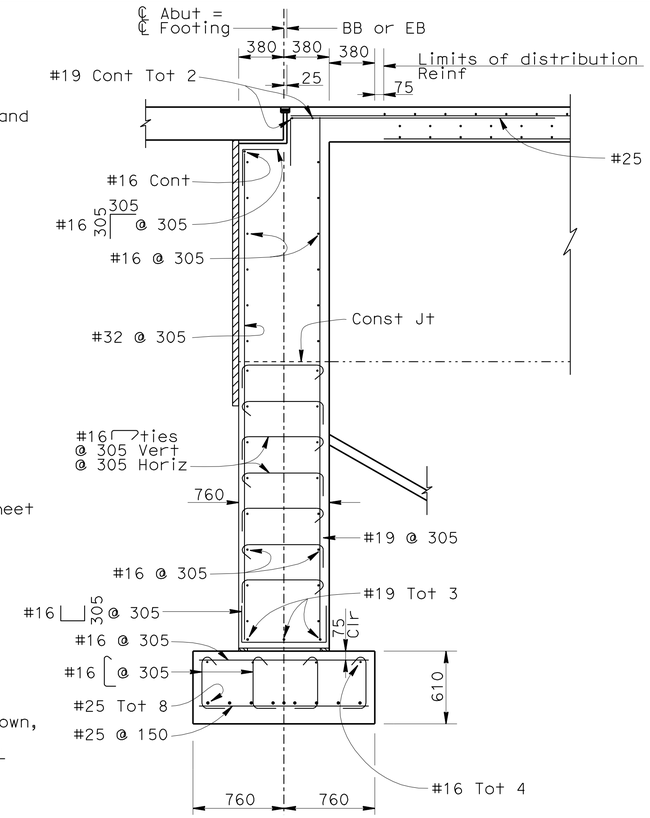

SECTION C-C

1:25

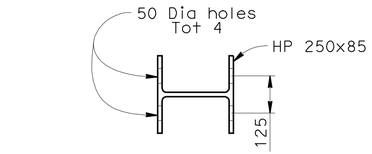

PLAN

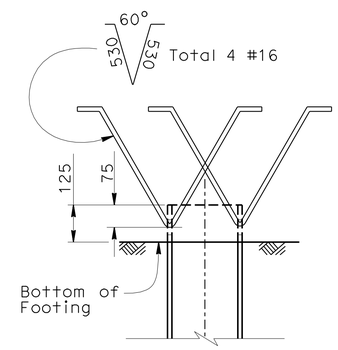

ELEVATION

STEEL PILE ANCHOR

NO SCALE

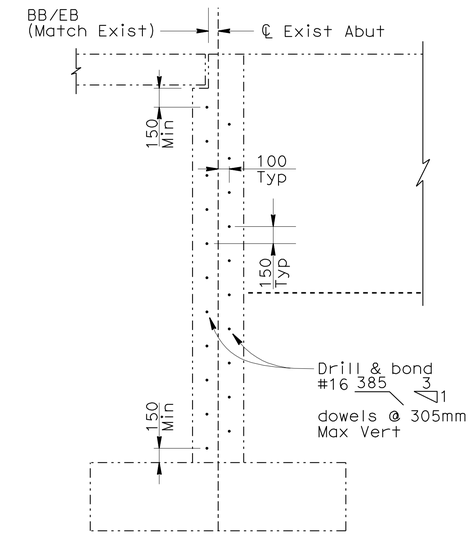

DOWEL LAYOUT (LEFT WIDEN)

No Scale

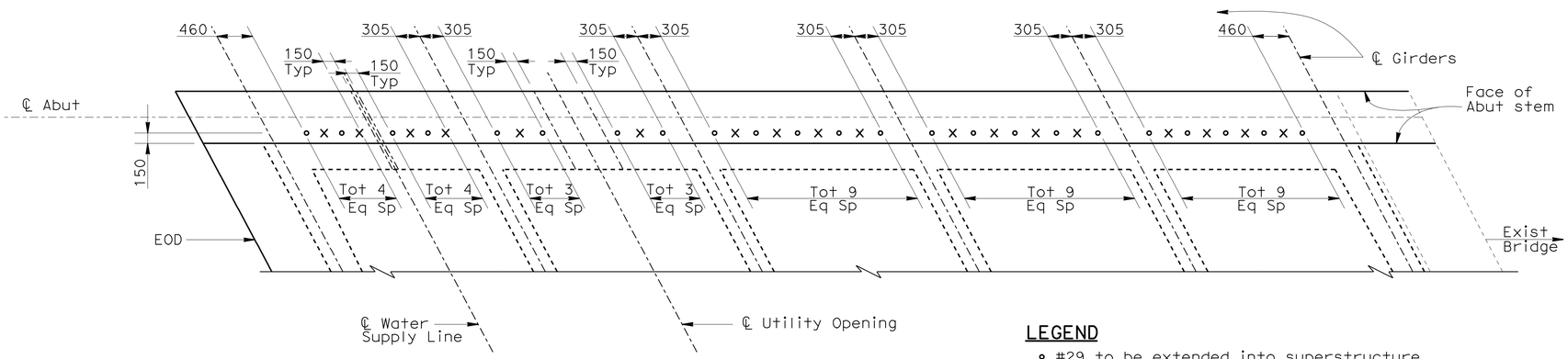

DETAIL C

1:40

LEGEND

- ∘ #29 to be extended into superstructure through 100mm Dia corrugated metal pipe. See "TYPICAL SECTION (LEFT WIDENING)." Pipe to be filled with same strength concrete as abutment stem after completion of abutment construction. For Min concrete strength requirements, see "INDEX TO PLANS" sheet.
- × #29 to be stopped at deck soffit level.

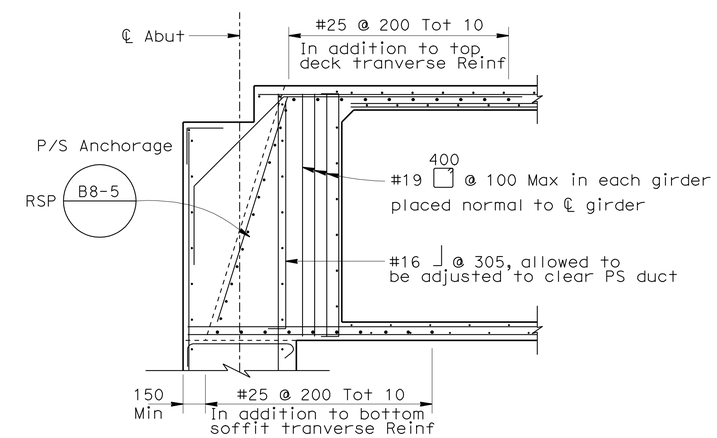

NOTE: For reinforcement not shown see, "TYPICAL SECTION (LEFT WIDENING)"

END DIAPHRAGM DETAIL (LEFT WIDENING)

No Scale

NOTE:
THE CONTRACTOR SHALL VERIFY ALL CONTROLLING FIELD DIMENSIONS BEFORE ORDERING OR FABRICATING ANY MATERIAL.

Caltrans Metric

ALL DIMENSIONS ARE IN MILLIMETERS UNLESS OTHERWISE SHOWN

ORIGINAL SCALE IN MILLIMETERS FOR REDUCED PLANS 0 10 20 30 40 50 60 70 80 90 100

	BY	CHECKED
DESIGN	K. Kim	K. Ghosh
DETAILS	P. Perez/M. Singh	K. Ghosh
QUANTITIES	K. Kim	H. Win

STATE OF CALIFORNIA
DEPARTMENT OF TRANSPORTATION

DIVISION OF ENGINEERING SERVICES
STRUCTURE DESIGN
DESIGN BRANCH 21

CU 11
EA 2T0401

BRIDGE NO. 57-0785
KILOMETER POST KP43.56

MIRA MESA BLVD UC (WIDEN)
ABUTMENT DETAILS NO. 2

DISREGARD PRINTS BEARING EARLIER REVISION DATES

REVISION DATES: 09/08/08 10/06/08 11/26/08 04/28/09

SHEET 10 OF 25

FILE => 57-0785-e-a02dt02.dgn

STRUCTURES DESIGN DETAIL SHEET (METRIC) (REV.03-17-04)

USERNAME => trmikesi DATE PLOTTED => 29-SEP-2010 TIME PLOTTED => 11:25

DIST	COUNTY	ROUTE	KILOMETER POST TOTAL PROJECT	SHEET No	TOTAL SHEETS
11	SD	5,805	R49.9/R51.7, 42.6/46.5	630	886

REGISTERED CIVIL ENGINEER — DATE 04/28/09

9-27-10
PLANS APPROVAL DATE

REGISTERED PROFESSIONAL ENGINEER — KUMAR K. GHOSH — No. C 72555 — Exp. 06/30/10 — CIVIL — STATE OF CALIFORNIA

The State of California or its officers or agents shall not be responsible for the accuracy or completeness of electronic copies of this plan sheet.

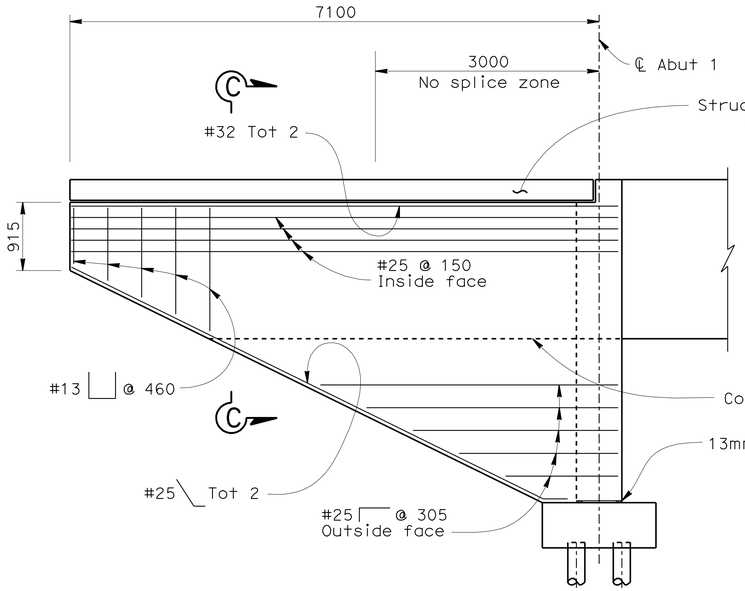

ABUTMENT 1 WINGWALL ELEVATION

1:40

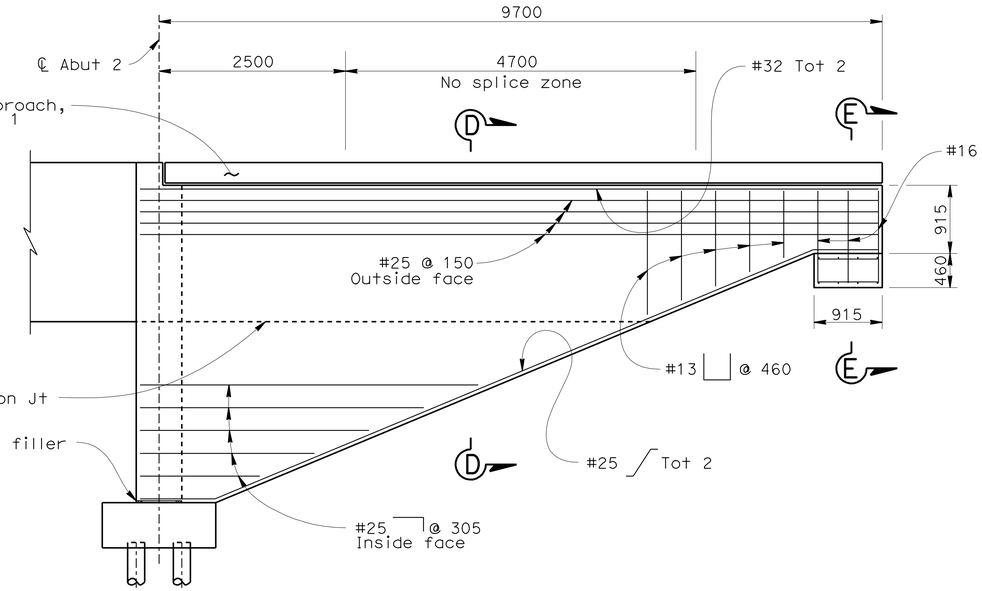

ABUTMENT 2 WINGWALL ELEVATION

1:40

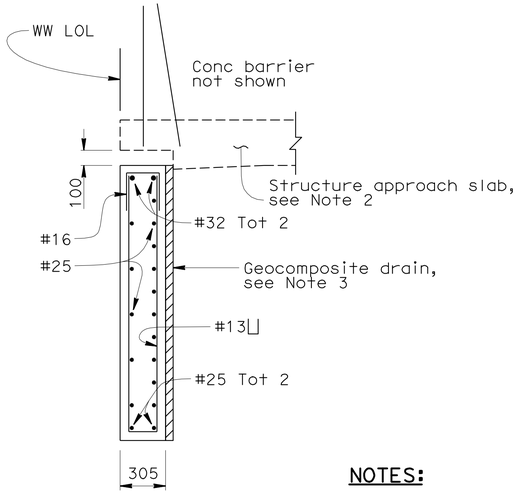

SECTION C-C

1:20

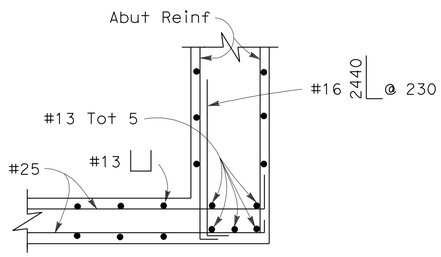

CORNER DETAIL

No Scale

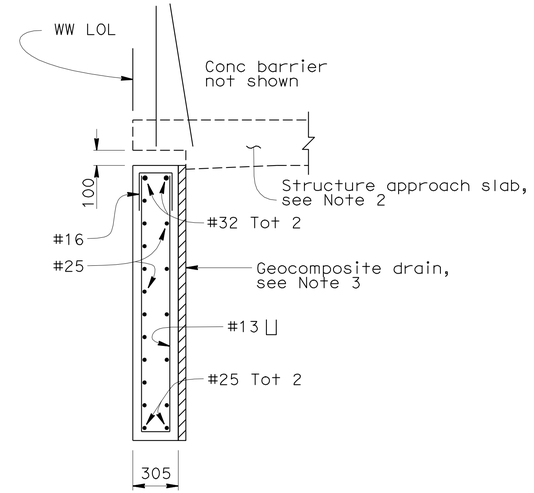

SECTION D-D

1:20

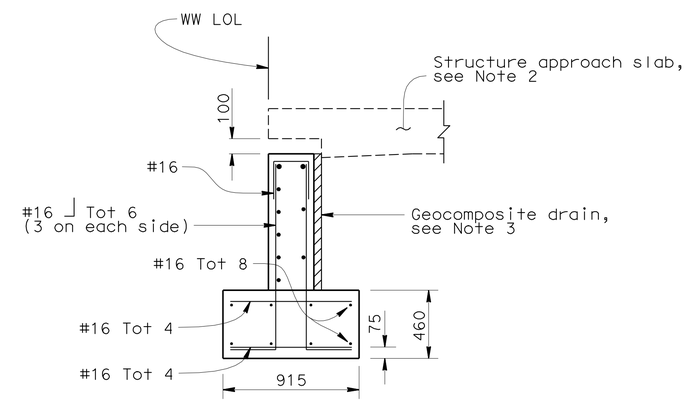

SECTION E-E

1:20

NOTES:

1. Approach slab length shall be adjusted to match with the end of wingwall.
2. See "STRUCTURE APPROACH TYPE N(9D)" sheet.
3. See "STRUCTURE APPROACH DRAINAGE DETAILS" sheet.

NOTE:
THE CONTRACTOR SHALL VERIFY ALL CONTROLLING FIELD DIMENSIONS BEFORE ORDERING OR FABRICATING ANY MATERIAL.

Caltrans Metric

	BY	CHECKED
DESIGN	K. Kim	K. Ghosh
DETAILS	P. Perez	K. Ghosh
QUANTITIES	K. Kim	H. Win

STATE OF CALIFORNIA
DEPARTMENT OF TRANSPORTATION

DIVISION OF ENGINEERING SERVICES
STRUCTURE DESIGN
DESIGN BRANCH 21

BRIDGE NO. 57-0785
KILOMETER POST KP43.56

MIRA MESA BLVD UC (WIDEN)
WINGWALL DETAILS

ALL DIMENSIONS ARE IN MILLIMETERS UNLESS OTHERWISE SHOWN

ORIGINAL SCALE IN MILLIMETERS FOR REDUCED PLANS 0 10 20 30 40 50 60 70 80 90 100

CU 11
EA 2T0401

DISREGARD PRINTS BEARING EARLIER REVISION DATES

REVISION DATES: 09/28/08 10/27/08 11/28/08 04/28/09

SHEET 11 OF 25

FILE => 57-0785-f-ww_dt.dgn

STRUCTURES DESIGN DETAIL SHEET (METRIC) (REV.03-17-04)

USERNAME => rtmikes1 DATE PLOTTED => 29-SEP-2010 TIME PLOTTED => 11:25

DIST	COUNTY	ROUTE	KILOMETER POST TOTAL PROJECT	SHEET No	TOTAL SHEETS
11	SD	5,805	R49.9/R51.7, 42.6/46.5	631	886

REGISTERED CIVIL ENGINEER 04/28/09 DATE

9-27-10
PLANS APPROVAL DATE

REGISTERED PROFESSIONAL ENGINEER KUMAR K. GHOSH No. C 72555 Exp. 06/30/10 CIVIL STATE OF CALIFORNIA

The State of California or its officers or agents shall not be responsible for the accuracy or completeness of electronic copies of this plan sheet.

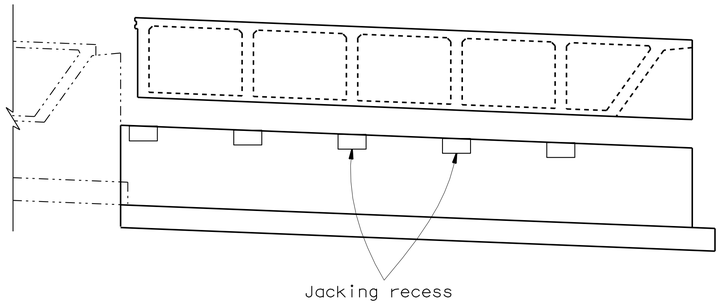

SUPERSTRUCTURE IN RAISED POSITION

No Scale

(Abutment 1 shown, Abutment 2 similar)

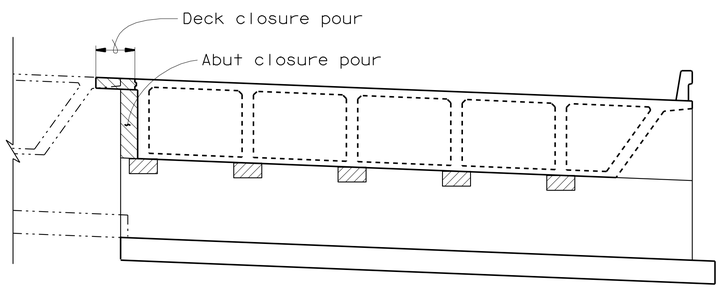

SUPERSTRUCTURE IN FINAL POSITION

No Scale

(Abutment 1 shown, Abutment 2 similar)

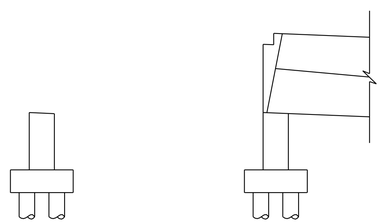

CONSTRUCTION SEQUENCES 1 to 5 — CONSTRUCTION SEQUENCES 6 to 10

ABUTMENT CONSTRUCTION SEQUENCE

No Scale

LEGEND

- Fill jacking recess with structural concrete after lowering superstructure
- Deck and abutment closure pour
- Falsework

NOTE:
THE CONTRACTOR SHALL VERIFY ALL CONTROLLING FIELD DIMENSIONS BEFORE ORDERING OR FABRICATING ANY MATERIAL.

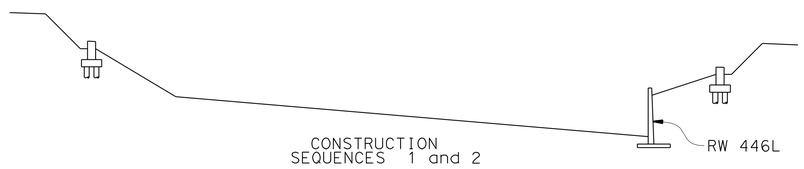

CONSTRUCTION SEQUENCES 1 and 2

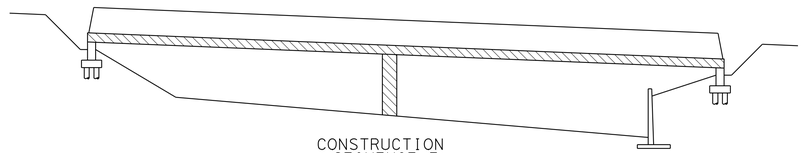

CONSTRUCTION SEQUENCE 3

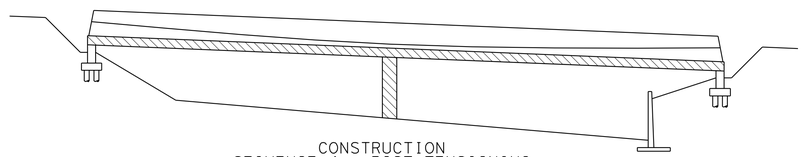

CONSTRUCTION SEQUENCE 4 - POST TENSIONING

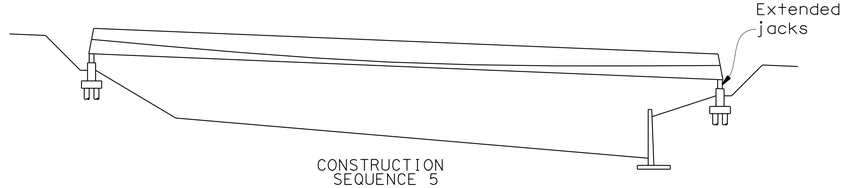

CONSTRUCTION SEQUENCE 5

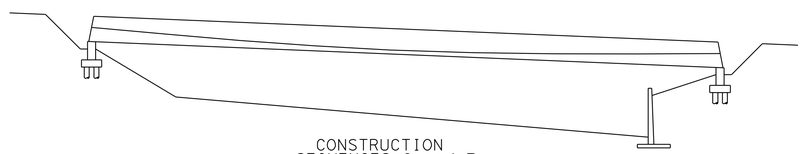

CONSTRUCTION SEQUENCES 6 and 7

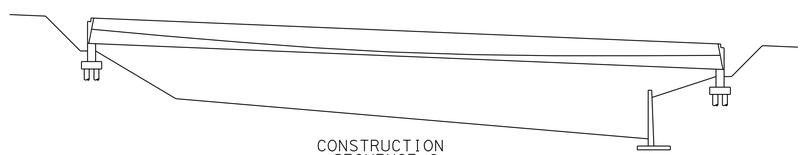

CONSTRUCTION SEQUENCE 8

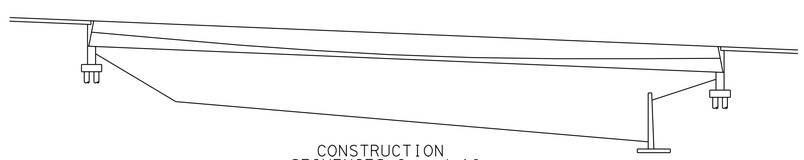

CONSTRUCTION SEQUENCES 9 and 10

Estimated Jacking Load Table	
Location	Total Min Jacking Load (KN)
Abutment 1 (Left Widen)	7560
Abutment 2 (Left Widen)	7560

NOTES

1. Loads given are 1.3X total structure Dead Loads at the specified locations.
2. The Jacking Loads at each specified Jack location shall be the total divided by the number of Jacks.
3. Contractor shall determine height for casting deck based on false work depth and clearance requirements.
4. Bottom of jacking recess shall be level so that jacks are vertical.
5. Structure to be lowered simultaneously at the abutments.
6. Contractor to Design Lowering System. Shop Drawings to be submitted for Approval. Lowering System shall include a minimum of five Hydraulic Jack at each abutment.
7. Before lowering the structure, temporary lateral supports should be provided in both directions to resist minimum of 10% of total jacking load.
8. Roadway to be closed during all jacking operations.

CONSTRUCTION SEQUENCE

1. Construct Retaining Wall 446L.
2. Construct abutments up to bottom of soffit level. Front face of abutment to be graded to final configuration and back face to be graded up to top level of front grade.
3. Construct falsework and cast superstructure in raised position.
4. Stress and Grout tendons.
5. Provide temporary Lateral Support, install jacks and remove all falsework including middle falswork, a minimum of 28 days after placement of concrete.
6. Lower Superstructure to final position.
7. Remove Jack and cast the Jacking Recess.
8. Complete abutment construction.
9. Construct deck and abutment closure pours.
10. Finish backfill and construct approach slab.

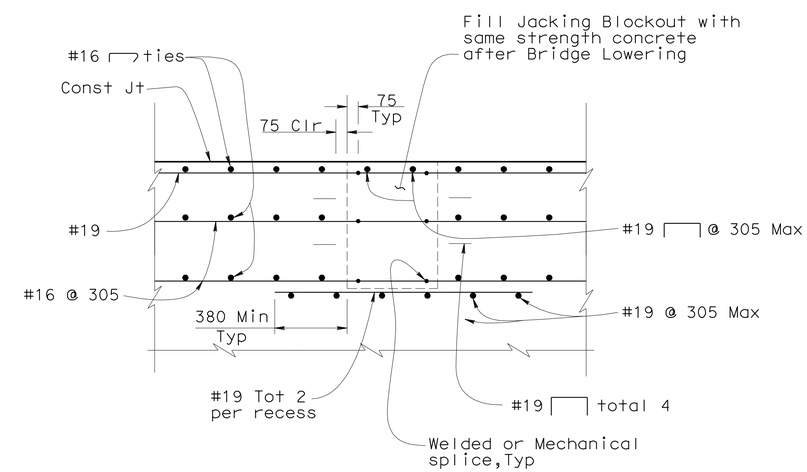

ABUTMENT ELEVATION (AT JACKING RECESS)

No Scale

DESIGN	BY K. Kim	CHECKED K. Ghosh	
DETAILS	BY P. Perez	CHECKED K. Ghosh	
QUANTITIES	BY K. Kim	CHECKED H. Win	

STATE OF CALIFORNIA DEPARTMENT OF TRANSPORTATION

DIVISION OF ENGINEERING SERVICES STRUCTURE DESIGN DESIGN BRANCH 21

BRIDGE NO. 57-0785 KILOMETER POST KP43.56

MIRA MESA BLVD UC (WIDEN)
BRIDGE JACKING DETAILS

ALL DIMENSIONS ARE IN MILLIMETERS UNLESS OTHERWISE SHOWN

ORIGINAL SCALE IN MILLIMETERS FOR REDUCED PLANS 0 10 20 30 40 50 60 70 80 90 100

CU 11
EA 2T0401

DISREGARD PRINTS BEARING EARLIER REVISION DATES 09/30/08 11/26/08 04/28/09

SHEET 12 OF 25

FILE => 57-0785-g-jk_dt.dgn

STRUCTURES DESIGN DETAIL SHEET (METRIC) (REV.03-17-04)

USERNAME => ftmikes1 DATE PLOTTED => 29-SEP-2010 TIME PLOTTED => 11:25

DIST	COUNTY	ROUTE	KILOMETER POST TOTAL PROJECT	SHEET No	TOTAL SHEETS
11	SD	5,805	R49.9/R51.7, 42.6/46.5	632	886

REGISTERED CIVIL ENGINEER — DATE 04/28/09

9-27-10
PLANS APPROVAL DATE

REGISTERED PROFESSIONAL ENGINEER — KUMAR K. GHOSH — No. C 72555 — Exp. 06/30/10 — CIVIL — STATE OF CALIFORNIA

The State of California or its officers or agents shall not be responsible for the accuracy or completeness of electronic copies of this plan sheet.

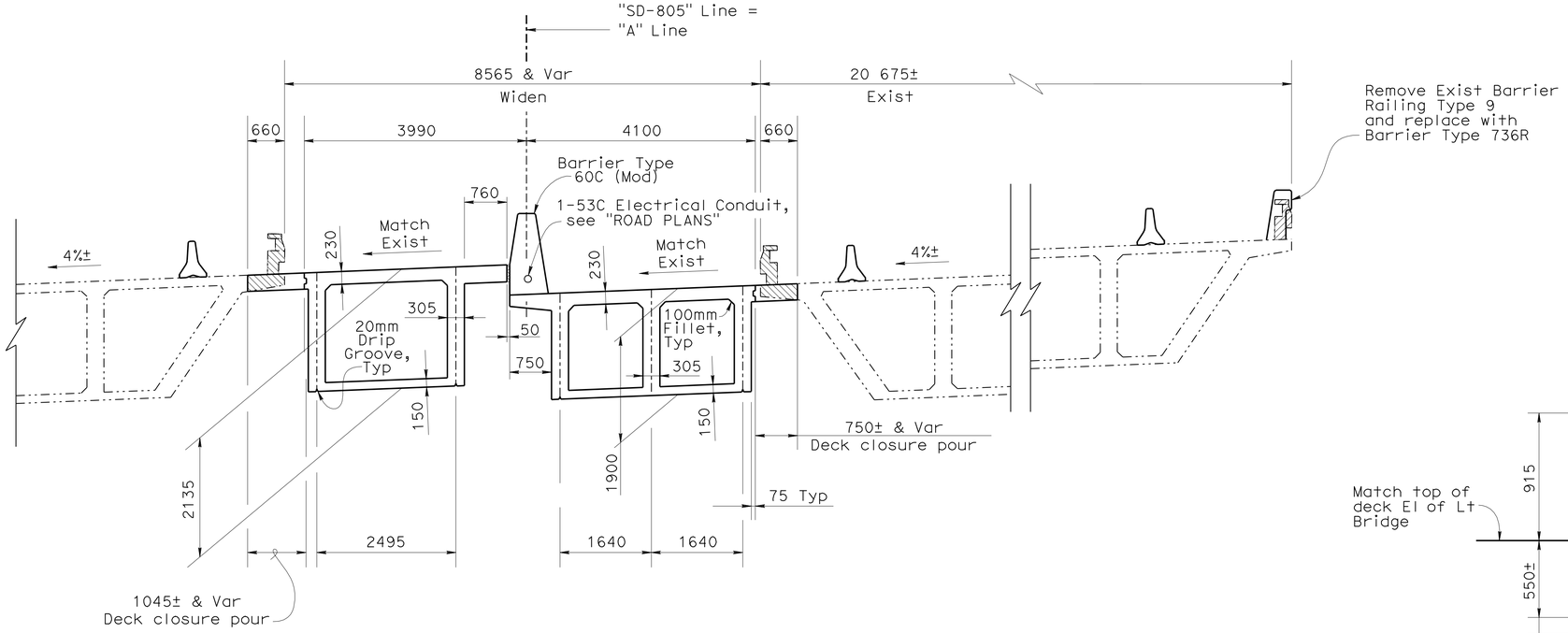

TYPICAL SECTION (MIDDLE WIDEN)

1:50

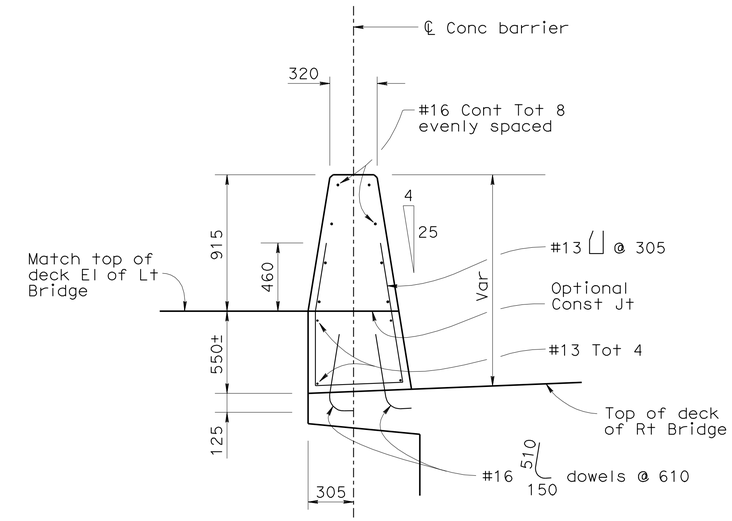

CONCRETE BARRIER TYPE 60C (MODIFIED)

1:20

NOTE:

For details not shown, see RSP A76A

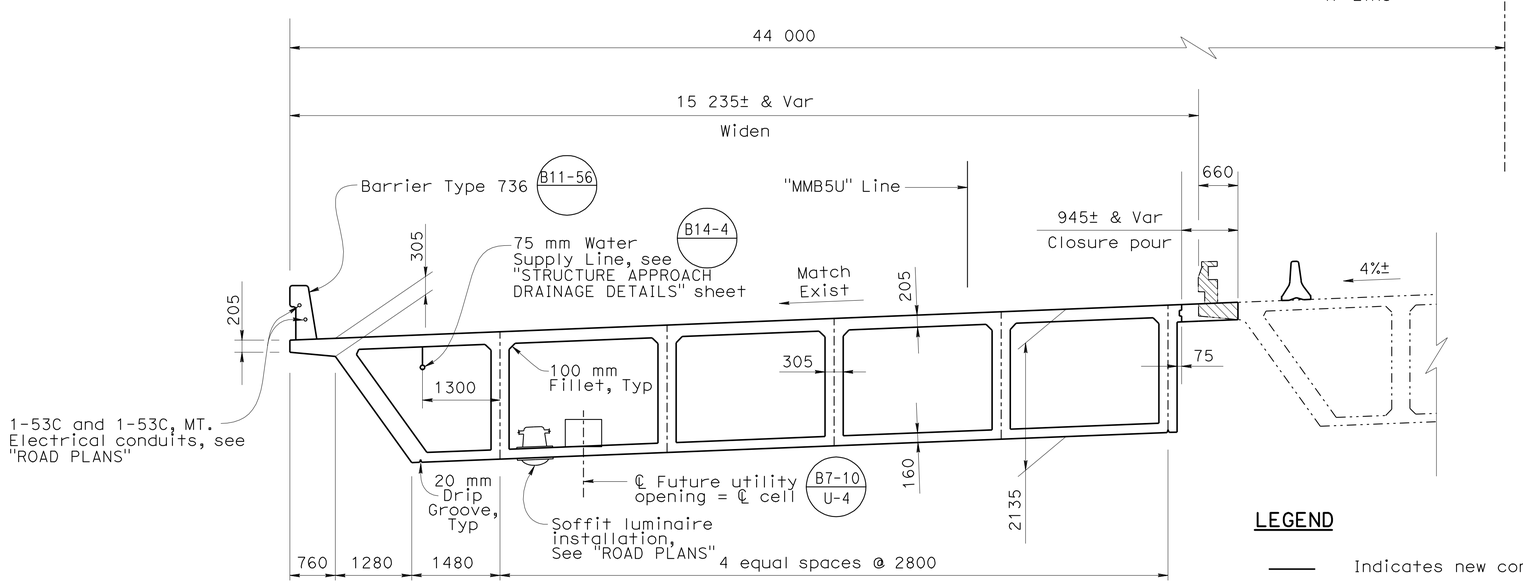

TYPICAL SECTION (LEFT WIDEN)

1:50

LEGEND

- Indicates new construction
- Indicates existing Structure
- Bridge Removal (Portion)

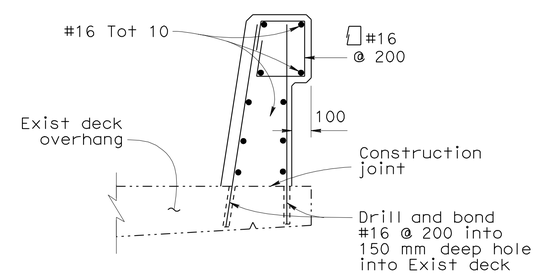

NOTE:

For details not shown, see B11-56

CONCRETE BARRIER TYPE 736R B11-56

NO SCALE

NOTE:
THE CONTRACTOR SHALL VERIFY ALL CONTROLLING FIELD DIMENSIONS BEFORE ORDERING OR FABRICATING ANY MATERIAL.

Caltrans Metric

	BY	CHECKED
DESIGN	K. Kim	K. Ghosh
DETAILS	P. Perez	K. Ghosh
QUANTITIES	K. Kim	H. Win

STATE OF CALIFORNIA
DEPARTMENT OF TRANSPORTATION

DIVISION OF ENGINEERING SERVICES
STRUCTURE DESIGN
DESIGN BRANCH 21

BRIDGE NO. 57-0785
KILOMETER POST KP43.56

MIRA MESA BLVD UC (WIDEN)
TYPICAL SECTION NO. 1

ALL DIMENSIONS ARE IN MILLIMETERS UNLESS OTHERWISE SHOWN

ORIGINAL SCALE IN MILLIMETERS FOR REDUCED PLANS 0 10 20 30 40 50 60 70 80 90 100

CU 11
EA 2T0401

DISREGARD PRINTS BEARING EARLIER REVISION DATES — REVISION DATES 12/24/07 12/26/07 08/24/08 11/28/08 04/28/09

SHEET 13 OF 25

FILE => 57-0785-K-ts_01.dgn

STRUCTURES DESIGN DETAIL SHEET (METRIC) (REV.03-17-04)

USERNAME => trmikes1 DATE PLOTTED => 29-SEP-2010 TIME PLOTTED => 11:25

DIST	COUNTY	ROUTE	KILOMETER POST TOTAL PROJECT	SHEET No	TOTAL SHEETS
11	SD	5,805	R49.9/R51.7, 42.6/46.5	633	886

REGISTERED CIVIL ENGINEER 04/28/09 DATE

9-27-10
PLANS APPROVAL DATE

REGISTERED PROFESSIONAL ENGINEER KUMAR K. GHOSH No. C 72555 Exp. 06/30/10 CIVIL STATE OF CALIFORNIA

The State of California or its officers or agents shall not be responsible for the accuracy or completeness of electronic copies of this plan sheet.

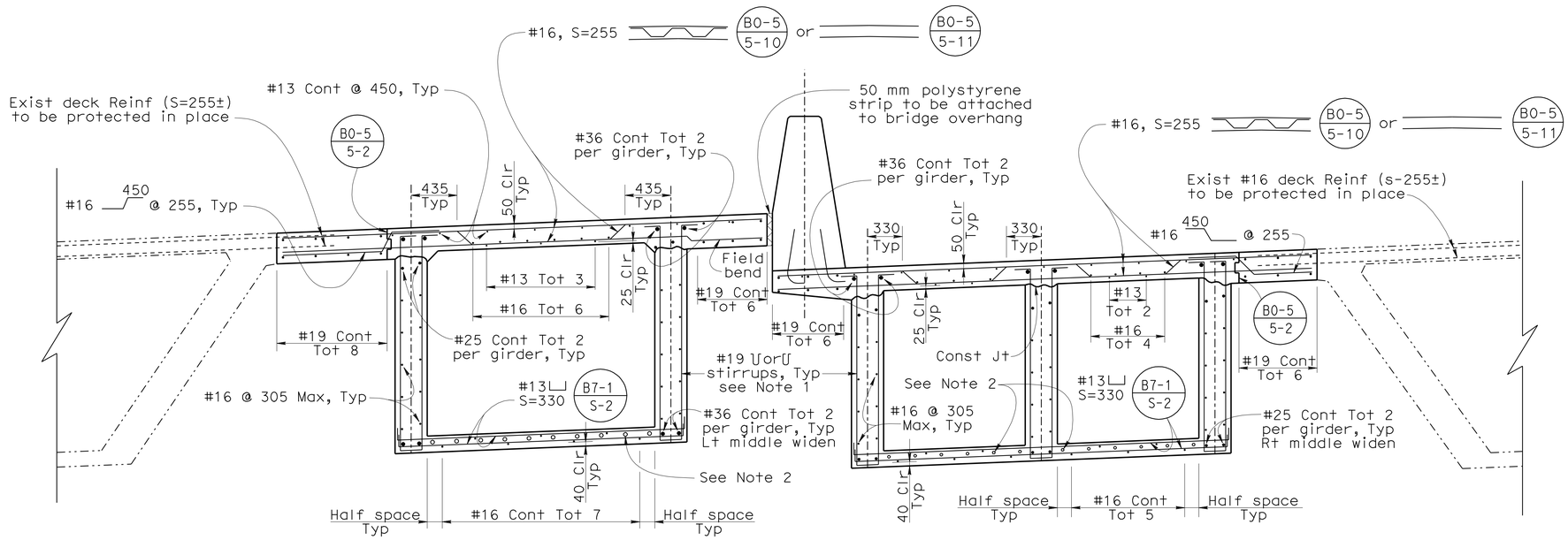

PART TYPICAL SECTION (MIDDLE WIDEN)

1:25

B0-5 B7-1 RSP B8-5 B11-56

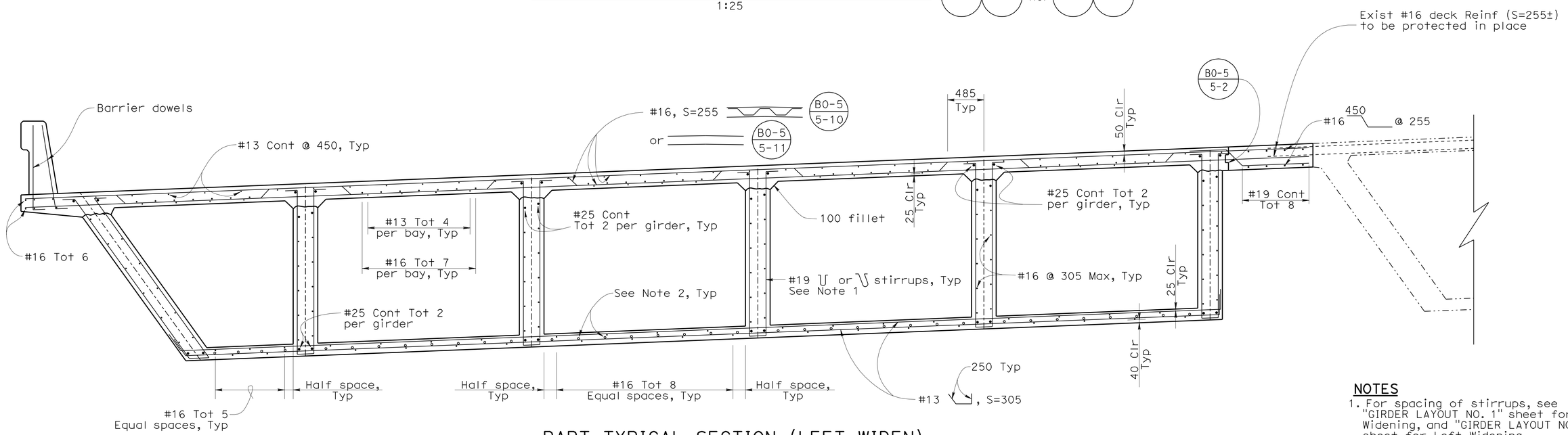

PART TYPICAL SECTION (LEFT WIDEN)

1:25

NOTES

1. For spacing of stirrups, see "GIRDER LAYOUT NO. 1" sheet for Middle Widening, and "GIRDER LAYOUT NO. 2" sheet for Left Widening.
2. For additional reinforcement, see "GIRDER REINFORCEMENT" sheet.

NOTE:
THE CONTRACTOR SHALL VERIFY ALL CONTROLLING FIELD DIMENSIONS BEFORE ORDERING OR FABRICATING ANY MATERIAL.

Caltrans Metric

	BY	CHECKED
DESIGN	K. Kim	K. Ghosh
DETAILS	P. Perez	K. Ghosh
QUANTITIES	K. Kim	H. Win

STATE OF CALIFORNIA
DEPARTMENT OF TRANSPORTATION

DIVISION OF ENGINEERING SERVICES
STRUCTURE DESIGN
DESIGN BRANCH 21

BRIDGE NO. 57-0785
KILOMETER POST KP43.56

MIRA MESA BLVD UC (WIDEN)
TYPICAL SECTION NO. 2

ALL DIMENSIONS ARE IN MILLIMETERS UNLESS OTHERWISE SHOWN

ORIGINAL SCALE IN MILLIMETERS FOR REDUCED PLANS 0 10 20 30 40 50 60 70 80 90 100

CU 11
EA 2T0401

DISREGARD PRINTS BEARING EARLIER REVISION DATES

REVISION DATES: 08/13/08 10/03/08 11/26/08 04/28/09

SHEET 14 OF 25

FILE => 57-0785-K-ts_02.dgn

STRUCTURES DESIGN DETAIL SHEET (METRIC) (REV.03-17-04)

USERNAME => tfmirkes1 DATE PLOTTED => 29-SEP-2010 TIME PLOTTED => 11:25

DIST	COUNTY	ROUTE	KILOMETER POST TOTAL PROJECT	SHEET No	TOTAL SHEETS
11	SD	5,805	R49.9/R51.7, 42.6/46.5	634	886

REGISTERED CIVIL ENGINEER — DATE 04/28/09

9-27-10
PLANS APPROVAL DATE

REGISTERED PROFESSIONAL ENGINEER — KUMAR K. GHOSH — No. C 72555 — Exp. 06/30/10 — CIVIL — STATE OF CALIFORNIA

The State of California or its officers or agents shall not be responsible for the accuracy or completeness of electronic copies of this plan sheet.

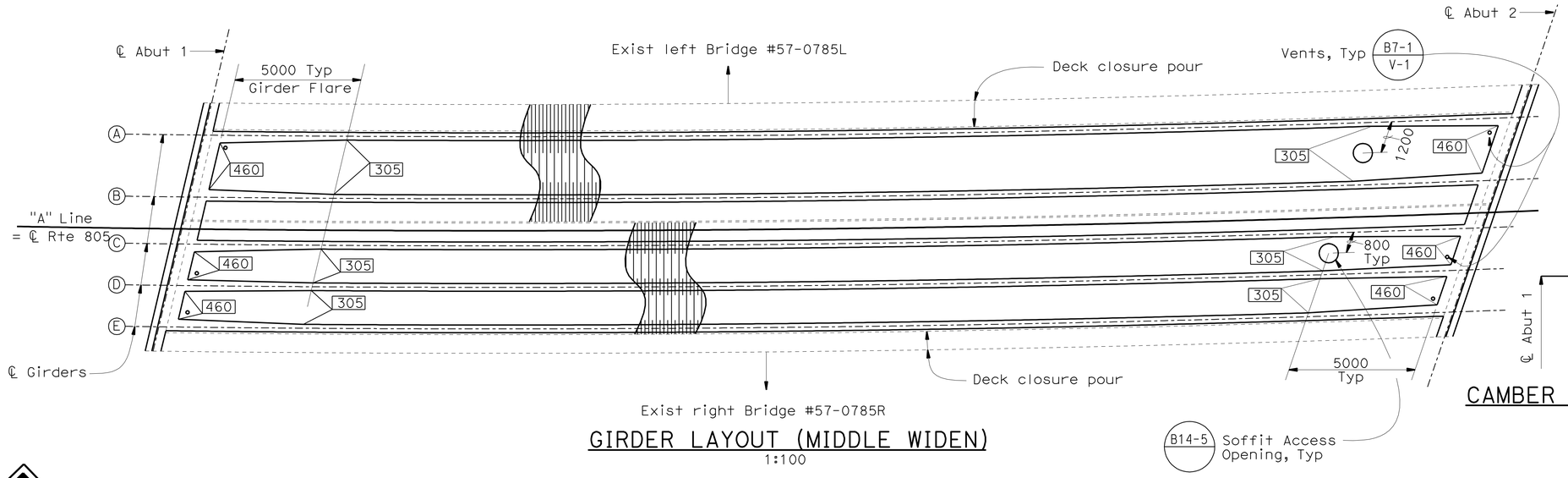

GIRDER LAYOUT (MIDDLE WIDEN)

1:100

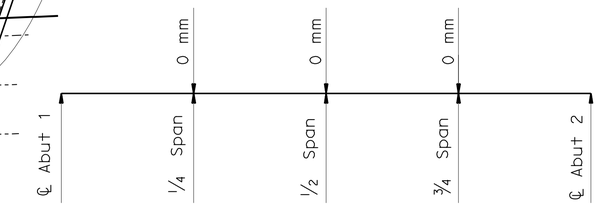

CAMBER DIAGRAM (MIDDLE LEFT WIDENING)

NO SCALE
(Girders Ⓐ & Ⓑ)

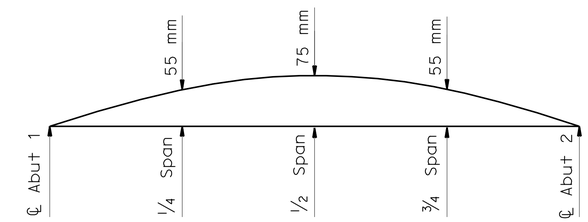

CAMBER DIAGRAM (MIDDLE RIGHT WIDENING)

NO SCALE
(Girders Ⓒ, Ⓓ & Ⓔ)

PRESTRESSING NOTES

1860 MPa Low Relaxation Strands:

Pjack =23 600 kN (Girder Ⓐ+Ⓑ)
=33 300 kN (Girder Ⓒ+Ⓓ+Ⓔ)

Anchor Set = 10 mm

Total Number of Girders = 5

Friction curvature coefficient μ = 15 $\times 10^{-2}$(1/rad)

Friction wobble coefficient K = 6.6 $\times 10^{-4}$(1/m)

Distribution of prestress force (Pjack) between girders shall not exceed the ratio of 3:2.

Maximum final force variation between girders shall not exceed 3200 kN.

Concrete: f'_c = 38 Mpa @ 28 days
f'_{ci} = 28 Mpa @ time of stressing

Contractor shall submit elongation calculations based on initial stress at ☒ =0.95 times jacking stress

One end stressing shall be performed.

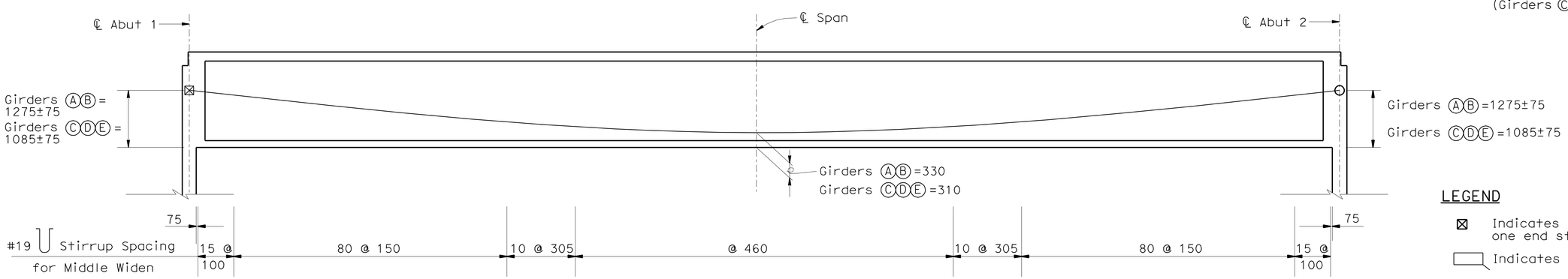

LONGITUDINAL SECTION (MIDDLE WIDEN)

HORIZ 1:100
VERT 1:50

LEGEND

☒ Indicates point of no movement for one end stressing

▭ Indicates stem width in millimeters

FALSEWORK RELEASE

Falsework shall be released as soon as permitted by the specifications. Closure pour shall not be placed sooner than 60 days after the falsework had been released.

NOTE:
THE CONTRACTOR SHALL VERIFY ALL CONTROLLING FIELD DIMENSIONS BEFORE ORDERING OR FABRICATING ANY MATERIAL.

	BY	CHECKED
DESIGN	K. Kim	K. Ghosh
DETAILS	M. Singh	K. Ghosh
QUANTITIES	K. Kim	H. Win

STATE OF CALIFORNIA
DEPARTMENT OF TRANSPORTATION

DIVISION OF ENGINEERING SERVICES
STRUCTURE DESIGN
DESIGN BRANCH 21

BRIDGE NO. 57-0785
KILOMETER POST KP43.56

MIRA MESA BLVD UC (WIDEN)
GIRDER LAYOUT NO. 1

ALL DIMENSIONS ARE IN MILLIMETERS UNLESS OTHERWISE SHOWN

ORIGINAL SCALE IN MILLIMETERS FOR REDUCED PLANS 0 10 20 30 40 50 60 70 80 90 100

CU 11
EA 2T0401

DISREGARD PRINTS BEARING EARLIER REVISION DATES → 01/16/08 09/09/08 10/03/08 11/06/08 04/28/09

SHEET 15 OF 25

FILE => 57-0785-n-gir_lo01.dgn

STRUCTURES DESIGN DETAIL SHEET (METRIC) (REV.03-17-04)

USERNAME => trmikes1 DATE PLOTTED => 29-SEP-2010 TIME PLOTTED => 11:25

DIST	COUNTY	ROUTE	KILOMETER POST TOTAL PROJECT	SHEET No	TOTAL SHEETS
11	SD	5,805	R49.9/R51.7, 42.6/46.5	635	886

REGISTERED CIVIL ENGINEER 04/28/09 DATE

9-27-10
PLANS APPROVAL DATE

REGISTERED PROFESSIONAL ENGINEER KUMAR K. GHOSH No. C 72555 Exp. 06/30/10 CIVIL STATE OF CALIFORNIA

The State of California or its officers or agents shall not be responsible for the accuracy or completeness of electronic copies of this plan sheet.

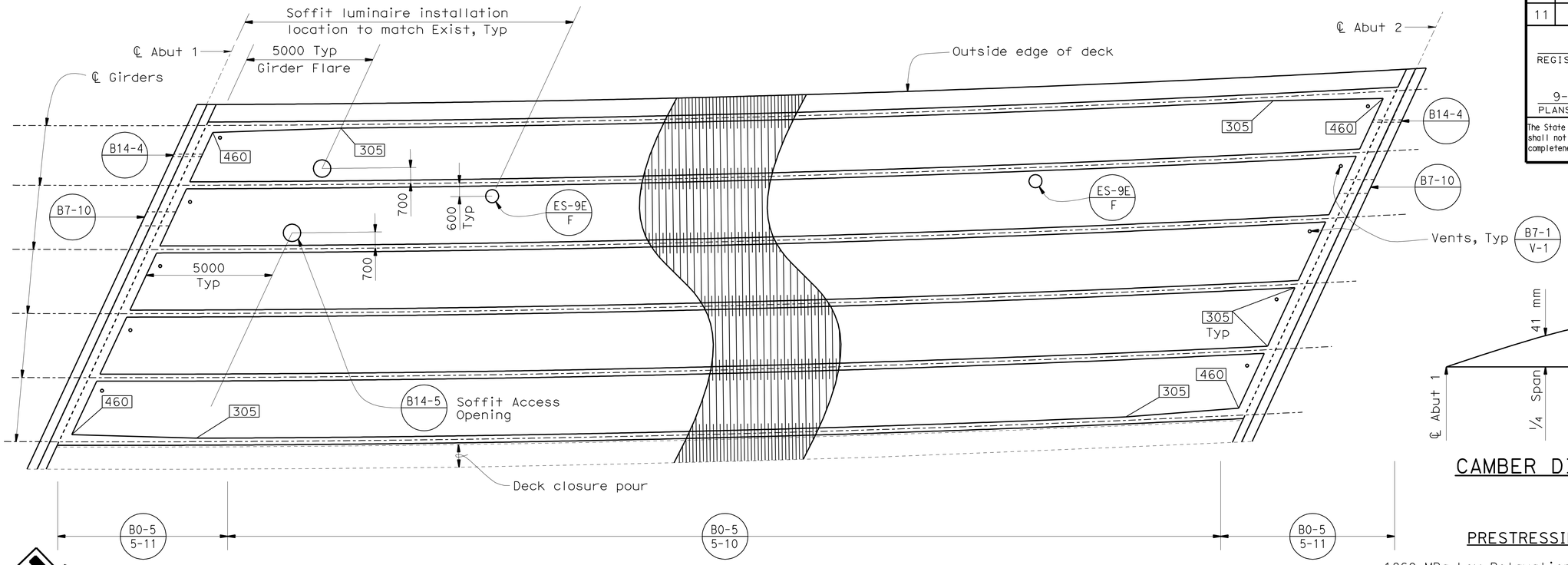

GIRDER LAYOUT (LEFT WIDEN)

1:100

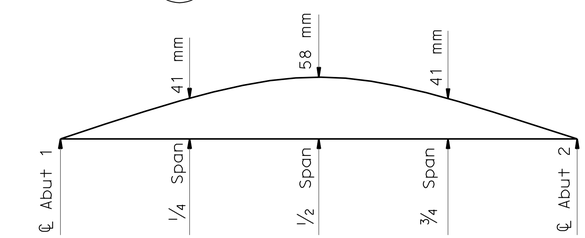

CAMBER DIAGRAM (LEFT WIDENING)

NO SCALE

PRESTRESSING NOTES

1860 MPa Low Relaxation Strands:

Pjack (Total) = 70 370 kN

Anchor Set = 10 mm

Total Number of Girders = 6

Friction curvature coefficient μ = 15 $\times 10^{-2}$(1/rad)

Friction wobble coefficient K = 6.6 $\times 10^{-4}$(1/m)

Distribution of prestress force (Pjack) between girders shall not exceed the ratio of 3:2.

Maximum final force variation between girders shall not exceed 3200 kN.

Concrete: f'_c = 35 Mpa @ 28 days

f'_{ci} = 28 Mpa @ time of stressing

Contractor shall submit elongation calculations based on initial stress at ⊠ =0.95 times jacking stress

One end stressing shall be performed.

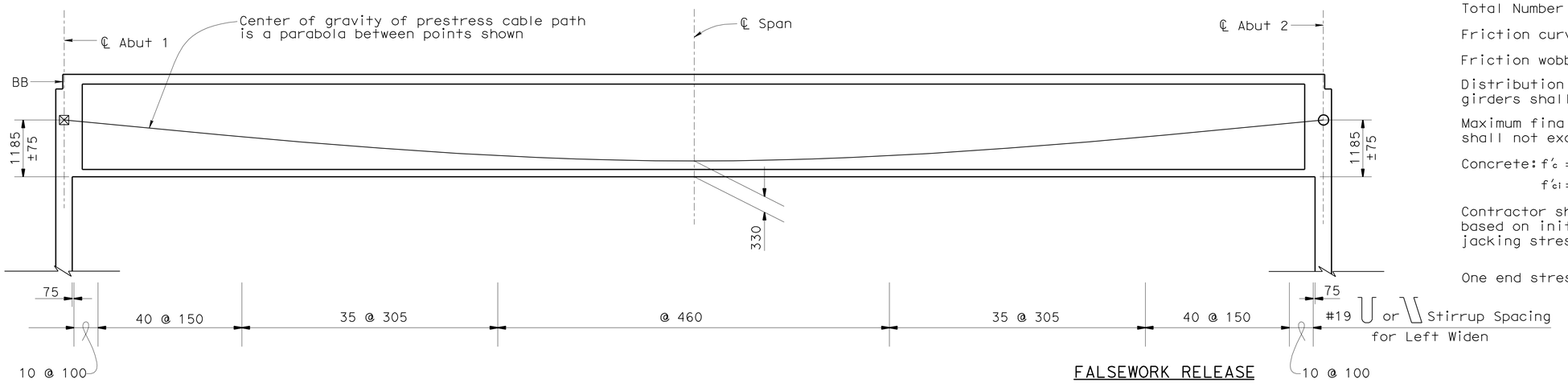

LONGITUDINAL SECTION (LEFT WIDEN)

HORIZ SCALE 1:100
VERT SCALE 1:50

FALSEWORK RELEASE

Falsework shall be released as soon as permitted by the specifications. Closure pour shall not be placed sooner than 60 days after the falsework had been released. For construction staging, see "BRIDGE JACKING DETAILS" sheet.

LEGEND

⊠ Indicates point of no movement for one end stressing

▭ Indicates stem width in millimeters

NOTE:
THE CONTRACTOR SHALL VERIFY ALL CONTROLLING FIELD DIMENSIONS BEFORE ORDERING OR FABRICATING ANY MATERIAL.

	BY	CHECKED
DESIGN	K. Kim	K. Ghosh
DETAILS	M. Singh/P. Perez	K. Ghosh
QUANTITIES	K. Kim	H. Win

STATE OF CALIFORNIA
DEPARTMENT OF TRANSPORTATION

DIVISION OF ENGINEERING SERVICES
STRUCTURE DESIGN
DESIGN BRANCH 21

CU 11
EA 2T0401

BRIDGE NO. 57-0785
KILOMETER POST KP43.56

MIRA MESA BLVD UC (WIDEN)
GIRDER LAYOUT NO. 2

ALL DIMENSIONS ARE IN MILLIMETERS UNLESS OTHERWISE SHOWN

ORIGINAL SCALE IN MILLIMETERS FOR REDUCED PLANS 0 10 20 30 40 50 60 70 80 90 100

DISREGARD PRINTS BEARING EARLIER REVISION DATES

REVISION DATES: 08/28/08 09/30/08 11/28/08 04/28/09

SHEET 16 OF 25

FILE => 57-0785-n-gir_lo02.dgn

STRUCTURES DESIGN DETAIL SHEET (METRIC) (REV.03-17-04)

USERNAME => frmikesl DATE PLOTTED => 29-SEP-2010 TIME PLOTTED => 11:26

DIST	COUNTY	ROUTE	KILOMETER POST TOTAL PROJECT	SHEET No	TOTAL SHEETS
11	SD	5,805	R49.9/R51.7, 42.6/46.5	636	886

REGISTERED CIVIL ENGINEER 04/28/09 DATE

9-27-10
PLANS APPROVAL DATE

REGISTERED PROFESSIONAL ENGINEER KUMAR K. GHOSH No. C 72555 Exp. 06/30/10 CIVIL STATE OF CALIFORNIA

The State of California or its officers or agents shall not be responsible for the accuracy or completeness of electronic copies of this plan sheet.

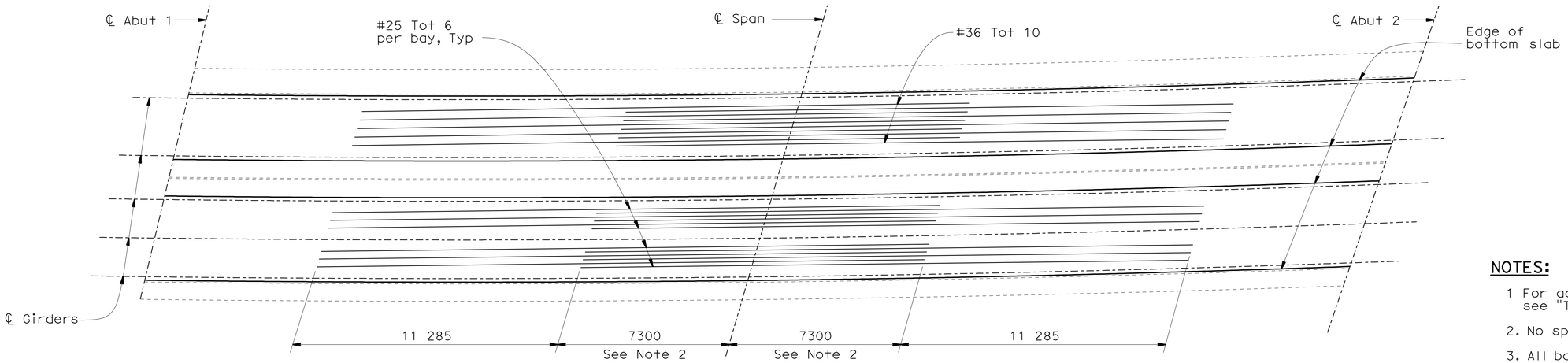

BOTTOM REINFORCEMENT (MIDDLE WIDEN)

1:100

NOTES:

1. For additional details and reinforcement, see "TYPICAL SECTION NO. 2" sheet.
2. No splices allowed.
3. All bars shall be evenly spaced.

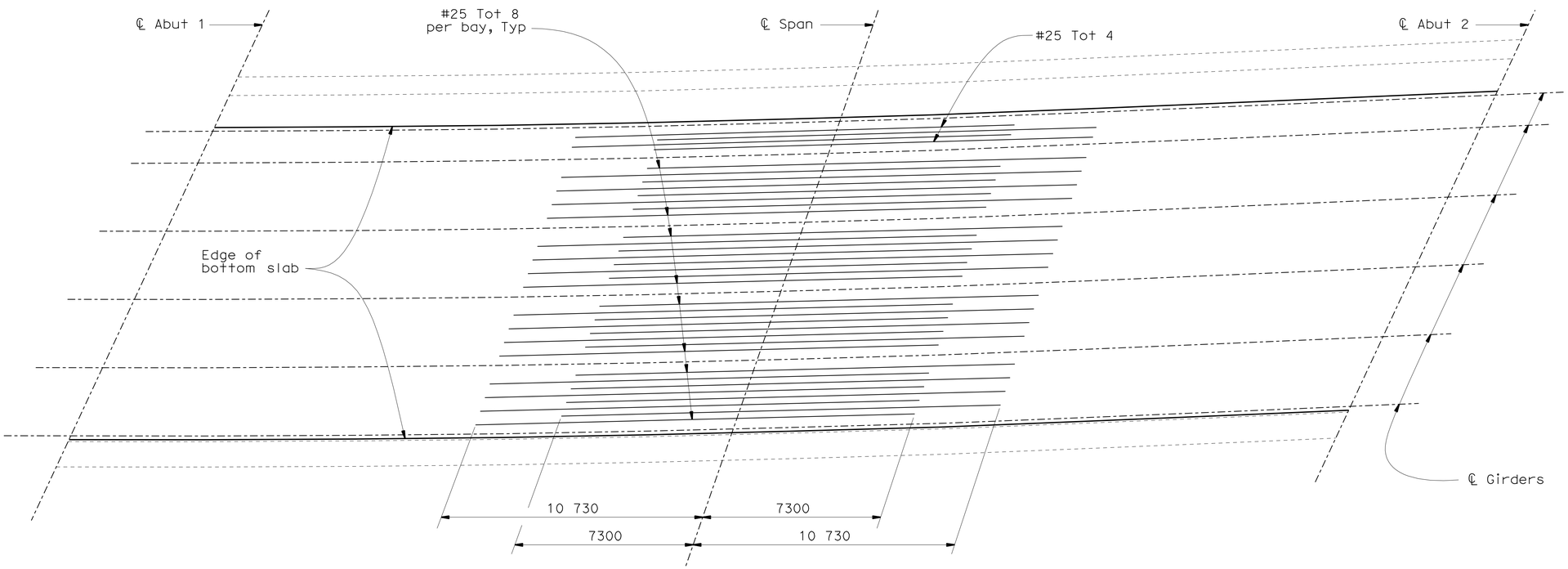

BOTTOM REINFORCEMENT (LEFT WIDEN)

1:100

NOTE:
THE CONTRACTOR SHALL VERIFY ALL CONTROLLING FIELD DIMENSIONS BEFORE ORDERING OR FABRICATING ANY MATERIAL.

Caltrans Metric

	BY	CHECKED
DESIGN	K. Kim	K. Ghosh
DETAILS	P. Perez	K. Ghosh
QUANTITIES	K. Kim	H. Win

STATE OF CALIFORNIA
DEPARTMENT OF TRANSPORTATION

DIVISION OF ENGINEERING SERVICES
STRUCTURE DESIGN
DESIGN BRANCH 21

BRIDGE NO. 57-0785
KILOMETER POST KP43.56

MIRA MESA BLVD UC (WIDEN)
GIRDER REINFORCEMENT

ALL DIMENSIONS ARE IN MILLIMETERS UNLESS OTHERWISE SHOWN

ORIGINAL SCALE IN MILLIMETERS FOR REDUCED PLANS 0 10 20 30 40 50 60 70 80 90 100

CU 11
EA 2T0401

DISREGARD PRINTS BEARING EARLIER REVISION DATES

REVISION DATES: 08/18/08 10/03/08 11/28/08 04/28/09

SHEET 17 OF 25

FILE => 57-0785-n-gir_rf.dgn

STRUCTURES DESIGN DETAIL SHEET (METRIC) (REV.03-17-04)

USERNAME => ftmirkes1 DATE PLOTTED => 29-SEP-2010 TIME PLOTTED => 11:26

DIST	COUNTY	ROUTE	KILOMETER POST TOTAL PROJECT	SHEET No	TOTAL SHEETS
11	SD	5,805	R49.9/R51.7, 42.6/46.5	637	886

REGISTERED CIVIL ENGINEER 04/28/09 DATE

9-27-10
PLANS APPROVAL DATE

REGISTERED PROFESSIONAL ENGINEER KUMAR K. GHOSH No. C 72555 Exp. 06/30/10 CIVIL STATE OF CALIFORNIA

The State of California or its officers or agents shall not be responsible for the accuracy or completeness of electronic copies of this plan sheet.

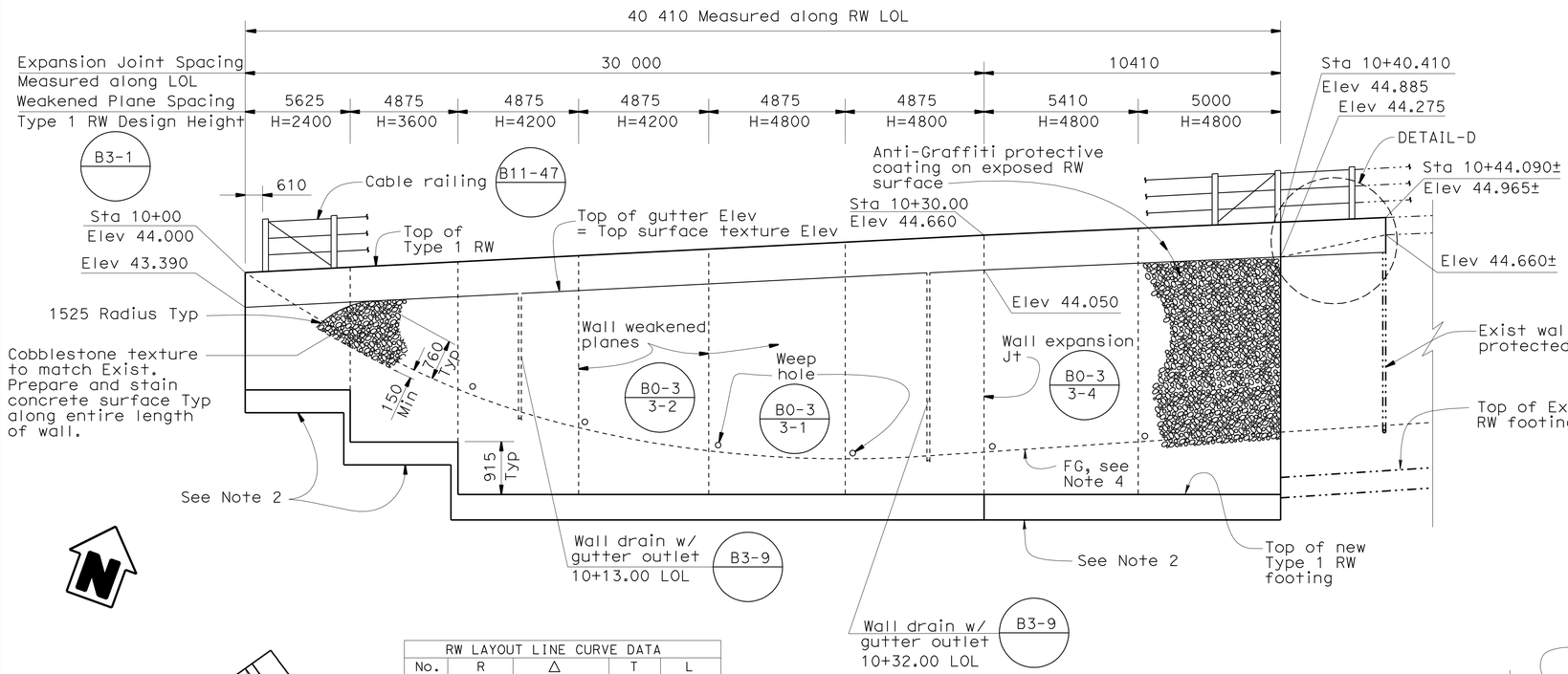

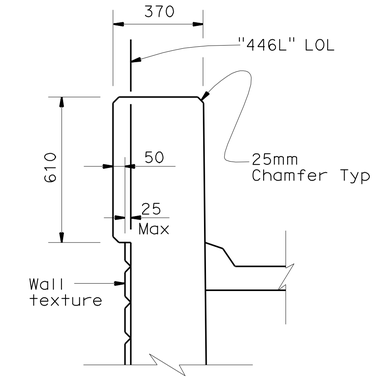

TOP OF WALL DETAIL

NO SCALE

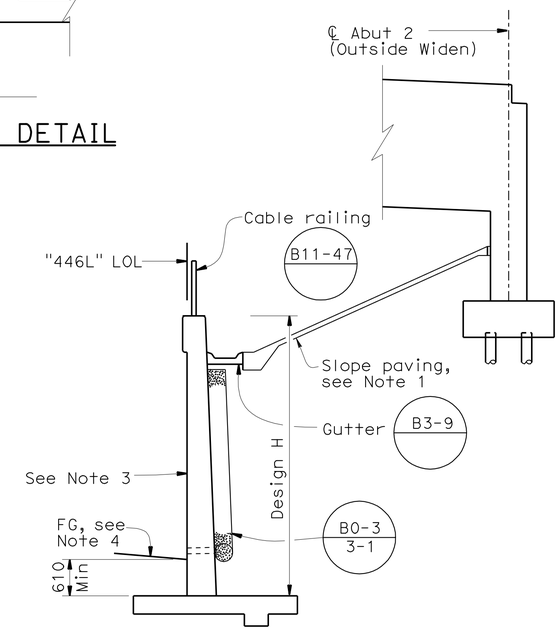

TYPICAL SECTION

NO SCALE

RW LAYOUT LINE CURVE DATA				
No.	R	Δ	T	L
1	30.000	57°17'44.9"	16.390	30.000

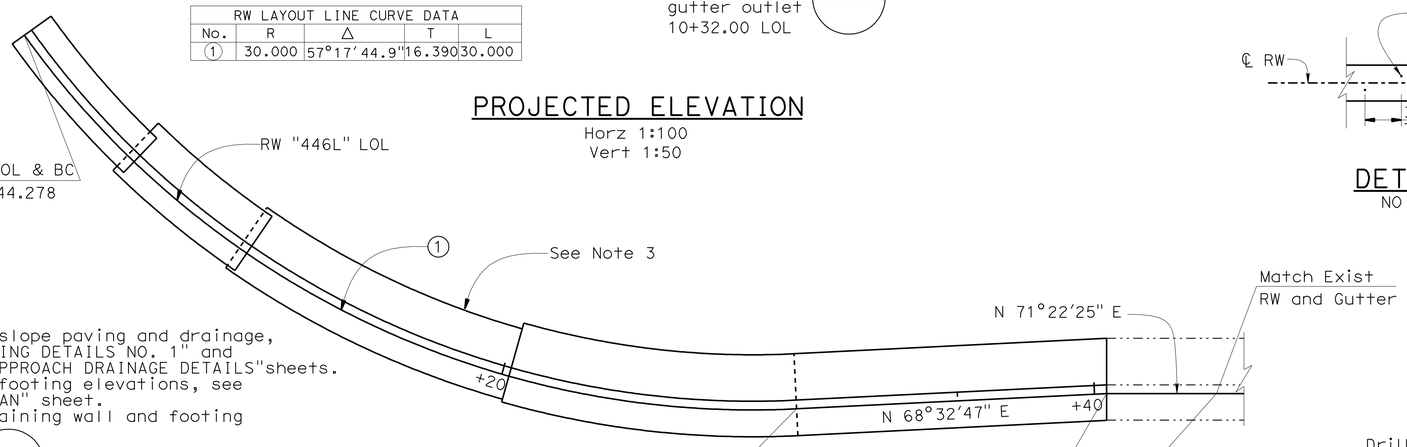

PROJECTED ELEVATION

Horz 1:100
Vert 1:50

PLAN

1:100

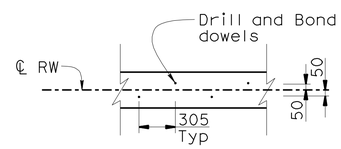

DETAIL-E

NO SCALE

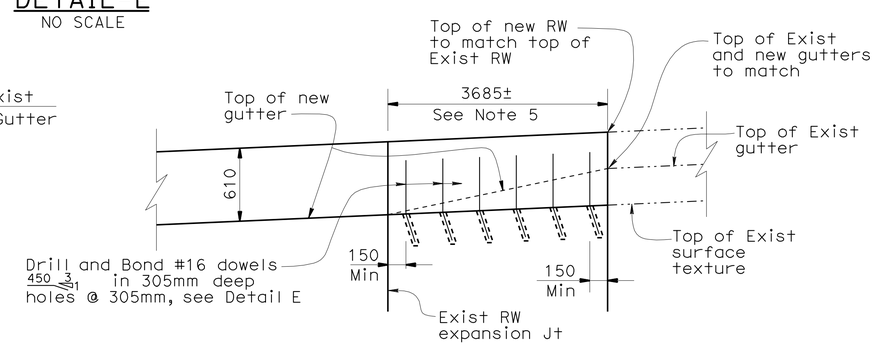

DETAIL-D

NO SCALE

NOTES:

1. For limits of slope paving and drainage, see "SLOPE PAVING DETAILS NO. 1" and "STRUCTURE APPROACH DRAINAGE DETAILS" sheets.
2. For bottom of footing elevations, see "FOUNDATION PLAN" sheet.
3. For Type 1 retaining wall and footing details see B3-1
4. For finish grade, see "ROAD PLANS".
5. Cable railing and gutter to be reconstructed. For details, see "REMOVAL PLAN NO. 2" sheet.

NOTE:
THE CONTRACTOR SHALL VERIFY ALL CONTROLLING FIELD DIMENSIONS BEFORE ORDERING OR FABRICATING ANY MATERIAL.

Caltrans Metric

	BY	CHECKED
DESIGN	K. Kim	K. Ghosh
DETAILS	M. Kingra	K. Ghosh
QUANTITIES	K. Kim	H. Win

STATE OF CALIFORNIA
DEPARTMENT OF TRANSPORTATION

DIVISION OF ENGINEERING SERVICES
STRUCTURE DESIGN
DESIGN BRANCH 21

BRIDGE NO. 57-0785
KILOMETER POST KP43.56

MIRA MESA BLVD UC (WIDEN)
RETAINING WALL LAYOUT

ALL DIMENSIONS ARE IN MILLIMETERS UNLESS OTHERWISE SHOWN

ORIGINAL SCALE IN MILLIMETERS FOR REDUCED PLANS 0 10 20 30 40 50 60 70 80 90 100

CU 11
EA 2T0401

DISREGARD PRINTS BEARING EARLIER REVISION DATES 09/30/08 11/26/08 04/28/09 REVISION DATES

SHEET 18 OF 25

FILE => 57-0785-n-rw_lo.dgn

STRUCTURES DESIGN DETAIL SHEET (METRIC) (REV.03-17-04)

USERNAME => trmkest DATE PLOTTED => 29-SEP-2010 TIME PLOTTED => 11:26

DIST.	COUNTY	ROUTE	KILOMETER POST TOTAL PROJECT	SHEET NO.	TOTAL SHEETS
11	SD	5,805	R49.9/R51.7, 42.6/46.5	638	886

REGISTERED ENGINEER - CIVIL 04/28/09

9-27-10
PLANS APPROVAL DATE

REGISTERED PROFESSIONAL ENGINEER KUMAR K. GHOSH No. C 72555 Exp. 06/30/10 CIVIL STATE OF CALIFORNIA

The State of California or its officers or agents shall not be responsible for the accuracy or completeness of electronic copies of this plan sheet.

Caltrans Metric

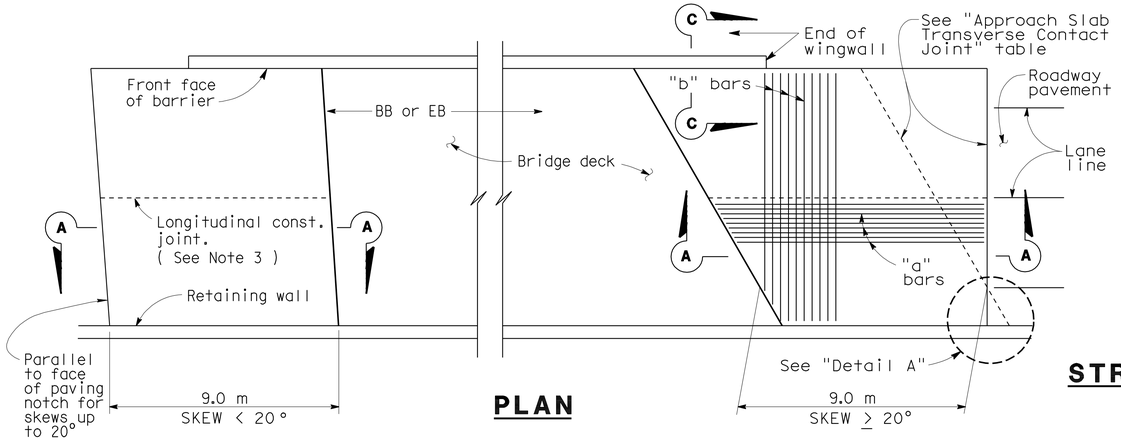

PLAN

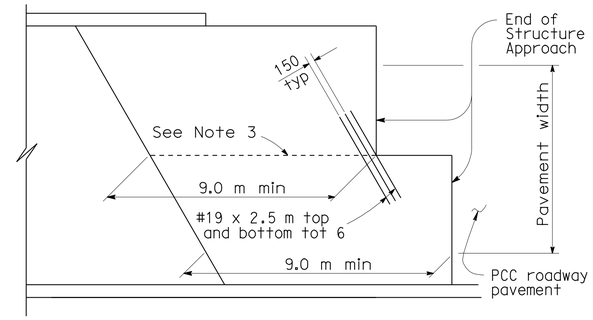

STRUCTURE APPROACH - END STAGGER DETAIL

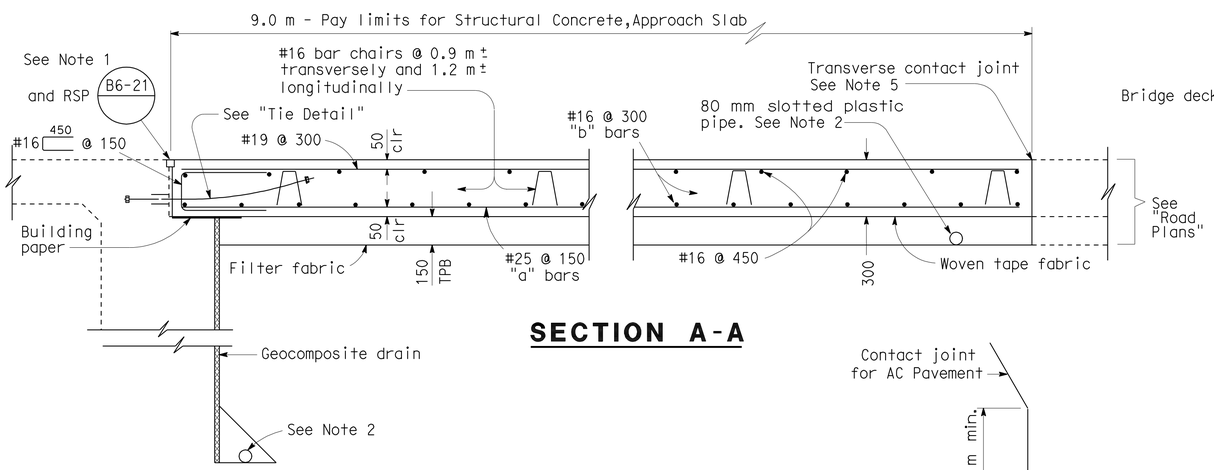

SECTION A-A

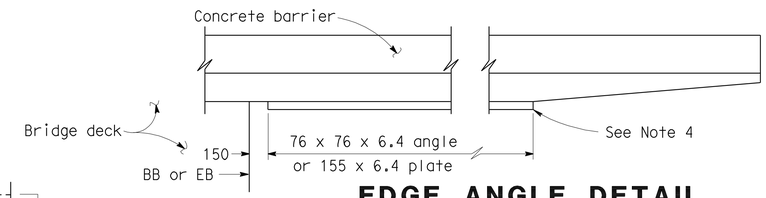

EDGE ANGLE DETAIL

APPROACH SLAB TRANSVERSE CONTACT JOINT		
APPROACH SKEW	WITH AC ROADWAY PAVEMENT	WITH PCC ROADWAY PAVEMENT
< 20°	Parallel to face of paving notch	Parallel to face of paving notch
20°- 45°	Parallel to face of P N use (Detail A)	Stagger lines 7.2 m to 10.8 m apart
> 45°	Parallel to face of P N use (Detail A)	Stagger at each lane line

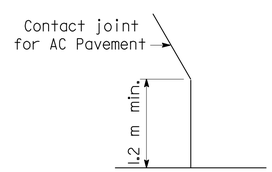

DETAIL A

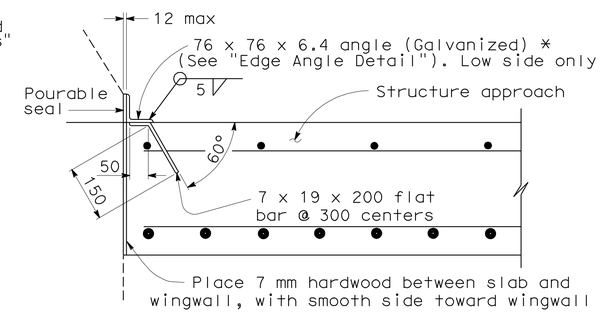

*(TO BE USED WITH TYPE 25 OR TYPE 27 CONCRETE BARRIER)

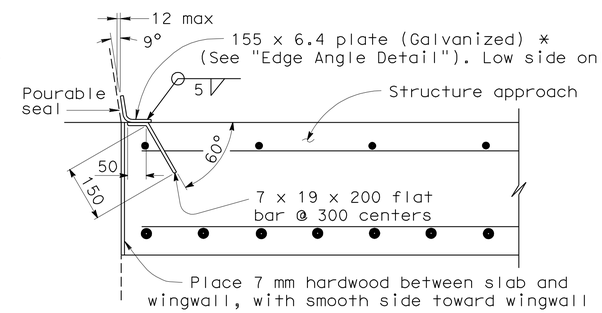

*(TO BE USED WITH TYPE 732 OR TYPE 736 CONCRETE BARRIER)

DETAIL B

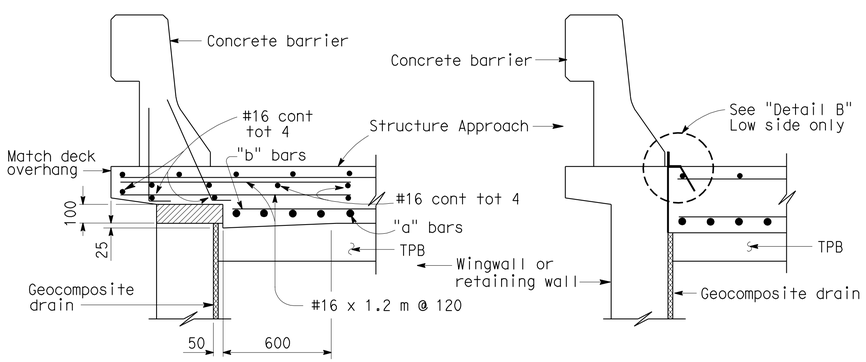

TYPE E-1 TYPE E-2

SECTION C-C

(Type E-1 to be used,unless otherwise shown on plans)

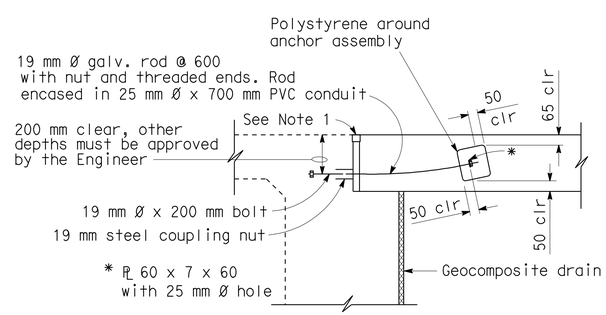

TIE DETAIL

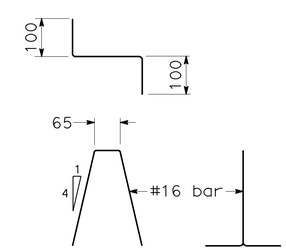

BAR CHAIR DETAIL

NO SCALE

NOTES:

1. For details not noted or shown,see Structure Plans.
2. For drainage details,see "Structure Approach Drainage Details" sheet.
3. Longitudinal construction joints,when permitted by the Engineer,shall be located on lane lines.
4. End angle or plate at beginning of barrier transition, end of wingwall or end of structure approach, as applicable.
5. For transverse contact joint with new PCC paving, refer to Standard Plan P10.
6. At the contractor's option,approach slab transverse reinforcement may be placed parallel to paving notch. Spacing of transverse reinforcement is measured along ℄ roadway.

Polystyrene to be removed.

ALL DIMENSIONS ARE IN MILLIMETERS UNLESS OTHERWISE SHOWN

STANDARD DRAWING					
RELEASE DATE 3/14/05	DESIGN	BY M. TRAFFALIS	CHECKED E. THORKILDSEN	RELEASED BY	
FILE NO. xs3-180	DETAILS	BY R. YEE	CHECKED E. THORKILDSEN		
	SUBMITTED	BY M. HA	DRAWING DATE 4/98	OFFICE CHIEF	

STATE OF CALIFORNIA DEPARTMENT OF TRANSPORTATION

DIVISION OF ENGINEERING SERVICES

BRIDGE NO. 57-0785

KILOMETER POST KP43.56

MIRA MESA BLVD UC (WIDEN)

STRUCTURE APPROACH TYPE N(9D)

DS OSD 2147A (METRIC) (REV. 2/25/97)

ORIGINAL SCALE IN MILLIMETERS FOR REDUCED PLANS 0 10 20 30 40 50 60 70 80 90 100

CU 11
EA 2T0401

DISREGARD PRINTS BEARING EARLIER REVISION DATES

REVISION DATES (PRELIMINARY STAGE ONLY) 11/26/08 04/28/09

SHEET 19 OF 25

USERNAME => trmikesl

57-0785-r-sap_n9d.

DATE PLOTTED => 29-SEP-2010 TIME PLOTTED => 11:26

DIST.	COUNTY	ROUTE	KILOMETER POST TOTAL PROJECT	SHEET NO.	TOTAL SHEETS
11	SD	5,805	R49.9/R51.7, 42.6/46.5	639	886

Caltrans Metric

REGISTERED ENGINEER - CIVIL 04/28/09

9-27-10
PLANS APPROVAL DATE

REGISTERED PROFESSIONAL ENGINEER KUMAR K. GHOSH No. C 72555 Exp. 06/30/10 CIVIL STATE OF CALIFORNIA

The State of California or its officers or agents shall not be responsible for the accuracy or completeness of electronic copies of this plan sheet.

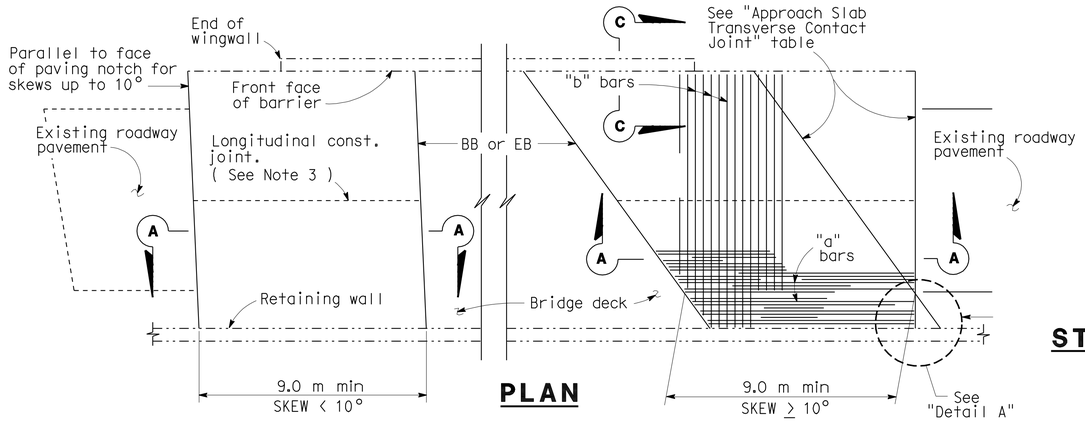

PLAN

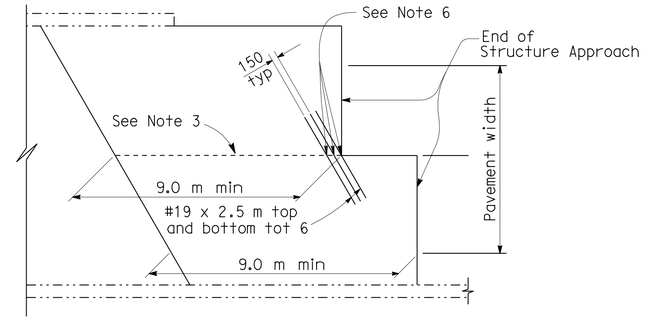

STRUCTURE APPROACH - END STAGGER DETAIL

APPROACH SLAB TRANSVERSE CONTACT JOINT		
APPROACH SKEW	WITH AC ROADWAY PAVEMENT	WITH PCC ROADWAY PAVEMENT
< 10°	Parallel to face of paving notch	Parallel to face of paving notch
10°- 45°	Parallel to face of P N use (Detail A)	Stagger lines 7.2 m to 10.8 m apart
> 45°	Parallel to face of P N use (Detail A)	Stagger at each lane line

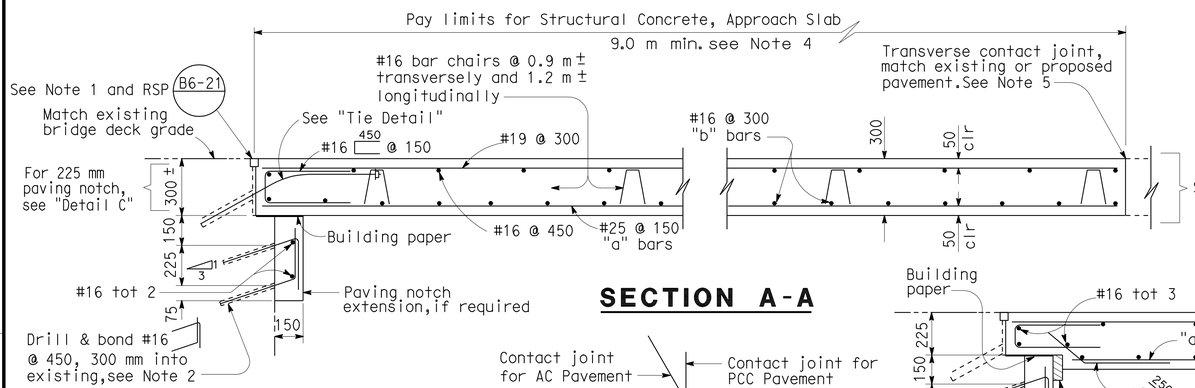

SECTION A-A

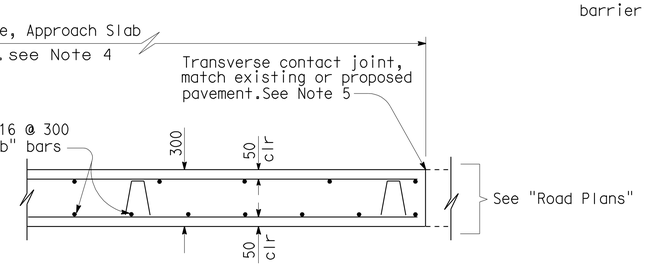

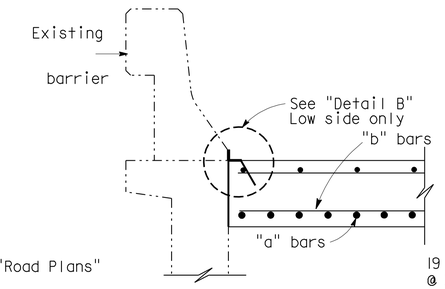

SECTION C-C

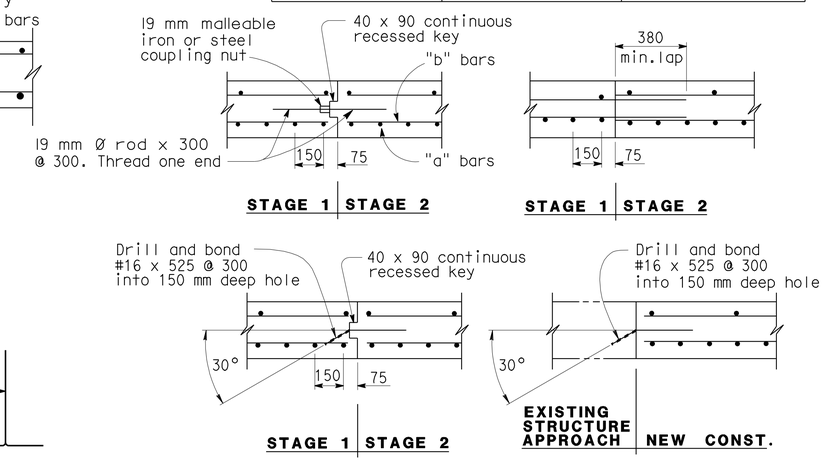

LONGITUDINAL CONSTRUCTION JOINT ALTERNATIVES

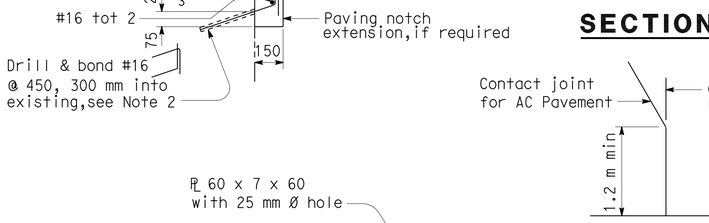

DETAIL A

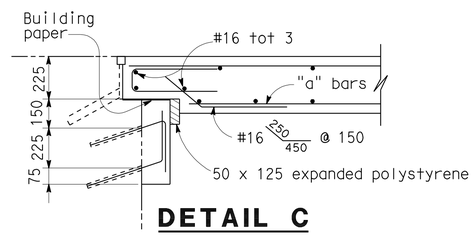

DETAIL C

NOTE: For details not shown, see "Section A-A".

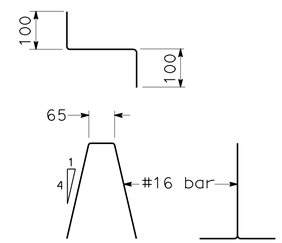

BAR CHAIR DETAIL

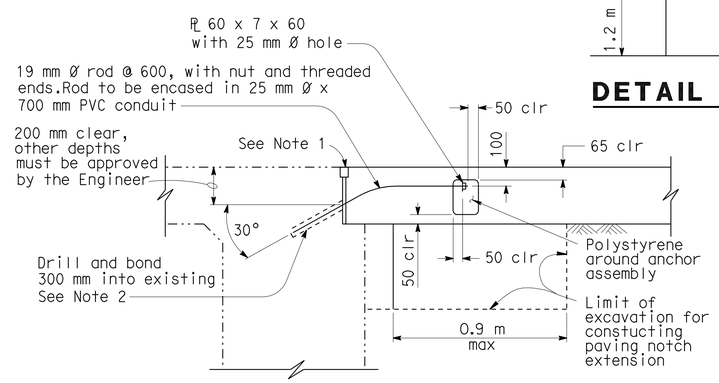

TIE DETAIL

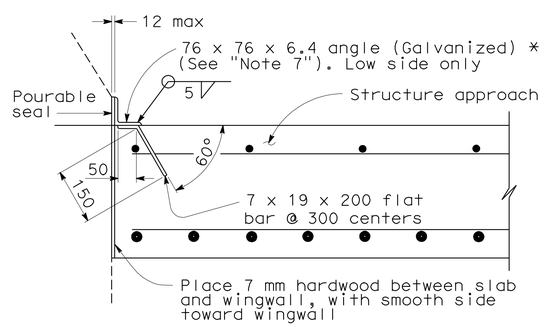

*(TO BE USED WITH TYPE 25 OR TYPE 27 CONCRETE BARRIER)

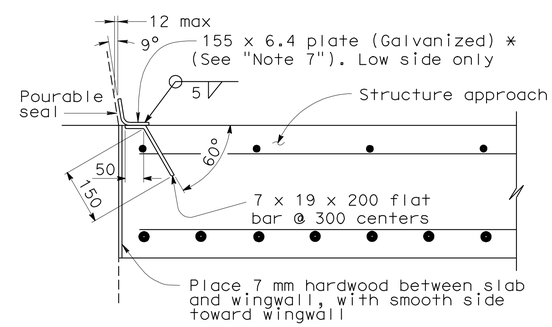

*(TO BE USED WITH TYPE 732 OR TYPE 736 CONCRETE BARRIER)

DETAIL B

NOTES:

1. For details not shown or noted, see Structure Plans. Adjust bar reinforcement to clear a sawcut for sealed joint, when required.
2. Space to avoid existing prestress anchorages and main reinforcement.
3. Longitudinal construction joints, when permitted by the Engineer, shall be located on lane lines.
4. Transverse contact joint shall be a minimum of 1.5 m from an existing or constructed weakened plane joint.
5. For transverse contact joint with new PCC paving. refer to Standard Plan P10.
6. Couplers are required for stage construction.
7. End angle or plate at beginning of barrier transition, end of wingwall or end of structure approach as applicable.

NO SCALE
ALL DIMENSIONS ARE IN MILLIMETERS UNLESS OTHERWISE SHOWN

NOTE:
THE CONTRACTOR SHALL VERIFY ALL CONTROLLING FIELD DIMENSIONS BEFORE ORDERING OR FABRICATING ANY MATERIAL.

STANDARD DRAWING

RELEASE DATE	3/14/05	DESIGN	BY M. TRAFFALIS	CHECKED E. THORKILDSEN	RELEASED BY
		DETAILS	BY R. YEE	CHECKED E. THORKILDSEN	
FILE NO.	xs3-140	SUBMITTED	BY M. HA	DRAWING DATE 8/92	OFFICE CHIEF

DS OSD 2147A (METRIC) (REV. 2/25/97)

ORIGINAL SCALE IN MILLIMETERS FOR REDUCED PLANS 0 10 20 30 40 50 60 70 80 90 100

STATE OF CALIFORNIA DEPARTMENT OF TRANSPORTATION

DIVISION OF ENGINEERING SERVICES

CU 11
EA 2T0401

BRIDGE NO. 57-0785
KILOMETER POST KP43.56

MIRA MESA BLVD UC (WIDEN)

STRUCTURE APPROACH TYPE R(9D)

DISREGARD PRINTS BEARING EARLIER REVISION DATES 01/26/08 04/28/09

REVISION DATES (PRELIMINARY STAGE ONLY)

SHEET 20 OF 25

USERNAME => trmikesl

DATE PLOTTED => 29-SEP-2010 TIME PLOTTED => 11:26

57-0785-r-sap_r9d

DIST	COUNTY	ROUTE	KILOMETER POST TOTAL PROJECT	SHEET No	TOTAL SHEETS
11	SD	5,805	R49.9/R51.7, 42.6/46.5	640	886

REGISTERED CIVIL ENGINEER 04/28/09 DATE

9-27-10
PLANS APPROVAL DATE

REGISTERED PROFESSIONAL ENGINEER KUMAR K. GHOSH No. C 72555 Exp. 06/30/10 CIVIL STATE OF CALIFORNIA

The State of California or its officers or agents shall not be responsible for the accuracy or completeness of electronic copies of this plan sheet.

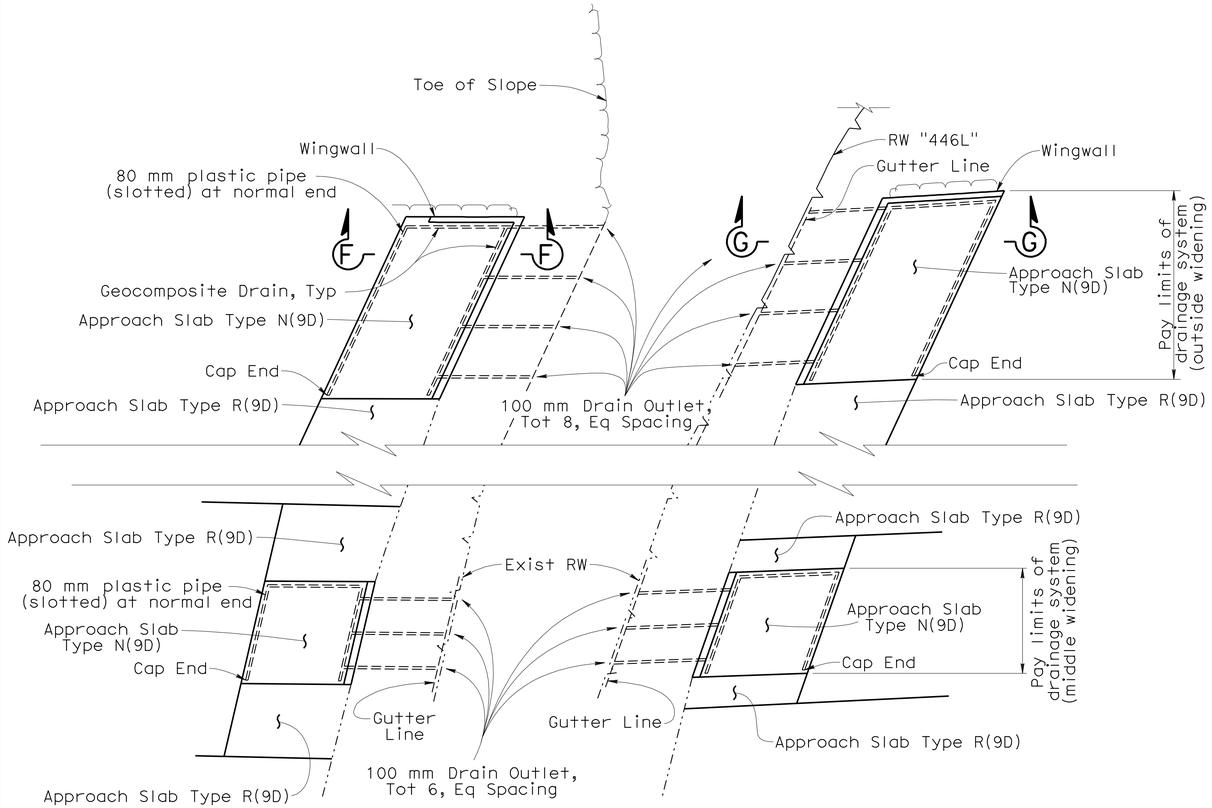

PLAN
1:250

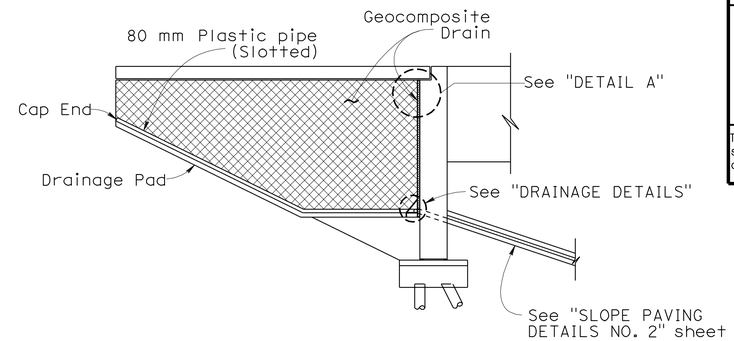

SECTION F-F
NO SCALE

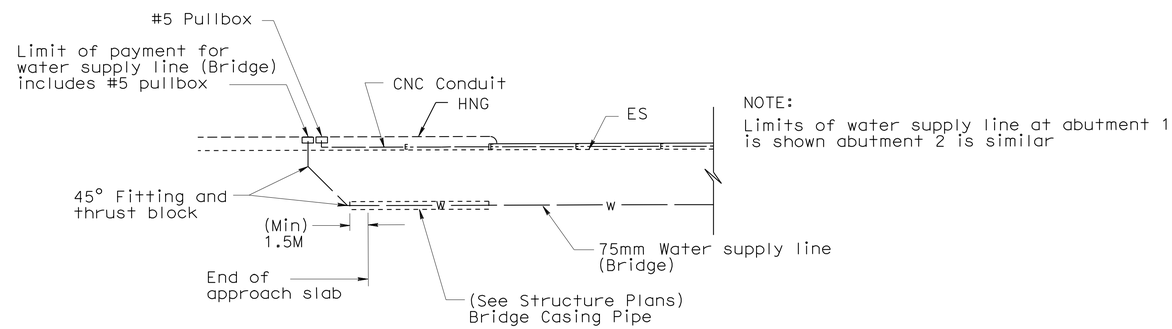

NOTE:
Limits of water supply line at abutment 1 is shown abutment 2 is similar

LIMITS OF 75 MM WATER SUPPLY LINE (BRIDGE)
NO SCALE

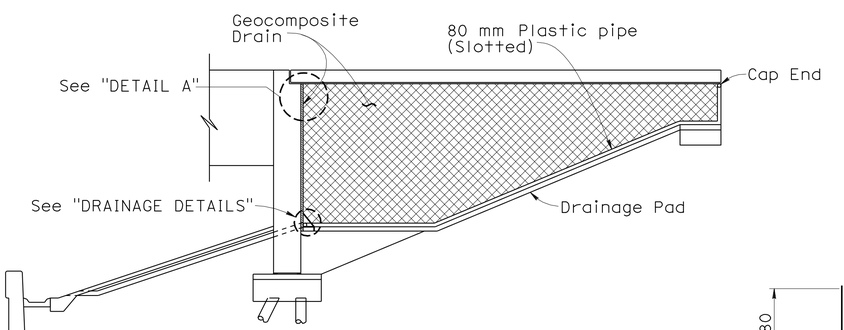

SECTION G-G
NO SCALE

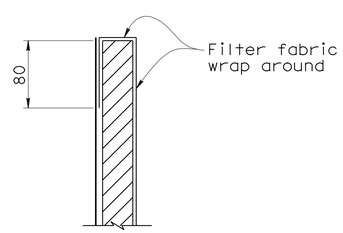

DETAIL-A
NO SCALE

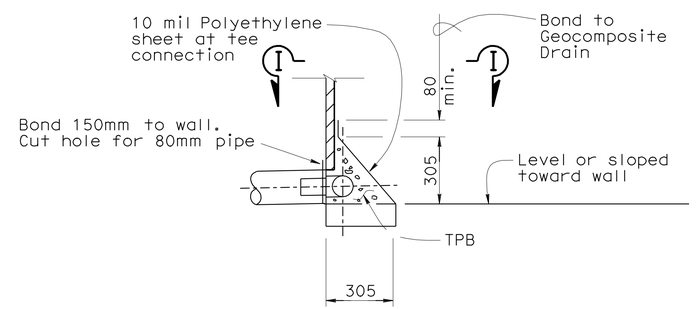

DRAINAGE DETAILS
NO SCALE

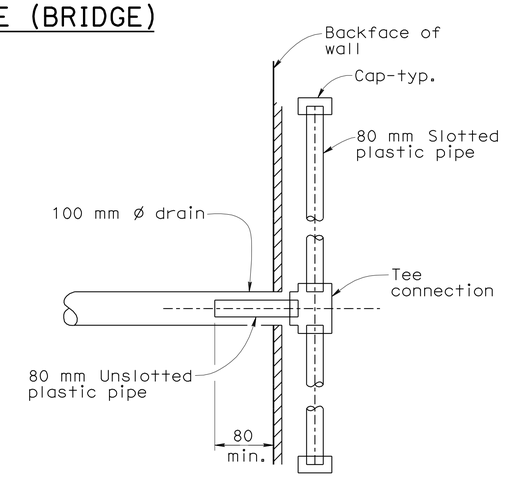

SECTION I-I
NO SCALE

NOTE:
THE CONTRACTOR SHALL VERIFY ALL CONTROLLING FIELD DIMENSIONS BEFORE ORDERING OR FABRICATING ANY MATERIAL.

	BY	CHECKED
DESIGN	K. Kim	K. Ghosh
DETAILS	J. Valencia/M. Singh	K. Ghosh
QUANTITIES	K. Kim	H. Win

STATE OF CALIFORNIA
DEPARTMENT OF TRANSPORTATION

DIVISION OF ENGINEERING SERVICES
STRUCTURE DESIGN
DESIGN BRANCH 21

BRIDGE NO. 57-0785
KILOMETER POST KP43.56

MIRA MESA BLVD UC (WIDEN)
STRUCTURE APPROACH DRAINAGE DETAILS

ALL DIMENSIONS ARE IN MILLIMETERS UNLESS OTHERWISE SHOWN

ORIGINAL SCALE IN MILLIMETERS FOR REDUCED PLANS 0 10 20 30 40 50 60 70 80 90 100

CU 11
EA 2T0401

DISREGARD PRINTS BEARING EARLIER REVISION DATES 10/8/08 10/31/08 11/26/08 04/28/09

REVISION DATES

SHEET 21 OF 25

FILE => 57-0785-s-sadd.dgn

STRUCTURES DESIGN DETAIL SHEET (METRIC) (REV.03-17-04)

USERNAME => trmikesl DATE PLOTTED => 29-SEP-2010 TIME PLOTTED => 11:27

DIST	COUNTY	ROUTE	KILOMETER POST TOTAL PROJECT	SHEET No	TOTAL SHEETS
11	SD	5,805	R49.9/R51.7, 42.6/46.5	641	886

REGISTERED CIVIL ENGINEER — DATE 04/28/09

9-27-10
PLANS APPROVAL DATE

REGISTERED PROFESSIONAL ENGINEER — KUMAR K. GHOSH — No. C 72555 — Exp. 06/30/10 — CIVIL — STATE OF CALIFORNIA

The State of California or its officers or agents shall not be responsible for the accuracy or completeness of electronic copies of this plan sheet.

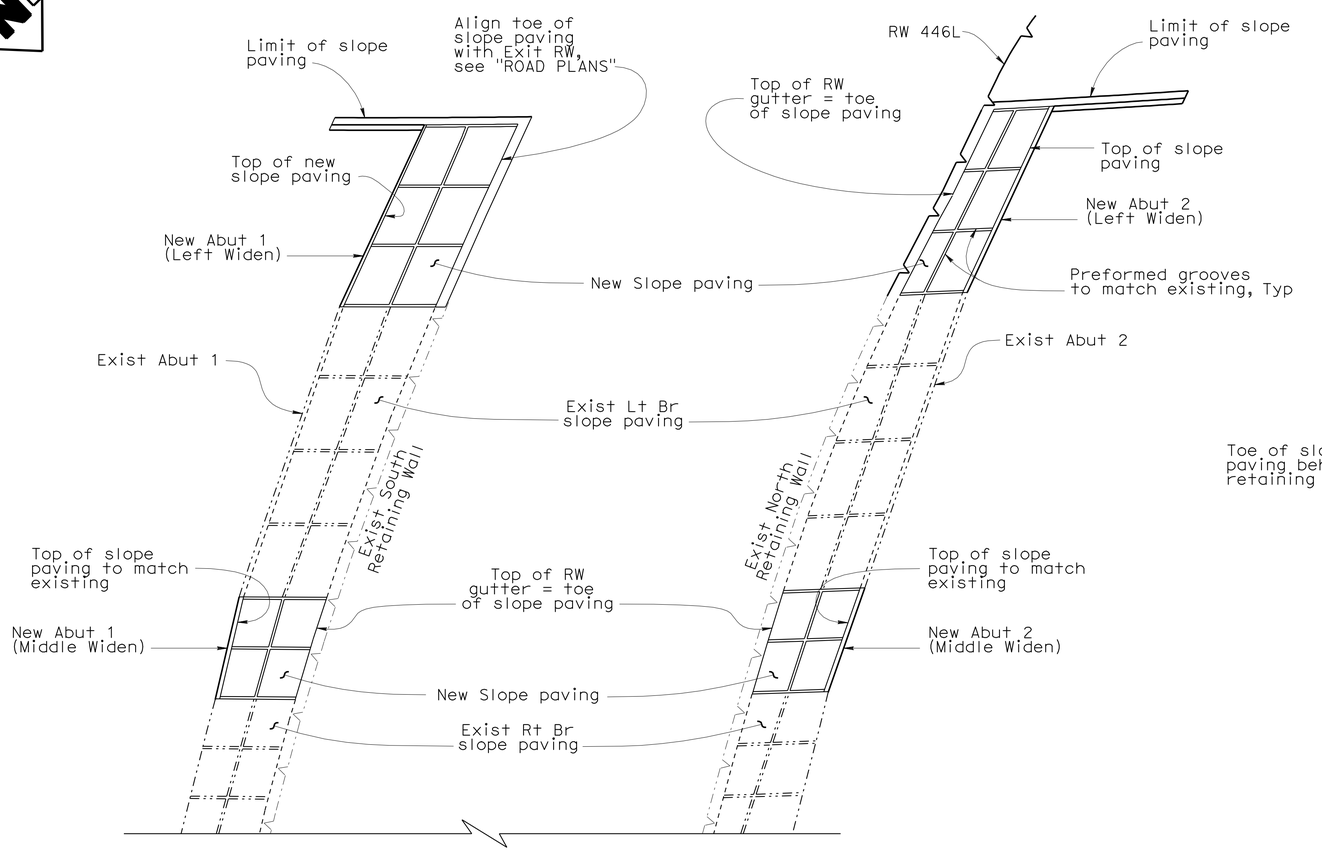

SLOPE PAVING PLAN

NO SCALE

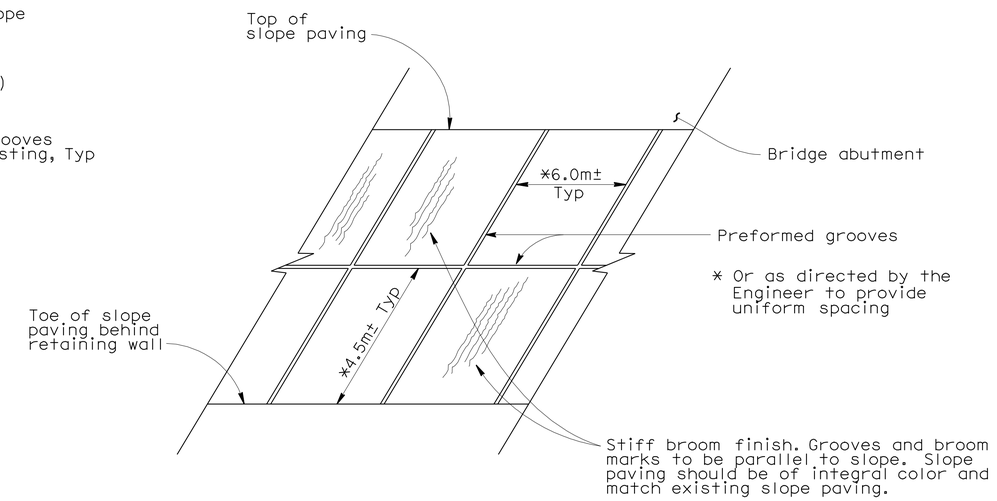

PICTORIAL VIEW OF TYPICAL INSTALLATION

No Scale

NOTE:

For limits of slope paving, see "SLOPE PAVING PLAN" on this sheet.

NOTE:
THE CONTRACTOR SHALL VERIFY ALL CONTROLLING FIELD DIMENSIONS BEFORE ORDERING OR FABRICATING ANY MATERIAL.

Caltrans Metric

	BY	CHECKED
DESIGN	K. Kim	K. Ghosh
DETAILS	P. Perez	K. Ghosh
QUANTITIES	K. Kim	H. Win

STATE OF CALIFORNIA
DEPARTMENT OF TRANSPORTATION

DIVISION OF ENGINEERING SERVICES
STRUCTURE DESIGN
DESIGN BRANCH 21

BRIDGE NO. 57-0785
KILOMETER POST KP43.56

MIRA MESA BLVD UC (WIDEN)
SLOPE PAVING DETAILS NO. 1

ALL DIMENSIONS ARE IN MILLIMETERS UNLESS OTHERWISE SHOWN

ORIGINAL SCALE IN MILLIMETERS FOR REDUCED PLANS 0 10 20 30 40 50 60 70 80 90 100

CU 11
EA 2T0401

DISREGARD PRINTS BEARING EARLIER REVISION DATES 10/06/08 11/26/08 04/28/09

REVISION DATES

SHEET 22 OF 25

FILE => 57-0785-t-sp01.dgn

STRUCTURES DESIGN DETAIL SHEET (METRIC) (REV.03-17-04)

USERNAME => trmkest DATE PLOTTED => 29-SEP-2010 TIME PLOTTED => 11:27

DIST	COUNTY	ROUTE	KILOMETER POST TOTAL PROJECT	SHEET No	TOTAL SHEETS
11	SD	5,805	R49.9/R51.7, 42.6/46.5	642	886

REGISTERED CIVIL ENGINEER — DATE 04/28/09

9-27-10
PLANS APPROVAL DATE

REGISTERED PROFESSIONAL ENGINEER — KUMAR K. GHOSH — No. C 72555 — Exp. 06/30/10 — CIVIL — STATE OF CALIFORNIA

The State of California or its officers or agents shall not be responsible for the accuracy or completeness of electronic copies of this plan sheet.

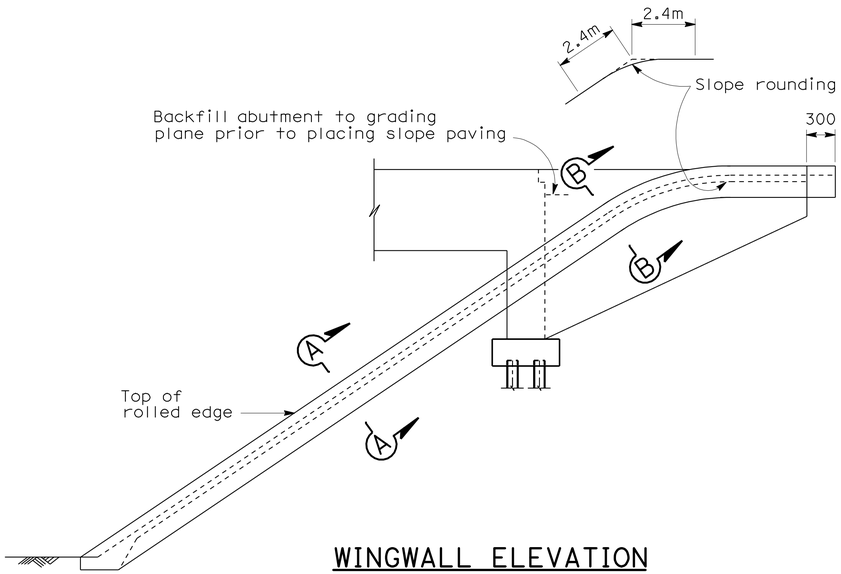

WINGWALL ELEVATION
No Scale

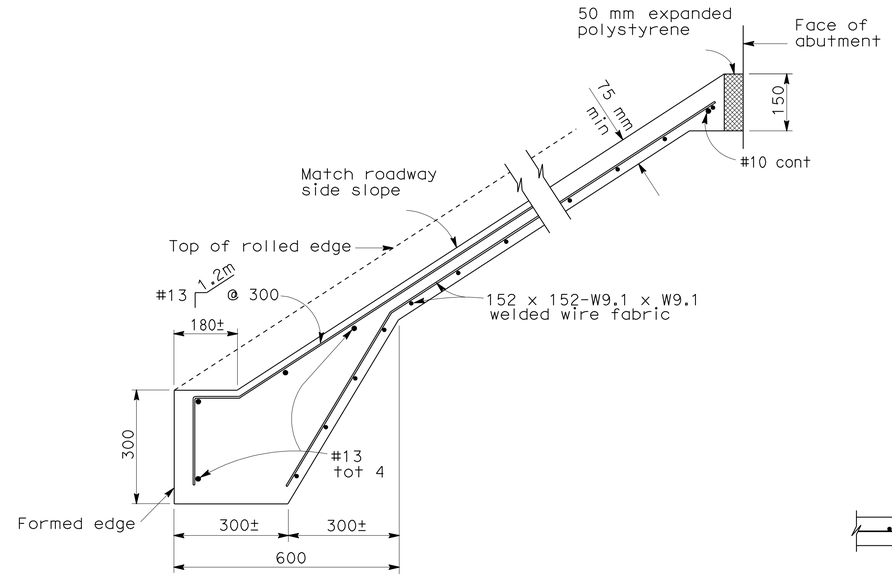

TYPICAL SECTION - CONCRETE PAVING
No Scale

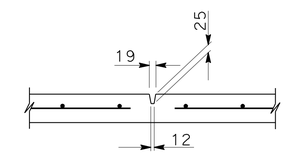

PREFORMED GROOVE
No Scale

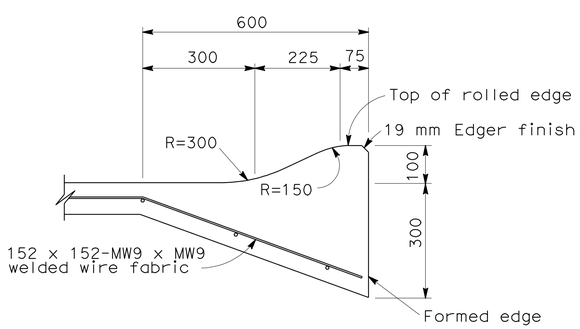

SECTION A-A
No Scale

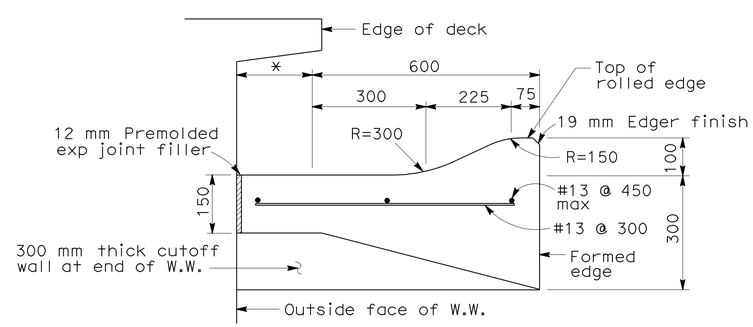

SECTION B-B
No Scale

* This dimension becomes zero when edge of deck is at outside face of W.W.

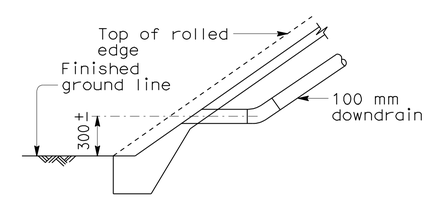

DRAINAGE DETAILS
No Scale

NOTE:
THE CONTRACTOR SHALL VERIFY ALL CONTROLLING FIELD DIMENSIONS BEFORE ORDERING OR FABRICATING ANY MATERIAL.

Caltrans Metric

	BY	CHECKED
DESIGN	K. Kim	K. Ghosh
DETAILS	P. Perez	K. Ghosh
QUANTITIES	K. Kim	H. Win

STATE OF CALIFORNIA
DEPARTMENT OF TRANSPORTATION

DIVISION OF ENGINEERING SERVICES
STRUCTURE DESIGN
DESIGN BRANCH 21

BRIDGE NO. 57-0785
KILOMETER POST KP43.56

MIRA MESA BLVD UC (WIDEN)
SLOPE PAVING DETAILS NO. 2

ALL DIMENSIONS ARE IN MILLIMETERS UNLESS OTHERWISE SHOWN

ORIGINAL SCALE IN MILLIMETERS FOR REDUCED PLANS 0 10 20 30 40 50 60 70 80 90 100

CU 11
EA 2T0401

DISREGARD PRINTS BEARING EARLIER REVISION DATES

REVISION DATES: 10/08/08 11/26/08 04/28/09

SHEET 23 OF 25

FILE => 57-0785-t-sp02.dgn

STRUCTURES DESIGN DETAIL SHEET (METRIC) (REV.03-17-04)

USERNAME => tmmkes1 DATE PLOTTED => 29-SEP-2010 TIME PLOTTED => 11:27

DIST	COUNTY	ROUTE	KILOMETER POST TOTAL PROJECT	SHEET No	TOTAL SHEETS
11	SD	5,805	R49.9/R51.7, 42.6/46.5	643	886

REGISTERED CIVIL ENGINEER 06-30-08

9-27-10
PLANS APPROVAL DATE

REGISTERED PROFESSIONAL ENGINEER Gina W. Pursell No. C54512 Exp. 12-31-09 CIVIL STATE OF CALIFORNIA

The State of California or its officers or agents shall not be responsible for the accuracy or completeness of electronic copies of this plan sheet.

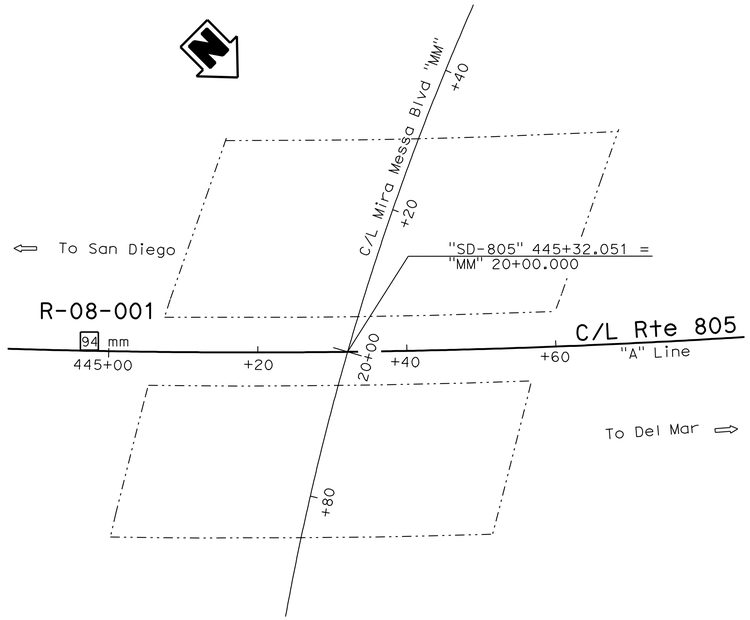

PLAN
1:400

BENCH MARK
11SD805 A1 Elev 53.4 m
444+95 3 ft Rt PT# 94

Notes :

1. Ground water was not encountered during field investigation.

2. The descriptions and classifications of soil, including consistency and relative density descriptors, used by the field and/or office personnel for the exploration boreholes shown on this sheet are based on the "Soil and Rock Logging Classification and Presentation Manual", Division of Engineering Services , Geotechnical Services, June 2007.

3. Soil colors were determined by using Munsel Soil Color Charts (1994, Revised Edition). Rock colors were determined using USGS Rock Color Charts (1995, revised text).

4. Test borings utilized a safety hammer to advance the sampler. Penetration index values shown on the LOTB sheets were the actual readings recorded in the field. Soil Consistencies shown on the LOTB sheets are based on these Penetration Index Values.

5. Penetration Index Value designated "REF" means sampler refusal.

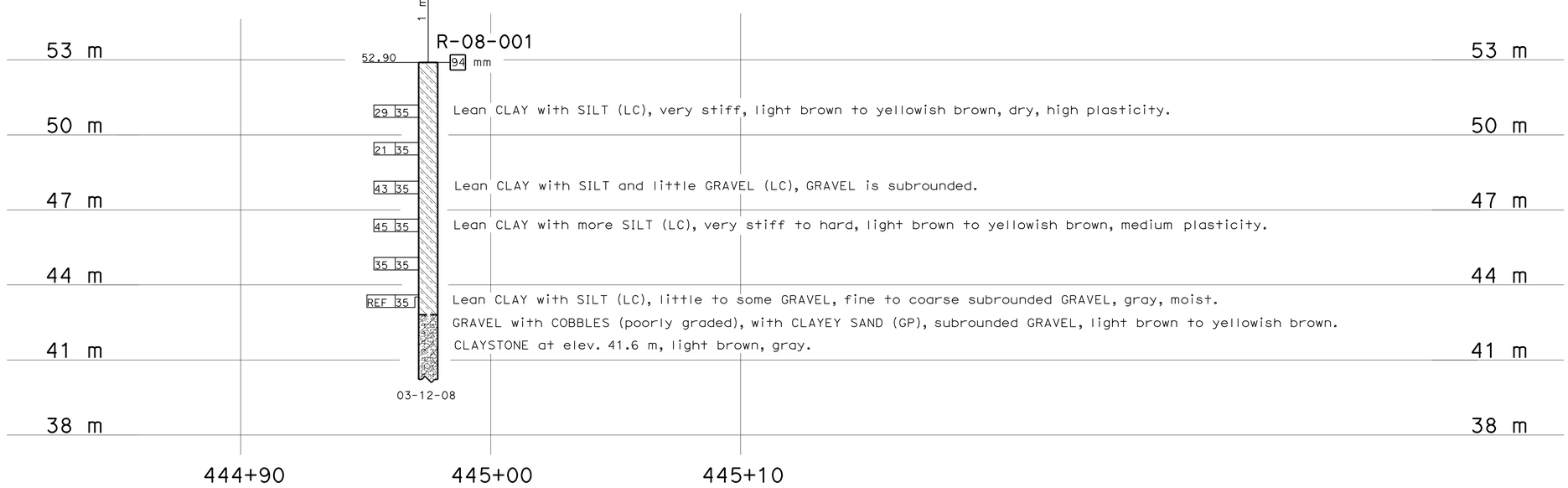

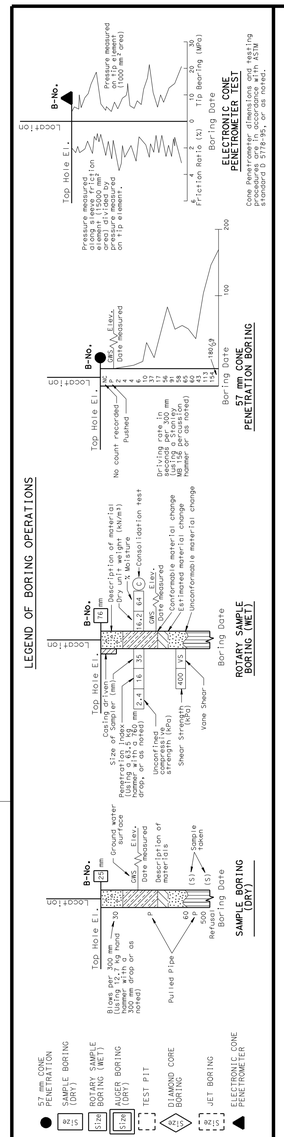

LEGEND OF EARTH MATERIALS

GRAVEL, SAND, SILT, CLAY, SANDY CLAY or CLAYEY SAND, SANDY SILT or SILTY SAND, SILTY CLAY, CLAYEY SILT, PEAT and/or ORGANIC MATTER, COBBLES and/or BOULDERS, IGNEOUS ROCK, SEDIMENTARY ROCK, METAMORPHIC

CONSISTENCY CLASSIFICATION FOR SOILS

According to the Standard Penetration Test

SPT N-Value (Blows/0.3m)	Granular	SPT N-Value (Blows/0.3m)	Cohesive
0-4	Very Loose	<2	Very Soft
5-10	Loose	2-4	Soft
11-30	Medium Dense	5-8	Firm
31-50	Dense	9-15	Stiff
>50	Very Dense	16-30	Very stiff
		>30	Hard

NOTE: Classification of earth material as shown on this sheet is based upon field inspection and is not to be construed to imply mechanical analysis.

OGS CIVIL LOG OF TEST BORINGS SHEET (METRIC) (REV. 4/04)

Caltrans Metric

ENGINEERING SERVICES	GEOTECHNICAL SERVICES
DRAWN BY	W. Tang 04/08
CHECKED BY	

FIELD INVESTIGATION BY: R. Kim

STATE OF CALIFORNIA DEPARTMENT OF TRANSPORTATION

DIVISION OF ENGINEERING SERVICES STRUCTURE DESIGN DESIGN BRANCH

BRIDGE NO. 57-0785R/L
KILOMETER POST KP43.56

MIRA MESA BLVD UC (WIDEN)
LOG OF TEST BORINGS 1 OF 2

ALL DIMENSIONS ARE IN METERS UNLESS OTHERWISE SHOWN

ORIGINAL SCALE IN MILLIMETERS FOR REDUCED PLANS 0 10 20 30 40 50 60 70 80 90 100

CU 11
EA 2T0401

DISREGARD PRINTS BEARING EARLIER REVISION DATES 04-28-09

REVISION DATES (PRELIMINARY STAGE ONLY)

SHEET 24 OF 25

FILE => 57-0785-u-lotb01.dgn

USERNAME => trmikesl DATE PLOTTED => 29-SEP-2010 TIME PLOTTED => 11:27

DIST.	COUNTY	ROUTE	POST MILES-TOTAL PROJECT	SHEET NO.	TOTAL SHEETS
11	SD	805	26.1/28.9	72	186

FA-ISA ELECTRICAL SUPERVISOR — REGISTERED PROFESSIONAL ENGINEER

ACTIVITY APPROVED August 26, 1970

To accompany plans dated 9-27-10

DIVISION OF ENGINEERING SERVICES - GEOTECHNICAL SERVICES

As-Built Log of Test Borings sheet is considered an informational document only. As such, the State of California registration seal with signature, license number and registration certificate expiration date confirm that this is a true and accurate copy of the original document. This drawing is available and presented only for the convenience of any bidder, contractor or other interested party.

DIST.	COUNTY	ROUTE	KILOMETER POST-TOTAL PROJECT	Sheet No.	Total Sheets
11	SD	5,805	R49.9/R51.7,42.6/46.5	644	886

REGISTERED PROFESSIONAL ENGINEER — Gina W. Pursell No. C54512 Exp. 12-31-09 CIVIL — STATE OF CALIFORNIA — 6/30/08

REGISTERED CIVIL ENGINEER

MIRA MESA BLVD UC (WIDEN)

LOG OF TEST BORINGS 2 OF 2

NOTE: A COPY OF THIS LOG OF TEST BORINGS IS AVAILABLE AT OFFICE OF STRUCTURE MAINTENANCE AND INVESTIGATIONS, SACRAMENTO, CALIFORNIA

CU: 11 EA: 2T0401

BRIDGE No. 57-0785R/L

Sheet 25 of 25

Revisions made to this Log of Test Borings from the original 1969 Log of Test Borings are the addition of the following table and notes:

Boring	Station	Offset from C/L Rte 805
B-1	445+51.56	23.5 m Rt
B-2	445+66.49	24.7 m Lt
B-3	445+01.57	25.0 m Rt
B-4	445+15.90	28.0 m Lt

Notes:
1. See the General Plan and/or Foundation Plan for Metric Stationing.
2. The Office of Geotechnical Design produced the data presented in the table above. The data are the metric locations for the As-Built Log of Test Borings referenced to the proposed new structure location. This table is presented on this sheet for the convenience of any bidder, contractor or other interested party.

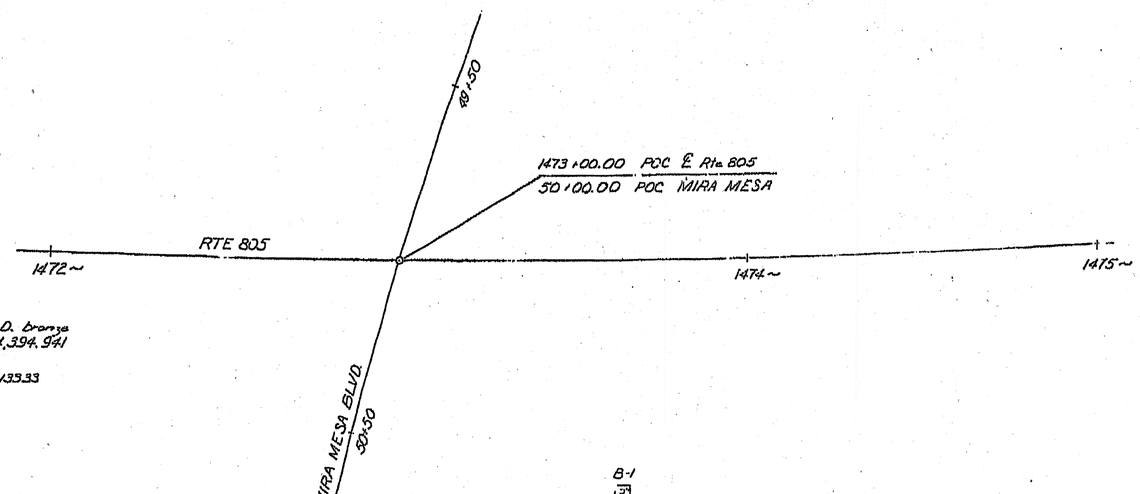

BM: # BL 995 - C.H.D. bronze disc in 2" I.P. N 264,394.941 E 1,706,576.693 Elev. 133.33

PLAN
Scale: 1"=20'

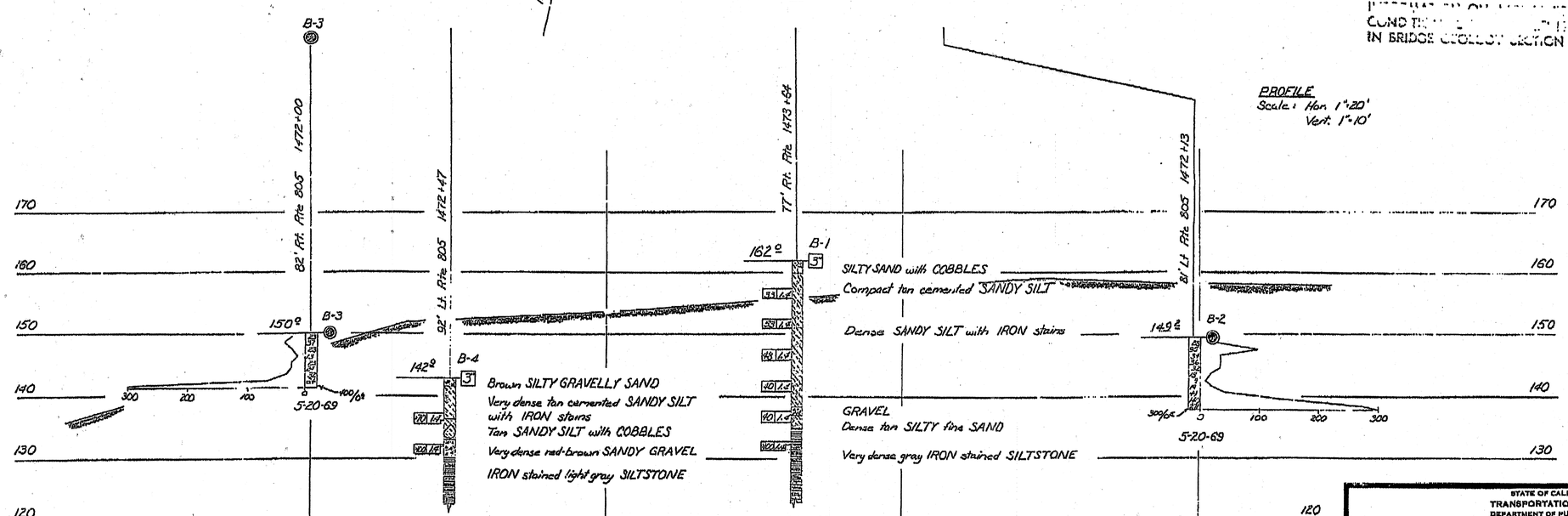

PROFILE
Scale: Hor. 1"=20'
Vert. 1"=10'

NO GROUND WATER ENCOUNTERED DURING THIS INVESTIGATION BY BRIDGE DEPT. GEOLOGY SECTION DATE 5-20-69

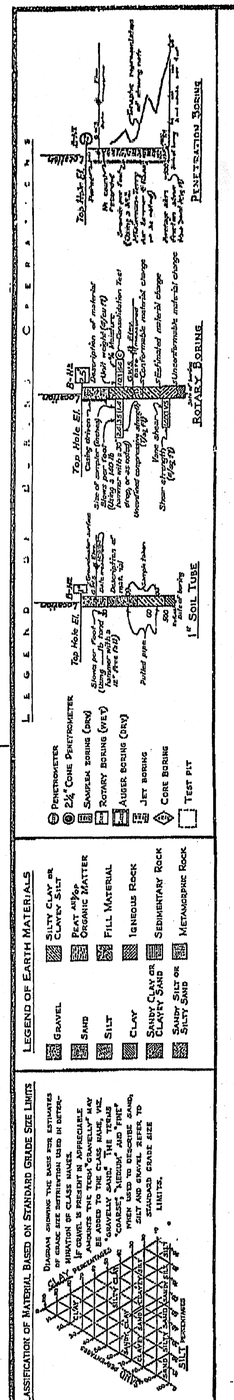

NOTE: Classification of earth material as shown on this sheet is based upon field inspection and is not to be construed to imply mechanical analysis.

FIELD STUDY By W.C. Bradley
DRAWN By J. Jones
CHECKED By V. Y. Ng
Approval Recommended R. Shakeshaft Engineering Geologist

BRIDGE DEPARTMENT
ENGINEERING GEOLOGY SECTION

170

AS BUILT PLANS
Contract No. 11-045894
Date Completed —
Document No. 100025720

WO 045831
CU 11201

Disregard prints bearing earlier revision dates

I HEREBY CERTIFY THAT THIS IS A TRUE AND ACCURATE COPY OF THE ABOVE DOCUMENT TAKEN

STATE OF CALIFORNIA
TRANSPORTATION AGENCY
DEPARTMENT OF PUBLIC WORKS
DIVISION OF HIGHWAYS

MIRA MESA BLVD. U.C.

LOG OF TEST BORINGS

BRIDGE NO.	POST MILE	DRAWING NO.	SHEET	OF
57-785 R/L	27.1		7	7

REVISION DATES (PRELIMINARY STAGE ONLY)

57-0785-u-lotb02.tif

DIST	COUNTY	ROUTE	KILOMETER POST TOTAL PROJECT	SHEET No	TOTAL SHEETS
11	SD	5,805	R49.9/R51.7, 42.6/46.5	645	886

REGISTERED CIVIL ENGINEER — DATE 04/28/09

9-27-10
PLANS APPROVAL DATE

REGISTERED PROFESSIONAL ENGINEER — KUMAR K. GHOSH — No. C 72555 — Exp. 06/30/10 — CIVIL — STATE OF CALIFORNIA

The State of California or its officers or agents shall not be responsible for the accuracy or completeness of electronic copies of this plan sheet.

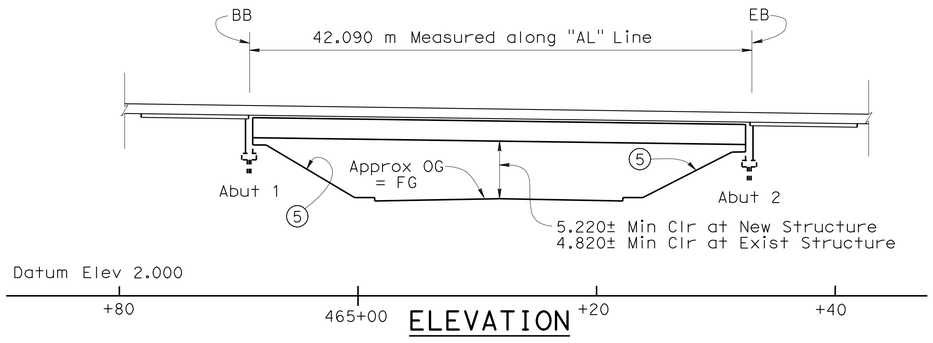

ELEVATION
1:250

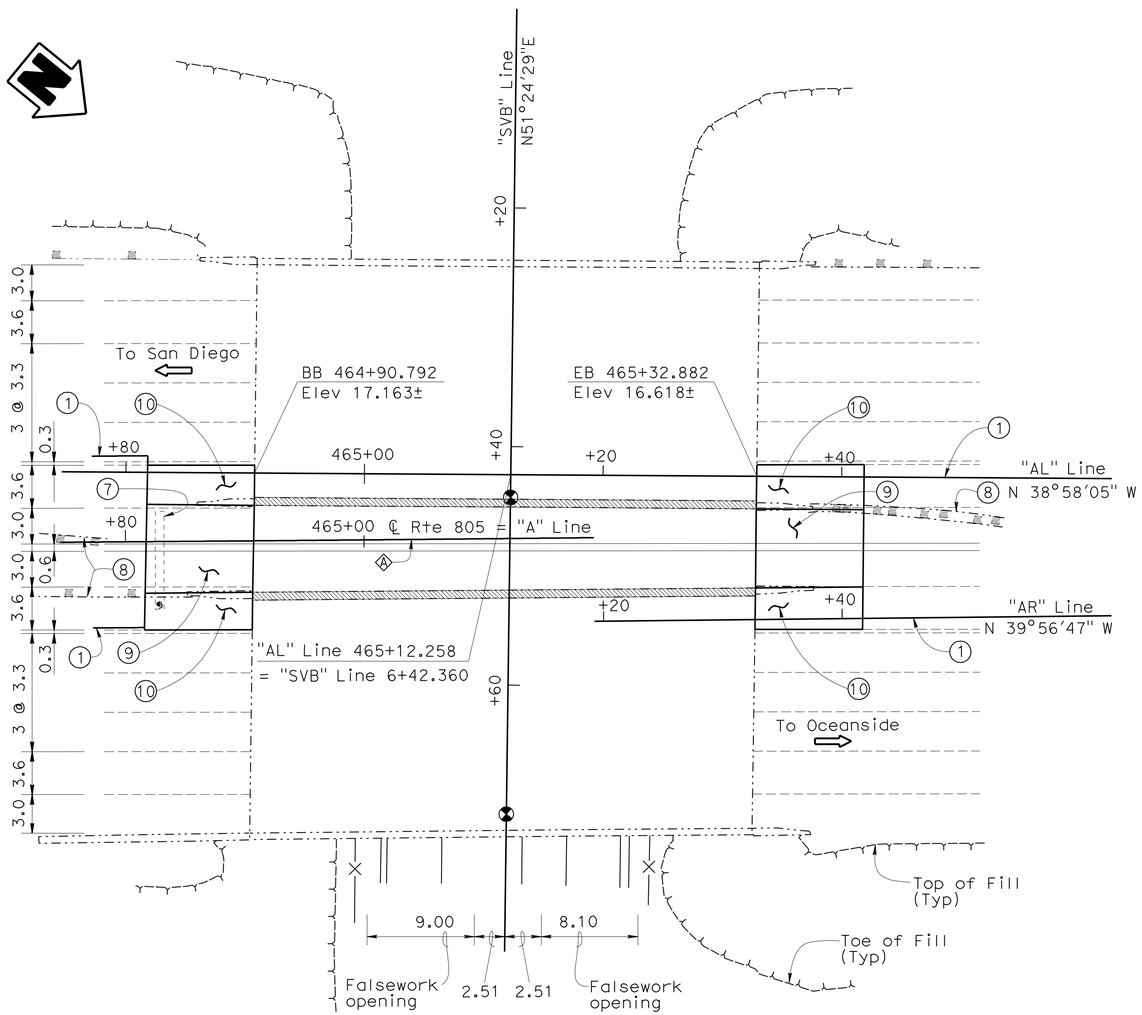

PLAN
1:250

NOTE:
THE CONTRACTOR SHALL VERIFY ALL CONTROLLING FIELD DIMENSIONS BEFORE ORDERING OR FABRICATING ANY MATERIAL.

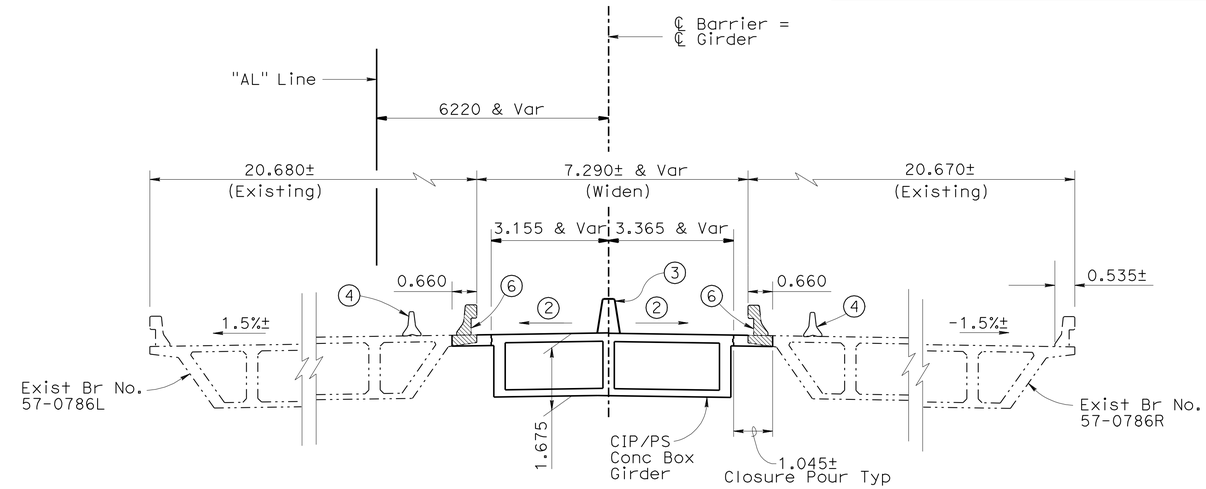

TYPICAL SECTION
1:80

QUANTITIES

BRIDGE REMOVAL (PORTION), LOCATION C	LUMP	SUM
STRUCTURE EXCAVATION (BRIDGE)	71	m3
STRUCTURE BACKFILL (BRIDGE)	50	m3
AGGREGATE BASE (APPROACH SLAB)	6	m3
FURNISH STEEL PILING (HP 250 X 85)	313	m
DRIVE STEEL PILE (HP 250 X 85)	14	EA
PRESTRESSING CAST-IN-PLACE CONCRETE	LUMP	SUM
STRUCTURAL CONCRETE, BRIDGE FOOTING	10	m3
STRUCTURAL CONCRETE, BRIDGE	215	m3
STRUCTURAL CONCRETE, APPROACH SLAB (TYPE N)	38	m3
STRUCTURAL CONCRETE, APPROACH SLAB (TYPE R)	37	m3
PAVING NOTCH EXTENSION	1	m3
DRILL AND BOND DOWEL	31	m
JOINT SEAL (MR 40 MM)	29	m
BAR REINFORCING STEEL (BRIDGE)	35 250	kg
SLOPE PAVING (CONCRETE)	9	m3
CONCRETE BARRIER (TYPE 60A)	60	m

CURVE DATA

	R	Δ	T	L
A	12192.024	03°14'43"	345.375	690.530

NOTES:

1. Sawcut lines, see "ROAD PLANS."
2. Match Exist cross slope
3. Concrete Barrier Type 60A
4. Temporary Railing, Type K, see "ROAD PLANS"
5. Slope Paving to match exist
6. Remove Exist Barrier Type 25 and deck overhang (Portion)
7. Remove Exist Overhead Sign Structure and install New Overhead Sign structure, see "ROAD PLANS"
8. Exist STBB/DTBB to be removed, see "ROAD PLANS"
9. Approach Slab Type N(9D)
10. Approach Slab Type R(9D)

LEGEND

- Indicates new construction
- Indicates existing Structure
- Bridge Removal (Portion)
- Point of minimum vertical clearance

For General Notes, see "INDEX TO PLANS" sheet

Caltrans Metric

CHUNG-YUAN WEN
DESIGN ENGINEER

	BY	CHECKED
DESIGN	K. Ghosh	K. Kim
DETAILS	M. Singh	K. Ghosh
QUANTITIES	S. Yeh	R. Rafie

LOAD FACTOR DESIGN — LIVE LOADING: HS20-44 AND ALTERNATIVE AND PERMIT DESIGN LOAD
LAYOUT — BY M. Singh — CHECKED K. Ghosh
SPECIFICATIONS — BY — PLANS AND SPECS COMPARED

STATE OF CALIFORNIA
DEPARTMENT OF TRANSPORTATION

DIVISION OF ENGINEERING SERVICES
STRUCTURE DESIGN
DESIGN BRANCH 21

BRIDGE NO. 57-0786
KILOMETER POST KP45.55

SORRENTO VALLEY BLVD. U.C. (WIDEN)
GENERAL PLAN

ALL DIMENSIONS ARE IN METERS UNLESS OTHERWISE SHOWN

ORIGINAL SCALE IN MILLIMETERS FOR REDUCED PLANS 0 10 20 30 40 50 60 70 80 90 100

CU 11
EA 2T0401

DISREGARD PRINTS BEARING EARLIER REVISION DATES

REVISION DATES: 03/06/08 08/24/08 09/08/08 11/06/08 04/28/09

SHEET 1 OF 17

FILE => 57-0786-a-gp.dgn

STRUCTURES DESIGN GENERAL PLAN SHEET (METRIC) (REV.03-17-04)

USERNAME => trmikest DATE PLOTTED => 29-SEP-2010 TIME PLOTTED => 11:28

DIST	COUNTY	ROUTE	KILOMETER POST TOTAL PROJECT	SHEET No	TOTAL SHEETS
11	SD	5,805	R49.9/R51.7, 42.6/46.5	646	886

REGISTERED CIVIL ENGINEER 04/28/09 DATE

9-27-10
PLANS APPROVAL DATE

REGISTERED PROFESSIONAL ENGINEER KUMAR K. GHOSH No. C 72555 Exp. 06/30/10 CIVIL STATE OF CALIFORNIA

The State of California or its officers or agents shall not be responsible for the accuracy or completeness of electronic copies of this plan sheet.

GENERAL NOTES
LOAD AND RESISTANCE FACTOR

DESIGN: AASHTO LRFD BRIDGE DESIGN SPECIFICATIONS 3RD EDITION WITH 2006 INTERIMS AND CALTRANS AMENDMENTS, V0.05

SEISMIC DESIGN: Caltrans Seismic Design Criteria (SDC) version 1.4 February 2006

LIVE LOADING: HL-93 Design Truck and Tandem and P15 long deck Permit design load

SEISMIC LOADING: Modified Site Specific ARS Curve

REINFORCED CONCRETE: ASTM A706

f'_y = 420 MPa

f'_c , see "Concrete Strength and Type Limits"

PRESTRESSED CONCRETE: See "Prestressing Notes" on "Girder Layout" sheet

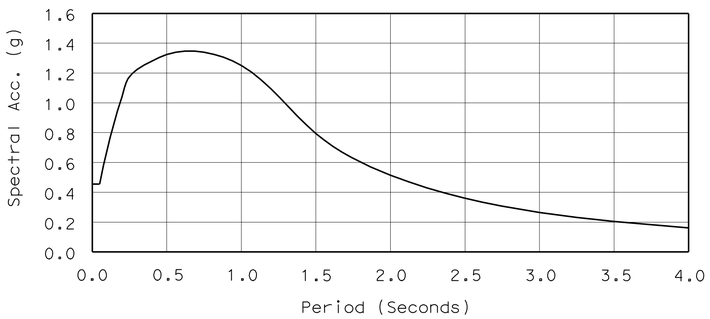

MODIFIED SITE SPECIFIC ARS CURVE

Peak Rock Acceleration = 0.5g
Magnitude, Mw = 7.25±
Type E Soil Profile
5% Damping

INDEX TO PLANS

1. GENERAL PLAN
2. INDEX TO PLANS
3. FOUNDATION PLAN
4. REMOVAL PLAN
5. ABUTMENT LAYOUT
6. ABUTMENT DETAILS
7. TYPICAL SECTION
8. GIRDER LAYOUT
9. GIRDER REINFORCEMENT
10. STRUCTURE APPROACH TYPE N(9D)
11. STRUCTURE APPROACH TYPE R(9D)
12. STRUCTURE APPROACH DRAINAGE DETAILS
13. SLOPE PAVING
14. LOG OF TEST BORINGS 1
15. LOG OF TEST BORINGS 2
16. LOG OF TEST BORINGS 3
17. LOG OF TEST BORINGS 4

STANDARD PLANS JULY 2004

	A10A	ACRONYMS AND ABBREVIATIONS (A-L)
	A10B	ACRONYMS AND ABBREVIATIONS (M-Z)
	A10C	SYMBOLS (SHEET 1 OF 2)
	A10D	SYMBOLS (SHEET 2 OF 2)
	A62C	LIMITS OF PAYMENT FOR EXCAVATION AND BACKFILL BRIDGE
RSP	A76A	CONCRETE BARRIER TYPE 60A
	BO-1	BRIDGE DETAILS
	BO-3	BRIDGE DETAILS
	BO-5	BRIDGE DETAILS
	BO-13	BRIDGE DETAILS
RSP	B6-21	JOINT SEALS (MAXIMUM MOVEMENT RATING = 50 MM)
	B7-1	BOX GIRDER DETAILS
	B7-10	UTILITY OPENING BOX GIRDER
RSP	B8-5	CAST-IN-PLACE PRESTRESSED GIRDER DETAILS
	B14-5	WATER SUPPLY LINE (DETAILS) (PIPE SIZES LESS THAN 100mm
RSP	P10	CONCRETE PAVEMENT - DOWEL BAR DETAILS
	T3	TEMPORARY RAILING (TYPE K)

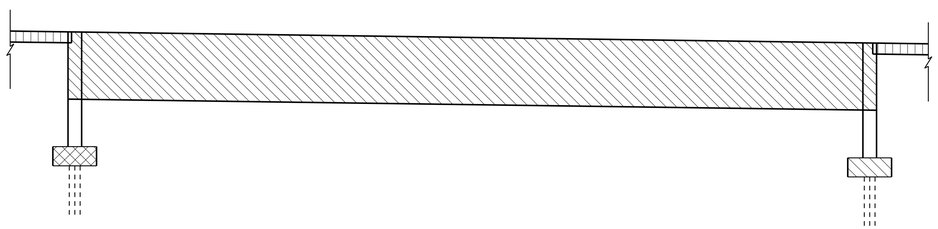

CONCRETE STRENGTH AND TYPE LIMITS

No Scale

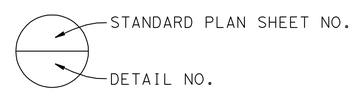

LEGEND

- Structural Concrete, Bridge (f'_c = 28 Mpa @ 28 days)
- Structural Concrete, Bridge (f'_c = 35 MPa @ 28 days)
- Structural Concrete Bridge Footing (f'_c = 28 MPa @ 28 days)
- Structural Concrete, Approach Slab (f'_c = 25 MPa @ 28 days)

PILE DATA TABLE

Location	Pile Type	Design Loading	Nominal Resistance		Desgin Tip Elevations (M)	Specified Tip Elevations (M)
			Compression	Tension		
Abutment 1	Steel H Piles HP 250x85	625kN	1250kN	0kN	-9.1	-9.1
Abutment 2	Steel H Piles HP 250x85	625kN	1250kN	0kN	-9.1	-9.1

NOTE: Design tip elevations are controlled by compression.

DIST	COUNTY	ROUTE	KILOMETER POST TOTAL PROJECT	SHEET No	TOTAL SHEETS
11	SD	5,805	R49.9/R51.7, 42.6/46.5	647	886

Caltrans Metric

REGISTERED CIVIL ENGINEER — DATE 04/28/09

9-27-10
PLANS APPROVAL DATE

REGISTERED PROFESSIONAL ENGINEER — KUMAR K. GHOSH — No. C 72555 — Exp. 06/30/10 — CIVIL — STATE OF CALIFORNIA

The State of California or its officers or agents shall not be responsible for the accuracy or completeness of electronic copies of this plan sheet.

(1) Sta 6+02.977, ℄ Sorrento Valley Rd,"SVB" Line = Sta 465+12.729, "805ST" Line
(2) Sta 6+42.360, ℄ Sorrento Valley Rd,"SVB" Line = Sta 465+12.258, "AL" Line
(3) Sta 6+47.710, ℄ Sorrento Valley Rd,"SVB" Line = Sta 465+12.232, ℄ Route 805,"A" Line
(4) Sta 6+77.954, ℄ Sorrento Valley Rd,"SVB" Line = Sta 465+12.110, "805NT" Line

Bridge Location

(A) 21.463 M Rt ℄ Sorrento Valley Rd, Sta 6+44.672, Elev= 17.195
(B) 21.491 M Rt ℄ Sorrento Valley Rd, Sta 6+25.030, Elev= 16.920
(C) 20.611 M Lt ℄ Sorrento Valley Rd, Sta 6+24.776, Elev= 16.362
(D) 20.625 M Lt ℄ Sorrento Valley Rd, Sta 6+44.462, Elev= 16.652
(E) 21.509 M Rt ℄ Sorrento Valley Rd, Sta 6+53.026, Elev= 17.224
(F) 20.643 M Lt ℄ Sorrento Valley Rd, Sta 6+52.095, Elev= 16.660
(G) 21.483 M Rt ℄ Sorrento Valley Rd, Sta 6+72.691, Elev= 16.936
(H) 20.612 M Lt ℄ Sorrento Valley Rd, Sta 6+71.742, Elev= 16.354

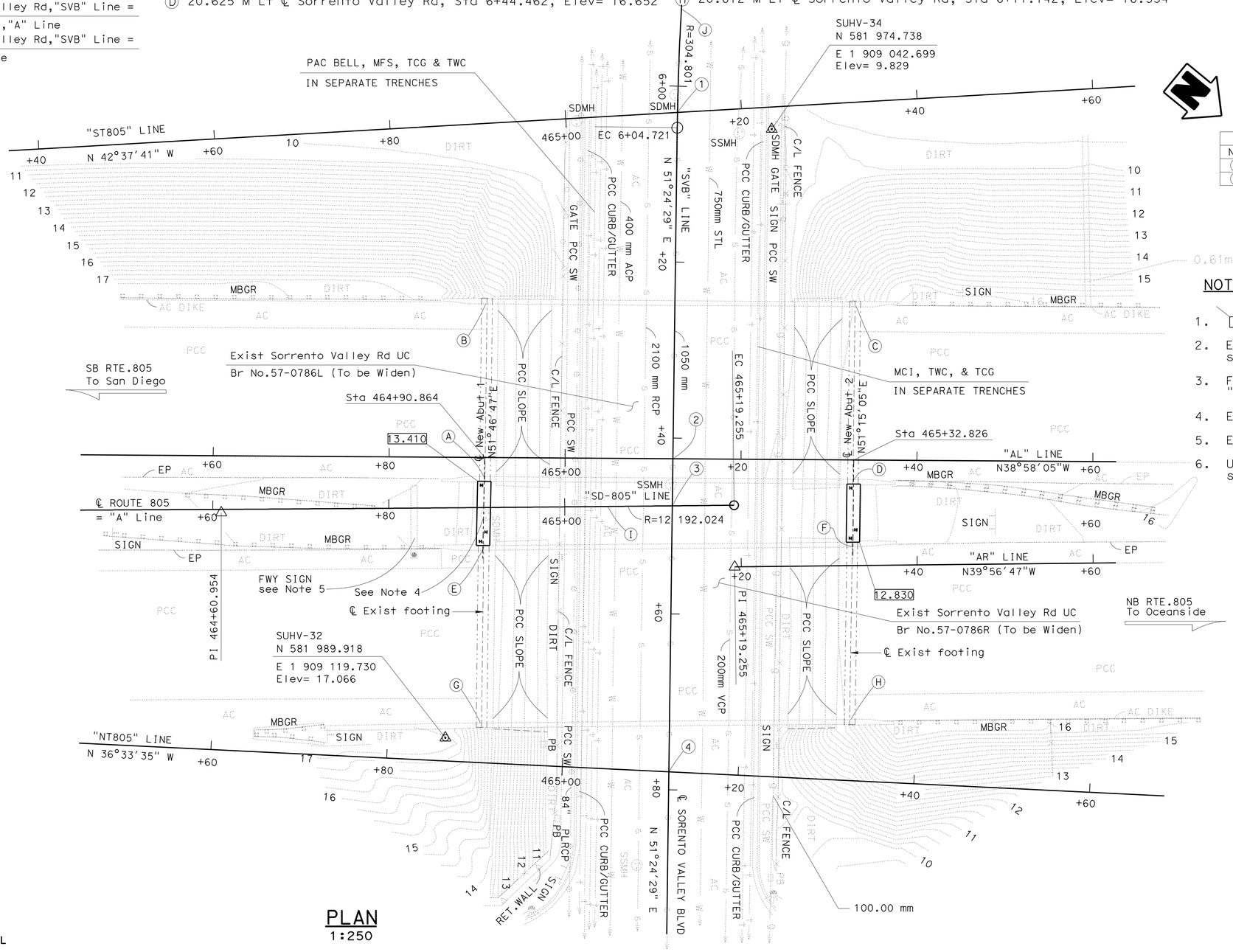

CURVE DATA				
No.	R	Δ	T	L
(I)	12192.024	03°14'43"	345.375	690.530
(J)	304.801	04°19'46"	11.521	23.031

NOTES:

1. ▭ Indicates bottom of footing elevation.
2. Existing contours shown, for final contours see "ROAD PLANS."
3. For footing dimensions and pile layout, see "ABUTMENT LAYOUT" and "ABUTMENT DEATILS" sheets.
4. Existing sewer vent to be relocated.
5. Existing Fwy sign to be removed.
6. Underground utilities as shown are approximate, see "ROAD PLANS" for details.

SURVEY CONTROL

SUHV-34
FD CAL DOT Tag/DI/SWalk
10.737 M Lt, "SVB" LINE
Sta 6+04.741
N 581 974.738
E 1 909 042.699
Elev= 9.829

SUHV-32
FD PK/Wshr./Con.Slope
25.448 M Rt, "SVB" LINE
Sta 6+74.418
N 581 989.918
E 1 909 119.730
Elev= 17.066

PLAN
1:250

NOTE:
THE CONTRACTOR SHALL VERIFY ALL CONTROLLING FIELD DIMENSIONS BEFORE ORDERING OR FABRICATING ANY MATERIAL.

ALL DIMENSIONS ARE IN METERS UNLESS OTHERWISE SHOWN

PRELIMINARY INVESTIGATION SECTION

SCALE	VERT. DATUM NGVD29	PHOTOGRAMMETRY AS OF:			
1:250	HORZ. DATUM NAD83(92)	SURVEYED	BY T.PHUNG 11/2007	CHECKED	BY C.STEWART 11/2007
ALIGNMENT TIES Dist. Trav. Sheets		DRAFTED	BY V.PHAM 12/2007	CHECKED	BY S.ALIVIO 12/2007

	BY	CHECKED
DESIGN	K. Ghosh	K. Kim
DETAILS	M. Singh	K. Ghosh
QUANTITIES	S. Yeh	R. Rafie

STATE OF CALIFORNIA
DEPARTMENT OF TRANSPORTATION

DIVISION OF ENGINEERING SERVICES
STRUCTURE DESIGN
DESIGN BRANCH

CU 11-275
EA 2T0401

BRIDGE NO. 57-0786
KILOMETER POST KP45.55

SORRENTO VALLEY BLVD UC (WIDEN
FOUNDATION PLAN

STRUCTURES FOUNDATION PLAN SHEET (METRIC) (REV.10-27-05)

ORIGINAL SCALE IN MILLIMETERS FOR REDUCED PLANS 0 10 20 30 40 50 60 70 80 90 100

DISREGARD PRINTS BEARING EARLIER REVISION DATES

REVISION DATES (PRELIMINARY STAGE ONLY): 12/28/07 01/23/08 07/24/08 02/26/09 04/28/09

SHEET 3 OF 17

FILE => 57-0786-e-fp.dgn

USERNAME => T.PHUNG DATE PLOTTED => 29-SEP-2010 TIME PLOTTED => 11:28

DIST	COUNTY	ROUTE	KILOMETER POST TOTAL PROJECT	SHEET No	TOTAL SHEETS
11	SD	5,805	R49.9/R51.7, 42.6/46.5	648	886

REGISTERED CIVIL ENGINEER 04/28/09 DATE

9-27-10
PLANS APPROVAL DATE

REGISTERED PROFESSIONAL ENGINEER KUMAR K. GHOSH No. C 72555 Exp. 06/30/10 CIVIL STATE OF CALIFORNIA

The State of California or its officers or agents shall not be responsible for the accuracy or completeness of electronic copies of this plan sheet.

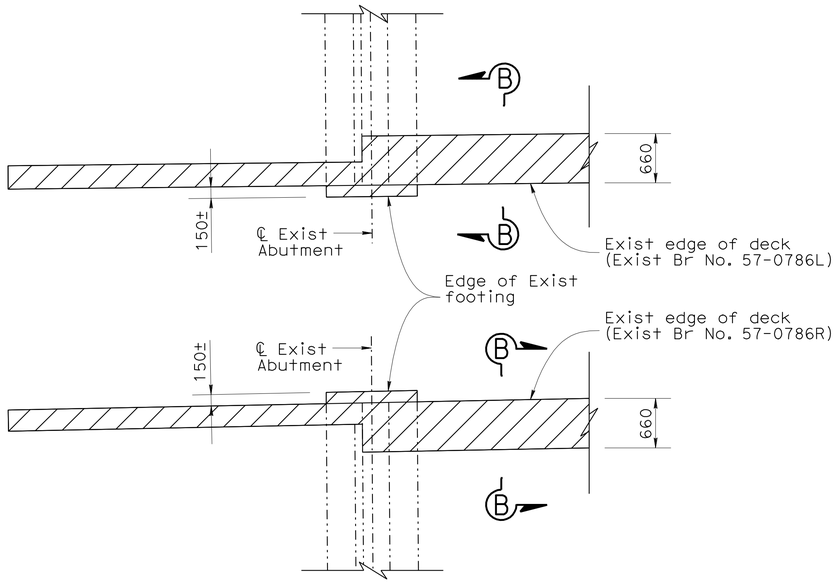

ABUTMENT REMOVAL PLAN

1:40

(Abut 1 shown, Abut 2 similar)

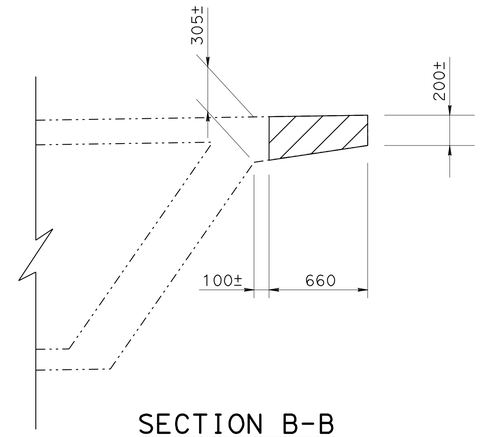

SECTION B-B

1:20

LEGEND

Bridge removal (Portion)

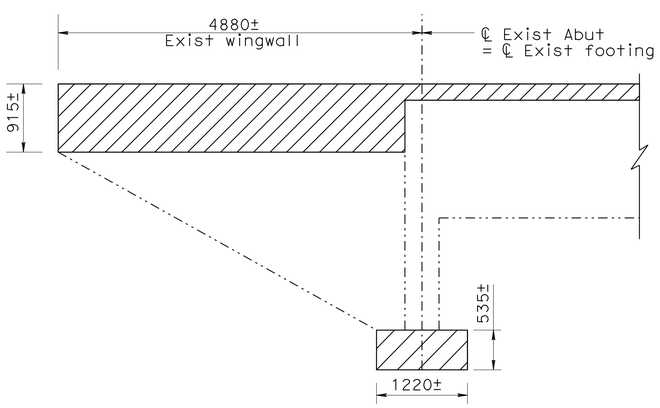

ABUTMENT REMOVAL ELEVATION

1:40

(Abut 1 shown, Abut 2 similar)

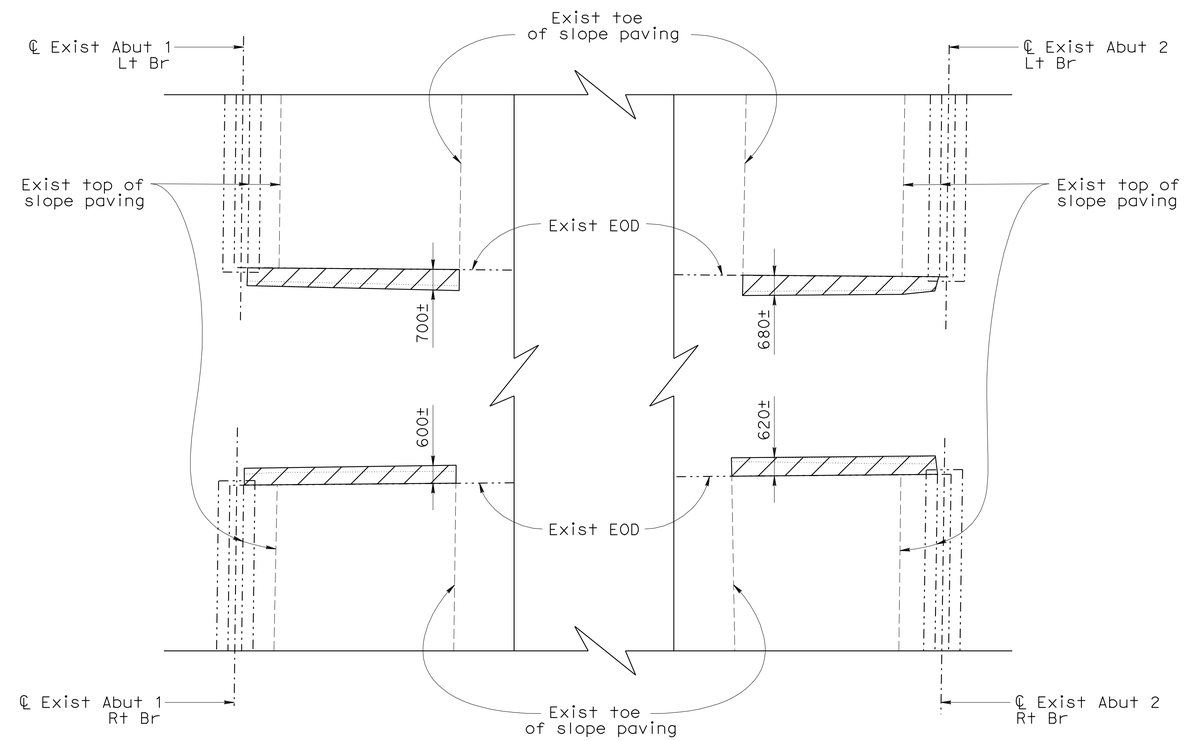

SLOPE PAVING REMOVAL

1:200

NOTE:

Total slope paving removal area = ± 23m^2

NOTE:
THE CONTRACTOR SHALL VERIFY ALL CONTROLLING FIELD DIMENSIONS BEFORE ORDERING OR FABRICATING ANY MATERIAL.

	BY	CHECKED
DESIGN	K. Ghosh	K. Kim
DETAILS	P. Perez	K. Ghosh
QUANTITIES	S. Yeh	R. Rafie

STATE OF CALIFORNIA
DEPARTMENT OF TRANSPORTATION

DIVISION OF ENGINEERING SERVICES
STRUCTURE DESIGN
DESIGN BRANCH 21

BRIDGE NO. 57-0786
KILOMETER POST KP45.55

SORRENTO VALLEY BLVD. U.C. (WIDEN)

REMOVAL PLAN

ALL DIMENSIONS ARE IN MILLIMETERS UNLESS OTHERWISE SHOWN

ORIGINAL SCALE IN MILLIMETERS FOR REDUCED PLANS 0 10 20 30 40 50 60 70 80 90 100

CU 11
EA 2T0401

DISREGARD PRINTS BEARING EARLIER REVISION DATES

REVISION DATES: 08/05/08 09/05/08 10/30/08 11/26/08 04/28/09

SHEET 4 OF 17

FILE => 57-0786-e-rem_pl.dgn

STRUCTURES DESIGN DETAIL SHEET (METRIC) (REV.03-17-04)

USERNAME => trmikest DATE PLOTTED => 29-SEP-2010 TIME PLOTTED => 11:28

DIST	COUNTY	ROUTE	KILOMETER POST TOTAL PROJECT	SHEET No	TOTAL SHEETS
11	SD	5,805	R49.9/R51.7, 42.6/46.5	649	886

REGISTERED CIVIL ENGINEER — DATE 04/28/09

9-27-10
PLANS APPROVAL DATE

REGISTERED PROFESSIONAL ENGINEER — KUMAR K. GHOSH — No. C 72555 — Exp. 06/30/10 — CIVIL — STATE OF CALIFORNIA

The State of California or its officers or agents shall not be responsible for the accuracy or completeness of electronic copies of this plan sheet.

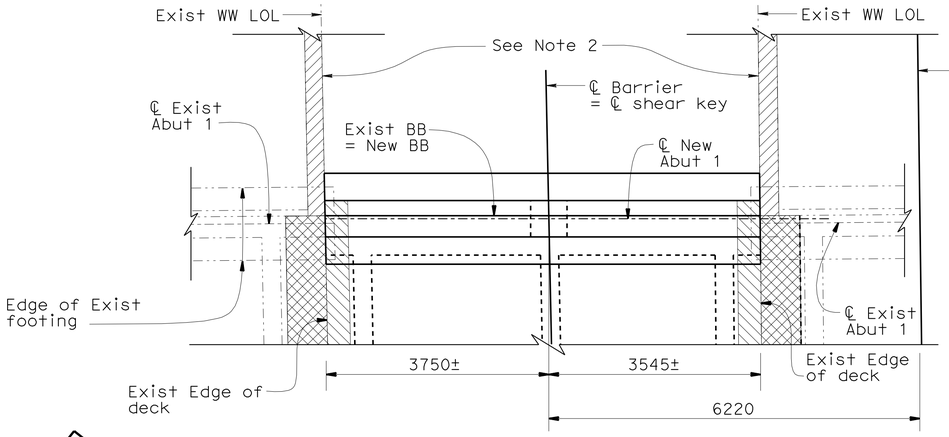

ABUTMENT 1 PLAN

1:50

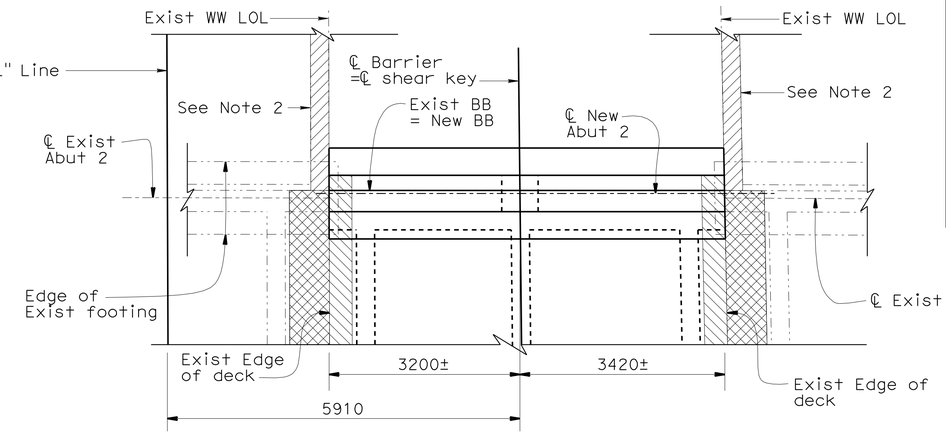

ABUTMENT 2 PLAN

1:50

NOTES:

1. For SECTION A-A and dowel details see "ABUTMENT DETAILS" sheet.
2. See "REMOVAL PLAN" sheet. Existing pile shall not be damaged.
3. For Detail B, see "ABUTMENT DETAILS" sheet.
4. See "STRUCTURE APPROACH DRAINAGE DETAILS" sheet.

LEGEND:

- Bridge removal (Portion)
- Closure pour

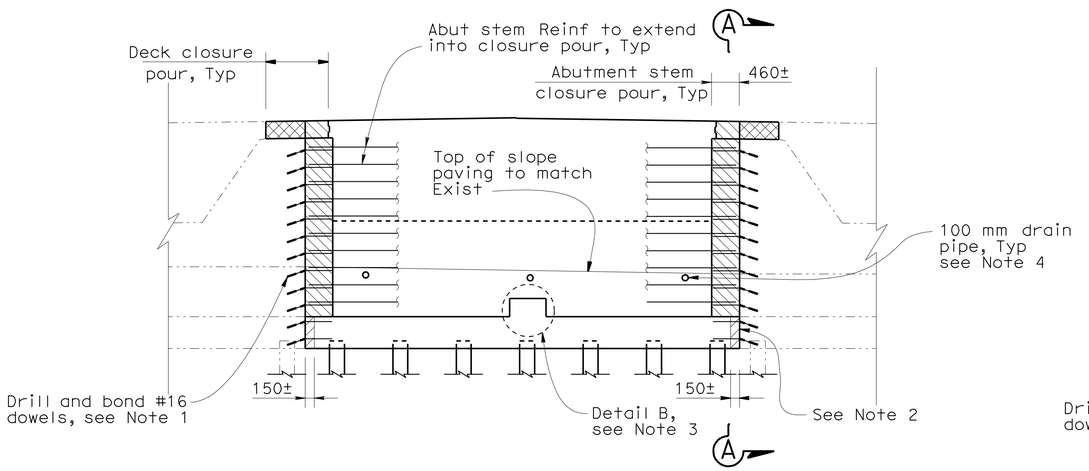

ABUTMENT 1 ELEVATION

1:50

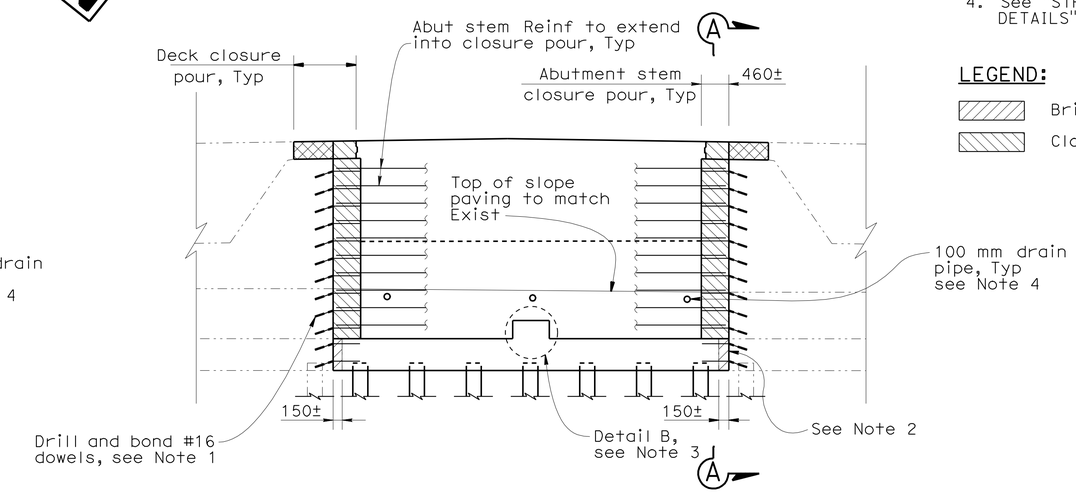

ABUTMENT 2 ELEVATION

1:50

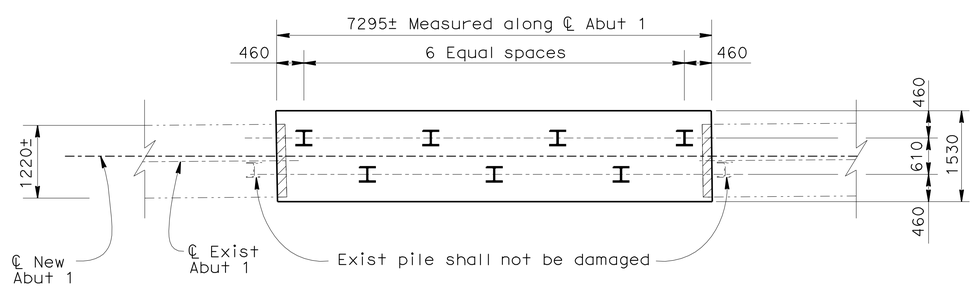

ABUTMENT 1 PILE LAYOUT

1:50

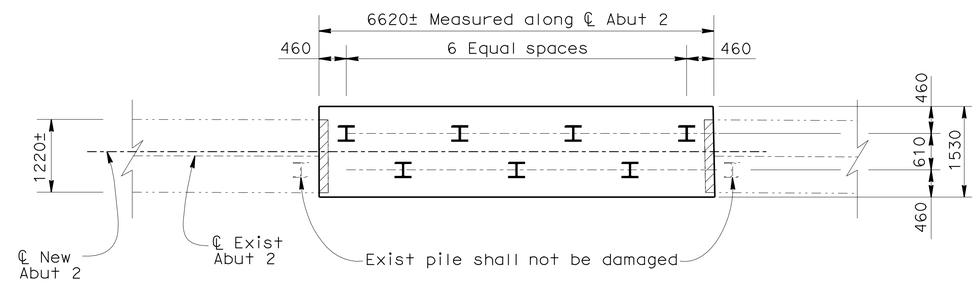

ABUTMENT 2 PILE LAYOUT

1:50

NOTE:
THE CONTRACTOR SHALL VERIFY ALL CONTROLLING FIELD DIMENSIONS BEFORE ORDERING OR FABRICATING ANY MATERIAL.

Caltrans Metric

	BY	CHECKED
DESIGN	K. Ghosh	K. Kim
DETAILS	M. Singh/P. Perez	K. Ghosh
QUANTITIES	S. Yeh	R. Rafie

STATE OF CALIFORNIA
DEPARTMENT OF TRANSPORTATION

DIVISION OF ENGINEERING SERVICES
STRUCTURE DESIGN
DESIGN BRANCH 21

CU 11
EA 2T0401

BRIDGE NO. 57-0786
KILOMETER POST KP45.55

SORRENTO VALLEY BLVD. U.C. (WIDEN)

ABUTMENT LAYOUT

ALL DIMENSIONS ARE IN MILLIMETERS UNLESS OTHERWISE SHOWN

ORIGINAL SCALE IN MILLIMETERS FOR REDUCED PLANS 0 10 20 30 40 50 60 70 80 90 100

DISREGARD PRINTS BEARING EARLIER REVISION DATES

REVISION DATES: 01/28/08 08/11/08 10/28/08 11/28/08 04/28/09

SHEET 5 OF 17

FILE => 57-0786-f-a01_io.dgn

STRUCTURES DESIGN DETAIL SHEET (METRIC) (REV.03-17-04)

USERNAME => rtmikes! DATE PLOTTED => 29-SEP-2010 TIME PLOTTED => 11:28

DIST	COUNTY	ROUTE	KILOMETER POST TOTAL PROJECT	SHEET No	TOTAL SHEETS
11	SD	5,805	R49.9/R51.7, 42.6/46.5	650	886

REGISTERED CIVIL ENGINEER — DATE 04/28/09

9-27-10
PLANS APPROVAL DATE

REGISTERED PROFESSIONAL ENGINEER — KUMAR K. GHOSH — No. C 72555 — Exp. 06/30/10 — CIVIL — STATE OF CALIFORNIA

The State of California or its officers or agents shall not be responsible for the accuracy or completeness of electronic copies of this plan sheet.

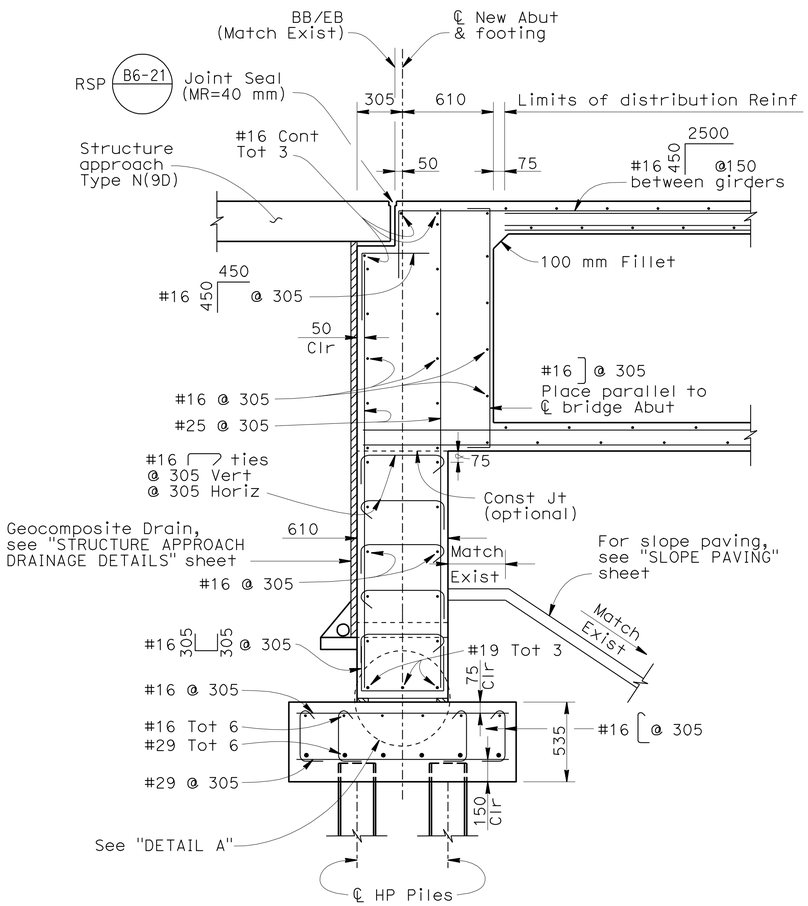

NOTE: For reinforcement not shown, see "END DIAPHRAGM DETAIL" and "STEEL PILE ANCHOR"

ABUTMENT SECTION

1:20

(Abutment 1 is shown Abutment 2 is similar)

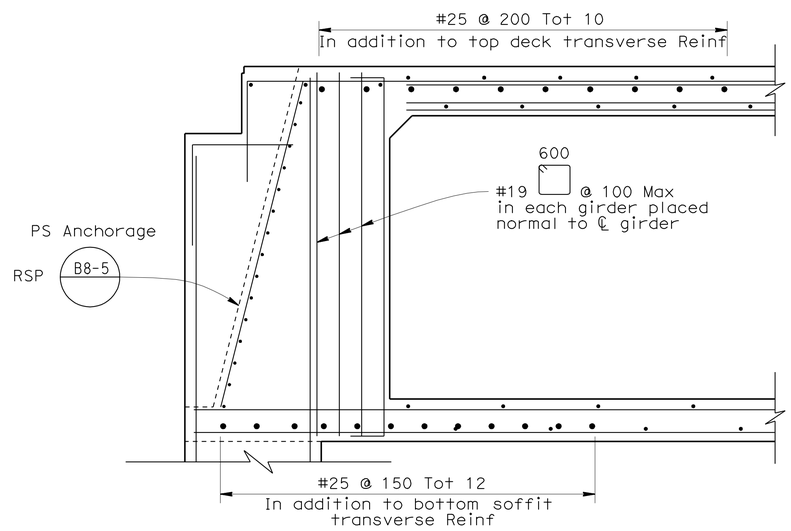

NOTE: For reinforcement not shown, see "ABUTMENT SECTION."

END DIAPHRAGM DETAIL

No Scale

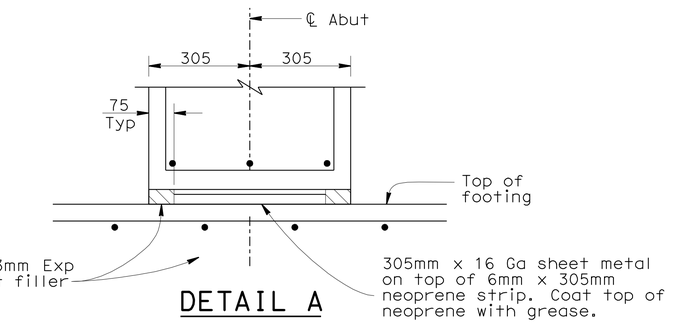

DETAIL A

No Scale

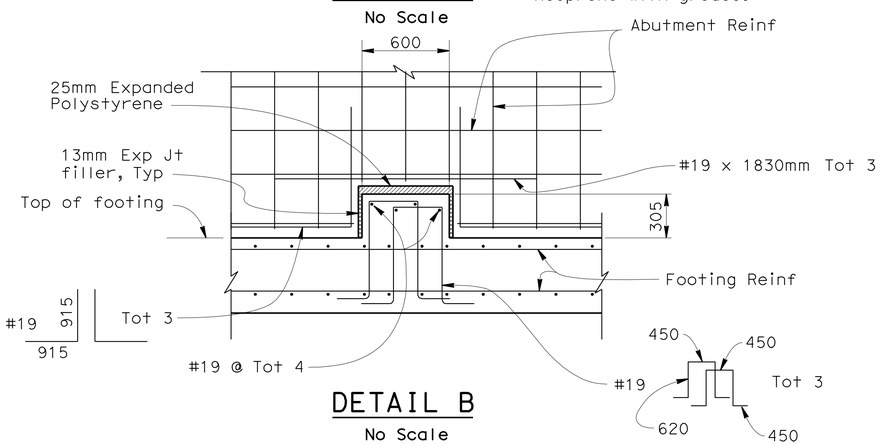

DETAIL B

No Scale

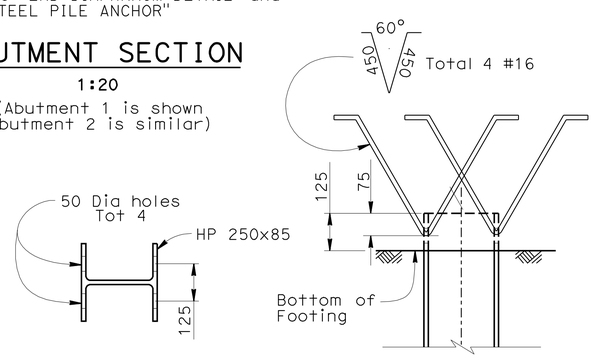

PLAN — ELEVATION

STEEL PILE ANCHOR

1:10

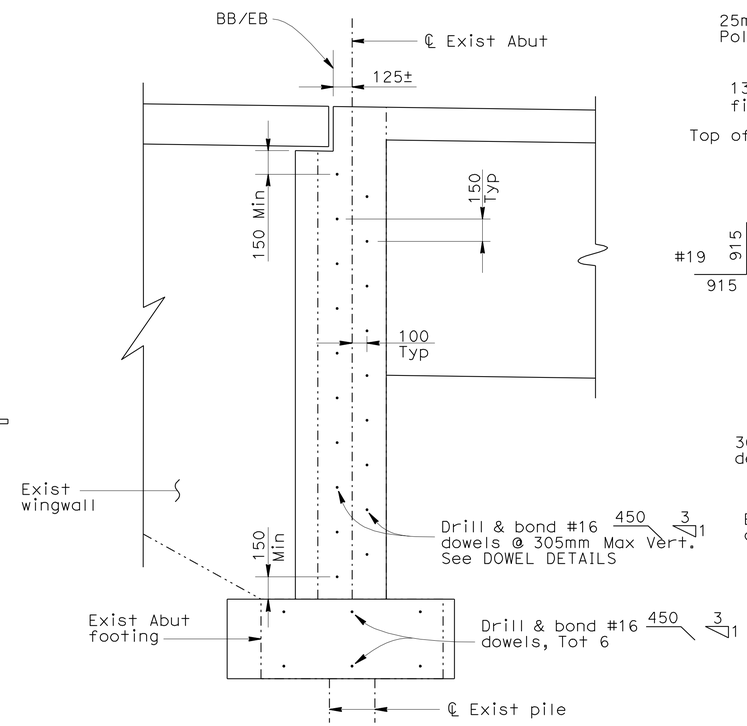

SECTION A-A

1:20

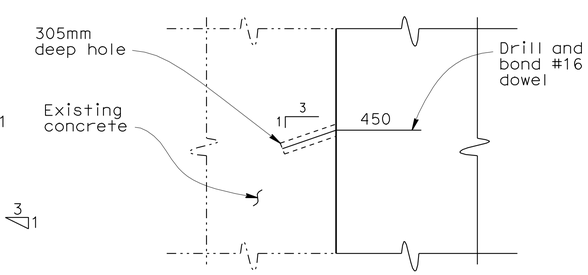

DOWEL DETAILS

No Scale

NOTE:
THE CONTRACTOR SHALL VERIFY ALL CONTROLLING FIELD DIMENSIONS BEFORE ORDERING OR FABRICATING ANY MATERIAL.

	BY	CHECKED
DESIGN	K. Ghosh	K. Kim
DETAILS	P. Perez	K. Ghosh
QUANTITIES	S. Yeh	R. Rafie

STATE OF CALIFORNIA — DEPARTMENT OF TRANSPORTATION

DIVISION OF ENGINEERING SERVICES — STRUCTURE DESIGN — DESIGN BRANCH 21

BRIDGE NO. 57-0786 — KILOMETER POST KP45.55

SORRENTO VALLEY BLVD. U.C. (WIDEN)

ABUTMENT DETAILS

ALL DIMENSIONS ARE IN MILLIMETERS UNLESS OTHERWISE SHOWN

ORIGINAL SCALE IN MILLIMETERS FOR REDUCED PLANS 0 10 20 30 40 50 60 70 80 90 100

CU 11
EA 2T0401

DISREGARD PRINTS BEARING EARLIER REVISION DATES

REVISION DATES: 01/30/08 02/21/08 07/24/08 10/30/08 11/26/08 04/28/09

SHEET 6 OF 17

FILE => 57-0786-f-a01dt.dgn

STRUCTURES DESIGN DETAIL SHEET (METRIC) (REV.03-17-04)

USERNAME => rtmikes1 DATE PLOTTED => 29-SEP-2010 TIME PLOTTED => 11:28

DIST	COUNTY	ROUTE	KILOMETER POST TOTAL PROJECT	SHEET No	TOTAL SHEETS
11	SD	5,805	R49.9/R51.7, 42.6/46.5	651	886

REGISTERED CIVIL ENGINEER — DATE 04/28/09

9-27-10
PLANS APPROVAL DATE

REGISTERED PROFESSIONAL ENGINEER — KUMAR K. GHOSH — No. C 72555 — Exp. 06/30/10 — CIVIL — STATE OF CALIFORNIA

The State of California or its officers or agents shall not be responsible for the accuracy or completeness of electronic copies of this plan sheet.

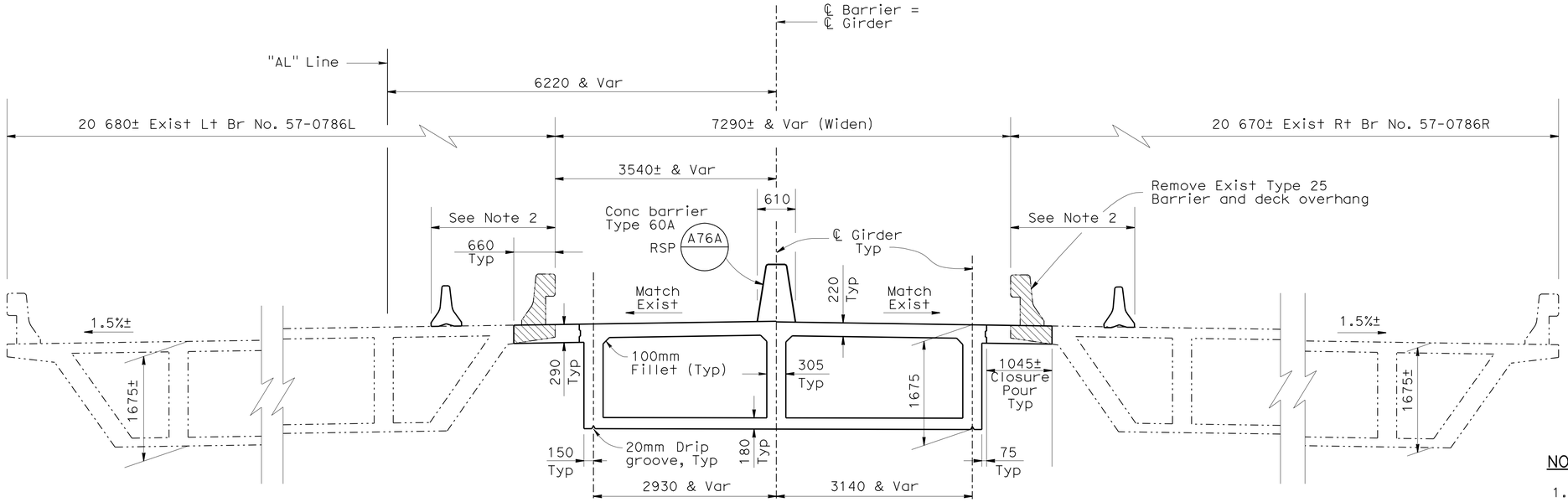

TYPICAL SECTION

1:40

NOTES:

1. For girder spacing, See "GIRDER LAYOUT" sheet.
2. See "ROAD PLANS".
3. For additional longitudinal reinforcement, see "GIRDER REINFORCEMENT" sheet.
4. For stirrup spacing, see "GIRDER LAYOUT" sheet.

LEGEND

- Indicates new construction
- Indicates existing construction
- Bridge Removal (Portion)

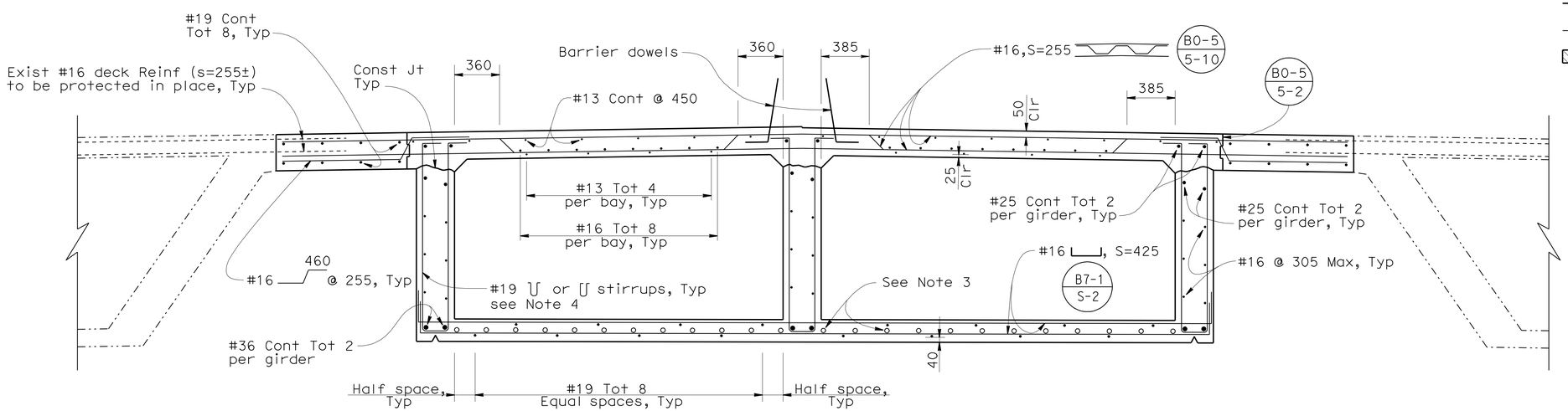

PART TYPICAL SECTION

1:20

B0-5 B7-1 B8-5

NOTE:
THE CONTRACTOR SHALL VERIFY ALL CONTROLLING FIELD DIMENSIONS BEFORE ORDERING OR FABRICATING ANY MATERIAL.

	BY	CHECKED
DESIGN	K. Ghosh	K. Kim
DETAILS	P. Perez	K. Ghosh
QUANTITIES	S. Yeh	R. Rafie

STATE OF CALIFORNIA
DEPARTMENT OF TRANSPORTATION

DIVISION OF ENGINEERING SERVICES
STRUCTURE DESIGN
DESIGN BRANCH 21

BRIDGE NO. 57-0786
KILOMETER POST KP45.55

SORRENTO VALLEY BLVD. U.C. (WIDEN)
TYPICAL SECTION

ALL DIMENSIONS ARE IN MILLIMETERS UNLESS OTHERWISE SHOWN

ORIGINAL SCALE IN MILLIMETERS FOR REDUCED PLANS 0 10 20 30 40 50 60 70 80 90 100

CU 11
EA 2T0401

DISREGARD PRINTS BEARING EARLIER REVISION DATES

REVISION DATES: 07/25/08 08/08/08 10/10/08 11/06/08 04/28/09

SHEET 7 OF 17

FILE => 57-0786-k-ts.dgn

STRUCTURES DESIGN DETAIL SHEET (METRIC) (REV.03-17-04)

USERNAME => trmikesl DATE PLOTTED => 29-SEP-2010 TIME PLOTTED => 11:29

DIST	COUNTY	ROUTE	KILOMETER POST TOTAL PROJECT	SHEET No	TOTAL SHEETS
11	SD	5,805	R49.9/R51.7, 42.6/46.5	652	886

REGISTERED CIVIL ENGINEER 04/28/09 DATE

9-27-10
PLANS APPROVAL DATE

REGISTERED PROFESSIONAL ENGINEER KUMAR K. GHOSH No. C 72555 Exp. 06/30/10 CIVIL STATE OF CALIFORNIA

The State of California or its officers or agents shall not be responsible for the accuracy or completeness of electronic copies of this plan sheet.

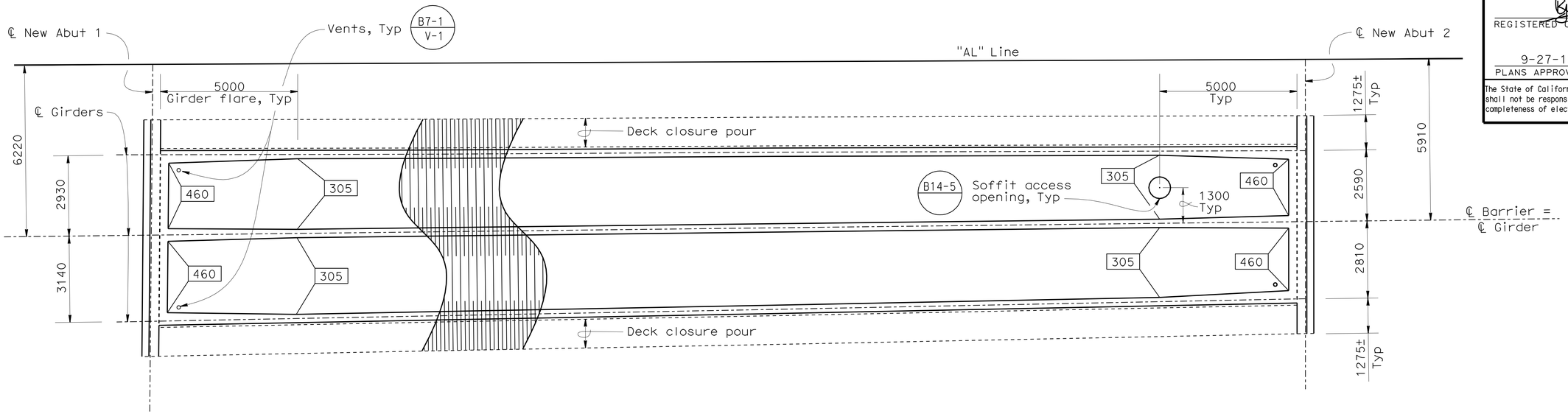

PLAN
1:80

B7-1 B14-5

NOTE: See "GIRDER REINFORCEMENT" sheet for "CAMBER DIAGRAM."

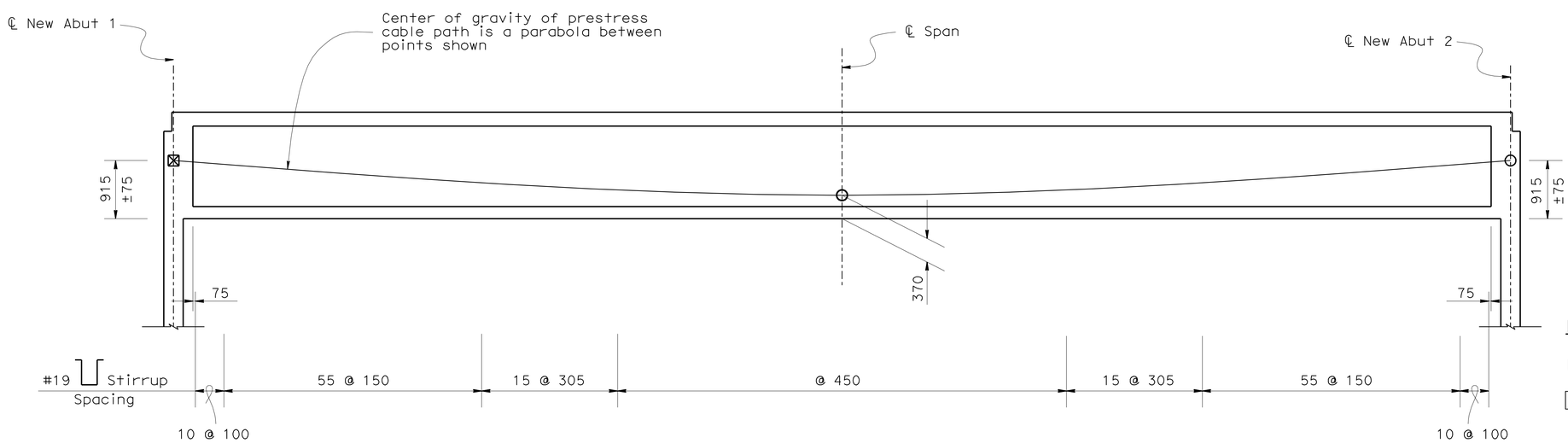

LONGITUDINAL SECTION

HORIZ SCALE 1:80
VERT SCALE 1:40

NOTE:
THE CONTRACTOR SHALL VERIFY ALL CONTROLLING FIELD DIMENSIONS BEFORE ORDERING OR FABRICATING ANY MATERIAL.

PRESTRESSING NOTES

1860 MPa Low Relaxation Strands:

Pjack (Total) = 38750 kN

Anchor Set = 10 mm

Total Number of Girders = 3

Friction curvature coefficient μ = 15 x 10^{-2}(1/rad)

Friction wobble coefficient K = 6.6 x 10^{-4}(1/m)

Distribution of prestress force (Pjack) between girders shall not exceed the ratio of 3:2.

Maximum final force variation between girders shall not exceed 3200 kN.

Concrete: f'_c = 35 Mpa @ 28 days
f'_{ci} = 28 Mpa @ time of stressing

Contractor shall submit elongation calculations based on initial stress at
☒ =.96 times jacking stress

One end stressing shall be performed.

LEGEND

☒ Indicates point of no movement for one end stressing

▭ Indicates girder stem thickness in mm

Caltrans Metric

	BY	CHECKED
DESIGN	K. Ghosh	K. Kim
DETAILS	P. Perez	K. Ghosh
QUANTITIES	S. Yeh	R. Rafie

STATE OF CALIFORNIA
DEPARTMENT OF TRANSPORTATION

DIVISION OF ENGINEERING SERVICES
STRUCTURE DESIGN
DESIGN BRANCH 21

BRIDGE NO. 57-0786
KILOMETER POST KP45.55

SORRENTO VALLEY BLVD. U.C. (WIDEN)
GIRDER LAYOUT

ALL DIMENSIONS ARE IN MILLIMETERS UNLESS OTHERWISE SHOWN

ORIGINAL SCALE IN MILLIMETERS FOR REDUCED PLANS 0 10 20 30 40 50 60 70 80 90 100

CU 11
EA 2T0401

DISREGARD PRINTS BEARING EARLIER REVISION DATES 08/01/08 10/10/08 11/26/08 04/28/09

SHEET 8 OF 17

FILE => 57-0786-1-gir_lo.dgn

STRUCTURES DESIGN DETAIL SHEET (METRIC) (REV.03-17-04)

USERNAME => trmikesl DATE PLOTTED => 29-SEP-2010 TIME PLOTTED => 11:23

DIST	COUNTY	ROUTE	KILOMETER POST TOTAL PROJECT	SHEET No	TOTAL SHEETS
11	SD	5,805	R49.9/R51.7, 42.6/46.5	653	886

REGISTERED CIVIL ENGINEER — DATE 04/28/09

9-27-10
PLANS APPROVAL DATE

REGISTERED PROFESSIONAL ENGINEER — KUMAR K. GHOSH — No. C 72555 — Exp. 06/30/10 — CIVIL — STATE OF CALIFORNIA

The State of California or its officers or agents shall not be responsible for the accuracy or completeness of electronic copies of this plan sheet.

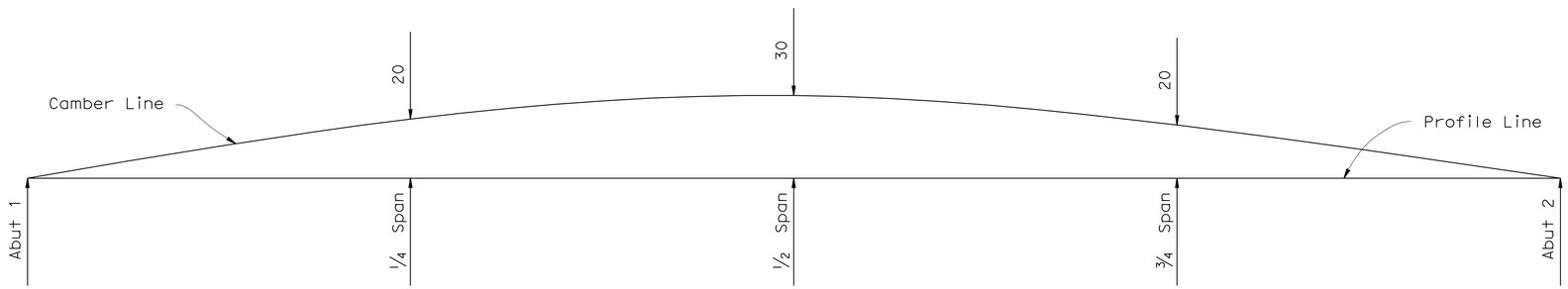

CAMBER DIAGRAM

No Scale

(Does not include allowance for falsework settlement)

FALSEWORK RELEASE

Falsework shall be released as soon as permitted by the specifications. Closure pour shall not be placed sooner than 60 days after the falsework had been released.

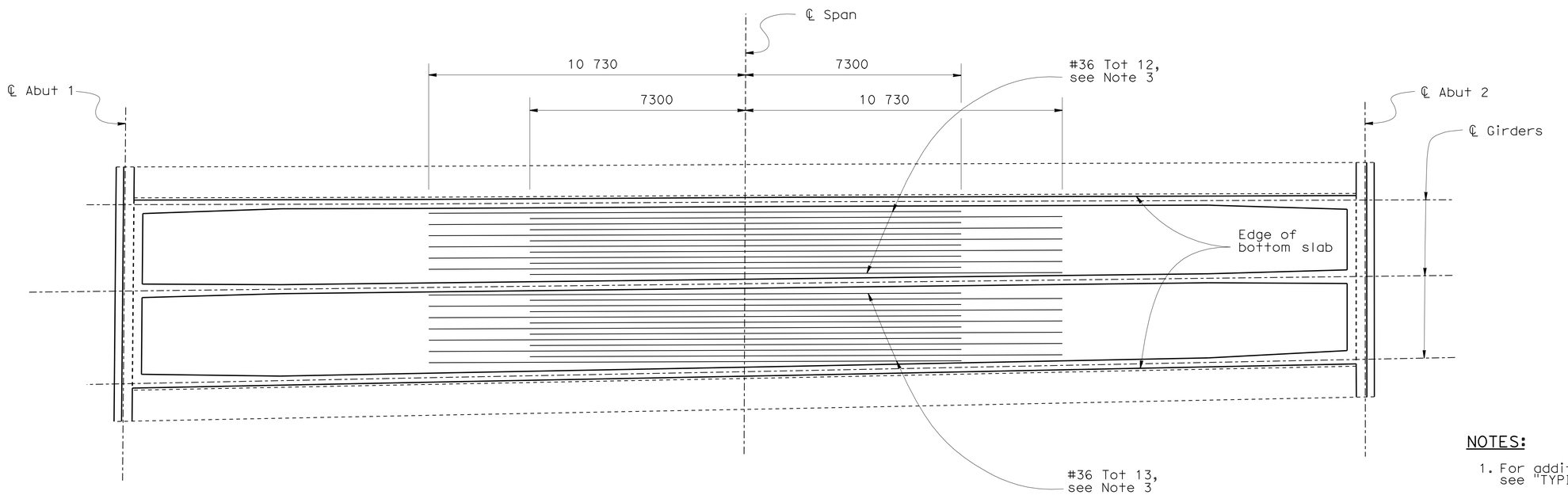

BOTTOM GIRDER REINFORCEMENT

1:80

NOTES:

1. For additional details and reinforcement, see "TYPICAL SECTION" sheet.
2. No splices allowed.
3. All bars shall be evenly spaced.

Caltrans Metric

	BY	CHECKED
DESIGN	K. Ghosh	K. Kim
DETAILS	P. Perez	K. Ghosh
QUANTITIES	S. Yeh	R. Rafie

STATE OF CALIFORNIA
DEPARTMENT OF TRANSPORTATION

DIVISION OF ENGINEERING SERVICES
STRUCTURE DESIGN
DESIGN BRANCH 21

BRIDGE NO. 57-0786
KILOMETER POST KP45.55

SORRENTO VALLEY BLVD. U.C. (WIDEN)
GIRDER REINFORCEMENT

ALL DIMENSIONS ARE IN MILLIMETERS UNLESS OTHERWISE SHOWN

ORIGINAL SCALE IN MILLIMETERS FOR REDUCED PLANS 0 10 20 30 40 50 60 70 80 90 100

CU 11
EA 2T0401

DISREGARD PRINTS BEARING EARLIER REVISION DATES

REVISION DATES: 11/20/07 01/08/08 07/18/08 10/14/08 11/26/08 04/28/09

SHEET 9 OF 17

FILE => 57-0786-o-gir_rf.dgn

STRUCTURES DESIGN DETAIL SHEET (METRIC) (REV.03-17-04)

USERNAME => trmikesl DATE PLOTTED => 29-SEP-2010 TIME PLOTTED => 11:29

DIST.	COUNTY	ROUTE	KILOMETER POST TOTAL PROJECT	SHEET NO.	TOTAL SHEETS
11	SD	5,805	R49.9/R51.7, 42.6/46.5	654	886

Caltrans Metric

REGISTERED ENGINEER - CIVIL 04/28/09

9-27-10
PLANS APPROVAL DATE

REGISTERED PROFESSIONAL ENGINEER KUMAR K. GHOSH No. C 72555 Exp. 06/30/10 CIVIL STATE OF CALIFORNIA

The State of California or its officers or agents shall not be responsible for the accuracy or completeness of electronic copies of this plan sheet.

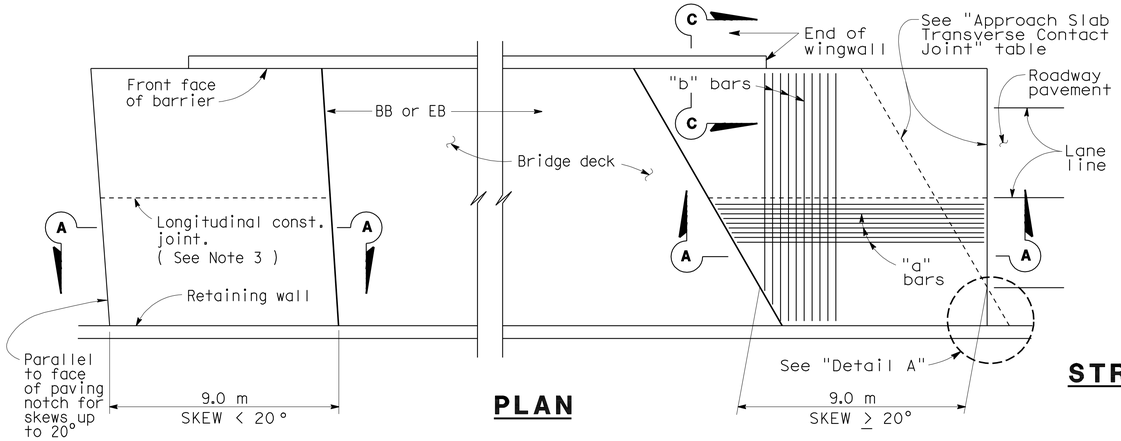

PLAN

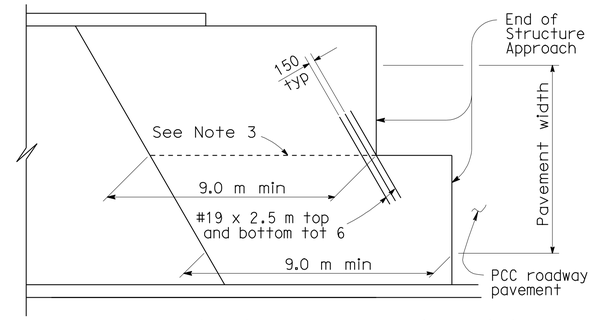

STRUCTURE APPROACH - END STAGGER DETAIL

APPROACH SLAB TRANSVERSE CONTACT JOINT		
APPROACH SKEW	WITH AC ROADWAY PAVEMENT	WITH PCC ROADWAY PAVEMENT
< 20°	Parallel to face of paving notch	Parallel to face of paving notch
20°- 45°	Parallel to face of P N use (Detail A)	Stagger lines 7.2 m to 10.8 m apart
> 45°	Parallel to face of P N use (Detail A)	Stagger at each lane line

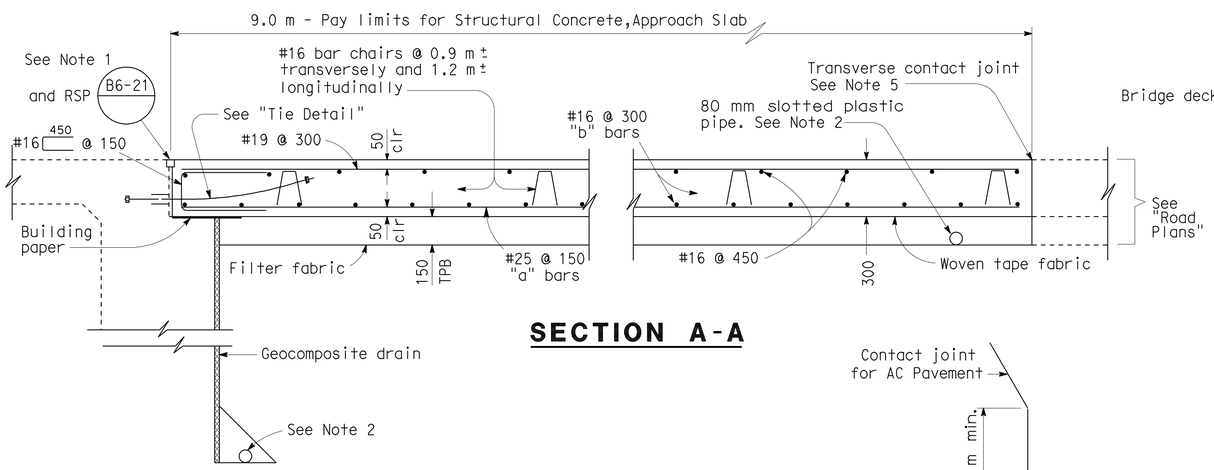

SECTION A-A

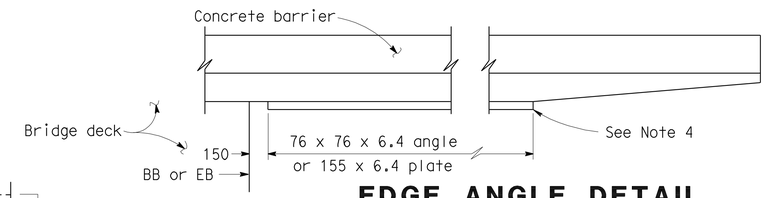

EDGE ANGLE DETAIL

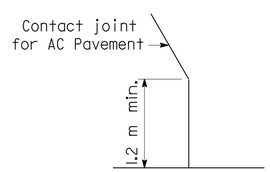

DETAIL A

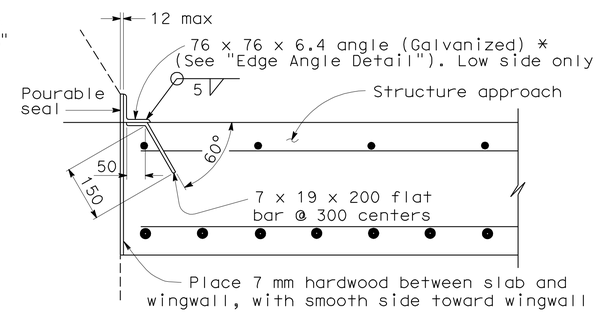

*(TO BE USED WITH TYPE 25 OR TYPE 27 CONCRETE BARRIER)

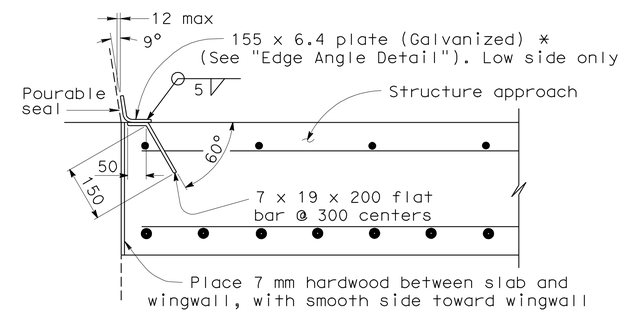

*(TO BE USED WITH TYPE 732 OR TYPE 736 CONCRETE BARRIER)

DETAIL B

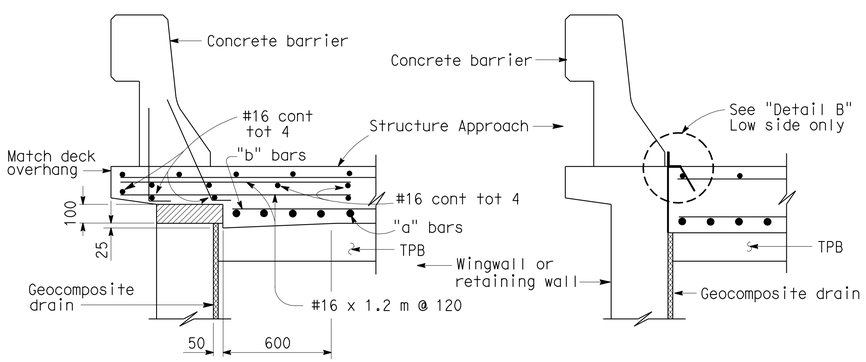

TYPE E-1 TYPE E-2

SECTION C-C

(Type E-1 to be used,unless otherwise shown on plans)

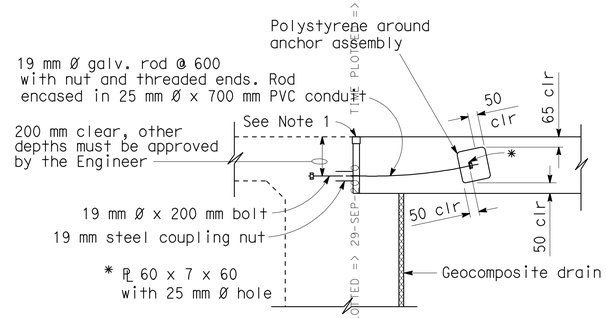

TIE DETAIL

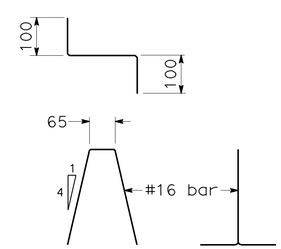

BAR CHAIR DETAIL

NO SCALE

NOTES:

1. For details not noted or shown,see Structure Plans.
2. For drainage details,see "Structure Approach Drainage Details" sheet.
3. Longitudinal construction joints,when permitted by the Engineer,shall be located on lane lines.
4. End angle or plate at beginning of barrier transition, end of wingwall or end of structure approach, as applicable.
5. For transverse contact joint with new PCC paving, refer to Standard Plan P10.
6. At the contractor's option,approach slab transverse reinforcement may be placed parallel to paving notch. Spacing of transverse reinforcement is measured along ℄ roadway.

Polystyrene to be removed.

ALL DIMENSIONS ARE IN MILLIMETERS UNLESS OTHERWISE SHOWN

STANDARD DRAWING					
RELEASE DATE 3/14/05	DESIGN	BY M. TRAFFALIS	CHECKED E. THORKILDSEN	RELEASED BY	
FILE NO. xs3-180	DETAILS	BY R. YEE	CHECKED E. THORKILDSEN		
	SUBMITTED	BY M. HA	DRAWING DATE 4/98	OFFICE CHIEF	

STATE OF CALIFORNIA DEPARTMENT OF TRANSPORTATION

DIVISION OF ENGINEERING SERVICES

BRIDGE NO. 57-0786

KILOMETER POST KP45.55

SORRENTO VALLEY BLVD. U.C. (WIDEN)

STRUCTURE APPROACH TYPE N(9D)

DS OSD 2147A (METRIC) (REV. 2/25/97)

ORIGINAL SCALE IN MILLIMETERS FOR REDUCED PLANS 0 10 20 30 40 50 60 70 80 90 100

CU 11
EA 2T0401

DISREGARD PRINTS BEARING EARLIER REVISION DATES

REVISION DATES (PRELIMINARY STAGE ONLY) 11/26/08 04/28/09

SHEET 10 OF 17

FILE => 57-0786-s-str_app_N9D.dgn

USERNAME => trmikesi DATE PLOTTED => 29-SEP-2010 TIME PLOTTED => 11:29

DIST.	COUNTY	ROUTE	KILOMETER POST TOTAL PROJECT	SHEET NO.	TOTAL SHEETS
11	SD	5,805	R49.9/R51.7, 42.6/46.5	655	886

Caltrans Metric

REGISTERED ENGINEER - CIVIL 04/28/09

9-27-10
PLANS APPROVAL DATE

REGISTERED PROFESSIONAL ENGINEER KUMAR K. GHOSH No. C 72555 Exp. 06/30/10 CIVIL STATE OF CALIFORNIA

The State of California or its officers or agents shall not be responsible for the accuracy or completeness of electronic copies of this plan sheet.

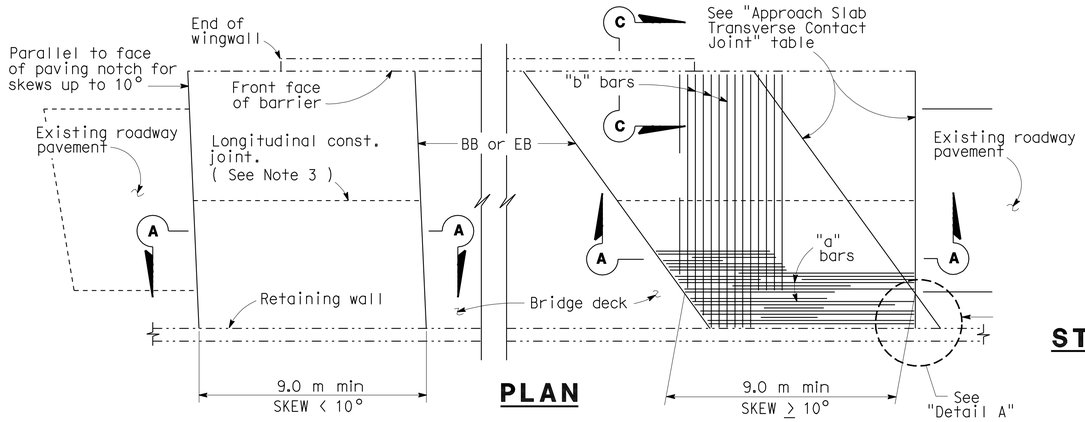

PLAN

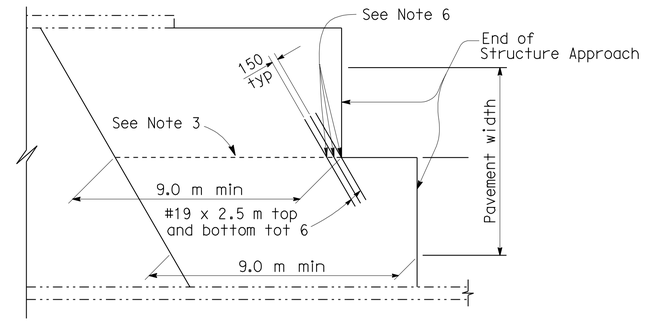

STRUCTURE APPROACH - END STAGGER DETAIL

APPROACH SLAB TRANSVERSE CONTACT JOINT		
APPROACH SKEW	WITH AC ROADWAY PAVEMENT	WITH PCC ROADWAY PAVEMENT
< 10°	Parallel to face of paving notch	Parallel to face of paving notch
10°- 45°	Parallel to face of P N use (Detail A)	Stagger lines 7.2 m to 10.8 m apart
> 45°	Parallel to face of P N use (Detail A)	Stagger at each lane line

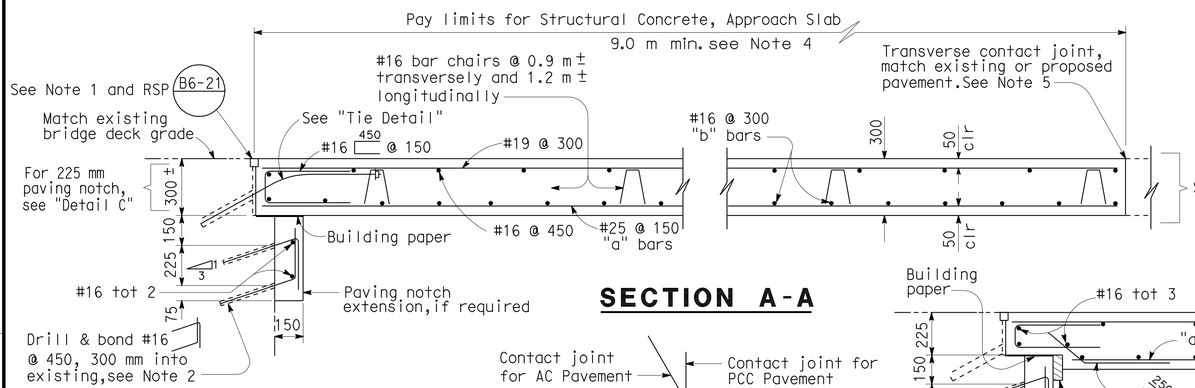

SECTION A-A

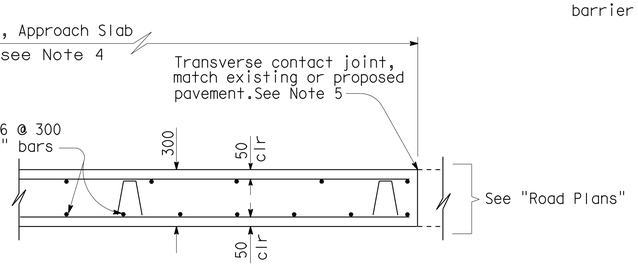

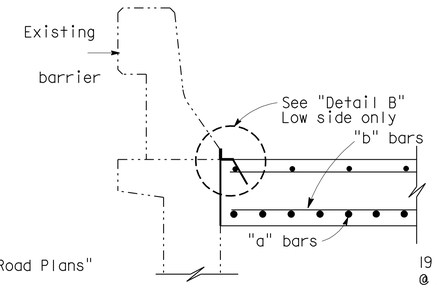

SECTION C-C

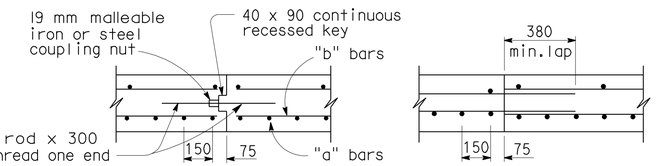

STAGE 1 | STAGE 2 STAGE 1 | STAGE 2

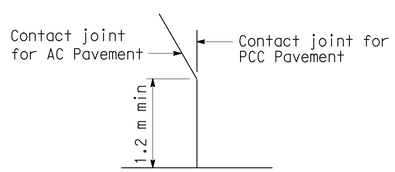

DETAIL A

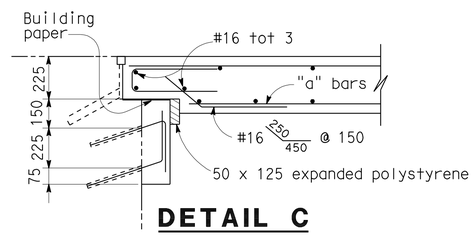

DETAIL C

NOTE: For details not shown, see "Section A-A".

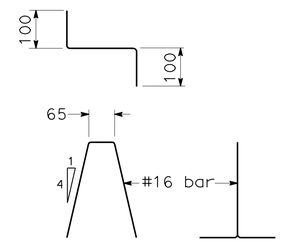

BAR CHAIR DETAIL

STAGE 1 | STAGE 2 EXISTING STRUCTURE APPROACH | NEW CONST.

LONGITUDINAL CONSTRUCTION JOINT ALTERNATIVES

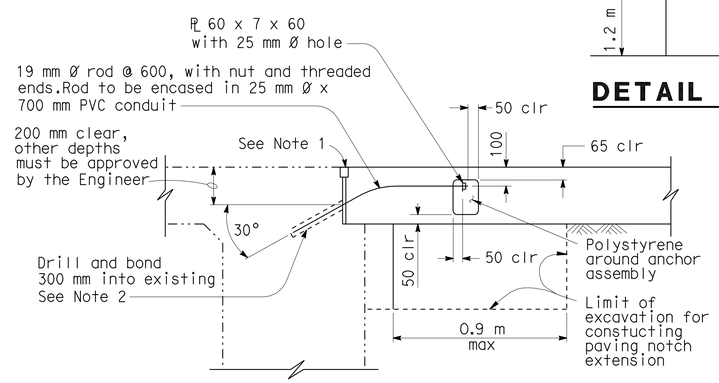

TIE DETAIL

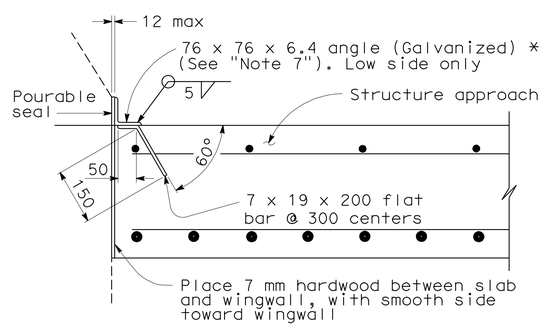

*(TO BE USED WITH TYPE 25 OR TYPE 27 CONCRETE BARRIER)

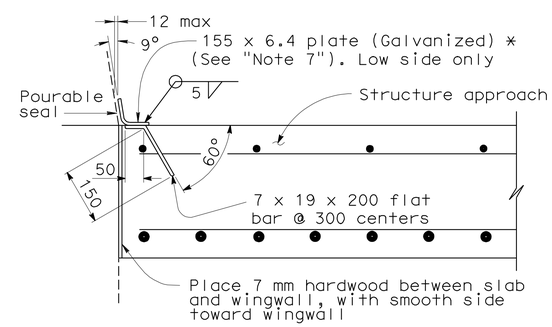

*(TO BE USED WITH TYPE 732 OR TYPE 736 CONCRETE BARRIER)

DETAIL B

NOTES:

1. For details not shown or noted, see Structure Plans. Adjust bar reinforcement to clear a sawcut for sealed joint, when required.
2. Space to avoid existing prestress anchorages and main reinforcement.
3. Longitudinal construction joints, when permitted by the Engineer, shall be located on lane lines.
4. Transverse contact joint shall be a minimum of 1.5 m from an existing or constructed weakened plane joint.
5. For transverse contact joint with new PCC paving. refer to Standard Plan P10.
6. Couplers are required for stage construction.
7. End angle or plate at beginning of barrier transition, end of wingwall or end of structure approach as applicable.

NO SCALE

ALL DIMENSIONS ARE IN MILLIMETERS UNLESS OTHERWISE SHOWN

NOTE:

THE CONTRACTOR SHALL VERIFY ALL CONTROLLING FIELD DIMENSIONS BEFORE ORDERING OR FABRICATING ANY MATERIAL.

STANDARD DRAWING

RELEASE DATE	3/14/05	DESIGN	BY M. TRAFFALIS	CHECKED E. THORKILDSEN	RELEASED BY
FILE NO.	xs3-140	DETAILS	BY R. YEE	CHECKED E. THORKILDSEN	
		SUBMITTED	BY M. HA	DRAWING DATE 8/92	OFFICE CHIEF

DS OSD 2147A (METRIC) (REV. 2/25/97)

ORIGINAL SCALE IN MILLIMETERS FOR REDUCED PLANS 0 10 20 30 40 50 60 70 80 90 100

STATE OF CALIFORNIA DEPARTMENT OF TRANSPORTATION

DIVISION OF ENGINEERING SERVICES

CU 11
EA 2T0401

BRIDGE NO. 57-0786
KILOMETER POST KP45.55

SORRENTO VALLEY BLVD. U.C. (WIDEN)

STRUCTURE APPROACH TYPE R(9D)

DISREGARD PRINTS BEARING EARLIER REVISION DATES 01/26/08 04/28/09

REVISION DATES (PRELIMINARY STAGE ONLY)

SHEET 11 OF 17

FILE => 57-0786-s-str_app_R9D.dgn

USERNAME => trmikes1 DATE PLOTTED => 29-SEP-2010 TIME PLOTTED => 11:29

DIST	COUNTY	ROUTE	KILOMETER POST TOTAL PROJECT	SHEET No	TOTAL SHEETS
11	SD	5,805	R49.9/R51.7, 42.6/46.5	656	886

REGISTERED CIVIL ENGINEER 04/28/09 DATE

9-27-10
PLANS APPROVAL DATE

REGISTERED PROFESSIONAL ENGINEER KUMAR K. GHOSH No. C 72555 Exp. 06/30/10 CIVIL STATE OF CALIFORNIA

The State of California or its officers or agents shall not be responsible for the accuracy or completeness of electronic copies of this plan sheet.

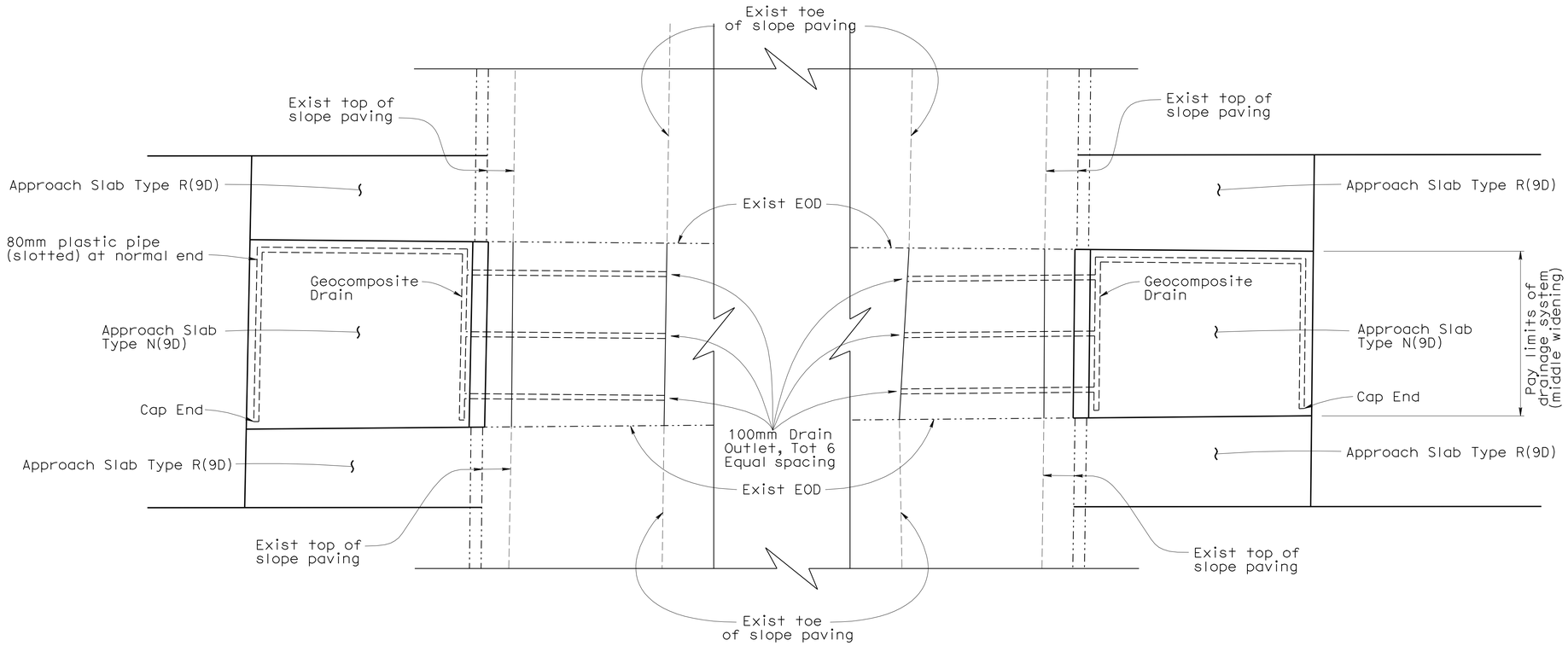

PLAN
NO SCALE

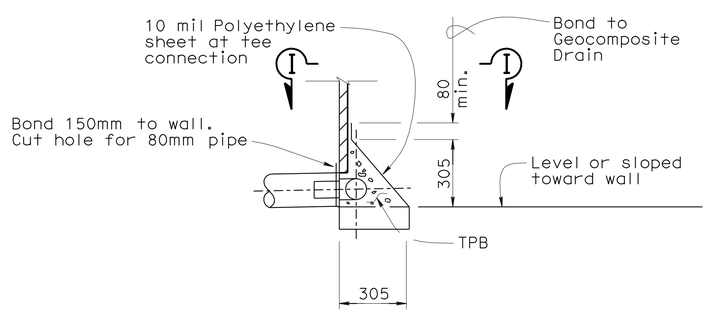

TEE CONNECTION DETAIL
NO SCALE

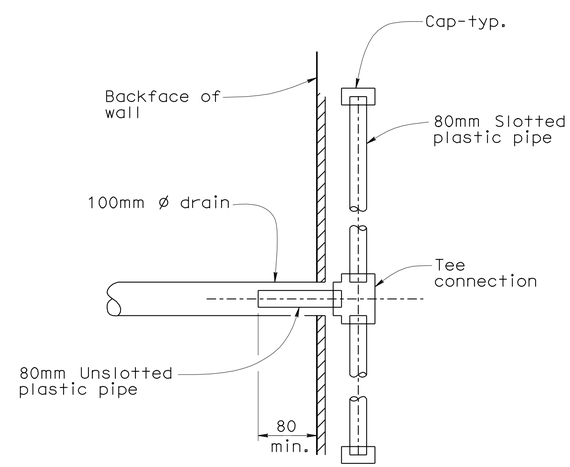

SECTION I-I
NO SCALE

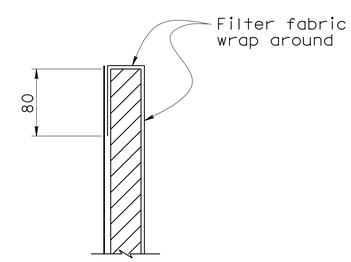

GEOCOMPOSITE DRAIN FILTER FABRIC WRAP AROUND DETAILS
NO SCALE

NOTE:
THE CONTRACTOR SHALL VERIFY ALL CONTROLLING FIELD DIMENSIONS BEFORE ORDERING OR FABRICATING ANY MATERIAL.

Caltrans Metric

	BY	CHECKED
DESIGN	K. Ghosh	K. Kim
DETAILS	J. Valencia	K. Ghosh
QUANTITIES	S. Yeh	R. Rafie

STATE OF CALIFORNIA DEPARTMENT OF TRANSPORTATION

DIVISION OF ENGINEERING SERVICES STRUCTURE DESIGN
DESIGN BRANCH 21

BRIDGE NO. 57-0786
KILOMETER POST KP45.55

SORRENTO VALLEY BLVD UC (WIDEN)
STRUCTURE APPROACH DRAINAGE DETAILS

ALL DIMENSIONS ARE IN MILLIMETERS UNLESS OTHERWISE SHOWN

ORIGINAL SCALE IN MILLIMETERS FOR REDUCED PLANS 0 10 20 30 40 50 60 70 80 90 100

CU 11
EA 2T0401

DISREGARD PRINTS BEARING EARLIER REVISION DATES

REVISION DATES: 10/6/08 10/14/08 04/28/09

SHEET 12 OF 17

FILE => 57-0786-t-sadd.dgn

STRUCTURES DESIGN DETAIL SHEET (METRIC) (REV.03-17-04)

USERNAME => trmikesl DATE PLOTTED => 29-SEP-2010 TIME PLOTTED => 11:30

DIST	COUNTY	ROUTE	KILOMETER POST TOTAL PROJECT	SHEET No	TOTAL SHEETS
11	SD	5,805	R49.9/R51.7, 42.6/46.5	657	886

REGISTERED CIVIL ENGINEER 04/28/09 DATE

9-27-10
PLANS APPROVAL DATE

REGISTERED PROFESSIONAL ENGINEER KUMAR K. GHOSH No. C 72555 Exp. 06/30/10 CIVIL STATE OF CALIFORNIA

The State of California or its officers or agents shall not be responsible for the accuracy or completeness of electronic copies of this plan sheet.

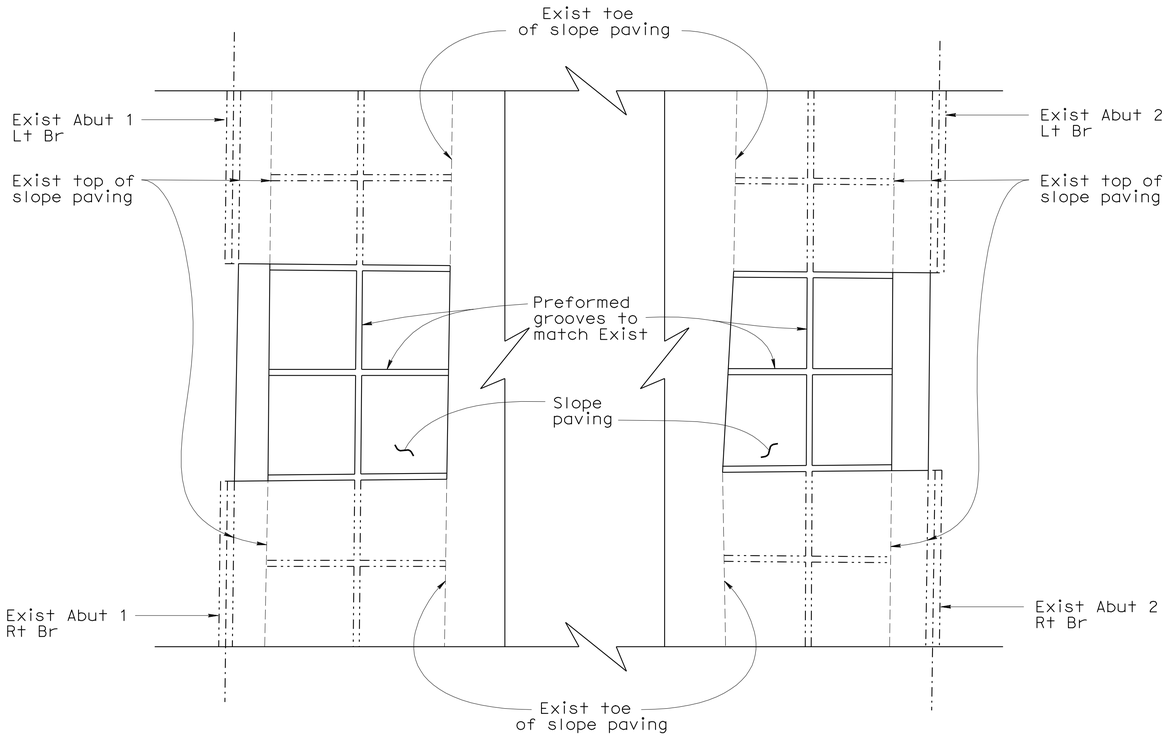

SLOPE PAVING PLAN

No Scale

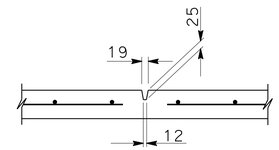

PREFORMED GROOVE

No Scale

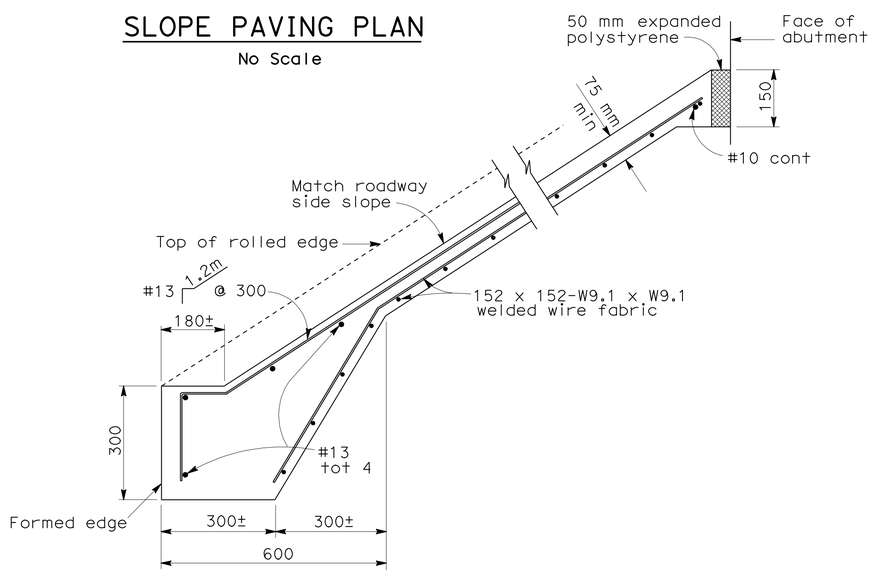

TYPICAL SECTION - CONCRETE PAVING

No Scale

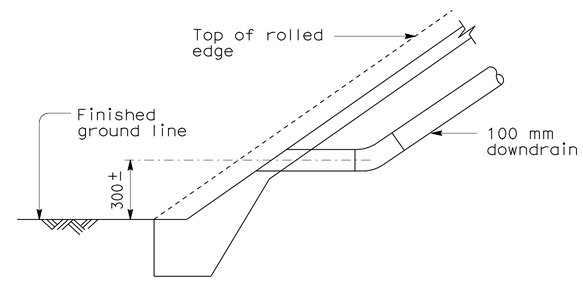

DRAINAGE DETAILS

No Scale

NOTE:
THE CONTRACTOR SHALL VERIFY ALL CONTROLLING FIELD DIMENSIONS BEFORE ORDERING OR FABRICATING ANY MATERIAL.

	BY	CHECKED
DESIGN	K. Ghosh	K. Kim
DETAILS	P. Perez /M.Kingra	K. Ghosh
QUANTITIES	S. Yeh	R. Rafie

STATE OF CALIFORNIA DEPARTMENT OF TRANSPORTATION

DIVISION OF ENGINEERING SERVICES STRUCTURE DESIGN
DESIGN BRANCH 21

BRIDGE NO. 57-0786
KILOMETER POST KP45.55

SORRENTO VALLEY BLVD. U.C. (WIDEN)
SLOPE PAVING

ALL DIMENSIONS ARE IN MILLIMETERS UNLESS OTHERWISE SHOWN

ORIGINAL SCALE IN MILLIMETERS FOR REDUCED PLANS 0 10 20 30 40 50 60 70 80 90 100

CU 11
EA 2T0401

DISREGARD PRINTS BEARING EARLIER REVISION DATES

REVISION DATES: 08/08/08 10/30/08 11/26/08 04/28/09

SHEET 13 OF 17

FILE => 57-0786-t-slo_pav.dgn

STRUCTURES DESIGN DETAIL SHEET (METRIC) (REV.03-17-04)

USERNAME => trmikest DATE PLOTTED => 29-SEP-2010 TIME PLOTTED => 11:30

DIST	COUNTY	ROUTE	KILOMETER POST TOTAL PROJECT	SHEET No	TOTAL SHEETS
11	SD	5,805	R49.9/R51.7, 42.6/46.5	658	886

REGISTERED CIVIL ENGINEER 06-30-08

9-27-10
PLANS APPROVAL DATE

REGISTERED PROFESSIONAL ENGINEER Gina W. Pursell No. C54512 Exp. 12-31-09 CIVIL STATE OF CALIFORNIA

The State of California or its officers or agents shall not be responsible for the accuracy or completeness of electronic copies of this plan sheet.

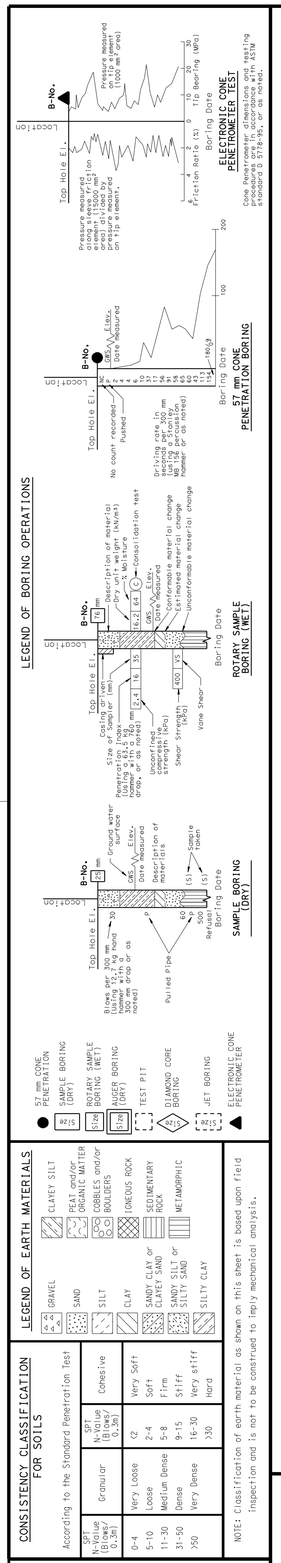

OGS CIVIL LOG OF TEST BORINGS SHEET (METRIC) (REV. 4/04)

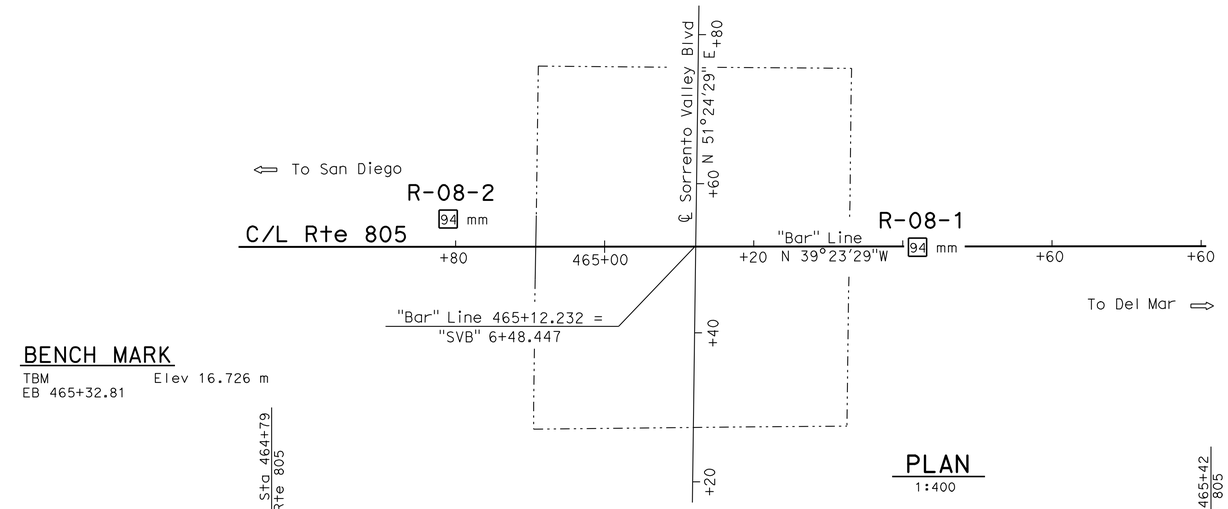

BENCH MARK

TBM Elev 16.726 m
EB 465+32.81

PLAN

1:400

Notes :

1. The ground water levels indicated in the Log of Test Borings (LOBT) sheets reflect the measured ground water levels measurement in the boreholes on the specified dates. Ground water surface elevations are subject to seasonal fluctuations and will be encountered at higher or lower elevations depending on conditions at time of construction.

2. The descriptions and classifications of soil, including consistency and relative density descriptors, used by the field and/or office personnel for the exploration boreholes shown on this sheet are based on the "Soil and Rock Logging Classification and presentation Manual", Division of Engineering Services, Geotechnical Services, June 2007.

3. Soil colors were determined by using Munsel Soil Color Charts (1994, Revised Edition). Rock colors were determined using USGS Rock Color Charts (1995, revised text).

4. Test borings utilized a automatic hammer to advance the sampler. Penetration index values shown on the LOTB sheets were the actual readings recorded in the field. Soil Consistencies shown on the LOTB sheets are based on these Penetration Index Values.

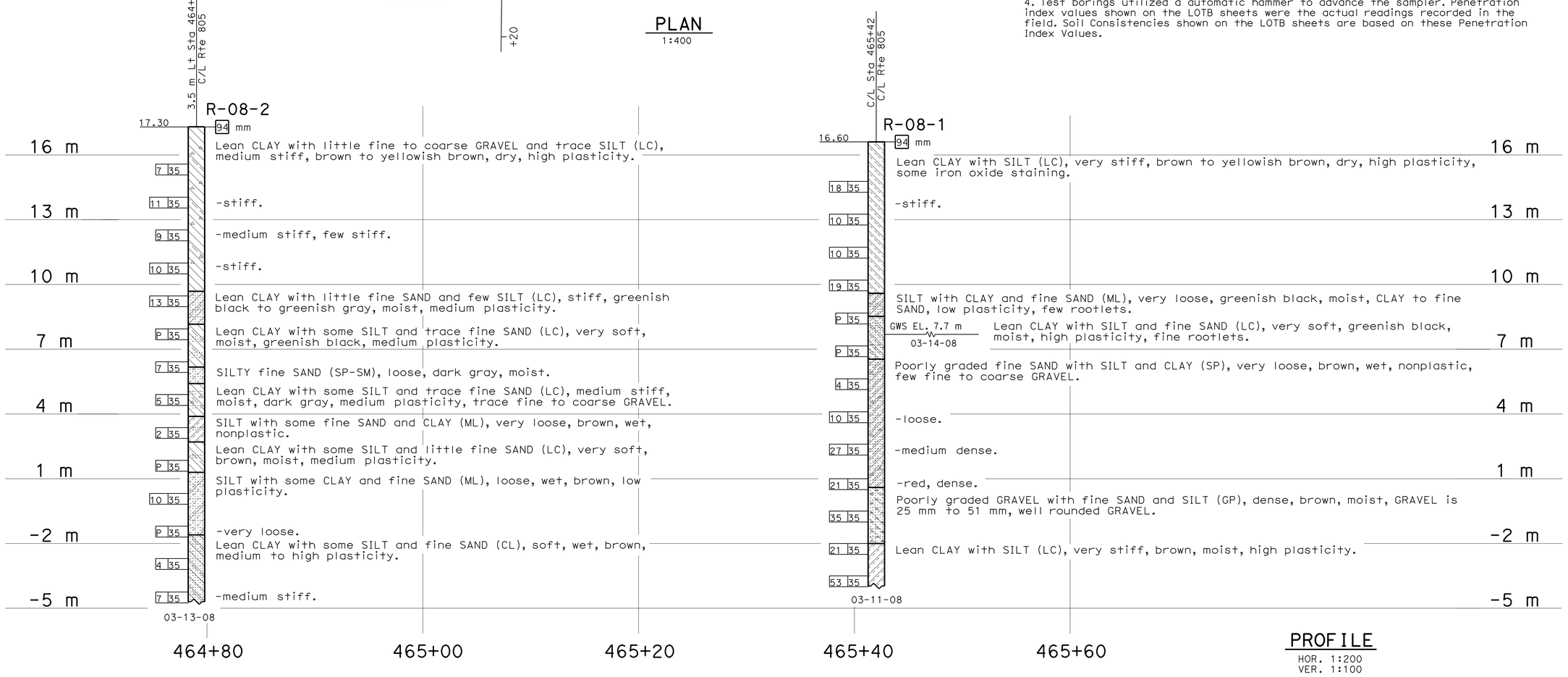

PROFILE

HOR. 1:200
VER. 1:100

Caltrans Metric

ENGINEERING SERVICES	GEOTECHNICAL SERVICES
DRAWN BY	W. Tang 04/08
CHECKED BY	G. Pursell

FIELD INVESTIGATION BY: G. Pursell

STATE OF CALIFORNIA DEPARTMENT OF TRANSPORTATION

DIVISION OF ENGINEERING SERVICES STRUCTURE DESIGN DESIGN BRANCH

BRIDGE NO. 57-0786
KILOMETER POST KP45.55

SORRENTO VALLEY BLVD UC (WIDEN)

LOG OF TEST BORINGS 1 OF 4

ALL DIMENSIONS ARE IN METERS UNLESS OTHERWISE SHOWN

ORIGINAL SCALE IN MILLIMETERS FOR REDUCED PLANS 0 10 20 30 40 50 60 70 80 90 100

CU 11
EA 2T0401

DISREGARD PRINTS BEARING EARLIER REVISION DATES

REVISION DATES (PRELIMINARY STAGE ONLY) 06-11-08 04/28/09

SHEET 14 OF 17

FILE => 57-0786-z-lotb1.dgn

USERNAME => trmikesl DATE PLOTTED => 29-SEP-2010 TIME PLOTTED => 11:30

DIST	COUNTY	ROUTE	KILOMETER POST TOTAL PROJECT	SHEET No	TOTAL SHEETS
11	SD	5,805	R49.9/R51.7, 42.6/46.5	659	886

Caltrans Metric

Joseph S. Pratt 4-9-01
CERTIFIED ENGINEERING GEOLOGIST

9-27-10
PLANS APPROVAL DATE

REGISTERED GEOLOGIST — Joseph S. Pratt — No. 2141 — Exp. 5-31-03 — CERTIFIED ENGINEERING GEOLOGIST — STATE OF CALIFORNIA

The State of California or its officers or agents shall not be responsible for the accuracy or completeness of electronic copies of this plan sheet.

BENCH MARKS

TBM Elev. 11.19 m
Fd. 25 mm x 51 mm stake and survey lath at 470+15 "NT805" Line, Dist.11 Surveys (J. Mainprize, party chief), surveyed 3-5-99 (Datum NAVD 1988).

TBM Elev. 11.82m
Fd. 25 mm x 51 mm stake and survey lath at 469+67 "NT805" Line, Dist.11 Surveys (J. Mainprize, party chief), surveyed 3-5-99 (Datum NAVD 1988).

TBM Elev. 15.09 m
Fd. 25 mm x 51 mm stake and survey lath at 466+89 "NT805" Line @ Begin Bridge, Dist.11 Surveys (J.Mainprize, party chief), surveyed 3-5-99 (Datum NAVD 1988).

TBM Boring 99-5 Elev. 12.63 m
Fd. Boring 99-5 @ 12.6 m Rt. 469+17.8 "NT805" Line (Datum NAVD 1988).

TBM Elev. 13.68 m
Fd. 25 mm x 51 mm stake and survey lath at 467+30 "NT805" Line, Dist.11 Surveys (J. Mainprize, party chief), surveyed 3-5-99 (Datum NAVD 1988).

TBM Boring 99-8 Elev. 11.72 m
Fd. Boring 99-8 @ 19.4 m Rt. 468+24.0 "NT805" Line (Datum NAVD 1988).

NOTES:
Top of hole elevations are based on NAVD 88 (metric) elevations. As Built Log of Test Borings (approved April 1972) elevations, for the Sorrento Valley Blvd. Undercrossing (Br. No. 57-0786R/L) and Los Penasquitos Creek Bridge (Br. No. 57-0779), require a +0.588 m (+1.93 ft) add to adjust to the current NAVD88 (metric) elevation shown on all current plans.

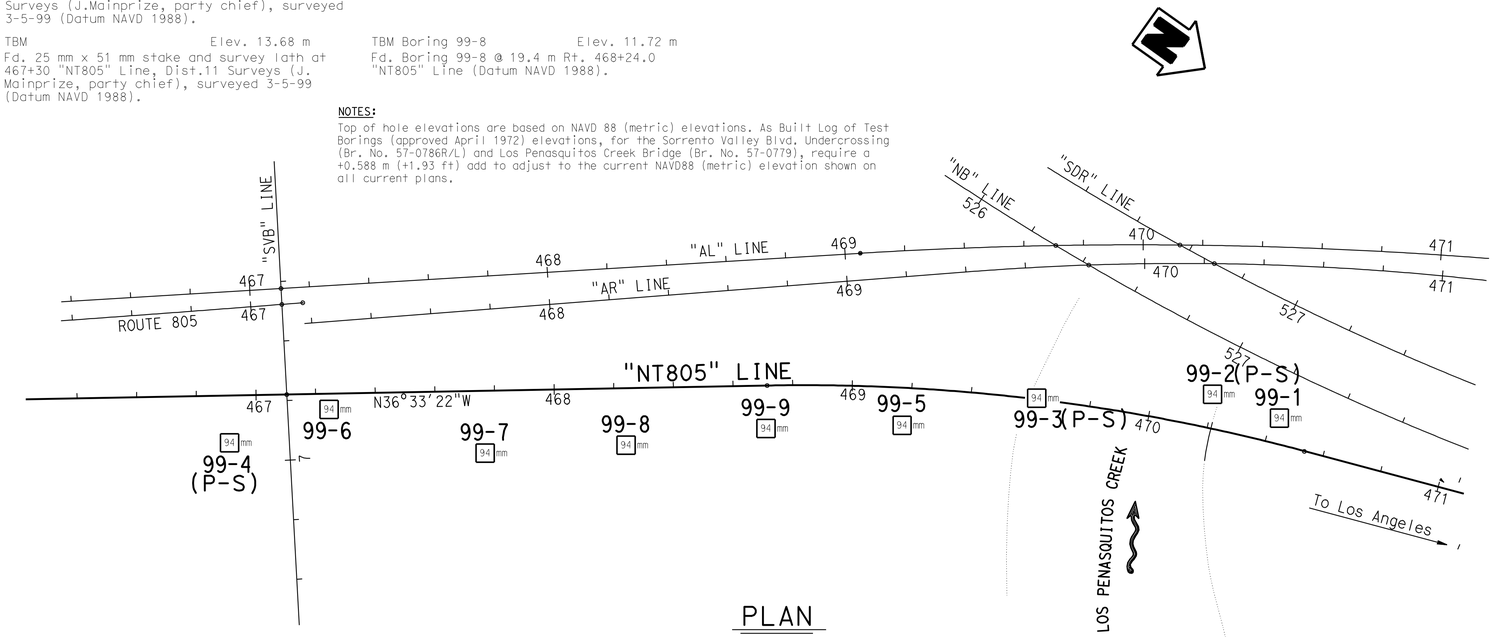

PLAN
1:1000

NOTES:

1. Classification of earth materials shown on these sheets is based on field inspection and is not to be construed to imply mechanical and/or laboratory analysis. Any modifications or standardization of field descriptions within the current 1999 field logs are solely interpretations by the Project Geologist and as such are subject to individual belief, judgement, or circumstance. The "As Built" Log of Test Boring sheets are unmodified.
2. Penetration index recorded as "P" when sampler sank under weight of rods. No blow counts recorded.
3. E=Blow count for 0.3 m penetration extrapolated from blow count for less than 0.3 m. penetration (typically due to change in material or hard driving).
4. Unconfined compressive strength qu (PP) determined in the field by "Pocket Penetrometer." Units shown are kilopascals (kPa).
5. Undrained shear strength Su (Tv) determined in field by "Torvane." Units are shown in kilopascals (kPa).
6. For cohesive soils, soil consistencies were determined by a) undrained shear strength Su (Tv, preferred if available), followed in descending order by b) the unconfined compressive strength qu(PP), and c) the standard penetration test (SPT).
7. REC=% rock/soil (length of rock/soil core recovered divided by the length of the total sampling run x 100).
8. Sample numbers (circled) for laboratory tests are recorded on the left side of the soil columns for easy cross reference to the Soil Test Results (test results will be recorded in a table format organized by bridge number, boring number, sample number, and depth interval) which will be included as an Appendix to the Foundation Recommendations. Laboratory tests include % moisture, plastic limit, liquid limit, plasticity index, cohesion, angle of internal friction, consolidation, sieve and hydrometer analysis (coarse and fine gradations), Unconsolidated Undrained and Consolidated Undrained Triaxial tests, in situ soil and rock densities, unconfined compressive strength of rock, and corrosion tests.
9. Soil colors were commonly determined using Munsell Soil Color Charts (1994, Revised Edition) and rock colors were commonly determined using The Geological Society of America Rock-Color Chart (with Munsell color chips, 1995, 8th printing)when available.
10. Lined and unlined soil cores (identified on the left side of the soil column by an elongate rectangle indicating the sampled interval) were taken with the 94 mm system utilizing a 61 mm (2.4 in) inner diameter punch core sampler or by other conventional coring methods.

BORING No.	BORING LOCATION (METRIC STATIONING)		METRIC COORDINATES: NORTHING	EASTING
99-1(**99-1**, 57-0512)	8.7 m Lt. 470+43.0	"NT805" Line	N582287.8717	E1908919.6568
99-2(P-S)(**99-2**,57-0512)	10.8 m Lt. 470+19.3	"NT805" Line	N582264.8422	E1908926.9133
99-3(P-S)	On Sta. 469+62.3	"NT805" Line	N582217.9531	E1908961.7907
99-4(P-S)	16.3 m Rt. 466+91.55	"NT805" Line	N582006.6367	E1909130.9126
99-5	12.6 m Rt. 469+17.8	"NT805" Line	N582186.3858	E1908995.0433
99-6	5.7 m Rt. 467+24.8	"NT805" Line	N582027.0321	E1909102.5938
99-7	21.4 m Rt. 467+76.6	"NT805" Line	N582077.9927	E1909084.3525
99-8	19.4 m Rt. 468+24.0	"NT805" Line	N582114.8766	E1909054.5140
99-9	14.5 m Rt. 468+71.0	"NT805" Line	N582149.7119	E1909022.5842
B-1 (57-0786R/L)	9.03 m Lt. 467+30.16	"NT805" Line	N582022.5702	E1909087.5614
B-2 (57-0786R/L)	25.8 m Lt. 467+31.6	"NT805" Line	N582013.6882	E1909073.1764
B-3 (57-0786R/L)	59.9 m Lt. 467+30.78	"NT805" Line	N581992.7061	E1909046.2637
B-4 (57-0786R/L)	50.21 m Lt. 466+86.6	"NT805" Line	N581963.0870	E1909080.4065
B-5 (57-0786R/L)	32.5 m Lt. 466+87.08	"NT805" Line	N581973.9581	E1909094.3401
B-6 (57-0786R/L)	5.19 m Lt. 466+89.47	"NT805" Line	N581992.1720	E1909114.8875
B-1 (57-0779)	42.5 m Lt. 469+98.0	"NT805" Line	N582231.5409	E1908907.2368
B-2 (57-0779)	78.9 m Lt. 469+82.5	"NT805" Line	N582200.3769	E1908881.8887
B-3 (57-0779)	36.6 m Lt. 469+72.4	"NT805" Line	N582209.9195	E1908924.6124
B-4 (57-0779)	59.3 m Lt. 470+35.4	"NT805" Line	N582261.7164	E1908875.5689
B-5 (57-0779)	approx. 91.13 m Lt. 470+53	"NT805" Line	N582260.2272	E1908841.9539
B-6 (57-0779)	approx. 83.9 m Lt. 470+14	"NT805" Line	N582227.1705	E1908863.5479
B-7 (57-0779)	approx. 85.7 m Lt. 470+30	"NT805" Line	N582241.6341	E1908855.2592

NOTES: 1) Recent Borings in **Boldface Print**
2) Borings that are in Light face Print represent reuse of As Built borings for this structure or interchange (in parentheses).
3) Recent Borings that are shared with other nearby structures show both the alternate boring number in Boldface Print and structure in Light face Print (in parentheses)

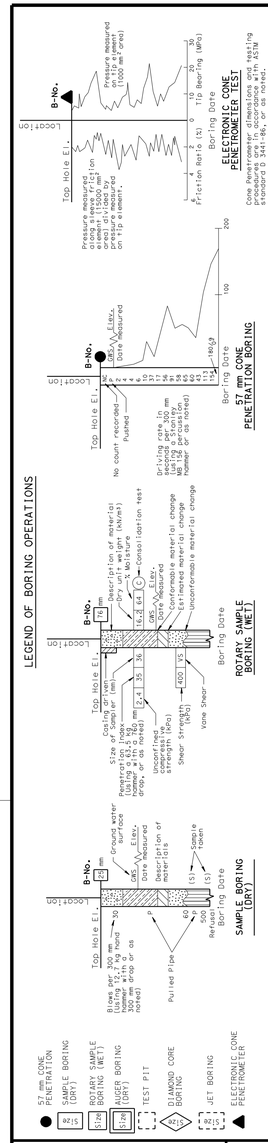

DIVISION OF ENGINEERING SERVICES - GEOTECHNICAL SERVICES

This 1999 LOTB drawing titled, N805/N5 TRUCK CONNECTOR, is considered an informational document only and is available and presented for the convenience of any bidder, contractor or other interested party. The State of California registration seal with signature, and license number confirm that this is a true and accurate copy of the original document.

DIST.	COUNTY	ROUTE	KILOMETER POST-TOTAL PROJECT	Sheet No.	Total Sheets
11	SD	805	R42.6/R46.5		

Gina W. Pursell 06-30-08
REGISTERED CIVIL ENGINEER

REGISTERED PROFESSIONAL ENGINEER — Gina W. Pursell — No. C54512 — Exp. 12-31-09 — CIVIL — STATE OF CALIFORNIA

SORRENTO VALLEY BLVD UC (WIDEN)
LOG OF TEST BORINGS 2 OF 4

NOTE: A COPY OF THIS LOG OF TEST BORINGS IS AVAILABLE AT OFFICE OF STRUCTURE MAINTENANCE AND INVESTIGATIONS, SACRAMENTO, CALIFORNIA

CU: 11
EA: 2T0401

BRIDGE No. 57-0786
Sheet 15 of 17

Note: Only borings 99-4 and 99-6 are considered for the SORRENTO VALLEY BLVD UC (WIDEN) project.

ENGINEERING SERVICE CENTER	STRUCTURE FOUNDATIONS
DRAWN BY	K. Wahl 3/00, I.G-Remmen 11/00
CHECKED BY	J. Pratt, F. Gerami

FIELD INVESTIGATION BY:
B. Komorniczak, M. Merriam, C. Avila, F.Gerami
W. Levine & J. Pratt

STATE OF CALIFORNIA
DEPARTMENT OF TRANSPORTATION

DIVISION OF STRUCTURES
STRUCTURE DESIGN

BRIDGE NO. 57-1070 G
KILOMETER POST KP45.55

CU 11
EA 0301U1

N805-N5 TRUCK CONNECTOR
LOG OF TEST BORINGS 2 OF 4

DISREGARD PRINTS BEARING EARLIER REVISION DATES
REVISION DATES (PRELIMINARY STAGE ONLY) 11-06-00 12-21-00 4-4-01 7-9-01 04/28/09
SHEET 15 OF 17

ORIGINAL SCALE IN MILLIMETERS FOR REDUCED PLANS 0 10 20 30 40 50 60 70 80 90 100

OSF GEOLOGIST LOG OF TEST BORINGS SHEET (METRIC) (REV. 3/1/99)

FILE => 57-0786-z-lotb2.dgn

USERNAME => trmikesl DATE PLOTTED => 29-SEP-2010 TIME PLOTTED => 11:30

DIST	COUNTY	ROUTE	KILOMETER POST TOTAL PROJECT	SHEET No	TOTAL SHEETS
11	SD	5,805	R49.9/R51.7, 42.6/46.5	660	886

Caltrans Metric

Joseph S. Pratt 4-9-01
CERTIFIED ENGINEERING GEOLOGIST

9-27-10
PLANS APPROVAL DATE

REGISTERED GEOLOGIST Joseph S. Pratt No. 2141 Exp. 5-31-03 CERTIFIED ENGINEERING GEOLOGIST STATE OF CALIFORNIA

The State of California or its officers or agents shall not be responsible for the accuracy or completeness of electronic copies of this plan sheet.

FOR PLAN VIEW, SEE
"LOG OF TEST BORINGS" SHEET 1 OF 13

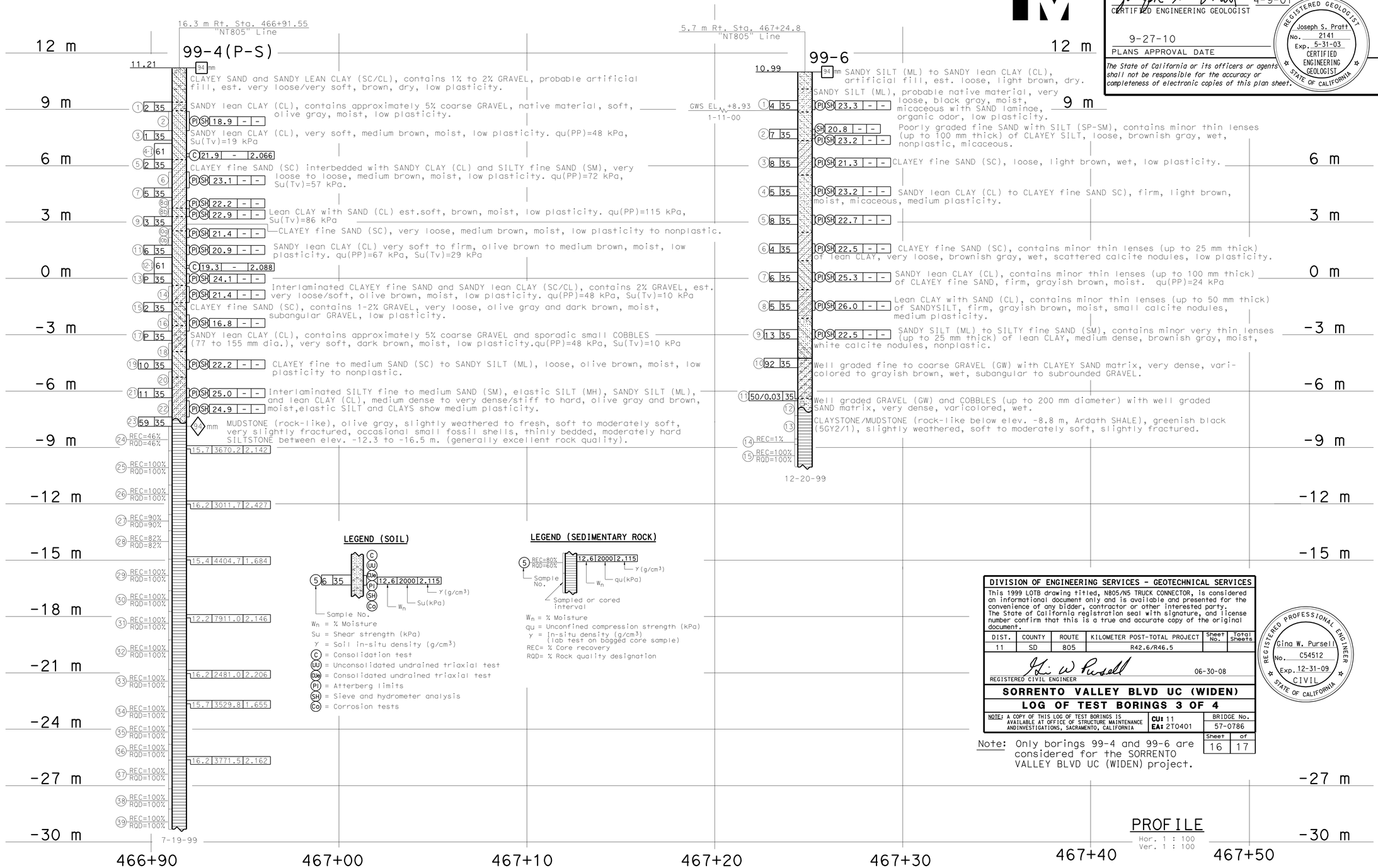

LEGEND (SOIL)

W_n = % Moisture
Su = Shear strength (kPa)
γ = Soil in-situ density (g/cm³)
(C) = Consolidation test
(UU) = Unconsolidated undrained triaxial test
(CU) = Consolidated undrained triaxial test
(PI) = Atterberg limits
(SH) = Sieve and hydrometer analysis
(Co) = Corrosion tests

LEGEND (SEDIMENTARY ROCK)

W_n = % Moisture
qu = Unconfined compression strength (kPa)
γ = In-situ density (g/cm³) (lab test on bagged core sample)
REC= % Core recovery
RQD= % Rock quality designation

LEGEND OF BORING OPERATIONS

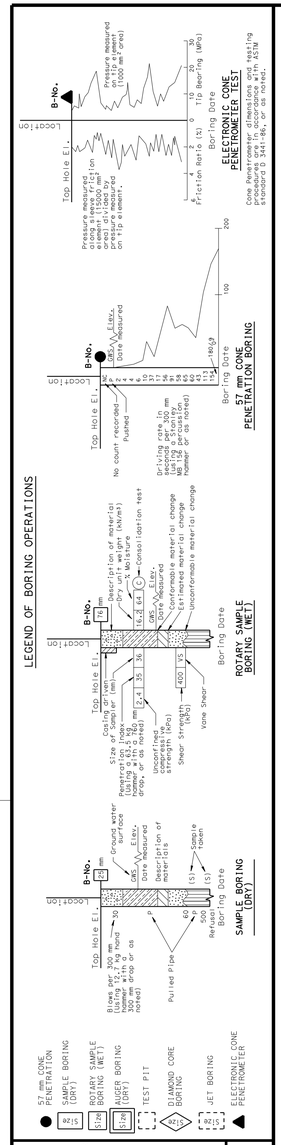

LEGEND OF EARTH MATERIALS

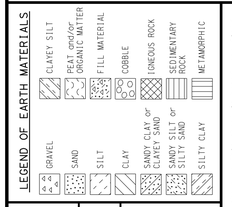

CONSISTENCY CLASSIFICATION FOR SOILS

According to the Standard Penetration Test

SPT N-Value (Blows/0.3m)	Granular	SPT N-Value (Blows/0.3m)	Cohesive
0-4	Very Loose	<2	Very Soft
5-10	Loose	2-4	Soft
11-30	Medium Dense	5-8	Firm
31-50	Dense	9-15	Stiff
>50	Very Dense	16-30	Very stiff
		>31	Hard

NOTE: Classification of earth material as shown on this sheet is based upon field inspection and is not to be construed to imply mechanical analysis.

DIVISION OF ENGINEERING SERVICES - GEOTECHNICAL SERVICES

This 1999 LOTB drawing titled, N805/N5 TRUCK CONNECTOR, is considered an informational document only and is available and presented for the convenience of any bidder, contractor or other interested party. The State of California registration seal with signature, and license number confirm that this is a true and accurate copy of the original document.

DIST.	COUNTY	ROUTE	KILOMETER POST-TOTAL PROJECT	Sheet No.	Total Sheets
11	SD	805	R42.6/R46.5		

Gina W. Pursell 06-30-08
REGISTERED CIVIL ENGINEER

REGISTERED PROFESSIONAL ENGINEER Gina W. Pursell No. C54512 Exp. 12-31-09 CIVIL STATE OF CALIFORNIA

SORRENTO VALLEY BLVD UC (WIDEN)

LOG OF TEST BORINGS 3 OF 4

NOTE: A COPY OF THIS LOG OF TEST BORINGS IS AVAILABLE AT OFFICE OF STRUCTURE MAINTENANCE AND INVESTIGATIONS, SACRAMENTO, CALIFORNIA

CU: 11
EA: 2T0401

BRIDGE No. 57-0786

Sheet 16 of 17

Note: Only borings 99-4 and 99-6 are considered for the SORRENTO VALLEY BLVD UC (WIDEN) project.

ENGINEERING SERVICE CENTER	STRUCTURE FOUNDATIONS
DRAWN BY	K. Wahl 3/00, I.G-Remmen 11/00, F. Nguyen 4/01
CHECKED BY	J. Pratt, F. Gerami

FIELD INVESTIGATION BY:
B. Komorniczak, M. Merriam
C. Avila, F.Gerami

STATE OF CALIFORNIA
DEPARTMENT OF TRANSPORTATION

DIVISION OF STRUCTURES
STRUCTURE DESIGN

CU 11
EA 0301U1

BRIDGE NO. 57-1070 G
KILOMETER POST KP45.55

N805/N5 TRUCK CONNECTOR

LOG OF TEST BORINGS 3 OF 4

ORIGINAL SCALE IN MILLIMETERS FOR REDUCED PLANS 0 10 20 30 40 50 60 70 80 90 100

DISREGARD PRINTS BEARING EARLIER REVISION DATES

REVISION DATES (PRELIMINARY STAGE ONLY) 11-06-00 4-6-01 4-9-01 04/28/09

SHEET 16 OF 17

OSF GEOLOGIST LOG OF TEST BORINGS SHEET (METRIC) (REV. 3/1/99)

FILE => 57-0786-z-lotb3.dgn

USERNAME => trmikesl DATE PLOTTED => 29-SEP-2010 TIME PLOTTED => 11:31

DIST.	COUNTY	ROUTE	POST MILES-TOTAL PROJECT	SHEET NO.	TOTAL SHEETS
11	SD	805	26.4/28.9	116	186

August 24, 1970

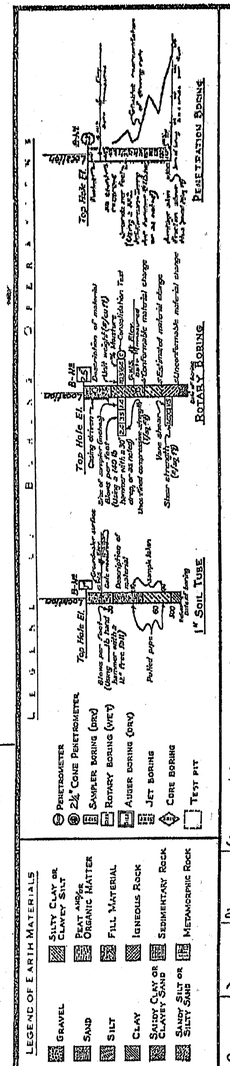

NOTE: Classification of earth material as shown on this sheet is based upon field inspection and is not to be construed to imply mechanical analysis.

FIELD STUDY	H.H. Gresston 5-69
DRAWN	R.R. Moore 6-30-69
CHECKED	H.H. Gresston 7-7-69

Approved Recommended: Engineering Geologist

BRIDGE DEPARTMENT
ENGINEERING GEOLOGY SECTION

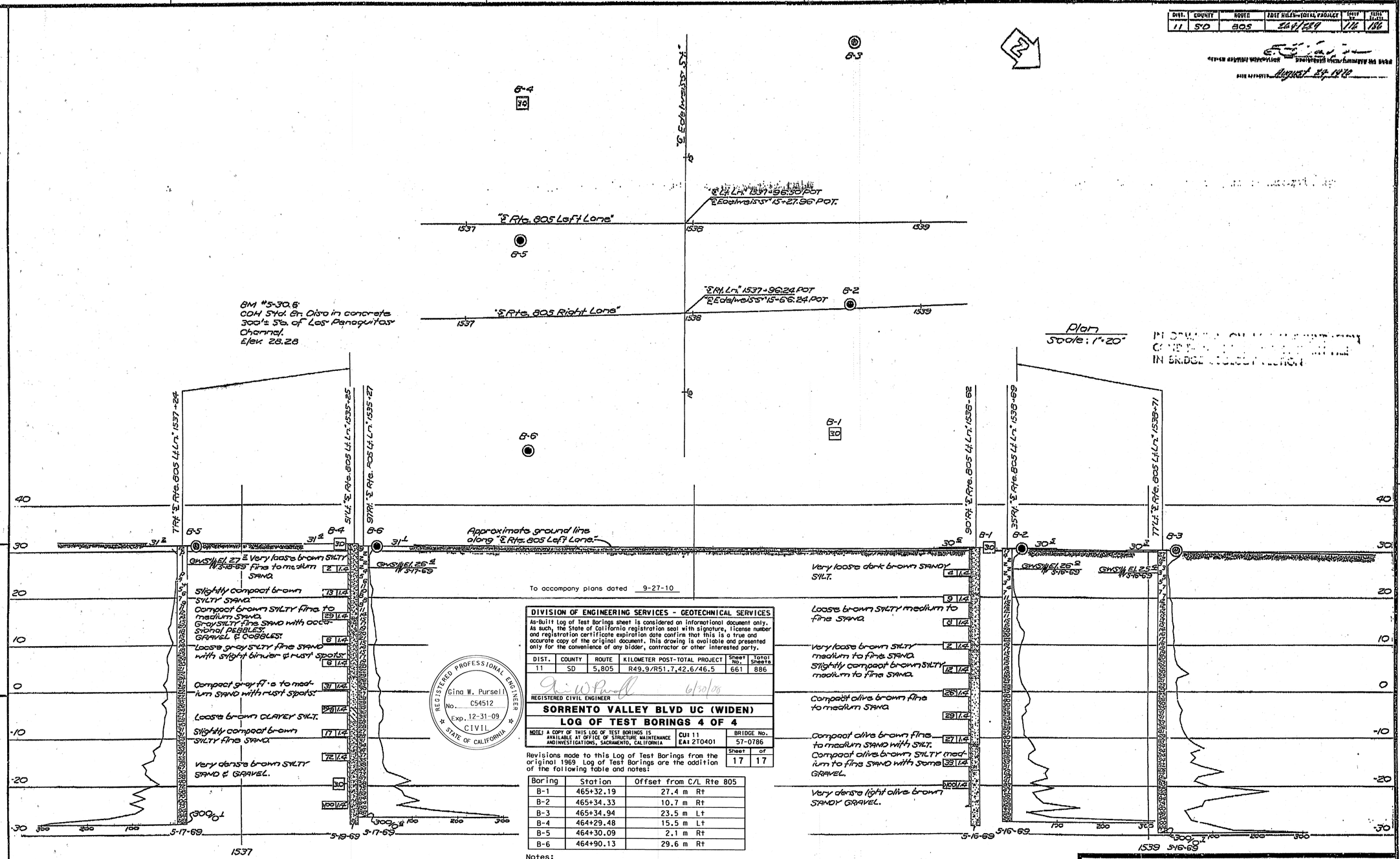

To accompany plans dated 9-27-10

DIVISION OF ENGINEERING SERVICES - GEOTECHNICAL SERVICES

As-built Log of Test Borings sheet is considered an informational document only. As such, the State of California registration seal with signature, license number and registration certificate expiration date confirm that this is a true and accurate copy of the original document. This drawing is available and presented only for the convenience of any bidder, contractor or other interested party.

DIST.	COUNTY	ROUTE	KILOMETER POST-TOTAL PROJECT	Sheet No.	Total Sheets
11	SD	5,805	R49.9/R51.7,42.6/46.5	661	886

Gina W. Pursell 6/30/08
REGISTERED CIVIL ENGINEER

REGISTERED PROFESSIONAL ENGINEER
Gina W. Pursell
No. C54512
Exp. 12-31-09
CIVIL
STATE OF CALIFORNIA

SORRENTO VALLEY BLVD UC (WIDEN)

LOG OF TEST BORINGS 4 OF 4

NOTE: A COPY OF THIS LOG OF TEST BORINGS IS AVAILABLE AT OFFICE OF STRUCTURE MAINTENANCE AND INVESTIGATIONS, SACRAMENTO, CALIFORNIA

CU: 11
EA: 2T0401

BRIDGE No.	Sheet	of
57-0786	17	17

Revisions made to this Log of Test Borings from the original 1969 Log of Test Borings are the addition of the following table and notes:

Boring	Station	Offset from C/L Rte 805
B-1	465+32.19	27.4 m Rt
B-2	465+34.33	10.7 m Rt
B-3	465+34.94	23.5 m Lt
B-4	464+29.48	15.5 m Lt
B-5	464+30.09	2.1 m Rt
B-6	464+90.13	29.6 m Rt

Notes:
1. See the General Plan and/or Foundation Plan for Metric Stationing.
2. The Office of Geotechnical Design produced the data presented in the table above. The data are the metric locations for the As-Built Log of Test Borings referenced to the proposed new structure location. This table is presented on this sheet for the convenience of any bidder, contractor or other interested party.

AS BUILT PLANS
Contract No. 11-045894
Date Completed —
Document No. 100025720

STATE OF CALIFORNIA
TRANSPORTATION AGENCY
DEPARTMENT OF PUBLIC WORKS
DIVISION OF HIGHWAYS

SORRENTO VALLEY BLVD UNDERCROSSING

LOG OF TEST BORINGS

BRIDGE NO.	POST MILE	DRAWING NO.	SHEET	OF
57-786 R/L	28.3			

REVISION DATES — PRELIMINARY STAGE ONLY

WO 045891
CU 11201
PR57786-2

Discarded prints bearing earlier revision dates

I HEREBY CERTIFY THAT THIS IS A TRUE AND ACCURATE COPY OF THE ABOVE DOCUMENT TAKEN

57-0786-z-lotb4.tif

176

DIST	COUNTY	ROUTE	KILOMETER POST TOTAL PROJECT	SHEET No	TOTAL SHEETS
11	SD	5,805	R49.9/R51.7, 42.6/46.5	662	886

Caltrans Metric

Peter B Smith 4-28-09
REGISTERED CIVIL ENGINEER DATE

9-27-10
PLANS APPROVAL DATE

REGISTERED PROFESSIONAL ENGINEER Pete B. Smith No. C60122 Exp. 6-30-10 CIVIL STATE OF CALIFORNIA

The State of California or its officers or agents shall not be responsible for the accuracy or completeness of electronic copies of this plan sheet.

SANDAG
401 B STREET,
SAN DIEGO, CA 92101

T.Y. LIN INTERNATIONAL
5030 CAMINO DE LA SIESTA, SUITE 204,
SAN DIEGO, CA 92108

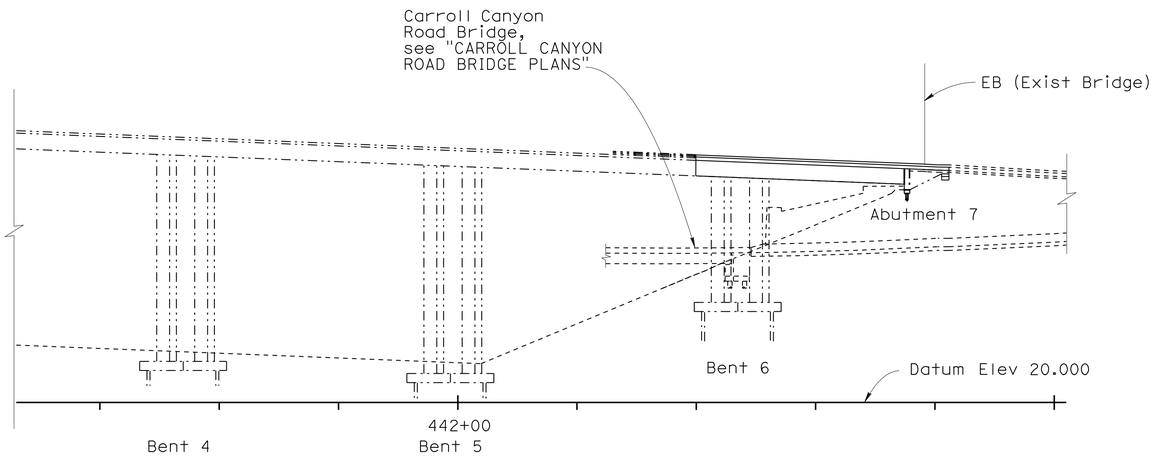

Left Bridge shown, mirror right bridge

ELEVATION
1:500

QUANTITIES

BRIDGE REMOVAL (PORTION), LOCATION A	LUMP	SUM
STRUCTURAL CONCRETE, BRIDGE	120	m³
DRILL AND BOND DOWEL	10	m
BAR REINFORCING STEEL (BRIDGE)	17 000	kg
MINOR CONCRETE (CURB)	72	m
CHAIN LINK RAILING (TYPE 7 MODIFIED)	72	m
CONCRETE BARRIER (TYPE 742)	130	m

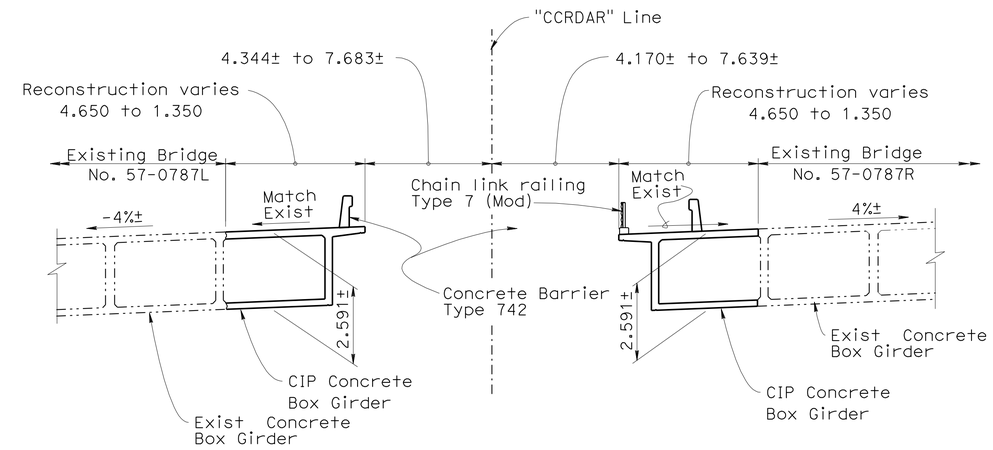

PART TYPICAL SECTION
1:100

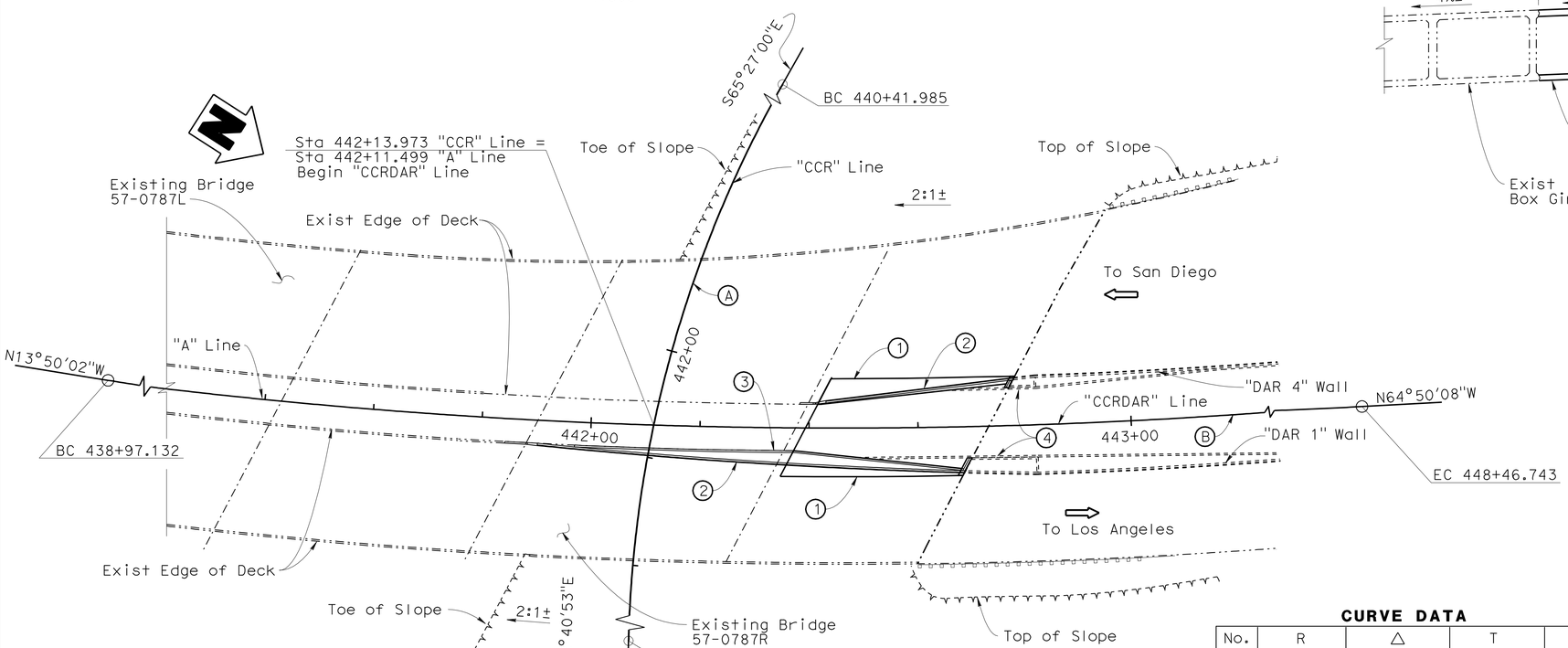

PLAN
1:500

Note:
The contractor shall verify all controlling field dimensions before ordering or fabricating any material.

CURVE DATA

No.	R	Δ	T	L
A	218.000	61°52'07"	130.648	235.399
B	1066.802	51°0'06"	508.857	949.611

NOTES

1. Reconstruct box girder
2. Barrier rail
3. Chain Link railing Type 7 (Mod)
4. See "CARROLL CANYON (DAR) RETAINING WALL PLANS"

LEGEND

——— Indicates new construction

-·-·- Indicates existing bridge

⇨ Indicates direction of traffic

ALL DIMENSIONS ARE IN METERS UNLESS OTHERWISE SHOWN

CHUNG-YUAN WEN
DESIGN OVERSIGHT
4-28-09
SIGN OFF DATE

	BY	CHECKED
DESIGN	Pete Smith	Jeremy Lahaye
DETAILS	Ivan Martin	Jeremy Lahaye
QUANTITIES	Tatyana Gnip	Shafi Sharifan

LOAD FACTOR DESIGN: LIVE LOADING: HS20-44 and Alternative
LAYOUT: BY Pete Smith; CHECKED Anthony Sánchez
SPECIFICATIONS: BY Jeremy Lahaye; PLANS AND SPECS COMPARED Jeremy Lahaye

PREPARED FOR THE STATE OF CALIFORNIA DEPARTMENT OF TRANSPORTATION

Brett Makley
PROJECT ENGINEER

BRIDGE NO. 57-787R/L
KILOMETER POST KP43.2

SOLEDAD CANYON BR & OH (RECONSTRUCT)
GENERAL PLAN

DESIGN GENERAL PLAN SHEET (METRIC) (REV. 10/27/05)

ORIGINAL SCALE IN MILLIMETERS FOR REDUCED PLANS 0 10 20 30 40 50 60 70 80 90 100

CU 11275
EA 2T0401

DISREGARD PRINTS BEARING EARLIER REVISION DATES

REVISION DATES (PRELIMINARY STAGE ONLY): ~~9/12/08~~ ~~12/19/08~~ ~~3/20/09~~ 4/28/09

SHEET 1 OF 12

FILE => 57-787rl-a-gp01.dgn

USERNAME => trmikesl DATE PLOTTED => 29-SEP-2010 TIME PLOTTED => 11:31

DIST	COUNTY	ROUTE	KILOMETER POST TOTAL PROJECT	SHEET No	TOTAL SHEETS
11	SD	5,805	R49.9/R51.7, 42.6/46.5	663	886

Caltrans Metric

Peter B Smith 4-28-09
REGISTERED CIVIL ENGINEER DATE

9-27-10
PLANS APPROVAL DATE

REGISTERED PROFESSIONAL ENGINEER Pete B. Smith No. C60122 Exp. 6-30-10 CIVIL STATE OF CALIFORNIA

The State of California or its officers or agents shall not be responsible for the accuracy or completeness of electronic copies of this plan sheet.

SANDAG
401 B STREET,
SAN DIEGO, CA 92101

T.Y. LIN INTERNATIONAL
5030 CAMINO DE LA SIESTA, SUITE 204,
SAN DIEGO, CA 92108

GENERAL NOTES
LOAD FACTOR DESIGN

DESIGN: BRIDGE DESIGN SPECIFICATIONS, APRIL 2000, LFD (1996 AASHTO WITH INTERIMS AND REVISIONS BY CALTRANS) SUPPLEMENTED BY STRUCTURAL DESIGN CRITERIA FOR PARTIAL REMOVAL AND RECONSTRUCTION OF CARROLL CANYON OVERHEAD, MAY 2008

DEAD LOAD: Includes 1675 Pa for future wearing surface

LIVE LOADING: HS20-44 and alternative load.

REINFORCED CONCRETE:
fy = 420 MPa
f'c = 25 MPa
n = 8

Transverse Deck Slabs (Working Stress Design)
fs = 138.0 MPa
fc = 8.3 MPa
n = 10

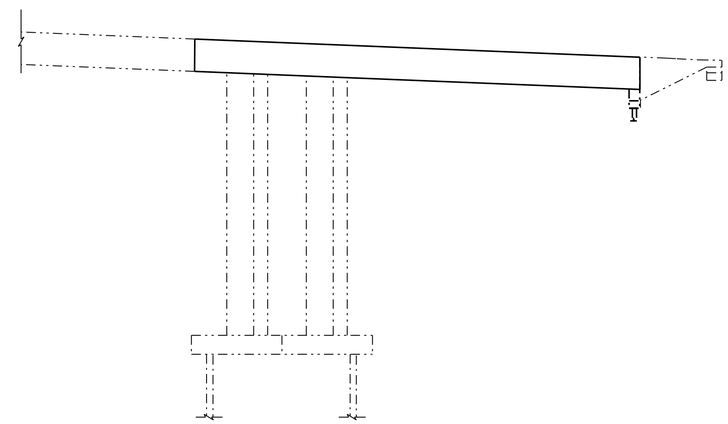

CONCRETE STRENGTH AND TYPE LIMITS

No Scale

- Structure Concrete, Bridge (28 MPa @ 28 days)

INDEX TO PLANS

1	GENERAL PLAN
2	INDEX TO PLANS
3	BRIDGE REMOVAL NO. 1
4	BRIDGE REMOVAL NO. 2
5	TYPICAL SECTION
6	GIRDER LAYOUT
7	GIRDER DETAILS
8	BOTTOM SLAB REINFORCING
9	TOP SLAB REINFORCING
10	BRIDGE BARRIER LAYOUT
11	BRIDGE BARRIER DETAILS NO. 1
12	BRIDGE BARRIER DETAILS NO. 2

STANDARD PLANS (DATED JULY 2004)

A10A	ACRONYMS AND ABBREVIATIONS (A-L)
A10B	ACRONYMS AND ABBREVIATIONS (M-Z)
A10C	SYMBOLS (SHEET 1 OF 2)
A10D	SYMBOLS (SHEET 2 OF 2)
B0-5	BRIDGE DETAILS
B7-1	BOX GIRDER DETAILS
B11-52	CHAIN LINK RAILING TYPE 7
B11-57	CONCRETE BARRIER TYPE 742

STANDARD PLAN SHEET NO.

DETAIL NO.

Note:
The contractor shall verify all controlling field dimensions before ordering or fabricating any material.

ALL DIMENSIONS ARE IN MILLIMETERS UNLESS OTHERWISE SHOWN

CHUNG-YUAN WEN
DESIGN OVERSIGHT
4-28-09
SIGN OFF DATE

	BY	CHECKED
DESIGN	Pete Smith	Jeremy LaHaye
DETAILS	Ivan Martin	Jeremy LaHaye
QUANTITIES	Tatyana Gnip	Shafi Sharifan

PREPARED FOR THE STATE OF CALIFORNIA DEPARTMENT OF TRANSPORTATION

Brett Makley
PROJECT ENGINEER

BRIDGE NO. 57-787R/L
KILOMETER POST KP43.2

SOLEDAD CANYON BR & OH (RECONSTRUCT)
INDEX TO PLANS

DESIGN DETAIL SHEET (METRIC) (REV. 10/27/05)

ORIGINAL SCALE IN MILLIMETERS FOR REDUCED PLANS 0 10 20 30 40 50 60 70 80 90 100

CU 11275
EA 2T0401

DISREGARD PRINTS BEARING EARLIER REVISION DATES

REVISION DATES (PRELIMINARY STAGE ONLY) 1/08/09 4/28/09

SHEET 2 OF 12

FILE => 57-787rl-a-itp.dgn

USERNAME => trmikesl DATE PLOTTED => 29-SEP-2010 TIME PLOTTED => 11:31

DIST	COUNTY	ROUTE	KILOMETER POST TOTAL PROJECT	SHEET No	TOTAL SHEETS
11	SD	5,805	R49.9/R51.7, 42.6/46.5	664	886

Caltrans Metric

Peter B Smith 4-28-09
REGISTERED CIVIL ENGINEER DATE

9-27-10
PLANS APPROVAL DATE

REGISTERED PROFESSIONAL ENGINEER Pete B. Smith No. C60122 Exp. 6-30-10 CIVIL STATE OF CALIFORNIA

The State of California or its officers or agents shall not be responsible for the accuracy or completeness of electronic copies of this plan sheet.

SANDAG
401 B STREET,
SAN DIEGO, CA 92101

T.Y. LIN INTERNATIONAL
5030 CAMINO DE LA SIESTA, SUITE 204,
SAN DIEGO, CA 92108

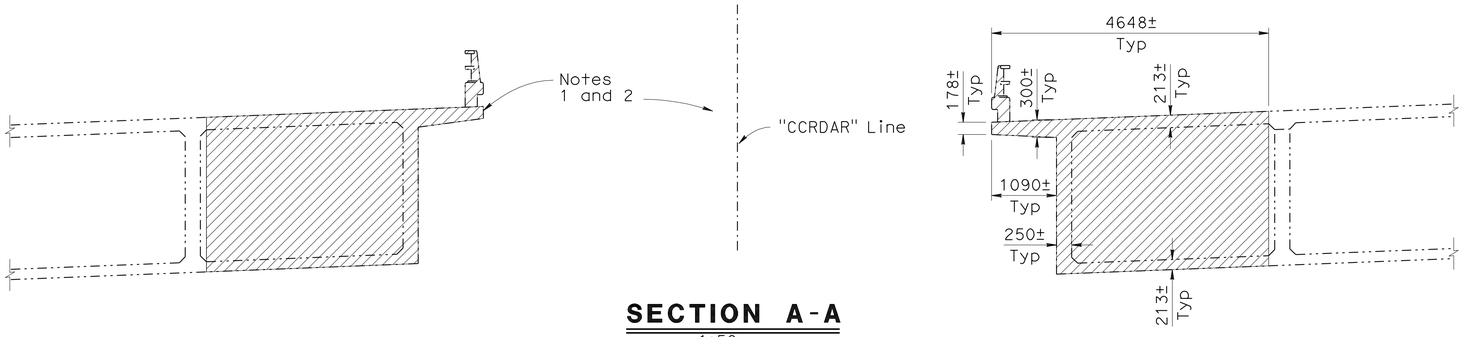

SECTION A-A
1:50

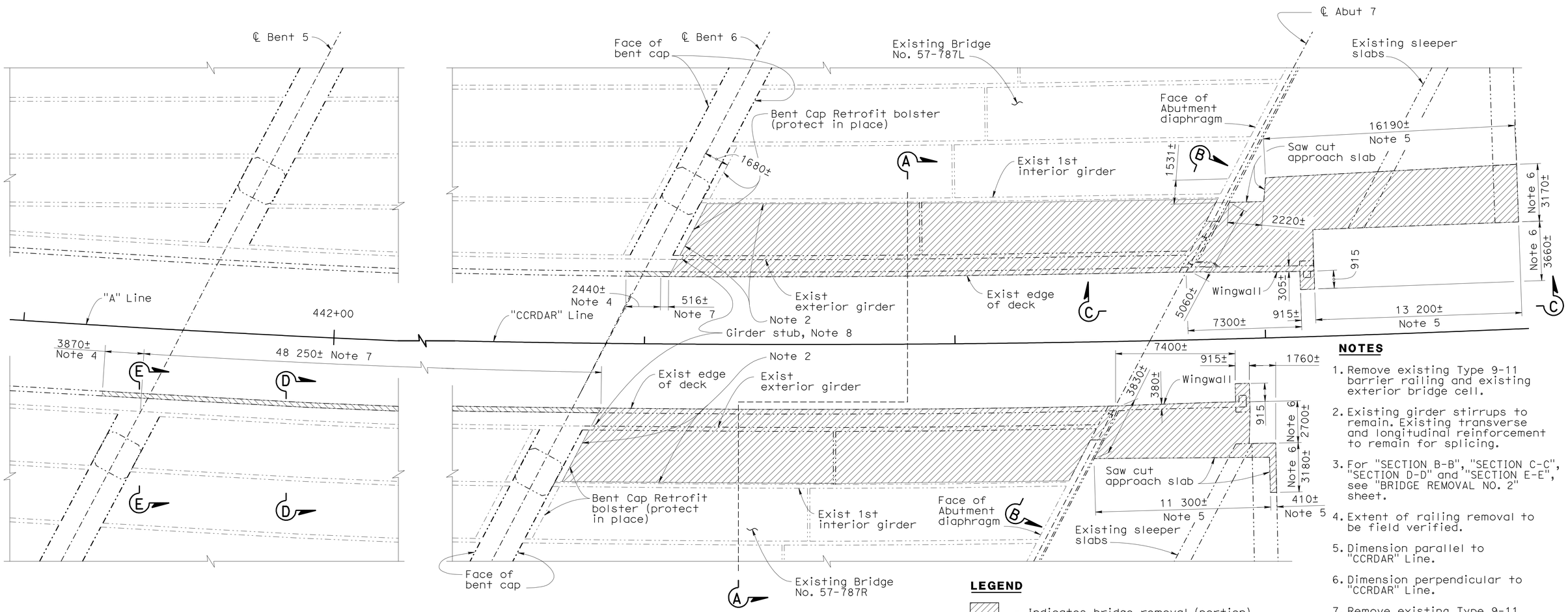

PLAN
1:125

NOTES

1. Remove existing Type 9-11 barrier railing and existing exterior bridge cell.
2. Existing girder stirrups to remain. Existing transverse and longitudinal reinforcement to remain for splicing.
3. For "SECTION B-B", "SECTION C-C", "SECTION D-D" and "SECTION E-E", see "BRIDGE REMOVAL NO. 2" sheet.
4. Extent of railing removal to be field verified.
5. Dimension parallel to "CCRDAR" Line.
6. Dimension perpendicular to "CCRDAR" Line.
7. Remove existing Type 9-11 barrier railing.
8. For dimensions of girder stub to remain, see "GIRDER DETAILS" sheet.

ALL DIMENSIONS ARE IN MILLIMETERS UNLESS OTHERWISE SHOWN

LEGEND

- Indicates bridge removal (portion)
- Indicates existing structure
- Indicates barrier removal

Note:
The contractor shall verify all controlling field dimensions before ordering or fabricating any material.

CHUNG-YUAN WEN
DESIGN OVERSIGHT
4-28-09
SIGN OFF DATE

	BY	CHECKED
DESIGN	Pete Smith	Jeremy LaHaye
DETAILS	Ivan Martin	Jeremy LaHaye
QUANTITIES	Tatyana Gnip	Shafi Sharifan

PREPARED FOR THE STATE OF CALIFORNIA DEPARTMENT OF TRANSPORTATION

Brett Makley
PROJECT ENGINEER

BRIDGE NO. 57-787R/L
KILOMETER POST KP43.2

SOLEDAD CANYON BR & OH (RECONSTRUCT)
BRIDGE REMOVAL NO.1

DESIGN DETAIL SHEET (METRIC) (REV. 10/27/05)

ORIGINAL SCALE IN MILLIMETERS FOR REDUCED PLANS 0 10 20 30 40 50 60 70 80 90 100

CU 11275
EA 2T0401

DISREGARD PRINTS BEARING EARLIER REVISION DATES
REVISION DATES (PRELIMINARY STAGE ONLY) 9/12/08 12/19/08 3/09/09 4/28/09

SHEET 3 OF 12

FILE => 57-787r1-i-brg_rem01.dgn

USERNAME => trmikes1 DATE PLOTTED => 29-SEP-2010 TIME PLOTTED => 11:31

DIST	COUNTY	ROUTE	KILOMETER POST TOTAL PROJECT	SHEET No	TOTAL SHEETS
11	SD	5,805	R49.9/R51.7, 42.6/46.5	665	886

Peter B Smith 4-28-09
REGISTERED CIVIL ENGINEER DATE

9-27-10
PLANS APPROVAL DATE

REGISTERED PROFESSIONAL ENGINEER Pete B. Smith No. C60122 Exp. 6-30-10 CIVIL STATE OF CALIFORNIA

The State of California or its officers or agents shall not be responsible for the accuracy or completeness of electronic copies of this plan sheet.

SANDAG
401 B STREET,
SAN DIEGO, CA 92101

T.Y. LIN INTERNATIONAL
5030 CAMINO DE LA SIESTA, SUITE 204,
SAN DIEGO, CA 92108

Caltrans Metric

NOTES

1. Remove existing "Type 9-11" barrier Railing.
2. Remove existing steel railing and steel post.
3. Remove existing "Type 9-11" barrier, abutment, wingwall, piles,approach slab.
4. Pile may remain in place if there is no interference with construction of DAR Wall. To be field verified.
5. Remove Abutment Diaphragm to bottom of soffit and first interior girder. Protect in place existing reinforcement.
6. Section taken along skew.
7. For locations of "SECTION B-B", "SECTION C-C", "SECTION D-D" and "SECTION E-E", see "BRIDGE REMOVAL NO. 1" sheet.

LEGEND

- Indicates bridge removal (Portion)
- Indicates existing structure
- Indicates new construction

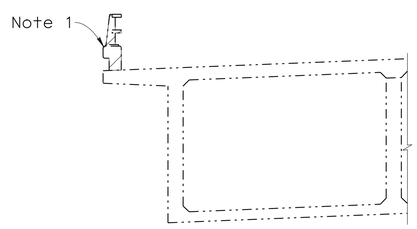

SECTION D-D
1:50

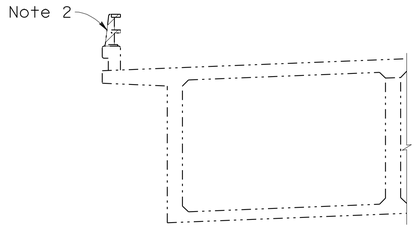

SECTION E-E
1:50

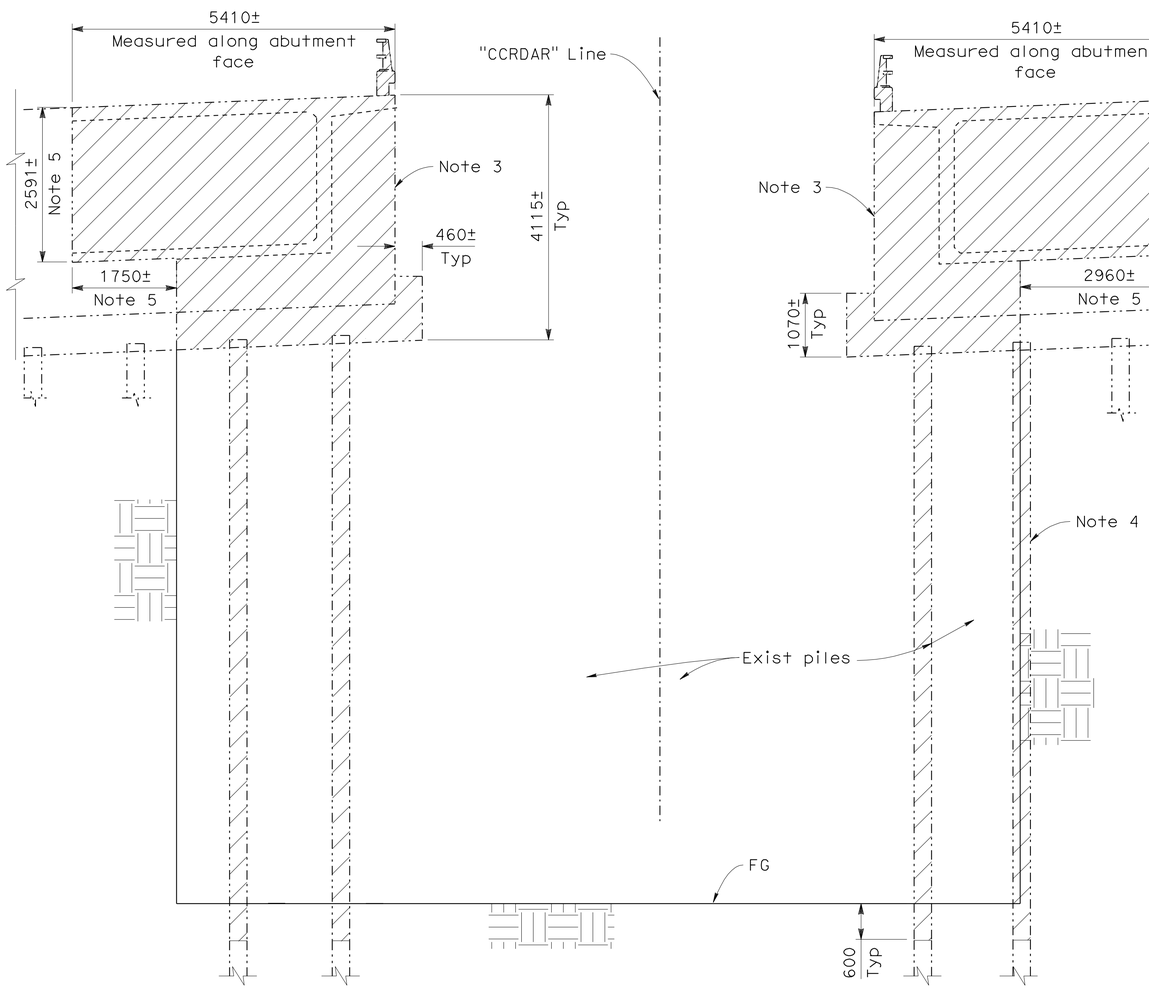

SECTION B-B
1:50
Note 6

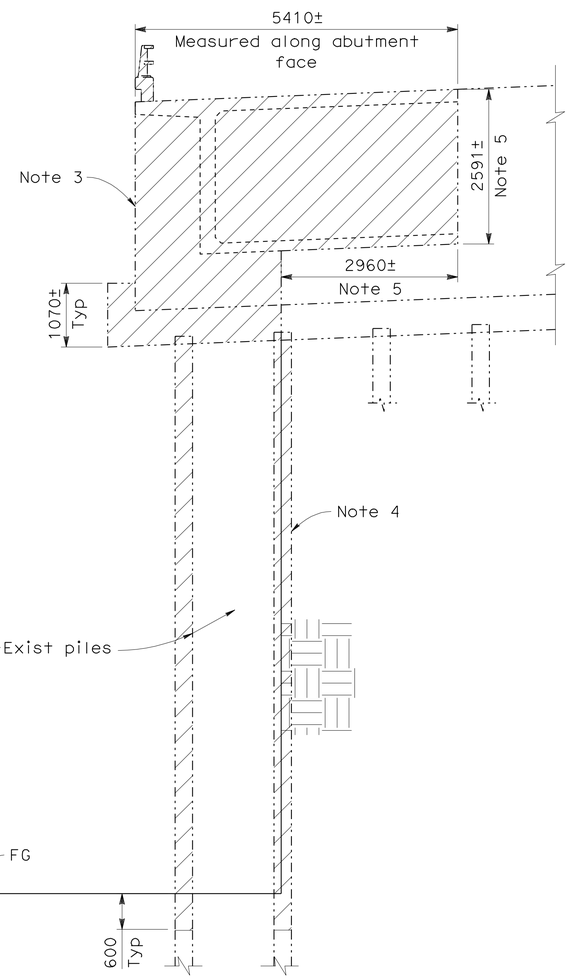

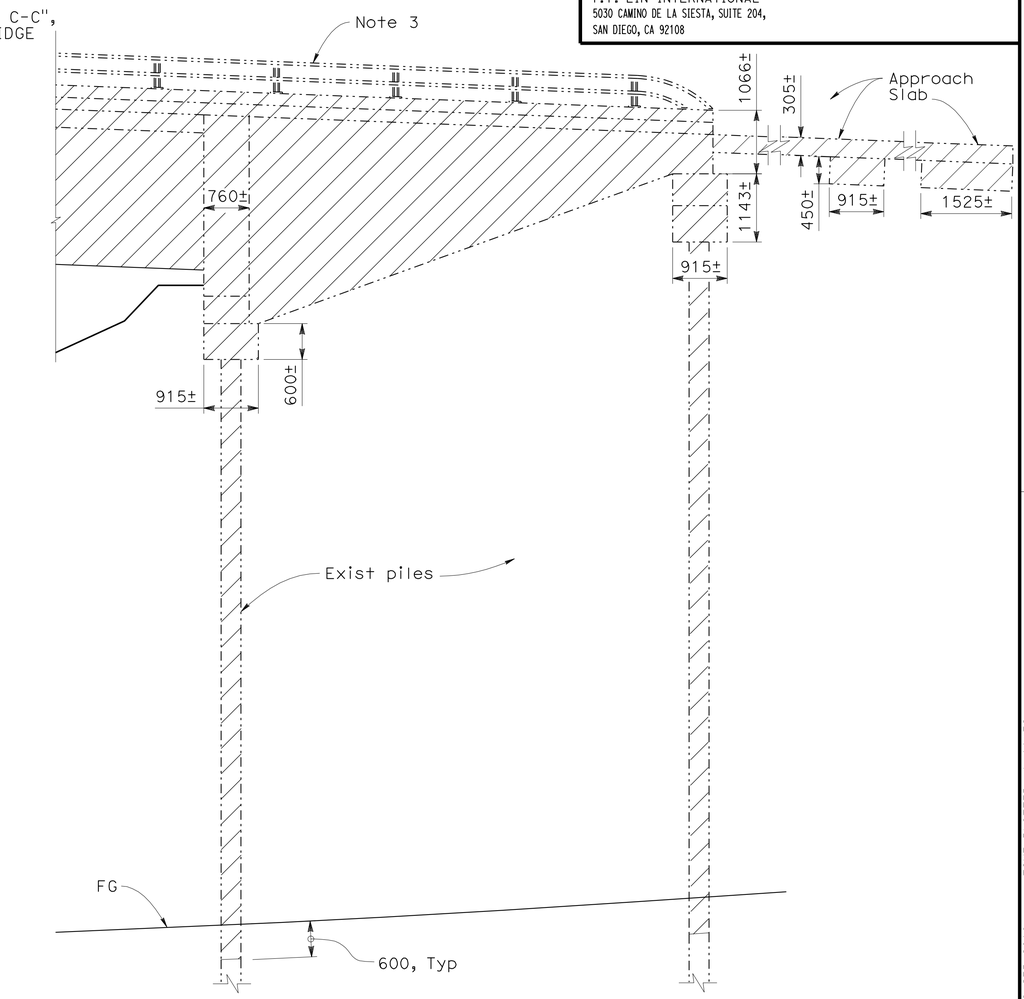

SECTION C-C
1:50

Note:
The contractor shall verify all controlling field dimensions before ordering or fabricating any material.

ALL DIMENSIONS ARE IN MILLIMETERS UNLESS OTHERWISE SHOWN

CHUNG-YUAN WEN
DESIGN OVERSIGHT
4-28-09
SIGN OFF DATE

	BY	CHECKED
DESIGN	Pete Smith	Jeremy LaHaye
DETAILS	Ivan Martin	Jeremy LaHaye
QUANTITIES	Tatyana Gnip	Shafi Sharifan

PREPARED FOR THE STATE OF CALIFORNIA DEPARTMENT OF TRANSPORTATION

Brett Makley
PROJECT ENGINEER

BRIDGE NO. 57-787R/L
KILOMETER POST KP43.2

SOLEDAD CANYON BR & OH (RECONSTRUCT)
BRIDGE REMOVAL NO. 2

DESIGN DETAIL SHEET (METRIC) (REV. 10/27/05)

ORIGINAL SCALE IN MILLIMETERS FOR REDUCED PLANS 0 10 20 30 40 50 60 70 80 90 100

CU 11275
EA 2T0401

DISREGARD PRINTS BEARING EARLIER REVISION DATES → 9/12/08 12/19/08 3/09/09 4/28/09

REVISION DATES (PRELIMINARY STAGE ONLY)

SHEET 4 OF 12

FILE => 57-787r1-1-brg_rem02.dgn

USERNAME => trmikes1 DATE PLOTTED => 29-SEP-2010 TIME PLOTTED => 11:32

DIST	COUNTY	ROUTE	KILOMETER POST TOTAL PROJECT	SHEET No	TOTAL SHEETS
11	SD	5,805	R49.9/R51.7, 42.6/46.5	666	886

Caltrans Metric

Peter B Smith 4-28-09
REGISTERED CIVIL ENGINEER DATE

9-27-10
PLANS APPROVAL DATE

REGISTERED PROFESSIONAL ENGINEER Pete B. Smith No. C60122 Exp. 6-30-10 CIVIL STATE OF CALIFORNIA

The State of California or its officers or agents shall not be responsible for the accuracy or completeness of electronic copies of this plan sheet.

SANDAG
401 B STREET,
SAN DIEGO, CA 92101

T.Y. LIN INTERNATIONAL
5030 CAMINO DE LA SIESTA, SUITE 204,
SAN DIEGO, CA 92108

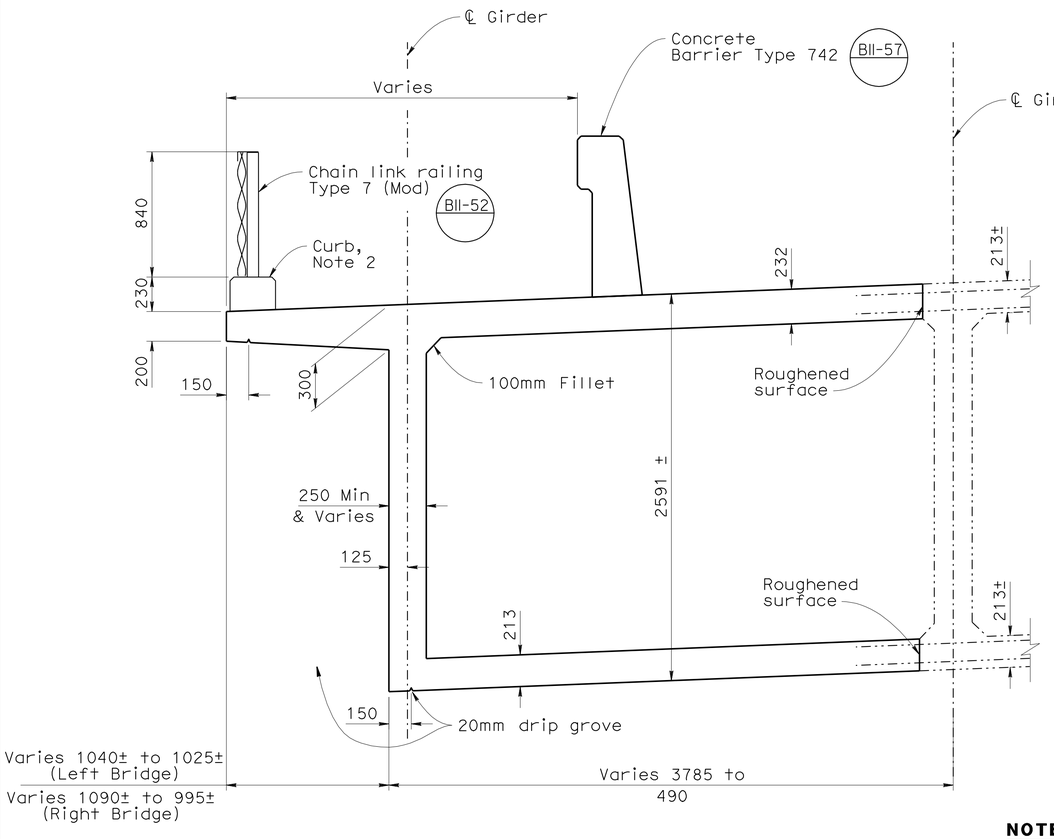

TYPICAL SECTION

1:20

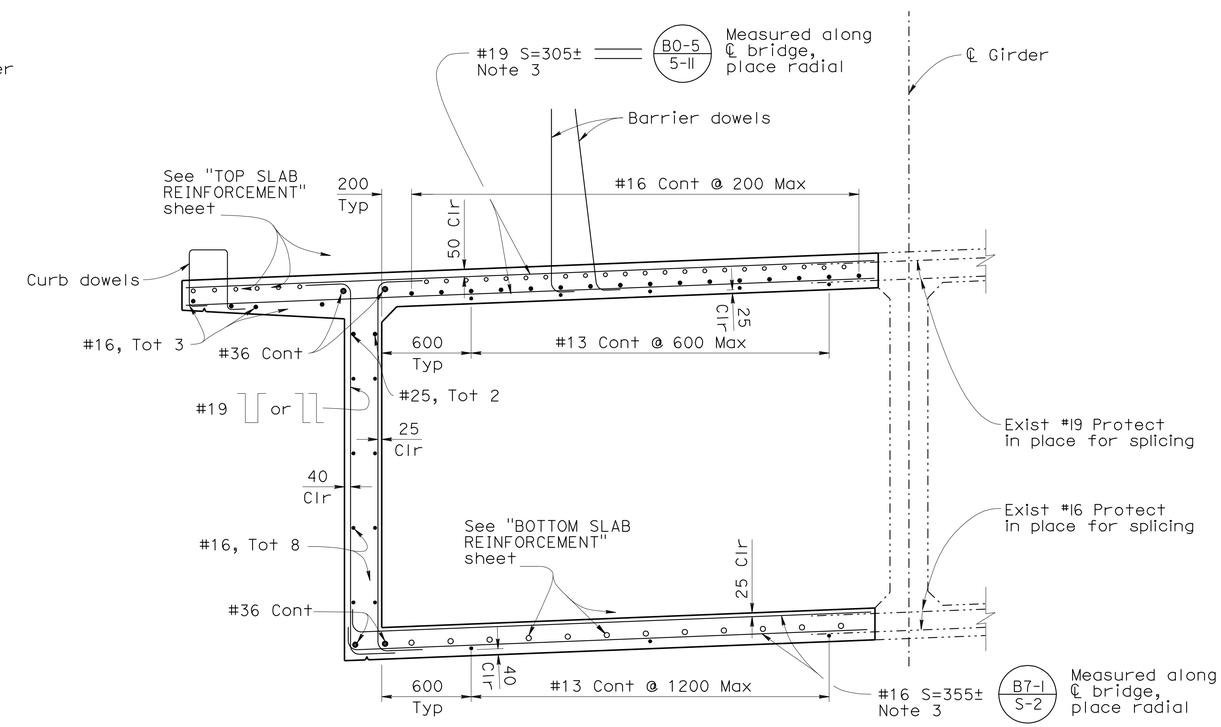

PART TYPICAL SECTION

1:20

B0-5 B7-1

LEGEND

——— - Indicates new construction

—··—·· - Indicates existing bridge

NOTES

1. Right bridge reconstruction shown, left bridge reconstruction similar
2. For curb details, see "BRIDGE BARRIER DETAIL NO. 2" sheet
3. Lap or mechanical splice with existing transverse reinforcing

Note:
The contractor shall verify all controlling field dimensions before ordering or fabricating any material.

ALL DIMENSIONS ARE IN MILLIMETERS UNLESS OTHERWISE SHOWN

CHUNG-YUAN WEN
DESIGN OVERSIGHT
4-28-09
SIGN OFF DATE

	BY	CHECKED
DESIGN	Pete Smith	Jeremy LaHaye
DETAILS	Ivan Martin	Jeremy LaHaye
QUANTITIES	Tatyana Gnip	Shafi Sharifan

PREPARED FOR THE STATE OF CALIFORNIA DEPARTMENT OF TRANSPORTATION

Brett Makley
PROJECT ENGINEER

BRIDGE NO. 57-787R/L
KILOMETER POST KP43.2

SOLEDAD CANYON BR & OH (RECONSTRUCT)

TYPICAL SECTION

DESIGN DETAIL SHEET (METRIC) (REV. 10/27/05)

ORIGINAL SCALE IN MILLIMETERS FOR REDUCED PLANS 0 10 20 30 40 50 60 70 80 90 100

CU 11275
EA 2T0401

DISREGARD PRINTS BEARING EARLIER REVISION DATES

REVISION DATES (PRELIMINARY STAGE ONLY) 9/12/08 12/19/08 3/09/09 4/28/09

SHEET 5 OF 12

FILE => 57-787rl-k-tst01.dgn

USERNAME => trmikesl DATE PLOTTED => 29-SEP-2010 TIME PLOTTED => 11:32

DIST	COUNTY	ROUTE	KILOMETER POST TOTAL PROJECT	SHEET No	TOTAL SHEETS
11	SD	5,805	R49.9/R51.7, 42.6/46.5	667	886

Caltrans Metric

Peter B Smith 4-28-09
REGISTERED CIVIL ENGINEER DATE

9-27-10
PLANS APPROVAL DATE

REGISTERED PROFESSIONAL ENGINEER Pete B. Smith No. C60122 Exp. 6-30-10 CIVIL STATE OF CALIFORNIA

The State of California or its officers or agents shall not be responsible for the accuracy or completeness of electronic copies of this plan sheet.

SANDAG
401 B STREET,
SAN DIEGO, CA 92101

T.Y. LIN INTERNATIONAL
5030 CAMINO DE LA SIESTA, SUITE 204,
SAN DIEGO, CA 92108

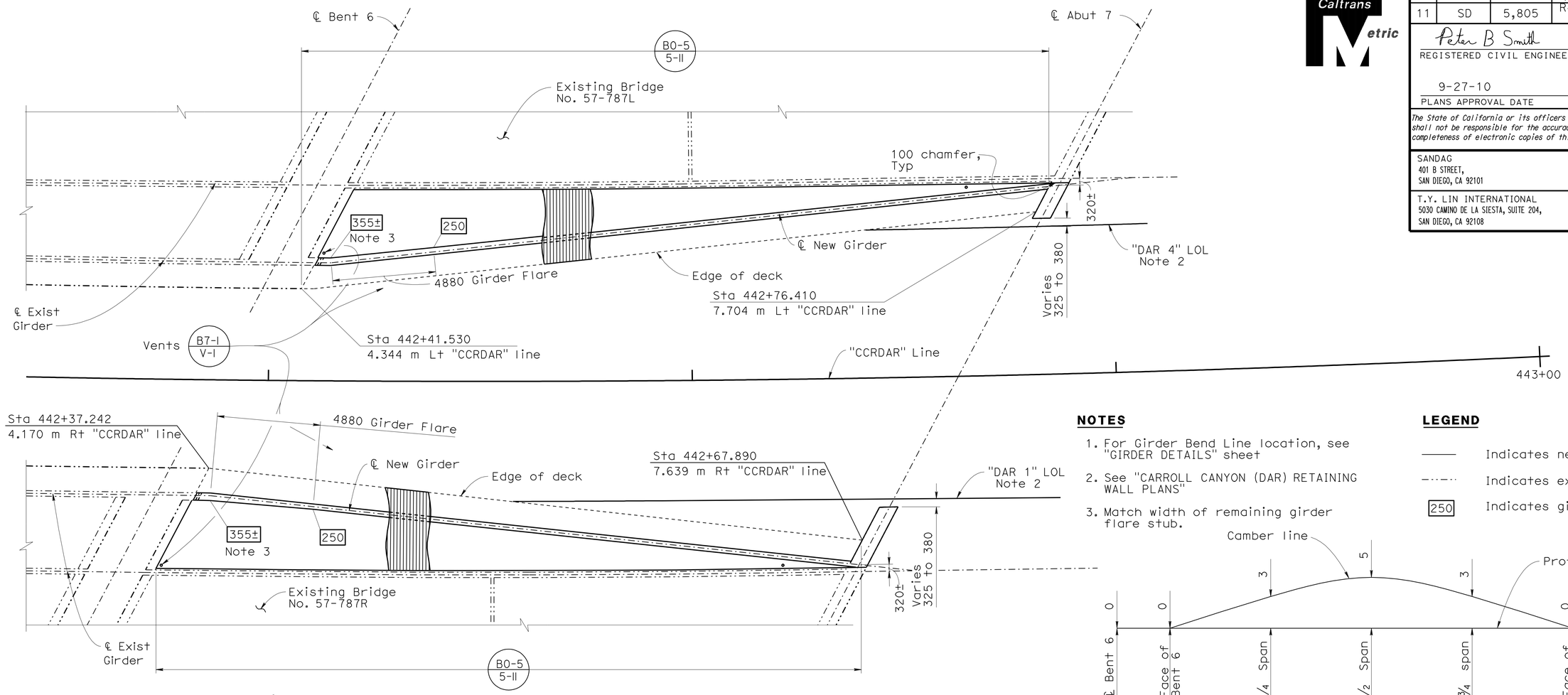

GIRDER LAYOUT
1:100

NOTES

1. For Girder Bend Line location, see "GIRDER DETAILS" sheet
2. See "CARROLL CANYON (DAR) RETAINING WALL PLANS"
3. Match width of remaining girder flare stub.

LEGEND

———	Indicates new construction
—··—··—	Indicates existing bridge
250	Indicates girder stem width

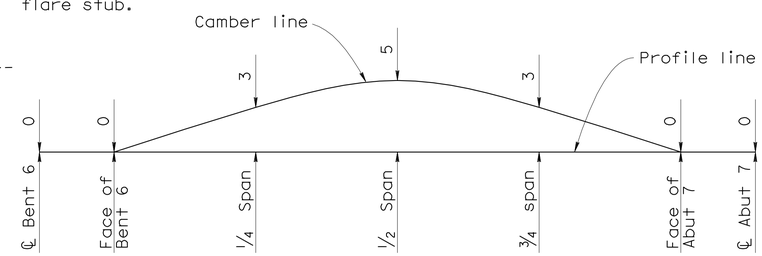

CAMBER DIAGRAM (LEFT BRIDGE GIRDER)
No Scale

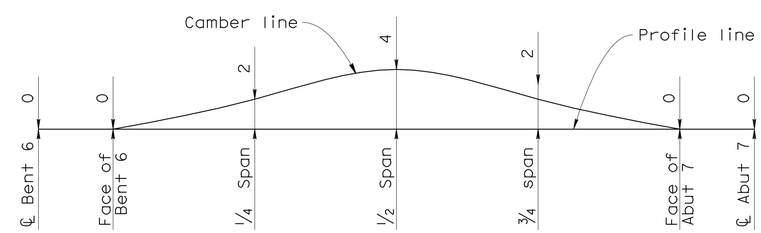

CAMBER DIAGRAM (RIGHT BRIDGE GIRDER)
No Scale

ALL DIMENSIONS ARE IN MILLIMETERS UNLESS OTHERWISE SHOWN

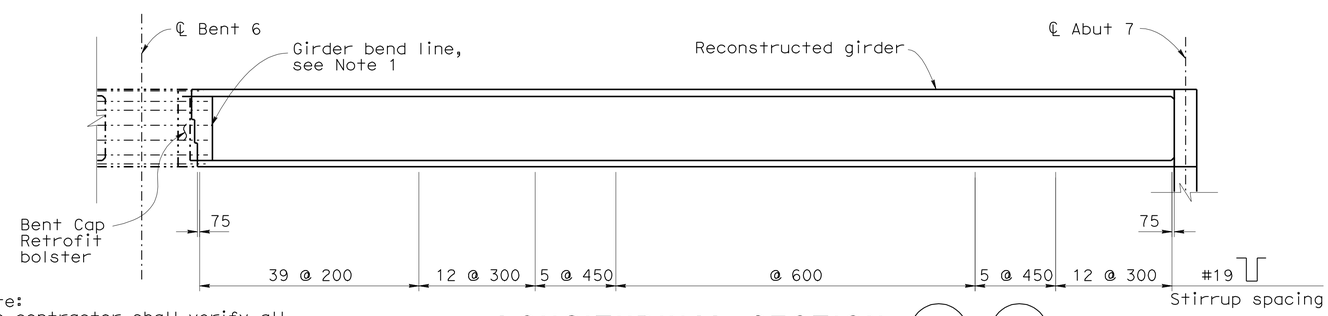

Note:
The contractor shall verify all controlling field dimensions before ordering or fabricating any material.

LONGITUDINAL SECTION
No Scale

B0-5 B7-1

CHUNG-YUAN WEN
DESIGN OVERSIGHT
4-28-09
SIGN OFF DATE

DESIGN DETAIL SHEET (METRIC) (REV. 10/27/05)

	BY	CHECKED
DESIGN	Pete Smith	Jeremy LaHaye
DETAILS	Ivan Martin	Jeremy LaHaye
QUANTITIES	Tatyana Gnip	Shafi Sharifan

PREPARED FOR THE STATE OF CALIFORNIA DEPARTMENT OF TRANSPORTATION

Brett Makley
PROJECT ENGINEER

BRIDGE NO. 57-787R/L
KILOMETER POST KP43.2

SOLEDAD CANYON BR & OH (RECONSTRUCT)
GIRDER LAYOUT

ORIGINAL SCALE IN MILLIMETERS FOR REDUCED PLANS 0 10 20 30 40 50 60 70 80 90 100

CU 11275
EA 2T0401

DISREGARD PRINTS BEARING EARLIER REVISION DATES
REVISION DATES (PRELIMINARY STAGE ONLY) 9/12/08 12/19/08 3/09/09 4/28/09

SHEET 6 OF 12

FILE => 57-787r1-1-g_lo01.dgn

USERNAME => trmikest DATE PLOTTED => 29-SEP-2010 TIME PLOTTED => 11:32

DIST	COUNTY	ROUTE	KILOMETER POST TOTAL PROJECT	SHEET No	TOTAL SHEETS
11	SD	5,805	R49.9/R51.7, 42.6/46.5	668	886

Caltrans Metric

Peter B Smith 4-28-09
REGISTERED CIVIL ENGINEER DATE

9-27-10
PLANS APPROVAL DATE

REGISTERED PROFESSIONAL ENGINEER Pete B. Smith No. C60122 Exp. 6-30-10 CIVIL STATE OF CALIFORNIA

The State of California or its officers or agents shall not be responsible for the accuracy or completeness of electronic copies of this plan sheet.

SANDAG
401 B STREET,
SAN DIEGO, CA 92101

T.Y. LIN INTERNATIONAL
5030 CAMINO DE LA SIESTA, SUITE 204,
SAN DIEGO, CA 92108

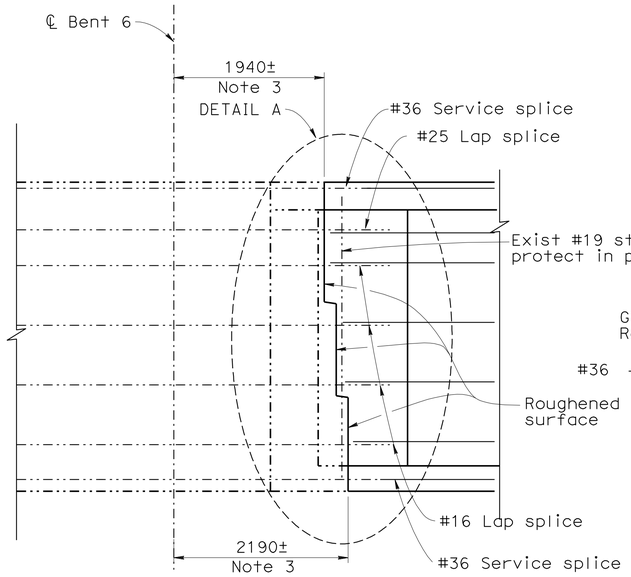

AT BENT 6
1:25

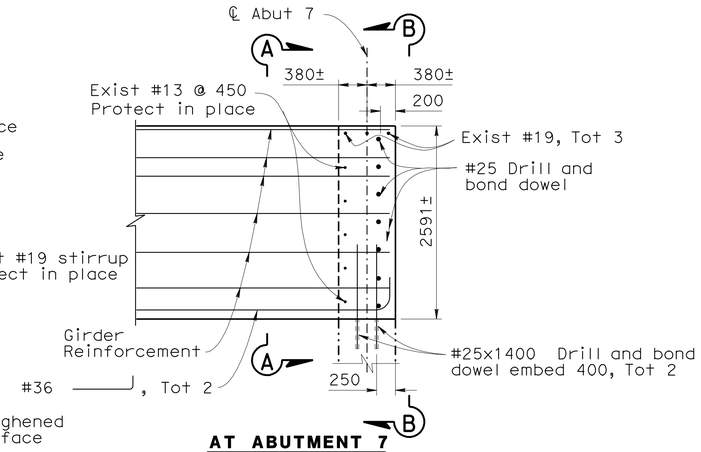

AT ABUTMENT 7
1:40

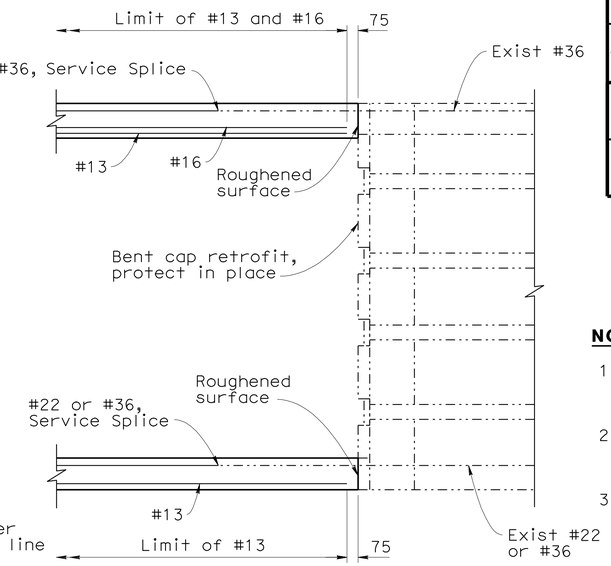

SLAB SPLICING DETAILS
1:20

NOTES

1. For Pile cap, curb, and chain link railing, see "CARROLL CANYON (DAR) RETAINING WALL PLANS".
2. For shotcrete face, CIP face, and expansion joint details, see "CARROLL CANYON (DAR) RETAINING WALL PLANS".
3. Distance to removal line measured along ℄ of existing girder.

GIRDER WEB SPLICE DETAILS

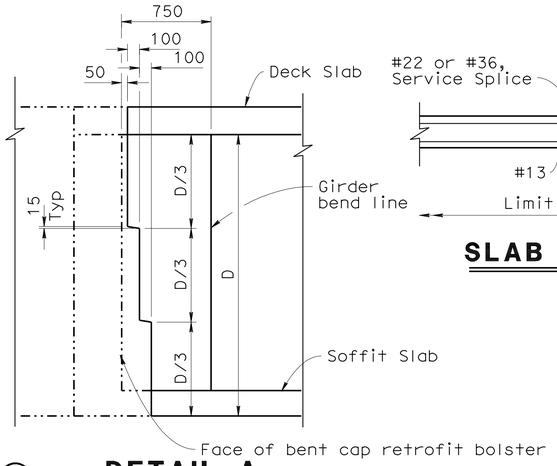

DETAIL A
1:25

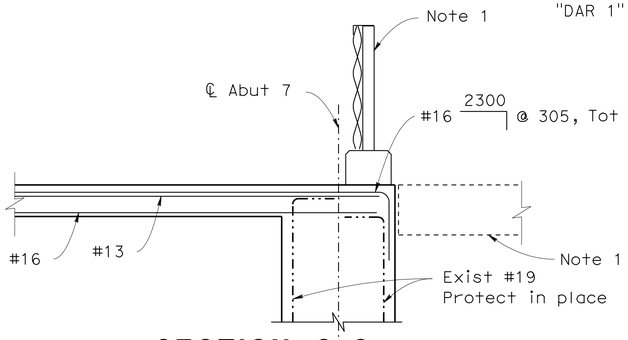

SECTION C-C
1:20

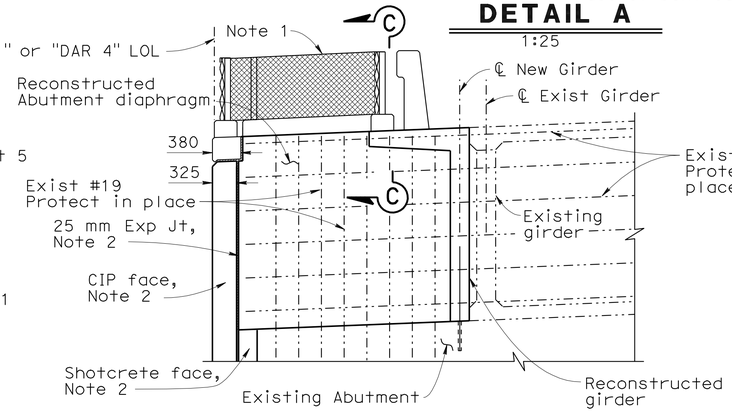

SECTION A-A
1:40

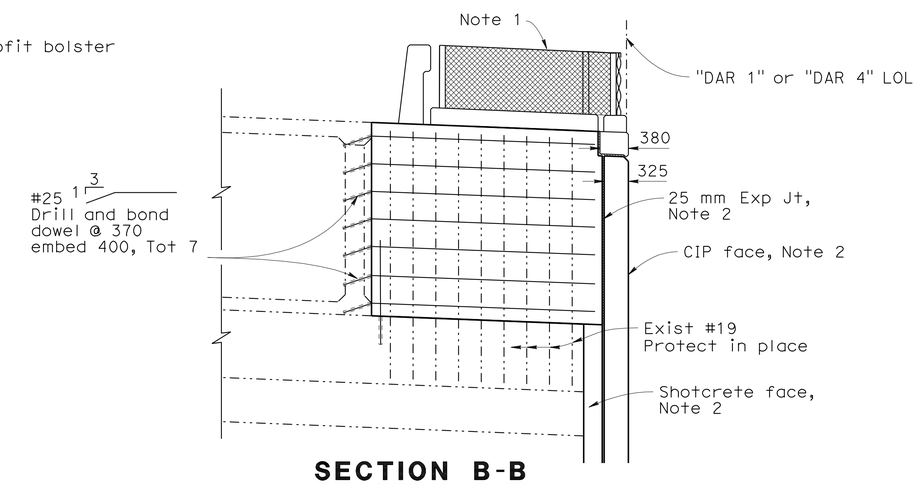

SECTION B-B
1:40

Note:
The contractor shall verify all controlling field dimensions before ordering or fabricating any material.

ALL DIMENSIONS ARE IN MILLIMETERS UNLESS OTHERWISE SHOWN

CHUNG-YUAN WEN	DESIGN	BY Pete Smith	CHECKED Jeremy LaHaye
DESIGN OVERSIGHT 4-28-09	DETAILS	BY Ivan Martin	CHECKED Jeremy LaHaye
SIGN OFF DATE	QUANTITIES	BY Tatyana Gnip	CHECKED Shafi Sharifan

PREPARED FOR THE STATE OF CALIFORNIA DEPARTMENT OF TRANSPORTATION

Brett Makley
PROJECT ENGINEER

BRIDGE NO. 57-787R/L
KILOMETER POST KP43.2

SOLEDAD CANYON BR & OH (RECONSTRUCT)
GIRDER DETAILS

DESIGN DETAIL SHEET (METRIC) (REV. 10/27/05)

ORIGINAL SCALE IN MILLIMETERS FOR REDUCED PLANS 0 10 20 30 40 50 60 70 80 90 100

CU 11275
EA 2T0401

DISREGARD PRINTS BEARING EARLIER REVISION DATES

REVISION DATES (PRELIMINARY STAGE ONLY) 9/12/08 12/19/08 3/09/09 4/28/09

SHEET 7 OF 12

FILE => 57-787r1-1-gdt01.dgn

USERNAME => trmikes1 DATE PLOTTED => 29-SEP-2010 TIME PLOTTED => 11:32

DIST	COUNTY	ROUTE	KILOMETER POST TOTAL PROJECT	SHEET No	TOTAL SHEETS
11	SD	5,805	R49.9/R51.7, 42.6/46.5	669	886

Caltrans Metric

Peter B Smith 4-28-09
REGISTERED CIVIL ENGINEER DATE

9-27-10
PLANS APPROVAL DATE

REGISTERED PROFESSIONAL ENGINEER Pete B. Smith No. C60122 Exp. 6-30-10 CIVIL STATE OF CALIFORNIA

The State of California or its officers or agents shall not be responsible for the accuracy or completeness of electronic copies of this plan sheet.

SANDAG
401 B STREET,
SAN DIEGO, CA 92101

T.Y. LIN INTERNATIONAL
5030 CAMINO DE LA SIESTA, SUITE 204,
SAN DIEGO, CA 92108

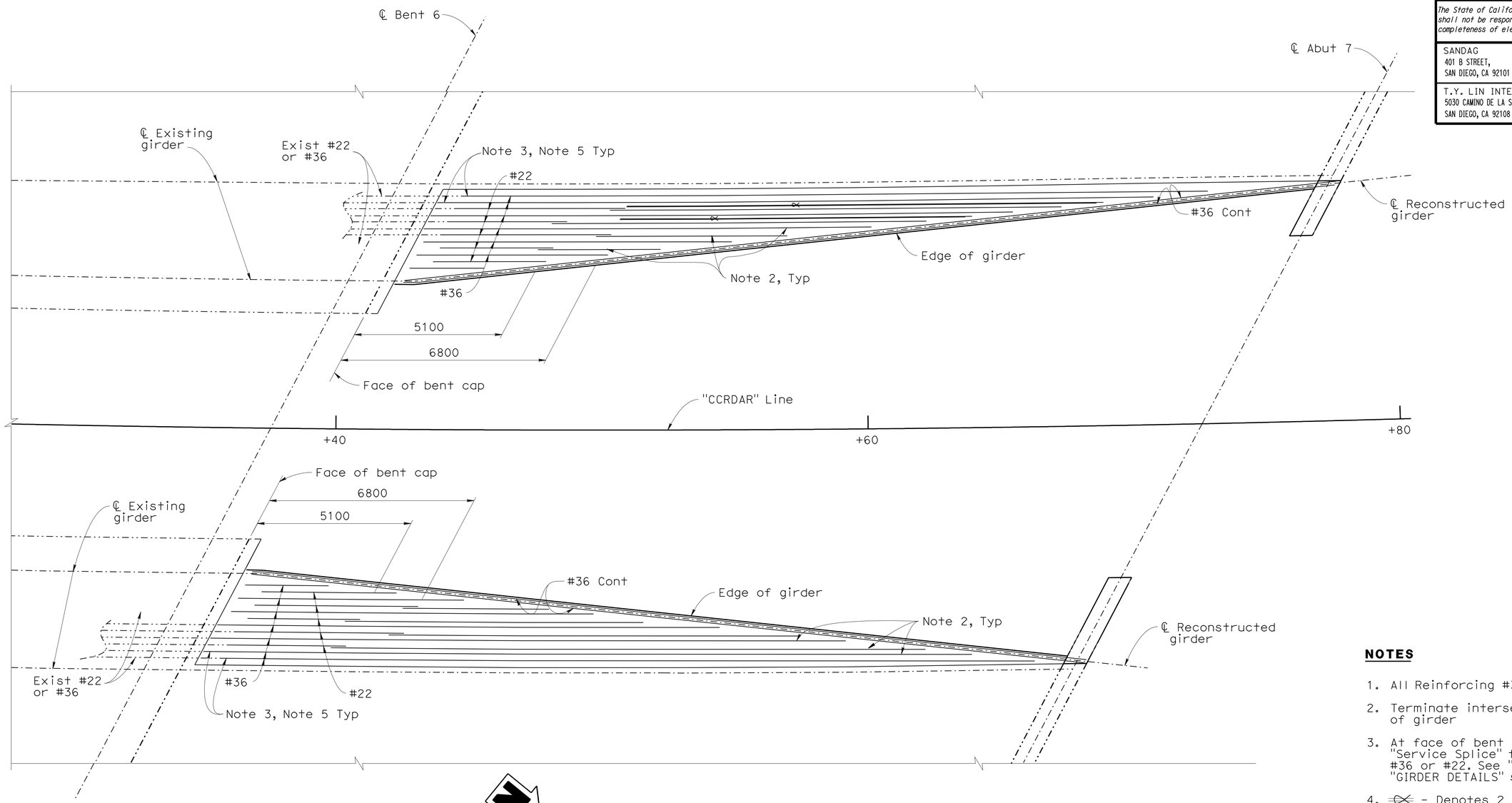

BOTTOM SLAB REINFORCING

1:80

NOTES

1. All Reinforcing #36 except as noted
2. Terminate intersecting bars at face of girder
3. At face of bent cap splice shall be "Service Splice" to existing #36 or #22. See "SECTION C-C" on "GIRDER DETAILS" sheet
4. ⊸⊷ - Denotes 2 - bar bundle
5. Stagger Splices

Note:
The contractor shall verify all controlling field dimensions before ordering or fabricating any material.

ALL DIMENSIONS ARE IN MILLIMETERS UNLESS OTHERWISE SHOWN

CHUNG-YUAN WEN
DESIGN OVERSIGHT
4-28-09
SIGN OFF DATE

	BY	CHECKED
DESIGN	Pete Smith	Jeremy LaHaye
DETAILS	Ivan Martin	Jeremy LaHaye
QUANTITIES	Tatyana Gnip	Shafi Sharifan

PREPARED FOR THE STATE OF CALIFORNIA DEPARTMENT OF TRANSPORTATION

Brett Makley
PROJECT ENGINEER

BRIDGE NO. 57-787R/L
KILOMETER POST KP43.2

SOLEDAD CANYON BR & OH (RECONSTRUCT)

BOTTOM SLAB REINFORCING

DESIGN DETAIL SHEET (METRIC) (REV. 10/27/05)

ORIGINAL SCALE IN MILLIMETERS FOR REDUCED PLANS 0 10 20 30 40 50 60 70 80 90 100

CU 11275
EA 2T0401

DISREGARD PRINTS BEARING EARLIER REVISION DATES → 9/12/08 12/19/08 3/09/09 4/28/09

REVISION DATES (PRELIMINARY STAGE ONLY)

SHEET 8 OF 12

FILE => 57-787r1-o-gbot01.dgn

USERNAME => trmikes1 DATE PLOTTED => 23-SEP-2010 TIME PLOTTED => 11:32

DIST	COUNTY	ROUTE	KILOMETER POST TOTAL PROJECT	SHEET No	TOTAL SHEETS
11	SD	5,805	R49.9/R51.7, 42.6/46.5	670	886

Caltrans Metric

Peter B Smith 4-28-09
REGISTERED CIVIL ENGINEER DATE

9-27-10
PLANS APPROVAL DATE

REGISTERED PROFESSIONAL ENGINEER Pete B. Smith No. C60122 Exp. 6-30-10 CIVIL STATE OF CALIFORNIA

The State of California or its officers or agents shall not be responsible for the accuracy or completeness of electronic copies of this plan sheet.

SANDAG
401 B STREET,
SAN DIEGO, CA 92101

T.Y. LIN INTERNATIONAL
5030 CAMINO DE LA SIESTA, SUITE 204,
SAN DIEGO, CA 92108

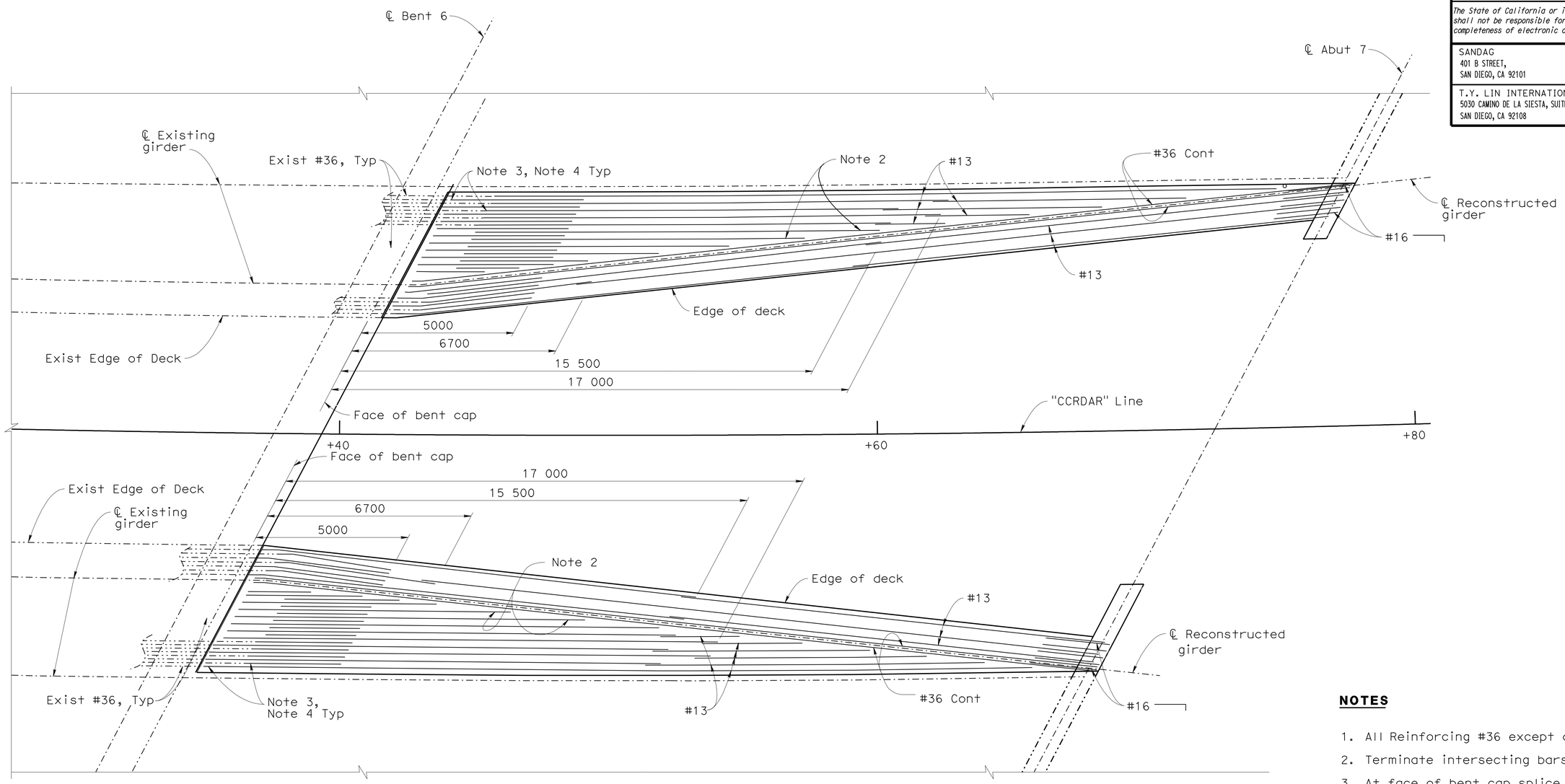

TOP SLAB REINFORCING

1:80

NOTES

1. All Reinforcing #36 except as noted
2. Terminate intersecting bars at face of girder
3. At face of bent cap splice shall be "Service Splice" to existing #36. See "SECTION C-C" on "GIRDER DETAILS" sheet
4. Staggered splices

Note:
The contractor shall verify all controlling field dimensions before ordering or fabricating any material.

ALL DIMENSIONS ARE IN MILLIMETERS UNLESS OTHERWISE SHOWN

CHUNG-YUAN WEN
DESIGN OVERSIGHT
4-28-09
SIGN OFF DATE

	BY	CHECKED
DESIGN	Pete Smith	Jeremy LaHaye
DETAILS	Ivan Martin	Jeremy LaHaye
QUANTITIES	Tatyana Gnip	Shafi Sharifan

PREPARED FOR THE STATE OF CALIFORNIA DEPARTMENT OF TRANSPORTATION

Brett Makley
PROJECT ENGINEER

BRIDGE NO. 57-787R/L
KILOMETER POST KP43.2

SOLEDAD CANYON BR & OH (RECONSTRUCT)

TOP SLAB REINFORCING

DESIGN DETAIL SHEET (METRIC) (REV. 10/27/05)

ORIGINAL SCALE IN MILLIMETERS FOR REDUCED PLANS 0 10 20 30 40 50 60 70 80 90 100

CU 11275
EA 2T0401

DISREGARD PRINTS BEARING EARLIER REVISION DATES

REVISION DATES (PRELIMINARY STAGE ONLY) 9/12/08 12/19/08 3/20/09 4/28/09

SHEET 9 OF 12

FILE => 57-787rl-o-gr_top01.dgn

USERNAME => trmikest DATE PLOTTED => 29-SEP-2010 TIME PLOTTED => 11:33

DIST	COUNTY	ROUTE	KILOMETER POST TOTAL PROJECT	SHEET No	TOTAL SHEETS
11	SD	5,805	R49.9/R51.7, 42.6/46.5	671	886

Caltrans Metric

Peter B Smith 4-28-09
REGISTERED CIVIL ENGINEER DATE

9-27-10
PLANS APPROVAL DATE

REGISTERED PROFESSIONAL ENGINEER Pete B. Smith No. C60122 Exp. 6-30-10 CIVIL STATE OF CALIFORNIA

The State of California or its officers or agents shall not be responsible for the accuracy or completeness of electronic copies of this plan sheet.

SANDAG
401 B STREET,
SAN DIEGO, CA 92101

T.Y. LIN INTERNATIONAL
5030 CAMINO DE LA SIESTA, SUITE 204,
SAN DIEGO, CA 92108

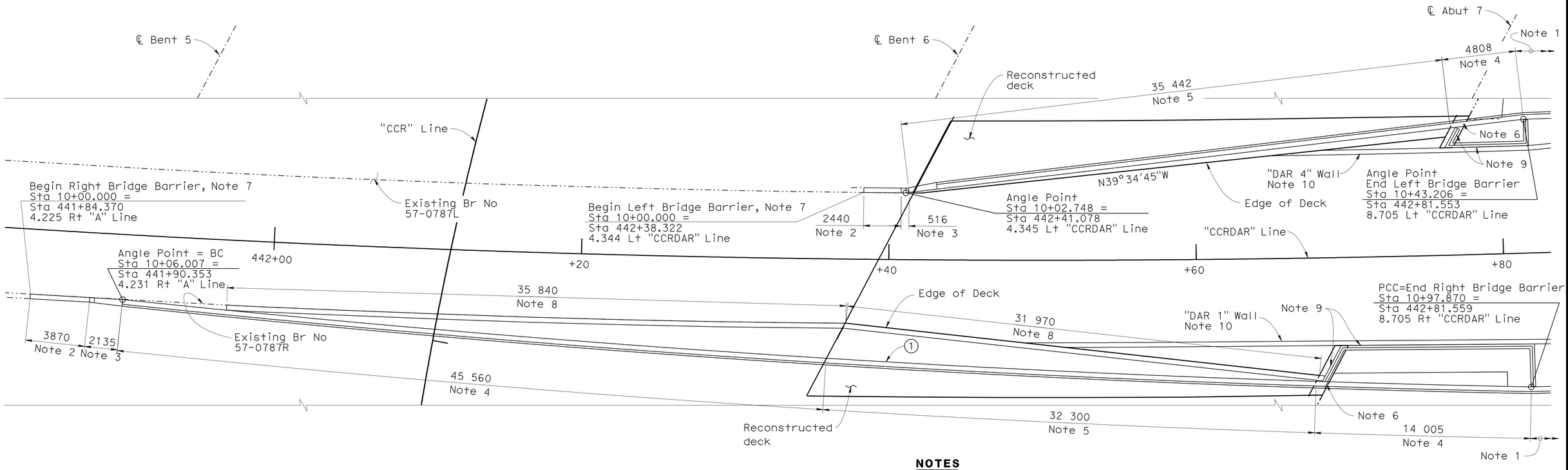

CURVE DATA

No.	R	Δ	T	L
1	1079.565	4°52'31"	45.959	91.862

PLAN
1:125

NOTES

1. See "DAR WALL BARRIER LAYOUT NO. 1" sheet for barrier layout details.
2. See "SECTION A-A" on "BRIDGE BARRIER DETAILS NO. 1" sheet.
3. See "SECTION B-B" on "BRIDGE BARRIER DETAILS NO. 1" sheet.
4. See "SECTION C-C" on "BRIDGE BARRIER DETAILS NO. 1" sheet.
5. Concrete barrier Type 742 See "TYPICAL SECTION" sheet (B11-57)
6. See "BARRIER EXPANSION JOINT DETAIL" on "BRIDGE BARRIER DETAILS NO. 2" sheet.
7. Begin bridge barrier is approximate. Final location of begin bridge barrier to be determined during construction.
8. Curb with chain link railing Type 7 (Mod). See "BRIDGE BARRIER DETAILS NO. 2" sheet.
9. See "CARROLL CANYON (DAR) RETAINING WALL PLANS" for chain link railing on wall.
10. See "CARROLL CANYON (DAR) RETAINING WALL PLANS"

Note:
The contractor shall verify all controlling field dimensions before ordering or fabricating any material.

ALL DIMENSIONS ARE IN MILLIMETERS UNLESS OTHERWISE SHOWN

CHUNG-YUAN WEN
DESIGN OVERSIGHT
4-28-09
SIGN OFF DATE

	BY	CHECKED
DESIGN	Pete Smith	Jeremy LaHaye
DETAILS	Ivan Martin	Jeremy LaHaye
QUANTITIES	Tatyana Gnip	Shafi Sharifan

PREPARED FOR THE STATE OF CALIFORNIA DEPARTMENT OF TRANSPORTATION

Brett Makley
PROJECT ENGINEER

BRIDGE NO. 57-787R/L
KILOMETER POST KP43.2

SOLEDAD CANYON BR & OH (RECONSTRUCT)
BRIDGE BARRIER LAYOUT

DESIGN DETAIL SHEET (METRIC) (REV. 10/27/05)

ORIGINAL SCALE IN MILLIMETERS FOR REDUCED PLANS 0 10 20 30 40 50 60 70 80 90 100

CU 11275
EA 2T0401

DISREGARD PRINTS BEARING EARLIER REVISION DATES
REVISION DATES (PRELIMINARY STAGE ONLY) 9/12/08 12/19/08 3/09/09 4/28/09

SHEET 10 OF 12

FILE => 57-787rl-t-bbr_lo01.dgn

USERNAME => ttmikes1 DATE PLOTTED => 29-SEP-2010 TIME PLOTTED => 11:33

DIST	COUNTY	ROUTE	KILOMETER POST TOTAL PROJECT	SHEET No	TOTAL SHEETS
11	SD	5,805	R49.9/R51.7, 42.6/46.5	672	886

Caltrans Metric

Peter B Smith 4-28-09
REGISTERED CIVIL ENGINEER DATE

9-27-10
PLANS APPROVAL DATE

REGISTERED PROFESSIONAL ENGINEER Pete B. Smith No. C60122 Exp. 6-30-10 CIVIL STATE OF CALIFORNIA

The State of California or its officers or agents shall not be responsible for the accuracy or completeness of electronic copies of this plan sheet.

SANDAG
401 B STREET,
SAN DIEGO, CA 92101

T.Y. LIN INTERNATIONAL
5030 CAMINO DE LA SIESTA, SUITE 204,
SAN DIEGO, CA 92108

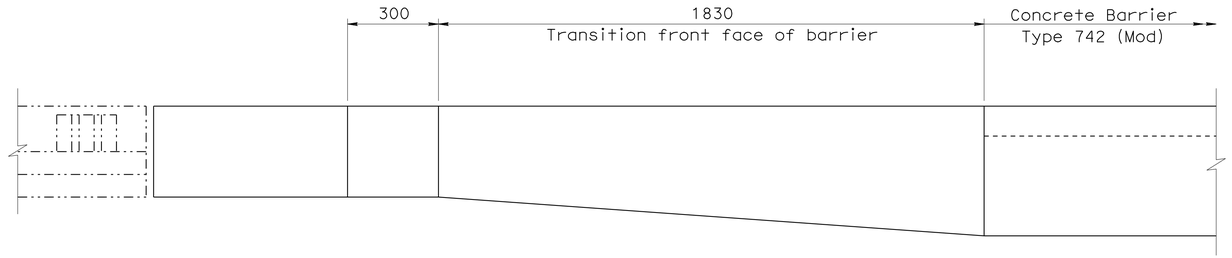

PLAN
1:10

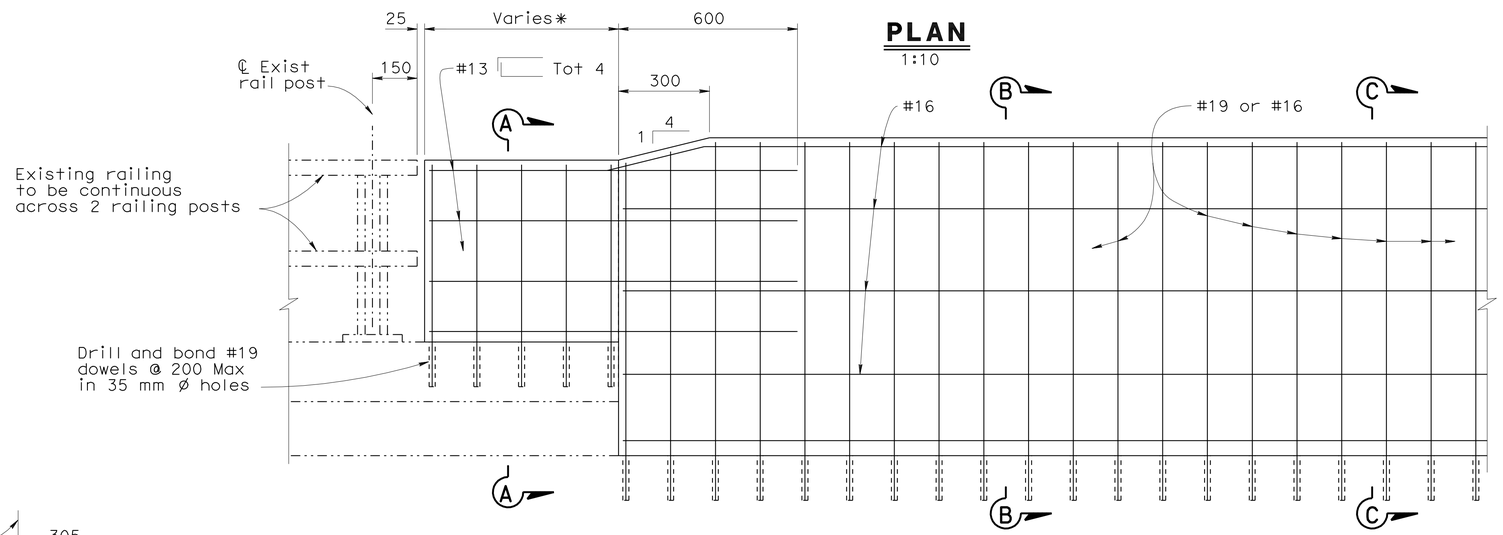

* Length to be determined by preserving the existing bridge railing as continuous across 2 railing posts.

ELEVATION
1:10

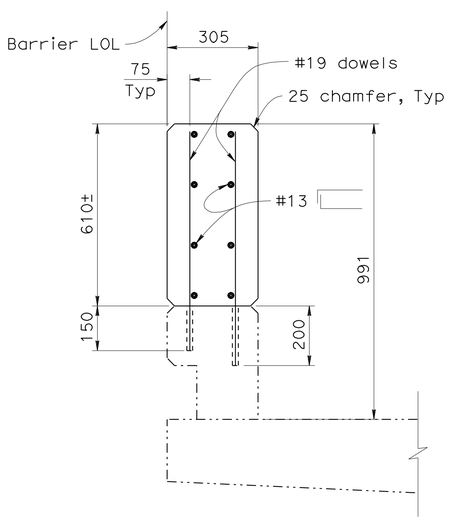

SECTION A-A
1:10

Note:
The contractor shall verify all controlling field dimensions before ordering or fabricating any material.

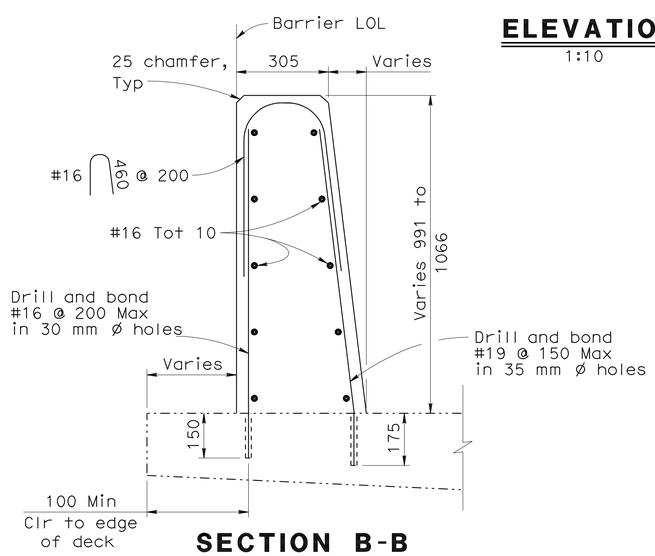

SECTION B-B
1:10

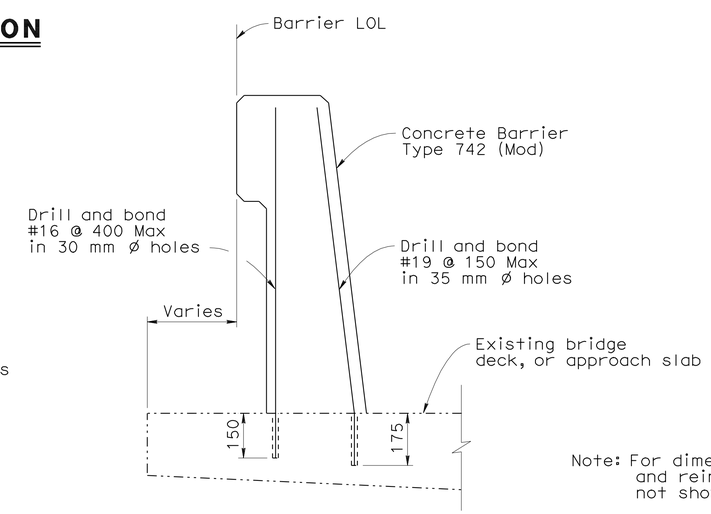

SECTION C-C
1:10

Note: For dimensions and reinforcing not shown, see B11-57

ALL DIMENSIONS ARE IN MILLIMETERS UNLESS OTHERWISE SHOWN

CHUNG-YUAN WEN
DESIGN OVERSIGHT
4-28-09
SIGN OFF DATE

	BY	CHECKED
DESIGN	Pete Smith	Jeremy LaHaye
DETAILS	Ivan Martin	Jeremy LaHaye
QUANTITIES	Tatyana Gnip	Shafi Sharifan

PREPARED FOR THE STATE OF CALIFORNIA DEPARTMENT OF TRANSPORTATION

Brett Makley
PROJECT ENGINEER

BRIDGE NO. 57-787R/L
KILOMETER POST KP43.2

SOLEDAD CANYON BR & OH (RECONSTRUCT)
BRIDGE BARRIER DETAILS NO. 1

DESIGN DETAIL SHEET (METRIC) (REV. 10/27/05)

ORIGINAL SCALE IN MILLIMETERS FOR REDUCED PLANS 0 10 20 30 40 50 60 70 80 90 100

CU 11275
EA 2T0401

DISREGARD PRINTS BEARING EARLIER REVISION DATES
REVISION DATES (PRELIMINARY STAGE ONLY) 9/12/08 12/19/08 3/02/09 4/28/09

SHEET 11 OF 12

FILE => 57-787rl-t-brdt01.dgn

USERNAME => trmikest DATE PLOTTED => 29-SEP-2010 TIME PLOTTED => 11:33

DIST	COUNTY	ROUTE	KILOMETER POST TOTAL PROJECT	SHEET No	TOTAL SHEETS
11	SD	5,805	R49.9/R51.7, 42.6/46.5	673	886

Caltrans Metric

Peter B Smith 4-28-09
REGISTERED CIVIL ENGINEER DATE

9-27-10
PLANS APPROVAL DATE

REGISTERED PROFESSIONAL ENGINEER Pete B. Smith No. C60122 Exp. 6-30-10 CIVIL STATE OF CALIFORNIA

The State of California or its officers or agents shall not be responsible for the accuracy or completeness of electronic copies of this plan sheet.

SANDAG
401 B STREET,
SAN DIEGO, CA 92101

T.Y. LIN INTERNATIONAL
5030 CAMINO DE LA SIESTA, SUITE 204,
SAN DIEGO, CA 92108

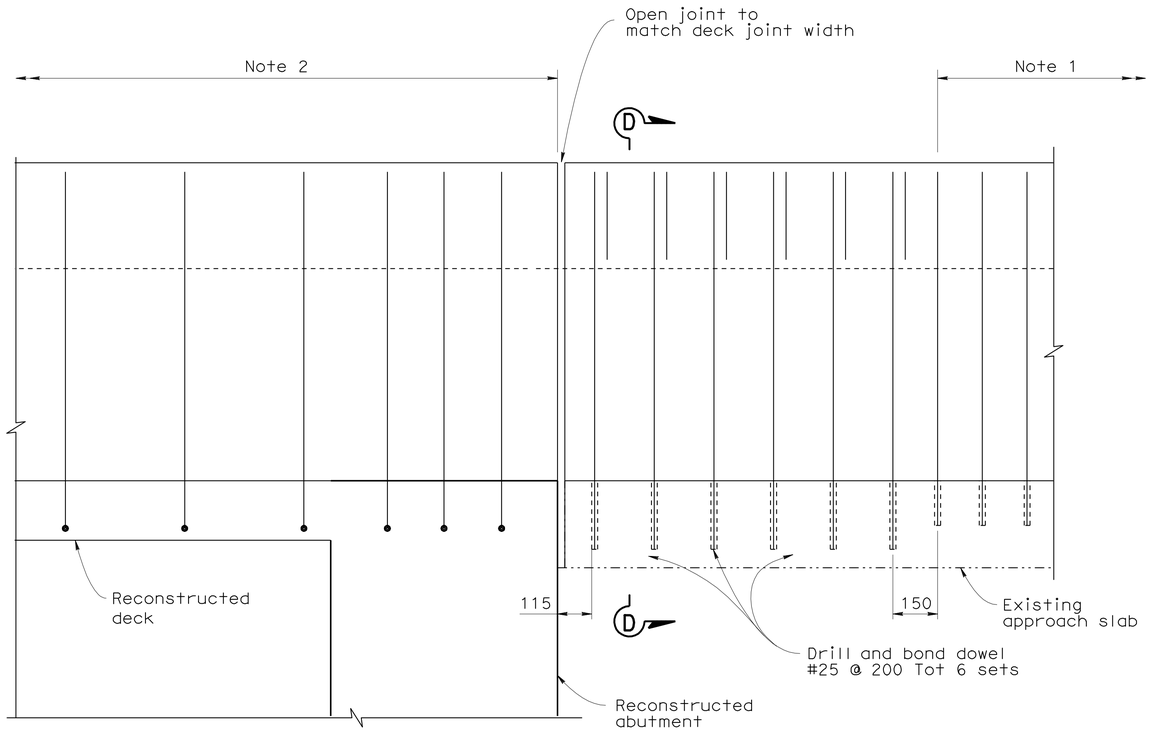

BARRIER EXPANSION JOINT DETAIL
1:10

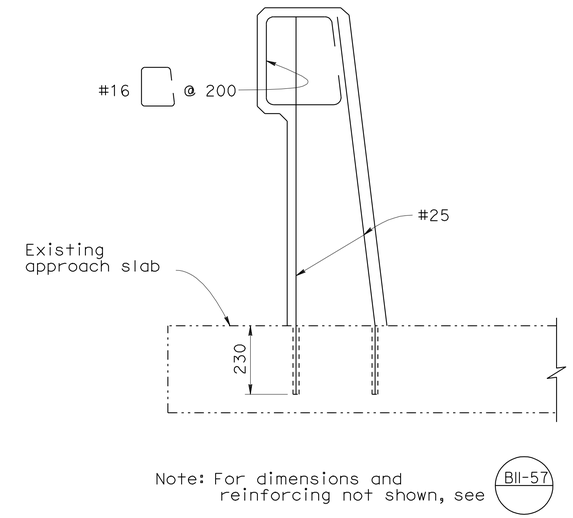

SECTION D-D
1:10

NOTES

1. See "SECTION C-C" on "BRIDGE BARRIER DETAILS NO. 1" sheet
2. Concrete barrier Type 742 (BII-57)
3. See (BII-57) for details not shown

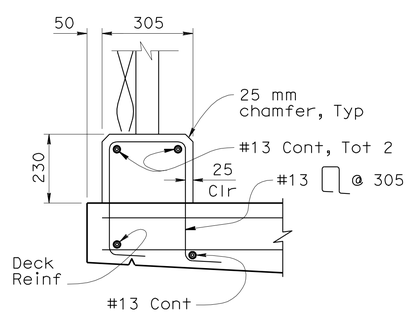

CURB DETAIL RECONSTRUCTED DECK
1:10

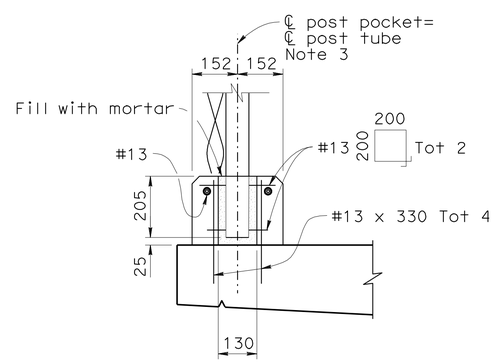

POST ANCHORAGE DETAIL RECONSTRUCTED DECK
1:10

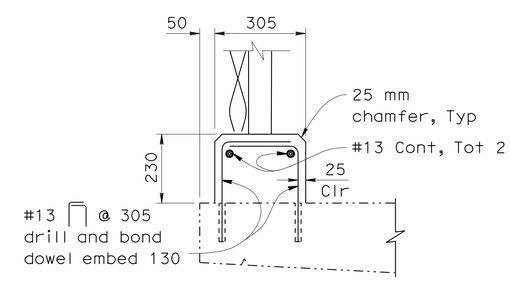

CURB DETAIL EXISTING DECK
1:10

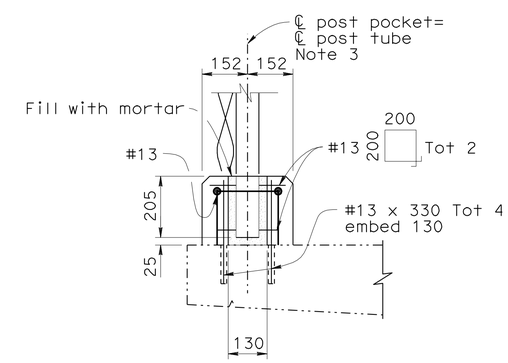

POST ANCHORAGE DETAIL EXISTING DECK
1:10

Note:
The contractor shall verify all controlling field dimensions before ordering or fabricating any material.

ALL DIMENSIONS ARE IN MILLIMETERS UNLESS OTHERWISE SHOWN

CHUNG-YUAN WEN
DESIGN OVERSIGHT
4-28-09
SIGN OFF DATE

	BY	CHECKED
DESIGN	Pete Smith	Jeremy LaHaye
DETAILS	Ivan Martin	Jeremy LaHaye
QUANTITIES	Tatyana Gnip	Shafi Sharifan

PREPARED FOR THE STATE OF CALIFORNIA DEPARTMENT OF TRANSPORTATION

Brett Makley
PROJECT ENGINEER

BRIDGE NO. 57-787R/L
KILOMETER POST KP43.2

SOLEDAD CANYON BR & OH (RECONSTRUCT)

BRIDGE BARRIER DETAILS NO. 2

DESIGN DETAIL SHEET (METRIC) (REV. 10/27/05)

ORIGINAL SCALE IN MILLIMETERS FOR REDUCED PLANS 0 10 20 30 40 50 60 70 80 90 100

CU 11275
EA 2T0401

DISREGARD PRINTS BEARING EARLIER REVISION DATES

REVISION DATES (PRELIMINARY STAGE ONLY) 9/12/08 12/19/08 3/09/09 4/28/09

SHEET 12 OF 12

FILE => 57-787rl-t-brdt02.dgn

USERNAME => trmikest DATE PLOTTED => 29-SEP-2010 TIME PLOTTED => 11:33

DIST	COUNTY	ROUTE	KILOMETER POST TOTAL PROJECT	SHEET No	TOTAL SHEETS
11	SD	5,805	R49.9/R51.7, 42.6/46.5	674	886

REGISTERED CIVIL ENGINEER — DATE 4-28-09

9-27-10
PLANS APPROVAL DATE

The State of California or its officers or agents shall not be responsible for the accuracy or completeness of electronic copies of this plan sheet.

REGISTERED PROFESSIONAL ENGINEER — James L. Rucker — No. 47796 — Exp. 12-31-09 — CIVIL — STATE OF CALIFORNIA

SANDAG
401 B STREET,
SAN DIEGO, CA 92101

T.Y. LIN INTERNATIONAL
5030 CAMINO DE LA SIESTA, SUITE 204,
SAN DIEGO, CA 92108

Caltrans Metric

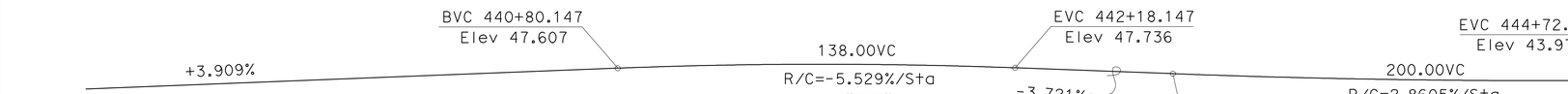

PROFILE GRADE

No Scale

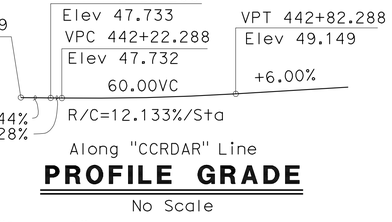

PROFILE GRADE

No Scale

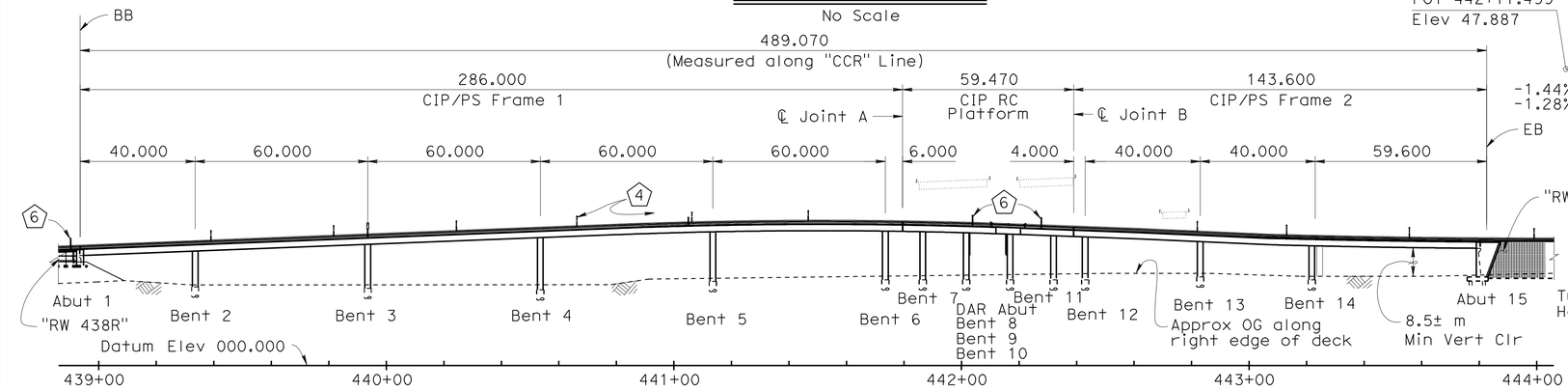

DEVELOPED ELEVATION

1:1000

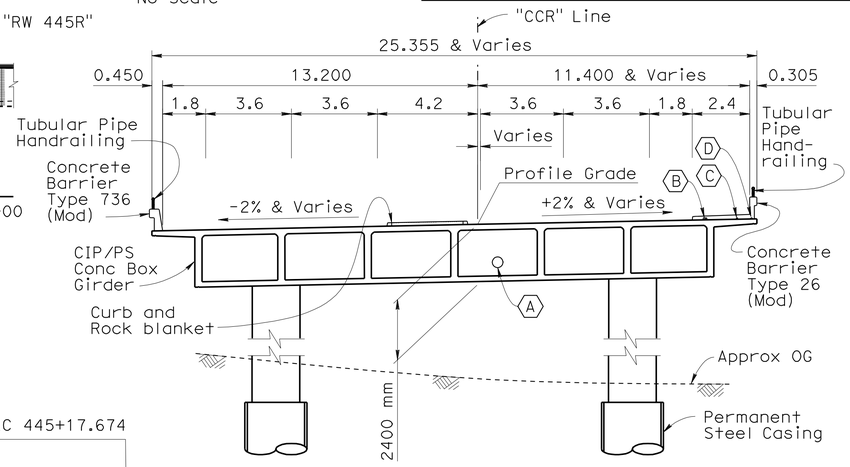

TYPICAL SECTION (FRAMES 1 & 2)

1:125

Note:
For Section at platform see, "PLATFORM SECTION NO.1", "PLATFORM SECTION NO.2" and "PLATFORM SECTION NO.3" sheets

CURVE DATA

No.	R	Δ	T	L
1	1066.802	51°0'06"	508.858	949.611
2	1219.202±	17°53'58"±	192.006±	380.884±
3	914.402±	3°55'21"±	31.313±	62.601±
4	218.000	61°52'07"	130.648	235.399
5	260.000	29°19'28"	68.026	133.070
6	14.550	76°33'06"	11.481	19.440

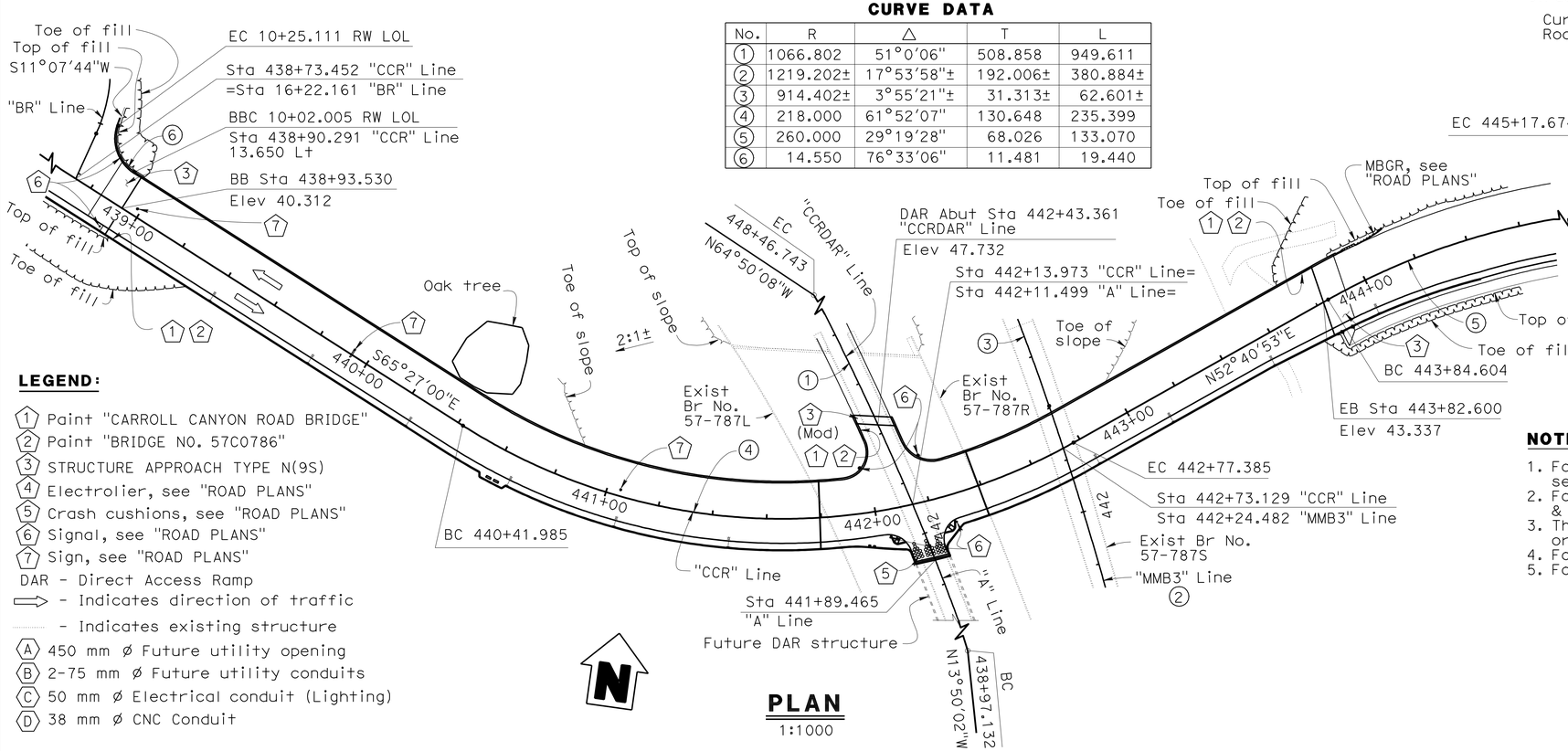

PLAN

1:1000

LEGEND:

1. Paint "CARROLL CANYON ROAD BRIDGE"
2. Paint "BRIDGE NO. 57C0786"
3. STRUCTURE APPROACH TYPE N(9S)
4. Electrolier, see "ROAD PLANS"
5. Crash cushions, see "ROAD PLANS"
6. Signal, see "ROAD PLANS"
7. Sign, see "ROAD PLANS"

DAR - Direct Access Ramp
⟹ - Indicates direction of traffic
····· - Indicates existing structure

A. 450 mm ø Future utility opening
B. 2-75 mm ø Future utility conduits
C. 50 mm ø Electrical conduit (Lighting)
D. 38 mm ø CNC Conduit

NOTES:

1. For "GENERAL NOTES", "STANDARD PLANS", and "INDEX TO PLANS", see "INDEX TO PLANS" sheet.
2. For deck drain, see "DECK DRAIN LAYOUT NO. 1", "DECK DRAIN LAYOUT NO. 2" & "DECK DRAIN DETAILS" sheets.
3. The contractor shall verify all controlling field dimensions before ordering or fabricating any material.
4. For "PILE DATA TABLE", see "FOUNDATION PLAN NO.1" sheet.
5. For "QUANTITIES" see "INDEX TO PLANS" sheet.

ALL DIMENSIONS ARE IN METERS UNLESS OTHERWISE SHOWN

CHUNG-YUAN WEN
DESIGN OVERSIGHT
4-28-09
SIGN OFF DATE

	BY	CHECKED
DESIGN	Roya Golchoobian	Pete Smith
DETAILS	Andy Toledo	Pete Smith
QUANTITIES	Oscar Colcol	Xiaoyun Wu

LRFD	LIVE LOADING: HL93 W/ "LOW-BOY" AND PERMIT DESIGN VEHICLE		
LAYOUT	BY Andy Toledo	CHECKED Roya Golchoobian	
SPECIFICATIONS	BY Jeremy LaHaye	PLANS AND SPECS COMPARED Jim Rucker	

PREPARED FOR THE STATE OF CALIFORNIA DEPARTMENT OF TRANSPORTATION

Brett Makley
PROJECT ENGINEER

BRIDGE NO. 57C0786
KILOMETER POST KP43.2

CARROLL CANYON ROAD BRIDGE
GENERAL PLAN

DESIGN GENERAL PLAN SHEET (METRIC) (REV. 10/27/05)

ORIGINAL SCALE IN MILLIMETERS FOR REDUCED PLANS 0 10 20 30 40 50 60 70 80 90 100

CU 11275
EA 2T0401

DISREGARD PRINTS BEARING EARLIER REVISION DATES

REVISION DATES (PRELIMINARY STAGE ONLY): 9/12/08 12/19/08 3/9/09 4/15/09 4-28-09

SHEET 1 OF 74

FILE => 57-c0786-a-gp01.dgn

USERNAME => ttmirkes1 DATE PLOTTED => 29-SEP-2010 TIME PLOTTED => 11:33

DIST	COUNTY	ROUTE	KILOMETER POST TOTAL PROJECT	SHEET No	TOTAL SHEETS
11	SD	5,805	R49.9/R51.7, 42.6/46.5	675	886

REGISTERED CIVIL ENGINEER 4-28-09 DATE

9-27-10
PLANS APPROVAL DATE

REGISTERED PROFESSIONAL ENGINEER James L. Rucker No. 47796 Exp. 12-31-09 CIVIL STATE OF CALIFORNIA

The State of California or its officers or agents shall not be responsible for the accuracy or completeness of electronic copies of this plan sheet.

SANDAG
401 B STREET,
SAN DIEGO, CA 92101

T.Y. LIN INTERNATIONAL
5030 CAMINO DE LA SIESTA, SUITE 204,
SAN DIEGO, CA 92108

GENERAL NOTES
LOAD AND RESISTANCE FACTOR DESIGN

DESIGN: AASHTO LRFD Bridge Design Specifications 3rd edition with Interims through 2005/2006 and the CALTRANS Amendments v.3.06.01 except that details taken from Standard Plans dated July 2004 and Standard Bridge Details XS sheets, are designed using Bridge Design Specifications April 2000 ('96 AASHTO w/ Revisions by CALTRANS)

SEISMIC DESIGN: Caltrans Seismic Design Criteria (SDC), V1.4, dated June 2006

DEAD LOAD: Includes 1675 Pa for future wearing surface.

LIVE LOADING: HL93 and permit design load.

SEISMIC LOADING: Soil Profile Type D
(Mw=7.0±0.25) Peak Rock Acceleration = 0.5g
Modified by 20% increase in the spectral acceleration for periods of 1.0 sec and greater
no increase for periods less than 0.5 sec, and linear interpolation between 0.5 & 1.0 sec

ACCELERATION RESPONSE SPECTRUM
5% Damping

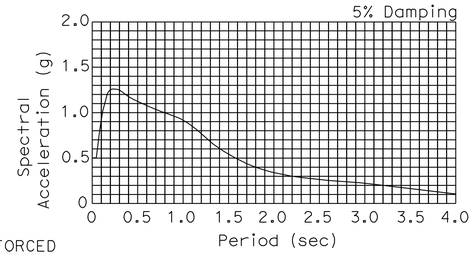

REINFORCED CONCRETE: ASTM A706
fy = 420MPa
f'c = 25MPa
n = 8

PRESTRESSED CONCRETE: See "PRESTRESSING NOTES" on "GIRDER LAYOUT NO.1" and "GIRDER LAYOUT NO.3" sheet

QUANTITIES

STRUCTURE EXCAVATION (BRIDGE)	2100	m3
STRUCTURE EXCAVATION (RETAINING WALL)	130	m3
STRUCTURE BACKFILL (BRIDGE)	1150	m3
STRUCTURE BACKFILL (RETAINING WALL)	100	m3
PERVIOUS BACKFILL MATERIAL (RETAINING WALL)	9	m3
ROCK BLANKET	750	m2
2.6 M PERMANENT STEEL CASING	276	m
1.2 M CAST-IN-DRILLED-HOLE CONCRETE PILING	118	m
1.5 M CAST-IN-DRILLED-HOLE CONCRETE PILING	158	m
2.4 M CAST-IN-DRILLED-HOLE CONCRETE PILING	769	m
900 MM CAST-IN-DRILLED-HOLE CONCRETE PILING	92	m
PRESTRESSING CAST-IN-PLACE CONCRETE	LUMP	SUM
STRUCTURAL CONCRETE, BRIDGE FOOTING	355	m3
STRUCTURAL CONCRETE, BRIDGE	11 335	m3
STRUCTURAL CONCRETE, RETAINING WALL	49	m3
STRUCTURAL CONCRETE, APPROACH SLAB (TYPE N)	157	m3
STRUCTURAL CONCRETE, APPROACH SLAB (TYPE N MODIFIED)	15	m3
ARCHITECTURAL TREATMENT (RANDOM FLUTE TEXTURE)	22	m2
JOINT SEAL ASSEMBLY (MR 100 MM)	25	m
JOINT SEAL ASSEMBLY (MR 101 MM - 160 MM)	51	m
JOINT SEAL ASSEMBLY (MR 161 MM - 240 MM)	25	m
JOINT SEAL (MR 25 MM)	14	m
BAR REINFORCING STEEL (BRIDGE)	2 997 000	kg
BAR REINFORCING STEEL (RETAINING WALL)	4000	kg
WELDED STEEL PIPE CASING (BRIDGE)	24	m
MINOR CONCRETE (CURB)	442	m
ISOLATION CASING (3.3 m)	31 700	kg
MISCELLANEOUS METAL (BRIDGE)	32 500	kg
BRIDGE DECK DRAINAGE SYSTEM	16 000	kg
TUBULAR PIPE HANDRAILING	1046	m
CONCRETE BARRIER (TYPE 26 MODIFIED)	511	m
CONCRETE BARRIER (TYPE 736 MODIFIED)	534	m

STANDARD PLANS (DATED JULY 2004)

	A10A	ACRONYMS AND ABBREVIATIONS (A-L)
	A10B	ACRONYMS AND ABBREVIATIONS (M-Z)
	A10C	SYMBOLS (SHEET 1 OF 2)
	A10D	SYMBOLS (SHEET 2 OF 2)
	A62C	LIMITS OF PAYMENT FOR EXCAVATION AND BACKFILL BRIDGE
	A77J3	METAL BEAM GUARD RAILING CONNECTIONS TO ABUTMENTS AND WALLS
RSP	A87A	CURBS AND DRIVEWAYS
RSP	A88A	CURB RAMP DETAILS
	B0-1	BRIDGE DETAILS
	B0-3	BRIDGE DETAILS
	B0-5	BRIDGE DETAILS
	B0-13	BRIDGE DETAILS
	B3-1	RETAINING WALL TYPE 1 H=1200 THROUGH 9100 mm
	B3-8	RETAINING WALL DETAILS NO.1
RSP	B6-21	JOINT SEAL (MAXIMUM MOVEMENT RATING = 50 mm)
	B7-1	BOX GIRDER DETAILS
	B7-6	DECK DRAINS TYPE D-1 AND D-2
	B7-8	DECK DRAINAGE DETAILS
	B7-10	UTILITY OPENING BOX GIRDER
	B7-11	UTILITY DETAILS
RSP	B8-5	CAST-IN-PLACE PRESTRESSED GIRDER DETAILS
	B11-51	TUBULAR HAND RAILING
	B11-54	CONCRETE BARRIER TYPE 26
	B11-56	CONCRETE BARRIER TYPE 736
	B14-3	COMMUNICATION AND SPRINKLER CONTROL CONDUITS (CONDUITS LESS THAN SIZE 103)
RSP	ES-2E	ELECTRICAL SYSTEMS (SERVICE EQUIPMENT AND TYPICAL WIRING DIAGRAM TYPE III - C SERIES)
RSP	ES-3C	ELECTRICAL SYSTEMS (CONTROLLER CABINET DETAILS)
RSP	ES-6A	ELECTRICAL SYSTEMS (LIGHTING STANDARDS TYPE 15 AND 21)
	ES-6B	ELECTRICAL SYSTEMS (LIGHTING STANDARDS TYPE 15 AND 21 BARRIER RAIL MOUNTED DETAILS)
RSP	ES-7A	ELECTRICAL SYSTEMS (SIGNAL STANDARDS PUSH BUTTON POSTS AND TYPE 15TS STANDARD)
RSP	ES-7C	ELECTRICAL SYSTEMS (SIGNAL AND LIGHTING STANDARDS CASE 1 ARM LOADING WIND VELOCITY=161 km/h, ARM LENGTHS 4.6 m TO 9.1 m)
RSP	ES-7D	ELECTRICAL SYSTEMS (SIGNAL AND LIGHTING STANDARDS CASE 2 ARM LOADING WIND VELOCITY=161 km/h, ARM LENGTHS 4.6 m TO 9.1 m)
RSP	ES-7E	ELECTRICAL SYSTEMS (SIGNAL AND LIGHTING STANDARDS CASE 3 ARM LOADING WIND VELOCITY=161 km/h, ARM LENGTHS 4.6 m TO 13.7 m)
	ES-7F	ELECTRICAL SYSTEMS (SIGNAL AND LIGHTING STANDARDS CASE 4 ARM LOADING, WIND VELOCITY=161 km/h, ARM LENGTHS 7.6 m TO 13.7 m)
RSP	ES-7G	ELECTRICAL SYSTEMS (SIGNAL AND LIGHTING STANDARDS CASE 5 ARM LOADING WIND VELOCITY=161 km/h, ARM LENGTHS 15.2 m TO 16.8 m)
RSP	ES-7M	ELECTRICAL SYSTEMS (SIGNAL AND LIGHTING STANDARDS DETAILS No. 1)
	ES-7N	ELECTRICAL SYSTEMS (SIGNAL AND LIGHTING STANDARDS DETAILS No. 2)
RSP	ES-9A	ELECTRICAL SYSTEMS (ELECTRICAL DETAILS STRUCTURE INSTALLATIONS)
RSP	ES-9B	ELECTRICAL SYSTEMS (ELECTRICAL DETAILS STRUCTURE INSTALLATIONS)
RSP	ES-9C	ELECTRICAL SYSTEMS (ELECTRICAL DETAILS STRUCTURE INSTALLATIONS)
	ES-9D	ELECTRICAL SYSTEMS (ELECTRICAL DETAILS STRUCTURE INSTALLATIONS)
RSP	ES-11	ELECTRICAL SYSTEMS (FOUNDATION INSTALLATIONS)
RSP	S48	OVERHEAD SIGNS-LIGHTWEIGHT POST DETAILS

Standard Plan (July 2004) Sheet No.

Detail No.

INDEX TO PLANS

SHEET NO.	TITLE
1.	GENERAL PLAN
2.	INDEX TO PLANS
3.	STRUCTURE PLAN NO.1
4.	STRUCTURE PLAN NO.2
5.	STRUCTURE PLAN NO.3
6.	STRUCTURE PLAN NO.4
7.	TEMPORARY/CONSTRUCTION CLEARANCES AND FALSEWORK DIAGRAM
8.	DECK CONTOURS NO.1
9.	DECK CONTOURS NO.2
10.	DECK CONTOURS NO.3
11.	DECK CONTOURS NO.4
12.	FOUNDATION PLAN NO.1
13.	FOUNDATION PLAN NO.2
14.	FOUNDATION PLAN NO.3
15.	FOUNDATION PLAN NO.4
16.	ABUTMENT 1 LAYOUT
17.	ABUTMENT 15 LAYOUT
18.	DAR ABUTMENT LAYOUT
19.	ABUTMENT DETAILS NO.1
20.	ABUTMENT DETAILS NO.2
21.	ABUTMENT DETAILS NO.3
22.	DAR ABUTMENT DETAILS
23.	ABUTMENT PILE DETAILS
24.	RETAINING WALL DETAILS
25.	BENT LAYOUT
26.	BENT DETAILS NO.1
27.	BENT DETAILS NO.2
28.	PLATFORM BENT LAYOUT NO.1
29.	PLATFORM BENT LAYOUT NO.2
30.	PLATFORM BENT LAYOUT NO.3
31.	PLATFORM BENT LAYOUT NO.4
32.	PLATFORM BENT LAYOUT NO.5
33.	PLATFORM BENT DETAILS NO.1
34.	PLATFORM BENT DETAILS NO.2
35.	PLATFORM BENT DETAILS NO.3
36.	PLATFORM BENT DETAILS NO.4
37.	TYPICAL SECTION
38.	PLATFORM SECTION NO.1
39.	PLATFORM SECTION NO.2
40.	PLATFORM SECTION NO.3
41.	GIRDER LAYOUT NO.1
42.	GIRDER LAYOUT NO.2
43.	GIRDER LAYOUT NO.3
44.	GIRDER DETAILS NO.1
45.	GIRDER DETAILS NO.2
46.	
47.	PLATFORM LAYOUT
48.	PLATFORM GIRDER LAYOUT
49.	PLATFORM TOP REINFORCEMENT
50.	PLATFORM REINFORCEMENT DETAILS NO.1
51.	PLATFORM REINFORCEMENT DETAILS NO.2
52.	PLATFORM ADDITIONAL REINFORCEMENT
53.	PLATFORM GIRDER REINFORCEMENT
54.	JOINT SEAL ASSEMBLY DETAILS NO. 1 (MAXIMUM MOVEMENT RATING=100 MM)
55.	JOINT SEAL ASSEMBLY DETAILS NO. 2 MOVEMENT RATING GREATER THAN 100 MM
56.	JOINT SEAL ASSEMBLY DETAILS NO. 3 MOVEMENT RATING GREATER THAN 100 MM
57.	DECK DRAINAGE LAYOUT NO.1
58.	DECK DRAINAGE LAYOUT NO.2
59.	DECK DRAINAGE DETAILS
60.	STRUCTURE APPROACH TYPE N(9S)
61.	STRUCTURE APPROACH DRAINAGE DETAILS
62.	BARRIER DETAILS
63.	TUBULAR PIPE HANDRAILING
64.	SIGN AND SIGNAL SUPPORT DETAILS NO.1
65.	SIGN AND SIGNAL SUPPORT DETAILS NO.2
66.	SIGN AND SIGNAL SUPPORT DETAILS NO.3
67.	BARRIER LIMITS
68.	LOG OF TEST BORINGS 1 OF 7
69.	LOG OF TEST BORINGS 2 OF 7
70.	LOG OF TEST BORINGS 3 OF 7
71.	LOG OF TEST BORINGS 4 OF 7
72.	LOG OF TEST BORINGS 5 OF 7
73.	LOG OF TEST BORINGS 6 OF 7
74.	LOG OF TEST BORINGS 7 OF 7

Note: See "DECK CONTOURS NO.4" sheet for "CONCRETE STRENGTH AND TYPE LIMITS" diagram

ALL DIMENSIONS ARE IN MILLIMETERS UNLESS OTHERWISE SHOWN

CHUNG-YUAN WEN
DESIGN OVERSIGHT
4-28-09
SIGN OFF DATE

	BY	CHECKED
DESIGN	Roya Golchoobian	Pete Smith
DETAILS	Andy Toledo	Pete Smith
QUANTITIES	Oscar Colcol	Xiaoyun Wu

PREPARED FOR THE STATE OF CALIFORNIA DEPARTMENT OF TRANSPORTATION

Brett Makley
PROJECT ENGINEER

BRIDGE NO. 57C0786
KILOMETER POST KP43.2

CARROLL CANYON ROAD BRIDGE
INDEX TO PLANS

DESIGN DETAIL SHEET (METRIC) (REV. 10/27/05)

ORIGINAL SCALE IN MILLIMETERS FOR REDUCED PLANS 0 10 20 30 40 50 60 70 80 90 100

CU 11275
EA 2T0401

DISREGARD PRINTS BEARING EARLIER REVISION DATES

REVISION DATES (PRELIMINARY STAGE ONLY) 9/12/08 12/19/08 3/9/09 4/15/09 4-28-09

SHEET 2 OF 74

FILE => 57-c0786-a-itp.dgn

USERNAME => trmikesl DATE PLOTTED => 29-SEP-2010 TIME PLOTTED => 11:34

DIST	COUNTY	ROUTE	KILOMETER POST TOTAL PROJECT	SHEET No	TOTAL SHEETS
11	SD	5,805	R49.9/R51.7, 42.6/46.5	676	886

Caltrans Metric

REGISTERED CIVIL ENGINEER — DATE 4-28-09

9-27-10
PLANS APPROVAL DATE

REGISTERED PROFESSIONAL ENGINEER — James L. Rucker No. 47796 Exp. 12-31-09 CIVIL — STATE OF CALIFORNIA

The State of California or its officers or agents shall not be responsible for the accuracy or completeness of electronic copies of this plan sheet.

SANDAG
401 B STREET,
SAN DIEGO, CA 92101

T.Y. LIN INTERNATIONAL
5030 CAMINO DE LA SIESTA, SUITE 204,
SAN DIEGO, CA 92108

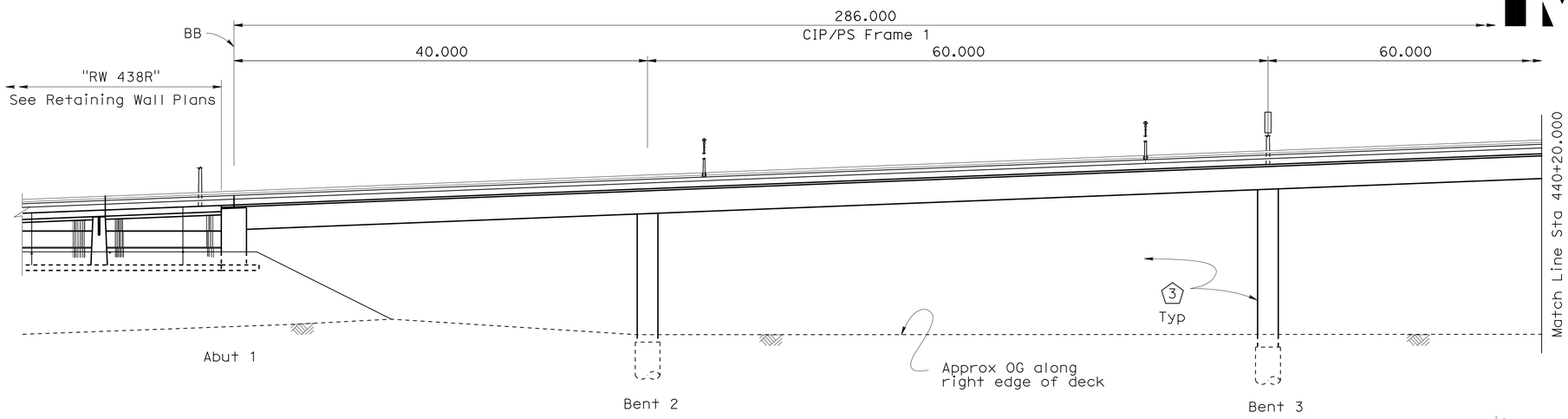

DEVELOPED ELEVATION

1:250

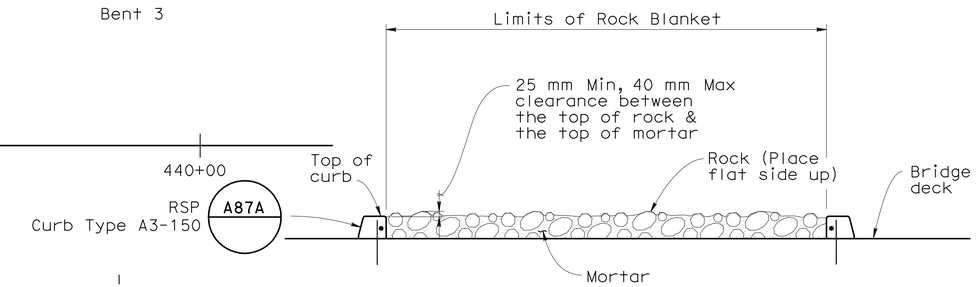

CURB AND ROCK BLANKET DETAIL

No Scale

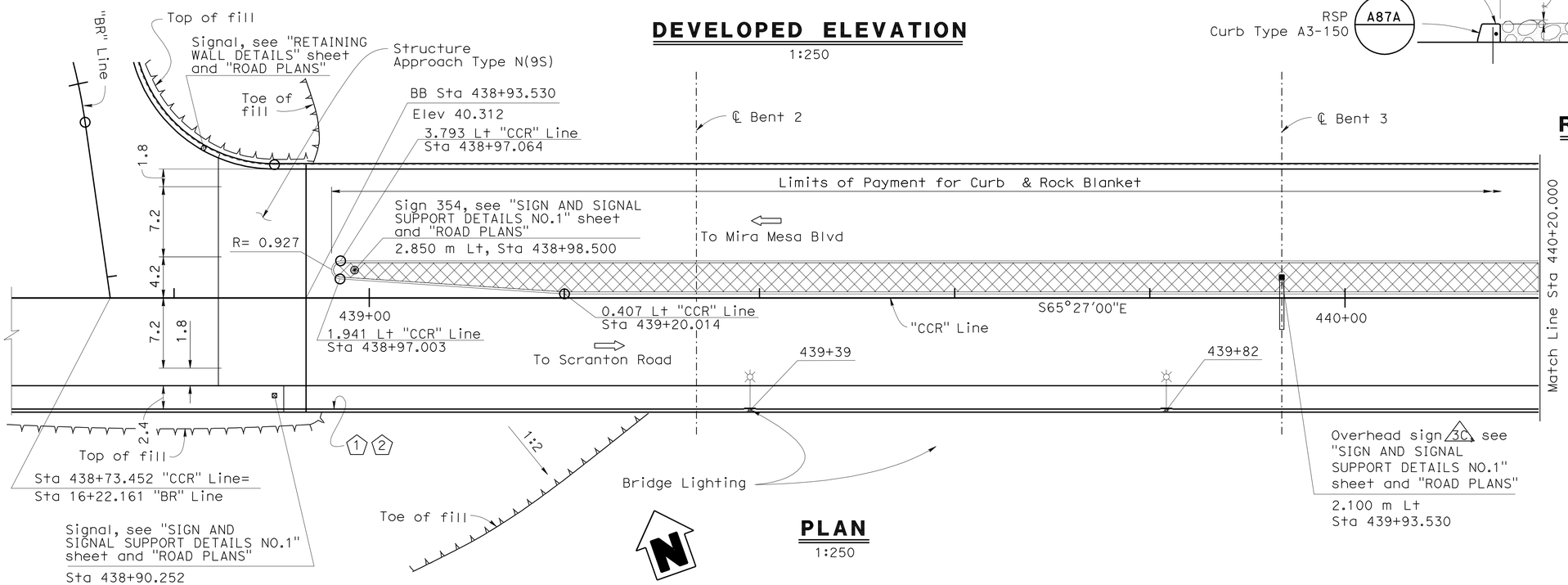

PLAN

1:250

LEGEND:

1. Paint "CARROLL CANYON ROAD BRIDGE"
2. Paint "BRIDGE NO. 57C0786"
3. Paint Bent No.

- Indicates Rock Blanket. For details see, "CURB AND ROCK BLANKET DETAIL"
- Indicates direction of traffic

ALL DIMENSIONS ARE IN METERS UNLESS OTHERWISE SHOWN

CHUNG-YUAN WEN
DESIGN OVERSIGHT
4-28-09
SIGN OFF DATE

	BY	CHECKED
DESIGN	Roya Golchoobian	Pete Smith
DETAILS	Andy Toledo	Pete Smith
QUANTITIES	Oscar Colcol	Xiaoyun Wu

PREPARED FOR THE STATE OF CALIFORNIA DEPARTMENT OF TRANSPORTATION

Brett Makley
PROJECT ENGINEER

BRIDGE NO. 57C0786
KILOMETER POST KP43.2

CARROLL CANYON ROAD BRIDGE
STRUCTURE PLAN NO.1

DESIGN DETAIL SHEET (METRIC) (REV. 10/27/05)

ORIGINAL SCALE IN MILLIMETERS FOR REDUCED PLANS 0 10 20 30 40 50 60 70 80 90 100

CU 11275
EA 2T0401

DISREGARD PRINTS BEARING EARLIER REVISION DATES

REVISION DATES (PRELIMINARY STAGE ONLY) 9/12/08 12/19/08 3/19/09 4/28/09

SHEET 3 OF 74

FILE => 57-c0786-c-sp01.dgn

USERNAME => trmikesl DATE PLOTTED => 29-SEP-2010 TIME PLOTTED => 11:34

DIST	COUNTY	ROUTE	KILOMETER POST TOTAL PROJECT	SHEET No	TOTAL SHEETS
11	SD	5,805	R49.9/R51.7, 42.6/46.5	677	886

Caltrans Metric

REGISTERED CIVIL ENGINEER — DATE 4-28-09

9-27-10
PLANS APPROVAL DATE

REGISTERED PROFESSIONAL ENGINEER — James L. Rucker No. 47796 Exp. 12-31-09 CIVIL — STATE OF CALIFORNIA

The State of California or its officers or agents shall not be responsible for the accuracy or completeness of electronic copies of this plan sheet.

SANDAG
401 B STREET,
SAN DIEGO, CA 92101

T.Y. LIN INTERNATIONAL
5030 CAMINO DE LA SIESTA, SUITE 204,
SAN DIEGO, CA 92108

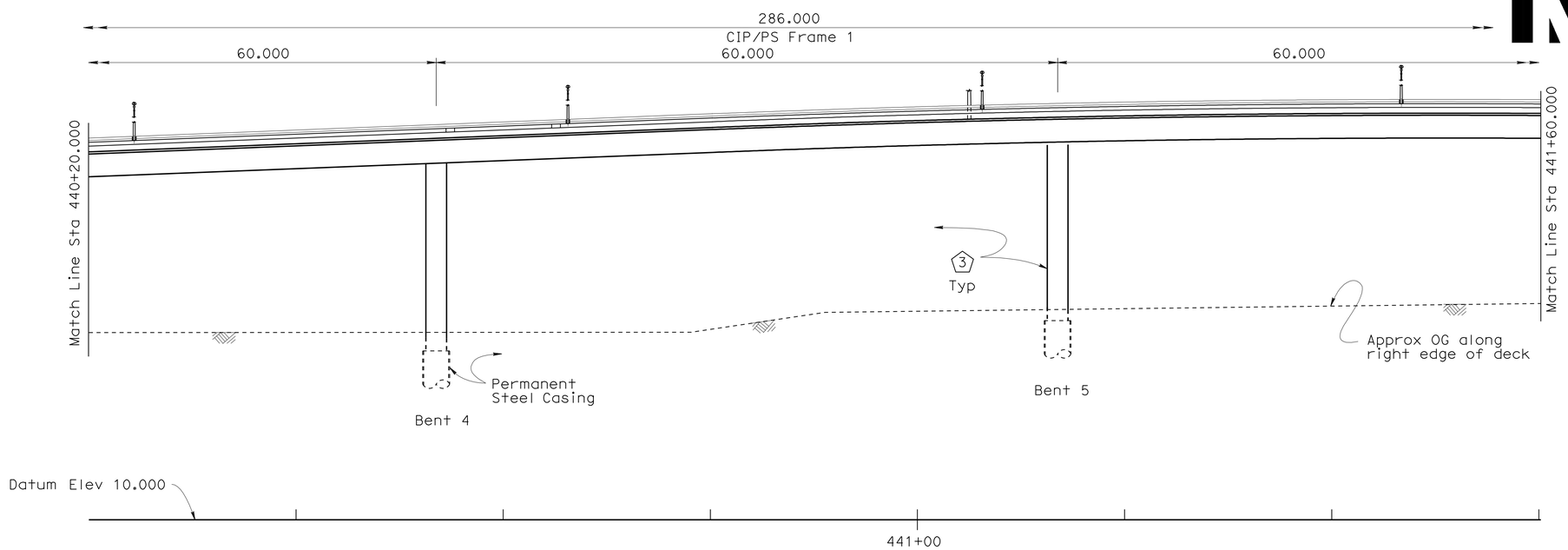

DEVELOPED ELEVATION

1:250

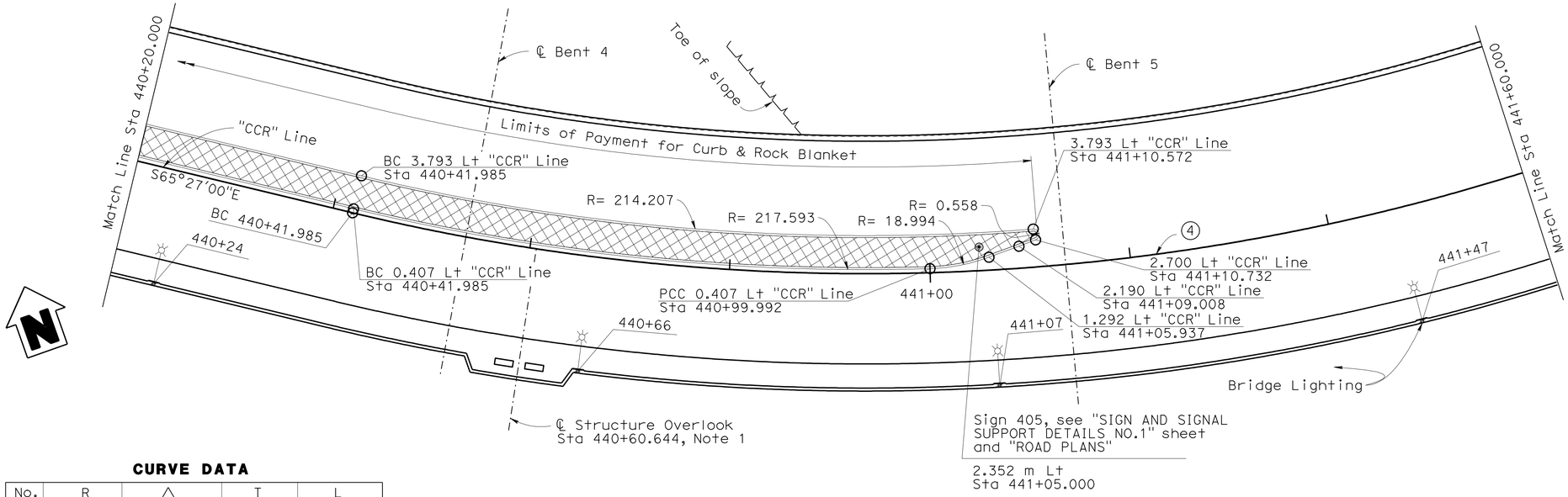

CURVE DATA

No.	R	Δ	T	L
4	218.000	-61°52'07"	130.648	235.399

PLAN

1:250

NOTE:

1. See "GIRDER DETAILS NO. 2" sheet for dimensions and reinforcement at structure overlook

LEGEND

- Indicates Rock Blanket. For details see, "CURB AND ROCK BLANKET DETAIL" On "STRUCTURE PLAN NO.1" sheet

(3) - Paint Bent No.

ALL DIMENSIONS ARE IN METERS UNLESS OTHERWISE SHOWN

CHUNG-YUAN WEN
DESIGN OVERSIGHT
4-28-09
SIGN OFF DATE

	BY	CHECKED
DESIGN	Roya Golchoobian	Pete Smith
DETAILS	Andy Toledo	Pete Smith
QUANTITIES	Oscar Colcol	Xiaoyun Wu

PREPARED FOR THE STATE OF CALIFORNIA DEPARTMENT OF TRANSPORTATION

Brett Makley
PROJECT ENGINEER

BRIDGE NO. 57C0786
KILOMETER POST KP43.2

CARROLL CANYON ROAD BRIDGE
STRUCTURE PLAN NO.2

DESIGN DETAIL SHEET (METRIC) (REV. 10/27/05)

ORIGINAL SCALE IN MILLIMETERS FOR REDUCED PLANS 0 10 20 30 40 50 60 70 80 90 100

CU 11275
EA 2T0401

DISREGARD PRINTS BEARING EARLIER REVISION DATES

REVISION DATES (PRELIMINARY STAGE ONLY): 9/12/08 12/19/08 3/9/09 4/28/09

SHEET 4 OF 74

FILE => 57-c0786-c-sp02.dgn

USERNAME => trmikes1 DATE PLOTTED => 29-SEP-2010 TIME PLOTTED => 11:34

DIST	COUNTY	ROUTE	KILOMETER POST TOTAL PROJECT	SHEET No	TOTAL SHEETS
11	SD	5,805	R49.9/R51.7, 42.6/46.5	678	886

REGISTERED CIVIL ENGINEER 4-28-09 DATE

9-27-10
PLANS APPROVAL DATE

The State of California or its officers or agents shall not be responsible for the accuracy or completeness of electronic copies of this plan sheet.

REGISTERED PROFESSIONAL ENGINEER James L. Rucker No. 47796 Exp. 12-31-09 CIVIL STATE OF CALIFORNIA

SANDAG
401 B STREET,
SAN DIEGO, CA 92101

T.Y. LIN INTERNATIONAL
5030 CAMINO DE LA SIESTA, SUITE 204,
SAN DIEGO, CA 92108

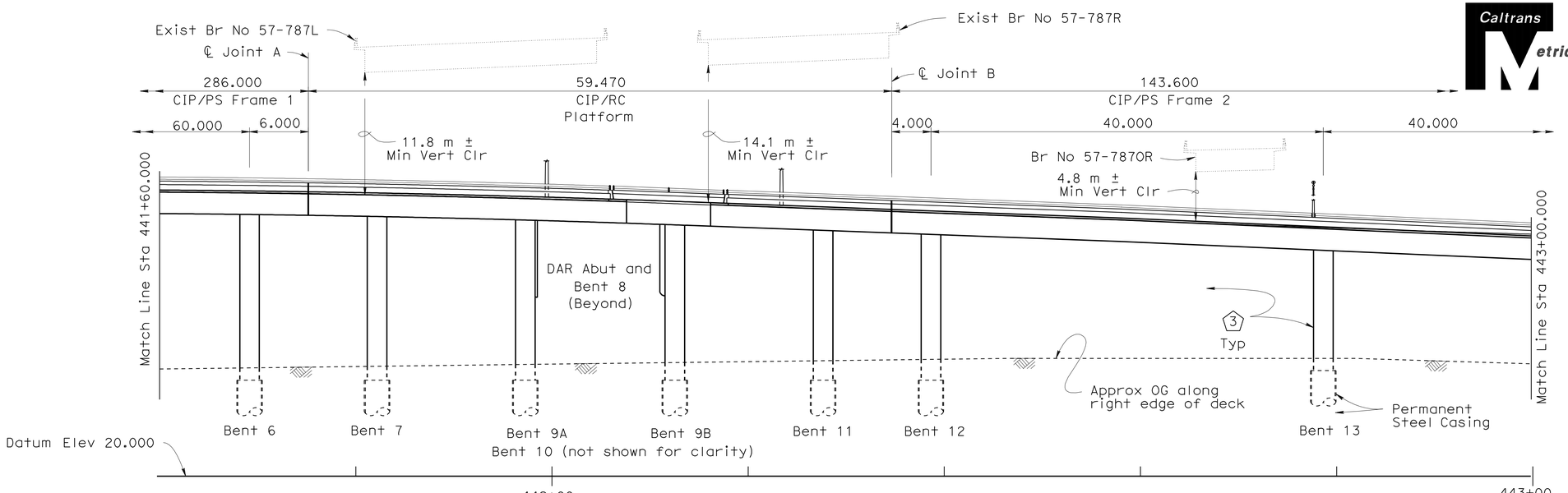

DEVELOPED ELEVATION

1:250

Note:
The length of approach slab is modified to 3.0 m at this abutment.

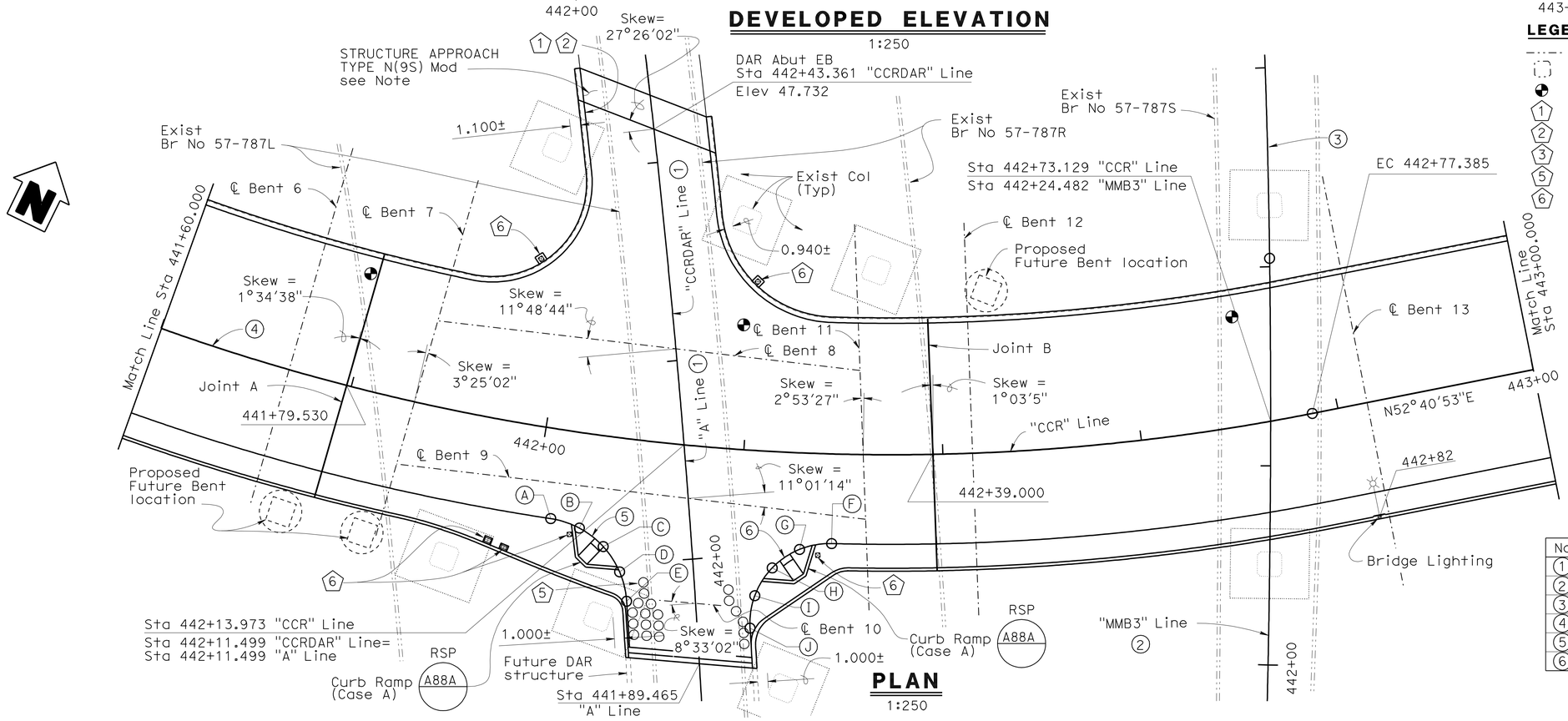

PLAN

1:250

LEGEND

- Indicates Exist structure
- Indicates Exist column location
- Indicates point of minimum vertical clearance
- (1) Paint "CARROLL CANYON ROAD BRIDGE"
- (2) Paint "BRIDGE NO. 57C0786"
- (3) Paint Bent No.
- (5) Crash Cushions, see "ROAD PLANS"
- (6) Signal, see "SIGN AND SIGNAL SUPPORT DETAILS NO.1", "SIGN AND SIGNAL SUPPORT DETAILS NO.2", "SIGN AND SIGNAL SUPPORT DETAILS NO.3" and "ROAD PLANS"

CURVE DATA

	Line	Station	Offset	Elev
(A)	"CCR"	BC 442+01.840	9.000 Rt	47.478
(B)	"CCR"	442+04.703	9.530 Rt	48.377
(C)	"CCR"	442+07.206	11.054 Rt	48.331
(D)	"A"	441+99.211	7.406 Lt	48.318
(E)	"A"	EC 441+96.202	6.900 Lt	48.347
(F)	"CCR"	BC 442+29.065	9.000 Rt	47.510
(G)	"CCR"	442+25.997	9.702 Rt	47.638
(H)	"CCR"	442+23.462	11.676 Rt	47.782
(I)	"A"	441+95.914	5.984 Rt	47.901
(J)	"A"	EC 441+92.707	5.300 Rt	47.983

CURVE DATA

No.	R	△	T	L
(1)	1066.802	51°0'06"	508.858	949.611
(2)	1219.202±	17°53'58"±	192.006±	380.884±
(3)	914.409±	3°55'21"±	31.313±	62.601±
(4)	218.000	61°52'07"	130.648	235.399
(5)	9.000	77°34'03"	7.232	12.184
(6)	8.000	95°05'23"	8.744	13.277

ALL DIMENSIONS ARE IN METERS UNLESS OTHERWISE SHOWN

CHUNG-YUAN WEN
DESIGN OVERSIGHT
4-28-09
SIGN OFF DATE

	BY	CHECKED
DESIGN	Roya Golchoobian	Pete Smith
DETAILS	Andy Toledo	Pete Smith
QUANTITIES	Oscar Colcol	Xiaoyun Wu

PREPARED FOR THE STATE OF CALIFORNIA DEPARTMENT OF TRANSPORTATION

Brett Makley
PROJECT ENGINEER

BRIDGE NO. 57C0786
KILOMETER POST KP43.2

CARROLL CANYON ROAD BRIDGE
STRUCTURE PLAN NO.3

DESIGN DETAIL SHEET (METRIC) (REV. 10/27/05)

ORIGINAL SCALE IN MILLIMETERS FOR REDUCED PLANS 0 10 20 30 40 50 60 70 80 90 100

CU 11275
EA 2T0401

DISREGARD PRINTS BEARING EARLIER REVISION DATES

REVISION DATES (PRELIMINARY STAGE ONLY) 9/12/08 12/19/08 3/9/09 1/15/09 4-28-09

SHEET 5 OF 74

FILE => 57-c0786-c-sp03.dgn

USERNAME => trmikesl DATE PLOTTED => 29-SEP-2010 TIME PLOTTED => 11:34

DIST	COUNTY	ROUTE	KILOMETER POST TOTAL PROJECT	SHEET No	TOTAL SHEETS
11	SD	5,805	R49.9/R51.7, 42.6/46.5	679	886

Caltrans Metric

REGISTERED CIVIL ENGINEER 4-28-09 DATE

9-27-10
PLANS APPROVAL DATE

REGISTERED PROFESSIONAL ENGINEER James L. Rucker No. 47796 Exp. 12-31-09 CIVIL STATE OF CALIFORNIA

The State of California or its officers or agents shall not be responsible for the accuracy or completeness of electronic copies of this plan sheet.

SANDAG
401 B STREET,
SAN DIEGO, CA 92101

T.Y. LIN INTERNATIONAL
5030 CAMINO DE LA SIESTA, SUITE 204,
SAN DIEGO, CA 92108

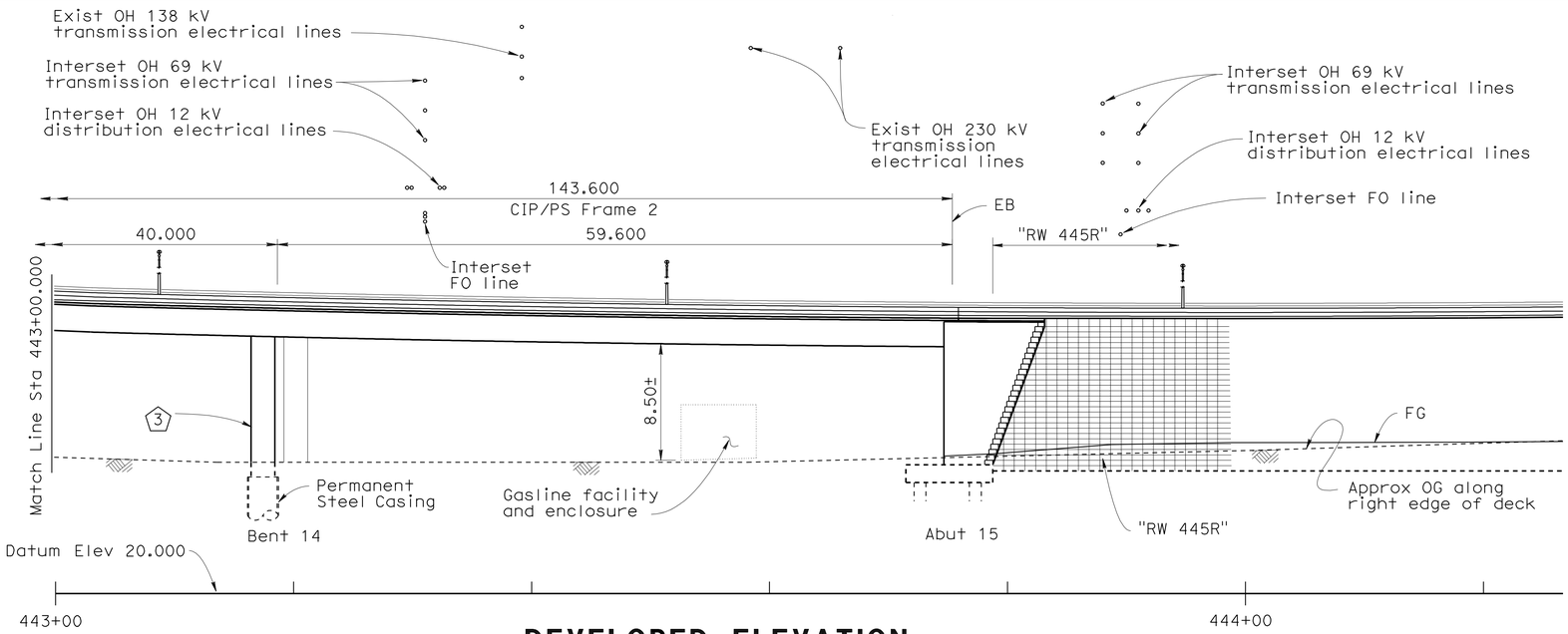

DEVELOPED ELEVATION

1:250

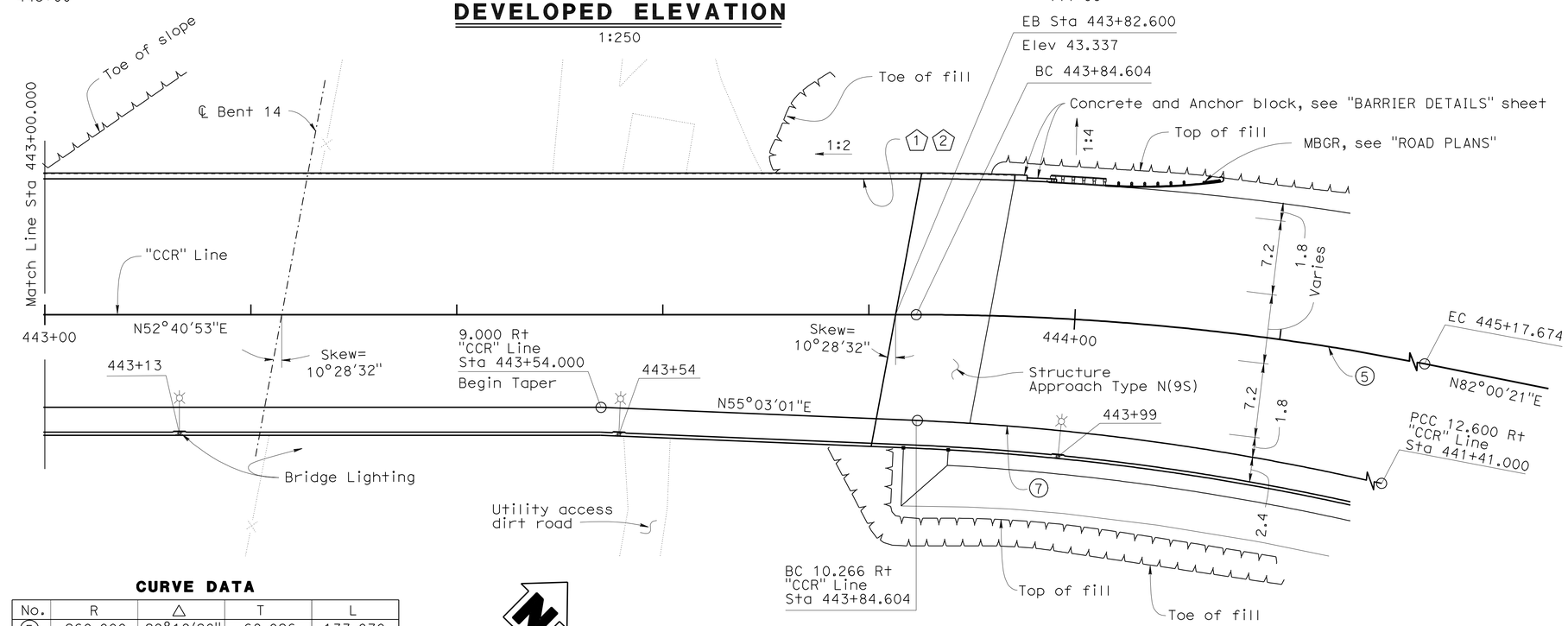

PLAN

1:250

LEGEND:

1 - Paint "CARROLL CANYON ROAD BRIDGE"
2 - Paint "BRIDGE NO. 57C0786"
3 - Paint Bent No.

CURVE DATA

No.	R	Δ	T	L
5	260.000	29°19'28"	68.026	133.070
7	248.336	12°27'04"	27.090	53.967

ALL DIMENSIONS ARE IN METERS UNLESS OTHERWISE SHOWN

CHUNG-YUAN WEN
DESIGN OVERSIGHT
4-28-09
SIGN OFF DATE

	BY	CHECKED
DESIGN	Roya Golchoobian	Pete Smith
DETAILS	Andy Toledo	Pete Smith
QUANTITIES	Oscar Colcol	Xiaoyun Wu

PREPARED FOR THE STATE OF CALIFORNIA DEPARTMENT OF TRANSPORTATION

Brett Makley
PROJECT ENGINEER

BRIDGE NO. 57C0786
KILOMETER POST KP43.2

CARROLL CANYON ROAD BRIDGE
STRUCTURE PLAN NO.4

DESIGN DETAIL SHEET (METRIC) (REV. 10/27/05)

ORIGINAL SCALE IN MILLIMETERS FOR REDUCED PLANS 0 10 20 30 40 50 60 70 80 90 100

CU 11275
EA 2T0401

DISREGARD PRINTS BEARING EARLIER REVISION DATES

REVISION DATES (PRELIMINARY STAGE ONLY): ~~9/12/08~~ ~~12/19/08~~ ~~3/19/09~~ 4/28/09

SHEET 6 OF 74

FILE => 57-c0786-c-sp04.dgn

USERNAME => rtrmikes1 DATE PLOTTED => 29-SEP-2010 TIME PLOTTED => 11:35

DIST	COUNTY	ROUTE	KILOMETER POST TOTAL PROJECT	SHEET No	TOTAL SHEETS
11	SD	5,805	R49.9/R51.7, 42.6/46.5	680	886

Caltrans Metric

REGISTERED CIVIL ENGINEER 4-28-09 DATE

9-27-10
PLANS APPROVAL DATE

REGISTERED PROFESSIONAL ENGINEER James L. Rucker No. 47796 Exp. 12-31-09 CIVIL STATE OF CALIFORNIA

The State of California or its officers or agents shall not be responsible for the accuracy or completeness of electronic copies of this plan sheet.

SANDAG
401 B STREET,
SAN DIEGO, CA 92101

T.Y. LIN INTERNATIONAL
5030 CAMINO DE LA SIESTA, SUITE 204,
SAN DIEGO, CA 92108

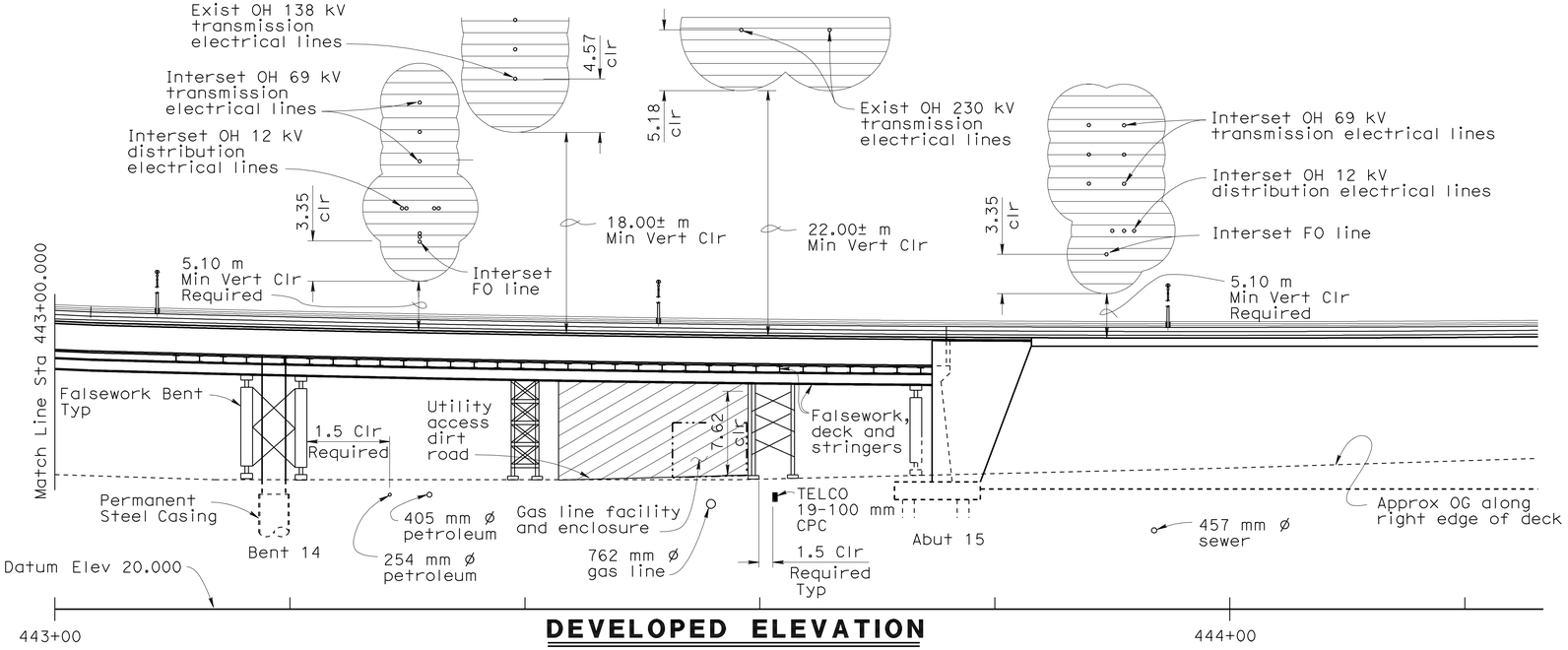

DEVELOPED ELEVATION

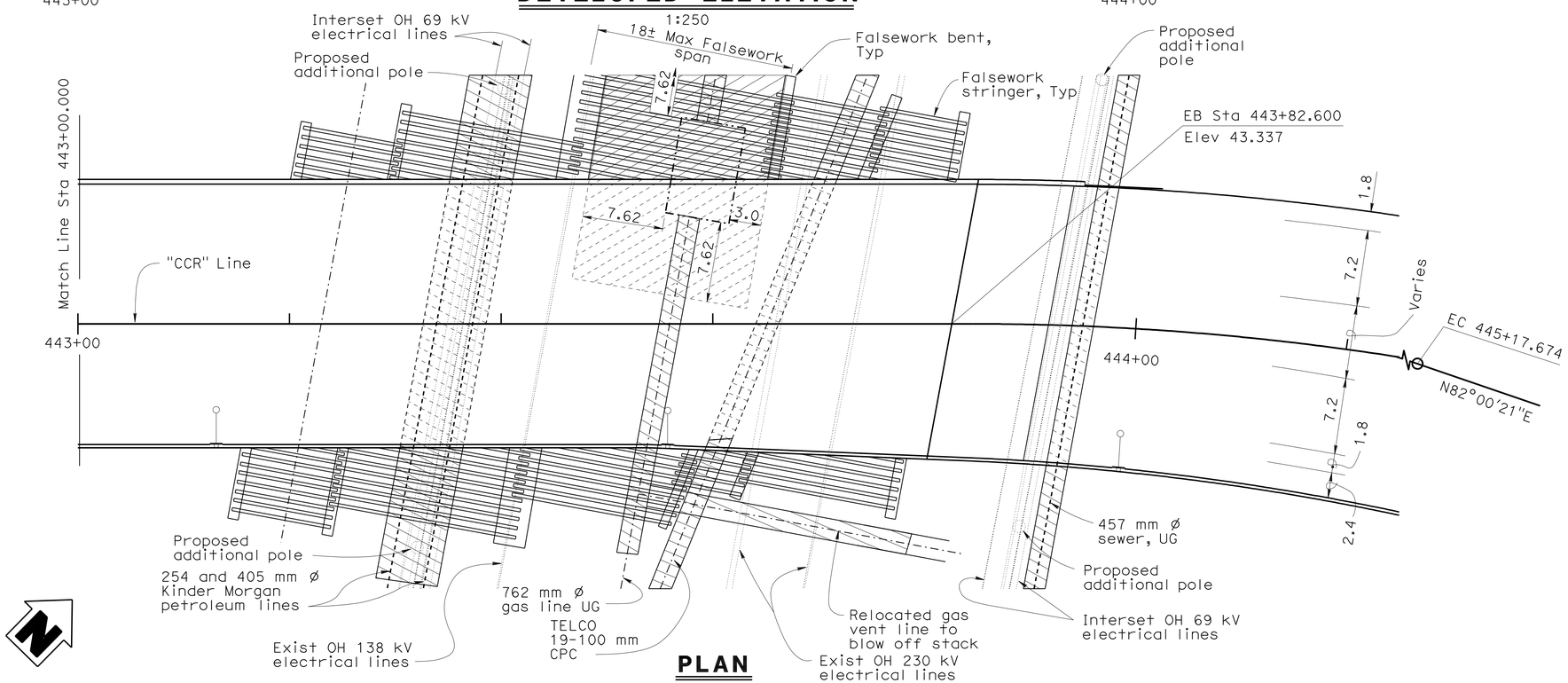

PLAN
1:250

LEGEND:

- Construction clearance envelope for electrical lines. See "UTILITY PLANS" for more details.
- Falsework bents not allowed in this area
- Construction work and equipment not allowed in this area

NOTES:

1. Superstructure depth = 2.4 m
2. Max Falsework depth = 1.0± m

ALL DIMENSIONS ARE IN METERS UNLESS OTHERWISE SHOWN

CHUNG-YUAN WEN
DESIGN OVERSIGHT
4-28-09
SIGN OFF DATE

	BY	CHECKED
DESIGN	Brett Makley	Roya Golchoobian
DETAILS	Andy Toledo	Brett Makley
QUANTITIES	Oscar Colcol	Xiaoyun Wu

PREPARED FOR THE STATE OF CALIFORNIA DEPARTMENT OF TRANSPORTATION

Brett Makley
PROJECT ENGINEER

BRIDGE NO. 57C0786
KILOMETER POST KP43.2

CARROLL CANYON ROAD BRIDGE
TEMPORARY/CONSTRUCTION CLEARANCES AND FALSEWORK DIAGRAM

DESIGN DETAIL SHEET (METRIC) (REV. 10/27/05)

ORIGINAL SCALE IN MILLIMETERS FOR REDUCED PLANS 0 10 20 30 40 50 60 70 80 90 100

CU 11275
EA 2T0401

DISREGARD PRINTS BEARING EARLIER REVISION DATES

REVISION DATES (PRELIMINARY STAGE ONLY) 4/15/08 12/19/08 3/19/09 4/28/09

SHEET 7 OF 74

FILE => 57-c0786-c-tccfd.dgn

USERNAME => ttmikes1 DATE PLOTTED => 29-SEP-2010 TIME PLOTTED => 11:35

DIST	COUNTY	ROUTE	KILOMETER POST TOTAL PROJECT	SHEET No	TOTAL SHEETS
11	SD	5,805	R49.9/R51.7, 42.6/46.5	681	886

Caltrans Metric

REGISTERED CIVIL ENGINEER — DATE 4-28-09

9-27-10
PLANS APPROVAL DATE

REGISTERED PROFESSIONAL ENGINEER — James L. Rucker No. 47796 Exp. 12-31-09 CIVIL — STATE OF CALIFORNIA

The State of California or its officers or agents shall not be responsible for the accuracy or completeness of electronic copies of this plan sheet.

SANDAG
401 B STREET,
SAN DIEGO, CA 92101

T.Y. LIN INTERNATIONAL
5030 CAMINO DE LA SIESTA, SUITE 204,
SAN DIEGO, CA 92108

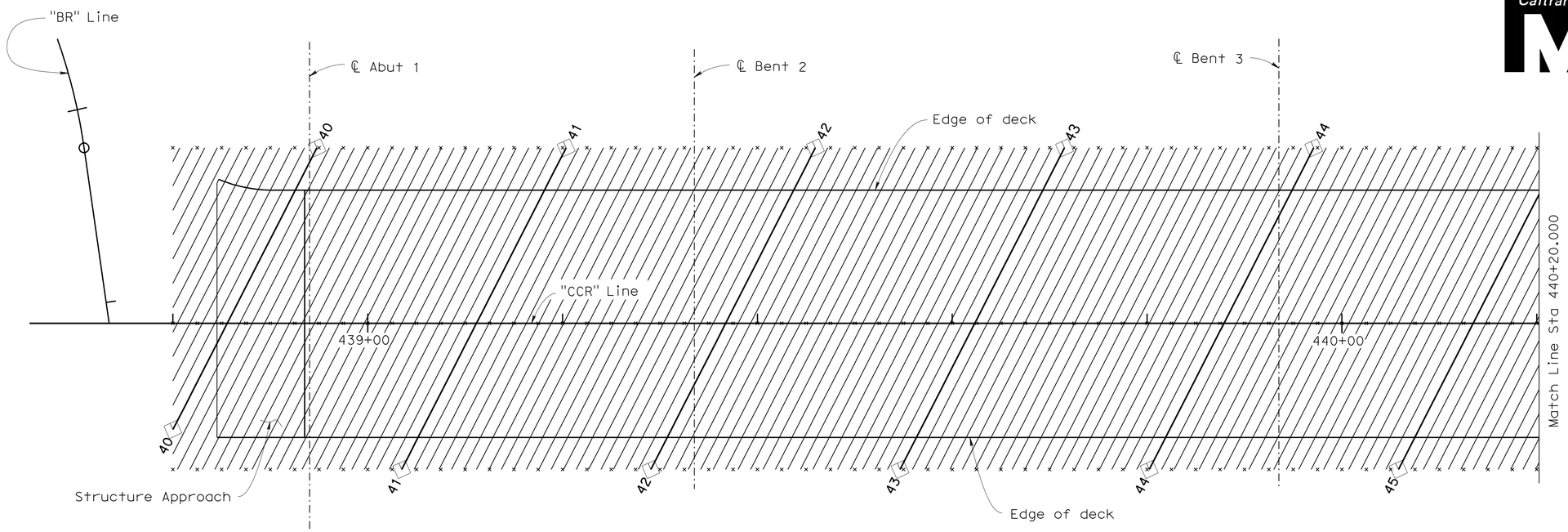

PLAN
1:250

NOTES:

1. Contour interval = 0.050 m.
2. Contours do not include camber.
3. ▯ - Indicates whole meter contour.
4. X - Indicates 2.500 meter intervals along "CCR" Line.

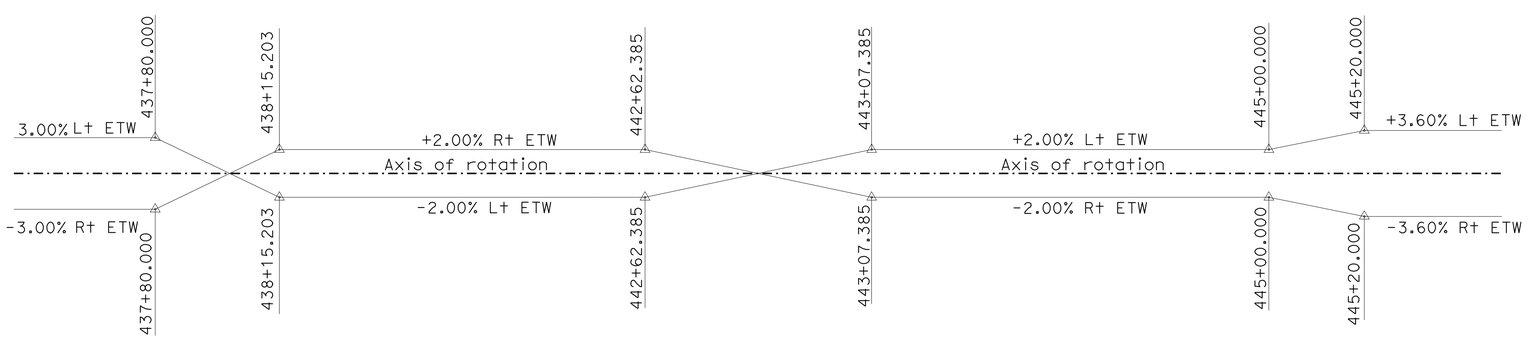

"CCR" LINE SUPER ELEVATION DIAGRAM
No Scale

ALL DIMENSIONS ARE IN METERS UNLESS OTHERWISE SHOWN

CHUNG-YUAN WEN
DESIGN OVERSIGHT
4-28-09
SIGN OFF DATE

	BY	CHECKED
DESIGN	Roya Golchoobian	Pete Smith
DETAILS	Andy Toledo	Pete Smith
QUANTITIES	Oscar Colcol	Xiaoyun Wu

PREPARED FOR THE STATE OF CALIFORNIA DEPARTMENT OF TRANSPORTATION

Brett Makley
PROJECT ENGINEER

BRIDGE NO. 57C0786
KILOMETER POST KP43.2

CARROLL CANYON ROAD BRIDGE
DECK CONTOURS NO.1

DESIGN DETAIL SHEET (METRIC) (REV. 10/27/05)

ORIGINAL SCALE IN MILLIMETERS FOR REDUCED PLANS 0 10 20 30 40 50 60 70 80 90 100

CU 11275
EA 2T0401

DISREGARD PRINTS BEARING EARLIER REVISION DATES

REVISION DATES (PRELIMINARY STAGE ONLY): ~~9/12/08~~ ~~12/19/08~~ ~~3/19/09~~ 4/28/09

SHEET 8 OF 74

FILE => 57-c0786-d-dc01.dgn

USERNAME => ttmirkes1 DATE PLOTTED => 29-SEP-2010 TIME PLOTTED => 11:35

DIST	COUNTY	ROUTE	KILOMETER POST TOTAL PROJECT	SHEET No	TOTAL SHEETS
11	SD	5,805	R49.9/R51.7, 42.6/46.5	682	886

Caltrans Metric

REGISTERED CIVIL ENGINEER — DATE 4-28-09

9-27-10
PLANS APPROVAL DATE

REGISTERED PROFESSIONAL ENGINEER — James L. Rucker — No. 47796 — Exp. 12-31-09 — CIVIL — STATE OF CALIFORNIA

The State of California or its officers or agents shall not be responsible for the accuracy or completeness of electronic copies of this plan sheet.

SANDAG
401 B STREET,
SAN DIEGO, CA 92101

T.Y. LIN INTERNATIONAL
5030 CAMINO DE LA SIESTA, SUITE 204,
SAN DIEGO, CA 92108

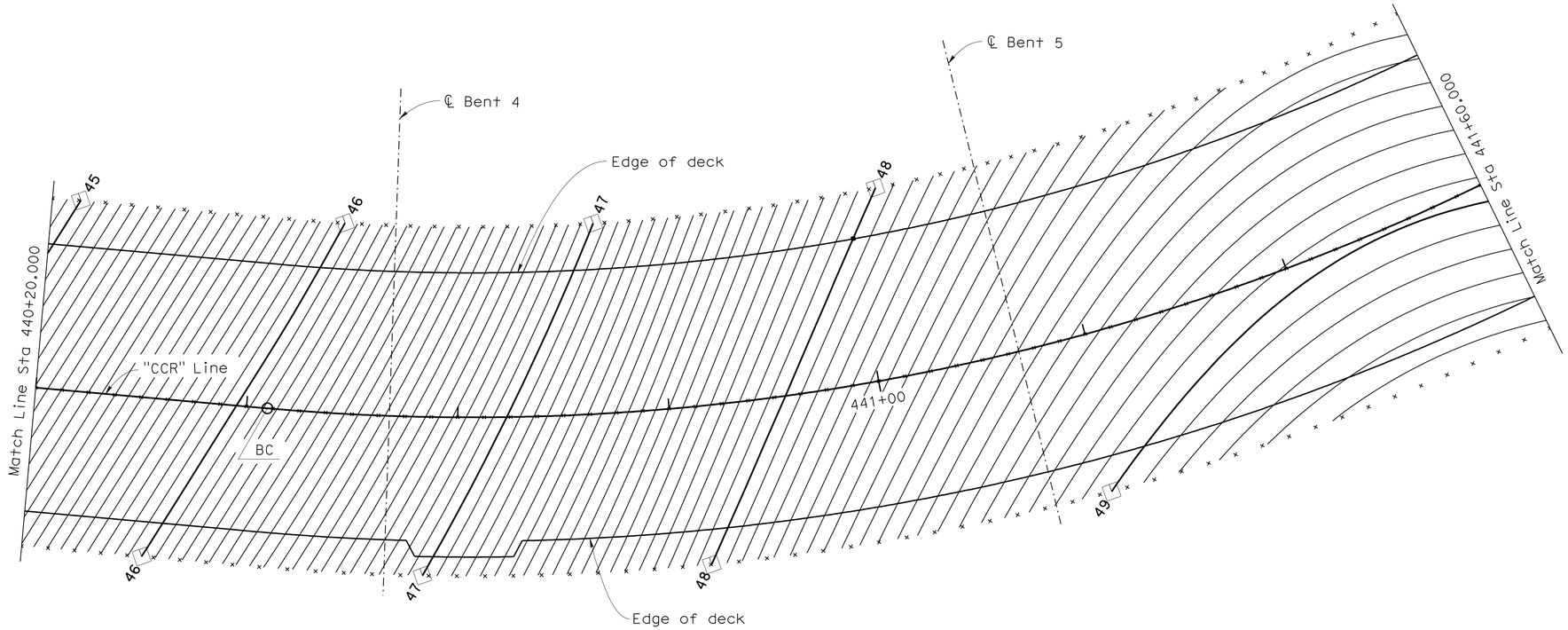

PLAN
1:250

NOTES:

1. Contour interval = 0.050 m.
2. Contours do not include camber.
3. ▯ - Indicates whole meter contour.
4. X - Indicates 2.500 meter intervals along "CCR" Line.

ALL DIMENSIONS ARE IN
METERS UNLESS OTHERWISE SHOWN

CHUNG-YUAN WEN
DESIGN OVERSIGHT
4-28-09
SIGN OFF DATE

	BY	CHECKED
DESIGN	Roya Golchoobian	Pete Smith
DETAILS	Andy Toledo	Pete Smith
QUANTITIES	Oscar Colcol	Xiaoyun Wu

PREPARED FOR THE
STATE OF CALIFORNIA
DEPARTMENT OF TRANSPORTATION

Brett Makley
PROJECT ENGINEER

BRIDGE NO. 57C0786
KILOMETER POST KP43.2

CARROLL CANYON ROAD BRIDGE
DECK CONTOURS NO.2

DESIGN DETAIL SHEET (METRIC) (REV. 10/27/05)

ORIGINAL SCALE IN MILLIMETERS FOR REDUCED PLANS 0 10 20 30 40 50 60 70 80 90 100

CU 11275
EA 2T0401

DISREGARD PRINTS BEARING EARLIER REVISION DATES

REVISION DATES (PRELIMINARY STAGE ONLY): 9/12/08 12/19/08 3/19/09 4/28/09

SHEET 9 OF 74

FILE => 57-c0786-d-dc02.dgn

USERNAME => trmikesl DATE PLOTTED => 29-SEP-2010 TIME PLOTTED => 11:35

DIST	COUNTY	ROUTE	KILOMETER POST TOTAL PROJECT	SHEET No	TOTAL SHEETS
11	SD	5,805	R49.9/R51.7, 42.6/46.5	683	886

REGISTERED CIVIL ENGINEER 4-28-09 DATE

9-27-10
PLANS APPROVAL DATE

REGISTERED PROFESSIONAL ENGINEER James L. Rucker No. 47796 Exp. 12-31-09 CIVIL STATE OF CALIFORNIA

The State of California or its officers or agents shall not be responsible for the accuracy or completeness of electronic copies of this plan sheet.

SANDAG
401 B STREET,
SAN DIEGO, CA 92101

T.Y. LIN INTERNATIONAL
5030 CAMINO DE LA SIESTA, SUITE 204,
SAN DIEGO, CA 92108

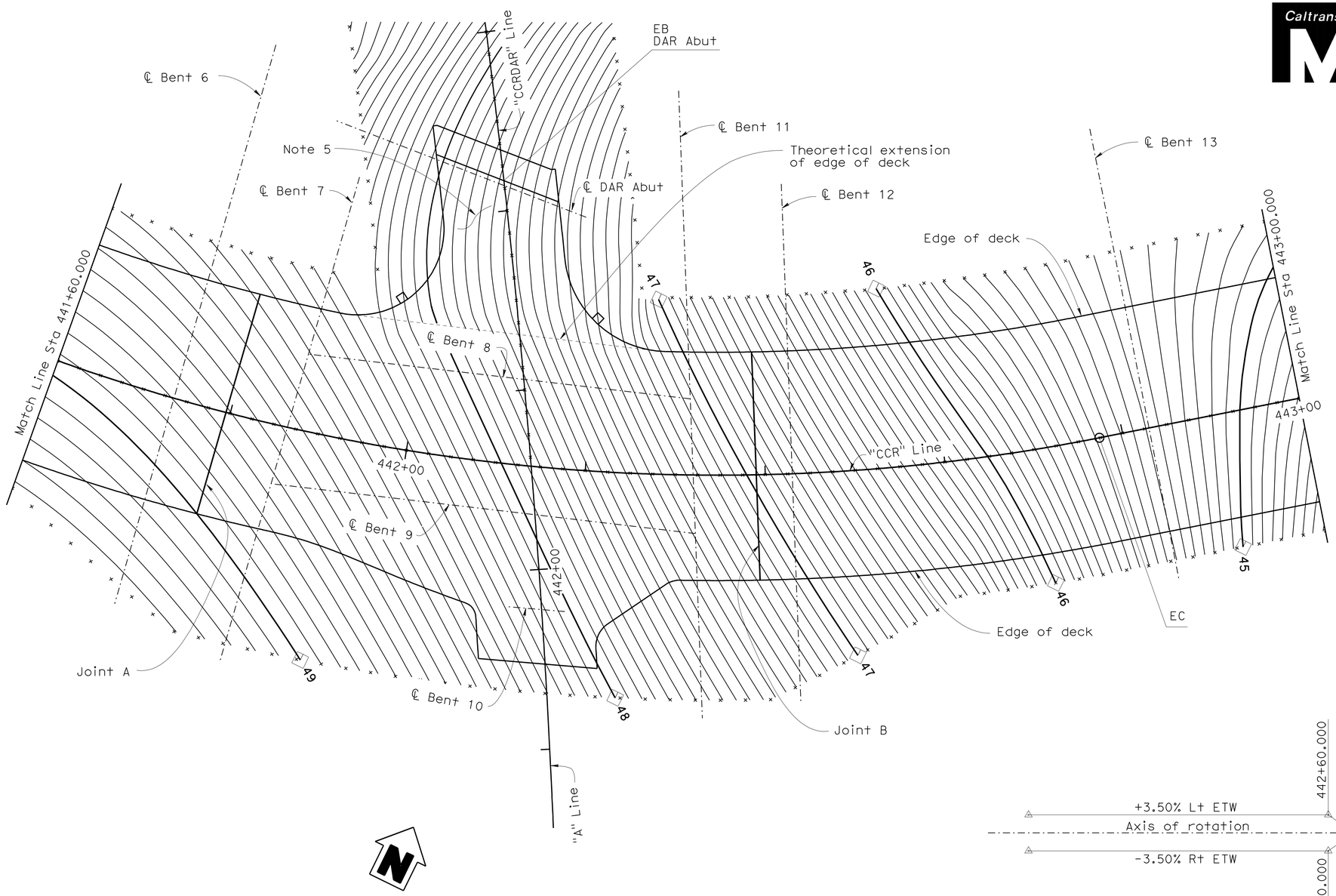

NOTES:

1. Contour interval = 0.050 m.
2. Contours do not include camber.
3. ⊡ - Indicates whole meter contour.
4. X - Indicates 2.500 meter intervals along "CCR" Line.
5. Contours between EB DAR abutment and theoretical extension of edge of deck have been adjusted to conform with "CCR" and "CCRDAR" contours

PLAN
1:250

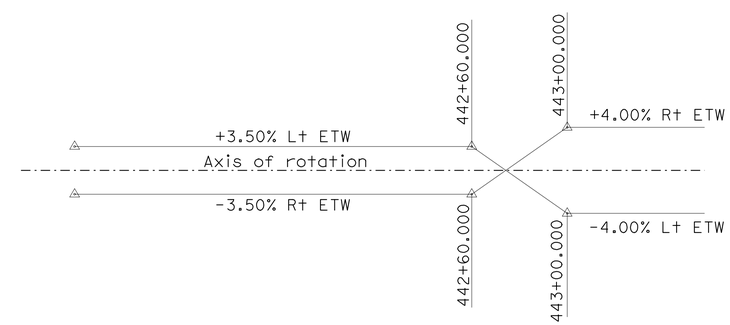

"CCRDAR" LINE SUPER ELEVATION DIAGRAM
No Scale

ALL DIMENSIONS ARE IN
METERS UNLESS OTHERWISE SHOWN

CHUNG-YUAN WEN
DESIGN OVERSIGHT
4-28-09
SIGN OFF DATE

	BY	CHECKED
DESIGN	Roya Golchoobian	Pete Smith
DETAILS	Andy Toledo	Pete Smith
QUANTITIES	Oscar Colcol	Xiaoyun Wu

PREPARED FOR THE
STATE OF CALIFORNIA
DEPARTMENT OF TRANSPORTATION

Brett Makley
PROJECT ENGINEER

BRIDGE NO. 57C0786
KILOMETER POST KP43.2

CARROLL CANYON ROAD BRIDGE
DECK CONTOURS NO.3

DESIGN DETAIL SHEET (METRIC) (REV. 10/27/05)

ORIGINAL SCALE IN MILLIMETERS FOR REDUCED PLANS 0 10 20 30 40 50 60 70 80 90 100

CU 11275
EA 2T0401

DISREGARD PRINTS BEARING EARLIER REVISION DATES

REVISION DATES (PRELIMINARY STAGE ONLY) 9/12/08 12/19/08 3/19/09 4/28/09

SHEET 10 OF 74

FILE => 57-c0786-d-dc03.dgn

USERNAME => trmikes1 DATE PLOTTED => 29-SEP-2010 TIME PLOTTED => 11:35

DIST	COUNTY	ROUTE	KILOMETER POST TOTAL PROJECT	SHEET No	TOTAL SHEETS
11	SD	5,805	R49.9/R51.7, 42.6/46.5	684	886

Caltrans Metric

REGISTERED CIVIL ENGINEER 4-28-09 DATE

9-27-10
PLANS APPROVAL DATE

REGISTERED PROFESSIONAL ENGINEER
James L. Rucker
No. 47796
Exp. 12-31-09
CIVIL
STATE OF CALIFORNIA

The State of California or its officers or agents shall not be responsible for the accuracy or completeness of electronic copies of this plan sheet.

SANDAG
401 B STREET,
SAN DIEGO, CA 92101

T.Y. LIN INTERNATIONAL
5030 CAMINO DE LA SIESTA, SUITE 204,
SAN DIEGO, CA 92108

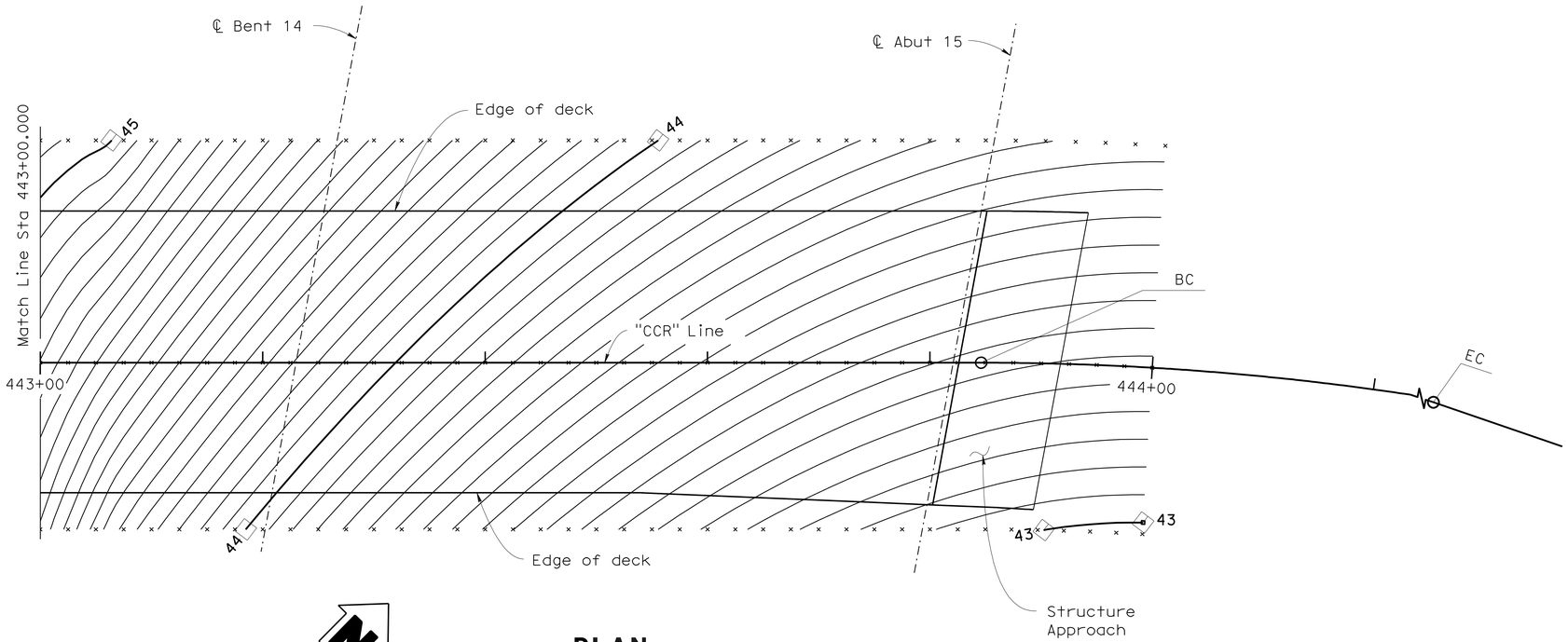

PLAN
1:250

NOTES:

1. Contour interval = 0.050 m.
2. Contours do not include camber.
3. ◻ - Indicates whole meter contour.
4. X - Indicates 2.500 meter intervals along "CCR" Line.

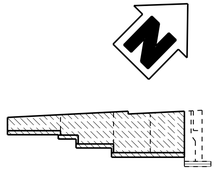

ABUTMENT 1 (NORTH) RETAINING WALL
NO SCALE

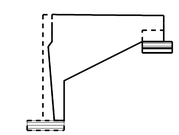

ABUTMENT 15 (NORTH) WINGWALL
NO SCALE

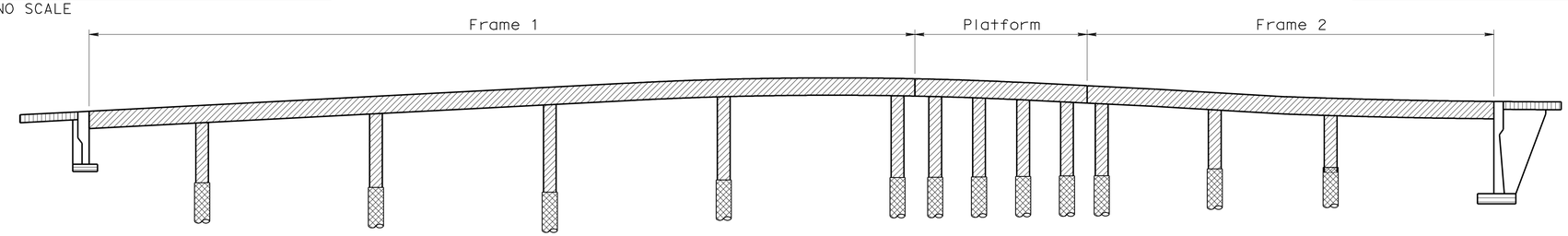

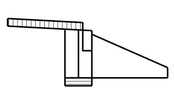

DAR ABUTMENT
NO SCALE

CONCRETE STRENGTH AND TYPE LIMITS
NO SCALE

- Structural Concrete, Bridge
- Structural Concrete, Bridge (28 MPa @ 28 days)
- Structural Concrete, Bridge Footing
- Cast-In-Drilled Hole Concrete Pile, (28 MPa @ 28 days)
- Structural Concrete, Approach Slab
- Structural Concrete, Retaining Wall

ALL DIMENSIONS ARE IN METERS UNLESS OTHERWISE SHOWN

CHUNG-YUAN WEN
DESIGN OVERSIGHT
4-28-09
SIGN OFF DATE

	BY	CHECKED
DESIGN	Roya Golchoobian	Pete Smith
DETAILS	Andy Toledo	Pete Smith
QUANTITIES	Oscar Colcol	Xiaoyun Wu

PREPARED FOR THE STATE OF CALIFORNIA DEPARTMENT OF TRANSPORTATION

Brett Makley
PROJECT ENGINEER

BRIDGE NO. 57C0786
KILOMETER POST KP43.2

CARROLL CANYON ROAD BRIDGE
DECK CONTOURS NO.4

DESIGN DETAIL SHEET (METRIC) (REV. 10/27/05)

ORIGINAL SCALE IN MILLIMETERS FOR REDUCED PLANS 0 10 20 30 40 50 60 70 80 90 100

CU 11275
EA 2T0401

DISREGARD PRINTS BEARING EARLIER REVISION DATES

REVISION DATES (PRELIMINARY STAGE ONLY): 9/12/08 12/19/08 3/19/09 4/28/09

SHEET 11 OF 74

FILE => 57-c0786-d-dc04.dgn

USERNAME => ttmikes1 DATE PLOTTED => 29-SEP-2010 TIME PLOTTED => 11:35

DIST	COUNTY	ROUTE	KILOMETER POST TOTAL PROJECT	SHEET No	TOTAL
11	SD	5,805	R49.9/R51.7, 42.6/46.5	685	886

Caltrans Metric

REGISTERED CIVIL ENGINEER 4-28-09 DATE

9-27-10
PLANS APPROVAL DATE

REGISTERED PROFESSIONAL ENGINEER James L. Rucker No. 47796 Exp. 12-31-09 CIVIL STATE OF CALIFORNIA

The State of California or its officers or agents shall not be responsible for the accuracy or completeness of electronic copies of this plan sheet.

SANDAG
401 B STREET,
SAN DIEGO, CA 92101

T.Y. LIN INTERNATIONAL
5030 CAMINO DE LA SIESTA, SUITE 204,
SAN DIEGO, CA 92108

CURVE DATA

No.	R	Δ	T	L
6	14.550	76°33'06"	11.481	19.440

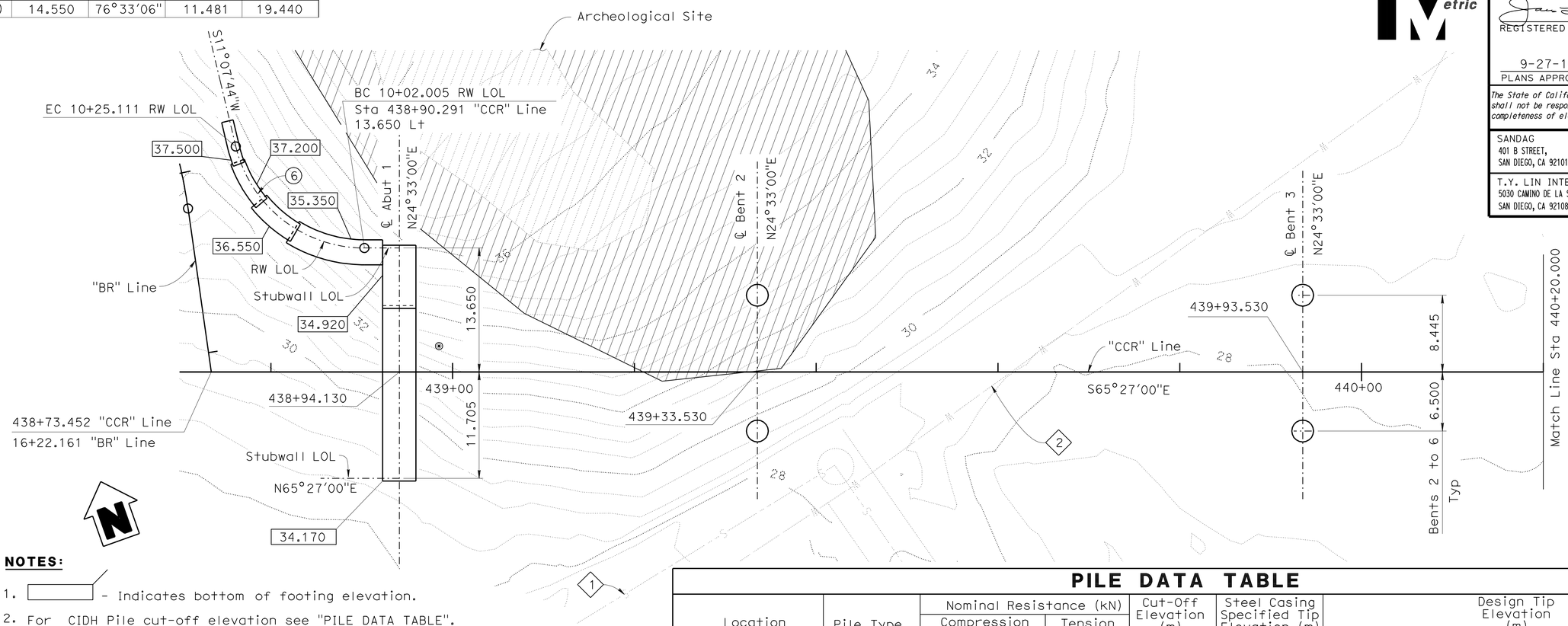

BENCHMARK

SURVEY CONTROL

B.M. #1 805-27.10
2" IP w/ CADT disk
"805-27.10 1990"
per SR 07-200
N 580612.599
E 1910366.834
Elev. = 38.576

B.M. #2 CITY 6
Street Well
Monument @ BC
per SR 07-200
N 580691.861
E 1910154.476
Elev. = 25.461

NOTES:

1. ▭ - Indicates bottom of footing elevation.
2. For CIDH Pile cut-off elevation see "PILE DATA TABLE".
3. For limits of excavation & backfill not shown, see A62C
4. ▨ - Archeological site boundaries

PLAN
1:250

SPREAD FOOTING DATA TABLE

Support Location	Working Stress Design (WSD)	
	Permissible Gross Contact Stress (Settlement) (kPa)	Allowable Gross Bearing Capacity (kPa)
Abut 1	862	287
Abut 15 WW	862	287

Note: Abutment 1 footing is stepped.

UTILITY DATA TABLE

Label	Quantity	Utility Type	Owner	To Be Relocated	Underground (UG) or Overhead (OH)
1	1	762 mm ± Existing VCP Sewer	City of San Diego	N	UG
2	1	263 mm ± Existing ACP water	City of San Diego	N	UG

PILE DATA TABLE

Location		Pile Type	Nominal Resistance (kN) Compression Left	Compression Right	Tension Left	Tension Right	Cut-Off Elevation (m) Left	Cut-Off Elevation (m) Right	Steel Casing Specified Tip Elevation (m) Left	Steel Casing Specified Tip Elevation (m) Right	Design Tip Elevation (m) Left	Design Tip Elevation (m) Right	Specified Tip Elev (m) Left	Specified Tip Elev (m) Right
Bent 2		2.4 m CIDH	37150	37850	0	0	29	28	N/A	N/A	2.4(a-I),10.4(a-II),15.9(c)	0.3(a-I),10.4(a-II),13.1(c)	2.4	0.3
Bent 3		2.4 m CIDH	39250	40950	0	0	28	27	N/A	N/A	-1.6(a-I),8.5(a-II),9.6(c)	-2.7(a-I),8.5(a-II),9.5(c)	-1.6	-2.7
Bent 4		2.4 m CIDH	39100	40600	0	0	27	27	23.1	23.1	-4.5(a-I),6.1(a-II),9.1(c)	-5.2(a-I),6.1(a-II),9.5(c)	-4.5	-5.2
Bent 5		2.4 m CIDH	41600	43300	0	0	30	29	19.4	19.4	-6.7(a-I),2.4(a-II),8.4(c)	-7.6(a-I),2.4(a-II),11.2(c)	-6.7	-7.6
Bent 6		2.4 m CIDH	28400	30700	1150	800	33	30	15.5	15.5	-2.4(a-I),2.7(a-II), 13.7(b-II),11.8(c)	-3.9(a-I),2.7(a-II), 13.7(b-II),11.1(c)	-2.4	-3.9
Bent 7	Bent 7A	2.4 m CIDH	17600		0		30.5		15.5		3.4(a-I),8.2(a-II),6.75(c)		3.4	
	Bent 7B	2.4 m CIDH	17050		0		30.5		15.5		3.4(a-I),8.2(a-II),6.75(c)		3.4	
Bent 8	Bent 8A	2.4 m CIDH	19850		0		30.5		16.4		3.0(a-I),9.8(a-II),6.75(c)		3.0	
	Bent 8B	2.4 m CIDH	19750		0		30.5		16.4		3.0(a-I),9.8(a-II),6.75(c)		3.0	
Bent 9	Bent 9A	2.4 m CIDH	21250		0		30.5		16.4		1.8(a-I),9.4(a-II),6.75(c)		1.8	
	Bent 9B	2.4 m CIDH	17750		0		30.5		16.4		3.6(a-I),11.3(a-II),6.75(c)		3.6	
Bent 10		2.4 m CIDH	17750		0		30.5		16.4		3.6(a-I),8.8(a-II),6.75(c)		3.6	
Bent 11	Bent 11A	2.4 m CIDH	15350		0		30.5		16.4		5.8(a-I),8.5(a-II),6.75(c)		5.8	
	Bent 11B	2.4 m CIDH	17200		0		30.5		16.4		4.3(a-I),8.5(a-II),6.75(c)		4.3	
Bent 12		2.4 m CIDH	20700	22050	400	0	35	31	17.1	17.1	3.4(a-I),7.6(a-II), 15.8(b-II),15.4(c)	2.1(a-I),7.6(a-II),12.5(c)	3.4	2.1
Bent 13		2.4 m CIDH	29500	30850	0	0	33	31	17.3	17.3	-1.5(a-I),6.7(a-II),15.5(c)	-2.4(a-I),6.7(a-II),14.7(c)	-1.5	-2.4
Bent 14		2.4 m CIDH	41950	43300	0	0	31	30	17.5	17.5	-8.2(a-I),1.8(a-II),11.3(c)	-9.1(a-I),1.8(a-II),11.7(c)	-8.2	-9.1
Abut 15	North	1.2 m CIDH	6800		0		See plans		N/A		14.9(a),21.0(c)		14.9	
	South	1.5 m CIDH	8400		0		See plans		N/A		14.6(a),15.9(c)		14.6	
DAR Abut		0.9 m CIDH	5600		0		see plans		N/A		23.8(a),32.2(c)		23.8	

Notes: 1. Design Tip Elevations for bents are Controlled By:
(a-I) Compression (Strength Limit), (a-II) Compression Extreme Event), (b-II) Tension (Extreme Event), (c) Lateral load
2. Design Tip Elevations for Abutment 15 and DAR Abutment are controlled by: (a) Compression, (b) Lateral
3. Abutment 15 footing is stepped

ALL DIMENSIONS ARE IN METERS UNLESS OTHERWISE SHOWN

GEOTECHNICAL PROFESSIONAL APPROVAL DATE

CHUNG-YUAN WEN
DESIGN OVERSIGHT
4-28-09
SIGN OFF DATE

SCALE: | VERT.DATUM NGVD29 | HORZ.DATUM NAD83
PHOTOGRAMMETRY AS OF: 10/30/07 | ALIGNMENT TIES
SURVEYED BY Dave Sparks | DRAFTED BY
FIELD CHECKED BY Dave Sparks | CHECKED BY

DESIGN BY Roya Golchoobian CHECKED Pete Smith
DETAILS BY Andy Toledo CHECKED Pete Smith
QUANTITIES BY Oscar Colcol CHECKED Xiaoyun Wu

PREPARED FOR THE STATE OF CALIFORNIA DEPARTMENT OF TRANSPORTATION

Brett Makley
PROJECT ENGINEER

BRIDGE NO. 57C0786
KILOMETER POST KP43.2

CARROLL CANYON ROAD BRIDGE
FOUNDATION PLAN NO.1

FOUNDATION PLAN SHEET (METRIC) (REV. 10/27/05)

ORIGINAL SCALE IN MILLIMETERS FOR REDUCED PLANS 0 10 20 30 40 50 60 70 80 90 100

CU 11275
EA 2T0401

DISREGARD PRINTS BEARING EARLIER REVISION DATES
REVISION DATES (PRELIMINARY STAGE ONLY) 9/12/08 12/19/08 3/19/09 4/28/09

SHEET 12 OF 74

FILE => 57-c0786-e-fdp101.dgn

USERNAME => rtrmikes1 DATE PLOTTED => 29-SEP-2010 TIME PLOTTED => 11:35

DIST	COUNTY	ROUTE	KILOMETER POST TOTAL PROJECT	SHEET No	TOTAL
11	SD	5,805	R49.9/R51.7, 42.6/46.5	686	886

Caltrans Metric

REGISTERED CIVIL ENGINEER 4-28-09 DATE

9-27-10
PLANS APPROVAL DATE

REGISTERED PROFESSIONAL ENGINEER James L. Rucker No. 47796 Exp. 12-31-09 CIVIL STATE OF CALIFORNIA

The State of California or its officers or agents shall not be responsible for the accuracy or completeness of electronic copies of this plan sheet.

SANDAG
401 B STREET,
SAN DIEGO, CA 92101

T.Y. LIN INTERNATIONAL
5030 CAMINO DE LA SIESTA, SUITE 204,
SAN DIEGO, CA 92108

CURVE DATA

No.	R	Δ	T	L
4	218.00	-61°52'07"	130.648	235.399

PLAN
1:250

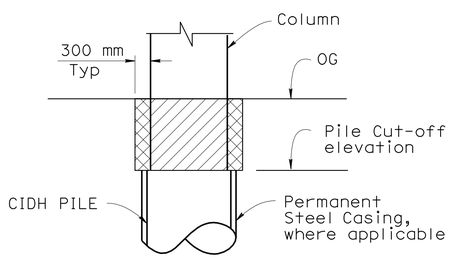

CIDH PILES

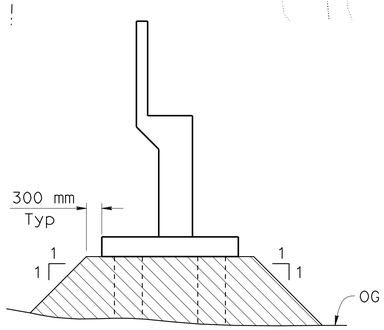

ABUTMENT 1 AND 15

LIMITS OF PAYMENT FOR EARTHWORK
No Scale

NOTES:

1. For CIDH Pile cut-off elevation see "PILE DATA TABLE" on "FOUNDATION PLAN NO.1" sheet
2. Earthwork limits in addition to A62C

LEGEND

= Structure Excavation
= Structure Backfill

UTILITY DATA TABLE

Label	Quantity	Utility Type	Owner	To Be Relocated	Underground (UG) or Overhead (OH)
3	1	2286 mm ± Existing Storm Drain	City of San Diego	N	UG

ALL DIMENSIONS ARE IN METERS UNLESS OTHERWISE SHOWN

GEOTECHNICAL PROFESSIONAL APPROVAL DATE

CHUNG-YUAN WEN
DESIGN OVERSIGHT
4-28-09
SIGN OFF DATE

SCALE: VERT.DATUM NGVD29 HORZ.DATUM NAD83
PHOTOGRAMMETRY AS OF: 10/30/07 ALIGNMENT TIES
SURVEYED BY Dave Sparks DRAFTED BY
FIELD CHECKED BY Dave Sparks CHECKED BY

DESIGN BY Roya Golchoobian CHECKED Pete Smith
DETAILS BY Andy Toledo CHECKED Pete Smith
QUANTITIES BY Oscar Colcol CHECKED Xiaoyun Wu

PREPARED FOR THE STATE OF CALIFORNIA DEPARTMENT OF TRANSPORTATION

Brett Makley
PROJECT ENGINEER

BRIDGE NO. 57C0786
KILOMETER POST KP43.2

CARROLL CANYON ROAD BRIDGE
FOUNDATION PLAN NO.2

FOUNDATION PLAN SHEET (METRIC) (REV. 10/27/05)

ORIGINAL SCALE IN MILLIMETERS FOR REDUCED PLANS 0 10 20 30 40 50 60 70 80 90 100

CU 11275
EA 2T0401

DISREGARD PRINTS BEARING EARLIER REVISION DATES
REVISION DATES (PRELIMINARY STAGE ONLY) 9/12/08 12/19/08 3/19/09 4/28/09

SHEET 13 OF 74

FILE => 57-c0786-e-fdp102.dgn

USERNAME => trmikesl DATE PLOTTED => 29-SEP-2010 TIME PLOTTED => 11:36

DIST	COUNTY	ROUTE	KILOMETER POST TOTAL PROJECT	SHEET No	TOTAL
11	SD	5,805	R49.9/R51.7, 42.6/46.5	687	886

Caltrans Metric

REGISTERED CIVIL ENGINEER 4-28-09 DATE

9-27-10
PLANS APPROVAL DATE

REGISTERED PROFESSIONAL ENGINEER James L. Rucker No. 47796 Exp. 12-31-09 CIVIL STATE OF CALIFORNIA

The State of California or its officers or agents shall not be responsible for the accuracy or completeness of electronic copies of this plan sheet.

SANDAG
401 B STREET,
SAN DIEGO, CA 92101

T.Y. LIN INTERNATIONAL
5030 CAMINO DE LA SIESTA, SUITE 204,
SAN DIEGO, CA 92108

CURVE DATA

No.	R	Δ	T	L
1	1066.802	51°0'06"	508.858	949.611
2	1219.202±	17°53'58"±	192.006±	380.884±
3	914.409±	3°55'21"±	31.313±	62.601±
4	218.000	61°52'07"	130.648	235.399

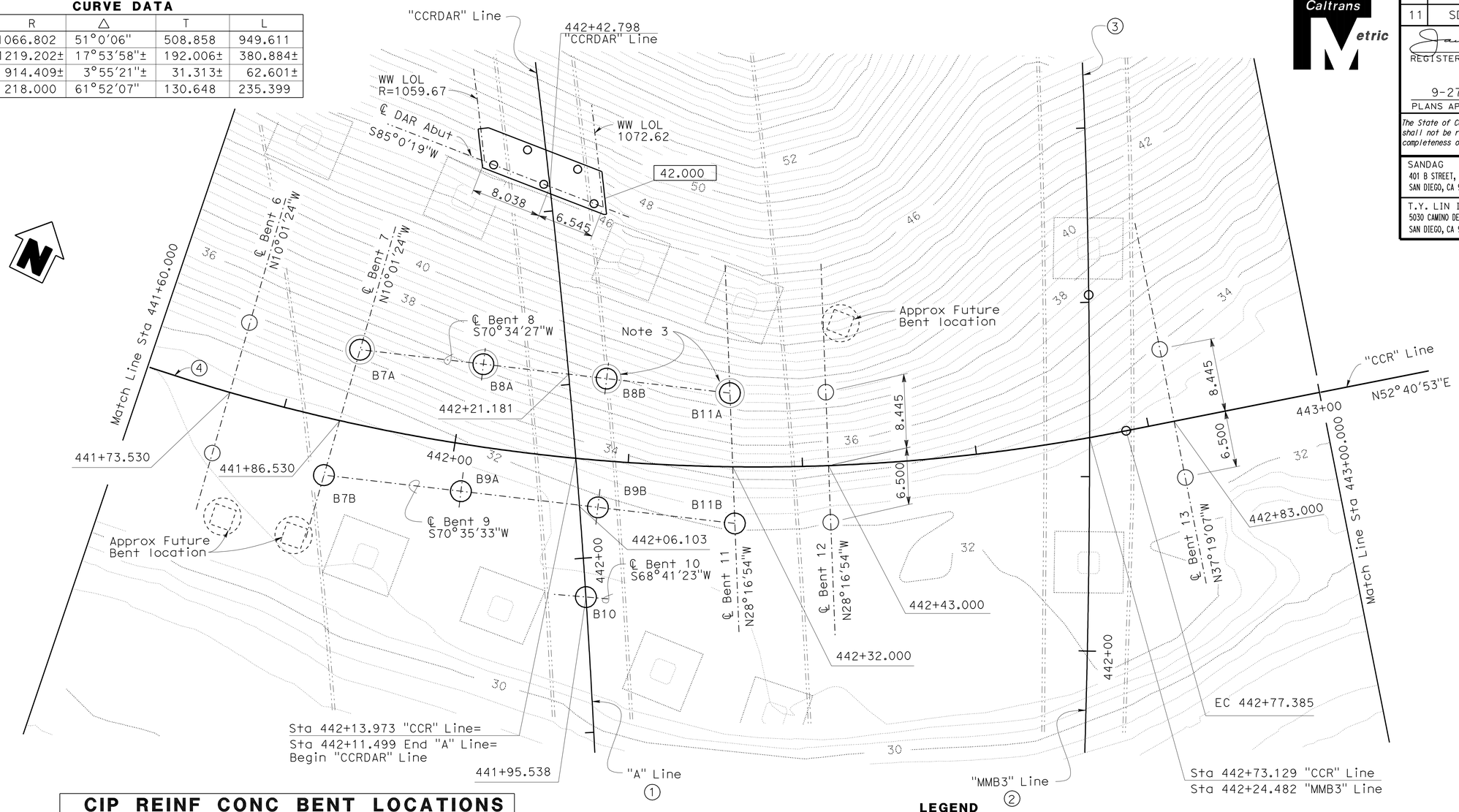

CIP REINF CONC BENT LOCATIONS

Bent Designation		Station along "CCR" Line	Station offset
B7	B7A	441+87.055	8.445 Lt
	B7B	441+86.153	6.500 Rt
B8	B8A	442+01.866	9.414 Lt
	B8B	442+16.745	9.414 Lt
B9	B9A	442+01.516	5.383 Rt
	B9B	442+16.956	5.383 Rt
B10	B10	442+15.771	15.752 Rt
B11	B11A	442+31.556	8.445 Lt
	B11B	442+32.319	6.500 Rt

PLAN
1:250

LEGEND

- Indicates existing footing/column location
- Indicates Approx location of future column/pile
- Indicates isolation casing

NOTES:

1. For CIDH Pile cut-off elevation see "PILE DATA TABLE" on "FOUNDATION PLAN NO.1" sheet
2. For limits of excavation & backfill not shown, see A62C
3. Isolation casing at B7A, B8A, B8B, and B11A. See details on "PLATFORM BENT DETAILS NO. 4" sheet

ALL DIMENSIONS ARE IN METERS UNLESS OTHERWISE SHOWN

GEOTECHNICAL PROFESSIONAL APPROVAL DATE

CHUNG-YUAN WEN
DESIGN OVERSIGHT
4-28-09
SIGN OFF DATE

SCALE:	VERT.DATUM NGVD29	HORZ.DATUM NAD83
PHOTOGRAMMETRY AS OF: 10/30/07	ALIGNMENT TIES	
SURVEYED BY Dave Sparks	DRAFTED BY	
FIELD CHECKED BY Dave Sparks	CHECKED BY	

DESIGN	BY Roya Golchoobian	CHECKED Pete Smith
DETAILS	BY Andy Toledo	CHECKED Pete Smith
QUANTITIES	BY Oscar Colcol	CHECKED Xiaoyun Wu

PREPARED FOR THE STATE OF CALIFORNIA DEPARTMENT OF TRANSPORTATION

Brett Makley
PROJECT ENGINEER

BRIDGE NO. 57C0786
KILOMETER POST KP43.2

CARROLL CANYON ROAD BRIDGE
FOUNDATION PLAN NO.3

FOUNDATION PLAN SHEET (METRIC) (REV. 10/27/05)

ORIGINAL SCALE IN MILLIMETERS FOR REDUCED PLANS 0 10 20 30 40 50 60 70 80 90 100

CU 11275
EA 2T0401

DISREGARD PRINTS BEARING EARLIER REVISION DATES

REVISION DATES (PRELIMINARY STAGE ONLY) 9/12/08 12/19/08 3/9/09 4/28/09

SHEET 14 OF 74

FILE => 57-c0786-e-fdp103.dgn

USERNAME => trmikesl DATE PLOTTED => 29-SEP-2010 TIME PLOTTED => 11:36

DIST	COUNTY	ROUTE	KILOMETER POST TOTAL PROJECT	SHEET No	TOTAL
11	SD	5,805	R49.9/R51.7, 42.6/46.5	688	886

Caltrans Metric

REGISTERED CIVIL ENGINEER — DATE 4-28-09

9-27-10
PLANS APPROVAL DATE

REGISTERED PROFESSIONAL ENGINEER — James L. Rucker No. 47796 Exp. 12-31-09 CIVIL — STATE OF CALIFORNIA

The State of California or its officers or agents shall not be responsible for the accuracy or completeness of electronic copies of this plan sheet.

SANDAG
401 B STREET,
SAN DIEGO, CA 92101

T.Y. LIN INTERNATIONAL
5030 CAMINO DE LA SIESTA, SUITE 204,
SAN DIEGO, CA 92108

CURVE DATA

No.	R	Δ	T	L
5	260.000	29°19'28"	68.026	133.070

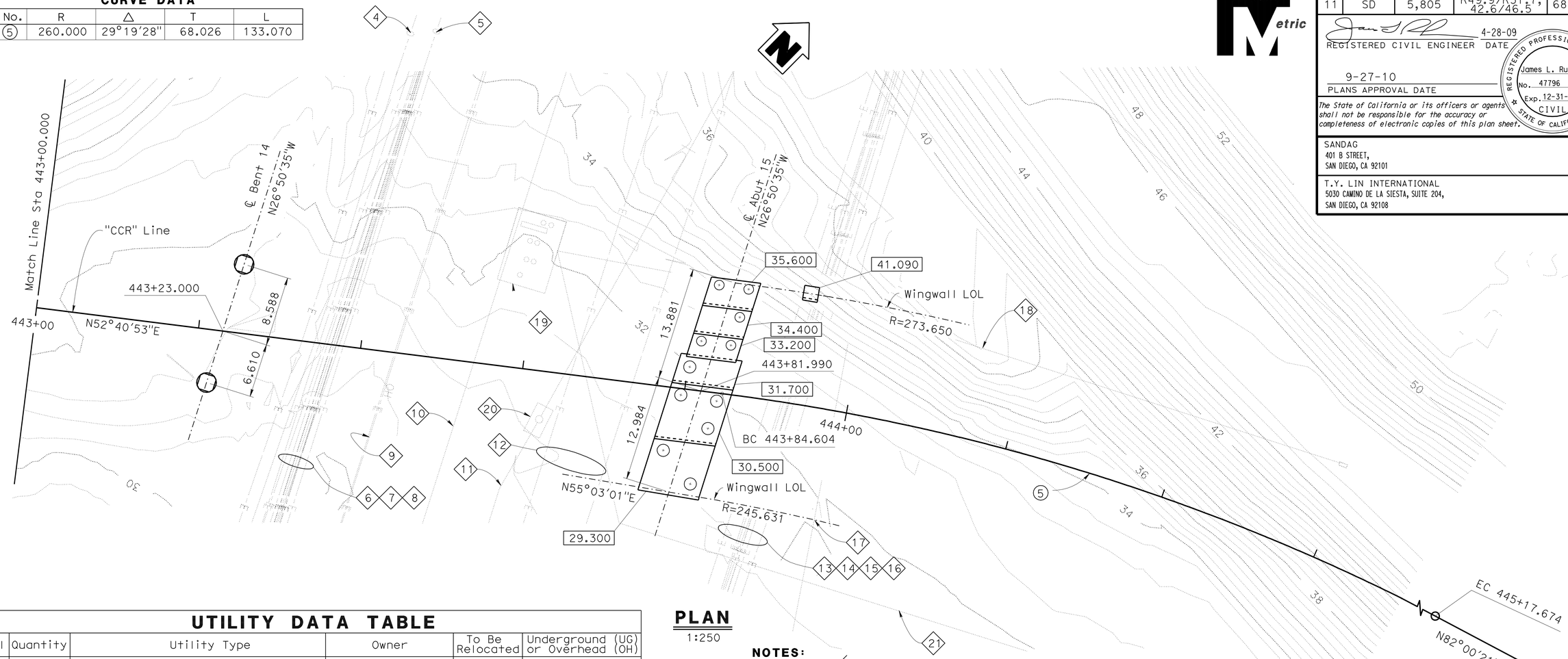

PLAN
1:250

NOTES:

1. [ ] - Indicates bottom of footing elevation.
2. For CIDH Pile cut-off elevation see "PILE DATA TABLE" on "FOUNDATION PLAN NO.1" sheet
3. For limits of excavation & backfill not shown, see A62C
4. All abutment piles not shown.

UTILITY DATA TABLE

Label	Quantity	Utility Type	Owner	To Be Relocated	Underground (UG) or Overhead (OH)
4	1	254 mm Existing WSP Petroleum Line	Kinder Morgan	N	UG
5	1	406 mm Existing WSP Petroleum Line	Kinder Morgan	N	UG
6	3	69 kV Existing Transmission Lines	SDG&E	Y	OH
7	4	12 kV Existing Distribution Lines	SDG&E	Y	OH
8	3	Existing CATV	?	Y	OH
9	3	138 kV Existing Transmission Lines	SDG&E	N	OH
10	1	762 mm Gas Line	SDG&E	N	UG
11	19	100 mm CPC Telephone Lines	Pacbell	N	UG
12	6	230 kV Existing Transmission Line	SDG&E	N	OH
13	6	69 kV Existing Transmission Lines	SDG&E	Y	OH
14	3	12 kV Existing Distribution Lines	SDG&E	Y	OH
15	1	Existing Fiber Optic Line	?	Y	OH

UTILITY DATA TABLE

Label	Quantity	Utility Type	Owner	To Be Relocated	Underground (UG) or Overhead (OH)
16	1	Existing Electrical Line	SDG&E	Y	OH
17	1	Existing 457 mm PVC Sewer	City of San Diego	N	UG
18	1	254 mm Steel Gas Vent Line	SDG&E	Y	UG
19	1	Existing Gas Facility	SDG&E	N	At Grade
20	1	Existing Manhole 6121 (3.6m x 1.8m x 2.1m)	Pacbell		UG
21	1	Proposed steel gas vent line	SDG&E	New	UG

ALL DIMENSIONS ARE IN METERS UNLESS OTHERWISE SHOWN

GEOTECHNICAL PROFESSIONAL APPROVAL DATE

CHUNG-YUAN WEN
DESIGN OVERSIGHT
4-28-09
SIGN OFF DATE

SCALE:	VERT.DATUM NGVD29	HORZ.DATUM NAD83	
PHOTOGRAMMETRY AS OF: 10/30/07	ALIGNMENT TIES		
SURVEYED BY Dave Sparks	DRAFTED BY		
FIELD CHECKED BY Dave Sparks	CHECKED BY		

DESIGN	BY Roya Golchoobian	CHECKED Pete Smith
DETAILS	BY Andy Toledo	CHECKED Pete Smith
QUANTITIES	BY Oscar Colcol	CHECKED Xiaoyun Wu

PREPARED FOR THE STATE OF CALIFORNIA DEPARTMENT OF TRANSPORTATION

Brett Makley
PROJECT ENGINEER

BRIDGE NO. 57C0786
KILOMETER POST KP43.2

CARROLL CANYON ROAD BRIDGE
FOUNDATION PLAN NO.4

FOUNDATION PLAN SHEET (METRIC) (REV. 10/27/05)

ORIGINAL SCALE IN MILLIMETERS FOR REDUCED PLANS 0 10 20 30 40 50 60 70 80 90 100

CU 11275
EA 2T0401

DISREGARD PRINTS BEARING EARLIER REVISION DATES

REVISION DATES (PRELIMINARY STAGE ONLY) 9/12/08 12/19/08 3/19/09 4/28/09

SHEET 15 OF 74

FILE => 57-c0786-e-fdp104.dgn

USERNAME => trmikest DATE PLOTTED => 29-SEP-2010 TIME PLOTTED => 11:36

DIST	COUNTY	ROUTE	KILOMETER POST TOTAL PROJECT	SHEET No	TOTAL SHEETS
11	SD	5,805	R49.9/R51.7, 42.6/46.5	689	886

Caltrans Metric

REGISTERED CIVIL ENGINEER — DATE 4-28-09

9-27-10
PLANS APPROVAL DATE

REGISTERED PROFESSIONAL ENGINEER — James L. Rucker No. 47796 Exp. 12-31-09 CIVIL — STATE OF CALIFORNIA

The State of California or its officers or agents shall not be responsible for the accuracy or completeness of electronic copies of this plan sheet.

SANDAG
401 B STREET,
SAN DIEGO, CA 92101

T.Y. LIN INTERNATIONAL
5030 CAMINO DE LA SIESTA, SUITE 204,
SAN DIEGO, CA 92108

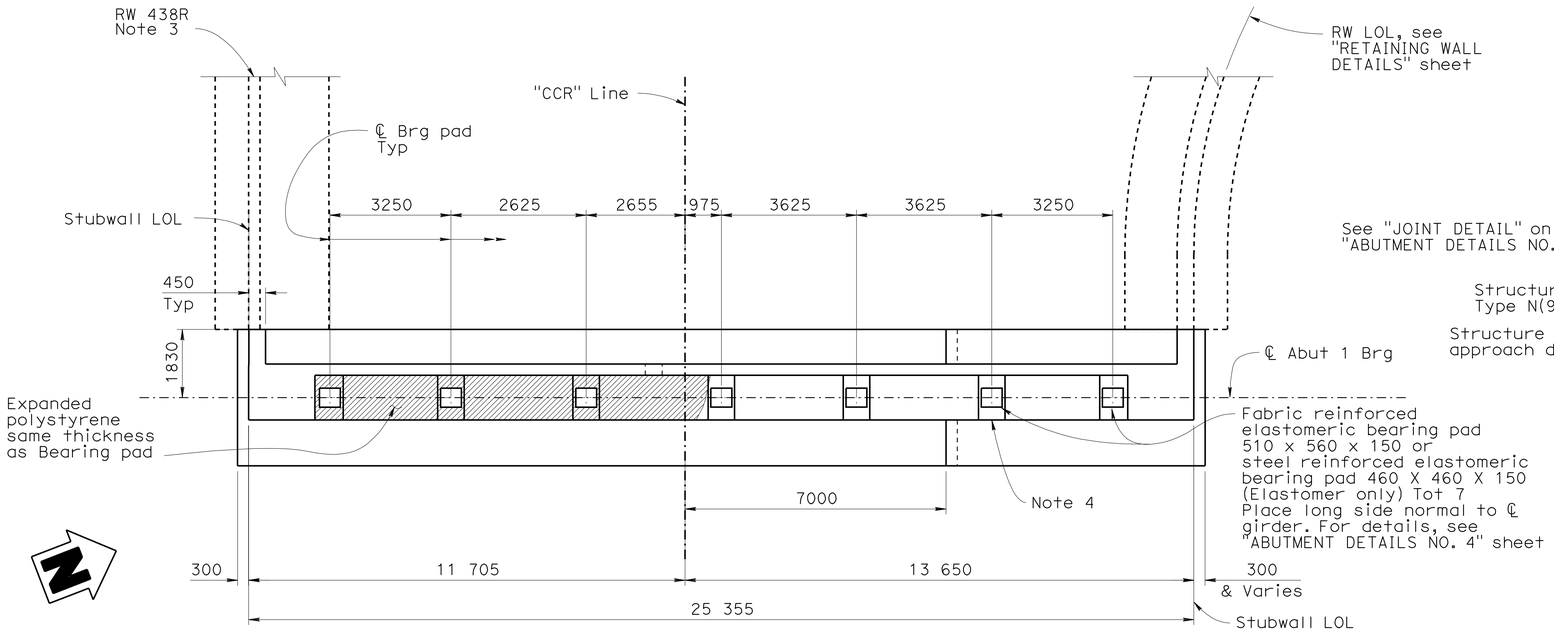

PLAN
1:80

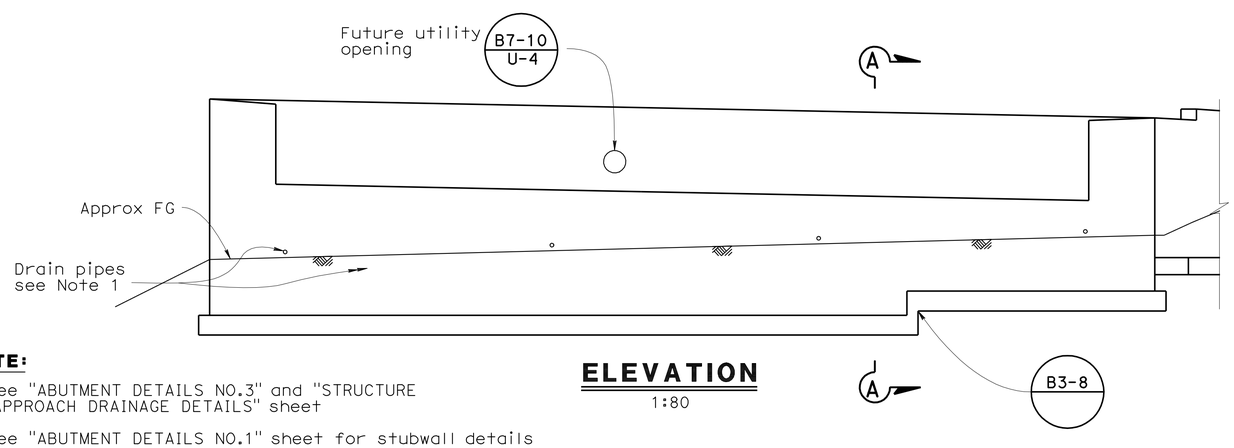

ELEVATION
1:80

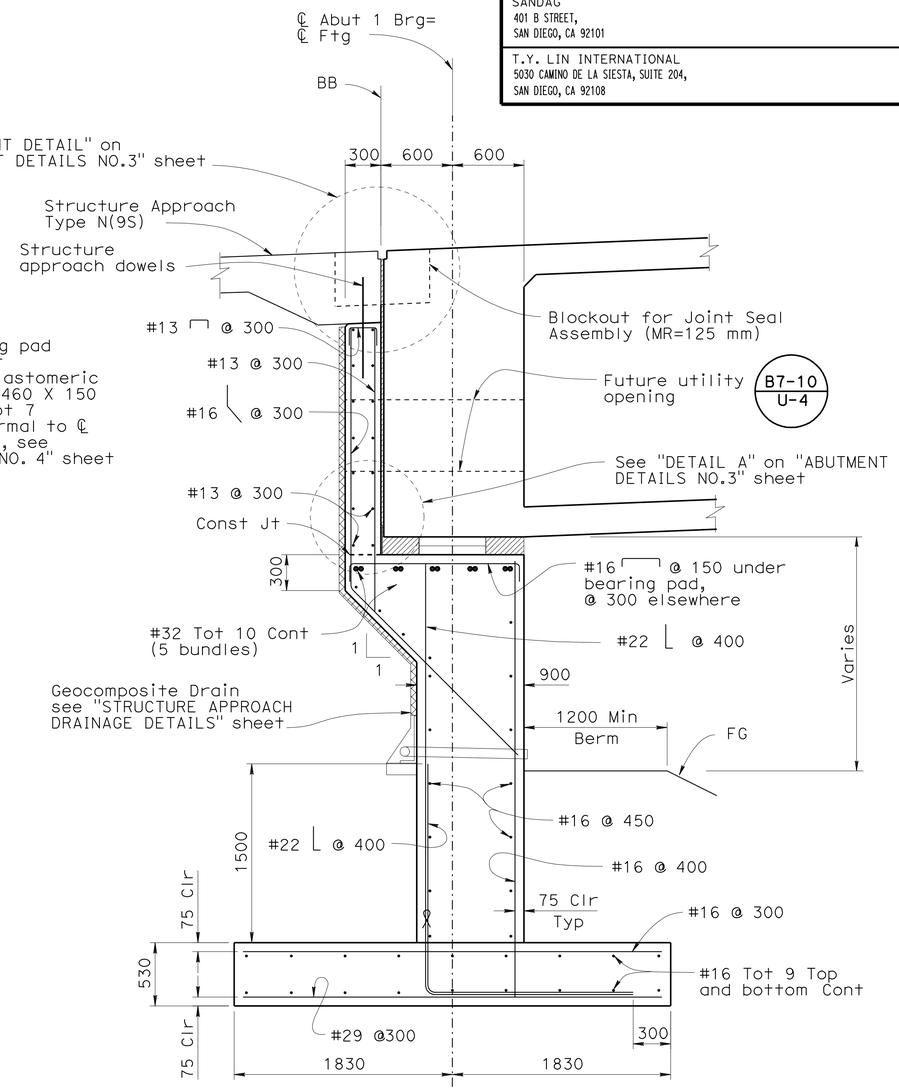

SECTION A-A
1:25

ALL DIMENSIONS ARE IN
MILLIMETERS UNLESS OTHERWISE SHOWN

NOTE:

1. See "ABUTMENT DETAILS NO.3" and "STRUCTURE APPROACH DRAINAGE DETAILS" sheet
2. See "ABUTMENT DETAILS NO.1" sheet for stubwall details
3. See Retaining wall plans for water stop detail
4. See "BEARING SEAT DETAILS" for level areas

CHUNG-YUAN WEN
DESIGN OVERSIGHT
4-28-09
SIGN OFF DATE

	BY	CHECKED
DESIGN	R. Golchoobian/E. Kjolsing	Dennis Trefren
DETAILS	Andy Toledo /I Martin	Dennis Trefren
QUANTITIES	Oscar Colcol	Xiaoyun Wu

PREPARED FOR THE
STATE OF CALIFORNIA
DEPARTMENT OF TRANSPORTATION

Brett Makley
PROJECT ENGINEER

BRIDGE NO. 57C0786
KILOMETER POST KP43.2

CARROLL CANYON ROAD BRIDGE
ABUTMENT 1 LAYOUT

DESIGN DETAIL SHEET (METRIC) (REV. 10/27/05)

ORIGINAL SCALE IN MILLIMETERS FOR REDUCED PLANS 0 10 20 30 40 50 60 70 80 90 100

CU 11275
EA 2T0401

DISREGARD PRINTS BEARING EARLIER REVISION DATES

REVISION DATES (PRELIMINARY STAGE ONLY): 9/12/08 12/19/08 3/9/09 4/28/09

SHEET 16 OF 74

FILE => 57-c0786-f-a01_lo1.dgn

USERNAME => trmikes1 DATE PLOTTED => 29-SEP-2010 TIME PLOTTED => 11:36

DIST	COUNTY	ROUTE	KILOMETER POST TOTAL PROJECT	SHEET No	TOTAL SHEETS
11	SD	5,805	R49.9/R51.7, 42.6/46.5	690	886

Caltrans Metric

REGISTERED CIVIL ENGINEER 4-28-09 DATE

9-27-10
PLANS APPROVAL DATE

REGISTERED PROFESSIONAL ENGINEER James L. Rucker No. 47796 Exp. 12-31-09 CIVIL STATE OF CALIFORNIA

The State of California or its officers or agents shall not be responsible for the accuracy or completeness of electronic copies of this plan sheet.

SANDAG
401 B STREET,
SAN DIEGO, CA 92101

T.Y. LIN INTERNATIONAL
5030 CAMINO DE LA SIESTA, SUITE 204,
SAN DIEGO, CA 92108

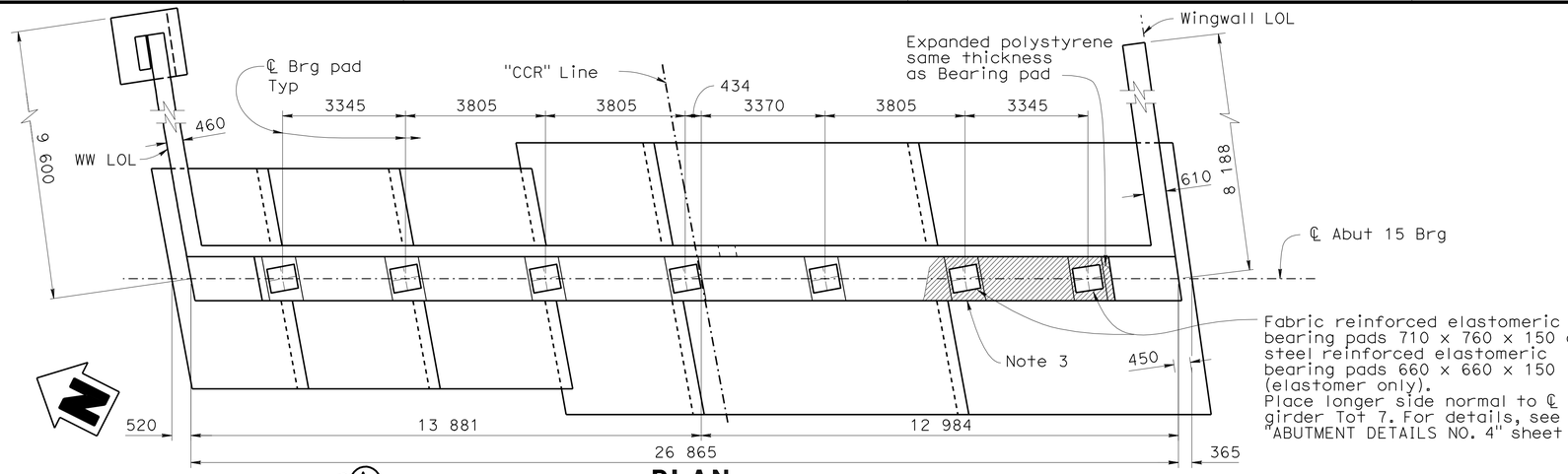

PLAN
1:80

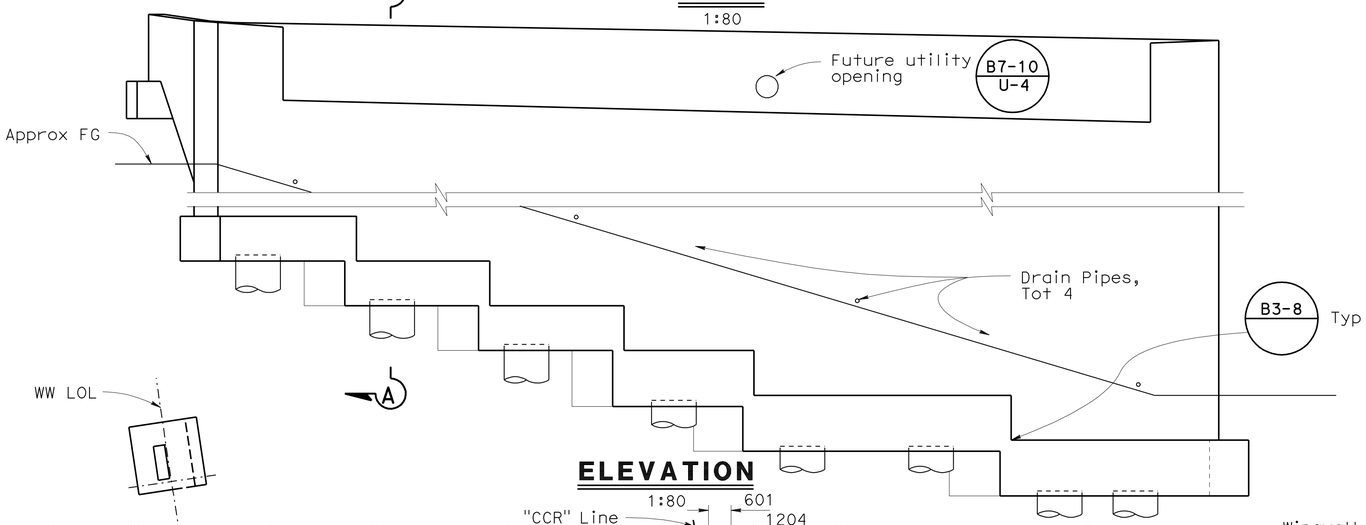

ELEVATION
1:80

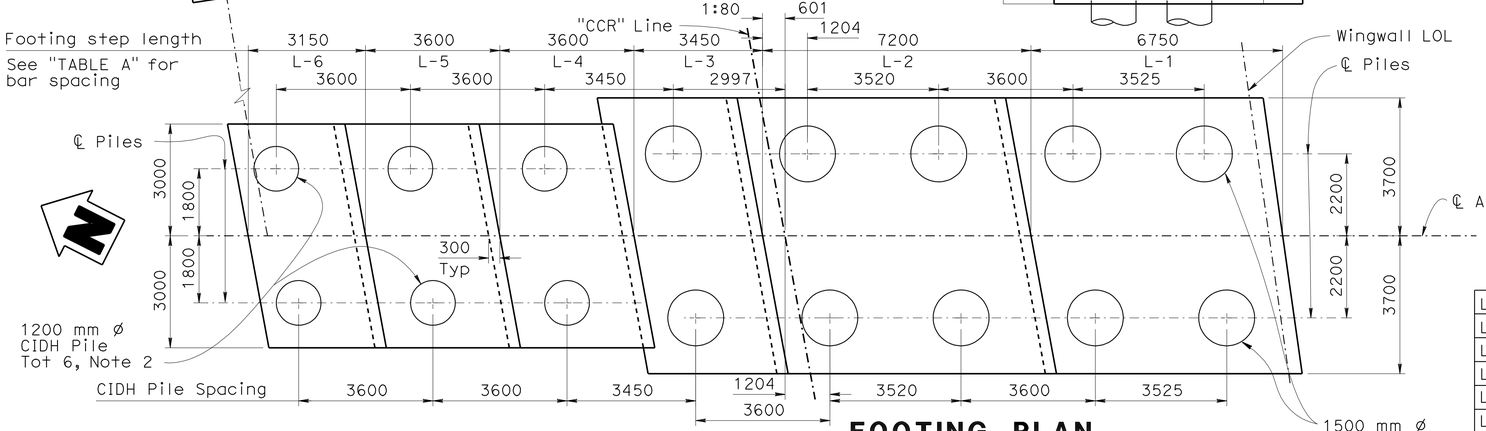

FOOTING PLAN
1:80

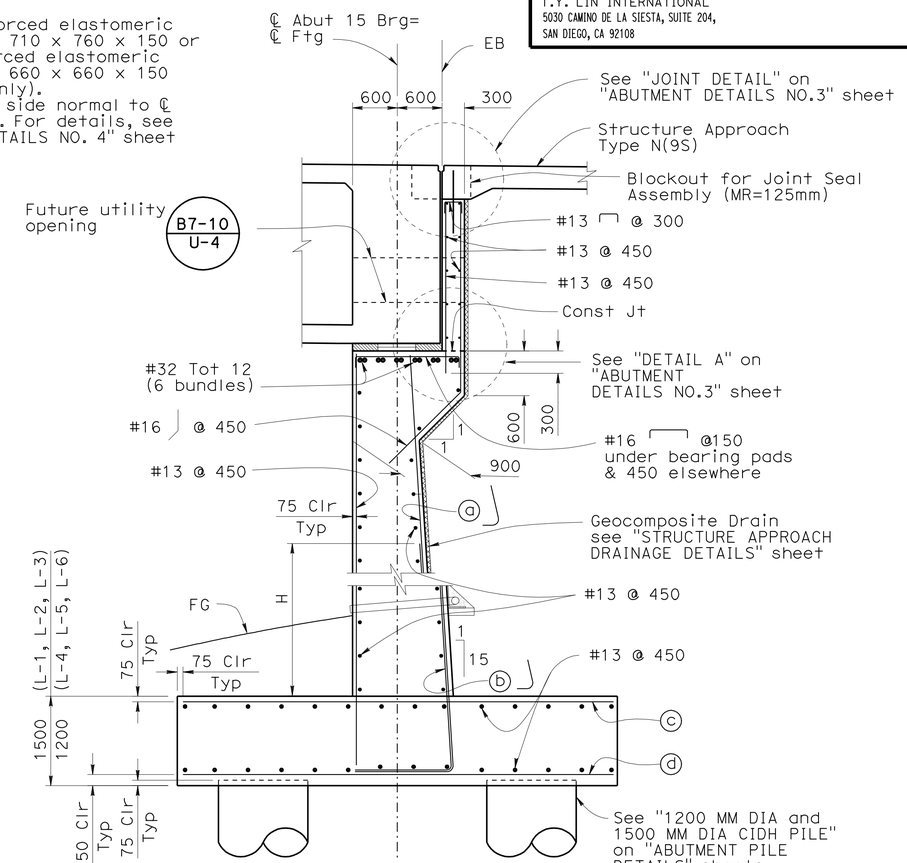

SECTION A-A
1:40

TABLE A

	ⓐ	ⓑ	H	ⓒ	ⓓ
L-1	#36 @ 220	#36 @ 220	3.9m	#25 @ 320	#43 @ 140
L-2	#36 @ 260	#36 @ 260	3.5m	#25 @ 310	#43 @ 150
L-3	#36 @ 260	#36 @ 260	3.5m	#25 @ 310	#43 @ 150
L-4	#36 @ 400	#36 @ 400	2.5m	#22 @ 440	#43 @ 240
L-5	#36 @ 400	#36 @ 400	2.5m	#22 @ 440	#43 @ 240
L-6	#36 @ 400	#36 @ 400	2.5m	#22 @ 440	#43 @ 240

NOTES:

1. See "ABUTMENT DETAILS NO.1" and "ABUTMENT DETAILS NO.4" sheets
2. See "NOTE: on "ABUTMENT PILE DETAILS" for hook direction at piles near the edge of footing
3. See "BEARING SEAT DETAILS" for level areas

ALL DIMENSIONS ARE IN MILLIMETERS UNLESS OTHERWISE SHOWN

CHUNG-YUAN WEN
DESIGN OVERSIGHT
4-28-09
SIGN OFF DATE

DESIGN DETAIL SHEET (METRIC) (REV. 10/27/05)

	BY	CHECKED
DESIGN	R. Golchoobian/E. Kjolsing	Dennis Trefren
DETAILS	Andy Toledo	Dennis Trefren
QUANTITIES	Oscar Colcol	Xiaoyun Wu

PREPARED FOR THE STATE OF CALIFORNIA DEPARTMENT OF TRANSPORTATION

Brett Makley
PROJECT ENGINEER

BRIDGE NO. 57C0786
KILOMETER POST KP43.2

CARROLL CANYON ROAD BRIDGE
ABUTMENT 15 LAYOUT

ORIGINAL SCALE IN MILLIMETERS FOR REDUCED PLANS 0 10 20 30 40 50 60 70 80 90 100

CU 11275
EA 2T0401

DISREGARD PRINTS BEARING EARLIER REVISION DATES

REVISION DATES (PRELIMINARY STAGE ONLY) 9/12/08 12/19/08 3/19/09 4/28/09

SHEET 17 OF 74

FILE => 57-c0786-f-a01_lo2.dgn

USERNAME => trmikesl DATE PLOTTED => 29-SEP-2010 TIME PLOTTED => 11:36

DIST	COUNTY	ROUTE	KILOMETER POST TOTAL PROJECT	SHEET No	TOTAL SHEETS
11	SD	5,805	R49.9/R51.7, 42.6/46.5	691	886

Caltrans Metric

REGISTERED CIVIL ENGINEER 4-28-09 DATE

9-27-10
PLANS APPROVAL DATE

REGISTERED PROFESSIONAL ENGINEER James L. Rucker No. 47796 Exp. 12-31-09 CIVIL STATE OF CALIFORNIA

The State of California or its officers or agents shall not be responsible for the accuracy or completeness of electronic copies of this plan sheet.

SANDAG
401 B STREET,
SAN DIEGO, CA 92101

T.Y. LIN INTERNATIONAL
5030 CAMINO DE LA SIESTA, SUITE 204,
SAN DIEGO, CA 92108

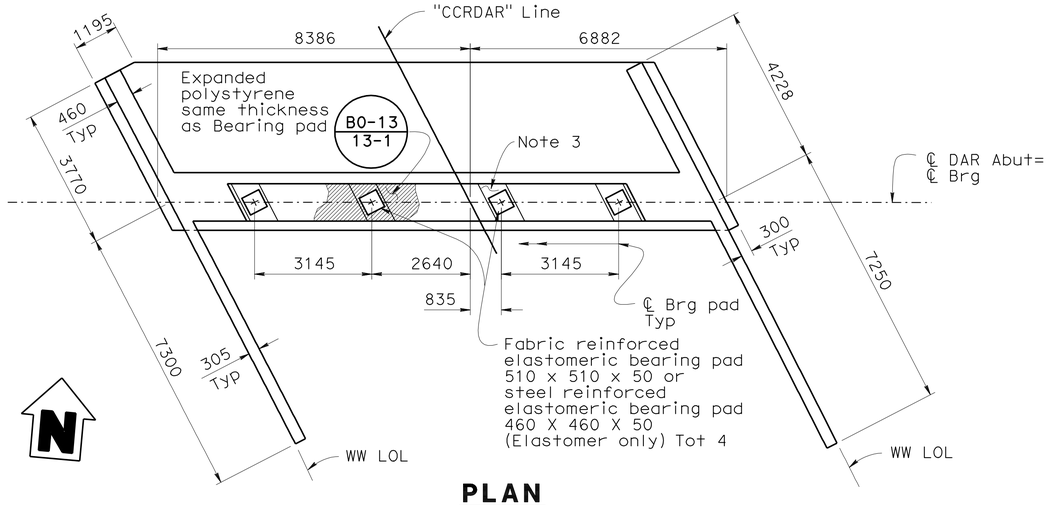

PLAN
1:80

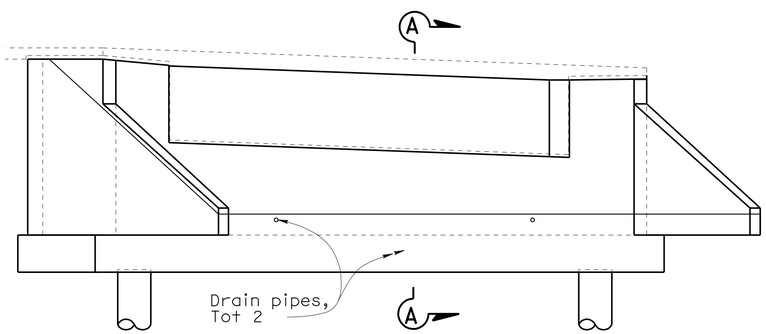

ELEVATION
1:80

NOTES:

1. All piles not shown
2. See "ABUTMENT DETAILS NO.3" sheet
3. See "BEARING SEAT DETAILS" for level areas

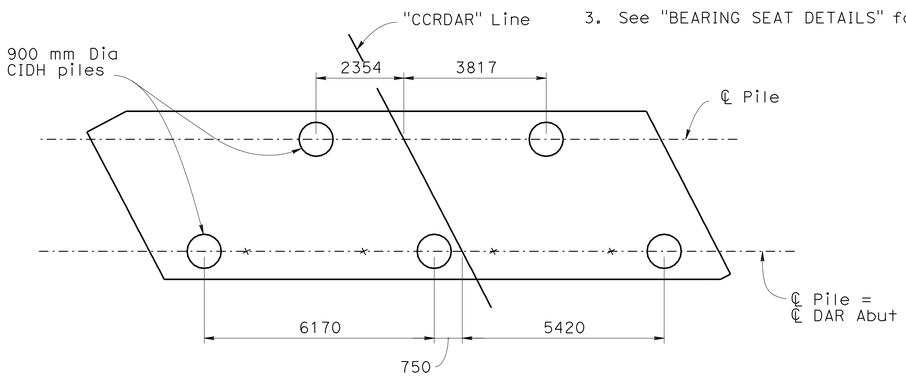

FOOTING PLAN
1:80

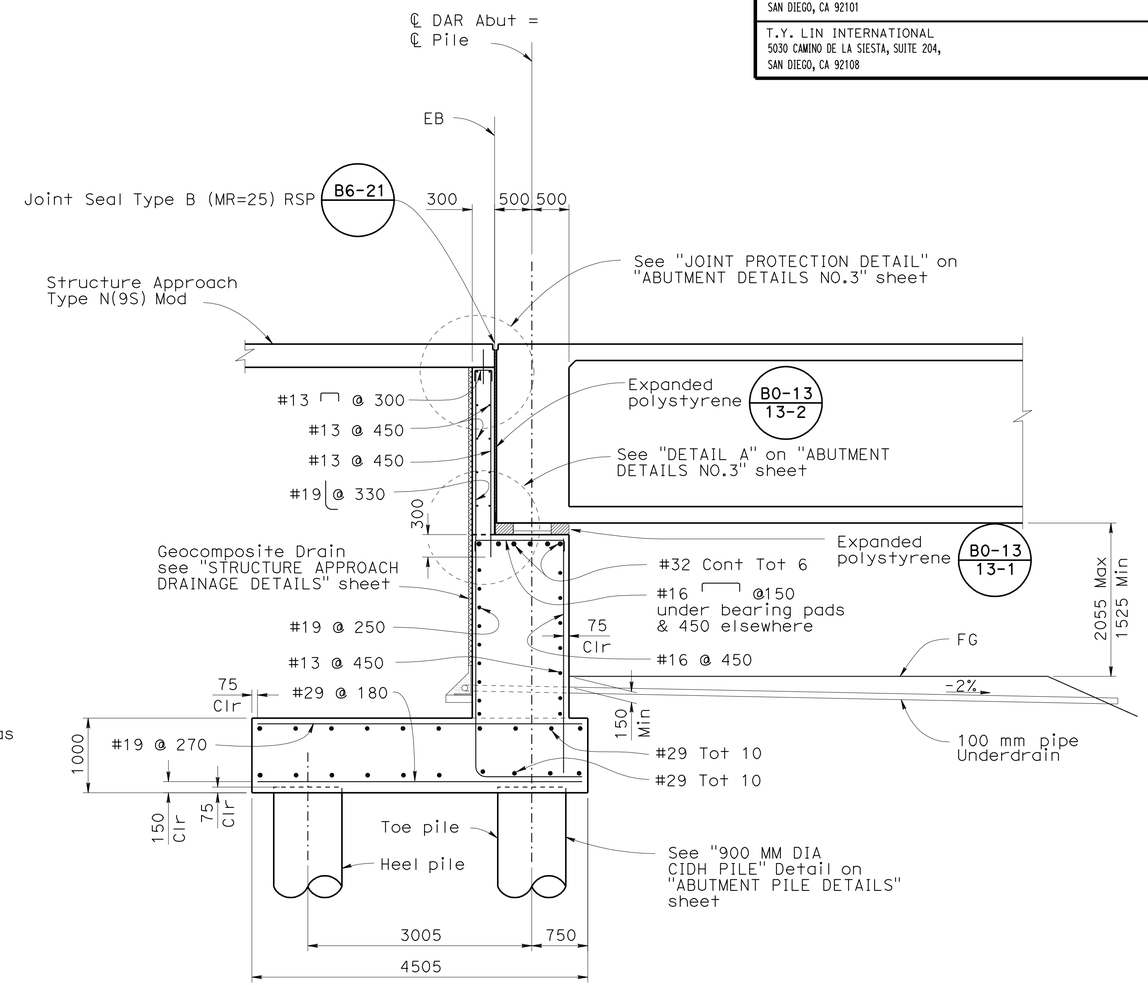

SECTION A-A
1:40

ALL DIMENSIONS ARE IN MILLIMETERS UNLESS OTHERWISE SHOWN

CHUNG-YUAN WEN
DESIGN OVERSIGHT
4-28-09
SIGN OFF DATE

	BY	CHECKED
DESIGN	Roya Golchoobian	Dennis Trefren
DETAILS	Andy Toledo	Dennis Trefren
QUANTITIES	Oscar Colcol	Xiaoyun Wu

PREPARED FOR THE STATE OF CALIFORNIA DEPARTMENT OF TRANSPORTATION

Brett Makley
PROJECT ENGINEER

BRIDGE NO. 57C0786
KILOMETER POST KP43.2

CARROLL CANYON ROAD BRIDGE
DAR ABUTMENT LAYOUT

DESIGN DETAIL SHEET (METRIC) (REV. 10/27/05)

ORIGINAL SCALE IN MILLIMETERS FOR REDUCED PLANS 0 10 20 30 40 50 60 70 80 90 100

CU 11275
EA 2T0401

DISREGARD PRINTS BEARING EARLIER REVISION DATES

REVISION DATES (PRELIMINARY STAGE ONLY) 9/12/08 12/19/08 3/19/09 4/28/09

SHEET 18 OF 74

FILE => 57-c0786-f-a01_lo3.dgn

USERNAME => trmikest DATE PLOTTED => 29-SEP-2010 TIME PLOTTED => 11:37

DIST	COUNTY	ROUTE	KILOMETER POST TOTAL PROJECT	SHEET No	TOTAL SHEETS
11	SD	5,805	R49.9/R51.7, 42.6/46.5	692	886

REGISTERED CIVIL ENGINEER 4-28-09 DATE

9-27-10
PLANS APPROVAL DATE

REGISTERED PROFESSIONAL ENGINEER James L. Rucker No. 47796 Exp. 12-31-09 CIVIL STATE OF CALIFORNIA

The State of California or its officers or agents shall not be responsible for the accuracy or completeness of electronic copies of this plan sheet.

SANDAG
401 B STREET,
SAN DIEGO, CA 92101

T.Y. LIN INTERNATIONAL
5030 CAMINO DE LA SIESTA, SUITE 204,
SAN DIEGO, CA 92108

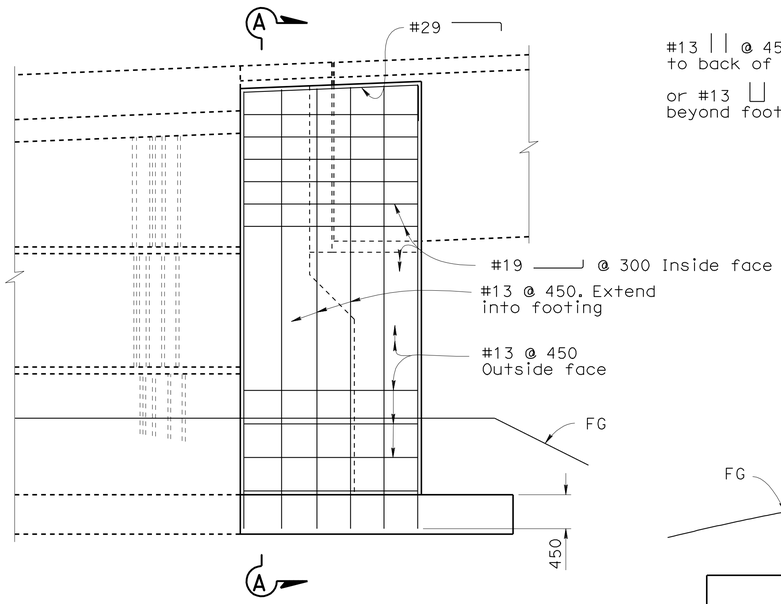

ABUTMENT 1 STUBWALL

NOTES:

1. South Stubwall shown, North Stubwall similar.
2. Barrier not shown for clarity.

ELEVATION

1:40

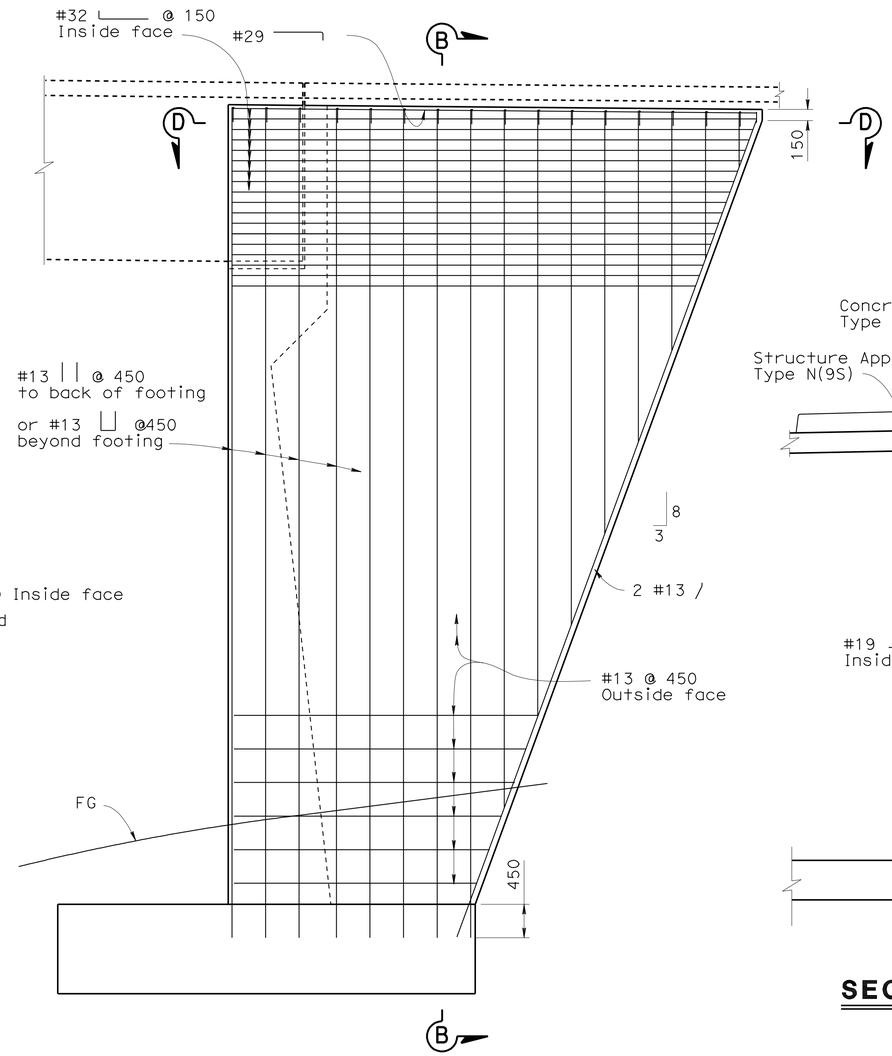

ABUTMENT 15 WINGWALL

NOTES:

1. Barrier not shown for clarity.

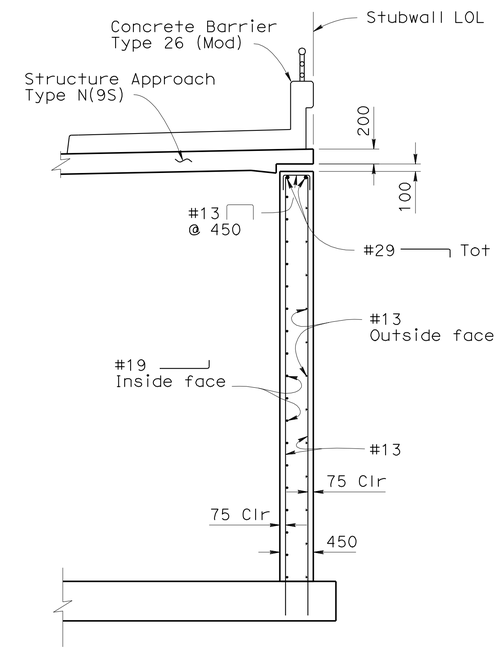

SECTION A-A

1:40

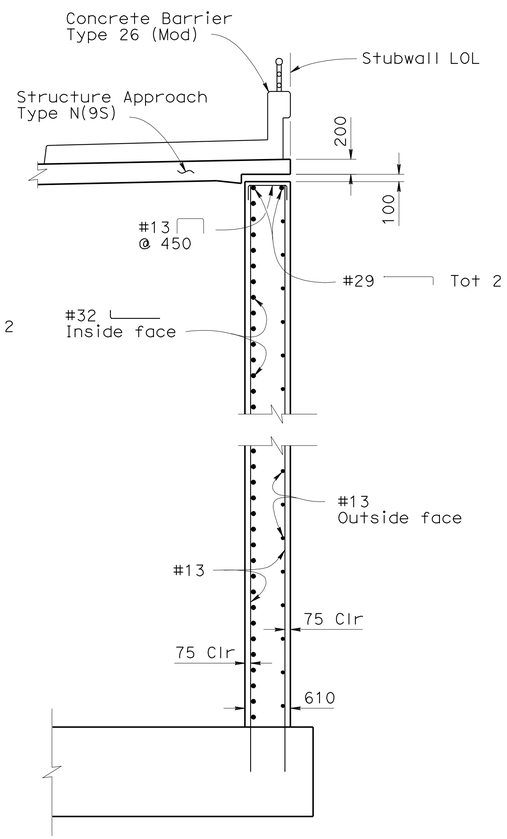

SECTION B-B

1:40

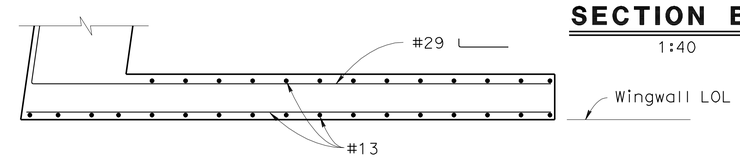

SECTION D-D

1:40

ALL DIMENSIONS ARE IN MILLIMETERS UNLESS OTHERWISE SHOWN

CHUNG-YUAN WEN DESIGN OVERSIGHT 4-28-09 SIGN OFF DATE	DESIGN	BY Roya Golchoobian	CHECKED Dennis Trefren	PREPARED FOR THE STATE OF CALIFORNIA DEPARTMENT OF TRANSPORTATION	Brett Makley PROJECT ENGINEER
	DETAILS	BY Andy Toledo	CHECKED Dennis Trefren		
	QUANTITIES	BY Oscar Colcol	CHECKED Xiaoyun Wu		

BRIDGE NO. 57C0786
KILOMETER POST KP43.2

CARROLL CANYON ROAD BRIDGE
ABUTMENT DETAILS NO.1

DESIGN DETAIL SHEET (METRIC) (REV. 10/27/05)

ORIGINAL SCALE IN MILLIMETERS FOR REDUCED PLANS 0 10 20 30 40 50 60 70 80 90 100

CU 11275
EA 2T0401

DISREGARD PRINTS BEARING EARLIER REVISION DATES → 9/12/08 12/19/08 3/19/09 4/28/09

REVISION DATES (PRELIMINARY STAGE ONLY)

SHEET 19 OF 74

FILE => 57-c0786-f-a01dt01.dgn

USERNAME => trmikes1 DATE PLOTTED => 29-SEP-2010 TIME PLOTTED => 11:37

DIST	COUNTY	ROUTE	KILOMETER POST TOTAL PROJECT	SHEET No	TOTAL SHEETS
11	SD	5,805	R49.9/R51.7, 42.6/46.5	693	886

Caltrans Metric

REGISTERED CIVIL ENGINEER 4-28-09 DATE

9-27-10
PLANS APPROVAL DATE

REGISTERED PROFESSIONAL ENGINEER James L. Rucker No. 47796 Exp. 12-31-09 CIVIL STATE OF CALIFORNIA

The State of California or its officers or agents shall not be responsible for the accuracy or completeness of electronic copies of this plan sheet.

SANDAG
401 B STREET,
SAN DIEGO, CA 92101

T.Y. LIN INTERNATIONAL
5030 CAMINO DE LA SIESTA, SUITE 204,
SAN DIEGO, CA 92108

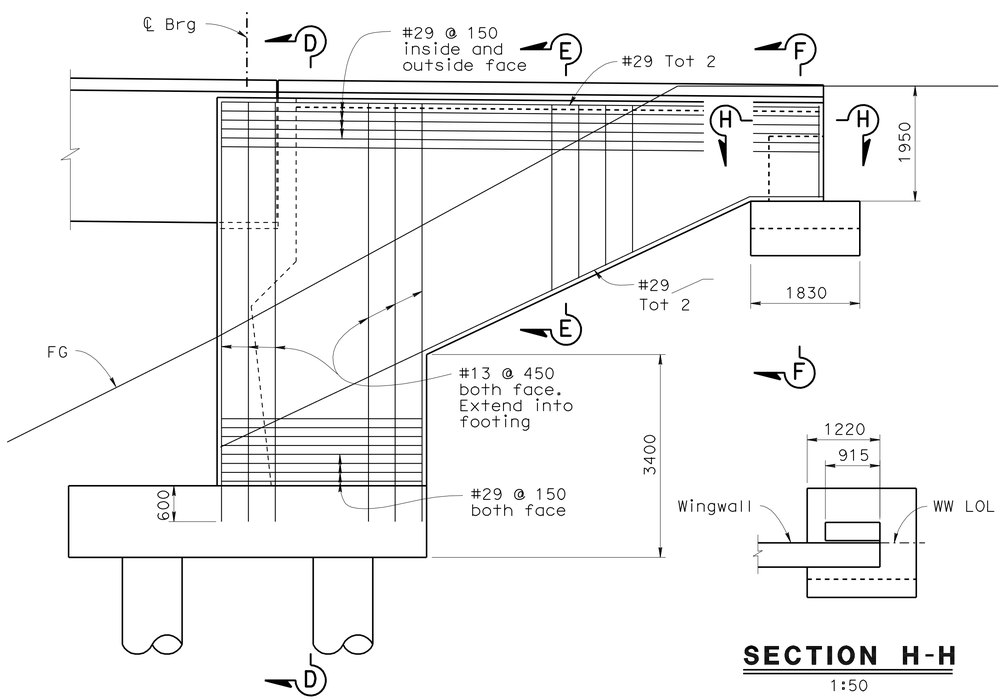

MIRRORED WINGWALL ELEVATION (ABUTMENT 15)
1:50

SECTION H-H
1:50

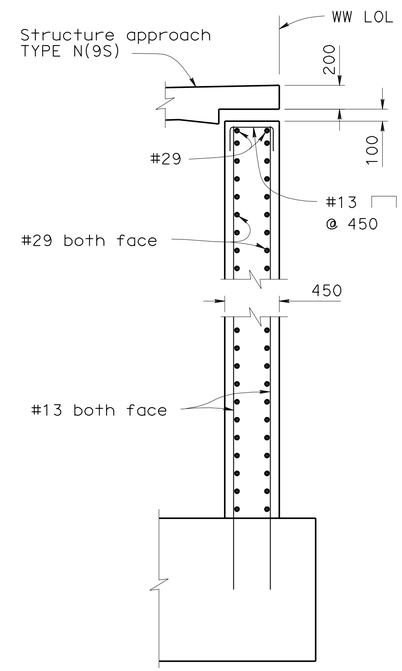

SECTION D-D
1:25

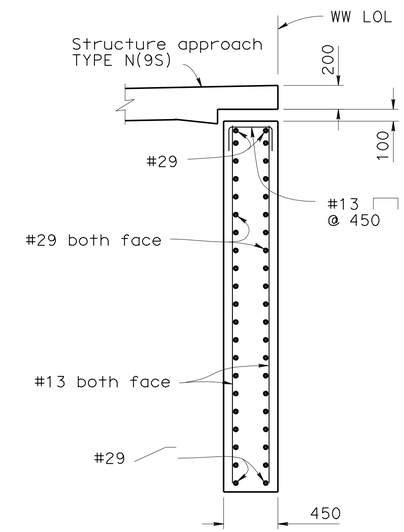

SECTION E-E
1:50

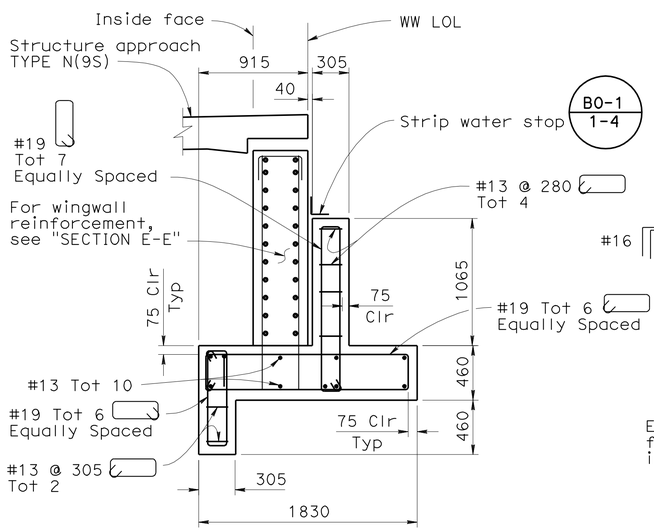

SECTION F-F
1:25

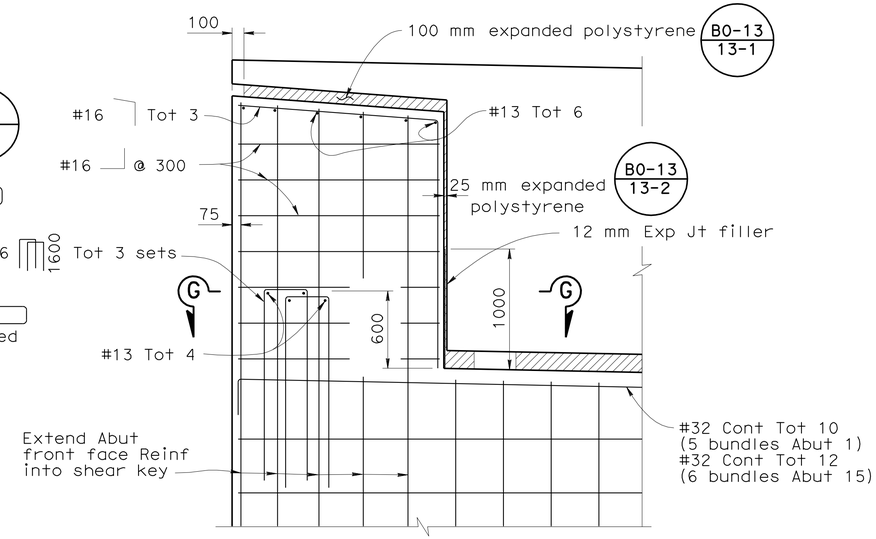

SHEAR KEY DETAIL
1:25

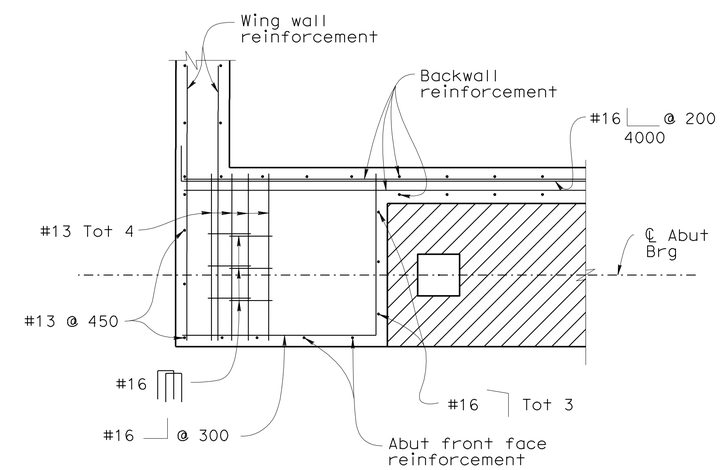

SECTION G-G
1:25

ALL DIMENSIONS ARE IN MILLIMETERS UNLESS OTHERWISE SHOWN

CHUNG-YUAN WEN
DESIGN OVERSIGHT
4-28-09
SIGN OFF DATE

	BY	CHECKED
DESIGN	Roya Golchoobian	Dennis Trefren
DETAILS	Andy Toledo	Dennis Trefren
QUANTITIES	Oscar Colcol	Xiaoyun Wu

PREPARED FOR THE STATE OF CALIFORNIA DEPARTMENT OF TRANSPORTATION

Brett Makley
PROJECT ENGINEER

BRIDGE NO. 57C0786
KILOMETER POST KP43.2

CARROLL CANYON ROAD BRIDGE
ABUTMENT DETAILS NO.2

DESIGN DETAIL SHEET (METRIC) (REV. 10/27/05)

ORIGINAL SCALE IN MILLIMETERS FOR REDUCED PLANS 0 10 20 30 40 50 60 70 80 90 100

CU 11275
EA 2T0401

DISREGARD PRINTS BEARING EARLIER REVISION DATES

REVISION DATES (PRELIMINARY STAGE ONLY): ~~9/12/08~~ ~~12/19/08~~ ~~3/19/09~~ 4/28/09

SHEET 20 OF 74

FILE => 57-c0786-f-a01dt02.dgn

USERNAME => ttmikes1 DATE PLOTTED => 29-SEP-2010 TIME PLOTTED => 11:37

DIST	COUNTY	ROUTE	KILOMETER POST TOTAL PROJECT	SHEET No	TOTAL SHEETS
11	SD	5,805	R49.9/R51.7, 42.6/46.5	694	886

Caltrans Metric

REGISTERED CIVIL ENGINEER — DATE 4-28-09

9-27-10
PLANS APPROVAL DATE

REGISTERED PROFESSIONAL ENGINEER — James L. Rucker No. 47796 Exp. 12-31-09 CIVIL — STATE OF CALIFORNIA

The State of California or its officers or agents shall not be responsible for the accuracy or completeness of electronic copies of this plan sheet.

SANDAG
401 B STREET,
SAN DIEGO, CA 92101

T.Y. LIN INTERNATIONAL
5030 CAMINO DE LA SIESTA, SUITE 204,
SAN DIEGO, CA 92108

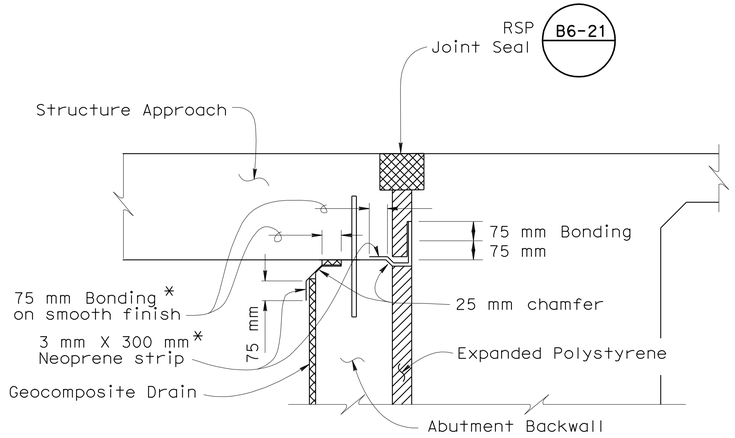

* - Place prior to backfilling the Abut backwall (Fold neoprene into chamfer)

JOINT PROTECTION DETAIL

No Scale

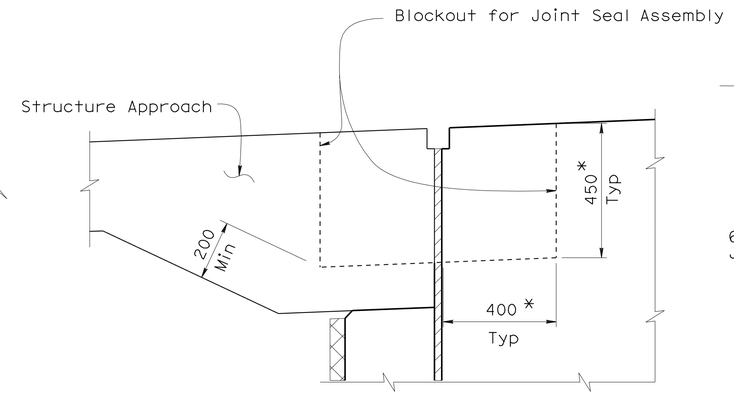

* Verify with Joint Seal Manufacturer

JOINT DETAIL

No Scale

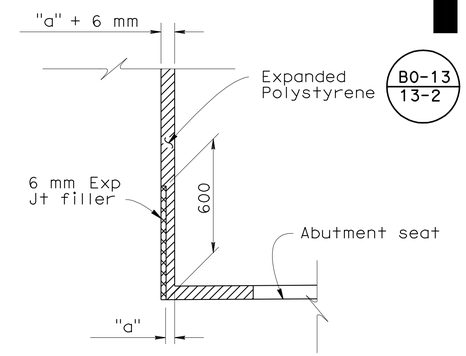

DETAIL A

No Scale

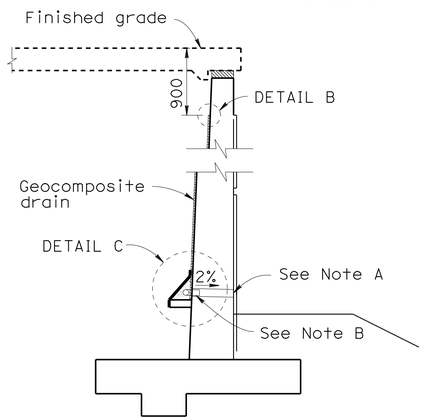

WALL SECTION

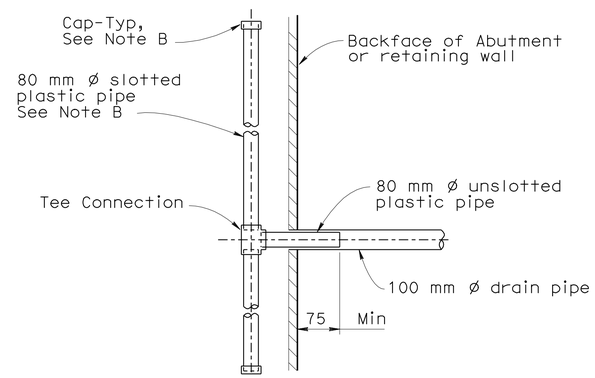

SECTION A-A

NOTES

A. 100 mm ø drains at intermediate sag points and at 7620 mm max. center to center (2743 mm c-c for Type 3 and 2819 mm c-c for Type 4 retaining walls). For walls adjacent to sidewalks or curbs, provide 100 mm plastic pipe under sidewalk to discharge through curb face. Exposed wall drains shall be located 75 mm± above finished grade.

B. Geocomposite drain, cement treated permeable base, and 80 mm ø slotted plastic pipe continuous behind retaining wall or abutment. Cap ends of pipe. Provide "Tee" connection at each 80 mm ø drain.

C. Connect the low end of plastic pipe to the main outlet pipe as applicable.

D. For location of "DETAIL A", see "ABUTMENT 1 LAYOUT", "ABUTMENT 15 LAYOUT" and "DAR ABUTMENT LAYOUT" sheet

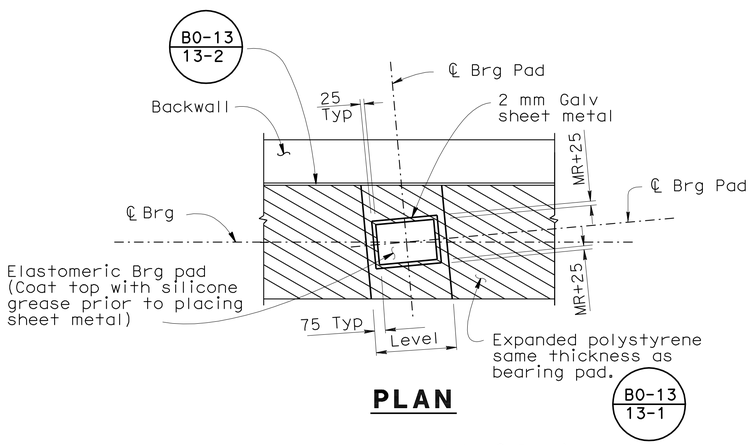

Note: ℄ Bearing pad should be parallel to ℄ girders

PLAN

ELEVATION

BEARING SEAT DETAILS

No Scale

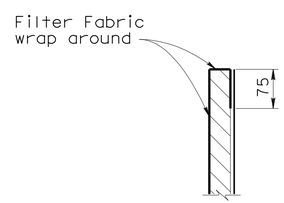

DETAIL B

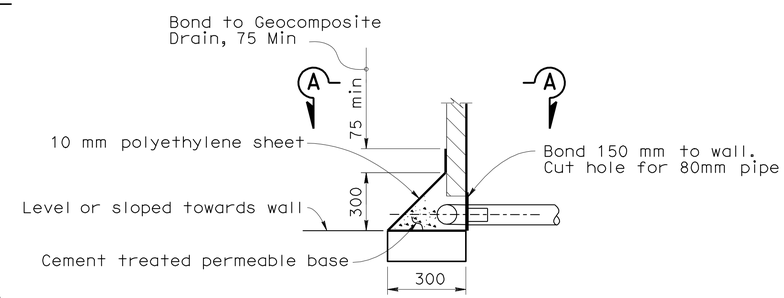

DETAIL C

WEEP HOLE AND GEOCOMPOSITE DRAIN

No Scale

Alternative to Bridge Detail B0-3 / 3-1

ALL DIMENSIONS ARE IN MILLIMETERS UNLESS OTHERWISE SHOWN

CHUNG-YUAN WEN
DESIGN OVERSIGHT
4-28-09
SIGN OFF DATE

	BY	CHECKED
DESIGN	Roya Golchoobian	Dennis Trefren
DETAILS	Andy Toledo	Dennis Trefren
QUANTITIES	Oscar Colcol	Xiaoyun Wu

PREPARED FOR THE STATE OF CALIFORNIA DEPARTMENT OF TRANSPORTATION

Brett Makley
PROJECT ENGINEER

BRIDGE NO. 57C0786
KILOMETER POST KP43.2

CARROLL CANYON ROAD BRIDGE
ABUTMENT DETAILS NO.3

DESIGN DETAIL SHEET (METRIC) (REV. 10/27/05)

ORIGINAL SCALE IN MILLIMETERS FOR REDUCED PLANS 0 10 20 30 40 50 60 70 80 90 100

CU 11275
EA 2T0401

DISREGARD PRINTS BEARING EARLIER REVISION DATES

REVISION DATES (PRELIMINARY STAGE ONLY): 9/12/08 12/19/08 3/19/09 4/28/09

SHEET 21 OF 74

FILE => 57-c0786-f-a01dt03.dgn

USERNAME => rtrmikes DATE PLOTTED => 29-SEP-2010 TIME PLOTTED => 11:37

DIST	COUNTY	ROUTE	KILOMETER POST TOTAL PROJECT	SHEET No	TOTAL SHEETS
11	SD	5,805	R49.9/R51.7, 42.6/46.5	695	886

REGISTERED CIVIL ENGINEER 4-28-09 DATE

9-27-10
PLANS APPROVAL DATE

The State of California or its officers or agents shall not be responsible for the accuracy or completeness of electronic copies of this plan sheet.

REGISTERED PROFESSIONAL ENGINEER
James L. Rucker
No. 47796
Exp. 12-31-09
CIVIL
STATE OF CALIFORNIA

SANDAG
401 B STREET,
SAN DIEGO, CA 92101

T.Y. LIN INTERNATIONAL
5030 CAMINO DE LA SIESTA, SUITE 204,
SAN DIEGO, CA 92108

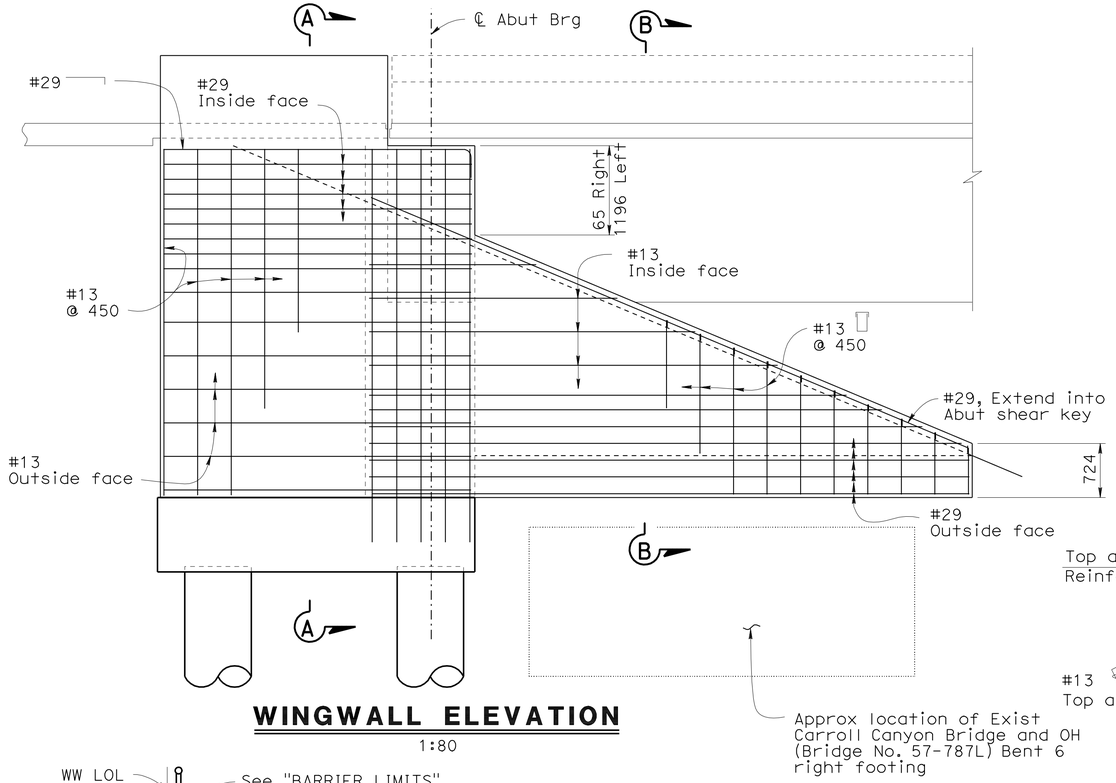

WINGWALL ELEVATION

1:80

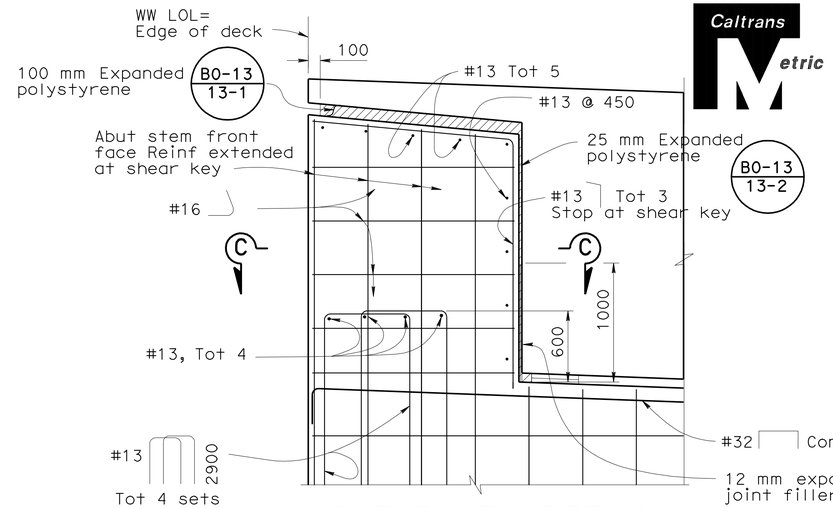

SHEAR KEY DETAIL

1:25

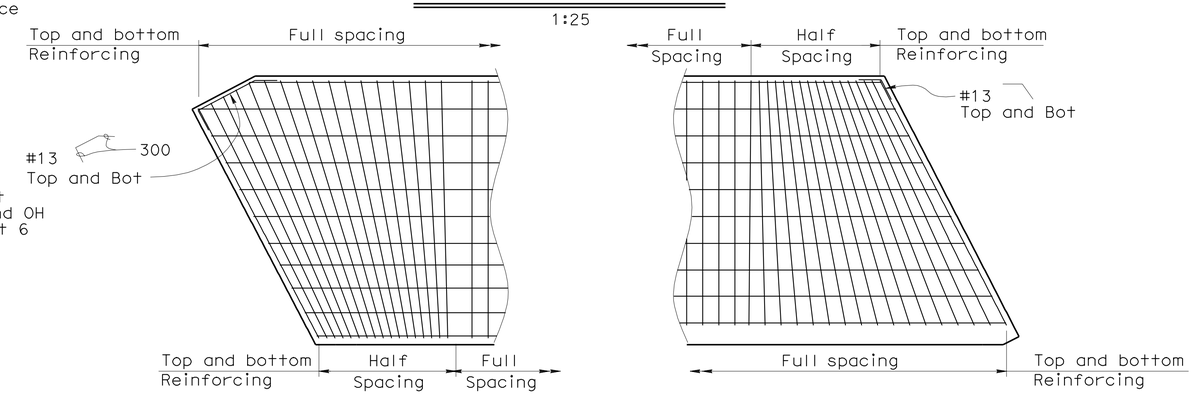

FOOTING CORNER DETAIL

1:50

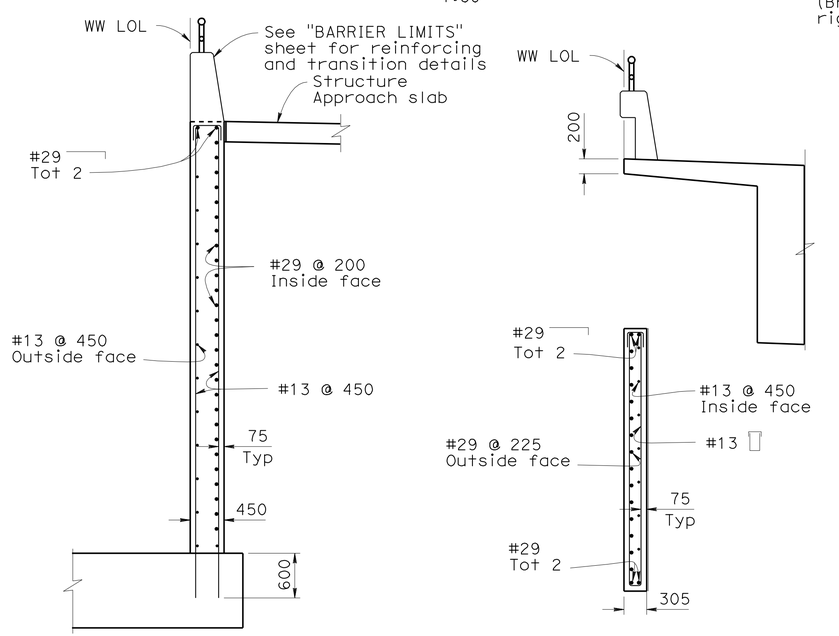

SECTION A-A

1:40

SECTION B-B

1:40

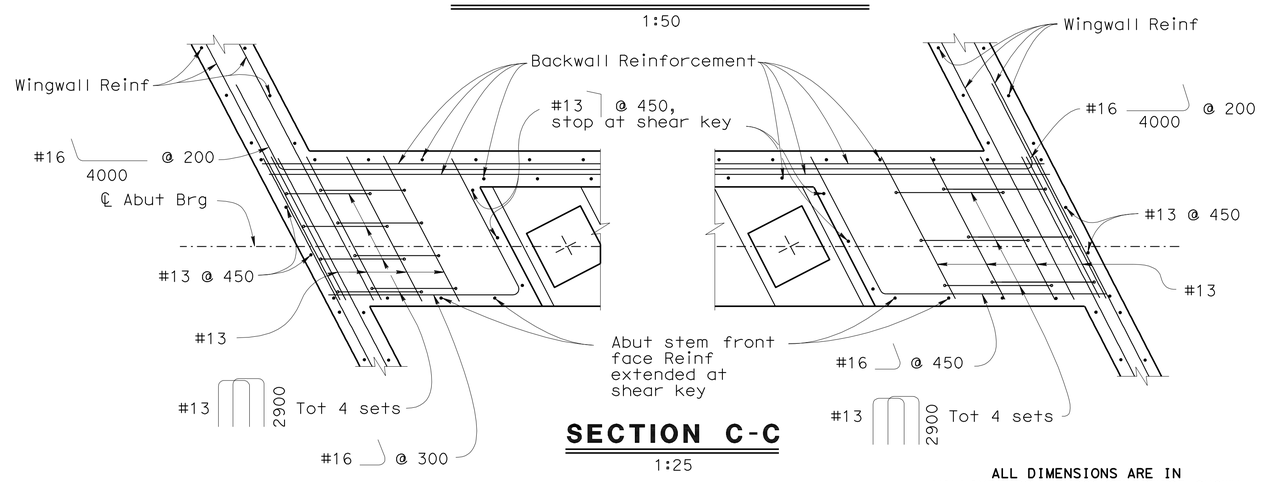

SECTION C-C

1:25

ALL DIMENSIONS ARE IN
MILLIMETERS UNLESS OTHERWISE SHOWN

CHUNG-YUAN WEN DESIGN OVERSIGHT 4-28-09 SIGN OFF DATE		DESIGN	BY R. Golchoobian/E. Kjolsing	CHECKED Dennis Trefren	PREPARED FOR THE STATE OF CALIFORNIA DEPARTMENT OF TRANSPORTATION
		DETAILS	BY Andy Toledo	CHECKED Dennis Trefren	
		QUANTITIES	BY Oscar Colcol	CHECKED Xiaoyun Wu	

Brett Makley
PROJECT ENGINEER

BRIDGE NO. 57C0786
KILOMETER POST KP43.2

CARROLL CANYON ROAD BRIDGE
DAR ABUTMENT DETAILS

DESIGN DETAIL SHEET (METRIC) (REV. 10/27/05)

ORIGINAL SCALE IN MILLIMETERS FOR REDUCED PLANS 0 10 20 30 40 50 60 70 80 90 100

CU 11275
EA 2T0401

DISREGARD PRINTS BEARING EARLIER REVISION DATES

REVISION DATES (PRELIMINARY STAGE ONLY) 9/12/08 12/19/08 3/19/09 4/28/09

SHEET 22 OF 74

FILE => 57-c0786-f-a01dt04.dgn

USERNAME => trmikesl DATE PLOTTED => 29-SEP-2010 TIME PLOTTED => 11:37

DIST	COUNTY	ROUTE	KILOMETER POST TOTAL PROJECT	SHEET No	TOTAL SHEETS
11	SD	5,805	R49.9/R51.7, 42.6/46.5	696	886

Caltrans Metric

REGISTERED CIVIL ENGINEER 4-28-09 DATE

9-27-10
PLANS APPROVAL DATE

REGISTERED PROFESSIONAL ENGINEER James L. Rucker No. 47796 Exp. 12-31-09 CIVIL STATE OF CALIFORNIA

The State of California or its officers or agents shall not be responsible for the accuracy or completeness of electronic copies of this plan sheet.

SANDAG
401 B STREET,
SAN DIEGO, CA 92101

T.Y. LIN INTERNATIONAL
5030 CAMINO DE LA SIESTA, SUITE 204,
SAN DIEGO, CA 92108

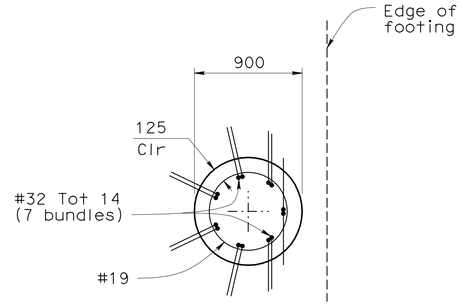

SECTION A-A

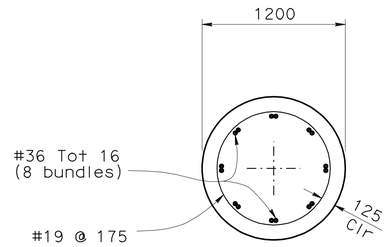

SECTION B-B

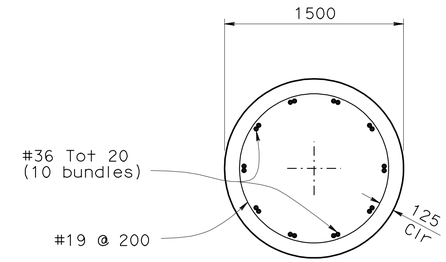

SECTION C-C

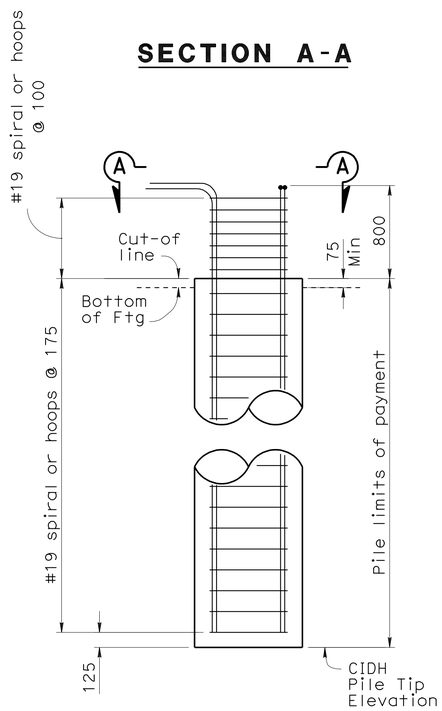

ELEVATION

900 MM DIA CIDH PILE

1:25

Note: Heel pile shown, Toe pile similar

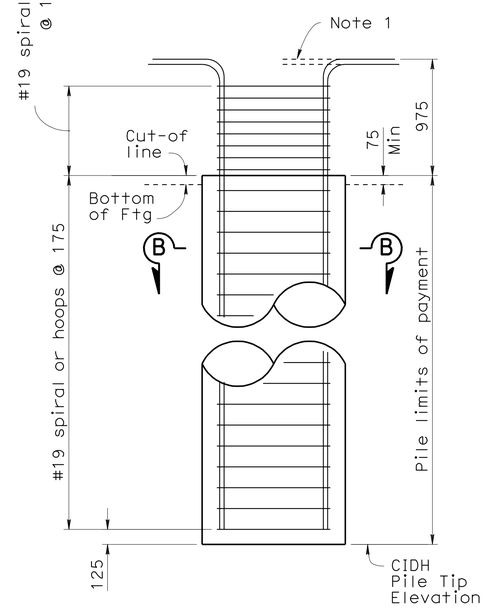

ELEVATION

1200 MM DIA CIDH PILE

1:25

NOTE:

1. Turn bar hooks for the pile at edge of footing

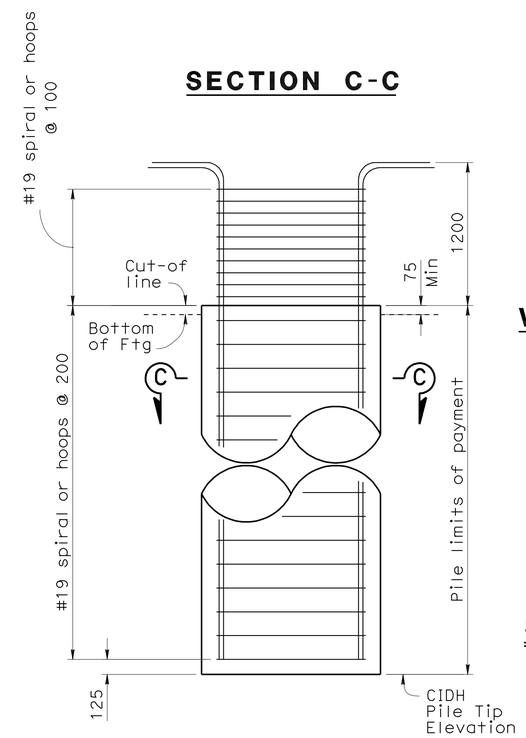

ELEVATION

1500 MM DIA CIDH PILE

1:25

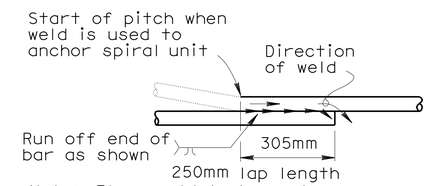

Note: Flare weld to be made in direction shown.

WELDED LAP SPIRAL ANCHOR

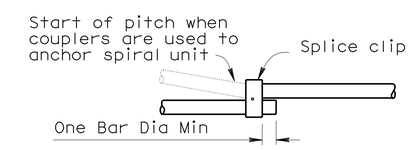

MECHANICAL LAP ANCHOR

Note: The spiral details is only permitted at the end of spiral cage that is well anchored into the footing.

SPIRAL END ANCHOR DETAIL

No Scale

ALL DIMENSIONS ARE IN MILLIMETERS UNLESS OTHERWISE SHOWN

CHUNG-YUAN WEN
DESIGN OVERSIGHT
4-28-09
SIGN OFF DATE

	BY	CHECKED
DESIGN	Roya Golchoobian	Dennis Trefren
DETAILS	Andy Toledo	Dennis Trefren
QUANTITIES	Oscar Colcol	Xiaoyun Wu

PREPARED FOR THE STATE OF CALIFORNIA DEPARTMENT OF TRANSPORTATION

Brett Makley
PROJECT ENGINEER

BRIDGE NO. 57C0786
KILOMETER POST KP43.2

CARROLL CANYON ROAD BRIDGE
ABUTMENT PILE DETAILS

DESIGN DETAIL SHEET (METRIC) (REV. 10/27/05)

ORIGINAL SCALE IN MILLIMETERS FOR REDUCED PLANS 0 10 20 30 40 50 60 70 80 90 100

CU 11275
EA 2T0401

DISREGARD PRINTS BEARING EARLIER REVISION DATES

REVISION DATES (PRELIMINARY STAGE ONLY) 9/12/08 12/19/08 3/19/09 4/28/09

SHEET 23 OF 74

FILE => 57-c0786-f-a01dt05.dgn

USERNAME => trmikes! DATE PLOTTED => 29-SEP-2010 TIME PLOTTED => 11:38

DIST	COUNTY	ROUTE	KILOMETER POST TOTAL PROJECT	SHEET No	TOTAL SHEETS
11	SD	5,805	R49.9/R51.7, 42.6/46.5	697	886

REGISTERED CIVIL ENGINEER — DATE 4-28-09

9-27-10
PLANS APPROVAL DATE

REGISTERED PROFESSIONAL ENGINEER — James L. Rucker No. 47796 Exp. 12-31-09 CIVIL — STATE OF CALIFORNIA

The State of California or its officers or agents shall not be responsible for the accuracy or completeness of electronic copies of this plan sheet.

SANDAG
401 B STREET,
SAN DIEGO, CA 92101

T.Y. LIN INTERNATIONAL
5030 CAMINO DE LA SIESTA, SUITE 204,
SAN DIEGO, CA 92108

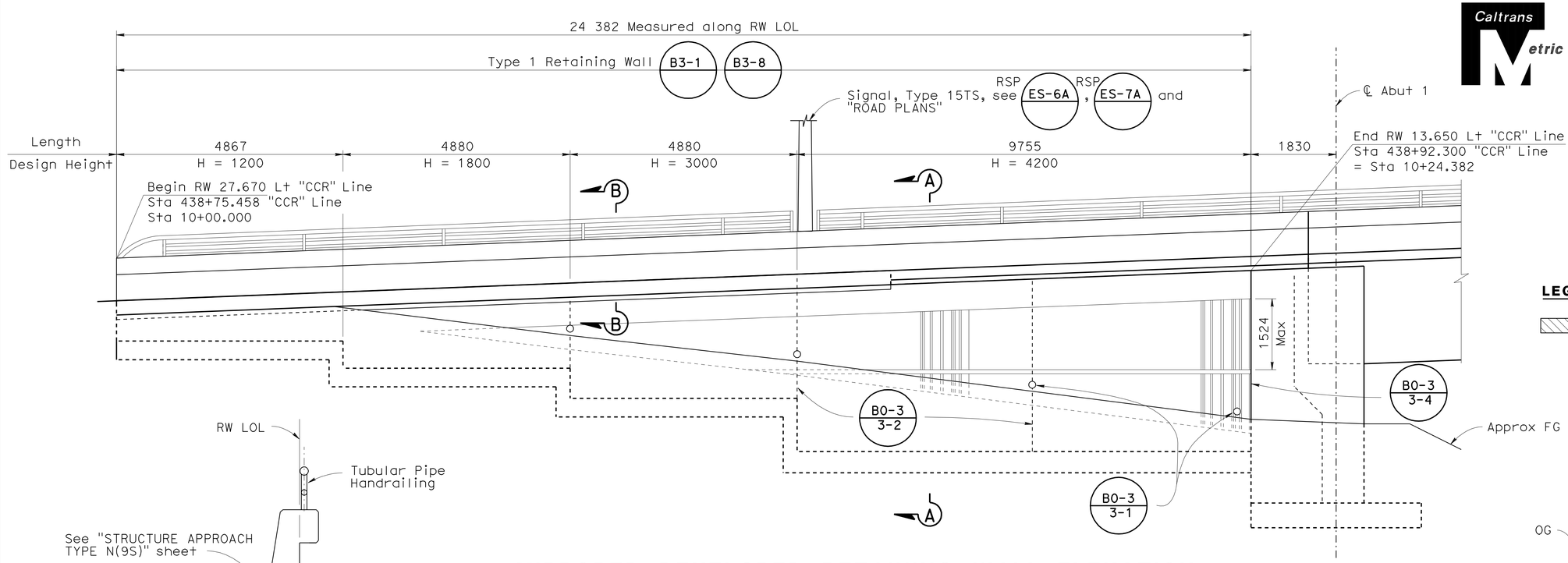

MIRRORED DEVELOPED RETAINING WALL ELEVATION

1:50

LEGEND

= Structure Backfill (Retaining Wall)

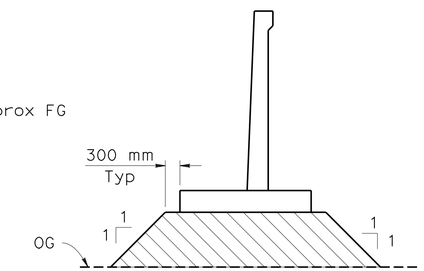

Approx Station 10+00 to 10+24

EARTHWORK LIMITS

N.T.S

Note: Earthwork limits in addition to A62C

NOTE:

1. For structure approach details, see "STRUCTURE APPROACH TYPE N(9S)" sheet

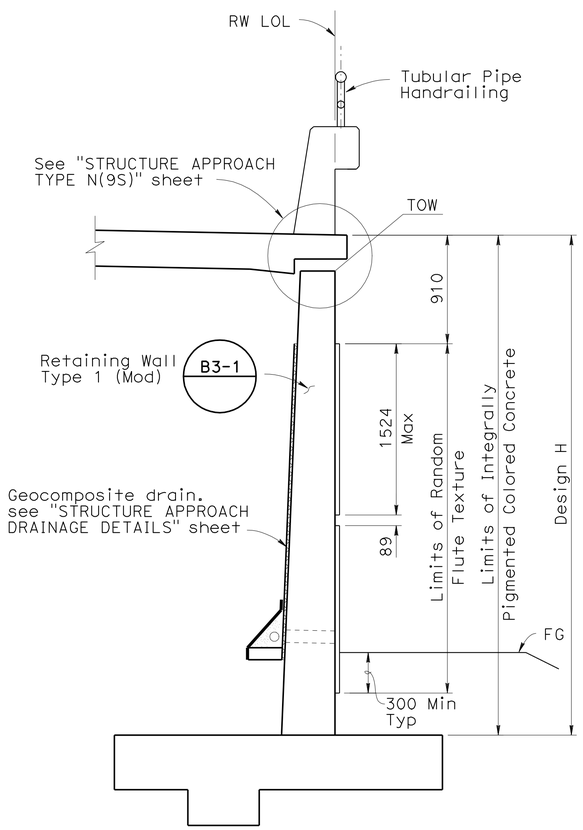

SECTION A-A

1:25

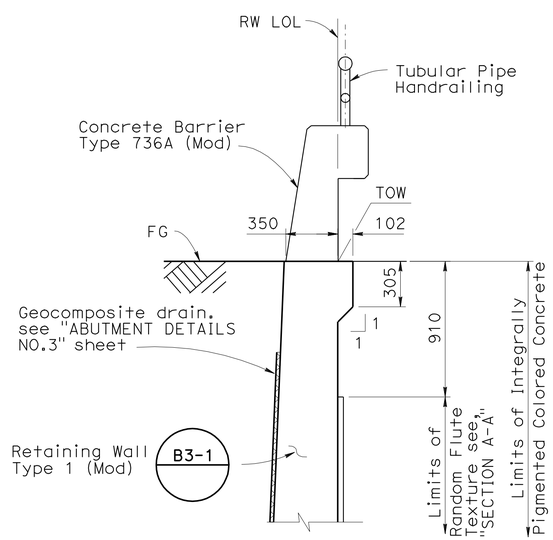

SECTION B-B

1:20

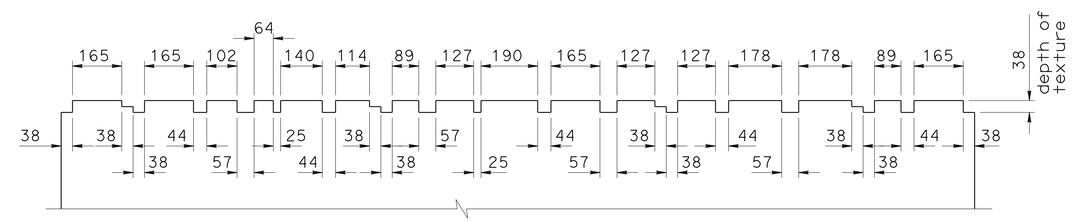

RANDOM FLUTE TEXTURE DETAIL

1:10

ALL DIMENSIONS ARE IN MILLIMETERS UNLESS OTHERWISE SHOWN

CHUNG-YUAN WEN
DESIGN OVERSIGHT
4-28-09
SIGN OFF DATE

	BY	CHECKED
DESIGN	Eric Kjolsing	Brett Makley
DETAILS	Ivan Martin	Brett Makley
QUANTITIES	Oscar Colcol	Xiaoyun Wu

PREPARED FOR THE STATE OF CALIFORNIA DEPARTMENT OF TRANSPORTATION

Brett Makley
PROJECT ENGINEER

BRIDGE NO. 57C0786
KILOMETER POST KP43.2

CARROLL CANYON ROAD BRIDGE
RETAINING WALL DETAILS

DESIGN DETAIL SHEET (METRIC) (REV. 10/27/05)

ORIGINAL SCALE IN MILLIMETERS FOR REDUCED PLANS 0 10 20 30 40 50 60 70 80 90 100

CU 11275
EA 2T0401

DISREGARD PRINTS BEARING EARLIER REVISION DATES

REVISION DATES (PRELIMINARY STAGE ONLY): 9/12/08 12/19/08 3/19/09 4/28/09

SHEET 24 OF 74

FILE => 57-c0786-g-rwdt01.dgn

USERNAME => trmikest DATE PLOTTED => 29-SEP-2010 TIME PLOTTED => 11:38

DIST	COUNTY	ROUTE	KILOMETER POST TOTAL PROJECT	SHEET No	TOTAL SHEETS
11	SD	5,805	R49.9/R51.7, 42.6/46.5	698	886

Caltrans Metric

REGISTERED CIVIL ENGINEER 4-28-09 DATE

9-27-10
PLANS APPROVAL DATE

REGISTERED PROFESSIONAL ENGINEER James L. Rucker No. 47796 Exp. 12-31-09 CIVIL STATE OF CALIFORNIA

The State of California or its officers or agents shall not be responsible for the accuracy or completeness of electronic copies of this plan sheet.

SANDAG
401 B STREET,
SAN DIEGO, CA 92101

T.Y. LIN INTERNATIONAL
5030 CAMINO DE LA SIESTA, SUITE 204,
SAN DIEGO, CA 92108

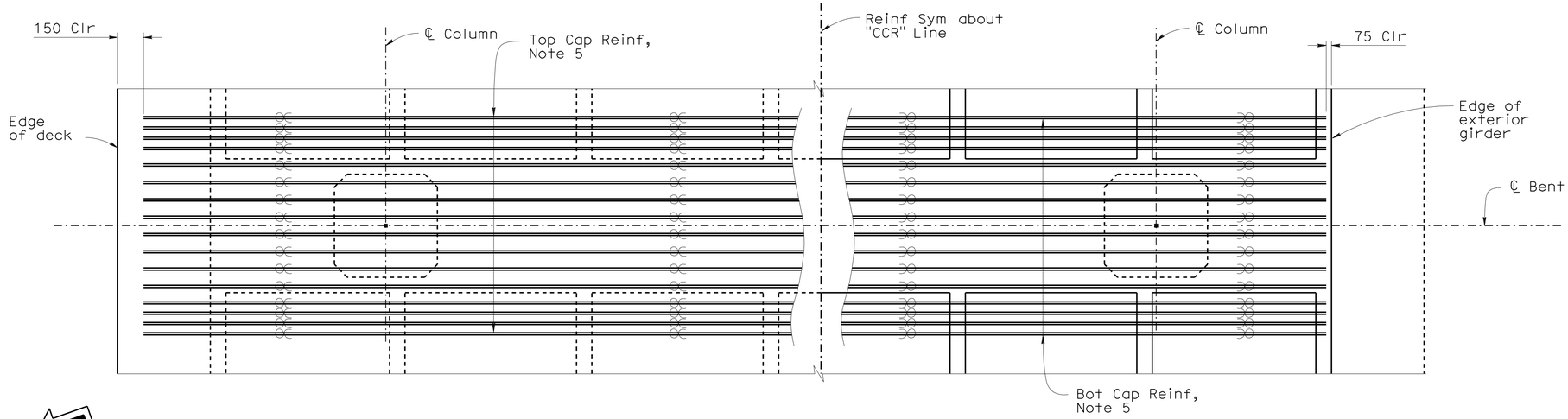

TOP CAP REINFORCEMENT **BOTTOM CAP REINFORCEMENT**

PLAN
1:50

NOTES:

1. ═══ - Indicates Horiz bundled bars
2. All bars not shown
3. Only service butt splices allowed in top and bottom cap reinforcement
4. For "SECTION A-A"and "SECTION B-B", see "BENT DETAILS NO. 1" sheet
5. See "TABLE B" on "BENT DETAILS NO. 1" sheet for cap top and bottom Reinf and cap stirrups

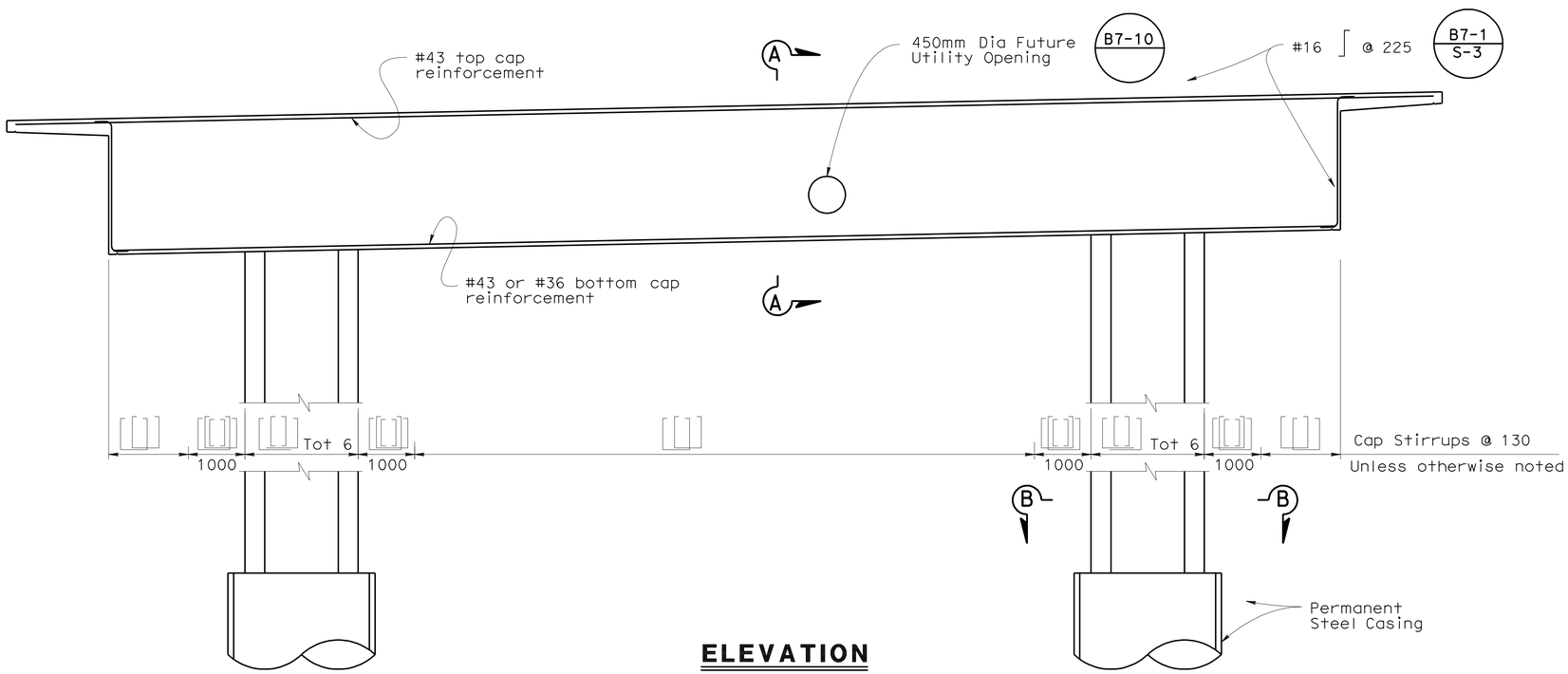

ELEVATION
1:50

ALL DIMENSIONS ARE IN MILLIMETERS UNLESS OTHERWISE SHOWN

CHUNG-YUAN WEN
DESIGN OVERSIGHT
4-28-09
SIGN OFF DATE

	BY	CHECKED
DESIGN	Roya Golchoobian	Pete Smith
DETAILS	Andy Toledo	Pete Smith
QUANTITIES	Oscar Colcol	Xiaoyun Wu

PREPARED FOR THE STATE OF CALIFORNIA DEPARTMENT OF TRANSPORTATION

Brett Makley
PROJECT ENGINEER

BRIDGE NO. 57C0786
KILOMETER POST KP43.2

CARROLL CANYON ROAD BRIDGE
BENT LAYOUT

DESIGN DETAIL SHEET (METRIC)(REV. 10/27/05)

ORIGINAL SCALE IN MILLIMETERS FOR REDUCED PLANS 0 10 20 30 40 50 60 70 80 90 100

CU 11275
EA 2T0401

DISREGARD PRINTS BEARING EARLIER REVISION DATES

REVISION DATES (PRELIMINARY STAGE ONLY) 9/12/08 12/19/08 3/19/09 4/28/09

SHEET 25 OF 74

FILE => 57-c0786-h-b01_1o01.dgn

USERNAME => trmikest DATE PLOTTED => 29-SEP-2010 TIME PLOTTED => 11:38

DIST	COUNTY	ROUTE	KILOMETER POST TOTAL PROJECT	SHEET No	TOTAL SHEETS
11	SD	5,805	R49.9/R51.7, 42.6/46.5	699	886

REGISTERED CIVIL ENGINEER 4-28-09 DATE

9-27-10
PLANS APPROVAL DATE

The State of California or its officers or agents shall not be responsible for the accuracy or completeness of electronic copies of this plan sheet.

REGISTERED PROFESSIONAL ENGINEER James L. Rucker No. 47796 Exp. 12-31-09 CIVIL STATE OF CALIFORNIA

SANDAG
401 B STREET,
SAN DIEGO, CA 92101

T.Y. LIN INTERNATIONAL
5030 CAMINO DE LA SIESTA, SUITE 204,
SAN DIEGO, CA 92108

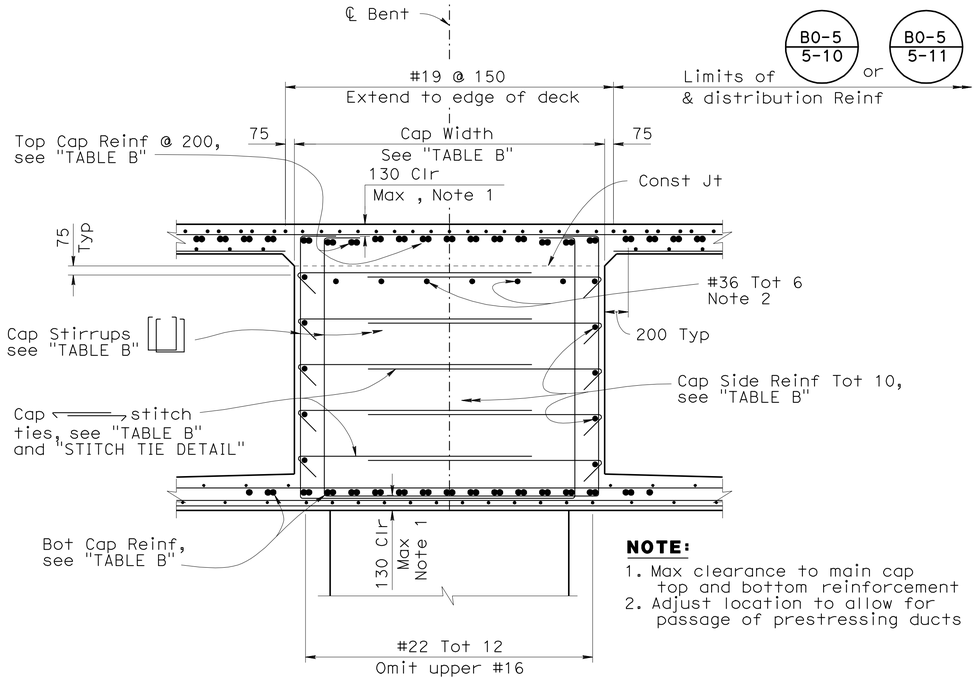

NOTE:

1. Max clearance to main cap top and bottom reinforcement
2. Adjust location to allow for passage of prestressing ducts

SECTION A-A

1:25

TABLE A

	Bent	Column Longit Reinf	Pile Longit Reinf
Frame-1	2	60 (30 bundles) #43	30 #43
	3	32 #43	32 #43
	4	32 #43	32 #43
	5	58 (29 bundles) #43	29 #43
	6	64 #43	32 #43
Frame-2			
	12	32 #43	32 #43
	13	32 #43	32 #43
	14	50 (25 bundles) #43	25 #43

TABLE B

	Bent	Cap Width (m)	Cap Top Reinforcement	Cap Bottom Reinforcement	Cap Stirrups	Cap Stitch Ties		Cap Side Reinf
						Size	L (m)	
Frame-1	2	3.2	54 (26 bundles & 2 singles) #43	40 (20 bundles) #43	#22	#16	2.4	#29
	3	2.6	42 (21 bundles) #43	32 (15 bundles & 2 singles) #43	#19	#13	2.0	#25
	4	2.6	40 (19 bundles & 2 singles) #43	32 (15 bundles & 2 singles) #43	#19	#13	2.0	#25
	5	3.2	54 (26 bundles & 2 singles) #43	36 (18 bundles) #43	#22	#16	2.4	#29
	6	3.6	52 (26 bundles) #43	40 (20 bundles) #43	#22	#16	2.7	#29
Frame-2								
	12	2.6	30 (15 bundles) #43	32 (15 bundles & 2 singles) #36	#19	#13	2.0	#25
	13	2.6	32 (15 bundles & 2 singles) #43	32 (15 bundles & 2 singles) #43	#19	#13	2.0	#25
	14	2.8	52 (26 bundles) #43	32 (16 bundles) #43	#22	#13	2.1	#29

Note: Bottom slab bars may be bundled horizontally or vertically to clear column bars.

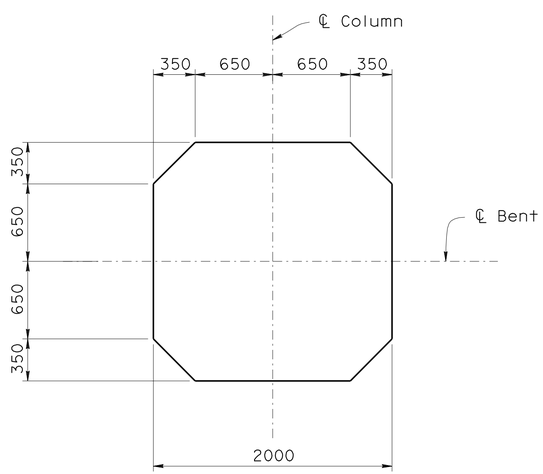

SECTION B-B

1:25

NOTE:

For locations of "SECTION A-A and "SECTION B-B", see "BENT LAYOUT" sheet

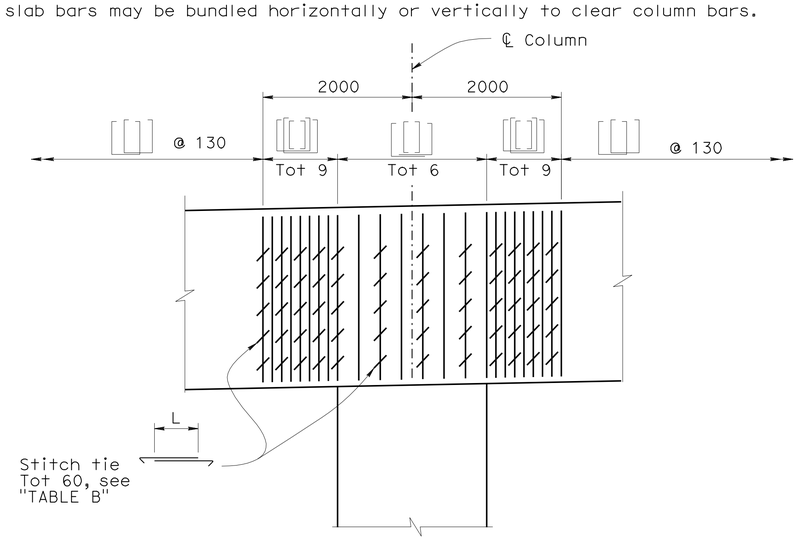

STITCH TIE DETAIL

No Scale

ALL DIMENSIONS ARE IN MILLIMETERS UNLESS OTHERWISE SHOWN

CHUNG-YUAN WEN
DESIGN OVERSIGHT
4-28-09
SIGN OFF DATE

	BY	CHECKED
DESIGN	Roya Golchoobian	Pete Smith
DETAILS	Andy Toledo	Pete Smith
QUANTITIES	Oscar Colcol	Xiaoyun Wu

PREPARED FOR THE STATE OF CALIFORNIA DEPARTMENT OF TRANSPORTATION

Brett Makley
PROJECT ENGINEER

BRIDGE NO. 57C0786
KILOMETER POST KP43.2

CARROLL CANYON ROAD BRIDGE
BENT DETAILS NO.1

DESIGN DETAIL SHEET (METRIC) (REV. 10/27/05)

ORIGINAL SCALE IN MILLIMETERS FOR REDUCED PLANS 0 10 20 30 40 50 60 70 80 90 100

CU 11275
EA 2T0401

DISREGARD PRINTS BEARING EARLIER REVISION DATES

REVISION DATES (PRELIMINARY STAGE ONLY) 9/12/08 12/19/08 3/19/09 4/15/09 4-28-09

SHEET 26 OF 74

FILE => 57-c0786-h-b01dt02.dgn

USERNAME => ttmikes1 DATE PLOTTED => 29-SEP-2010 TIME PLOTTED => 11:38

DIST	COUNTY	ROUTE	KILOMETER POST TOTAL PROJECT	SHEET No	TOTAL SHEETS
11	SD	5,805	R49.9/R51.7, 42.6/46.5	700	886

Caltrans Metric

REGISTERED CIVIL ENGINEER 4-28-09 DATE

9-27-10
PLANS APPROVAL DATE

REGISTERED PROFESSIONAL ENGINEER James L. Rucker No. 47796 Exp. 12-31-09 CIVIL STATE OF CALIFORNIA

The State of California or its officers or agents shall not be responsible for the accuracy or completeness of electronic copies of this plan sheet.

SANDAG
401 B STREET,
SAN DIEGO, CA 92101

T.Y. LIN INTERNATIONAL
5030 CAMINO DE LA SIESTA, SUITE 204,
SAN DIEGO, CA 92108

NOTES:

1. Extend 800 mm into bent cap and stop at top of pile.
2. Stop below bent cap and on top of pile.
3. For "TABLE A", see "BENT DETAILS NO.1" sheet.
4. No splice allowed in Column and Pile main Reinf
5. Only ultimate butt splice is allowed for Column and Pile main Reinf
6. Only ultimate butt splice is allowed for all column and pile hoops
7. Extend one bar in column bundled bars 2400 and 3600, alternate.
8. A few of the bars may be cut up to 500 mm to avoid the prestressing ducts, as approved by the Engineer. Column bars at Bent 6 and Bent 12 shall not be cut, see "DETAIL E"

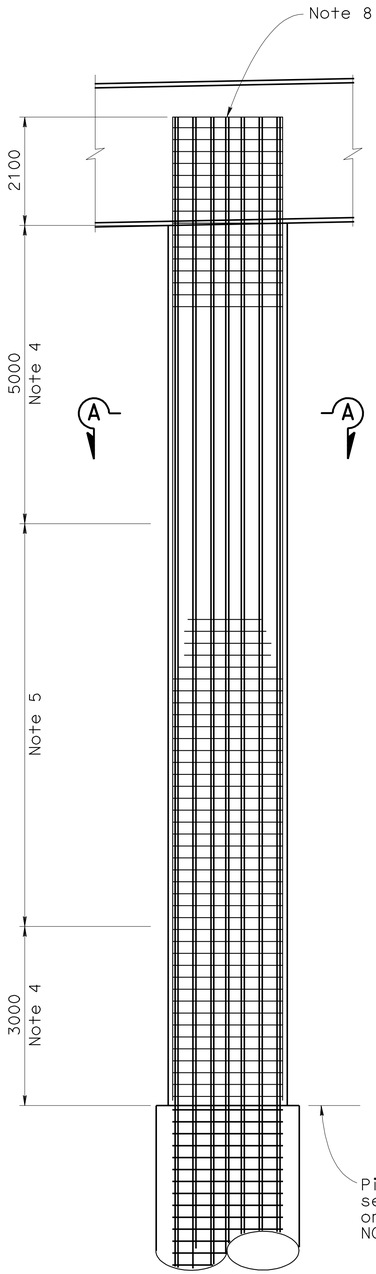

ELEVATION

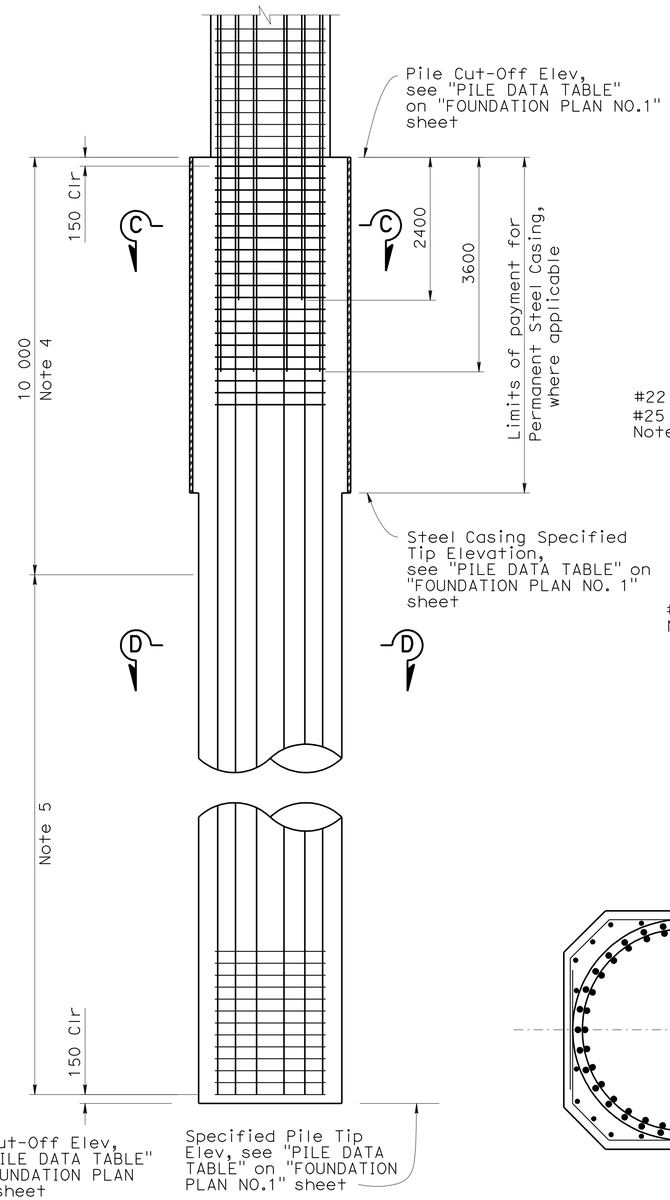

ELEVATION

2400 mm DIA CIDH PILE

1:50

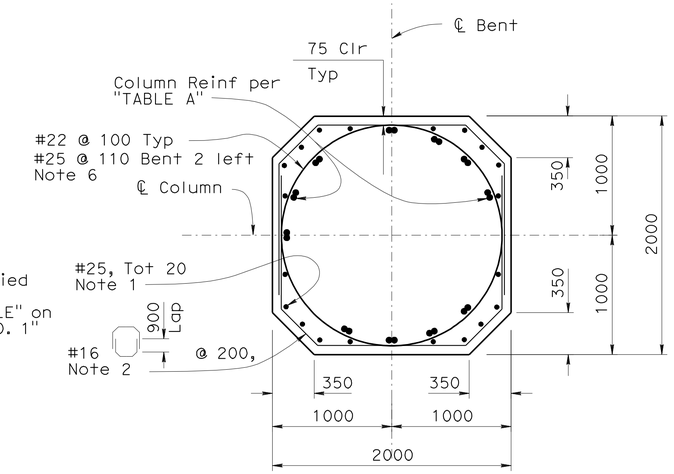

SECTION A-A

1:25

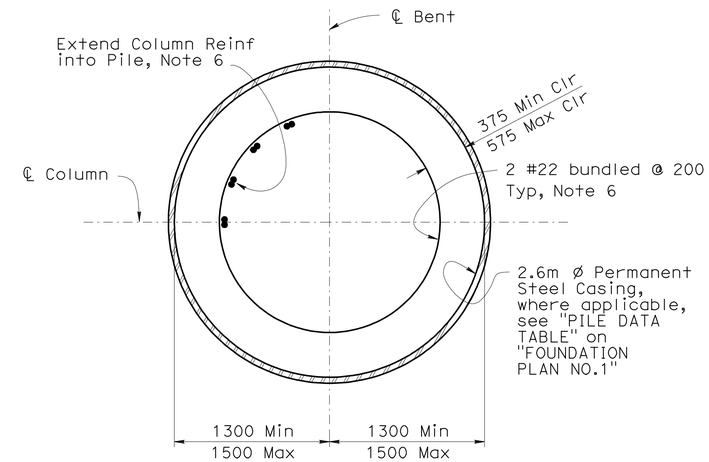

SECTION C-C

1:25

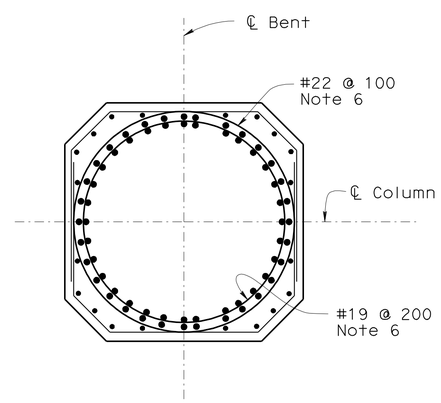

SECTION A-A

1:25

FOR BENT 6 ONLY

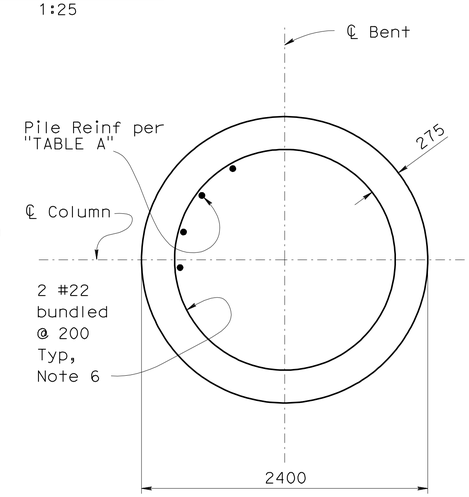

SECTION D-D

1:25

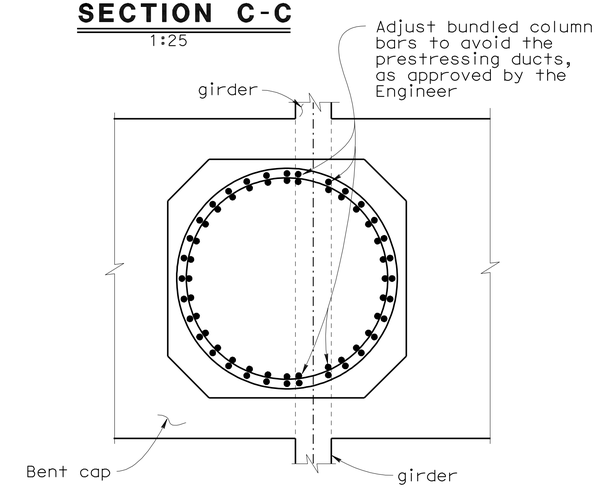

DETAIL E

1:50

BENT 6 SHOWN, BENT 12 SIMILAR

ALL DIMENSIONS ARE IN MILLIMETERS UNLESS OTHERWISE SHOWN

CHUNG-YUAN WEN
DESIGN OVERSIGHT
4-28-09
SIGN OFF DATE

	BY	CHECKED
DESIGN	Roya Golchoobian	Pete Smith
DETAILS	Andy Toledo	Pete Smith
QUANTITIES	Oscar Colcol	Xiaoyun Wu

PREPARED FOR THE STATE OF CALIFORNIA DEPARTMENT OF TRANSPORTATION

Brett Makley
PROJECT ENGINEER

BRIDGE NO. 57C0786
KILOMETER POST KP43.2

CARROLL CANYON ROAD BRIDGE
BENT DETAILS NO.2

DESIGN DETAIL SHEET (METRIC) (REV. 10/27/05)

ORIGINAL SCALE IN MILLIMETERS FOR REDUCED PLANS 0 10 20 30 40 50 60 70 80 90 100

CU 11275
EA 2T0401

DISREGARD PRINTS BEARING EARLIER REVISION DATES

REVISION DATES (PRELIMINARY STAGE ONLY): ~~9/12/08~~ ~~12/19/08~~ ~~3/9/09~~ ~~4/15/09~~ 4-28-09

SHEET 27 OF 74

FILE => 57-c0786-h-b01dt03.dgn

USERNAME => trmikesl DATE PLOTTED => 29-SEP-2010 TIME PLOTTED => 11:39