Dist	COUNTY	ROUTE	POST MILES TOTAL PROJECT	SHEET No.	TOTAL SHEETS
11	Imp	111	40.5/65.4	1	19

STATE OF CALIFORNIA

DEPARTMENT OF TRANSPORTATION

ACSTP-P111-(071)E

PROJECT PLANS FOR CONSTRUCTION ON

STATE HIGHWAY

IN IMPERIAL COUNTY NEAR NILAND

FROM MAIN STREET TO IMPERIAL COUNTY LINE

TO BE SUPPLEMENTED BY STANDARD PLANS DATED 2010

INDEX OF PLANS

SHEET No.	DESCRIPTION
1	TITLE AND LOCATION MAP
2-3	TYPICAL CROSS SECTIONS
4-5	CONSTRUCTION DETAILS
6	CONSTRUCTION AREA SIGNS
7-9	PAVEMENT DELINEATION DETAILS AND QUANTITIES
10-11	SUMMARY OF QUANTITIES
12-19	REVISED STANDARD PLANS

THE STANDARD PLANS LIST APPLICABLE TO THIS CONTRACT IS INCLUDED IN THE NOTICE TO BIDDERS AND SPECIAL PROVISIONS BOOK.

LOCATION MAP

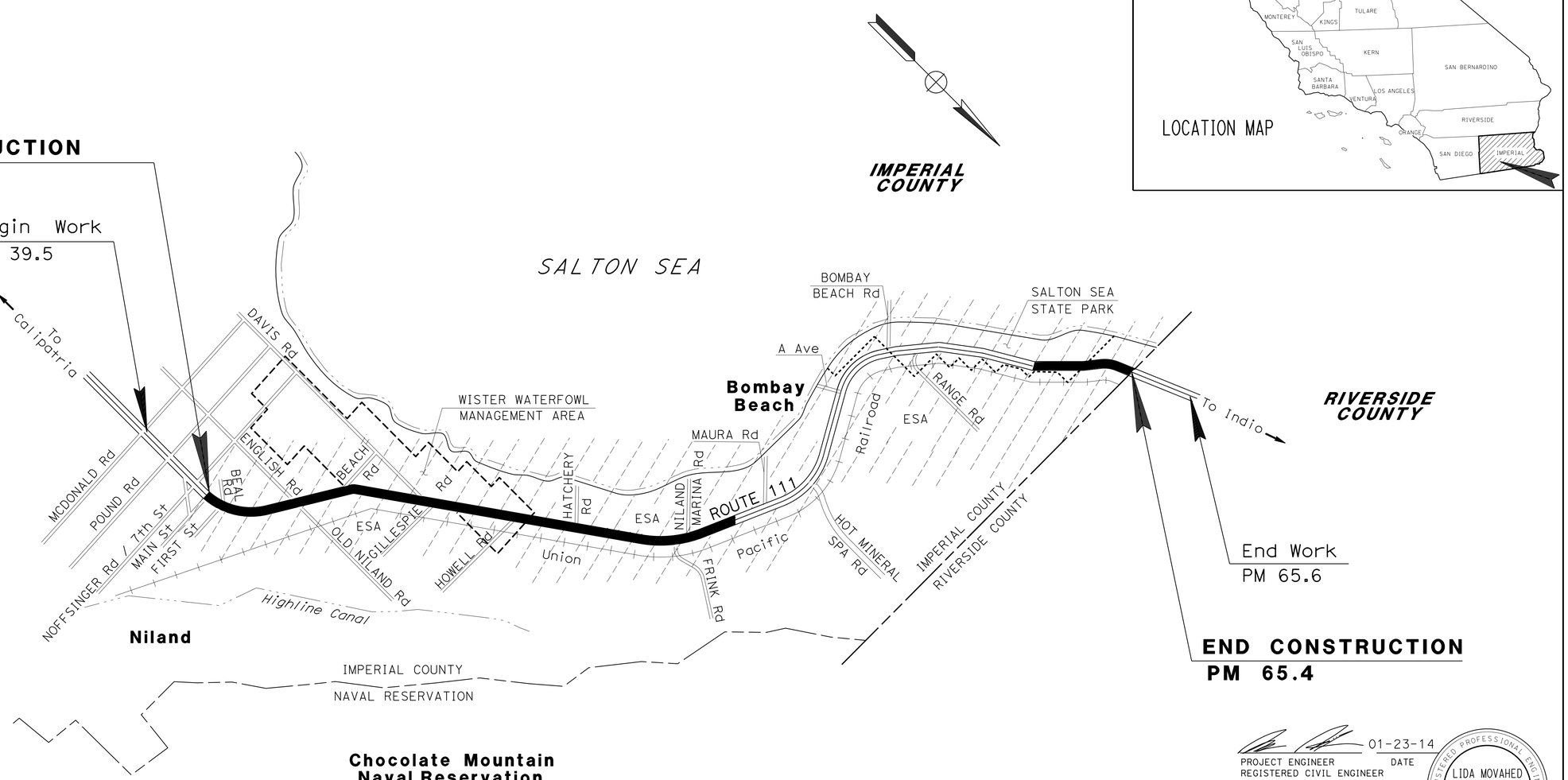

NO SCALE

THE CONTRACTOR SHALL POSSESS THE CLASS (OR CLASSES) OF LICENSE AS SPECIFIED IN THE "NOTICE TO BIDDERS."

PROJECT MANAGER: ALBERTO GAYON

DESIGN ENGINEER: LIDA MOVAHED

01-23-14
PROJECT ENGINEER REGISTERED CIVIL ENGINEER — DATE

REGISTERED PROFESSIONAL ENGINEER — LIDA MOVAHED No. 81020 Exp. 09-30-15 CIVIL — STATE OF CALIFORNIA

March 10, 2014
PLANS APPROVAL DATE

THE STATE OF CALIFORNIA OR ITS OFFICERS OR AGENTS SHALL NOT BE RESPONSIBLE FOR THE ACCURACY OR COMPLETENESS OF SCANNED COPIES OF THIS PLAN SHEET.

CONTRACT No.	11-2M4404
PROJECT ID	1100020476

LAST REVISION 02-12-14 DATE PLOTTED => 04-MAR-2014 TIME PLOTTED => 16:01

Dist	COUNTY	ROUTE	POST MILES TOTAL PROJECT	SHEET No.	TOTAL SHEETS
11	Imp	111	40.5/65.4	2	19

REGISTERED CIVIL ENGINEER 01-23-14 DATE

03-10-14
PLANS APPROVAL DATE

REGISTERED PROFESSIONAL ENGINEER
LIDA MOVAHED
No. 81020
Exp. 09-30-15
CIVIL
STATE OF CALIFORNIA

THE STATE OF CALIFORNIA OR ITS OFFICERS OR AGENTS SHALL NOT BE RESPONSIBLE FOR THE ACCURACY OR COMPLETENESS OF SCANNED COPIES OF THIS PLAN SHEET.

NOTES:

1. DIMENSIONS OF THE PAVEMENT STRUCTURES (STRUCTURAL SECTION) ARE SUBJECT TO TOLERANCES SPECIFIED IN THE STANDARD SPECIFICATIONS.
2. EXISTING UTILITY FACILITIES HAVE NOT BEEN PLOTTED ON THESE PLANS.
3. FOG SEAL COAT SHALL BE APPLIED TO ALL HMA SURFACES EXCEPT TRAVELED WAYS.
4. SEE CONSTRUCTION DETAILS FOR CONFORM DETAILS AT BEGIN/END WORK, CROSS ROAD, CURBS, AND RAISED PCC ISLAND.

DESIGN DESIGNATION (ROUTE 111)

2002 ADT = 6300 D = 52%
2022 ADT = 8100 T = 20%
DHV = 450 V = 65 MPH

CLIMATE REGION

DESERT

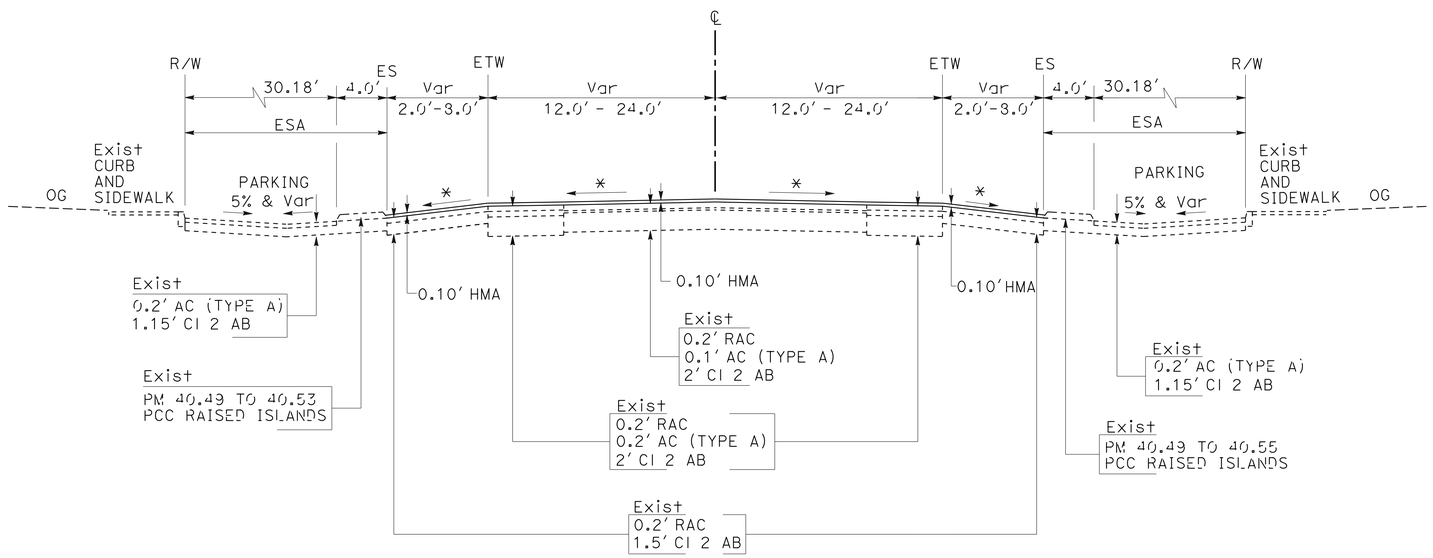

ROUTE 111

PM 40.50 - PM 40.59

* = MATCH Exist

ABBREVIATIONS:

RAC - RUBBERIZED ASPHALT CONCRETE
AR - ASPHALT RUBBER

TYPICAL CROSS SECTIONS

NO SCALE

X-1

STATE OF CALIFORNIA - DEPARTMENT OF TRANSPORTATION
Caltrans® MAJOR MAINTENANCE

FUNCTIONAL SUPERVISOR: ALBERTO GAYON
CALCULATED-DESIGNED BY: LIDA MOVAHED
CHECKED BY: MOHAMAD AHMED
REVISED BY
DATE REVISED

LAST REVISION 02-13-14
DATE PLOTTED => 18-MAR-2014
TIME PLOTTED => 13:49

Dist	COUNTY	ROUTE	POST MILES TOTAL PROJECT	SHEET No.	TOTAL SHEETS
11	Imp	111	40.5/65.4	3	19

REGISTERED CIVIL ENGINEER 01-23-14 DATE

03-10-14
PLANS APPROVAL DATE

REGISTERED PROFESSIONAL ENGINEER
LIDA MOVAHED
No. 81020
Exp. 09-30-15
CIVIL
STATE OF CALIFORNIA

THE STATE OF CALIFORNIA OR ITS OFFICERS OR AGENTS SHALL NOT BE RESPONSIBLE FOR THE ACCURACY OR COMPLETENESS OF SCANNED COPIES OF THIS PLAN SHEET.

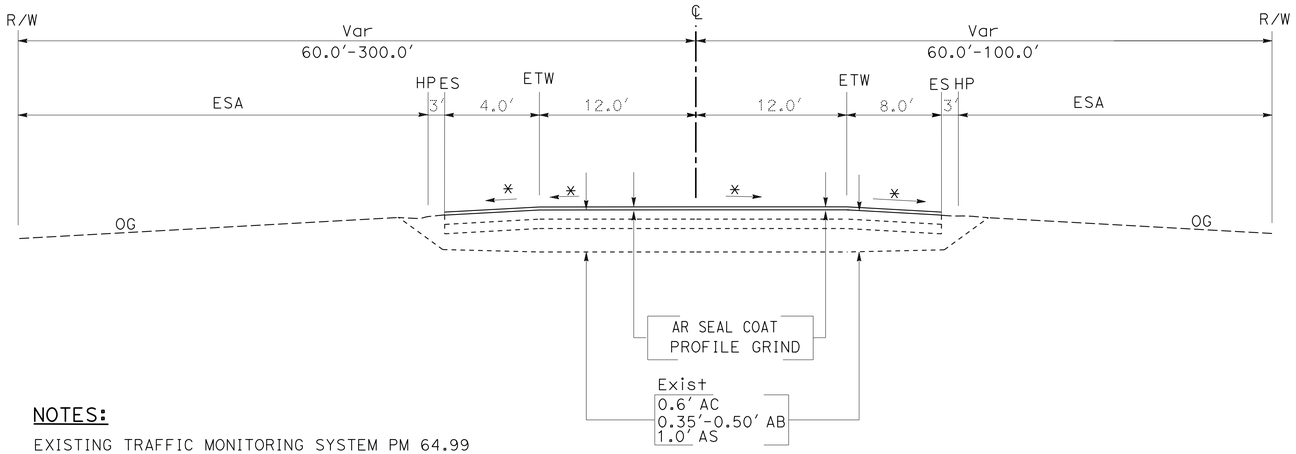

NOTES:

EXISTING TRAFFIC MONITORING SYSTEM PM 64.99

ROUTE 111

PM 63.0 - PM 65.4

* = MATCH Exist

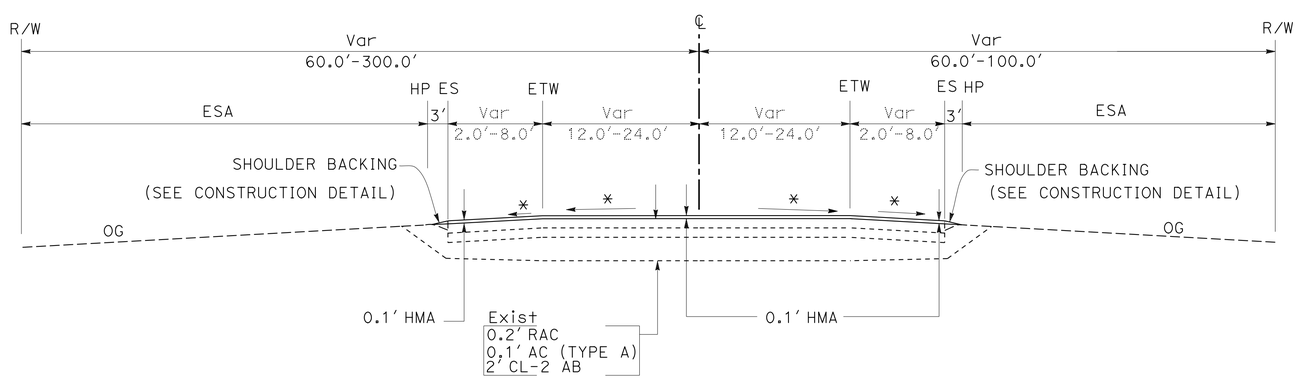

ROUTE 111

PM 40.59 - PM 53.0

* = MATCH Exist

TYPICAL CROSS SECTIONS

NO SCALE

X-2

REVISED BY	DATE REVISED

CALCULATED-DESIGNED BY: LIDA MOVAHED
CHECKED BY: MOHAMAD AHMED
FUNCTIONAL SUPERVISOR: ALBERTO GAYON

STATE OF CALIFORNIA - DEPARTMENT OF TRANSPORTATION
Caltrans® MAJOR MAINTENANCE

LAST REVISION 02-13-14
DATE PLOTTED => 04-MAR-2014
TIME PLOTTED => 16:01

Dist	COUNTY	ROUTE	POST MILES TOTAL PROJECT	SHEET No.	TOTAL SHEETS
11	Imp	111	40.5/65.4	4	19

REGISTERED CIVIL ENGINEER 01-23-14 DATE

03-10-14
PLANS APPROVAL DATE

REGISTERED PROFESSIONAL ENGINEER LIDA MOVAHED No. 81020 Exp. 09-30-15 CIVIL STATE OF CALIFORNIA

THE STATE OF CALIFORNIA OR ITS OFFICERS OR AGENTS SHALL NOT BE RESPONSIBLE FOR THE ACCURACY OR COMPLETENESS OF SCANNED COPIES OF THIS PLAN SHEET.

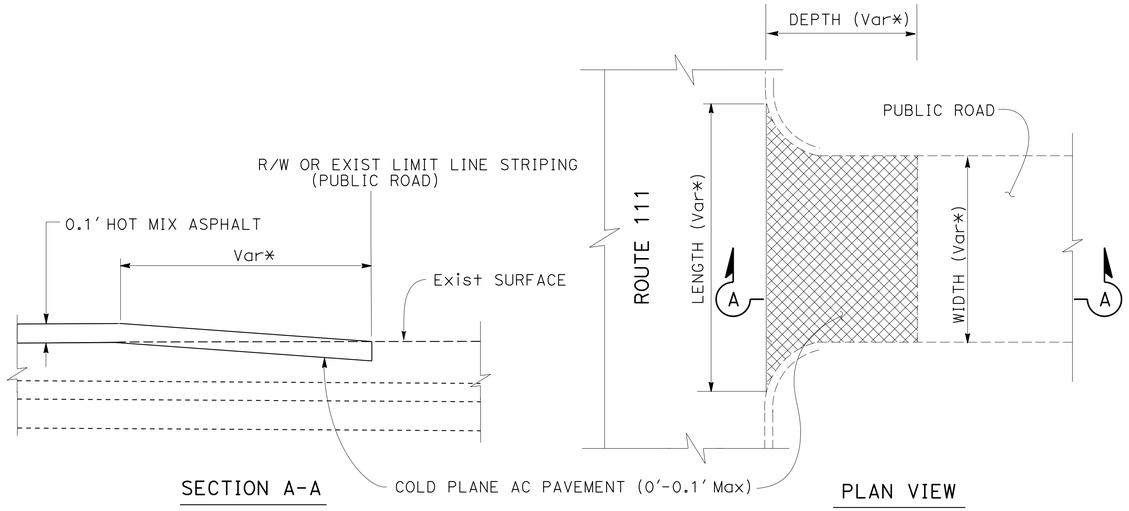

CROSSROADS CONFORM DETAIL

* - FOR ACTUAL MEASURMENTS REFER TO SUMMARY OF QUANTITIES SHEETS.

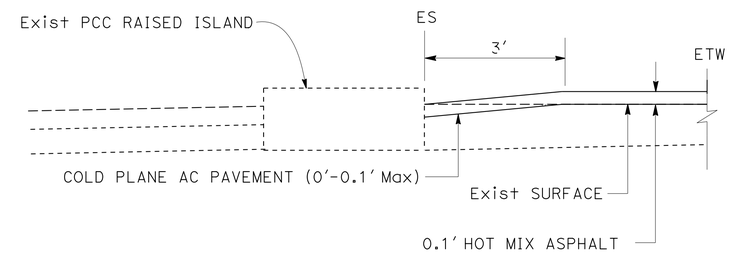

ISLAND CONFORM DETAIL

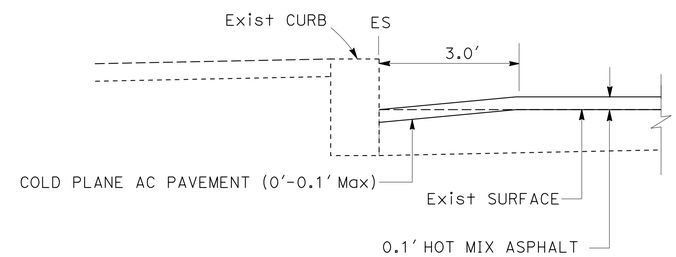

CURB CONFORM DETAIL

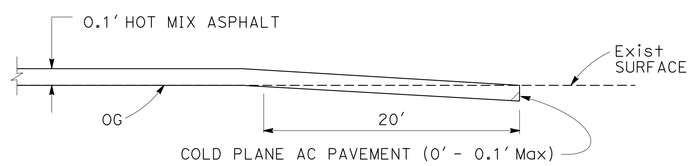

BEGIN & END WORK CONFORM DETAIL

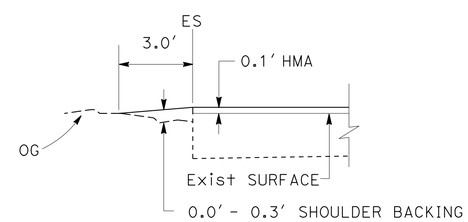

IMPORTED MATERIAL (SHOULDER BACKING) DETAIL

LEGEND:

COLD PLANE AC PAVEMENT (0' - 0.1' Max)

CONSTRUCTION DETAILS

NO SCALE

C-1

STATE OF CALIFORNIA - DEPARTMENT OF TRANSPORTATION
Caltrans MAJOR MAINTENANCE

FUNCTIONAL SUPERVISOR: ALBERTO GAYON
CALCULATED-DESIGNED BY: LIDA MOVAHED
CHECKED BY: MOHAMAD AHMED
REVISED BY
DATE REVISED

LAST REVISION 02-13-14 | DATE PLOTTED => 18-MAR-2014 | TIME PLOTTED => 13:55

Dist	COUNTY	ROUTE	POST MILES TOTAL PROJECT	SHEET No.	TOTAL SHEETS
11	Imp	111	40.5/65.4	5	19

REGISTERED CIVIL ENGINEER 01-23-14 DATE

03-10-14
PLANS APPROVAL DATE

REGISTERED PROFESSIONAL ENGINEER
LIDA MOVAHED
No. 81020
Exp. 09-30-15
CIVIL
STATE OF CALIFORNIA

THE STATE OF CALIFORNIA OR ITS OFFICERS OR AGENTS SHALL NOT BE RESPONSIBLE FOR THE ACCURACY OR COMPLETENESS OF SCANNED COPIES OF THIS PLAN SHEET.

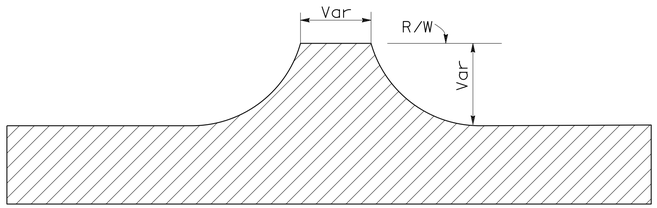

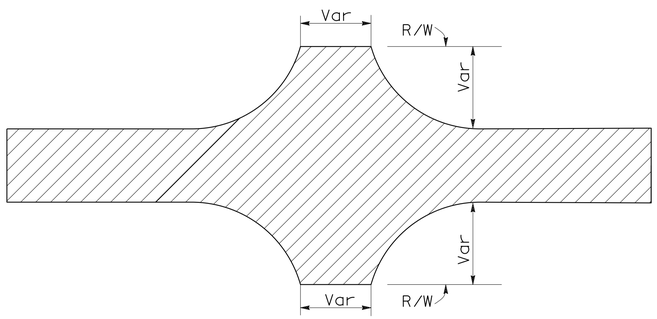

TYPICAL CROSS STREET

NOTE:
SEE SUMMARY OF QUANTITIES FOR DIMENSIONS

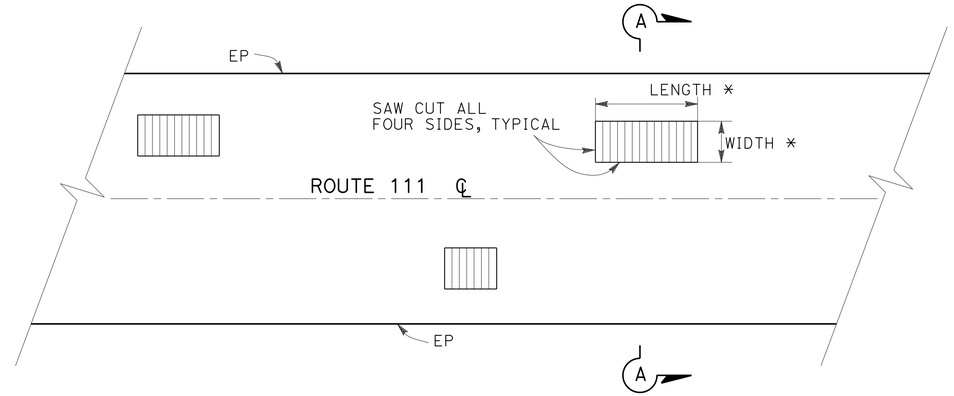

TYPICAL LAYOUT

NOTE:
LOCATION OF DIGOUT TO BE DETERMIND BY THE ENGINEER.

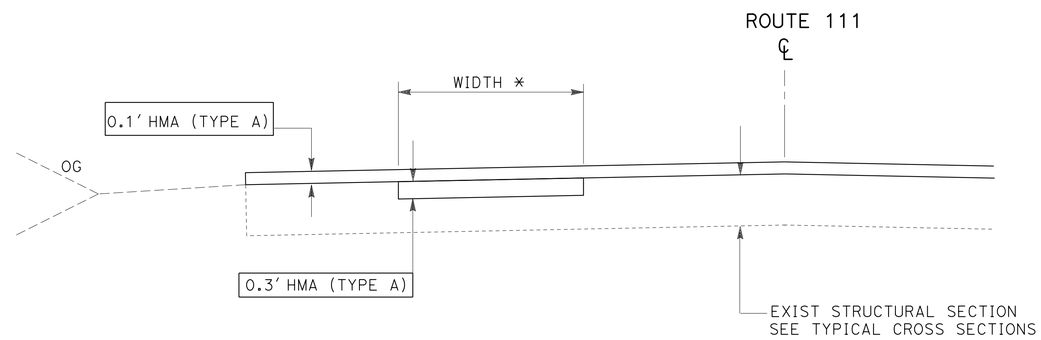

SECTION A-A

TYPICAL "REPLACE ASPHALT CONCRETE SURFACING"

* NOTE: SEE SUMMARY OF QUANTITIES SHEET FOR MORE INFORMATION.

LEGEND:

- ASPHALT RUBBERIZED SEAL COAT
- REPLACE ASPHALT CONCRETE SURFACING

CONSTRUCTION DETAILS

NO SCALE

C-2

STATE OF CALIFORNIA - DEPARTMENT OF TRANSPORTATION
Caltrans MAJOR MAINTENANCE

FUNCTIONAL SUPERVISOR: ALBERTO GAYON
CALCULATED-DESIGNED BY: LIDA MOVAHED
CHECKED BY: MOHAMAD AHMED
REVISED BY / DATE REVISED

LAST REVISION 02-13-14 | DATE PLOTTED => 04-MAR-2014 | TIME PLOTTED => 16:01

Dist	COUNTY	ROUTE	POST MILES TOTAL PROJECT	SHEET No.	TOTAL SHEETS
11	Imp	111	40.5/65.4	6	19

REGISTERED CIVIL ENGINEER 01-23-14 DATE

03-10-14
PLANS APPROVAL DATE

REGISTERED PROFESSIONAL ENGINEER SHAHIN T. ADIBI No. 54839 Exp. 06-30-14 CIVIL STATE OF CALIFORNIA

THE STATE OF CALIFORNIA OR ITS OFFICERS OR AGENTS SHALL NOT BE RESPONSIBLE FOR THE ACCURACY OR COMPLETENESS OF SCANNED COPIES OF THIS PLAN SHEET.

NOTES:

1. EXACT LOCATION OF THE CONSTRUCTION AREA SIGNS TO BE DETERMINED BY THE ENGINEER.
2. EXISTING UTILITIES ARE NOT SHOWN ON THESE PLANS. THE CONTRACTOR SHALL VERIFY LOCATIONS OF EXISTING UTILITIES AND AVOID IMPACTING THESE EXISTING UTILITIES BY ADJUSTING THE FIELD LOCATION OF THE SIGNPOST IN CONSULTATION WITH THE ENGINEER.
3. FOR ACCURATE RIGHT OF WAY DATA, CONTACT RIGHT OF WAY ENGINEERING AT THE DISTRICT OFFICE.

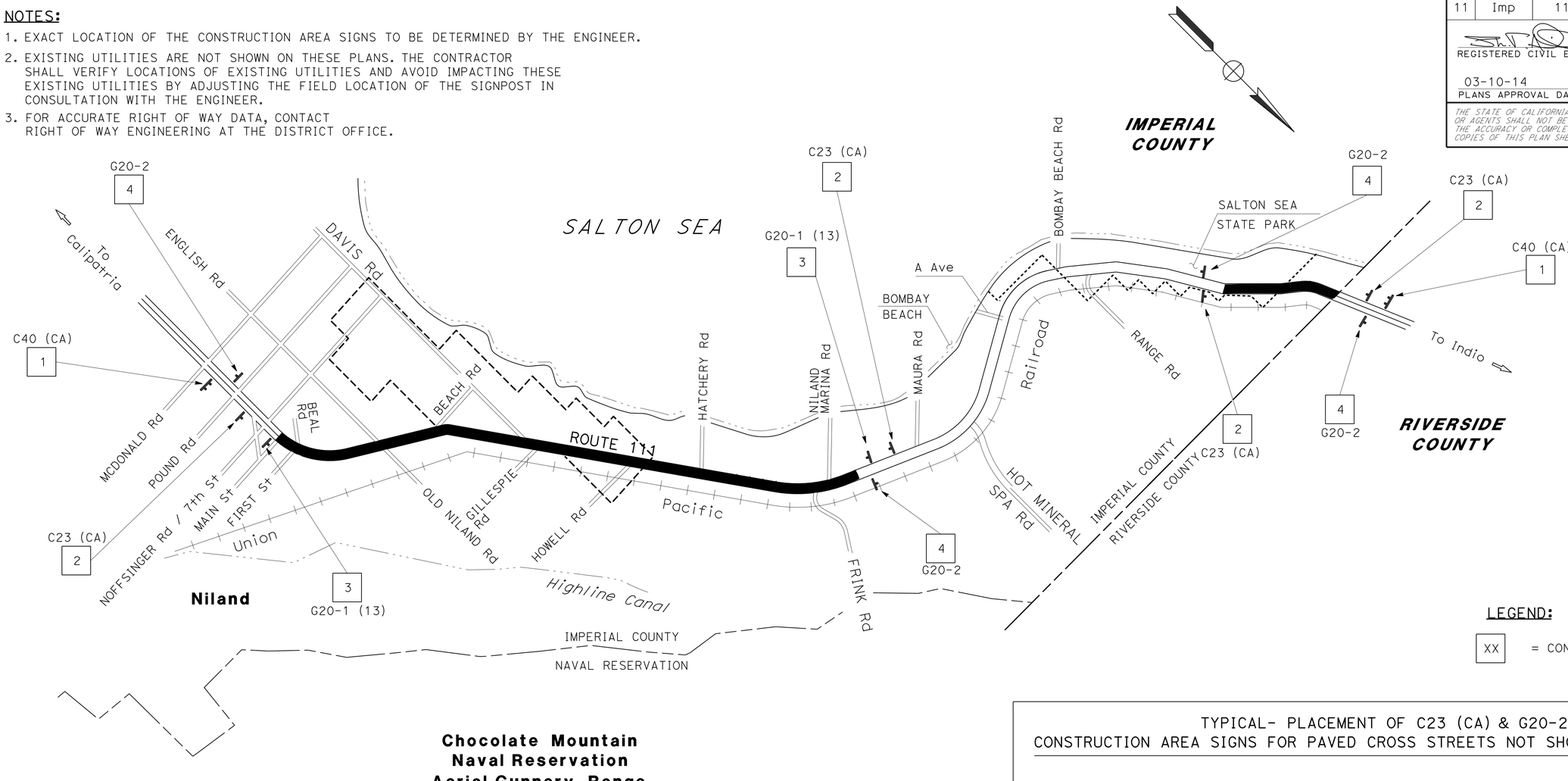

LEGEND:

XX = CONSTRUCTION AREA SIGN

TYPICAL- PLACEMENT OF C23 (CA) & G20-2
CONSTRUCTION AREA SIGNS FOR PAVED CROSS STREETS NOT SHOWN ON ABOVE MAP

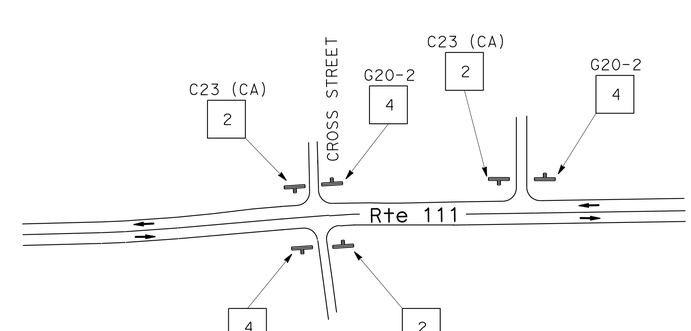

CONSTRUCTION AREA SIGNS

SIGN No.	SIGN CODE FEDERAL	SIGN CODE CALIFORNIA	PANEL SIZE	SIGN MESSAGE	No. OF POSTS AND SIGN	No. OF SIGNS
1		C40 (CA)	72" X 36"	TRAFFIC FINES DOUBLE IN CONSTRUCTION ZONES	2 - 4 X 6	2
2		C23 (CA)	48" X 48"	ROAD WORK AHEAD	1 - 4 X 6	20
3	G20-1 (13)		48" X 24"	ROAD WORK NEXT 13 MILES	1 - 4 X 4	2
4	G20-2		48" X 24"	END ROAD WORK	1 - 4 X 4	20

APPROVED FOR CONSTRUCTION AREA SIGN WORK ONLY

CONSTRUCTION AREA SIGNS
NO SCALE
CS-1

STATE OF CALIFORNIA - DEPARTMENT OF TRANSPORTATION
Caltrans® TRAFFIC DESIGN
FUNCTIONAL SUPERVISOR: CAMILLE ABOUFADEL
CALCULATED-DESIGNED BY: DON LUONG | CHECKED BY: SHAHIN ADIBI
REVISED BY | DATE REVISED

LAST REVISION 02-13-14 | DATE PLOTTED => 04-MAR-2014 | TIME PLOTTED => 16:01

Dist	COUNTY	ROUTE	POST MILES TOTAL PROJECT	SHEET No.	TOTAL SHEETS
11	Imp	111	40.5/65.4	7	19

REGISTERED CIVIL ENGINEER 01-23-14 DATE

03-10-14
PLANS APPROVAL DATE

REGISTERED PROFESSIONAL ENGINEER SHAHIN T. ADIBI No. 54839 Exp. 06-30-14 CIVIL STATE OF CALIFORNIA

THE STATE OF CALIFORNIA OR ITS OFFICERS OR AGENTS SHALL NOT BE RESPONSIBLE FOR THE ACCURACY OR COMPLETENESS OF SCANNED COPIES OF THIS PLAN SHEET.

AIRCRAFT ENFORCEMENT MARKING

TYPE 2

(FOR NARROW Shld APPLICATIONS)

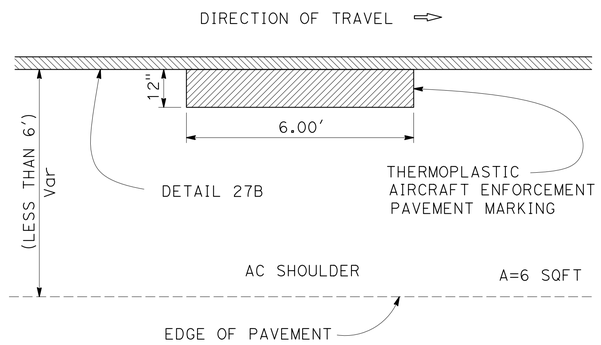

DETAIL 19 (Mod)

TYPICAL

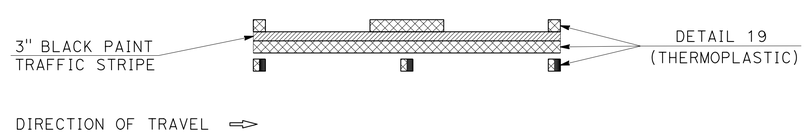

DETAIL 22 (Mod)

TYPICAL

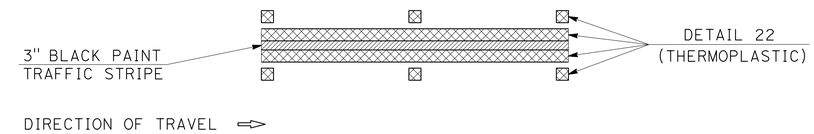

PAVEMENT DELINEATION DETAILS

NO SCALE

PDD-1

STATE OF CALIFORNIA - DEPARTMENT OF TRANSPORTATION
Caltrans® TRAFFIC DESIGN

FUNCTIONAL SUPERVISOR: CAMILLE ABOUFADEL
CALCULATED-DESIGNED BY: DON LUONG
CHECKED BY: SHAHIN ADIBI
REVISED BY
DATE REVISED

LAST REVISION 02-13-14
DATE PLOTTED => 04-MAR-2014
TIME PLOTTED => 16:02

Dist	COUNTY	ROUTE	POST MILES TOTAL PROJECT	SHEET No.	TOTAL SHEETS
11	Imp	111	40.5/65.4	8	19

REGISTERED CIVIL ENGINEER 01-23-14 DATE

03-10-14
PLANS APPROVAL DATE

REGISTERED PROFESSIONAL ENGINEER SHAHIN T. ADIBI No. 54839 Exp. 06-30-14 CIVIL STATE OF CALIFORNIA

THE STATE OF CALIFORNIA OR ITS OFFICERS OR AGENTS SHALL NOT BE RESPONSIBLE FOR THE ACCURACY OR COMPLETENESS OF SCANNED COPIES OF THIS PLAN SHEET.

REMOVE THERMOPLASTIC

LOCATION	DETAIL/TYPE	PAVEMENT MARKING (SQFT)	TRAFFIC STRIPE (LF)	REMARKS
PM 40.5 - PM 53.0 & PM 63.0 - PM 65.0	38		2,930	1,465 x 2 = 2,930
	TYPE III ARROWS	588		
	12" LIMIT LINE	391		
	AIRCRAFT MARKINGS	150		
	TOTAL	1,129	2,930	

REMOVE PAVEMENT MARKER (N)

ROUTE	LOCATION	TYPE NON-RECESSED (EA)		
		D	G	H
111	PM 40.5 - PM 65.4	2,086	64	390

(N) = NOT A SEPARATE PAY ITEM, FOR INFORMATION ONLY

PAVEMENT DELINEATION QUANTITIES

LOCATION FROM PM	LOCATION TO PM	ROUTE	DETAIL No./PAVEMENT MARKING	PAINT TRAFFIC STRIPE (1-COAT)	THERMOPLASTIC TRAFFIC STRIPE (ENHANCED WET NIGHT VISIBILITY)			PAVEMENT MARKER (RETROREFLECTIVE)				COMMENTS
				3" WIDE BLACK SOLID	4" WIDE SOLID	4" WIDE BROKEN 36-12	8" WIDE SOLID	TYPE C	TYPE D	TYPE G	TYPE H	
				LF	LF	LF	LF	EA	EA	EA	EA	
40.5	65.4	111	6			61,570			1286			
			19 (Mod)	9,251	9,251	9,251			200		390	
			22 (Mod)	7,149	14,298				600			
			27B		157,344							
			38				1,465			64		
			SUBTOTAL	16,400	180,893	70,821	1,465		2,086	64	390	
			TOTAL	16,400	180,893	70,821	1,465	2,540				

PAVEMENT DELINEATION QUANTITIES

PDQ-1

REVISED BY | DATE REVISED
DON LUONG | SHAHIN ADIBI
CALCULATED-DESIGNED BY | CHECKED BY
FUNCTIONAL SUPERVISOR | CAMILLE ABOUFADEL

STATE OF CALIFORNIA - DEPARTMENT OF TRANSPORTATION
Caltrans
TRAFFIC DESIGN

LAST REVISION 02-13-14 | DATE PLOTTED => 04-MAR-2014 | TIME PLOTTED => 16:02

Dist	COUNTY	ROUTE	POST MILES TOTAL PROJECT	SHEET No.	TOTAL SHEETS
11	Imp	111	40.5/65.4	9	19

REGISTERED CIVIL ENGINEER 01-23-14 DATE

03-10-14
PLANS APPROVAL DATE

REGISTERED PROFESSIONAL ENGINEER SHAHIN T. ADIBI No. 54839 Exp. 06-30-14 CIVIL STATE OF CALIFORNIA

THE STATE OF CALIFORNIA OR ITS OFFICERS OR AGENTS SHALL NOT BE RESPONSIBLE FOR THE ACCURACY OR COMPLETENESS OF SCANNED COPIES OF THIS PLAN SHEET.

THERMOPLASTIC PAVEMENT MARKING (ENHANCED WET NIGHT VISIBILITY)

ROUTE	LOCATION FROM	LOCATION TO	TYPE 2 AIRCRAFT MARKING SQFT	ARROW TYPE III SQFT	LIMIT LINE 12" SQFT	REMARKS
111	PM 41.00	PM 65.00	90			25 EA AT 1 MILE INTERVAL
	PM 40.50	PM 40.52		84		2 EA LEFT TURN
	PM 40.53	PM 40.55		84		2 EA LEFT TURN
	PM 40.56	PM 40.63		126		3 EA LEFT TURN
	PM 45.27	PM 45.30		84		2 EA LEFT TURN
	PM 51.55	PM 51.55		42		1 EA LEFT TURN
	PM 51.87	PM 51.89		84		2 EA LEFT TURN
	PM 51.90	PM 51.93		84		2 EA RIGHT TURN
	PM 40.50				16	MAIN St NB
	PM 40.56				22	FIRST St NB
	PM 42.46				59	OLD NILAND Rd SB
	PM 42.48				52	ENGLISH Rd NB
	PM 43.47				35	NO NAME SB
	PM 45.30				63	DAVIS Rd NB
	PM 47.01				35	NO NAME SB
	PM 51.55				42	FRINK Rd NB
	PM 51.89				40	NILAND MARINA Rd SB
	PM 53.00				27	NO NAME SB
SUBTOTAL			90	588	391	
TOTAL			1,069			

PAVEMENT DELINEATION QUANTITIES

PDQ-2

STATE OF CALIFORNIA - DEPARTMENT OF TRANSPORTATION
Caltrans® TRAFFIC DESIGN

FUNCTIONAL SUPERVISOR: CAMILLE ABOUFADEL
CALCULATED-DESIGNED BY: DON LUONG
CHECKED BY: SHAHIN ADIBI
REVISED BY
DATE REVISED

LAST REVISION 02-13-14
DATE PLOTTED => 04-MAR-2014
TIME PLOTTED => 16:02

Dist	COUNTY	ROUTE	POST MILES TOTAL PROJECT	SHEET No.	TOTAL SHEETS
11	Imp	111	40.5/65.4	10	19

REGISTERED CIVIL ENGINEER 01-23-14 DATE

03-10-14
PLANS APPROVAL DATE

REGISTERED PROFESSIONAL ENGINEER
LIDA MOVAHED
No. 81020
Exp. 09-30-15
CIVIL
STATE OF CALIFORNIA

THE STATE OF CALIFORNIA OR ITS OFFICERS OR AGENTS SHALL NOT BE RESPONSIBLE FOR THE ACCURACY OR COMPLETENESS OF SCANNED COPIES OF THIS PLAN SHEET.

ROADWAY QUANTITIES

LOCATION			LENGTH	TRAVELED WAY WIDTH	OUTSIDE SHOULDER WIDTH	HOT MIX ASPHALT (TYPE A)	TACK COAT	ASPHALTIC EMULSION (FOG SEAL COAT)	REMARKS
DIRECTION	FROM PM	TO PM	LF [N]	LF [N]	LF [N]	TON	TON	TON	
NB	40.50	40.54	190.08	12.0	8.0	28.16	0.07	0.04	
	40.54	40.56	105.60	24.0	8.0	25.03	0.06	0.02	
	40.56	40.73	918.72	22.3	3.0	172.17	0.43	0.08	
	40.73	45.26	23,944.80	12.0	8.0	3,547.38	8.87	5.32	
	45.26	45.34	422.40	24.0	6.0	93.87	0.23	0.07	
	45.34	46.50	6,119.52	12.0	8.0	906.6	2.27	1.36	
	46.50	51.60	26,928.00	12.0	8.0	3,989.33	9.97	5.98	
	51.60	51.69	475.20	22.3	3.0	89.06	0.22	0.04	
	51.69	51.75	348.48	12.0	8.0	51.63	0.13	0.08	
	51.75	51.83	422.40	24.0	8.0	100.12	0.25	0.09	
	51.83	51.86	158.40	12.0	8.0	23.47	0.06	0.04	
	51.86	51.93	343.20	24.0	5.0	73.72	0.18	0.05	
	51.93	53.00	5,665.44	12.0	8.0	839.32	2.10	1.26	
SB	40.50	40.52	126.72	24.0	8.0	30.04	0.08	0.03	
	40.52	40.57	264.00	12.0	5.0	33.24	0.08	0.04	
	40.57	40.67	528.00	24.0	2.0	101.69	0.25	0.03	
	40.67	46.50	30,761.28	12.0	8.0	4,557.23	11.39	6.84	
	46.50	51.56	26,716.80	12.0	8.0	3,958.04	9.90	5.94	
	51.56	51.59	158.40	24.0	5.0	34.03	0.09	0.02	
	51.59	51.91	1,689.60	12.0	8.0	250.31	0.63	0.38	
	51.91	51.97	316.80	24.0	5.0	68.05	0.17	0.04	
	51.97	53.00	5,427.84	12.0	8.0	804.12	2.01	1.21	
ASPHALT RUBBER SEAL COAT								10.64	
TOTAL						19,776.61	49.44	39.60	

(N) - NOT A SEPARATE PAY ITEM, FOR INFORMATION ONLY

ASPHALT RUBBER SEAL COAT QUANTITIES

LOCATION			LENGTH	TRAVELED WAY WIDTH	OUTSIDE SHOULDER WIDTH	ASPHALT-RUBBER BINDER	ASPHALTIC EMULSION (FOG SEAL COAT)	PRECOATED SCREENINGS	SAND COVER (SEAL)
DIRECTION	FROM PM	TO PM	LF [N]	LF [N]	LF [N]	TON	TON	TON	TON
NB	63.00	65.40	12,672.00	12.00	8.00	65.47	5.75	563.20	56.32
SB	63.00	65.40	12,672.00	12.00	5.00	55.65	4.89	478.72	47.87
TOTAL						121.12	10.64	1,041.92	104.19

PROFILE GRINDING

DIRECTION	LOCATION		STA
	FROM PM	TO PM	
NB	63.00	65.40	127.20
SB	63.00	65.40	127.20
TOTAL			254.40

SUMMARY OF QUANTITIES
Q-1

REVISED BY | DATE REVISED
LIDA MOVAHED | MOHAMAD AHMED
CALCULATED-DESIGNED BY | CHECKED BY
FUNCTIONAL SUPERVISOR: ALBERTO GAYON
STATE OF CALIFORNIA - DEPARTMENT OF TRANSPORTATION
Caltrans® MAJOR MAINTENANCE

LAST REVISION 02-13-14 | DATE PLOTTED => 04-MAR-2014 | TIME PLOTTED => 16:02

Dist	COUNTY	ROUTE	POST MILES TOTAL PROJECT	SHEET No.	TOTAL SHEETS
11	Imp	111	40.5/65.4	11	19

REGISTERED CIVIL ENGINEER DATE 01-23-14

PLANS APPROVAL DATE 03-10-14

REGISTERED PROFESSIONAL ENGINEER LIDA MOVAHED No. 81020 Exp. 09-30-15 CIVIL STATE OF CALIFORNIA

THE STATE OF CALIFORNIA OR ITS OFFICERS OR AGENTS SHALL NOT BE RESPONSIBLE FOR THE ACCURACY OR COMPLETENESS OF SCANNED COPIES OF THIS PLAN SHEET.

COLD PLANE AC PAVEMENT

DIRECTION	BEGIN PM	END PM	LENGTH (LF) [N]	WIDTH (LF) [N]	DEPTH (LF) [N]	AREA SQYD	DESCRIPTION
NB	40.50	40.504	20.00	24.00		56.32	BEGIN WORK CONFORM
NB	40.51	40.57	316.80	3.00		105.60	ISLAND CONFORM
NB	40.55	40.58	158.40	15.48	18.34	177.16	FIRST St CONFORM
NB	42.47	42.52	264.00	32.41	74.12	1,220.55	ENGLISH Rd CONFORM
NB	51.54	51.58	211.20	32.00	44.00	594.49	FRINK Rd CONFORM
SB	40.51	40.55	211.20	3.00		70.40	ISLAND CONFORM
SB	42.78	42.81	158.40	34.19		606.02	ENGLISH Rd CONFORM
SB	45.31	45.35	211.20	25.66	56.64	1,094.42	DAVIS Rd CONFORM
SB	47.01	47.04	158.40	22.50	83.17	663.30	HATCHERY Rd CONFORM
SB	51.89	51.94	264.00	21.00	66.00	1,092.50	NILAND MARINA Rd CONFORM
					TOTAL	5,614.04	

SHOULDER BACKING

DIRECTION	BEGIN PM	END PM	LENGTH LF [N]	DEPTH (LF)	TON
NB	40.59	42.50	10,084.80	3	329.02
NB	42.53	51.54	47,572.80	3	1,552.06
NB	51.57	51.79	1,161.60	3	37.90
NB	51.84	53.00	6,124.80	3	199.82
SB	40.59	42.78	11,563.20	3	377.25
SB	42.80	45.31	13,252.80	3	432.37
SB	45.35	47.01	8,764.80	3	285.95
SB	47.04	51.86	25,449.60	3	830.29
SB	51.88	53.00	5,913.60	3	192.93
				TOTAL	4,237.59

REPLACE ASPHALT CONCRETE SURFACING

DIRECTION	LOCATION	PM	LENGTH (N) LF	WIDTH (N) LF	AREA (N) SQFT	THICKNESS (N) LF	VOLUME CY
NB	1	40.54	650	12	7,800.00	0.3	86.67
	2	40.73	600	12	7,200.00	0.3	80.00
	3	45.34	560	16	8,960.00	0.3	99.56
	4	50.00	700	18	12,600.00	0.3	140.00
	5	51.60	900	12	10,800.00	0.3	120.00
	6	51.75	724	12	8,688.00	0.3	96.53
	7	51.86	850	14	11,900.00	0.3	132.22
	8	52.50	450	16	7,200.00	0.3	80.00
SB	1	40.52	700	16	11,200.00	0.3	124.44
	2	40.67	850	12	10,200.00	0.3	113.33
	3	41.50	700	12	8,400.00	0.3	93.33
	4	42.50	800	12	9,600.00	0.3	106.67
	5	43.25	1,000	12	12,000.00	0.3	133.33
	6	50.00	700	12	8,400.00	0.3	93.33
	7	51.56	1,000	16	16,000.00	0.3	177.78
	8	51.91	630	12	7,560.00	0.3	84.00
	9	52.50	600	16	9,600.00	0.3	106.67
						TOTAL	1,867.86

(N) - NOT A SEPARATE PAY ITEM, FOR INFORMATION ONLY

SUMMARY OF QUANTITIES

Q-2

REVISED BY | DATE REVISED

LIDA MOVAHED | MOHAMED AHMED

CALCULATED-DESIGNED BY | CHECKED BY

FUNCTIONAL SUPERVISOR: ALBERTO GAYON

STATE OF CALIFORNIA - DEPARTMENT OF TRANSPORTATION

Caltrans MAJOR MAINTENANCE

LAST REVISION 02-13-14 | DATE PLOTTED => 04-MAR-2014 | TIME PLOTTED => 16:02

M

Maint	MAINTENANCE
Max	MAXIMUM
MB	METAL BEAM
MBB	METAL BEAM BARRIER
MBGR	METAL BEAM GUARD RAILING
Med	MEDIAN
MGS	MIDWEST GUARDRAIL SYSTEM
MH	MANHOLE
Min	MINIMUM
Misc	MISCELLANEOUS
Misc I & S	MISCELLANEOUS IRON AND STEEL
Mkr	MARKER
Mod	MODIFIED,
	MODIFY
Mon	MONUMENT
MP	METAL PLATE
MPGR	METAL PLATE GUARD RAILING
MR	MOVEMENT RATING
MSE	MECHANICALLY STABILIZED EMBANKMENT
Mt	MOUNTAIN, MOUNT
Mtl	MATERIAL
MVP	MAINTENANCE VEHICLE PULLOUT

N

N	NORTH
NB	NORTHBOUND
No.	NUMBER (MUST HAVE PERIOD)
Nos.	NUMBERS (MUST HAVE PERIOD)
NPS	NOMINAL PIPE SIZE
NS	NEAR SIDE
NSP	NEW STANDARD PLAN
NTS	NOT TO SCALE

O

Oblr	OBLITERATE
OC	OVERCROSSING
OD	OUTSIDE DIAMETER
OF	OUTSIDE FACE
OG	ORIGINAL GROUND
OGAC	OPEN GRADED ASPHALT CONCRETE
OGFC	OPEN GRADED FRICTION COURSE
OH	OVERHEAD
OHWM	ORDINARY HIGH WATER MARK
O-O	OUT TO OUT
Opp	OPPOSITE
OSD	OVERSIDE DRAIN

P

P	PAGE
PAP	PERFORATED ALUMINUM PIPE
PB	PULL BOX
PC	POINT OF CURVATURE,
	PRECAST
PCC	POINT OF COMPOUND CURVE,
	PORTLAND CEMENT CONCRETE
PCMS	PORTABLE CHANGEABLE MESSAGE SIGN
PCP	PERFORATED CONCRETE PIPE,
	PRESTRESSED CONCRETE PIPE
PCVC	POINT OF COMPOUND VERTICAL CURVE
PEC	PERMIT TO ENTER AND CONSTRUCT
Ped	PEDESTRIAN
Ped OC	PEDESTRIAN OVERCROSSING
Ped UC	PEDESTRIAN UNDERCROSSING
Perm Mtl	PERMEABLE MATERIAL

P continued

PG	PROFILE GRADE
PI	POINT OF INTERSECTION
PJP	PARTIAL JOINT PENETRATION
Pkwy	PARKWAY
ℙ,PL	PLATE
P/L	PROPERTY LINE
PM	POST MILE,
	TIME FROM NOON TO MIDNIGHT
PN	PAVING NOTCH
POC	POINT OF HORIZONTAL CURVE
POT	POINT OF TANGENT
POVC	POINT OF VERTICAL CURVE
PP	PIPE PILE,
	PLASTIC PIPE,
	POWER POLE
PPL	PREFORMED PERMEABLE LINER
PPP	PERFORATED PLASTIC PIPE
PRC	POINT OF REVERSE CURVE
PRF	PAVEMENT REINFORCING FABRIC
PRVC	POINT OF REVERSE VERTICAL CURVE
PS&E	PLANS, SPECIFICATIONS AND ESTIMATES
PS, P/S	PRESTRESSED
PSP	PERFORATED STEEL PIPE
PT	POINT OF TANGENCY
PVC	POLYVINYL CHLORIDE
Pvmt	PAVEMENT

Q

Qty	QUANTITY

R

R	RADIUS
R & D	REMOVE AND DISPOSE
R & S	REMOVE AND SALVAGE
R/C	RATE OF CHANGE
RCA	REINFORCED CONCRETE ARCH
RCB	REINFORCED CONCRETE BOX
RCP	REINFORCED CONCRETE PIPE
RCPA	REINFORCED CONCRETE PIPE ARCH
Rd	ROAD
Reinf	REINFORCED,
	REINFORCEMENT,
	REINFORCING
Rel	RELOCATE
Repl	REPLACEMENT
Ret	RETAINING
Rev	REVISED, REVISION
Rdwy	ROADWAY
RHMA	RUBBERIZED HOT MIX ASPHALT
Riv	RIVER
RM	ROAD-MIXED
RP	RADIUS POINT,
	REFERENCE POINT
RR	RAILROAD
RSP	ROCK SLOPE PROTECTION,
	REVISED STANDARD PLAN
Rt	RIGHT
Rte	ROUTE
RW	REDWOOD,
	RETAINING WALL
R/W	RIGHT OF WAY
Rwy	RAILWAY

S

S	SOUTH,
	SUPPLEMENT
SAE	STRUCTURE APPROACH EMBANKMENT
Salv	SALVAGE
SAPP	STRUCTURAL ALUMINUM PLATE PIPE
SB	SOUTHBOUND
SC	SAND CUSHION
SCSP	SLOTTED CORRUGATED STEEL PIPE
SD	STORM DRAIN
Sec	SECOND,
	SECTION
Sep	SEPARATION
SG	SUBGRADE
Shld	SHOULDER
Sht	SHEET
Sim	SIMILAR
℄	STATION LINE
SM	SELECTED MATERIAL
Spec	SPECIAL,
	SPECIFICATIONS
SPP	SLOTTED PLASTIC PIPE
SS	SLOPE STAKE
SSBM	STRAP AND SADDLE BRACKET METHOD
SSD	STRUCTURAL SECTION DRAIN
SSPA	STRUCTURAL STEEL PLATE ARCH
SSPP	STRUCTURAL STEEL PLATE PIPE
SSPPA	STRUCTURAL STEEL PLATE PIPE ARCH
SSRP	STEEL SPIRAL RIB PIPE
St	STREET
Sta	STATION
STBB	SINGLE THRIE BEAM BARRIER
Std	STANDARD
Str	STRUCTURE
Surf	SURFACING
SW	SIDEWALK,
	SOUND WALL
Swr	SEWER
Sym	SYMMETRICAL
S4S	SURFACE 4 SIDES

T

T	SEMI-TANGENT
Tan	TANGENT
TBB	THRIE BEAM BARRIER
Tbr	TIMBER
TC	TOP OF CURB
TCB	TRAFFIC CONTROL BOX
TCE	TEMPORARY CONSTRUCTION EASEMENT
Tel	TELEPHONE
Temp	TEMPORARY
TG	TOP OF GRADE
Tot	TOTAL
TP	TELEPHONE POLE
TPB	TREATED PERMEABLE BASE
TPM	TREATED PERMEABLE MATERIAL
Trans	TRANSITION

T continued

TS	TRANSVERSE,
	TRAFFIC SIGNAL,
	TUBULAR STEEL
Typ	TYPICAL

U

UC	UNDERCROSSING
UD	UNDERDRAIN
UG	UNDERGROUND
UON	UNLESS OTHERWISE NOTED
UP	UNDERPASS

V

V	VALVE,
	DESIGN SPEED
Var	VARIABLE,
	VARIES
VC	VERTICAL CURVE
VCP	VITRIFIED CLAY PIPE
Vert	VERTICAL
Via	VIADUCT
Vol	VOLUME

W

W	WEST,
	WIDTH
WB	WESTBOUND
WH	WEEP HOLE
WM	WIRE MESH
WS	WATER SURFACE
WSP	WELDED STEEL PIPE
Wt	WEIGHT
WV	WATER VALVE
WW	WINGWALL
WWLOL	WINGWALL LAYOUT LINE

X

X Sec	CROSS SECTION
Xing	CROSSING

Y

Yr	YEAR
Yrs	YEARS

Dist	COUNTY	ROUTE	POST MILES TOTAL PROJECT	SHEET No.	TOTAL SHEETS
11	Imp	111	40.5/65.4	12	19

Grace M. Tsushima
REGISTERED CIVIL ENGINEER

July 19, 2013
PLANS APPROVAL DATE

REGISTERED PROFESSIONAL ENGINEER
Grace M. Tsushima
No. C49814
Exp. 9-30-14
CIVIL
STATE OF CALIFORNIA

THE STATE OF CALIFORNIA OR ITS OFFICERS OR AGENTS SHALL NOT BE RESPONSIBLE FOR THE ACCURACY OR COMPLETENESS OF SCANNED COPIES OF THIS PLAN SHEET.

TO ACCOMPANY PLANS DATED 03-10-14

UNIT OF MEASUREMENT SYMBOLS:

Some of the symbols used in the project plan quantity tables and in the Bid Item List are:

TABLE A

SYMBOL USED	DEFINITIONS
ACRE	ACRE
CF	CUBIC FOOT
CY	CUBIC YARD
EA	EACH
GAL	GALLON
LB	POUND
LF	LINEAR FOOT
SQFT	SQUARE FOOT
SQYD	SQUARE YARD
STA	100 FEET
TAB	TABLET
TON	2,000 POUNDS

Some of the symbols used in the plans other than in the project plan quantity tables are:

TABLE B

SYMBOL USED	DEFINITIONS
ksi	KIPS PER SQUARE INCH
ksf	KIPS PER SQUARE FOOT
psi	POUNDS PER SQUARE INCH
psf	POUNDS PER SQUARE FOOT
lb/ft^3, pcf	POUNDS PER CUBIC FOOT
tsf	TONS PER SQUARE FOOT
mph, MPH *	MILES PER HOUR
ø	NOMINAL DIAMETER
oz	OUNCE
lb	POUND
kip	1,000 POUNDS
cal	CALORIE
ft	FOOT OR FEET
gal	GALLON

* For use on a sign panel only

STATE OF CALIFORNIA
DEPARTMENT OF TRANSPORTATION

ABBREVIATIONS (SHEET 2 OF 2)

NO SCALE

RSP A10B DATED JULY 19, 2013 SUPERSEDES STANDARD PLAN A10B DATED MAY 20, 2011 - PAGE 2 OF THE STANDARD PLANS BOOK DATED 2010.

REVISED STANDARD PLAN RSP A10B

2010 REVISED STANDARD PLAN RSP A10B

6-7-13

Dist	COUNTY	ROUTE	POST MILES TOTAL PROJECT	SHEET No.	TOTAL SHEETS
11	Imp	111	40.5/65.4	13	19

REGISTERED CIVIL ENGINEER

July 20, 2012
PLANS APPROVAL DATE

REGISTERED PROFESSIONAL ENGINEER
Roberta L. McLaughlin
No. C40375
Exp. 3-31-13
CIVIL
STATE OF CALIFORNIA

THE STATE OF CALIFORNIA OR ITS OFFICERS OR AGENTS SHALL NOT BE RESPONSIBLE FOR THE ACCURACY OR COMPLETENESS OF SCANNED COPIES OF THIS PLAN SHEET.

TO ACCOMPANY PLANS DATED 03-10-14

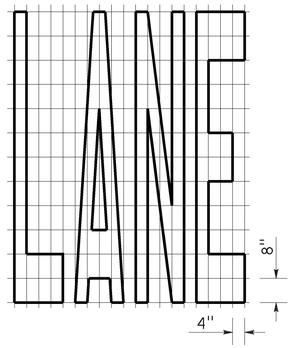

A=24 ft^2

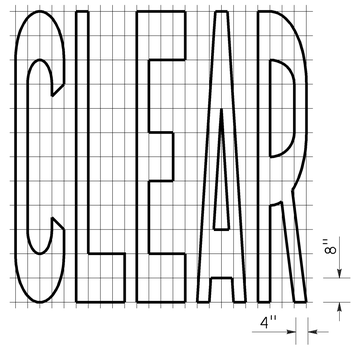

A=27 ft^2

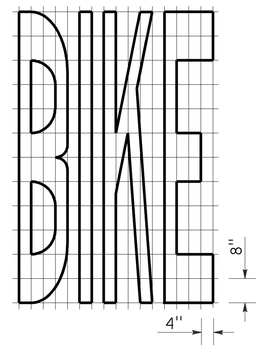

A=21 ft^2

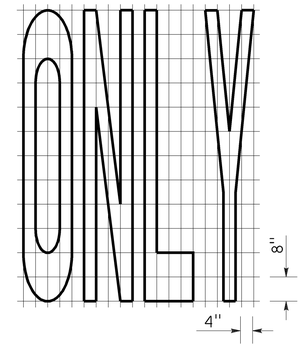

A=22 ft^2

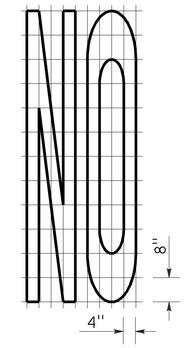

A=14 ft^2

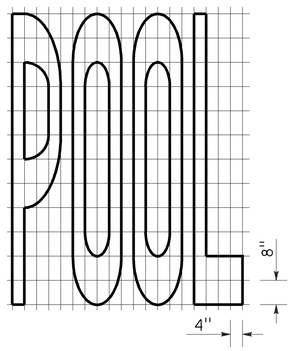

A=23 ft^2

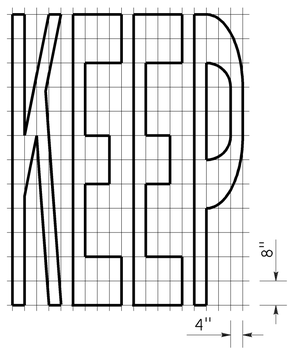

A=24 ft^2

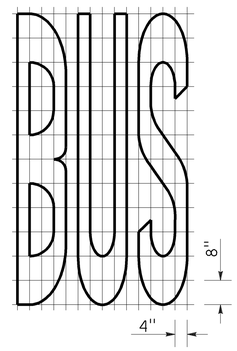

A=20 ft^2

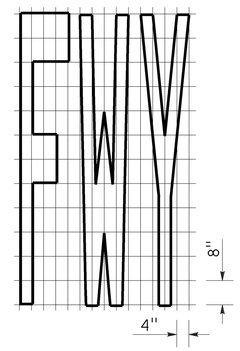

A=16 ft^2

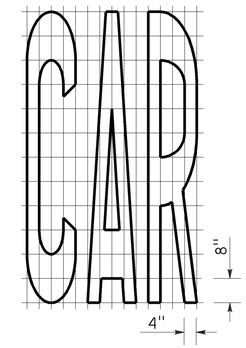

A=17 ft^2

WORD MARKINGS			
ITEM	ft^2	ITEM	ft^2
LANE	24	NO	14
POOL	23	BIKE	21
CAR	17	BUS	20
CLEAR	27	ONLY	22
KEEP	24	FWY	16

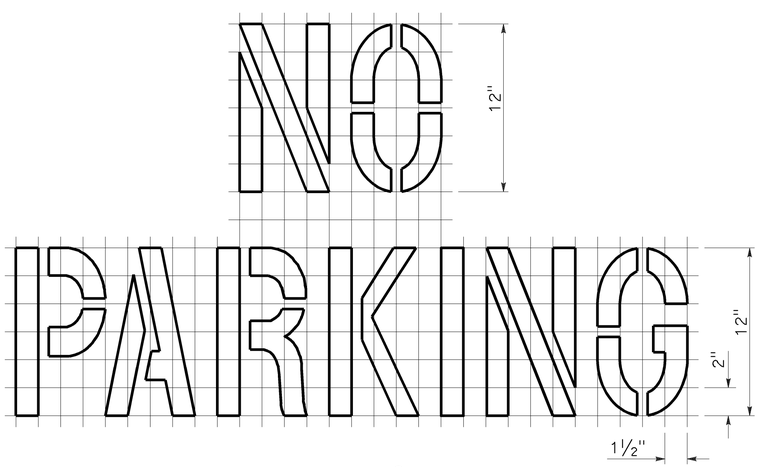

A=2 ft^2
See Notes 6 and 7

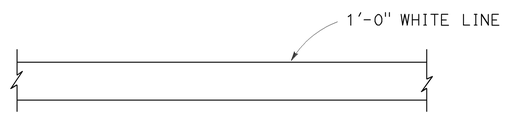

LIMIT LINE (STOP LINE)

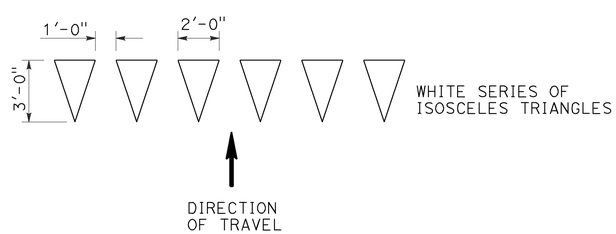

YIELD LINE

NOTES:

1. If a message consists of more than one word, it should read "UP", i.e., the first word should be nearest the driver.
2. The space between words should be at least four times the height of the characters for low speed roads, but not more than ten times the height of the characters. The space may be reduced appropriately where there is limited space because of local conditions.
3. Minor variations in dimensions may be accepted by the Engineer.
4. Portions of a letter, number or symbol may be separated by connecting segments not to exceed 2" in width.
5. The words "NO PARKING" pavement marking is to be used for parking facilities. For typical locations of markings, see Standard Plans A90A and A90B.
6. The words "NO PARKING", shall be painted in white letters no less than 1'-0" high on a contrasting background and located so that it is visible to traffic enforcement officials.

STATE OF CALIFORNIA
DEPARTMENT OF TRANSPORTATION

PAVEMENT MARKINGS WORDS, LIMIT AND YIELD LINES

NO SCALE

RSP A24E DATED JULY 20, 2012 SUPERSEDES STANDARD PLAN A24E
DATED MAY 20, 2011 - PAGE 17 OF THE STANDARD PLANS BOOK DATED 2010.

REVISED STANDARD PLAN RSP A24E

2010 REVISED STANDARD PLAN RSP A24E

6-12-12

Dist	COUNTY	ROUTE	POST MILES TOTAL PROJECT	SHEET No.	TOTAL SHEETS
11	Imp	111	40.5/65.4	14	19

REGISTERED CIVIL ENGINEER

July 20, 2012
PLANS APPROVAL DATE

REGISTERED PROFESSIONAL ENGINEER
Roberta L. McLaughlin
No. C40375
Exp. 3-31-13
CIVIL
STATE OF CALIFORNIA

THE STATE OF CALIFORNIA OR ITS OFFICERS OR AGENTS SHALL NOT BE RESPONSIBLE FOR THE ACCURACY OR COMPLETENESS OF SCANNED COPIES OF THIS PLAN SHEET.

TO ACCOMPANY PLANS DATED 03-10-14

2010 REVISED STANDARD PLAN RSP A24F

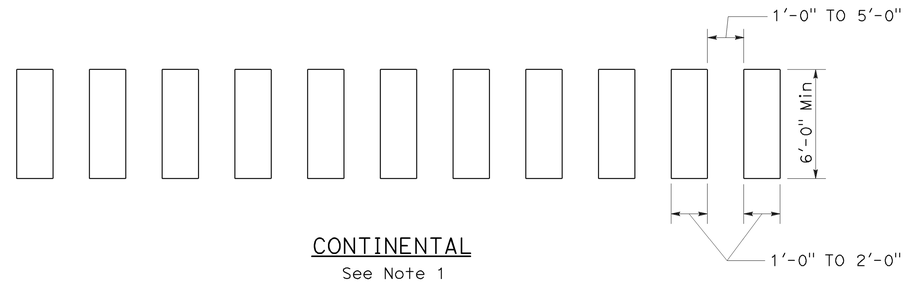

CONTINENTAL
See Note 1

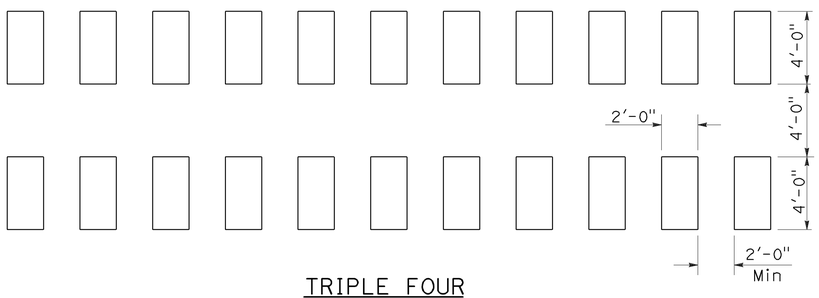

TRIPLE FOUR
See Note 1

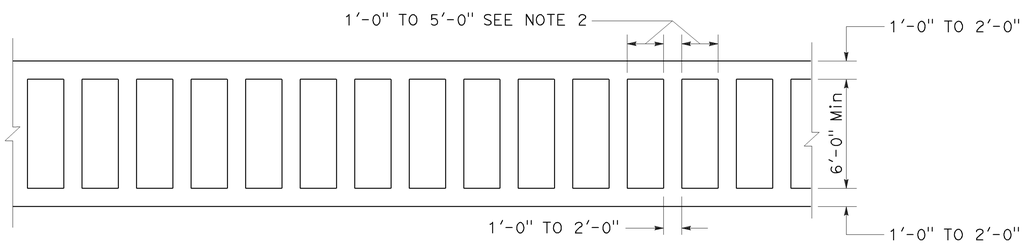

LADDER

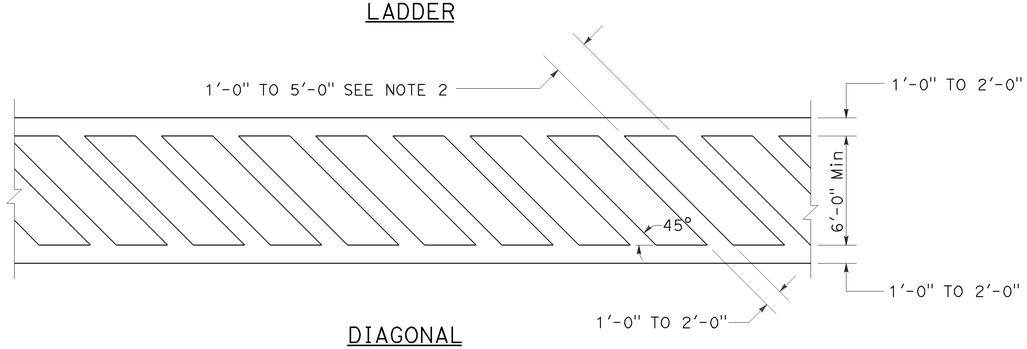

DIAGONAL

HIGHER VISIBILITY CROSSWALKS

NOTES:

1. Spaces between markings should be placed in wheel tracks of each lane.
2. Spacings not to exceed 2.5 times width of longitudinal line.
3. All crosswalk markings must be white except for those near schools must be yellow.

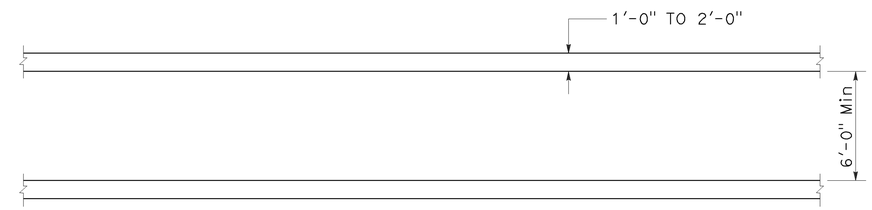

BASIC

STATE OF CALIFORNIA
DEPARTMENT OF TRANSPORTATION

PAVEMENT MARKINGS CROSSWALKS

NO SCALE

RSP A24F DATED JULY 20, 2012 SUPPLEMENTS THE STANDARD PLANS BOOK DATED 2010.

REVISED STANDARD PLAN RSP A24F

DIST	COUNTY	ROUTE	POST MILES TOTAL PROJECT	SHEET No.	TOTAL SHEETS
11	Imp	111	40.5/65.4	15	19

REGISTERED CIVIL ENGINEER

January 20, 2012
PLANS APPROVAL DATE

REGISTERED PROFESSIONAL ENGINEER Cornelis M. Hakim No. C55610 Exp. 12-31-12 CIVIL STATE OF CALIFORNIA

THE STATE OF CALIFORNIA OR ITS OFFICERS OR AGENTS SHALL NOT BE RESPONSIBLE FOR THE ACCURACY OR COMPLETENESS OF SCANNED COPIES OF THIS PLAN SHEET.

TO ACCOMPANY PLANS DATED 03-10-14

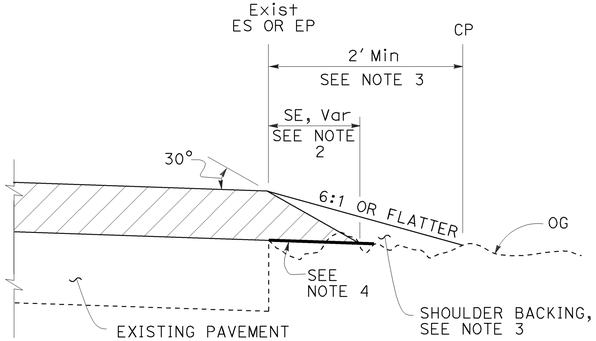

CASE A
Safety Edge

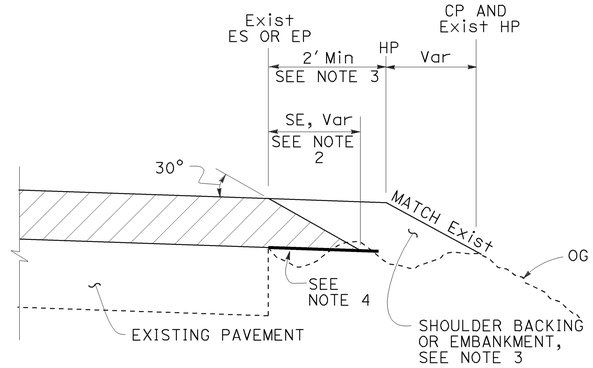

CASE B
Safety Edge

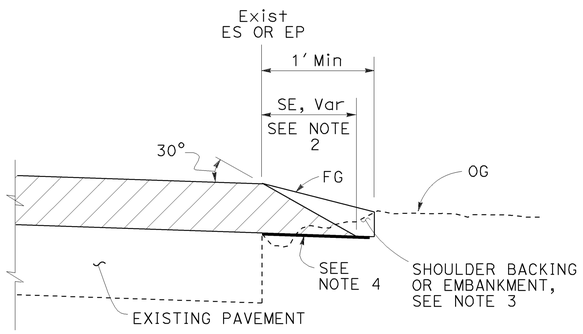

CASE C
Safety Edge

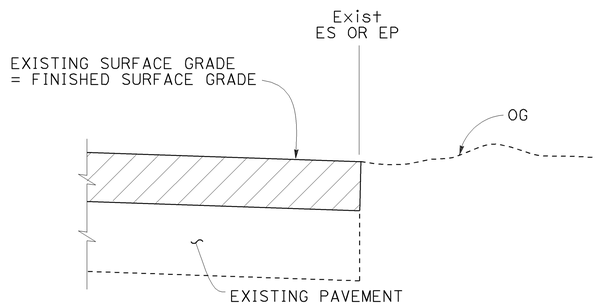

CASE D
Vertical Edge

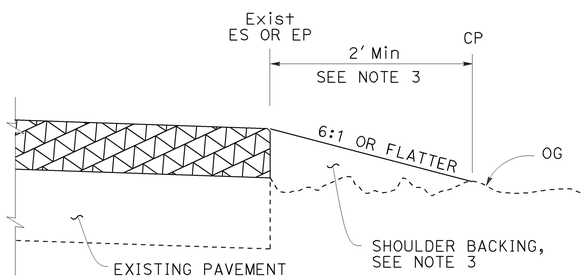

CASE E
Vertical Edge

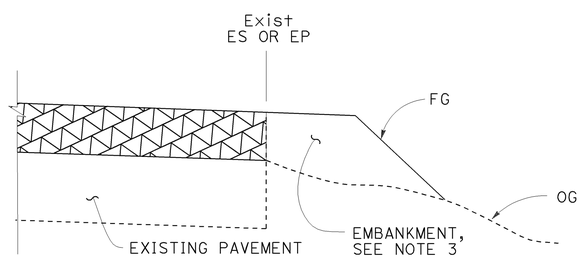

CASE F
Vertical Edge
* See Table A and Revised Std Plan RSP P74

LEGEND:

- HMA OVERLAY
- HMA OR CONCRETE OVERLAY
- CONCRETE OVERLAY

ABBREVIATIONS:

SE SAFETY EDGE
TT TOTAL THICKNESS OF SE

TABLE A
EDGE TREATMENT FOR VARIOUS OVERLAY THICKNESS AND CONDITIONS

	OVERLAY THICKNESS	
FIELD CONDITION	LESS THAN 0.15'	0.15' OR MORE
Exist SLOPE 6:1 OR FLATTER	CASE E	CASE A
Exist SLOPE 3:1 TO 6:1	CASE E	CASE B
Exist SLOPE STEEPER THAN 3:1	CASE F	CASE F
CUT SECTION (REPLACE, COLD PLANE, MILL PAVEMENT)	CASE D	CASE C

ADDITIONAL HMA OR CONCRETE QUANTITIES FOR SE/SIDE/MILE

TYPICAL CROSS SECTION	TT	TOTAL ADDITIONAL MATERIAL FOR SE/SIDE/MILE		
		HMA (TON)	CONCRETE (CY)*	CONCRETE (CY)**
TT	0.15'	NA	NA	NA
	0.20'	13.7	NA	NA
	0.30'	30.9	NA	NA
	0.40'	54.9	NA	NA
	0.45'	69.4	NA	NA
TT 0.43'	0.50'	84.2	NA	NA
	0.60'	113.9	NA	NA
	0.70'	143.6	70.9	94.2
	0.80'	173.3	85.6	112.2
	0.90'	203.0	100.3	130.2
	1.00'	232.7	114.9	148.2
	1.10'	262.4	129.6	166.2
	1.20'	292.1	144.3	184.2

* For Detail "A"
** For Optional Detail "A"

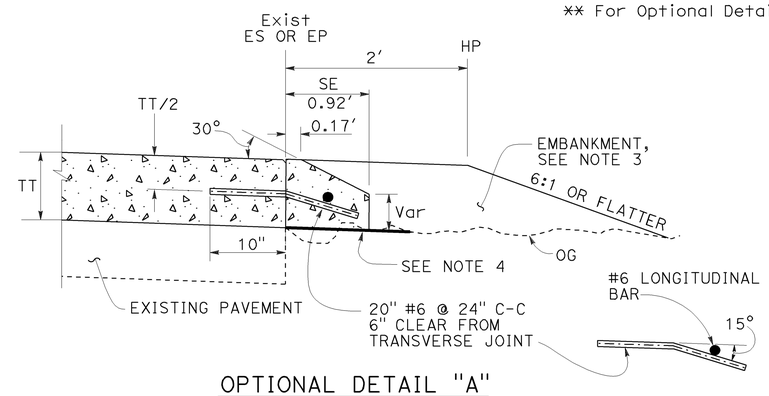

OPTIONAL DETAIL "A"
For concrete overlay
See Note 5

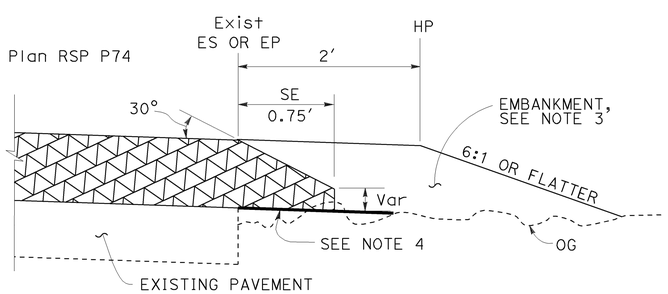

DETAIL "A"
For HMA overlay thickness more than 0.43' or concrete overlay

NOTES:

1. For limits of safety edge and vertical edge treatments, see Revised Standard Plan RSP P74.
2. Details shown for HMA overlay thickness less than 0.43'. See Detail "A" for HMA overlay thickness more than 0.43' or concrete overlay.
3. For locations and limits of shoulder backing or embankment see project plans.
4. Grade existing ground to place safety edge. 1' minimum width
5. Safety edge transverse joint must match overlay transverse joint. End of #6 longitudinal bar must be 2" ±½" clear from transverse joint.
6. Safety edge is not needed in the area of MBGR, barrier, right turn lane and acceleration lane. See Revised Standard Plan RSP P74.

STATE OF CALIFORNIA
DEPARTMENT OF TRANSPORTATION

PAVEMENT EDGE TREATMENTS-OVERLAYS

NO SCALE

RSP P75 DATED JANUARY 20, 2012 SUPPLEMENTS THE STANDARD PLANS BOOK DATED 2010.

REVISED STANDARD PLAN RSP P75

2010 REVISED STANDARD PLAN RSP P75

Dist	COUNTY	ROUTE	POST MILES TOTAL PROJECT	SHEET No.	TOTAL SHEETS
11	Imp	111	40.5/65.4	16	19

REGISTERED CIVIL ENGINEER

July 19, 2013
PLANS APPROVAL DATE

REGISTERED PROFESSIONAL ENGINEER
Gurinderpal Bhullar
No. C48815
Exp. 9-30-14
CIVIL
STATE OF CALIFORNIA

THE STATE OF CALIFORNIA OR ITS OFFICERS OR AGENTS SHALL NOT BE RESPONSIBLE FOR THE ACCURACY OR COMPLETENESS OF SCANNED COPIES OF THIS PLAN SHEET.

TO ACCOMPANY PLANS DATED 03-10-14

2010 REVISED STANDARD PLAN RSP T9

TABLE 1

TAPER LENGTH CRITERIA AND CHANNELIZING DEVICE SPACING

SPEED (S)	MINIMUM TAPER LENGTH * FOR WIDTH OF OFFSET 12 FEET (W)				MAXIMUM CHANNELIZING DEVICE SPACING		
					X	Y	Z **
	TANGENT 2L	MERGING L	SHIFTING L/2	SHOULDER L/3	TAPER	TANGENT	CONFLICT
mph	ft	ft	ft	ft	ft	ft	ft
20	160	80	40	27	20	40	10
25	250	125	63	42	25	50	12
30	360	180	90	60	30	60	15
35	490	245	123	82	35	70	17
40	640	320	160	107	40	80	20
45	1080	540	270	180	45	90	22
50	1200	600	300	200	50	100	25
55	1320	660	330	220	55	110	27
60	1440	720	360	240	60	120	30
65	1560	780	390	260	65	130	32
70	1680	840	420	280	70	140	35

* - For other offsets, use the following merging taper length formula for L:
For speed of 40 mph or less, $L = WS^2/60$
For speed of 45 mph or more, $L = WS$

Where: L = Taper length in feet
W = Width of offset in feet
S = Posted speed limit, off-peak 85th-percentile speed prior to work starting, or the anticipated operating speed in mph

** - Use for taper and tangent sections where there are no pavement markings or where there is a conflict between existing pavement markings and channelizers (CA).

TABLE 2

LONGITUDINAL BUFFER SPACE AND FLAGGER STATION SPACING

SPEED *	Min D **	DOWNGRADE Min D ***		
		-3%	-6%	-9%
mph	ft	ft	ft	ft
20	115	116	120	126
25	155	158	165	173
30	200	205	215	227
35	250	257	271	287
40	305	315	333	354
45	360	378	400	427
50	425	446	474	507
55	495	520	553	593
60	570	598	638	686
65	645	682	728	785
70	730	771	825	891

* - Speed is posted speed limit, off-peak 85th-percentile speed prior to work starting, or the anticipated operating speed in mph

** - Longitudinal buffer space or flagger station spacing

*** - Use on sustained downgrade steeper than -3 percent and longer than 1 mile.

TABLE 3

ADVANCE WARNING SIGN SPACING

ROAD TYPE	DISTANCE BETWEEN SIGNS *		
	A	B	C
	ft	ft	ft
URBAN - 25 mph OR LESS	100	100	100
URBAN - MORE THAN 25 mph TO 40 mph	250	250	250
URBAN - MORE THAN 40 mph	350	350	350
RURAL	500	500	500
EXPRESSWAY / FREEWAY	1000	1500	2640

* - The distances are approximate, are intended for guidance purposes only, and should be applied with engineering judgment. These distances should be adjusted by the Engineer for field conditions, if necessary, by increasing or decreasing the recommmended distances.

STATE OF CALIFORNIA
DEPARTMENT OF TRANSPORTATION

TRAFFIC CONTROL SYSTEM TABLES FOR LANE AND RAMP CLOSURES

NO SCALE

RSP T9 DATED JULY 19, 2013 SUPERSEDES RSP T9 DATED APRIL 19, 2013 THAT SUPPLEMENTS THE STANDARD PLANS BOOK DATED 2010.

REVISED STANDARD PLAN RSP T9

Dist	COUNTY	ROUTE	POST MILES TOTAL PROJECT	SHEET No.	TOTAL SHEETS
11	Imp	111	40.5/65.4	17	19

REGISTERED CIVIL ENGINEER

April 19, 2013
PLANS APPROVAL DATE

REGISTERED PROFESSIONAL ENGINEER
Gurinderpal Bhullar
No. C48815
Exp. 9-30-14
CIVIL
STATE OF CALIFORNIA

THE STATE OF CALIFORNIA OR ITS OFFICERS OR AGENTS SHALL NOT BE RESPONSIBLE FOR THE ACCURACY OR COMPLETENESS OF SCANNED COPIES OF THIS PLAN SHEET.

TO ACCOMPANY PLANS DATED 03-10-14

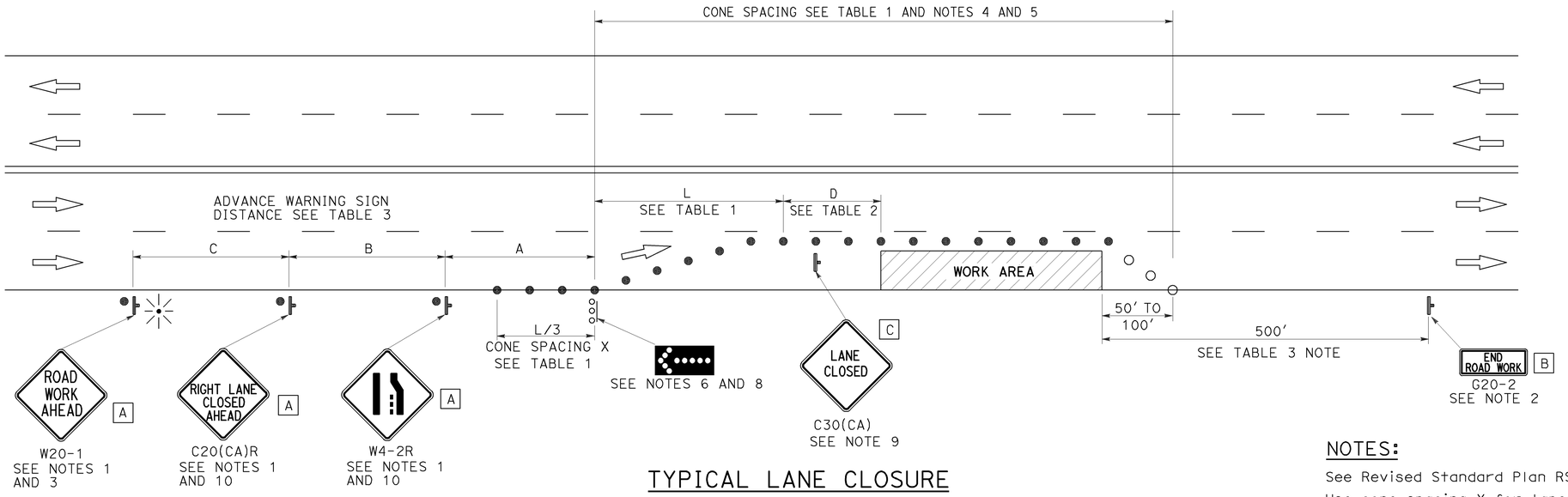

TYPICAL LANE CLOSURE

NOTES:

See Revised Standard Plan RSP T9 for tables.

Use cone spacing X for taper segment, Y for tangent segment or Z for conflict situations, as approriate, per Table 1, unless X, Y, or Z cone spacing is shown on this sheet.

Unless otherwise specified in the special provisions, all temporary warning signs shall have black legend on fluorescent orange background.

California codes are designated by (CA). Otherwise, Federal (MUTCD) codes are shown.

NOTES:

1. Each advance warning sign shall be equipped with at least two flags for daytime closure. Each flag shall be at least 16" x 16" in size and shall be orange or fluorescent red-orange in color. Flashing beacons shall be placed at the locations indicated for lane closure during hours of darkness.
2. A G20-2 "END ROAD WORK" sign, as appropriate, shall be placed at the end of the lane closure unless the end of work area is obvious, or ends within a larger project's limits.
3. If the W20-1 sign would follow within 2000' of a stationary W20-1 or G20-1 "ROAD WORK NEXT _____ MILES", use a C20(CA) sign for the first advance warning sign.
4. All cones used for lane closures during the hours of darkness shall be fitted with retroreflective bands (or sleeves) as specified in the specifications.
5. Portable delineators, placed at one-half the spacing indicated for traffic cones, may be used instead of cones for daytime closures only.
6. Flashing arrow sign shall be either Type I or Type II.
7. For approach speeds over 50 mph, use the "Traffic Control System for Lane Closure On Freeways And Expressways" plan for lane closure details and requirements.
8. A minimum 1500' of sight distance shall be provided where possible for vehicles approaching the first flashing arrow sign. Lane closures shall not begin at the top of crest vertical curve or on a horizontal curve.
9. Place a C30(CA) sign every 2000' throughout length of lane closure.
10. Median lane closures shall conform to the details as shown except that C20(CA)L and W4-2L signs shall be used.
11. At least one person shall be assigned to provide full time maintenance of traffic control devices for lane closure unless, otherwise directed by the Engineer.

LEGEND

- TRAFFIC CONE
- TRAFFIC CONE (OPTIONAL TAPER)
- TEMPORARY TRAFFIC CONTROL SIGN
- FLASHING ARROW SIGN (FAS)
- FAS SUPPORT OR TRAILER
- PORTABLE FLASHING BEACON

SIGN PANEL SIZE (Min)

A	48" x 48"
B	36" x 18"
C	30" x 30"

STATE OF CALIFORNIA
DEPARTMENT OF TRANSPORTATION

TRAFFIC CONTROL SYSTEM FOR LANE CLOSURE ON MULTILANE CONVENTIONAL HIGHWAYS

NO SCALE

RSP T11 DATED APRIL 19, 2013 SUPERSEDES STANDARD PLAN T11 DATED MAY 20, 2011 - PAGE 239 OF THE STANDARD PLANS BOOK DATED 2010.

REVISED STANDARD PLAN RSP T11

2010 REVISED STANDARD PLAN RSP T11

4-2-13

Dist	COUNTY	ROUTE	POST MILES TOTAL PROJECT	SHEET No.	TOTAL SHEETS
11	Imp	111	40.5/65.4	18	19

REGISTERED CIVIL ENGINEER

April 19, 2013
PLANS APPROVAL DATE

REGISTERED PROFESSIONAL ENGINEER Gurinderpal Bhullar No. C48815 Exp. 9-30-14 CIVIL STATE OF CALIFORNIA

THE STATE OF CALIFORNIA OR ITS OFFICERS OR AGENTS SHALL NOT BE RESPONSIBLE FOR THE ACCURACY OR COMPLETENESS OF SCANNED COPIES OF THIS PLAN SHEET.

TO ACCOMPANY PLANS DATED 03-10-14

2010 REVISED STANDARD PLAN RSP T13

NOTES:

See Revised Standard Plan RSP T9 for tables.

Use cone spacing X for taper segment, Y for tangent segment or Z for conflict situations, as approriate, per Table 1, unless X, Y, or Z cone spacing is shown on this sheet.

Unless otherwise specified in the special provisions, all temporary warning signs shall have black legend on fluorescent orange background.

California codes are designated by (CA). Otherwise, Federal (MUTCD) codes are shown.

TYPICAL LANE CLOSURE WITH REVERSIBLE CONTROL

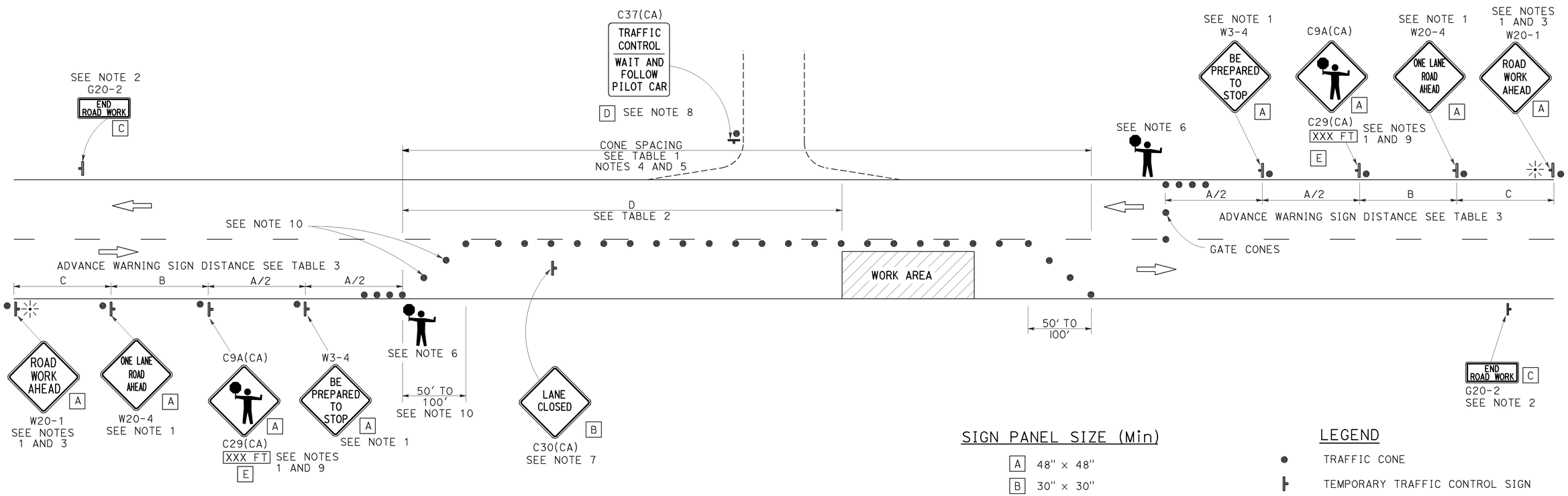

SIGN PANEL SIZE (Min)

A	48" × 48"
B	30" × 30"
C	36" × 18"
D	36" × 42"
E	20" × 7"

LEGEND

- TRAFFIC CONE
- TEMPORARY TRAFFIC CONTROL SIGN
- PORTABLE FLASHING BEACON
- FLAGGER

NOTES:

1. Each advance warning sign in each direction of travel shall be equipped with at least two flags for daytime closure. Each flag shall be at least 16" x 16" in size and shall be orange or fluorescent red-orange in color. Flashing beacons shall be placed at the locations indicated for lane closure during hours of darkness.
2. A G20-2 "END ROAD WORK" sign, as appropriate, shall be placed at the end of the lane control unless the end of work area is obvious, or ends within a larger project's limits.
3. If the W20-1 sign would follow within 2000' of a stationary W20-1 or G20-1 "ROAD WORK NEXT _____ MILES", use a W20-4 sign for the first advance warning sign.
4. All cones used for lane closures during the hours of darkness shall be fitted with retroreflective bands (or sleeves) as specified in the specifications.
5. Portable delineators, placed at one-half the spacing indicated for traffic cones, may be used instead of cones for daytime closures only.
6. Additional advance flaggers may be required. Flagger should stand in a conspicuous place, be visible to approaching traffic as well as approaching vehicles after the first vehicle has stopped. During the hours of darkness, the flagging-station and flagger shall be illuminated and clearly visible to approaching traffic. The illumination footprint of the lighting on the ground shall be at least 20' in diameter. Place a minimum of four cones at 50' intervals in advance of flagger station as shown.
7. Place C30(CA) "LANE CLOSED" sign at 500' to 1000' intervals throughout extended work areas. They are optional if the work area is visible from the flagger station.
8. When a pilot car is used, place a C37(CA) "TRAFFIC CONTROL-WAIT AND FOLLOW PILOT CAR" sign with black legend on white background at all intersections, driveways and alleys without a flagger within traffic control area. Signs shall be clean and visible at all times. Where traffic can not be effectively self-regulated, at least one flagger shall be used at each intersection within traffic control area.
9. An optional C29(CA) sign may be placed below the C9A(CA) sign.
10. Either traffic cones or barricades shall be placed on the taper. Barricades shall be Type I, II, or III.

STATE OF CALIFORNIA
DEPARTMENT OF TRANSPORTATION

TRAFFIC CONTROL SYSTEM FOR LANE CLOSURE ON TWO LANE CONVENTIONAL HIGHWAYS

NO SCALE

RSP T13 DATED APRIL 19, 2013 SUPERSEDES STANDARD PLAN T13 DATED MAY 20, 2011 - PAGE 241 OF THE STANDARD PLANS BOOK DATED 2010.

REVISED STANDARD PLAN RSP T13

Dist	COUNTY	ROUTE	POST MILES TOTAL PROJECT	SHEET No.	TOTAL SHEETS
11	Imp	111	40.5/65.4	19	19

REGISTERED CIVIL ENGINEER

April 19, 2013
PLANS APPROVAL DATE

REGISTERED PROFESSIONAL ENGINEER Gurinderpal Bhullar No. C48815 Exp. 9-30-14 CIVIL STATE OF CALIFORNIA

THE STATE OF CALIFORNIA OR ITS OFFICERS OR AGENTS SHALL NOT BE RESPONSIBLE FOR THE ACCURACY OR COMPLETENESS OF SCANNED COPIES OF THIS PLAN SHEET.

TO ACCOMPANY PLANS DATED 03-10-14

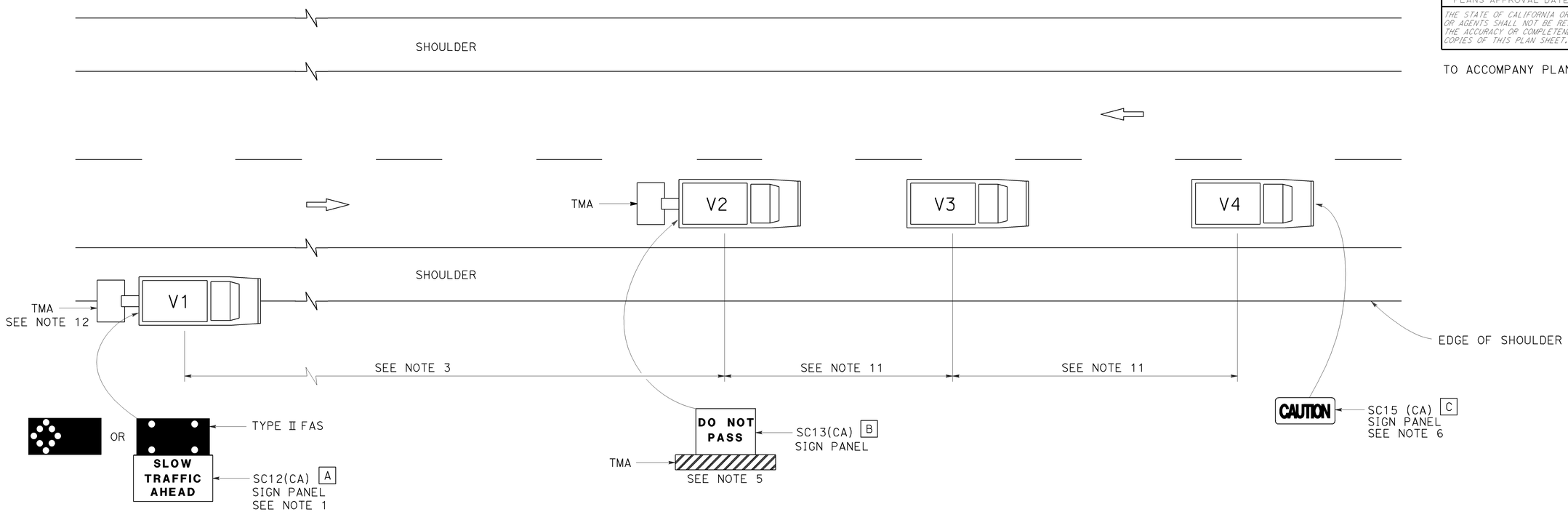

LEGEND

V1	SIGN VEHICLE
V2	SHADOW VEHICLE
V3	WORK/APPLICATION VEHICLE
V4	SIGN VEHICLE
TMA	TRUCK-MOUNTED ATTENUATOR
	FLASHING ARROW SIGN (FAS) IN FLASHING CAUTION MODE
	FLASHING ARROW SIGN (FAS) IN ALTERNATING DIAMOND CAUTION

SIGN PANEL SIZE (Min)

A	72" x 42"
B	54" x 42"
C	54" x 24"

NOTES:

1. Either a changeable message sign or a SC12(CA) "SLOW TRAFFIC AHEAD" sign shall be mounted on the rear of sign vehicle V1. The changeable message sign shall be sequenced to show the "CAUTION" message first, follow by the "SLOW TRAFFIC AHEAD" message. A Type II flashing arrow sign may be used with the SC12(CA) sign panel.
2. Sign vehicle V1 should be positioned where highly visible when shoulders are not available.
3. If traffic queues develop, sign vehicle V1 should be positioned upstream from the end of queue.
4. Vehicle-mounted sign panels shall have Type III or above retroreflective sheeting, black on white, or black on fluorescent orange, with 6" minimum series D letters per Caltrans sign specifications.
5. Shadow vehicle shall be equipped with a truck-mounted attenuator. The sign panel shown shall be mounted on the rear of shadow vehicle V2. The message "LANE CLOSED" may be used in place of the "DO NOT PASS" message.
6. The sign panel shown shall be mounted on the front of sign vehicle V4, facing opposing traffic.
7. All vehicles shall be equipped with flashing or rotating amber lights.
8. Sign vehicle V4 will not be required when the work and vehicles V2 and V3 are 2′ or more from the centerline of the highway during the work or application operations.
9. All vehicles used for lane closures shall be equipped with two-way radios and the vehicle operators shall maintain communication during the work or application operation.
10. This plan shall not be used where workers would be on foot in the work area. Use a stationary type lane closure (Revised Standard Plan T13) for this condition.
11. Minimize spacing between vehicles V2 and V3 and vehicles V3 and V4 to deter road users from driving in between them.
12. If sign vehicle V1 encroaches into the traffic lane due to insufficient shoulder width, sign vehicle V1 shall be equipped with a truck-mounted attenuator. Sign vehicle V1 shall stay as close to the edge of shoulder as practicable.

STATE OF CALIFORNIA
DEPARTMENT OF TRANSPORTATION

TRAFFIC CONTROL SYSTEM FOR MOVING LANE CLOSURE ON TWO LANE HIGHWAYS

NO SCALE

RSP T17 DATED APRIL 19, 2013 SUPERSEDES STANDARD PLAN T17
DATED MAY 20, 2011 - PAGE 245 OF THE STANDARD PLANS BOOK DATED 2010.

REVISED STANDARD PLAN RSP T17

2010 REVISED STANDARD PLAN RSP T17

12-18-12