Dist	COUNTY	ROUTE	POST MILES TOTAL PROJECT	SHEET No.	TOTAL SHEETS
11	SD	76	L0.0/M2.9	1	44

INDEX OF PLANS

SHEET NO.	DESCRIPTION
1	TITLE AND LOCATION MAP
2	TYPICAL CROSS SECTIONS
3-8	CONSTRUCTION DETAILS
9-10	CONSTRUCTION AREA SIGNS
11-18	TRAFFIC HANDLING PLAN
19-21	PAVEMENT DELINEATION DETAILS AND QUANTITIES
22-24	SIGN PLAN AND QUANTITIES
25-27	SUMMARY OF QUANTITIES
28-35	ELECTRICAL PLANS
36-44	REVISED AND NEW STANDARD PLANS

THE STANDARD PLANS LIST APPLICABLE TO THIS CONTRACT IS INCLUDED IN THE NOTICE TO BIDDERS AND SPECIAL PROVISIONS BOOK.

STATE OF CALIFORNIA

DEPARTMENT OF TRANSPORTATION

PROJECT PLANS FOR CONSTRUCTION ON

STATE HIGHWAY

IN SAN DIEGO COUNTY IN OCEANSIDE FROM 0.1 MILE WEST OF ROUTE 5/76 SEPARATION TO MISSION AVENUE UNDERCROSSING

TO BE SUPPLEMENTED BY STANDARD PLANS DATED MAY 2006

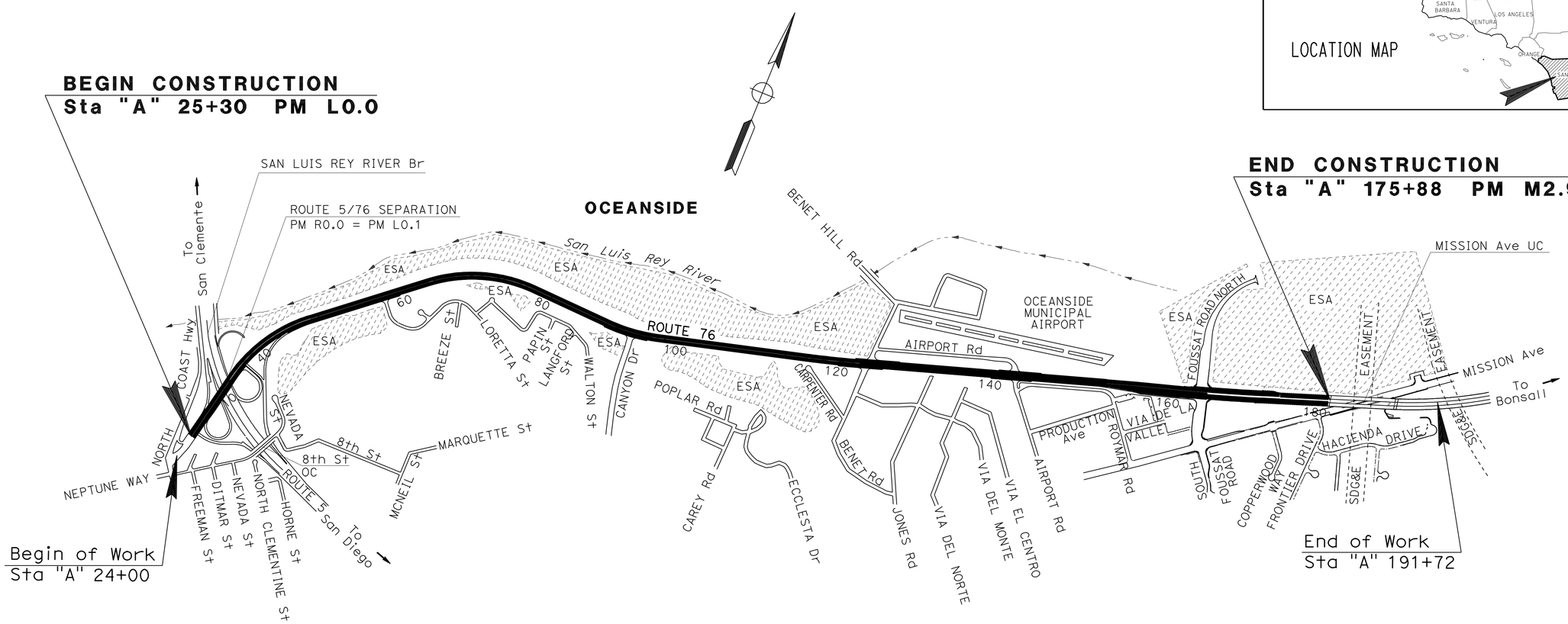

ESA - ENVIRONMENTALLY SENSITIVE AREA

THE CONTRACTOR SHALL POSSESS THE CLASS (OR CLASSES) OF LICENSE AS SPECIFIED IN THE "NOTICE TO BIDDERS."

NO SCALE

Hamed S. Baha 02-08-12
PROJECT ENGINEER DATE
REGISTERED CIVIL ENGINEER

February 13, 2012
PLANS APPROVAL DATE

THE STATE OF CALIFORNIA OR ITS OFFICERS OR AGENTS SHALL NOT BE RESPONSIBLE FOR THE ACCURACY OR COMPLETENESS OF SCANNED COPIES OF THIS PLAN SHEET.

REGISTERED PROFESSIONAL ENGINEER
HAMED S. BAHA
No. 74499
Exp. 12-31-13
CIVIL
STATE OF CALIFORNIA

CONTRACT No.	11-2M3904
PROJECT ID	1100020411

PROJECT MANAGER: ALBERTO GAYON
DESIGN ENGINEER: HAMED BAHA

LAST REVISION 02-10-12
DATE PLOTTED => 16-FEB-2012
TIME PLOTTED => 11:53

Dist	COUNTY	ROUTE	POST MILES TOTAL PROJECT	SHEET No.	TOTAL SHEETS
11	SD	76	L0.0/M2.9	2	44

Hamed S. Baha 02-08-12
REGISTERED CIVIL ENGINEER DATE

02-13-12
PLANS APPROVAL DATE

REGISTERED PROFESSIONAL ENGINEER HAMED S. BAHA No. 74499 Exp. 12-31-13 CIVIL STATE OF CALIFORNIA

THE STATE OF CALIFORNIA OR ITS OFFICERS OR AGENTS SHALL NOT BE RESPONSIBLE FOR THE ACCURACY OR COMPLETENESS OF SCANNED COPIES OF THIS PLAN SHEET.

NOTES:

1. DIMENSIONS OF THE PAVEMENT STRUCTURES (STRUCTURAL SECTIONS) ARE SUBJECT TO TOLERANCES SPECIFIED IN THE STANDARD SPECIFICATIONS.
2. FOR ACCURATE RIGHT OF WAY DATA, CONTACT RIGHT OF WAY ENGINEERING AT THE DISTRICT OFFICE.
3. APPLY FOG SEAL ON MAINTENANCE VEHICLE PULLOUT, MISCELLANEOUS AREA, DRAINAGE INLET APPROACH AND RUMBLE STRIPS (SEE SUMMARY OF QUANTITY SHEETS).
4. (*) = MATCH EXISTING.
5. FOR TYPE AND LOCATIONS OF HMA DIKE, SEE SUMMARY OF QUANTITY SHEETS.

ABBREVIATIONS:

RHMA (BWC-G) = RUBBERIZED HOT MIX ASPHALT (BONDED WEARING COURSE - GAP GRADED)

DESIGN DESIGNATION
(Rte 5/76 SEPARATION TO MISSION Ave UC)

Exist ADT - 2010	=	49,950
Exist PEAK HOUR	=	3,860
FORECASTED ADT (2020)	=	59,000
FORECASTED PEAK HOUR	=	4,550
TRUCK	=	5.4%

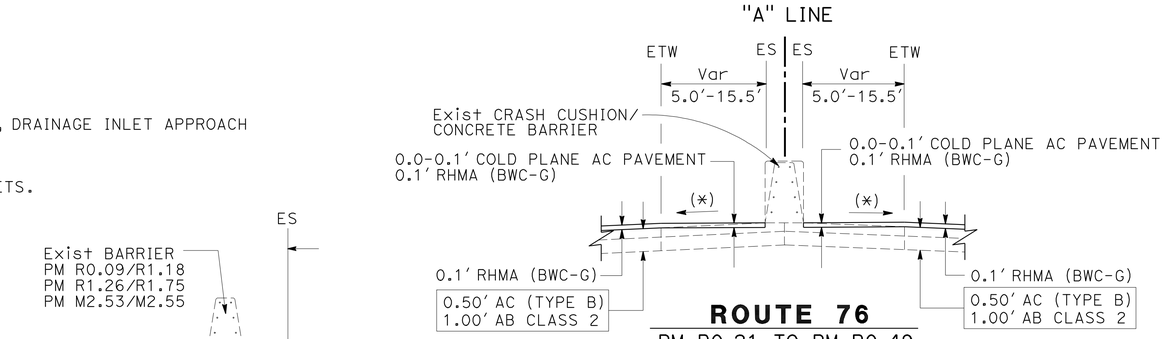

ROUTE 76

PM R0.21 TO PM R0.49
PM R0.50 TO PM R1.15
PM R0.16 TO PM R1.77
PM R1.78 TO PM R2.15
PM R2.16 TO PM M2.57
PM M2.58 TO PM M2.85

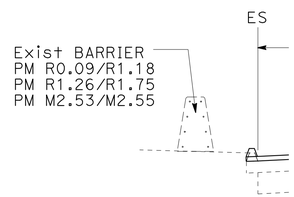

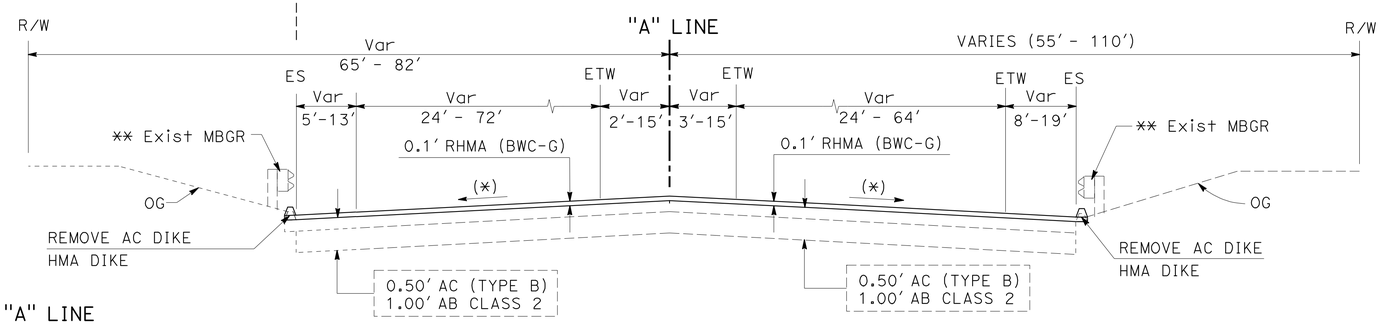

ROUTE 76

PM R0.09 TO PM M2.85

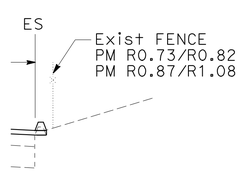

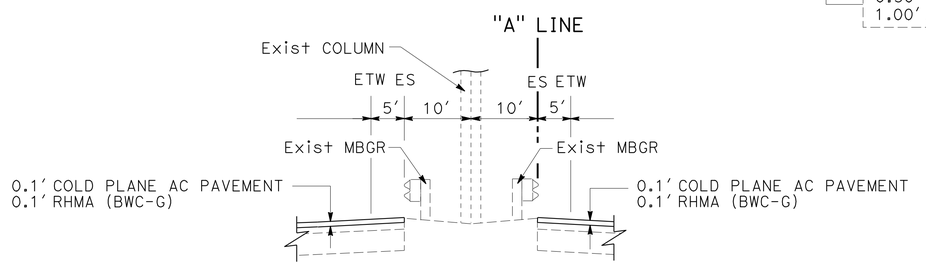

ROUTE 76

PM R0.0 TO PM R0.04
(L0.14 = R0.00)
PM L0.11 TO PM L0.14

** Exist MBGR LOCATIONS

PM = EASTBOUND	PM = WESTBOUND
R0.21/R0.25	R1.83/R2.06
R0.45/R0.47	R2.16/R2.18
R1.08/R1.15	M2.71/M2.85
R1.17/R1.19	
R1.58/R1.62	
R1.83/R2.03	
R2.12/R2.14	
M2.69/M2.85	

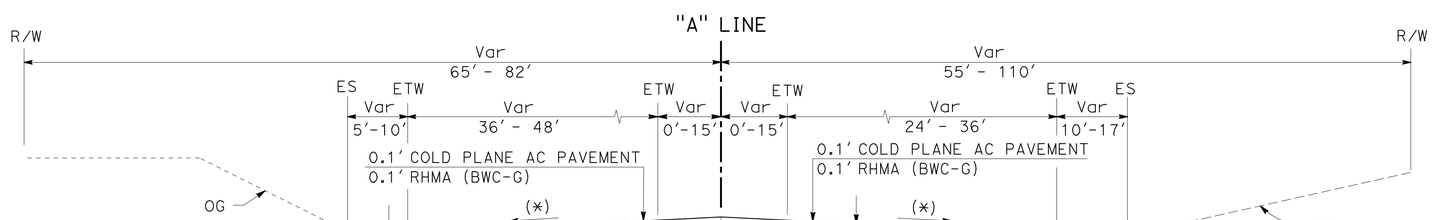

ROUTE 76

PM L0.00 TO PM R0.09

TYPICAL CROSS SECTIONS

NO SCALE

X-1

REVISED BY | DATE REVISED
REBECCA IGNACIO | HAMED BAHA
CALCULATED-DESIGNED BY | CHECKED BY
FUNCTIONAL SUPERVISOR
ALBERTO GAYON

STATE OF CALIFORNIA - DEPARTMENT OF TRANSPORTATION
Caltrans
MAINTENANCE

LAST REVISION 02-10-12 | DATE PLOTTED => 16-FEB-2012 | TIME PLOTTED => 11:53

Dist	COUNTY	ROUTE	POST MILES TOTAL PROJECT	SHEET No.	TOTAL SHEETS
11	SD	76	L0.0/M2.9	3	44

Hamed S. Baha 02-08-12
REGISTERED CIVIL ENGINEER DATE

02-13-12
PLANS APPROVAL DATE

REGISTERED PROFESSIONAL ENGINEER HAMED S. BAHA No. 74499 Exp. 12-31-13 CIVIL STATE OF CALIFORNIA

THE STATE OF CALIFORNIA OR ITS OFFICERS OR AGENTS SHALL NOT BE RESPONSIBLE FOR THE ACCURACY OR COMPLETENESS OF SCANNED COPIES OF THIS PLAN SHEET.

NOTES:

1. SEE SUMMARY OF QUANTITIES SHEETS FOR COMPLETE LIST OF HMA DIKES AND SHOULDER BACKING LOCATIONS.
2. FOR ACCURATE RIGHT OF WAY DATA, CONTACT RIGHT OF WAY ENGINEERING AT THE DISTRICT OFFICE.
3. APPLY AT LEAST 2:1 SAFETY EDGE TAPER AT EDGE OF PAVEMENT OR EDGE OF SHOULDER AT ALL LOCATIONS.
4. RE-ESTABLISH EXISTING GROUND-IN RUMBLE STRIPS AT ORIGINAL LOACTIONS PER Std PLAN A40B.
5. GROUND-IN RUMBLE STRIPS SHALL NOT BE PLACED AT INTERSECTIONS AND TURN LOCATIONS.

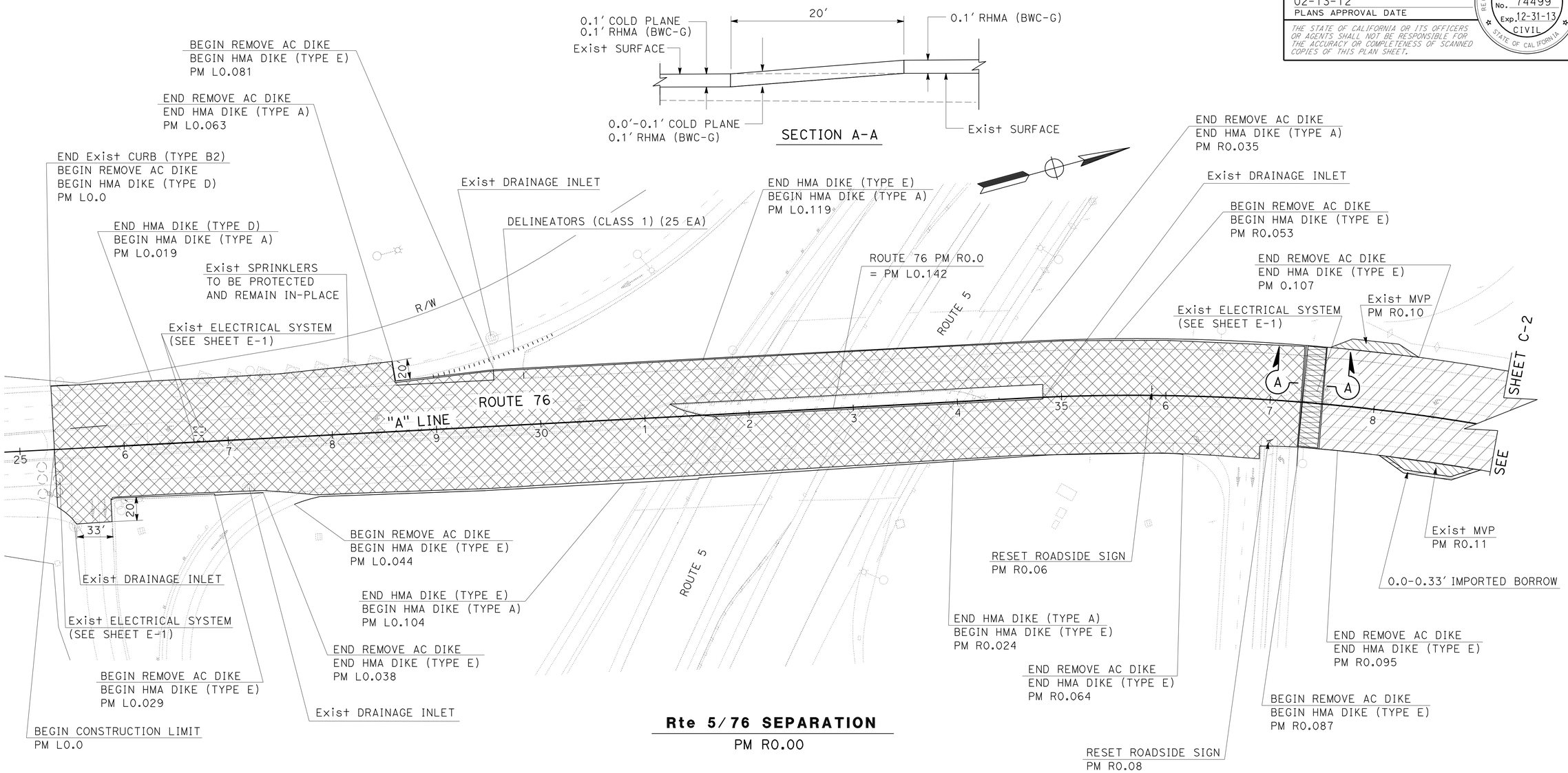

Rte 5/76 SEPARATION

PM R0.00

LEGEND:

- = SHOULDER BACKING
- = FOG SEAL COAT
- = COLD PLANE ASPHALT CONCRETE PAVEMENT (0.1') 0.1' RHMA (BWC-G)
- = 0.1' RHMA (BWC-G) - RUBBERIZED HOT MIX ASPHALT (BONDED WEARING COURSE-GAP GRADED)
- = COLD PLANE ASPHALT CONCRETE PAVEMENT (0.0'-0.1') 0.1' RHMA (BWC-G)
- = COLD PLANE ASPHALT CONCRETE PAVEMENT (0.2') 0.2' HMA (TYPE C) (SEE C-2 SHEET)
- = IMPORTED BORROW

CONSTRUCTION DETAILS

NO SCALE

C-1

REVISED BY | DATE REVISED
REBECCA IGNACIO | HAMED BAHA
CALCULATED-DESIGNED BY | CHECKED BY
FUNCTIONAL SUPERVISOR
ALBERTO GAYON

STATE OF CALIFORNIA - DEPARTMENT OF TRANSPORTATION
MAINTENANCE
Caltrans

LAST REVISION 02-14-12 | DATE PLOTTED => 16-FEB-2012 | TIME PLOTTED => 11:53

Dist	COUNTY	ROUTE	POST MILES TOTAL PROJECT	SHEET No.	TOTAL SHEETS
11	SD	76	L0.0/M2.9	4	44

Hamed S. Baha 02-08-12
REGISTERED CIVIL ENGINEER DATE

02-13-12
PLANS APPROVAL DATE

REGISTERED PROFESSIONAL ENGINEER HAMED S. BAHA No. 74499 Exp. 12-31-13 CIVIL STATE OF CALIFORNIA

THE STATE OF CALIFORNIA OR ITS OFFICERS OR AGENTS SHALL NOT BE RESPONSIBLE FOR THE ACCURACY OR COMPLETENESS OF SCANNED COPIES OF THIS PLAN SHEET.

NOTE:

FOR ACCURATE RIGHT OF WAY DATA, CONTACT RIGHT OF WAY ENGINEERING AT THE DISTRICT OFFICE.

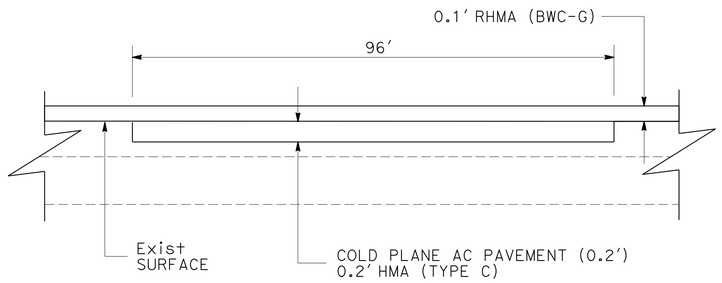

SECTION A-A

SEE Q-1 SHEET FOR LOCATIONS, COLD PLANE AC PAVEMENT (0.2' MAX)

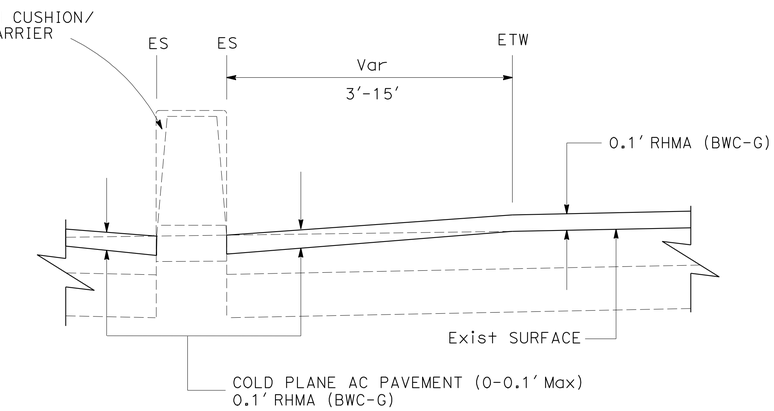

SECTION B-B

(Typ)

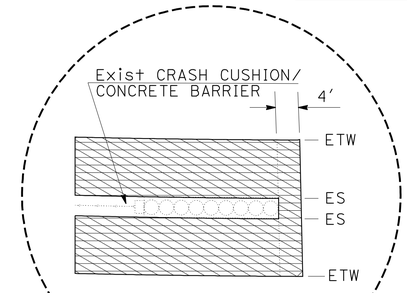

DETAIL 'A'

(Typ)

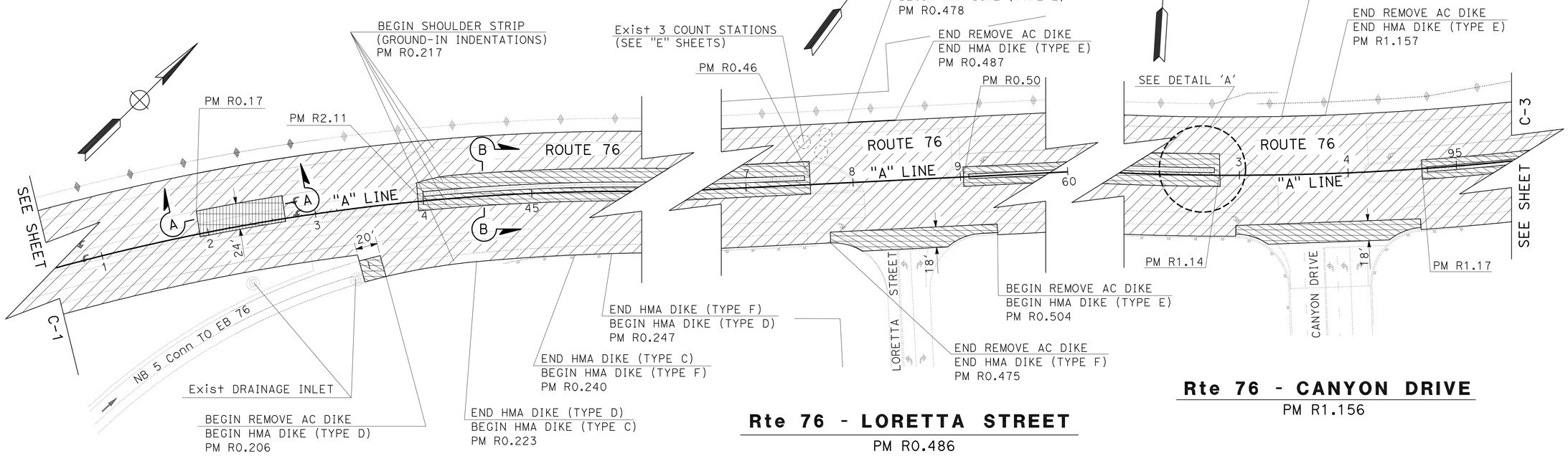

Rte 76 - At EB ON-RAMP FROM NB Rte 5

PM R0.189

Rte 76 - LORETTA STREET

PM R0.486

Rte 76 - CANYON DRIVE

PM R1.156

CONSTRUCTION DETAILS

NO SCALE

C-2

STATE OF CALIFORNIA - DEPARTMENT OF TRANSPORTATION
Caltrans MAINTENANCE

FUNCTIONAL SUPERVISOR: ALBERTO GAYON
CALCULATED-DESIGNED BY: REBECCA IGNACIO
CHECKED BY: HAMED BAHA
REVISED BY / DATE REVISED

LAST REVISION 02-14-12 | DATE PLOTTED => 16-FEB-2012 | TIME PLOTTED => 11:53

Dist	COUNTY	ROUTE	POST MILES TOTAL PROJECT	SHEET No.	TOTAL SHEETS
11	SD	76	L0.0/M2.9	5	44

Hamed S. Baha 02-08-12
REGISTERED CIVIL ENGINEER DATE

02-13-12
PLANS APPROVAL DATE

REGISTERED PROFESSIONAL ENGINEER HAMED S. BAHA No. 74499 Exp. 12-31-13 CIVIL STATE OF CALIFORNIA

THE STATE OF CALIFORNIA OR ITS OFFICERS OR AGENTS SHALL NOT BE RESPONSIBLE FOR THE ACCURACY OR COMPLETENESS OF SCANNED COPIES OF THIS PLAN SHEET.

NOTE:

FOR ACCURATE RIGHT OF WAY DATA, CONTACT RIGHT OF WAY ENGINEERING AT THE DISTRICT OFFICE.

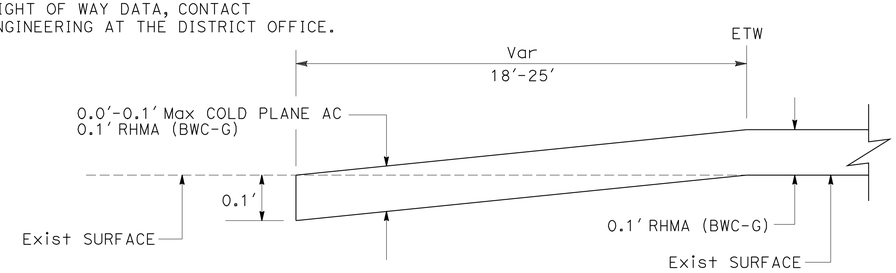

TYPICAL CONFORM AT CROSS STREET

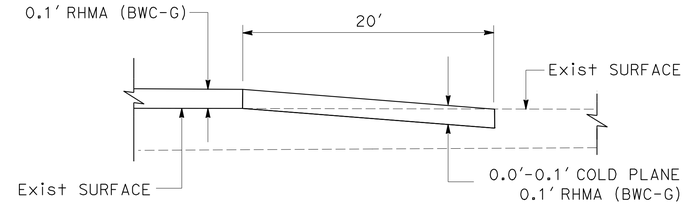

SECTION A-A

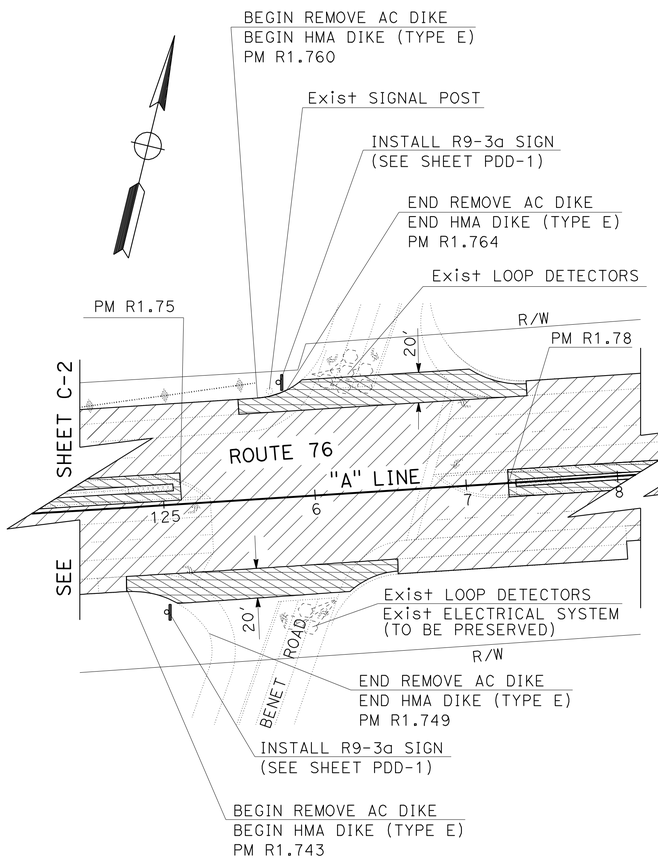

Rte 76 - BENET ROAD

PM: R1.767

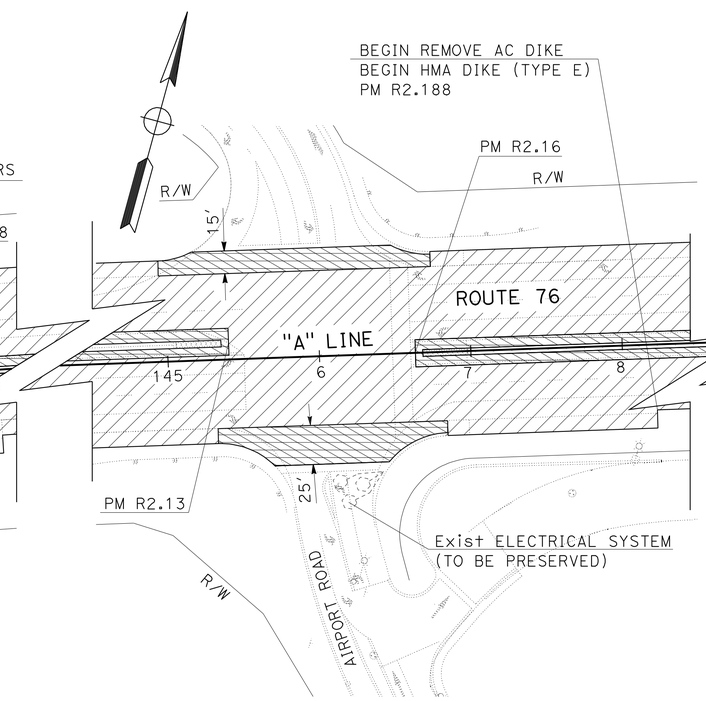

Rte 76 - AIRPORT ROAD

PM R2.145

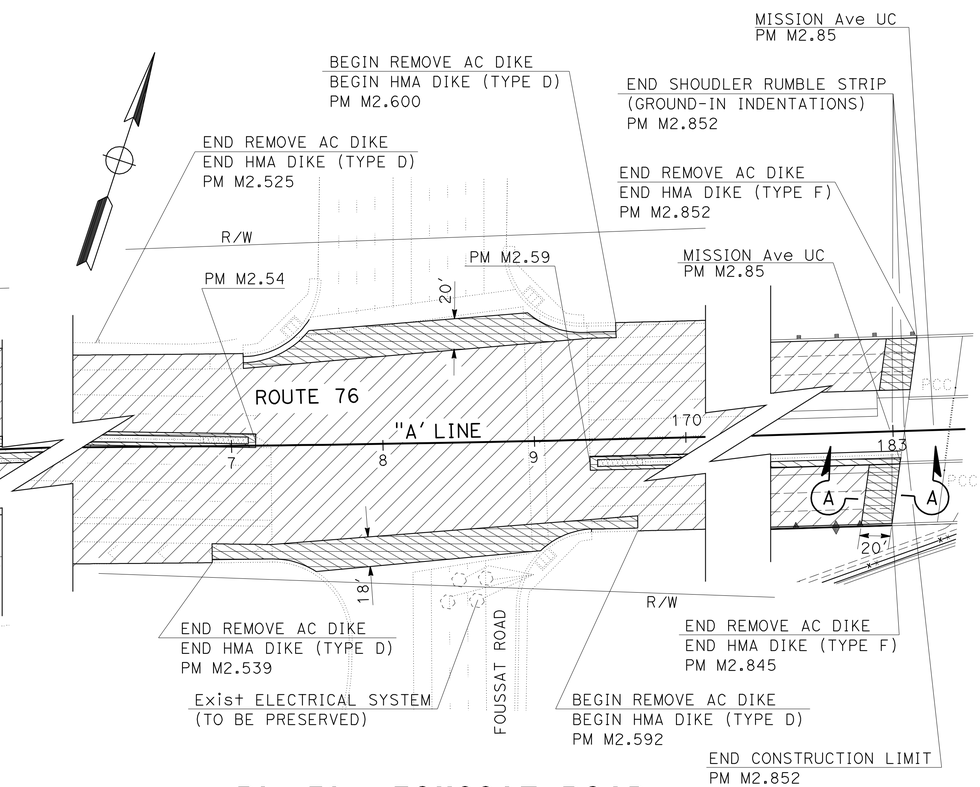

Rte 76 - FOUSSAT ROAD

PM M2.570

CONSTRUCTION DETAILS

NO SCALE

C-3

REVISED BY | DATE REVISED
REBECCA IGNACIO | HAMED BAHA
CALCULATED-DESIGNED BY | CHECKED BY
FUNCTIONAL SUPERVISOR
ALBERTO GAYON
STATE OF CALIFORNIA - DEPARTMENT OF TRANSPORTATION
MAINTENANCE
Caltrans

LAST REVISION 02-10-12 | DATE PLOTTED => 16-FEB-2012 | TIME PLOTTED => 11:54

Dist	COUNTY	ROUTE	POST MILES TOTAL PROJECT	SHEET No.	TOTAL SHEETS
11	SD	76	L0.0/M2.9	6	44

Hamed S. Baha 02-08-12
REGISTERED CIVIL ENGINEER DATE

02-13-12
PLANS APPROVAL DATE

REGISTERED PROFESSIONAL ENGINEER HAMED S. BAHA No. 74499 Exp. 12-31-13 CIVIL STATE OF CALIFORNIA

THE STATE OF CALIFORNIA OR ITS OFFICERS OR AGENTS SHALL NOT BE RESPONSIBLE FOR THE ACCURACY OR COMPLETENESS OF SCANNED COPIES OF THIS PLAN SHEET.

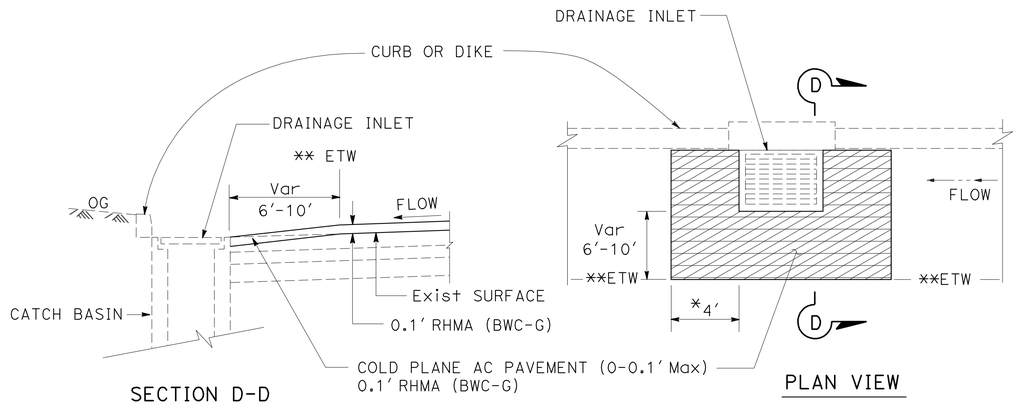

* TYPICALLY 4', UNLESS INDICATED OTHERWISE ON THE DETAILS
** COLD PLANE TYPICALLY LIMITED TO ETW, UNLESS INDICATED OTHERWISE ON THE DETAILS

DRAINAGE INLET (GRATE) CONFORM DETAIL

(SEE SUMMARY OF QUANTITIES SHEETS FOR LOCATIONS)

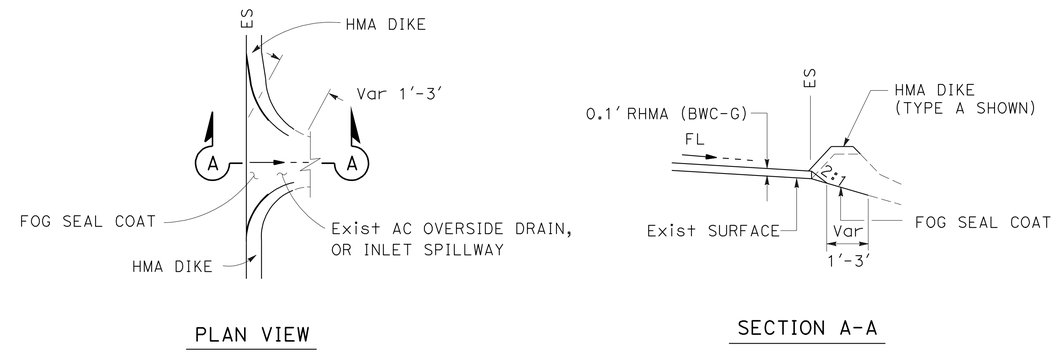

SPILLWAY/OVERSIDE DRAIN DETAIL

EB Rte 76 = PM R0.49; R0.75; R1.20; R1.31; R1.38; R1.61; R1.64; R1.74

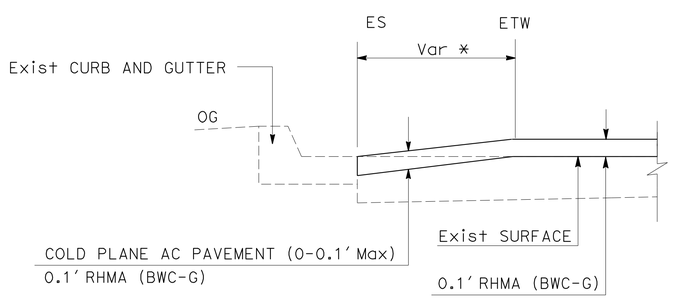

CURB AND GUTTER CONFORM DETAIL

EB Rte 76 = PM L0.01; R1.77; R2.15; M2.60
WB Rte 76 = PM R1.77; R2.15; M2.60

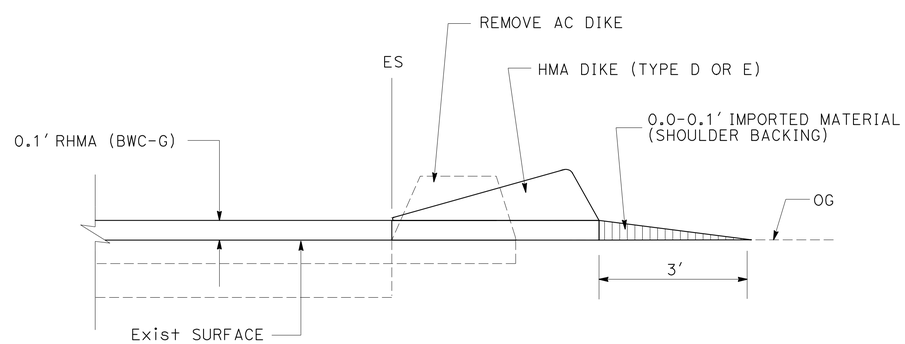

EXTENDED LIFT UNDER HMA DIKE

(SEE SUMMARY OF QUANTITIES SHEETS FOR LOCATIONS)

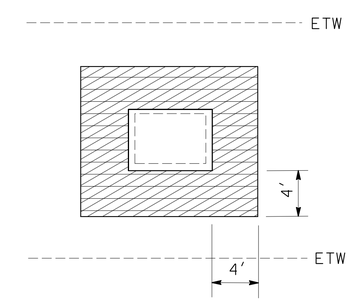

UTILITY BOX CONFORM DETAIL

PM R0.095; PM R0.0.097

CONSTRUCTION DETAILS

NO SCALE

C-4

STATE OF CALIFORNIA - DEPARTMENT OF TRANSPORTATION
Caltrans® MAINTENANCE

FUNCTIONAL SUPERVISOR: ALBERTO GAYON
CALCULATED-DESIGNED BY: REBECCA IGNACIO
CHECKED BY: HAMED BAHA
REVISED BY
DATE REVISED

LAST REVISION 02-14-12
DATE PLOTTED => 16-FEB-2012
TIME PLOTTED => 11:54

Dist	COUNTY	ROUTE	POST MILES TOTAL PROJECT	SHEET No.	TOTAL SHEETS
11	SD	76	L0.0/M2.9	7	44

Hamed S. Baha 02-08-12
REGISTERED CIVIL ENGINEER DATE

02-13-12
PLANS APPROVAL DATE

REGISTERED PROFESSIONAL ENGINEER
HAMED S. BAHA
No. 74499
Exp. 12-31-13
CIVIL
STATE OF CALIFORNIA

THE STATE OF CALIFORNIA OR ITS OFFICERS OR AGENTS SHALL NOT BE RESPONSIBLE FOR THE ACCURACY OR COMPLETENESS OF SCANNED COPIES OF THIS PLAN SHEET.

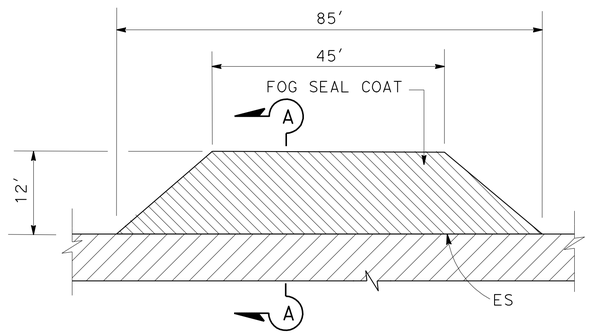

PLAN VIEW

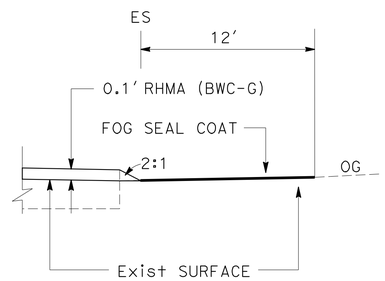

SECTION A-A

MAINTENANCE VEHICLE PULLOUT DETAIL

(SEE SUMMARY OF QUANTITIES SHEETS FOR LOCATIONS)

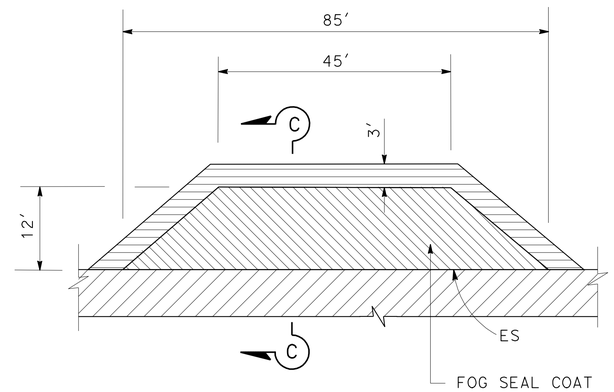

PLAN VIEW

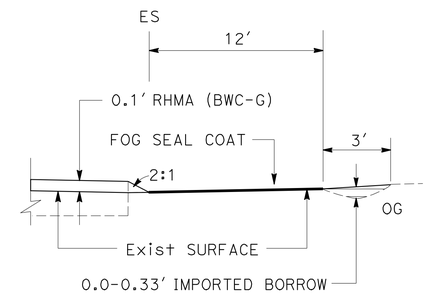

SECTION C-C

IMPORTED BORROW DETAIL

EB Rte 76 - PM R0.11

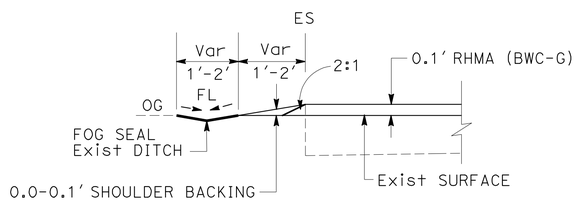

Misc AREA WITH DITCH

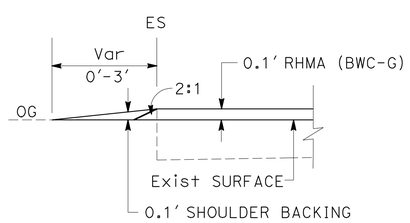

Misc AREA WITHOUT DITCH

IMPORTED MATERIAL (SHOULDER BACKING) DETAIL

(SEE SUMMARY OF QUANTITIES SHEETS FOR LOCATIONS)

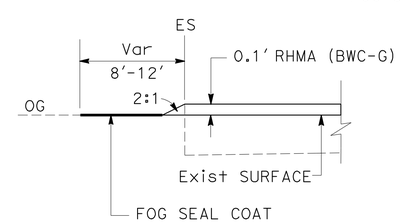

SECTION B-B

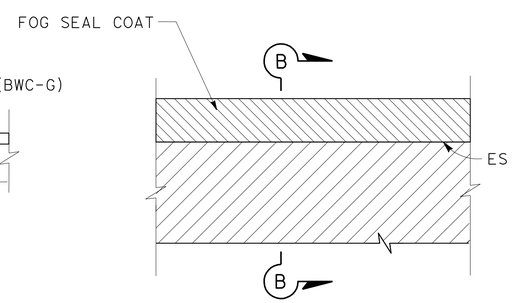

PLAN VIEW

MISCELLANEOUS AREA DETAIL

(SEE SUMMARY OF QUANTITIES SHEETS FOR LOCATIONS)

CONSTRUCTION DETAILS

NO SCALE

C-5

STATE OF CALIFORNIA - DEPARTMENT OF TRANSPORTATION
Caltrans
MAINTENANCE

FUNCTIONAL SUPERVISOR: ALBERTO GAYON
CALCULATED-DESIGNED BY: REBECCA IGNACIO
CHECKED BY: HAMED BAHA
REVISED BY
DATE REVISED

LAST REVISION 02-10-12
DATE PLOTTED => 16-FEB-2012
TIME PLOTTED => 11:54

Dist	COUNTY	ROUTE	POST MILES TOTAL PROJECT	SHEET No.	TOTAL SHEETS
11	SD	76	L0.0/M2.9	8	44

Hamed S. Baha 02-08-12
REGISTERED CIVIL ENGINEER DATE

02-13-12
PLANS APPROVAL DATE

REGISTERED PROFESSIONAL ENGINEER
HAMED S. BAHA
No. 74499
Exp. 12-31-13
CIVIL
STATE OF CALIFORNIA

THE STATE OF CALIFORNIA OR ITS OFFICERS OR AGENTS SHALL NOT BE RESPONSIBLE FOR THE ACCURACY OR COMPLETENESS OF SCANNED COPIES OF THIS PLAN SHEET.

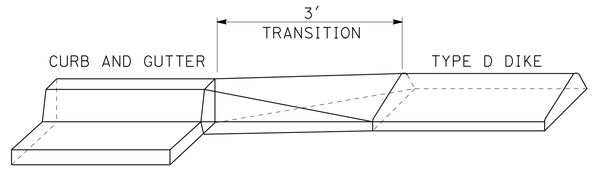

B-2 CURB TO TYPE "D" DIKE

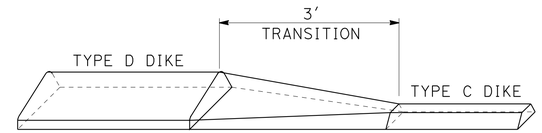

TYPE "D" TO TYPE "C" DIKE

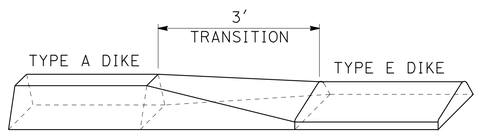

TYPE "A" TO TYPE "E" DIKE

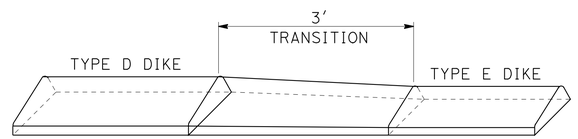

TYPE "D" TO TYPE "E" DIKE

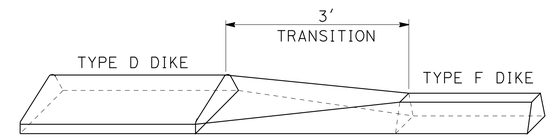

TYPE "D" TO TYPE "F" DIKE

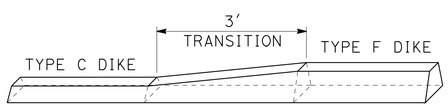

TYPE "C" TO TYPE "F" DIKE

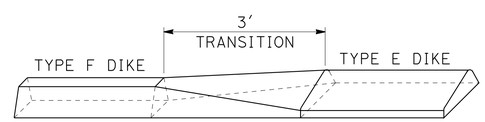

TYPE "F" TO TYPE "E" DIKE

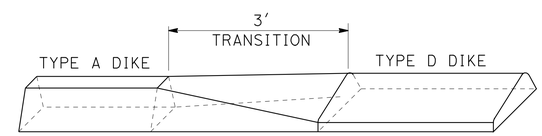

TYPE "A" TO TYPE "D" DIKE

DIKE TRANSITION DETAILS

CONSTRUCTION DETAILS

NO SCALE

C-6

STATE OF CALIFORNIA - DEPARTMENT OF TRANSPORTATION
Caltrans®
MAINTENANCE

FUNCTIONAL SUPERVISOR: ALBERTO GAYON
CALCULATED-DESIGNED BY: REBECCA IGNACIO
CHECKED BY: HAMED BAHA
REVISED BY
DATE REVISED

LAST REVISION 02-10-12
DATE PLOTTED => 16-FEB-2012
TIME PLOTTED => 11:54

Dist	COUNTY	ROUTE	POST MILES TOTAL PROJECT	SHEET No.	TOTAL SHEETS
11	SD	76	L0.0/M2.9	9	44

REGISTERED CIVIL ENGINEER 02-08-12 DATE

02-13-12
PLANS APPROVAL DATE

REGISTERED PROFESSIONAL ENGINEER
SHAHIN ADIBI
No. 54839
Exp. 06-30-12
CIVIL
STATE OF CALIFORNIA

THE STATE OF CALIFORNIA OR ITS OFFICERS OR AGENTS SHALL NOT BE RESPONSIBLE FOR THE ACCURACY OR COMPLETENESS OF SCANNED COPIES OF THIS PLAN SHEET.

NOTES:

1. EXACT LOCATION OF CONSTRUCTION AREA SIGNS WILL BE DETERMINED BY THE ENGINEER.
2. FEDERAL MANUAL ON UNIFORM TRAFFIC CONTROL DEVICES (MUTCD) SIGN CODES ARE SHOWN UNLESS DESIGNATED BY (CA), INDICATING CALIFORNIA MUTCD.
3. SEE TRAFFIC HANDLING PLANS FOR ADDITIONAL CONSTRUCTION AREA SIGNS.
4. EXISTING UTILITIES ARE NOT SHOWN ON THESE PLAN SHEETS. THE CONTRACTOR SHALL VERIFY LOCATIONS OF EXISTING UTILITIES AND ADJUST THE FIELD LOCATION OF SIGN POSTS IN CONSULTATION WITH THE ENGINEER.

LEGEND:

[X] = CONSTRUCTION AREA SIGNS

→ = DIRECTION OF TRAFFIC

CONSTRUCTION AREA SIGNS

SIGN No.	TYPE	PANEL SIZE (In)x(In)	No. OF POST AND SIZE (In)x(In)	No. OF SIGNS
1	C40 (CA)	108 X 42	2-4 X 6 (S)	2
2	C14 (CA)	48 X 24	1-4 X 4 (S)	11
3	C23 (CA)	48 X 48	1-4 X 6 (S)	13
4	SC6-4 (CA)	48 X 60	PORTABLE	5
			TOTAL	31

(S) DENOTES STATIONARY MOUNTED SIGN

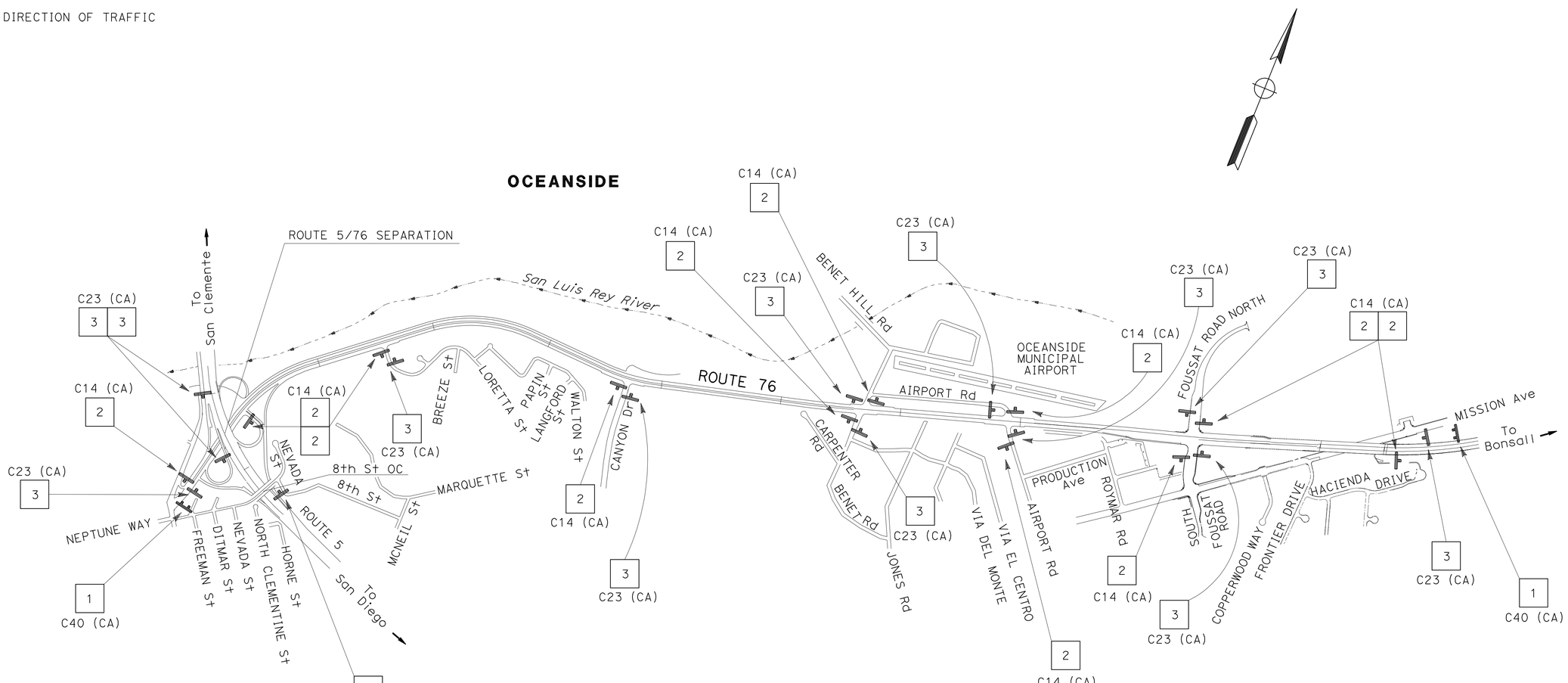

APPROVED FOR CONSTRUCTION AREA SIGN WORK ONLY

CONSTRUCTION AREA SIGNS

NO SCALE

CS-1

STATE OF CALIFORNIA - DEPARTMENT OF TRANSPORTATION
Caltrans® **TRAFFIC DESIGN**

FUNCTIONAL SUPERVISOR: CAMILLE ABOU-FADEL
CALCULATED-DESIGNED BY: SHAHIN ADIBI
CHECKED BY: RYAN CHAO
REVISED BY / DATE REVISED

LAST REVISION 02-10-12
DATE PLOTTED => 16-FEB-2012
TIME PLOTTED => 11:54

Dist	COUNTY	ROUTE	POST MILES TOTAL PROJECT	SHEET No.	TOTAL SHEETS
11	SD	76	L0.0/M2.9	10	44

02-08-12
REGISTERED CIVIL ENGINEER DATE

02-13-12
PLANS APPROVAL DATE

REGISTERED PROFESSIONAL ENGINEER
SHAHIN ADIBI
No. 54839
Exp. 06-30-12
CIVIL
STATE OF CALIFORNIA

THE STATE OF CALIFORNIA OR ITS OFFICERS OR AGENTS SHALL NOT BE RESPONSIBLE FOR THE ACCURACY OR COMPLETENESS OF SCANNED COPIES OF THIS PLAN SHEET.

TYPICAL- PLACEMENT OF SC6-4 (CA) CONSTRUCTION AREA SIGNS

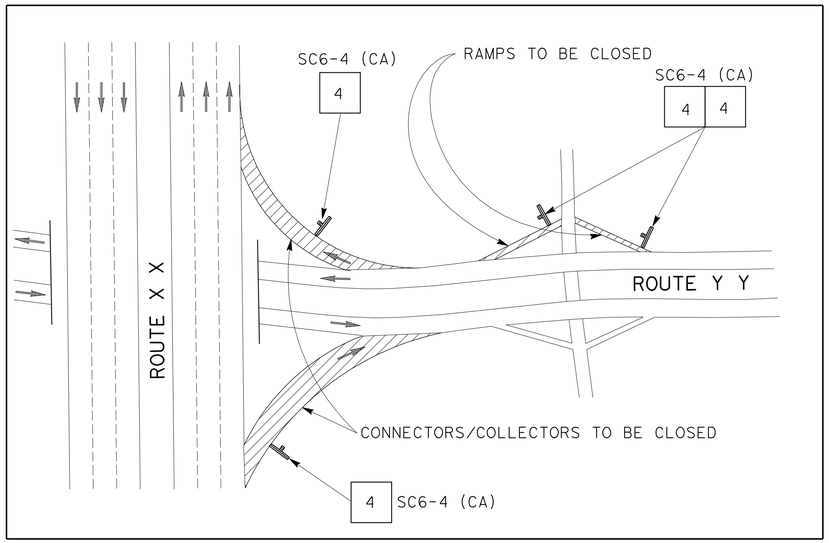

TYPICAL PLACEMENT OF TRAFFIC PLASTIC DRUM

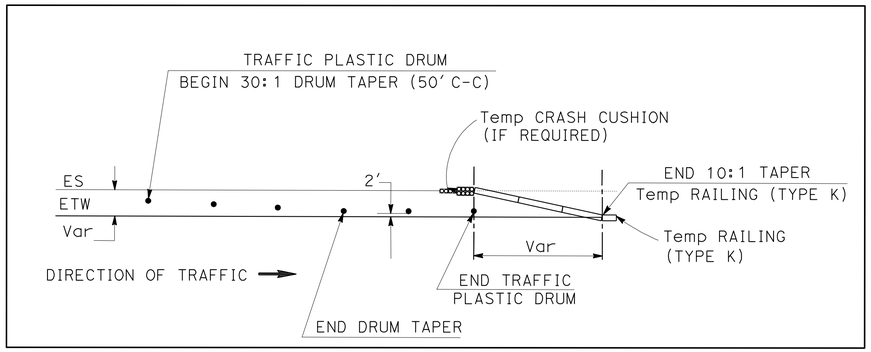

APPROVED FOR CONSTRUCTION AREA SIGN WORK ONLY

CONSTRUCTION AREA SIGNS

NO SCALE

CS-2

STATE OF CALIFORNIA - DEPARTMENT OF TRANSPORTATION
Caltrans
TRAFFIC DESIGN

FUNCTIONAL SUPERVISOR: CAMILLE ABOU-FADEL
CALCULATED-DESIGNED BY: SHAHIN ADIBI
CHECKED BY: RYAN CHAO
REVISED BY
DATE REVISED

LAST REVISION 02-14-12
DATE PLOTTED => 16-FEB-2012
TIME PLOTTED => 11:54

Dist	COUNTY	ROUTE	POST MILES TOTAL PROJECT	SHEET No.	TOTAL SHEETS
11	SD	76	L0.0/M2.9	11	44

REGISTERED CIVIL ENGINEER 02-08-12 DATE

02-13-12
PLANS APPROVAL DATE

REGISTERED PROFESSIONAL ENGINEER SHAHIN ADIBI No. 54839 Exp. 06-30-12 CIVIL STATE OF CALIFORNIA

THE STATE OF CALIFORNIA OR ITS OFFICERS OR AGENTS SHALL NOT BE RESPONSIBLE FOR THE ACCURACY OR COMPLETENESS OF SCANNED COPIES OF THIS PLAN SHEET.

NOTES:

1. EXACT LOCATION OF CONSTRUCTION AREA SIGNS WILL BE DETERMINED BY THE ENGINEER.
2. FEDERAL MANUAL ON UNIFORM TRAFFIC CONTROL DEVICES (MUTCD) SIGN CODES ARE SHOWN UNLESS DESIGNATED BY (CA), INDICATING CALIFORNIA MUTCD.
3. ROTATE ARROW ON SC9 (CA) PANEL TO REFLECT DIRECTION OF DETOUR.
4. SEE CONSTRUCTION AREA SIGN PLAN FOR ADDITIONAL CONSTRUCTION AREA SIGNS.
5. EXISTING UTILITIES ARE NOT SHOWN ON THESE PLAN SHEETS. THE CONTRACTOR SHALL VERIFY LOCATIONS OF EXISTING UTILITIES AND ADJUST THE FIELD LOCATION OF THE SIGN POSTS IN CONSULTATION WITH THE ENGINEER.

LEGEND:

XX = CONSTRUCTION AREA SIGNS

SPCL = SPECIAL CONSTRUCTION AREA SIGN

Caps = CAPITAL LETTERING

→ = DETOUR DIRECTION OF TRAVEL

SIGN #7

SPCL-1 8" Caps

5 SOUTH
USE
DETOUR

72" 72"

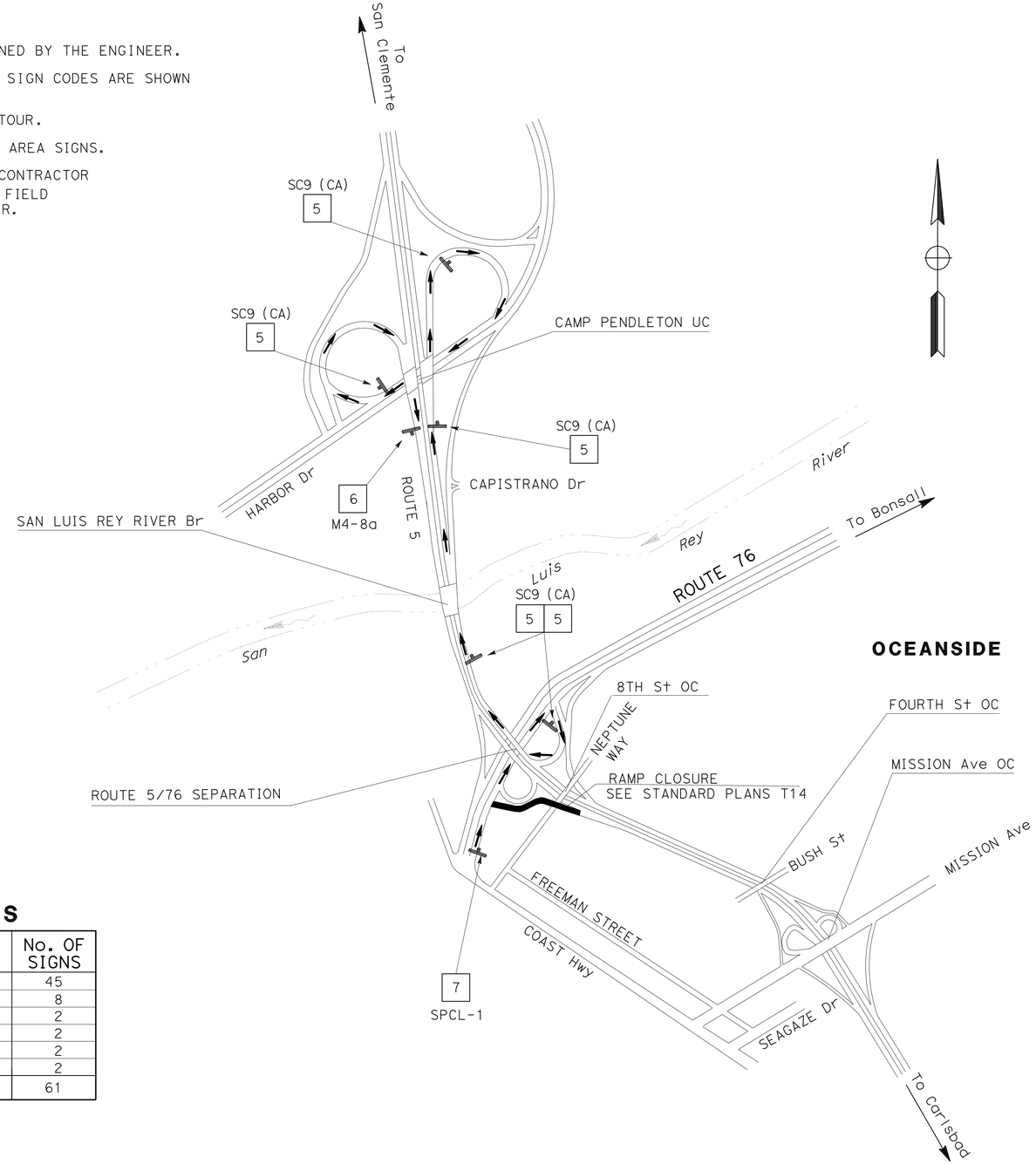

CONSTRUCTION AREA SIGNS

SIGN No.	TYPE	PANEL SIZE (In)x(In)	No. OF POSTS AND SIZE	No. OF SIGNS
5	SC9 (CA)	36 X 36	PORTABLE	45
6	M4-8a	24 X 18	PORTABLE	8
7	SPCL-1	72 X 72	PORTABLE	2
8	SPCL-2	72 X 72	PORTABLE	2
9	SPCL-3	72 X 72	PORTABLE	2
10	SPCL-4	72 X 72	PORTABLE	2
			TOTAL	61

EB 76 CONNECTOR TO SB 5

TRAFFIC HANDLING PLAN

TH-1

NO SCALE

APPROVED FOR TRAFFIC HANDLING WORK ONLY

REVISED BY | DATE REVISED
RYAN CHAO | SHAHIN ADIBI
CALCULATED-DESIGNED BY | CHECKED BY
FUNCTIONAL SUPERVISOR: CAMILLE ABOU-FADEL
STATE OF CALIFORNIA - DEPARTMENT OF TRANSPORTATION
Caltrans
TRAFFIC DESIGN

LAST REVISION 02-14-12
DATE PLOTTED => 16-FEB-2012
TIME PLOTTED => 11:54

Dist	COUNTY	ROUTE	POST MILES TOTAL PROJECT	SHEET No.	TOTAL SHEETS
11	SD	76	L0.0/M2.9	12	44

REGISTERED CIVIL ENGINEER 02-08-12 DATE

02-13-12
PLANS APPROVAL DATE

REGISTERED PROFESSIONAL ENGINEER SHAHIN ADIBI No. 54839 Exp. 06-30-12 CIVIL STATE OF CALIFORNIA

THE STATE OF CALIFORNIA OR ITS OFFICERS OR AGENTS SHALL NOT BE RESPONSIBLE FOR THE ACCURACY OR COMPLETENESS OF SCANNED COPIES OF THIS PLAN SHEET.

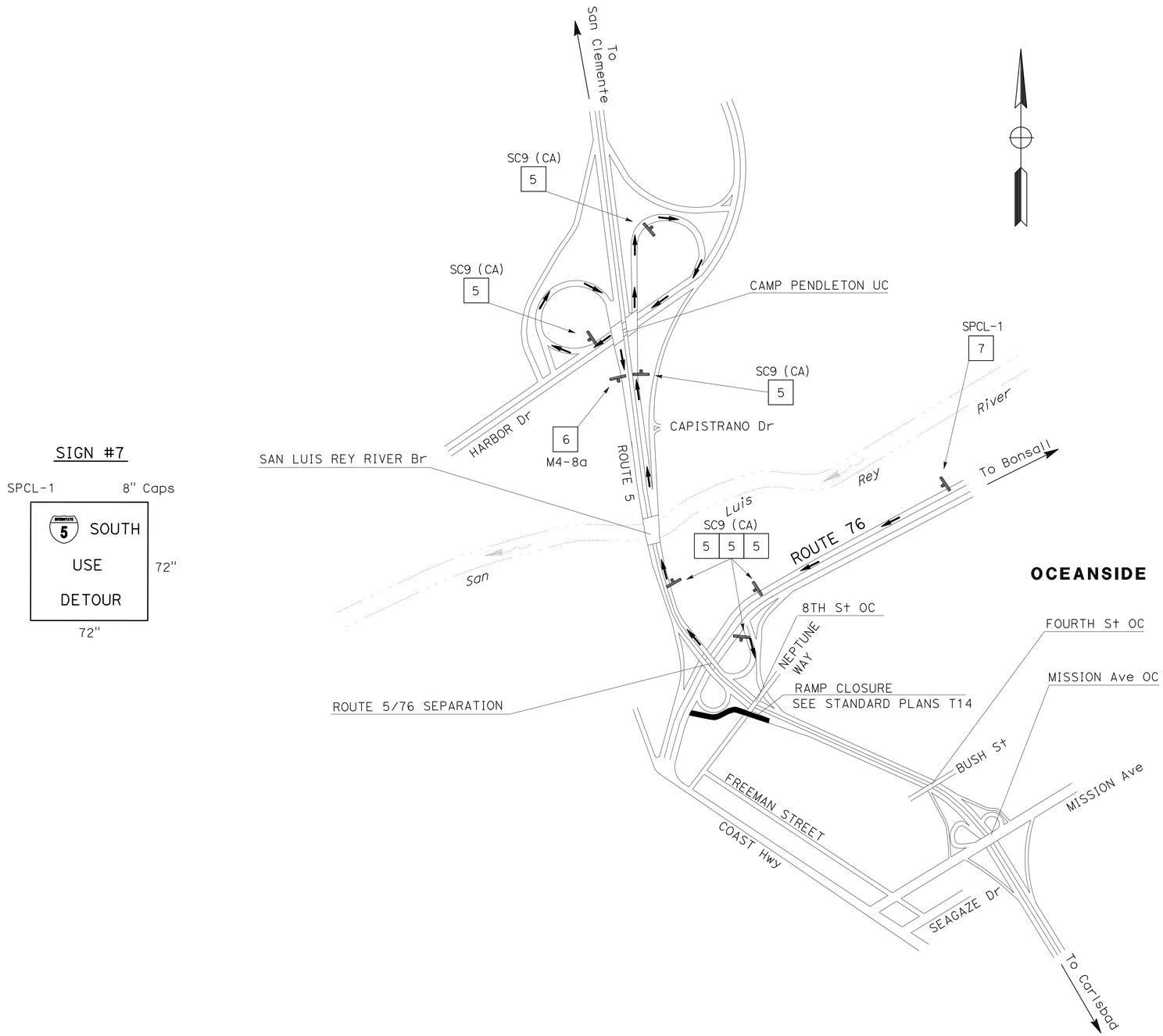

SIGN #7

SPCL-1 8" Caps

5 SOUTH
USE
DETOUR

72" 72"

WB 76 CONNECTOR TO SB 5

TRAFFIC HANDLING PLAN

APPROVED FOR TRAFFIC HANDLING WORK ONLY

NO SCALE

TH-2

STATE OF CALIFORNIA - DEPARTMENT OF TRANSPORTATION
Caltrans
TRAFFIC DESIGN

FUNCTIONAL SUPERVISOR: CAMILLE ABOU-FADEL
CALCULATED-DESIGNED BY: SHAHIN ADIBI
CHECKED BY: RYAN CHAO
REVISED BY
DATE REVISED

LAST REVISION 02-14-12
DATE PLOTTED => 16-FEB-2012
TIME PLOTTED => 11:54

Dist	COUNTY	ROUTE	POST MILES TOTAL PROJECT	SHEET No.	TOTAL SHEETS
11	SD	76	L0.0/M2.9	13	44

REGISTERED CIVIL ENGINEER 02-08-12 DATE

02-13-12
PLANS APPROVAL DATE

REGISTERED PROFESSIONAL ENGINEER
SHAHIN ADIBI
No. 54839
Exp. 06-30-12
CIVIL
STATE OF CALIFORNIA

THE STATE OF CALIFORNIA OR ITS OFFICERS OR AGENTS SHALL NOT BE RESPONSIBLE FOR THE ACCURACY OR COMPLETENESS OF SCANNED COPIES OF THIS PLAN SHEET.

SIGN #8

SPCL-2 8" Caps

76 EAST
USE
DETOUR

72"

72"

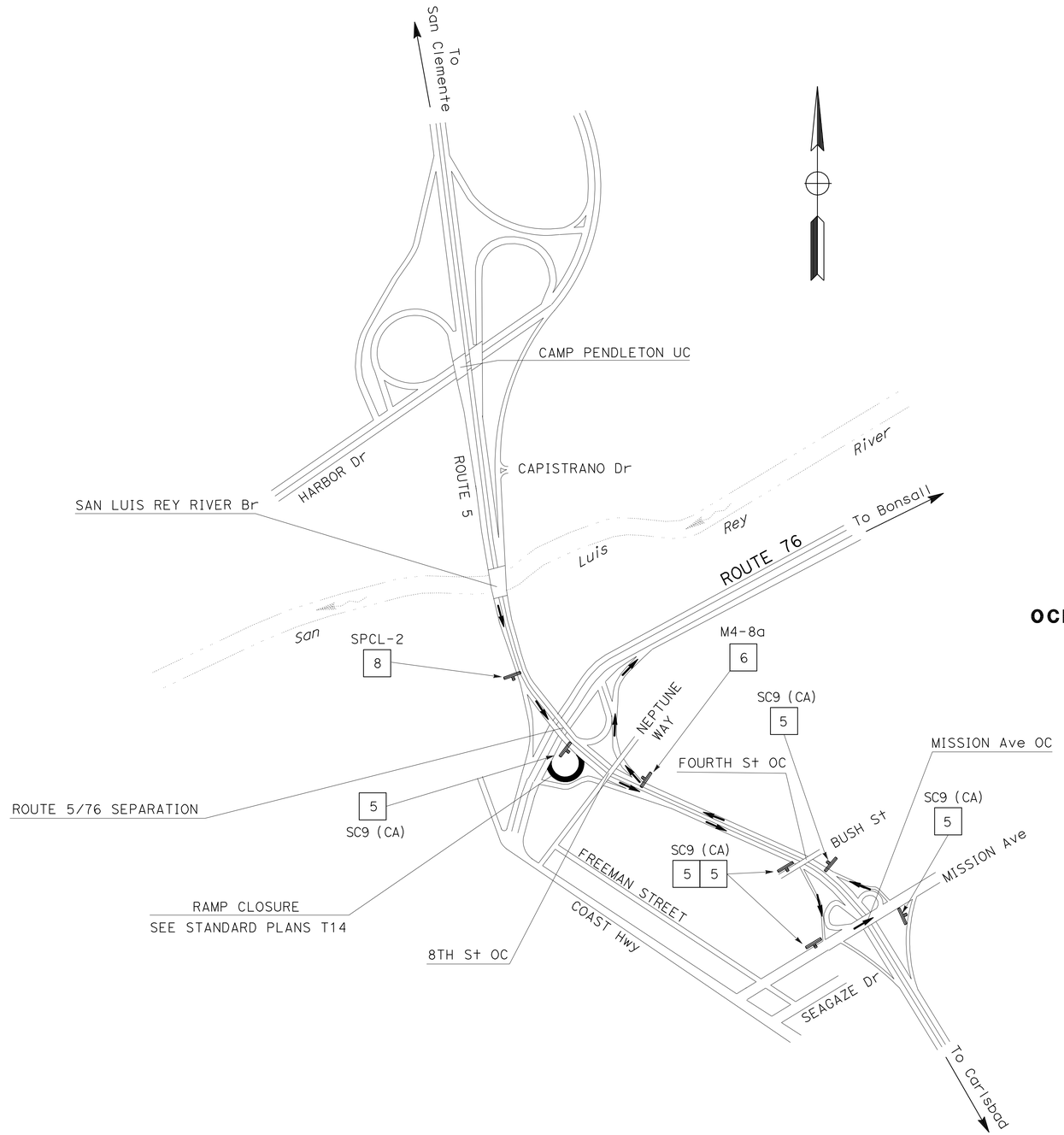

OCEANSIDE

SB 5 CONNECTOR TO EB 76

TRAFFIC HANDLING PLAN

NO SCALE

TH-3

APPROVED FOR TRAFFIC HANDLING WORK ONLY

STATE OF CALIFORNIA - DEPARTMENT OF TRANSPORTATION
Caltrans
TRAFFIC DESIGN

FUNCTIONAL SUPERVISOR: CAMILLE ABOU-FADEL
CALCULATED-DESIGNED BY: RYAN CHAO
CHECKED BY: SHAHIN ADIBI
REVISED BY
DATE REVISED

LAST REVISION 02-14-12
DATE PLOTTED => 16-FEB-2012
TIME PLOTTED => 11:54

Dist	COUNTY	ROUTE	POST MILES TOTAL PROJECT	SHEET No.	TOTAL SHEETS
11	SD	76	L0.0/M2.9	14	44

REGISTERED CIVIL ENGINEER 02-08-12 DATE

02-13-12
PLANS APPROVAL DATE

REGISTERED PROFESSIONAL ENGINEER SHAHIN ADIBI No. 54839 Exp. 06-30-12 CIVIL STATE OF CALIFORNIA

THE STATE OF CALIFORNIA OR ITS OFFICERS OR AGENTS SHALL NOT BE RESPONSIBLE FOR THE ACCURACY OR COMPLETENESS OF SCANNED COPIES OF THIS PLAN SHEET.

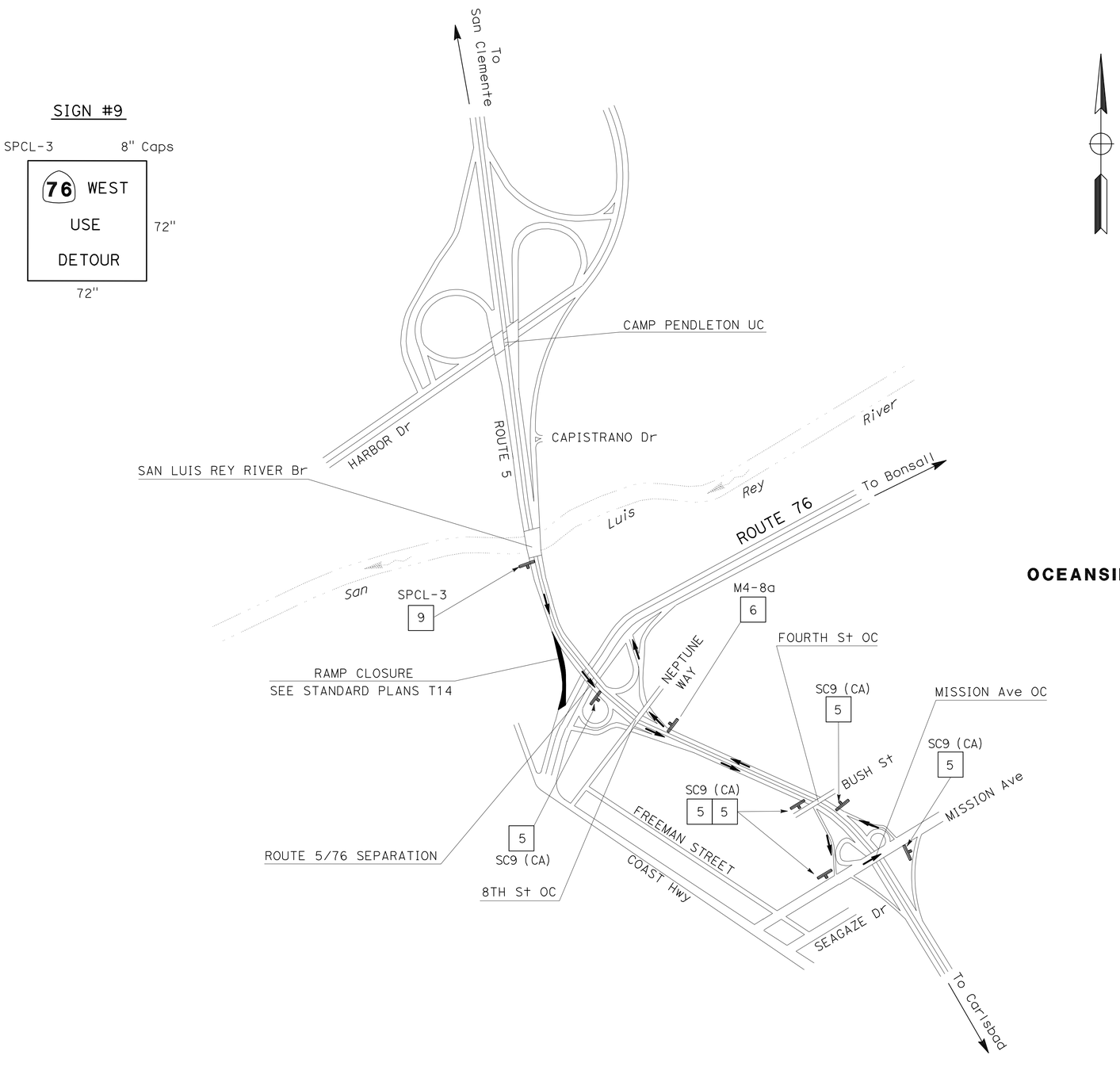

SB 5 CONNECTOR TO WB 76/COAST HWY

TRAFFIC HANDLING PLAN

APPROVED FOR TRAFFIC HANDLING WORK ONLY

NO SCALE

TH-4

STATE OF CALIFORNIA - DEPARTMENT OF TRANSPORTATION
Caltrans
TRAFFIC DESIGN

FUNCTIONAL SUPERVISOR: CAMILLE ABOU-FADEL
CALCULATED-DESIGNED BY: RYAN CHAO
CHECKED BY: SHAHIN ADIBI
REVISED BY
DATE REVISED

LAST REVISION 02-14-12
DATE PLOTTED => 16-FEB-2012
TIME PLOTTED => 11:54

Dist	COUNTY	ROUTE	POST MILES TOTAL PROJECT	SHEET No.	TOTAL SHEETS
11	SD	76	L0.0/M2.9	15	44

REGISTERED CIVIL ENGINEER DATE 02-08-12

02-13-12
PLANS APPROVAL DATE

REGISTERED PROFESSIONAL ENGINEER
SHAHIN ADIBI
No. 54839
Exp. 06-30-12
CIVIL
STATE OF CALIFORNIA

THE STATE OF CALIFORNIA OR ITS OFFICERS OR AGENTS SHALL NOT BE RESPONSIBLE FOR THE ACCURACY OR COMPLETENESS OF SCANNED COPIES OF THIS PLAN SHEET.

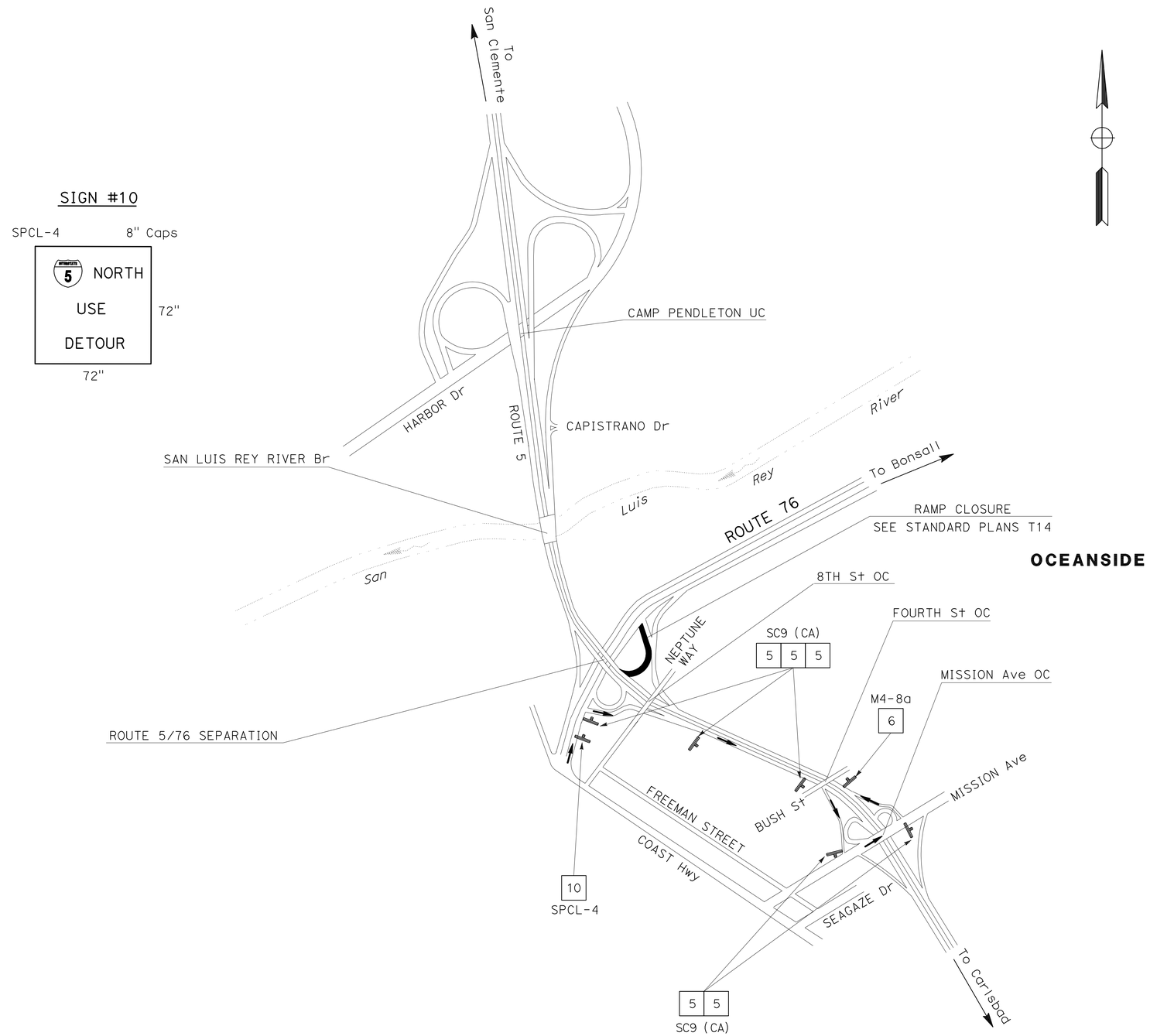

EB 76 CONNECTOR TO NB 5

TRAFFIC HANDLING PLAN

NO SCALE

TH-5

APPROVED FOR TRAFFIC HANDLING WORK ONLY

STATE OF CALIFORNIA - DEPARTMENT OF TRANSPORTATION
Caltrans
TRAFFIC DESIGN

FUNCTIONAL SUPERVISOR: CAMILLE ABOU-FADEL
CALCULATED-DESIGNED BY: RYAN CHAO
CHECKED BY: SHAHIN ADIBI
REVISED BY
DATE REVISED

LAST REVISION 02-14-12
DATE PLOTTED => 16-FEB-2012
TIME PLOTTED => 11:54

Dist	COUNTY	ROUTE	POST MILES TOTAL PROJECT	SHEET No.	TOTAL SHEETS
11	SD	76	L0.0/M2.9	16	44

REGISTERED CIVIL ENGINEER 02-08-12 DATE

02-13-12
PLANS APPROVAL DATE

REGISTERED PROFESSIONAL ENGINEER SHAHIN ADIBI No. 54839 Exp. 06-30-12 CIVIL STATE OF CALIFORNIA

THE STATE OF CALIFORNIA OR ITS OFFICERS OR AGENTS SHALL NOT BE RESPONSIBLE FOR THE ACCURACY OR COMPLETENESS OF SCANNED COPIES OF THIS PLAN SHEET.

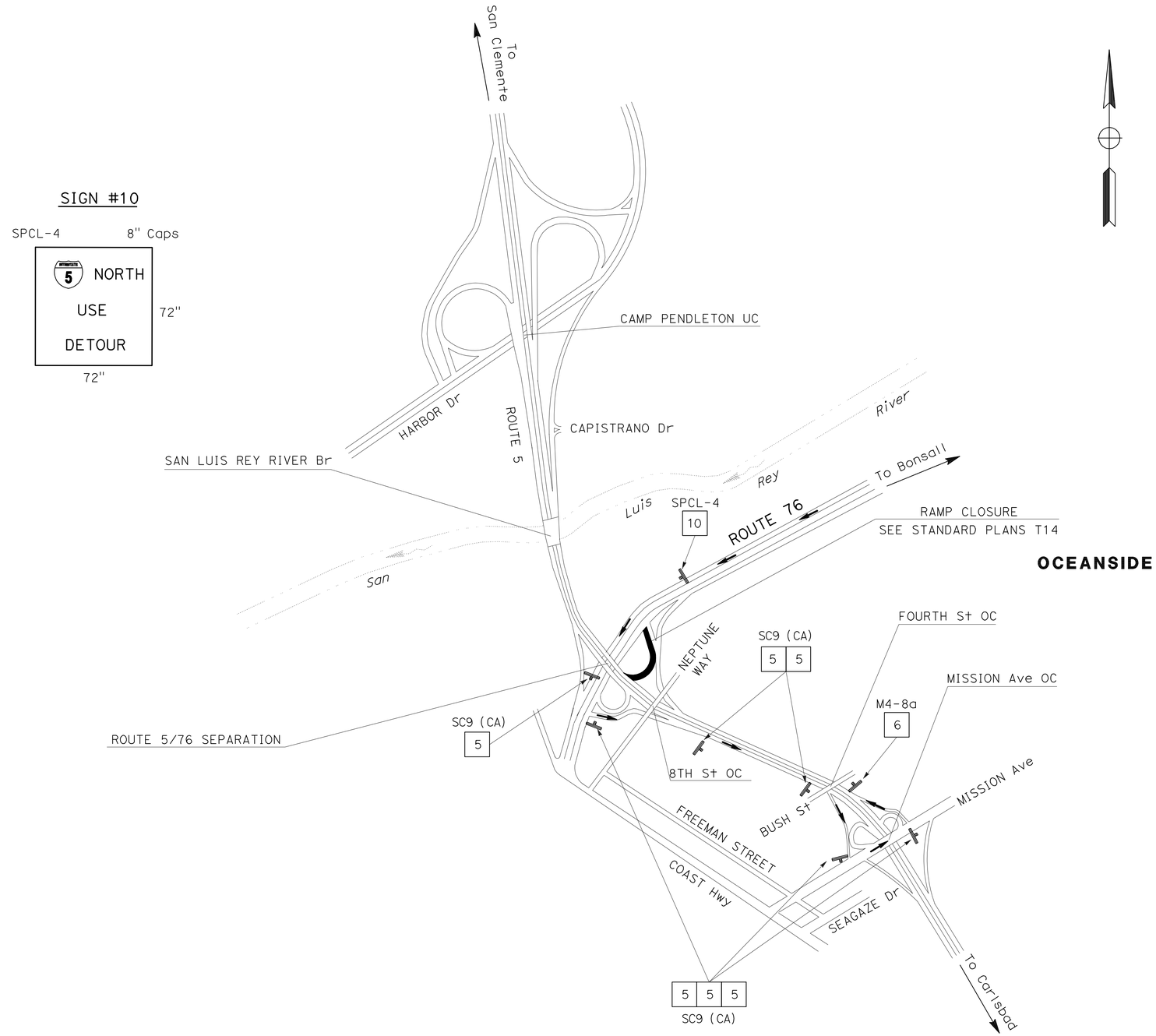

WB 76 CONNECTOR TO NB 5

TRAFFIC HANDLING PLAN

APPROVED FOR TRAFFIC HANDLING WORK ONLY

NO SCALE

TH-6

STATE OF CALIFORNIA - DEPARTMENT OF TRANSPORTATION
Caltrans
TRAFFIC DESIGN

FUNCTIONAL SUPERVISOR: CAMILLE ABOU-FADEL
CALCULATED-DESIGNED BY: RYAN CHAO
CHECKED BY: SHAHIN ADIBI
REVISED BY
DATE REVISED

LAST REVISION 02-14-12
DATE PLOTTED => 16-FEB-2012
TIME PLOTTED => 11:55

Dist	COUNTY	ROUTE	POST MILES TOTAL PROJECT	SHEET No.	TOTAL SHEETS
11	SD	76	L0.0/M2.9	17	44

REGISTERED CIVIL ENGINEER 02-08-12 DATE

02-13-12
PLANS APPROVAL DATE

REGISTERED PROFESSIONAL ENGINEER SHAHIN ADIBI No. 54839 Exp. 06-30-12 CIVIL STATE OF CALIFORNIA

THE STATE OF CALIFORNIA OR ITS OFFICERS OR AGENTS SHALL NOT BE RESPONSIBLE FOR THE ACCURACY OR COMPLETENESS OF SCANNED COPIES OF THIS PLAN SHEET.

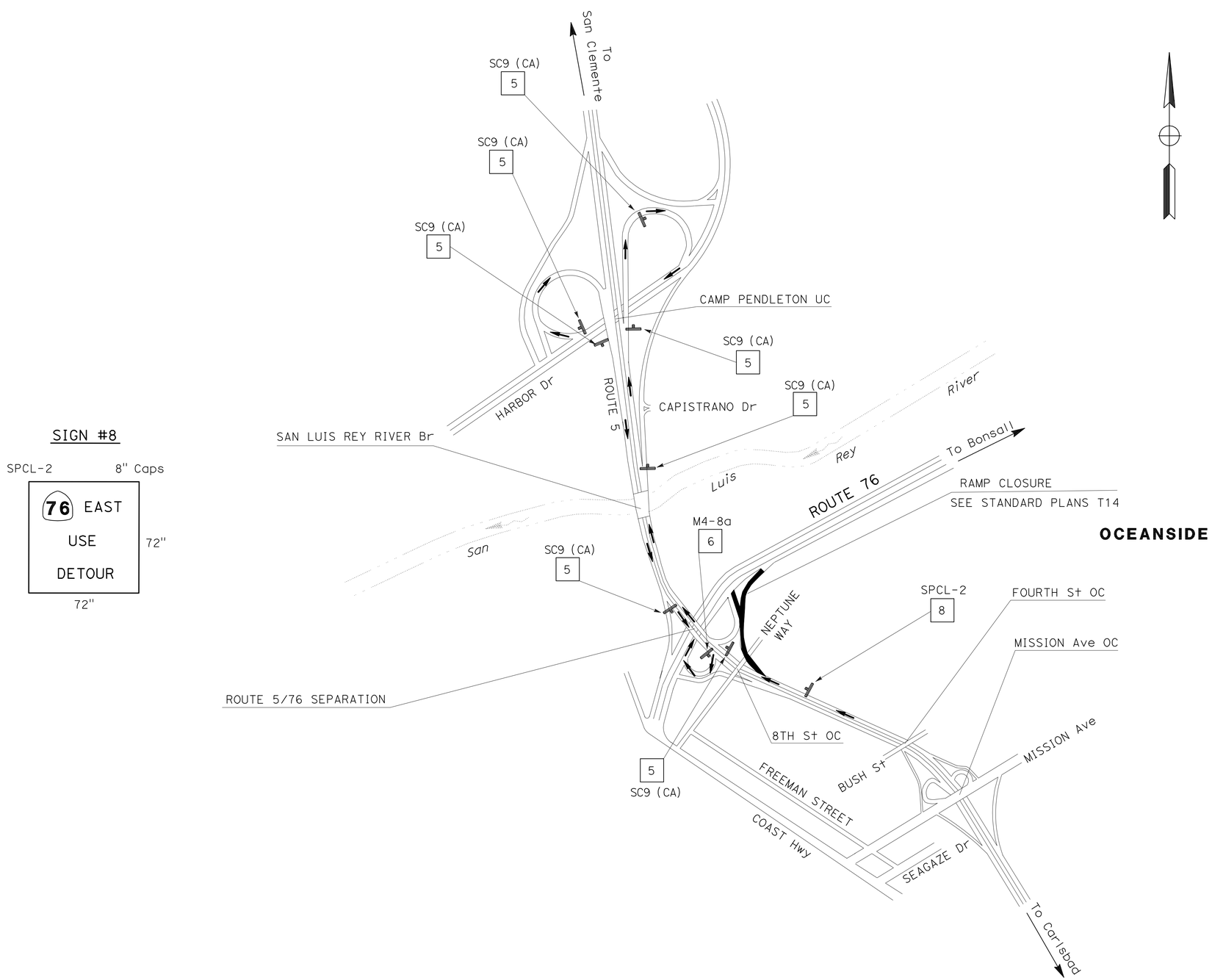

NB 5 CONNECTOR TO EB 76

TRAFFIC HANDLING PLAN

APPROVED FOR TRAFFIC HANDLING WORK ONLY

NO SCALE

TH-7

STATE OF CALIFORNIA - DEPARTMENT OF TRANSPORTATION
Caltrans®
TRAFFIC DESIGN

FUNCTIONAL SUPERVISOR: CAMILLE ABOU-FADEL
CALCULATED-DESIGNED BY: RYAN CHAO
CHECKED BY: SHAHIN ADIBI
REVISED BY
DATE REVISED

LAST REVISION 02-14-12
DATE PLOTTED => 16-FEB-2012
TIME PLOTTED => 11:55

Dist	COUNTY	ROUTE	POST MILES TOTAL PROJECT	SHEET No.	TOTAL SHEETS
11	SD	76	L0.0/M2.9	18	44

REGISTERED CIVIL ENGINEER 02-08-12 DATE

02-13-12
PLANS APPROVAL DATE

REGISTERED PROFESSIONAL ENGINEER
SHAHIN ADIBI
No. 54839
Exp. 06-30-12
CIVIL
STATE OF CALIFORNIA

THE STATE OF CALIFORNIA OR ITS OFFICERS OR AGENTS SHALL NOT BE RESPONSIBLE FOR THE ACCURACY OR COMPLETENESS OF SCANNED COPIES OF THIS PLAN SHEET.

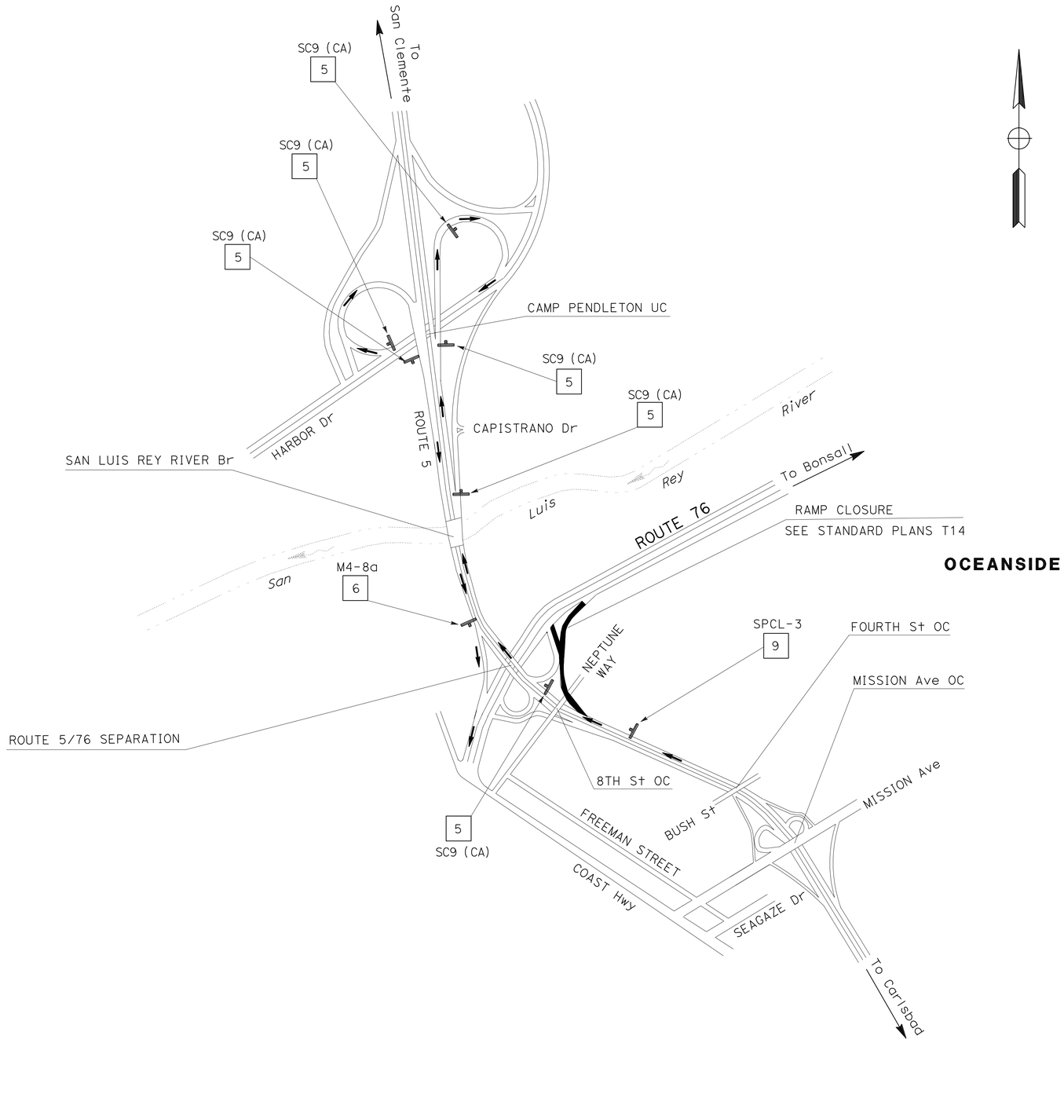

SIGN #9

SPCL-3 8" Caps

76 WEST
USE
DETOUR

72" 72"

NB 5 CONNECTOR TO WB 76

TRAFFIC HANDLING PLAN

NO SCALE

TH-8

APPROVED FOR TRAFFIC HANDLING WORK ONLY

STATE OF CALIFORNIA - DEPARTMENT OF TRANSPORTATION
Caltrans® **TRAFFIC DESIGN**

FUNCTIONAL SUPERVISOR: CAMILLE ABOU-FADEL
CALCULATED-DESIGNED BY: RYAN CHAO
CHECKED BY: SHAHIN ADIBI
REVISED BY
DATE REVISED

LAST REVISION 02-14-12
DATE PLOTTED => 16-FEB-2012
TIME PLOTTED => 11:55

Dist	COUNTY	ROUTE	POST MILES TOTAL PROJECT	SHEET No.	TOTAL SHEETS
11	SD	76	L0.0/M2.9	19	44

REGISTERED CIVIL ENGINEER 02-08-12 DATE

02-13-12
PLANS APPROVAL DATE

REGISTERED PROFESSIONAL ENGINEER
SHAHIN ADIBI
No. 54839
Exp. 06-30-12
CIVIL
STATE OF CALIFORNIA

THE STATE OF CALIFORNIA OR ITS OFFICERS OR AGENTS SHALL NOT BE RESPONSIBLE FOR THE ACCURACY OR COMPLETENESS OF SCANNED COPIES OF THIS PLAN SHEET.

DETAIL 29 (Mod)

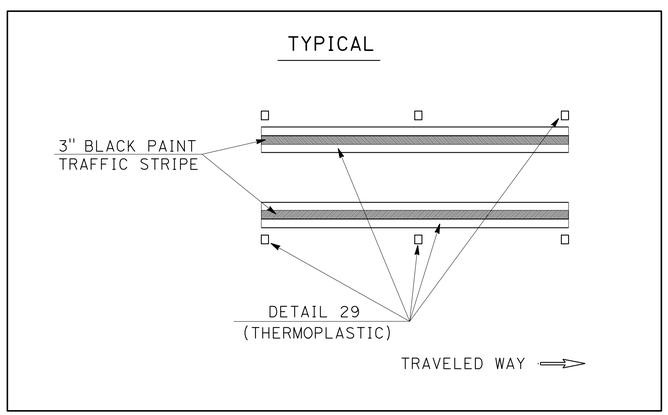

DETAIL 11/13

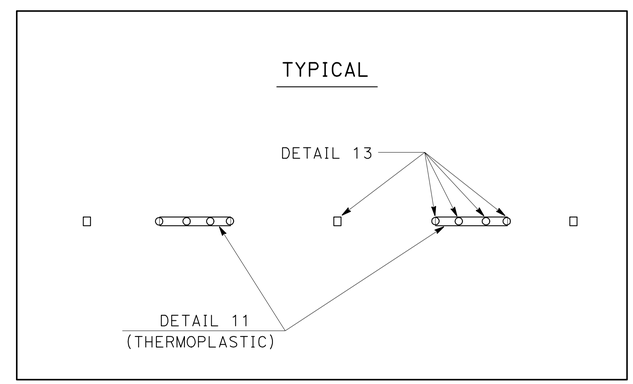

PAVEMENT DELINEATION DETAILS
PDD-1

STATE OF CALIFORNIA - DEPARTMENT OF TRANSPORTATION
Caltrans®
TRAFFIC DESIGN

FUNCTIONAL SUPERVISOR: CAMILLE ABOU-FADEL
CALCULATED-DESIGNED BY: REBECCA IGNACIO
CHECKED BY: RYAN CHAO
REVISED BY
DATE REVISED

LAST REVISION 02-13-12
DATE PLOTTED => 16-FEB-2012
TIME PLOTTED => 11:55

Dist	COUNTY	ROUTE	POST MILES TOTAL PROJECT	SHEET No.	TOTAL SHEETS
11	SD	76	L0.0/M2.9	20	44

REGISTERED CIVIL ENGINEER 02-08-12 DATE

02-13-12
PLANS APPROVAL DATE

REGISTERED PROFESSIONAL ENGINEER SHAHIN ADIBI No. 54839 Exp. 06-30-12 CIVIL STATE OF CALIFORNIA

THE STATE OF CALIFORNIA OR ITS OFFICERS OR AGENTS SHALL NOT BE RESPONSIBLE FOR THE ACCURACY OR COMPLETENESS OF SCANNED COPIES OF THIS PLAN SHEET.

REMOVE THERMOPLASTIC TRAFFIC STRIPE

ROUTE	POSTMILE		DETAIL	LF
	BEGIN	END		
76	L0.00	R1.03	36, 37, 38, 38B	4,060
	R1.03	R1.65	38B	1,840
	R1.65	R2.05	38B	2,280
	R2.05	R2.33	38B	3,372
	R2.33	M2.65	38B	4,992
	M2.65	M2.85	38B	5,300
			TOTAL	21,844

REMOVE THERMOPLASTIC PAVEMENT MARKING

ROUTE	POSTMILE		SQFT
	BEGIN	END	
76	L0.00	R1.03	1,485
	R1.03	R1.65	842
	R1.65	R2.05	1,243
	R2.05	R2.33	1,562
	R2.33	M2.65	2,333
	M2.65	M2.85	1,345
		TOTAL	8,810

IRRIGATION CROSSOVER LOCATIONS

ROUTE	DIRECTION	POSTMILES	NON-REFLECTIVE MARKERS (TYPE A) (EA)
76	EB	R0.05; R0.44; R0.61; R0.78; R1.05; R1.22; R1.43; R1.57; R1.72; R1.94; R2.08; R2.21	12
	WB	R0.05; R0.44; R0.61; R0.78; R1.05; R1.22; R1.43; R1.57; R1.72; R1.94; R2.08; R2.21	12
		TOTAL	24 *

(*) = SEE PDQ-2, FOR ADDITIONAL QUANTITIES

REMOVE PAINTED TRAFFIC STRIPE

ROUTE	POSTMILE		DETAIL	4" WHITE BROKEN (LF)	4" WHITE SOLID (LF)
	BEGIN	END			
76	L0.00	R1.03	11/13	2,719	
			27B		11,417
	R1.03	R1.65	11/13	1,637	
			27B		6,547
	R1.65	R2.05	11/13	1,056	
			27B		4,224
	R2.05	R2.33	11/13	739	
			27B		2,957
	R2.33	M2.65	11/13	888	
			27B		3,379
	M2.65	M2.85	11/13	528	
			27B		2,112
			SUB-TOTAL	7,567	30,636
			TOTAL	38,203	

THERMOPLASTIC PAVEMENT MARKINGS

LOCATION				TYPE													REMARKS
ROUTE	DESCRIPTION	POSTMILE		ARROW I - 10' SQFT	ARROW I - 24' SQFT	ARROW III-L SQFT	ARROW III-R SQFT	ARROW IV-L - 8' SQFT	ARROW IV-R - 8' SQFT	ARROW IV-R-12' SQFT	ARROW V SQFT	ARROW VI SQFT	CHEVRON SQFT	12" LIMIT LINE SQFT	SIGNAL SQFT	AHEAD SQFT	
		BEGIN	END														
76	SB ROUTE 5 ON-RAMP FROM ROUTE 76 TO LORETTA STREET	L0.00	R1.03		62	588	168			20	132			200	160	155	
	LORETTA STREET TO CANYON DRIVE	R1.03	R1.65			84	126				264			116	128	124	
	CANYON DRIVE TO BENET ROAD	R1.65	R2.05	14		336	126	45	30		264			176	128	124	
	BENET ROAD TO AIRPORT ROAD	R2.05	R2.33	14		252	252	30	30		264			468	128	124	
	AIRPORT ROAD TO FOUSSAT ROAD	R2.33	M2.65			378	252	45	30		264	126	312	674	128	124	
	FOUSSAT ROAD TO MISSION AVENUE UC	M2.65	M2.85			252	126	30	15		132		260	404	64	62	
			SUB-TOTALS	28	62	1,890	1,050	150	105	20	1,320	126	572	2,038	736	713	
			TOTALS	8,810													

PAVEMENT DELINEATION QUANTITIES
PDQ-1

STATE OF CALIFORNIA - DEPARTMENT OF TRANSPORTATION
Caltrans®
TRAFFIC DESIGN

FUNCTIONAL SUPERVISOR: CAMILLE ABOU-FADEL
CALCULATED-DESIGNED BY: REBECCA IGNACIO
CHECKED BY: RYAN CHAO
REVISED BY
DATE REVISED

LAST REVISION 02-14-12
DATE PLOTTED => 16-FEB-2012
TIME PLOTTED => 11:55

Dist	COUNTY	ROUTE	POST MILES TOTAL PROJECT	SHEET No.	TOTAL SHEETS
11	SD	76	L0.0/M2.9	21	44

REGISTERED CIVIL ENGINEER 02-08-12 DATE

02-13-12
PLANS APPROVAL DATE

REGISTERED PROFESSIONAL ENGINEER SHAHIN ADIBI No. 54839 Exp. 06-30-12 CIVIL STATE OF CALIFORNIA

THE STATE OF CALIFORNIA OR ITS OFFICERS OR AGENTS SHALL NOT BE RESPONSIBLE FOR THE ACCURACY OR COMPLETENESS OF SCANNED COPIES OF THIS PLAN SHEET.

REMOVE PAVEMENT MARKER (EA) (N)

ROUTE	POSTMILE		TYPE					
	BEGIN	END	A	C	D	G	H	REMARKS
76	L0.00	R1.03	908	8	142	484	61	
	R1.03	R1.65	548			217	138	
	R1.65	R2.05	354			187	90	
	R2.05	R2.33	248			207	64	
	R2.33	M2.65	298			286	72	
	M2.65	M2.85	178			269	46	

(N) NOT A SEPARATE PAY ITEM, FOR INFORMATION ONLY

REMOVE YELLOW PAINTED TRAFFIC STRIPE (HAZARDOUS WASTE)

ROUTE	POSTMILE		DETAIL	LF	REMARKS
	BEGIN	END			
76	L0.00	R1.03	25, 29	6,180	
	R1.03	R1.65	25	6,547	
	R1.65	R2.05		4,224	
	R2.05	R2.33		2,957	
	R2.33	M2.65		3,379	
	M2.65	M2.85		2,112	
			TOTAL	25,399	

PAVEMENT DELINEATION QUANTITIES

LOCATION				DETAIL No.	PAVEMENT MARKER SUMMARY					TRAFFIC STRIPE SUMMARY						REMARKS
					NON-REFLECTIVE	RETROREFLECTIVE				PAINT (LF)	THERMOPLASTIC (LF)					
ROUTE	DESCRIPTION	POSTMILE			(EA)	(EA)										
		BEGIN	END		TYPE A	TYPE C	TYPE D	TYPE G	TYPE H	3" BLACK SOLID	4" YELLOW SOLID	4" WHITE SOLID	4" WHITE BROKEN 36-12	8" WHITE BROKEN 12-3	8" WHITE SOLID	
76	SB ROUTE 5 ON-RAMP FROM ROUTE 76 TO LORETTA STREET	L0.00	R1.03	11/13	908			229					10,877			
				25					61		2,820					
				27B	-			-	-			10,877				
				29 (Mod)			142			3,360	6,720					L=1680
				36				30							680	L=340
				37		8		124						1,950		
				38				14							280	
				38B				87							1,020	
	LORETTA STREET TO CANYON DRIVE	R1.03	R1.65	11/13	548			138					6,547			
				25					138		6,547					
				27B	-			-	-			6,547				
				38B				79							920	
	CANYON DRIVE TO BENET ROAD	R1.65	R2.05	11/13	354			90					4,224			
				25					90		4,224					
				27B	-			-	-			4,224				
				38B				97							1,140	
	BENET ROAD TO AIRPORT ROAD	R2.05	R2.33	11/13	248			64					2,957			
				25					64		2,957					
				27B	-			-	-			2,957				
				38B				143							1,686	
	AIRPORT ROAD TO FOUSSAT ROAD	R2.33	M2.65	11/13	298			76					3,550			
				25					72		3,379					
				27B	-			-	-			3,379				
				38B				210							2,496	
	FOUSSAT ROAD TO MISSION AVENUE UC	M2.65	M2.85	11/13	178			46					2,112			
				25					46		2,112					
				27B	-			-	-			2,112				
				38B				223							2,650	
SUB-TOTALS					2,534	8	142	1,649	471	3,360	28,759	30,096	30,267	1950	10,872	
IRRIGATION CROSSOVER LOCATIONS (SEE PDQ-1)					24											
TOTALS					2,558	2,262				3,360	59,026		30,267	1950	10,872	

PAVEMENT DELINEATION QUANTITIES
PDQ-2

STATE OF CALIFORNIA - DEPARTMENT OF TRANSPORTATION
Caltrans® TRAFFIC DESIGN

FUNCTIONAL SUPERVISOR: CAMILLE ABOU-FADEL
CALCULATED-DESIGNED BY: REBECCA IGNACIO
CHECKED BY: RYAN CHAO
REVISED BY
DATE REVISED

LAST REVISION 02-14-12
DATE PLOTTED => 16-FEB-2012
TIME PLOTTED => 11:55

Dist	COUNTY	ROUTE	POST MILES TOTAL PROJECT	SHEET No.	TOTAL SHEETS
11	SD	76	L0.0/M2.9	22	44

02-08-12
REGISTERED CIVIL ENGINEER DATE

02-13-12
PLANS APPROVAL DATE

REGISTERED PROFESSIONAL ENGINEER
SHAHIN ADIBI
No. 54839
Exp. 06-30-12
CIVIL
STATE OF CALIFORNIA

THE STATE OF CALIFORNIA OR ITS OFFICERS OR AGENTS SHALL NOT BE RESPONSIBLE FOR THE ACCURACY OR COMPLETENESS OF SCANNED COPIES OF THIS PLAN SHEET.

LEGEND:

S/S
(XX) = INSTALL SIGN (STRAP AND SADDLE BRACKET METHOD)

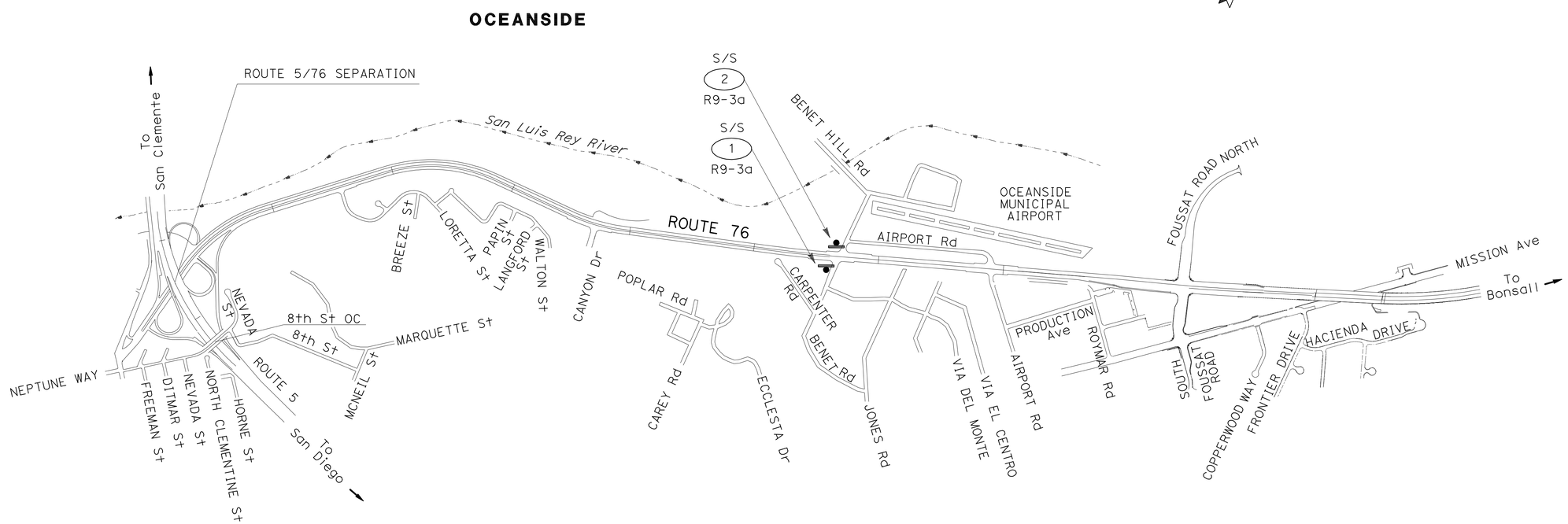

APPROVED FOR SIGN WORK ONLY

NO SCALE

SIGN PLAN

S-1

STATE OF CALIFORNIA - DEPARTMENT OF TRANSPORTATION
Caltrans® TRAFFIC DESIGN

FUNCTIONAL SUPERVISOR: CAMILLE ABOU-FADEL
CALCULATED-DESIGNED BY: RYAN CHAO
CHECKED BY: SHAHIN ADIBI
REVISED BY
DATE REVISED

LAST REVISION 02-14-12
DATE PLOTTED => 16-FEB-2012
TIME PLOTTED => 11:55

BORDER LAST REVISED 7/2/2010
USERNAME => s127400
DGN FILE => 11000204111oa001.dgn
RELATIVE BORDER SCALE IS IN INCHES 0 1 2 3
UNIT 2828
PROJECT NUMBER & PHASE 11000204111

Dist	COUNTY	ROUTE	POST MILES TOTAL PROJECT	SHEET No.	TOTAL SHEETS
11	SD	76	L0.0/M2.9	23	44

REGISTERED CIVIL ENGINEER 02-08-12 DATE

02-13-12
PLANS APPROVAL DATE

REGISTERED PROFESSIONAL ENGINEER
SHAHIN ADIBI
No. 54839
Exp. 06-30-12
CIVIL
STATE OF CALIFORNIA

THE STATE OF CALIFORNIA OR ITS OFFICERS OR AGENTS SHALL NOT BE RESPONSIBLE FOR THE ACCURACY OR COMPLETENESS OF SCANNED COPIES OF THIS PLAN SHEET.

NOTES:

1. FEDERAL MANUAL ON UNIFORM TRAFFIC CONTROL DEVICES (MUTCD) SIGN CODES ARE SHOWN UNLESS DESIGNATED BY (CA) INDICATING STANDARD CALIFORNIA SIGN SPECIFICATIONS.
2. EXACT LOCATIONS OF SIGNS SHALL BE DETERMINED BY THE ENGINEER.
3. REFER TO "FURNISH ROADSIDE SIGN PANEL" CHART FOR FURTHER INFORMATION.

ROADSIDE SIGN QUANTITIES

SIGN No.	ROUTE	CODE	PANEL SIZE		D	C	E	Min POST LENGTH	POST SIZE				INSTALL SIGN (STRAP & SADDLE BRACKET METHOD)	REMARKS
			Horiz	Vert					4X4	4X6	6X6	6X8		
			INCHES X INCHES		Ft	Ft	Ft	Ft	INCHES X INCHES				EA	
1	76	R9-3a	24x24										1	ATTACH TO EXISTING SIGNAL POLE
2	76	R9-3a	24x24										1	ATTACH TO EXISTING SIGNAL POLE
												TOTAL	2	

REVISED BY | DATE REVISED
RYAN CHAO | SHAHIN ADIBI
CALCULATED-DESIGNED BY | CHECKED BY
FUNCTIONAL SUPERVISOR
CAMILLE ABOU-FADEL

STATE OF CALIFORNIA - DEPARTMENT OF TRANSPORTATION
Caltrans TRAFFIC DESIGN

SIGN QUANTITIES

SQ-1

LAST REVISION 02-14-12 | DATE PLOTTED => 16-FEB-2012 | TIME PLOTTED => 11:55

Dist	COUNTY	ROUTE	POST MILES TOTAL PROJECT	SHEET No.	TOTAL SHEETS
11	SD	76	L0.0/M2.9	24	44

REGISTERED CIVIL ENGINEER 02-08-12 DATE

02-13-12
PLANS APPROVAL DATE

REGISTERED PROFESSIONAL ENGINEER
SHAHIN ADIBI
No. 54839
Exp. 06-30-12
CIVIL
STATE OF CALIFORNIA

THE STATE OF CALIFORNIA OR ITS OFFICERS OR AGENTS SHALL NOT BE RESPONSIBLE FOR THE ACCURACY OR COMPLETENESS OF SCANNED COPIES OF THIS PLAN SHEET.

NOTES:

1. FEDERAL MANUAL ON UNIFORM TRAFFIC CONTROL DEVICES (MUTCD) SIGN CODES ARE SHOWN UNLESS DESIGNATED BY (CA) INDICATING STANDARD CALIFORNIA SIGN SPECIFICATIONS.
2. PROTECTIVE OVERLAY DESIGNATIONS ARE AS FOLLOWS: SOC-SPRAY-ON COATING, SF-STANDARD FILM, AND PF-PREMIUM FILM.
3. REFER TO "ROADSIDE SIGN QUANTITIES" CHART FOR FURTHER INFORMATION.
4. GREEN - Grn, WHITE - Wht, BLACK - Blk, BLUE - Blu, YELLOW - Ylw, BROWN - Brn, RED - Red, ORANGE - Org

FURNISH ROADSIDE SIGN PANEL

SIGN No.	CODE	PANEL SIZE		BACKGROUND		LEGEND			SIGN PANEL				REMARKS
		Horiz	Vert	SHEETING COLOR	RETRO-REFLECTIVE ASTM TYPE	SHEETING COLOR	REFLECTIVE ASTM TYPE	BLACK (NON-REFLECTIVE)	SINGLE SHEET ALUMINUM (SQFT) UNFRAMED 0.063 INCHES	PROTECTIVE OVERLAY			
		INCHES X INCHES								SOC	SF	PF	
1	R9-3a	24 X 24		Wht	IV	Red/Blk	IV	X	4			X	
2	R9-3a	24 X 24		Wht	IV	Red/Blk	IV	X	4			X	
								TOTAL	8				

SIGN QUANTITIES

SQ-2

STATE OF CALIFORNIA - DEPARTMENT OF TRANSPORTATION
Caltrans® TRAFFIC DESIGN

FUNCTIONAL SUPERVISOR: CAMILLE ABOU-FADEL
CALCULATED-DESIGNED BY: RYAN CHAO
CHECKED BY: SHAHIN ADIBI
REVISED BY
DATE REVISED

LAST REVISION 02-14-12
DATE PLOTTED => 16-FEB-2012
TIME PLOTTED => 11:55

Dist	COUNTY	ROUTE	POST MILES TOTAL PROJECT	SHEET No.	TOTAL SHEETS
11	SD	76	L0.0/M2.9	25	44

Hamed S. Baha 02-08-12
REGISTERED CIVIL ENGINEER DATE

02-13-12
PLANS APPROVAL DATE

REGISTERED PROFESSIONAL ENGINEER HAMED S. BAHA No. 74499 Exp. 12-31-13 CIVIL STATE OF CALIFORNIA

THE STATE OF CALIFORNIA OR ITS OFFICERS OR AGENTS SHALL NOT BE RESPONSIBLE FOR THE ACCURACY OR COMPLETENESS OF SCANNED COPIES OF THIS PLAN SHEET.

COLD PLANE AC PAVEMENT (0.2' Max) AT SPOT LOCATIONS

ROUTE	DIRECTION	DESCRIPTION	POSTMILES	LANE No.	DIMENSION	COLD PLANE (SQFT)	AREA (SQYD)	HMA (TYPE C) (TON)	TACK COAT (TON)	REMARKS
76	EB	EAST OF NB 5 Conn TO WB 76	R0.02	2	4' x 10'	40	4.44	0.57	0.001	DIG-OUTS
		LORETTA St TO CANYON Dr	R0.86	2	4' x 10'	40	4.44	0.57	0.001	
		CANYON Dr to BENET Rd	R1.36	2	4' x 20'	80	8.89	1.15	0.002	
		BENET Rd TO AIRPORT ROAD	R1.95	2	12' x 40'	480	53.33	6.90	0.011	
		BENET Rd TO AIRPORT ROAD	R2.00	2	10' x 10'	100	11.11	1.44	0.002	
		AIRPORT Rd TO FOUSSAT Rd	R2.46	1	4' x 20'	80	8.89	1.15	0.002	
		FOUSSAT Rd INTERSECTION	R2.56	1, 2	24' x 40'	960	106.67	13.80	0.022	
		FOUSSAT Rd INTERSECTION	R2.58	1	12' x 20'	240	26.67	3.45	0.006	
	WB	EAST OF WB 76 Conn TO NB 5	R0.17	1, 2	24' x 96'	2,304	256.00	33.11	0.053	
		WEST OF BENET Rd	R1.73	2	4' x 10'	40	4.44	0.57	0.001	
		AIRPORT Rd TO BENET Rd	R2.08	1	4' x 10'	40	4.44	0.57	0.001	
		FOUSSAT Rd INTERSECTION	R2.60	1	12' x 40'	480	53.33	6.90	0.011	
						TOTAL	542.67 *	70.18	0.113	

(*) = SEE Q-3 SHEET, FOR ADDITIONAL QUANTITIES

LEGEND:

(N) = NOT A SEPARATE PAY ITEM, FOR INFORMATION ONLY.
HMA = HOT MIX ASPHALT
MVP = MAINTENANCE VEHICLE PULLOUT
RHMA (BWC-G) = RUBBERIZED HOT MIX ASPHALT - GAP GRADED

HMA DIKES

ROUTE	DIRECTION	POSTMILE		REMOVE AC DIKE		PLACE HMA DIKE TYPE (LF)					EXTENDED LIFT UNDER HMA DIKE	MINOR HMA (TON)	ASPHALTIC EMULSION (FOG SEAL COAT)
		BEGIN	END	TYPE	(LF)	A	C	D	E	F	CY (N)	TON	TON
76	EB	L0.029	L0.038	A	46				46		0.23	1.14	0.003
	EB	L0.044	L0.104	A	317				317		1.57	7.83	0.022
	EB	L0.104	R0.024	A	316	316					1.07	8.11	0.022
	EB	R0.024	R0.041	A	91				91		0.45	2.25	0.006
	EB	R0.041	R0.072	E	166				166		0.82	4.10	0.012
	EB	R0.087	R0.095	A	42				42		0.21	1.04	0.003
	EB	R0.206	R0.223	A	88			88			0.71	4.90	0.010
	EB	R0.223	R0.240	C	93		93				0.23	0.67	0.003
	EB	R0.240	R0.247	F	35					35	0.09	0.44	0.002
	EB	R0.247	R0.444	A	1,039			1,039			8.34	57.84	0.117
	EB	R0.444	R0.456	C	65		65				0.16	0.47	0.002
	EB	R0.456	R0.475	F	100					100	0.25	1.25	0.005
	EB	R0.504	R0.545	E	217				217		1.07	5.36	0.015
	EB	R1.743	R1.749	A	33				33		0.16	0.82	0.002
	EB	R2.188	R2.272	E	446				446		2.20	11.02	0.031
	EB	M2.521	M2.695	D	922			922			7.40	51.33	0.104
	EB	M2.745	M2.830	D	418			418			3.35	23.27	0.047
	EB	M2.830	M2.842	A	65		65				0.16	0.47	0.002
	EB	M2.842	M2.852	A	85					85	0.21	1.07	0.004
	WB	L0.000	L0.008	A	100			100			0.80	5.57	0.011
	WB	L0.008	L0.063	A	230	230					0.78	5.90	0.016
	WB	L0.081	R0.022	A	203				203		0.31	5.01	0.014
	WB	R0.022	R0.035	A	300	300					1.02	7.70	0.021
	WB	R0.053	R0.107	A	284				284		1.40	7.01	0.020
	WB	R0.478	R0.487	A	44				44		0.22	1.09	0.003
	WB	R1.149	R1.157	A	41				41		0.20	1.01	0.003
	WB	R1.760	R1.764	A	20				20		0.10	0.49	0.001
	WB	R2.365	M2.537	D	908			908			7.29	50.55	0.102
	WB	M2.600	M2.710	D	581			581			4.66	32.34	0.065
	WB	M2.710	M2.715	D	25		25				0.06	0.18	0.001
	WB	M2.715	M2.852	A	726					726	1.79	9.10	0.036
				TOTALS	8,046	846	248	4,056	1,950	946	47.31 *	309.32	0.710 **

(*) = SEE Q-3 SHEET, FOR ADDITIONAL QUANTITIES.
(**) = SEE Q-2 SHEET, FOR ADDITIONAL QUANTITIES.

COLD PLANE AC PAVEMENT CONFORM AT DRAINAGE INLETS

ROUTE	DIRECTION	LOCATION	DIMENSION (LENGTH X WIDTH) (FT X FT)	TYPE OF INLET (N) SPILLWAY/ OVERSIDE DRAIN	GRATE	SLOTTED	COLD PLANE (SQYD)
76	EB	L0.004	32 X 4		1		14.22
	EB	L0.044	32 X 4		1		14.22
	MEDIAN	L0.170	32 X 4		1		14.22
	EB	R0.49		1			
	EB	R0.75		1			
	EB	R1.20		1			
	EB	R1.31		1			
	EB	R1.38		1			
	EB	R1.61		1			
	EB - MEDIAN	R1.64	32 X 4		1		14.22
	EB	R1.64		1			
	EB	R1.74		1			
	EB	R1.85	32 X 4		1		14.22
	EB	R2.35	32 X 4		1		14.22
	EB	M2.60	180 X 4			1	80.00
	EB	M2.63	32 X 4		1		14.22
	EB	M2.71	32 X 4		1		14.22
	EB	M2.84	32 X 4		1		14.22
	WB	R0.72	32 X 4		1		14.22
	WB	R0.75	32 X 4		1		14.22
	WB - MEDIAN	R1.20	32 X 4		1		14.22
	WB - MEDIAN	R1.21	32 X 4		1		14.22
	WB	R1.51	32 X 4		1		14.22
	WB	R1.62	32 X 4		1		14.22
	WB	R1.73	32 X 4		1		14.22
	WB - MEDIAN	R1.73	32 X 4		1		14.22
	WB	R1.84	32 X 4		1		14.22
	WB	R1.88	32 X 4		1		14.22
	WB	M2.60	180 X 4			1	80.00
	WB	M2.63	32 X 4		1		14.22
	WB	M2.71	32 X 4		1		14.22
	WB	M2.84	32 X 4		1		14.22
			SUB-TOTAL	8	22	2	472.89 *

(*) = SEE Q-3 SHEET, FOR ADDITIONAL QUANTITIES.

SUMMARY OF QUANTITIES
Q-1

STATE OF CALIFORNIA - DEPARTMENT OF TRANSPORTATION
Caltrans® MAINTENANCE
FUNCTIONAL SUPERVISOR: ALBERTO GAYON
CALCULATED-DESIGNED BY: REBECCA IGNACIO
CHECKED BY: HAMED BAHA
REVISED BY
DATE REVISED

LAST REVISION 02-14-12
DATE PLOTTED => 16-FEB-2012
TIME PLOTTED => 11:55

Dist	COUNTY	ROUTE	POST MILES TOTAL PROJECT	SHEET No.	TOTAL SHEETS
11	SD	76	L0.0/M2.9	26	44

Hamed S. Baha 02-08-12
REGISTERED CIVIL ENGINEER DATE

02-13-12
PLANS APPROVAL DATE

REGISTERED PROFESSIONAL ENGINEER HAMED S. BAHA No. 74499 Exp. 12-31-13 CIVIL STATE OF CALIFORNIA

THE STATE OF CALIFORNIA OR ITS OFFICERS OR AGENTS SHALL NOT BE RESPONSIBLE FOR THE ACCURACY OR COMPLETENESS OF SCANNED COPIES OF THIS PLAN SHEET.

SHOULDER RUMBLE STRIP GROUND-IN INDENTATIONS

ROUTE	DESCRIPTION	DIRECTION	POSTMILE BEGIN	POSTMILE END	AREA (SQFT)(N)	QUANTITY (Sta)	REMARKS
76	EB ON-RAMP FROM NB 5 TO LORETTA St	EB/WB-MEDIAN SHOULDER	R0.21	R0.46	2,640.00	26.40	
		EB/WB-OUTSIDE SHOULDER	R0.21	R0.46	2,640.00	26.40	
	LORETTA St TO CANYON Dr	EB/WB-MEDIAN SHOULDER	R0.50	R1.14	6,758.40	67.58	
		EB/WB-OUTSIDE SHOULDER	R0.50	R1.14	6,758.40	67.58	
	CANYON Dr TO BENET Rd	EB/WB-MEDIAN SHOULDER	R1.17	R1.75	6,124.80	61.25	
		EB/WB-OUTSIDE SHOULDER	R1.17	R1.75	6,124.80	61.25	
	BENET Rd TO AIRPORT Rd	EB/WB-MEDIAN SHOULDER	R1.78	R2.13	3,696.00	36.96	
		EB/WB-OUTSIDE SHOULDER	R1.78	R2.13	3,696.00	36.96	
	AIRPORT Rd TO FOUSSAT Rd	EB/WB-MEDIAN SHOULDER	R2.16	M2.43	2,851.20	28.51	
		EB-OUTSIDE SHOULDER	R2.16	M2.43	1,425.60	14.26	
		WB-OUTSIDE SHOULDER	R2.16	M2.57	2,164.80	21.65	
	FOUSSAT Rd TO MISSION Ave	WB-MEDIAN SHOULDER	M2.69	M2.85	844.80	8.45	
		EB-MEDIAN SHOULDER	M2.58	M2.85	1,425.60	14.26	
		EB/WB-OUTSIDE SHOULDER	M2.58	M2.85	2,851.20	28.51	
				TOTAL	50,001.60**	500.02	

(**) = SEE ASPHALTIC EMULSION (FOG SEAL TABLE BELOW)

SHOULDER BACKING

ROUTE	DIRECTION	POSTMILE BEGIN	POSTMILE END	LENGTH (LF) (N)	QUANTITY (TON)	REMARKS
76	EB	R0.24	R0.28	211.20	4.59	
	EB	R0.52	R0.99	2,481.60	53.90	
	EB	R1.10	R1.53	2,270.40	49.31	
	EB	R1.59	R1.92	1,742.40	37.84	
	EB	R2.10	R2.22	633.60	13.76	
	EB	R2.37	M2.46	475.20	10.32	
	EB	M2.64	M2.68	211.20	4.59	
	WB	R0.18	R2.02	4,329.60	94.04	
	EXTENDED LIFT UNDER HMA DIKE (SEE Q-1 SHEET)			8,046.00	87.38	
				TOTAL	351.15	

ASPHALTIC EMULSION (FOG SEAL COAT)

ROUTE	DIRECTION	POSTMILE LOCATION MVP	POSTMILE LOCATION Misc AREA	POSTMILE LOCATION SPILLWAY/ OVERSIDE DRAIN	DIMENSION (LF X LF) (N)	AREA (SQFT) (N)	ASPHALTIC EMULSION (FOG SEAL COAT) (TON)	REMARKS
76	EB	R0.11			45-85 X 12	780	0.036	
	EB			R0.49	2-26 X 10	140	0.006	
	EB			R0.75	2-26 X 10	140	0.006	
	EB		R1.05		185 X 12	2,220	0.102	
	EB	R1.10			45-85 X 12	780	0.036	
	EB			R1.20	2-26 X 10	140	0.006	
	EB	R1.29			45-85 X 12	780	0.036	
	EB			R1.31	2-26 X 10	140	0.006	
	EB			R1.38	2-26 X 10	140	0.006	
	EB	R1.43			45-85 X 12	780	0.036	
	EB		R1.53		85 X 9	765	0.035	
	EB			R1.61	2-26 X 10	140	0.006	
	EB			R1.64	2-26 X 10	140	0.006	
	EB		R1.68		158 X 10	1,580	0.073	
	EB			R1.74	2-26 X 10	140	0.006	
	EB	R1.78			45-85 X 12	780	0.036	
	EB		R1.93		90 X 10	900	0.041	
	EB	R1.95			45-85 X 12	780	0.036	
	EB		R2.08		158 X 9	1,422	0.065	
	EB	R2.18			45-85 X 12	780	0.036	
	EB		R2.22		36 X 6	216	0.010	
	EB	M2.47			45-85 X 12	780	0.036	
	EB	M2.64			45-85 X 12	780	0.036	
	WB	R0.10			45-85 X 12	780	0.036	
	WB	R1.01			45-85 X 12	780	0.036	
	WB	R1.58			45-85 X 12	780	0.036	
	WB		R2.04		145 X 8	1,160	0.053	
	WB		R2.17		73 X 8	584	0.027	
	WB	R2.18			45-85 X 12	780	0.036	
	WB		R2.30		138 X 9	1,242	0.057	
	WB	M2.46			45-85 X 12	780	0.036	
	** SUB-TOTAL FROM RUMBLE STRIP					50,002	2.180	
	SUB-TOTAL FROM HMA DIKE						0.710	
						TOTAL	3.908	

RESET ROADSIDE SIGN

ROUTE	DIRECTION	POSTMILE	QUANTITY (EA)
76	MEDIAN	R0.06	1
	EB	R0.08	1
TOTAL			2

DELINEATOR (CLASS 1)

ROUTE	DIRECTION	POSTMILE	QUANTITY (EA)
76	WB	R0.08	25
TOTAL			25

COLD PLANE AC PAVEMENT TYPICAL CONFORM AT CROSS STREET

ROUTE	DIRECTION	POSTMILE	DIMENSION (LENGTH X WIDTH) (LF X LF)	AREA (SQYD)	REMARKS
76	EB	R0.486	130 X 18	260.00	
	EB	R1.156	152 X 18	304.00	
	EB	R1.767	152 X 20	337.78	
	EB	R2.145	98 X 25	272.22	
	EB	M2.570	230 X 18	460.00	
	WB	R1.767	159 X 20	353.33	
	WB	R2.145	167 X 15	278.33	
	WB	R 0.18	216 X 20	480.00	
			SUB-TOTAL	2,745.67 *	

(*) = SEE Q-3 SHEET

IMPORTED BORROW

ROUTE	DIRECTION	POSTMILE	DIMENSION (LENGTH X WIDTH X DEPTH) LF	LF	LF	QUANTITY (TON)	REMARKS
76	EB	R 0.11	100	3	0.33	6.42	
					TOTAL	6.42	

SUMMARY OF QUANTITIES

Q-2

STATE OF CALIFORNIA - DEPARTMENT OF TRANSPORTATION
Caltrans
MAINTENANCE

FUNCTIONAL SUPERVISOR: ALBERTO GAYON
CALCULATED-DESIGNED BY: REBECCA IGNACIO
CHECKED BY: HAMED BAHA
REVISED BY / DATE REVISED

LAST REVISION 02-14-12
DATE PLOTTED => 16-FEB-2012
TIME PLOTTED => 11:55

Dist	COUNTY	ROUTE	POST MILES TOTAL PROJECT	SHEET No.	TOTAL SHEETS
11	SD	76	L0.0/M2.9	27	44

Hamed S. Baha 02-08-12
REGISTERED CIVIL ENGINEER DATE

02-13-12
PLANS APPROVAL DATE

REGISTERED PROFESSIONAL ENGINEER HAMED S. BAHA No. 74499 Exp. 12-31-13 CIVIL STATE OF CALIFORNIA

THE STATE OF CALIFORNIA OR ITS OFFICERS OR AGENTS SHALL NOT BE RESPONSIBLE FOR THE ACCURACY OR COMPLETENESS OF SCANNED COPIES OF THIS PLAN SHEET.

NOTE: 1. (**) = COLD PLANE AT MEDIAN SHOULDER

ROADWAY QUANTITIES

ROUTE	DIRECTION	POSTMILE BEGIN	POSTMILE END	LENGTH (LF) (N)	MAIN LANES WIDTH (LF) (N)	RIGHT SHOULDER WIDTH (LF) (N)	LEFT SHOULDER WIDTH (LF) (N)	AREA (SQFT) (N)	VOLUME (CY) (N)	COLD PLANE AC PAVEMENT 0.1' Max (SQYD)	COLD PLANE AC PAVEMENT 0.0'-0.1' Max (SQYD)	RUBBERIZED HMA (BWC-GAP GRADED) (TON)	ASPHALTIC EMULSION MEMBRANE (BWC) (TON)	REMARKS
76	EB	L0.00	L0.05	264.00	24	17	3	11,616.00	43.02	1,290.67		83.00	1.20	
	EB	L0.05	L0.10	264.00	36	10	3	12,936.00	47.91	1,437.33		92.00	1.30	
	EB	L0.10	L0.14	211.20	36	10	5	10,771.20	39.89	1,196.80		77.00	1.10	
	EB	R0.00	R0.07	369.60	36	10	15	22,545.60	83.50	2,505.07		160.00	2.30	
	EB	R0.07	R0.09	105.60	24	10	6	4,224.00	14.86	469.33		30.00	0.40	
	EB	R0.09	R0.21	633.60	24	10	3	23,443.20	86.83			167.00	2.40	
	EB	R0.21	R0.49	1478.40	36	10	15	90,182.40	334.01		2,464.00	641.00	9.20	
	EB	R0.49	R0.50	52.80	36	10	15	3,220.80	11.93			23.00	0.30	
	EB	R0.50	R0.57	369.60	24	10	15	18,110.40	67.08		616.00	129.00	1.80	
	EB	R0.57	R1.04	2,481.60	24	10	15	121,598.40	450.36		4,136.00	865.00	12.40	
	EB	R1.04	R1.15	580.80	36	8	15	34,267.20	126.92		968.00	244.00	3.50	
	EB	R1.15	R1.16	52.80	36	8	15	3,115.20	11.54			22.00	0.30	
	EB	R1.16	R1.32	844.80	24	10	10	37,171.20	137.67		938.67	264.00	3.80	
	EB	R1.32	R1.66	1795.20	24	10	15	87,964.80	325.80		2,992.00	626.00	9.00	
	EB	R1.66	R1.77	580.80	36	10	5	29,620.80	109.71		322.67	211.00	3.00	
	EB	R1.77	R1.78	52.80	36	10	5	2,692.80	9.97			19.00	0.30	
	EB	R1.78	R1.87	475.20	24	8	10	19,958.40	73.92		528.00	142.00	2.00	
	EB	R1.87	R2.05	950.40	24	10	12	43,718.40	161.92		1,267.20	311.00	4.50	
	EB	R2.05	R2.15	528.00	48	10	5	33,264.00	123.20		293.33	237.00	3.40	
	EB	R2.15	R2.16	52.80	48	10	5	3,326.40	12.32			24.00	0.30	
	EB	R2.16	R2.27	580.80	24	10	7	23,812.80	88.20		451.73	169.00	2.40	
	EB	R2.27	R2.43	844.80	24	8	14	38,860.80	143.93		1,314.13	276.00	4.00	
	EB	R2.43	M2.57	739.20	64	19	3	63,571.20	235.45		246.40	452.00	6.50	
	EB	M2.57	M2.58	52.80	64	19	3	4,540.80	16.82			32.00	0.50	
	EB	M2.58	M2.68	528.00	24	18	3	23,760.00	88.00		176.00	169.00	2.40	
	EB	M2.68	M2.85	897.60	24	10	5	35,006.40	129.65		*** 585.34	249.00	3.60	
	WB	L0.00	L0.06	317.00	60	8	3	22,507.00	83.36	2,053.33		160.00	2.30	
	WB	L0.06	L0.10	211.00	48	8	3	12,449.00	46.11	1,383.22		89.00	1.30	
	WB	L0.10	L0.14	211.20	24	8	10	8,870.40	31.29	985.60		63.00	0.90	
	WB	R0.00	R0.07	369.60	24	10	15	18,110.40	65.71	2,012.27		129.00	1.80	
	WB	R0.07	R0.09	105.60	48	10	15	7,708.80	25.03	856.53		55.00	0.80	
	WB	R0.09	R0.21	633.60	24	10	3	38,649.60	143.15			275.00	3.90	
	WB	R0.21	R0.49	1478.40	24	6	15	66,528.00	246.40		2,464.00	473.00	6.80	
	WB	R0.49	R0.50	52.80	36	6	10	2,745.60	10.17			20.00	0.30	
	WB	R0.50	R1.15	3,432.00	26	13	10	168,168.00	622.84		3,813.33	1,196.00	17.10	
	WB	R1.15	R1.16	52.80	24	13	10	2,481.60	9.19			18.00	0.30	
	WB	R1.16	R1.31	792.00	36	5	5	4,048.00	134.93		440.00	259.00	3.70	
	WB	R1.31	R1.77	2428.80	24	10	12	111,724.80	413.80		3,238.40	794.00	11.40	
	WB	R1.77	R1.78	52.80	24	10	12	2,428.80	9.00			17.00	0.20	
	WB	R1.78	R1.88	528.00	48	8	5	32,208.00	119.29		293.33	229.00	3.30	
	WB	R1.88	R2.15	1,425.60	24	10	10	62,726.40	232.32		1,584.00	446.00	6.40	
	WB	R2.15	R2.16	52.80	24	10	10	2,323.20	8.60			17.00	0.20	
	WB	R2.16	R2.26	528.00	48	8	8	33,792.00	125.16		469.33	240.00	3.40	
	WB	R2.26	M2.50	1,267.20	24	12	15	64,627.20	239.36		2,112.00	460.00	6.60	
	WB	M2.50	M2.57	369.60	36	10	2	17,740.80	65.71		82.13	126.00	1.80	
	WB	M2.57	M2.58	52.80	36	10	2	2,534.40	9.39			18.00	0.30	
	WB	M2.58	M2.70	633.60	72	10	2	53,222.40	197.12		140.80	378.00	5.40	
	WB	M2.70	M2.73	158.40	36	12	30	12,355.20	45.76		528.00	88.00	1.30	
	WB	M2.73	M2.85	633.60	24	10	15	31,046.40	114.99		*** 1,164.89	221.00	3.20	
	* EXTENDED LIFT UNDER HMA DIKE (SEE Q-1 SHEET)								47.31			90.83		
	* COLD PLANE AC PAVEMENT (0.2' Max) AT SPOT LOCATIONS (SEE Q-1 SHEET)									542.67				
	* COLD PLANE AC PAVEMENT TYPICAL CONFORM AT CROSS STREET (SEE Q-2 SHEET)									2,745.67		94.00 **	1.40	
	* COLD PLANE AC PAVEMENT CONFORM AT DRAINAGE INLETS (SEE Q-1 SHEET)									472.89			0.40	
									TOTALS	52,721.85		11,669.83	166.40	

(N) = NOT A SEPARATE PAY ITEM, FOR INFORMATION ONLY.
** = LEFT-OVER FROM ROADWAY WITH A TOTAL OF 1,473.68 SQYD ONLY.
*** = INCLUDES 20' OF COLD PLANE AC PAVEMENT (0-0.1') AT END OF CONSTRUCTION LIMIT.

SUMMARY OF QUANTITIES
Q-3

STATE OF CALIFORNIA - DEPARTMENT OF TRANSPORTATION
Caltrans® MAINTENANCE

FUNCTIONAL SUPERVISOR: ALBERTO GAYON
CALCULATED-DESIGNED BY: REBECCA IGNACIO
CHECKED BY: HAMED BAHA
REVISED BY / DATE REVISED

LAST REVISION 02-14-12
DATE PLOTTED => 16-FEB-2012
TIME PLOTTED => 11:56

Dist	COUNTY	ROUTE	POST MILES TOTAL PROJECT	SHEET No.	TOTAL SHEETS
11	SD	76	L0.0/M2.9	28	44

Mahendra R. Nirmal 02-09-12
REGISTERED ELECTRICAL ENGINEER DATE

02-13-12
PLANS APPROVAL DATE

REGISTERED PROFESSIONAL ENGINEER
MAHENDRA R. NIRMAL
No. E 10689
Exp. 06-30-13
ELECTRICAL
STATE OF CALIFORNIA

THE STATE OF CALIFORNIA OR ITS OFFICERS OR AGENTS SHALL NOT BE RESPONSIBLE FOR THE ACCURACY OR COMPLETENESS OF SCANNED COPIES OF THIS PLAN SHEET.

LEGEND:

VDU = VIDEO DETECTION UNIT.
VIS = VIDEO IMAGE SENSOR.
CS = COUNT STATION.
OCC = OUTDOOR CATEGORY 5E CABLE.
= VIDEO DETECTION ZONE.
N/C = NO CHANGE

INDUCTIVE LOOP DETECTOR

Rte	POST MILE	LOCATION DESCRIPTION	FACILITIES	DIRECTION	LOCATION OF INDUCTIVE LOOP DETECTORS (N)							LOCATION	SEE DETAILS ON SHEET	INDUCTIVE LOOP DETECTOR (EA)
					MAIN LANE, COUNT STATION DETECTOR LOOPS			ADVANCE LOOPS						
					#1	#2	#3	#1	#2	#3	#4			
76	R0.486	LORETTA STREET	COUNT STATION & ADVANCE LOOP	EB	1(CS-E1-L†)	1(CS-E2-R†)	1(CS-E3-R†)	1(2-4-R†)	1(2-3-R†)			3	E-4	5
76	R0.486	LORETTA STREET	COUNT STATION & ADVANCE LOOP	WB	1(CS-W1-R†)	1(CS-W2-R†)		1(6-6-R†)	1(6-5-R†)			3	E-4	4
76	R1.156	CANYON DRIVE	SIGNAL	EB				1(2-5-R†)	1(2-4-R†)			4	E-5	2
76	R1.156	CANYON DRIVE	SIGNAL	WB				1(6-7-R†)	1(6-6-R†)			4	E-5	2
76	R1.767	BENET ROAD	SIGNAL	EB				1(2-5-R†)	1(2-4-R†)			5	E-6	2
76	R1.767	BENET ROAD	SIGNAL	WB				1(6-11-R†)	1(6-10-R†)			5	E-6	2
76	R1.767	BENET ROAD S/B TO Rte 76	SIGNAL	SB	2(7-8-R†)	2(4-7-R†)	2(4-6-R†)					5	E-6	6
76	R1.156	AIRPORT ROAD	SIGNAL	EB				1(2-4-R†)	1(2-3-R†)			6		2
76	R1.767	AIRPORT ROAD	SIGNAL	WB				1(6-8-R†)	1(6-7-R†)			6		2
76	R1.767	FOUSSAT ROAD	SIGNAL	EB				1(2-2-R†)	1(2-1-R†)			7		2
76	R1.767	FOUSSAT ROAD	SIGNAL	WB				1(6-6-R†)	1(6-5-R†)			7		2
													TOTAL	31

1(2-4-R†)
- QUANTITY OF LOOPS
- LOOP NUMBER
- TERMINATION PULL BOX LOCATION IN DIRECTION OF TRAVEL
- TRAFFIC PHASE IDENTIFICATION

LOOP IDENTIFICATION
TRAFFIC SIGNAL

1(CS-W1-L†)
- QUANTITY OF LOOPS
- LOOP NUMBER
- TERMINATION PULL BOX LOCATION IN DIRECTION OF TRAVEL
- TRAFFIC LANE IDENTIFICATION - EAST (E) OR WEST(W) BOUND

COUNT STATION
LOOP IDENTIFICATION
TRAFFIC SIGNAL

APPROVED FOR ELECTRICAL WORK ONLY

INDUCTIVE LOOP DETECTOR

E-1

REVISED BY | DATE REVISED
MAHENDRA R. NIRMAL | ENRIQUE P. BERNAL
CALCULATED-DESIGNED BY | CHECKED BY
FUNCTIONAL SUPERVISOR
BRIAN T. PECUS

STATE OF CALIFORNIA - DEPARTMENT OF TRANSPORTATION
Caltrans® TRAFFIC ELECTRICAL

LAST REVISION 02-15-12 | DATE PLOTTED => 16-FEB-2012 | TIME PLOTTED => 11:56

Dist	COUNTY	ROUTE	POST MILES TOTAL PROJECT	SHEET No.	TOTAL SHEETS
11	SD	76	L0.0/M2.9	29	44

Mahendra R. Nirmal 02-09-12
REGISTERED ELECTRICAL ENGINEER DATE

02-13-12
PLANS APPROVAL DATE

REGISTERED PROFESSIONAL ENGINEER MAHENDRA R. NIRMAL No. E 10689 Exp. 06-30-13 ELECTRICAL STATE OF CALIFORNIA

THE STATE OF CALIFORNIA OR ITS OFFICERS OR AGENTS SHALL NOT BE RESPONSIBLE FOR THE ACCURACY OR COMPLETENESS OF SCANNED COPIES OF THIS PLAN SHEET.

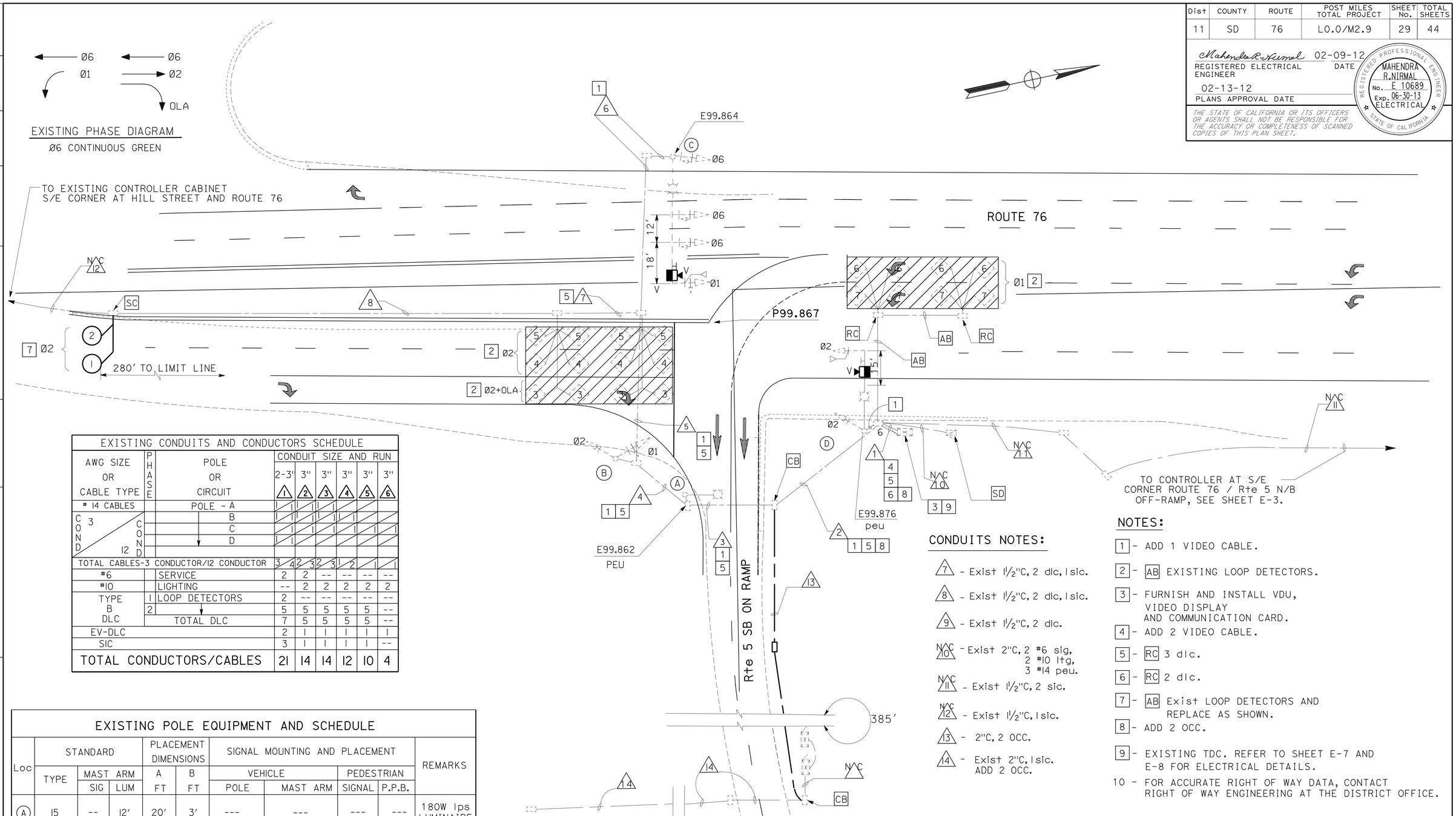

ROUTE 76 AT ROUTE 5 SB ON-RAMP
SIGNAL NUMBER P99.867

EXISTING CONDUITS AND CONDUCTORS SCHEDULE

AWG SIZE OR CABLE TYPE	PHASE	POLE OR CIRCUIT	CONDUIT SIZE AND RUN 2-3" (1)	3" (2)	3" (3)	3" (4)	3" (5)	3" (6)
# 14 CABLES		POLE - A						
COND 3 / COND 12		B						
		C						
		D						
TOTAL CABLES-3 CONDUCTOR/12 CONDUCTOR			3 4	2 3	2 3	1 2	1	1
#6		SERVICE	2	2	--	--	--	--
#10		LIGHTING	--	2	2	2	2	2
TYPE B DLC	1	LOOP DETECTORS	2	--	--	--	--	--
	2		5	5	5	5	5	--
		TOTAL DLC	7	5	5	5	5	--
EV-DLC			2	1	1	1	1	1
SIC			3	1	1	1	1	--
TOTAL CONDUCTORS/CABLES			21	14	14	12	10	4

EXISTING POLE EQUIPMENT AND SCHEDULE

Loc	STANDARD TYPE	MAST ARM SIG	MAST ARM LUM	PLACEMENT DIMENSIONS A FT	PLACEMENT DIMENSIONS B FT	SIGNAL MOUNTING AND PLACEMENT VEHICLE POLE	VEHICLE MAST ARM	PEDESTRIAN SIGNAL	PEDESTRIAN P.P.B.	REMARKS
(A)	15	--	12'	20'	3'	---	---	---	---	180W lps LUMINAIRE
(B)	1A	--	--	10'	3'	TV-2-T	---	---	---	
(C)	29-5-80	55'	15'	SEE PLAN	3'	SV-1-T	mat,mat,mat	---	---	180W lps LUMINAIRE, ADD VIS
(D)	24-4-80	35'	15'	35'	5'	SV-1-T	mas	---	---	180W lps LUMINAIRE, ADD VIS

CONDUITS NOTES:

7 - Exist 1½"C, 2 dlc, 1sic.

8 - Exist 1½"C, 2 dlc, 1sic.

9 - Exist 1½"C, 2 dlc.

N/C 10 - Exist 2"C, 2 #6 sig, 2 #10 ltg, 3 #14 peu.

N/C 11 - Exist 1½"C, 2 sic.

N/C 12 - Exist 1½"C, 1sic.

13 - 2"C, 2 OCC.

14 - Exist 2"C, 1sic. ADD 2 OCC.

NOTES:

1 - ADD 1 VIDEO CABLE.

2 - AB EXISTING LOOP DETECTORS.

3 - FURNISH AND INSTALL VDU, VIDEO DISPLAY AND COMMUNICATION CARD.

4 - ADD 2 VIDEO CABLE.

5 - RC 3 dlc.

6 - RC 2 dlc.

7 - AB Exist LOOP DETECTORS AND REPLACE AS SHOWN.

8 - ADD 2 OCC.

9 - EXISTING TDC. REFER TO SHEET E-7 AND E-8 FOR ELECTRICAL DETAILS.

10 - FOR ACCURACY RIGHT OF WAY DATA, CONTACT RIGHT OF WAY ENGINEERING AT THE DISTRICT OFFICE.

APPROVED FOR ELECTRICAL WORK ONLY

MODIFY SIGNAL AND LIGHTING (LOCATION 1)

NO SCALE

E-2

STATE OF CALIFORNIA - DEPARTMENT OF TRANSPORTATION
Caltrans® TRAFFIC ELECTRICAL

FUNCTIONAL SUPERVISOR: BRIAN T. PECUS
CALCULATED-DESIGNED BY: MAHENDRA R. NIRMAL
CHECKED BY: ENRIQUE P. BERNAL
REVISED BY
DATE REVISED

LAST REVISION 02-15-12
DATE PLOTTED => 16-FEB-2012
TIME PLOTTED => 11:56

Dist	COUNTY	ROUTE	POST MILES TOTAL PROJECT	SHEET No.	TOTAL SHEETS
11	SD	76	L0.0/M2.9	30	44

Mahendra R. Nirmal 02-09-12
REGISTERED CIVIL ENGINEER DATE

02-13-12
PLANS APPROVAL DATE

REGISTERED PROFESSIONAL ENGINEER
MAHENDRA R. NIRMAL
No. E 10689
Exp. 06-30-13
ELECTRICAL
STATE OF CALIFORNIA

THE STATE OF CALIFORNIA OR ITS OFFICERS OR AGENTS SHALL NOT BE RESPONSIBLE FOR THE ACCURACY OR COMPLETENESS OF SCANNED COPIES OF THIS PLAN SHEET.

NOTES:

1 - ADD 1 VIDEO CABLE.

2 - AB EXISTING LOOP DETECTORS.

3 - FURNISH AND INSTALL VDU, VIDEO DISPLAY AND COMMUNICATION CARD.

4 - ADD 3 VIDEO CABLE.

5 - RC 8 dlc.

6 - RC 4 dlc.

7 - RC 3 dlc.

8 - RC 2 dlc.

9 - AB Exist LOOP DETECTORS REPLACE AS SHOWN ON PLANS.

10 - ADD 2 VIDEO CABLE.

11 - RC 1 dlc.

12 - RC 1 dlc.

14 - FOR ACCURATE RIGHT OF WAY DATA, CONTACT RIGHT OF WAY ENGINEERING AT THE DISTRICT OFFICE.

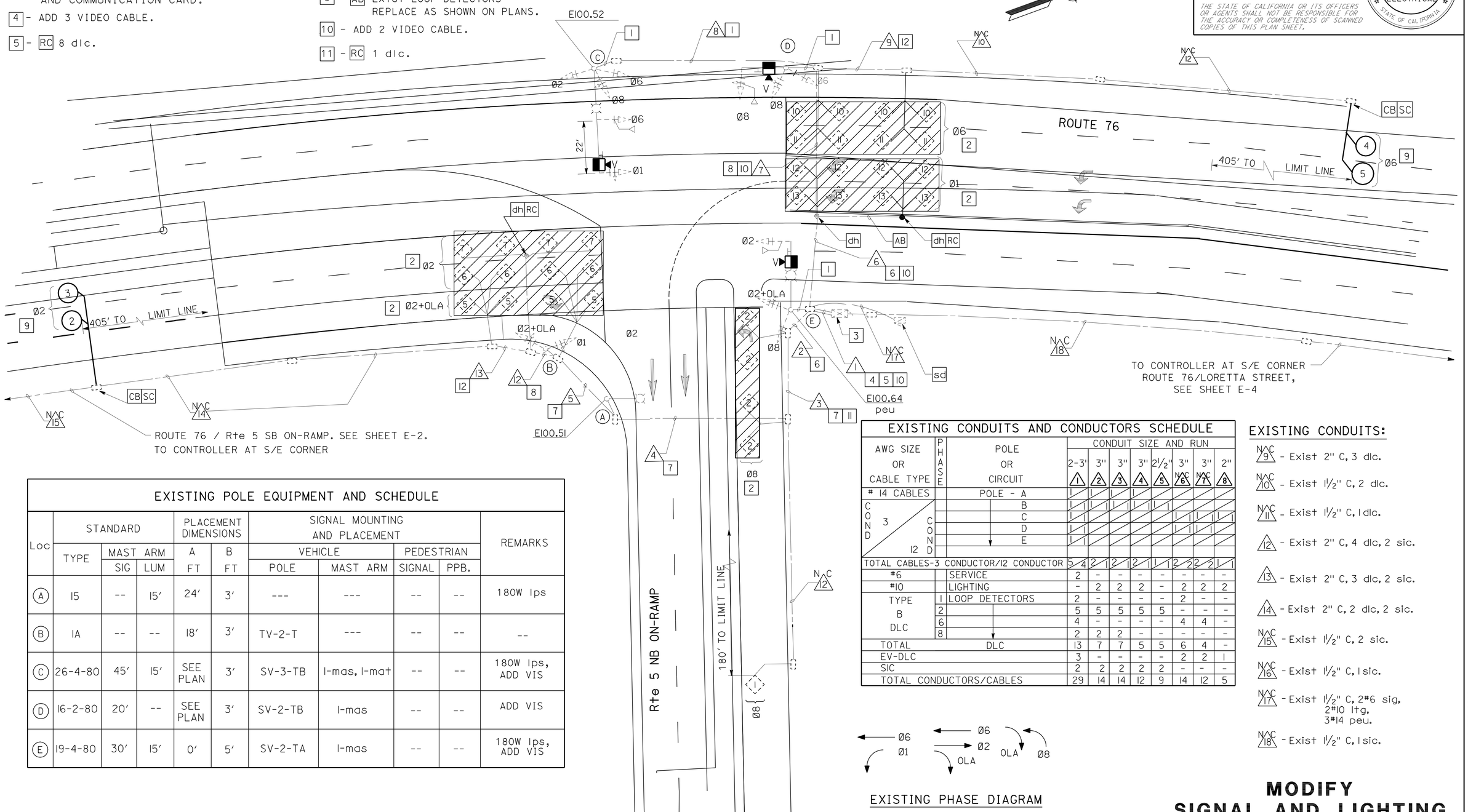

EXISTING POLE EQUIPMENT AND SCHEDULE

Loc	STANDARD TYPE	MAST ARM SIG	MAST ARM LUM	PLACEMENT DIMENSIONS A FT	PLACEMENT DIMENSIONS B FT	SIGNAL MOUNTING AND PLACEMENT VEHICLE POLE	VEHICLE MAST ARM	PEDESTRIAN SIGNAL	PEDESTRIAN PPB.	REMARKS
A	15	--	15'	24'	3'	---	---	--	--	180W lps
B	1A	--	--	18'	3'	TV-2-T	---	--	--	--
C	26-4-80	45'	15'	SEE PLAN	3'	SV-3-TB	1-mas, 1-mat	--	--	180W lps, ADD VIS
D	16-2-80	20'	--	SEE PLAN	3'	SV-2-TB	1-mas	--	--	ADD VIS
E	19-4-80	30'	15'	0'	5'	SV-2-TA	1-mas	--	--	180W lps, ADD VIS

EXISTING CONDUITS AND CONDUCTORS SCHEDULE

AWG SIZE OR CABLE TYPE	PHASE	POLE OR CIRCUIT	CONDUIT SIZE AND RUN 2-3" (1)	3" (2)	3" (3)	3" (4)	2½" (5)	3" NAC (6)	3" NAC (7)	2" (8)
# 14 CABLES		POLE - A	1	1	1	1				
COND 3 / COND 12		B	1	1	1	1	1	1		
		C	1	1				1	1	1
		D	1	1				1	1	1
		E	1	1						
TOTAL CABLES-3 CONDUCTOR/12 CONDUCTOR			5 4	2 1	2 1	2 1	1 1	2 2	2 1	1 1
#6		SERVICE	2	-	-	-	-	-	-	-
#10		LIGHTING	-	2	2	2	-	2	2	2
TYPE B DLC	1	LOOP DETECTORS	2	-	-	-	-	2	-	-
	2		5	5	5	5	5	-	-	-
	6		4	-	-	-	-	4	4	-
	8		2	2	2	-	-	-	-	-
TOTAL		DLC	13	7	7	5	5	6	4	-
EV-DLC			3	-	-	-	-	2	2	1
SIC			2	2	2	2	2	-	-	-
TOTAL CONDUCTORS/CABLES			29	14	14	12	9	14	12	5

EXISTING CONDUITS:

NAC 9 - Exist 2" C, 3 dlc.

NAC 10 - Exist 1½" C, 2 dlc.

NAC 11 - Exist 1½" C, 1 dlc.

12 - Exist 2" C, 4 dlc, 2 sic.

13 - Exist 2" C, 3 dlc, 2 sic.

14 - Exist 2" C, 2 dlc, 2 sic.

NAC 15 - Exist 1½" C, 2 sic.

NAC 16 - Exist 1½" C, 1 sic.

NAC 17 - Exist 1½" C, 2#6 sig, 2#10 ltg, 3#14 peu.

NAC 18 - Exist 1½" C, 1 sic.

EXISTING PHASE DIAGRAM

ROUTE 76 AT ROUTE 5 NB ON-RAMP
SIGNAL NUMBER P100.56

APPROVED FOR ELECTRICAL WORK ONLY

MODIFY SIGNAL AND LIGHTING
(LOCATION 2)

SCALE: 1" = 20'

E-3

REVISED BY | DATE REVISED
MAHENDRA R. NIRMAL | ENRIQE P. BERNAL
CALCULATED-DESIGNED BY | CHECKED BY
FUNCTIONAL SUPERVISOR: BRIAN T. PECUS

STATE OF CALIFORNIA - DEPARTMENT OF TRANSPORTATION
Caltrans

LAST REVISION 02-15-12 | DATE PLOTTED => 16-FEB-2012 | TIME PLOTTED => 11:56

Dist	COUNTY	ROUTE	POST MILES TOTAL PROJECT	SHEET No.	TOTAL SHEETS
11	SD	76	L0.0/M2.9	31	44

Mahendra R. Nirmal 02-09-12
REGISTERED ELECTRICAL ENGINEER DATE

02-13-12
PLANS APPROVAL DATE

REGISTERED PROFESSIONAL ENGINEER
MAHENDRA R. NIRMAL
No. E 10689
Exp. 06-30-13
ELECTRICAL
STATE OF CALIFORNIA

THE STATE OF CALIFORNIA OR ITS OFFICERS OR AGENTS SHALL NOT BE RESPONSIBLE FOR THE ACCURACY OR COMPLETENESS OF SCANNED COPIES OF THIS PLAN SHEET.

CONDUIT NOTES:

N 1 C - Exist 1½"C, 2 dlc, 1 sic.

N 2 C - Exist 1½"C, 4 dlc, 1sic.

N 3 C - Exist 2"C, 1 dlc (tms), 1 sic.

N 4 C - Exist 2"C, 2#8 (ltg), 2 dlc.

N 5 C - Exist 2"C, 2 dlc.

NOTES:

1 - AB EXISTING LOOPS AND REPLACE AS SHOWN.

2 - LOOPS ARE FOR TRAFFIC MONITORING STATION.

3 - FOR ACCURATE RIGHT OF WAY DATA, CONTACT RIGHT OF WAY ENGINEERING AT THE DISTRICT OFFICE.

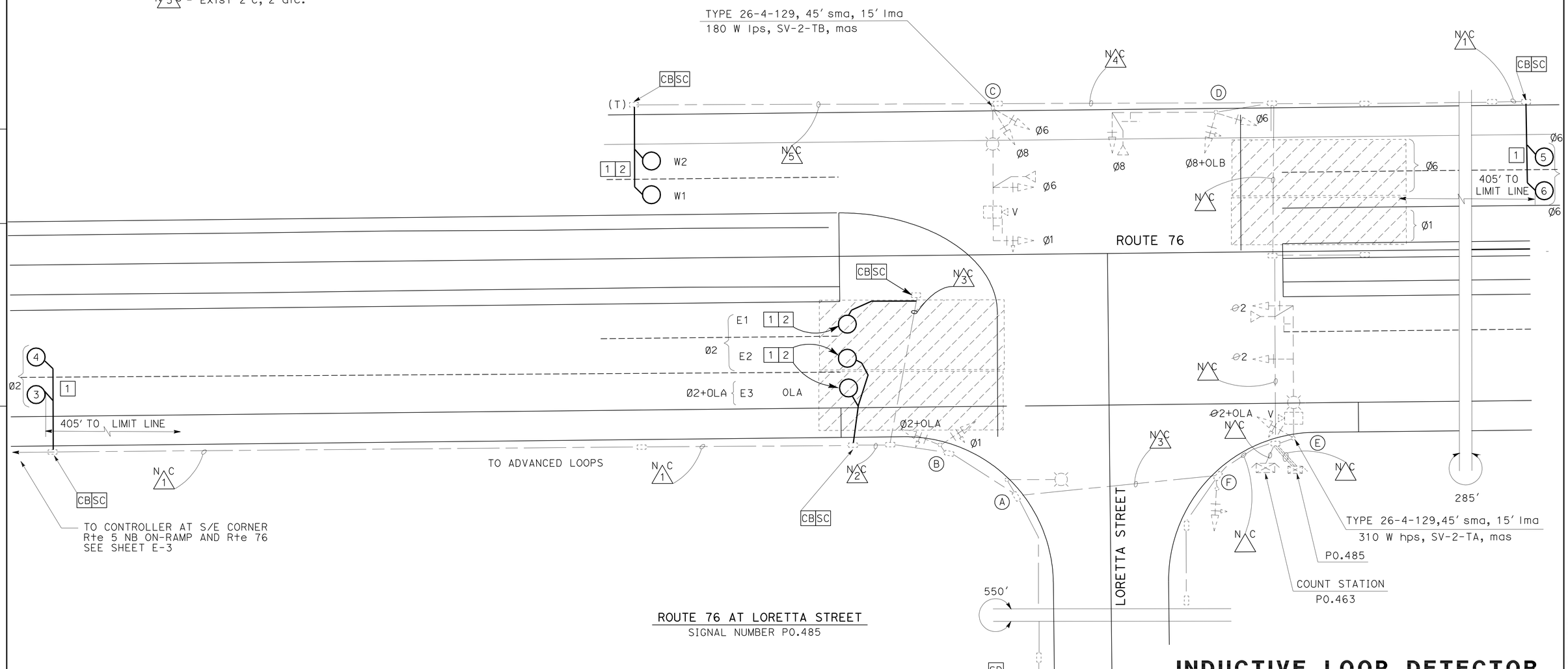

ROUTE 76 AT LORETTA STREET
SIGNAL NUMBER P0.485

APPROVED FOR ELECTRICAL WORK ONLY

INDUCTIVE LOOP DETECTOR
(LOCATION 3)

SCALE: 1" = 20'

E-4

STATE OF CALIFORNIA - DEPARTMENT OF TRANSPORTATION
Caltrans® TRAFFIC ELECTRICAL

FUNCTIONAL SUPERVISOR: BRIAN T. PECUS
CALCULATED-DESIGNED BY: MAHENDRA R. NIRMAL
CHECKED BY: ENRIQUE P. BERNAL
REVISED BY
DATE REVISED

LAST REVISION 02-15-12
DATE PLOTTED => 16-FEB-2012
TIME PLOTTED => 11:56

Dist	COUNTY	ROUTE	POST MILES TOTAL PROJECT	SHEET No.	TOTAL SHEETS
11	SD	76	L0.0/M2.9	32	44

Mahendra R. Nirmal 02-09-12
REGISTERED ELECTRICAL ENGINEER DATE

02-13-12
PLANS APPROVAL DATE

REGISTERED PROFESSIONAL ENGINEER
MAHENDRA R. NIRMAL
No. E 10689
Exp. 06-30-13
ELECTRICAL
STATE OF CALIFORNIA

THE STATE OF CALIFORNIA OR ITS OFFICERS OR AGENTS SHALL NOT BE RESPONSIBLE FOR THE ACCURACY OR COMPLETENESS OF SCANNED COPIES OF THIS PLAN SHEET.

CONDUIT NOTES

N 1 C - Exist 1½"C, 2 dlc.

NOTES:

1 - AB EXISTING LOOPS AND REPLACE AS SHOWN.

2 - FOR ACCURATE RIGHT OF WAY DATA, CONTACT RIGHT OF WAY ENGINEERING AT THE DISTRICT OFFICE.

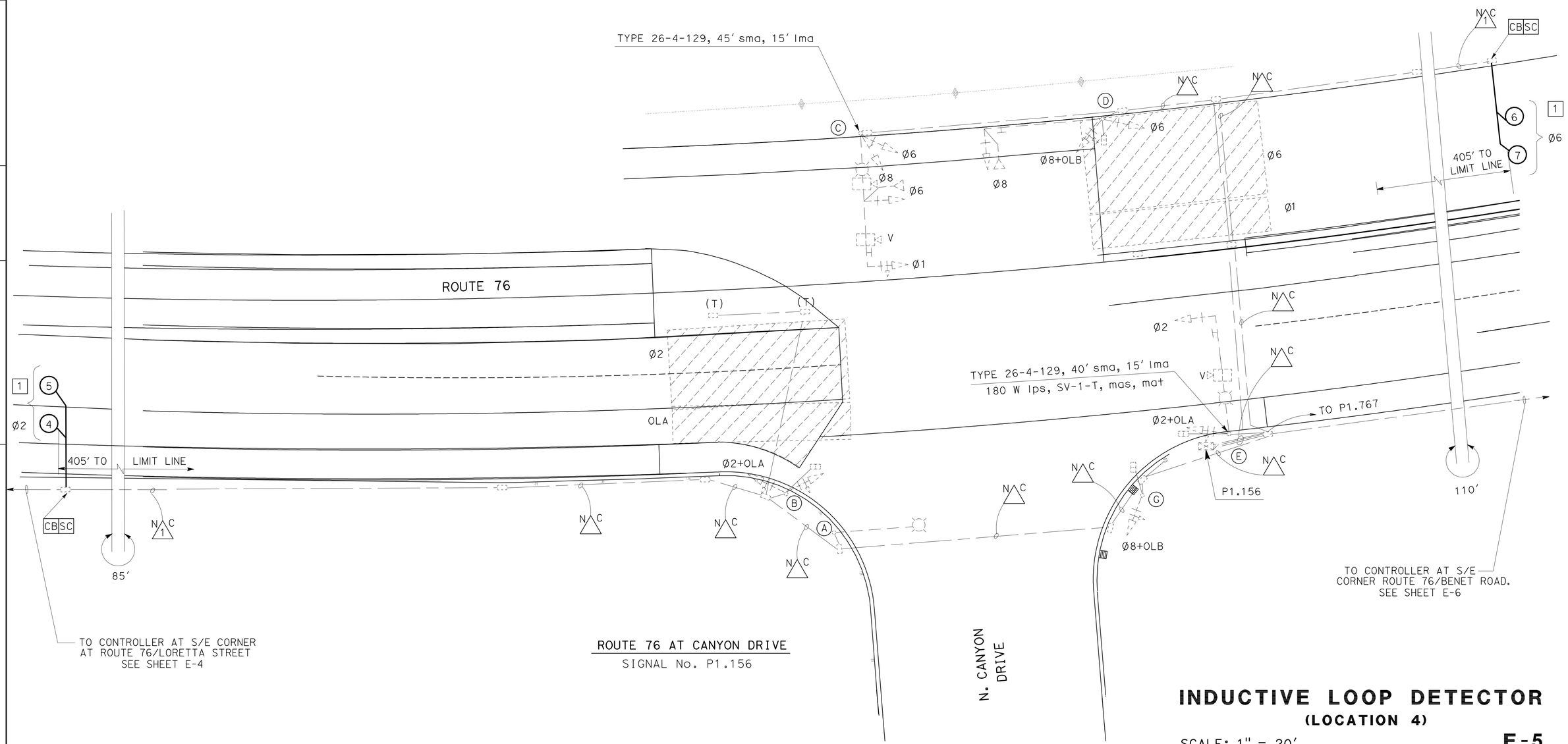

ROUTE 76 AT CANYON DRIVE
SIGNAL No. P1.156

APPROVED FOR ELECTRICAL WORK ONLY

INDUCTIVE LOOP DETECTOR
(LOCATION 4)

SCALE: 1" = 20'

E-5

STATE OF CALIFORNIA - DEPARTMENT OF TRANSPORTATION
Caltrans® TRAFFIC ELECTRICAL

FUNCTIONAL SUPERVISOR: BRIAN T. PECUS
CALCULATED-DESIGNED BY: MAHENDRA R. NIRMAL
CHECKED BY: ENRIQUE P. BERNAL
REVISED BY
DATE REVISED

LAST REVISION 02-15-12
DATE PLOTTED => 16-FEB-2012
TIME PLOTTED => 11:56

Dist	COUNTY	ROUTE	POST MILES TOTAL PROJECT	SHEET No.	TOTAL SHEETS
11	SD	76	L0.0/M2.9	33	44

Mahendra R. Nirmal 02-09-12
REGISTERED ELECTRICAL ENGINEER DATE

02-13-12
PLANS APPROVAL DATE

REGISTERED PROFESSIONAL ENGINEER MAHENDRA R. NIRMAL No. E 10689 Exp. 06-30-13 ELECTRICAL STATE OF CALIFORNIA

THE STATE OF CALIFORNIA OR ITS OFFICERS OR AGENTS SHALL NOT BE RESPONSIBLE FOR THE ACCURACY OR COMPLETENESS OF SCANNED COPIES OF THIS PLAN SHEET.

CONDUIT NOTES:

N 1 C - Exist 1½"C, 2#10(ltg), 1 evc.

N 2 C - Exist 2-2"C, 2#10(ltg), 4 dlc, 1 evc.

N 3 C - Exist 3"C, 2#10(ltg), 2#4(CONTROLLER), 4 dlc, 2 evc.

N 4 C - Exist 2-2"C, 2#10(ltg), 2#4(CONTROLLER), 6 dlc, 2 evc.

NOTES:

1 - AB EXISTING LOOPS AND REPLACE AS SHOWN.

2 - FOR ACCURATE RIGHT OF WAY DATA, CONTACT RIGHT OF WAY ENGINEERING AT THE DISTRICT OFFICE.

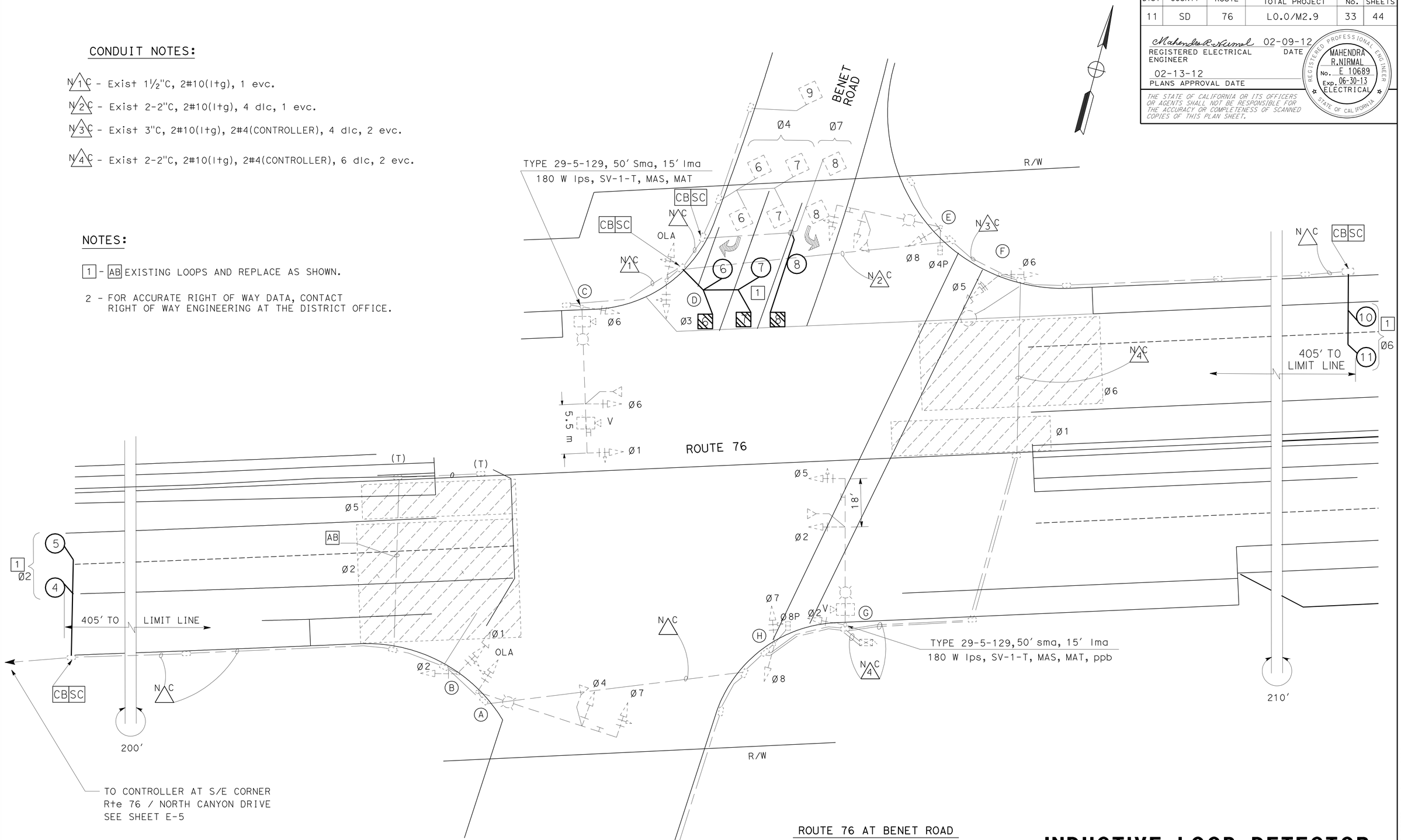

ROUTE 76 AT BENET ROAD
SIGNAL No. P1.767

INDUCTIVE LOOP DETECTOR

(LOCATION 5)

SCALE: 1" = 20'

E-6

APPROVED FOR ELECTRICAL WORK ONLY

STATE OF CALIFORNIA - DEPARTMENT OF TRANSPORTATION
Caltrans TRAFFIC ELECTRICAL

FUNCTIONAL SUPERVISOR: BRIAN T. PECUS
CALCULATED-DESIGNED BY: MAHENDRA R. NIRMAL
CHECKED BY: ENRIQUE P. BERNAL
REVISED BY
DATE REVISED

LAST REVISION 02-15-12
DATE PLOTTED => 16-FEB-2012
TIME PLOTTED => 11:56

Dist	COUNTY	ROUTE	POST MILES TOTAL PROJECT	SHEET No.	TOTAL SHEETS
11	SD	76	L0.0/M2.9	34	44

Mahendra R. Nirmal 02-09-12
REGISTERED ELCTRICAL ENGINEER DATE

02-13-12
PLANS APPROVAL DATE

REGISTERED PROFESSIONAL ENGINEER
MAHENDRA R.NIRMAL
No. E 10689
Exp. 06-30-13
ELECTRICAL
STATE OF CALIFORNIA

THE STATE OF CALIFORNIA OR ITS OFFICERS OR AGENTS SHALL NOT BE RESPONSIBLE FOR THE ACCURACY OR COMPLETENESS OF SCANNED COPIES OF THIS PLAN SHEET.

NOTES:

1 - SEE E-8 FOR CABINET LAYOUT.

2 - 110 PUNCH BLOCK/RJ45 JACK.

3 - OCC.

ABBREVIATIONS AND LEGENDS:

(THIS SHEET ONLY)

VDSL - VERY HIGH SPEED DIGITAL SUBSCRIBER LINE
OCC - OUTDOOR CATEGORY 5E CABLE
□ - NETWORK PORT
⊔ - RJ11, RJ12 OR RJ45 JACK
⊂⊃ - SERIAL CONNECTION

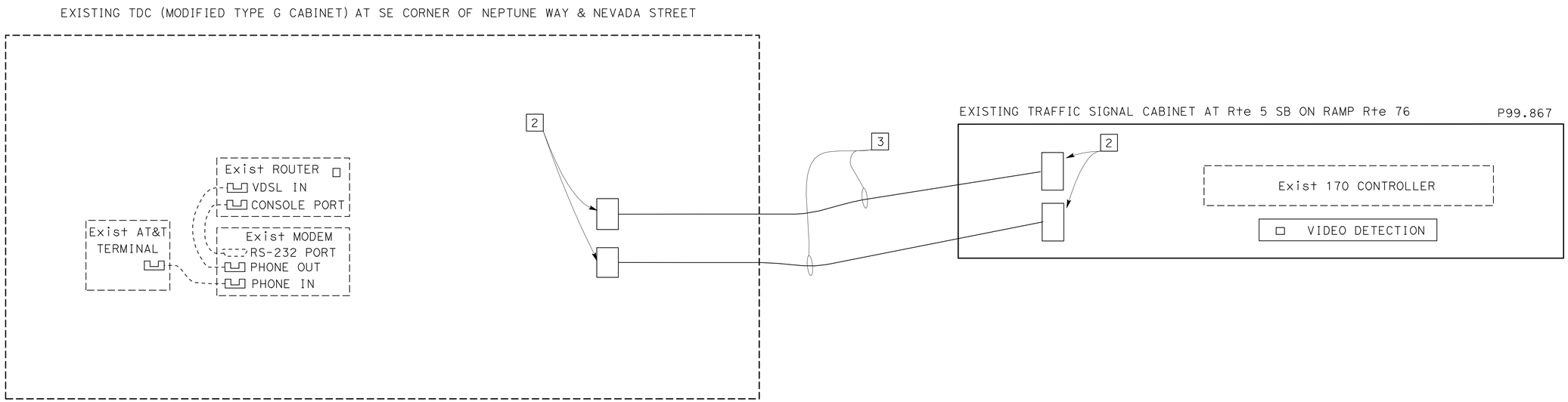

EXISTING TDC CABINET TO TRAFFIC SIGNAL CABINET COMPONENT DIAGRAM

APPROVED FOR ELECTRICAL WORK ONLY

MODIFY SIGNAL AND LIGHTING ELECTRICAL DETAILS

NO SCALE

E-7

REVISED BY | DATE REVISED
MAHENDRA R. NIRMAL | ENRIQUE P. BERNAL
CALCULATED-DESIGNED BY | CHECKED BY
FUNCTIONAL SUPERVISOR: BRIAN PECUS

STATE OF CALIFORNIA - DEPARTMENT OF TRANSPORTATION
Caltrans® TRAFFIC ELECTRICAL

LAST REVISION 02-15-12 | DATE PLOTTED => 16-FEB-2012 | TIME PLOTTED => 11:56

Dist	COUNTY	ROUTE	POST MILES TOTAL PROJECT	SHEET No.	TOTAL SHEETS
11	SD	76	L0.0/M2.9	35	44

Mahendra R. Nirmal 02-09-12
REGISTERED ELECTRICAL ENGINEER DATE

02-13-12
PLANS APPROVAL DATE

REGISTERED PROFESSIONAL ENGINEER MAHENDRA R. NIRMAL No. E 10689 Exp. 06-30-13 ELECTRICAL STATE OF CALIFORNIA

THE STATE OF CALIFORNIA OR ITS OFFICERS OR AGENTS SHALL NOT BE RESPONSIBLE FOR THE ACCURACY OR COMPLETENESS OF SCANNED COPIES OF THIS PLAN SHEET.

NOTES:

1 - THE CONTRACTOR SHALL VERIFY ALL CONTROLLING FIELD DIMENSIONS BEFORE ORDERING OR FABRICATING MATERIAL.

2 - GFCI RECEPTACLES ARE FOR MAINTENANCE EQUIPMENT ONLY.

3 - EXISTING RACK MOUNT SHELF.

4 - EXISTING 110 PUNCH BLOCK/RJ-45 JACK.

5 - EXISTING VDSL SWITCH CABLE AND VDSL CPE CONNECTION POINT.

6 - EXISTING BACK MOUNTING BOARD (1/2" THICK PLYWOOD).

7 - EXISTING 19" EIA RACK RAIL.

8 - BLANK PANEL.

9 - TWO 110 PUNCH BLOCK/RJ-45 JACKS.

ABBREVIATIONS:

(THIS SHEET ONLY)

VDSL - VERY HIGH SPEED DIGITAL SUBSCRIBER LINE
DSL - DIGITAL SUBSCRIBER LINE
CPE - CUSTOMER PREMISES EQUIPMENT

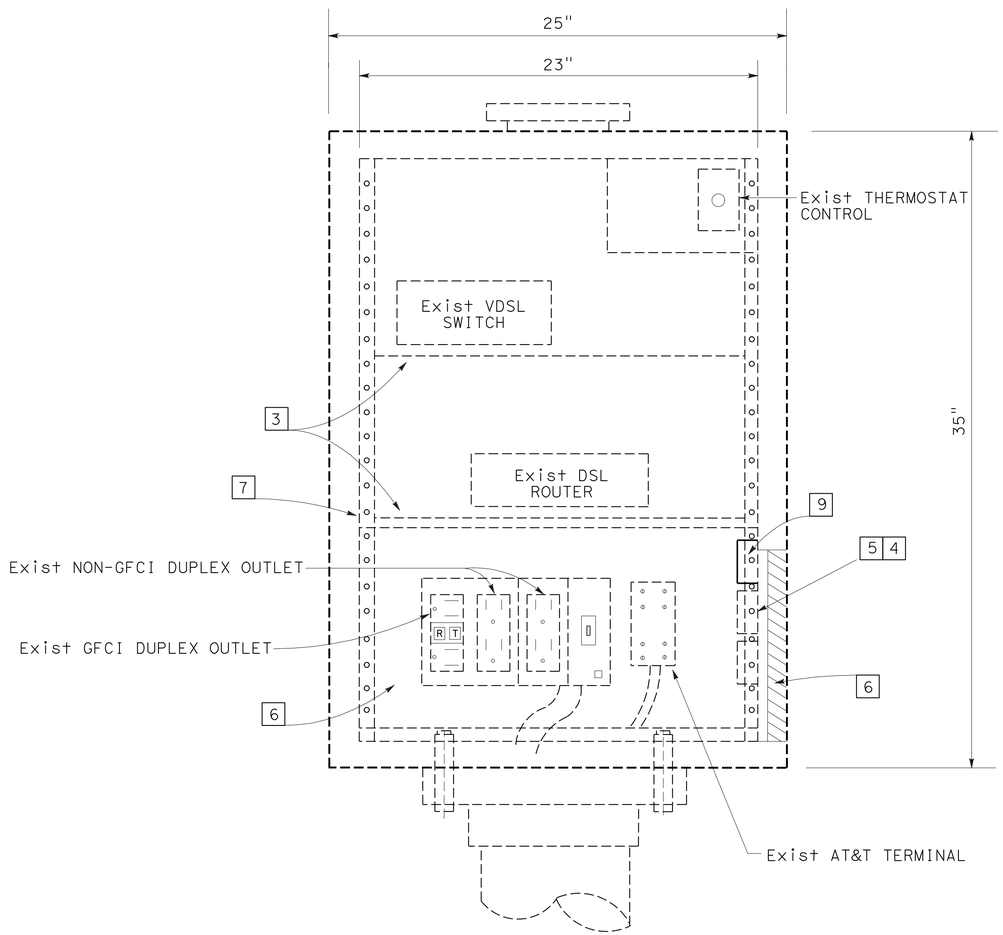

TDC CABINET EQUIPMENT LAYOUT

(EXISTING MODIFIED TYPE G FRONT INTERIOR)

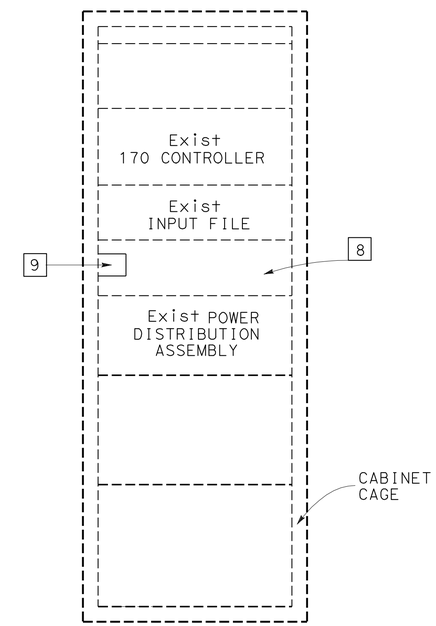

TRAFFIC SIGNAL CABINET EQUIPMENT LAYOUT

(EXISTING TYPE 332)

APPROVED FOR ELECTRICAL WORK ONLY

MODIFY SIGNAL AND LIGHTING ELECTRICAL DETAILS

NO SCALE

E-8

STATE OF CALIFORNIA - DEPARTMENT OF TRANSPORTATION
Caltrans® TRAFFIC ELECTRICAL

FUNCTIONAL SUPERVISOR: BRIAN T. PACUS
CALCULATED-DESIGNED BY: MAHENDRA R. NIRMAL
CHECKED BY: ENRIQUE P. BERNAL
REVISED BY
DATE REVISED

LAST REVISION 02-15-12 DATE PLOTTED => 16-FEB-2012 TIME PLOTTED => 11:56

DIST	COUNTY	ROUTE	POST MILES TOTAL PROJECT	SHEET NO.	TOTAL SHEETS
11	SD	76	L0.0/M2.9	36	44

REGISTERED ELECTRICAL ENGINEER

January 20, 2012
PLANS APPROVAL DATE

REGISTERED PROFESSIONAL ENGINEER Jeffery G. McRae No. E14512 Exp. 6-30-12 ELECTRICAL STATE OF CALIFORNIA

The State of California or its officers or agents shall not be responsible for the accuracy or completeness of electronic copies of this plan sheet.

To accompany plans dated 02-13-12

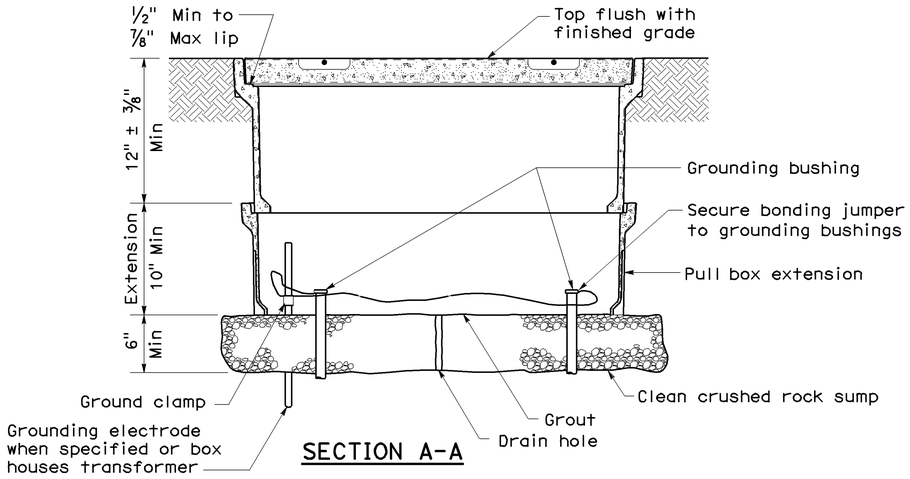

SECTION A-A

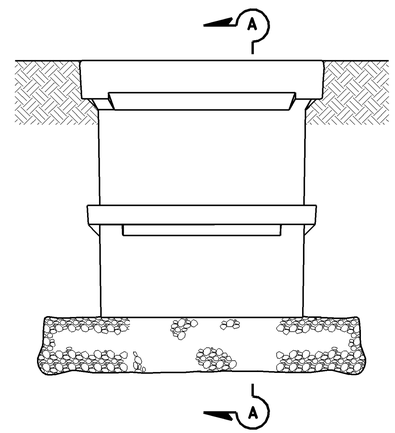

SIDE VIEW

INSTALLATION DETAILS

DETAIL A

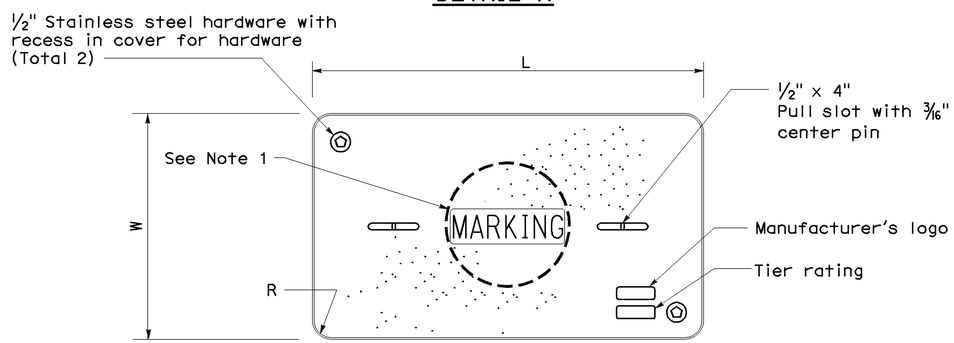

COVER TOP VIEW

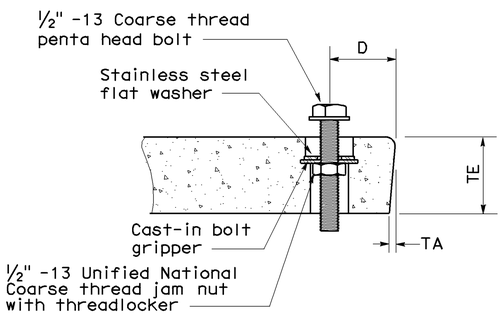

TYPICAL COVER CAPTIVE BOLT
(Or similar)

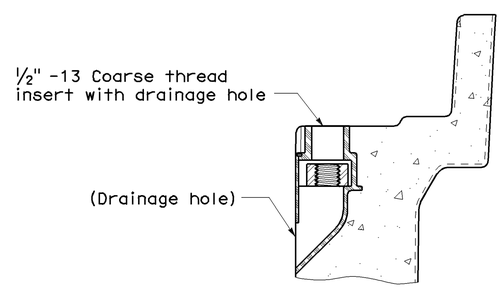

TYPICAL THREADED INSERT
(Or similar)

DIMENSION TABLE

PULL BOX	PULL BOX			COVER						
	Minimum Depth Box	Minimum Depth Extension	Maximum Weight	L	W	R	TE	TA	D	Maximum Weight
No. 3½	12"	N/A	40 lb	1' - 3⅜"	10⅛"	1⅜"	2"	⅛"	1¾"	30 lb
No. 5	12"	10"	55 lb	1' - 11¼"	1' - 1¾"	1⅜"	2"	⅛"	1¾"	60 lb
No. 6	12"	10"	70 lb	2' - 6½"	1' - 5½"	1⅜"	2"	⅛"	2"	85 lb

NOTES ON PULL BOXES:

1. Pull box covers must be marked as follows: "SERVICE" Service circuits between service point and service disconnect; "SPRINKLER-CONTROL" sprinkler control circuits, 50 V or less; "CALTRANS" on all pull boxes, except pull boxes marked "SPRINKLER-CONTROL"; and "TELEPHONE" Telephone service;

   A) No. 3½ pull box.
      1) "SIGNAL" - Traffic signal circuits with or without street or sign lighting circuits.
      2) "ST LIGHTING" - Street or sign lighting circuits where voltage is under 600 V.

   B) No. 5, 6, 9 or 9A pull box.
      1) "TRAFFIC SIGNAL" - Traffic signal circuits with or without street or sign lighting circuits.
      2) "STREET LIGHTING" - Street or sign lighting circuits where voltage is under 600 V.
      3) "STREET LIGHTING-HIGH VOLTAGE" - Street or sign lighting circuits where voltage is above 600 V.
      4) "IRRIGATION" - Circuits to irrigation controller 120 V or more.
      5) "RAMP METER" - Ramp meter circuits.
      6) "COUNT STATION" - Count or speed monitor circuits.
      7) "COMMUNICATIONS" - Communication circuits.
      8) "TOS COMMUNICATIONS" - TOS communication line.
      9) "TOS POWER" -TOS power.
      10) "TDC POWER" - Telephone demarcation cabinet power.
      11) "CCTV" - Closed circuit television circuits.
      12) "TMS" - Traffic monitoring station circuits.
      13) "CMS" - Changeable message sign circuits.
      14) "HAR" - Highway advisory radio circuits.

2. The nominal dimensions of the opening in which the cover sets must be the same as the cover dimensions (L and W) plus ⅛" or greater.

3. Covers and boxes must be interchangeable with California Standard. When interchanged with a standard, the top surfaces must be flush within ⅛". Top outside radius of covers and pull boxes must have a ⅛" radius.

4. Pull box extension may be another pull box as long as the bottom edge of the pull box can fit into the cover opening.

STATE OF CALIFORNIA
DEPARTMENT OF TRANSPORTATION

ELECTRICAL SYSTEMS (PULL BOX)

NO SCALE

NSP ES-8A DATED JANUARY 20, 2012 SUPPLEMENTS THE STANDARD PLANS BOOK DATED MAY 2006.

NEW STANDARD PLAN NSP ES-8A

2006 NEW STANDARD PLAN NSP ES-8A

Dist	COUNTY	ROUTE	POST MILES TOTAL PROJECT	SHEET No.	TOTAL SHEETS
11	SD	76	L0.0/M2.9	37	44

Randell D. Hiatt
REGISTERED CIVIL ENGINEER

May 20, 2011
PLANS APPROVAL DATE

REGISTERED PROFESSIONAL ENGINEER
Randell D. Hiatt
No. C50200
Exp. 6-30-11
CIVIL
STATE OF CALIFORNIA

The State of California or its officers or agents shall not be responsible for the accuracy or completeness of electronic copies of this plan sheet.

To accompany plans dated 02-13-12

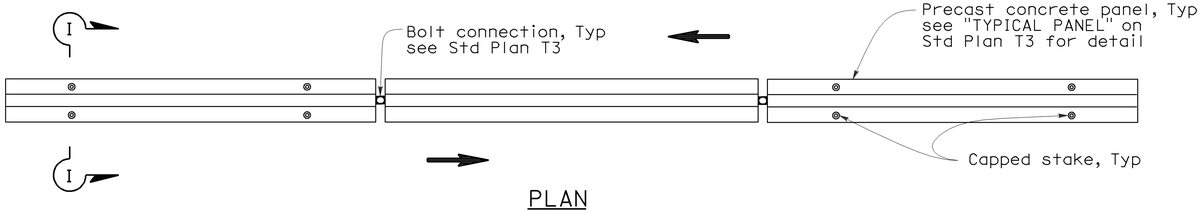

PLAN

RAILING STAKING CONFIGURATION FOR TWO-WAY TRAFFIC

See Note 1

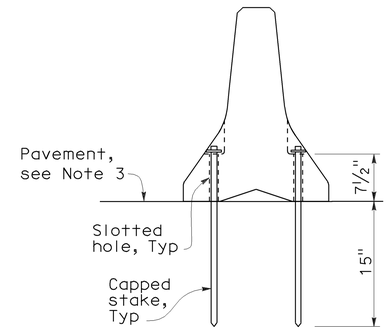

SECTION I-I

NOTES:

1. Where Type K Temporary Railing is placed as a temporary or long term barrier in two-way traffic on highways with less than 24" from the edge of traveled way, use four capped stakes per every other panel with end panels staked.
2. Where Type K Temporary Railing is placed 3" to 24" from the edge of an excavation on highways, use two capped stakes per panel along the traffic side.
3. Staked Type K Temporary Railing must be supported by at least 4" thick concrete, hot mix asphalt or existing asphalt concrete pavement.
4. The minimum yield strength for the washer must be 60,000 psi.
5. Direction of adjacent traffic indicated by ⟹.

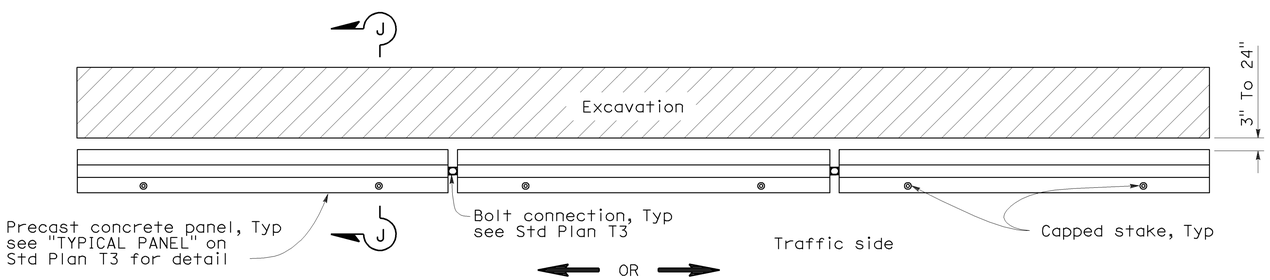

PLAN

RAILING STAKING CONFIGURATION ADJACENT TO AN EXCAVATION

See Note 2

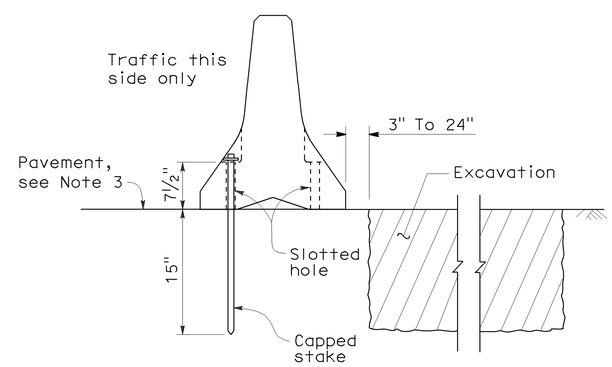

SECTION J-J

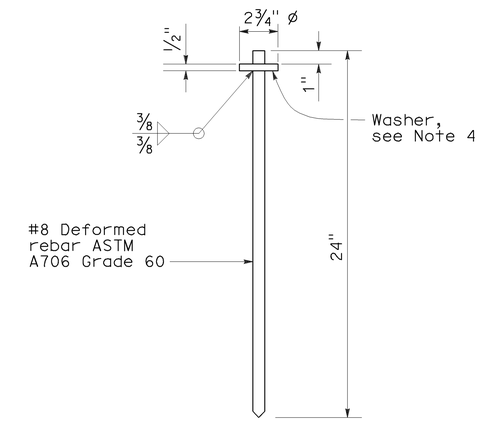

CAPPED STAKE DETAIL

STATE OF CALIFORNIA
DEPARTMENT OF TRANSPORTATION

TEMPORARY RAILING (TYPE K)

NO SCALE

NSP T3A DATED MAY 20, 2011 SUPPLEMENTS
THE STANDARD PLANS BOOK DATED MAY 2006.

NEW STANDARD PLAN NSP T3A

2006 NEW STANDARD PLAN NSP T3A

DIST	COUNTY	ROUTE	POST MILES TOTAL PROJECT	SHEET NO.	TOTAL SHEETS
11	SD	76	L0.0/M2.9	38	44

REGISTERED ELECTRICAL ENGINEER

October 5, 2007
PLANS APPROVAL DATE

REGISTERED PROFESSIONAL ENGINEER Jeffery G. McRae No. E14512 Exp. 6-30-08 ELECTRICAL STATE OF CALIFORNIA

The State of California or its officers or agents shall not be responsible for the accuracy or completeness of electronic copies of this plan sheet.

To accompany plans dated 02-13-12

ELECTROLIERS

STANDARD TYPES
15, 15D
15 STRUCTURE
21, 21D STRUCTURE
30
31
32
35
36-20A

High mast light pole

Double Arm lighting standard

Existing electrolier

Electrolier foundation (Future installation)

NOTES:

1. Luminaires shall be 310 W HPS when installed on Type 21, 21D, 30, 31, 32, 35 and 36-20A Standards, unless otherwise specified. Luminaires shall be 200 W HPS when installed on other type standards or poles, unless otherwise specified.
2. Luminaires shall be the cutoff type, ANSI Type Ⅲ medium cutoff lighting distribution, unless otherwise specified.
3. Variations noted adjacent to symbol on project plans.

Electrolier (see project notes or project plans)

Luminaire on wood pole

STANDARD NOTES:

- AB — Abandon. If applied to conduit, remove conductors.
- BC — Install pull box in existing conduit run.
- BP — Pedestrian barricade, type as indicated on plan.
- CB — Install conduit into existing pull box.
- CC — Connect new and existing conduit. Remove existing conductors and install conductors as indicated.
- CF — Conduit to remain for future use. Remove conductors. Install pull wire or rope.
- DH — Detector handhole.
- FA — Foundation to be abandoned.
- IS — Install sign on signal mast arm.
- NS — No slip base on standard.
- PEC — Photoelectric control.
- PEU — Photoelectric unit.
- RC — Equipment or material to be removed and become the property of the Contractor.
- RE — Remove electrolier, fuses and ballast. Tape ends of conductors.
- RL — Relocate equipment.
- RR — Remove and reuse equipment.
- RS — Remove and salvage equipment.
- SC — Splice new to existing conductors.
- SD — Service disconnect.
- SF — Standard to remain for future use. Remove luminaire, pole conductors, fuses and ballast.
- TSP — Telephone service point.

ABBREVIATIONS AND EQUIPMENT DESIGNATIONS

PROPOSED	EXISTING	
BBS	bbs	Battery backup system
BC	bc	Bolt circle
C	C	Conduit
CCTV	cctv	Closed circuit television
CKT	ckt	Circuit
CMS	cms	Changeable message sign
DLC	dlc	Loop detector lead-in cable
EMS	ems	Extinguishable message sign
EVC	evc	Emergency vehicle cable
EVD	evd	Emergency vehicle detector
FB	fb	Flashing beacon
FBCA	fbca	Flashing beacon control assembly
FBS	fbs	Flashing beacon with slip base
FO	fo	Fiber optic
G	G	Ground (Equipment Grounding Conductor)
GFCI	GFCI	Ground fault circuit interrupt
HAR	har	Highway advisory radio
HEX	hex	Hexagonal
HPS	hps	High pressure sodium
IISNS	iisns	Internally illuminated street name sign
ISL	isl	Induction sign lighting
LED	led	Light emitting diode
LMA	lma	Luminaire mast arm
LPS	lps	Low pressure sodium
LTG	ltg	Lighting
LUM	lum	Luminaire
MAT	mat	Mast arm mounting vehicle signal faces, top attachment
MAS	mas	Mast arm mounting vehicle signal faces, side attachment
MAS-4A	mas-4A	Mast arm mounting vehicle signal faces, side attachment - 4 signal section
MAS-4B	mas-4B	
MAS-4C	mas-4C	
MAS-5A	mas-5A	Mast arm mounting vehicle signal faces, side attachment - 5 signal section
MAS-5B	mas-5B	
MC	mc	Mercury contactor
M/M	m/m	Multiple to multiple transformer
MT	mt	Conduit with pull wire or rope only
MTG	mtg	Mounting
	mv	Mercury vapor lighting fixture
N	N	Neutral (Grounded Conductor)
NC	NC	Normally closed
NO	NO	Normally open
PB	pb	Pull box
PEC	pec	Photoelectric control (Type Ⅰ, Ⅱ, Ⅲ, Ⅳ or Ⅴ as shown)
PED	ped	Pedestrian
PEU	peu	Photoelectric unit
PPB	ppb	Pedestrian push button
RL		Relocated equipment
RM	rm	Ramp metering
SB	sb	Slip base
SIC	sic	Signal interconnect cable
SIG	sig	Signal
SMA	sma	Signal mast arm
SNS	sns	Street name sign
SP	sp	Service point
TDC	tdc	Telephone demarcation cabinet
TMS	tms	Traffic monitoring station
TOS	tos	Traffic Operations System
VEH	veh	Vehicle
XFMR	xfmr	Transformer
COMM	comm	Communication
RWIS	rwis	Roadway weather information system

SOFFIT AND WALL MOUNTED LUMINAIRES

Pendant, 70 W HPS unless otherwise specified.

Flush, 70 W HPS unless otherwise specified.

Wall surface, 70 W HPS unless otherwise specified.

Existing soffit or wall luminaire to remain unmodified.

Existing soffit or wall luminaire to be modified as specified.

NOTE:

Arrow indicates "street side" of luminaire.

STATE OF CALIFORNIA
DEPARTMENT OF TRANSPORTATION

ELECTRICAL SYSTEMS (SYMBOLS AND ABBREVIATIONS)

NO SCALE

RSP ES-1A DATED OCTOBER 5, 2007 SUPERSEDES STANDARD PLAN ES-1A DATED MAY 1, 2006 - PAGE 400 OF THE STANDARD PLANS BOOK DATED MAY 2006.

REVISED STANDARD PLAN RSP ES-1A

2006 REVISED STANDARD PLAN RSP ES-1A

DIST	COUNTY	ROUTE	POST MILES TOTAL PROJECT	SHEET NO.	TOTAL SHEETS
11	SD	76	L0.0/M2.9	39	44

REGISTERED ELECTRICAL ENGINEER

October 5, 2007
PLANS APPROVAL DATE

REGISTERED PROFESSIONAL ENGINEER Jeffery G. McRae No. E14512 Exp. 6-30-08 ELECTRICAL STATE OF CALIFORNIA

The State of California or its officers or agents shall not be responsible for the accuracy or completeness of electronic copies of this plan sheet.

To accompany plans dated 02-13-12

CONDUIT

PROPOSED	EXISTING	
		Lighting Conduit, unless otherwise indicated or noted
		Traffic signal conduit
C	c	Communication conduit
T	t	Telephone conduit
F	f	Fire alarm conduit
FO	fo	Fiber optic conduit
		Conduit termination (RSP ES-9A C)
R	r	Conduit riser in/on structure or service pole

SERVICE EQUIPMENT

PROPOSED	EXISTING	
OH	oh	Overhead lines
U	U	Wood pole "U" indicates utility owned
		Pole guy with anchor
		Utility transformer - ground mounted
III		Service equipment enclosure type
		Service equipment enclosure door indicates front of enclosure
T	t	Telephone demarcation cabinet

POLE-MOUNTED SERVICE DESIGNATION

Type of installation

TYPE H SERVICE - 28'-10" ← Pole height above grade

ILLUMINATED OVERHEAD SIGN

PROPOSED	EXISTING	
		Overhead sign - Single post
		Overhead sign - Two post
		Overhead sign - Mounted on structure
		Overhead sign with electrolier

SIGNAL EQUIPMENT

PROPOSED	EXISTING	
		Pedestrian signal face
		Pedestrian push button post
		Pedestrian barricade
		Vehicle signal face (with backplate, 3-Section: red, yellow and green)
		Vehicle signal face with angle visors
PV	PV	Modifications of basic symbols: "L" Indicates all non-arrow sections louvered "LG" Indicates louvered green section only "PV" indicates 12" programmed visibility sections "8" indicates all 8" sections (only when specified)
		Type 15TS and Vehicle signal face
		Vehicle signal face with red, yellow and green left arrow sections
		Vehicle signal face with red and yellow sections and up green arrow
		Vehicle signal face (5 Section) with red, yellow and green sections and yellow and green right arrows
		Type 1 Standard and attached vehicle signal faces
		Standard with signal mast arm only and attached vehicle signal faces and internally illuminated street name sign
		Type 33 Standard, Left-turn vehicle signal face and sign
		Standard with luminaire and signal mast arms and attached vehicle signal faces
		Cantilever flashing beacon Type 9 Frame, with a sign unless otherwise specified or indicated
		Type 15-FBS Standard with two vehicle signal face sections with lens, backplate and visor with a sign
R	Y	Flashing beacon. One vehicle signal face section with lens, backplate and visor. "R" indicates red indication, "Y" indicates yellow indication
		Controller assembly. Door indicates front of cabinet

SIGNAL EQUIPMENT Cont

PROPOSED	EXISTING	
		Guard post
		Type 1 Standard with "Meter On" sign
		Emergency Vehicle detector

NOTES:

1. All signal sections shall be 12" unless shown otherwise.
2. Signal heads shall be provided with backplates unless shown otherwise.
3. Signal indication shall be LED.

STATE OF CALIFORNIA
DEPARTMENT OF TRANSPORTATION

ELECTRICAL SYSTEMS (SYMBOLS AND ABBREVIATIONS)

NO SCALE

RSP ES-1B DATED OCTOBER 5, 2007 SUPERCEDES STANDARD PLAN ES-1B DATED MAY 1, 2006 - PAGE 401 OF THE STANDARD PLANS BOOK DATED MAY 2006.

REVISED STANDARD PLAN RSP ES-1B

2006 REVISED STANDARD PLAN RSP ES-1B

7-10-07

DIST	COUNTY	ROUTE	POST MILES TOTAL PROJECT	SHEET NO.	TOTAL SHEETS
11	SD	76	L0.0/M2.9	40	44

Jeffery G. McRae
REGISTERED ELECTRICAL ENGINEER

October 5, 2007
PLANS APPROVAL DATE

REGISTERED PROFESSIONAL ENGINEER Jeffery G. McRae No. E14512 Exp. 6-30-08 ELECTRICAL STATE OF CALIFORNIA

The State of California or its officers or agents shall not be responsible for the accuracy or completeness of electronic copies of this plan sheet.

To accompany plans dated 02-13-12

EQUIPMENT IDENTIFICATION

ILLUMINATED SIGN IDENTIFICATION NUMBER:

Sign No. 12345

10 ISL SCI 1.0

- Sign number - Place on post or structure
- Transformer rating (kVA)
- Lighting control type
- Number and type of fixtures

Do NOT place on standard or structure

ELECTROLIER OR EQUIPMENT IDENTIFICATION NUMBER:

12345 - 15'-0"

- Mast arm length, if shown. Do not place on standard or structure.
- Equipment number - Place on standard or structure. Existing equipment numbers are shown in parenthesis

CONDUIT AND CONDUCTOR IDENTIFICATION:

1½"C, 2#10, 15#14, 2 DLC

- Number and size of conductors and cables
- Size of conduit in inches

ø1, ø2, ø2P, etc.	Traffic phase identification for signal faces, detectors and phase diagrams
1 2 3	Project note numbers
A B C	Equipment description, installation or item numbers
1 2 3	Conduit run numbers

SIGNAL AND LIGHTING STANDARD (TYPICAL DESIGNATION):

19A - 3 - 100

- Wind velocity = 100 mph
- Case 3 arm loading
- Standard type
- Standard Plan sheet number
- Detail number or letter

MISCELLANEOUS EQUIPMENT

PROPOSED	EXISTING	
CMS	cms	Changeable message sign
		Closed circuit television camera
		Highway advisory radio pole and antenna
EMS	ems	Extinguishable message sign
M V	m v	Detection device M = Microwave sensor V = Video image sensor

WIRING DIAGRAM LEGEND

P	Pole
CB	Circuit breaker
A	Ampere
V	Volt
M	Metered
UM	Unmetered
NB	Neutral bus
GB	Ground bus
G	Equipment grounding conductor
N	Grounded conductor (Neutral)

- External conductor
- Conductor or bus
- Tie point
- Contactor coil
- Contactor, Contact NO
- Terminal blocks
- Contactor, Contact NC
- Enclosure bond
- Grounding electrode
- Circuit breaker
- Receptacle

PULL BOXES

PROPOSED EXISTING

Pull box-No. 5 unless otherwise indicated or noted.

3 9A(21)

Pull box-Additional designations or descriptions

3	= No. 3½ pull box
5	= No. 5 pull box
6	= No. 6 pull box
7	= No. 7 (Ceiling pull box)
8	= No. 8 (Pendant soffit pull box)
9	= No. 9 pull box
9A	= No. 9A pull box

(C)	= Communications pull box
(E)	= Pull box with extension
(S)	= Sprinkler control pull box
(21)	= Anchor bolts and conduit for future installation of Type 21 Standard
(T)	= Traffic pull box

VEHICLE DETECTORS

5 J 9 U

- Vehicle detector designation
- U = Upper
- L = Lower
- Slot number in input file
- Input file (I or J)
- Phase

PROPOSED EXISTING

	Type A detector loop. Outline of sawcut shown.
	Type B detector loop. Outline of sawcut shown.
	Type C detector loop. Outline of sawcut shown.
	Type D detector loop. Outline of sawcut shown.
	Type E detector loop. Outline of sawcut shown.
	Type Q detector loop. Outline of sawcut shown.
	Magnetic detector
DH dh	Detector handhole
	Microwave or video detection zone

STATE OF CALIFORNIA
DEPARTMENT OF TRANSPORTATION

ELECTRICAL SYSTEMS (SYMBOLS AND ABBREVIATIONS)

NO SCALE

RSP ES-1C DATED OCTOBER 5, 2007 SUPERCEDES STANDARD PLAN ES-1C DATED MAY 1, 2006 - PAGE 402 OF THE STANDARD PLANS BOOK DATED MAY 2006.

REVISED STANDARD PLAN RSP ES-1C

2006 REVISED STANDARD PLAN RSP ES-1C

7-10-07

DIST	COUNTY	ROUTE	POST MILES TOTAL PROJECT	SHEET NO.	TOTAL SHEETS
11	SD	76	L0.0/M2.9	41	44

REGISTERED ELECTRICAL ENGINEER

October 5, 2007
PLANS APPROVAL DATE

REGISTERED PROFESSIONAL ENGINEER Jeffery G. McRae No. E14512 Exp. 6-30-08 ELECTRICAL STATE OF CALIFORNIA

The State of California or its officers or agents shall not be responsible for the accuracy or completeness of electronic copies of this plan sheet.

To accompany plans dated 02-13-12

2006 REVISED STANDARD PLAN RSP ES-5A

LOOP INSTALLATION PROCEDURE

1. Loops shall be centered in lanes.
2. Saw slots in pavement for loop conductors as shown in details.
3. Distance between side of loop and a lead-in saw cut from adjacent detectors shall be 2'-0" minimum. Distance between lead-in saw cuts shall be 6" minimum.
4. Bottom of saw slot shall be smooth with no sharp edges.
5. Slots shall be washed until clean, blown out and thoroughly dried before installing loop conductors.
6. Adjacent loops on the same sensor unit channel shall be wound in opposite directions.
7. Identify and tag loop circuit pairs in the pull box with loop number, start (S) and finish (F) of conductor. Identify and tag lead-in-cable with sensor number and phase.
8. Install loop conductor in slot using a 3/16" to 1/4" thick wood paddle. Hold loop conductors with wood paddles (at the bottom of the sawed slot) during sealant placement.
9. No more than 2 twisted pairs shall be installed in one sawed slot.
10. Allow additional 5'-0" of slack length of conductor for the lead-in run to pull box.
11. The additional length of each conductor for each loop shall be twisted together into a pair (6 turns per 3'-4" minimum) before being placed in the slot and conduit leading to pull box.
12. Test each loop circuit for continuity, circuit resistance and insulation resistance at the pull box before filling slots.
13. Fill slots as shown in details.
14. Splice loop conductors to lead-in-cable. Splices shall be soldered.
15. End of lead-in-cable and Type 2 loop conductor shall be waterproofed prior to installing in conduit to prevent moisture from entering the cable.
16. Lead-in-cable shall not be spliced between the pull box and the controller cabinet terminals.
17. Test each loop circuit for continuity, circuit resistance and insulation resistance at the controller cabinet location.
18. Where loop conductors are not to be spliced to a lead-in-cable, the ends of the conductors shall be taped and waterproofed with electrical insulating coating.

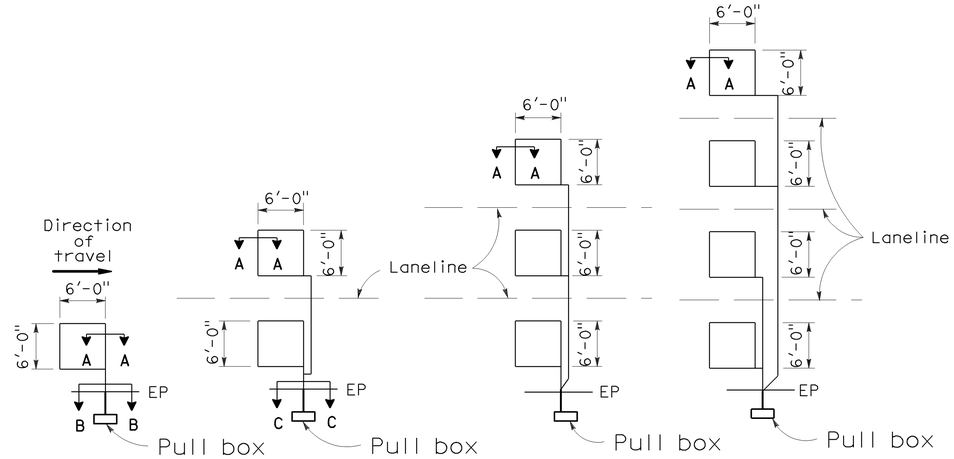

TYPE 1A INSTALLATION | TYPE 2A INSTALLATION | TYPE 3A INSTALLATION | TYPE 4A INSTALLATION

SAWCUT DETAILS

(Type A loop detector configurations illustrated)

1. 1A thru 4A = 1 Type A loop configuration in each lane.
2. 1B thru 4B = 1 Type B loop configuration in each lane.
3. 1C = 1 Type C loop configuration entering lanes as required.
4. 1D thru 4D = 1 Type D loop configuration in each lane.
5. 1E thru 4E = 1 Type E loop configuration in each lane.
6. 1Q thru 4Q = 1 Type Q loop configuration in each lane. (Use Type A, B, C, D, E or Q loop detector configurations only when specified or shown on plans)

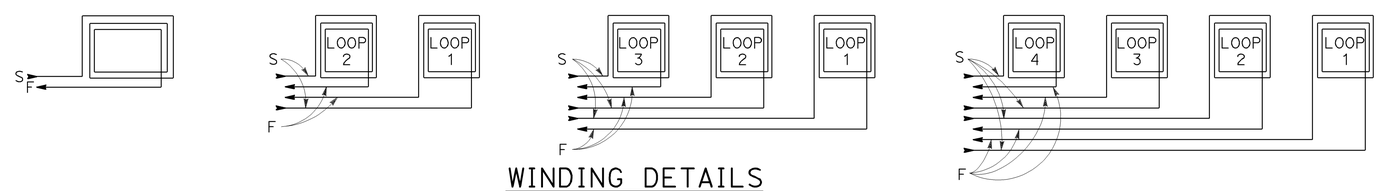

WINDING DETAILS

See Notes 6 and 7

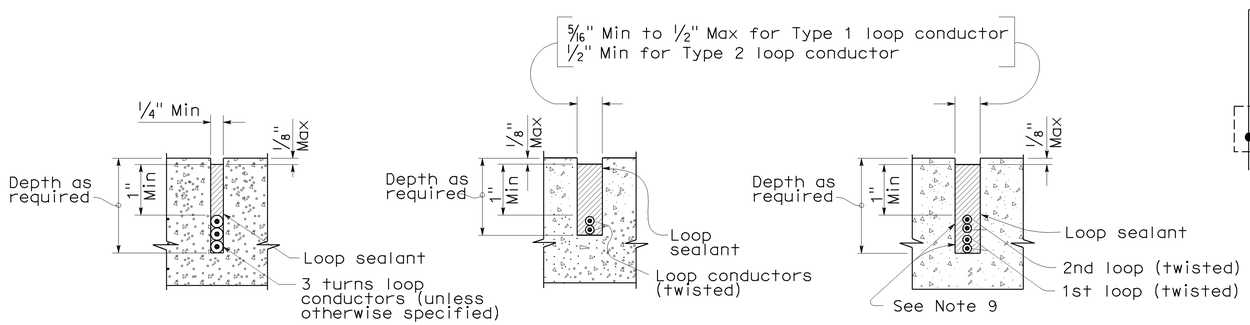

SECTION A-A | SECTION B-B | SECTION C-C

SLOT DETAILS - TYPE 1 AND TYPE 2 LOOP CONDUCTOR

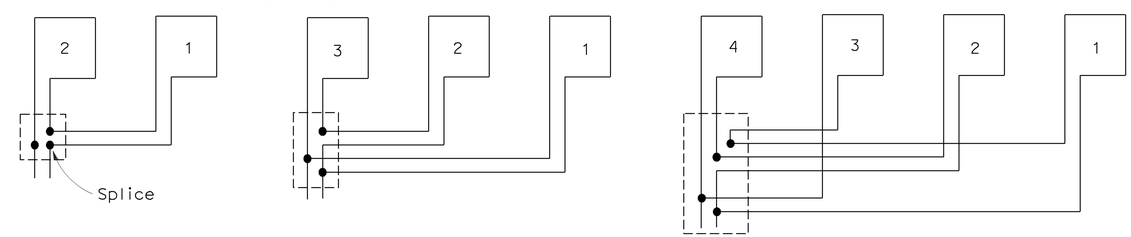

TYPICAL LOOP CONNECTIONS

(Dashed lines represent the pull box)

STATE OF CALIFORNIA
DEPARTMENT OF TRANSPORTATION

ELECTRICAL SYSTEMS (DETECTORS)

NO SCALE

RSP ES-5A DATED OCTOBER 5, 2007 SUPERCEDES STANDARD PLAN ES-5A DATED MAY 1, 2006 - PAGE 423 OF THE STANDARD PLANS BOOK DATED MAY 2006.

REVISED STANDARD PLAN RSP ES-5A

8-17-07

DIST	COUNTY	ROUTE	POST MILES TOTAL PROJECT	SHEET NO.	TOTAL SHEETS
11	SD	76	L0.0/M2.9	42	44

Randell D. Hiatt
REGISTERED CIVIL ENGINEER

June 6, 2008
PLANS APPROVAL DATE

REGISTERED PROFESSIONAL ENGINEER
Randell D. Hiatt
No. C50200
Exp. 6-30-09
CIVIL
STATE OF CALIFORNIA

The State of California or its officers or agents shall not be responsible for the accuracy or completeness of electronic copies of this plan sheet.

To accompany plans dated 02-13-12

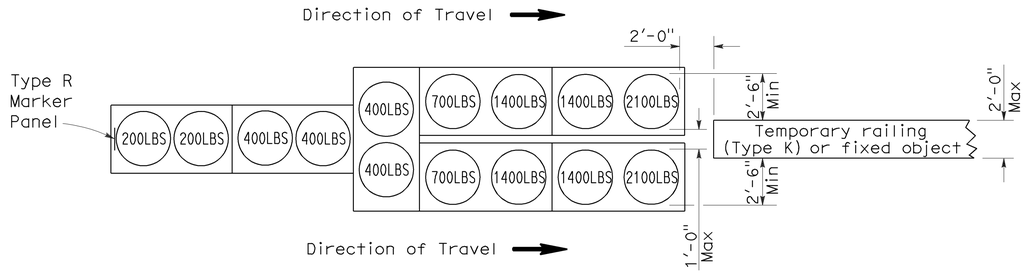

ARRAY 'TU14'

Approach speed 45 mph or more

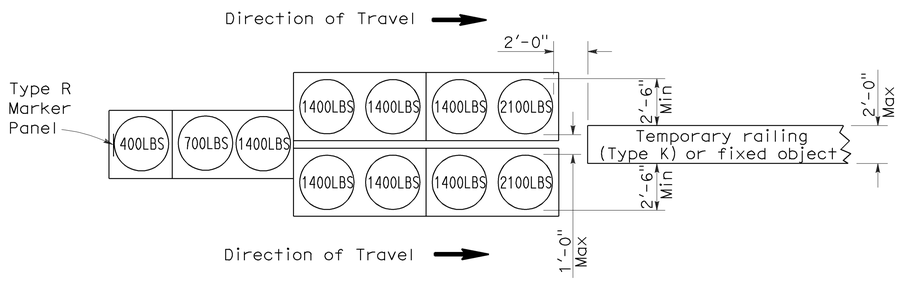

ARRAY 'TU11'

Approach speed less than 45 mph

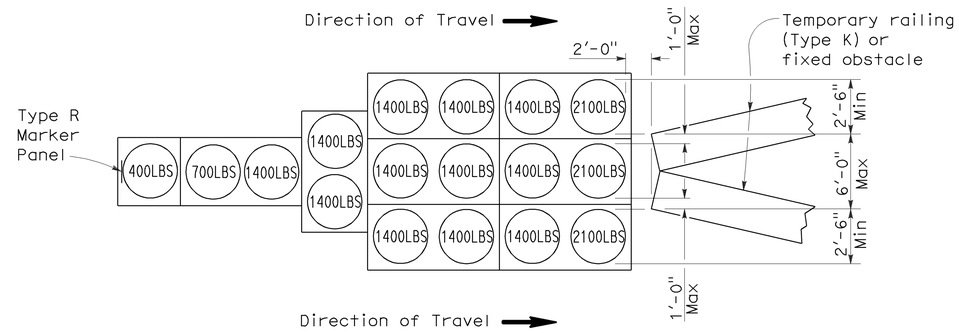

ARRAY 'TU17'

Approach speed less than 45 mph

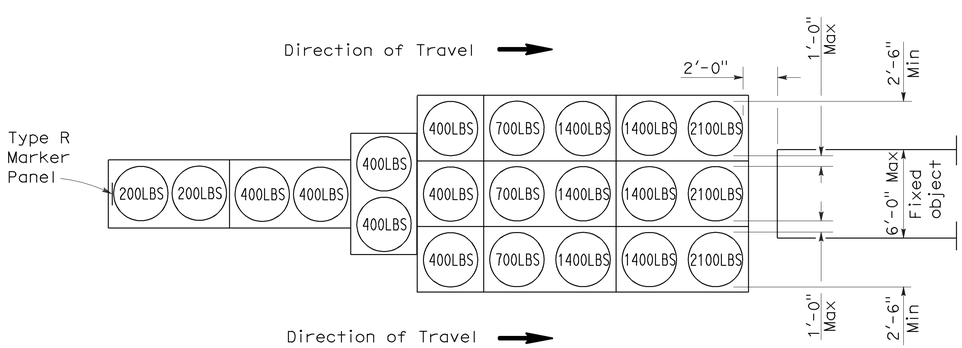

ARRAY 'TU21'

Approach speed 45 mph or more

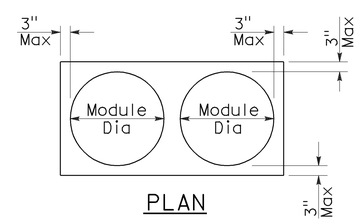

PLAN

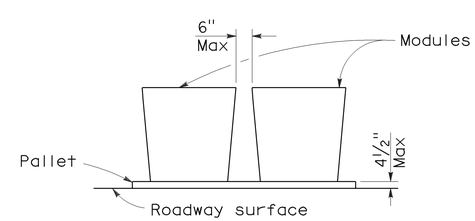

ELEVATION

CRASH CUSHION PALLET DETAIL

See Note 7

NOTES:

1. (XXX) Indicates sand filled module location and weight of sand in pounds for each module. Module spacing is based on the greater diameter of the module.
2. All sand weights are nominal.
3. Temporary crash cushion arrays shall not encroach on the traveled way.
4. Place the top of Type R marker panel 1" below the module lid.
5. Refer to Standard Plan A73B for marker details.
6. Approach speeds indicated conform to NCHRP 350 Report criteria.
7. Use of pallets is optional.

STATE OF CALIFORNIA
DEPARTMENT OF TRANSPORTATION

TEMPORARY CRASH CUSHION, SAND FILLED (UNIDIRECTIONAL)

NO SCALE

RSP T1A DATED JUNE 6, 2008 SUPERSEDES STANDARD PLAN T1A
DATED MAY 1, 2006 - PAGE 211 OF THE STANDARD PLANS BOOK DATED MAY 2006.

REVISED STANDARD PLAN RSP T1A

2006 REVISED STANDARD PLAN RSP T1A

DIST	COUNTY	ROUTE	POST MILES TOTAL PROJECT	SHEET NO.	TOTAL SHEETS
11	SD	76	L0.0/M2.9	43	44

Randell D. Hiatt
REGISTERED CIVIL ENGINEER

June 6, 2008
PLANS APPROVAL DATE

REGISTERED PROFESSIONAL ENGINEER
Randell D. Hiatt
No. C50200
Exp. 6-30-09
CIVIL
STATE OF CALIFORNIA

The State of California or its officers or agents shall not be responsible for the accuracy or completeness of electronic copies of this plan sheet.

To accompany plans dated 02-13-12

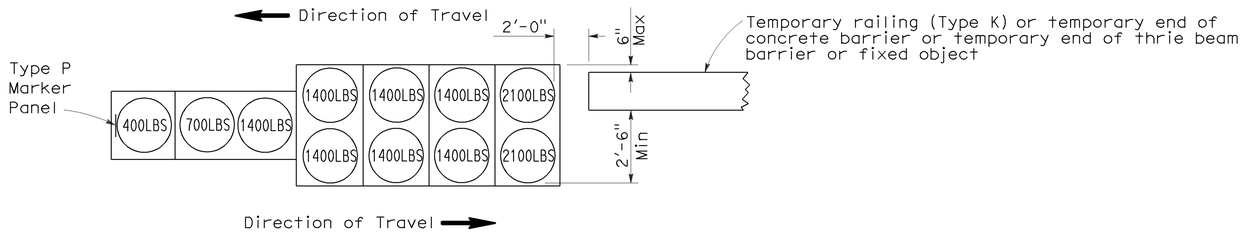

ARRAY 'TB11'

Approach speed less than 45 mph

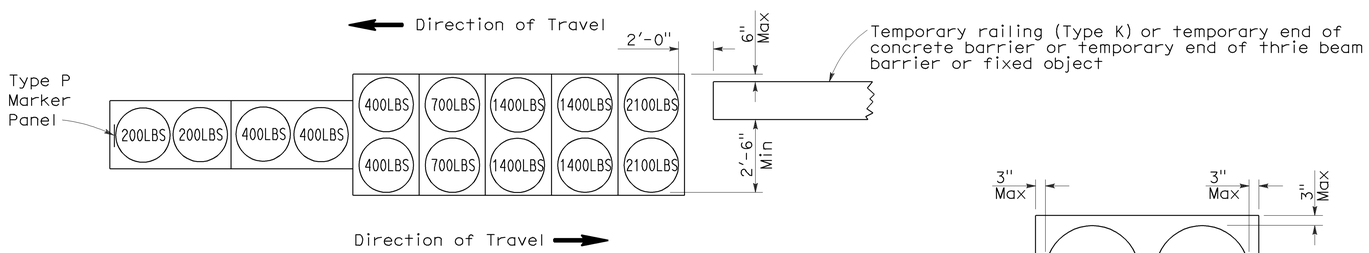

ARRAY 'TB14'

Approach speed 45 mph or more

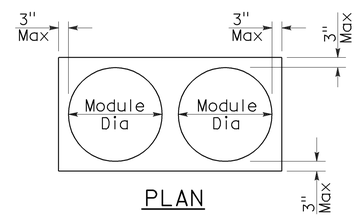

PLAN

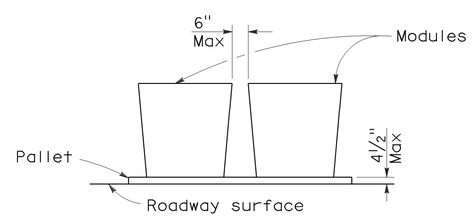

ELEVATION

CRASH CUSHION PALLET DETAIL

See Note 7

NOTES:

1. (XXX) Indicates sand filled module location and weight of sand in pounds for each module. Module spacing is based on the greater diameter of the module.
2. All sand weights are nominal.
3. Temporary crash cushion arrays shall not encroach on the traveled way.
4. Place the Type P marker panel so that the bottom of the panel rests upon the pallet.
5. Refer to Standard Plan A73B for marker details.
6. Approach speeds indicated conform to NCHRP 350 Report criteria.
7. Use of pallets is optional.

STATE OF CALIFORNIA
DEPARTMENT OF TRANSPORTATION

TEMPORARY CRASH CUSHION, SAND FILLED (BIDIRECTIONAL)

NO SCALE

RSP T1B DATED JUNE 6, 2008 SUPERSEDES STANDARD PLAN T1B
DATED MAY 1, 2006 - PAGE 212 OF THE STANDARD PLANS BOOK DATED MAY 2006.

REVISED STANDARD PLAN RSP T1B

2006 REVISED STANDARD PLAN RSP T1B

5-15-08

DIST	COUNTY	ROUTE	POST MILES TOTAL PROJECT	SHEET NO.	TOTAL SHEETS
11	SD	76	L0.0/M2.9	44	44

Randell D. Hiatt
REGISTERED CIVIL ENGINEER

June 6, 2008
PLANS APPROVAL DATE

REGISTERED PROFESSIONAL ENGINEER
Randell D. Hiatt
No. C50200
Exp. 6-30-09
CIVIL
STATE OF CALIFORNIA

The State of California or its officers or agents shall not be responsible for the accuracy or completeness of electronic copies of this plan sheet.

To accompany plans dated 02-13-12

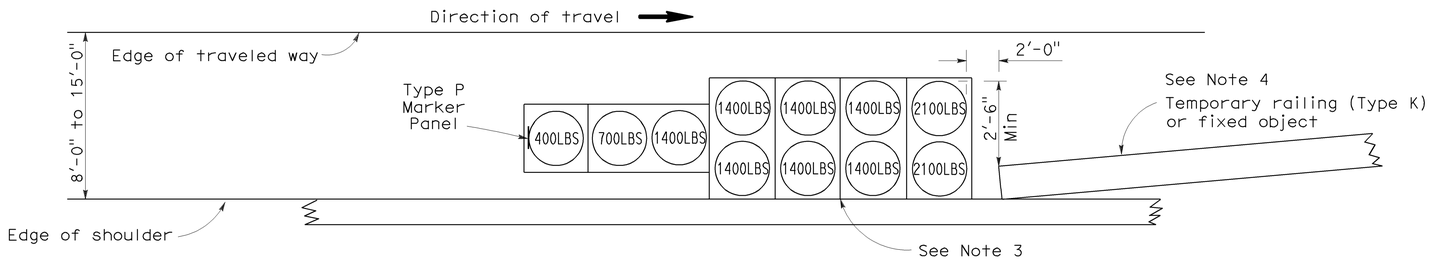

ARRAY 'TS11'

Approach speed less than 45 mph
See Note 9

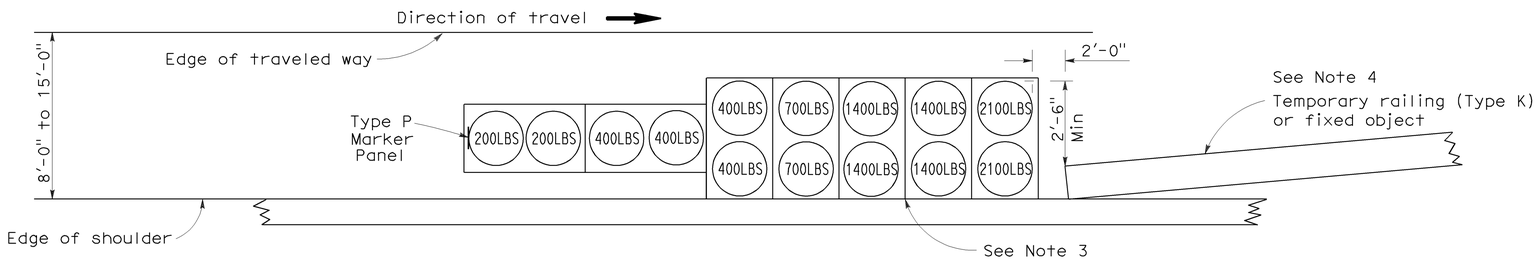

ARRAY 'TS14'

Approach speed 45 mph or more
See Note 9

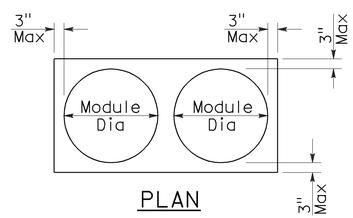

PLAN

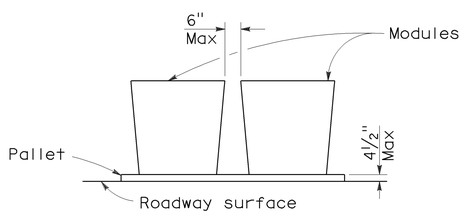

ELEVATION

CRASH CUSHION PALLET DETAIL

See Note 11

NOTES:

1. (XXX) Indicates sand filled module location and weight of sand in pounds for each module. Module spacing is based on the greater diameter of the module.
2. All sand weights are nominal.
3. The temporary crash cushion arrays shown on this plan shall be used only in locations where there will be traffic on one side of the temporary crash cushion array.
4. If the fixed object or approach end of the temporary railing is less than 15'-0" from the edge of traveled way, a temporary crash cushion is required in a construction or work zone.
5. Temporary crash cushion arrays shall not encroach on the traveled way.
6. Arrays for median shoulders shall conform to details shown on this plan for outside shoulders.
7. Place the Type P marker panel so that the bottom of the panel rests upon the pallet and faces traffic.
8. Refer to Standard Plan A73B for marker details.
9. For shoulder widths less than 8'-0", appropriate approved crash cushion protection, other than sand filled modules, shall be provided at fixed objects and at approach ends of temporary railing. The specific type of crash cushion shall be as shown on the project plans or as specified in the Special Provisions, or if not shown on the project plans or specified in the Special Provisions, shall be as approved by the Engineer.
10. Approach speeds indicated conform to NCHRP 350 Report criteria.
11. Use of pallets is optional.

STATE OF CALIFORNIA
DEPARTMENT OF TRANSPORTATION

TEMPORARY CRASH CUSHION, SAND FILLED (SHOULDER INSTALLATIONS)

NO SCALE

RSP T2 DATED JUNE 6, 2008 SUPERSEDES STANDARD PLAN T2
DATED MAY 1, 2006 - PAGE 213 OF THE STANDARD PLANS BOOK DATED MAY 2006.

REVISED STANDARD PLAN RSP T2

2006 REVISED STANDARD PLAN RSP T2

5-15-08