Dist	COUNTY	ROUTE	POST MILES TOTAL PROJECT	SHEET No.	TOTAL SHEETS
11	SD	75	9.3/10.1	1	62

SPT-P075(037)E

STATE OF CALIFORNIA
DEPARTMENT OF TRANSPORTATION

PROJECT PLANS FOR CONSTRUCTION ON
STATE HIGHWAY

IN SAN DIEGO COUNTY
IN SAN DIEGO AND IMPERIAL BEACH
FROM SATURN BOULEVARD TO 13TH STREET

TO BE SUPPLEMENTED BY STANDARD PLANS DATED MAY 2006

INDEX OF PLANS

SHEET NO.	DESCRIPTION
1	TITLE AND LOCATION MAP
2	PROJECT CONTROL
3-10	LAYOUT
11-20	CONSTRUCTION DETAILS
21-27	UTILITY PLAN
28	CONSTRUCTION AREA SIGNS
29-33	SIGNS PLANS, DETAILS AND QUANTITIES
34-35	SUMMARY OF QUANTITIES
36-46	ELECTRICAL PLANS
47-48	SPECIAL ELECTRICAL STRUCTURES
49-62	NEW AND REVISED STANDARD PLANS

THE STANDARD PLANS LIST APPLICABLE TO THIS CONTRACT IS INCLUDED IN THE NOTICE TO BIDDERS AND SPECIAL PROVISIONS BOOK.

LOCATION MAP

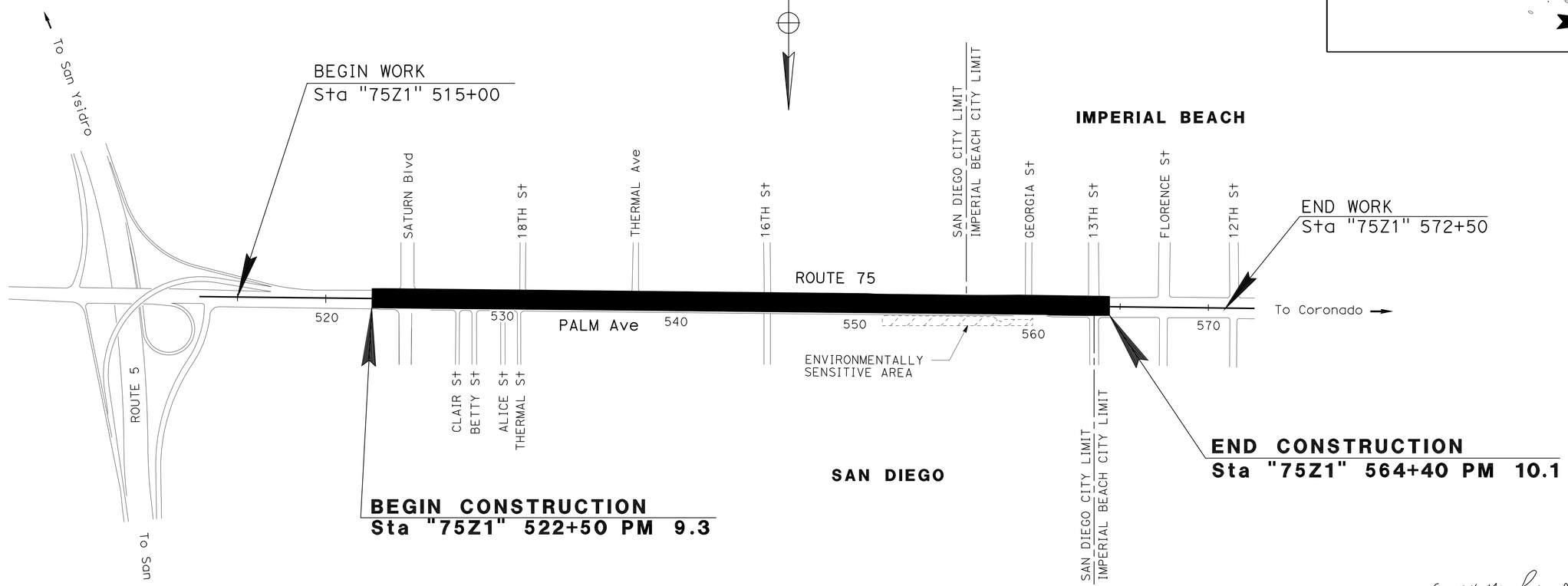

NO SCALE

THE CONTRACTOR SHALL POSSESS THE CLASS (OR CLASSES) OF LICENSE AS SPECIFIED IN THE "NOTICE TO BIDDERS."

PROJECT MANAGER: ABU-BAKR H AL-JAFRI

DESIGN ENGINEER: GEORGE MAMAGHANI

PROJECT ENGINEER REGISTERED CIVIL ENGINEER — DATE 06-07-11

REGISTERED PROFESSIONAL ENGINEER — GEORGE H. MAMAGHANI — No. 44842 — Exp. 3-31-12 — CIVIL — STATE OF CALIFORNIA

June 27, 2011
PLANS APPROVAL DATE

THE STATE OF CALIFORNIA OR ITS OFFICERS OR AGENTS SHALL NOT BE RESPONSIBLE FOR THE ACCURACY OR COMPLETENESS OF SCANNED COPIES OF THIS PLAN SHEET.

CONTRACT No.	11-296714
PROJECT ID	1100020264

LAST REVISION 06-24-11

DATE PLOTTED => 30-JUN-2011
TIME PLOTTED => 09:43

Dist	COUNTY	ROUTE	POST MILES TOTAL PROJECT	SHEET No.	TOTAL SHEETS
11	SD	75	9.3/10.1	2	62

06-08-11
PROFESSIONAL LAND SURVEYOR DATE

06-27-11
PLANS APPROVAL DATE

PROFESSIONAL LAND SURVEYOR MARK D. PHELAN L.S.7111 EXP:12-31-12 STATE OF CALIFORNIA

THE STATE OF CALIFORNIA OR ITS OFFICERS OR AGENTS SHALL NOT BE RESPONSIBLE FOR THE ACCURACY OR COMPLETENESS OF SCANNED COPIES OF THIS PLAN SHEET.

NOTES:

1. CONTACT DISTRICT 11 DIVISION OF LAND SURVEYS, PHONE (858)467-4305, FOR ADDITIONAL INFORMATION OR QUERIES REGARDING THIS SURVEY PROJECT CONTROL.
2. BASIS OF BEARINGS AND COORDINATES
   FOR THIS PROJECT IS THE CALIFORNIA COORDINATE SYSTEM OF 1983, HPGN EPOCH ADJUSTMENT [CCS 83 (1991.35)], ZONE 6. 3RD ORDER PROJECT CONTROL WORK STATIONS WERE ESTABLISHED IN MARCH 2008 ACCORDING TO CRITERIA SET FORTH IN THE FEDERAL GEODETIC CONTROL SUBCOMMITTEE'S "GEOMETRIC GEODETIC ACCURACY STANDARDS AND SPECIFICATIONS FOR USING GPS RELATIVE POSITIONING TECHNIQUES" REPRINTED AUGUST 1, 1989.

   THIS GPS FAST STATIC SURVEY WAS CONSTRAINED TO "CALTRANS" 2ND ORDER STATIONS 75-11.4, 75-K 15.4 AND F 1412 RESULTING IN 3RD ORDER ACCURACIES PER THE ABOVE-REFERENCED STANDARDS.
3. BASIS OF ELEVATIONS
   FOR THIS PROJECT IS THE NORTH AMERICAN VERTICAL DATUM OF 1988 (NAVD 88). ELEVATIONS WERE ESTABLISHED BY DIFFERENTIAL LEVELS CONSTRAINING TO USC&GS BENCH MARK Y 895 BEING 40.64.
4. IN THE EVENT GPS MACHINE CONTROL/GUIDANCE IS USED FOR THIS PROJECT, THE CONTRACTOR SHALL CONTACT AND MEET WITH DISTRICT 11 LAND SURVEY DIVISION TO OBTAIN THE CONTROL NECESSARY TO ESTABLISH A PROJECT CALIBRATION COMPATIBLE FOR ALL USERS.

LEGEND:

(2) 2ND ORDER STATION

(3) 3RD ORDER WORK POINT

ABBREVIATIONS:

CADT	CALIFORNIA DEPARTMENT OF TRANSPORTATION
NGS	NATIONAL GEODETIC SURVEY
USC&GS	UNITED STATES COAST & GEODETIC SURVEY
STD	STANDARD
BR	BRASS
IP	IRON PIPE
BM	BENCH MARK

CONTROL FOR DESIGN AND CONSTRUCTION

STATION DESIGNATION	ORDER	NORTHING	EASTING	ELEVATION	DESCRIPTION
75-11.4	2ND	1,796,090.80	6,292,867.58	11.58	2¼" CADT BR DISK IN IP
75-K 15.4	2ND	1,793,268.16	6,300,524.29		2¼" CADT BR DISK IN IP
F 1412	2ND	1,790,585.56	6,305,361.42	56.69	NGS STD DISK IN BRIDGE DECK
Y 895	2ND	1,793,285.14	6,303,839.67	40.64	3½" USC&GS BM DISK IN BRIDGE
WP 52887	3RD	1,793,260.36	6,301,666.12	14.86	PK & WASHER IN AC
WP 53440L	3RD	1,793,205.57	6,301,114.12	18.09	"X" IN SIDEWALK
WP 53529	3RD	1,793,268.32	6,301,023.91	18.94	PK & WASHER IN AC
WP 54045	3RD	1,793,275.00	6,300,507.82	24.61	PK & WASHER
WP 54530R	3RD	1,793,339.29	6,300,025.63	23.65	"X" IN SIDEWALK
WP 55030	3RD	1,793,286.74	6,299,525.49	23.57	PK & WASHER
WP 55275	3RD	1,793,290.68	6,299,277.89	18.50	PK & WASHER
WP 55800	3RD	1,793,293.22	6,298,753.48	16.06	PK & WASHER
WP 55925	3RD	1,793,350.53	6,298,627.48	14.77	PK & WASHER
WP 56240	3RD	1,793,293.38	6,298,310.51	23.50	"X" IN MEDIAN
WP 58955R	3RD	1,793,402.57	6,295,599.91	18.36	"X" IN SIDEWALK
WP 58978L	3RD	1,793,273.00	6,295,573.38	19.29	"X" IN SIDEWALK
WP 59095R	3RD	1,793,400.22	6,295,462.48	16.95	"X" IN SIDEWALK
WP 59410R	3RD	1,793,416.94	6,295,148.14	18.98	"X" IN SIDEWALK
WP 59630	3RD	1,793,369.61	6,294,924.41	23.81	"X" IN MEDIAN

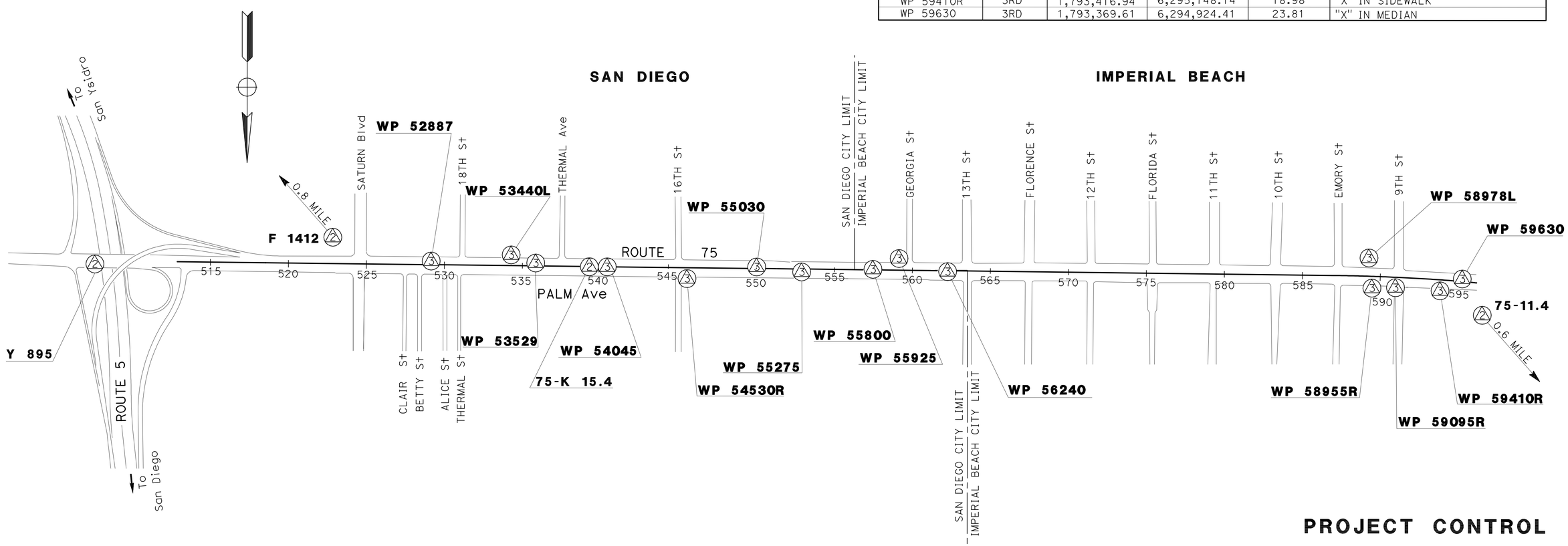

THIS PLAN ACCURATE FOR PROJECT CONTROL INFORMATION ONLY

PROJECT CONTROL

NO SCALE

PC-1

REVISED BY	DATE REVISED

CALCULATED-DESIGNED BY: MARK PHELAN
CHECKED BY: NED SALMAN
FUNCTIONAL SUPERVISOR: BRUCE URQUHART

STATE OF CALIFORNIA - DEPARTMENT OF TRANSPORTATION
Caltrans® LAND SURVEYS DIVISION

LAST REVISION 06-24-11
DATE PLOTTED => 07-JUL-2011
TIME PLOTTED => 09:47

Dist	COUNTY	ROUTE	POST MILES TOTAL PROJECT	SHEET No.	TOTAL SHEETS
11	SD	75	9.3/10.1	3	62

REGISTERED CIVIL ENGINEER 06-07-11 DATE

06-27-11
PLANS APPROVAL DATE

GEORGE H. MAMAGHANI No. 44842 Exp. 3-31-12 CIVIL — REGISTERED PROFESSIONAL ENGINEER — STATE OF CALIFORNIA

THE STATE OF CALIFORNIA OR ITS OFFICERS OR AGENTS SHALL NOT BE RESPONSIBLE FOR THE ACCURACY OR COMPLETENESS OF SCANNED COPIES OF THIS PLAN SHEET.

NOTES:

1. FOR ACCURATE RIGHT OF WAY AND ACCESS DATA, CONTACT RIGHT OF WAY ENGINEERING AT THE DISTRICT OFFICE.
2. LOCATION OF DRIVEWAYS AND CURB RAMPS ARE APPROXIMATE.
3. FINAL DRIVEWAYS AND RAMPS LOCATIONS SHALL BE DETERMINED BY THE ENGINEER.
4. THE DETECTABLE WARNING SUFACE DIMENSIONS ARE 3' X 4', UNLESS OTHERWISE SPECIFIED.
5. TYPICAL WIDTH OF SIDEWALKS ARE EQUAL TO 5', UNLESS OTHERWISE SHOWN ON THE PLANS
6. SEE CONSTRUCTION DETAILS FOR SECTION VIEWS, UNLESS OTHERWISE SHOWN
7. SEE CONSTRUCTION DETAILS FOR DRIVEWAY TYPES AND SIDEWALK TRANSITIONS.

LEGEND:

- REMOVE AC SURFACING REPLACE WITH PCC
- Misc CONCRETE AREA
- X — DRIVEWAY NUMBER
- REPLACE PCC DRIVEWAY
- REPLACE PCC SIDEWALK
- ENVIRONMENTALLY SENSITIVE AREA
- T.C.E. — TEMPORARY CONSTRUCTION EASEMENT
- XX — SUB-LOCATION
- REMOVE PCC, REPLACE WITH RAPID STRENGTH PCC
- ROCK BLANKET
- REMOVE AC SURFACING, PLACE MINOR HMA
- REMOVE AC SURFACING REPLACE WITH RAPID STRENGTH PCC
- TEMPORARY DRAINAGE INLET PROTECTION

SAN DIEGO

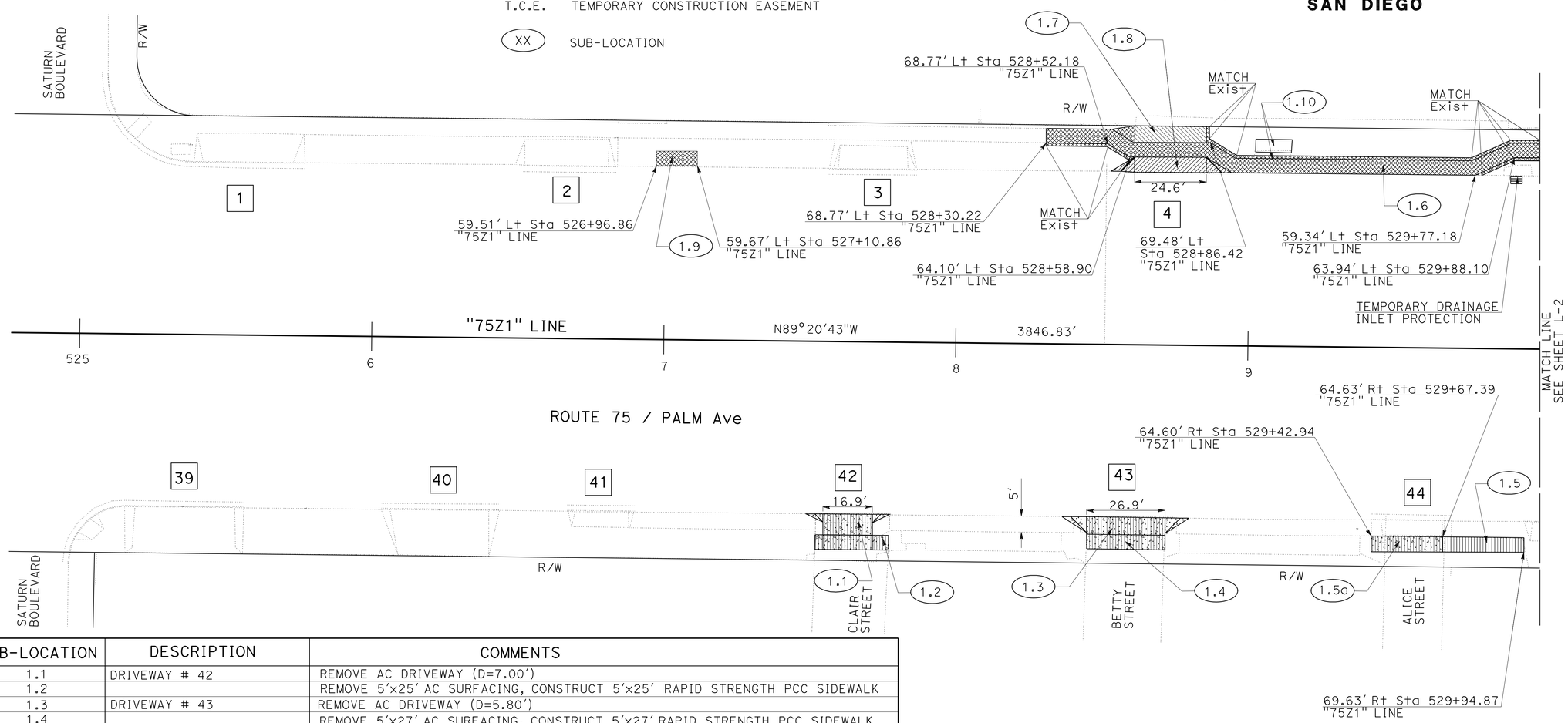

SUB-LOCATION	DESCRIPTION	COMMENTS
1.1	DRIVEWAY # 42	REMOVE AC DRIVEWAY (D=7.00')
1.2		REMOVE 5'x25' AC SURFACING, CONSTRUCT 5'x25' RAPID STRENGTH PCC SIDEWALK
1.3	DRIVEWAY # 43	REMOVE AC DRIVEWAY (D=5.80')
1.4		REMOVE 5'x27' AC SURFACING, CONSTRUCT 5'x27' RAPID STRENGTH PCC SIDEWALK
1.5		REMOVE 5'x28' AC SURFACING, CONSTRUCT 5'x28' PCC SIDEWALK
1.5a		REMOVE 5'x25' PCC, REPLACE 5'x25' RAPID STRENGTH PCC SIDEWALK
1.6		REMOVE 5'x173' PCC REPLACE 5'x173' PCC SIDEWALK
1.7		MISCELLANEOUS CONCRETE AREA (5.5'X25.5')
1.8	DRIVEWAY # 4	REPLACE DRIVEWAY (D=5.00')
1.9		REMOVE 5'x14' PCC, REPLACE 5'x14' PCC SIDEWALK
1.10		Exist BUS STOP BENCH FROM 64.93' Lt Sta 529+08.14 "75Z1" LINE TO 68.57' Lt OF Sta 529+08.14 "75Z1" LINE TO BE RELOCATED BY OTHERS

SCALE 1" = 20'

LAYOUT L-1

REVISED BY | DATE REVISED
MOHAMMAD OLADI | GEORGE MAMAGHANI
CALCULATED-DESIGNED BY | CHECKED BY
FUNCTIONAL SUPERVISOR: ABU-BAKR H AL-JAFRI

STATE OF CALIFORNIA - DEPARTMENT OF TRANSPORTATION
Caltrans® DESIGN

LAST REVISION 06-24-11 | DATE PLOTTED => 07-JUL-2011 | TIME PLOTTED => 09:49

Dist	COUNTY	ROUTE	POST MILES TOTAL PROJECT	SHEET No.	TOTAL SHEETS
11	SD	75	9.3/10.1	4	62

George H Mamaghani 06-07-11
REGISTERED CIVIL ENGINEER DATE

06-27-11
PLANS APPROVAL DATE

REGISTERED PROFESSIONAL ENGINEER GEORGE H. MAMAGHANI No. 44842 Exp. 3-31-12 CIVIL STATE OF CALIFORNIA

THE STATE OF CALIFORNIA OR ITS OFFICERS OR AGENTS SHALL NOT BE RESPONSIBLE FOR THE ACCURACY OR COMPLETENESS OF SCANNED COPIES OF THIS PLAN SHEET.

NOTE:

1. FOR ACCURATE RIGHT OF WAY AND ACCESS DATA, CONTACT RIGHT OF WAY ENGINEERING AT THE DISTRICT OFFICE.

SUB-LOCATION	DESCRIPTION	COMMENTS
2.1, 2.9		REMOVE 5'x164' AC SURFACING, CONSTRUCT 5'x164' PCC SIDEWALK
2.2	DRIVEWAY # 46	REPLACE DRIVEWAY (D=8.65')
2.3	DRIVEWAY # 47	REPLACE DRIVEWAY (D=6.73')
2.4, 2.5, 2.5b, 2.5d, 2.7, 2.7b, 2.11, 2.13, 2.13b, 2.13c, 2.16, 2.16b, 2.16c, 2.18, 2.18b 2.21, 2.22		REMOVE 5'x687' PCC, REPLACE 5'x687' PCC SIDEWALK
2.5a, 2.5c, 2.7a, 2.13a, 2.13d, 2.16a, 2.16d, 2.18a		REMOVE 5'x160' PCC, REPLACE 5'x160' RAPID STRENGTH PCC SIDEWALK
2.9a		REMOVE 5'x37' AC, REPLACE 5'x37' RAPID STRENGTH PCC SIDEWALK
2.6	DRIVEWAY # 48	REPLACE DRIVEWAY (D=5.00')
2.8	DRIVEWAY # 49	REPLACE DRIVEWAY (D=5.00')
2.10	DRIVEWAY # 50	REPLACE DRIVEWAY (D=5.00')
2.12	DRIVEWAY # 12 & 13	REPLACE DRIVEWAYS(D=5.00')
2.12a		MISCELLANEOUS CONCRETE AREA (5.8'X51.8') RAPID STRENGTH PCC
2.14	DRIVEWAY # 11	REPLACE DRIVEWAY (D=5.31')
2.15	DRIVEWAY # 10	REPLACE DRIVEWAY (D=7.25')
2.17	DRIVEWAY # 9	REPLACE DRIVEWAY (D=7.36')
2.19	DRIVEWAY # 8	REPLACE DRIVEWAY (D=6.75')
2.20	DRIVEWAY # 7	REPLACE DRIVEWAY (D=7.40')
2.23		CUT AND CAP STEEL PIPE PROTRUSIONS (SEE CONSTRUCTION DETAILS)

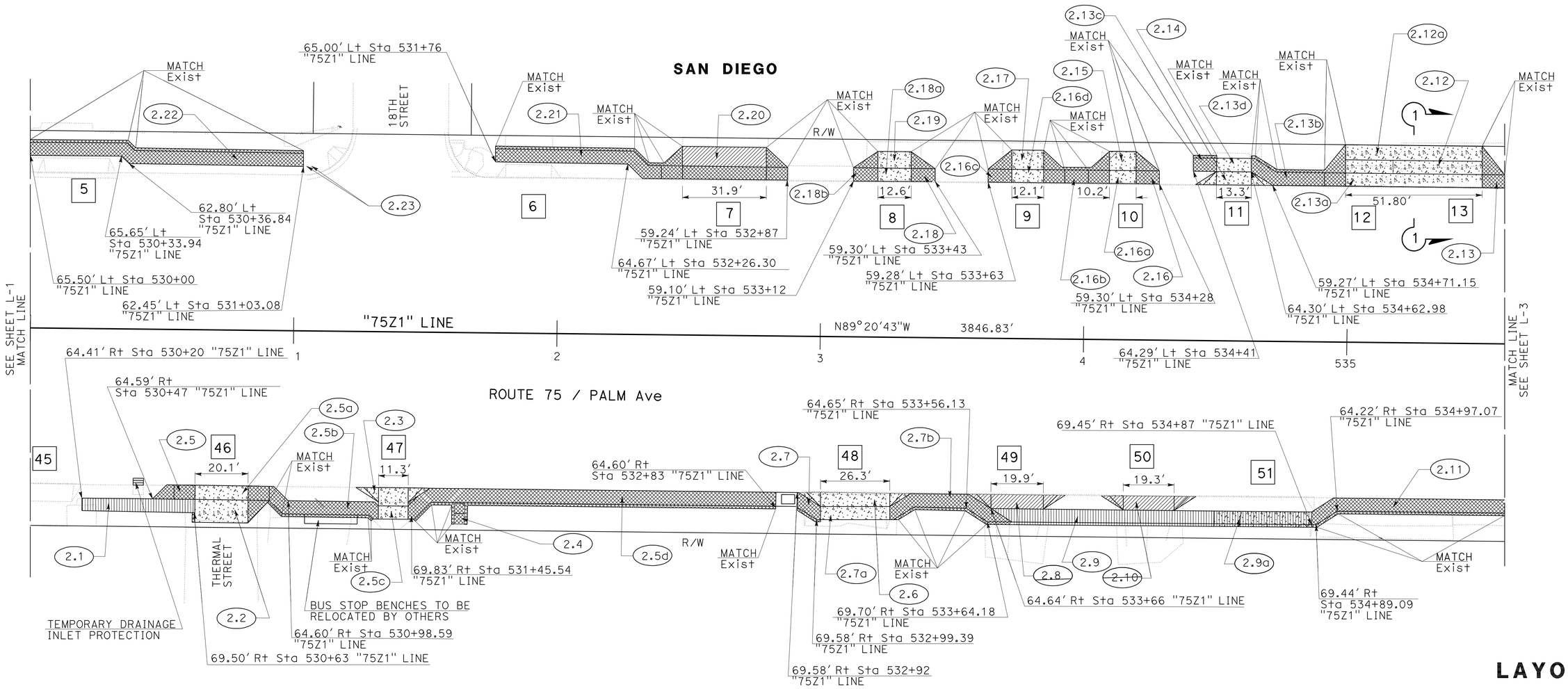

SCALE 1" = 20'

LAYOUT L-2

STATE OF CALIFORNIA - DEPARTMENT OF TRANSPORTATION
Caltrans® DESIGN
FUNCTIONAL SUPERVISOR: ABU-BAKR H AL-JAFRI
CALCULATED-DESIGNED BY: MOHAMMAD OLADI
CHECKED BY: GEORGE MAMAGHANI
REVISED BY / DATE REVISED

LAST REVISION 06-24-11
DATE PLOTTED => 07-JUL-2011
TIME PLOTTED => 09:49

Dist	COUNTY	ROUTE	POST MILES TOTAL PROJECT	SHEET No.	TOTAL SHEETS
11	SD	75	9.3/10.1	5	62

REGISTERED CIVIL ENGINEER 06-07-11 DATE

06-27-11
PLANS APPROVAL DATE

REGISTERED PROFESSIONAL ENGINEER GEORGE H. MAMAGHANI No. 44842 Exp. 3-31-12 CIVIL STATE OF CALIFORNIA

THE STATE OF CALIFORNIA OR ITS OFFICERS OR AGENTS SHALL NOT BE RESPONSIBLE FOR THE ACCURACY OR COMPLETENESS OF SCANNED COPIES OF THIS PLAN SHEET.

SUB-LOCATION	DESCRIPTION	COMMENTS
3.1,3.1b, 3.7, 3.7b 3.9, 3.9b, 3.9d 3.16, 3.16b		REMOVE 5'x688' PCC, REPLACE 5'x688' PCC SIDEWALK
3.1a, 3.7a,3.9a, 3.9c,3.16a		REMOVE 5'x98.2' PCC, REPLACE 5'x98.2' RAPID STRENGTH PCC SIDEWALK
3.2	DRIVEWAY # 52	REPLACE DRIVEWAY (D=5.00')
3.3	DRIVEWAY # 53	REPLACE DRIVEWAY (D=5.00')
3.4		CONSTRUCT 5'X5' PCC SIDEWALK WIDENING
3.5	DRIVEWAY # 56	REPLACE DRIVEWAY (D=4.80')
3.6	DRIVEWAY # 57	REPLACE DRIVEWAY (D=5.00')
3.6a		Misc Conc AREA (5.5'X19.8') REMOVE AC SURFACING
3.8	DRIVEWAY # 58	REPLACE DRIVEWAY (D=5.00')
3.10	DRIVEWAY # 19	REPLACE DRIVEWAY (D=7.20')
3.11		TUBULAR HANDRAILING (42" HIGH) (SEE CONSTRUCTION DETAILS)
3.12	DRIVEWAY # 18	REPLACE DRIVEWAY (D=10.15')
3.13		CUT AND CAP STEEL PIPE PROTRUSIONS (SEE CONSTRUCTION DETAILS)
3.14	DRIVEWAY # 16 AND 17	REPLACE DRIVEWAYS (D=5.00')
3.14a		Misc Conc AREA (6.1'X56.2')
3.15	DRIVEWAY # 15	REPLACE DRIVEWAY (D=5.00')
3.15a		Misc Conc AREA (6.1'X21.5')
3.17	DRIVEWAY # 14	REPLACE DRIVEWAY (D=9.82')
3.18, 3.19, 3.20		REMOVE 3'X 128' AC SURFACING PLACE 3'X128' MINOR HOT MIX ASPHALT (SEE SECTION VIEW DETAILS THIS SHEET)

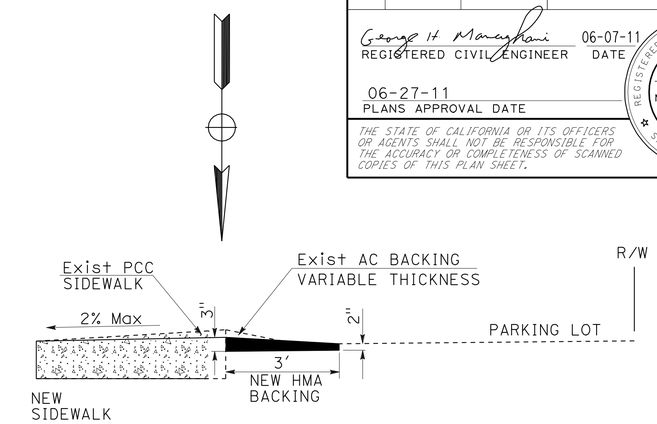

SECTION 2-2

SUB-LOCATIONS 3.18, 3.19, 3.20, 4.22

SAN DIEGO

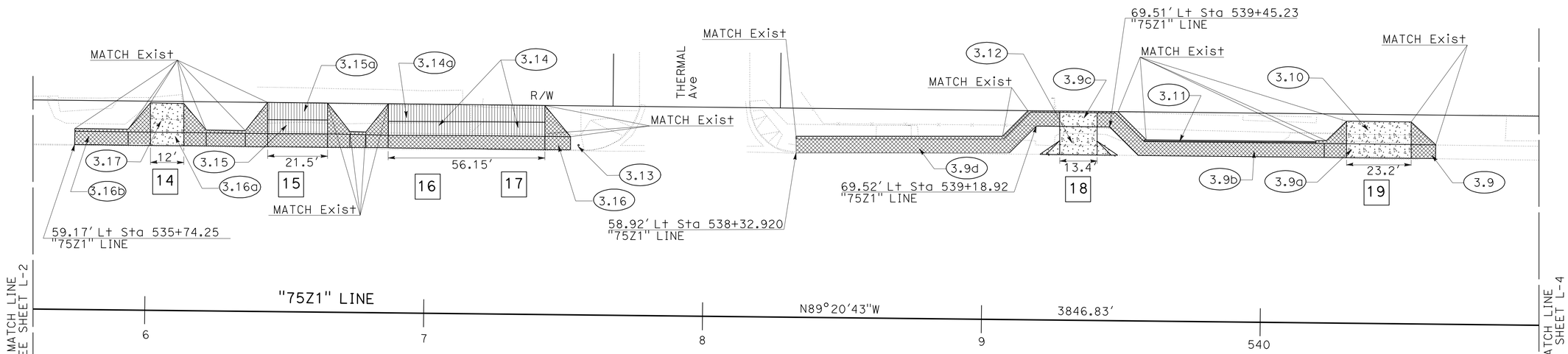

NOTE:

1. FOR ACCURATE RIGHT OF WAY AND ACCESS DATA, CONTACT RIGHT OF WAY ENGINEERING AT THE DISTRICT OFFICE.

SCALE 1" = 20'

LAYOUT L-3

REVISED BY | DATE REVISED
MOHAMMAD OLADI | GEORGE MAMAGHANI
CALCULATED-DESIGNED BY | CHECKED BY
FUNCTIONAL SUPERVISOR: ABU-BAKR H AL-JAFRI
STATE OF CALIFORNIA - DEPARTMENT OF TRANSPORTATION
Caltrans® DESIGN

LAST REVISION DATE PLOTTED => 30-JUN-2011
06-24-11 TIME PLOTTED => 09:11

Dist	COUNTY	ROUTE	POST MILES TOTAL PROJECT	SHEET No.	TOTAL SHEETS
11	SD	75	9.3/10.1	6	62

REGISTERED CIVIL ENGINEER 06-07-11 DATE

06-27-11
PLANS APPROVAL DATE

REGISTERED PROFESSIONAL ENGINEER GEORGE H. MAMAGHANI No. 44842 Exp. 3-31-12 CIVIL STATE OF CALIFORNIA

THE STATE OF CALIFORNIA OR ITS OFFICERS OR AGENTS SHALL NOT BE RESPONSIBLE FOR THE ACCURACY OR COMPLETENESS OF SCANNED COPIES OF THIS PLAN SHEET.

NOTE:

1. FOR ACCURATE RIGHT OF WAY AND ACCESS DATA, CONTACT RIGHT OF WAY ENGINEERING AT THE DISTRICT OFFICE.

SUB-LOCATION	DESCRIPTION	COMMENTS
4.1, 4.3, 4.6, 4.6b 4.10, 4.12, 4.17, 4.17b, 4.18, 4.21, 4.21b		REMOVE 5'x420' PCC, REPLACE 5'x420' PCC SIDEWALK
4.6a, 4.17a, 4.21a		REMOVE 5'x45' PCC, REPLACE 5'x45' RAPID STRENGTH PCC SIDEWALK
4.2	DRIVEWAY # 59	REPLACE DRIVEWAY (D=5.00')
4.4		REMOVE 3'x15' AC SURFACING, CONSTRUCT 3'x15' PCC SIDEWALK WIDENING
4.5	DRIVEWAY # 60	REMOVE AC DRIVEWAY (D=5.58'), CONSTRUCT RAPID STRENGTH PCC DRIVEWAY
4.7	DRIVEWAY # 61	REPLACE DRIVEWAY (D=5.00')
4.8	DRIVEWAY # 62	REPLACE DRIVEWAY (D=5.08')
4.9	DRIVEWAY # 63	REPLACE DRIVEWAY (D=5.68')
4.11	DRIVEWAY # 64	REPLACE DRIVEWAY (D=6.76')
4.13		REMOVE 10'x30' PCC, REPLACE 10'x30' PCC SIDEWALK
4.14		REMOVE 16'x59' PCC, REPLACE 16'x59' PCC SIDEWALK
4.15		REMOVE 12'x20' PCC, REPLACE 12'x20' PCC SIDEWALK
4.16	DRIVEWAY # 25	REPLACE DRIVEWAY (D=7.24')
4.19	DRIVEWAY # 21	REPLACE DRIVEWAY (D=5.00')
4.20	DRIVEWAY # 20	REPLACE DRIVEWAY (D=5.00')
4.22		REMOVE 3'X57' AC SURFACING, CONSTRUCT 3'X57' MINOR HOT MIX ASPHALT

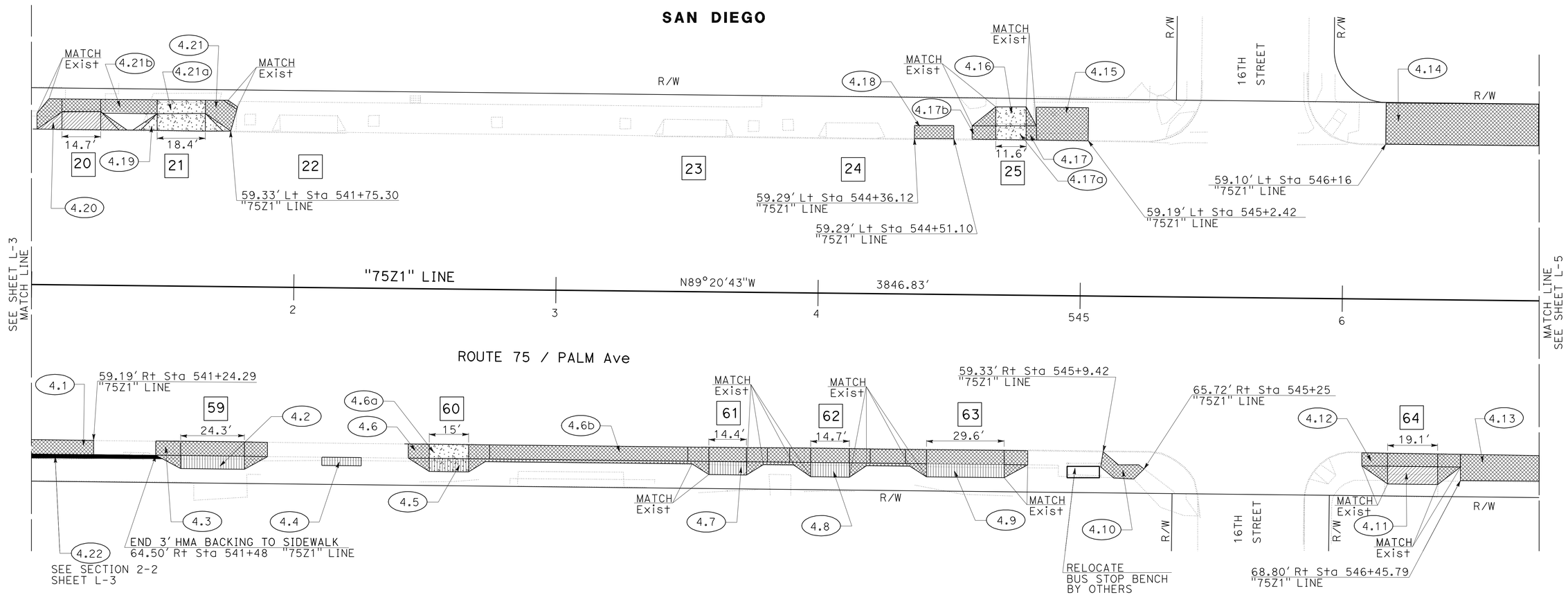

SCALE 1" = 20'

LAYOUT L-4

STATE OF CALIFORNIA - DEPARTMENT OF TRANSPORTATION
Caltrans DESIGN
FUNCTIONAL SUPERVISOR: ABU-BAKR H AL-JAFRI
CALCULATED-DESIGNED BY: MOHAMMAD OLADI
CHECKED BY: GEORGE MAMAGHANI
REVISED BY
DATE REVISED

LAST REVISION 06-24-11
DATE PLOTTED => 30-JUN-2011
TIME PLOTTED => 09:11

Dist	COUNTY	ROUTE	POST MILES TOTAL PROJECT	SHEET No.	TOTAL SHEETS
11	SD	75	9.3/10.1	7	62

REGISTERED CIVIL ENGINEER — DATE 06-07-11

06-27-11
PLANS APPROVAL DATE

REGISTERED PROFESSIONAL ENGINEER — GEORGE H. MAMAGHANI — No. 44842 — Exp. 3-31-12 — CIVIL — STATE OF CALIFORNIA

THE STATE OF CALIFORNIA OR ITS OFFICERS OR AGENTS SHALL NOT BE RESPONSIBLE FOR THE ACCURACY OR COMPLETENESS OF SCANNED COPIES OF THIS PLAN SHEET.

NOTE:

1. FOR ACCURATE RIGHT OF WAY AND ACCESS DATA, CONTACT RIGHT OF WAY ENGINEERING AT THE DISTRICT OFFICE.

SUB-LOCATION	DESCRIPTION	COMMENTS
5.1, 5.4, 5.7		REMOVE 10'x247' PCC, REPLACE 10'x247' PCC SIDEWALK
5.2	DRIVEWAY #65 AND #66	REPLACE DRIVEWAYS (D=5.00')
5.2a		MISCELLANEOUS CONCRETE AREA (3.9'X66')
5.3, 5.6, 5.9, 5.12 5.14		REMOVE 5'x646' PCC, REPLACE 5'x646' PCC SIDEWALK
5.16		REMOVE (5'-16')x63' PCC, REPLACE (5'-16')x63' PCC SIDEWALK
5.5	DRIVEWAY # 67	REPLACE DRIVEWAY (D=5.00')
5.5a		MISCELLANEOUS CONCRETE AREA (4.6'X28')
5.7a		REMOVE 5'x31.5' PCC, REPLACE 5'x31.5' RAPID STRENGTH PCC SIDEWALK
5.8	DRIVEWAY # 68	REPLACE DRIVEWAY (D=5.00')
5.10	DRIVEWAY # 69	REPLACE DRIVEWAY (D=4.36')
5.11	DRIVEWAY # 28	REPLACE DRIVEWAY (D=5.00')
5.13	DRIVEWAY # 27	REPLACE DRIVEWAY (D=5.00')
5.15	DRIVEWAY # 26	REPLACE DRIVEWAY (D=5.00')

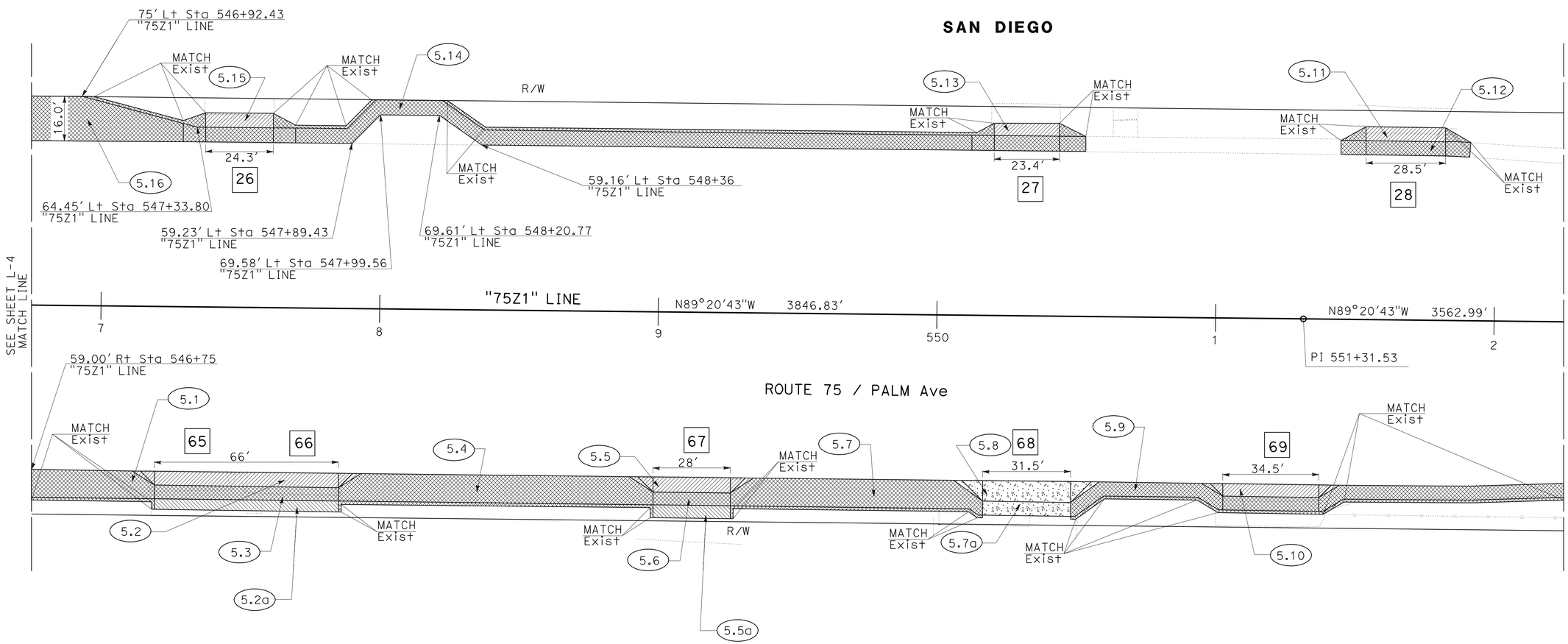

SCALE 1" = 20'

LAYOUT
L-5

STATE OF CALIFORNIA - DEPARTMENT OF TRANSPORTATION
Caltrans® DESIGN

FUNCTIONAL SUPERVISOR: ABU-BAKR H AL-JAFRI
CALCULATED-DESIGNED BY: MOHAMMAD OLADI
CHECKED BY: GEORGE MAMAGHANI
REVISED BY / DATE REVISED

LAST REVISION 06-24-11
DATE PLOTTED => 07-JUL-2011
TIME PLOTTED => 09:51

Dist	COUNTY	ROUTE	POST MILES TOTAL PROJECT	SHEET No.	TOTAL SHEETS
11	SD	75	9.3/10.1	8	62

REGISTERED CIVIL ENGINEER 06-07-11 DATE

06-27-11
PLANS APPROVAL DATE

REGISTERED PROFESSIONAL ENGINEER GEORGE H. MAMAGHANI No. 44842 Exp. 3-31-12 CIVIL STATE OF CALIFORNIA

THE STATE OF CALIFORNIA OR ITS OFFICERS OR AGENTS SHALL NOT BE RESPONSIBLE FOR THE ACCURACY OR COMPLETENESS OF SCANNED COPIES OF THIS PLAN SHEET.

NOTE:

1. FOR ACCURATE RIGHT OF WAY AND ACCESS DATA, CONTACT RIGHT OF WAY ENGINEERING AT THE DISTRICT OFFICE.

SUB-LOCATION	DESCRIPTION	COMMENTS
6.1		REMOVE 5'x10' PCC, REPLACE 5'x10' PCC SIDEWALK
6.2	DRIVEWAY # 29	REPLACE DRIVEWAY (D=4.50')
6.3, 6.5		REMOVE 5'x103' PCC, REPLACE 5'x103' PCC SIDEWALK
6.4	DRIVEWAY # 30	REPLACE DRIVEWAY (D=5.00')
6.6		PRUNE Exist PLANTS (GROUND COVER)
6.7		PRUNE Exist PLANTS (GROUND COVER)

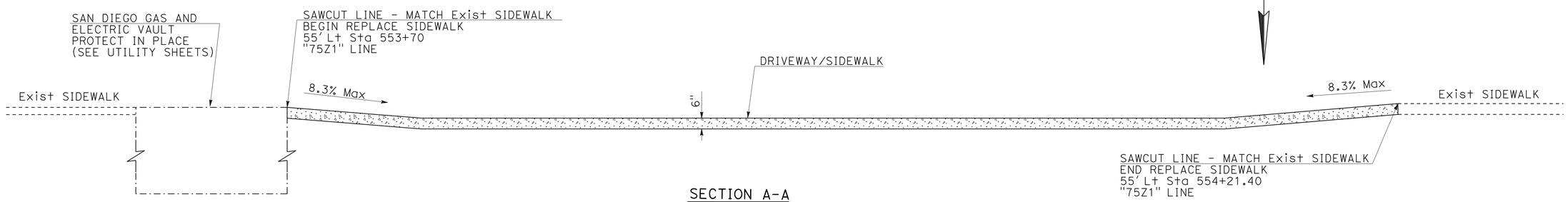

SECTION A-A
NO SCALE

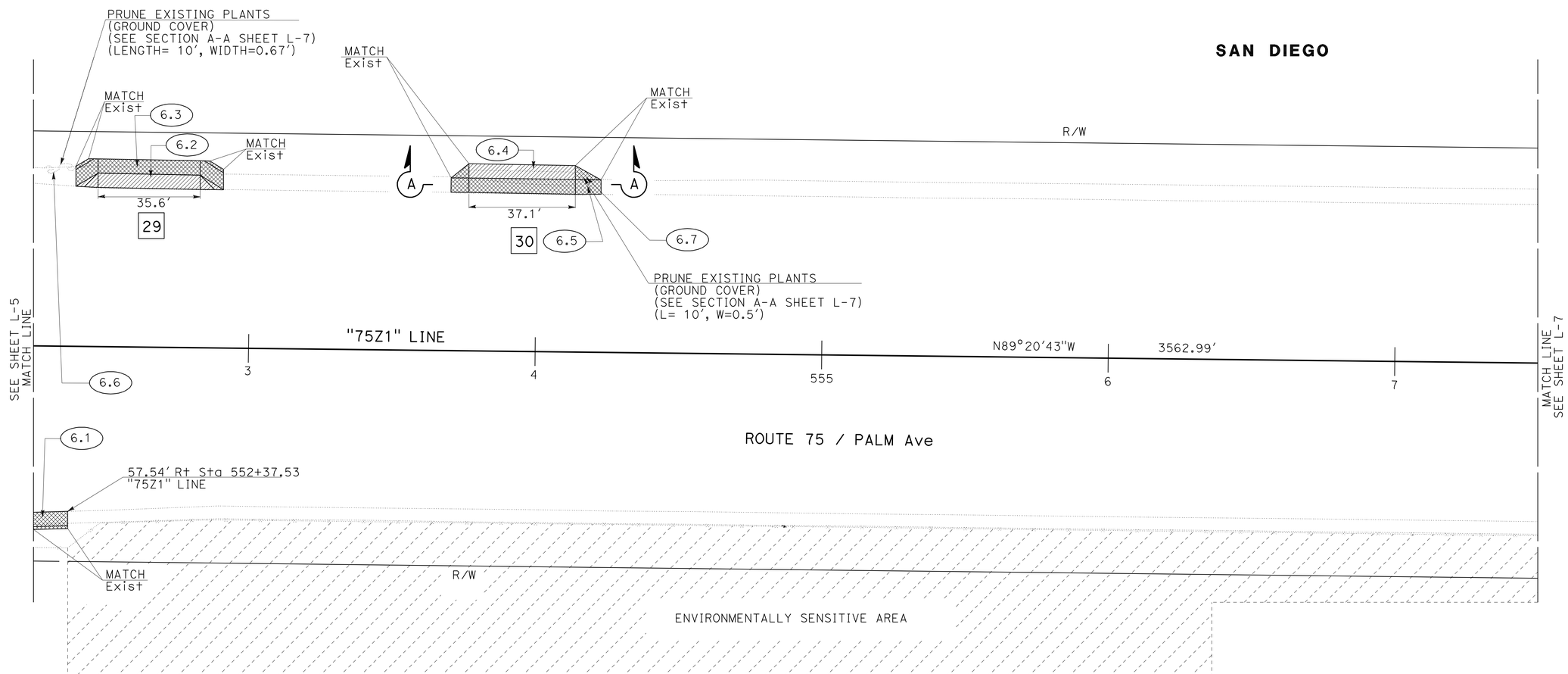

SAN DIEGO

SCALE 1" = 20'

LAYOUT L-6

STATE OF CALIFORNIA - DEPARTMENT OF TRANSPORTATION
Caltrans DESIGN

FUNCTIONAL SUPERVISOR: ABU-BAKR H AL-JAFRI
CALCULATED-DESIGNED BY: MOHAMMAD OLADI
CHECKED BY: GEORGE MAMAGHANI
REVISED BY
DATE REVISED

LAST REVISION 06-24-11
DATE PLOTTED => 30-JUN-2011
TIME PLOTTED => 09:11

Dist	COUNTY	ROUTE	POST MILES TOTAL PROJECT	SHEET No.	TOTAL SHEETS
11	SD	75	9.3/10.1	9	62

George H Mamaghani 06-07-11
REGISTERED CIVIL ENGINEER DATE

06-27-11
PLANS APPROVAL DATE

REGISTERED PROFESSIONAL ENGINEER GEORGE H. MAMAGHANI No. 44842 Exp. 3-31-12 CIVIL STATE OF CALIFORNIA

THE STATE OF CALIFORNIA OR ITS OFFICERS OR AGENTS SHALL NOT BE RESPONSIBLE FOR THE ACCURACY OR COMPLETENESS OF SCANNED COPIES OF THIS PLAN SHEET.

NOTES:

1. FOR ACCURATE RIGHT OF WAY AND ACCESS DATA, CONTACT RIGHT OF WAY ENGINEERING AT THE DISTRICT OFFICE.
2. BEGIN SIDEWALK 55.53 Lt Sta 558+15.30 "75Z1" LINE
3. END SIDEWALK 58.28 Lt Sta 558+84.03 "75Z1" LINE
4. BEGIN RAMP/ SIDEWALK 59.34 Lt Sta 559+24.20 "75Z1" LINE
5. END RAMP/ SIDEWALK 59.33 Lt Sta 559+61.75 "75Z1" LINE
6. BEGIN RAMP/ SIDEWALK 59.25 Lt Sta 559+87.72 "75Z1" LINE
7. END RAMP/ SIDEWALK 59.44 Lt Sta 560+15.11 "75Z1" LINE
8. BEGIN RAMP/ SIDEWALK 59.06 Lt Sta 561+42.20 "75Z1" LINE
9. END RAMP/ SIDEWALK 62.25 Lt Sta 562+00.00 "75Z1" LINE

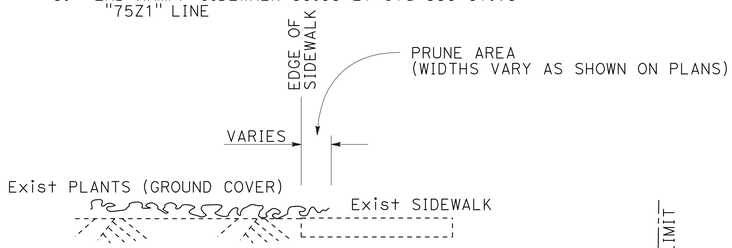

SECTION A-A
NO SCALE

SUB-LOCATION	DESCRIPTION	COMMENTS
7.1, 7.2, 7.4, 7.4b 7.6, 7.6b, 7.8		REMOVE 5'x247' PCC, REPLACE 5'x247' PCC SIDEWALK
7.3	DRIVEWAY # 31	REPLACE DRIVEWAY (D=1.10')
7.4a, 7.6a		REMOVE 5'x30' PCC, REPLACE 5'x30' RAPID STRENGTH PCC SIDEWALK
7.5	DRIVEWAY # 32	REPLACE DRIVEWAY (D=6.96')
7.7	DRIVEWAY # 33	REPLACE DRIVEWAY (D=6.00')
7.9	DRIVEWAY # 34	REPLACE DRIVEWAY (D=7.21')
7.10		PRUNE Exist PLANTS (GROUND COVER)

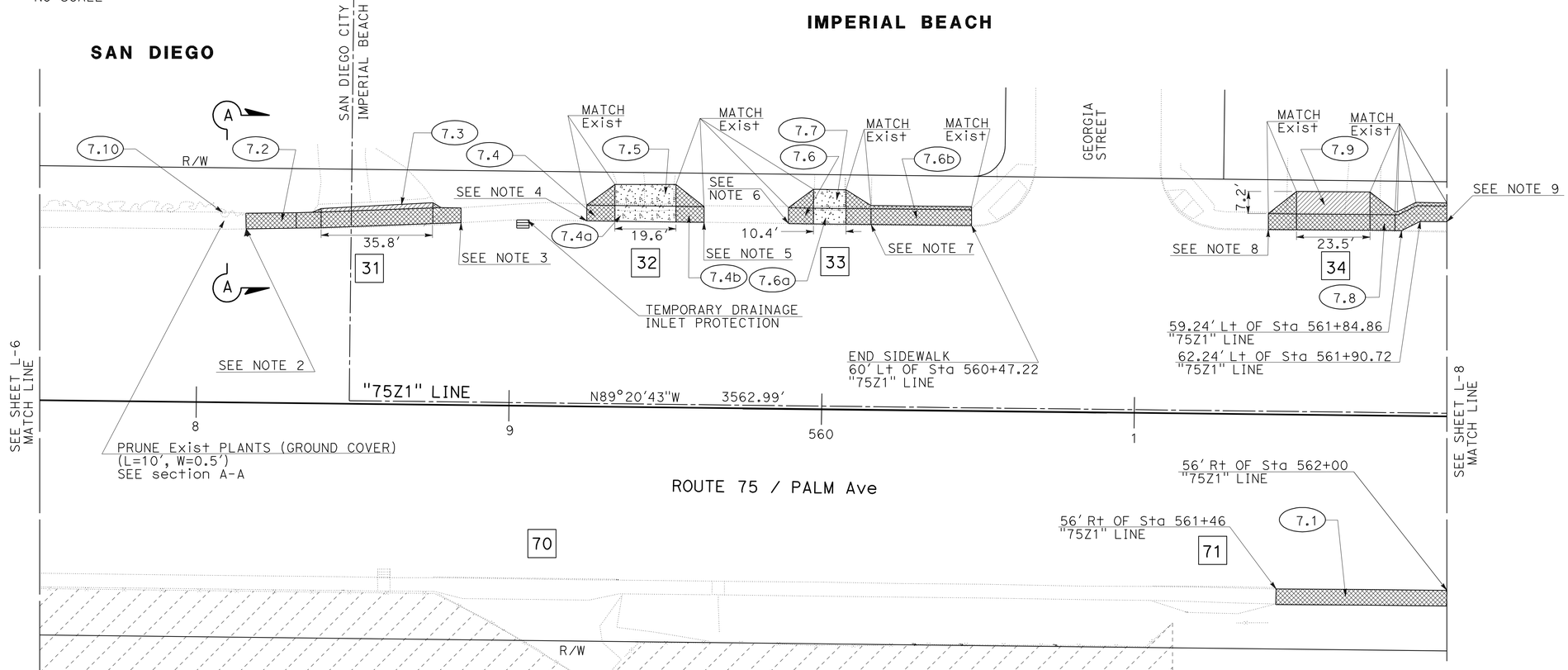

SCALE 1" = 20'

LAYOUT L-7

STATE OF CALIFORNIA - DEPARTMENT OF TRANSPORTATION
DESIGN

FUNCTIONAL SUPERVISOR: ABU-BAKR H AL-JAFRI
CALCULATED-DESIGNED BY: MOHAMMAD OLADI
CHECKED BY: GEORGE MAMAGHANI
REVISED BY
DATE REVISED

LAST REVISION 06-24-11
DATE PLOTTED => 30-JUN-2011
TIME PLOTTED => 09:11

Dist	COUNTY	ROUTE	POST MILES TOTAL PROJECT	SHEET No.	TOTAL SHEETS
11	SD	75	9.3/10.1	10	62

REGISTERED CIVIL ENGINEER 06-07-11 DATE

06-27-11
PLANS APPROVAL DATE

REGISTERED PROFESSIONAL ENGINEER GEORGE H. MAMAGHANI No. 44842 Exp. 3-31-12 CIVIL STATE OF CALIFORNIA

THE STATE OF CALIFORNIA OR ITS OFFICERS OR AGENTS SHALL NOT BE RESPONSIBLE FOR THE ACCURACY OR COMPLETENESS OF SCANNED COPIES OF THIS PLAN SHEET.

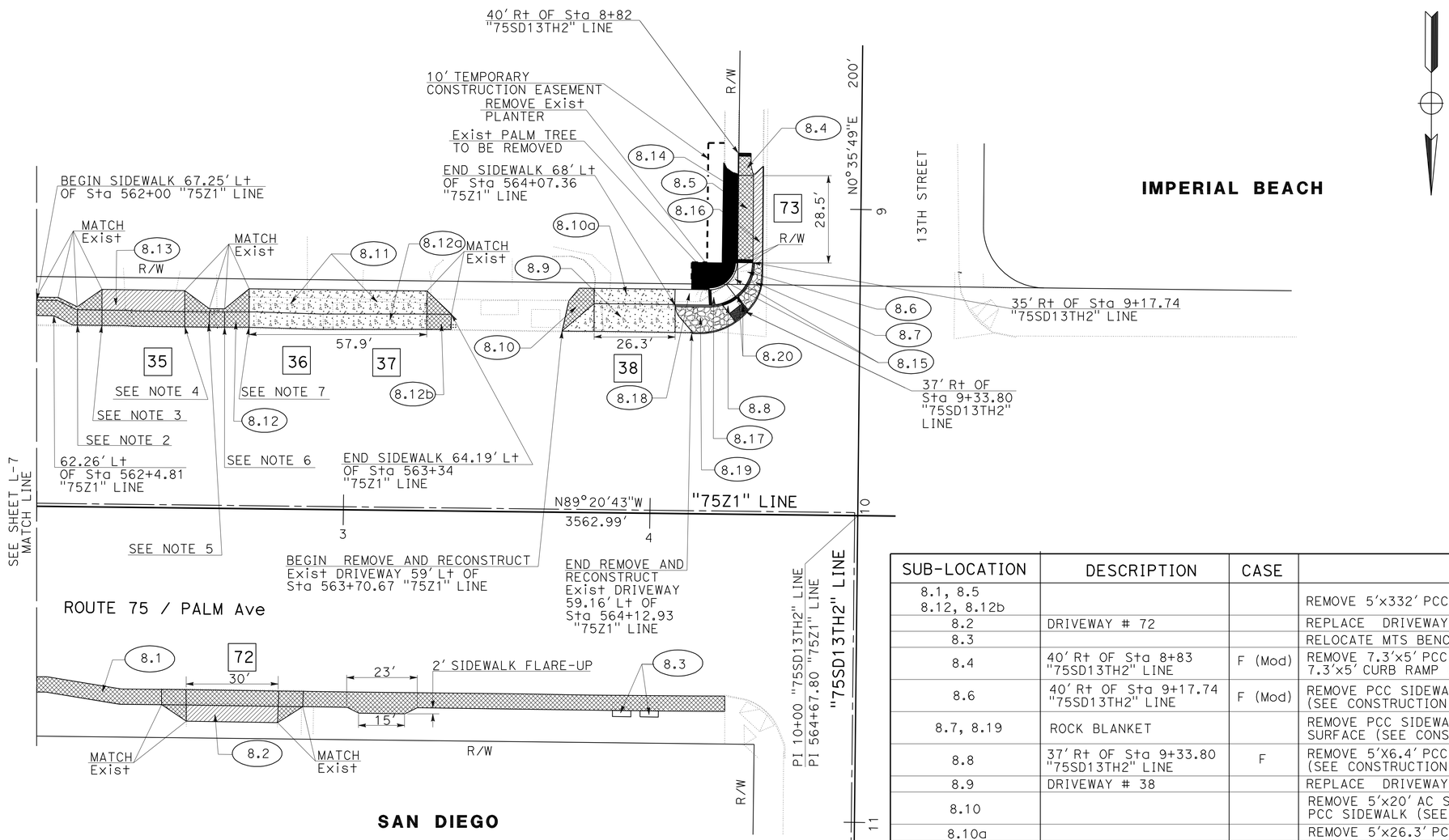

SUB-LOCATION	DESCRIPTION	CASE	COMMENTS
8.1, 8.5 8.12, 8.12b			REMOVE 5'x332' PCC, REPLACE 5'x332' PCC SIDEWALK
8.2	DRIVEWAY # 72		REPLACE DRIVEWAY (D=5.33')
8.3			RELOCATE MTS BENCHES (BY OTHERS)
8.4	40' Rt OF Sta 8+83 "75SD13TH2" LINE	F (Mod)	REMOVE 7.3'x5' PCC SIDEWALK, CONSTRUCT 7.3'x5' CURB RAMP (SEE CONSTRUCTION DETAIL SHEETS)
8.6	40' Rt OF Sta 9+17.74 "75SD13TH2" LINE	F (Mod)	REMOVE PCC SIDEWALK, CONSTRUCT CURB RAMP (SEE CONSTRUCTION DETAIL SHEETS)
8.7, 8.19	ROCK BLANKET		REMOVE PCC SIDEWALK, CONSTRUCT ROCK BLANKET SURFACE (SEE CONSTRUCTION DETAIL SHEETS)
8.8	37' Rt OF Sta 9+33.80 "75SD13TH2" LINE	F	REMOVE 5'X6.4' PCC CURB RAMP, REPLACE 5'X6.4' PCC CURB RAMP (SEE CONSTRUCTION DETAIL SHEETS)
8.9	DRIVEWAY # 38		REPLACE DRIVEWAY (D=9')
8.10			REMOVE 5'x20' AC SURFACING, REPLACE 5'x20' PCC SIDEWALK (SEE CONSTRUCTION DETAIL SHEETS)
8.10a			REMOVE 5'x26.3' PCC, REPLACE 5'x26.3' RAPID STRENGTH PCC SIDEWALK
8.11	DRIVEWAY # 36, 37		REPLACE DRIVEWAYS (D=7.53')
8.12a			REMOVE 5'x57.9' PCC, REPLACE 5'x57.9' RAPID STRENGTH PCC SIDEWALK
8.13	DRIVEWAY # 35		REPLACE DRIVEWAY (D=6.82'). RELOCATE CENTER LINE OF DRIVEWAY 9.2' TO THE EAST
8.14			REMOVE 5'x30' AC SURFACING, REPLACE 5'x30' MINOR HMA (SEE CONSTRUCTION DETAIL SHEETS)
8.15	TREE PLANTER		REMOVE 6" CURB
8.16	DRIVEWAY # 73		REPLACE DRIVEWAY (D=3.10')
8.17			CONSTRUCT 5' WIDE LANDING
8.18		F (Mod)	REMOVE PCC SIDEWALK, CONSTRUCT CURB RAMP (SEE CONSTRUCTION DETAIL SHEETS)
8.20			TUBULAR HANDRAILING (38" HIGH) SEE CONSTRUCTION DETAILS

NOTES:

1. FOR ACCURATE RIGHT OF WAY AND ACCESS DATA, CONTACT RIGHT OF WAY ENGINEERING AT THE DISTRICT OFFICE.
2. BEGIN RAMP 59.25' Lt OF Sta 562+12.50 "75Z1" LINE
3. END RAMP/ BEGIN DRIVEWAY 59.26' Lt OF Sta 562+20.50 "75Z1" LINE
4. END DRIVEWAY/ BEGIN RAMP 59.14' Lt OF Sta 562+47.50 "75Z1" LINE
5. END RAMP/ BEGIN 5' LANDING 59.23' Lt OF Sta 562+55.56 "75Z1" LINE
6. END 5' LANDING/ BEGIN RAMP 59.11' Lt OF Sta 562+60.56 "75Z1" LINE
7. END RAMP/ BEGIN DRIVEWAY 59.20' Lt OF Sta 562+68.56 "75Z1" LINE

LAYOUT L-8

SCALE 1" = 20'

STATE OF CALIFORNIA - DEPARTMENT OF TRANSPORTATION
Caltrans DESIGN

FUNCTIONAL SUPERVISOR: ABU-BAKR H AL-JAFRI
CALCULATED-DESIGNED BY: MOHAMMAD OLADI
CHECKED BY: GEORGE MAMAGHANI
REVISED BY / DATE REVISED

LAST REVISION 06-24-11 | DATE PLOTTED => 30-JUN-2011 | TIME PLOTTED => 09:11

Dist	COUNTY	ROUTE	POST MILES TOTAL PROJECT	SHEET No.	TOTAL SHEETS
11	SD	75	9.3/10.1	11	62

REGISTERED CIVIL ENGINEER 06-07-11 DATE

06-27-11
PLANS APPROVAL DATE

REGISTERED PROFESSIONAL ENGINEER GEORGE H. MAMAGHANI No. 44842 Exp. 3-31-12 CIVIL STATE OF CALIFORNIA

THE STATE OF CALIFORNIA OR ITS OFFICERS OR AGENTS SHALL NOT BE RESPONSIBLE FOR THE ACCURACY OR COMPLETENESS OF SCANNED COPIES OF THIS PLAN SHEET.

ABBREVIATIONS:

EDWY EDGE OF DRIVEWAY
ESW EDGE OF SIDEWALK

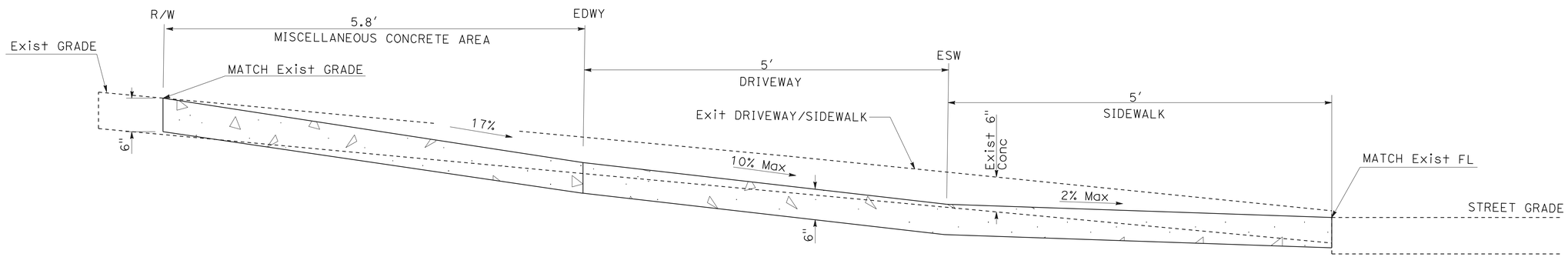

SECTION 1-1
DRIVEWAYS 12, 13

CONSTRUCTION DETAILS
NO SCALE
C-1

STATE OF CALIFORNIA - DEPARTMENT OF TRANSPORTATION
Caltrans® **DESIGN**

FUNCTIONAL SUPERVISOR: ABU-BAKR H AL-JAFRI
CALCULATED-DESIGNED BY: MOHAMMAD OLADI
CHECKED BY: GEORGE MAMAGHANI
REVISED BY
DATE REVISED

LAST REVISION 06-24-11
DATE PLOTTED => 30-JUN-2011
TIME PLOTTED => 09:11

Dist	COUNTY	ROUTE	POST MILES TOTAL PROJECT	SHEET No.	TOTAL SHEETS
11	SD	75	9.3/10.1	12	62

George H Mamaghani 06-07-11
REGISTERED CIVIL ENGINEER DATE

06-27-11
PLANS APPROVAL DATE

REGISTERED PROFESSIONAL ENGINEER
GEORGE H. MAMAGHANI
No. 44842
Exp. 3-31-12
CIVIL
STATE OF CALIFORNIA

THE STATE OF CALIFORNIA OR ITS OFFICERS OR AGENTS SHALL NOT BE RESPONSIBLE FOR THE ACCURACY OR COMPLETENESS OF SCANNED COPIES OF THIS PLAN SHEET.

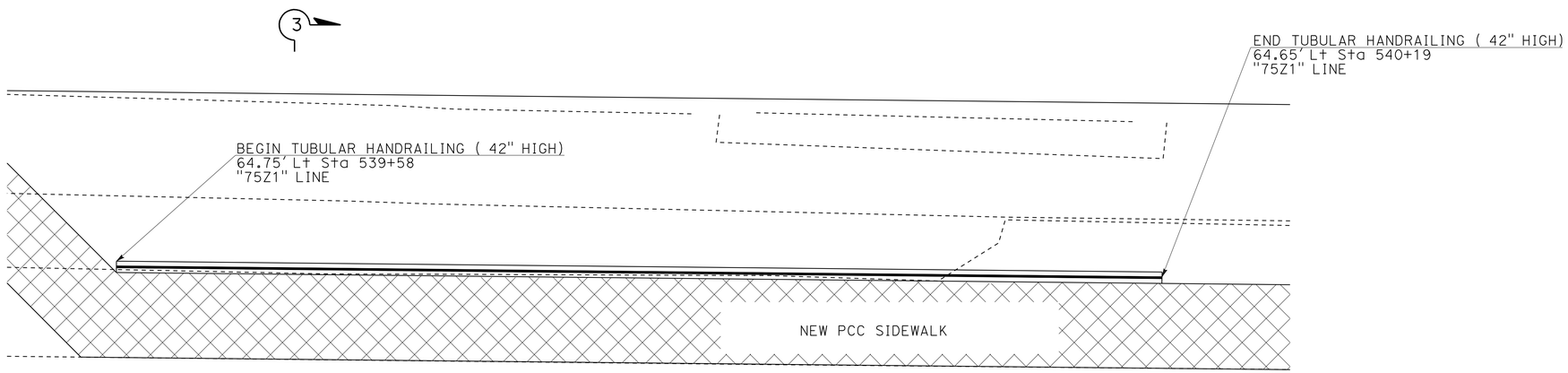

TUBULAR HANDRAILING

SUB-LOCATION 3.11

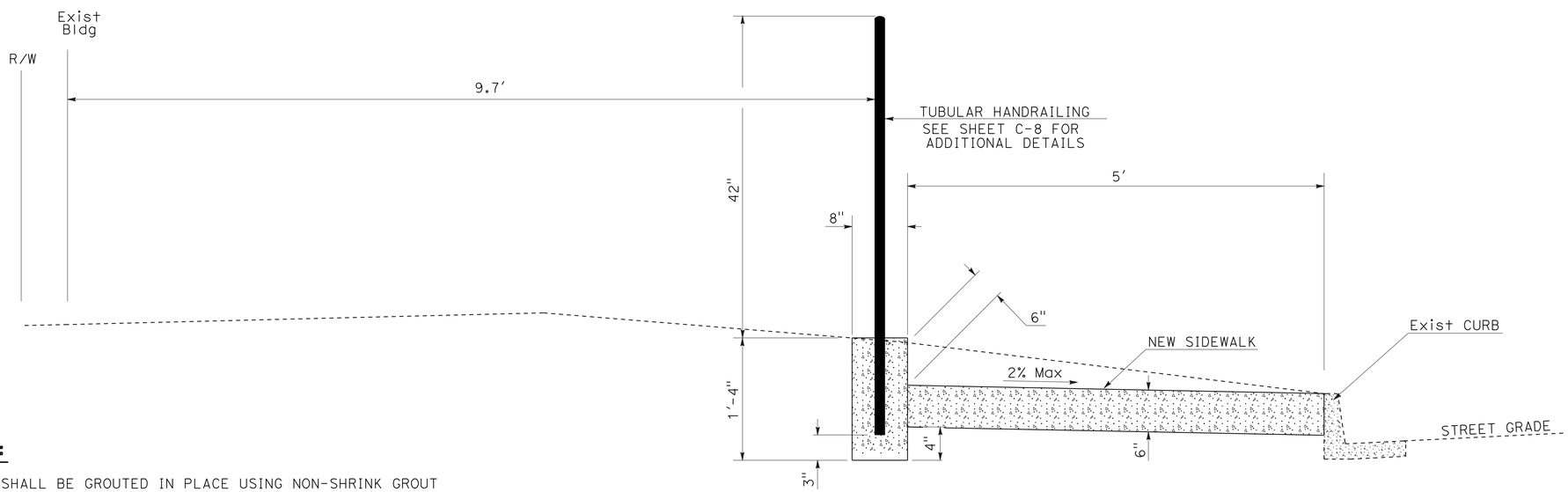

NOTE:

POST SHALL BE GROUTED IN PLACE USING NON-SHRINK GROUT

SECTION 3-3

CONSTRUCTION DETAILS

NO SCALE

C-2

STATE OF CALIFORNIA - DEPARTMENT OF TRANSPORTATION
Caltrans DESIGN

FUNCTIONAL SUPERVISOR: ABU-BAKR H AL-JAFRI

CALCULATED-DESIGNED BY: MOHAMMAD OLADI
CHECKED BY: GEORGE MAMAGHANI

REVISED BY
DATE REVISED

LAST REVISION 06-24-11
DATE PLOTTED => 30-JUN-2011
TIME PLOTTED => 09:11

Dist	COUNTY	ROUTE	POST MILES TOTAL PROJECT	SHEET No.	TOTAL SHEETS
11	SD	75	9.3/10.1	13	62

REGISTERED CIVIL ENGINEER — DATE 06-07-11

PLANS APPROVAL DATE 06-27-11

REGISTERED PROFESSIONAL ENGINEER — GEORGE H. MAMAGHANI — No. 44842 — Exp. 3-31-12 — CIVIL — STATE OF CALIFORNIA

THE STATE OF CALIFORNIA OR ITS OFFICERS OR AGENTS SHALL NOT BE RESPONSIBLE FOR THE ACCURACY OR COMPLETENESS OF SCANNED COPIES OF THIS PLAN SHEET.

NOTES:

1: DRIVEWAY CENTERLINE SLOPES ARE AT 10% Max, UNLESS OTHERWISE INDICATED IN TABLE 1.

2: FOR DETAILS NOT SHOWN, SEE STANDARD PLAN A87A.

3: FOR DRIVEWAY 73 DETAILS, SEE SHEET C-4 AND C-7

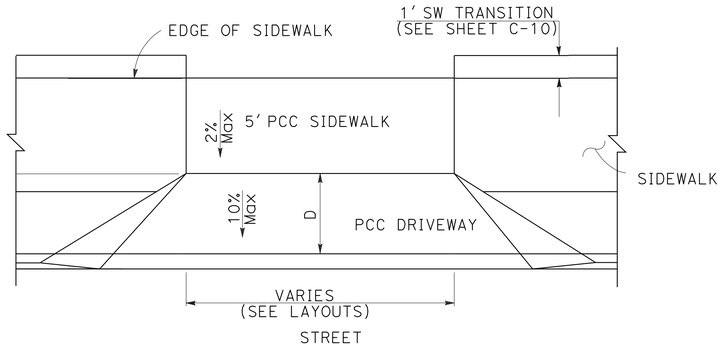

TYPE B DRIVEWAY

DRIVEWAYS 11, 18, 20, 21, 29, 38, 42, 43, 47, 48, 49, 50, 56, 68, 69

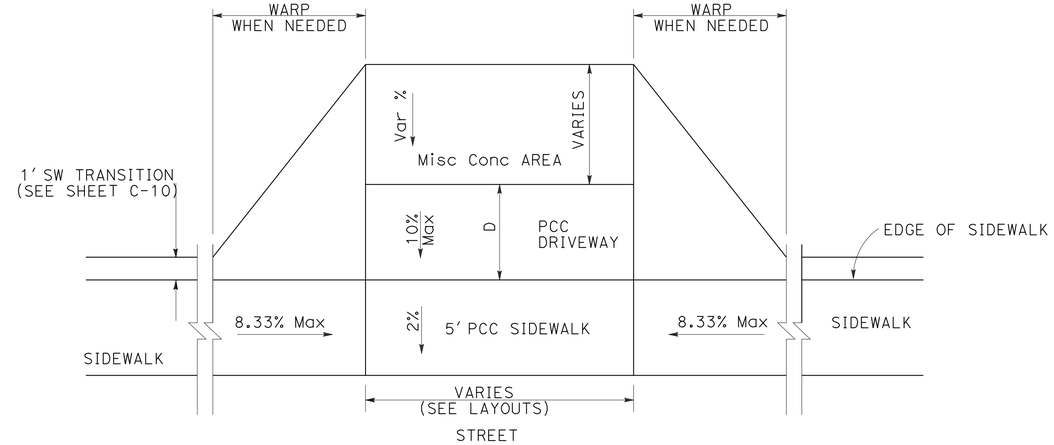

TYPE C DRIVEWAY

DRIVEWAYS 12, 13, 15, 16, 17, 57

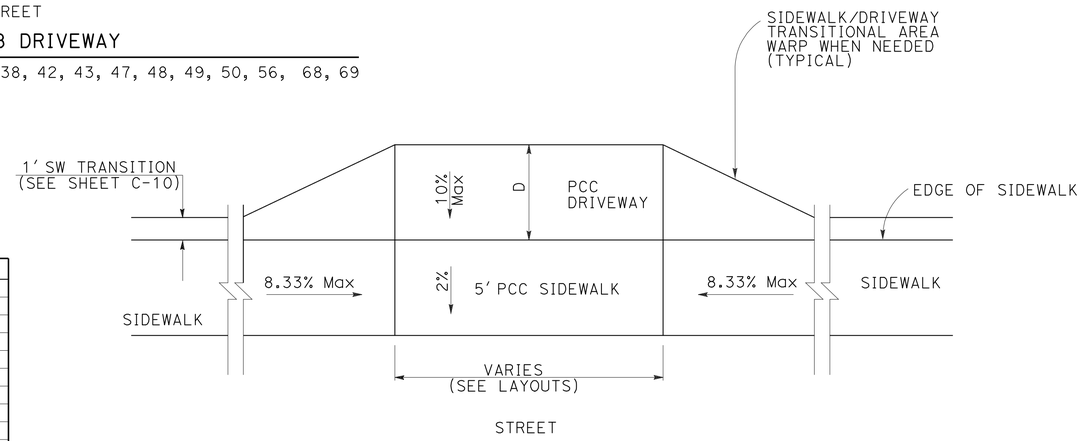

TYPE D DRIVEWAY

DRIVEWAYS 7, 8, 9, 10, 14, 19, 25, 26, 27, 28, 30, 31, 32, 33, 34, 35, 36, 37, 46, 52, 53, 58, 59, 60, 61, 62, 63, 64, 72

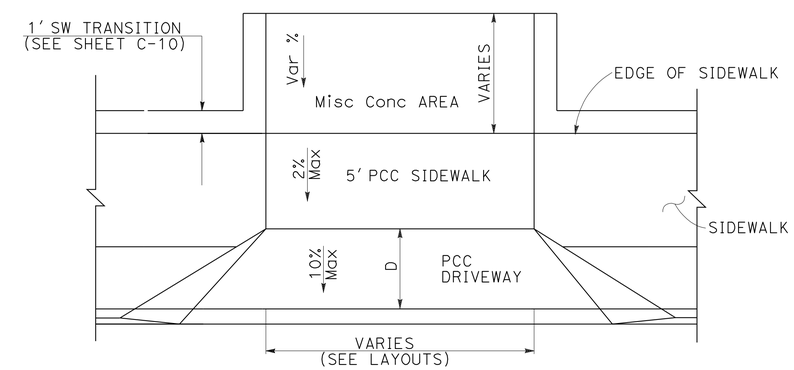

TYPE A DRIVEWAY

DRIVEWAYS 4, 65, 66, 67

TABLE 1

DRIVEWAY	℄ SLOPE
20	7.3%
21	9.0%
28	5.4%
29	3.4%
30	4.0%
49	6.3%
50	3.8%
52	5.0%
56	7.2%
57	4.2%
58	3.5%
59	5.0%
61	7.0%

DRIVEWAY TYPES

CONSTRUCTION DETAILS

NO SCALE

C-3

STATE OF CALIFORNIA - DEPARTMENT OF TRANSPORTATION — DESIGN

FUNCTIONAL SUPERVISOR: ABU-BAKR H AL-JAFRI

CALCULATED-DESIGNED BY: MOHAMMAD OLADI — CHECKED BY: GEORGE MAMAGHANI

REVISED BY — DATE REVISED

LAST REVISION 06-24-11 — DATE PLOTTED => 07-JUL-2011 — TIME PLOTTED => 11:33

Dist	COUNTY	ROUTE	POST MILES TOTAL PROJECT	SHEET No.	TOTAL SHEETS
11	SD	75	9.3/10.1	14	62

REGISTERED CIVIL ENGINEER 06-07-11 DATE

06-27-11
PLANS APPROVAL DATE

GEORGE H. MAMAGHANI No. 44842 Exp. 3-31-12 CIVIL — REGISTERED PROFESSIONAL ENGINEER — STATE OF CALIFORNIA

THE STATE OF CALIFORNIA OR ITS OFFICERS OR AGENTS SHALL NOT BE RESPONSIBLE FOR THE ACCURACY OR COMPLETENESS OF SCANNED COPIES OF THIS PLAN SHEET.

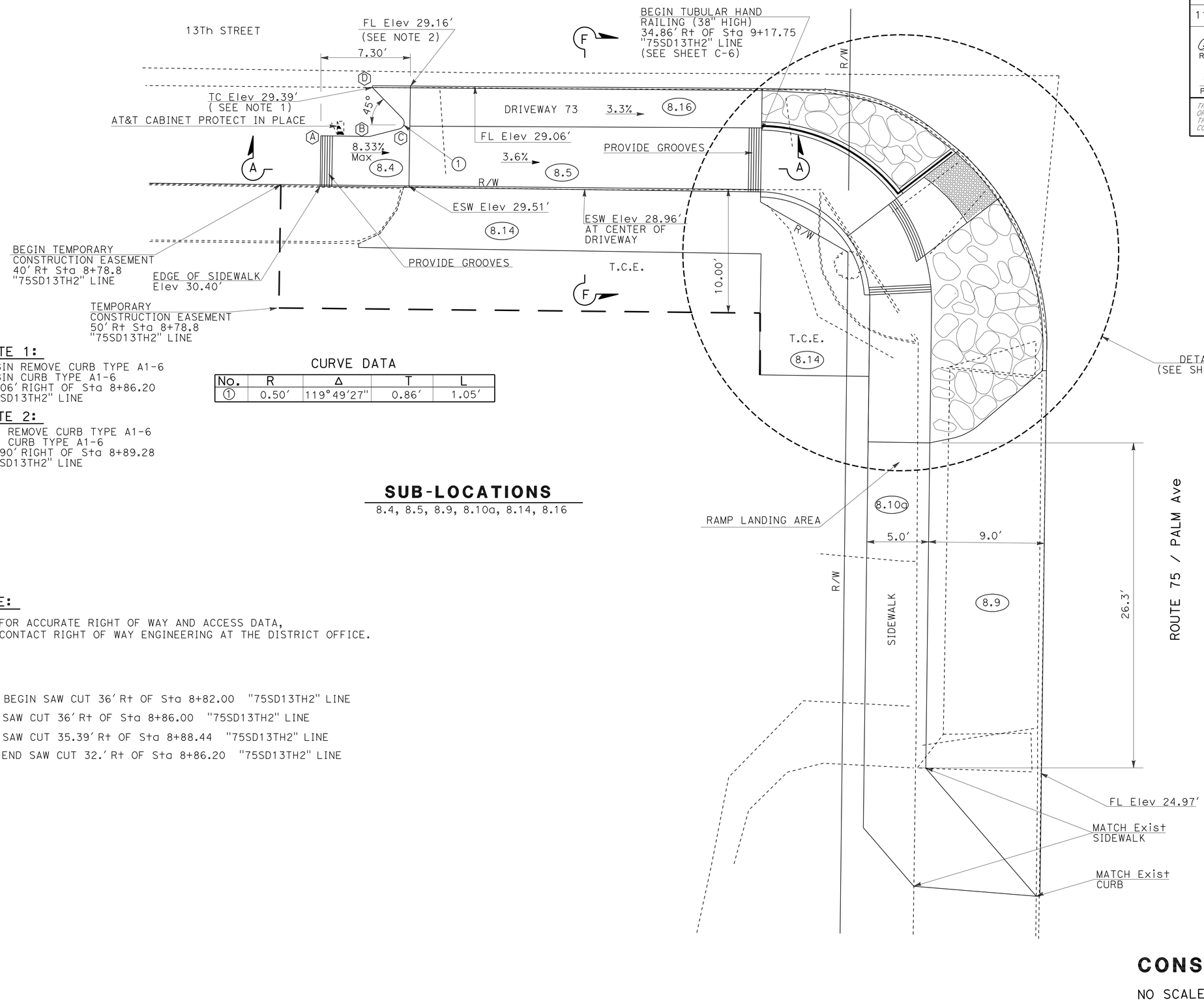

NOTE 1:

BEGIN REMOVE CURB TYPE A1-6
BEGIN CURB TYPE A1-6
32.06′ RIGHT OF Sta 8+86.20
"75SD13TH2" LINE

NOTE 2:

END REMOVE CURB TYPE A1-6
END CURB TYPE A1-6
31.90′ RIGHT OF Sta 8+89.28
"75SD13TH2" LINE

CURVE DATA

No.	R	Δ	T	L
1	0.50′	119°49′27"	0.86′	1.05′

SUB-LOCATIONS

8.4, 8.5, 8.9, 8.10a, 8.14, 8.16

NOTE:

1. FOR ACCURATE RIGHT OF WAY AND ACCESS DATA, CONTACT RIGHT OF WAY ENGINEERING AT THE DISTRICT OFFICE.

(A) BEGIN SAW CUT 36′ Rt OF Sta 8+82.00 "75SD13TH2" LINE
(B) SAW CUT 36′ Rt OF Sta 8+86.00 "75SD13TH2" LINE
(C) SAW CUT 35.39′ Rt OF Sta 8+88.44 "75SD13TH2" LINE
(D) END SAW CUT 32.′ Rt OF Sta 8+86.20 "75SD13TH2" LINE

CONSTRUCTION DETAILS

NO SCALE

C-4

STATE OF CALIFORNIA - DEPARTMENT OF TRANSPORTATION
Caltrans® DESIGN

FUNCTIONAL SUPERVISOR: ABU-BAKR H AL-JAFRI
CALCULATED-DESIGNED BY: MOHAMMAD OLADI
CHECKED BY: GEORGE MAMAGHANI
REVISED BY / DATE REVISED

LAST REVISION 06-24-11
DATE PLOTTED => 30-JUN-2011
TIME PLOTTED => 09:12

Dist	COUNTY	ROUTE	POST MILES TOTAL PROJECT	SHEET No.	TOTAL SHEETS
11	SD	75	9.3/10.1	15	62

REGISTERED CIVIL ENGINEER George H Mamaghani DATE 06-07-11

PLANS APPROVAL DATE 06-27-11

REGISTERED PROFESSIONAL ENGINEER GEORGE H. MAMAGHANI No. 44842 Exp. 3-31-12 CIVIL STATE OF CALIFORNIA

THE STATE OF CALIFORNIA OR ITS OFFICERS OR AGENTS SHALL NOT BE RESPONSIBLE FOR THE ACCURACY OR COMPLETENESS OF SCANNED COPIES OF THIS PLAN SHEET.

NOTE:

1. FOR ACCURATE RIGHT OF WAY AND ACCESS DATA, CONTACT RIGHT OF WAY ENGINEERING AT THE DISTRICT OFFICE.

No.	R	Δ	T	L
①	13.99′	89°50′50″	13.95′	21.94′
②	8.57′	89°50′50″	8.55′	13.44′

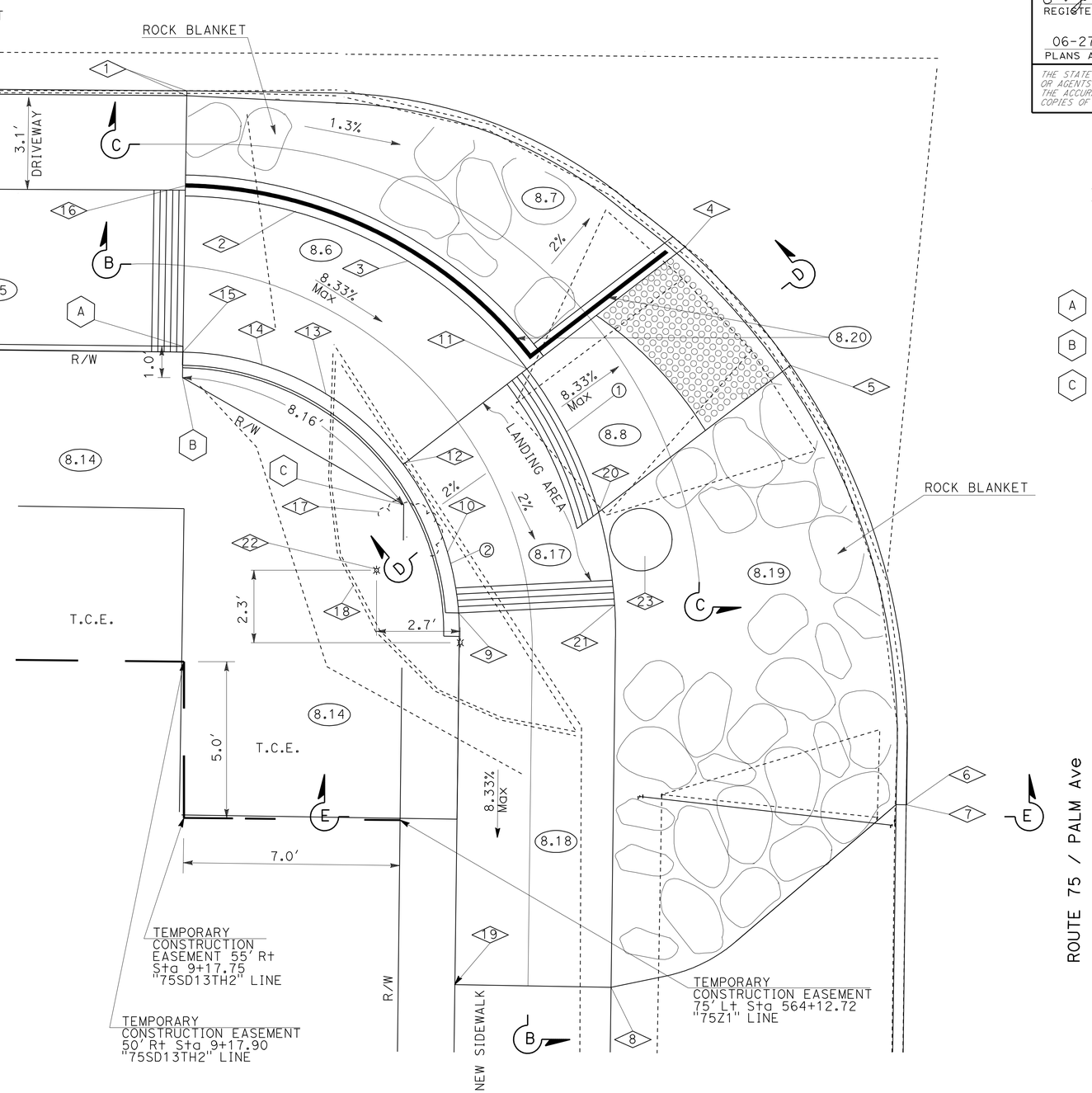

1	TC Elev 28.56′/FL Elev 28.23′ BEGIN CURB TYPE A2-6 31.82′ Rt OF sTA 9+17.8 "75SD13TH2" LINE
2	TC Elev 28.59′/RAMP FS 28.09′ 36.63′ Rt OF Sta 9+21.32 "75SD13TH2" LINE
3	TC Elev 28.41′/RAMP FS Elev 27.91 37.19′ Rt OF Sta 9+24.92 "75SD13TH2" LINE
4	TC Elev 27.55′/FL Elev 27.05′ END CURB TYPE A2-6 36.66′ Rt OF Sta 9+33.8 "75SD13TH2" LINE (L=17.3′)
5	TC Elev 27.49′/FL Elev 26.99′ END CURB TYPE A2-6 62.67′ Lt OF Sta 564+27.30 "75Z1" LINE
6	FL Elev 25.54′ MATCH Exist
7	BEGIN CURB TYPE A2-6 58.80′ Lt OF Sta 564+13.32 "75Z1" LINE (L=26.6′)
8	FS Elev 26.59′
9	END CURB RAMP/BEGIN LANDING TC Elev 28.11′/FS Elev 27.65′ 73.20′ Lt OF Sta 564+19.29 "75Z1" LINE
10	TC Elev 27.95′/FS Elev 27.45′ 73.58′ Lt OF Sta 564+21.23 "75Z1" LINE
11	TC Elev 28.15′/FS Elev 27.65′ 71.11′ Lt OF Sta 564+27.12 "75Z1" LINE
12	END CURB RAMP/END LANDING TC Elev 28.25′/FS Elev 27.75′ 43.71′ Rt OF Sta 9+24.83 "75SD13TH2" LINE
13	TC Elev 28.51′/FS Elev 28.01′ 41.47′ Lt OF Sta 9+22.34 "75SD13TH2" LINE
14	TC Elev 28.69′/FS Elev 28.19′ 40.57′ Rt OF Sta 9+20.29 "75SD13TH2" LINE
15	BEGIN CURB RAMP TC Elev 28.90′/FS Elev 28.40′ 40.2′ Rt Sta 9+17.7 "75SD13TH2" LINE
16	BEGIN TUBULAR HAND RAILING (38" HIGH) 34.86′ Rt OF Sta 9+17.75 "75SD13TH2" LINE (SEE SHEET C-8)
17	Exist PALM TREE TO BE REMOVED
18	Exist PLANTER TO BE REMOVED
19	BEGIN CURB RAMP Elev 26.69′ 73.19′ Lt OF Sta 564+12.66 "75Z1" LINE
20	FS Elev 27.57′
21	FS Elev 27.51′
22	RELOCATE PARKING LOT LIGHT (SEE ELECTRICAL PLANS
23	3′ Dia PEDESTAL FOR SIGNAL POLE (SEE ELECTRICAL PLANS)

A R/W CORNER 40′ Rt OF Sta 9+17.74 "75SD13TH2" LINE

B R/W CORNER 41′ Rt OF Sta 9+17.74 "75SD13TH2" LINE

C R/W CORNER 45′ Rt OF Sta 9+24.87 "75SD13TH2" LINE

DETAIL A

SUB-LOCATIONS
8.6, 8.7, 8.8, 8.17, 8.18, 8.19

CONSTRUCTION DETAILS

NO SCALE

C-5

STATE OF CALIFORNIA - DEPARTMENT OF TRANSPORTATION

Caltrans DESIGN

FUNCTIONAL SUPERVISOR ABU-BAKR H AL-JAFRI

CALCULATED-DESIGNED BY MOHAMMAD OLADI

CHECKED BY GEORGE MAMAGHANI

REVISED BY

DATE REVISED

LAST REVISION 06-24-11

DATE PLOTTED => 30-JUN-2011

TIME PLOTTED => 09:12

Dist	COUNTY	ROUTE	POST MILES TOTAL PROJECT	SHEET No.	TOTAL SHEETS
11	SD	75	9.3/10.1	16	62

REGISTERED CIVIL ENGINEER 06-07-11 DATE

06-27-11
PLANS APPROVAL DATE

REGISTERED PROFESSIONAL ENGINEER GEORGE H. MAMAGHANI No. 44842 Exp. 3-31-12 CIVIL STATE OF CALIFORNIA

THE STATE OF CALIFORNIA OR ITS OFFICERS OR AGENTS SHALL NOT BE RESPONSIBLE FOR THE ACCURACY OR COMPLETENESS OF SCANNED COPIES OF THIS PLAN SHEET.

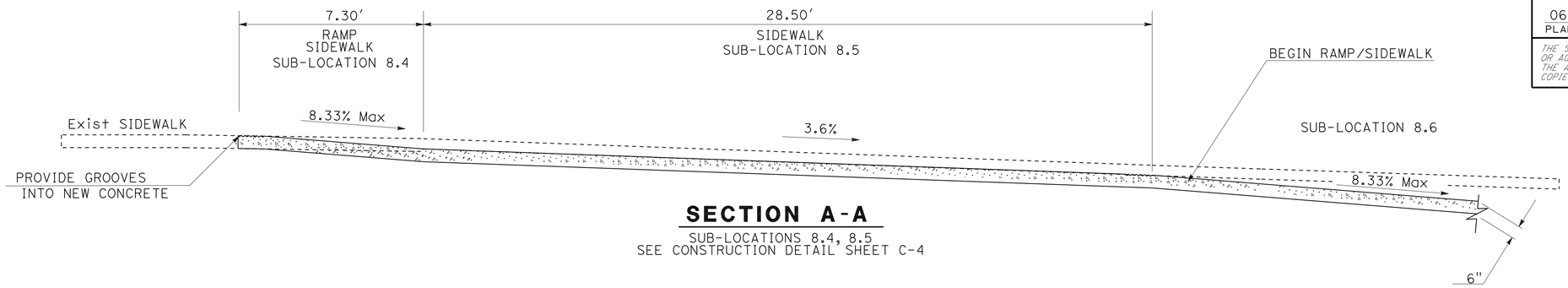

SECTION A-A

SUB-LOCATIONS 8.4, 8.5
SEE CONSTRUCTION DETAIL SHEET C-4

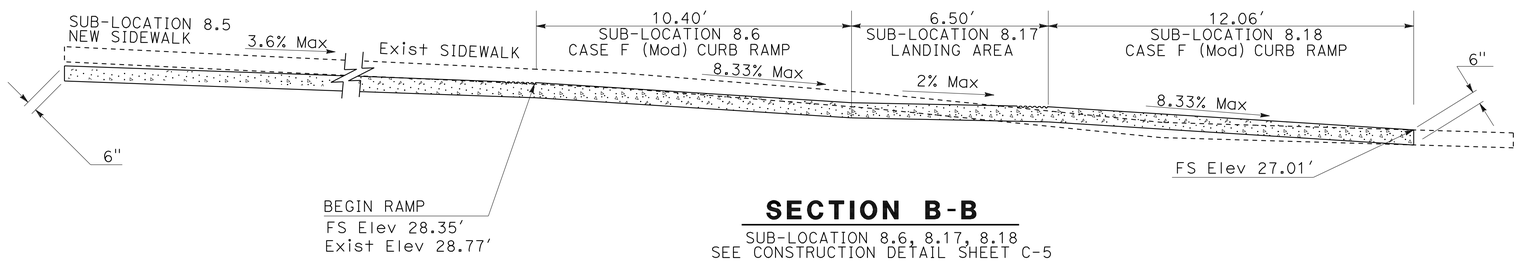

SECTION B-B

SUB-LOCATION 8.6, 8.17, 8.18
SEE CONSTRUCTION DETAIL SHEET C-5

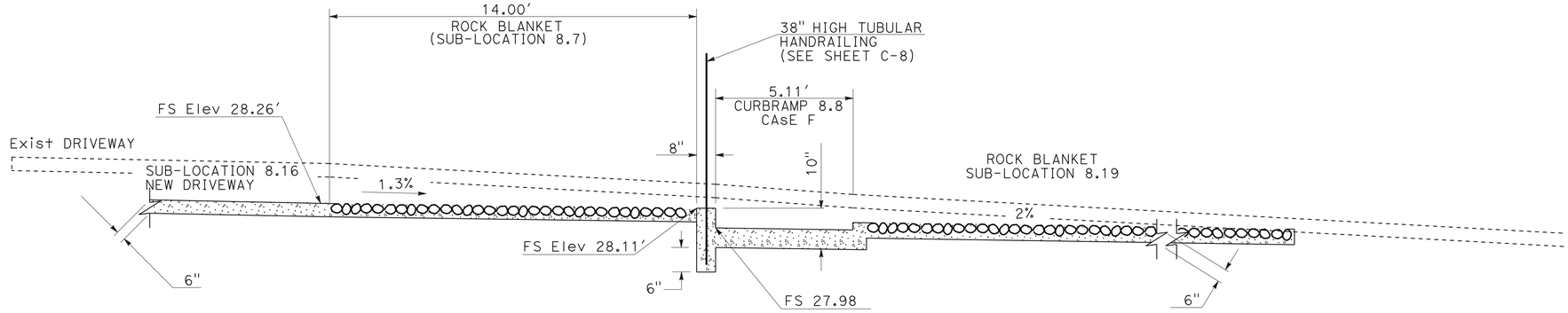

SECTION C-C

SUB-LOCATIONS 8.7, 8.8, 8.19
SEE CONSTRUCTION DETAIL SHEET C-5

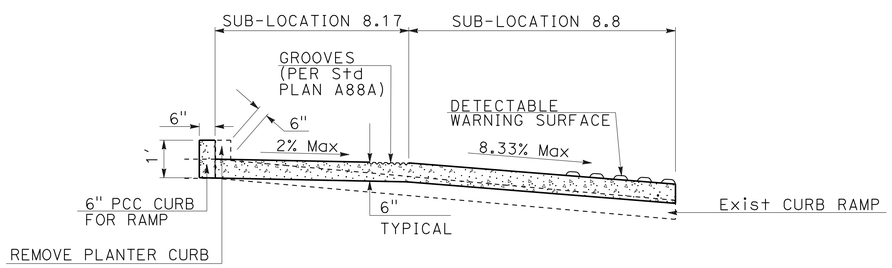

SECTION D-D

SUB-LOCATIONS 8.17 AND 8.8
SEE CONSTRUCTION DETAIL SHEET C-5

CONSTRUCTION DETAILS

NO SCALE

C-6

STATE OF CALIFORNIA - DEPARTMENT OF TRANSPORTATION
Caltrans
DESIGN

FUNCTIONAL SUPERVISOR: ABU-BAKR H AL-JAFRI
CALCULATED-DESIGNED BY: MOHAMMAD OLADI
CHECKED BY: GEORGE MAMAGHANI
REVISED BY
DATE REVISED

LAST REVISION 06-24-11
DATE PLOTTED => 30-JUN-2011
TIME PLOTTED => 09:12

Dist	COUNTY	ROUTE	POST MILES TOTAL PROJECT	SHEET No.	TOTAL SHEETS
11	SD	75	9.3/10.1	17	62

George H Mamaghani 06-07-11
REGISTERED CIVIL ENGINEER DATE

06-27-11
PLANS APPROVAL DATE

REGISTERED PROFESSIONAL ENGINEER
GEORGE H. MAMAGHANI
No. 44842
Exp. 3-31-12
CIVIL
STATE OF CALIFORNIA

THE STATE OF CALIFORNIA OR ITS OFFICERS OR AGENTS SHALL NOT BE RESPONSIBLE FOR THE ACCURACY OR COMPLETENESS OF SCANNED COPIES OF THIS PLAN SHEET.

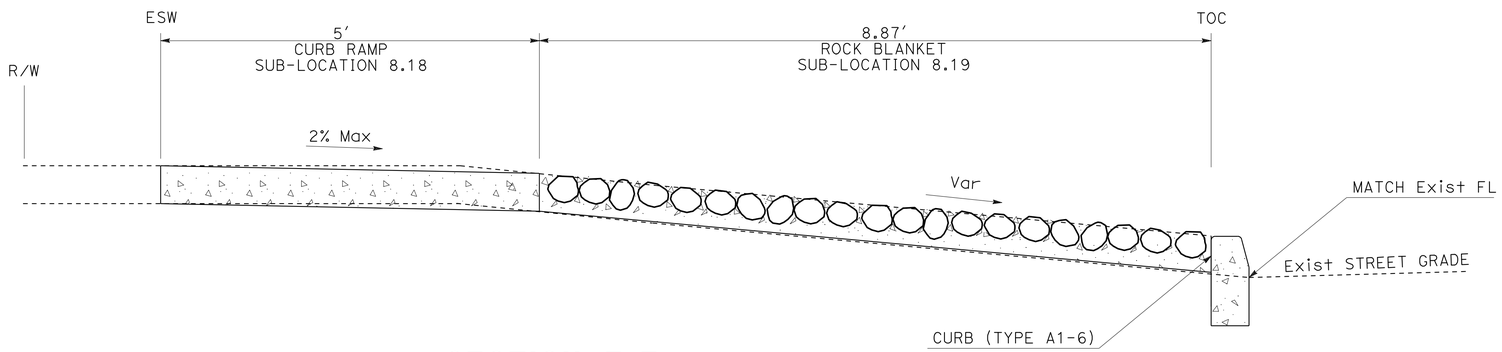

SECTION E-E

SUB-LOCATIONS 8.18 AND 8.19
SEE CONSTRUCTION DETAIL SHEET C-5

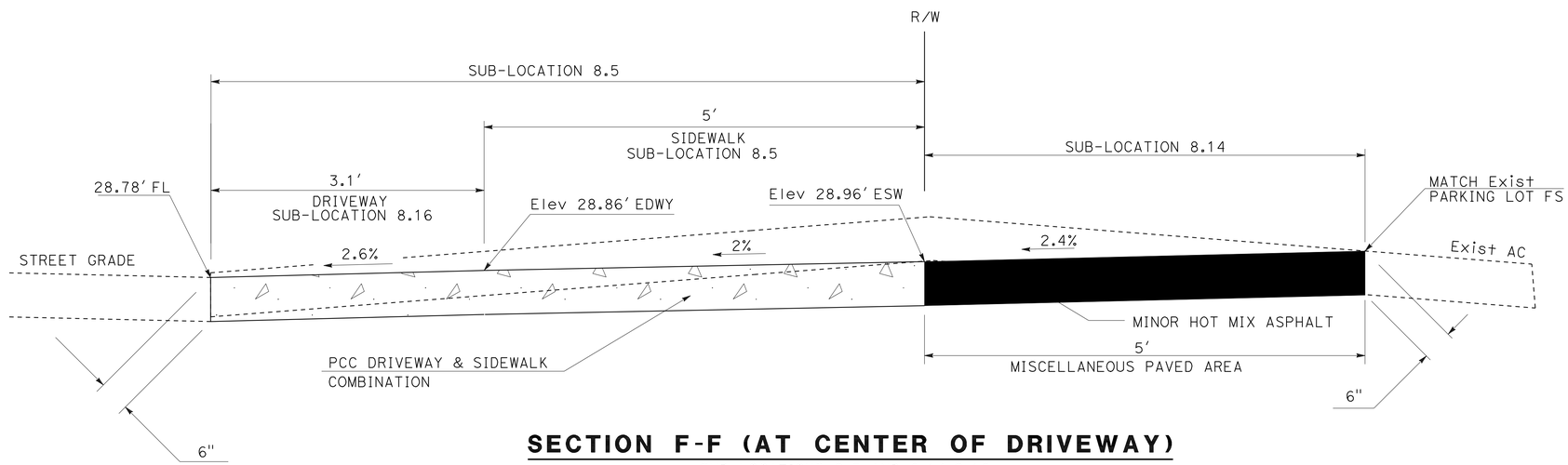

SECTION F-F (AT CENTER OF DRIVEWAY)

SUB-LOCATIONS 8.5 AND 8.14,8.16
(SEE CONSTRUCTION DETAIL SHEET C-4)

CONSTRUCTION DETAILS

NO SCALE

C-7

STATE OF CALIFORNIA - DEPARTMENT OF TRANSPORTATION
Caltrans® DESIGN

FUNCTIONAL SUPERVISOR: ABU-BAKR H AL-JAFRI

CALCULATED-DESIGNED BY: MOHAMMAD OLADI
CHECKED BY: GEORGE MAMAGHANI

REVISED BY | DATE REVISED

LAST REVISION 06-24-11 | DATE PLOTTED => 30-JUN-2011 | TIME PLOTTED => 09:12

Dist	COUNTY	ROUTE	POST MILES TOTAL PROJECT	SHEET No.	TOTAL SHEETS
11	SD	75	9.3/10.1	18	62

REGISTERED CIVIL ENGINEER 06-07-11 DATE

06-27-11
PLANS APPROVAL DATE

REGISTERED PROFESSIONAL ENGINEER GEORGE H. MAMAGHANI No. 44842 Exp. 3-31-12 CIVIL STATE OF CALIFORNIA

THE STATE OF CALIFORNIA OR ITS OFFICERS OR AGENTS SHALL NOT BE RESPONSIBLE FOR THE ACCURACY OR COMPLETENESS OF SCANNED COPIES OF THIS PLAN SHEET.

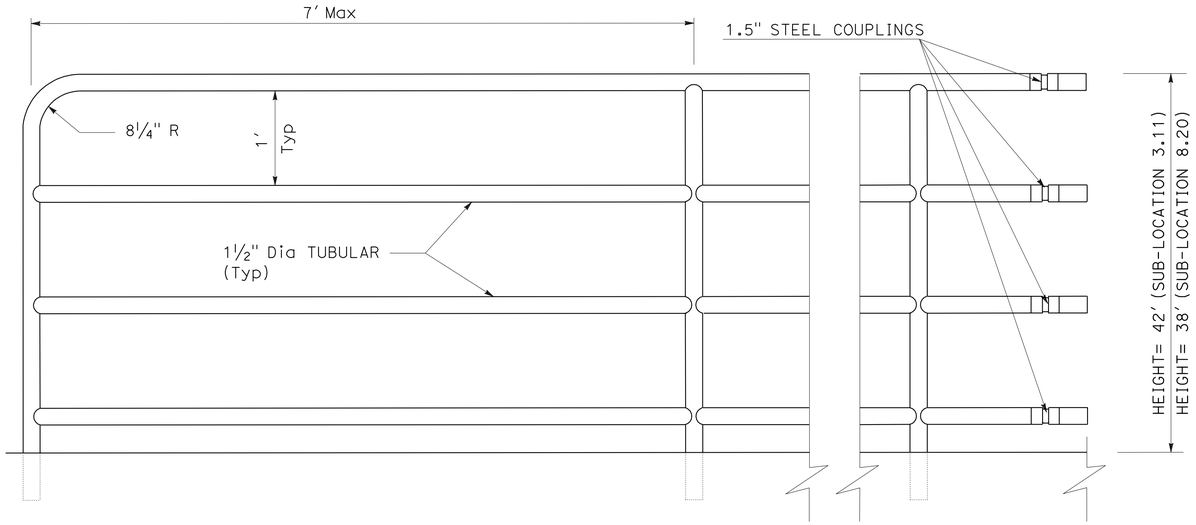

TUBULAR HANDRAILING

SUB-LOCATIONS 3.11 AND 8.20

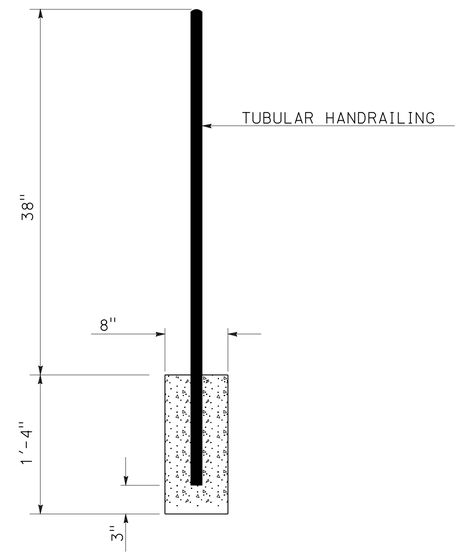

MOUNTING DETAIL

POST SHALL BE GROUTED IN PLACE
USING NON-SHRINK GROUT
(FOR SUB-LOCATION 8.20)

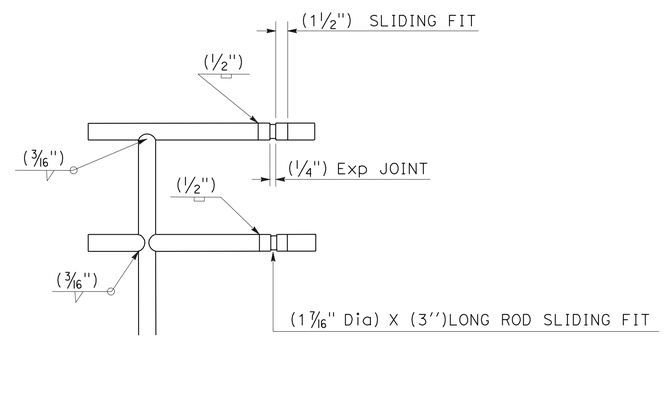

WELDING DETAIL

NOTES:

1. ¼" EXPANSION JOINTS @ 15' ON CENTER.
2. WELD AND GRIND SMOOTH ALL CONNECTIONS.
3. ALL RAILING TO BE HOT DIP GALVANIZED AFTER FABRICATION.
4. PIPE SHALL BE SEAMLESS STEEL ASTM A53 GRADE B.

CONSTRUCTION DETAILS

NO SCALE

C-8

STATE OF CALIFORNIA - DEPARTMENT OF TRANSPORTATION
Caltrans DESIGN

FUNCTIONAL SUPERVISOR: ABU-BAKR H AL-JAFRI
CALCULATED-DESIGNED BY: MOHAMMAD OLADI
CHECKED BY: GEORGE MAMAGHANI
REVISED BY / DATE REVISED

LAST REVISION 06-08-11 | DATE PLOTTED => 30-JUN-2011 | TIME PLOTTED => 09:12

Dist	COUNTY	ROUTE	POST MILES TOTAL PROJECT	SHEET No.	TOTAL SHEETS
11	SD	75	9.3/10.1	19	62

REGISTERED CIVIL ENGINEER 06-07-11 DATE

06-27-11
PLANS APPROVAL DATE

REGISTERED PROFESSIONAL ENGINEER GEORGE H. MAMAGHANI No. 44842 Exp. 3-31-12 CIVIL STATE OF CALIFORNIA

THE STATE OF CALIFORNIA OR ITS OFFICERS OR AGENTS SHALL NOT BE RESPONSIBLE FOR THE ACCURACY OR COMPLETENESS OF SCANNED COPIES OF THIS PLAN SHEET.

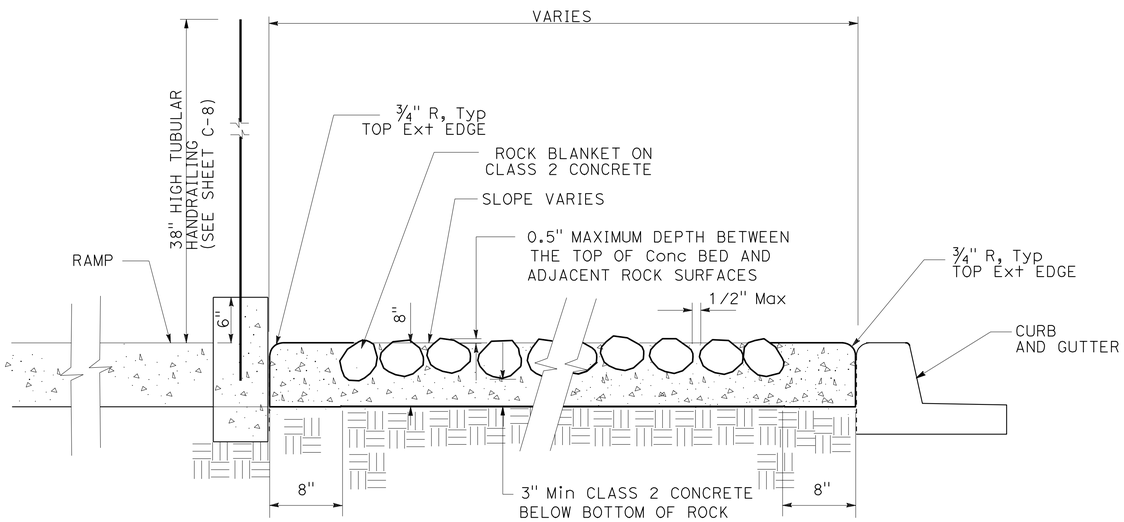

ROCK BLANKET

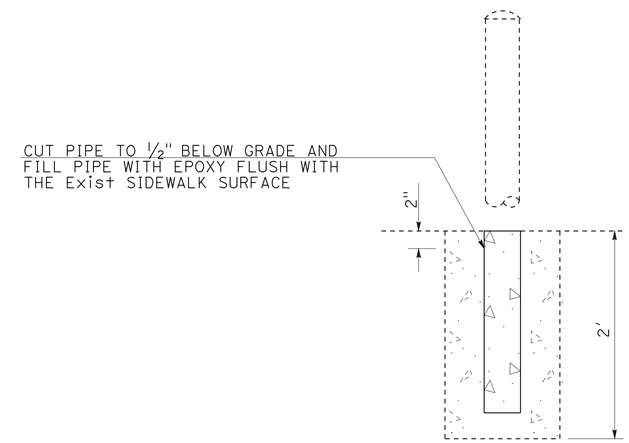

CUT & CAP STEEL PIPE PROTRUSION

FOR SUB-LOCATIONS 2.23 AND 3.13

CONSTRUCTION DETAILS

NO SCALE

C-9

STATE OF CALIFORNIA - DEPARTMENT OF TRANSPORTATION
Caltrans® DESIGN

FUNCTIONAL SUPERVISOR: ABU-BAKR H AL-JAFRI

CALCULATED-DESIGNED BY: MOHAMMAD OLADI
CHECKED BY: GEORGE MAMAGHANI

REVISED BY
DATE REVISED

LAST REVISION 06-24-11
DATE PLOTTED => 30-JUN-2011
TIME PLOTTED => 09:12

Dist	COUNTY	ROUTE	POST MILES TOTAL PROJECT	SHEET No.	TOTAL SHEETS
11	SD	75	9.3/10.1	20	62

REGISTERED CIVIL ENGINEER 06-07-11 DATE

06-27-11
PLANS APPROVAL DATE

REGISTERED PROFESSIONAL ENGINEER GEORGE H. MAMAGHANI No. 44842 Exp. 3-31-12 CIVIL STATE OF CALIFORNIA

THE STATE OF CALIFORNIA OR ITS OFFICERS OR AGENTS SHALL NOT BE RESPONSIBLE FOR THE ACCURACY OR COMPLETENESS OF SCANNED COPIES OF THIS PLAN SHEET.

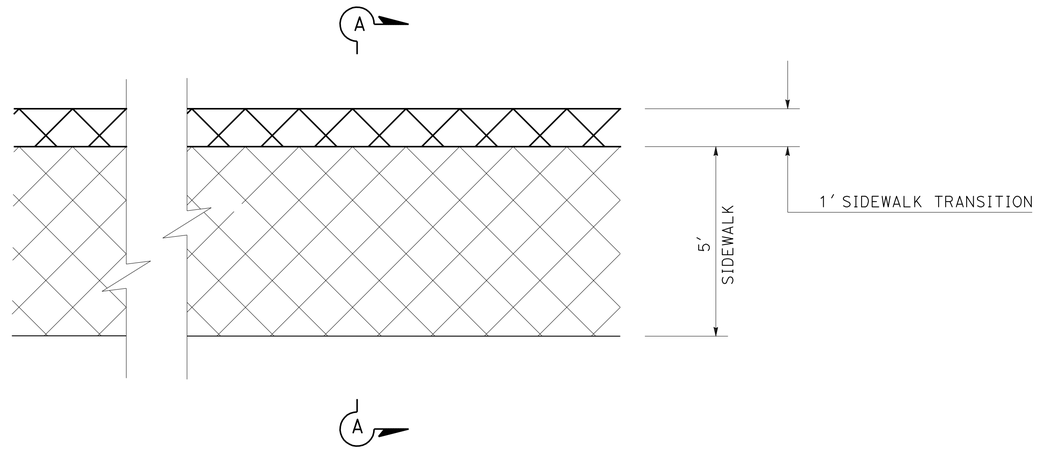

SIDEWALK TRANSITION

(TYPICAL)

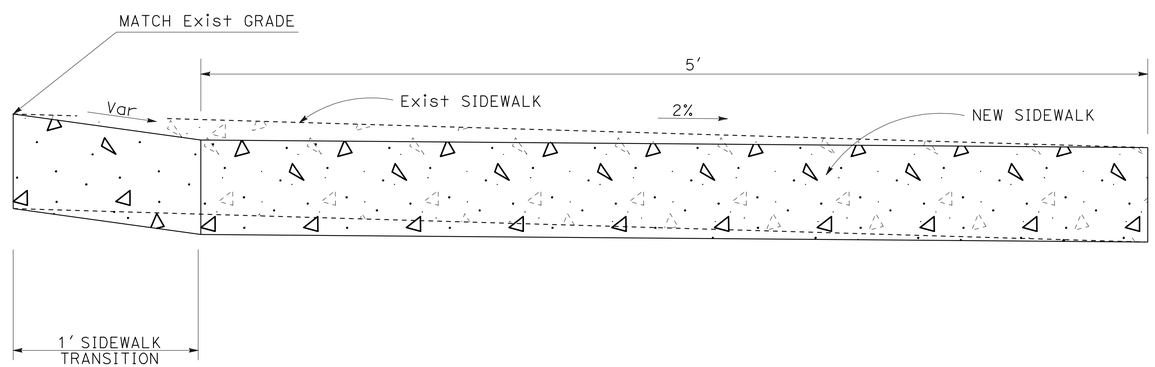

SECTION A-A

CONSTRUCTION DETAILS

NO SCALE

C-10

STATE OF CALIFORNIA - DEPARTMENT OF TRANSPORTATION
Caltrans® DESIGN

FUNCTIONAL SUPERVISOR: ABU-BAKR H AL-JAFRI

CALCULATED-DESIGNED BY: MOHAMMAD OLADI
CHECKED BY: GEORGE MAMAGHANI

REVISED BY | DATE REVISED

LAST REVISION 06-24-11 | DATE PLOTTED => 30-JUN-2011 | TIME PLOTTED => 09:12

Dist	COUNTY	ROUTE	POST MILES TOTAL PROJECT	SHEET No.	TOTAL SHEETS
11	SD	75	9.3/10.1	21	62

REGISTERED CIVIL ENGINEER 06-07-11 DATE

06-27-11
PLANS APPROVAL DATE

REGISTERED PROFESSIONAL ENGINEER ARTURO A. REYES No. C75491 Exp. 6/30/12 CIVIL STATE OF CALIFORNIA

THE STATE OF CALIFORNIA OR ITS OFFICERS OR AGENTS SHALL NOT BE RESPONSIBLE FOR THE ACCURACY OR COMPLETENESS OF SCANNED COPIES OF THIS PLAN SHEET.

NOTES: 1. FOR ACCURATE RIGHT OF WAY AND ACCESS DATA, CONTACT RIGHT OF WAY ENGINEERING AT THE DISTRICT OFFICE.
2. LOCATION OF UTILITY FACILITIES SHOWN ON THESE PLANS WERE OBTAINED FROM OWNER RECORDS AND/OR FROM STATE SURVEYS.
3. ALL UTILITIES TO BE FIELD VERIFIED.

EXISTING UTILITIES LEGEND

SYMBOL	FACILITY	OWNER
—e—	ELECTRIC LINE	- SDG&E
—g—	GAS LINE	- SDG&E
—tv—	TELEVISION LINE	- COX CABLE
—w—	WATER LINE	- CITY OF EL SAN DIEGO & CITY OF IMPERIAL BEACH
—t—	TELEPHONE LINE	- AT&T

SAN DIEGO

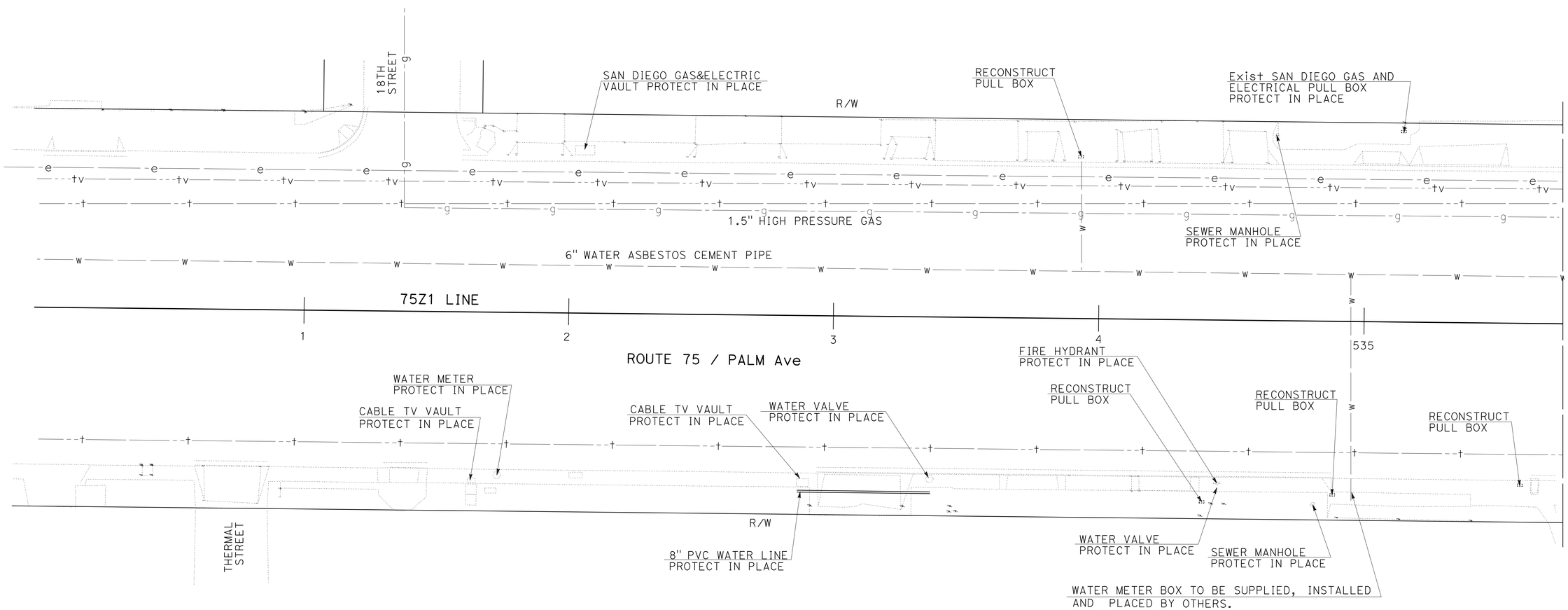

THIS PLAN ACCURATE FOR UTILITY INFORMATION ONLY

UTILITY PLAN

SCALE 1" = 20'

U-1

STATE OF CALIFORNIA - DEPARTMENT OF TRANSPORTATION
Caltrans® DESIGN

FUNCTIONAL SUPERVISOR: ABU-BAKR H AL-JAFRI
CALCULATED-DESIGNED BY: ARTURO REYES
CHECKED BY: VASANT KALE
REVISED BY
DATE REVISED

LAST REVISION 06-24-11
DATE PLOTTED => 30-JUN-2011
TIME PLOTTED => 09:12

Dist	COUNTY	ROUTE	POST MILES TOTAL PROJECT	SHEET No.	TOTAL SHEETS
11	SD	75	9.3/10.1	22	62

REGISTERED CIVIL ENGINEER 06-07-11 DATE

06-27-11
PLANS APPROVAL DATE

REGISTERED PROFESSIONAL ENGINEER ARTURO A. REYES No. C75491 Exp. 6/30/12 CIVIL STATE OF CALIFORNIA

THE STATE OF CALIFORNIA OR ITS OFFICERS OR AGENTS SHALL NOT BE RESPONSIBLE FOR THE ACCURACY OR COMPLETENESS OF SCANNED COPIES OF THIS PLAN SHEET.

NOTES:
1. FOR ACCURATE RIGHT OF WAY AND ACCESS DATA, CONTACT RIGHT OF WAY ENGINEERING AT THE DISTRICT OFFICE.
2. LOCATION OF UTILITY FACILITIES SHOWN ON THESE PLANS WERE OBTAINED FROM OWNER RECORDS AND/OR FROM STATE SURVEYS.
3. ALL UTILITIES TO BE FIELD VERIFIED.

SAN DIEGO

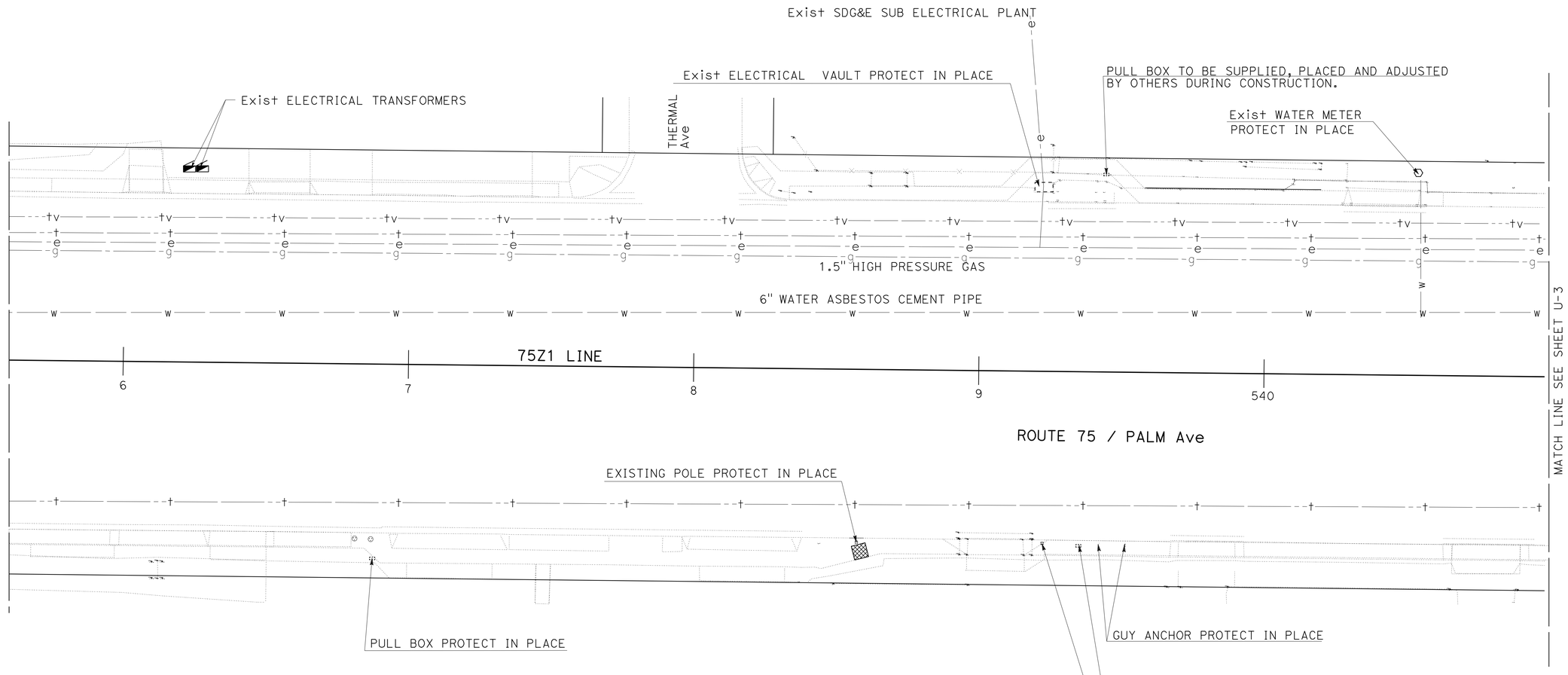

THIS PLAN ACCURATE FOR UTILITY INFORMATION ONLY

SCALE 1" = 20'

UTILITY PLAN
U-2

STATE OF CALIFORNIA - DEPARTMENT OF TRANSPORTATION
Caltrans®
DESIGN

FUNCTIONAL SUPERVISOR: ABU-BAKR H AL-JAFRI
CALCULATED-DESIGNED BY: ARTURO REYES
CHECKED BY: VASANT KALE
REVISED BY
DATE REVISED

LAST REVISION 06-24-11
DATE PLOTTED => 30-JUN-2011
TIME PLOTTED => 09:12

Dist	COUNTY	ROUTE	POST MILES TOTAL PROJECT	SHEET No.	TOTAL SHEETS
11	SD	75	9.3/10.1	23	62

REGISTERED CIVIL ENGINEER 06-07-11 DATE

06-27-11
PLANS APPROVAL DATE

REGISTERED PROFESSIONAL ENGINEER ARTURO A. REYES No. C75491 Exp. 6/30/12 CIVIL STATE OF CALIFORNIA

THE STATE OF CALIFORNIA OR ITS OFFICERS OR AGENTS SHALL NOT BE RESPONSIBLE FOR THE ACCURACY OR COMPLETENESS OF SCANNED COPIES OF THIS PLAN SHEET.

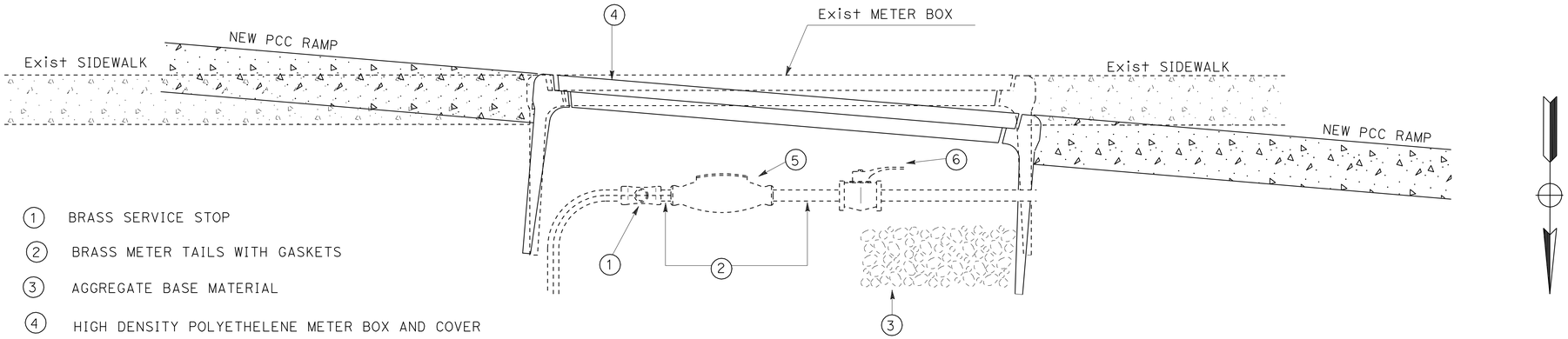

1. BRASS SERVICE STOP
2. BRASS METER TAILS WITH GASKETS
3. AGGREGATE BASE MATERIAL
4. HIGH DENSITY POLYETHELENE METER BOX AND COVER
5. WATER METER
6. BRASS BALL VALVE

ADJUST WATER METER BOX TO GRADE

NO SCALE

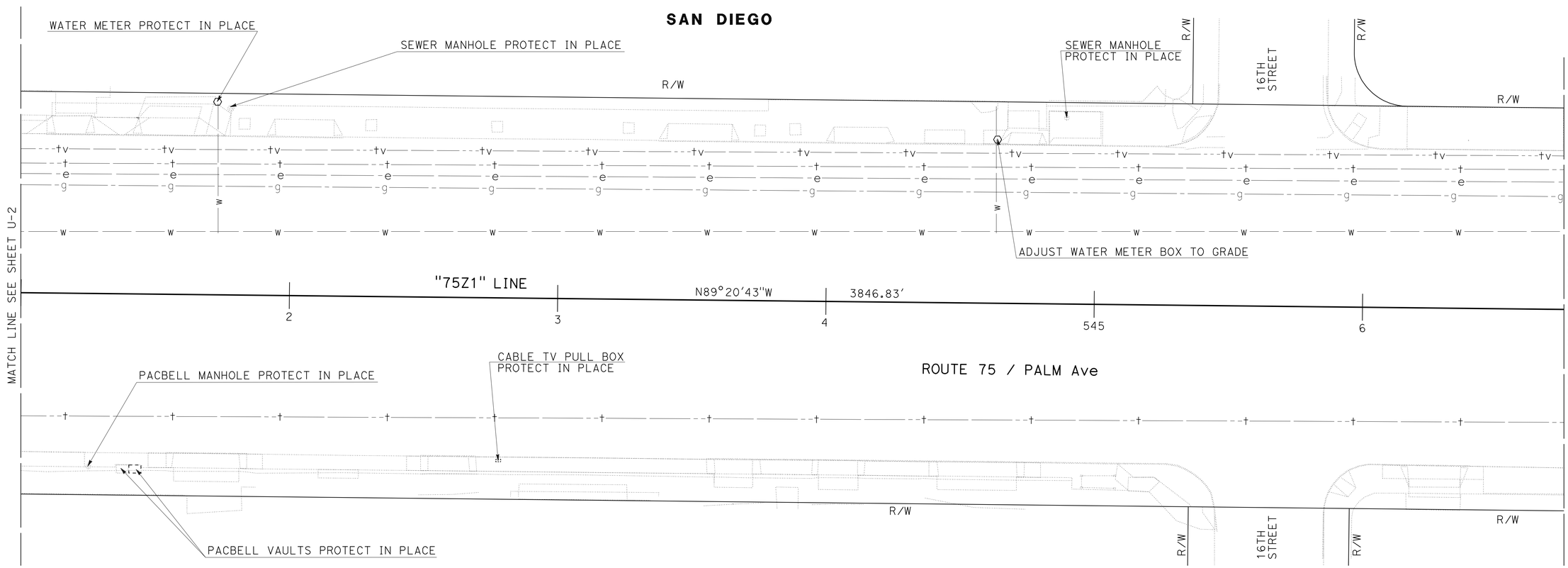

THIS PLAN ACCURATE FOR UTILITY INFORMATION ONLY

NOTE:

1. FOR ACCURATE RIGHT OF WAY AND ACCESS DATA, CONTACT RIGHT OF WAY ENGINEERING AT THE DISTRICT OFFICE.

UTILITY PLAN
U-3

SCALE 1" = 20'

STATE OF CALIFORNIA - DEPARTMENT OF TRANSPORTATION
Caltrans® DESIGN

FUNCTIONAL SUPERVISOR: ABU-BAKR H AL-JAFRI
CALCULATED-DESIGNED BY: ARTURO REYES
CHECKED BY: VASANT KALE
REVISED BY
DATE REVISED

LAST REVISION 06-24-11
DATE PLOTTED => 30-JUN-2011
TIME PLOTTED => 09:12

Dist	COUNTY	ROUTE	POST MILES TOTAL PROJECT	SHEET No.	TOTAL SHEETS
11	SD	75	9.3/10.1	24	62

REGISTERED CIVIL ENGINEER 06-07-11 DATE

06-27-11
PLANS APPROVAL DATE

REGISTERED PROFESSIONAL ENGINEER ARTURO A. REYES No. C75491 Exp. 6/30/12 CIVIL STATE OF CALIFORNIA

THE STATE OF CALIFORNIA OR ITS OFFICERS OR AGENTS SHALL NOT BE RESPONSIBLE FOR THE ACCURACY OR COMPLETENESS OF SCANNED COPIES OF THIS PLAN SHEET.

NOTE:

1. FOR ACCURATE RIGHT OF WAY AND ACCESS DATA, CONTACT RIGHT OF WAY ENGINEERING AT THE DISTRICT OFFICE.

SAN DIEGO

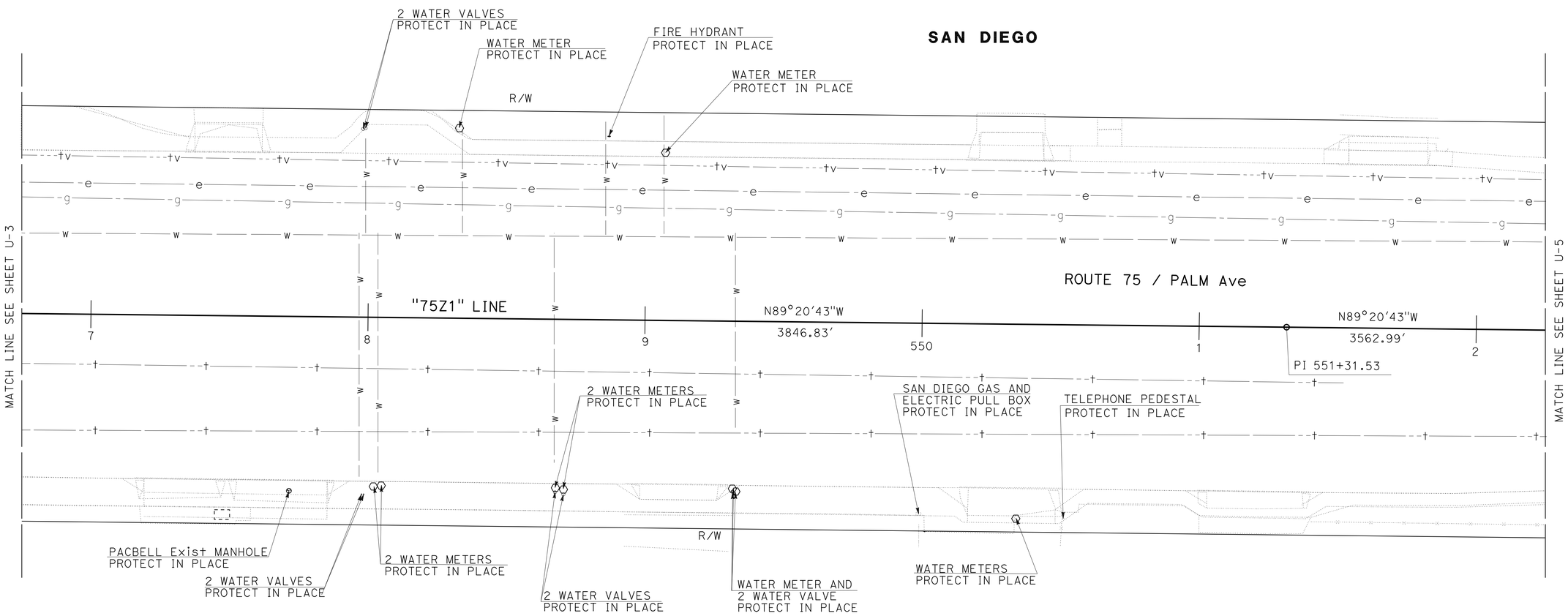

THIS PLAN ACCURATE FOR UTILITY INFORMATION ONLY

SCALE 1" = 20'

UTILITY PLAN
U-4

STATE OF CALIFORNIA - DEPARTMENT OF TRANSPORTATION
Caltrans DESIGN

FUNCTIONAL SUPERVISOR: ABU-BAKR H AL-JAFRI

CALCULATED-DESIGNED BY: ARTURO REYES
CHECKED BY: VASANT KALE

REVISED BY
DATE REVISED

LAST REVISION 06-24-11
DATE PLOTTED => 30-JUN-2011
TIME PLOTTED => 09:13

Dist	COUNTY	ROUTE	POST MILES TOTAL PROJECT	SHEET No.	TOTAL SHEETS
11	SD	75	9.3/10.1	25	62

REGISTERED CIVIL ENGINEER 06-07-11 DATE

06-27-11
PLANS APPROVAL DATE

REGISTERED PROFESSIONAL ENGINEER ARTURO A. REYES No. C75491 Exp. 6/30/12 CIVIL STATE OF CALIFORNIA

THE STATE OF CALIFORNIA OR ITS OFFICERS OR AGENTS SHALL NOT BE RESPONSIBLE FOR THE ACCURACY OR COMPLETENESS OF SCANNED COPIES OF THIS PLAN SHEET.

NOTE:

1. FOR ACCURATE RIGHT OF WAY AND ACCESS DATA, CONTACT RIGHT OF WAY ENGINEERING AT THE DISTRICT OFFICE.

SAN DIEGO

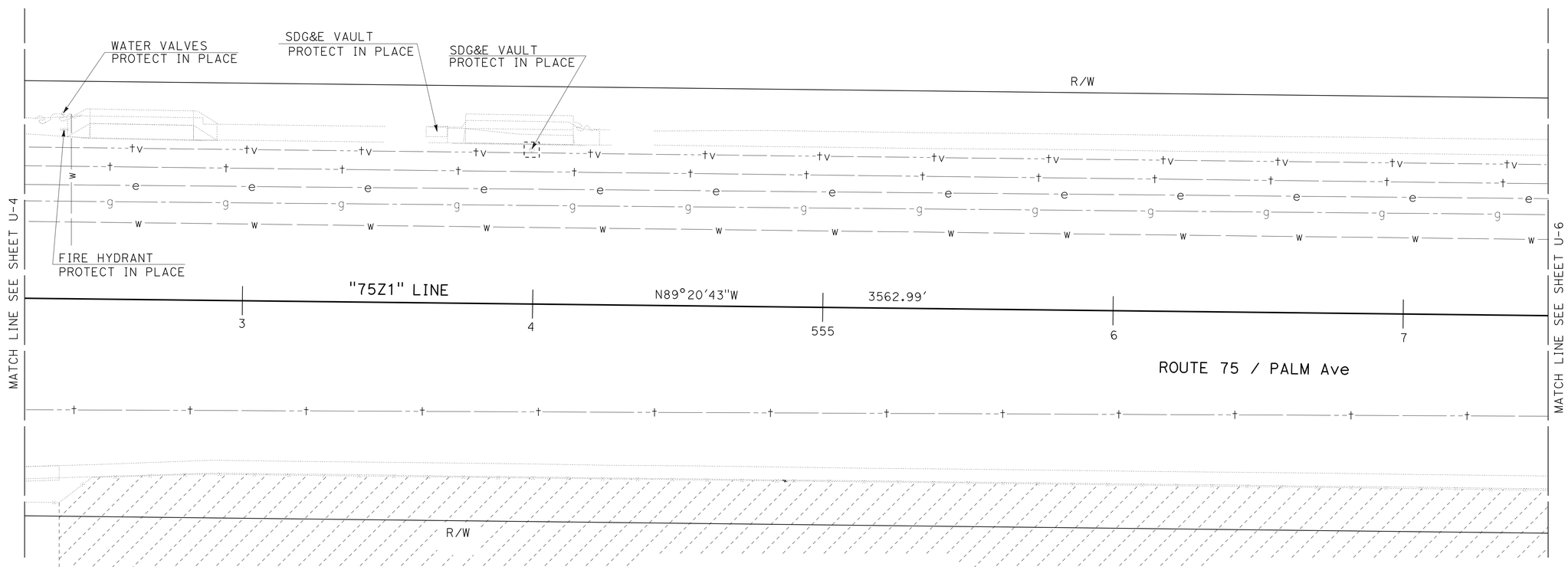

THIS PLAN ACCURATE FOR UTILITY INFORMATION ONLY

SCALE 1" = 20'

UTILITY PLAN
U-5

STATE OF CALIFORNIA - DEPARTMENT OF TRANSPORTATION
Caltrans® DESIGN

FUNCTIONAL SUPERVISOR: ABU-BAKR H AL-JAFRI
CALCULATED-DESIGNED BY: ARTURO REYES
CHECKED BY: VASANT KALE
REVISED BY
DATE REVISED

LAST REVISION 06-24-11
DATE PLOTTED => 30-JUN-2011
TIME PLOTTED => 09:13

Dist	COUNTY	ROUTE	POST MILES TOTAL PROJECT	SHEET No.	TOTAL SHEETS
11	SD	75	9.3/10.1	26	62

REGISTERED CIVIL ENGINEER 06-07-11 DATE

06-27-11
PLANS APPROVAL DATE

REGISTERED PROFESSIONAL ENGINEER ARTURO A. REYES No. C75491 Exp. 6/30/12 CIVIL STATE OF CALIFORNIA

THE STATE OF CALIFORNIA OR ITS OFFICERS OR AGENTS SHALL NOT BE RESPONSIBLE FOR THE ACCURACY OR COMPLETENESS OF SCANNED COPIES OF THIS PLAN SHEET.

NOTE:

1. FOR ACCURATE RIGHT OF WAY AND ACCESS DATA, CONTACT RIGHT OF WAY ENGINEERING AT THE DISTRICT OFFICE.

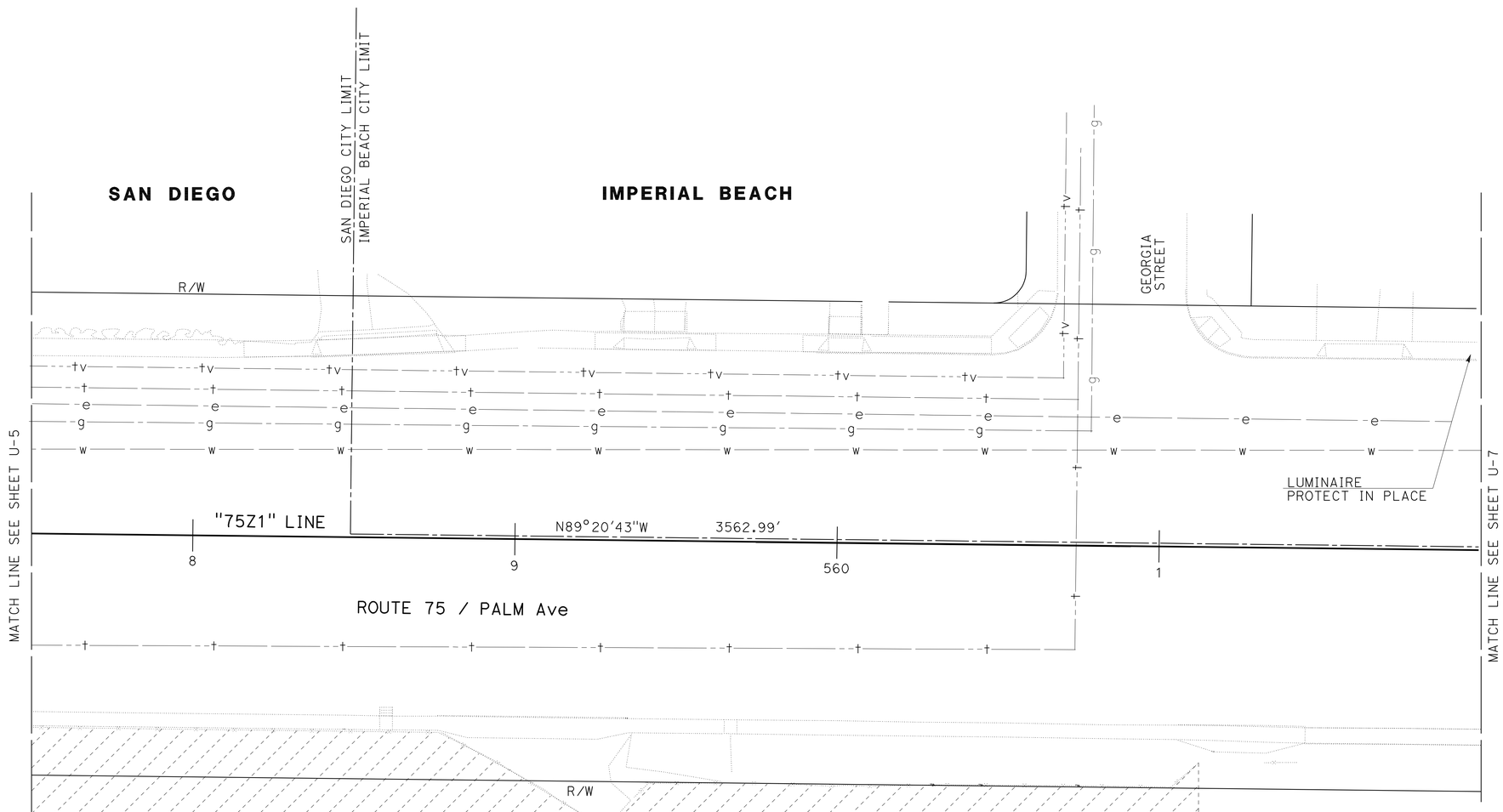

THIS PLAN ACCURATE FOR UTILITY INFORMATION ONLY

SCALE 1" = 20'

UTILITY PLAN

U-6

STATE OF CALIFORNIA - DEPARTMENT OF TRANSPORTATION
Caltrans DESIGN

FUNCTIONAL SUPERVISOR: ABU-BAKR H AL-JAFRI
CALCULATED-DESIGNED BY: ARTURO REYES
CHECKED BY: VASANT KALE
REVISED BY
DATE REVISED

LAST REVISION 06-24-11
DATE PLOTTED => 30-JUN-2011
TIME PLOTTED => 09:13

Dist	COUNTY	ROUTE	POST MILES TOTAL PROJECT	SHEET No.	TOTAL SHEETS
11	SD	75	9.3/10.1	27	62

REGISTERED CIVIL ENGINEER 06-07-11 DATE

06-27-11
PLANS APPROVAL DATE

REGISTERED PROFESSIONAL ENGINEER ARTURO A. REYES No. C75491 Exp. 6/30/12 CIVIL STATE OF CALIFORNIA

THE STATE OF CALIFORNIA OR ITS OFFICERS OR AGENTS SHALL NOT BE RESPONSIBLE FOR THE ACCURACY OR COMPLETENESS OF SCANNED COPIES OF THIS PLAN SHEET.

NOTES: 1. FOR ACCURATE RIGHT OF WAY AND ACCESS DATA, CONTACT RIGHT OF WAY ENGINEERING AT THE DISTRICT OFFICE.
2. LOCATION OF UTILITY FACILITIES SHOWN ON THESE PLANS WERE OBTAINED FROM OWNER RECORDS AND/OR FROM STATE SURVEYS.
3. ALL UTILITIES TO BE FIELD VERIFIED.

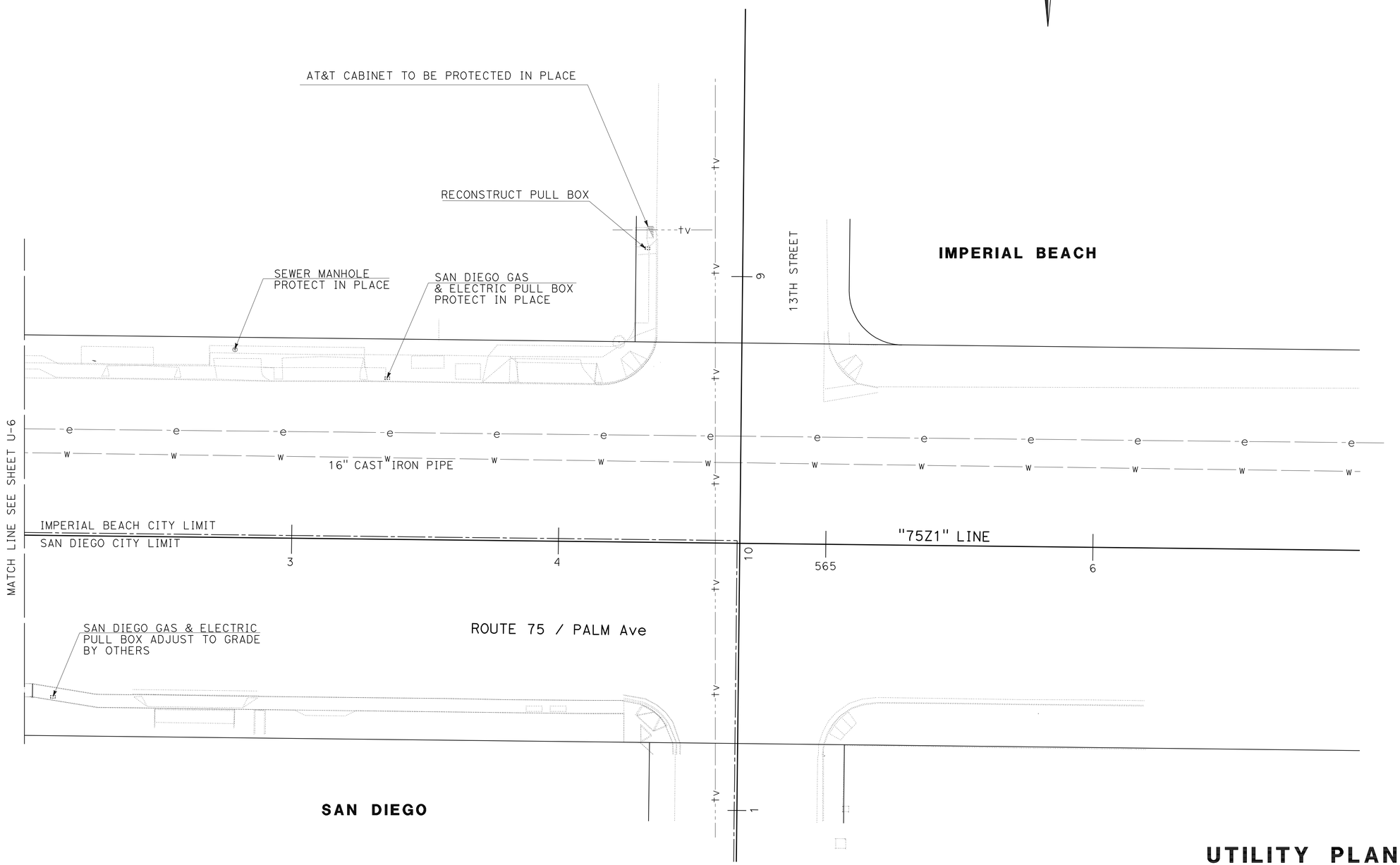

THIS PLAN ACCURATE FOR UTILITY INFORMATION ONLY

SCALE 1" = 20'

UTILITY PLAN
U-7

STATE OF CALIFORNIA - DEPARTMENT OF TRANSPORTATION
Caltrans DESIGN

FUNCTIONAL SUPERVISOR: ABU-BAKR H AL-JAFRI
CALCULATED-DESIGNED BY: ARTURO REYES
CHECKED BY: VASANT KALE
REVISED BY
DATE REVISED

LAST REVISION 06-24-11
DATE PLOTTED => 30-JUN-2011
TIME PLOTTED => 09:13

Dist	COUNTY	ROUTE	POST MILES TOTAL PROJECT	SHEET No.	TOTAL SHEETS
11	SD	75	9.3/10.1	28	62

REGISTERED CIVIL ENGINEER 06-07-11 DATE

06-27-11
PLANS APPROVAL DATE

REGISTERED PROFESSIONAL ENGINEER SHAHIN ADIBI No. 54839 Exp. 06-30-12 CIVIL STATE OF CALIFORNIA

THE STATE OF CALIFORNIA OR ITS OFFICERS OR AGENTS SHALL NOT BE RESPONSIBLE FOR THE ACCURACY OR COMPLETENESS OF SCANNED COPIES OF THIS PLAN SHEET.

NOTES:

1. EXACT LOCATION OF CONSTRUCTION AREA SIGNS SHALL BE DETERMINED BY THE ENGINEER.
2. FEDERAL MANUAL ON UNIFORM TRAFFIC CONTROL DEVICES (MUTCD) SIGN CODES ARE SHOWN UNLESS DESIGNATED BY (CA), INDICATING CALIFORNIA MUTCD.
3. EXISTING UTILITIES ARE NOT SHOWN ON THESE PLAN SHEETS. THE CONTRACTOR SHALL VERIFY LOCATIONS OF EXISTING UTILITIES AND ADJUST THE FIELD LOCATION OF SIGN POSTS IN CONSULTATION WITH THE ENGINEER.

LEGENDS:

XX = CONSTRUCTION AREA SIGN

→ = DIRECTION OF TRAFFIC

TYPICAL- PLACEMENT OF TRAFFIC PLASTIC DRUM

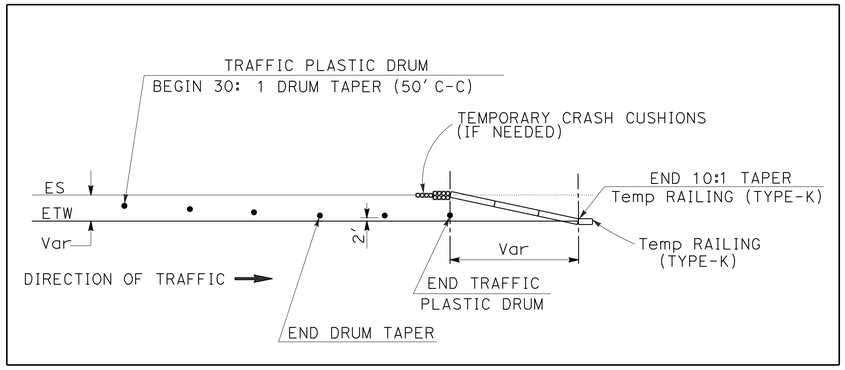

CONSTRUCTION AREA SIGNS

SIGN No.	CODE	PANEL SIZE (In)x(In)	No. OF POST AND SIZE (In)x(In)	No. OF SIGNS
1	C11 (1) (CA)	90 X 48	2 - 4 X 6 (S)	2
2	C14 (CA)	48 X 24	1 - 4 X 4 (S)	18
3	C23 (CA)	48 X 48	1 - 4 X 6 (S)	16
4	W11-1	24 X 24	PORTABLE	2
	W16-1	18 X 24		
5	R9-9	30 X 18	PORTABLE	10
6	R9-10	48 X 24	PORTABLE	10
			TOTAL	58

(S) DENOTES STATIONARY MOUNTED SIGN.

TYPICAL PLACEMENT OF R9-10 & R9-9 CONSTRUCTION AREA SIGNS

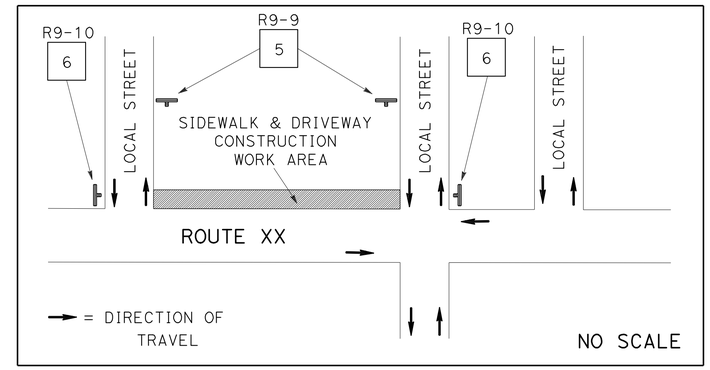

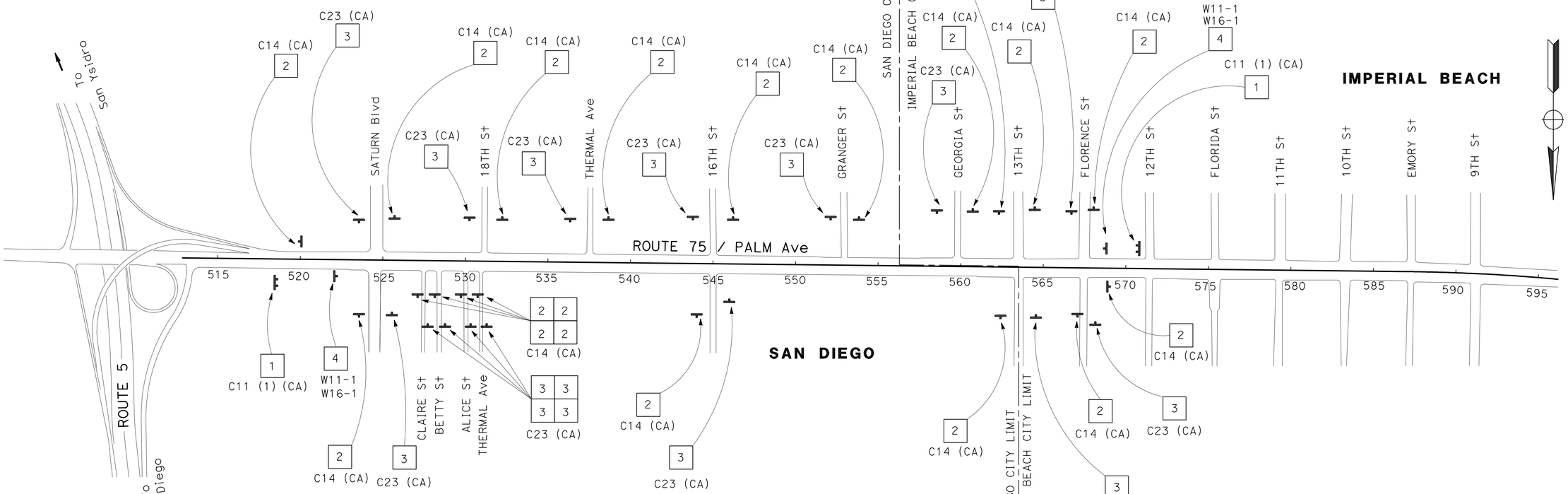

CONSTRUCTION AREA SIGNS

NO SCALE

CS-1

THIS PLAN ACCURATE FOR CONSTRUCTION AREA SIGN WORK ONLY.

STATE OF CALIFORNIA - DEPARTMENT OF TRANSPORTATION
Caltrans
TRAFFIC DESIGN

FUNCTIONAL SUPERVISOR: CAMILLE ABOU-FADEL
CALCULATED-DESIGNED BY: SHAHIN ADIBI
CHECKED BY: RYAN CHAO
REVISED BY / DATE REVISED

LAST REVISION 06-24-11
DATE PLOTTED => 30-JUN-2011
TIME PLOTTED => 09:13

Dist	COUNTY	ROUTE	POST MILES TOTAL PROJECT	SHEET No.	TOTAL SHEETS
11	SD	75	9.3/10.1	29	62

REGISTERED CIVIL ENGINEER 06-07-11 DATE

06-27-11
PLANS APPROVAL DATE

REGISTERED PROFESSIONAL ENGINEER
SHAHIN ADIBI
No. 54839
Exp. 06-30-12
CIVIL
STATE OF CALIFORNIA

THE STATE OF CALIFORNIA OR ITS OFFICERS OR AGENTS SHALL NOT BE RESPONSIBLE FOR THE ACCURACY OR COMPLETENESS OF SCANNED COPIES OF THIS PLAN SHEET.

NOTE

1. FOR ACCURATE RIGHT OF WAY AND ACCESS DATA, CONTACT RIGHT OF WAY ENGINEERING AT THE DISTRICT OFFICE.

LEGEND

RB
(XX) = REMOVE PEDESTRIAN BARRICADE

RL
(XX) = RELOCATE SIGN (SIGN WILL BE RELOCATED BY OTHERS)

S/S
(XX) = INSTALL SIGN (STRAP AND SADDLE BRACKET METHOD)

M
(XX) = MAST ARM MOUNTED SIGN

MTS = METROPOLITAN TRANSIT SYSTEM

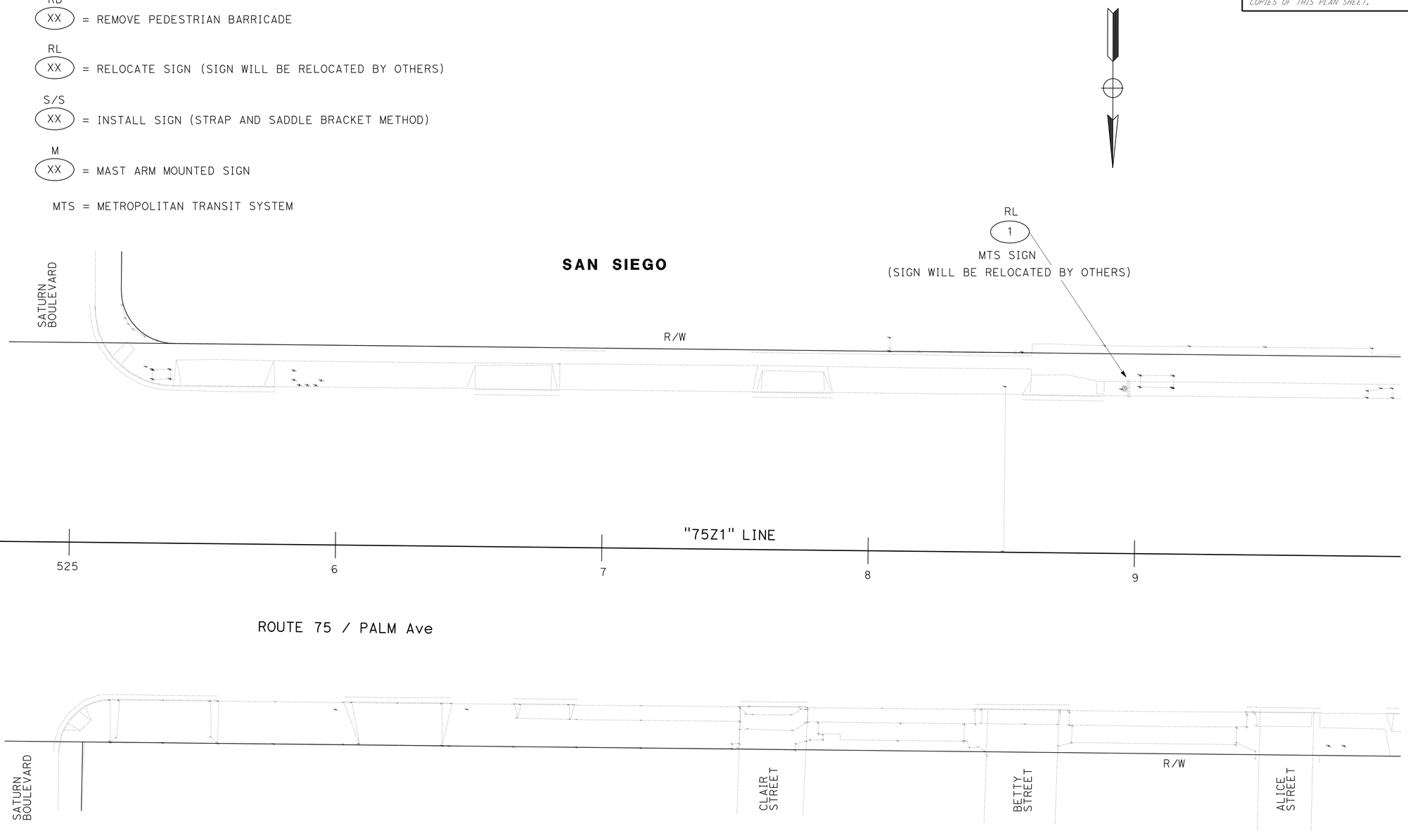

THIS PLAN ACCURATE FOR SIGN WORK ONLY.

SCALE 1" = 20'

SIGN PLAN
S-1

STATE OF CALIFORNIA - DEPARTMENT OF TRANSPORTATION
Caltrans® TRAFFIC DESIGN

FUNCTIONAL SUPERVISOR: CAMILLE ABOU-FADEL
CALCULATED-DESIGNED BY: RYAN CHAO
CHECKED BY: SHAHIN ADIBI
REVISED BY
DATE REVISED

LAST REVISION 06-24-11
DATE PLOTTED => 30-JUN-2011
TIME PLOTTED => 09:13

Dist	COUNTY	ROUTE	POST MILES TOTAL PROJECT	SHEET No.	TOTAL SHEETS
11	SD	75	9.3/10.1	30	62

REGISTERED CIVIL ENGINEER 06-07-11 DATE

06-27-11
PLANS APPROVAL DATE

REGISTERED PROFESSIONAL ENGINEER
SHAHIN ADIBI
No. 54839
Exp. 06-30-12
CIVIL
STATE OF CALIFORNIA

THE STATE OF CALIFORNIA OR ITS OFFICERS OR AGENTS SHALL NOT BE RESPONSIBLE FOR THE ACCURACY OR COMPLETENESS OF SCANNED COPIES OF THIS PLAN SHEET.

NOTE:

1. FOR ACCURATE RIGHT OF WAY AND ACCESS DATA, CONTACT RIGHT OF WAY ENGINEERING AT THE DISTRICT OFFICE.

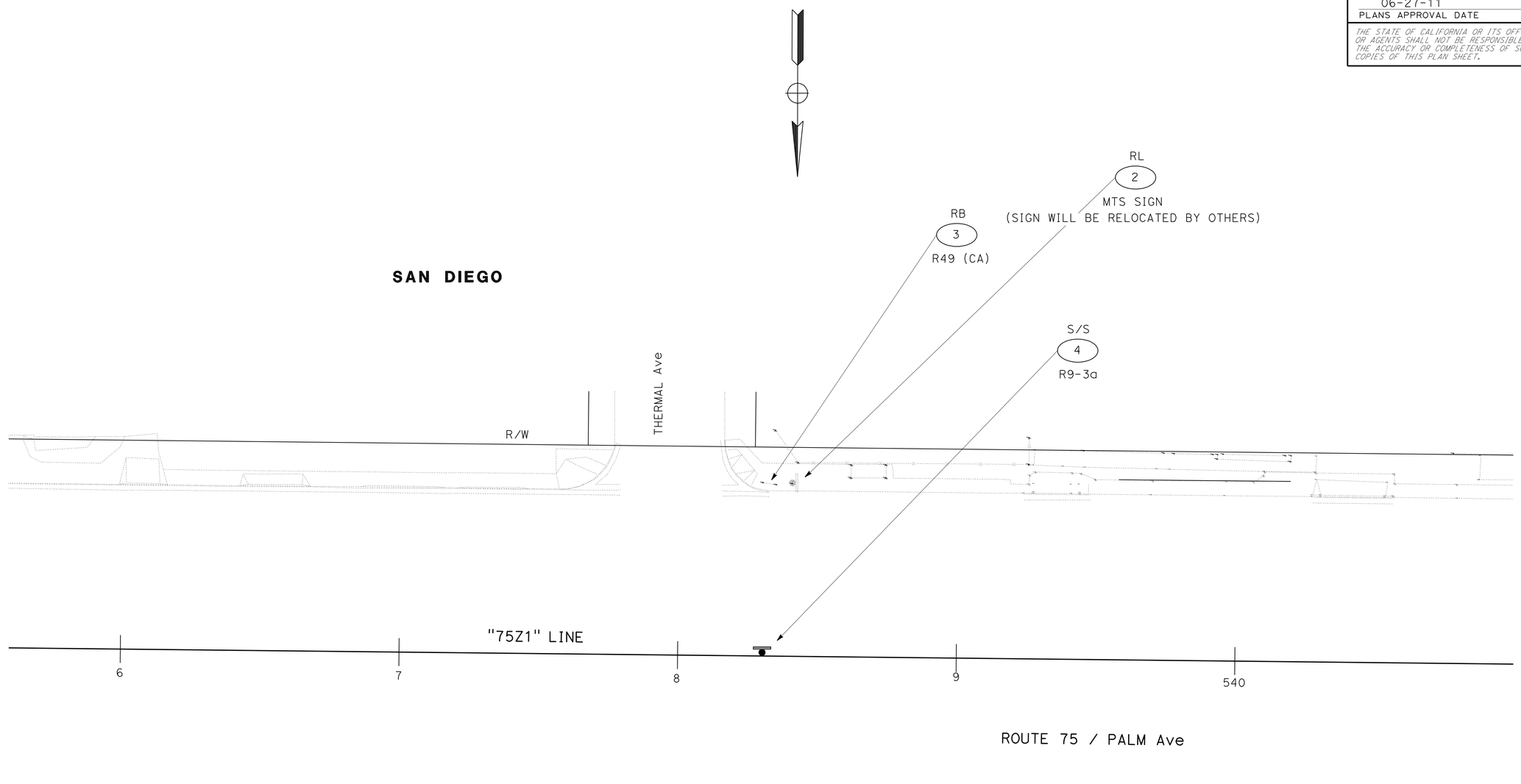

THIS PLAN ACCURATE FOR SIGN WORK ONLY.

SCALE 1" = 20'

SIGN PLAN
S-2

STATE OF CALIFORNIA - DEPARTMENT OF TRANSPORTATION
Caltrans
TRAFFIC DESIGN

FUNCTIONAL SUPERVISOR: CAMILLE ABOU-FADEL
CALCULATED-DESIGNED BY: RYAN CHAO
CHECKED BY: SHAHIN ADIBI
REVISED BY
DATE REVISED

LAST REVISION 06-24-11
DATE PLOTTED => 30-JUN-2011
TIME PLOTTED => 09:13

Dist	COUNTY	ROUTE	POST MILES TOTAL PROJECT	SHEET No.	TOTAL SHEETS
11	SD	75	9.3/10.1	31	62

REGISTERED CIVIL ENGINEER 06-07-11 DATE

06-27-11
PLANS APPROVAL DATE

REGISTERED PROFESSIONAL ENGINEER
SHAHIN ADIBI
No. 54839
Exp. 06-30-12
CIVIL
STATE OF CALIFORNIA

THE STATE OF CALIFORNIA OR ITS OFFICERS OR AGENTS SHALL NOT BE RESPONSIBLE FOR THE ACCURACY OR COMPLETENESS OF SCANNED COPIES OF THIS PLAN SHEET.

NOTE:

1. FOR ACCURATE RIGHT OF WAY AND ACCESS DATA, CONTACT RIGHT OF WAY ENGINEERING AT THE DISTRICT OFFICE.

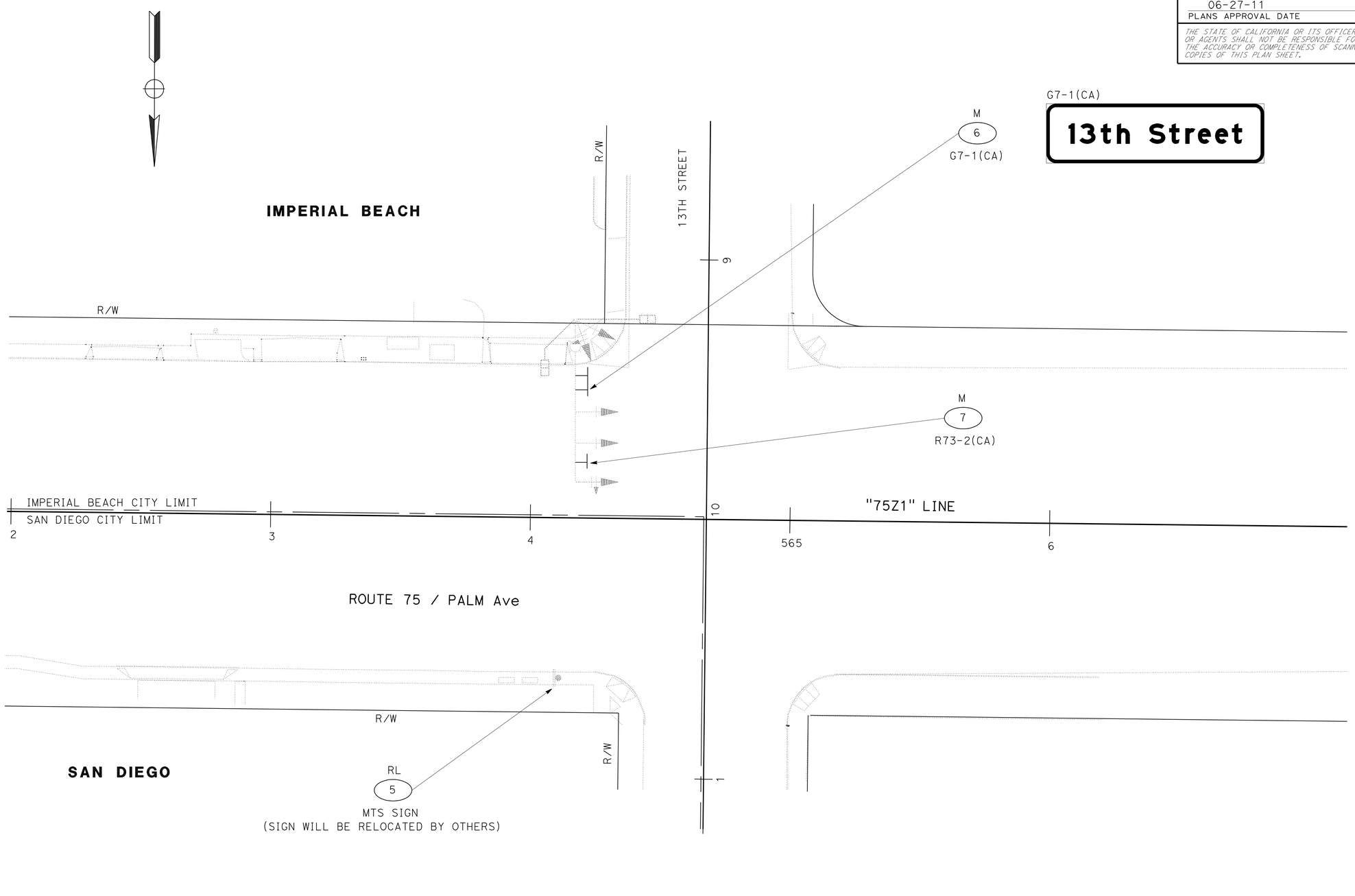

SCALE 1" = 20'

SIGN PLAN
S-3

REVISED BY	DATE REVISED

CALCULATED-DESIGNED BY	RYAN CHAO
CHECKED BY	SHAHIN ADIBI

FUNCTIONAL SUPERVISOR: CAMILLE ABOU-FADEL

STATE OF CALIFORNIA - DEPARTMENT OF TRANSPORTATION
Caltrans
TRAFFIC DESIGN

LAST REVISION 06-24-11
DATE PLOTTED => 30-JUN-2011
TIME PLOTTED => 09:13

Dist	COUNTY	ROUTE	POST MILES TOTAL PROJECT	SHEET No.	TOTAL SHEETS
11	SD	75	9.3/10.1	32	62

REGISTERED CIVIL ENGINEER 06-07-11 DATE

06-27-11
PLANS APPROVAL DATE

REGISTERED PROFESSIONAL ENGINEER
SHAHIN ADIBI
No. 54839
Exp. 06-30-12
CIVIL
STATE OF CALIFORNIA

THE STATE OF CALIFORNIA OR ITS OFFICERS OR AGENTS SHALL NOT BE RESPONSIBLE FOR THE ACCURACY OR COMPLETENESS OF SCANNED COPIES OF THIS PLAN SHEET.

SIGN No. 6
G7-1 (CA)

LEGEND				ARROW	
LINE No.	U/L	Caps	Num	Deg	Length
1	6E(M)/4.5E(M)				

NO SCALE

SIGN DETAILS
SD-1

REVISED BY | DATE REVISED
RYAN CHAO | SHAHIN ADIBI
CALCULATED-DESIGNED BY | CHECKED BY
FUNCTIONAL SUPERVISOR
CAMILLE ABOU-FADEL

STATE OF CALIFORNIA - DEPARTMENT OF TRANSPORTATION
Caltrans
TRAFFIC DESIGN

LAST REVISION 06-24-11 | DATE PLOTTED => 30-JUN-2011 | TIME PLOTTED => 09:13

Dist	COUNTY	ROUTE	POST MILES TOTAL PROJECT	SHEET No.	TOTAL SHEETS
11	SD	75	9.3/10.1	33	62

06-07-11
REGISTERED CIVIL ENGINEER DATE

06-27-11
PLANS APPROVAL DATE

REGISTERED PROFESSIONAL ENGINEER
SHAHIN ADIBI
No. 54839
Exp. 06-30-12
CIVIL
STATE OF CALIFORNIA

THE STATE OF CALIFORNIA OR ITS OFFICERS OR AGENTS SHALL NOT BE RESPONSIBLE FOR THE ACCURACY OR COMPLETENESS OF ELECTRONIC COPIES OF THIS PLAN SHEET.

NOTES:

1. CALIFORNIA SIGN QUANTITIES ARE DESIGNATED BY (CA) OTHERWISE FEDERAL (MUTCD) SIGN CODES ARE SHOWN.
2. EXACT LOCATION OF SIGNS TO BE DETERMINED BY THE ENGINEER.
3. REFER TO "FURNISH ROADSIDE SIGN PANEL" CHART FOR FURTHER INFORMATION.

ROADSIDE SIGN QUANTITIES

SIGN No.	CODE	SHEET No.	PANEL SIZE Horiz	PANEL SIZE Vert	REMOVE PED BARRICADE	INSTALL SIGN (STRAP & SADDLE BRACKET METHOD)	MAST ARM MOUNTED (N)	REMARKS
			INCHES X INCHES		EA	EA		
3	R49 (CA)	S-2			1			
4	R9-3a	S-2	24 X 24			1		STRAP & SADDLE TO EXISTING FENCE
6	G7-1(CA)	S-3	60 X 18				1	MAST ARM MOUNTED
7	R73-2(CA)	S-3	24 X 24				1	MAST ARM MOUNTED
			TOTAL		1	1	2	

(N) - NOT A SEPARATE PAY ITEM. FOR INFORMATION ONLY.

NOTES:

1. PROTECTIVE OVERLAY DESIGNATIONS ARE AS FOLLOWS: SOC- SPRAY ON COATING, SF-STANDARD FILM, PF-PREMIUM FILM.
2. GREEN-Grn, WHITE-Wht, BLACK-Blk, BLUE-Blu, YELLOW-Ylw, BROWN-Brn, RED-Red, ORANGE-Org, CREAM-Crm.
3. REFER TO "ROADSIDE SIGN QUANTITIES" CHART FOR FURTHER INFORMATION.

FURNISH ROADSIDE SIGN PANEL

SIGN No.	CODE	PANEL SIZE Horiz	PANEL SIZE Vert	BACKGROUND SHEETING COLOR	BACKGROUND RETRO-REFLECTIVE ASTM TYPE	LEGEND SHEETING COLOR	LEGEND REFLECTIVE ASTM TYPE	LEGEND BLACK(NON-REFLECTIVE)	SIGN PANEL SINGLE SHEET ALUMINUM (SQFT) UNFRAMED 0.063"	PROTECTIVE OVERLAY SOC	PROTECTIVE OVERLAY SF	PROTECTIVE OVERLAY PF	REMARKS
		INCHES X INCHES											
4	R9-3a	24 X 24		WHITE	IV	Red/Blk	IV	X	4			X	
6	G7-1(CA)	60 X 18		GREEN	IV	Wht	IV		7.5			X	
7	R73-2(CA)	24 X 24		WHITE	IV	Blk		X	4			X	
								TOTAL	15.5				

SIGN QUANTITIES
SQ-1

STATE OF CALIFORNIA - DEPARTMENT OF TRANSPORTATION
Caltrans TRAFFIC DESIGN

REVISED BY | DATE REVISED
RYAN CHAO | SHAHIN ADIBI
CALCULATED-DESIGNED BY | CHECKED BY
FUNCTIONAL SUPERVISOR
CAMILLE ABOUFADEL

LAST REVISION 06-24-11
DATE PLOTTED => 30-JUN-2011
TIME PLOTTED => 09:13

Dist	COUNTY	ROUTE	POST MILES TOTAL PROJECT	SHEET No.	TOTAL SHEETS
11	SD	75	9.3/10.1	34	62

REGISTERED CIVIL ENGINEER 06-07-11 DATE

06-27-11
PLANS APPROVAL DATE

REGISTERED PROFESSIONAL ENGINEER GEORGE H. MAMAGHANI No. 44842 Exp. 3-31-12 CIVIL STATE OF CALIFORNIA

THE STATE OF CALIFORNIA OR ITS OFFICERS OR AGENTS SHALL NOT BE RESPONSIBLE FOR THE ACCURACY OR COMPLETENESS OF SCANNED COPIES OF THIS PLAN SHEET.

SIDEWALKS AND RAMPS

SHEET	SUB-LOCATION	REMOVE CONCRETE	MINOR CONCRETE (Misc CONSTRUCTION)	MINOR CONCRETE (RAPID STRENGTH CONCRETE)
		CY	CY	CY
L-1	1.2, 1.4, 1.5a			7.2
	1.6, 1.9	20.9	20.9	
L-2	2.1, 2.9		10.4	
	2.4, 2.5, 2.5b, 2.5d, 2.7, 2.7b, 2.11, 2.13, 2.13b, 2.13c, 2.16, 2.16b, 2.16c, 2.18, 2.18b, 2.21, 2.22	79.6	79.6	
	2.5a, 2.5c, 2.7a, 2.9a,2.13a, 2.13d, 2.16a, 2.16d, 2.18a	14.5		18.2
L-3	3.1, 3.1b, 3.4, 3.7, 3.7b, 3.9, 3.9b, 3.9d, 3.16, 3.16b	71.0	71.0	
	3.1a, 3.7a, 3.9a, 3.9c, 3.16a	9.1		9.1
L-4	4.1, 4.3, 4.4, 4.6, 4.6b, 4.10, 4.12, 4.13, 4.14, 4.15, 4.17, 4.17b, 4.18, 4.21, 4.21b	76.2	77.0	
	4.6a, 4.17a, 4.21a	4.4		4.4
L-5	5.1, 5.3, 5.4, 5.6, 5.7, 5.9, 5.12, 5.14, 5.16	134.4	134.4	
	5.7a	2.9		2.9
L-6	6.1, 6.3, 6.5	12.1	12.1	
L-7	7.1, 7.2, 7.4, 7.4b, 7.6, 7.6b, 7.8	25.9	25.9	
	7.4a, 7.6a	2.8		2.8
L-8	8.1, 8.4, 8.5, 8.6, 8.8, 8.10, 8.12, 8.12b, 8.17, 8.18	36.8	38.7	
	8.10a, 8.12a	5.4		7.8
TOTAL		496.0	470.0	52.4

CUT AND CAP STEEL PIPE PROTRUSION

LOCATION	QUANTITY (EA)
2.23	2
3.13	3
TOTAL	5

DRIVEWAY, AND MISCELLANEOUS CONCRETE AREA

SHEET	SUB-LOCATION	REMOVE CONCRETE	MINOR CONCRETE (Misc CONSTRUCTION)	MINOR CONCRETE (RAPID STRENGTH CONCRETE)
		CY	CY	CY
L-1	1.1, 1.3	0		6.5
	1.7, 1.8	5.6	5.6	
L-2	2.2, 2.3, 2.6, 2.12, 2.12a, 2.14, 2.15, 2.17, 2.19	25.6		25.6
	2.8, 2.10, 2.20		9.9	
L-3	3.2, 3.5, 3.10, 3.12, 3.17	15.0		15.0
	3.3, 3.6, 3.6a, 3.8, 3.14, 3.14a, 3.15, 3.15a	1.8	23.7	
L-4	4.5, 4.16, 4.19	4.7		6.3
	4.2, 4.7, 4.8, 4.9, 4.11, 4.20	8.1	13.2	
L-5	5.8	3.8		3.8
	5.2, 5.2a, 5.5, 5.5a, 5.10, 5.11, 5.13, 5.15	25.9	25.9	
L-6	6.2, 6.4	7.3	7.3	
L-7	7.5, 7.7	3.6		3.6
	7.3, 7.9	3.9	3.9	
L-8	8.9, 8.11	13.8		13.8
	8.2, 8.13, 8.16	8.1	8.1	
TOTAL		127.2	97.6	74.6

CURB UNDER TUBULAR HANDRAILING

SHEET	MINOR CONCRETE (CY) (Misc CONSTRUCTION)
L-3	1.9
L-8	1.2
TOTAL	3.1

REMOVE TREE

SHEET	DESCRIPTION	QUANTITY EA (N)
L-8	REMOVE Exist PALM TREE AT SUB-LOCATION 8.7	1
TOTAL		1

TUBULAR HANDRAILING

SHEET	DESCRIPTION	QUANTITY LF
L-3	AT SUB-LOCATION 3.11	61
L-8	AT SUB-LOCATION 8.20	19
TOTAL		80

TEMPORARY DRAINAGE INLET PROTECTION

SHEET	LOCATION	QUANTITY EA
L-1	57' LEFT OF Sta 529+91 "75Z1" LINE	1
L-2	59' RIGHT OF Sta 530+41 "75Z1" LINE	1
L-7	59' LEFT OF Sta 559+04 "75Z1" LINE	1
TOTAL		3

ROCK BLANKET

LOCATION	QUANTITY (SQYD)
8.7	6.1
8.19	14.8
TOTAL	20.9

MINOR CONCRETE (CURB)

SHEET	QUANTITY (LF)
L-8	37
TOTAL	37

(N): NOT A SEPARATE PAY ITEM. FOR INFORMATION ONLY.

SUMMARY OF QUANTITIES
Q-1

STATE OF CALIFORNIA - DEPARTMENT OF TRANSPORTATION
Caltrans DESIGN
FUNCTIONAL SUPERVISOR: ABU-BAKR H AL-JAFRI
CALCULATED-DESIGNED BY: MOHAMMAD OLADI
CHECKED BY: GEORGE MAMAGHANI
REVISED BY
DATE REVISED

LAST REVISION 06-24-11
DATE PLOTTED => 30-JUN-2011
TIME PLOTTED => 09:14

Dist	COUNTY	ROUTE	POST MILES TOTAL PROJECT	SHEET No.	TOTAL SHEETS
11	SD	75	9.3/10.1	35	62

George H Mamaghani 06-07-11
REGISTERED CIVIL ENGINEER DATE

06-27-11
PLANS APPROVAL DATE

REGISTERED PROFESSIONAL ENGINEER
GEORGE H. MAMAGHANI
No. 44842
Exp. 3-31-12
CIVIL
STATE OF CALIFORNIA

THE STATE OF CALIFORNIA OR ITS OFFICERS OR AGENTS SHALL NOT BE RESPONSIBLE FOR THE ACCURACY OR COMPLETENESS OF SCANNED COPIES OF THIS PLAN SHEET.

EARTHWORK SUMMARY

SHEET	LOCATION	
	NORTH OF PALM Ave	SOUTH OF PALM Ave
	ROADWAY EXCAVATION (CY)	ROADWAY EXCAVATION (TYPE DC) (CY)
L-1	20.0	5.0
L-2	11.6	35.4
L-3	13.6	41.7
L-4	19.2	20.1
L-5	15.9	8.5
L-6	0.1	1.4
L-7	0.6	17.8
L-8	8.0	33.5
TOTAL	89.0	163.4

MINOR HOT MIX ASPHALT

SHEET	MINOR HOT MIX ASPHALT (TON)
L-3	9.0
L-4	4.0
L-8	12.0
TOTAL	25.0

PRUNE EXISTING PLANTS

SHEET	SUB-LOCATION	PRUNE EXISTING PLANTS (GROUND COVER) (SQFT)
L-6	6.6	7
	6.7	5
L-7	7.10	5
TOTAL		17

ADJUST WATER METER BOX TO GRADE

SHEET	QUANTITY (EACH)
U-3	1
TOTAL	1

RECONSTRUCT PULL BOX

SHEET	QUANTITY (EACH)
U-1	4
U-7	1
TOTAL	5

SUMMARY OF QUANTITIES
Q-2

REVISED BY | DATE REVISED
MOHAMMAD OLADI | GEORGE MAMAGHANI
CALCULATED-DESIGNED BY | CHECKED BY
FUNCTIONAL SUPERVISOR
ABU-BAKR H AL-JAFRI
STATE OF CALIFORNIA - DEPARTMENT OF TRANSPORTATION
Caltrans
DESIGN

LAST REVISION 06-24-11 | DATE PLOTTED => 30-JUN-2011 | TIME PLOTTED => 09:14

Dist	COUNTY	ROUTE	POST MILES TOTAL PROJECT	SHEET No.	TOTAL SHEETS
11	SD	75	9.3/10.1	36	62

Héctor A. Santamaría 06-07-11
REGISTERED ELECTRICAL ENGINEER DATE

06-27-11
PLANS APPROVAL DATE

REGISTERED PROFESSIONAL ENGINEER HECTOR A. SANTAMARIA No. 18207 Exp. 12-31-11 ELECTRICAL STATE OF CALIFORNIA

THE STATE OF CALIFORNIA OR ITS OFFICERS OR AGENTS SHALL NOT BE RESPONSIBLE FOR THE ACCURACY OR COMPLETENESS OF SCANNED COPIES OF THIS PLAN SHEET.

NOTES (TSO):

1 -RC Exist PULL BOX AND SET NEW PULL BOX TO GRADE.

2 - PULL BOXES SEE E-11 FOR DETAILS.

3 - FOR ACCURATE RIGHT OF WAY AND ACCESS DATA, CONTACT RIGHT OF WAY ENGINEERING AT DISTRICT OFFICE.

LEGEND:

N C = NO CHANGE

NOTES (TSO):

N C 1 -Exist 1½", 2 sic.

PULL BOX (EA)		
E-1	2	
E-2	3	
E-3	2	
E-4	6	
E-5	3	
E-6	1	
TOTAL	17	

SAN DIEGO

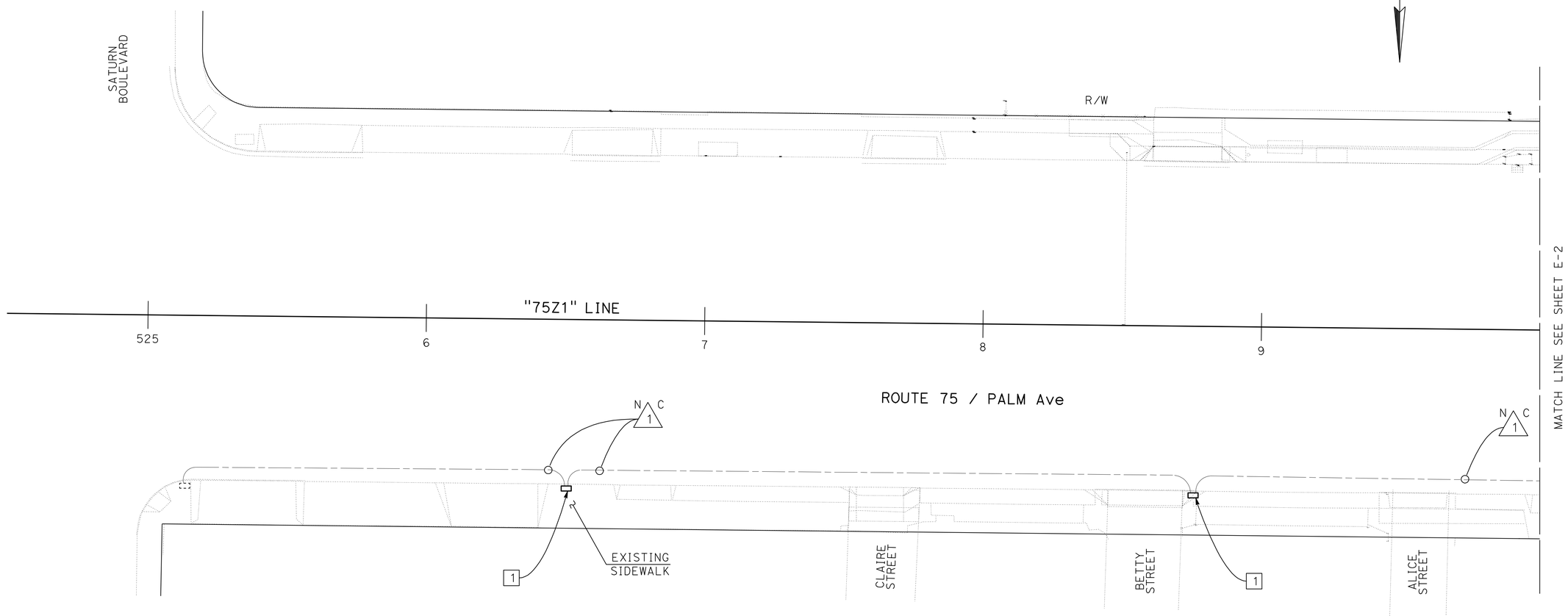

THIS PLAN IS ACCURATE FOR ELECTRICAL WORK ONLY

SCALE: 1:20'

PULL BOX E-1

STATE OF CALIFORNIA - DEPARTMENT OF TRANSPORTATION
Caltrans® TRAFFIC ELECTRICAL

FUNCTIONAL SUPERVISOR: DALE WILSON
CALCULATED-DESIGNED BY: HECTOR SANTAMARIA
CHECKED BY: ENRIQUE BERNAL
REVISED BY
DATE REVISED

LAST REVISION 06-24-11
DATE PLOTTED => 13-JUL-2011
TIME PLOTTED => 13:26

Dist	COUNTY	ROUTE	POST MILES TOTAL PROJECT	SHEET No.	TOTAL SHEETS
11	SD	75	9.3/10.1	37	62

Héctor A. Santamaría 06-07-11
REGISTERED ELECTRICAL ENGINEER DATE

06-27-11
PLANS APPROVAL DATE

REGISTERED PROFESSIONAL ENGINEER HECTOR A. SANTAMARIA No. 18207 Exp. 12-31-11 ELECTRICAL STATE OF CALIFORNIA

THE STATE OF CALIFORNIA OR ITS OFFICERS OR AGENTS SHALL NOT BE RESPONSIBLE FOR THE ACCURACY OR COMPLETENESS OF SCANNED COPIES OF THIS PLAN SHEET.

NOTES (TSO):

1 - RC Exist PULL BOX AND SET NEW PULL BOX TO GRADE.

2 - PULL BOXES SEE E-11 FOR DETAILS.

3 - FOR ACCURATE RIGHT OF WAY AND ACCESS DATA, CONTACT RIGHT OF WAY ENGINEERING AT DISTRICT OFFICE.

CONDUIT NOTES (TSO):

N C 1 - Exist 1½"C, 2 sic

SAN DIEGO

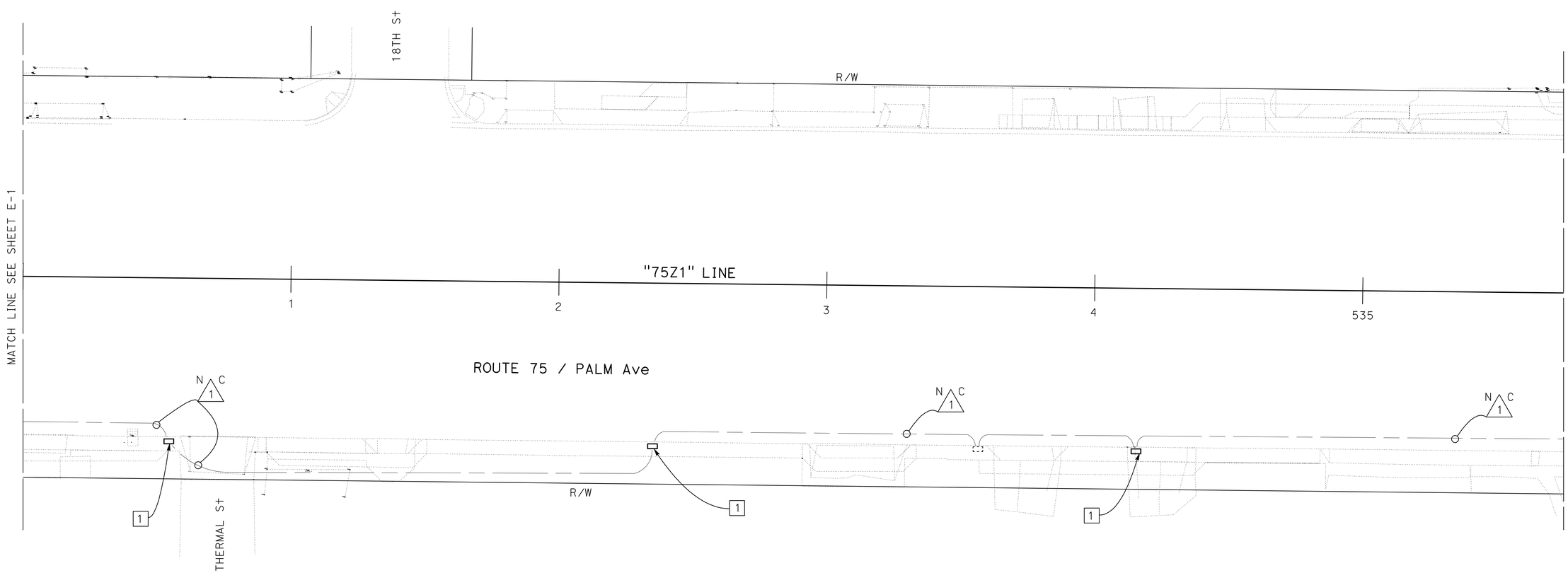

THIS PLAN IS ACCURATE FOR ELECTRICAL WORK ONLY

SCALE: 1:20'

PULL BOX E-2

STATE OF CALIFORNIA - DEPARTMENT OF TRANSPORTATION
Caltrans® TRAFFIC ELECTRICAL

FUNCTIONAL SUPERVISOR: DALE WILSON
CALCULATED-DESIGNED BY: HECTOR SANTAMARIA
CHECKED BY: ENRIQUE BERNAL
REVISED BY
DATE REVISED

LAST REVISION 06-24-11
DATE PLOTTED => 13-JUL-2011
TIME PLOTTED => 13:26

Dist	COUNTY	ROUTE	POST MILES TOTAL PROJECT	SHEET No.	TOTAL SHEETS
11	SD	75	9.3/10.1	38	62

Héctor A. Santamaría 06-07-11
REGISTERED ELECTRICAL ENGINEER DATE

06-27-11
PLANS APPROVAL DATE

REGISTERED PROFESSIONAL ENGINEER
HECTOR A. SANTAMARIA
No. 18207
Exp. 12-31-11
ELECTRICAL
STATE OF CALIFORNIA

THE STATE OF CALIFORNIA OR ITS OFFICERS OR AGENTS SHALL NOT BE RESPONSIBLE FOR THE ACCURACY OR COMPLETENESS OF SCANNED COPIES OF THIS PLAN SHEET.

NOTES:

1 -RC Exist PULL BOX AND SET NEW PULL BOX TO GRADE.

2 - PULL BOXES SEE E-11 FOR DETAILS.

3 - FOR ACCURATE RIGHT OF WAY AND ACCESS DATA, CONTACT RIGHT OF WAY ENGINEERING AT DISTRICT OFFICE.

CONDUIT NOTES (TSO):

N C 1 - Exist 1½"C, 2 sic

SAN DIEGO

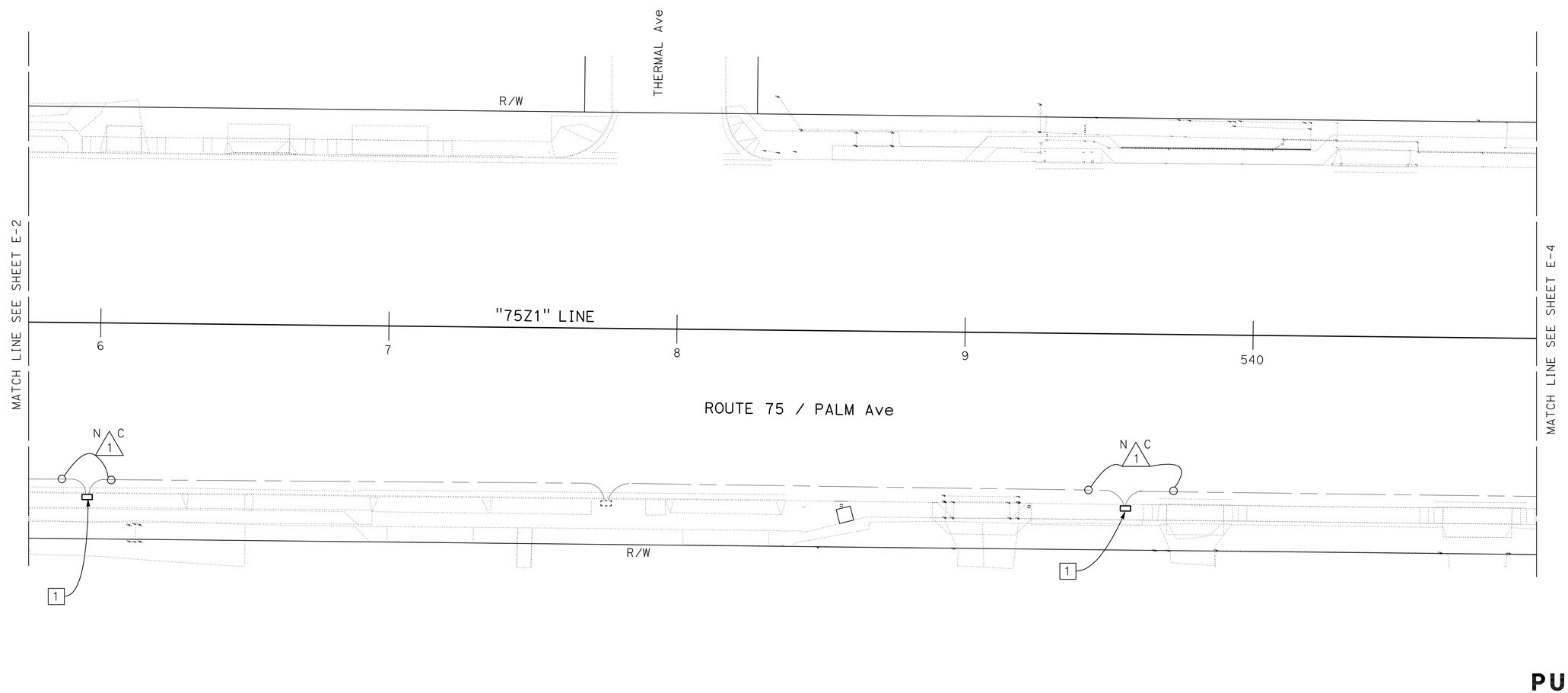

THIS PLAN IS ACCURATE FOR ELECTRICAL WORK ONLY

SCALE: 1:20'

PULL BOX
E-3

STATE OF CALIFORNIA - DEPARTMENT OF TRANSPORTATION
Caltrans TRAFFIC ELECTRICAL

FUNCTIONAL SUPERVISOR: DALE WILSON
CALCULATED-DESIGNED BY: HECTOR SANTAMARIA
CHECKED BY: ENRIQUE BERNAL
REVISED BY
DATE REVISED

LAST REVISION 06-24-11
DATE PLOTTED => 13-JUL-2011
TIME PLOTTED => 13:26

Dist	COUNTY	ROUTE	POST MILES TOTAL PROJECT	SHEET No.	TOTAL SHEETS
11	SD	75	9.3/10.1	39	62

Héctor A. Santamaría 06-07-11
REGISTERED ELECTRICAL ENGINEER DATE

06-27-11
PLANS APPROVAL DATE

REGISTERED PROFESSIONAL ENGINEER HECTOR A. SANTAMARIA No. 18207 Exp. 12-31-11 ELECTRICAL STATE OF CALIFORNIA

THE STATE OF CALIFORNIA OR ITS OFFICERS OR AGENTS SHALL NOT BE RESPONSIBLE FOR THE ACCURACY OR COMPLETENESS OF SCANNED COPIES OF THIS PLAN SHEET.

NOTES:

1 - RC Exist PULL BOX AND SET NEW PULL BOX TO GRADE.

2 - PULL BOXES SEE E-11 FOR DETAILS.

3 - FOR ACCURATE RIGHT OF WAY AND ACCESS DATA, CONTACT RIGHT OF WAY ENGINEERING AT DISTRICT OFFICE.

CONDUIT NOTES (TSO):

N 1 C - Exist 1½"C, 2 sic

N 2 C - Exist 3 "C, 4 dlc

SAN DIEGO

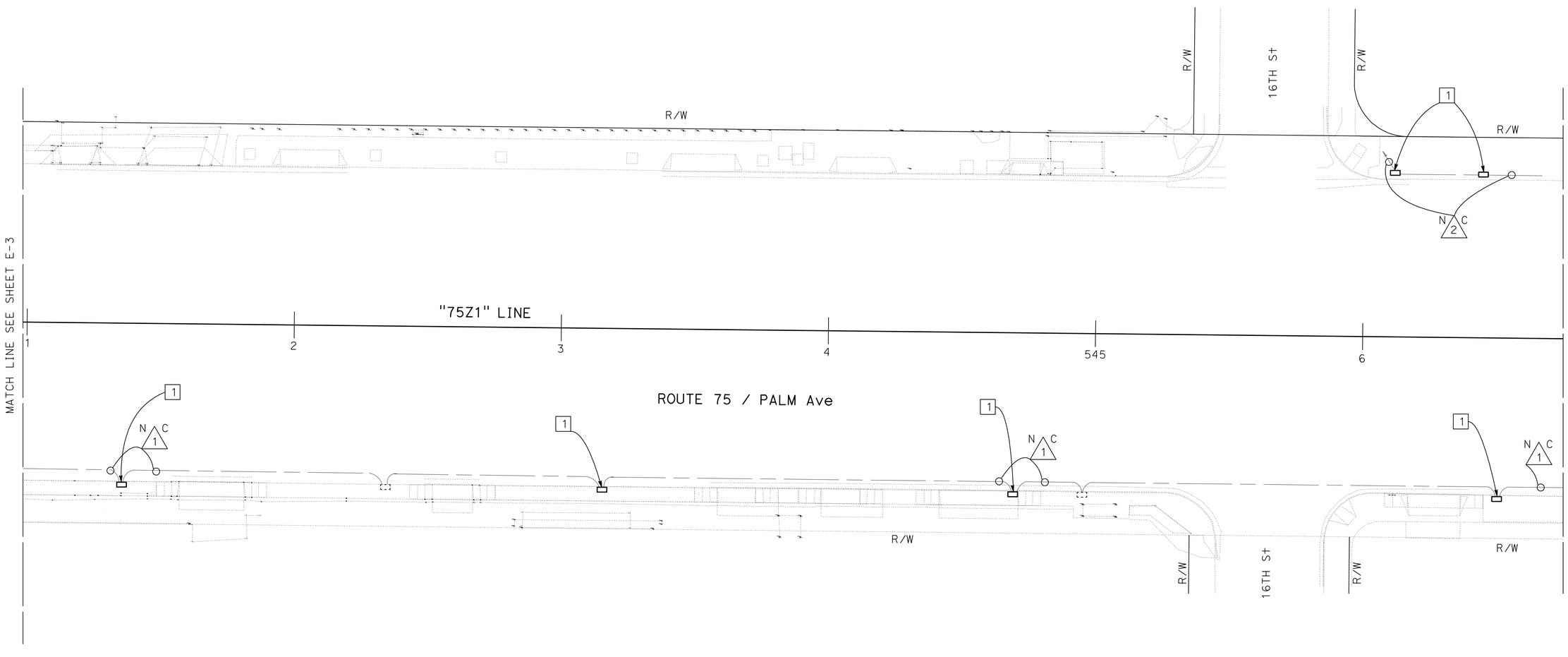

PULL BOX E-4

SCALE: 1:20'

THIS PLAN IS ACCURATE FOR ELECTRICAL WORK ONLY

STATE OF CALIFORNIA - DEPARTMENT OF TRANSPORTATION
Caltrans® TRAFFIC ELECTRICAL

FUNCTIONAL SUPERVISOR: DALE WILSON
CALCULATED-DESIGNED BY: HECTOR SANTAMARIA
CHECKED BY: ENRIQUE BERNAL
REVISED BY / DATE REVISED

LAST REVISION 06-24-11
DATE PLOTTED => 13-JUL-2011
TIME PLOTTED => 13:26

Dist	COUNTY	ROUTE	POST MILES TOTAL PROJECT	SHEET No.	TOTAL SHEETS
11	SD	75	9.3/10.1	40	62

Héctor A. Santamaría 06-07-11
REGISTERED ELECTRICAL ENGINEER DATE

06-27-11
PLANS APPROVAL DATE

REGISTERED PROFESSIONAL ENGINEER
HECTOR A. SANTAMARIA
No. 18207
Exp. 12-31-11
ELECTRICAL
STATE OF CALIFORNIA

THE STATE OF CALIFORNIA OR ITS OFFICERS OR AGENTS SHALL NOT BE RESPONSIBLE FOR THE ACCURACY OR COMPLETENESS OF SCANNED COPIES OF THIS PLAN SHEET.

NOTES:

1 - RC Exist PULL BOX AND SET NEW PULL BOX TO GRADE.

2 - PULL BOXES SEE E-11 FOR DETAILS.

3 - FOR ACCURATE RIGHT OF WAY AND ACCESS DATA, CONTACT RIGHT OF WAY ENGINEERING AT DISTRICT OFFICE.

CONDUIT NOTES (TSO):

N C 1 - Exist 1½"C, 2 sic

SAN DIEGO

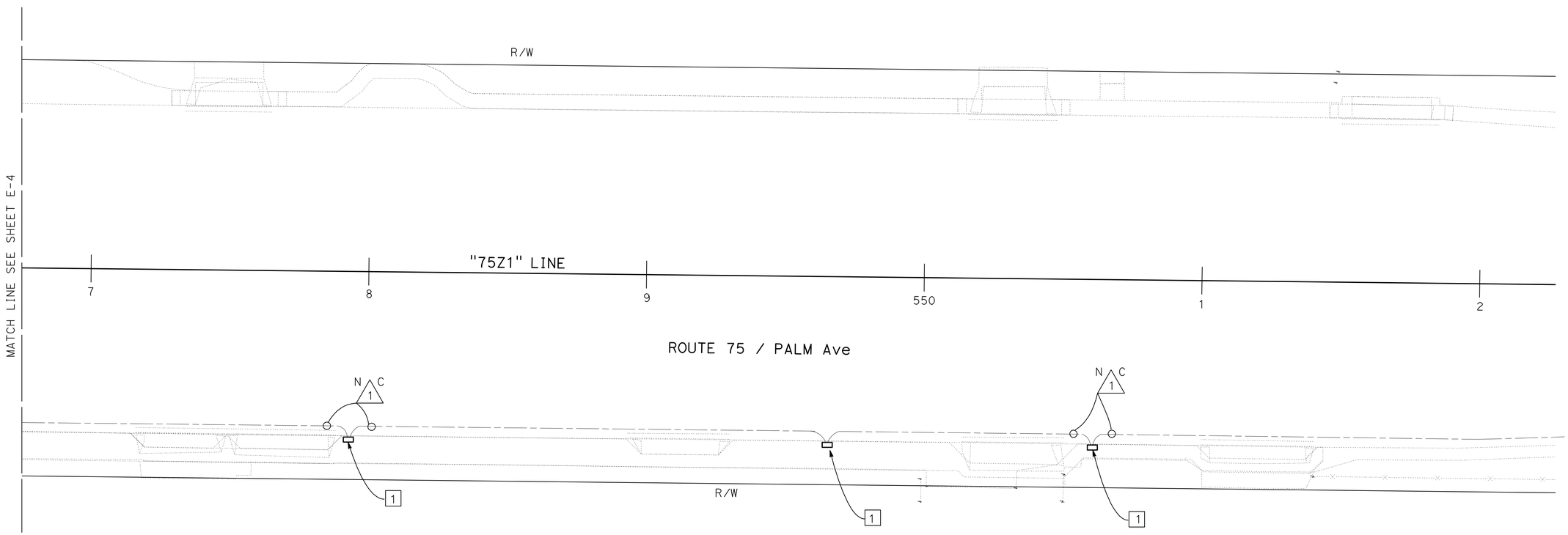

THIS PLAN IS ACCURATE FOR ELECTRICAL WORK ONLY

SCALE: 1:20'

PULL BOX
E-5

STATE OF CALIFORNIA - DEPARTMENT OF TRANSPORTATION
Caltrans® TRAFFIC ELECTRICAL

FUNCTIONAL SUPERVISOR: DALE WILSON
CALCULATED-DESIGNED BY: HECTOR SANTAMARIA
CHECKED BY: ENRIQUE BERNAL
REVISED BY
DATE REVISED

LAST REVISION 06-24-11
DATE PLOTTED => 13-JUL-2011
TIME PLOTTED => 13:26

Dist	COUNTY	ROUTE	POST MILES TOTAL PROJECT	SHEET No.	TOTAL SHEETS
11	SD	75	9.3/10.1	41	62

Héctor A. Santamaría 06-07-11
REGISTERED ELECTRICAL ENGINEER DATE

06-27-11
PLANS APPROVAL DATE

REGISTERED PROFESSIONAL ENGINEER
HECTOR A. SANTAMARIA
No. 18207
Exp. 12-31-11
ELECTRICAL
STATE OF CALIFORNIA

THE STATE OF CALIFORNIA OR ITS OFFICERS OR AGENTS SHALL NOT BE RESPONSIBLE FOR THE ACCURACY OR COMPLETENESS OF SCANNED COPIES OF THIS PLAN SHEET.

NOTES (TSO):

1 - RC Exist CITY PULL BOX AND SET NEW PULL BOX TO GRADE.

2 - PULL BOXES SEE E-11 FOR DETAILS.

3 - FOR ACCURATE RIGHT OF WAY AND ACCESS DATA, CONTACT RIGHT OF WAY ENGINEERING AT DISTRICT OFFICE.

CONDUIT NOTES (TSO):

N C 1 - Exist 1½"C, 2 sic

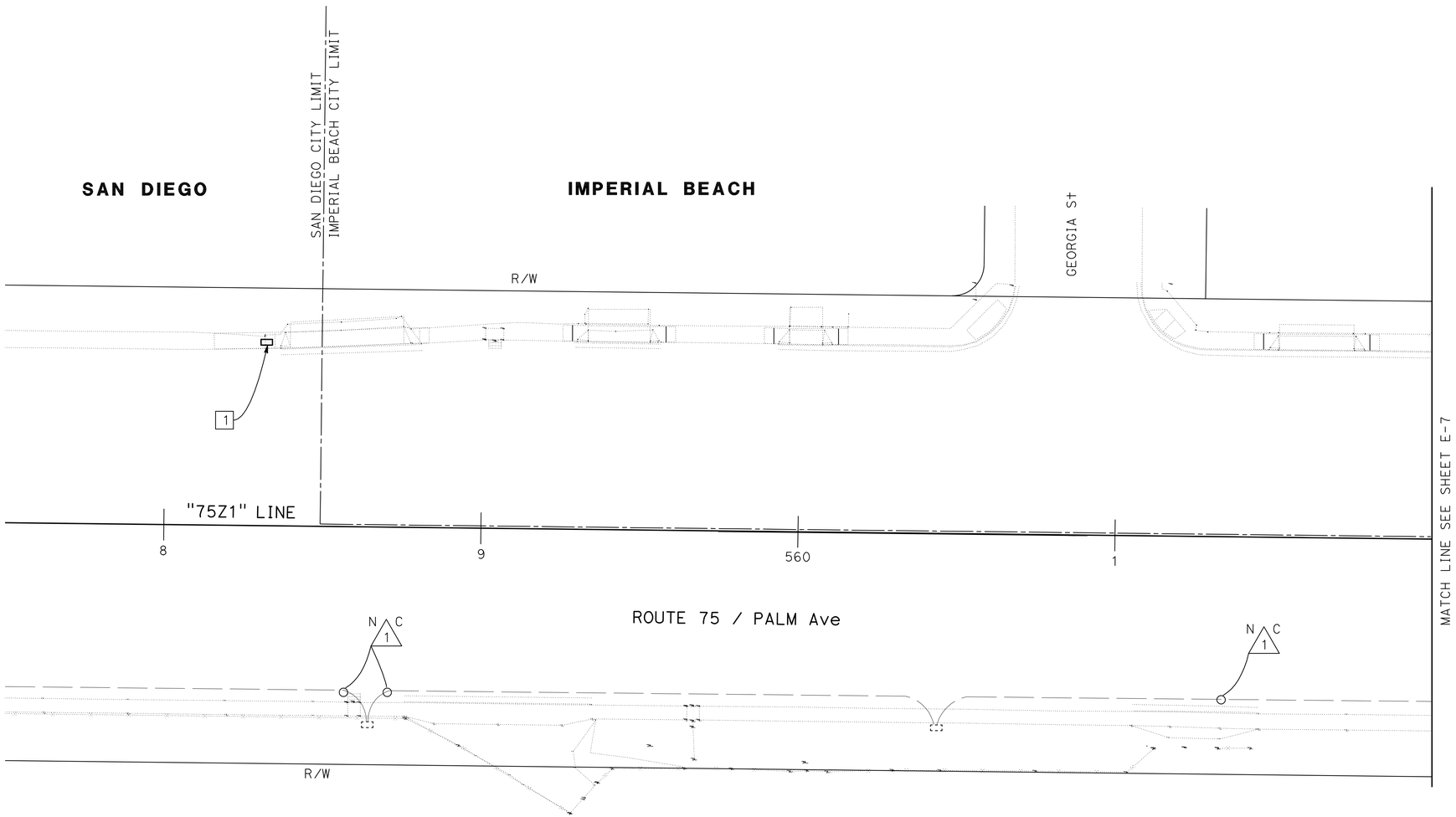

THIS PLAN IS ACCURATE FOR ELECTRICAL WORK ONLY

SCALE: 1:20'

PULL BOX E-6

STATE OF CALIFORNIA - DEPARTMENT OF TRANSPORTATION
Caltrans® TRAFFIC ELECTRICAL

FUNCTIONAL SUPERVISOR: DALE WILSON
CALCULATED-DESIGNED BY: HECTOR SANTAMARIA
CHECKED BY: ENRIQUE BERNAL
REVISED BY
DATE REVISED

LAST REVISION 06-24-11
DATE PLOTTED => 13-JUL-2011
TIME PLOTTED => 13:26

Dist	COUNTY	ROUTE	POST MILES TOTAL PROJECT	SHEET No.	TOTAL SHEETS
11	SD	75	9.3/10.1	42	62

Héctor A. Santamaría 06-07-11
REGISTERED ELECTRICAL ENGINEER DATE

06-27-11
PLANS APPROVAL DATE

REGISTERED PROFESSIONAL ENGINEER HECTOR A. SANTAMARIA No. 18207 Exp. 12-31-11 ELECTRICAL STATE OF CALIFORNIA

THE STATE OF CALIFORNIA OR ITS OFFICERS OR AGENTS SHALL NOT BE RESPONSIBLE FOR THE ACCURACY OR COMPLETENESS OF SCANNED COPIES OF THIS PLAN SHEET.

NOTES (TSO):

1 - RL Exist LIGHT STANDARD IN PARKING LOT.
SEE STRUCTURAL FOUNDATION DETAILS ON ST-1 AND ST-2, ELECTRICAL DETAILS ON E-10, AND PLACEMENT DETAILS ON C-5.

2 - EXIST CONDUCTORS AND CONDUIT FOR PRIVATE LOT LIGHTING.

3 - PULL BOXES SEE E-11 FOR DETAILS.

4 - FOR ACCURATE RIGHT OF WAY AND ACCESS DATA, CONTACT RIGHT OF WAY ENGINEERING AT DISTRICT OFFICE.

CONDUIT NOTES:

1 -1" C, 2#10(LTG)

N C 2 - Exist 1½"C, 2 sic

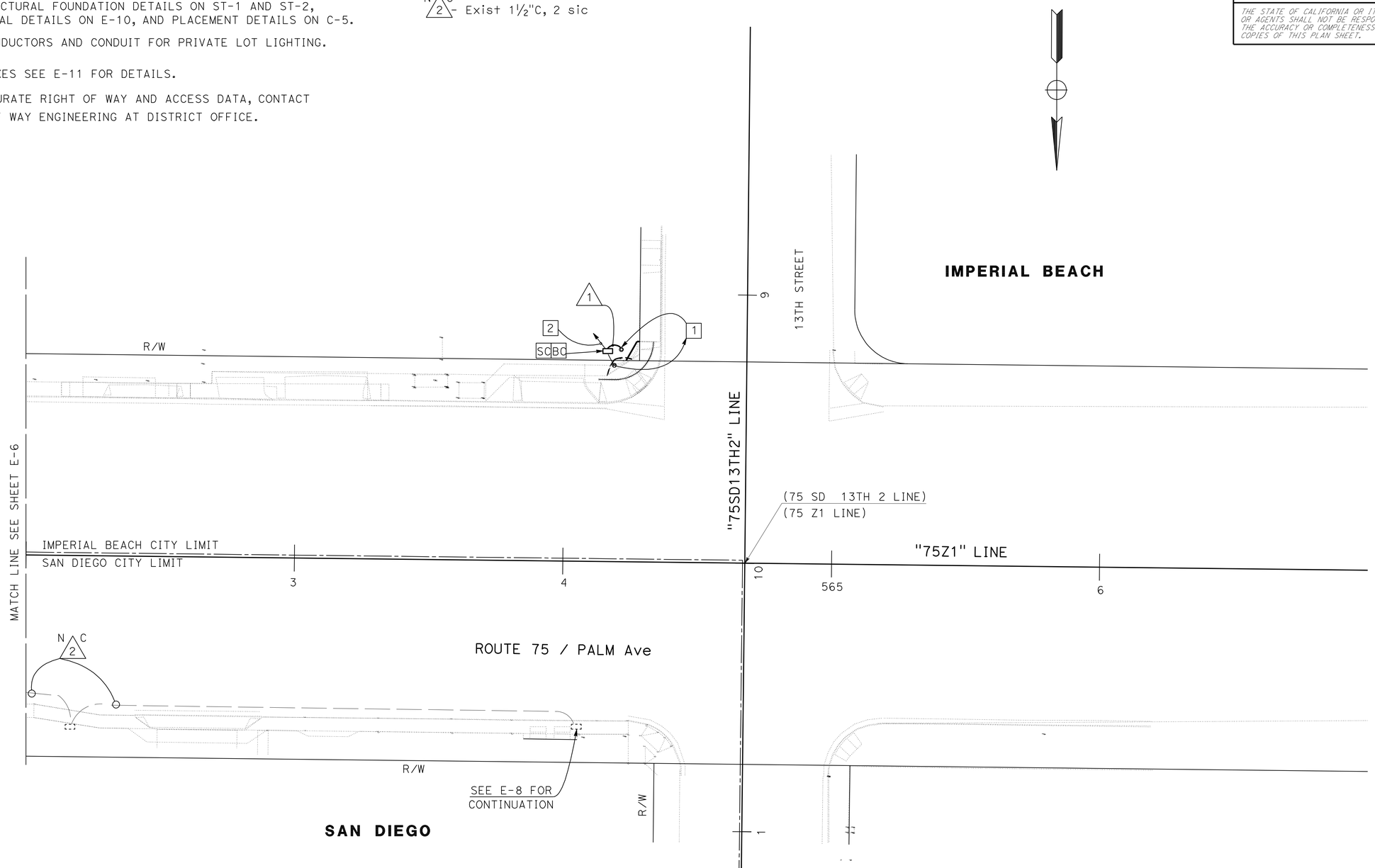

THIS PLAN IS ACCURATE FOR ELECTRICAL WORK ONLY

MODIFY LIGHTING

SCALE: 1:20'

E-7

STATE OF CALIFORNIA - DEPARTMENT OF TRANSPORTATION
Caltrans® TRAFFIC ELECTRICAL

FUNCTIONAL SUPERVISOR: DALE WILSON
CALCULATED-DESIGNED BY: HECTOR SANTAMARIA
CHECKED BY: ENRIQUE BERNAL
REVISED BY
DATE REVISED

LAST REVISION 06-24-11
DATE PLOTTED => 13-JUL-2011
TIME PLOTTED => 13:26

Dist	COUNTY	ROUTE	POST MILES TOTAL PROJECT	SHEET No.	TOTAL SHEETS
11	SD	75	9.3/10.1	43	62

Héctor A. Santamaría 06-07-11
REGISTERED ELECTRICAL ENGINEER DATE

06-27-11
PLANS APPROVAL DATE

REGISTERED PROFESSIONAL ENGINEER HECTOR A. SANTAMARIA No. 18207 Exp. 12-31-11 ELECTRICAL STATE OF CALIFORNIA

THE STATE OF CALIFORNIA OR ITS OFFICERS OR AGENTS SHALL NOT BE RESPONSIBLE FOR THE ACCURACY OR COMPLETENESS OF SCANNED COPIES OF THIS PLAN SHEET.

NOTES:

1 -RC Exist SIGNAL STANDARD (TYPE II SIMILAR TO TYPE 16 WITH 18′ SMA) AND APPURTENANCES.

2 -RC Exist PULL BOX, SEE SHEET E-9.

3 -SIGNAL STANDARD TO REMAIN.
RC 18′ SMA.

4 -SEE E-7 FOR CONTINUATION OF CIRCUIT.

5 - PULL BOXES SEE E-11 FOR DETAILS.

6 - FOR ACCURATE RIGHT OF WAY AND ACCESS DATA, CONTACT RIGHT OF WAY ENGINEERING AT DISTRICT OFFICE.

7 - ALL SIGNAL Std, TO REMAIN UNLESS OTHERWISE NOTED.

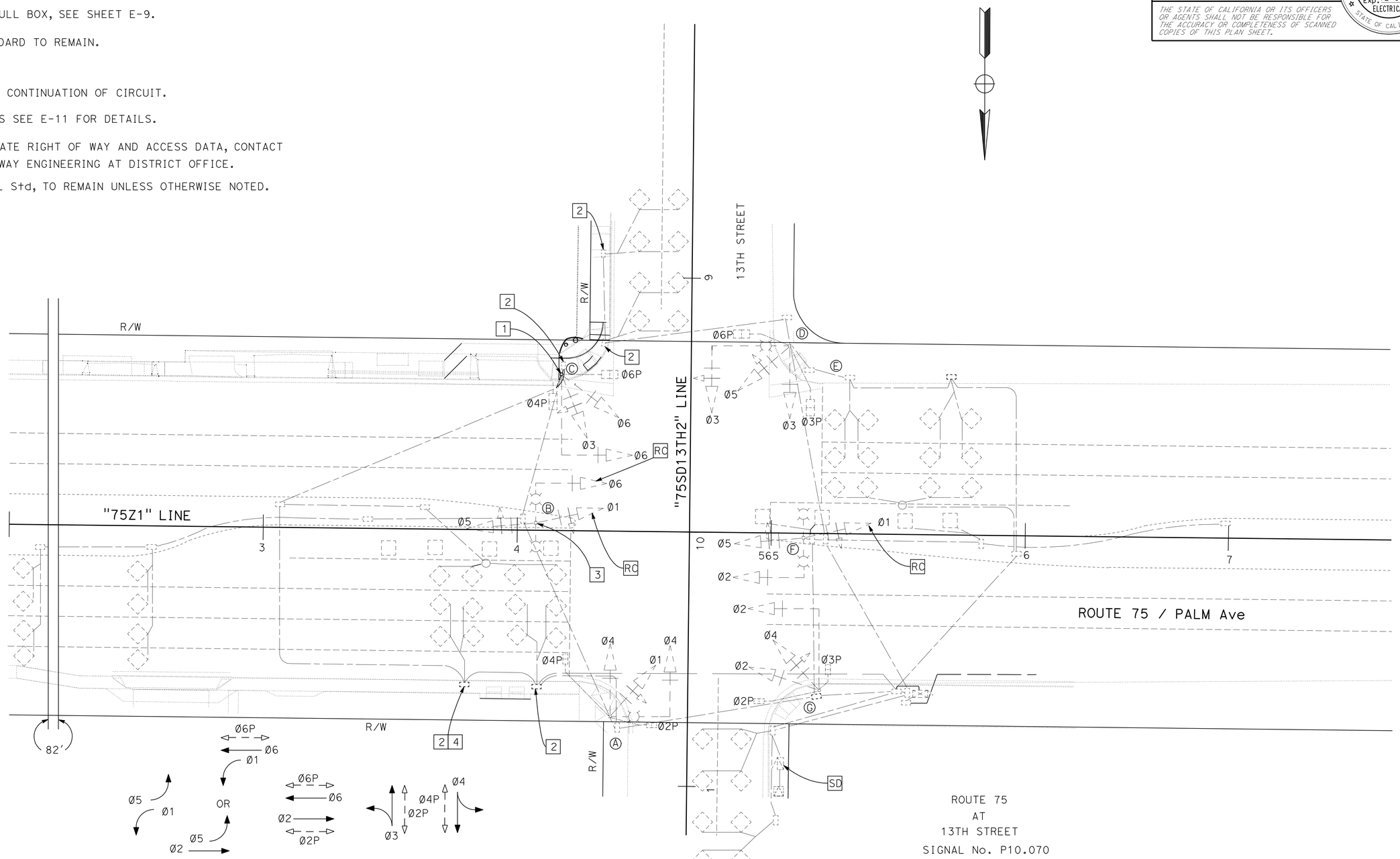

THIS PLAN IS ACCURATE FOR ELECTRICAL WORK ONLY

SIGNAL AND LIGHTING
EXISTING AND REMOVE
SCALE: 1:20′

E-8

STATE OF CALIFORNIA - DEPARTMENT OF TRANSPORTATION
Caltrans® TRAFFIC ELECTRICAL

FUNCTIONAL SUPERVISOR: DALE WILSON
CALCULATED-DESIGNED BY: HECTOR SANTAMARIA
CHECKED BY: ENRIQUE BERNAL
REVISED BY / DATE REVISED

LAST REVISION 06-24-11
DATE PLOTTED => 13-JUL-2011
TIME PLOTTED => 13:26

Dist	COUNTY	ROUTE	POST MILES TOTAL PROJECT	SHEET No.	TOTAL SHEETS
11	SD	75	9.3/10.1	44	62

Héctor A. Santamaría 06-07-11
REGISTERED ELECTRICAL ENGINEER DATE

06-27-11
PLANS APPROVAL DATE

REGISTERED PROFESSIONAL ENGINEER HECTOR A. SANTAMARIA No. 18207 Exp. 12-31-11 ELECTRICAL STATE OF CALIFORNIA

THE STATE OF CALIFORNIA OR ITS OFFICERS OR AGENTS SHALL NOT BE RESPONSIBLE FOR THE ACCURACY OR COMPLETENESS OF SCANNED COPIES OF THIS PLAN SHEET.

POLE AND EQUIPMENT SCHEDULE

No.	STANDARD Type	STANDARD SMA	STANDARD LMA	VEH SIG MTG Mast Arm	VEH SIG MTG Pole	PED SIGNAL MTG	PPB Ø	PPB ARROW	HPS LUMINAIRE	SPECIAL REQUIREMENTS
A	Exist 19-4-80	25′	12′	MAS-4B	SV-2-TD	SP-2-TD	Ø2P Ø4P	← →		NO WORK REQUIRED
B	Exist TYPE III DUAL LMA		15′		SV-1-T					NO WORK REQUIRED
C	61-5-100	60′	15′	MAT, 2-MAS	SV-2-TB	SP-2-T	Ø6P Ø4P	← →	200 W HPS	
D	Exist 19-4-80	30′	10′	MAS-4B	SV-2-TD	SP-2-TD	Ø6P Ø3P	← →		NO WORK REQUIRED
E	Exist PPB POST									NO WORK REQUIRED
F	Exist TYPE III DUAL LMA	18′	15′	MAS	SV-1-T					NO WORK REQUIRED
G	Exist TYPE II	18′		MAS	SV-2-T	SP-2-TD				NO WORK REQUIRED

NOTES:

1 -SIGNAL POLE PLACEMENT A=6.3′ AND B=6.75′ SEE Std PLAN, SHEET ES-4C.

2 -FOR ACCURATE RIGHT OF WAY AND ACCESS DATA, CONTACT RIGHT OF WAY ENGINEERING AT DISTRICT OFFICE.

3 -DETAIL "U" SEE Std PLAN, ES-7N.

4 -TERMINATE EVC(FUTURE USE) IN MAS RED SECTION. LEAVE 0.3 m OF SLACK.

5 - PULL BOXES SEE E-11 FOR DETAILS.

CONDUIT NOTES:

1 - Exist 3" C, 5-3/14
2-12/14
21-#14(sig)
2#8(sig service)
1#10(sig)
RC 1-3CSC, 1-12CSC.
ADD 1-3CSC, 1-12CSC.

Exist 2½" C,1-3CSC, 4 evc
RC 1 evc
ADD 1 EVC

2 - Exist 3" C, 2-3/14(POLE A&C), 3-12/14(POLE A&C)
3 dlc, 2 sic
3 #14(peu)
2 ev-dlc
RC 1-csc, 1-12CSC, 1 evc.
ADD 1-3CSC, 1-12CSC, 1 EVC,
2#10(LTG-POLE C).

3 - Exist 3" C, 1-3/14(POLE C), 1-12/14(POLE C)
3 dlc, 2 sic, 1 ev-dlc
RC 1-3CSC, 1-12CSC, 1 evc.
ADD 1-3CSC, 1-12CSC, 1 EVC,
2#10(LTG-POLE C).

4 - Exist 3" C, 1-3CSC(POLE C)
1-12CSC(POLE C)
1 dlc, 1 evc.
RC 1-3CSC, 1-12CSC, 1 evc.
ADD 1-3CSC, 1-12CSC, 1 EVC,
2#10(LTG-POLE C).

5 - Exist 3"C, 1-3CSC(POLE C)
1-12CSC(POLE C)
1evc.
RC 1-3CSC, 1-12CSC, 1 evc
ADD 1-3CSC, 1-12CSC, 1 EVC,
2#10(LTG-POLEC).

N C 6 - Exist 2½" C, 12 #14(POLE B)
1 #12(lgt)
1#10(sig)
3 dlc.

N C 7 - Exist 3"C, 15 #14(POLE F)

N C 8 - Exist 1½" C, 2 #8(sig)
2#10(ltg)
3#14 (ped)

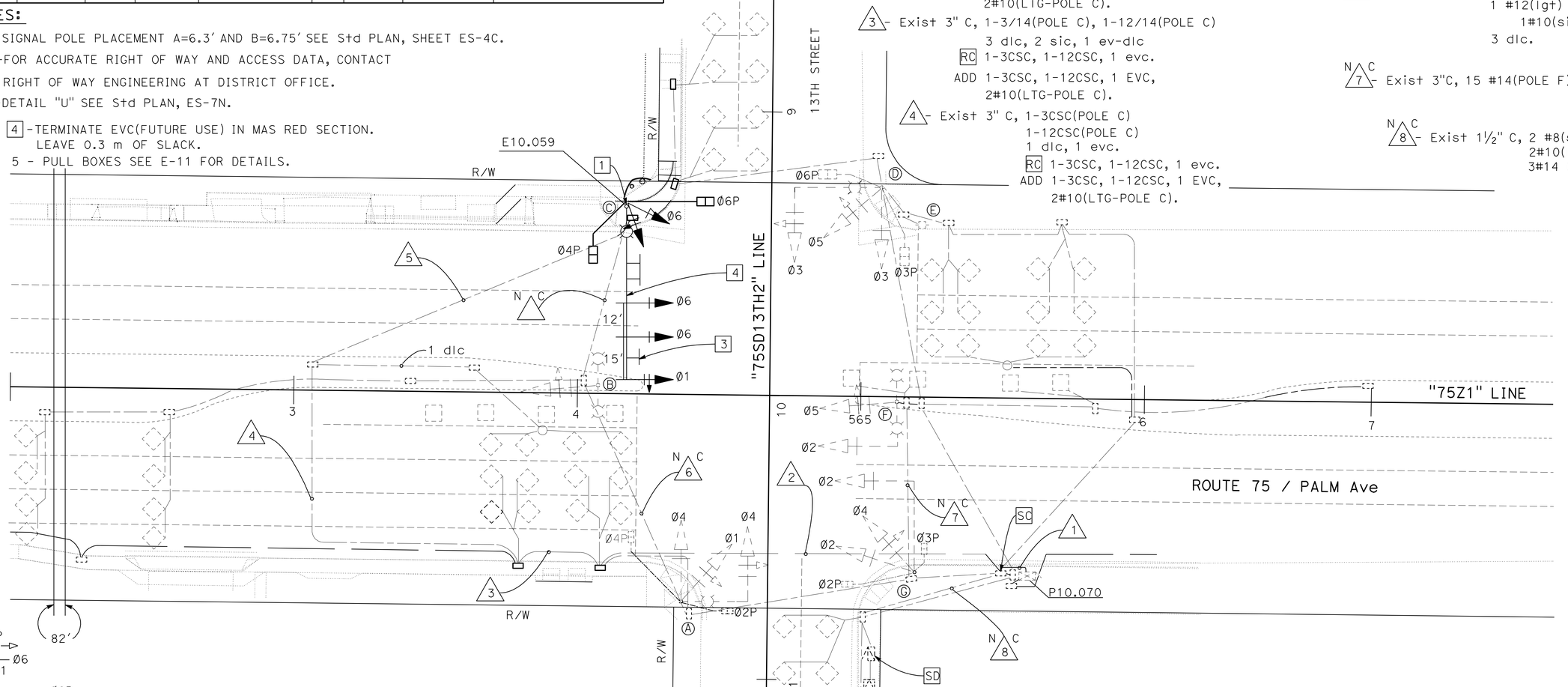

ROUTE 75
AT
13TH STREET
SIGNAL No. P10.070

EXIST PHASE DIAGRAM

THIS PLAN IS ACCURATE FOR ELECTRICAL WORK ONLY

SIGNAL AND LIGHTING

SCALE: 1:20′

E-9

STATE OF CALIFORNIA - DEPARTMENT OF TRANSPORTATION
Caltrans® TRAFFIC ELECTRICAL

FUNCTIONAL SUPERVISOR: DALE WILSON
CALCULATED-DESIGNED BY: HECTOR SANTAMARIA
CHECKED BY: ENRIQUE BERNAL
REVISED BY / DATE REVISED

LAST REVISION 06-24-11
DATE PLOTTED => 13-JUL-2011
TIME PLOTTED => 13:27

Dist	COUNTY	ROUTE	POST MILES TOTAL PROJECT	SHEET No.	TOTAL SHEETS
11	SD	75	9.3/10.1	45	62

Héctor A. Santamaría 06-07-11
REGISTERED ELECTRICAL ENGINEER DATE

06-27-11
PLANS APPROVAL DATE

REGISTERED PROFESSIONAL ENGINEER HECTOR A. SANTAMARIA No. 18207 Exp. 12-31-11 ELECTRICAL STATE OF CALIFORNIA

THE STATE OF CALIFORNIA OR ITS OFFICERS OR AGENTS SHALL NOT BE RESPONSIBLE FOR THE ACCURACY OR COMPLETENESS OF SCANNED COPIES OF THIS PLAN SHEET.

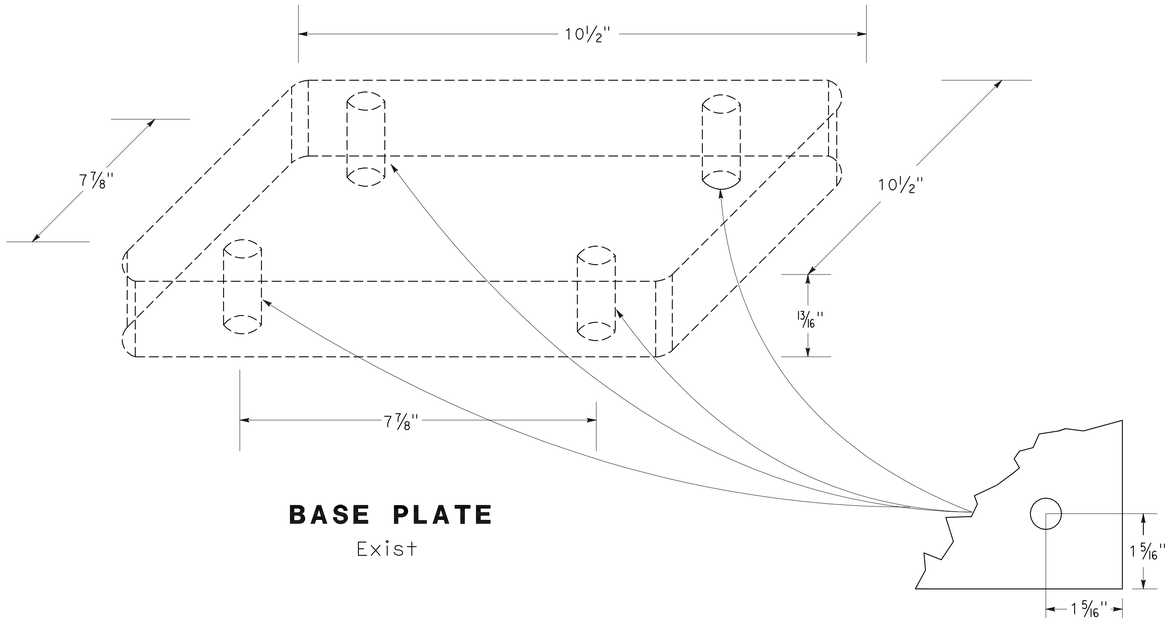

BASE PLATE
Exist

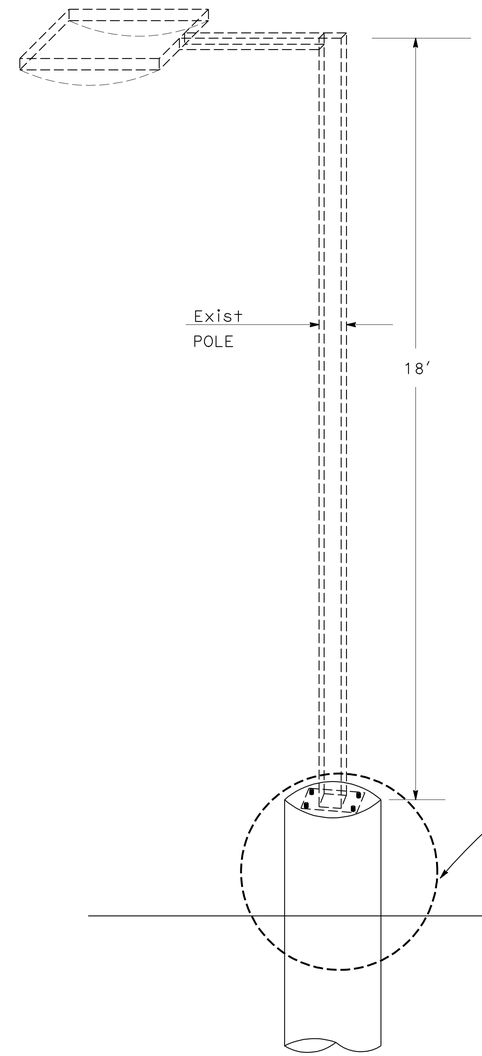

LIGHT STANDARD

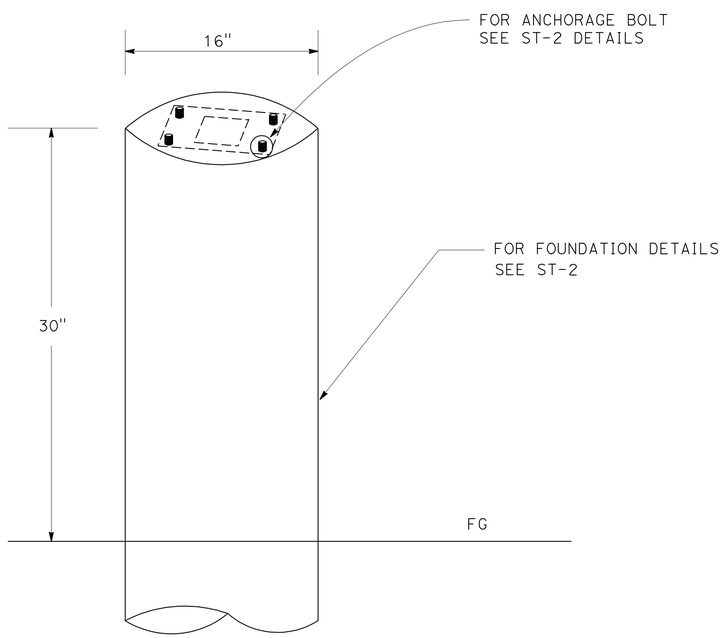

DETAIL "B"

THIS PLAN IS ACCURATE FOR ELECTRICAL WORK ONLY

ELECTRICAL DETAILS

SCALE: 1:20'

E-10

STATE OF CALIFORNIA - DEPARTMENT OF TRANSPORTATION
Caltrans® TRAFFIC ELECTRICAL

FUNCTIONAL SUPERVISOR: DALE WILSON
CALCULATED-DESIGNED BY: ENRIQUE BERNAL
CHECKED BY: HECTOR SANTAMARIA
REVISED BY
DATE REVISED

LAST REVISION 06-24-11
DATE PLOTTED => 13-JUL-2011
TIME PLOTTED => 13:27

Dist	COUNTY	ROUTE	POST MILES TOTAL PROJECT	SHEET No.	TOTAL SHEETS
11	SD	75	9.3/10.1	46	62

Héctor A. Santamaría 06-07-11
REGISTERED ELECTRICAL ENGINEER DATE

06-27-11
PLANS APPROVAL DATE

REGISTERED PROFESSIONAL ENGINEER HECTOR A. SANTAMARIA No. 18207 Exp. 12-31-11 ELECTRICAL STATE OF CALIFORNIA

THE STATE OF CALIFORNIA OR ITS OFFICERS OR AGENTS SHALL NOT BE RESPONSIBLE FOR THE ACCURACY OR COMPLETENESS OF SCANNED COPIES OF THIS PLAN SHEET.

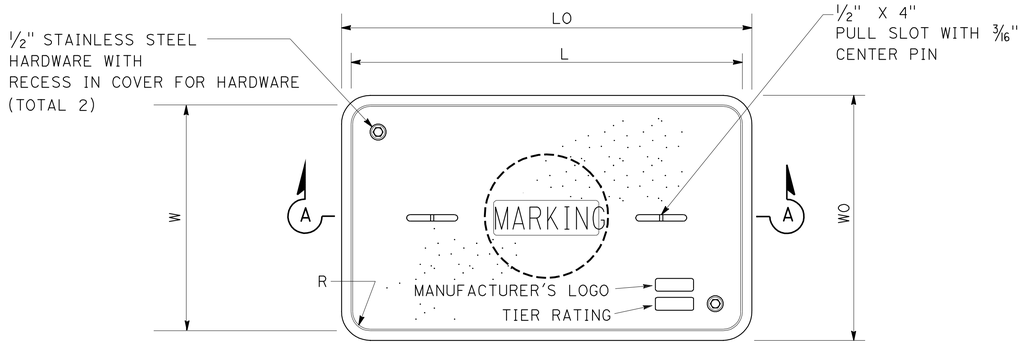

TOP VIEW

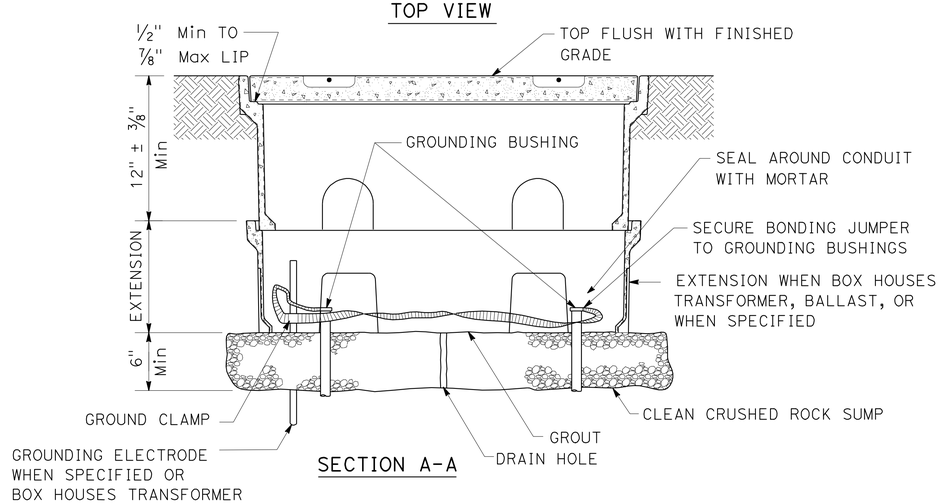

SECTION A-A

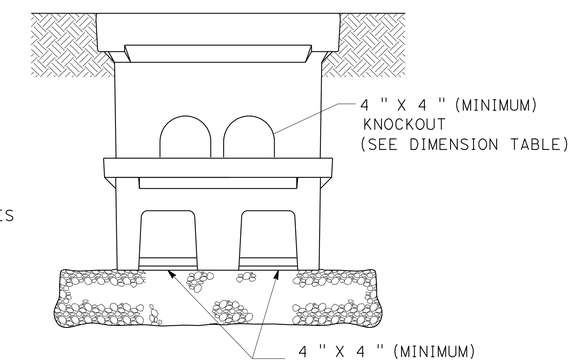

SIDE VIEW

LEGEND:

UNC - UNIFIED NATIONAL COARSE THREAD
LO - LENGTH OUTSIDE
WO - WIDTH OUTSIDE
L - LENGTH (TOP OF COVER)
W - WIDTH (TOP OF COVER)
R - COVER CORNER RADIUS
D - COVER EDGE TO COVER BOLT CENTER DISTANCE
TE - COVER EDGE THICKNESS
TA - COVER EDGE TAPER

NOTES:

1. ALL NON-TRAFFIC RATED PULL BOXES AND COVERS, FOR IN GROUND AND IN SIDEWALK APPLICATIONS, MUST BE INDEPENDENTLY TESTED AND CERTIFIED AS COMPLYING WITH THE PROVISIONS OF ANSI/SCTE 77 2010 "SPECIFICATION FOR UNDERGROUND ENCLOSURE INTEGRITY." PULL BOXES MUST MEET THE TIER 22 APPLICATION. COVERS NOT INSTALLED IN SIDEWALKS MUST MEET THE TIER 22 APPLICATION. COVERS INSTALLED IN SIDEWALKS MUST MEET THE TIER 8 APPLICATION.
2. COVERS MUST BE SECURED WITH A CAPTIVE BOLT DESIGN USING 1/2-13 UNC LARGE PENTA-HEAD BOLTS. THE BOLTS AND WASHERS MUST BE STAINLESS STEEL.
3. THE CAPTIVE BOLT DESIGN MUST BE INDEPENDENTLY TESTED AND CERTIFIED AS CAPABLE OF WITHSTANDING A TORQUE OF 56 FT. LBS AND A MINIMUM PULL OUT STRENGTH OF 750 LBS. THE PULL OUT TEST MUST BE PERFORMED WITH THE COVER IN PLACE AND THE BOLTS TORQUED TO 56 FT.LBS. THE BOLTS, INSERTS, AND COVER MUST NOT BE DAMAGED WHEN TESTED UP TO THE MINIMUM PULL OUT STRENGTH.
4. MARKINGS, SHOWING THE TIER RATING, MUST BE LABELED OR STENCILED ON THE INSIDE AND OUTSIDE OF THE PULL BOX AND ON THE UNDERSIDE OF THE COVER.
5. THE TIER RATING MUST BE EMBOSSED ON THE TOP SURFACE OF THE COVER.
6. COVERS AND PULL BOXES MUST BE INTERCHANGEABLE WITH CALIFORNIA STANDARD MALE AND FEMALE GAGES. SEE STANDARD PLAN ES-8, NOTE 7. MINIMUM RADIUS OF TOP OUTSIDE EDGE IS 1/8".
7. PULL BOXES MUST NOT BE INSTALLED WITHIN THE BOUNDARIES OF NEW OR EXISTING CURB RAMPS OR DRIVEWAYS.
8. AN EXTENSION MAY BE SUBSTITUTED WITH A PULL BOX IF THE BOTTOM EDGE OF THE PULL BOX FITS INTO THE PULL BOX COVER OPENING. A PULL BOX AND EXTENSION MAY BE SUBSTITUTED WITH A PULL BOX OF EQUAL DEPTH. IF SUBSTITUTIONS ARE MADE, THE INSTALLED UNIT MUST MEET THE TIER 22 LOAD REQUIREMENTS.
9. SEE STANDARD PLAN ES-8, NOTES 3,4,6 AND 9 FOR OTHER REQUIREMENTS. THESE ADDRESS, BUT ARE NOT LIMITED TO: PLACEMENT, SURROUNDING GRADE, REQUIREMENTS IN UNPAVED AREAS, PULL BOX COVER MARKING, NOMINAL DIMENSIONS OF THE OPENING, AND THE LOCATION OF BOXES FOR ELECTROLIERS AND STANDARDS.

PULL BOX INSTALLATION DETAILS

No. 5 & No. 6

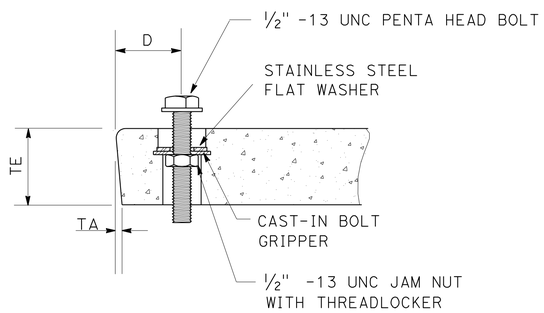

SECTION OF COVER BOLTDOWN
(AS SHOWN OR SIMILAR)

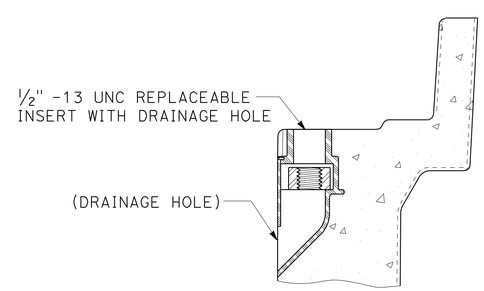

SECTION OF REPLACEABLE INSERT
(AS SHOWN OR SIMILAR)

DIMENSION TABLE

PULL BOX	PULL BOX			COVER							PULL BOX KNOCKOUTS		EXTENSION KNOCKOUTS	
	MINIMUM DEPTH BOX (In)	MINIMUM DEPTH EXTENSION (In)	MAXIMUM WEIGHT (LBS)	L (In)	W (In)	R (In)	TE (In)	TA (In)	D (In)	MAXIMUM WEIGHT (LBS)	SIDE	END	SIDE	END
No. 5	12	10	55	23¼	13¾	1⅜	2	⅛	1¾	60	2	1	2	1
No. 6	12	10	70	30½	17½	1⅜	2	⅛	2	85	2	2	2	2

NOTE : THIS PLAN IS ACCURATE FOR ELECTRICAL WORK ONLY

ELECTRICAL SYSTEMS (NON-TRAFFIC RATED PULL BOX)

NO SCALE

E-11

STATE OF CALIFORNIA - DEPARTMENT OF TRANSPORTATION
Caltrans® TRAFFIC ELECTRICAL

FUNCTIONAL SUPERVISOR: DALE WILSON
CALCULATED-DESIGNED BY: ENRIQUE BERNAL
CHECKED BY: HECTOR SANTAMARIA
REVISED BY
DATE REVISED

LAST REVISION 06-24-11
DATE PLOTTED => 13-JUL-2011
TIME PLOTTED => 14:06

DIST.	COUNTY	ROUTE	POST MILES TOTAL PROJECT	SHEET NO.	TOTAL SHEETS
11	SD	75	PM 9.3/10.1	47	62

REGISTERED CIVIL ENGINEER — 12-08-10 DATE

REGISTERED PROFESSIONAL ENGINEER — Dai Lu No. 67416 Exp. 12-31-12 CIVIL — STATE OF CALIFORNIA

06-27-11
PLANS APPROVAL DATE

The State of California or its officers or agents shall not be responsible for the accuracy or completeness of electronic copies of this plan sheet.

Caltrans now has a web site.
To get to the web site go to http://www.dot.ca.gov

ABBREVIATIONS

AAD	Adhesive Anchorage Device
AB	Anchor Bolt
AC	Asphalt Concrete
Alt	Alternate
APA	American Plywood Association
APC	Alternative Pipe Culvert
Bldg	Building
Blkg	Blocking
BN	Boundary Nailing
Btm	Bottom
CB	Carriage Bolt
CIDH	Cast In Drilled Hole
CJ	Control Joint
Clr	Clear
CMU	Concrete Masonry Unit
Conc	Concrete
Const	Construction
Cont	Continuous
CP	Complete Penetration Weld
Dbl	Double
DF	Douglas Fir
Dia	Diameter
DIP	Ductile Iron Pipe
DN	Diameter Nominal
do	Ditto
(E)	Existing
Ea	Each
EL	Elevation
Elec	Electrical
Embed	Embedment
EN	Edge Nail
Eq	Equal
Exp	Expansion
FDGM	Free Draining Granular Material
FG	Finish Grade
FL	Flow Line
Flr	Floor
FN	Face (Field) Nail
FOC	Face of Concrete
FOM	Face of Masonry
FOS	Face of Stud
Ftg	Footing
Ga	Gage
Galv	Galvanized
GLM	Glue Laminated Member
Gyp Bd	Gypsum Board
HD	Holdown
Hex	Hexagon
Horiz	Horizontal
HSB	High Strength Bolt
HSS	Hollow Structural Section
Jt	Joint
LOL	Layout Line
LVL	Laminated Veneer Lumber
m	Meter
Max	Maximum
MEA	Mechanical Expansion Anchor
Mech	Mechanical
Mfr	Manufacturer
mm	Millimeter
Min	Minimum
MIW	Malleable Iron Washer
OC	On Center
OG	Original Grade
OH	Opposite Hand
Opt	Optional
P	Pitch
PDF	Powder Driven Fastener
Plwd	Plywood
PT	Pressure Treated
PW	Puddle Weld
PWB	Prefabricated Wood I Beam
RCP	Reinforced Concrete Pipe
Reinf	Reinforced, Reinforcing
Req'd	Required
SDSTS	Self Drill, Self Tap Screw
Sim	Similar
SPS	Structural Plywood Sheathing
Sq	Square
Stagg	Staggered
Std	Standard
SW	Stud Weld
Sym	Symmetrical
T&G	Tongue-and-Groove
TN	Toe Nail
TS	Tube Steel
Typ	Typical
UON	Unless Otherwise Noted
Vert	Vertical

SYMBOLS

- Blocking In Section or Elevation
- Continuous Member In Section
- End of Member
- Bearing Wall
- Shear Wall
- X XXXX — Length; Shearwall Schedule Symbol; Reference
- Glue Laminated Member Section
- North Arrow
- X ST1-X — Partial Section Cut
- X ST1-X — Full Section Cut
- X — Revision Callout
- A — Grid Line Indicator
- ℄ — Center Line
- £ — Station Line
- PL — Steel Plate
- Ø — Diameter
- ◻ — Square
- CMU Wall on Plan Views
- Dropped Slab on Plan Views
- Reinforced Concrete
- Sand
- Structural Backfill
- Structural Excavation
- Original Ground
- Limits of Structural Backfill (shown on plan view)
- Free Draining Granular Material
- X — Bottom of Footing
- Elevation or Working Point
- Existing Features
- Holdown, Typ — Simpson / USP / Equal (Manufacturers are those noted in the order shown.)
- Frame Connector — Simpson / USP / Equal (Manufacturers are those noted in the order shown.)
- 3 5b ST-1 — Detail Number or Note Number; Additional Reference (if required); Sheet Number

NOTE: SPECIFIC DETAILS OR NOTES ON OTHER SHEETS SHALL PREVAIL OVER STANDARD DETAILS AND NOTES ON THIS SHEET

STANDARD DRAWING

FILE NO. XS-25-0	DESIGN BY Sean Samuel	CHECKED Eric Coffman	APPROVED R.E. Travis
DRAWING DATE 1-04	DETAILS BY George E. Rove	CHECKED	DESIGN SUPERVISOR
	SUBMITTED BY Sean Samuel, DESIGN ENGINEER		

STATE OF CALIFORNIA
DEPARTMENT OF TRANSPORTATION

DIVISION OF ENGINEERING SERVICES
ARCHITECTURAL AND STRUCTURAL DESIGN

BRIDGE NO.
POST MILE 9.3/10.1

PALM AVENUE LIGHTING POLE

LEGEND

SHEET SES-1

ORIGINAL SCALE IN INCHES FOR REDUCED PLANS 0 1 2 3

UNIT 3599
PROJECT NUMBER & PHASE 11000000401
EA 296711

DISREGARD PRINTS BEARING EARLIER REVISION DATES → 12-08-10

REVISION DATES (PRELIMINARY STAGE ONLY) | SHEET | OF

DTDESIGN Imperial Rev. 9/02

30-JUN-2011 09:15

b29671uh001.dgn

DIST.	COUNTY	ROUTE	POST MILES TOTAL PROJECT	SHEET NO.	TOTAL SHEETS
11	SD	75	PM 9.3/10.1	48	62

REGISTERED CIVIL ENGINEER — DATE 12-08-10

REGISTERED PROFESSIONAL ENGINEER — Dai Lu — No. 67416 — Exp. 12-31-12 — CIVIL — STATE OF CALIFORNIA

06-27-11
PLANS APPROVAL DATE

The State of California or its officers or agents shall not be responsible for the accuracy or completeness of electronic copies of this plan sheet.

PROJECT DESIGN CRITERIA

The building work on this project has been designed to conform to the 2007 California Building Code (2006 IBC).

LOADS

SEISMIC:

Occupancy Category = I

Importance Factor I = 1.0

Site Soil Class = D

S_S = 1.34 S_{DS} = 0.893

S_1 = 0.53 S_{D1} = 0.53

Seismic Design Category = D

WIND:

Basic Wind Speed = 85 mph

Importance Factor I = 0.87

Exposure C

MATERIALS

REINFORCED CONCRETE: (Ultimate Strength Design):

f'c = 3,000 psi

f_y = 60,000 psi

FOUNDATION:

Allowable Soil Pressure (DL + LL) = 1,500 psf assumed

Allowable Soil Lateral Bearing = 100 psf/ft below natural grade assumed

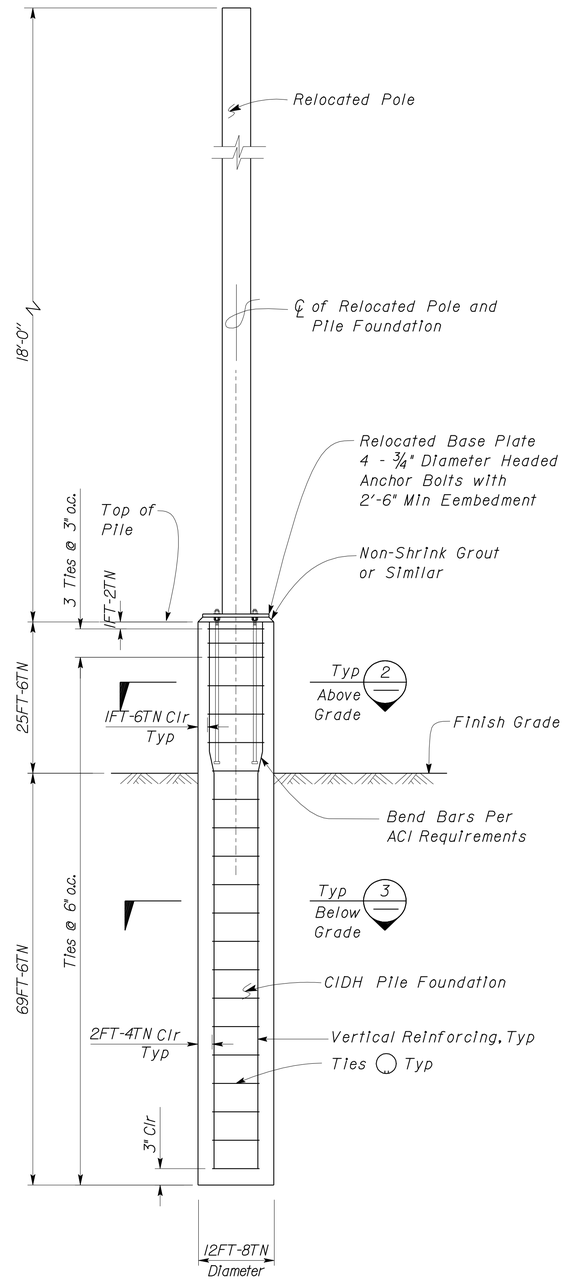

1 LIGHT POLE FOUNDATION DETAIL
Scale ¾" = 1' - 0"

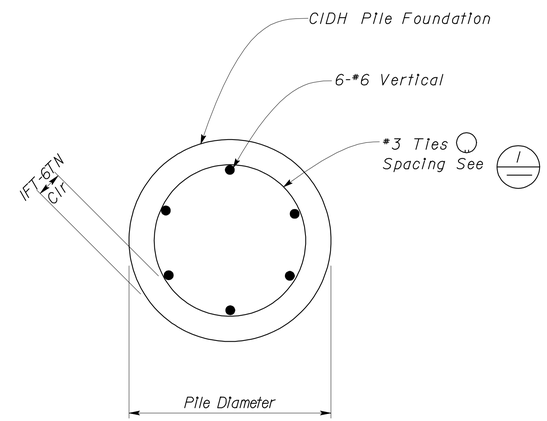

2 SECTION ABOVE GRADE
Scale 2" = 1' - 0"

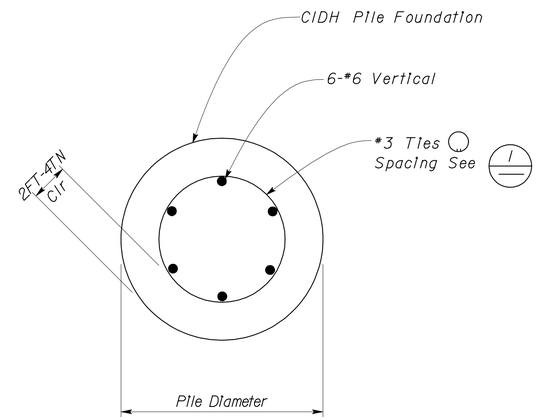

3 SECTION BELOW GRADE
Scale 2" = 1' - 0"

	BY	CHECKED
DESIGN	Dai Lu	Tom Mesich
DETAILS	Dai Lu	Tom Mesich
QUANTITIES		

STATE OF CALIFORNIA
DEPARTMENT OF TRANSPORTATION

DIVISION OF ENGINEERING SERVICES
ARCHITECTURAL AND STRUCTURAL DESIGN

BRIDGE NO.
POST MILE 9.3/10.1

PALM AVENUE LIGHTING POLE
SAND STORAGE FACILITY
FOUNDATION DETAILS

SHEET SES-2

TAEMWW Imperial Rev. 7/10

ORIGINAL SCALE IN INCHES FOR REDUCED PLANS 0 1 2 3

UNIT 3599
PROJECT NUMBER & PHASE 11000000401
EA 296711

DISREGARD PRINTS BEARING EARLIER REVISION DATES → 12-08-10 02-15-11

REVISION DATES (PRELIMINARY STAGE ONLY) SHEET OF

30-JUN-2011 09:15

U:\1100020264\b29671uh002.dgn

DIST	COUNTY	ROUTE	POST MILES TOTAL PROJECT	SHEET NO.	TOTAL SHEETS
11	SD	75	9.3/10.1	49	62

LICENSED LANDSCAPE ARCHITECT

August 15, 2008
PLANS Approval DATE

The State of California or its officers or agents shall not be responsible for the accuracy or completeness of electronic copies of this plan sheet.

LICENSED LANDSCAPE ARCHITECT
Robert B. Schott 3635
Signature - Date
11-04-08
Renewal - Date
08-11-08
Date
STATE OF CALIFORNIA

To accompany plans dated 06-27-11

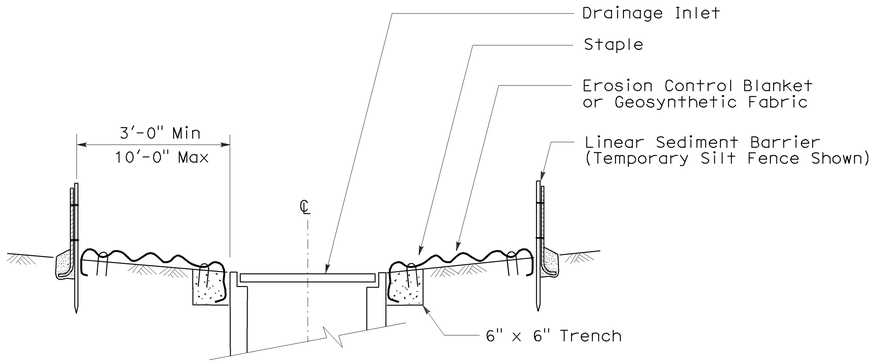

SECTION A-A

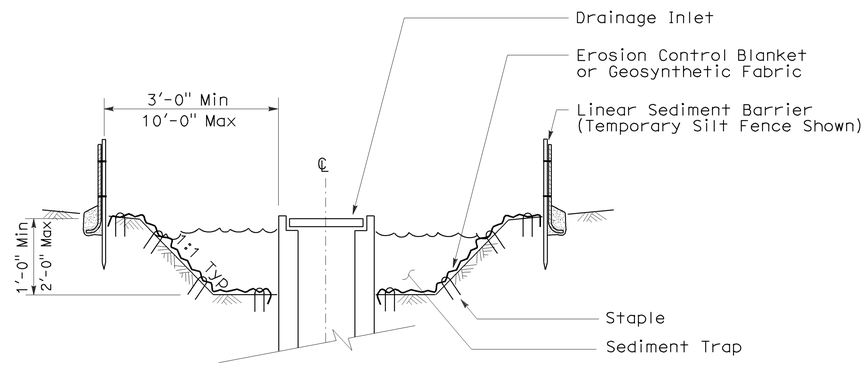

SECTION B-B

NOTES:

1. See Standard Plan T51 for Temporary Silt Fence.
2. Dimensions may vary to fit field conditions.

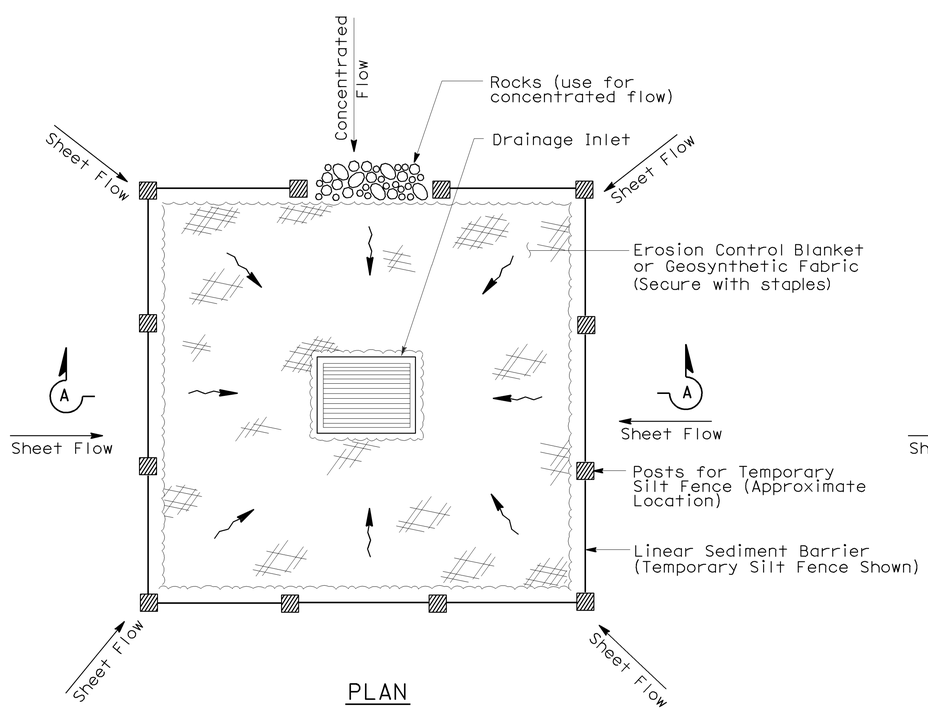

PLAN

TEMPORARY DRAINAGE INLET PROTECTION (TYPE 1)

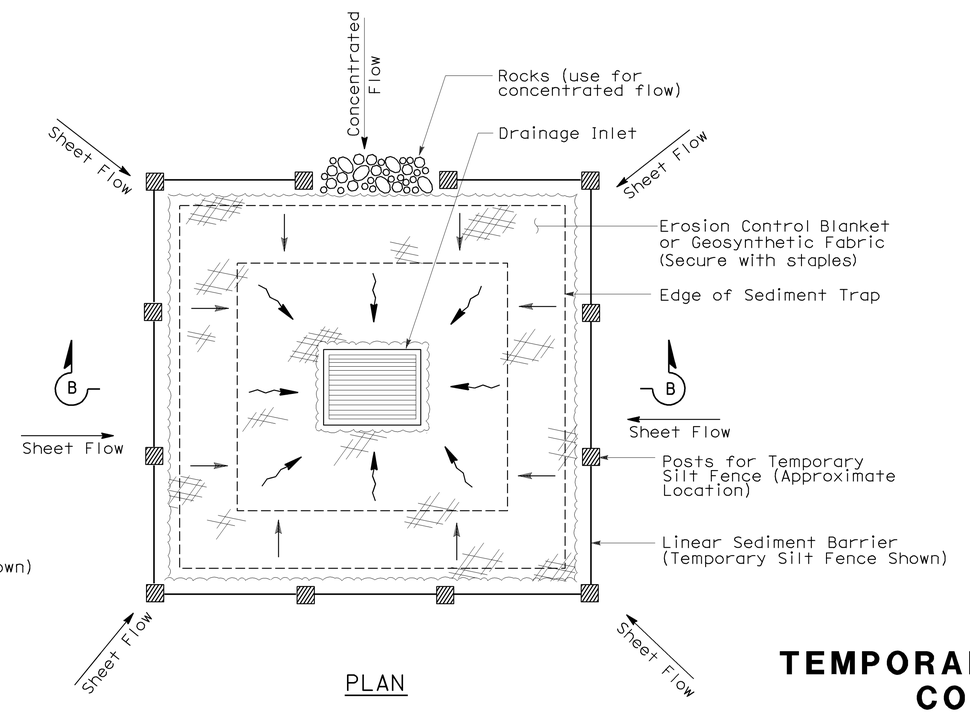

PLAN

TEMPORARY DRAINAGE INLET PROTECTION (TYPE 2) (EXCAVATED SEDIMENT TRAP)

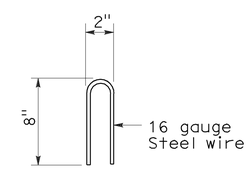

STAPLE DETAIL

STATE OF CALIFORNIA
DEPARTMENT OF TRANSPORTATION

TEMPORARY WATER POLLUTION CONTROL DETAILS (TEMPORARY DRAINAGE INLET PROTECTION)

NO SCALE

Nsp t61 dated august 15, 2008 supplements the standard plans book dated may 2006.

NEW STANDARD PLAN NSP T61

2006 NEW STANDARD PLAN NSP T61

7-11-08

DIST	COUNTY	ROUTE	POST MILES TOTAL PROJECT	SHEET NO.	TOTAL SHEETS
11	SD	75	9.3/10.1	50	62

LICENSED LANDSCAPE ARCHITECT

August 15, 2008
PLANS APPROVAL DATE

The State of California or its officers or agents shall not be responsible for the accuracy or completeness of electronic copies of this plan sheet.

LICENSED LANDSCAPE ARCHITECT — Robert B. Schott — Signature — 11-04-08 Renewal Date — 08-11-08 Date — STATE OF CALIFORNIA

To accompany plans dated 06-27-11

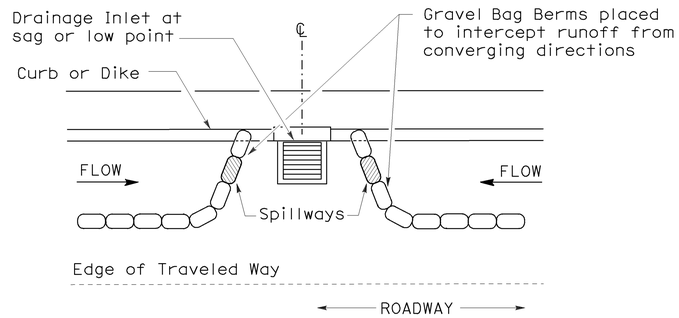

PLAN

CONFIGURATION FOR SAG POINT INLET (GRAVEL BAG BERM)

GRAVEL BAG BERM (TYPE 3A) SPACING TABLE

SLOPE OF ROADWAY (PERCENT)	1 to 3.9	4 to 5.9	6 to 7.9	8 to 10	10+
INTERVAL BETWEEN BERM	100′	75′	50′	25′	12′

For slope of less than 1%, install barriers only if erosion/sediment is prevalent

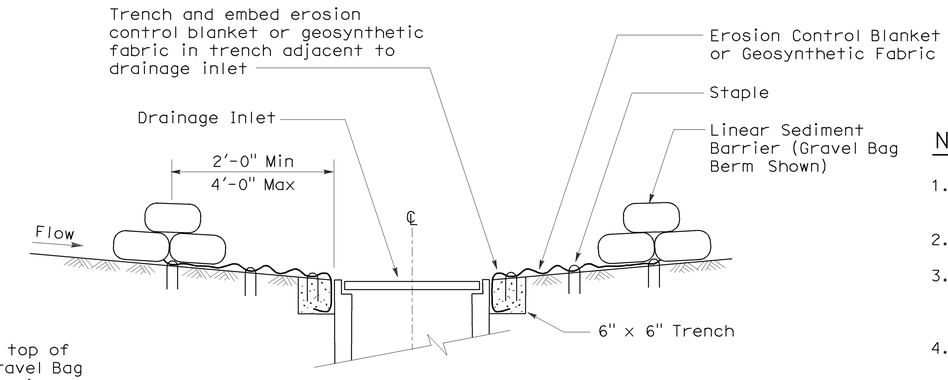

SECTION A-A

NOTES:

1. Place safety cones adjacent to drainage inlet protection.
2. Dimensions may vary to fit field conditions.
3. Install a minimum of 3 gravel bag berms upstream of each drainage inlet to be protected.
4. Position erosion control blanket or geosynthetic fabric at edge of concrete apron and secure in trench.
5. Erosion control blanket or geosynthetic fabric is not required if the area adjacent to the drainage inlet is vegetated or paved.

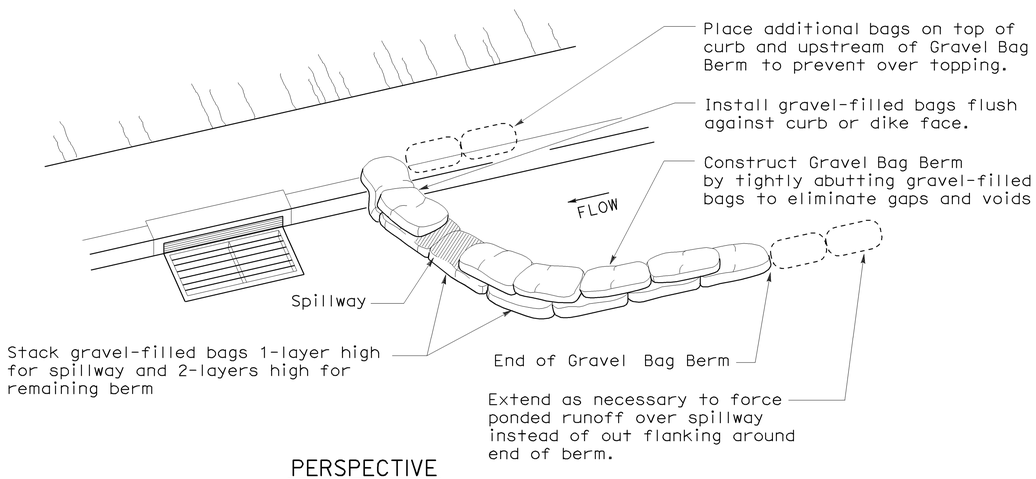

PERSPECTIVE

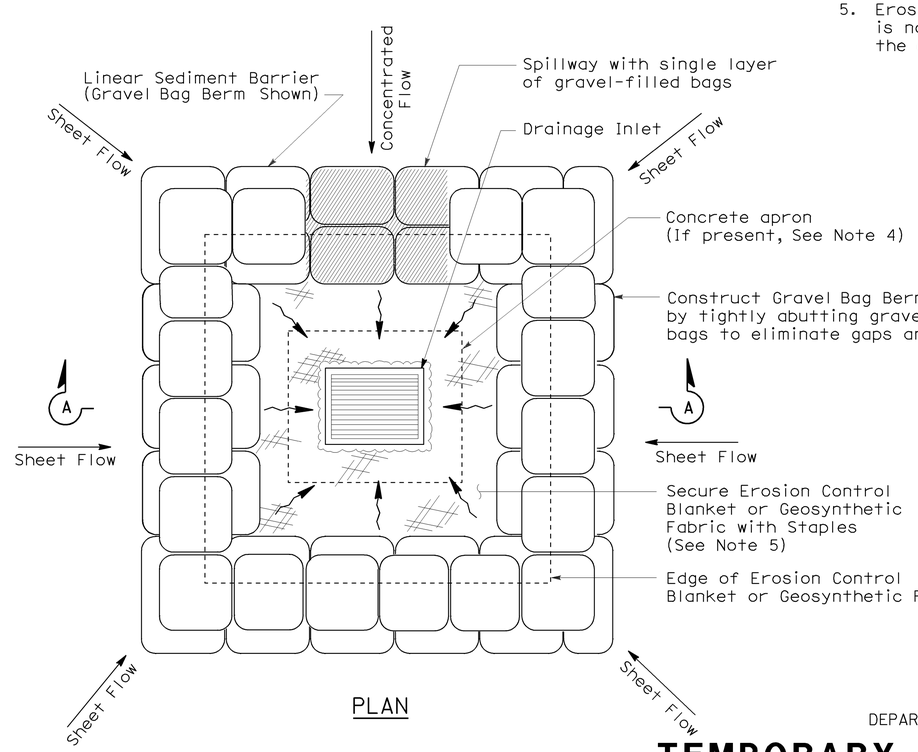

PLAN

TEMPORARY DRAINAGE INLET PROTECTION (TYPE 3B)

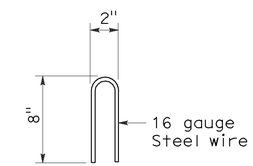

STAPLE DETAIL

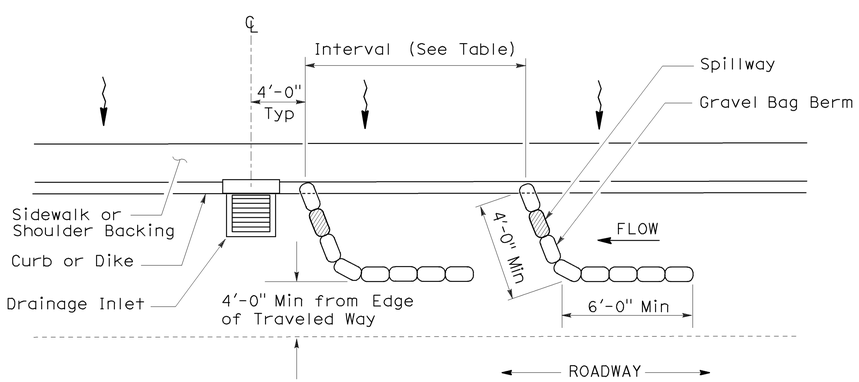

PLAN

TEMPORARY DRAINAGE INLET PROTECTION (TYPE 3A) (GRAVEL BAG BERM)

STATE OF CALIFORNIA
DEPARTMENT OF TRANSPORTATION

TEMPORARY WATER POLLUTION CONTROL DETAILS (TEMPORARY DRAINAGE INLET PROTECTION)

NO SCALE

NSP T62 DATED AUGUST 15, 2008 SUPPLEMENTS THE STANDARD PLANS BOOK DATED MAY 2006.

NEW STANDARD PLAN NSP T62

2006 NEW STANDARD PLAN NSP T62

7-11-08

DIST	COUNTY	ROUTE	POST MILES TOTAL PROJECT	SHEET NO.	TOTAL SHEETS
11	SD	75	9.3/10.1	51	62

LICENSED LANDSCAPE ARCHITECT

August 15, 2008
PLANS APPROVAL DATE

LICENSED LANDSCAPE ARCHITECT — Robert B. Schott — 3635 — Signature — 11-04-08 Renewal Date — 08-11-08 Date — STATE OF CALIFORNIA

The State of California or its officers or agents shall not be responsible for the accuracy or completeness of electronic copies of this plan sheet.

To accompany plans dated 06-27-11

FLEXIBLE SEDIMENT BARRIER SPACING TABLE

SLOPE OF ROADWAY (PERCENT)	0 to 0.9	1 to 1.9	2 to 2.9	3 to 4	5+
INTERVAL BETWEEN BARRIERS	50′	35′	30′	25′	20′
ANGLE FROM FACE OF CURB	70°	70°	70°	45°	45°
SUGGESTED BARRIER LENGTH	6′	6′	6′	6′	6′

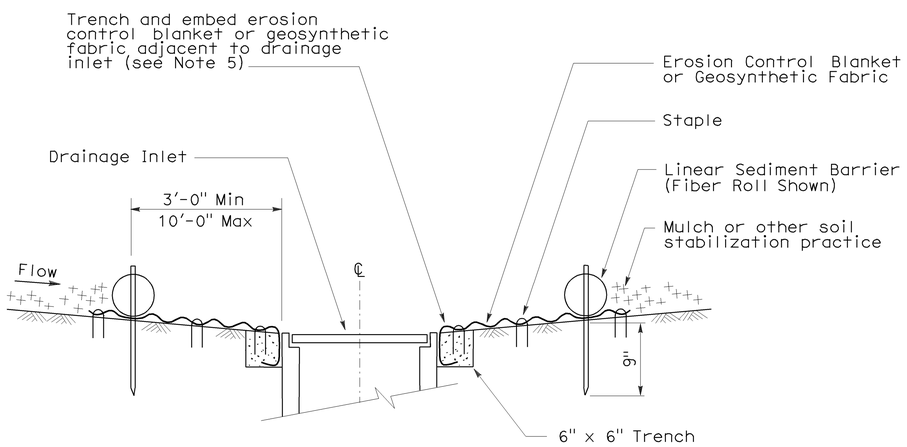

SECTION A-A

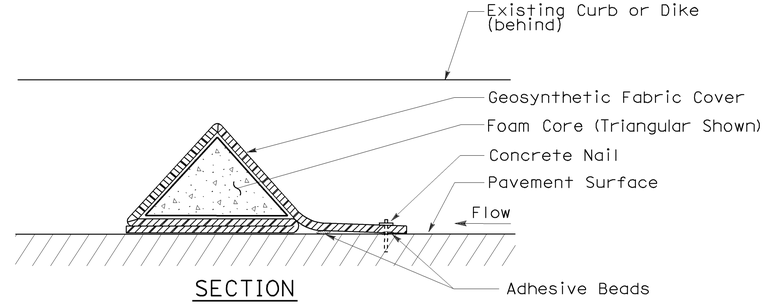

SECTION

FLEXIBLE SEDIMENT BARRIER DETAIL (FOAM BARRIER SHOWN)

NOTES:

1. See Standard Plan T51 for Temporary Silt Fence.
2. Dimensions may vary to fit field conditions.
3. Install a minimum of 3 flexible sediment barriers upstream of each drainage inlet to be protected.
4. Position erosion control blanket or geosynthetic fabric at edge of concrete apron and secure in trench.
5. Erosion control blanket or geosynthetic fabric is not required if the area adjacent to the drainage inlet is vegetated.

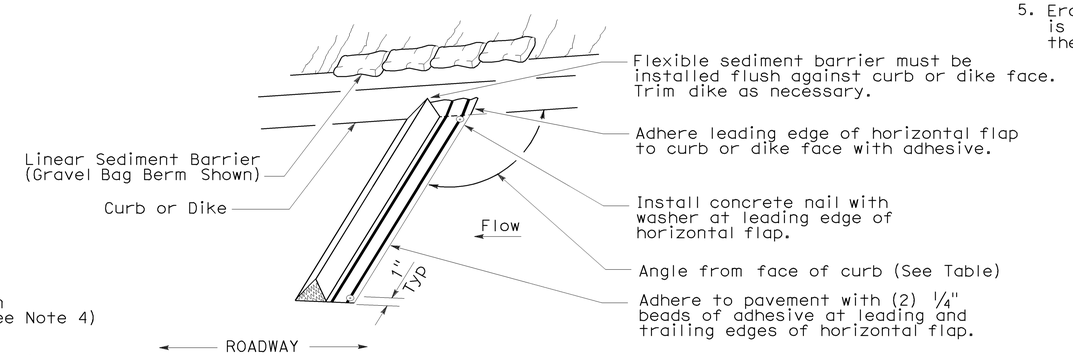

PERSPECTIVE

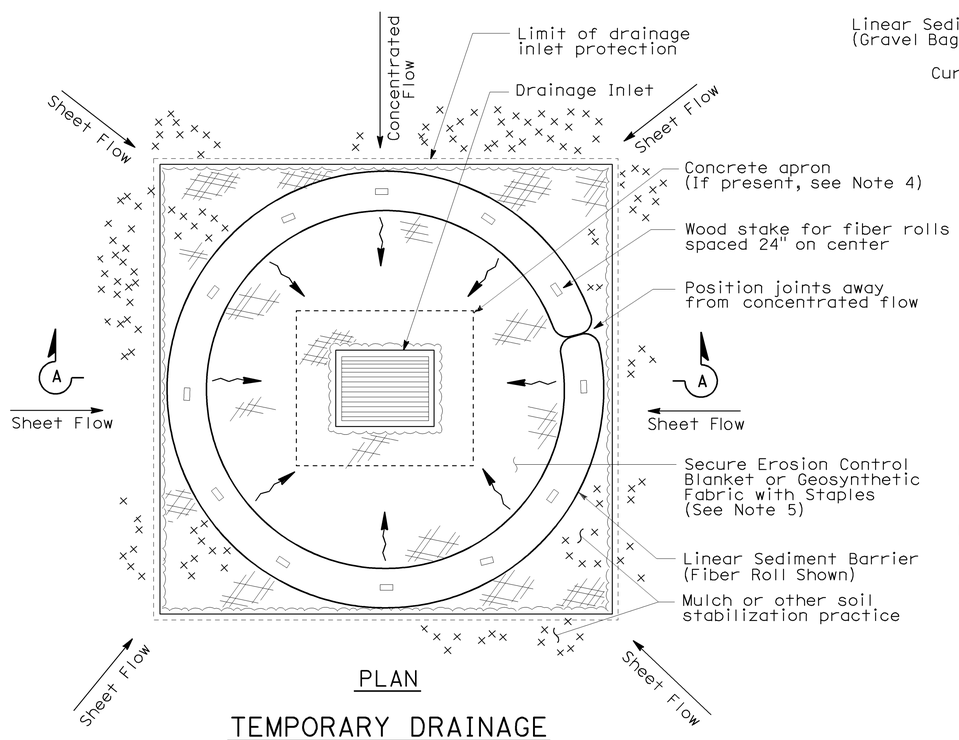

PLAN

TEMPORARY DRAINAGE INLET PROTECTION (TYPE 4A)

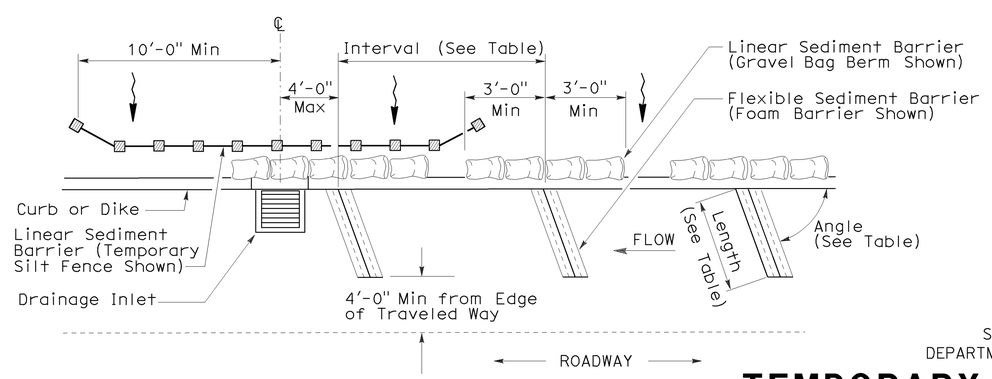

PLAN

TEMPORARY DRAINAGE INLET PROTECTION (TYPE 4B) FLEXIBLE SEDIMENT BARRIER

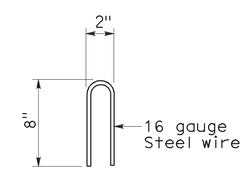

STAPLE DETAIL

STATE OF CALIFORNIA
DEPARTMENT OF TRANSPORTATION

TEMPORARY WATER POLLUTION CONTROL DETAILS (TEMPORARY DRAINAGE INLET PROTECTION)

NO SCALE

NSP T63 DATED AUGUST 15, 2008 SUPPLEMENTS THE STANDARD PLANS BOOK DATED MAY 2006.

NEW STANDARD PLAN NSP T63

2006 NEW STANDARD PLAN NSP T63

7-11-08

DIST	COUNTY	ROUTE	POST MILES TOTAL PROJECT	SHEET NO.	TOTAL SHEETS
11	SD	75	9.3/10.1	52	62

LICENSED LANDSCAPE ARCHITECT

August 15, 2008
PLANS APPROVAL DATE

LICENSED LANDSCAPE ARCHITECT
Robert B. Schott 3635
Signature
11-04-08
Renewal Date
08-11-08
Date
STATE OF CALIFORNIA

The State of California or its officers or agents shall not be responsible for the accuracy or completeness of electronic copies of this plan sheet.

To accompany plans dated 06-27-11

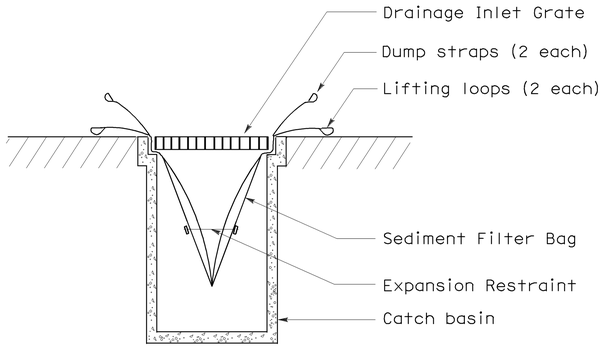

SECTION B-B

SEDIMENT FILTER BAG DETAIL

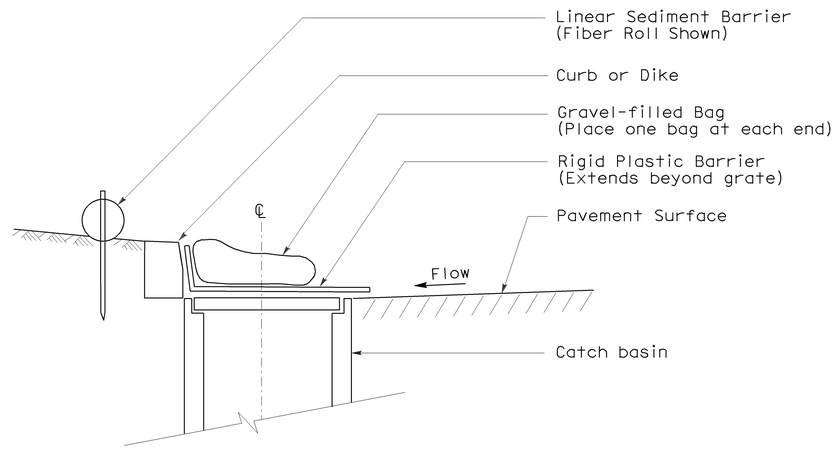

SECTION

TEMPORARY DRAINAGE INLET PROTECTION (TYPE 6A) (CATCH BASIN WITH GRATE)

NOTES:

1. See Standard Plan T51 for Temporary Silt Fence.
2. Dimensions may vary to fit field conditions.

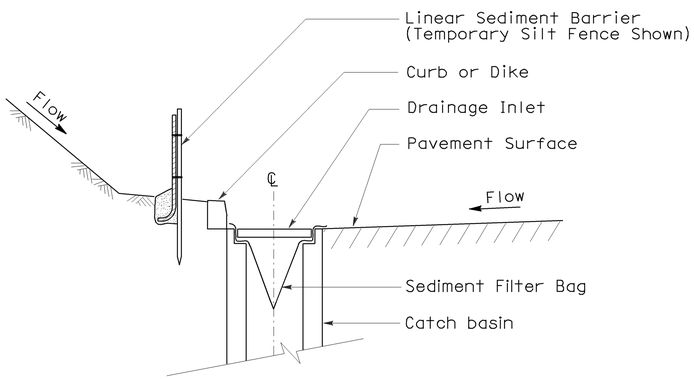

SECTION A-A

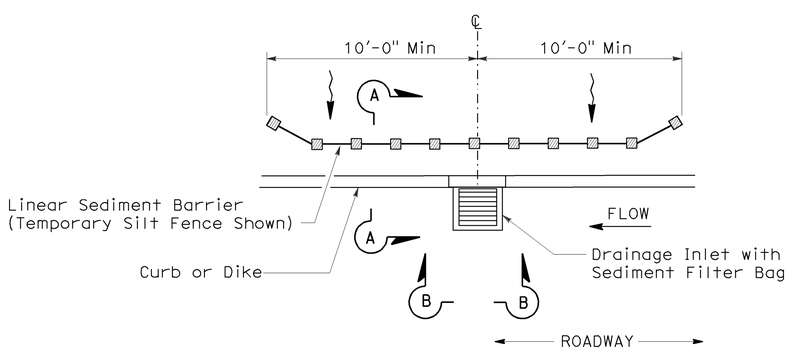

PLAN

TEMPORARY DRAINAGE INLET PROTECTION (TYPE 5) (SEDIMENT FILTER BAG)

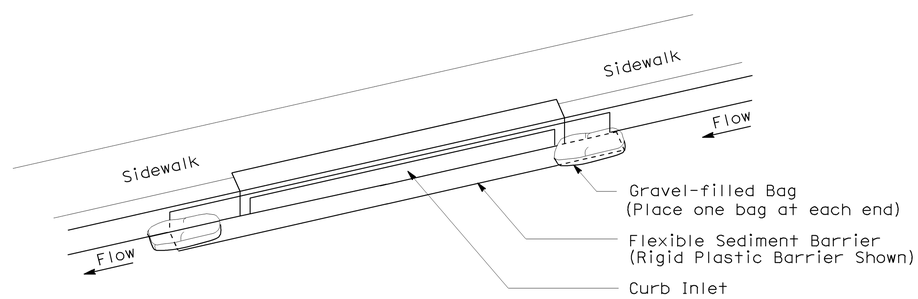

PERSPECTIVE

TEMPORARY DRAINAGE INLET PROTECTION (TYPE 6B) (CURB INLET WITHOUT GRATE)

STATE OF CALIFORNIA
DEPARTMENT OF TRANSPORTATION

TEMPORARY WATER POLLUTION CONTROL DETAILS (TEMPORARY DRAINAGE INLET PROTECTION)

NO SCALE

NSP T64 DATED AUGUST 15, 2008 SUPPLEMENTS
THE STANDARD PLANS BOOK DATED MAY 2006.

NEW STANDARD PLAN NSP T64

2006 NEW STANDARD PLAN NSP T64

7-11-08

DIST	COUNTY	ROUTE	POST MILES TOTAL PROJECT	SHEET NO.	TOTAL SHEETS
11	SD	75	9.3/10.1	53	62

REGISTERED CIVIL ENGINEER

November 17, 2006
PLANS APPROVAL DATE

REGISTERED PROFESSIONAL ENGINEER Michael Janzen No. 44788 Exp. 03-31-08 CIVIL STATE OF CALIFORNIA

The State of California or its officers or agents shall not be responsible for the accuracy or completeness of electronic copies of this plan sheet.

To accompany plans dated 06-27-11

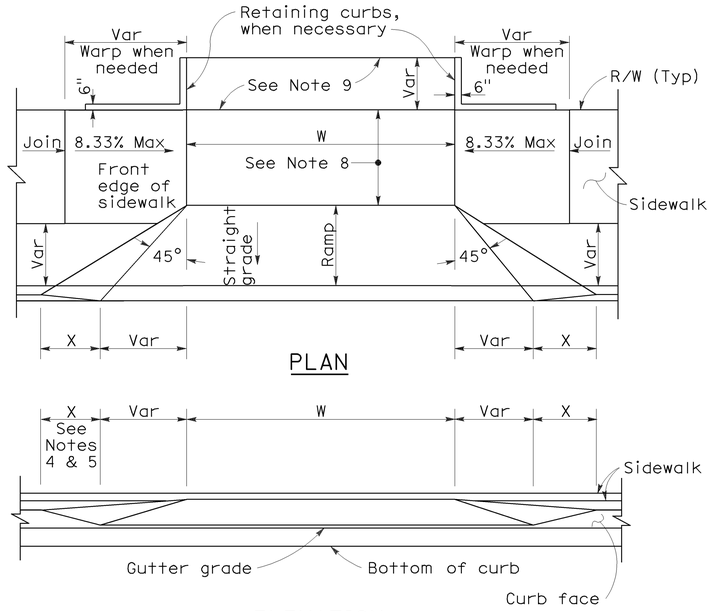

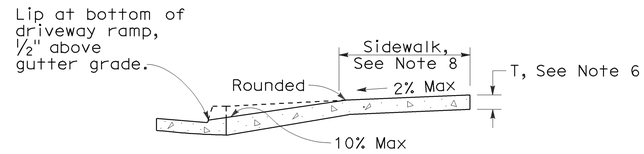

CASE A

Typical driveway, sidewalk not depressed

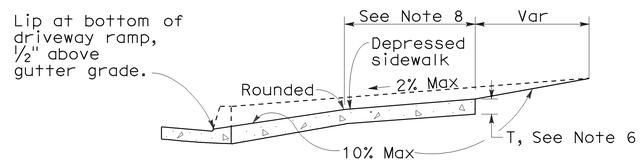

CASE B

Driveway with depressed sidewalk

SECTIONS

CURB QUANTITIES

TYPE	CUBIC YARDS PER LINEAR FOOT
A1-6	0.02585
A1-8	0.03084
A2-6	0.05903
A2-8	0.06379
A3-6	0.01036
A3-8	0.01435
B1-4	0.02185
B1-6	0.02930
B2-4	0.05515
B2-6	0.06171
B3-4	0.00641
B3-6	0.01074
B4	0.05709
D-4	0.04083
D-6	0.06804
E	0.06661

TABLE A

CURB TYPE	DIMENSIONS "H1"	"H2"	"W1"	"W2"
A1-6	1'-2"	6"	7½"	1½"
A1-8	1'-4"	8"	8"	2"
A2-6	1'-0"	6"	2'-7½"	1½"
A2-8	1'-2"	8"	2'-8"	2"
A3-6	6"	5"	7¼"	1¼"
A3-8	8"	7"	7¾"	1¾"
B1-4	1'-0"	4"	7½"	2½"
B1-6	1'-2"	6"	9"	4"
B2-4	10"	4"	2'-7½"	2½"
B2-6	1'-0"	6"	2'-9"	4"
B3-4	4"	3"	7"	2"
B3-6	6"	5"	8½"	3½"
D-4	10"	4"	1'-6"	1'-1"
D-6	1'-0"	6"	2'-2"	1'-8"

DRIVEWAYS

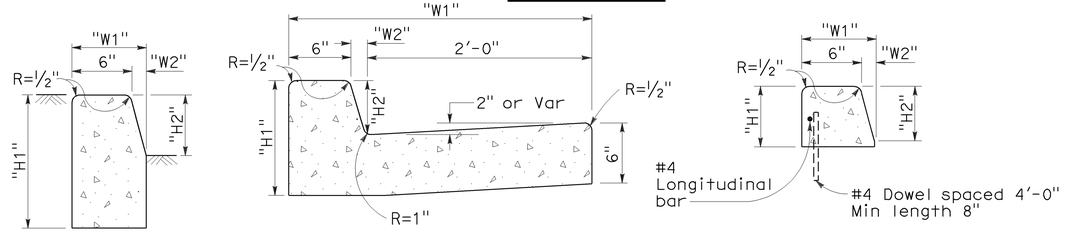

TYPE A1 CURBS
See Table A

TYPE A2 CURBS
See Table A

TYPE A3 CURBS
Superimposed on existing pavement
See Table A

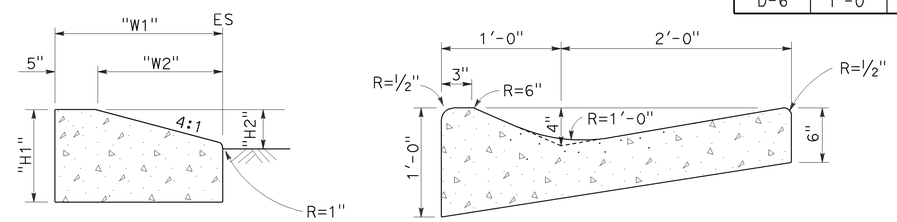

TYPE D CURBS
See Table A

TYPE E CURB

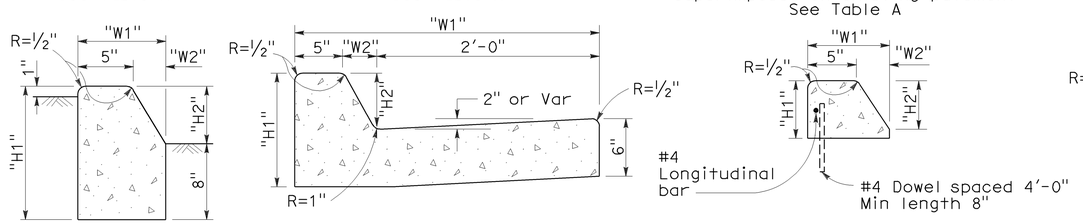

TYPE B1 CURBS
See Table A

TYPE B2 CURBS
See Table A

TYPE B3 CURBS
Superimposed on existing pavement
See Table A

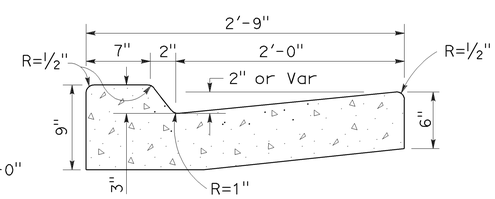

TYPE B4 CURBS

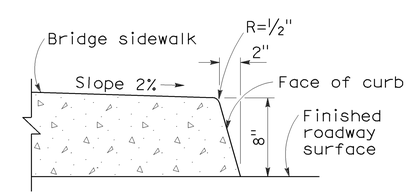

TYPE H CURB
On Bridges

CURBS

NOTES:

1. Case A driveway section typically applies.
2. Use Case B driveway section when ramp slopes would exceed 10% in Case A.
3. Use Case B driveway section when sidewalk cross slope would exceed 2% in Case A.
4. X=3'-0" except for curb heights over 10" where 4:1 slopes shall be used on curb slope.
5. X is a variable when sidewalk is located where wheelchairs may traverse the surface. Slopes shall not exceed 8.33%.
6. Sidewalk and ramp thickness "T" at driveway shall be 4" for residental and 6" for commercial.
7. Difference in slope of the driveway ramp and the slope of a line between the gutter and a point on the roadway 5'-0" from gutter line shall not exceed 15%. Reduce driveway ramp slope, not gutter slope, where required.
8. Minimum width of clear passageway for sidewalk shall be 4'-0".
9. Retaining curbs and acquisition of construction easement may be necessary for narrow sidewalks or curb heights in excess of 6".
10. Across the pedestrian route at curb ramp locations, the gutter pan slope shall not exceed 1" of depth for each 2'-0" of width.

STATE OF CALIFORNIA
DEPARTMENT OF TRANSPORTATION

CURBS AND DRIVEWAYS

NO SCALE

RSP A87A DATED NOVEMBER 17, 2006 SUPERSEDES STANDARD PLAN A87A DATED MAY 1, 2006 - PAGE 113 OF THE STANDARD PLANS BOOK DATED MAY 2006.

REVISED STANDARD PLAN RSP A87A

2006 REVISED STANDARD PLAN RSP A87A

10-25-06

DIST	COUNTY	ROUTE	POST MILES TOTAL PROJECT	SHEET NO.	TOTAL SHEETS
11	SD	75	9.3/10.1	54	62

REGISTERED CIVIL ENGINEER

September 1, 2006
PLANS APPROVAL DATE

REGISTERED PROFESSIONAL ENGINEER Hector David Cordova No. C41957 Exp. 3-31-08 CIVIL STATE OF CALIFORNIA

The State of California or its officers or agents shall not be responsible for the accuracy or completeness of electronic copies of this plan sheet.

To accompany plans dated 06-27-11

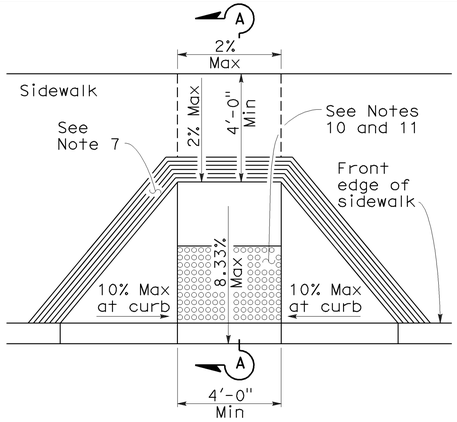

CASE A

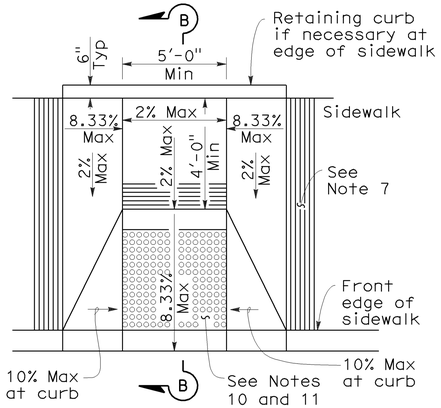

CASE B

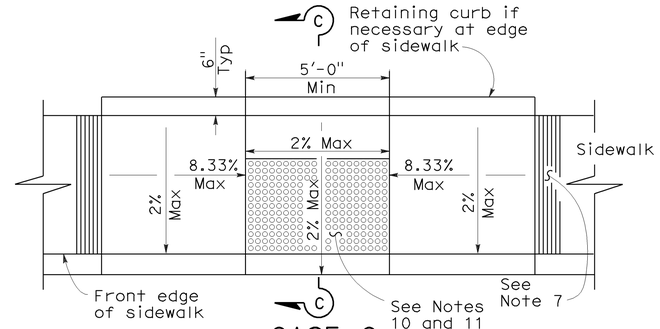

CASE C

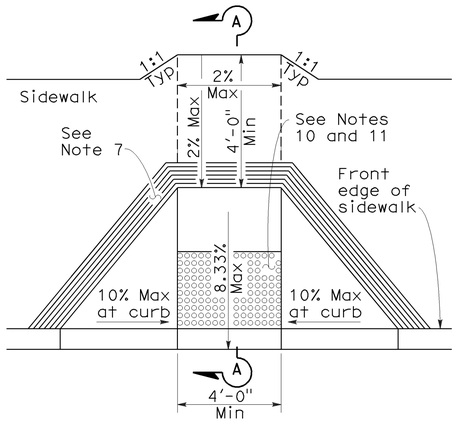

CASE D

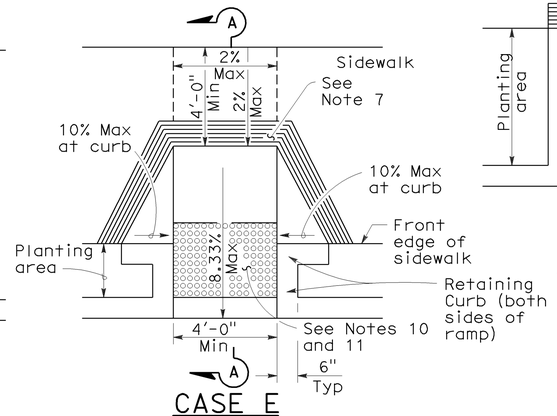

CASE E

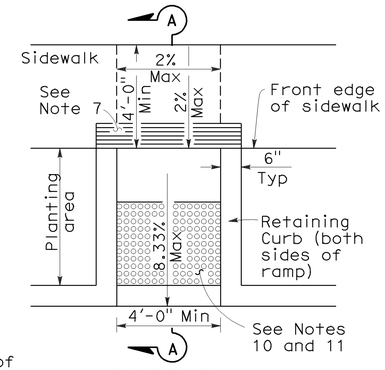

CASE F

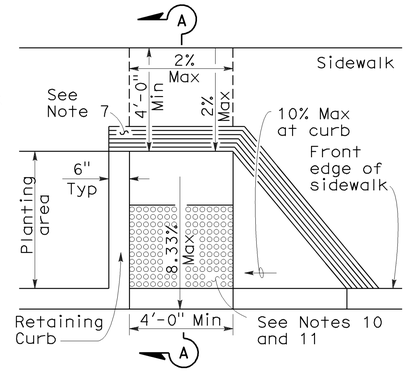

CASE G
See Note 4

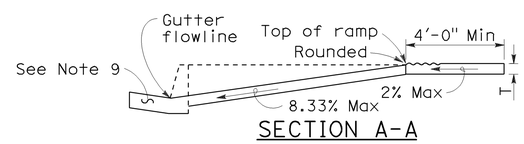

SECTION A-A

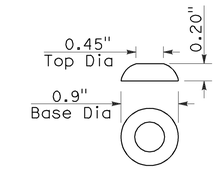

RAISED TRUNCATED DOME

NOTES:

1. As site conditions dictate, Case A through Case G curb ramps may be used for corner installations similar to those shown in Detail A and Detail B. The case of curb ramps used in Detail A do not have to be the same. Case A through Case G curb ramps also may be used at mid block locations, as site conditions dictate.
2. If distance from curb to back of sidewalk is too short to accommodate ramp and 4'-0" platform (landing) as shown in Case A, the sidewalk may be depressed longitudinally as in Case B, or C or may be widened as in Case D.
3. When ramp is located in center of curb return, crosswalk configuration must be similar to that shown for Detail B.
4. As site conditions dictate, the retaining curb side and the flared side of the Case G ramp shall be constructed in reversed position.
5. If located on a curve, the sides of the ramp need not be parallel, but the minimum width of the ramp shall be 4'-0".
6. Side slope of ramp flares vary uniformly from a maximum of 10% at curb to conform with longitudinal sidewalk slope adjacent to top of the ramp, except in Case C and Case F.
7. The curb ramp shall be outlined, as shown, with a 1'-0" wide border with ¼" grooves approximately ¾" on center. See grooving detail.
8. Transitions from ramps and landing to walks, gutters or streets shall be flush and free of abrupt changes.
9. Maximum slopes of adjoining gutters, the road surface immediately adjacent to the curb ramp or accessible route shall not exceed 5 percent within 4'-0" of the top and bottom of the curb ramp.
10. Curb ramps shall have a detectable warning surface that extends the full width and 3'-0" depth of the ramp. Detectable Warning Surfaces shall conform to the details on this plan and the requirements in the Special Provisions.
11. The edge of the detectable warning surface nearest the street shall be between 6" and 8" from the gutter flowline.
12. Sidewalk and ramp thickness, "T", shall be 3½" minimum.
13. Utility pull boxes, manholes, vaults and all other utility facilities within the boundaries of the curb ramp will be relocated or adjusted to grade by the owner prior to, or in conjunction with, curb ramp construction.
14. For retrofit conditions, removal and replacement of curb apron will be at the Contractor's option, unless otherwise shown on project plans.

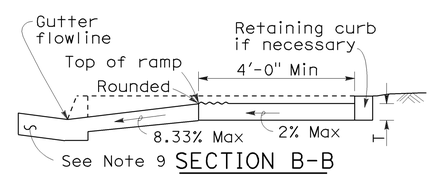

SECTION B-B
Depress entire sidewalk as required

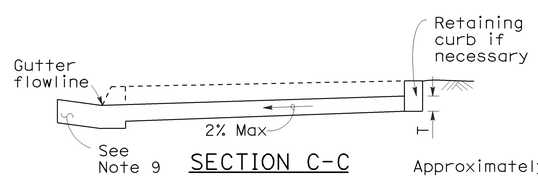

SECTION C-C

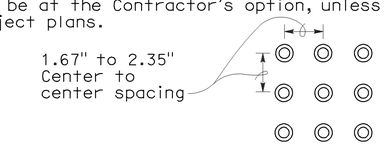

RAISED TRUNCATED DOME PATTERN (IN-LINE)

DETECTABLE WARNING SURFACE

See Note 10

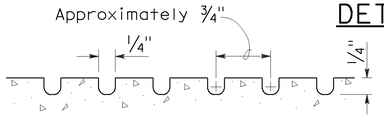

GROOVING DETAIL

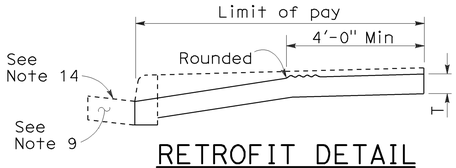

RETROFIT DETAIL
Existing curb and sidewalk

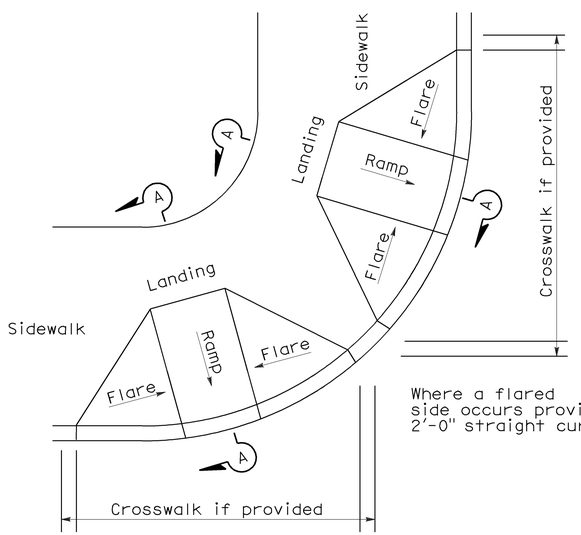

DETAIL A

TYPICAL TWO-RAMP CORNER INSTALLATION

See Note 1

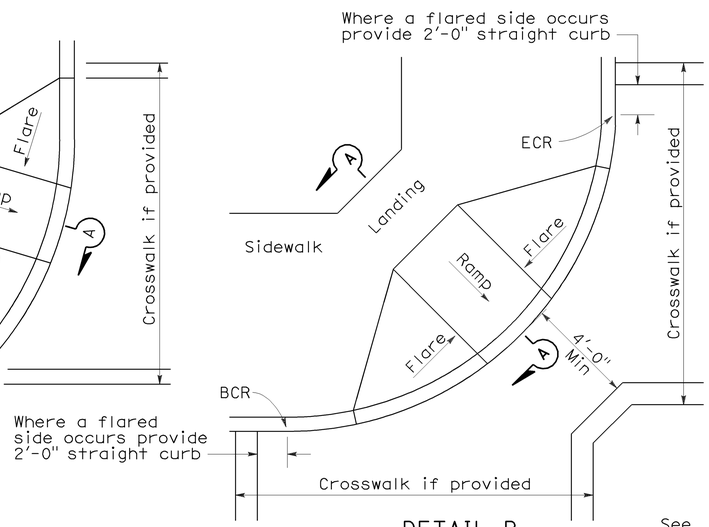

DETAIL B

TYPICAL ONE-RAMP CORNER INSTALLATION

See Notes 1 and 3

STATE OF CALIFORNIA
DEPARTMENT OF TRANSPORTATION

CURB RAMP DETAILS

NO SCALE

RSP A88A DATED SEPTEMBER 1, 2006 SUPERSEDES STANDARD PLAN A88A DATED MAY 1, 2006 - PAGE 115 OF THE STANDARD PLANS BOOK DATED MAY 2006.

REVISED STANDARD PLAN RSP A88A

2006 REVISED STANDARD PLAN RSP A88A

8-3-06

DIST	COUNTY	ROUTE	POST MILES TOTAL PROJECT	SHEET NO.	TOTAL SHEETS
11	SD	75	9.3/10.1	55	62

REGISTERED ELECTRICAL ENGINEER

October 5, 2007
PLANS APPROVAL DATE

REGISTERED PROFESSIONAL ENGINEER Jeffery G. McRae No. E14512 Exp. 6-30-08 ELECTRICAL STATE OF CALIFORNIA

The State of California or its officers or agents shall not be responsible for the accuracy or completeness of electronic copies of this plan sheet.

To accompany plans dated 06-27-11

ELECTROLIERS

STANDARD TYPES
15, 15D
15 STRUCTURE
21, 21D STRUCTURE
30
31
32
35
36-20A

High mast light pole

Double Arm lighting standard

Existing electrolier

Electrolier foundation (Future installation)

NOTES:

1. Luminaires shall be 310 W HPS when installed on Type 21, 21D, 30, 31, 32, 35 and 36-20A Standards, unless otherwise specified. Luminaires shall be 200 W HPS when installed on other type standards or poles, unless otherwise specified.
2. Luminaires shall be the cutoff type, ANSI Type Ⅲ medium cutoff lighting distribution, unless otherwise specified.
3. Variations noted adjacent to symbol on project plans.

Electrolier (see project notes or project plans)

Luminaire on wood pole

STANDARD NOTES:

- AB — Abandon. If applied to conduit, remove conductors.
- BC — Install pull box in existing conduit run.
- BP — Pedestrian barricade, type as indicated on plan.
- CB — Install conduit into existing pull box.
- CC — Connect new and existing conduit. Remove existing conductors and install conductors as indicated.
- CF — Conduit to remain for future use. Remove conductors. Install pull wire or rope.
- DH — Detector handhole.
- FA — Foundation to be abandoned.
- IS — Install sign on signal mast arm.
- NS — No slip base on standard.
- PEC — Photoelectric control.
- PEU — Photoelectric unit.
- RC — Equipment or material to be removed and become the property of the Contractor.
- RE — Remove electrolier, fuses and ballast. Tape ends of conductors.
- RL — Relocate equipment.
- RR — Remove and reuse equipment.
- RS — Remove and salvage equipment.
- SC — Splice new to existing conductors.
- SD — Service disconnect.
- SF — Standard to remain for future use. Remove luminaire, pole conductors, fuses and ballast.
- TSP — Telephone service point.

ABBREVIATIONS AND EQUIPMENT DESIGNATIONS

PROPOSED	EXISTING	
BBS	bbs	Battery backup system
BC	bc	Bolt circle
C	C	Conduit
CCTV	cctv	Closed circuit television
CKT	ckt	Circuit
CMS	cms	Changeable message sign
DLC	dlc	Loop detector lead-in cable
EMS	ems	Extinguishable message sign
EVC	evc	Emergency vehicle cable
EVD	evd	Emergency vehicle detector
FB	fb	Flashing beacon
FBCA	fbca	Flashing beacon control assembly
FBS	fbs	Flashing beacon with slip base
FO	fo	Fiber optic
G	G	Ground (Equipment Grounding Conductor)
GFCI	GFCI	Ground fault circuit interrupt
HAR	har	Highway advisory radio
HEX	hex	Hexagonal
HPS	hps	High pressure sodium
IISNS	iisns	Internally illuminated street name sign
ISL	isl	Induction sign lighting
LED	led	Light emitting diode
LMA	lma	Luminaire mast arm
LPS	lps	Low pressure sodium
LTG	ltg	Lighting
LUM	lum	Luminaire
MAT	mat	Mast arm mounting vehicle signal faces, top attachment
MAS	mas	Mast arm mounting vehicle signal faces, side attachment
MAS-4A	mas-4A	Mast arm mounting vehicle signal faces, side attachment - 4 signal section
MAS-4B	mas-4B	
MAS-4C	mas-4C	
MAS-5A	mas-5A	Mast arm mounting vehicle signal faces, side attachment - 5 signal section
MAS-5B	mas-5B	
MC	mc	Mercury contactor
M/M	m/m	Multiple to multiple transformer
MT	mt	Conduit with pull wire or rope only
MTG	mtg	Mounting
	mv	Mercury vapor lighting fixture
N	N	Neutral (Grounded Conductor)
NC	NC	Normally closed
NO	NO	Normally open
PB	pb	Pull box
PEC	pec	Photoelectric control (Type Ⅰ, Ⅱ, Ⅲ, Ⅳ or Ⅴ as shown)
PED	ped	Pedestrian
PEU	peu	Photoelectric unit
PPB	ppb	Pedestrian push button
RL		Relocated equipment
RM	rm	Ramp metering
SB	sb	Slip base
SIC	sic	Signal interconnect cable
SIG	sig	Signal
SMA	sma	Signal mast arm
SNS	sns	Street name sign
SP	sp	Service point
TDC	tdc	Telephone demarcation cabinet
TMS	tms	Traffic monitoring station
TOS	tos	Traffic Operations System
VEH	veh	Vehicle
XFMR	xfmr	Transformer
COMM	comm	Communication
RWIS	rwis	Roadway weather information system

SOFFIT AND WALL MOUNTED LUMINAIRES

Pendant, 70 W HPS unless otherwise specified.

Flush, 70 W HPS unless otherwise specified.

Wall surface, 70 W HPS unless otherwise specified.

Existing soffit or wall luminaire to remain unmodified.

Existing soffit or wall luminaire to be modified as specified.

NOTE:

Arrow indicates "street side" of luminaire.

STATE OF CALIFORNIA
DEPARTMENT OF TRANSPORTATION

ELECTRICAL SYSTEMS (SYMBOLS AND ABBREVIATIONS)

NO SCALE

RSP ES-1A DATED OCTOBER 5, 2007 SUPERSEDES STANDARD PLAN ES-1A DATED MAY 1, 2006 - PAGE 400 OF THE STANDARD PLANS BOOK DATED MAY 2006.

REVISED STANDARD PLAN RSP ES-1A

2006 REVISED STANDARD PLAN RSP ES-1A

DIST	COUNTY	ROUTE	POST MILES TOTAL PROJECT	SHEET NO.	TOTAL SHEETS
11	SD	75	9.3/10.1	56	62

REGISTERED ELECTRICAL ENGINEER

October 5, 2007
PLANS APPROVAL DATE

REGISTERED PROFESSIONAL ENGINEER Jeffery G. McRae No. E14512 Exp. 6-30-08 ELECTRICAL STATE OF CALIFORNIA

The State of California or its officers or agents shall not be responsible for the accuracy or completeness of electronic copies of this plan sheet.

To accompany plans dated 06-27-11

CONDUIT

PROPOSED	EXISTING	
		Lighting Conduit, unless otherwise indicated or noted
		Traffic signal conduit
C	c	Communication conduit
T	t	Telephone conduit
F	f	Fire alarm conduit
FO	fo	Fiber optic conduit
		Conduit termination (RSP ES-9A C)
R	r	Conduit riser in/on structure or service pole

SERVICE EQUIPMENT

PROPOSED	EXISTING	
OH	oh	Overhead lines
U	U	Wood pole "U" indicates utility owned
		Pole guy with anchor
		Utility transformer - ground mounted
III		Service equipment enclosure type
		Service equipment enclosure door indicates front of enclosure
T	t	Telephone demarcation cabinet

POLE-MOUNTED SERVICE DESIGNATION

Type of installation

TYPE H SERVICE - 28'-10" ← Pole height above grade

ILLUMINATED OVERHEAD SIGN

PROPOSED	EXISTING	
		Overhead sign - Single post
		Overhead sign - Two post
		Overhead sign - Mounted on structure
		Overhead sign with electrolier

SIGNAL EQUIPMENT

PROPOSED	EXISTING	
		Pedestrian signal face
		Pedestrian push button post
		Pedestrian barricade
		Vehicle signal face (with backplate, 3-Section: red, yellow and green)
		Vehicle signal face with angle visors
PV	PV	Modifications of basic symbols: "L" Indicates all non-arrow sections louvered "LG" Indicates louvered green section only "PV" indicates 12" programmed visibility sections "8" indicates all 8" sections (only when specified)
		Type 15TS and Vehicle signal face
		Vehicle signal face with red, yellow and green left arrow sections
		Vehicle signal face with red and yellow sections and up green arrow
		Vehicle signal face (5 Section) with red, yellow and green sections and yellow and green right arrows
		Type 1 Standard and attached vehicle signal faces
		Standard with signal mast arm only and attached vehicle signal faces and internally illuminated street name sign
		Type 33 Standard, Left-turn vehicle signal face and sign
		Standard with luminaire and signal mast arms and attached vehicle signal faces
		Cantilever flashing beacon Type 9 Frame, with a sign unless otherwise specified or indicated
		Type 15-FBS Standard with two vehicle signal face sections with lens, backplate and visor with a sign
R	Y	Flashing beacon. One vehicle signal face section with lens, backplate and visor. "R" indicates red indication, "Y" indicates yellow indication
		Controller assembly. Door indicates front of cabinet

SIGNAL EQUIPMENT Cont

PROPOSED	EXISTING	
		Guard post
		Type 1 Standard with "Meter On" sign
		Emergency Vehicle detector

NOTES:

1. All signal sections shall be 12" unless shown otherwise.
2. Signal heads shall be provided with backplates unless shown otherwise.
3. Signal indication shall be LED.

STATE OF CALIFORNIA
DEPARTMENT OF TRANSPORTATION

ELECTRICAL SYSTEMS (SYMBOLS AND ABBREVIATIONS)

NO SCALE

RSP ES-1B DATED OCTOBER 5, 2007 SUPERCEDES STANDARD PLAN ES-1B DATED MAY 1, 2006 - PAGE 401 OF THE STANDARD PLANS BOOK DATED MAY 2006.

REVISED STANDARD PLAN RSP ES-1B

2006 REVISED STANDARD PLAN RSP ES-1B

7-10-07

DIST	COUNTY	ROUTE	POST MILES TOTAL PROJECT	SHEET NO.	TOTAL SHEETS
11	SD	75	9.3/10.1	57	62

Jeffery G. McRae
REGISTERED ELECTRICAL ENGINEER

October 5, 2007
PLANS APPROVAL DATE

REGISTERED PROFESSIONAL ENGINEER
Jeffery G. McRae
No. E14512
Exp. 6-30-08
ELECTRICAL
STATE OF CALIFORNIA

The State of California or its officers or agents shall not be responsible for the accuracy or completeness of electronic copies of this plan sheet.

To accompany plans dated 06-27-11

EQUIPMENT IDENTIFICATION

ILLUMINATED SIGN IDENTIFICATION NUMBER:

Sign No. 12345 — Sign number - Place on post or structure

10 ISL SCI 1.0

- 1.0 — Transformer rating (kVA)
- SCI — Lighting control type
- ISL — Number and type of fixtures

Do NOT place on standard or structure

ELECTROLIER OR EQUIPMENT IDENTIFICATION NUMBER:

12345 - 15'-0"

- 15'-0" — Mast arm length, if shown. Do not place on standard or structure.
- 12345 — Equipment number - Place on standard or structure. Existing equipment numbers are shown in parenthesis

CONDUIT AND CONDUCTOR IDENTIFICATION:

1½"C, 2#10, 15#14, 2 DLC

- 2#10, 15#14, 2 DLC — Number and size of conductors and cables
- 1½"C — Size of conduit in inches

Ø1, Ø2, Ø2P, etc.	Traffic phase identification for signal faces, detectors and phase diagrams
1 2 3	Project note numbers
A B C	Equipment description, installation or item numbers
1 2 3	Conduit run numbers

SIGNAL AND LIGHTING STANDARD (TYPICAL DESIGNATION):

19A - 3 - 100

- 100 — Wind velocity = 100 mph
- 3 — Case 3 arm loading
- 19A — Standard type
- Standard Plan sheet number
- Detail number or letter

MISCELLANEOUS EQUIPMENT

PROPOSED	EXISTING	
CMS	cms	Changeable message sign
		Closed circuit television camera
		Highway advisory radio pole and antenna
EMS	ems	Extinguishable message sign
M V	m v	Detection device M = Microwave sensor V = Video image sensor

WIRING DIAGRAM LEGEND

P	Pole
CB	Circuit breaker
A	Ampere
V	Volt
M	Metered
UM	Unmetered
NB	Neutral bus
GB	Ground bus
G	Equipment grounding conductor
N	Grounded conductor (Neutral)

External conductor
Conductor or bus
Tie point
Contactor coil
Contactor, Contact NO
Terminal blocks
Contactor, Contact NC
Enclosure bond
Grounding electrode
Circuit breaker
Receptacle

PULL BOXES

PROPOSED EXISTING

Pull box-No. 5 unless otherwise indicated or noted.

3 — 9A(21)

Pull box-Additional designations or descriptions

3	= No. 3½ pull box
5	= No. 5 pull box
6	= No. 6 pull box
7	= No. 7 (Ceiling pull box)
8	= No. 8 (Pendant soffit pull box)
9	= No. 9 pull box
9A	= No. 9A pull box

(C) = Communications pull box
(E) = Pull box with extension
(S) = Sprinkler control pull box
(21) = Anchor bolts and conduit for future installation of Type 21 Standard
(T) = Traffic pull box

VEHICLE DETECTORS

5 J 9 U

- U — U = Upper, L = Lower
- 9 — Slot number in input file
- J — Input file (I or J)
- 5 — Phase

PROPOSED	EXISTING	
		Type A detector loop. Outline of sawcut shown.
		Type B detector loop. Outline of sawcut shown.
		Type C detector loop. Outline of sawcut shown.
		Type D detector loop. Outline of sawcut shown.
		Type E detector loop. Outline of sawcut shown.
		Type Q detector loop. Outline of sawcut shown.
		Magnetic detector
DH	dh	Detector handhole
		Microwave or video detection zone

STATE OF CALIFORNIA
DEPARTMENT OF TRANSPORTATION

ELECTRICAL SYSTEMS (SYMBOLS AND ABBREVIATIONS)

NO SCALE

RSP ES-1C DATED OCTOBER 5, 2007 SUPERCEDES STANDARD PLAN ES-1C DATED MAY 1, 2006 - PAGE 402 OF THE STANDARD PLANS BOOK DATED MAY 2006.

REVISED STANDARD PLAN RSP ES-1C

2006 REVISED STANDARD PLAN RSP ES-1C

7-10-07

DIST	COUNTY	ROUTE	POST MILES TOTAL PROJECT	SHEET NO.	TOTAL SHEETS
11	SD	75	9.3/10.1	58	62

REGISTERED ELECTRICAL ENGINEER

June 6, 2008
PLANS APPROVAL DATE

REGISTERED PROFESSIONAL ENGINEER Jeffery G. McRae No. E14512 Exp. 6-30-10 ELECTRICAL STATE OF CALIFORNIA

The State of California or its officers or agents shall not be responsible for the accuracy or completeness of electronic copies of this plan sheet.

To accompany plans dated 06-27-11

VISORS

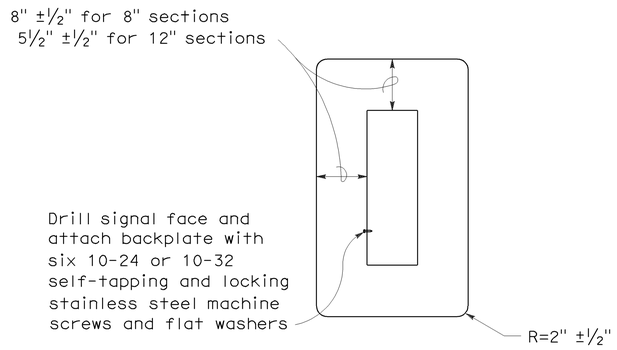

8" AND 12" SECTIONS

BACKPLATE

1/16" minimum thickness
3001-14 aluminum, or plastic when specified

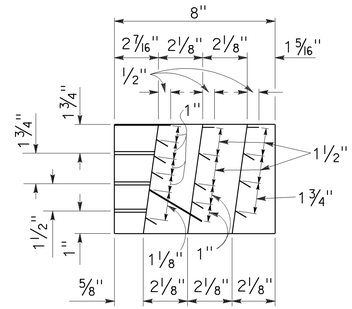

SECTION A-A

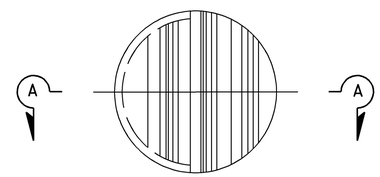

FRONT VIEW

DIRECTIONAL LOUVER

Directional louvers shall be oriented as directed by the Engineer and secured in place with one plated brass machine screw and nut.

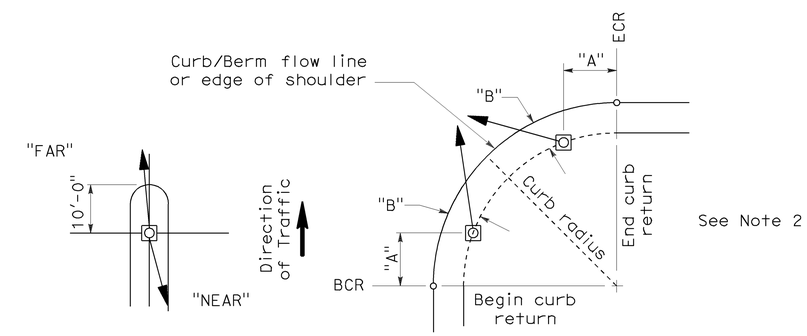

NOTES:

1. Typical signal pole placement unless dimensioned on plans.
2. For "A" and "B" dimensions, see Pole Schedule, or as directed by the Engineer.

SIGNAL STANDARD PLACEMENT DIMENSIONS AND EQUIPMENT LOCATIONS

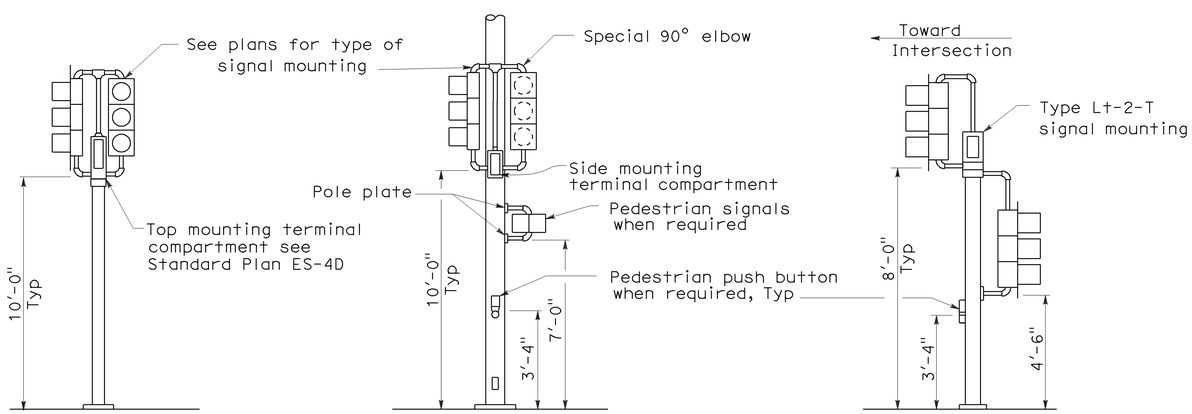

TOP MOUNTED SIGNALS (TV)

Type 1-A, 1-B, 1-C and 1-D standard as indicated on the plans

SIDE MOUNTED SIGNALS (SV AND SP)

Normally used on standards with luminaire or signal mast arm

LEFT TURN LANE SIGNAL

Type 1-A, 1-B, 1-C and 1-D standard as indicated on plans

TYPICAL SIGNAL INSTALLATIONS

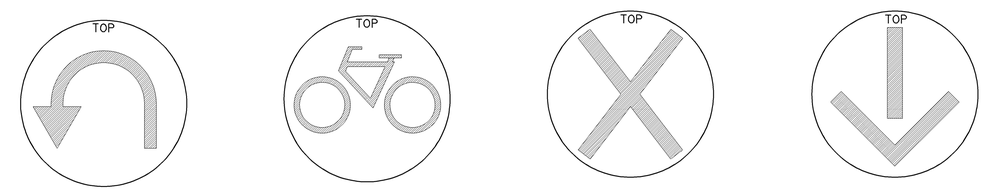

U-TURN SIGNAL FACE

BICYCLE SIGNAL FACE

LANE CONTROL SIGNAL FACE

LANE CONTROL SIGNAL FACE

STATE OF CALIFORNIA
DEPARTMENT OF TRANSPORTATION

ELECTRICAL SYSTEMS (SIGNAL HEADS AND MOUNTINGS)

NO SCALE

RSP ES-4C DATED JUNE 6, 2008 SUPERSEDES STANDARD PLAN ES-4C DATED MAY 1, 2006 - PAGE 420 OF THE STANDARD PLANS BOOK DATED MAY 2006.

REVISED STANDARD PLAN RSP ES-4C

2006 REVISED STANDARD PLAN RSP ES-4C

5-19-08

DIST	COUNTY	ROUTE	POST MILES TOTAL PROJECT	SHEET NO.	TOTAL SHEETS
11	SD	75	9.3/10.1	59	62

Randell D. Hiatt
REGISTERED CIVIL ENGINEER

June 6, 2008
PLANS APPROVAL DATE

REGISTERED PROFESSIONAL ENGINEER
Randell D. Hiatt
No. C50200
Exp. 6-30-09
CIVIL
STATE OF CALIFORNIA

The State of California or its officers or agents shall not be responsible for the accuracy or completeness of electronic copies of this plan sheet.

To accompany plans dated 06-27-11

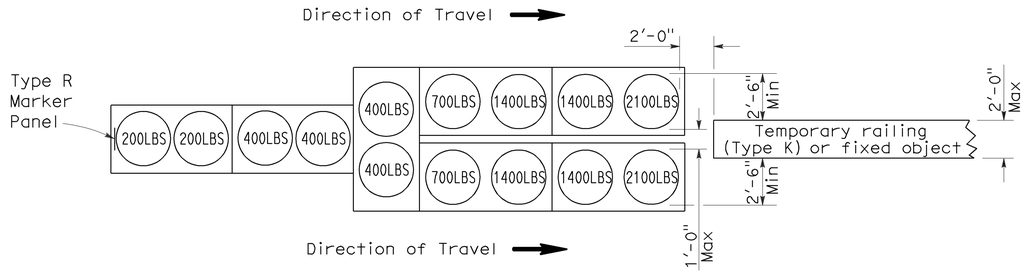

ARRAY 'TU14'

Approach speed 45 mph or more

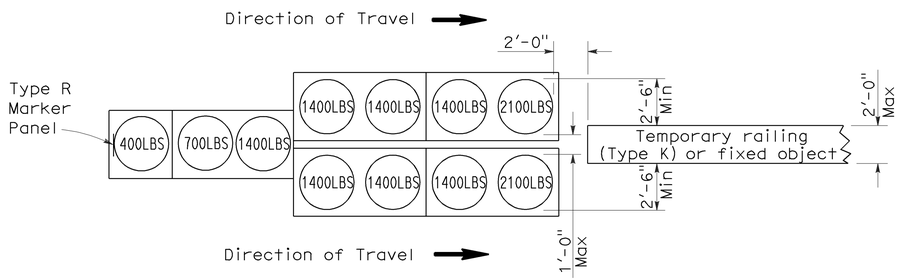

ARRAY 'TU11'

Approach speed less than 45 mph

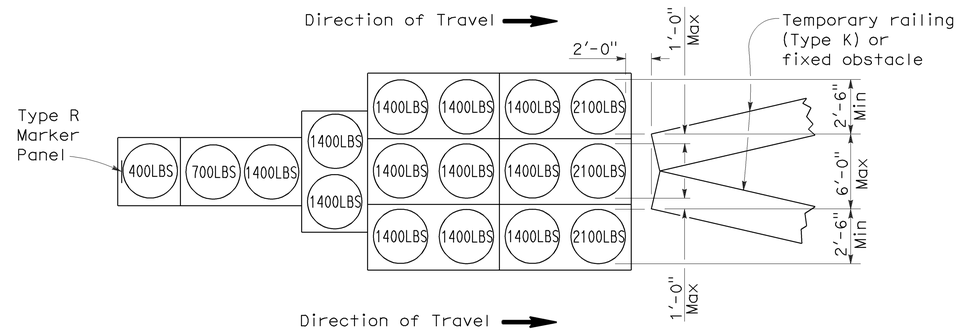

ARRAY 'TU17'

Approach speed less than 45 mph

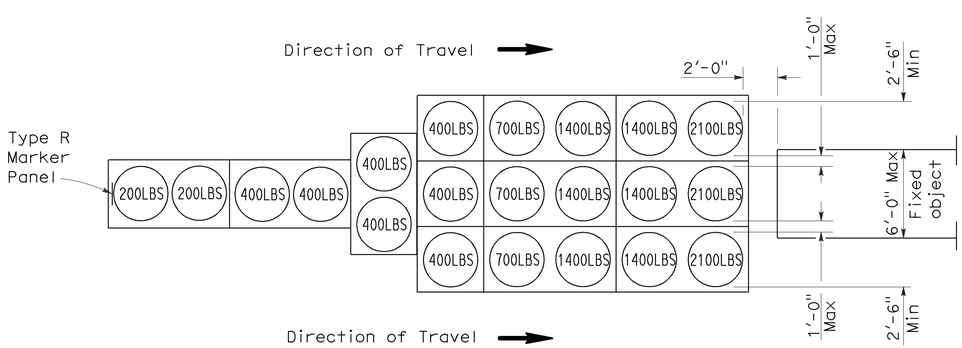

ARRAY 'TU21'

Approach speed 45 mph or more

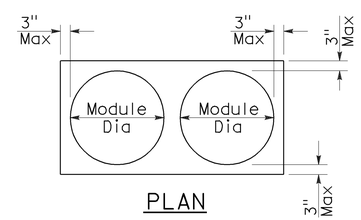

PLAN

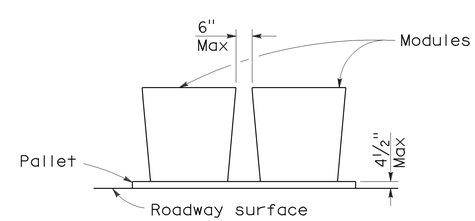

ELEVATION

CRASH CUSHION PALLET DETAIL

See Note 7

NOTES:

1. (XXX) Indicates sand filled module location and weight of sand in pounds for each module. Module spacing is based on the greater diameter of the module.
2. All sand weights are nominal.
3. Temporary crash cushion arrays shall not encroach on the traveled way.
4. Place the top of Type R marker panel 1" below the module lid.
5. Refer to Standard Plan A73B for marker details.
6. Approach speeds indicated conform to NCHRP 350 Report criteria.
7. Use of pallets is optional.

STATE OF CALIFORNIA
DEPARTMENT OF TRANSPORTATION

TEMPORARY CRASH CUSHION, SAND FILLED (UNIDIRECTIONAL)

NO SCALE

RSP T1A DATED JUNE 6, 2008 SUPERSEDES STANDARD PLAN T1A
DATED MAY 1, 2006 - PAGE 211 OF THE STANDARD PLANS BOOK DATED MAY 2006.

REVISED STANDARD PLAN RSP T1A

2006 REVISED STANDARD PLAN RSP T1A

DIST	COUNTY	ROUTE	POST MILES TOTAL PROJECT	SHEET NO.	TOTAL SHEETS
11	SD	75	9.3/10.1	60	62

Randell D. Hiatt
REGISTERED CIVIL ENGINEER

June 6, 2008
PLANS APPROVAL DATE

REGISTERED PROFESSIONAL ENGINEER
Randell D. Hiatt
No. C50200
Exp. 6-30-09
CIVIL
STATE OF CALIFORNIA

The State of California or its officers or agents shall not be responsible for the accuracy or completeness of electronic copies of this plan sheet.

To accompany plans dated 06-27-11

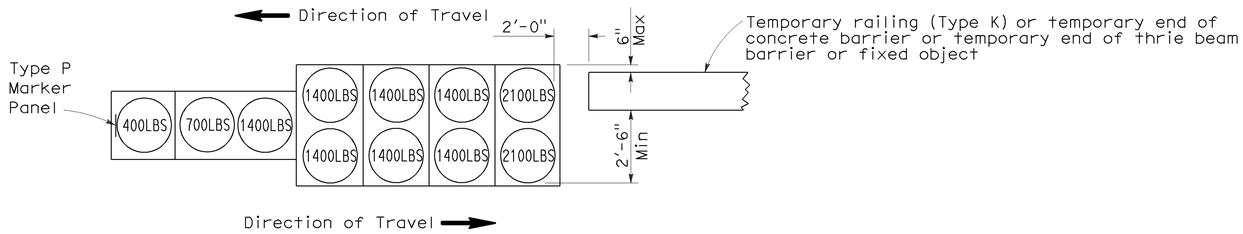

ARRAY 'TB11'

Approach speed less than 45 mph

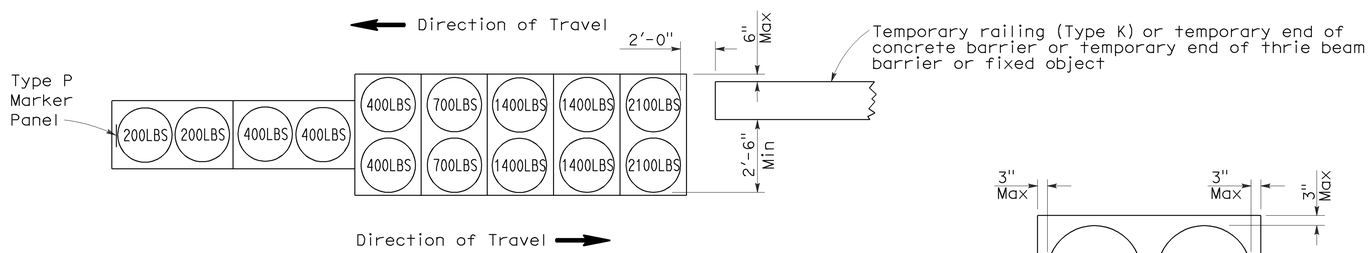

ARRAY 'TB14'

Approach speed 45 mph or more

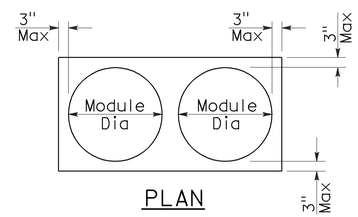

PLAN

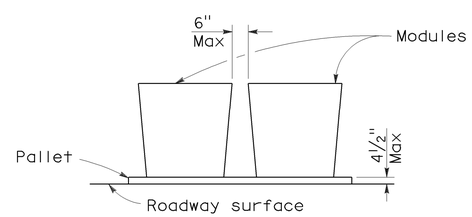

ELEVATION

CRASH CUSHION PALLET DETAIL

See Note 7

NOTES:

1. (XXX) Indicates sand filled module location and weight of sand in pounds for each module. Module spacing is based on the greater diameter of the module.
2. All sand weights are nominal.
3. Temporary crash cushion arrays shall not encroach on the traveled way.
4. Place the Type P marker panel so that the bottom of the panel rests upon the pallet.
5. Refer to Standard Plan A73B for marker details.
6. Approach speeds indicated conform to NCHRP 350 Report criteria.
7. Use of pallets is optional.

STATE OF CALIFORNIA
DEPARTMENT OF TRANSPORTATION

TEMPORARY CRASH CUSHION, SAND FILLED (BIDIRECTIONAL)

NO SCALE

RSP T1B DATED JUNE 6, 2008 SUPERSEDES STANDARD PLAN T1B
DATED MAY 1, 2006 - PAGE 212 OF THE STANDARD PLANS BOOK DATED MAY 2006.

REVISED STANDARD PLAN RSP T1B

2006 REVISED STANDARD PLAN RSP T1B

5-15-08

DIST	COUNTY	ROUTE	POST MILES TOTAL PROJECT	SHEET NO.	TOTAL SHEETS
11	SD	75	9.3/10.1	61	62

Randell D. Hiatt
REGISTERED CIVIL ENGINEER

June 6, 2008
PLANS APPROVAL DATE

REGISTERED PROFESSIONAL ENGINEER
Randell D. Hiatt
No. C50200
Exp. 6-30-09
CIVIL
STATE OF CALIFORNIA

The State of California or its officers or agents shall not be responsible for the accuracy or completeness of electronic copies of this plan sheet.

To accompany plans dated 06-27-11

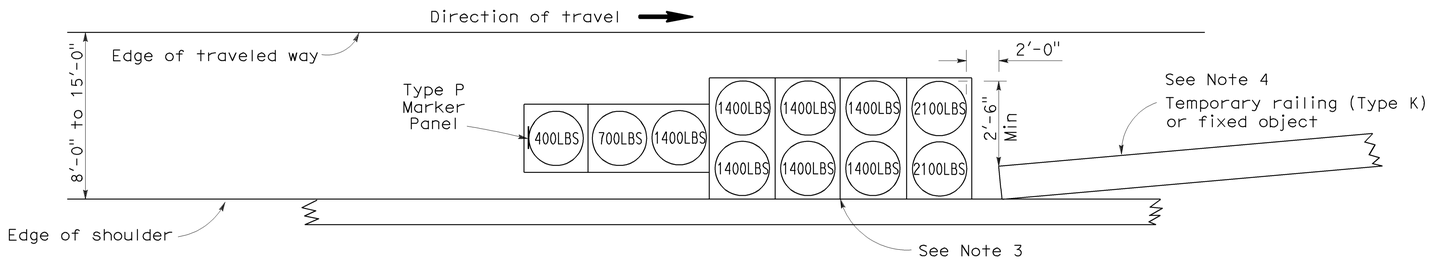

ARRAY 'TS11'

Approach speed less than 45 mph
See Note 9

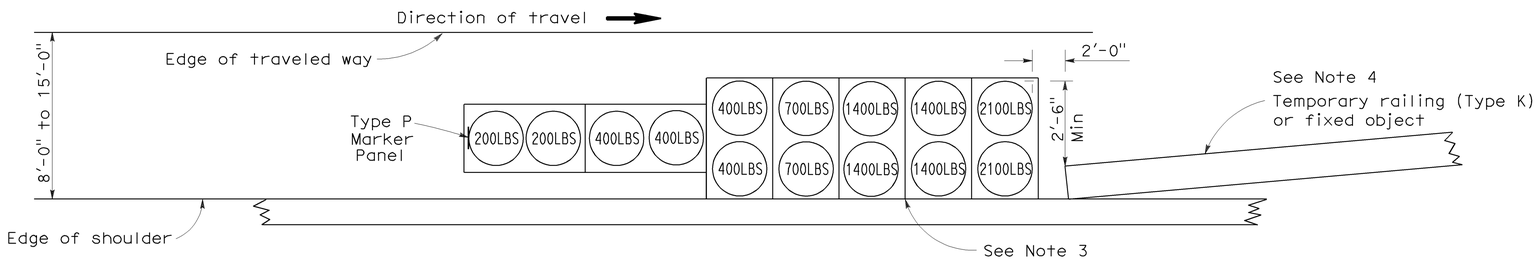

ARRAY 'TS14'

Approach speed 45 mph or more
See Note 9

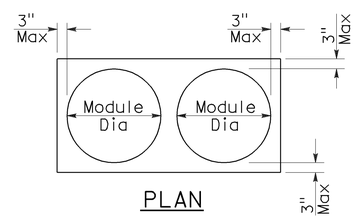

PLAN

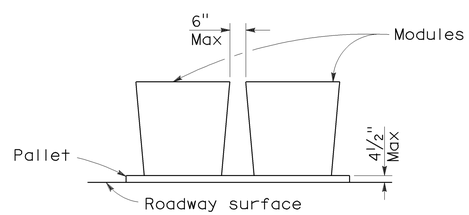

ELEVATION

CRASH CUSHION PALLET DETAIL

See Note 11

NOTES:

1. (XXX) Indicates sand filled module location and weight of sand in pounds for each module. Module spacing is based on the greater diameter of the module.
2. All sand weights are nominal.
3. The temporary crash cushion arrays shown on this plan shall be used only in locations where there will be traffic on one side of the temporary crash cushion array.
4. If the fixed object or approach end of the temporary railing is less than 15'-0" from the edge of traveled way, a temporary crash cushion is required in a construction or work zone.
5. Temporary crash cushion arrays shall not encroach on the traveled way.
6. Arrays for median shoulders shall conform to details shown on this plan for outside shoulders.
7. Place the Type P marker panel so that the bottom of the panel rests upon the pallet and faces traffic.
8. Refer to Standard Plan A73B for marker details.
9. For shoulder widths less than 8'-0", appropriate approved crash cushion protection, other than sand filled modules, shall be provided at fixed objects and at approach ends of temporary railing. The specific type of crash cushion shall be as shown on the project plans or as specified in the Special Provisions, or if not shown on the project plans or specified in the Special Provisions, shall be as approved by the Engineer.
10. Approach speeds indicated conform to NCHRP 350 Report criteria.
11. Use of pallets is optional.

STATE OF CALIFORNIA
DEPARTMENT OF TRANSPORTATION

TEMPORARY CRASH CUSHION, SAND FILLED (SHOULDER INSTALLATIONS)

NO SCALE

RSP T2 DATED JUNE 6, 2008 SUPERSEDES STANDARD PLAN T2
DATED MAY 1, 2006 - PAGE 213 OF THE STANDARD PLANS BOOK DATED MAY 2006.

REVISED STANDARD PLAN RSP T2

2006 REVISED STANDARD PLAN RSP T2

5-15-08

DIST	COUNTY	ROUTE	POST MILES TOTAL PROJECT	SHEET NO.	TOTAL SHEETS
11	SD	75	9.3/10.1	62	62

REGISTERED CIVIL ENGINEER

November 17, 2006
PLANS APPROVAL DATE

Greg W. Edwards No. C36386 Exp. 6-30-08 CIVIL — REGISTERED PROFESSIONAL ENGINEER — STATE OF CALIFORNIA

The State of California or its officers or agents shall not be responsible for the accuracy or completeness of electronic copies of this plan sheet.

To accompany plans dated 06-27-11

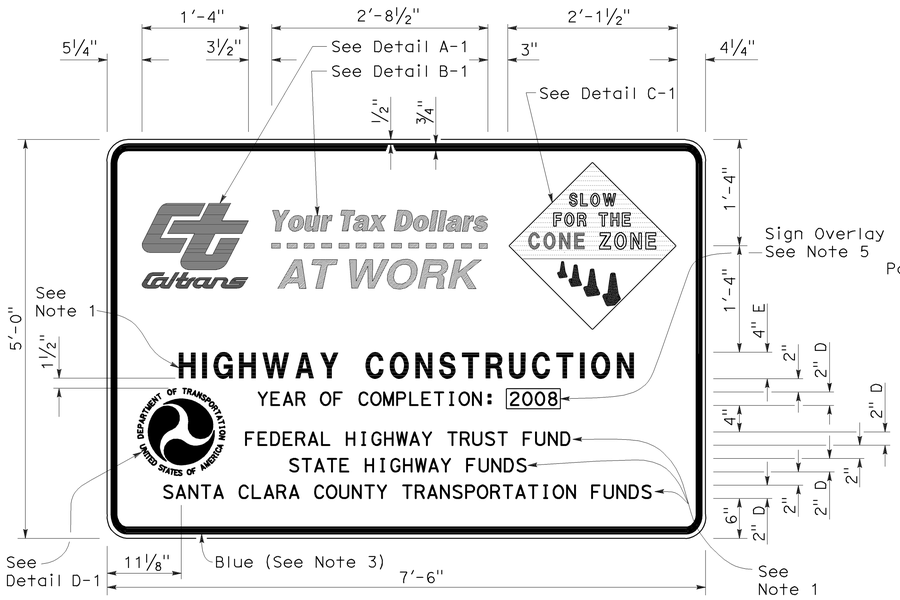

TYPE 1

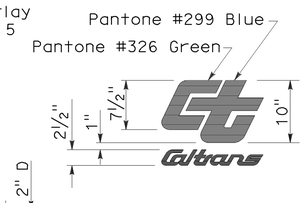

DETAIL A-1

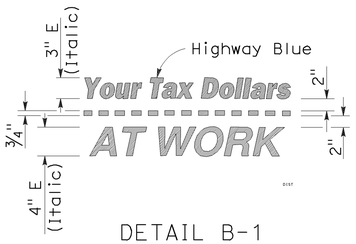

DETAIL B-1
(See Note 3)

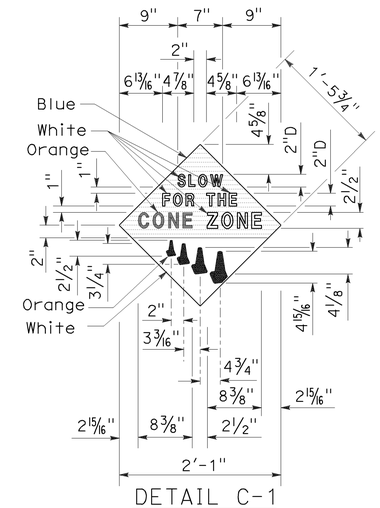

DETAIL C-1
(See Note 4)

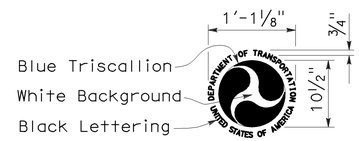

DETAIL D-1
(See Note 6)

NOTES:

1. The sign messages shown for type of project and fund types are examples only. See the Special Provisions for the applicable type of project and fund type messages to be used.
2. Except as otherwise shown, the legend of sign shall be black on a white background (non-reflective).
3. The border of the signs and details "B-1" and "B-2" shall be blue (non-reflective).
4. The diamond in details "C-1" and "C-2" shall be blue for the background of message, " SLOW FOR THE CONE ZONE", and white background for the orange cones. The color and type of font for the "SLOW FOR THE CONE ZONE" message shall be: "SLOW" white D; "FOR THE" white D; "CONE" orange Arial font; "ZONE" white Arial font.
5. Year of completion of project construction shown on the overlay is an example only. See the Special Provisions.
6. Use when the Project involves Federal Highway Trust Fund.

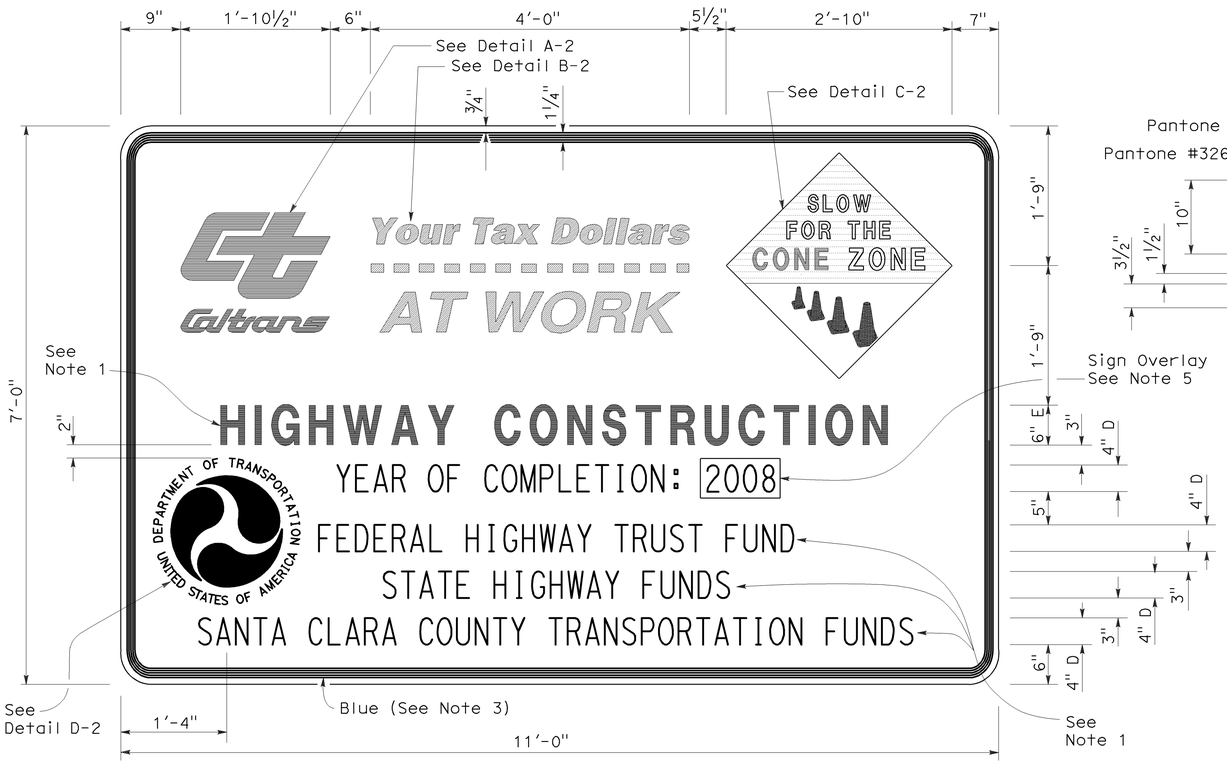

TYPE 2

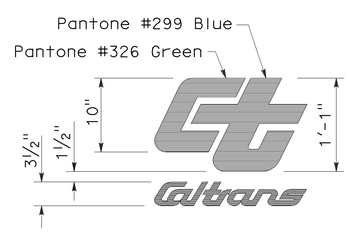

DETAIL A-2

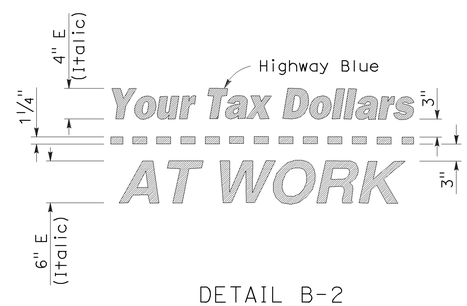

DETAIL B-2
(See Note 3)

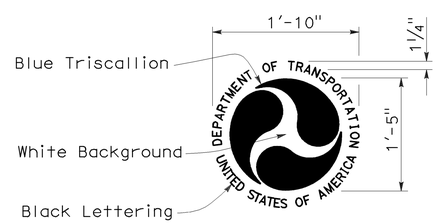

DETAIL D-2
(See Note 6)

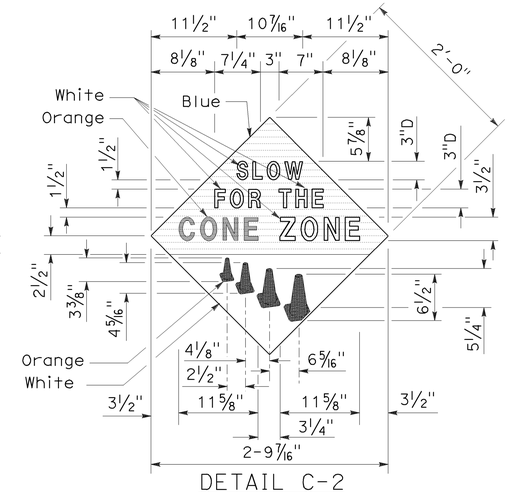

DETAIL C-2
(See Note 4)

STATE OF CALIFORNIA
DEPARTMENT OF TRANSPORTATION

CONSTRUCTION PROJECT FUNDING IDENTIFICATION SIGNS

NO SCALE

RSP T7 DATED NOVEMBER 17, 2006 SUPERSEDES STANDARD PLAN T7
DATED MAY 1, 2006 - PAGE 217 OF THE STANDARD PLANS BOOK DATED MAY 2006.

REVISED STANDARD PLAN RSP T7

2006 REVISED STANDARD PLAN RSP T7

9-7-06