Dist	COUNTY	ROUTE	POST MILES TOTAL PROJECT	SHEET No.	TOTAL SHEETS
11	SD	125	10.6/10.9	1	64

INDEX OF PLANS

Sheet No.	Description
1	Title and Location Map
2	Typical Cross Sections
3	Project Control
4	Layout
5-6	Construction Details
7-8	Temporary Water Pollution Control Plan and Quantities
9-13	Drainage Plan, Profiles and Quantities
14	Utility Plan
15	Construction Area Signs
16-19	Stage Construction Plan and Quantities
20	Traffic Handling Plan
21-22	Pavement Delineation and Sign Plan and Quantities
23-25	Sign Details and Quantities
26	Summary of Quantities
27	Retaining Wall Plan
28	Plan List
29	Plan Removal Plan
30	Planting Plan
31	Irrigation Removal Plan
32	Irrigation Plan
33-34	Landscape Details
35-38	Electrical Plans
39-64	Revised and New Standard Plans

THE STANDARD PLANS LIST APPLICABLE TO THIS CONTRACT IS INCLUDED IN THE NOTICE TO BIDDERS AND SPECIAL PROVISIONS BOOK.

STATE OF CALIFORNIA

DEPARTMENT OF TRANSPORTATION

PROJECT PLANS FOR CONSTRUCTION ON

STATE HIGHWAY

IN SAN DIEGO COUNTY
NEAR LEMON GROVE
FROM JAMACHA ROAD UNDERCROSSING
TO 0.3 MILE NORTH OF JAMACHA ROAD UNDERCROSSING

TO BE SUPPLEMENTED BY STANDARD PLANS DATED MAY 2006

LOCATION MAP

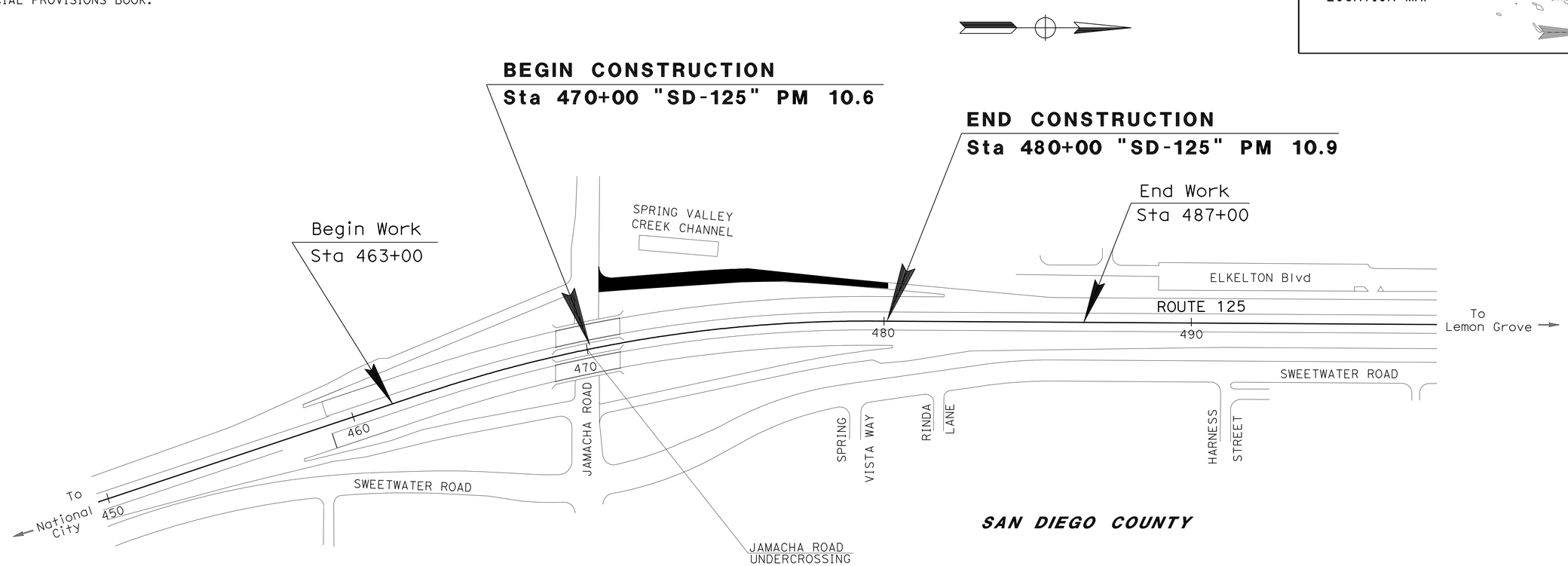

NO SCALE

PROJECT MANAGER: CHRIS THOMAS

DESIGN ENGINEER: JOSEPH CHUA

THE CONTRACTOR SHALL POSSESS THE CLASS (OR CLASSES) OF LICENSE AS SPECIFIED IN THE "NOTICE TO BIDDERS."

03-15-11
PROJECT ENGINEER DATE
REGISTERED CIVIL ENGINEER

March 21, 2011
PLANS APPROVAL DATE

REGISTERED PROFESSIONAL ENGINEER
JOSEPH CHUA
No. 53168
Exp. 06-30-11
CIVIL
STATE OF CALIFORNIA

THE STATE OF CALIFORNIA OR ITS OFFICERS OR AGENTS SHALL NOT BE RESPONSIBLE FOR THE ACCURACY OR COMPLETENESS OF SCANNED COPIES OF THIS PLAN SHEET.

CONTRACT No.	11-294604
PROJECT ID	1100000388

LAST REVISION 03-15-11 DATE PLOTTED => 21-MAR-2011 TIME PLOTTED => 13:48

Dist	COUNTY	ROUTE	POST MILES TOTAL PROJECT	SHEET No.	TOTAL SHEETS
11	SD	125	10.6/10.9	2	64

REGISTERED CIVIL ENGINEER 03-15-11 DATE

03-21-11
PLANS APPROVAL DATE

REGISTERED PROFESSIONAL ENGINEER JOSEPH CHUA No. 53168 Exp. 06-30-11 CIVIL STATE OF CALIFORNIA

THE STATE OF CALIFORNIA OR ITS OFFICERS OR AGENTS SHALL NOT BE RESPONSIBLE FOR THE ACCURACY OR COMPLETENESS OF SCANNED COPIES OF THIS PLAN SHEET.

NOTES:

1. DIMENSIONS OF THE PAVEMENT STRUCTURES (STRUCTURAL SECTIONS) ARE SUBJECT TO TOLERANCES SPECIFIED IN THE STANDARD SPECIFICATIONS.
2. FOG SEAL COAT SHALL BE APPLIED TO ALL HMA SURFACES EXCEPT TRAVELED WAYS.

DESIGN DESIGNATION (ROUTE 125 SB JAMACHA ROAD OFF RAMP)

		AM	PM
2007	ADT 18000	695	1,732
2027	ADT 22000	900	2,100

ABBREVIATION:

S/C - SAW CUT LINE

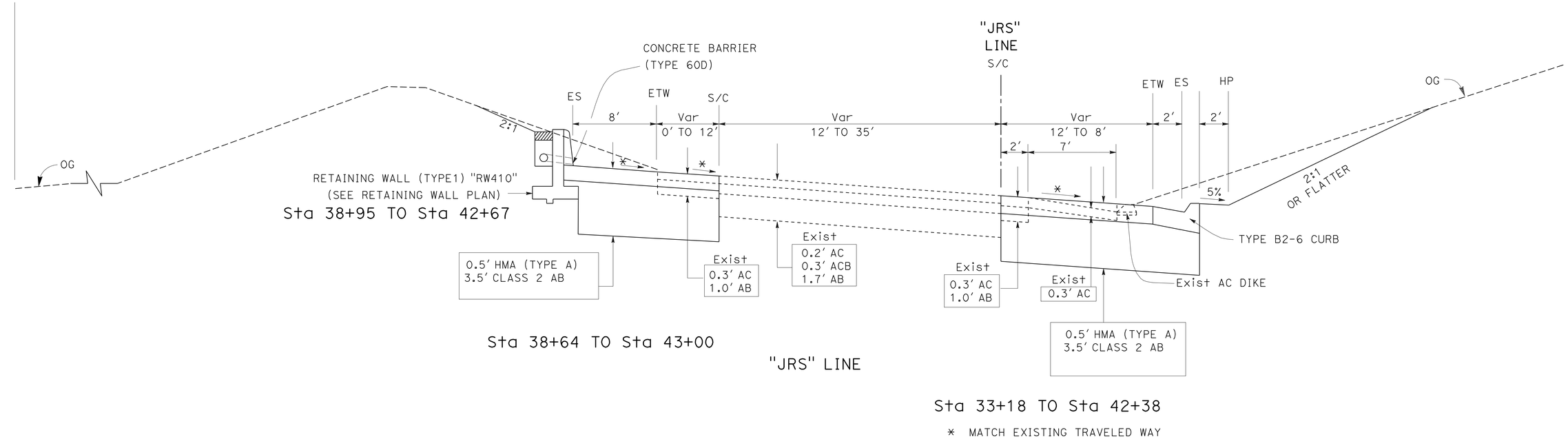

* MATCH EXISTING TRAVELED WAY

TYPICAL CROSS SECTIONS

NO SCALE

X-1

STATE OF CALIFORNIA - DEPARTMENT OF TRANSPORTATION
Caltrans
MINOR A

FUNCTIONAL SUPERVISOR: CHRIS THOMAS
CALCULATED-DESIGNED BY: JOSEPH CHUA
CHECKED BY: THIN BUI
REVISED BY
DATE REVISED

LAST REVISION 03-17-11
DATE PLOTTED => 21-MAR-2011
TIME PLOTTED => 13:36

Dist	COUNTY	ROUTE	POST MILES TOTAL PROJECT	SHEET No.	TOTAL SHEETS
11	SD	125	10.6/10.9	3	64

LaVerne W. Klassen 11-17-09
PROFESSIONAL LAND SURVEYOR DATE

03-21-11
PLANS APPROVAL DATE

PROFESSIONAL LAND SURVEYOR LAVERNE W. KLASSEN EXP:6-30-12 L.S. 4097 STATE OF CALIFORNIA

THE STATE OF CALIFORNIA OR ITS OFFICERS OR AGENTS SHALL NOT BE RESPONSIBLE FOR THE ACCURACY OR COMPLETENESS OF SCANNED COPIES OF THIS PLAN SHEET.

NOTES:

1. CONTACT DISTRICT 11 OFFICE OF LAND SURVEYS, PHONE (858) 467-4305, FOR ADDITIONAL INFORMATION OR QUERIES REGARDING THIS SURVEY PROJECT CONTROL.
2. BASIS OF BEARINGS AND COORDINATES
   FOR THIS PROJECT IS THE CALIFORNIA COORDINATE SYSTEM OF 1983, HPGN EPOCH ADJUSTMENT [CCS 83 (1991.35)], ZONE 6. 3RD ORDER PROJECT CONTROL STATIONS WERE ESTABLISHED IN JUNE 1997 ACCORDING TO CRITERIA SET FORTH IN THE FEDERAL GEODETIC CONTROL SUBCOMMITTEE'S "GEOMETRIC GEODETIC ACCURACY STANDARDS AND SPECIFICATIONS FOR USING GPS RELATIVE POSITIONING TECHNIQUES" REPRINTED AUGUST 1, 1989.

   THIS GPS FAST STATIC SURVEY WAS CONSTRAINED TO B ORDER STATION "HPGN CA D 11 BE", 1ST ORDER STATION "DOT ECC" AND 2ND ORDER STATIONS "54-6.2", "OTTO" AND "94-8.98" PER THE ABOVE-REFERENCED STANDARDS.
3. BASIS OF ELEVATIONS
   FOR THIS PROJECT IS THE NORTH AMERICAN VERTICAL DATUM OF 1988 (NAVD 88). ELEVATIONS WERE ESTABLISHED BY GPS FAST STATIC CONSTRAINING TO VERTICAL 1ST ORDER STATION "J 890 RESET", VERTICAL 2ND ORDER STATIONS "HPGN CA D 11 BE", "54-6.2", AND "94-8.98".

LEGEND:

- (B) B ORDER STATION
- (1) 1ST ORDER STATION
- (2) 2ND ORDER STATION
- (3) 3RD ORDER STATION

ABBREVIATIONS:

BR	BRASS
CADT	CALIFORNIA DEPARTMENT OF TRANSPORTATION
CDH	CALIFORNIA DIVISION OF HIGHWAYS
NGS	NATIONAL GEODETIC SURVEY
SDCE	SAN DIEGO COUNTY ENGINEER
STD	STANDARD
STR	STRUCTURE

CONTROL FOR DESIGN AND CONSTRUCTION

STATION DESIGNATION	ORDER	NORTHING	EASTING	ELEVATION	DESCRIPTION
HPGN CA D 11 BE	B	1,844,655.47	6,337,707.38	830.78	3 1/2" CDH BR DISK IN ROCK OUTCROP
DOT ECC	1ST	1,841,756.32	6,296,652.95	180.23	2 1/4" CADT BR DISK TOP OF CURB
54-6.2	2ND	1,832,468.67	6,326,080.48	344.96	2 1/4" CADT BR DISK IN 2" IRON PIPE
94-8.98	2ND	1,852,268.54	6,321,507.11	509.45	2 1/4" CADT BR DISK IN SIDEWALK
OTTO	2ND	1,831,062.32	6,328,305.14	419.27	SDCE DISK HOLE IN ROCK OUTCROP
J 890 RESET	2ND	1,854,312.65	6,327,872.86	433.38	NGS STD DISK IN DRAINAGE STRUCTURE
125-KP 19.34	3RD	1,839,588.82	6,326,914.93	281.70	2 1/4" CADT BR DISK IN DRAINAGE STR
125-KP 19.60	3RD	1,840,330.98	6,326,672.60	300.14	2 1/4" CADT BR DISK IN DRAINAGE STR
125-KP 19.8	3RD	1,840,836.78	6,326,556.82	305.28	2 1/4" CADT BR DISK IN DRAINAGE STR
125-KP 20.3	3RD	1,842,635.69	6,326,486.67	293.46	2 1/4" CADT BR DISK IN DRAINAGE STR

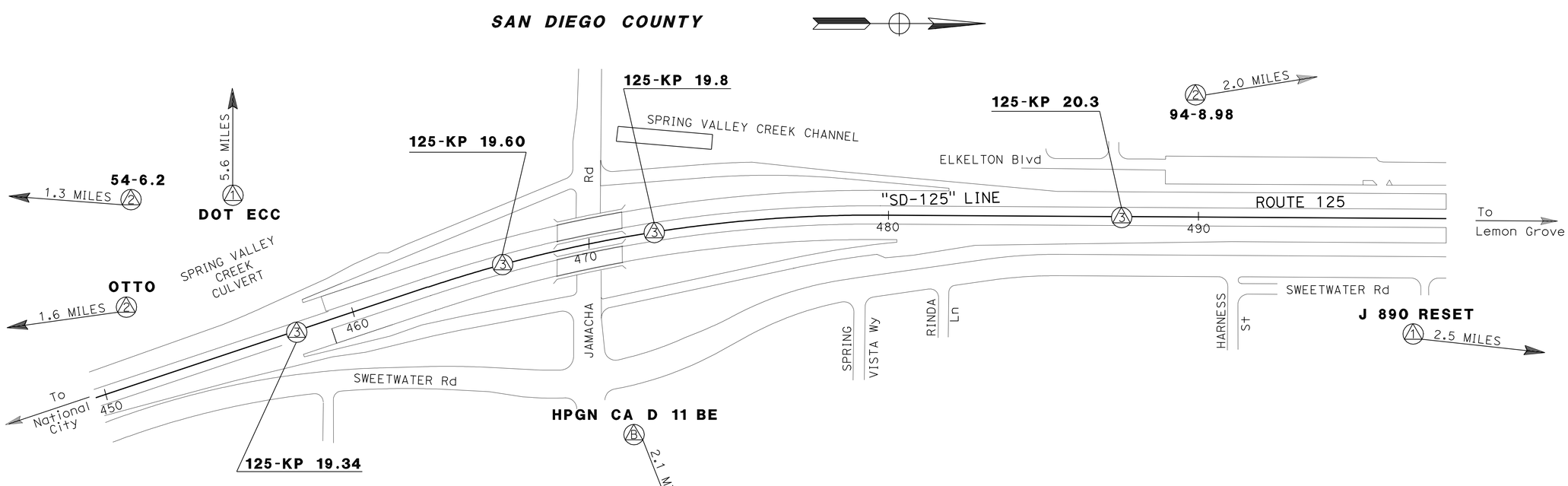

THIS PLAN ACCURATE FOR PROJECT CONTROL INFORMATION ONLY

PROJECT CONTROL

NO SCALE

PC-1

STATE OF CALIFORNIA - DEPARTMENT OF TRANSPORTATION
Caltrans LAND SURVEYS DIVISION

FUNCTIONAL SUPERVISOR: BRUCE URQUHART
CALCULATED-DESIGNED BY: LaVERNE KLASSEN
CHECKED BY: NED SALMAN
REVISED BY
DATE REVISED

LAST REVISION 03-17-11
DATE PLOTTED => 21-MAR-2011
TIME PLOTTED => 13:36

Dist	COUNTY	ROUTE	POST MILES TOTAL PROJECT	SHEET No.	TOTAL SHEETS
11	SD	125	10.6/10.9	4	64

REGISTERED CIVIL ENGINEER 03-15-11 DATE

03-21-11
PLANS APPROVAL DATE

REGISTERED PROFESSIONAL ENGINEER JOSEPH CHUA No. 53168 Exp. 06-30-11 CIVIL STATE OF CALIFORNIA

THE STATE OF CALIFORNIA OR ITS OFFICERS OR AGENTS SHALL NOT BE RESPONSIBLE FOR THE ACCURACY OR COMPLETENESS OF SCANNED COPIES OF THIS PLAN SHEET.

NOTES:

1. FOR ACCURATE RIGHT OF WAY AND ACCESS DATA, CONTACT RIGHT OF WAY ENGINEERING AT THE DISTRICT OFFICE.
2. COORDINATES, BEARINGS AND GRID DISTANCES ARE BASED ON CCS83 (1991.35) ZONE 6.

LEGEND:

(X) - METAL BEAM GUARD RAILING

CURVE DATA

No.	R	Δ	T	L
1	4921.25′	5°21′14″	230.10′	459.86′

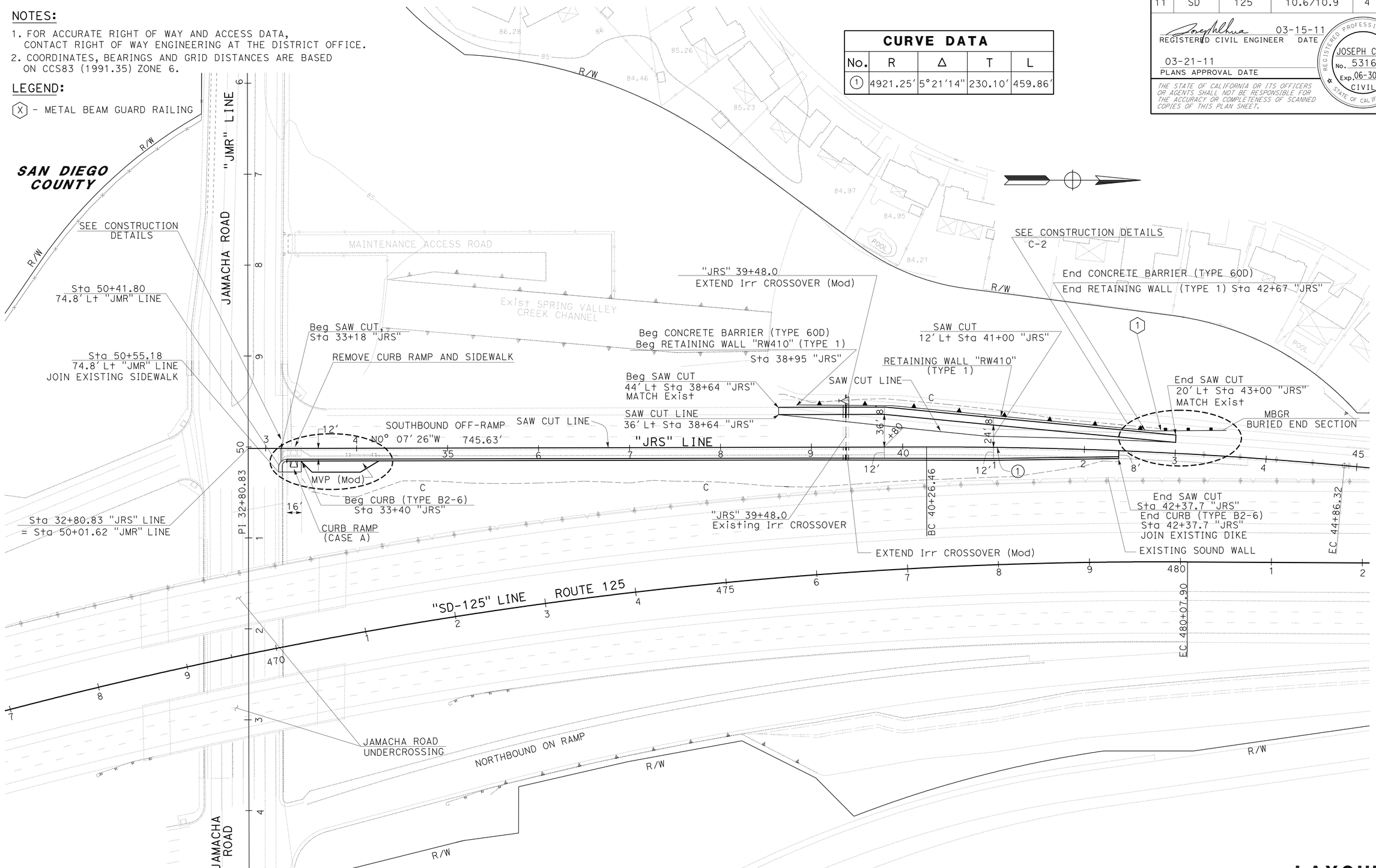

SCALE: 1" = 50′

LAYOUT
L-1

REVISED BY	DATE REVISED
JOSEPH CHUA	THIN BUI
CALCULATED-DESIGNED BY	CHECKED BY
FUNCTIONAL SUPERVISOR	CHRIS THOMAS

STATE OF CALIFORNIA - DEPARTMENT OF TRANSPORTATION
Caltrans
MINOR A

LAST REVISION 03-18-11
DATE PLOTTED => 21-MAR-2011
TIME PLOTTED => 13:37

Dist	COUNTY	ROUTE	POST MILES TOTAL PROJECT	SHEET No.	TOTAL SHEETS
11	SD	125	10.6/10.9	5	64

REGISTERED CIVIL ENGINEER 03-15-11 DATE

03-21-11
PLANS APPROVAL DATE

REGISTERED PROFESSIONAL ENGINEER JOSEPH CHUA No. 53168 Exp. 06-30-11 CIVIL STATE OF CALIFORNIA

THE STATE OF CALIFORNIA OR ITS OFFICERS OR AGENTS SHALL NOT BE RESPONSIBLE FOR THE ACCURACY OR COMPLETENESS OF SCANNED COPIES OF THIS PLAN SHEET.

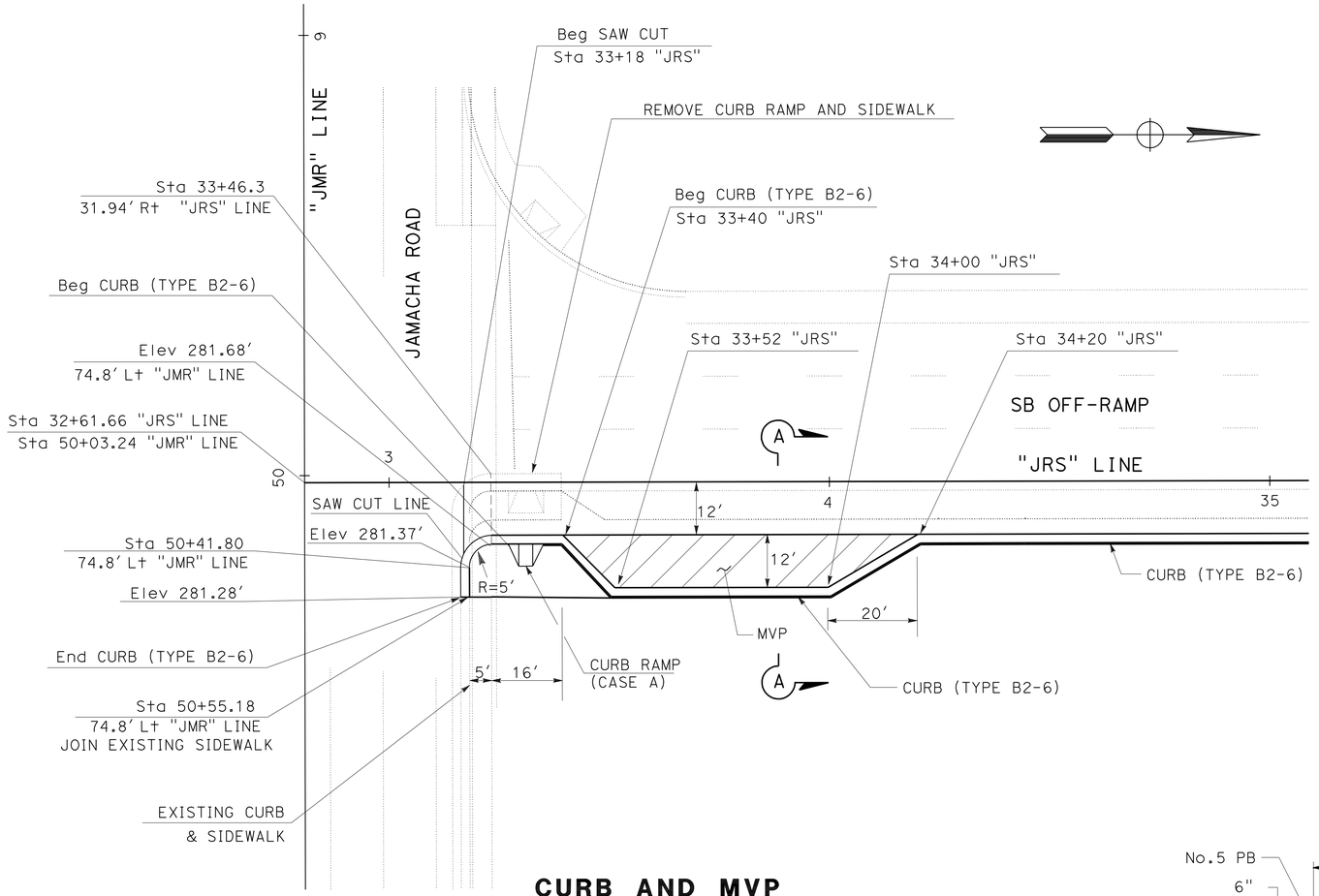

CURB AND MVP

THRUST BLOCK DETAIL

INSTALLATION	TYPE FITTING	PIPE SIZE 2"	2½"	3"	4"	6"	8"	
	45°	0.04	0.08	0.1	0.1	0.2	0.3	REQUIRED BEARING AREA CUBIC YARD

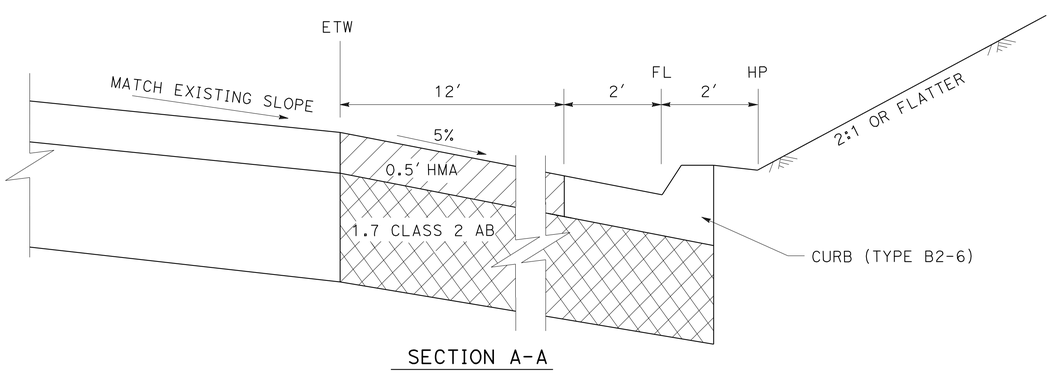

SECTION A-A

MAINTENANCE VEHICLE PULLOUT (MODIFIED)

LEGEND:

MAINTENANCE VEHICLE PULLOUT

CLASS 2 AB

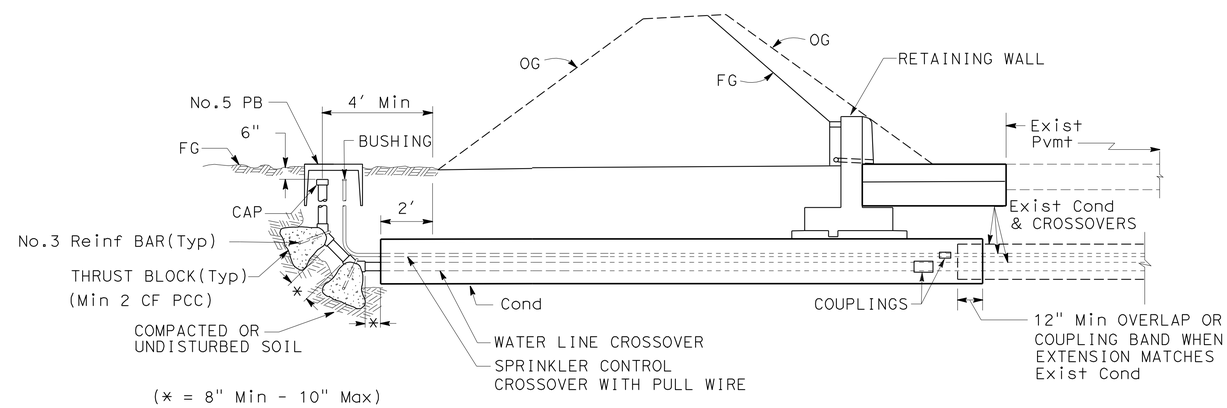

TYPICAL

EXTEND IRRIGATION CROSSOVER (MODIFIED)

CONSTRUCTION DETAILS

NO SCALE

C-1

STATE OF CALIFORNIA - DEPARTMENT OF TRANSPORTATION
Caltrans
MINOR A

FUNCTIONAL SUPERVISOR: CHRIS THOMAS
CALCULATED-DESIGNED BY: JOSEPH CHUA
CHECKED BY: THIN BUI
REVISED BY
DATE REVISED

LAST REVISION 03-18-11
DATE PLOTTED => 21-MAR-2011
TIME PLOTTED => 13:37

Dist	COUNTY	ROUTE	POST MILES TOTAL PROJECT	SHEET No.	TOTAL SHEETS
11	SD	125	10.6/10.9	6	64

REGISTERED CIVIL ENGINEER 03-15-11 DATE

03-21-11
PLANS APPROVAL DATE

REGISTERED PROFESSIONAL ENGINEER JOSEPH CHUA No. 53168 Exp 06-30-11 CIVIL STATE OF CALIFORNIA

THE STATE OF CALIFORNIA OR ITS OFFICERS OR AGENTS SHALL NOT BE RESPONSIBLE FOR THE ACCURACY OR COMPLETENESS OF SCANNED COPIES OF THIS PLAN SHEET.

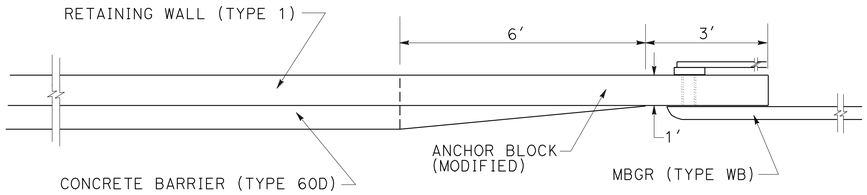

(CONCRETE BARRIER TYPE 60D TO CONCRETE BLOCK)

TRANSITION

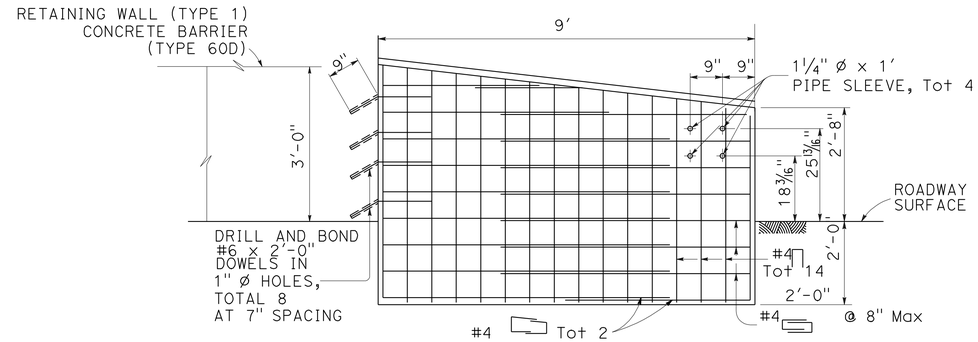

ELEVATION

ANCHOR BLOCK FOR TRANSITION RAILING CONNECTION (MODIFIED)

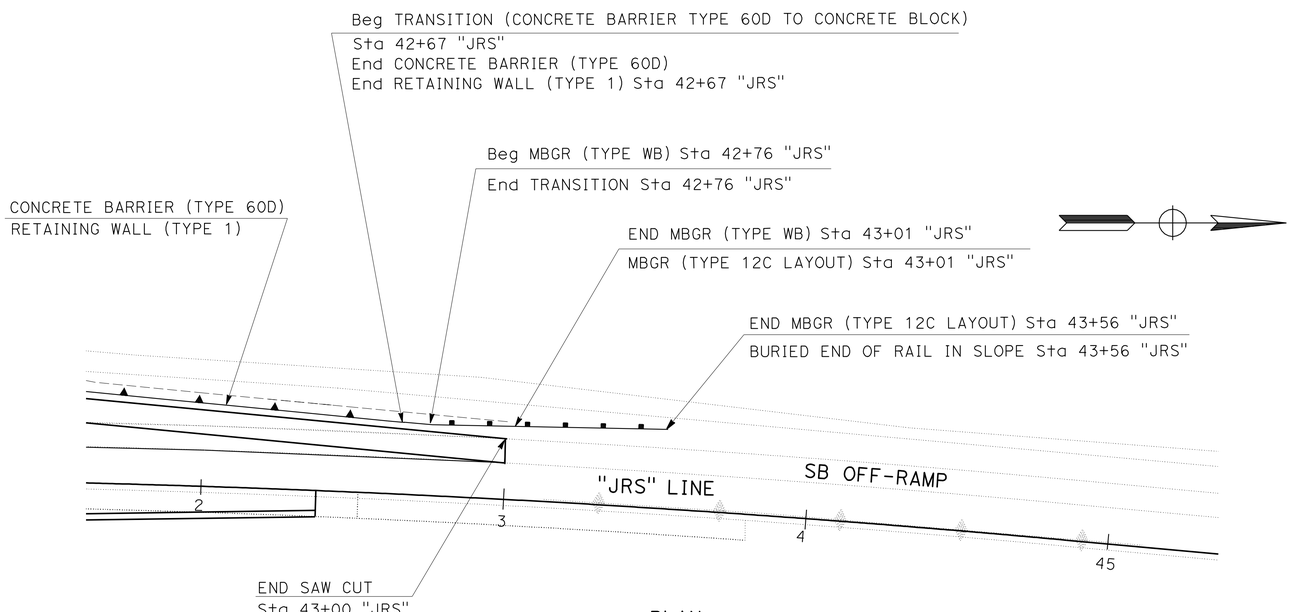

PLAN

MBGR BURIED END SECTION

CONSTRUCTION DETAILS

NO SCALE

C-2

STATE OF CALIFORNIA - DEPARTMENT OF TRANSPORTATION

Caltrans

MINOR A

FUNCTIONAL SUPERVISOR: CHRIS THOMAS

CALCULATED-DESIGNED BY: JOSEPH CHUA

CHECKED BY: THIN BUI

REVISED BY

DATE REVISED

LAST REVISION 03-18-11

DATE PLOTTED => 21-MAR-2011

TIME PLOTTED => 13:37

Dist	COUNTY	ROUTE	POST MILES TOTAL PROJECT	SHEET No.	TOTAL SHEETS
11	SD	125	10.6/10.9	7	64

REGISTERED CIVIL ENGINEER 03-15-11 DATE

03-21-11
PLANS APPROVAL DATE

REGISTERED PROFESSIONAL ENGINEER JOSEPH CHUA No. 53168 Exp. 06-30-11 CIVIL STATE OF CALIFORNIA

THE STATE OF CALIFORNIA OR ITS OFFICERS OR AGENTS SHALL NOT BE RESPONSIBLE FOR THE ACCURACY OR COMPLETENESS OF SCANNED COPIES OF THIS PLAN SHEET.

NOTE:

1. FOR ACCURATE RIGHT OF WAY AND ACCESS DATA, CONTACT RIGHT OF WAY ENGINEERING AT THE DISTRICT OFFICE.

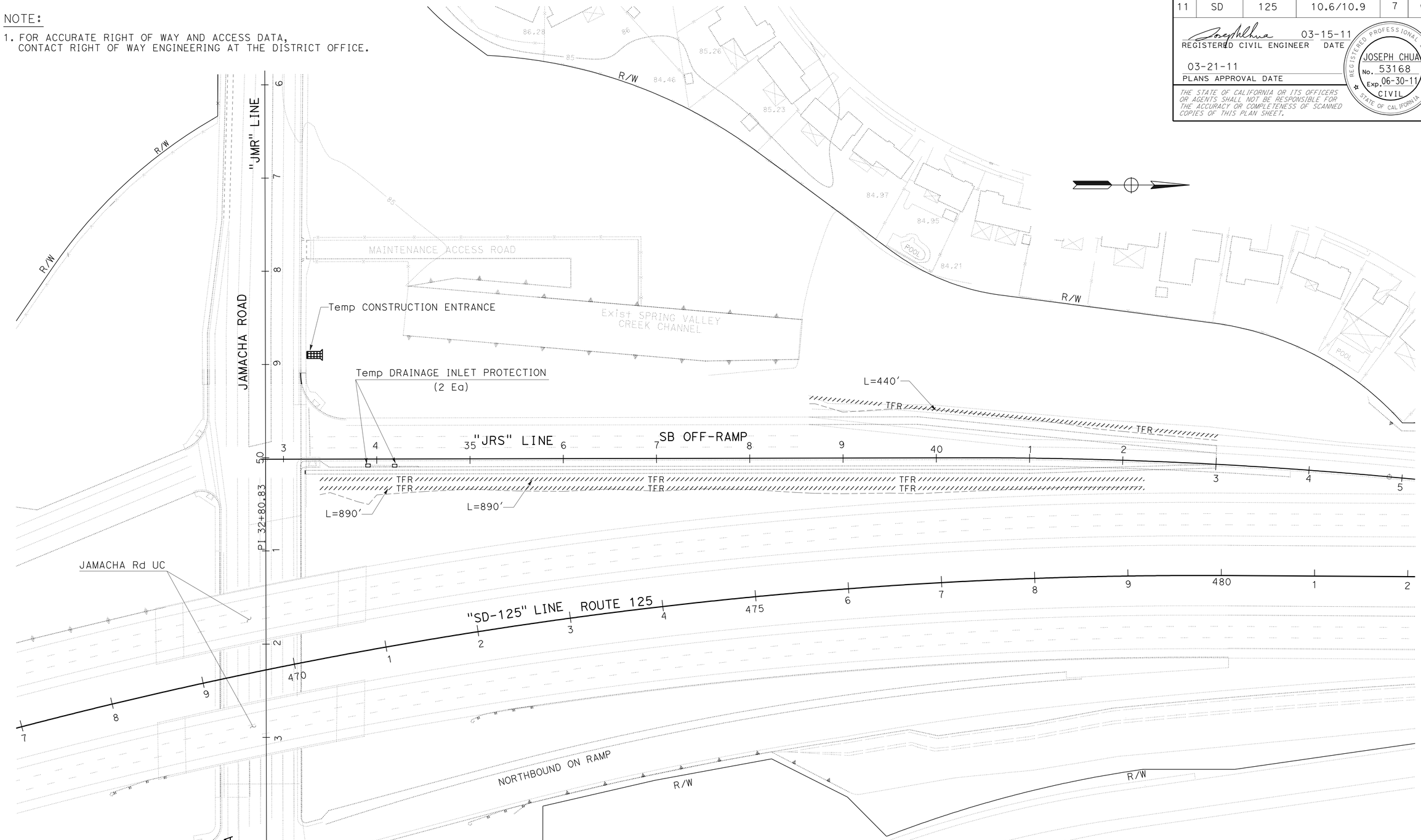

LEGEND:

- TFR — Temp FIBER ROLL
- Temp CONSTRUCTION ENTRANCE (TYPE 2)
- Temp DRAINAGE INLET PROTECTION (TYPE 5)

THIS PLAN ACCURATE FOR TEMPORARY WATER POLLUTION CONTROL ONLY

TEMPORARY WATER POLLUTION CONTROL PLAN

SCALE: 1" = 50'

WPC-1

STATE OF CALIFORNIA - DEPARTMENT OF TRANSPORTATION

Caltrans

MINOR A

FUNCTIONAL SUPERVISOR: CHRIS THOMAS

CALCULATED-DESIGNED BY: JOSEPH CHUA

CHECKED BY: THIN BUI

REVISED BY

DATE REVISED

LAST REVISION 03-18-11

DATE PLOTTED => 21-MAR-2011
TIME PLOTTED => 13:37

Dist	COUNTY	ROUTE	POST MILES TOTAL PROJECT	SHEET No.	TOTAL SHEETS
11	SD	125	10.6/10.9	8	64

REGISTERED CIVIL ENGINEER 03-15-11 DATE

03-21-11
PLANS APPROVAL DATE

REGISTERED PROFESSIONAL ENGINEER JOSEPH CHUA No. 53168 Exp. 06-30-11 CIVIL STATE OF CALIFORNIA

THE STATE OF CALIFORNIA OR ITS OFFICERS OR AGENTS SHALL NOT BE RESPONSIBLE FOR THE ACCURACY OR COMPLETENESS OF SCANNED COPIES OF THIS PLAN SHEET.

TEMPORARY WATER POLLUTION CONTROL QUANTITIES

SHEET No.	TEMPORARY FIBER ROLL	TEMPORARY CONSTRUCTION ENTRANCE	Temp DRAINAGE INLET PROTECTION
		(TYPE 2)	(TYPE 5)
	LF	EA	EA
WPC-1	2,220	1	2
TOTAL	2,220	1	2

NO SCALE

TEMPORARY WATER POLLUTION CONTROL QUANTITIES

WPCQ-1

STATE OF CALIFORNIA - DEPARTMENT OF TRANSPORTATION
Caltrans
MINOR A

FUNCTIONAL SUPERVISOR: CHRIS THOMAS
CALCULATED-DESIGNED BY: JOSEPH CHUA
CHECKED BY: THIN BUI
REVISED BY
DATE REVISED

LAST REVISION 03-15-11
DATE PLOTTED => 21-MAR-2011
TIME PLOTTED => 13:37

Dist	COUNTY	ROUTE	POST MILES TOTAL PROJECT	SHEET No.	TOTAL SHEETS
11	SD	125	10.6/10.9	9	64

REGISTERED CIVIL ENGINEER 03-15-11 DATE

03-21-11
PLANS APPROVAL DATE

REGISTERED PROFESSIONAL ENGINEER JOSEPH CHUA No. 53168 Exp. 06-30-11 CIVIL STATE OF CALIFORNIA

THE STATE OF CALIFORNIA OR ITS OFFICERS OR AGENTS SHALL NOT BE RESPONSIBLE FOR THE ACCURACY OR COMPLETENESS OF SCANNED COPIES OF THIS PLAN SHEET.

NOTE:

FOR ACCURATE RIGHT OF WAY AND ACCESS DATA, CONTACT RIGHT OF WAY ENGINEERING AT THE DISTRICT OFFICE.

LEGEND:

(X) DRAINAGE SYSTEM No.

(X) DRAINAGE UNIT

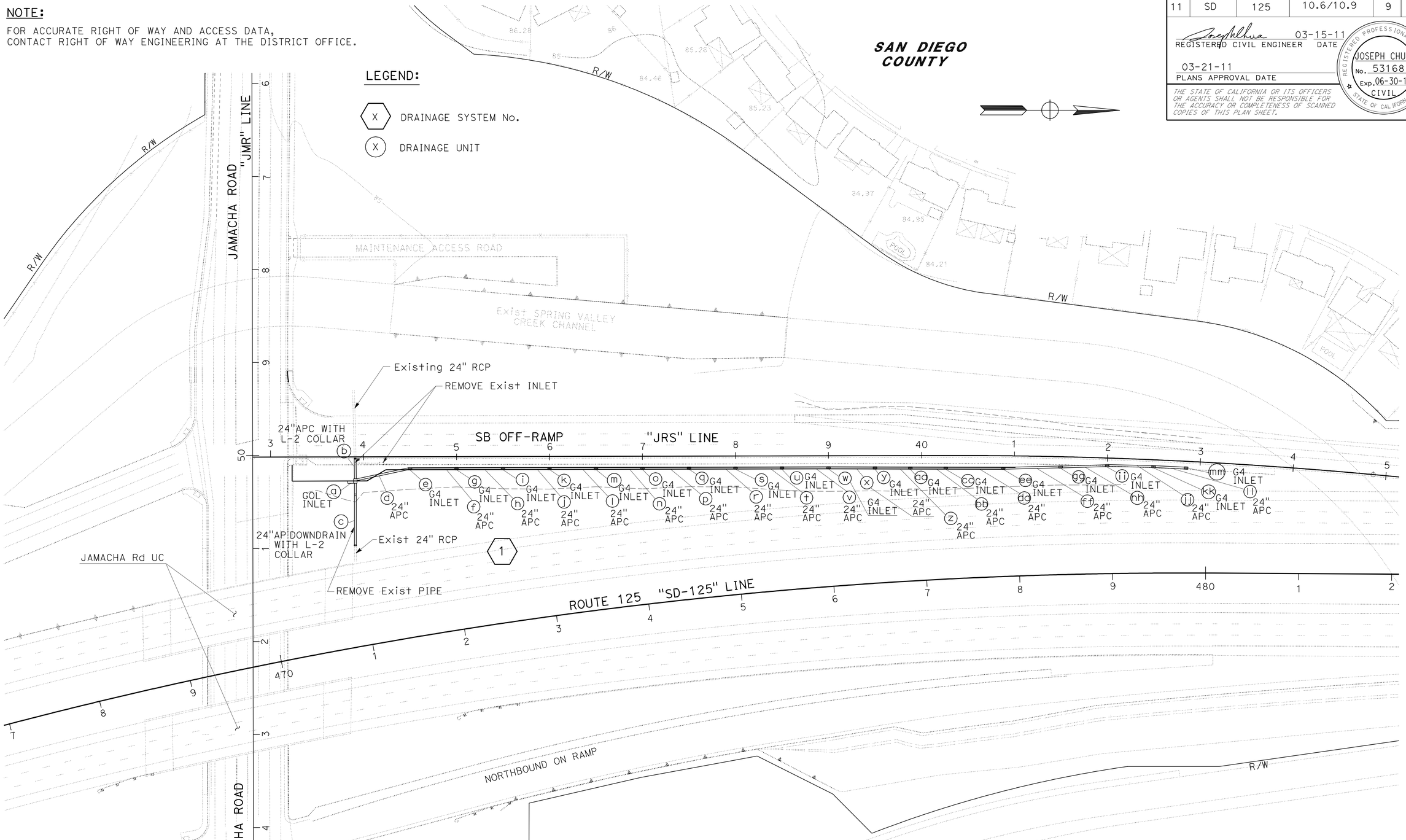

DRAINAGE PLAN

THIS PLAN ACCURATE FOR DRAINAGE WORK ONLY

SCALE: 1" = 50'

D-1

STATE OF CALIFORNIA - DEPARTMENT OF TRANSPORTATION
Caltrans
MINOR PROJECTS

FUNCTIONAL SUPERVISOR: CHRIS M THOMAS

CALCULATED-DESIGNED BY: JOSEPH CHUA
CHECKED BY: RAMON JUAREZ

REVISED BY / DATE REVISED

LAST REVISION 03-18-11
DATE PLOTTED => 21-MAR-2011
TIME PLOTTED => 13:37

Dist	COUNTY	ROUTE	POST MILES TOTAL PROJECT	SHEET No.	TOTAL SHEETS
11	SD	125	10.6/10.9	10	64

REGISTERED CIVIL ENGINEER 03-15-11 DATE

03-21-11
PLANS APPROVAL DATE

REGISTERED PROFESSIONAL ENGINEER JOSEPH CHUA No. 53168 Exp. 06-30-11 CIVIL STATE OF CALIFORNIA

THE STATE OF CALIFORNIA OR ITS OFFICERS OR AGENTS SHALL NOT BE RESPONSIBLE FOR THE ACCURACY OR COMPLETENESS OF SCANNED COPIES OF THIS PLAN SHEET.

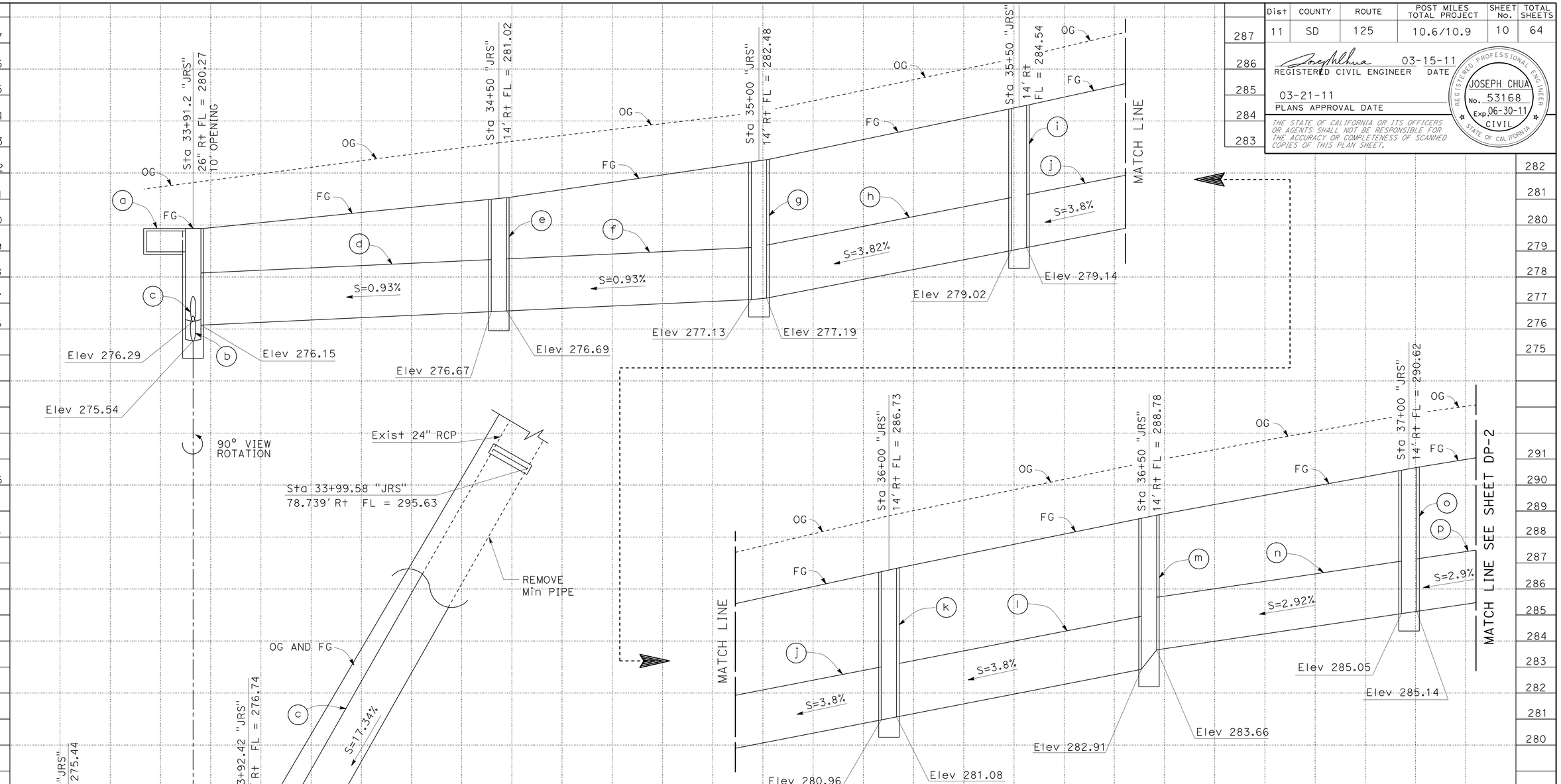

DRAINAGE SYSTEM 1

a GOL INLET H=4.73' L=7'

b 24" X 22.5' ALTERNATIVE PIPE CULVERT WITH L-2 COLLAR

c 24" X 117.8' ALTERNATIVE PIPE DOWNDRAIN WITH L-2 COLLAR

d 24" X 55.9' ALTERNATIVE PIPE CULVERT

e G4 INLET H=4.35'

f 24" X 47.1' ALTERNATIVE PIPE CULVERT

g G4 INLET H=5.35'

h 24" X 47.9' ALTERNATIVE PIPE CULVERT

i G4 INLET H=5.52'

j 24" X 47.9' ALTERNATIVE PIPE CULVERT

k G4 INLET H=5.77'

l 24" X 47.9' ALTERNATIVE PIPE CULVERT

m G4 INLET H=5.87'

n 24" X 47.6' ALTERNATIVE PIPE CULVERT

o G4 INLET H=5.57'

p 24" X 47.9' ALTERNATIVE PIPE CULVERT

DRAINAGE PROFILES

SCALE: Vert 1" = 2'
Horiz 1" = 10'

DP-1

STATE OF CALIFORNIA - DEPARTMENT OF TRANSPORTATION
Caltrans® MINOR PROJECTS

FUNCTIONAL SUPERVISOR: CHRIS M THOMAS
CALCULATED-DESIGNED BY: JOSEPH CHUA
CHECKED BY: RAMON JUAREZ
REVISED BY
DATE REVISED

LAST REVISION 03-21-11
DATE PLOTTED => 21-MAR-2011
TIME PLOTTED => 13:37

Dist	COUNTY	ROUTE	POST MILES TOTAL PROJECT	SHEET No.	TOTAL SHEETS
11	SD	125	10.6/10.9	11	64

REGISTERED CIVIL ENGINEER 03-15-11 DATE

03-21-11
PLANS APPROVAL DATE

REGISTERED PROFESSIONAL ENGINEER JOSEPH CHUA No. 53168 Exp 06-30-11 CIVIL STATE OF CALIFORNIA

THE STATE OF CALIFORNIA OR ITS OFFICERS OR AGENTS SHALL NOT BE RESPONSIBLE FOR THE ACCURACY OR COMPLETENESS OF SCANNED COPIES OF THIS PLAN SHEET.

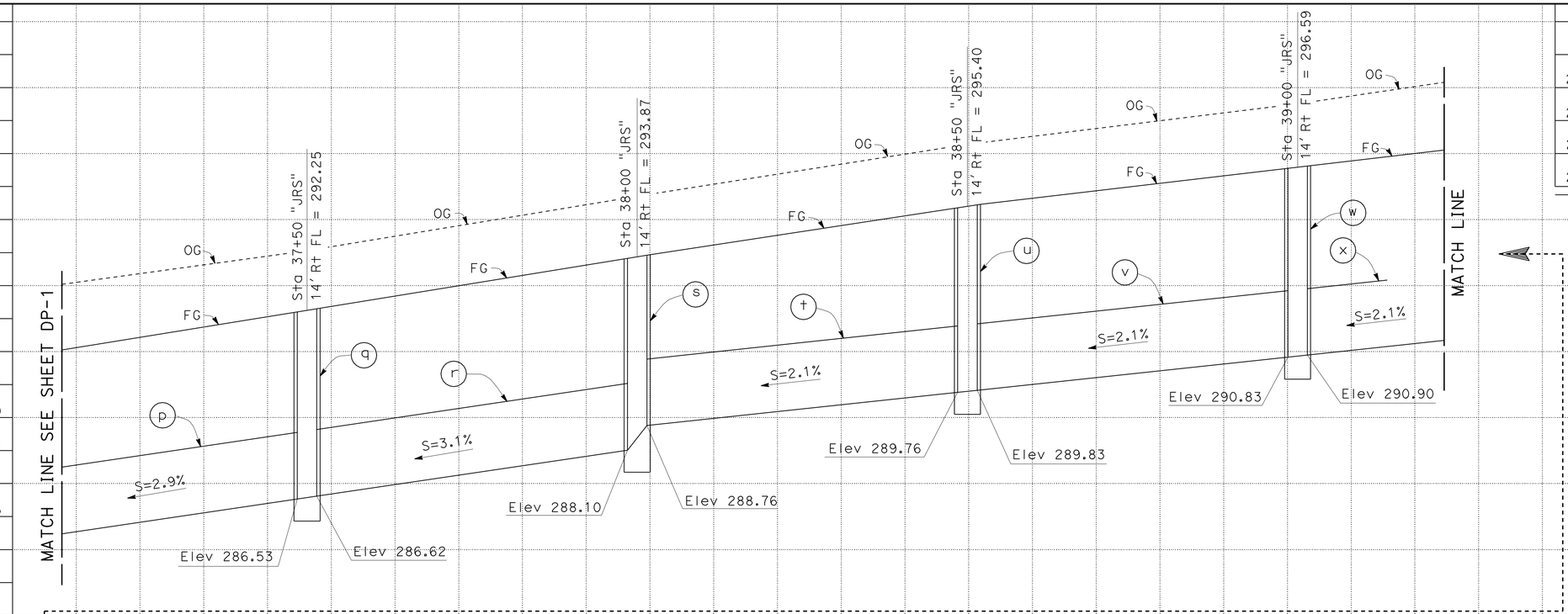

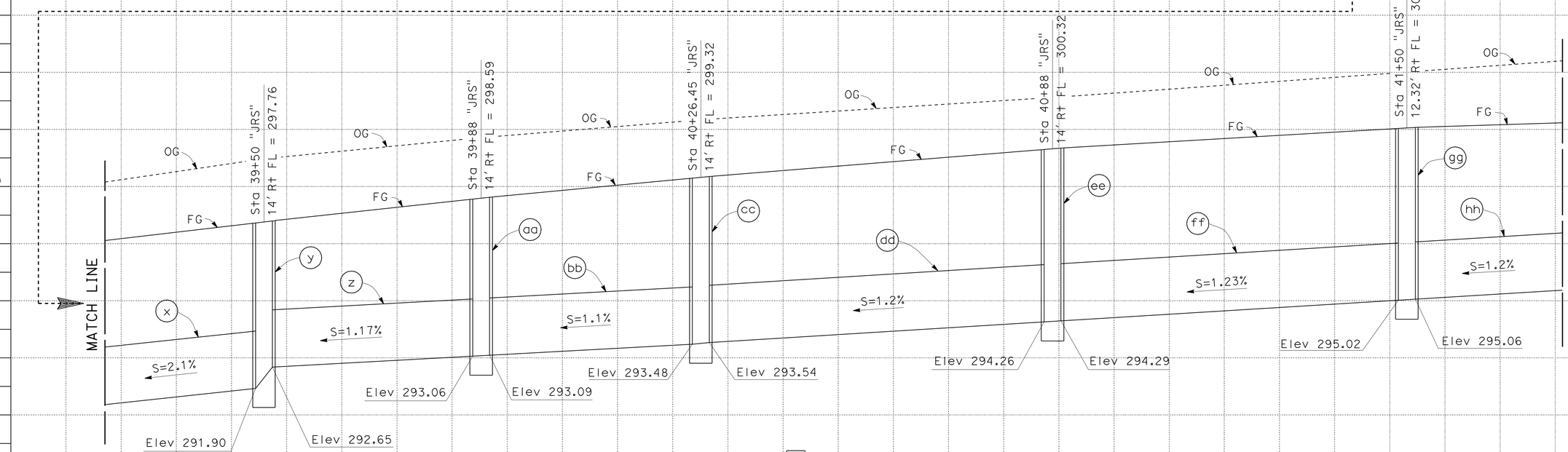

DRAINAGE SYSTEM 1

- (p) 24" X 47.9' ALTERNATIVE PIPE CULVERT
- (q) G4 INLET H=5.72'
- (r) 24" X 47.6' ALTERNATIVE PIPE CULVERT
- (s) G4 INLET H=5.77'
- (t) 24" X 47.3' ALTERNATIVE PIPE CULVERT
- (u) G4 INLET H=5.64'
- (v) 24" X 47.3' ALTERNATIVE PIPE CULVERT
- (w) G4 INLET H=5.76'
- (x) 24" X 47.3' ALTERNATIVE PIPE CULVERT
- (y) G4 INLET H=5.86'
- (z) 24" X 35' ALTERNATIVE PIPE CULVERT
- (aa) G4 INLET H=5.53'
- (bb) 24" X 35.6' ALTERNATIVE PIPE CULVERT
- (cc) G4 INLET H=5.84'
- (dd) 24" X 58.7' ALTERNATIVE PIPE CULVERT
- (ee) G4 INLET H=6.06'
- (ff) 24" X 59.2' ALTERNATIVE PIPE CULVERT
- (gg) G4 INLET H=6.0'
- (hh) 24" X 47.0' ALTERNATIVE PIPE CULVERT

DRAINAGE PROFILES

SCALE: Vert 1" = 2'
Horiz 1" = 10'

DP-2

STATE OF CALIFORNIA - DEPARTMENT OF TRANSPORTATION
Caltrans® MINOR PROJECTS

FUNCTIONAL SUPERVISOR: CHRIS M THOMAS
CALCULATED-DESIGNED BY: JOSEPH CHUA
CHECKED BY: RAMON JUAREZ
REVISED BY
DATE REVISED

LAST REVISION 03-21-11
DATE PLOTTED => 21-MAR-2011
TIME PLOTTED => 13:37

Dist	COUNTY	ROUTE	POST MILES TOTAL PROJECT	SHEET No.	TOTAL SHEETS
11	SD	125	10.6/10.9	12	64

REGISTERED CIVIL ENGINEER 03-15-11 DATE

03-21-11
PLANS APPROVAL DATE

REGISTERED PROFESSIONAL ENGINEER JOSEPH CHUA No. 53168 Exp. 06-30-11 CIVIL STATE OF CALIFORNIA

THE STATE OF CALIFORNIA OR ITS OFFICERS OR AGENTS SHALL NOT BE RESPONSIBLE FOR THE ACCURACY OR COMPLETENESS OF SCANNED COPIES OF THIS PLAN SHEET.

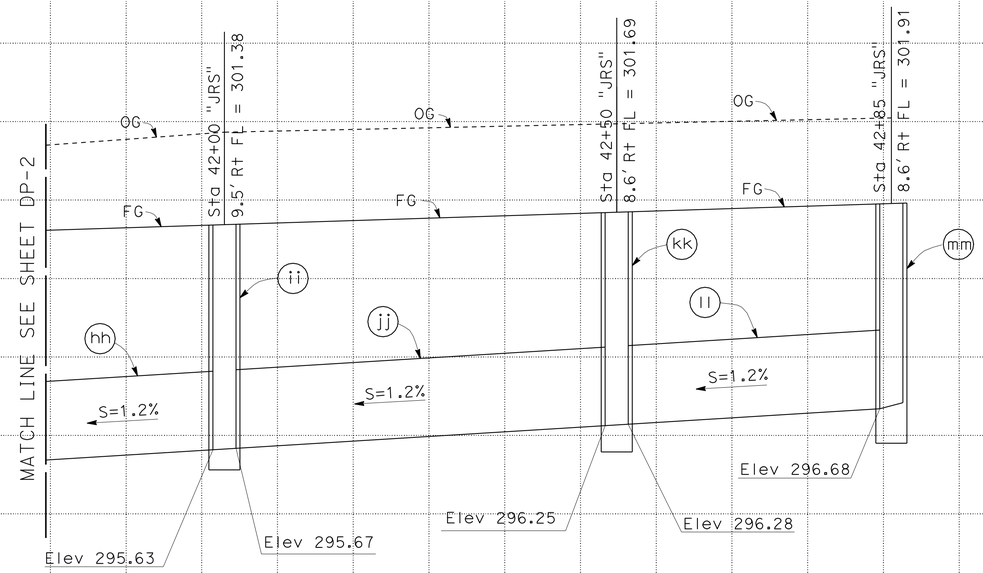

DRAINAGE SYSTEM 1

(hh) 24" X 47.0' ALTERNATIVE PIPE CULVERT

(ii) G4 INLET H=5.75'

(jj) 24" X 47.0' ALTERNATIVE PIPE CULVERT

(kk) G4 INLET H=5.44'

(ll) 24" X 32.0' ALTERNATIVE PIPE CULVERT

(mm) G4 INLET H=5.23'

DRAINAGE PROFILES

SCALE: Vert 1" = 2'
Horiz 1" = 10'

DP-3

REVISED BY | DATE REVISED

JOSEPH CHUA | RAMON JUAREZ

CALCULATED-DESIGNED BY | CHECKED BY

FUNCTIONAL SUPERVISOR | CHRIS M THOMAS

STATE OF CALIFORNIA - DEPARTMENT OF TRANSPORTATION

Caltrans® MINOR PROJECTS

LAST REVISION 03-21-11 | DATE PLOTTED => 21-MAR-2011 TIME PLOTTED => 13:37

Dist	COUNTY	ROUTE	POST MILES TOTAL PROJECT	SHEET No.	TOTAL SHEETS
11	SD	125	10.6/10.9	13	64

REGISTERED CIVIL ENGINEER 03-15-11 DATE

03-21-11
PLANS APPROVAL DATE

REGISTERED PROFESSIONAL ENGINEER JOSEPH CHUA No. 53168 Exp. 06-30-11 CIVIL STATE OF CALIFORNIA

THE STATE OF CALIFORNIA OR ITS OFFICERS OR AGENTS SHALL NOT BE RESPONSIBLE FOR THE ACCURACY OR COMPLETENESS OF SCANNED COPIES OF THIS PLAN SHEET.

NOTE:
1. ALLOWABLE COATING:
POLYMERIC SHEET COATING OR POLYMERIZED ASPHALT INVERT

APC ALLOWABLE PIPE MATERIAL

DESCRIPTION	TYPE		
	COATED CSP (1) (14 GA.)	HDPE TYPE S	RCP (3/4" X 3/4") 7.5" PITCH
	SIZE	SIZE	SIZE
24" AP	24"	24"	24"

DRAINAGE SYSTEM	DRAINAGE UNIT	PLAN SHEET No.	INLET GRATE TYPE 24-12 (N) EA	INLET GRATE TYPE 18-9 (N) EA	24" ALTERNATIVE PIPE CULVERT LF	24" ALTERNATIVE PIPE DOWNDRAIN LF	MISCELLANEOUS IRON & STEEL LB	MINOR CONCRETE (MINOR STRUCTURE) CY	CONCRETE COLLAR(N) EA	PIPE JOINT CLASSIFICATION (N) -	MAXIMUM COVER (N) FT	DESCRIPTION	STATION	PLAN SHEET No.	SYSTEM	UNIT
1	a	D-1	1				326	2.87				GOL INLET WITH PLATE COVER, H=4.73' L=7' GRATE 24-12X	Sta 33+91.2 "JRS" LINE	D-1	1	a
	b				22.5				1	Std	2.0	24" ALTERNATIVE PIPE CULVERT WITH L-2 COLLAR	Sta 33+90.45 "JRS" LINE			b
	c					117.8			1	DD		24" ALTERNATIVE PIPE CULVERT DOWNDRAIN WITH L-2 COLLAR	Sta 33+92.42 "JRS" LINE			c
	d				55.9					Std	2.5	24" ALTERNATIVE PIPE CULVERT				d
	e			1			249	1.64				G4 INLET WITH 18-9 GRATE, H=4.35'	Sta 34+50 "JRS" LINE			e
	f				47.1					Std	3.1	24" ALTERNATIVE PIPE CULVERT				f
	g			1			249	1.90				G4 INLET WITH 18-9 GRATE, H=5.35'	Sta 35+00 "JRS" LINE			g
	h				47.9					Std	3.5	24" ALTERNATIVE PIPE CULVERT				h
	i			1			249	1.94				G4 INLET WITH 18-9 GRATE, H=5.52'	Sta 35+50 "JRS" LINE			i
	j				47.9					Std	3.8	24" ALTERNATIVE PIPE CULVERT				j
	k			1			249	2.01				G4 INLET WITH 18-9 GRATE, H=5.77'	Sta 36+00 "JRS" LINE			k
	l				47.9					Std	3.8	24" ALTERNATIVE PIPE CULVERT				l
	m			1			249	2.03				G4 INLET WITH 18-9 GRATE, H=5.87'	Sta 36+50 "JRS" LINE			m
	n				47.6					Std	3.6	24" ALTERNATIVE PIPE CULVERT				n
	o			1			249	1.96				G4 INLET WITH 18-9 GRATE, H=5.57'	Sta 37+00 "JRS" LINE			o
	p				47.9					Std	3.7	24" ALTERNATIVE PIPE CULVERT				p
	q			1			249	2.00				G4 INLET WITH 18-9 GRATE, H=5.72'	Sta 37+50 "JRS" LINE			q
	r				47.6					Std	3.8	24" ALTERNATIVE PIPE CULVERT				r
	s			1			249	2.01				G4 INLET WITH 18-9 GRATE, H=5.77'	Sta 38+00 "JRS" LINE			s
	t				47.3					Std	3.6	24" ALTERNATIVE PIPE CULVERT				t
	u			1			249	1.97				G4 INLET WITH 18-9 GRATE, H=5.64'	Sta 38+50 "JRS" LINE			u
	v				47.3					Std	3.9	24" ALTERNATIVE PIPE CULVERT				v
	w			1			249	2.00				G4 INLET WITH 18-9 GRATE, H=5.76'	Sta 39+00 "JRS" LINE			w
	x				47.3					Std	4.0	24" ALTERNATIVE PIPE CULVERT				x
	y			1			249	2.03				G4 INLET WITH 18-9 GRATE, H=5.86'	Sta 39+50 "JRS" LINE			y
	z				35.0					Std	3.5	24" ALTERNATIVE PIPE CULVERT				z
	aa			1			249	1.95				G4 INLET WITH 18-9 GRATE, H=5.53'	Sta 39+88 "JRS" LINE			aa
	bb				35.6					Std	3.8	24" ALTERNATIVE PIPE CULVERT				bb
	cc			1			249	2.02				G4 INLET WITH 18-9 GRATE, H=5.84'	Sta 40+26.45 "JRS" LINE			cc
	dd				58.7					Std	4.1	24" ALTERNATIVE PIPE CULVERT				dd
	ee			1			249	2.08				G4 INLET WITH 18-9 GRATE, H=6.06'	Sta 40+88.00 "JRS" LINE			ee
	ff				59.2					Std	4.2	24" ALTERNATIVE PIPE CULVERT				ff
	gg			1			249	2.07				G4 INLET WITH 18-9 GRATE, H=6.0'	Sta 41+50.00 "JRS" LINE			gg
	hh				47.0					Std	4.0	24" ALTERNATIVE PIPE CULVERT				hh
	ii			1			249	2.00				G4 INLET WITH 18-9 GRATE, H=5.75'	Sta 42+00.00 "JRS" LINE			ii
	jj				47.0					Std	3.8	24" ALTERNATIVE PIPE CULVERT				jj
	kk			1			249	1.92				G4 INLET WITH 18-9 GRATE, H=5.44'	Sta 42+50.00 "JRS" LINE			kk
	ll				32.0					Std	3.2	24" ALTERNATIVE PIPE CULVERT				ll
	mm			1			249	1.87				G4 INLET WITH 18-9 GRATE, H=5.23'	Sta 42+85.00 "JRS" LINE			mm
TOTAL			868.7		117.8	4808	38.27*									

* SEE Q-1 FOR ADDITIONAL QUANTITIES

NOTES:
1. JOINT TYPE: DD = DOWNDRAIN, Std = STANDARD [N] NOT A SEPARATE PAY ITEM. FOR INFORMATION ONLY.

DRAINAGE QUANTITIES
DQ-1

REVISED BY | DATE REVISED
JOSEPH CHUA | RAMON JUAREZ
CALCULATED-DESIGNED BY | CHECKED BY
FUNCTIONAL SUPERVISOR: CHRIS M THOMAS

STATE OF CALIFORNIA - DEPARTMENT OF TRANSPORTATION
Caltrans MINOR PROJECTS

LAST REVISION 03-21-11 | DATE PLOTTED => 21-MAR-2011 | TIME PLOTTED => 13:37

Dist	COUNTY	ROUTE	POST MILES TOTAL PROJECT	SHEET No.	TOTAL SHEETS
11	SD	125	10.6/10.9	14	64

REGISTERED CIVIL ENGINEER 03-15-11 DATE

03-21-11
PLANS APPROVAL DATE

REGISTERED PROFESSIONAL ENGINEER MICHAEL PEDERSEN No. 74073 Exp. 06-30-11 CIVIL STATE OF CALIFORNIA

THE STATE OF CALIFORNIA OR ITS OFFICERS OR AGENTS SHALL NOT BE RESPONSIBLE FOR THE ACCURACY OR COMPLETENESS OF SCANNED COPIES OF THIS PLAN SHEET.

NOTE:

FOR ACCURATE RIGHT OF WAY AND ACCESS DATA, CONTACT RIGHT OF WAY ENGINEERING AT THE DISTRICT OFFICE.

LEGEND:

Exist UTILITIES	OWNER
—s—	SEWERLINE / CITY OF SAN DIEGO
—g—	GAS LINE / SAN DIEGO GAS & ELECTRIC
—e—	UG ELECTRICAL / SAN DIEGO GAS & ELECTRIC
—t—	TELEPHONE LINE / AT&T
—tv—	TELEVISION CABLE / COX COMMUNICATION

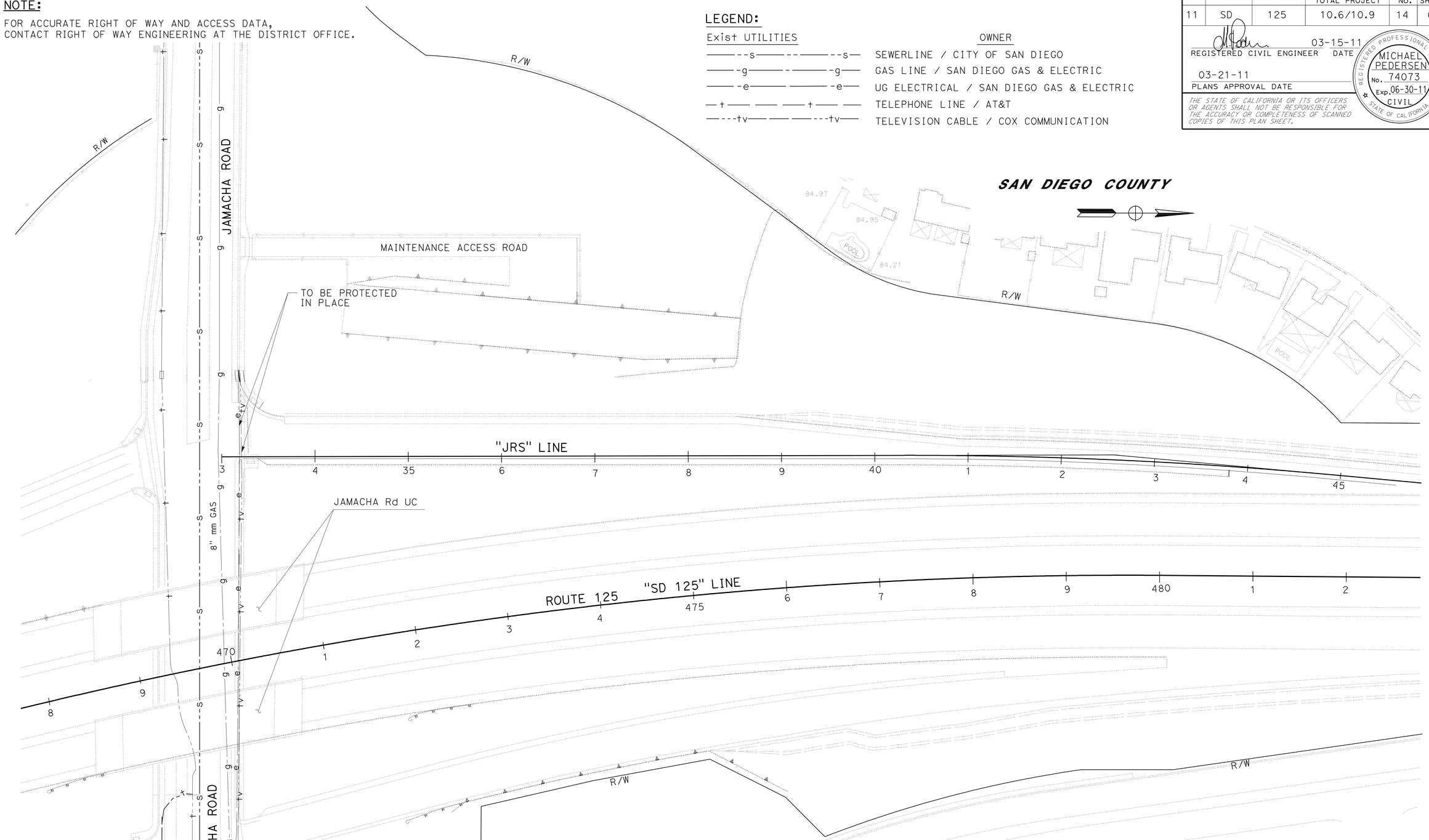

THIS PLAN ACCURATE FOR UTILITY IMFORMATION ONLY

UTILITY PLAN

SCALE: 1" = 50'

U-1

STATE OF CALIFORNIA - DEPARTMENT OF TRANSPORTATION

Caltrans

MINOR A

FUNCTIONAL SUPERVISOR: CHRIS THOMAS

CALCULATED-DESIGNED BY: JOSEPH CHUA

CHECKED BY: THIN BUI

REVISED BY

DATE REVISED

LAST REVISION 03-21-11

DATE PLOTTED => 21-MAR-2011

TIME PLOTTED => 13:38

Dist	COUNTY	ROUTE	POST MILES TOTAL PROJECT	SHEET No.	TOTAL SHEETS
11	SD	125	10.6/10.9	15	64

REGISTERED CIVIL ENGINEER 03-15-11 DATE

03-21-11
PLANS APPROVAL DATE

REGISTERED PROFESSIONAL ENGINEER SHAHIN T. ADIBI No. 54839 Exp. 06-30-11 CIVIL STATE OF CALIFORNIA

THE STATE OF CALIFORNIA OR ITS OFFICERS OR AGENTS SHALL NOT BE RESPONSIBLE FOR THE ACCURACY OR COMPLETENESS OF SCANNED COPIES OF THIS PLAN SHEET.

NOTES:

1. EXACT SIGN LOCATIONS TO BE DETERMINED BY THE ENGINEER.
2. FEDERAL MANUAL ON UNIFORM TRAFFIC CONTROL DEVICES (MUTCD) SIGN CODES ARE SHOWN UNLESS DESIGNATED BY (CA) INDICATING STANDARD CALIFORNIA SIGN SPECIFICATIONS ARE USED.
3. EXISTING UTILITIES ARE NOT SHOWN ON THESE PLAN SHEETS. THE CONTRACTOR SHALL VERIFY LOCATIONS OF EXISTING UTILITIES AND ADJUST THE FIELD LOCATION OF THE SIGN POSTS IN CONSULTATION WITH THE ENGINEER.

LEGEND:

[XX] - CONSTRUCTION AREA SIGNS

CONSTRUCTION AREA SIGNS

SIGN No.	TYPE	PANEL SIZE (in)	No. OF POST AND SIZE (in)	No. OF SIGNS
1	C23 (CA)	48 X 48	1-4 X 6 (S)	3
2	C14 (CA)	48 X 24	1-4 X 4 (S)	3
3	SC6-4 (CA)	48 X 60	PORTABLE	1
			TOTAL	7

(S)-DENOTES STATIONARY MOUNTED SIGN

TYPICAL- PLACEMENT OF TRAFFIC PLASTIC DRUM

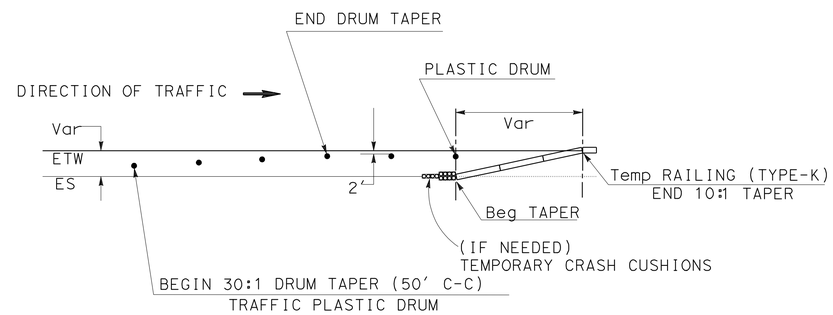

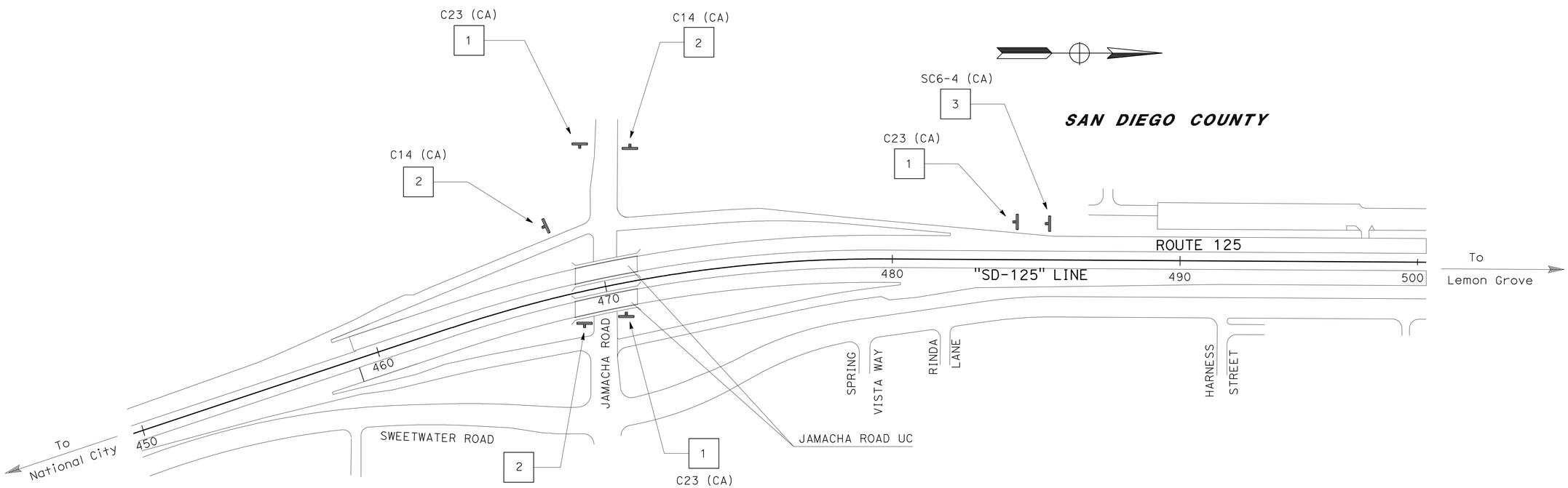

THIS PLAN ACCURATE FOR CONSTRUCTION AREA SIGN WORK ONLY

NO SCALE

CONSTRUCTION AREA SIGNS

CS-1

STATE OF CALIFORNIA - DEPARTMENT OF TRANSPORTATION
Caltrans® TRAFFIC DESIGN

FUNCTIONAL SUPERVISOR: CAMILLE ABOUFADEL

CALCULATED-DESIGNED BY: ROBERT EDEJER
CHECKED BY: SHAHIN T. ADIBI

REVISED BY | DATE REVISED

LAST REVISION 03-21-11 | DATE PLOTTED => 21-MAR-2011 | TIME PLOTTED => 13:38

Dist	COUNTY	ROUTE	POST MILES TOTAL PROJECT	SHEET No.	TOTAL SHEETS
11	SD	125	10.6/10.9	16	64

REGISTERED CIVIL ENGINEER 03-15-11 DATE

03-21-11
PLANS APPROVAL DATE

REGISTERED PROFESSIONAL ENGINEER JOSEPH CHUA No. 53168 Exp. 06-30-11 CIVIL STATE OF CALIFORNIA

THE STATE OF CALIFORNIA OR ITS OFFICERS OR AGENTS SHALL NOT BE RESPONSIBLE FOR THE ACCURACY OR COMPLETENESS OF SCANNED COPIES OF THIS PLAN SHEET.

NOTES:

1. FOR ACCURATE RIGHT OF WAY AND ACCESS DATA, SEE RIGHT OF WAY ENGINEERING AT THE DISTRICT OFFICE.
2. CONSTRUCT RETAINING WALL AT STAGE 1.
3. CONSTRUCT RETAINING WALL AND STRUCTURAL SECTION FROM Sta 38+75 "JRS" Lt TO Sta 40+30 "JRS" Lt.

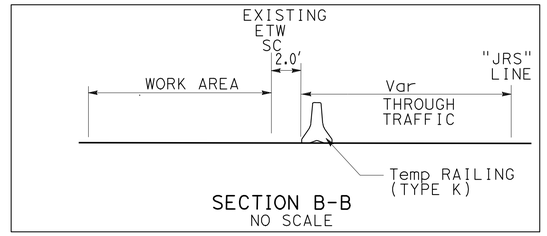

SECTION B-B
NO SCALE

LEGEND:

CONSTRUCT THIS STAGE

BT (XX) = BEGIN Temp PAVEMENT DELINEATION DETAIL

ET (XX) = END Temp PAVEMENT DELINEATION DETAIL

BR (XX) = BEGIN REMOVE PAVEMENT DELINEATION DETAIL

ER (XX) = END REMOVE PAVEMENT DELINEATION DETAIL

= BEGIN/ END Temp PAVEMENT DELINEATION DETAIL

= TEMPORARY RAILING (TYPE K)

= TRAFFIC PLASTIC DRUM

= TEMPORARY CRASH CUSHION

SAN DIEGO COUNTY

SECTION A-A
NO SCALE

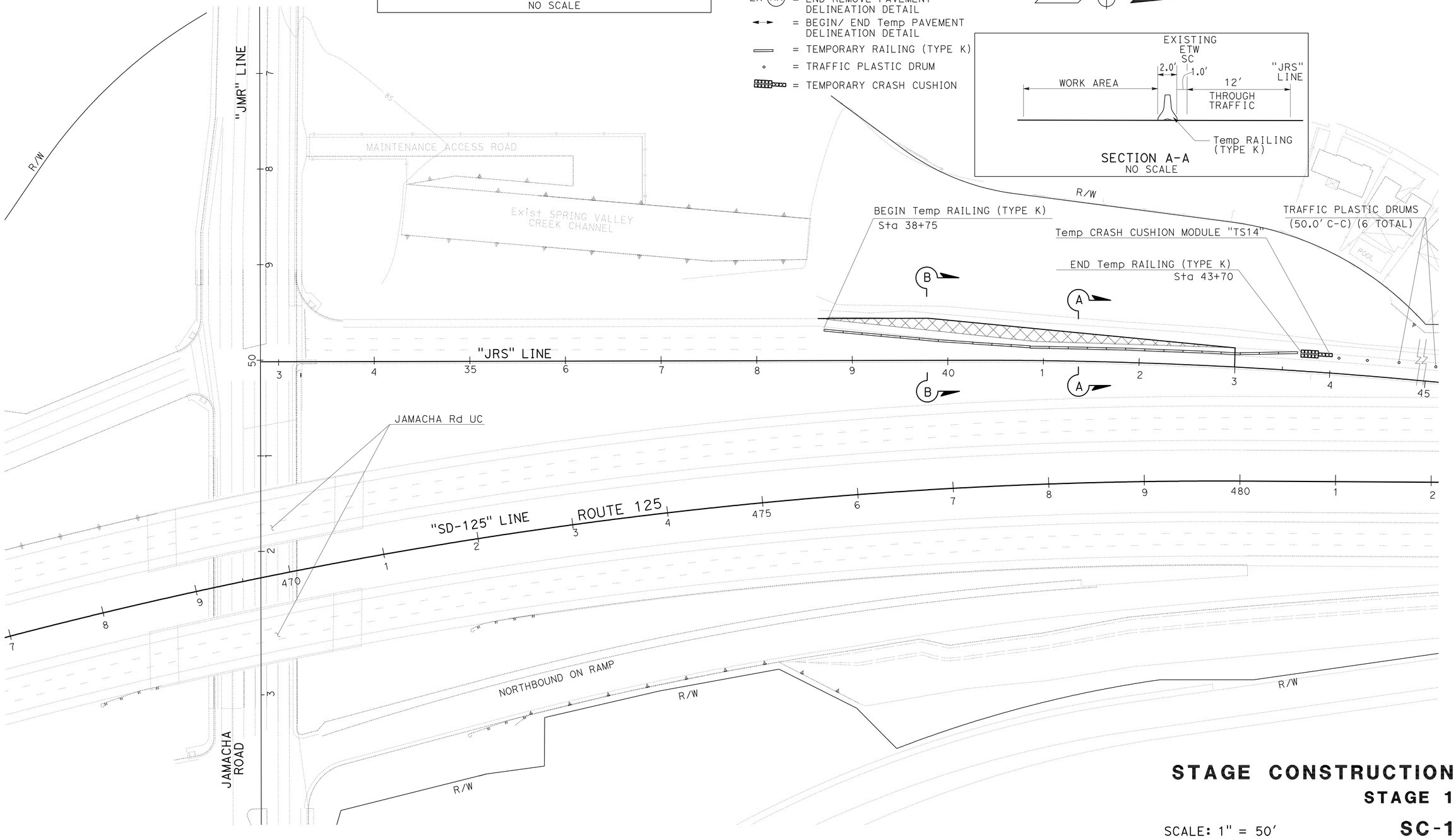

STAGE CONSTRUCTION

STAGE 1

SCALE: 1" = 50'

SC-1

THIS PLAN ACCURATE FOR STAGE CONSTRUCTION WORK ONLY

STATE OF CALIFORNIA - DEPARTMENT OF TRANSPORTATION

Caltrans

MINOR A

FUNCTIONAL SUPERVISOR: CHRIS THOMAS

CALCULATED-DESIGNED BY: JOSEPH CHUA

CHECKED BY: THIN BUI

REVISED BY

DATE REVISED

LAST REVISION 03-21-11

DATE PLOTTED => 21-MAR-2011
TIME PLOTTED => 13:38

Dist	COUNTY	ROUTE	POST MILES TOTAL PROJECT	SHEET No.	TOTAL SHEETS
11	SD	125	10.6/10.9	17	64

REGISTERED CIVIL ENGINEER 03-15-11 DATE

03-21-11
PLANS APPROVAL DATE

REGISTERED PROFESSIONAL ENGINEER JOSEPH CHUA No. 53168 Exp. 06-30-11 CIVIL STATE OF CALIFORNIA

THE STATE OF CALIFORNIA OR ITS OFFICERS OR AGENTS SHALL NOT BE RESPONSIBLE FOR THE ACCURACY OR COMPLETENESS OF SCANNED COPIES OF THIS PLAN SHEET.

NOTES:

1. FOR ACCURATE RIGHT OF WAY AND ACCESS DATA, SEE RIGHT OF WAY ENGINEERING AT DISTRICT OFFICE.
2. REMOVE TEMPORARY RAILING (TYPE K) AND CONSTRUCT STRUCTURAL SECTION FROM Sta 40+30 TO Sta 43+00 (NIGHT WORK).

LEGEND:

CONSTRUCT THIS STAGE

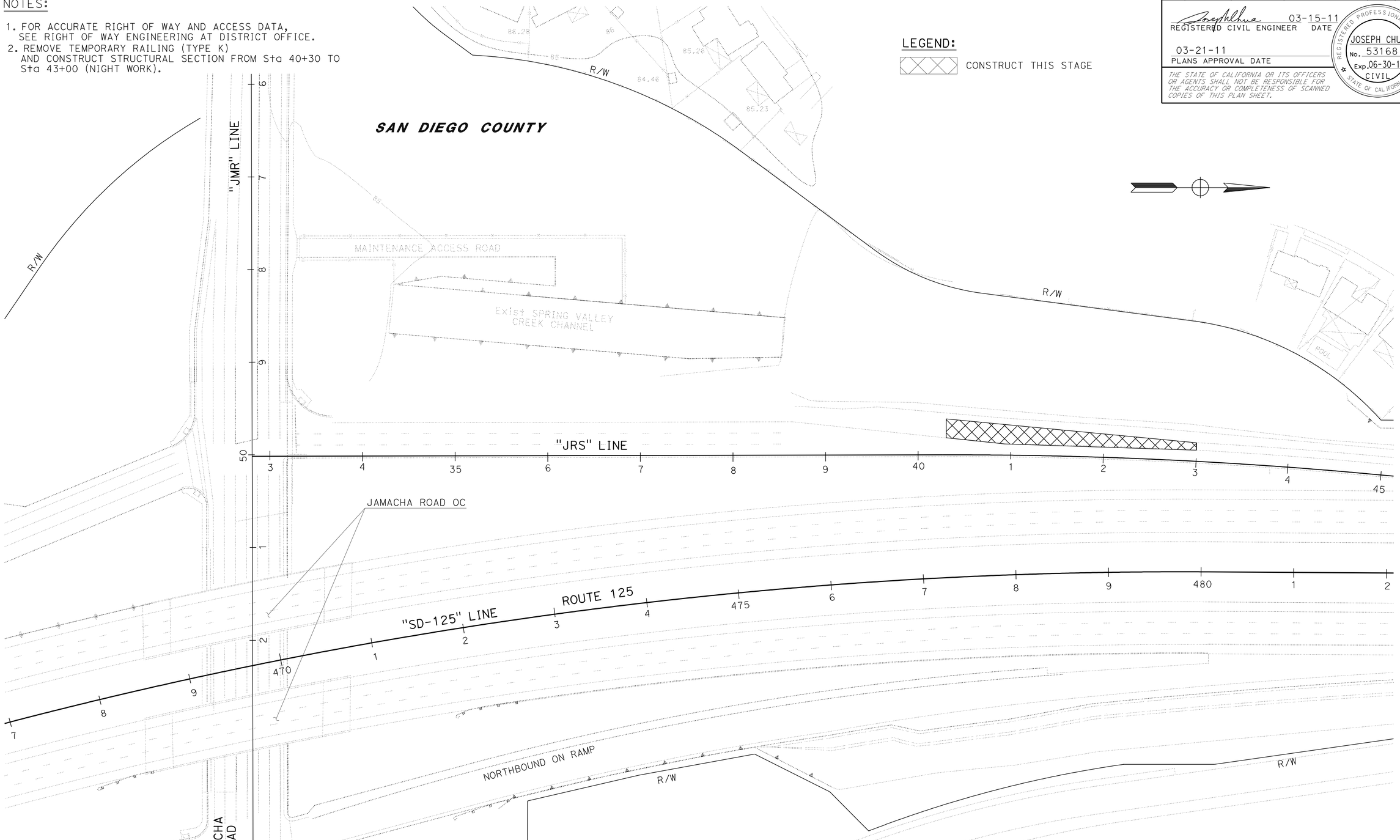

THIS PLAN ACCURATE FOR STAGE CONSTRUCTION WORK ONLY

STAGE CONSTRUCTION

STAGE 2

SCALE: 1" = 50'

SC-2

STATE OF CALIFORNIA - DEPARTMENT OF TRANSPORTATION

Caltrans

MINOR A

FUNCTIONAL SUPERVISOR: CHRIS THOMAS

CALCULATED-DESIGNED BY: JOSEPH CHUA

CHECKED BY: THIN BUI

REVISED BY

DATE REVISED

LAST REVISION 03-21-11

DATE PLOTTED => 21-MAR-2011

TIME PLOTTED => 13:38

Dist	COUNTY	ROUTE	POST MILES TOTAL PROJECT	SHEET No.	TOTAL SHEETS
11	SD	125	10.6/10.9	18	64

REGISTERED CIVIL ENGINEER 03-15-11 DATE

03-21-11
PLANS APPROVAL DATE

REGISTERED PROFESSIONAL ENGINEER JOSEPH CHUA No. 53168 Exp. 06-30-11 CIVIL STATE OF CALIFORNIA

THE STATE OF CALIFORNIA OR ITS OFFICERS OR AGENTS SHALL NOT BE RESPONSIBLE FOR THE ACCURACY OR COMPLETENESS OF SCANNED COPIES OF THIS PLAN SHEET.

NOTES:

1. FOR ACCURATE RIGHT OF WAY AND ACCESS DATA, CONTACT RIGHT OF WAY ENGINEERING AT THE DISTRICT OFFICE.
2. CONSTRUCT MAINTENANCE VEHICLE PULLOUT.
3. PEDESTRIAN ACCESS THROUGH TRAFFIC SIGNAL AT JAMACHA ROAD SHOULD BE MAINTAINED DURING CONSTRUCTION.

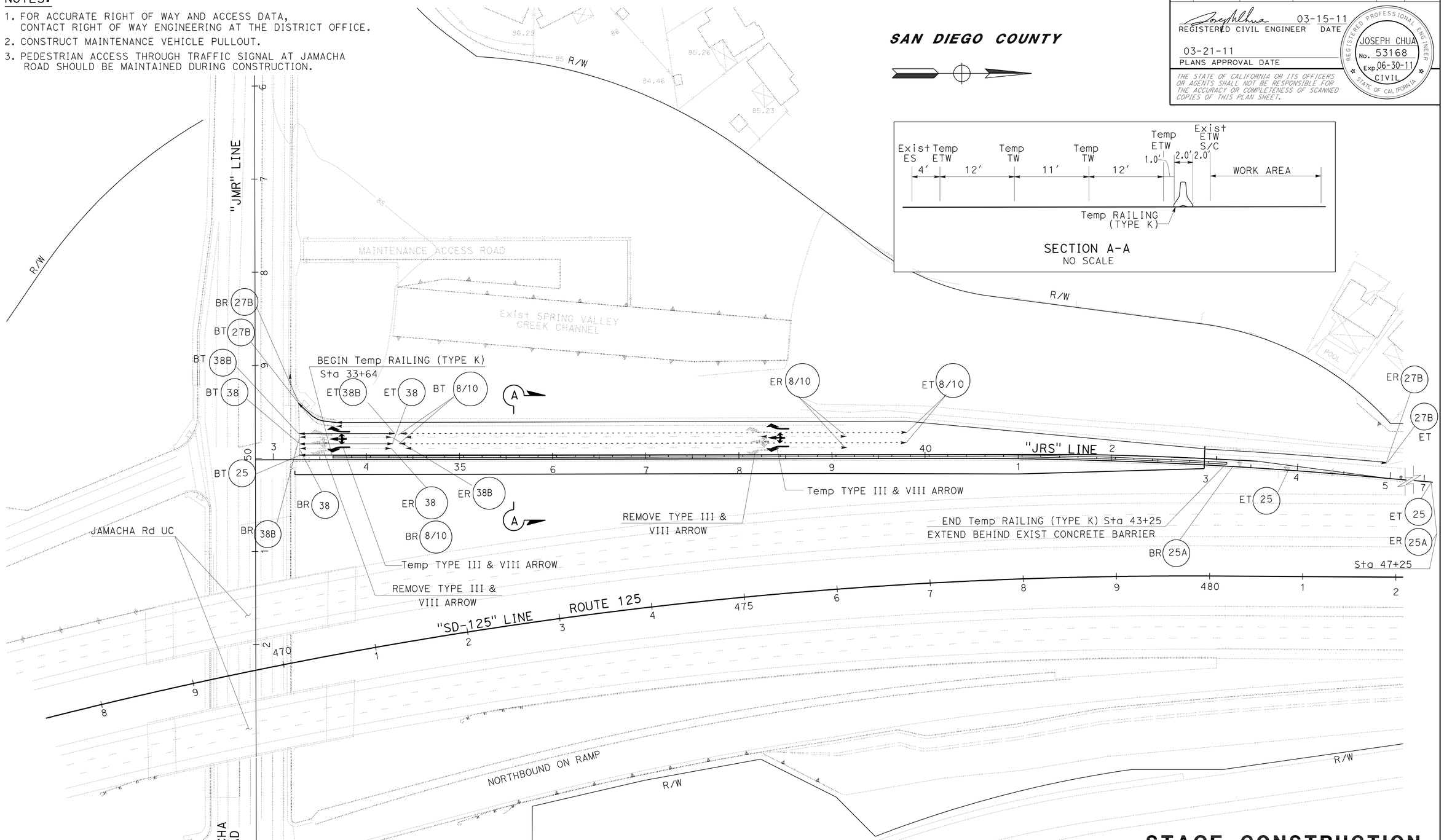

THIS PLAN ACCURATE FOR STAGE CONSTRUCTION WORK ONLY

STAGE CONSTRUCTION AND TRAFFIC HANDLING

STAGE 3

SCALE: 1" = 50′

SC-3

REVISED BY	DATE REVISED
JOSEPH CHUA	THIN BUI
CALCULATED-DESIGNED BY	CHECKED BY
FUNCTIONAL SUPERVISOR	CHRIS THOMAS

STATE OF CALIFORNIA - DEPARTMENT OF TRANSPORTATION

Caltrans

MINOR A

LAST REVISION 03-21-11 | DATE PLOTTED => 21-MAR-2011 | TIME PLOTTED => 13:38

Dist	COUNTY	ROUTE	POST MILES TOTAL PROJECT	SHEET No.	TOTAL SHEETS
11	SD	125	10.6/10.9	19	64

REGISTERED CIVIL ENGINEER 03-15-11 DATE

03-21-11
PLANS APPROVAL DATE

REGISTERED PROFESSIONAL ENGINEER JOSEPH CHUA No. 53168 Exp. 06-30-11 CIVIL STATE OF CALIFORNIA

THE STATE OF CALIFORNIA OR ITS OFFICERS OR AGENTS SHALL NOT BE RESPONSIBLE FOR THE ACCURACY OR COMPLETENESS OF SCANNED COPIES OF THIS PLAN SHEET.

Temp PAVEMENT MARKING (PAINT)

ROUTE	LOCATION	TYPE III (R) ARROW SQFT	TYPE III (L) ARROW SQFT	TYPE II (B) ARROW SQFT	REMARKS
125	OFF RAMP TO JAMACHA Rd	84	84	118	TEMPORARY
	SUBTOTAL	84	84	118	
	TOTAL	286			

Temp RAILING (TYPE K)

BEGIN STATION	END STATION	LENGTH (LF)
"JRS" 38+75	43+70	495
"JRS" 33+64	43+25	961
TOTAL		1,456

Temp CRASH CUSHION MODULE

STATION	ARRAY 'TS14' (EA)
"JRS" 43+00 (LEFT)	14
"JRS" 43+00 (RIGHT)	14
TOTAL	28

Temp PAVEMENT MARKER / Temp TRAFFIC STRIPE

ROUTE	LOCATION	DETAIL NUMBER	NON REFLECTIVE TYPE A WHITE EA	RETROREFLECTIVE TYPE H YELLOW EA	RETROREFLECTIVE TYPE G CLEAR EA	(PAINT) (LF) 1-COAT	REMARKS
125	SB OFF RAMP TO JAMACHA Rd	8/10	102		18	800	TEMPORARY
		25A		43		1,200	
		27B				1,200	
		38			5	100	
		38B			10	100	
	SUBTOTAL		102	43	33	3,400	
	TOTAL		102	76		3,400	

REMOVE THERMOPLASTIC PAVEMENT MARKING

ROUTE	LOCATION	TYPE III (R) ARROW SQFT	TYPE III (L) ARROW SQFT	TYPE II (B) ARROW SQFT	REMARKS
125	OFF RAMP TO JAMACHA Rd	84	84	118	EXISTING
	SUBTOTAL	84	84	118	
	TOTAL	286*			

REMOVE PAVEMENT MARKER (N)

ROUTE	LOCATION	DETAIL NUMBER	NON REFLECTIVE TYPE A [N] WHITE EA	RETROREFLECTIVE TYPE H [N] YELLOW EA	RETROREFLECTIVE TYPE G [N] CLEAR EA	REMARKS
125	SB OFF RAMP TO JAMACHA Rd	8/10	102		18	EXISTING
		25A		43		
		27B				
		38			5	
		38B			10	
	SUBTOTAL		102	43	33	
	TOTAL		102	76		

REMOVE PAINTED TRAFFIC STRIPE

ROUTE	LOCATION	DETAIL NUMBER	PAINT (LF)	REMARKS
125	SB OFF RAMP TO JAMACHA Rd	8/10	240	EXISTING
		27B	1,200	
	TOTAL		1,440*	

TRAFFIC PLASTIC DRUMS

LOCATION	EACH
SHEET SC-1	6
TOTAL	6

REMOVE THERMOPLASTIC TRAFFIC STRIPE

ROUTE	LOCATION	DETAIL NUMBER	LF	REMARKS
125	SB OFF RAMP TO JAMACHA Rd	38	200	EXISTING
125	SB OFF RAMP TO JAMACHA Rd	38B	200	
	TOTAL		400*	

NOTES:

[N] NOT A SEPARATE PAY ITEM, FOR INFORMATION ONLY.
* SEE PDQ SHEET FOR ADDITIONAL QUANTITIES.

STAGE CONSTRUCTION QUANTITIES

SCQ-1

STATE OF CALIFORNIA - DEPARTMENT OF TRANSPORTATION
Caltrans
MINOR A

FUNCTIONAL SUPERVISOR: CHRIS THOMAS
CALCULATED-DESIGNED BY: JOSEPH CHUA
CHECKED BY: THIN BUI
REVISED BY
DATE REVISED

LAST REVISION 03-21-11
DATE PLOTTED => 21-MAR-2011
TIME PLOTTED => 13:38

Dist	COUNTY	ROUTE	POST MILES TOTAL PROJECT	SHEET No.	TOTAL SHEETS
11	SD	125	10.6/10.9	20	64

REGISTERED CIVIL ENGINEER 03-15-11 DATE

03-21-11
PLANS APPROVAL DATE

REGISTERED PROFESSIONAL ENGINEER SHAHIN T. ADIBI No. 54839 Exp. 06-30-12 CIVIL STATE OF CALIFORNIA

THE STATE OF CALIFORNIA OR ITS OFFICERS OR AGENTS SHALL NOT BE RESPONSIBLE FOR THE ACCURACY OR COMPLETENESS OF SCANNED COPIES OF THIS PLAN SHEET.

NOTES:

1. EXACT LOCATION OF DETOUR SIGNS SHALL BE DETERMINED BY THE ENGINEER.
2. FEDERAL MANUAL ON UNIFORM TRAFFIC CONTROL DEVICES (MUTCD) SIGN CODES ARE SHOWN UNLESS DESIGNATED BY (CA), INDICATING CALIFORNIA MUTCD.
3. SEE CONSTRUCTION AREA SIGN PLAN FOR ADDITIONAL CONSTRUCTION AREA SIGNS.

LEGEND

XX = CONSTRUCTION AREA SIGNS

SPCL = SPECIAL CONSTRUCTION AREA SIGN

Caps = CAPITAL LETTERING

→ = DETOUR DIRECTION OF TRAVEL

CONSTRUCTION AREA SIGNS

SIGN No.	TYPE	PANEL SIZE (In)	No. OF POSTS AND SIZE (In)	No. OF SIGNS
4	SC9 (CA)	36 X 36	PORTABLE	8
5	M4-8a	24 X 18	PORTABLE	1
6	SPCL-1	72 X 72	PORTABLE	1
			TOTAL	10

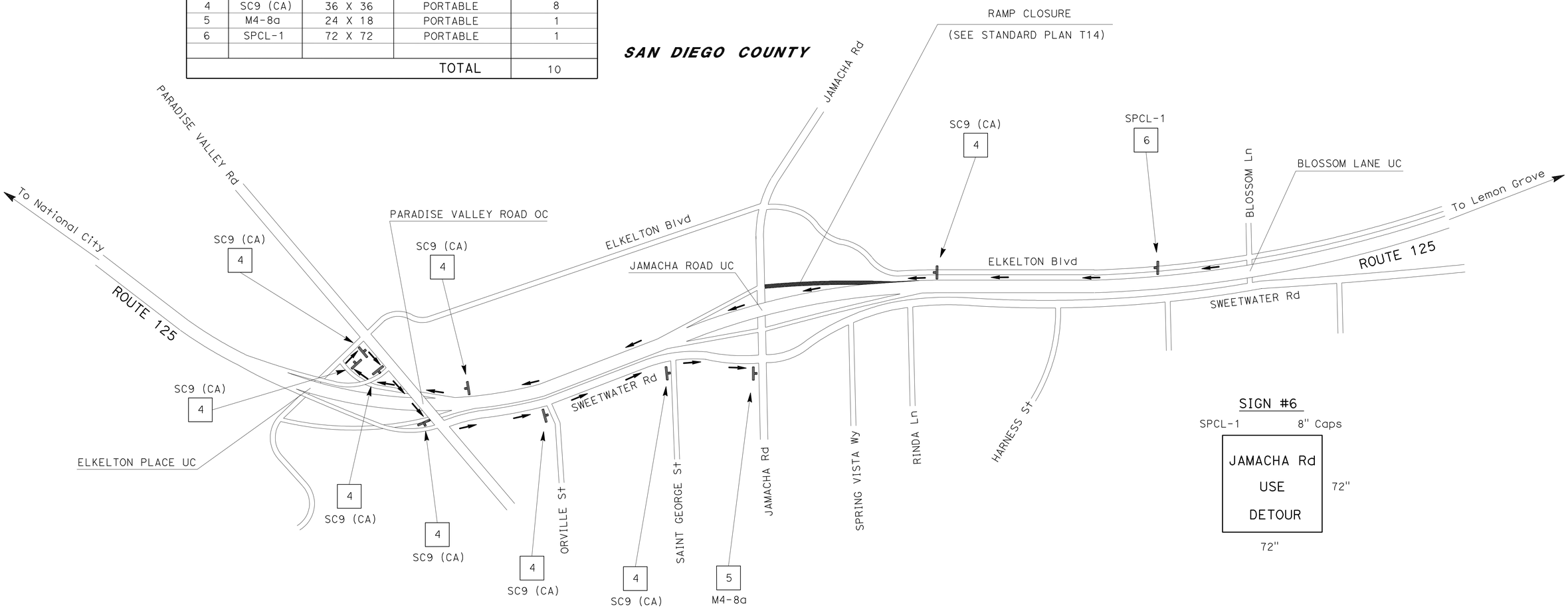

SIGN #6

SPCL-1 8" Caps

JAMACHA Rd
USE
DETOUR

72" 72"

THIS PLAN ACCURATE FOR TRAFFIC HANDLING WORK ONLY.

TRAFFIC HANDLING PLAN

NO SCALE

TH-1

STATE OF CALIFORNIA - DEPARTMENT OF TRANSPORTATION
Caltrans® TRAFFIC DESIGN

FUNCTIONAL SUPERVISOR: CAMILLE ABOU FADEL
CALCULATED-DESIGNED BY: SHAHIN ADIBI
CHECKED BY: ROBERT EDEJER
REVISED BY
DATE REVISED

LAST REVISION 03-15-11
DATE PLOTTED => 21-MAR-2011
TIME PLOTTED => 13:38

Dist	COUNTY	ROUTE	POST MILES TOTAL PROJECT	SHEET No.	TOTAL SHEETS
11	SD	125	10.6/10.9	21	64

REGISTERED CIVIL ENGINEER 03-15-11 DATE

03-21-11
PLANS APPROVAL DATE

REGISTERED PROFESSIONAL ENGINEER
SHAHIN T. ADIBI
No. 54839
Exp. 06/30/12
CIVIL
STATE OF CALIFORNIA

THE STATE OF CALIFORNIA OR ITS OFFICERS OR AGENTS SHALL NOT BE RESPONSIBLE FOR THE ACCURACY OR COMPLETENESS OF SCANNED COPIES OF THIS PLAN SHEET.

LEGEND:

- (XX) = PAVEMENT DELINEATION DETAIL
- (X) = OVERHEAD SIGN STRUCTURE
- = CHANGE OF PAVEMENT DELINEATION DETAIL
- (XX) = ROADSIDE SIGN
- MA (XX) = INSTALL SIGN (MAST-ARM HANGER METHOD)
- EP (XX) = INSTALL ROADSIDE SIGN PANEL ON EXISTING POST (WALL)
- SS (XX) = INSTALL SIGN (STRAP AND SADDLE BRACKET METHOD)
- RM (XX) = REMOVE ROADSIDE SIGN
- RB (XX) = REMOVE PEDESTRIAN BARRICADE
- RM (XX) = REMOVE PAVEMENT DELINEATION DETAIL

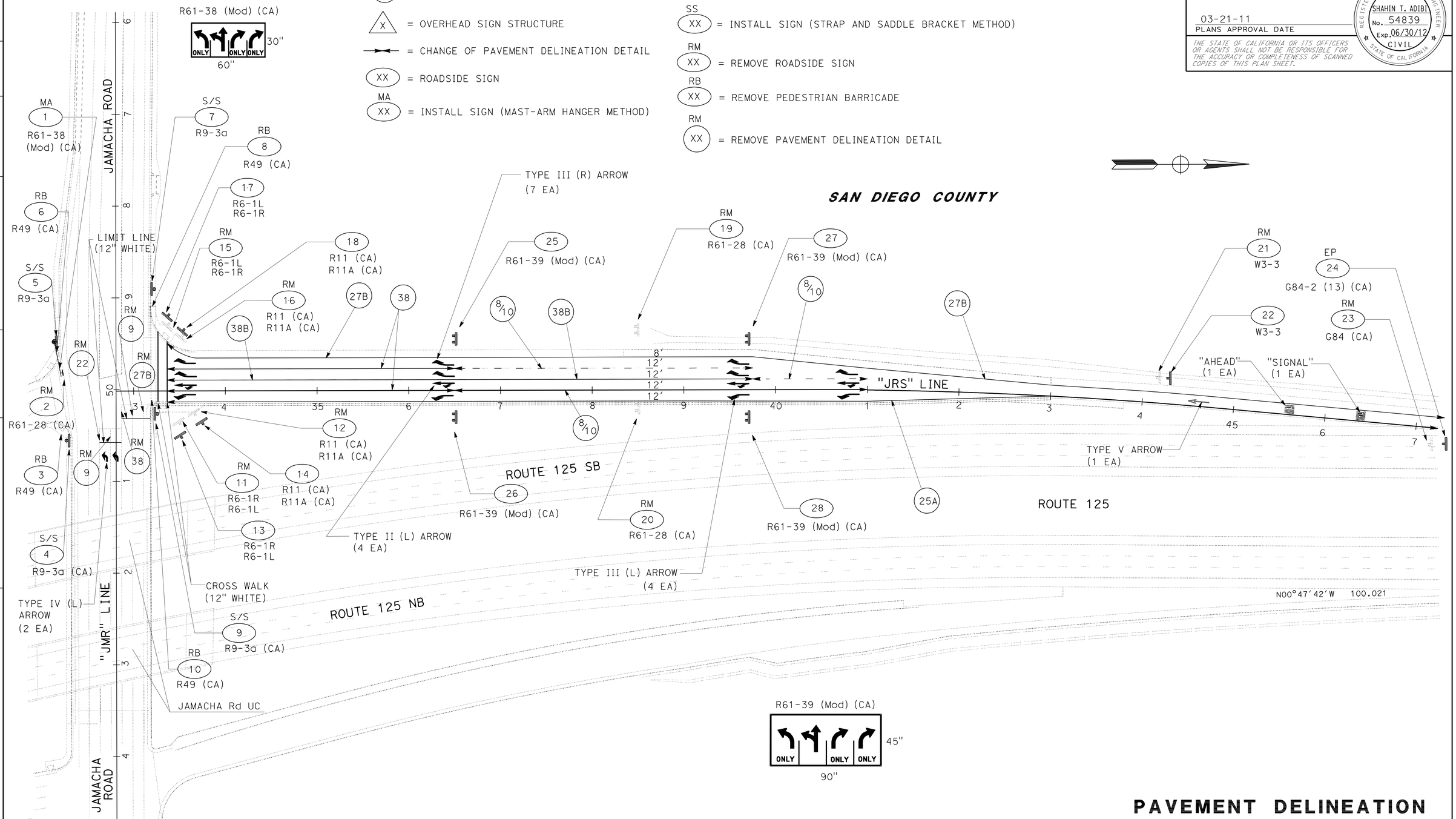

PAVEMENT DELINEATION AND SIGN PLAN

SCALE: 1" = 50'

PD-1

THIS PLAN ACCURATE FOR PAVEMENT DELINEATION AND SIGN WORK ONLY

REVISED BY	DATE REVISED
ROBERT EDEJER	SHAHIN T. ADIBI
CALCULATED-DESIGNED BY	CHECKED BY
FUNCTIONAL SUPERVISOR	CAMILLE ABOUFADEL

STATE OF CALIFORNIA - DEPARTMENT OF TRANSPORTATION
Caltrans
TRAFFIC DESIGN

LAST REVISION 03-15-11
DATE PLOTTED => 21-MAR-2011
TIME PLOTTED => 13:38

Dist	COUNTY	ROUTE	POST MILES TOTAL PROJECT	SHEET No.	TOTAL SHEETS
11	SD	125	10.6/10.9	22	64

REGISTERED CIVIL ENGINEER 03-15-11 DATE

03-21-11
PLANS APPROVAL DATE

REGISTERED PROFESSIONAL ENGINEER SHAHIN T. ADIBI No. 54839 Exp. 06/30/12 CIVIL STATE OF CALIFORNIA

THE STATE OF CALIFORNIA OR ITS OFFICERS OR AGENTS SHALL NOT BE RESPONSIBLE FOR THE ACCURACY OR COMPLETENESS OF SCANNED COPIES OF THIS PLAN SHEET.

REMOVE PAINTED TRAFFIC STRIPE

ROUTE	LOCATION	DETAIL NUMBER	PAINT (LF)	REMARKS
125	SB OFF RAMP TO JAMACHA Rd	8/10	240	TEMPORARY
		25A	1300	Temp/Exist
		27B	1700	Temp/Exist
		38	200	TEMPORARY
		38B	200	
	WB JAMACHA Rd	9	7	EXISTING
		22	30	
		27B	15	
		TOTAL	3692*	

* - SEE SCQ-1 SHEETS FOR ADDITIONAL QUANTITIES.

REMOVE PAVEMENT MARKER (N)

ROUTE	LOCATION	DETAIL NUMBER	NON REFLECTIVE	RETROREFLECTIVE			REMARKS
			TYPE A	TYPE D	TYPE G	TYPE H	
			WHITE	YELLOW	CLEAR	YELLOW	
			EA	EA	EA	EA	
125	SB OFF RAMP TO JAMACHA Rd	8/10	102		18		TEMPORARY
		25A				43	
		38			5		
		38B			10		
	WB JAMACHA Rd	9			1		EXISTING
		22		2			
		38			1		
	SUBTOTAL		102	2	35	43	
	TOTAL		102	80			

(N) - NOT A SEPARATE PAY ITEM. FOR INFORMATION ONLY.

REMOVE THERMOPLASTIC TRAFFIC STRIPE

ROUTE	LOCATION	DETAIL NUMBER	LF	REMARKS
125	WB JAMACHA Rd	38	30	EXISTING
		TOTAL	30*	

* - SEE SCQ-1 SHEETS FOR ADDITIONAL QUANTITIES.

PAVEMENT MARKER / TRAFFIC STRIPE

ROUTE	LOCATION	DETAIL NUMBER	PAVEMENT MARKER: NON REFLECTIVE TYPE A WHITE EA	PAVEMENT MARKER: RETROREFLECTIVE TYPE H YELLOW EA	PAVEMENT MARKER: RETROREFLECTIVE TYPE G CLEAR EA	TRAFFIC STRIPE: THERMOPLASTIC (LF) 4" BROKEN (17-7)	TRAFFIC STRIPE: THERMOPLASTIC (LF) 4" SOLID	TRAFFIC STRIPE: THERMOPLASTIC (LF) 8" SOLID	REMARKS
125	SB OFF RAMP TO JAMACHA Rd	8/10	162		27	1220			PERMANENT
		25A		41			1300		
		27B					1700		
		38			28			640	
		38B			56			645	
		SUBTOTAL	162	41	111	1220	3000	1285	
		TOTAL	162	152		1220	3000	1285	

REMOVE PAINTED PAVEMENT MARKING

ROUTE	LOCATION	TYPE V ARROW SQFT	TYPE III (R) ARROW SQFT	TYPE III (L) ARROW SQFT	TYPE II (B) ARROW SQFT	REMARKS
125	OFF RAMP TO JAMACHA Rd	33	84	84	118	TEMPORARY
	SUBTOTAL	33	84	84	118	
	TOTAL	319				

* - SEE SCQ-1 SHEETS FOR ADDITIONAL QUANTITIES.

THERMOPLASTIC PAVEMENT MARKING

ROUTE	LOCATION	TYPE V ARROW SQFT	TYPE III (R) ARROW SQFT	TYPE III (L) ARROW SQFT	TYPE II (L) ARROW SQFT	TYPE IV (L) ARROW SQFT	SIGNAL SQFT	AHEAD SQFT	CROSSWALK/ LIMIT LINE 12 INCH SQFT	REMARKS
125	OFF RAMP TO JAMACHA Rd	33	294	168	180		32	31	150	PERMANENT
	WB JAMACHA Rd					30			56	
	SUBTOTAL	33	294	168	180	30	32	31	206	
	TOTAL	974								

REMOVE THERMOPLASTIC PAVEMENT MARKING

ROUTE	LOCATION	SIGNAL SQFT	AHEAD SQFT	TYPE IV (L) ARROW SQFT	CROSSWALK 12 INCH SQFT	REMARKS
125	OFF RAMP TO JAMACHA Rd	32	31		120	EXISTING
	WB JAMACHA Rd			30	56	
	SUBTOTAL	32	31	30	176	
	TOTAL	269*				

* - SEE SCQ-1 SHEETS FOR ADDITIONAL QUANTITIES.

PAVEMENT DELINEATION QUANTITIES

PDQ-1

STATE OF CALIFORNIA - DEPARTMENT OF TRANSPORTATION
Caltrans
TRAFFIC DESIGN

FUNCTIONAL SUPERVISOR: CAMILLE ABOUFADEL
CALCULATED-DESIGNED BY: ROBERT EDEJER
CHECKED BY: SHAHIN T. ADIBI
REVISED BY
DATE REVISED

LAST REVISION 03-15-11
DATE PLOTTED => 21-MAR-2011
TIME PLOTTED => 13:38

Dist	COUNTY	ROUTE	POST MILES TOTAL PROJECT	SHEET No.	TOTAL SHEETS
11	SD	125	10.6/10.9	23	64

REGISTERED CIVIL ENGINEER 03-15-11 DATE

03-21-11
PLANS APPROVAL DATE

REGISTERED PROFESSIONAL ENGINEER
SHAHIN T. ADIBI
No. 54839
Exp. 06/30/12
CIVIL
STATE OF CALIFORNIA

THE STATE OF CALIFORNIA OR ITS OFFICERS OR AGENTS SHALL NOT BE RESPONSIBLE FOR THE ACCURACY OR COMPLETENESS OF SCANNED COPIES OF THIS PLAN SHEET.

SIGN 1
R61-38 (Mod) (CA)

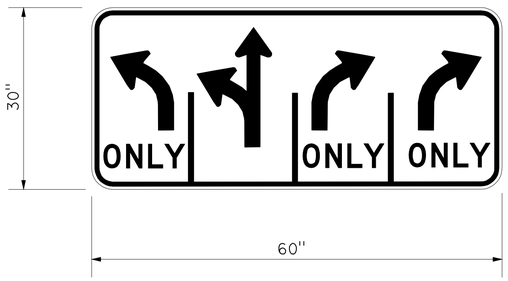

LEGEND				ARROW	
LINE No.	U/L	Caps	Num	Deg	Length
1		4"D			

SIGN 25, 26, 27, 28
R61-39 (Mod) (CA)

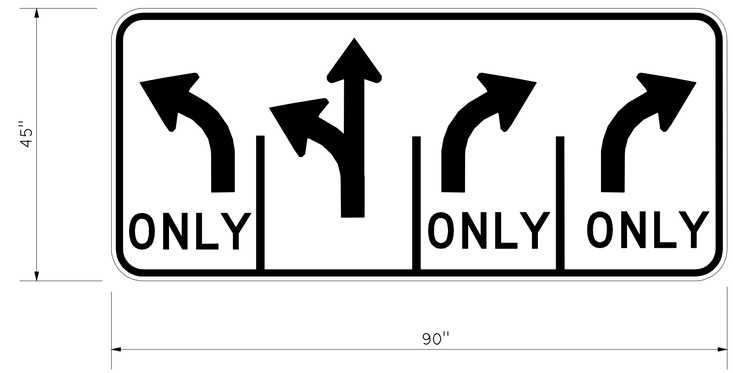

LEGEND				ARROW	
LINE No.	U/L	Caps	Num	Deg	Length
1		6"D			

SIGN DETAILS

SD-1

STATE OF CALIFORNIA - DEPARTMENT OF TRANSPORTATION
Caltrans
TRAFFIC DESIGN

FUNCTIONAL SUPERVISOR: CAMILLE ABOUFADEL
CALCULATED-DESIGNED BY: ROBERT EDEJER
CHECKED BY: SHAHIN T. ADIBI
REVISED BY
DATE REVISED

LAST REVISION 03-15-11
DATE PLOTTED => 21-MAR-2011
TIME PLOTTED => 13:38

Dist	COUNTY	ROUTE	POST MILES TOTAL PROJECT	SHEET No.	TOTAL SHEETS
11	SD	125	10.6/10.9	24	64

REGISTERED CIVIL ENGINEER 03-15-11 DATE

03-21-11
PLANS APPROVAL DATE

REGISTERED PROFESSIONAL ENGINEER SHAHIN T. ADIBI No. 54839 Exp. 06/30/12 CIVIL STATE OF CALIFORNIA

THE STATE OF CALIFORNIA OR ITS OFFICERS OR AGENTS SHALL NOT BE RESPONSIBLE FOR THE ACCURACY OR COMPLETENESS OF SCANNED COPIES OF THIS PLAN SHEET.

NOTES:

1. FEDERAL MANUAL ON UNIFORM TRAFFIC CONTROL DEVICES (MUTCD) SIGN CODES ARE SHOWN UNLESS DESIGNATED BY (CA) INDICATING STANDARD CALIFORNIA SIGN SPECIFICATIONS ARE USED.
2. MINIMUM POST LENGTHS WERE CALCULATED ASSUMING A LEVEL GROUND SURFACE FROM THE EP. ENSURE "C" DIMENSION IS MET. POST LENGTHS MAY VARY DUE TO SITE CONDITIONS.
3. EXACT LOCATIONS OF SIGNS AND POSTS SHALL BE DETERMINED BY THE ENGINEER.
4. REFER TO "FURNISH ROADSIDE SIGN PANEL" CHART FOR FURTHER INFORMATION.
5. (N) - NOT A SEPARATE PAY ITEM. FOR INFORMATION ONLY.

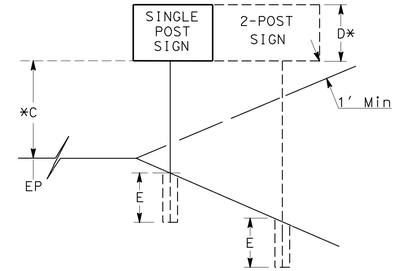

*TO BOTTOM OF LOWER PANEL ON MULTIPLE SIGN INSTALLATIONS.

ROADSIDE SIGN QUANTITIES

SIGN No.	CODE	SHEET No.	PANEL SIZE Horiz	PANEL SIZE Vert	D	C	E	Min POST LENGTH	POST SIZE 4X4	POST SIZE 4X6	POST SIZE 6X6	POST SIZE 6X8	ONE POST	TWO POST	REMOVE ROADSIDE SIGN	INSTALL SIGN (STRAP & SADDLE BRACKET METHOD) (N)	MAST ARM MOUNTED (N)	INSTALL SIGN PANEL ON EXISTING POST (WALL)	REMOVE PEDESTRIAN BARRICADE (N)	REMARKS
			INCHES X INCHES		LF	LF	LF	LF	INCHES X INCHES				EA	EA	EA	EA	EA	EA	EA	
1	R61-38 (Mod) (CA)	PD-1	60	30													1			ATTACH TO EXISTING SIGNAL POLE MAST ARM
2	R61-28 (CA)		48	30											1					REMOVE FROM EXISTING SIGNAL POLE MAST ARM
3	R49 (CA)		42	18															1	REMOVE EXISTING SIGN PANEL AND BARRICADE
4	R9-3a (CA)		24	24												1				ATTACH TO EXISTING SIGNAL POLE
5	R9-3a (CA)		24	24												1				ATTACH TO EXISTING SIGNAL POLE
6	R49 (CA)		42	18															1	REMOVE EXISTING SIGN PANEL AND BARRICADE
7	R9-3a (CA)		24	24												1				ATTACH TO EXISTING SIGNAL POLE
8	R49 (CA)		42	18															1	REMOVE EXISTING SIGN PANEL AND BARRICADE
9	R9-3a (CA)		24	24												1				ATTACH TO EXISTING SIGNAL POLE
10	R49 (CA)		42	18															1	REMOVE EXISTING SIGN PANEL AND BARRICADE
11	R6-1R		54	18											1					REMOVE EXISTING SIGN PANEL AND POST
	R6-1L		54	18																REMOVE EXISTING SIGN PANEL AND POST
12	R11 (CA)		36	36											1					REMOVE EXISTING SIGN PANEL AND POST
	R11A (CA)		36	21																REMOVE EXISTING SIGN PANEL AND POST
13	R6-1R		54	18	1.5	1.5	3.5	6.5	X				1							INSTALL NEW SIGN PANEL AND POST
	R6-1L		54	18																INSTALL NEW SIGN PANEL AND POST
14	R11 (CA)		36	36	4.8	2.0	4.5	11.3		X			1							INSTALL NEW SIGN PANEL AND POST
	R11A (CA)		36	21																INSTALL NEW SIGN PANEL AND POST
15	R6-1L		54	18											1					REMOVE EXISTING SIGN PANEL AND POST
	R6-1R		54	18																REMOVE EXISTING SIGN PANEL AND POST
16	R11 (CA)		36	36											1					REMOVE EXISTING SIGN PANEL AND POST
	R11A (CA)		36	21																REMOVE EXISTING SIGN PANEL AND POST
17	R6-1L		54	18	1.5	1.5	3.5	6.5	X				1							INSTALL NEW SIGN PANEL AND POST
	R6-1R		54	18																INSTALL NEW SIGN PANEL AND POST
18	R11 (CA)		36	36	4.8	2.0	4.5	11.3		X			1							INSTALL NEW SIGN PANEL AND POST
	R11A (CA)		36	21																INSTALL NEW SIGN PANEL AND POST
19	R61-28 (CA)		48	30											1					REMOVE EXISTING SIGN PANEL AND POST
20	R61-28 (CA)		48	30											1					REMOVE EXISTING SIGN PANEL AND POST
21	W3-3		36	36											1					REMOVE EXISTING SIGN PANEL AND POST
22	W3-3		36	36	3.0	7.0	4.5	14.5		X			1							INSTALL NEW SIGN PANEL AND POST
23	G84 (CA)		54	48											1					REMOVE EXISTING SIGN PANEL FROM EXISTING WALL
24	G84-2 (13) (CA)		54	48														1		ATTACH NEW SIGN PANEL TO EXISTING WALL
25	R61-39 (Mod) (CA)		90	45	3.75	7.0	5.0	15.75			X			1						INSTALL NEW SIGN PANEL AND POST
26	R61-39 (Mod) (CA)		90	45	3.75	7.0	5.0	15.75			X			1						INSTALL NEW SIGN PANEL AND POST
27	R61-39 (Mod) (CA)		90	45	3.75	7.0	5.0	15.75			X			1						INSTALL NEW SIGN PANEL AND POST
28	R61-39 (Mod) (CA)		90	45	3.75	7.0	5.0	15.75			X			1						INSTALL NEW SIGN PANEL AND POST
								TOTAL					5	4	9	4	1	1	4	

SIGN QUANTITIES

SQ-1

STATE OF CALIFORNIA - DEPARTMENT OF TRANSPORTATION
Caltrans
TRAFFIC DESIGN

FUNCTIONAL SUPERVISOR: CAMILLE ABOUFADEL
CALCULATED-DESIGNED BY: ROBERT EDEJER
CHECKED BY: SHAHIN T. ADIBI
REVISED BY
DATE REVISED

LAST REVISION 03-15-11
DATE PLOTTED => 21-MAR-2011
TIME PLOTTED => 13:38

Dist	COUNTY	ROUTE	POST MILES TOTAL PROJECT	SHEET No.	TOTAL SHEETS
11	SD	125	10.6/10.9	25	64

REGISTERED CIVIL ENGINEER DATE 03-15-11

03-21-11
PLANS APPROVAL DATE

REGISTERED PROFESSIONAL ENGINEER
SHAHIN T. ADIBI
No. 54839
Exp. 06/30/12
CIVIL
STATE OF CALIFORNIA

THE STATE OF CALIFORNIA OR ITS OFFICERS OR AGENTS SHALL NOT BE RESPONSIBLE FOR THE ACCURACY OR COMPLETENESS OF SCANNED COPIES OF THIS PLAN SHEET.

NOTES:

1. FEDERAL MANUAL ON UNIFORM TRAFFIC CONTROL DEVICES (MUTCD) SIGN CODES ARE SHOWN UNLESS DESIGNATED BY (CA), INDICATING CALIFORNIA MUTCD.
2. PROTECTIVE OVERLAY DESIGNATIONS ARE AS FOLLOWS:
   SOC-SPRAY-ON COATING, SF-STANDARD FILM, AND PF-PREMIUM FILM.
3. REFER TO "ROADSIDE SIGN QUANTITIES" CHART FOR FURTHER INFORMATION.
4. GREEN - Grn, WHITE - Wht, BLACK - Blk, BLUE - Blu, YELLOW - Ylw, BROWN - Brn, RED - Red, ORANGE - Org

FURNISH ROADSIDE SIGN PANEL

SIGN No.	CODE	PANEL SIZE Horiz (INCHES X INCHES)	PANEL SIZE Vert (INCHES X INCHES)	BACKGROUND SHEETING COLOR	BACKGROUND RETRO-REFLECTIVE ASTM TYPE	LEGEND SHEETING COLOR	LEGEND REFLECTIVE ASTM TYPE	LEGEND BLACK (NON-REFLECTIVE)	SIGN PANEL SINGLE SHEET ALUMINUM (SQFT) UNFRAMED 0.063 INCHES	SIGN PANEL SINGLE SHEET ALUMINUM (SQFT) UNFRAMED 0.080 INCHES	SIGN PANEL SINGLE SHEET ALUMINUM (SQFT) FRAMED 0.063 INCHES	SIGN PANEL SINGLE SHEET ALUMINUM (SQFT) FRAMED 0.080 INCHES	SIGN PANEL PROTECTIVE OVERLAY PREMIUM FILM	REMARKS
1	R61-38 Mod (CA)	60	30	Wht	III	Blk		X			12.5		X	
4	R9-3a	24	24	Wht	III	Blk/Red		X	4.0				X	
5	R9-3a	24	24	Wht	III	Blk/Red		X	4.0				X	
7	R9-3a	24	24	Wht	III	Blk/Red		X	4.0				X	
9	R9-3a	24	24	Wht	III	Blk/Red		X	4.0				X	
13	R6-1R	54	18	Blk		Blk/Wht	IV	X		6.75			X	
	R6-1L	54	18	Blk		Blk/Wht	IV	X		6.75			X	
14	R11 (CA)	36	36	Wht	VII	Red	VII		9.0				X	
	R11A (CA)	36	21	Red	VII	Wht	VII		5.25				X	
17	R6-1L	54	18	Blk		Blk/Wht	IV	X		6.75			X	
	R6-1R	54	18	Blk		Blk/Wht	IV	X		6.75			X	
18	R11 (CA)	36	36	Wht	VII	Red	VII		9.0				X	
	R11A (CA)	36	21	Red	VII	Wht	VII		5.25				X	
22	W3-3	36	36	Ylw	VII	Blk		X	9.0				X	
24	G84-2 (13) (CA)	54	48	Grn	IV	Wht	IV			18.0			X	
25	R61-39 Mod (CA)	90	45	Wht	III	Blk		X				28.13	X	
26	R61-39 Mod (CA)	90	45	Wht	III	Blk		X				28.13	X	
27	R61-39 Mod (CA)	90	45	Wht	III	Blk		X				28.13	X	
28	R61-39 Mod (CA)	90	45	Wht	III	Blk		X				28.13	X	
							TOTAL		53.50	45.00	12.50	112.52		

SIGN QUANTITIES

SQ-2

REVISED BY | DATE REVISED
ROBERT EDEJER | SHAHIN T. ADIBI
CALCULATED-DESIGNED BY | CHECKED BY
FUNCTIONAL SUPERVISOR: CAMILLE ABOUFADEL
STATE OF CALIFORNIA - DEPARTMENT OF TRANSPORTATION
Caltrans TRAFFIC DESIGN

LAST REVISION 03-15-11 | DATE PLOTTED => 21-MAR-2011 | TIME PLOTTED => 13:39

Dist	COUNTY	ROUTE	POST MILES TOTAL PROJECT	SHEET No.	TOTAL SHEETS
11	SD	125	10.6/10.9	26	64

REGISTERED CIVIL ENGINEER 03-15-11 DATE

03-21-11
PLANS APPROVAL DATE

REGISTERED PROFESSIONAL ENGINEER JOSEPH CHUA No. 53168 Exp. 06-30-11 CIVIL STATE OF CALIFORNIA

THE STATE OF CALIFORNIA OR ITS OFFICERS OR AGENTS SHALL NOT BE RESPONSIBLE FOR THE ACCURACY OR COMPLETENESS OF SCANNED COPIES OF THIS PLAN SHEET.

CONSTRUCTION QUANTITIES

SHEET	LINE	BEGIN STATION	END STATION	TOTAL AREA [N] (SQFT) FOR AC (TYPE HMA)	TOTAL AREA [N] (SQFT) FOR CLASS 2 AGGREGATE BASE	REMOVE CONCRETE CASE F CURB AND SIDEWALK (CY)	HMA (TYPE A) (TON)	TACK COAT (TON)	ASPHALTIC EMULSION (FOG SEAL COAT) (TON)	CLASS 2 AGGREGATE BASE (CY)
L-1	"JRS"	38+64	43+00	6,104	6,104	10	226.1	0.19	0.12	731.5
		33+18	42+37.7	10,761	10,761		398	0.33		1536.5
			TOTAL			10	624.1	0.52	0.12	2,268.0**

** - SEE R1-1 FOR ADDITIONAL QUANTITIES

MINOR CONCRETE (MISC. CONSTRUCTION)

SHEET	BEGIN STATION	END STATION	VOLUME (CY)	REMARKS
L-1	33+15	33+40	10	CURB, RAMP, SIDEWALK & CURB
L-1	33+40	42+38	55.4	CONCRETE CURB
		TOTAL	65.4	

EARTHWORK

BEGIN STATION "JRS" R†	END STATION "JRS" R†	EMBANKMENT [N] (CY)	ROADWAY EXCAVATION (CY)	BEGIN STATION "JRS" L†	END STATION "JRS" L†	EMBANKMENT [N] (CY)	ROADWAY EXCAVATION (CY)
32+18	32+25	0	0	38+64	39+00	0	152
32+25	33+39	0	12	39+00	39+50	0	201
33+39	33+40	0	2	39+50	40+00	0	272
33+40	33+50	0	25	40+00	40+50	0	168
33+50	34+00	0	338	40+50	41+00	0	166
34+00	34+50	0	241	41+00	41+50	0	135
34+50	35+00	0	116	41+50	42+00	0	90
35+00	35+50	0	118	42+00	42+50	0	57
35+50	36+00	0	124	42+50	43+00	0	42
36+00	36+50	0	339	SUB TOTAL		0	1283
36+50	37+00	0	125				
37+00	37+50	0	116				
37+50	38+00	0	326				
38+00	38+50	0	120				
38+50	39+00	0	127				
39+00	39+50	0	344				
39+50	40+00	0	127				
40+00	40+50	0	116				
40+50	41+00	0	106				
41+00	41+50	0	303				
41+50	42+00	0	58				
42+00	42+38	0	30				
SUB TOTAL		0	3,213				
TOTAL		0	4,496				

EXTEND IRRIGATION CROSSOVERS

SHEET	LINE	STATION	Exist Cond SIZE (INCH)	Exist Cond TYPE	SIDE R†	SIDE L†	EXTEND Cond LENGTH (LF) SIZE (IN) DN 10"		CB	OL	(N) WATER LINE CROSSOVER SIZE(INCH)	(N) SPRINKLER CONTROL CROSSOVER SIZE(INCH)
L-1	"JRS"	39+48	8"	WSP		X	58			X	3"	2"
L-1	"JRS"	39+48	8"	WSP	X		12			X	3"	2"
						TOTAL	70					

(N) - NOT A SEPARATE PAY ITEM, FOR INFORMATION ONLY
X - DENOTES REQUIREMENT
DN - DIAMETER NOMINAL

CB - COUPLING BAND
OL - OVERLAP

METAL BEAM GUARD RAILING

⬡ MBGR No.	SHEET No.	LAYOUT TYPE (N)	MBGR (LF)	MBGR TRANSITION RAILING (TYPE WB) (EA)	BURIED POST END ANCHOR (N) (EA)	GUARD RAILING DELINEATOR (N) (CLASS 1) (EA)	REMARKS
1	L-1	12C	55	1	1	2	
TOTAL			55	1	1		

MINOR CONCRETE (MINOR STRUCTURE)

SHEET	LINE	BEGIN STATION	END STATION	VOLUME (CY)	REMARKS
C-2	"JRS"	42+67	42+76	1.7	ANCHOR BLOCK FOR TRANSITION RAILING CONNECTION
			TOTAL	1.7*	

* SEE DQ SHEET FOR ADDITIONAL QUANTITIES

NOTE: [N] NOT A SEPARATE PAY ITEM, FOR INFORMATION ONLY.

SUMMARY OF QUANTITIES
Q-1

STATE OF CALIFORNIA - DEPARTMENT OF TRANSPORTATION
Caltrans
MINOR A
FUNCTIONAL SUPERVISOR: CHRIS THOMAS
CALCULATED-DESIGNED BY: JOSEPH CHUA
CHECKED BY: THIN BUI
REVISED BY
DATE REVISED

LAST REVISION 03-21-11
DATE PLOTTED => 21-MAR-2011
TIME PLOTTED => 13:39

Dist	COUNTY	ROUTE	POST MILES TOTAL PROJECT	SHEET No.	TOTAL SHEETS
11	SD	125	10.6/10.9	27	64

REGISTERED CIVIL ENGINEER 03-15-11 DATE

03-21-11
PLANS APPROVAL DATE

REGISTERED PROFESSIONAL ENGINEER JOSEPH CHUA No. 53168 Exp. 06-30-11 CIVIL STATE OF CALIFORNIA

THE STATE OF CALIFORNIA OR ITS OFFICERS OR AGENTS SHALL NOT BE RESPONSIBLE FOR THE ACCURACY OR COMPLETENESS OF SCANNED COPIES OF THIS PLAN SHEET.

RETAINING WALL QUANTITES

RETAINING WALL	LINE	SIDE	STATION	STRUCTURAL CONCRETE (RETAINING WALL)	BAR REINFORCING STEEL (RETAINING WALL)	STRUCTURE EXCAVATION (RETAINING WALL)	STRUCTURE BACKFILL (RETAINING WALL)	PREVIOUS BACKFILL MATERIAL (RETAINING WALL)	CONCRETE BARRIER (TYPE 60D)	CLASS 2 AB
				CY	LB	CY	CY	CY	LF	CY
Rte 125 SB OFF RAMP	"RW410"	LEFT	10+00 TO 13+74	188	11935	463	307	83.3	374	142.6*

* SEE Q-1 FOR ADDITIONAL QUANTITIES

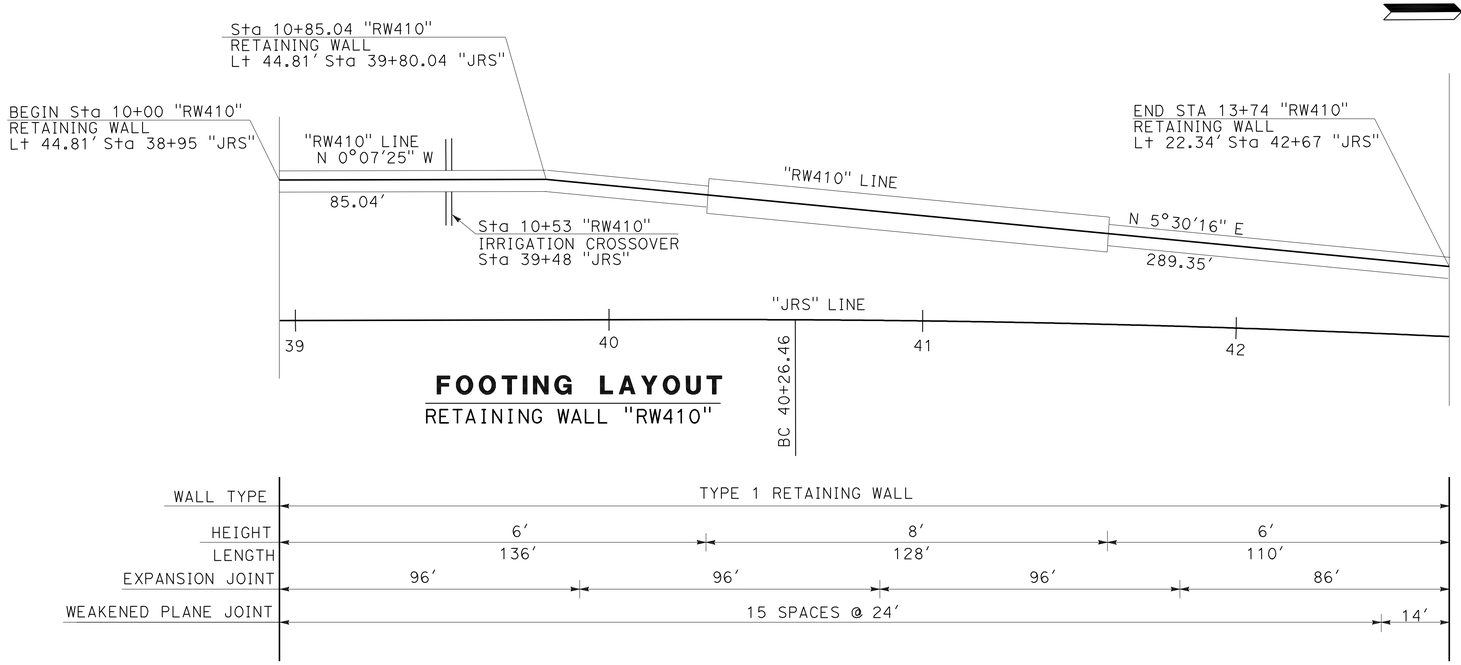

FOOTING LAYOUT

RETAINING WALL "RW410"

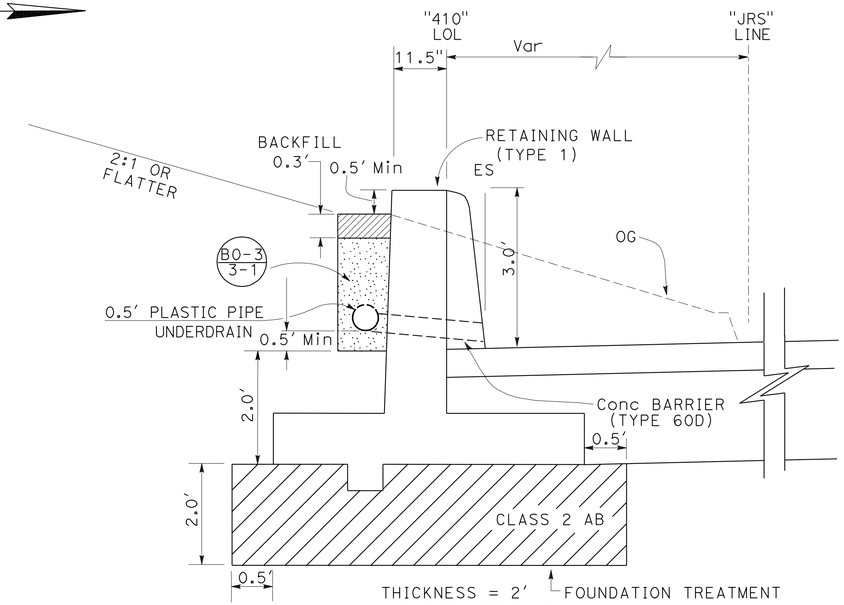

TYPICAL SECTION

Sta 38+95 TO Sta 42+67
NO SCALE

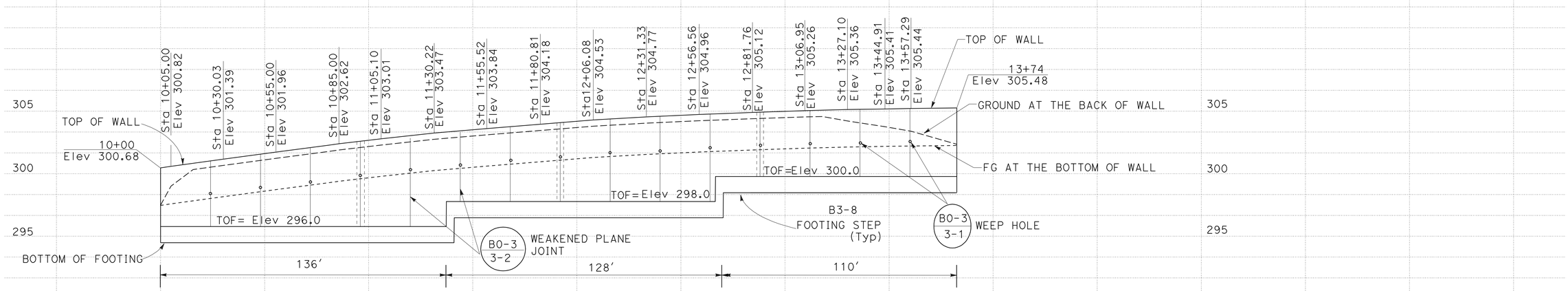

ELEVATION

RETAINING WALL "RW410"
SCALE: 1"=10' Horiz
1"=5' Vert

LEGEND:

TOF TOP OF FOOTING

RETAINING WALL PLAN

"RW410"

SCALE AS SHOWN

R1-1

REVISED BY | DATE REVISED
RICARDO PADILLA | JOSEPH CHUA
CALCULATED-DESIGNED BY | CHECKED BY
FUNCTIONAL SUPERVISOR
CHRIS M. THOMAS

STATE OF CALIFORNIA - DEPARTMENT OF TRANSPORTATION
Caltrans PROJECT DEVELOPMENT

LAST REVISION 03-15-11 | DATE PLOTTED => 21-MAR-2011 | TIME PLOTTED => 13:39

Dist	COUNTY	ROUTE	POST MILES TOTAL PROJECT	SHEET No.	TOTAL SHEETS
11	SD	125	10.6/10.9	28	64

LICENSED LANDSCAPE ARCHITECT

03-21-11
PLANS APPROVAL DATE

LICENSED LANDSCAPE ARCHITECT — STEPHEN ALVAREZ No. 2606 — Signature — Renewal Date 06-30-12 — Date 03-15-11 — STATE OF CALIFORNIA

THE STATE OF CALIFORNIA OR ITS OFFICERS OR AGENTS SHALL NOT BE RESPONSIBLE FOR THE ACCURACY OR COMPLETENESS OF SCANNED COPIES OF THIS PLAN SHEET.

ABBREVIATIONS:

AMEND — amendment
B & B — balled and burlapped
Dia — diameter
EA — each
LB — pound
Oz — ounce
Ft — foot/feet
SQFT — square feet
SQYD — square yard
CF — cubic feet
CY — cubic yard
Max — maximum
Min — minimum
NCN — no common name
No. — number
Pkt — packet
PLT ESTB — plant establishment
Pvmt — pavement
R/W — right of way
SF — state furnished
TRVD — traveled

PLANT LIST AND PLANTING SPECIFICATIONS

PLANT GROUP	PLANT No.	SYMBOL	BOTANICAL NAME	COMMON NAME	SIZE	QUANTITY EACH	HOLE SIZE (INCH) Dia	HOLE SIZE (INCH) DEPTH	BASIN TYPE	IRON SULFATE ①	SOIL AMEND ①	COMMERCIAL FERTILIZER ① PLANTING	COMMERCIAL FERTILIZER ① PLT ESTB	BASIN MULCH (CY)	STAKING	PLANTING LIMITS MINIMUM DISTANCE (Ft) FROM TRVD WAY	PVMT	FENCE	WALL	PAVED DITCH	EARTH DITCH	ON CENTER (Ft)	REMARKS
A	1	⊙	LEUCOPHYLLUM FRUTESCENS 'COMPACTA'	'COMPACT' TEXAS SAGE	No.1	72	⑬	③	II	4 Oz	-	3 Pkt	8 Oz	②	-	-	6	6	6	6	8	8	SHRUB
A	2		BACCHARIS PILULARIS 'PIGEON POINT'	DWARF COYOTE BRUSH	No.1	4,557	⑬	③	II	4 Oz	-	3 Pkt	8 Oz	0.06	-	-	6	6	6	6	8	3	SHRUB
B	3		AGAVE ATTENUATA	AGAVE	No.5	49	⑬	③	II	4 Oz	-	3 Pkt	8 Oz	0.06	-	-	8	8	8	8	8	⑦	SHRUB
F	4		ROSMARINUS OFFICINALIS 'PROSTRATUS'	CREEPING ROSEMARY	IN FLATS	6,248	-	-	-	8 LB/ 1,000 SQFT	-	8 LB/ 1,000 SQFT	4 LB/ 1,000 SQFT	-	-	-	6	6	6	6	8	1	GROUND COVER
H	5		CARPOBROTUS EDULIS	HOTTENTOT FIG	CUTTINGS	9,702	-	-	-	8 LB/ 1,000 SQFT	-	4 LB/ 1,000 SQFT	2 LB/ 1,000 SQFT	-	-	-	6	6	6	6	8	1	GROUND COVER
U	6	ⓤ	JACARANDA MIMOSIFOLIA	JACARANDA	No.15	3	⑬	③	II	8 Oz	-	5 Pkt	8 Oz	0.20	⑭	30	-	10	10	10	12	⑦	TREE

APPLICABLE WHEN CIRCLED:

① - QUANTITIES SHOWN ARE "PER PLANT" UNLESS SHOWN AS SQFT OR SQYD APPLICATION RATES
② - BASIN MULCH IS INCLUDED WITH MULCH QUANTITIES SHOWN ON PLANTING PLAN
③ - SUFFICIENT TO RECEIVE ROOT BALL AND AMENDMENTS IF REQUIRED
4 - SEE DETAIL
5 - SEE SPECIAL PROVISIONS
6 - SEE STANDARD SPECIFICATIONS
⑦ - AS SHOWN ON PLANS
8 - UNLESS OTHERWISE SHOWN ON PLANS
9 - FOLIAGE PROTECTOR REQUIRED
10 - ROOT PROTECTOR REQUIRED
11 - ROOT BARRIER REQUIRED
12 - STATE-FURNISHED
⑬ - TWICE THE SIZE OF THE ROOTBALL
⑭ - SEE STANDARD DETAIL

LEGEND

MULCH (3" DEPTH)
REMOVE GROUNDCOVER
REMOVE SHRUB
EXIST TREES TO REMAIN

NOTE:

UNDERLINED PORTIONS OF BOTANICAL NAME INDICATE ABBREVIATIONS USED ON PLANTING PLANS.

MULCH	
SHEET	CY
PP-1	132
PLANT BASIN	277
TOTAL	409

REVISED BY | DATE REVISED
RUDY MEDINA | STEPHEN ALVAREZ
CALCULATED-DESIGNED BY | CHECKED BY
SENIOR LANDSCAPE ARCHITECT | STEPHEN ALVAREZ
STATE OF CALIFORNIA - DEPARTMENT OF TRANSPORTATION
Caltrans® LANDSCAPE ARCHITECTURE

PLANT LIST
PL-1

LAST REVISION 03-01-11 | DATE PLOTTED => 21-MAR-2011 | TIME PLOTTED => 13:39

Dist	COUNTY	ROUTE	POST MILES TOTAL PROJECT	SHEET No.	TOTAL SHEETS
11	SD	125	10.6/10.9	29	64

LICENSED LANDSCAPE ARCHITECT

03-21-11
PLANS APPROVAL DATE

LICENSED LANDSCAPE ARCHITECT
STEPHEN ALVAREZ No. 3908
Signature
06-30-12
Renewal Date
03-15-11
Date
STATE OF CALIFORNIA

THE STATE OF CALIFORNIA OR ITS OFFICERS OR AGENTS SHALL NOT BE RESPONSIBLE FOR THE ACCURACY OR COMPLETENESS OF SCANNED COPIES OF THIS PLAN SHEET.

NOTE:

FOR ACCURATE RIGHT OF WAY DATA, CONTACT RIGHT OF WAY ENGINEERING AT THE DISTRICT OFFICE.

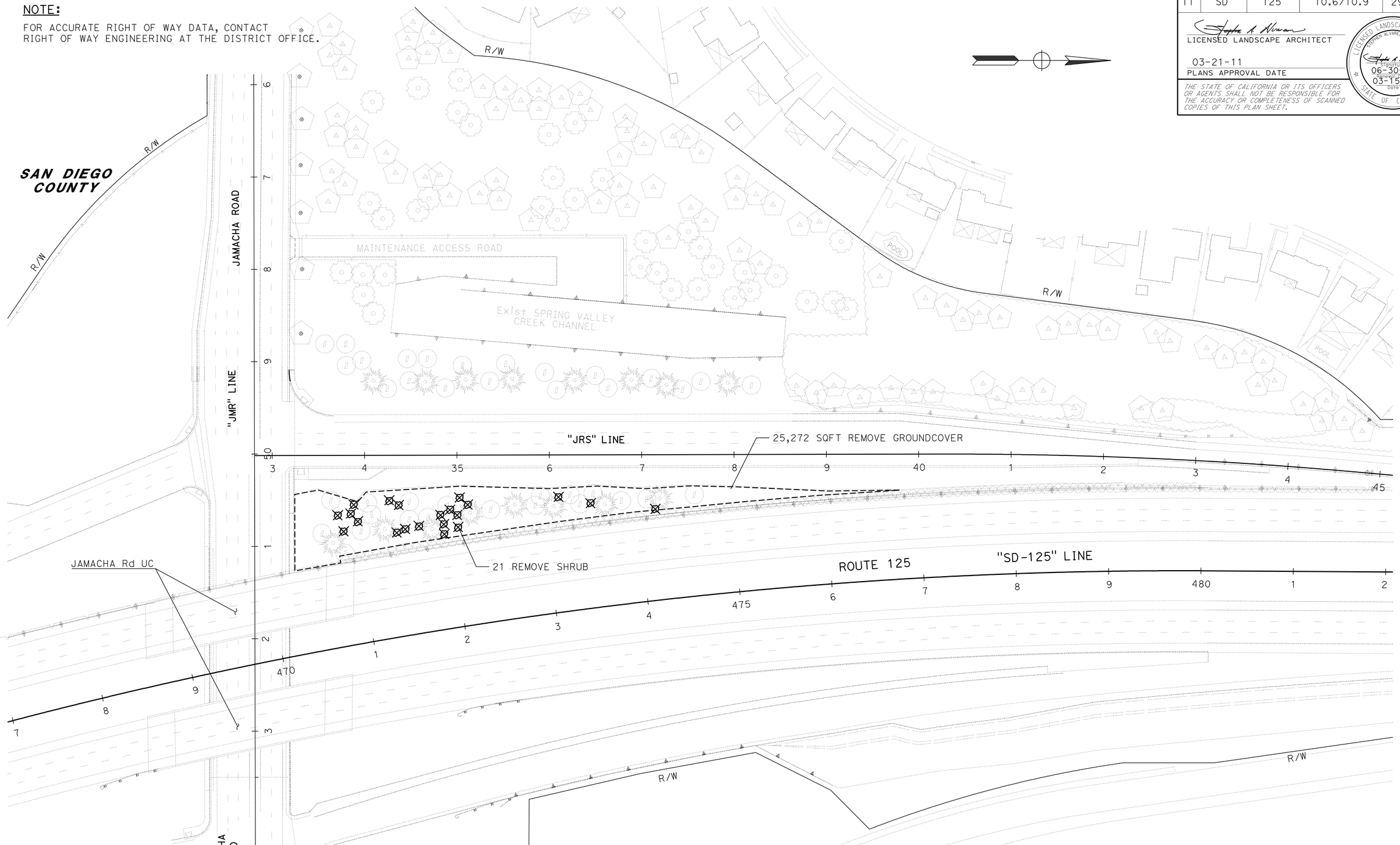

THIS PLAN ACCURATE FOR PLANT REMOVAL WORK ONLY.

SCALE 1" = 50'

PLANT REMOVAL PLAN

PR-1

STATE OF CALIFORNIA - DEPARTMENT OF TRANSPORTATION
Caltrans® LANDSCAPE ARCHITECTURE

SENIOR LANDSCAPE ARCHITECT: STEPHEN ALVAREZ

CALCULATED-DESIGNED BY: RUDY MEDINA
CHECKED BY: STEPHEN ALVAREZ

REVISED BY | DATE REVISED

LAST REVISION 02-01-11 | DATE PLOTTED => 21-MAR-2011 | TIME PLOTTED => 13:39

Dist	COUNTY	ROUTE	POST MILES TOTAL PROJECT	SHEET No.	TOTAL SHEETS
11	SD	125	10.6/10.9	30	64

LICENSED LANDSCAPE ARCHITECT

03-21-11
PLANS APPROVAL DATE

LICENSED LANDSCAPE ARCHITECT
STEPHEN ALVAREZ No. 3026
Signature
06-30-12
Renewal Date
03-15-11
Date
STATE OF CALIFORNIA

THE STATE OF CALIFORNIA OR ITS OFFICERS OR AGENTS SHALL NOT BE RESPONSIBLE FOR THE ACCURACY OR COMPLETENESS OF SCANNED COPIES OF THIS PLAN SHEET.

NOTE:

FOR ACCURATE RIGHT OF WAY DATA, CONTACT RIGHT OF WAY ENGINEERING AT THE DISTRICT OFFICE.

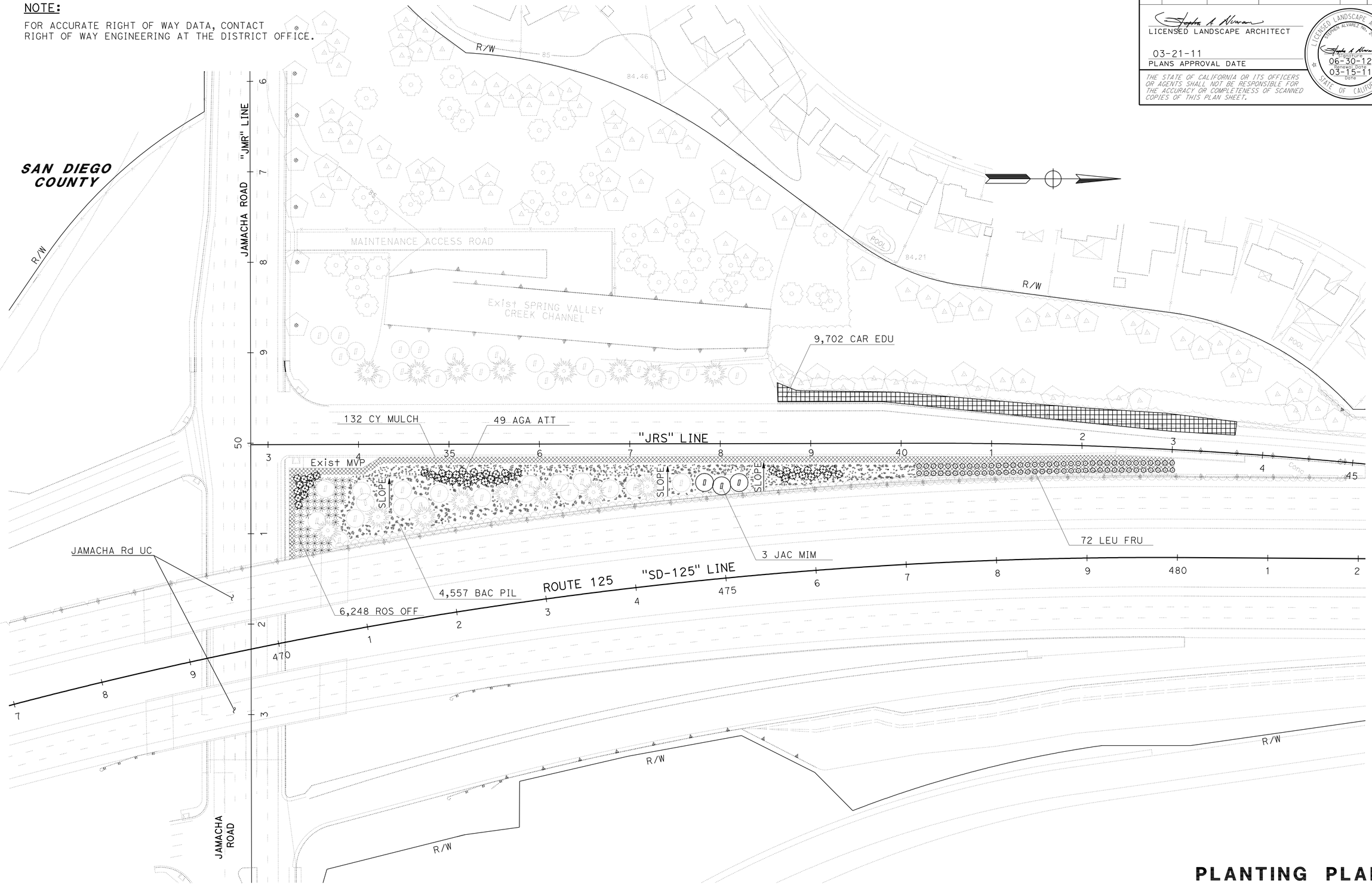

THIS PLAN ACCURATE FOR PLANTING WORK ONLY.

SCALE 1" = 50'

PLANTING PLAN

PP-1

STATE OF CALIFORNIA - DEPARTMENT OF TRANSPORTATION
Caltrans® LANDSCAPE ARCHITECTURE

SENIOR LANDSCAPE ARCHITECT: STEPHEN ALVAREZ

CALCULATED-DESIGNED BY: RUDY MEDINA
CHECKED BY: STEPHEN ALVAREZ

REVISED BY | DATE REVISED

LAST REVISION 02-23-11
DATE PLOTTED => 21-MAR-2011
TIME PLOTTED => 13:39

Dist	COUNTY	ROUTE	POST MILES TOTAL PROJECT	SHEET No.	TOTAL SHEETS
11	SD	125	10.6/10.9	31	64

LICENSED LANDSCAPE ARCHITECT

03-21-11
PLANS APPROVAL DATE

LICENSED LANDSCAPE ARCHITECT STEPHEN ALVAREZ No. 3868 Signature 06-30-12 Renewal Date 03-15-11 Date STATE OF CALIFORNIA

THE STATE OF CALIFORNIA OR ITS OFFICERS OR AGENTS SHALL NOT BE RESPONSIBLE FOR THE ACCURACY OR COMPLETENESS OF SCANNED COPIES OF THIS PLAN SHEET.

NOTE:

FOR ACCURATE RIGHT OF WAY DATA, CONTACT RIGHT OF WAY ENGINEERING AT THE DISTRICT OFFICE.

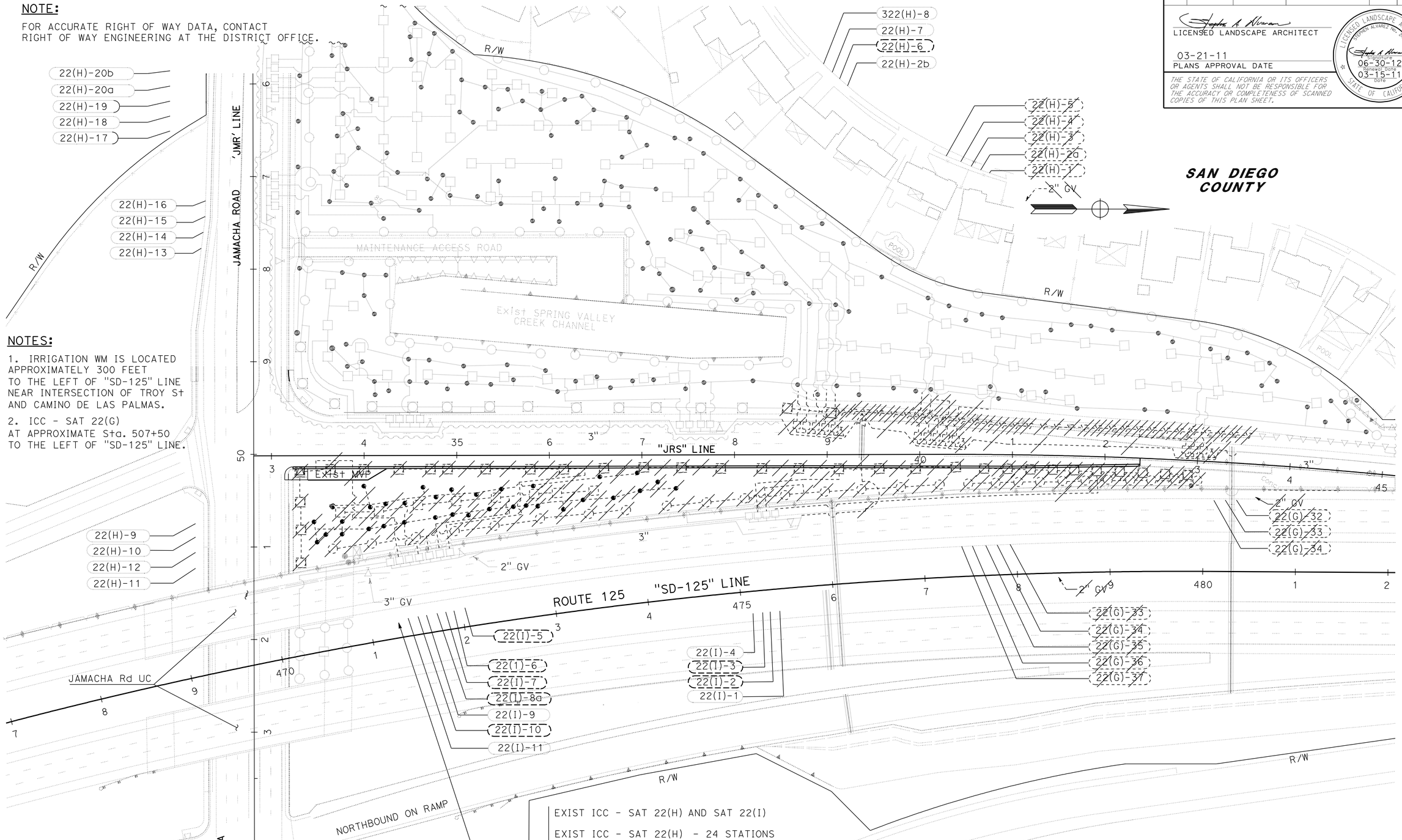

NOTES:

1. IRRIGATION WM IS LOCATED APPROXIMATELY 300 FEET TO THE LEFT OF "SD-125" LINE NEAR INTERSECTION OF TROY St AND CAMINO DE LAS PALMAS.

2. ICC - SAT 22(G) AT APPROXIMATE Sta. 507+50 TO THE LEFT OF "SD-125" LINE.

EXIST ICC - SAT 22(H) AND SAT 22(I)

EXIST ICC - SAT 22(H) - 24 STATIONS
24 STATIONS USED

EXIST ICC - SAT 22(I) - 24 STATIONS
20 STATIONS USED

THIS PLAN ACCURATE FOR IRRIGATION REMOVAL WORK ONLY.

IRRIGATION REMOVAL PLAN

SCALE 1" = 50'

IR-1

REVISED BY	DATE REVISED

CALCULATED-DESIGNED BY: RUDY MEDINA
CHECKED BY: STEPHEN ALVAREZ
SENIOR LANDSCAPE ARCHITECT: STEPHEN ALVAREZ

STATE OF CALIFORNIA - DEPARTMENT OF TRANSPORTATION
Caltrans® LANDSCAPE ARCHITECTURE

LAST REVISION 02-01-11
DATE PLOTTED => 21-MAR-2011
TIME PLOTTED => 13:39

Dist	COUNTY	ROUTE	POST MILES TOTAL PROJECT	SHEET No.	TOTAL SHEETS
11	SD	125	10.6/10.9	32	64

LICENSED LANDSCAPE ARCHITECT

03-21-11
PLANS APPROVAL DATE

LICENSED LANDSCAPE ARCHITECT — STEPHEN ALVAREZ No. 3026 — Signature 06-30-12 Renewal Date — 03-15-11 Date — STATE OF CALIFORNIA

THE STATE OF CALIFORNIA OR ITS OFFICERS OR AGENTS SHALL NOT BE RESPONSIBLE FOR THE ACCURACY OR COMPLETENESS OF SCANNED COPIES OF THIS PLAN SHEET.

NOTE:

FOR ACCURATE RIGHT OF WAY DATA, CONTACT RIGHT OF WAY ENGINEERING AT THE DISTRICT OFFICE.

NOTES:

1. IRRIGATION WM IS LOCATED APPROXIMATELY 300 FEET TO THE LEFT OF "SD-125" LINE NEAR INTERSECTION OF TROY St AND CAMINO DE LAS PALMAS.
2. ICC - SAT 22(G) AT APPROXIMATE Sta 507+50 TO THE LEFT OF "SD-125" LINE.

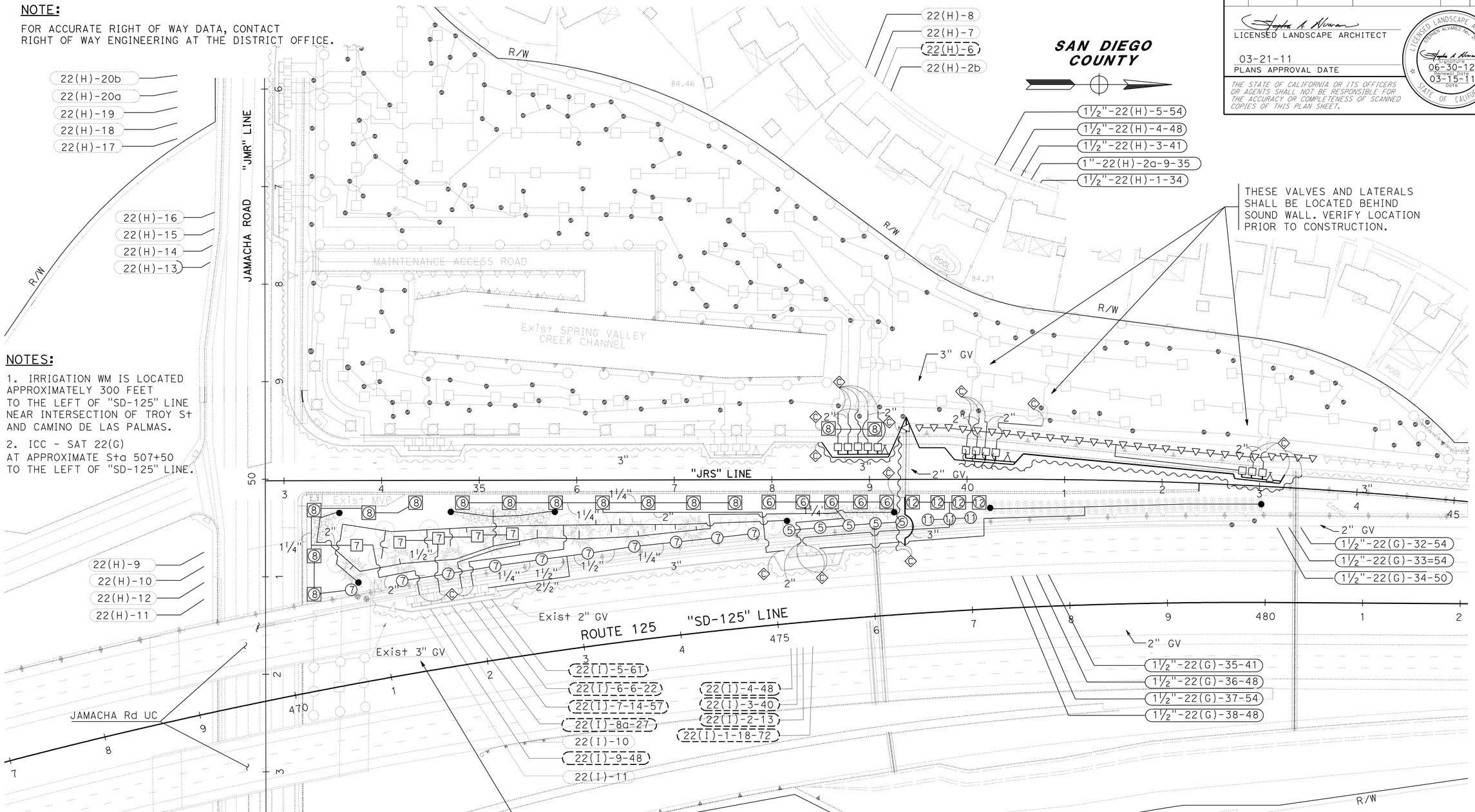

EXIST ICC - SAT 22(H) AND SAT 22(I)

EXIST ICC - SAT 22(H) - 24 STATIONS
24 STATIONS USED

EXIST ICC - SAT 22(I) - 24 STATIONS
20 STATIONS USED

THIS PLAN ACCURATE FOR IRRIGATION REMOVAL WORK ONLY.

IRRIGATION PLAN

SCALE 1" = 50'

IP-1

REVISED BY	DATE REVISED
RUDY MEDINA	STEPHEN ALVAREZ

CALCULATED- DESIGNED BY — CHECKED BY

SENIOR LANDSCAPE ARCHITECT — STEPHEN ALVAREZ

STATE OF CALIFORNIA - DEPARTMENT OF TRANSPORTATION
Caltrans® LANDSCAPE ARCHITECTURE

LAST REVISION 02-23-11 — DATE PLOTTED => 21-MAR-2011 — TIME PLOTTED => 13:39

Dist	COUNTY	ROUTE	POST MILES TOTAL PROJECT	SHEET No.	TOTAL SHEETS
11	SD	125	10.6/10.9	33	64

LICENSED LANDSCAPE ARCHITECT

03-21-11
PLANS APPROVAL DATE

LICENSED LANDSCAPE ARCHITECT — STEPHEN ALVAREZ No. 2606 — Signature — 06-30-12 Renewal Date — 03-15-11 Date — STATE OF CALIFORNIA

THE STATE OF CALIFORNIA OR ITS OFFICERS OR AGENTS SHALL NOT BE RESPONSIBLE FOR THE ACCURACY OR COMPLETENESS OF SCANNED COPIES OF THIS PLAN SHEET.

SPRINKLER SCHEDULE

SYMBOL	TYPE	DESCRIPTION	SPRAY PATTERN	OPERATING PRESSURE (PSI)	PRESSURE COMPENSATING	PLUS / MINUS 5% ② DISCHARGE: GALLONS PER SECOND (GPS)	GALLONS PER MINUTE (GPM)	GALLONS PER HOUR (GPH)	RADIUS (Ft)	WIDTH x LENGTH (Ft)	MATERIAL	NOZZLE SIZE (INCH)	INLET CONNECTION (NPT) (DN IN INCHES)(INCH)	POSITIVE-LOCKING ADJ ARC STOP	BACKSPLASH PREVENTER	DIFFUSER PIN	DISTANCE CONTROL FLAP	ADJ DISCHARGE	RISER: TYPE	MATERIAL: PLASTIC	GALVANIZED	SIZE (IPS) (INCH)	HEIGHT (INCH)	FLOW SHUTOFF DEVICE	SWING JOINT (TYPE)	RISER SUPPORT	SPRINKLER PROTECTOR (TYPE)	REMARKS
⑤	A-5	GEAR DRIVEN	P	50	-	-	4	-	40	-	PL	-	¾	-	-	X	-	-	I	X	-	¾	6	-	1	-	-	③⑦
⑥	A-6	GEAR DRIVEN	P	50	-	-	4	-	40	-	PL	-	¾	-	-	X	-	-	-	-	-	-	-	-	1	-	I	③⑦ 12" POP-UP
7	A-7	GEAR DRIVEN	F	50	-	-	6.8	-	48	-	PL	-	¾	-	-	X	-	-	I	X	-	¾	6	-	1	-	-	③
⑦	A-7	GEAR DRIVEN	P	50	-	-	6.8	-	48	-	PL	-	¾	-	-	X	-	-	I	X	-	¾	6	-	1	-	-	③⑦
⑧	A-8	GEAR DRIVEN	P	50	-	-	6.8	-	48	-	PL	-	¾	-	-	X	-	-	-	X	-	¾	6	-	1	-	I	③⑦ 12" POP-UP
⑪	A-11	GEAR DRIVEN	P	50	-	-	1.8	-	25	-	PL	-	¾	-	-	X	-	-	I	X	-	¾	6	-	1	-	-	③⑦
⑫	A-12	GEAR DRIVEN	P	50	-	-	1.8	-	25	-	PL	-	¾	-	-	X	-	-	-	X	-	¾	6	-	1	-	I	③⑦ 12" POP-UP
△	B-1	SHRUB SPRAY	H	30	-	-	1.8	-	15	-	PL	-	½	-	-	X	-	X	I	X	-	½	12	-	1	-	-	⑧⑨
●	C-2 Mod	MODIFIED FLOOD BUBBLER	-	30	X	-	0.25	-	-	-	PL	-	½	-	-	-	-	-	II	X	-	½	-	-	1	-	-	④⑨

X IN BOX DENOTES REQUIREMENT

APPLICABLE WHEN CIRCLED BELOW:

1 - SEE SPECIAL PROVISIONS.
② - IF A PRESSURE COMPENSATING DEVICE IS SPECIFIED, THE DISCHARGE AND RADII SHOWN REFLECT ITS USE.
③ - SHALL HAVE AN INTERNAL OR EXTERNAL CHECK VALVE.
④ - NON-ADJUSTABLE DISCHARGE RATE.
5 - REQUIRED ADJACENT TO SHOULDERS, CURBS, SIDEWALKS, AND DIKES.
6 - UNLESS OTHERWISE SHOWN ON PLANS.
⑦ - ADJUSTABLE ARC.
⑧ - MATCHED PRECIPITATION RATE NOZZLES.
⑨ - REFER TO PIPE SIZING CHARTS.

ABBREVIATIONS

Adj — ADJUSTABLE
B/B — BRASS/BRONZE
B/B/PL — BRASS/BRONZE/PLASTIC
B/PL — BRASS/PLASTIC
CST — CENTER STRIP
DN — DIAMETER NOMINAL
EST — END STRIP
Ft — FEET
F — FULL CIRCLE
F/P — FULL/PART CIRCLE
GPH — GALLONS PER HOUR
GPM — GALLONS PER MINUTE
GPS — GALLONS PER SECOND
H — HALF CIRCLE
IPS — IRON PIPE SIZE
NPT — NATIONAL PIPE THREAD
P — PART CIRCLE
PL — PLASTIC
PSI — POUNDS PER SQUARE INCH
Q — QUARTER CIRCLE
SST — SIDE STRIP
T — THIRD CIRCLE
TQ — THREE QUARTER CIRCLE
TT — TWO THIRDS CIRCLE

NOTES:

1. ALL LATERAL PIPE NOT LABELED SHALL BE 1 INCH, OR AS SHOWN ON PIPE SIZING CHARTS.
2. ALL SPRINKLER HEADS, VALVES AND MAINLINE SHOWN NEAR MVP LOCATIONS ARE TO BE INSTALLED OUTSIDE OF THE PAVED MPV AREA. VALVES TO BE INSTALLED AT EXITING END OF THE MPV.

LEGEND

X(X)-X — Exist VALVE TO BE REMOVED
X(X)-X — Exist IRRIGATION SYSTEM TO BE REMOVED/ MODIFIED Exist VALVE TO REMAIN
X(X)-X — Exist VALVE TO REMAIN
Exist IRRIGATION SYSTEM TO BE REMOVED
Exist IRRIGATION SYSTEM TO REMAIN

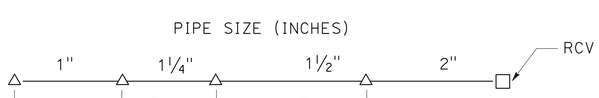

NUMBER OF HALF HEADS

1 HALF HEAD = TWO QUARTER HEADS

PIPE SIZING CHART
B-1 SHRUB SPRAY

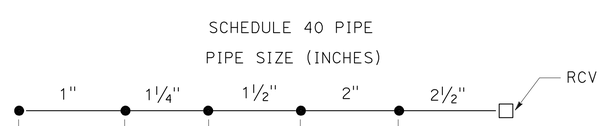

NUMBER OF HEADS @ 0.25 GPM

PIPE SIZING CHART
C-2 (Mod) SPRINKLERS
(FLOOD BUBBLER)

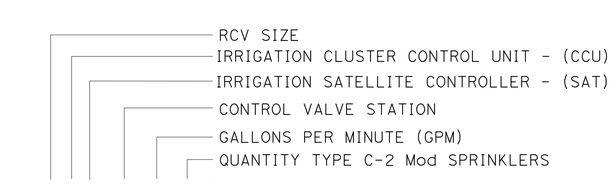

VALVE CODE

LANDSCAPE DETAILS

NO SCALE

LD-1

STATE OF CALIFORNIA - DEPARTMENT OF TRANSPORTATION
Caltrans LANDSCAPE ARCHITECTURE
SENIOR LANDSCAPE ARCHITECT: STEPHEN ALVAREZ
CALCULATED-DESIGNED BY: RUDY MEDINA
CHECKED BY: STEPHEN ALVAREZ
REVISED BY
DATE REVISED

LAST REVISION 03-17-11
DATE PLOTTED => 21-MAR-2011
TIME PLOTTED => 13:39

Dist	COUNTY	ROUTE	POST MILES TOTAL PROJECT	SHEET No.	TOTAL SHEETS
11	SD	125	10.6/10.9	34	64

LICENSED LANDSCAPE ARCHITECT

03-21-11
PLANS APPROVAL DATE

LICENSED LANDSCAPE ARCHITECT
STEPHEN ALVAREZ No. 3868
Signature
06-30-12
Renewal Date
03-23-11
Date
STATE OF CALIFORNIA

THE STATE OF CALIFORNIA OR ITS OFFICERS OR AGENTS SHALL NOT BE RESPONSIBLE FOR THE ACCURACY OR COMPLETENESS OF SCANNED COPIES OF THIS PLAN SHEET.

NOTES:

1. INSTALL SPRINKLER TYPE C-2 Mod ON UP-HILL SIDE OF PLANT WHEN ON SLOPE
2. INSTALL SPRINKLER WITHIN TREE BASIN

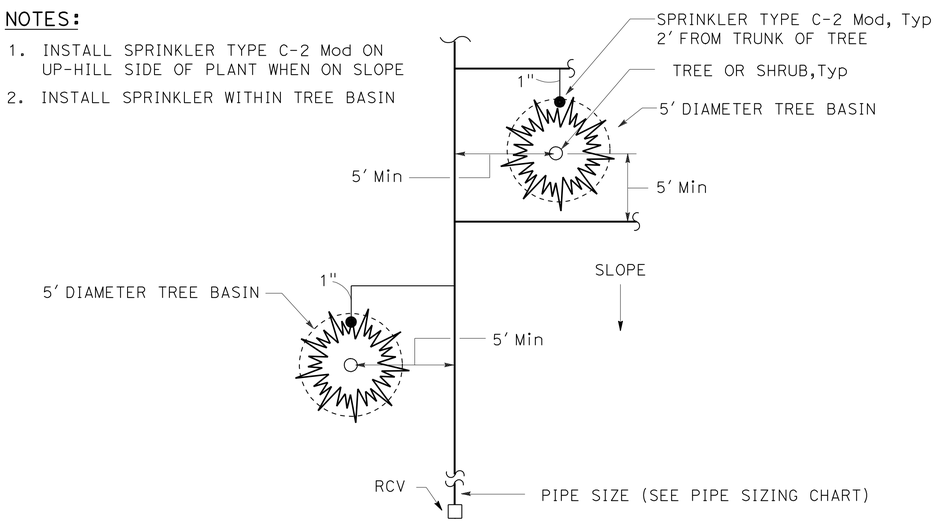

PLAN

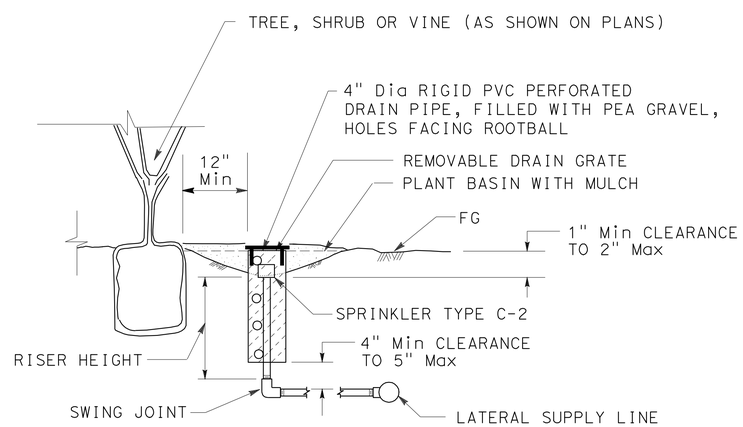

SECTION

SPRINKLER TYPE C-2 Mod INSTALLATION

LANDSCAPE DETAILS

NO SCALE **LD-2**

STATE OF CALIFORNIA - DEPARTMENT OF TRANSPORTATION
Caltrans® LANDSCAPE ARCHITECTURE

SENIOR LANDSCAPE ARCHITECT: STEPHEN ALVAREZ

CALCULATED-DESIGNED BY: RUDY MEDINA
CHECKED BY: STEPHEN ALVAREZ

REVISED BY
DATE REVISED

LAST REVISION 01-14-11
DATE PLOTTED => 21-MAR-2011
TIME PLOTTED => 13:40

Dist	COUNTY	ROUTE	POST MILES TOTAL PROJECT	SHEET No.	TOTAL SHEETS
11	SD	125	10.6/10.9	35	64

Enrique P. Bernal 03-15-11
REGISTERED CIVIL ENGINEER DATE

03-21-11
PLANS APPROVAL DATE

REGISTERED PROFESSIONAL ENGINEER
ENRIQUE P. BERNAL
No. 15675
Exp. 6-30-12
ELECTRICAL
STATE OF CALIFORNIA

THE STATE OF CALIFORNIA OR ITS OFFICERS OR AGENTS SHALL NOT BE RESPONSIBLE FOR THE ACCURACY OR COMPLETENESS OF SCANNED COPIES OF THIS PLAN SHEET.

NOTES:

1 - Exist SIGNAL, LIGHTING STANDARD AND ASSOCIATED EQUIPMENT TO REMAIN UNLESS OTHERWISE NOTED.

2 - Exist CONDUIT, PULL BOXES AND DETECTOR LOOPS TO REMAIN UNLESS OTHERWISE NOTED.

3 - RELOCATE SIGNAL STANDARD AND APPURTENANCES. SEE SHEET E-2.

4 - ABANDON Exist CONDUIT, REUSE INTERMEDIATE AND ADVANCE DLC SEE SHEET E-2.

5 - CC Exist CONDUIT, SEE SHEET E-2.

6 - AB Exist LOOPS.
RC CORRESPONDING DLC.

7 - ABANDON Exist LOOPS. REUSE CORRESPONDING DLC SEE SHEET E-2.

8 - RC Exist PEDESTRIAN BARRICADE AND SIGN PANEL.

9 - RC 180 W lps LUMINAIRE.

ABBREVIATIONS AND LEGENDS:

N△C = EXISTING CONDUIT NO CHANGE.

R△M = FOR INFORMATION SEE RAMP METER SYSTEM PLAN.

S△L = FOR INFORMATION SEE SIGNAL AND LIGHTING PLAN.

VDU = VIDEO DETECTION UNIT

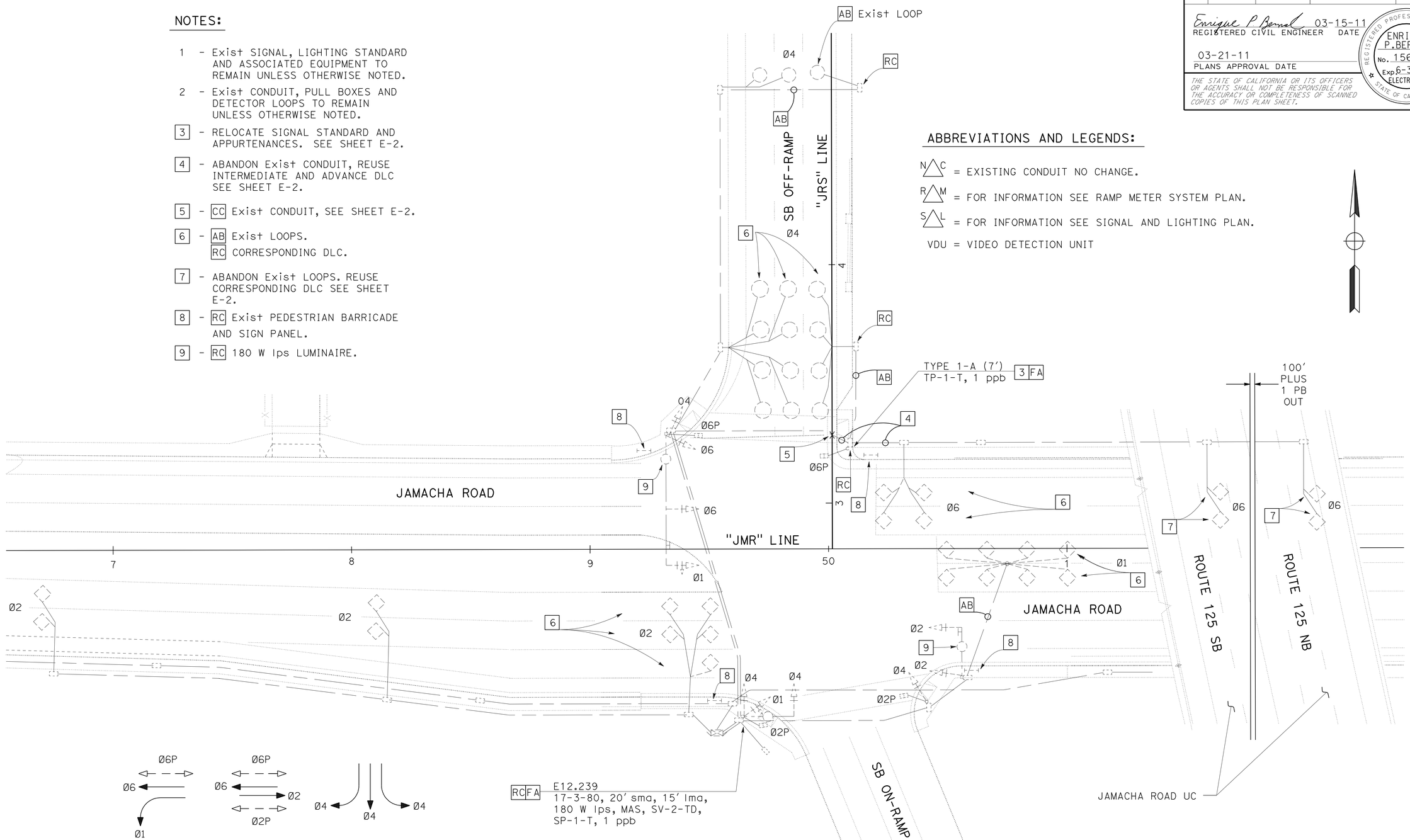

ROUTE 125 SOUTHBOUND ON/OFF RAMP AT JAMACHA ROAD

SIGNAL AND LIGHTING (EXISTING AND REMOVE)

SCALE: 1" = 20'

E-1

THIS PLAN IS ACCURATE FOR ELECTRICAL WORK ONLY.

STATE OF CALIFORNIA - DEPARTMENT OF TRANSPORTATION
Caltrans TRAFFIC ELECTRICAL

FUNCTIONAL SUPERVISOR: DALE WILSON
CALCULATED-DESIGNED BY: HUA SAWAYA
CHECKED BY: ENRIQUE P. BERNAL
REVISED BY / DATE REVISED

LAST REVISION 02-25-11
DATE PLOTTED => 21-MAR-2011
TIME PLOTTED => 13:40

Dist	COUNTY	ROUTE	POST MILES TOTAL PROJECT	SHEET No.	TOTAL SHEETS
11	SD	125	10.6/10.9	36	64

Enrique P. Bernal 03-15-11
REGISTERED CIVIL ENGINEER DATE

03-21-11
PLANS APPROVAL DATE

REGISTERED PROFESSIONAL ENGINEER ENRIQUE P. BERNAL No. 15675 Exp. 6-30-12 ELECTRICAL STATE OF CALIFORNIA

THE STATE OF CALIFORNIA OR ITS OFFICERS OR AGENTS SHALL NOT BE RESPONSIBLE FOR THE ACCURACY OR COMPLETENESS OF SCANNED COPIES OF THIS PLAN SHEET.

NOTES (E-2 AND E-3):

1. Exist EQUIPMENT TO REMAIN UNLESS OTHERWISE NOTED.
2. INSTALL VDU, VIDEO DISPLAY AND COMMUNICATION CARD IN TYPE 332 CABINET.
3. INSTALL VIDEO IMAGE SENSOR.
4. INSTALL 200 W HPS LUMINAIRE.
5. DETAIL "U" ES-7N, SEE SIGN PLAN.
6. FOR CIRCUIT CONTINUITY SEE SHEET E-4.
7. 280' TO THE LIMIT LINE.
8. Exist INTERCONNECT CONDUIT AND CABLE TO NB SIGNAL P19.680.
9. SEE E-3 FOR EQUIPMENT AND POLE SCHEDULE.
10. ALL NEW PULL BOXES SHALL BE THE NON-PCC TYPE.
11. ALL CONDUCTORS/CABLES ARE Exist UNLESS OTHERWISE NOTED.

CONDUIT NOTES (E-2 AND E-3):

- N/9C - Exist 3"C, 2 sic
- N/10C - Exist 2"C, 3 dlc
- N/11C - Exist 2"C, 1 dlc
- /12 - Exist 2"C, WITH 3 dlc ADD: 1 DLC
- N/13C - Exist 3"C, mt

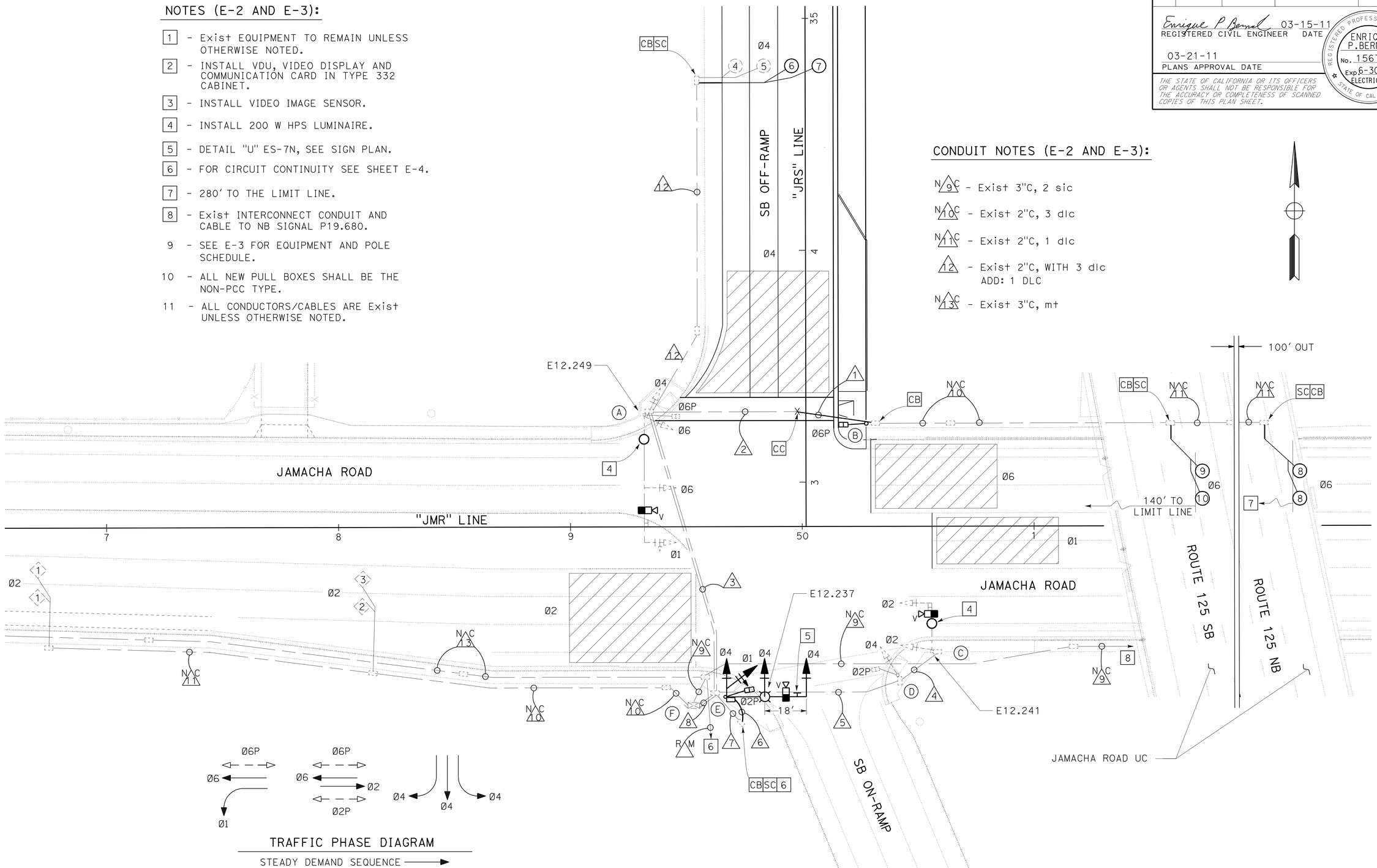

SIGNAL No. P19.705
ROUTE 125 SOUTHBOUND ON/OFF RAMP
AT JAMACHA ROAD

SIGNAL AND LIGHTING

SCALE: 1" = 20'

E-2

THIS PLAN IS ACCURATE FOR ELECTRICAL WORK ONLY.

STATE OF CALIFORNIA - DEPARTMENT OF TRANSPORTATION
Caltrans® TRAFFIC ELECTRICAL

FUNCTIONAL SUPERVISOR: DALE WILSON
CALCULATED-DESIGNED BY: HUA SAWAYA
CHECKED BY: ENRIQUE P. BERNAL
REVISED BY / DATE REVISED

LAST REVISION 02-25-11 | DATE PLOTTED => 21-MAR-2011 | TIME PLOTTED => 13:40

Dist	COUNTY	ROUTE	POST MILES TOTAL PROJECT	SHEET No.	TOTAL SHEETS
11	SD	125	10.6/10.9	37	64

Enrique P. Bernal 03-15-11
REGISTERED CIVIL ENGINEER DATE

03-21-11
PLANS APPROVAL DATE

REGISTERED PROFESSIONAL ENGINEER
ENRIQUE P. BERNAL
No. 15675
Exp. 6-30-12
ELECTRICAL
STATE OF CALIFORNIA

THE STATE OF CALIFORNIA OR ITS OFFICERS OR AGENTS SHALL NOT BE RESPONSIBLE FOR THE ACCURACY OR COMPLETENESS OF SCANNED COPIES OF THIS PLAN SHEET.

CONDUIT AND CONDUCTOR SCHEDULE

AWG SIZE OR CABLE TYPE	PHASE	POLE OR CIRCUIT	CONDUIT SIZE AND RUN: 3" (1)	Exist 3" (2)	Exist 2-3" (3)	Exist 4" (4)	Exist 4" (5)	2" (6)	Exist 2" (7)	Exist 2-3" (8)	NOTES
3CSC / 12CSC		POLE - A			1 / 2					1 / 2	
		B	1 / 1	1 / 1	1 / 1					1 / 1	NEW
		C				1 / 1				1 / 1	
		D					1 / 1			1 / 1	
		E						1 / 1	1 / 1	1 / 1	NEW
TOTAL 3CSC / 12CSC			1 / 1	1 / 1	2 / 3	/ 1	1 / 2	1 / 1	1 / 1	4 / 6	
8		LIGHTING			2	2	2	2	2		
6		SIGNAL							2	2	
TYPE B DLC	Ø4				4					4	ADD 1 DLC
	Ø6		3	3	3					3	
VIDEO CABLE HARNESS	Ø2	POLE - C				1	1			1	NEW
	Ø1 / Ø6	A			1					1	NEW
	Ø4	E						1	1	1	NEW
EVC					1	1	1			2	
TOTAL CONDUCTORS / CABLES			5	5	16	5	7	5	7	24	

EQUIPMENT AND POLE SCHEDULE [1]

LOC	STANDARD TYPE	SMA FT	LMA FT	PLACEMENT DIMENSIONS A FT	B FT	SIGNAL MOUNTING AND PLACEMENT: VEHICLE POLE	VEHICLE MASTARM	PEDESTRIAN SIGNAL	PEDESTRIAN PPB	REMARKS
A	29-5-80	55	12	Exist		SV-2-TD	MAT MAS [3]	SP-1-T	Exist Ø6P	200 W HPS [4]
B	RL TYPE 1-A (7')	—	—	2	12	—	—	TP-1-T	Ø6P →	
C	17-3-80	20	10	Exist		SV-1-T	MAS [3]	—	—	200 W HPS [4]
D	TYPE 1-A (7')	—	—	Exist		—	—	TP-1-T	Exist Ø2P	
E	26-4-100	40	15	11	10	SV-2-TD	MAT MAS	SP-1-T	← Ø2P	NEW STANDARD AND APPURTENANCES WITH 200 W HPS
F	Exist MODEL 170 CONTROLLER ASSEMBLY. [2]									

THIS PLAN IS ACCURATE FOR ELECTRICAL WORK ONLY.

SIGNAL No. P19.705
ROUTE 125 SOUTHBOUND ON/OFF RAMP
AT JAMACHA ROAD

SIGNAL AND LIGHTING

NO SCALE

E-3

STATE OF CALIFORNIA - DEPARTMENT OF TRANSPORTATION
Caltrans® TRAFFIC ELECTRICAL

FUNCTIONAL SUPERVISOR: DALE WILSON
CALCULATED-DESIGNED BY: HUA SAWAYA
CHECKED BY: ENRIQUE P. BERNAL
REVISED BY
DATE REVISED

LAST REVISION 02-25-11
DATE PLOTTED => 21-MAR-2011
TIME PLOTTED => 13:40

Dist	COUNTY	ROUTE	POST MILES TOTAL PROJECT	SHEET No.	TOTAL SHEETS
11	SD	125	10.6/10.9	38	64

Enrique P. Bernal 03-15-11
REGISTERED CIVIL ENGINEER DATE

03-21-11
PLANS APPROVAL DATE

REGISTERED PROFESSIONAL ENGINEER
ENRIQUE P. BERNAL
No. 15675
Exp. 6-30-12
ELECTRICAL
STATE OF CALIFORNIA

THE STATE OF CALIFORNIA OR ITS OFFICERS OR AGENTS SHALL NOT BE RESPONSIBLE FOR THE ACCURACY OR COMPLETENESS OF SCANNED COPIES OF THIS PLAN SHEET.

NOTE:

FOR ACCURATE RIGHT OF WAY AND ACCESS DATA,
CONTACT RIGHT OF WAY ENGINEERING AT THE DISTRICT OFFICE.

NOTES:

1 - Exist SIGNAL, LIGHTING STANDARD AND ASSOCIATED EQUIPMENT TO REMAIN UNLESS OTHERWISE NOTED.

2 - Exist CONDUIT, PULL BOXES AND DETECTOR LOOPS TO REMAIN UNLESS OTHERWISE NOTED.

3 - Exist RAMP METERING SYSTEM PARTIALLY SHOWN ONLY.

4 - SEE SHEET E-2 FOR CIRCUIT CONTINUITY.

5 - AB Exist LOOP.
RC CORRESPONDING DLC.

CONDUIT NOTES:

1 - Exist 2"C,
ADD: 2 DLC

2 - Exist 2"C, WITH 2 dlc
ADD: 2 DLC

3 - Exist 2"C, WITH 2 dlc
2#6(ltg)
2#6(rm)
ADD: 2 DLC

NAC 4 - Exist 2"C, WITH 2#6(ltg)
2#6(rm)
2#6(sig)

NAC 5 - Exist 2"C, WITH 2#8(s)
2#6(ltg)
2#6(rm)
2#6(sig)
4#14(peu)

6 - Exist 2"C, WITH 5 dlc
2#6(ltg)
2#6(rm)
2#14(fb)
ADD: 2 DLC

7 - Exist 2-3"C, WITH 17 dlc
2#6(rm)
2#14(fb)
2 9CSC
1 12CSC
ADD: 2 DLC

NAC 8 - Exist 2"C, WITH 12 dlc
2#6(ltg)
2 9CSC
1 12CSC

NAC 9 - Exist 2"C, WITH 2 sic

NAC 10 - Exist 2"C, WITH 1 dlc
2#14(fb)

11 - 2"C, 2 DLC

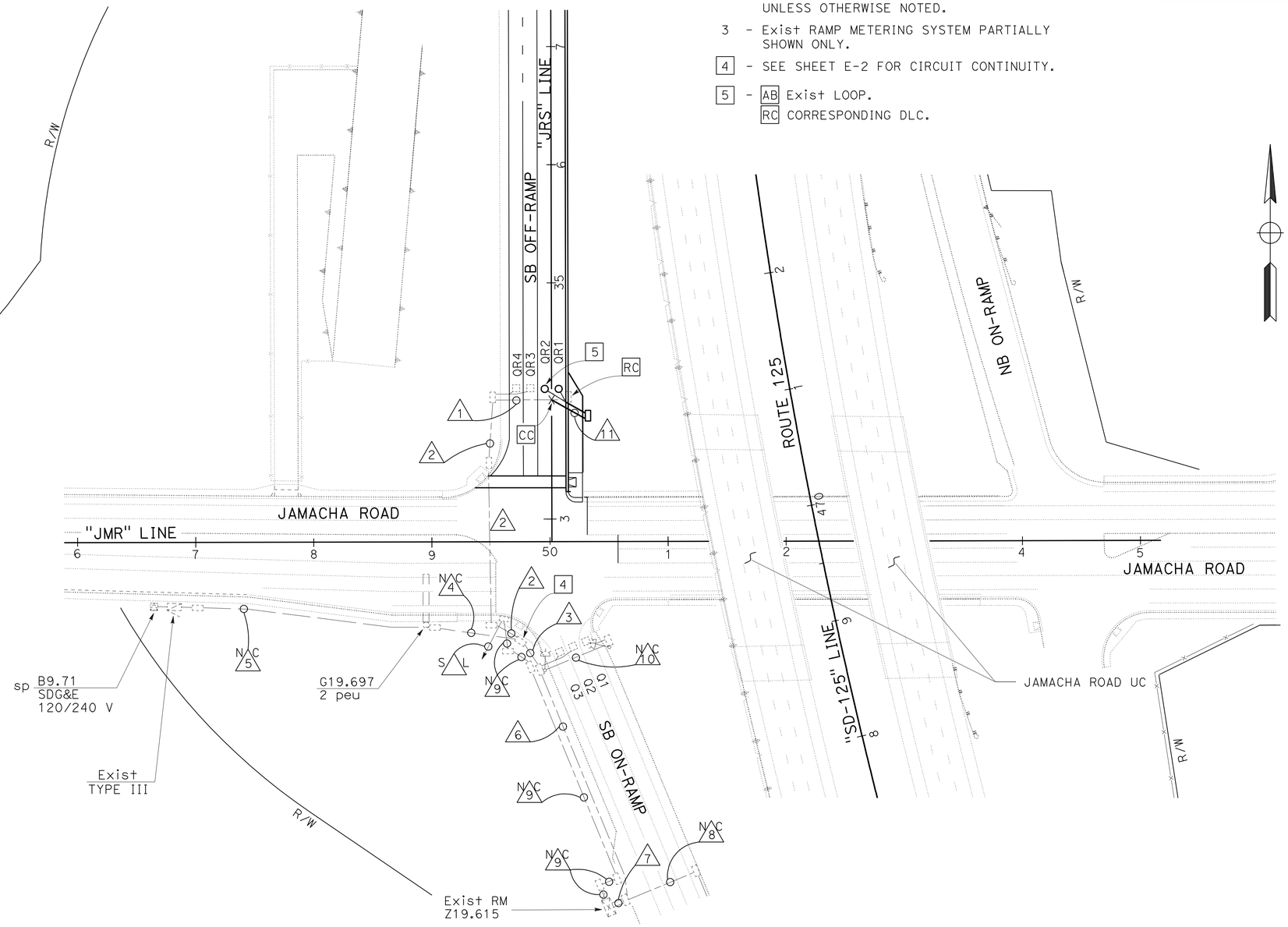

ROUTE 125 SOUTHBOUND ON/OFF RAMP
AT JAMACHA ROAD

MODIFY RAMP METERING SYSTEM

SCALE: 1" = 50'

E-4

THIS PLAN IS ACCURATE FOR ELECTRICAL WORK ONLY.

STATE OF CALIFORNIA - DEPARTMENT OF TRANSPORTATION
Caltrans® TRAFFIC ELECTRICAL

FUNCTIONAL SUPERVISOR: DALE WILSON
CALCULATED-DESIGNED BY: HUA SAWAYA
CHECKED BY: ENRIQUE P. BERNAL
REVISED BY
DATE REVISED

LAST REVISION 02-25-11
DATE PLOTTED =>
TIME PLOTTED =>

DIST	COUNTY	ROUTE	POST MILES TOTAL PROJECT	SHEET NO.	TOTAL SHEETS
11	SD	125	10.6/10.9	39	64

Raymond Don Tsztoo
REGISTERED CIVIL ENGINEER

March 7, 2008
PLANS APPROVAL DATE

REGISTERED PROFESSIONAL ENGINEER
Raymond Don Tsztoo
No. C37332
Exp. 6-30-08
CIVIL
STATE OF CALIFORNIA

The State of California or its officers or agents shall not be responsible for the accuracy or completeness of electronic copies of this plan sheet.

To accompany plans dated 03-21-11

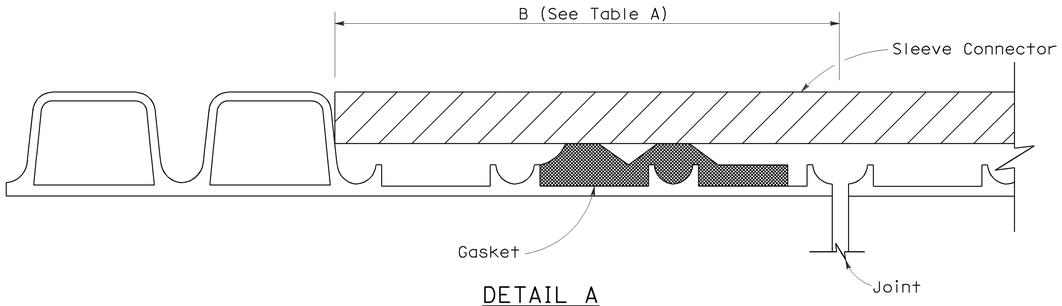

DETAIL A

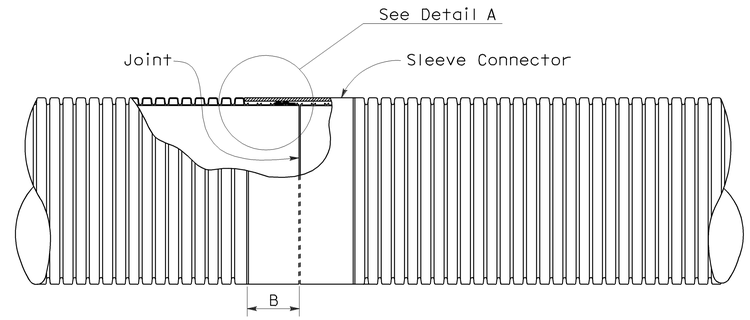

PLAN VIEW
Liner Insert
See Note 4

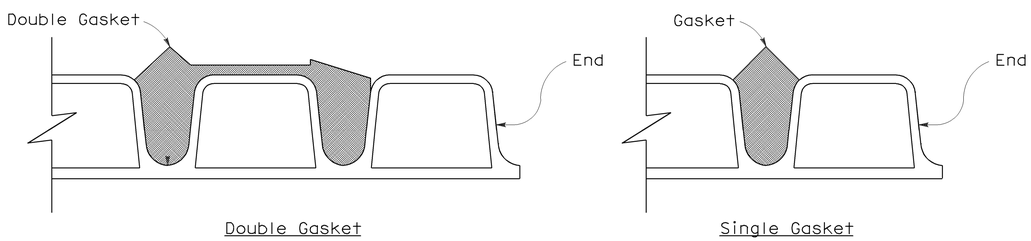

DETAIL B

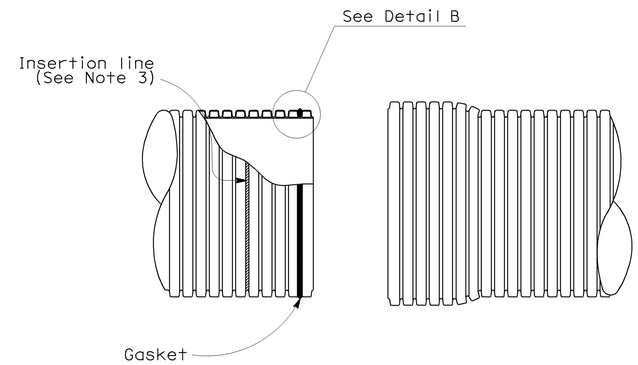

SPIGOT BELL

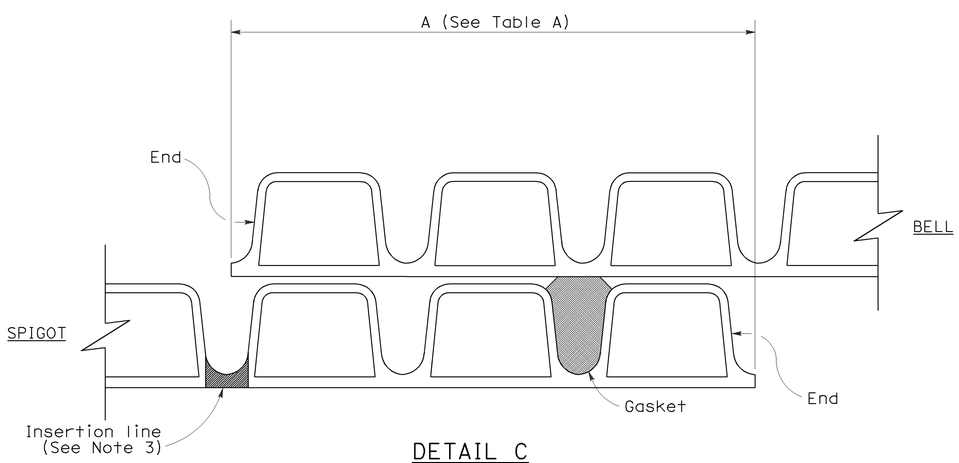

DETAIL C
(Single gasket shown)

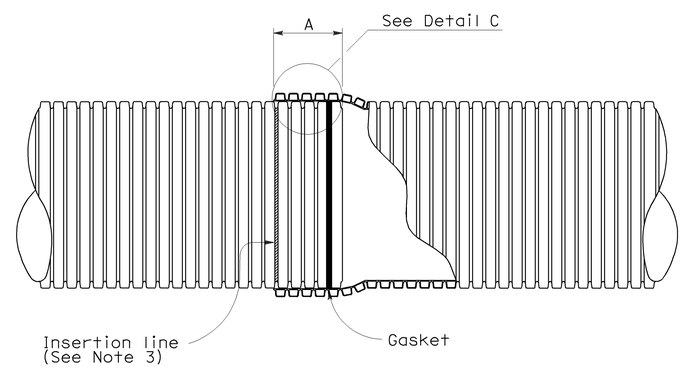

BELL AND SPIGOT JOINT

NOTES:

1. For pipe sections installed on straight alignment, the pipe sections shall be joined to achieve maxium joint overlap at all points on the periphery as indicated in Table A where the plans call for positive or watertight joints. Maxium joint overlap is recommended where the plans call for standard joints, but in no case shall the joint overlap be less than 3½".
2. For pipe sections installed on curved alignment, the maxium angle of deflection from straight alignment at any joint shall not exceed two degrees. Where the plans call for watertightness, field testing for compliance is required. Where plans call for positive joints, the pipe sections shall be joined to achieve Table A Dimensions on one side of the joint. Joints classified as standard shall have no less than 3½" joint overlap at any point on the periphery.
3. Factory applied insertion line limit shall be placed on spigot.
4. Liner insert to be used inside of existing pipe.

TABLE A

JOINT OVERLAP DIMENSIONS		
PIPE Dia (NOMINAL)	A	B
12"	5¾"	4¼"
15"	6¾"	5⅝"
18"	6¾"	5⅝"
21"	8½"	5⅝"
24"	8½"	6⅛"
30"	8½"	7⅛"
36"	8½"	8⅛"

STATE OF CALIFORNIA
DEPARTMENT OF TRANSPORTATION

CORRUGATED POLYVINYL CHLORIDE PIPE WITH SMOOTH INTERIOR STANDARD AND POSITIVE JOINTS

NO SCALE

NSP D97I DATED MARCH 7, 2008 SUPPLEMENTS THE STANDARD PLANS BOOK DATED MAY 2006.

NEW STANDARD PLAN NSP D97I

2006 NEW STANDARD PLAN NSP D97I

190A

2-13-08

DIST	COUNTY	ROUTE	POST MILES TOTAL PROJECT	SHEET NO.	TOTAL SHEETS
11	SD	125	10.6/10.9	40	64

Raymond Don Tsztoo
REGISTERED CIVIL ENGINEER

June 6, 2008
PLANS APPROVAL DATE

REGISTERED PROFESSIONAL ENGINEER
Raymond Don Tsztoo
No. C37332
Exp. 6-30-08
CIVIL
STATE OF CALIFORNIA

The State of California or its officers or agents shall not be responsible for the accuracy or completeness of electronic copies of this plan sheet.

To accompany plans dated 03-21-11

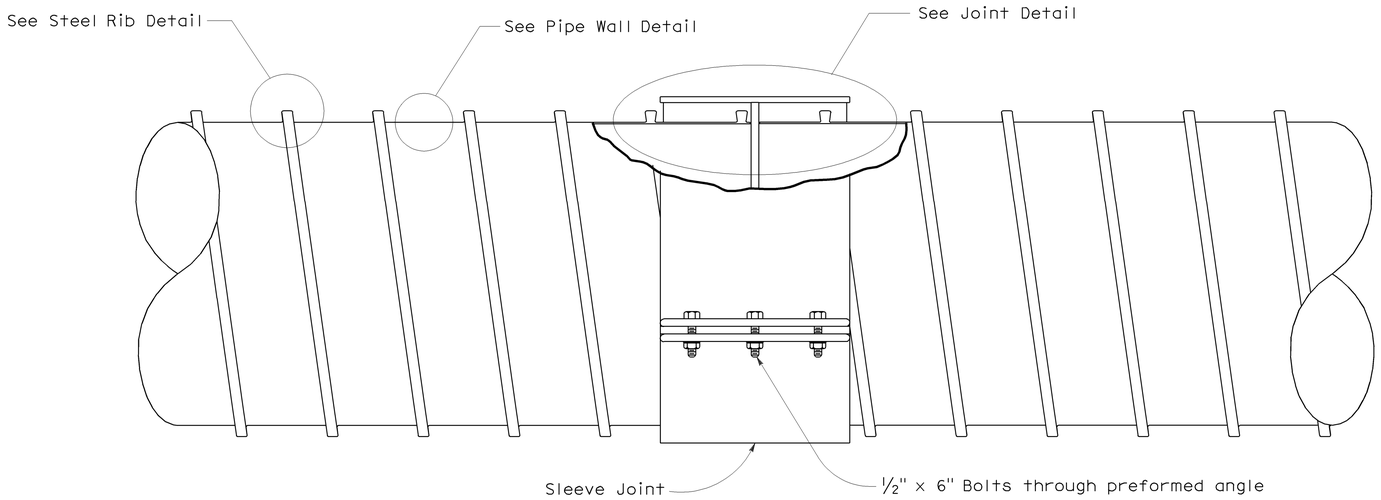

COMPOSITE STEEL SPIRAL RIB PIPE

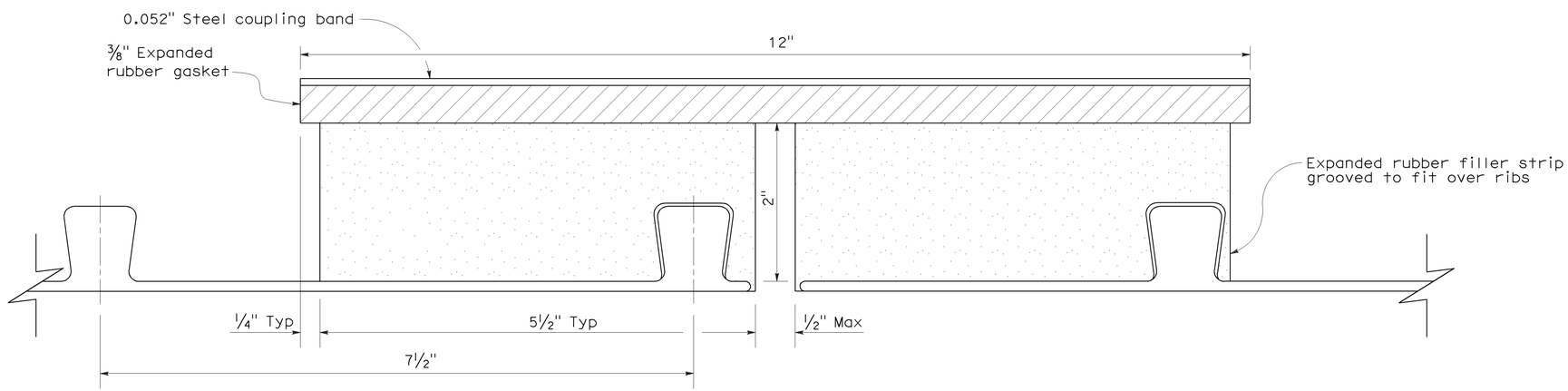

JOINT DETAIL

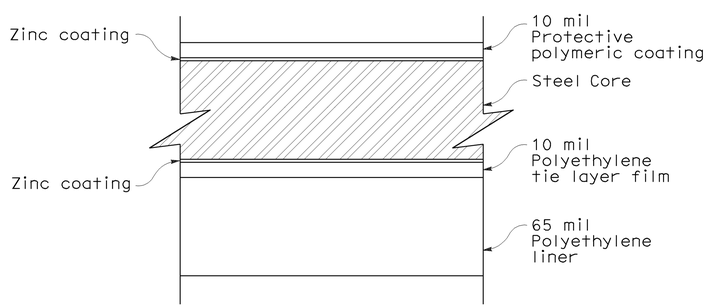

PIPE WALL DETAIL

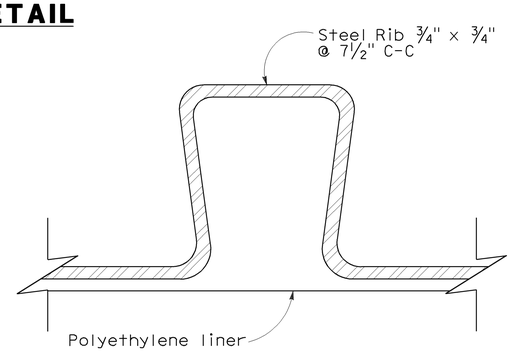

STEEL RIB DETAIL

NOTES:

1. Pipe to conform to ASTM A 978.
2. See Standard Plan A62F for backfill details.
3. Protective polymer film to conform to ASTM A 742 and AASHTO M 246.
4. See Standard Plan D97C for Universal Coupling details.
5. Strap joint connection shall consist of 2 separate bolted preformed connectors joined to form one strap when pipe inside diameter is greater than or equal to 60".

STATE OF CALIFORNIA
DEPARTMENT OF TRANSPORTATION

COMPOSITE STEEL SPIRAL RIB PIPE WITH SMOOTH INTERIOR STANDARD JOINT

NO SCALE

NSP D97J DATED JUNE 6, 2008 SUPPLEMENTS THE STANDARD PLANS BOOK DATED MAY 2006.

NEW STANDARD PLAN NSP D97J

2006 NEW STANDARD PLAN NSP D97J

4-24-08

DIST	COUNTY	ROUTE	POST MILES TOTAL PROJECT	SHEET NO.	TOTAL SHEETS
11	SD	125	10.6/10.9	41	64

LICENSED LANDSCAPE ARCHITECT

August 15, 2008
PLANS APPROVAL DATE

LICENSED LANDSCAPE ARCHITECT — Robert B. Schott 3635 — Signature — 11-04-08 Renewal Date — 08-11-08 Date — STATE OF CALIFORNIA

The State of California or its officers or agents shall not be responsible for the accuracy or completeness of electronic copies of this plan sheet.

To accompany plans dated 03-21-11

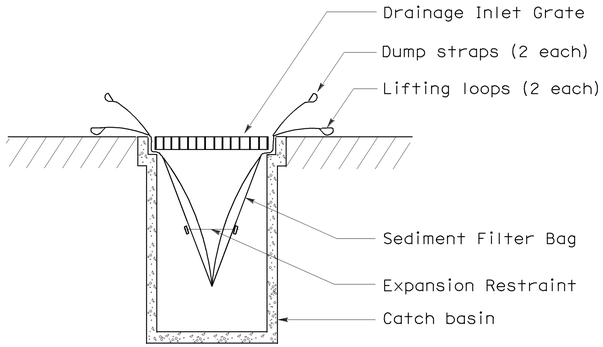

SECTION B-B

SEDIMENT FILTER BAG DETAIL

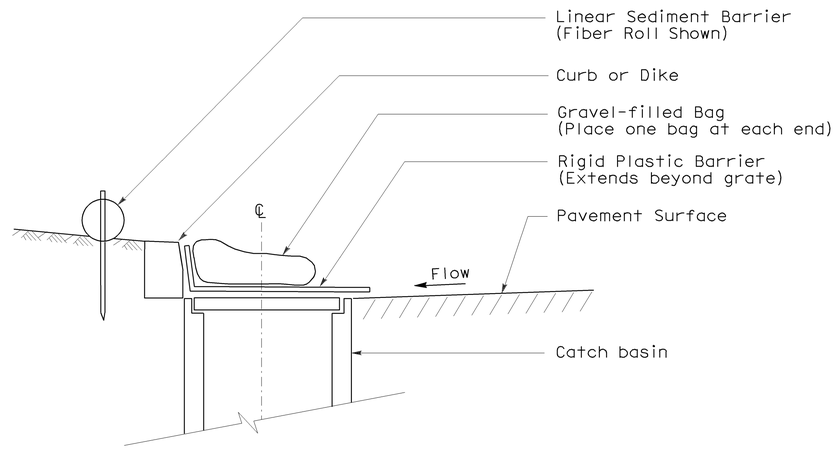

SECTION

TEMPORARY DRAINAGE INLET PROTECTION (TYPE 6A) (CATCH BASIN WITH GRATE)

NOTES:

1. See Standard Plan T51 for Temporary Silt Fence.
2. Dimensions may vary to fit field conditions.

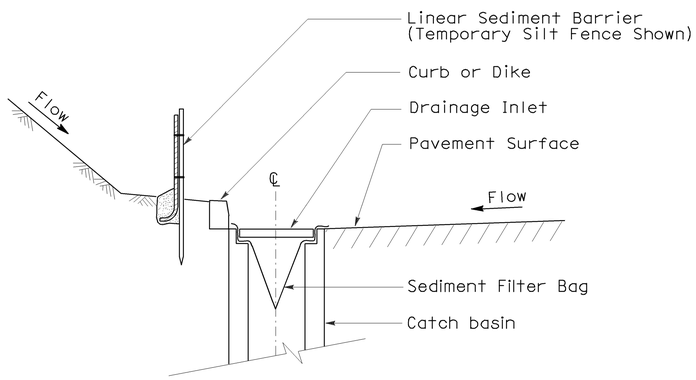

SECTION A-A

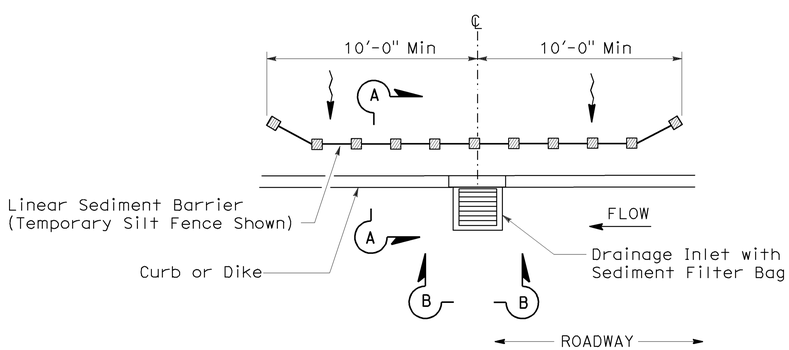

PLAN

TEMPORARY DRAINAGE INLET PROTECTION (TYPE 5) (SEDIMENT FILTER BAG)

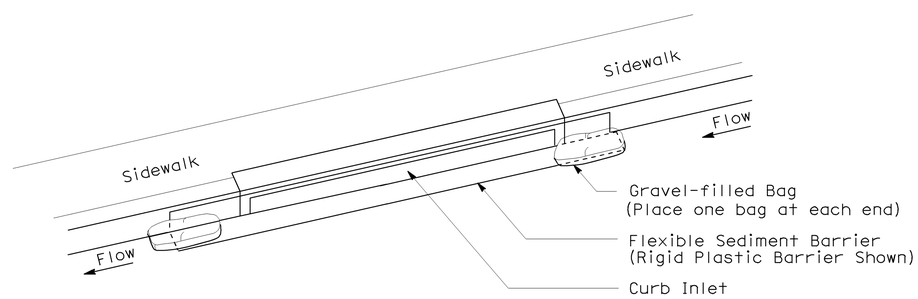

PERSPECTIVE

TEMPORARY DRAINAGE INLET PROTECTION (TYPE 6B) (CURB INLET WITHOUT GRATE)

STATE OF CALIFORNIA
DEPARTMENT OF TRANSPORTATION

TEMPORARY WATER POLLUTION CONTROL DETAILS (TEMPORARY DRAINAGE INLET PROTECTION)

NO SCALE

NSP T64 DATED AUGUST 15, 2008 SUPPLEMENTS THE STANDARD PLANS BOOK DATED MAY 2006.

NEW STANDARD PLAN NSP T64

2006 NEW STANDARD PLAN NSP T64

7-11-08

DIST	COUNTY	ROUTE	POST MILES TOTAL PROJECT	SHEET NO.	TOTAL SHEETS
11	SD	125	10.6/10.9	42	64

Randell D. Hiatt
REGISTERED CIVIL ENGINEER

June 6, 2008
PLANS APPROVAL DATE

REGISTERED PROFESSIONAL ENGINEER
Randell D. Hiatt
No. C50200
Exp. 6-30-09
CIVIL
STATE OF CALIFORNIA

The State of California or its officers or agents shall not be responsible for the accuracy or completeness of electronic copies of this plan sheet.

To accompany plans dated 03-21-11

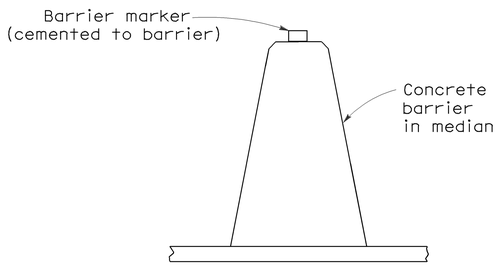

CONCRETE BARRIER TYPE 60 DELINEATION

See Notes 7 and 8

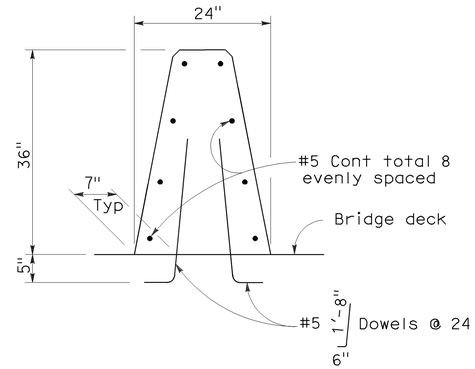

CONCRETE BARRIER TYPE 60A

Details similar to Type 60 except as noted.

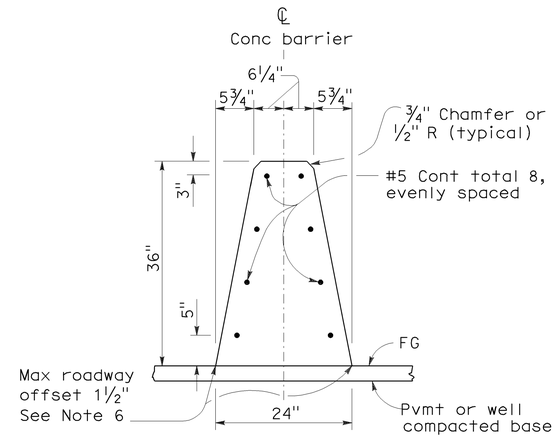

CONCRETE BARRIER TYPE 60

NOTES:

1. See Standard Plan A76B for details of Concrete Barrier Type 60 end anchors, connection to structures and transitions to Concrete Barrier Type 50 and Concrete Barrier Type 60S.
2. See Standard Plan A76C for Concrete Barrier Type 60 transitions at bridge column and sign pedestals.
3. Where glare screen is required on Concrete Barrier Type 60, use Concrete Barrier Type 60G.
4. Where the concrete barrier is added to the face of existing concrete structure, match existing weep holes.
5. Expansion joints in concrete barrier shall be located at all deck, pavement and principal wall joints. Expansion joint filler material shall be the same size as joint or ½" minimum.
6. Where roadway offset is greater than 1½", see Concrete Barrier Type 60C.
7. Barrier delineation to be used when required by the Special Provisions.
8. Spacing of barrier markers to match spacing of raised pavement markers on the adjacent median edgeline pavement delineation.
9. Reinforcing stirrup not required for roadway offsets less than 1'-0".
10. For roadway surfaces offset greater than 1½" to 3", no rebars required. For roadway surfaces offset greater than 3" to 8" use two #4 rebars at 3" above the lower roadway surface. For roadway surfaces offset greater than 8" to 12", use two #4 rebars at 3" above the lower roadway surface and two #4 rebars at 8" above the lower roadway surface. For roadway surfaces offset greater than 12" to 36", use two #4 rebars at 3" above the lower roadway surface and two #4 rebars at every 8" increment vertical spacing above the first two #4 rebars.

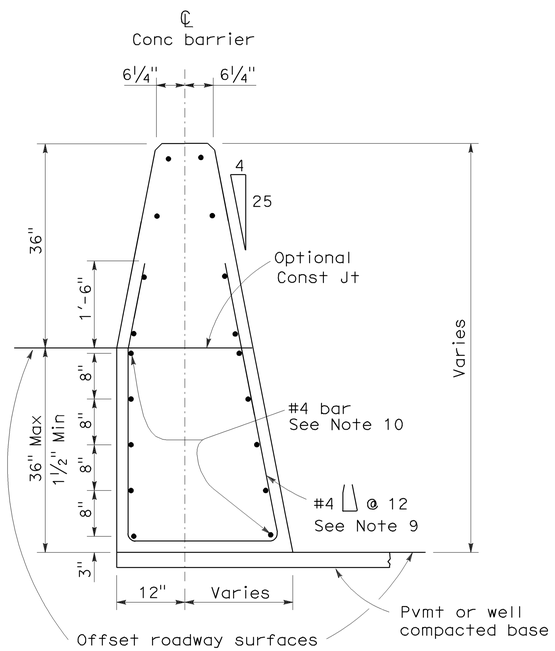

CONCRETE BARRIER TYPE 60C

Details similar to Type 60 except as noted.
Concrete barrier end anchor when necessary.
36" roadway surfaces offset shown.

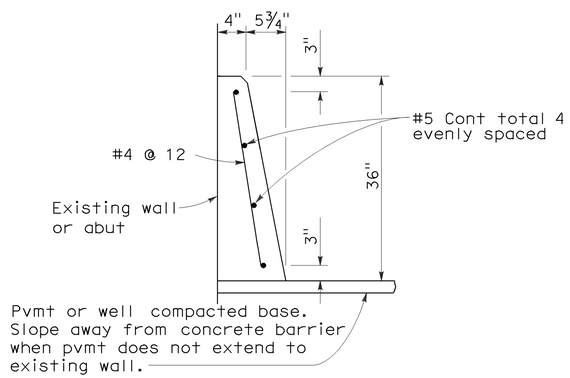

CONCRETE BARRIER TYPE 60D

STATE OF CALIFORNIA
DEPARTMENT OF TRANSPORTATION

CONCRETE BARRIER TYPE 60

NO SCALE

RSP A76A DATED JUNE 6, 2008 SUPERSEDES STANDARD PLAN A76A
DATED MAY 1, 2006 - PAGE 29 OF THE STANDARD PLANS BOOK DATED MAY 2006.

REVISED STANDARD PLAN RSP A76A

2006 REVISED STANDARD PLAN RSP A76A

5-21-08

DIST	COUNTY	ROUTE	POST MILES TOTAL PROJECT	SHEET NO.	TOTAL SHEETS
11	SD	125	10.6/10.9	43	64

Randell D. Hiatt
REGISTERED CIVIL ENGINEER

June 6, 2008
PLANS APPROVAL DATE

REGISTERED PROFESSIONAL ENGINEER
Randell D. Hiatt
No. C50200
Exp. 6-30-09
CIVIL
STATE OF CALIFORNIA

The State of California or its officers or agents shall not be responsible for the accuracy or completeness of electronic copies of this plan sheet.

To accompany plans dated 03-21-11

NOTES:

1. When necessary to place dike in front of face of guard railing, only Type C dike may be used. For dike details, see Standard Plan A87B.
2. For standard railing post embedment, see Standard Plans A77C3.
3. Guard railing delineation to be used where shown on the Project Plans.
4. When dike or curb is placed under guard railing, the maximum height of the dike or curb shall be 4". Mountable dike should not be used. For dike and curb details, see Revised Standard Plans RSP A87A and Standard Plan A87B.
5. For details of typical distance between the face of rail and hinge point, see Standard Plan A77C3.

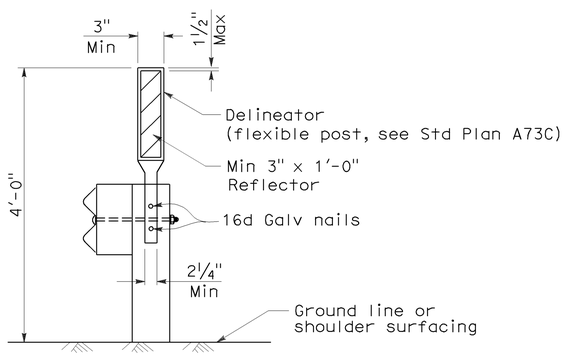

GUARD RAILING DELINEATION

See Note 3

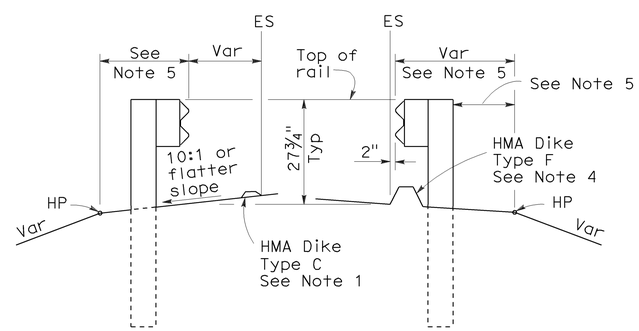

DIKE POSITIONING

See Note 1

STATE OF CALIFORNIA
DEPARTMENT OF TRANSPORTATION

METAL BEAM GUARD RAILING TYPICAL RAILING DELINEATION AND DIKE POSITIONING DETAILS

NO SCALE

RSP A77C4 DATED JUNE 6, 2008 SUPERSEDES STANDARD PLAN A77C4
DATED MAY 1, 2006 - PAGE 47 OF THE STANDARD PLANS BOOK DATED MAY 2006.

REVISED STANDARD PLAN RSP A77C4

2006 REVISED STANDARD PLAN RSP A77C4

12-10-07

DIST	COUNTY	ROUTE	POST MILES TOTAL PROJECT	SHEET NO.	TOTAL SHEETS
11	SD	125	10.6/10.9	44	64

Randell D. Hiatt
REGISTERED CIVIL ENGINEER

June 5, 2009
PLANS APPROVAL DATE

REGISTERED PROFESSIONAL ENGINEER
Randell D. Hiatt
No. C50200
Exp. 6-30-09
CIVIL
STATE OF CALIFORNIA

The State of California or its officers or agents shall not be responsible for the accuracy or completeness of electronic copies of this plan sheet.

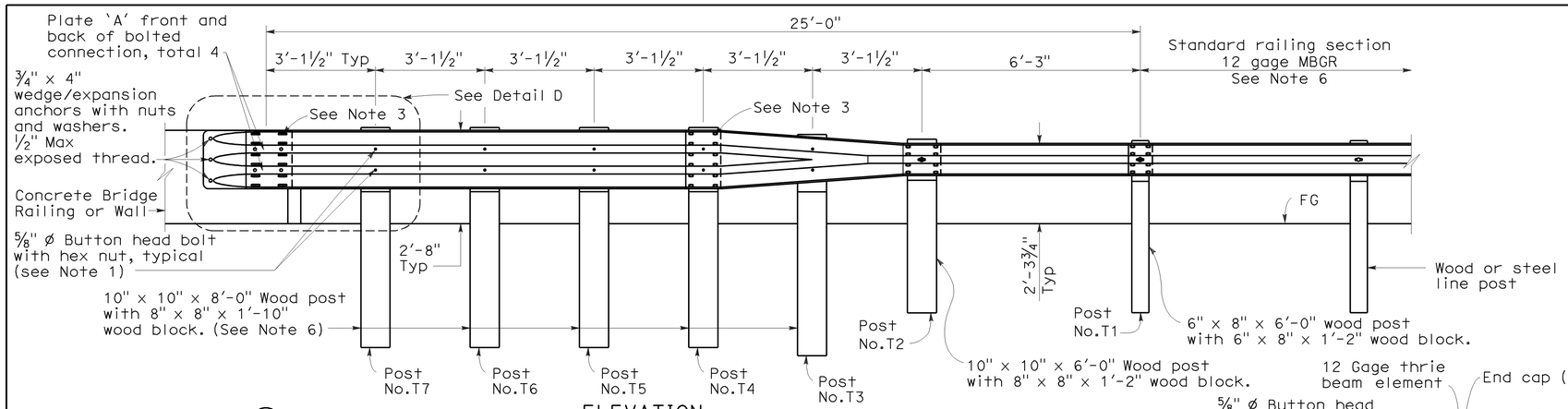

ELEVATION

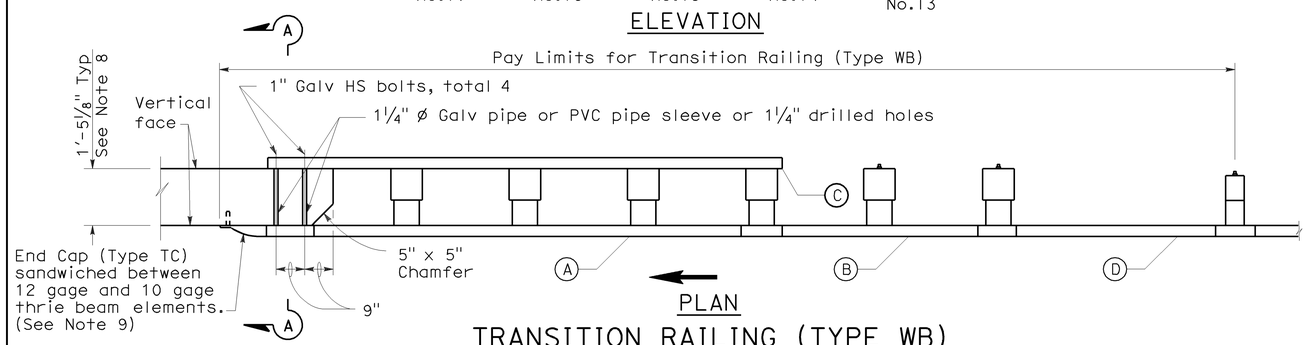

PLAN

TRANSITION RAILING (TYPE WB)

(No Blockout Attachment)

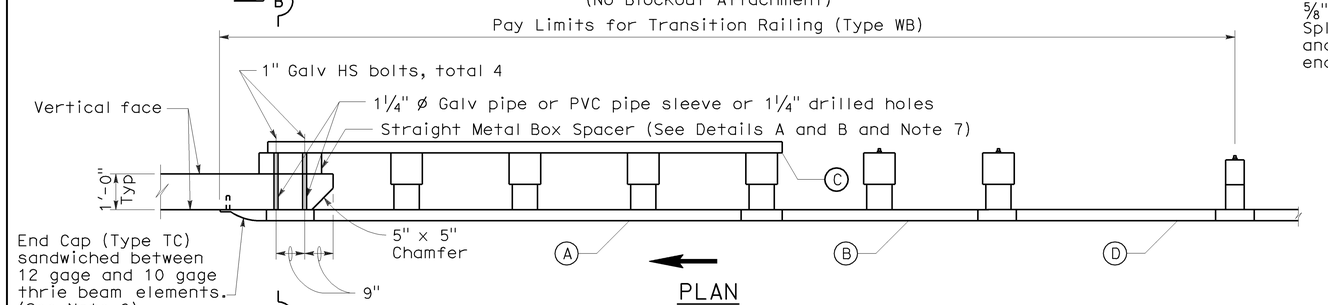

PLAN

TRANSITION RAILING (TYPE WB)

(Blockout Attachment)

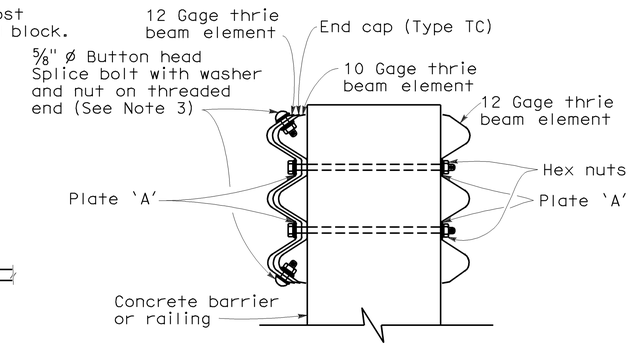

SECTION A-A

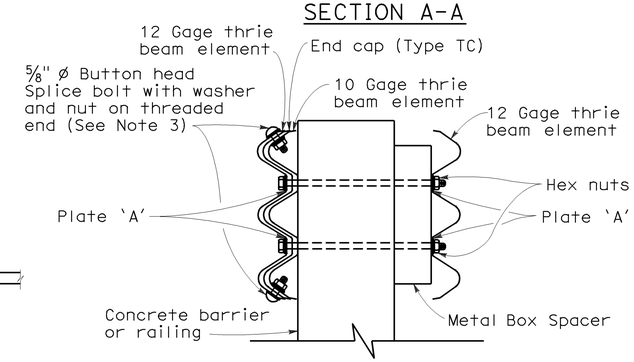

SECTION B-B

LEGEND

(A) Nested thrie beam elements (one 12 gage element nested over one 10 gage element).

(B) One 10 gage "W" beam to thrie beam element.

(C) One 12 gage thrie beam element.

(D) One 10 gage "W" beam rail element (7'-3½" length)

10 gage = 0.135" thick

12 gage = 0.108" thick

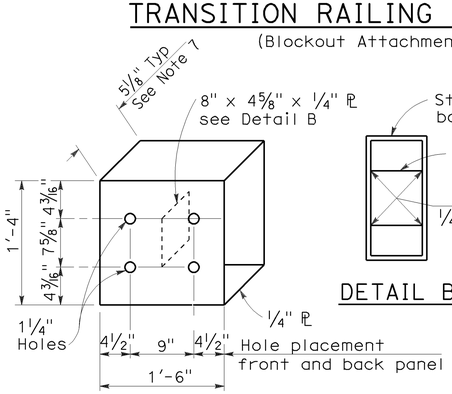

DETAIL A

STRAIGHT METAL BOX SPACER

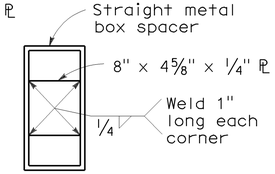

DETAIL B

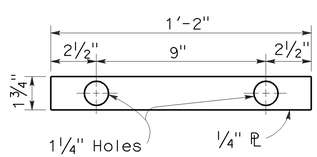

DETAIL C

PLATE 'A'

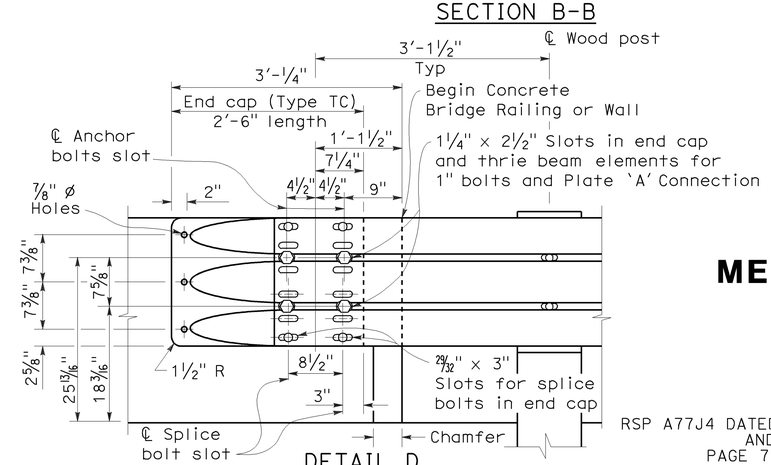

DETAIL D

NOTES:

To accompany plans dated 03-21-11

1. Use 5/8 " ø Button head bolts and hex nuts for connections to posts. No washer on rail face for bolted connections to post.
2. The nested rail elements, end cap, and 'W' beam to thrie beam element may be spliced together prior to bolting the elements to the wood post and concrete barrier or railing.
3. Exterior splice bolt holes for rail element splices at Post No.T4 and the connection to the concrete barrier or railing shall be the standard 29/32 " x 1 1/8 " slot size. Interior splice bolt holes at these locations may be increased up to 1 1/4 " ø. Only the top 2 and the bottom 2 splice bolts with washers and nuts are required for rail splices at Post No.T4 and the connection to the concrete barrier or railing.
4. Direction of adjacent traffic indicated by →.
5. The top elevation of Post Nos.T2 through T7 shall not project more than 1" above the top elevation of the rail element.
6. Typically, the railing connected to Transition Railing (Type WB) will be either standard railing section of metal beam guard railing or an approved Caltrans end treatment attached to Post No.T1.
7. The depth of the metal box spacer varies from the 5 1/8 " to 1 1/2 " and is dependent on the width of the concrete railing or wall. The combined dimension for the depth of the metal box spacer plus the width of railing or wall is typically 17 1/8 ". Where the space between the backside of the concrete railing or wall and the rear thrie beam element is less than 1 1/2 ", metal plates similar to Plate 'A' are to be used as spacers.
8. Where the width of the concrete railing or wall is greater than 17 1/8 ", wood blocks are to be used to fill the space created between the backside of Posts No.4 through No.7 and the rear thrie beam element. These wood blocks shall be 8" in width and 1'-2" in length. The dimension between the front thrie beam element and the rear thrie beam element is to match the width of the concrete railing or wall.
9. End cap may be installed over 12 gage and 10 gage thrie beam elements where transition railing is installed on the departure end of bridge railing.

STATE OF CALIFORNIA
DEPARTMENT OF TRANSPORTATION

METAL BEAM GUARD RAILING TRANSITION RAILING (TYPE WB)

NO SCALE

RSP A77J4 DATED JUNE 5, 2009 SUPERSEDES RSP A77J4 DATED JUNE 6, 2008 AND STANDARD PLAN A77J4 DATED MAY 1, 2006 - PAGE 75 OF THE STANDARD PLANS BOOK DATED MAY 2006.

REVISED STANDARD PLAN RSP A77J4

2006 REVISED STANDARD PLAN RSP A77J4

5-14-09

DIST	COUNTY	ROUTE	POST MILES TOTAL PROJECT	SHEET NO.	TOTAL SHEETS
11	SD	125	10.6/10.9	45	64

REGISTERED CIVIL ENGINEER

November 17, 2006
PLANS APPROVAL DATE

REGISTERED PROFESSIONAL ENGINEER Michael Janzen No. 44788 Exp. 03-31-08 CIVIL STATE OF CALIFORNIA

The State of California or its officers or agents shall not be responsible for the accuracy or completeness of electronic copies of this plan sheet.

To accompany plans dated 03-21-11

2006 REVISED STANDARD PLAN RSP A87A

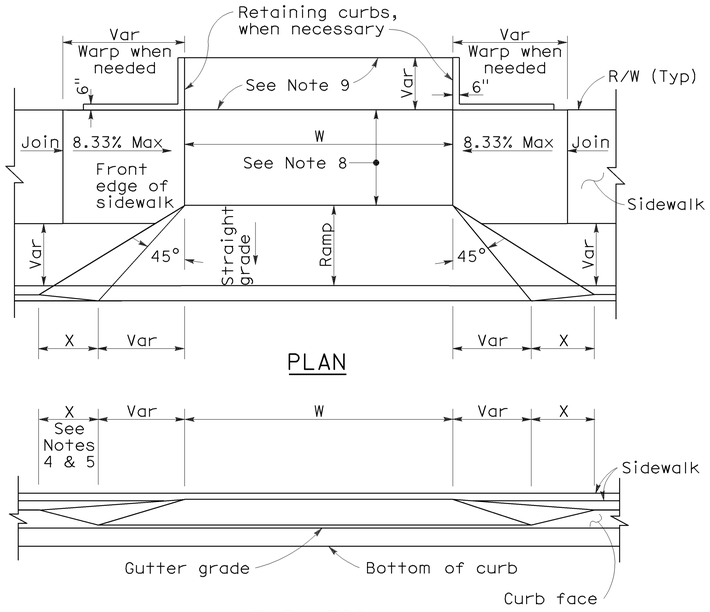

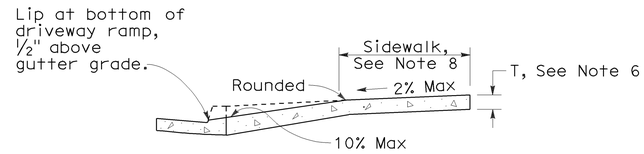

CASE A

Typical driveway, sidewalk not depressed

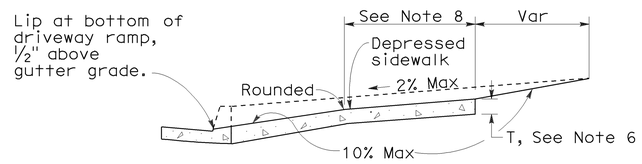

CASE B

Driveway with depressed sidewalk

SECTIONS

CURB QUANTITIES

TYPE	CUBIC YARDS PER LINEAR FOOT
A1-6	0.02585
A1-8	0.03084
A2-6	0.05903
A2-8	0.06379
A3-6	0.01036
A3-8	0.01435
B1-4	0.02185
B1-6	0.02930
B2-4	0.05515
B2-6	0.06171
B3-4	0.00641
B3-6	0.01074
B4	0.05709
D-4	0.04083
D-6	0.06804
E	0.06661

TABLE A

CURB TYPE	DIMENSIONS "H1"	"H2"	"W1"	"W2"
A1-6	1'-2"	6"	7½"	1½"
A1-8	1'-4"	8"	8"	2"
A2-6	1'-0"	6"	2'-7½"	1½"
A2-8	1'-2"	8"	2'-8"	2"
A3-6	6"	5"	7¼"	1¼"
A3-8	8"	7"	7¾"	1¾"
B1-4	1'-0"	4"	7½"	2½"
B1-6	1'-2"	6"	9"	4"
B2-4	10"	4"	2'-7½"	2½"
B2-6	1'-0"	6"	2'-9"	4"
B3-4	4"	3"	7"	2"
B3-6	6"	5"	8½"	3½"
D-4	10"	4"	1'-6"	1'-1"
D-6	1'-0"	6"	2'-2"	1'-8"

DRIVEWAYS

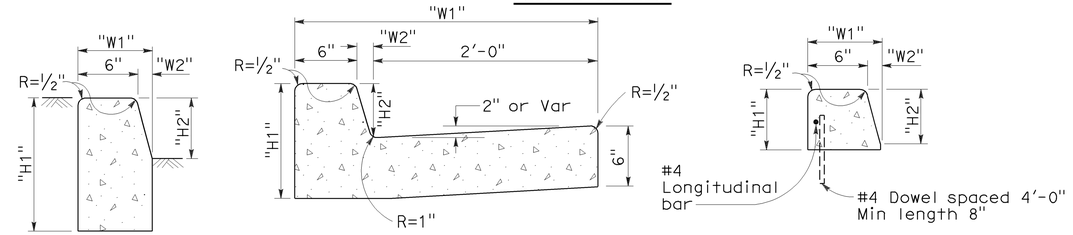

TYPE A1 CURBS
See Table A

TYPE A2 CURBS
See Table A

TYPE A3 CURBS
Superimposed on existing pavement
See Table A

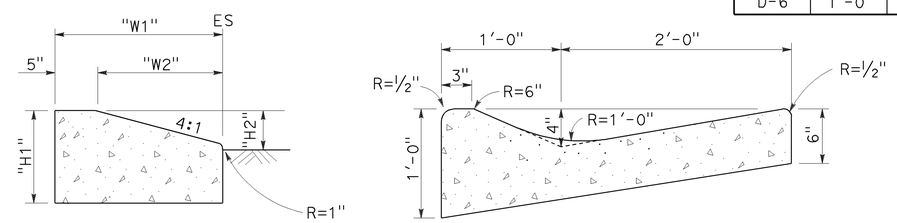

TYPE D CURBS
See Table A

TYPE E CURB

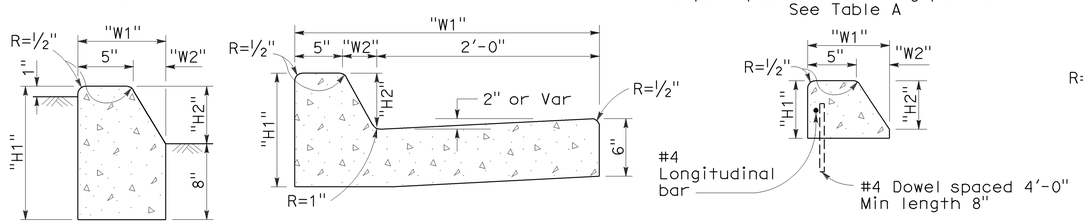

TYPE B1 CURBS
See Table A

TYPE B2 CURBS
See Table A

TYPE B3 CURBS
Superimposed on existing pavement
See Table A

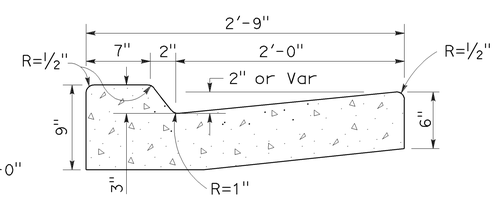

TYPE B4 CURBS

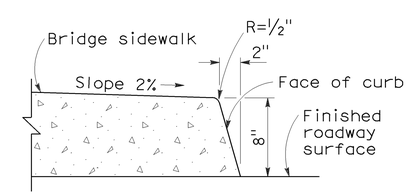

TYPE H CURB
On Bridges

CURBS

NOTES:

1. Case A driveway section typically applies.
2. Use Case B driveway section when ramp slopes would exceed 10% in Case A.
3. Use Case B driveway section when sidewalk cross slope would exceed 2% in Case A.
4. X=3'-0" except for curb heights over 10" where 4:1 slopes shall be used on curb slope.
5. X is a variable when sidewalk is located where wheelchairs may traverse the surface. Slopes shall not exceed 8.33%.
6. Sidewalk and ramp thickness "T" at driveway shall be 4" for residental and 6" for commercial.
7. Difference in slope of the driveway ramp and the slope of a line between the gutter and a point on the roadway 5'-0" from gutter line shall not exceed 15%. Reduce driveway ramp slope, not gutter slope, where required.
8. Minimum width of clear passageway for sidewalk shall be 4'-0".
9. Retaining curbs and acquisition of construction easement may be necessary for narrow sidewalks or curb heights in excess of 6".
10. Across the pedestrian route at curb ramp locations, the gutter pan slope shall not exceed 1" of depth for each 2'-0" of width.

STATE OF CALIFORNIA
DEPARTMENT OF TRANSPORTATION

CURBS AND DRIVEWAYS

NO SCALE

RSP A87A DATED NOVEMBER 17, 2006 SUPERSEDES STANDARD PLAN A87A DATED MAY 1, 2006 - PAGE 113 OF THE STANDARD PLANS BOOK DATED MAY 2006.

REVISED STANDARD PLAN RSP A87A

10-25-06

DIST	COUNTY	ROUTE	POST MILES TOTAL PROJECT	SHEET NO.	TOTAL SHEETS
11	SD	125	10.6/10.9	46	64

REGISTERED CIVIL ENGINEER

September 1, 2006
PLANS APPROVAL DATE

REGISTERED PROFESSIONAL ENGINEER Hector David Cordova No. C41957 Exp. 3-31-08 CIVIL STATE OF CALIFORNIA

The State of California or its officers or agents shall not be responsible for the accuracy or completeness of electronic copies of this plan sheet.

To accompany plans dated 03-21-11

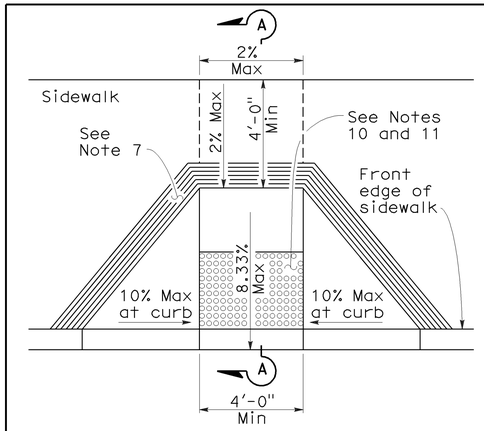

CASE A

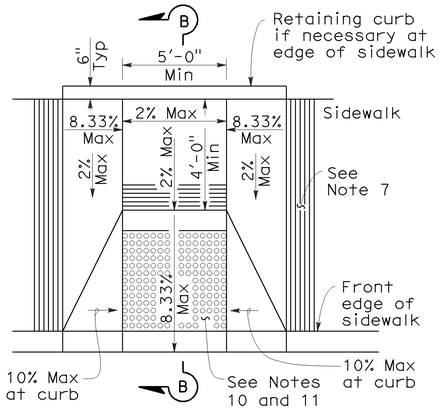

CASE B

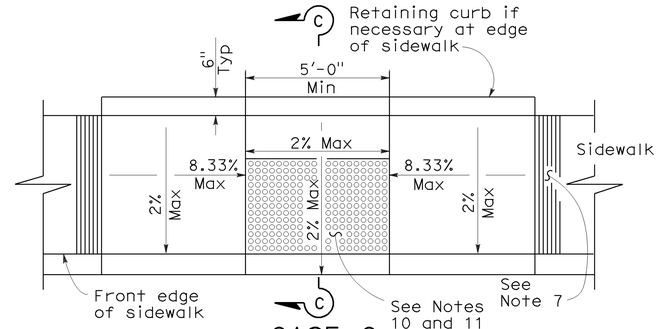

CASE C

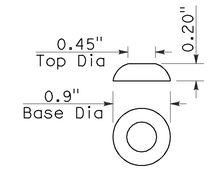

RAISED TRUNCATED DOME

CASE D

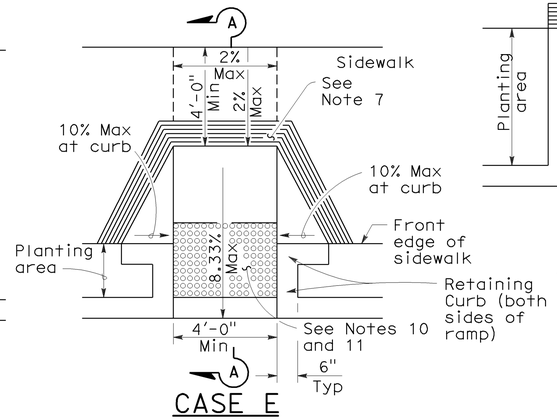

CASE E

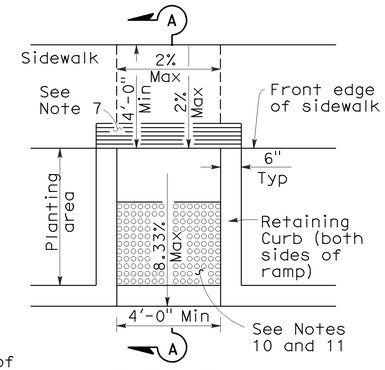

CASE F

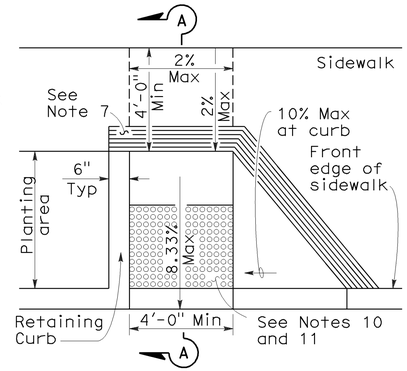

CASE G
See Note 4

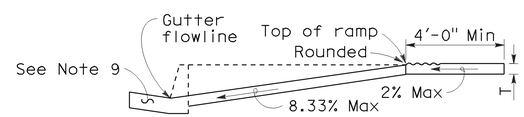

SECTION A-A

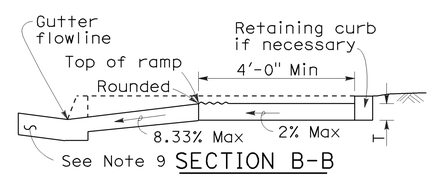

SECTION B-B
Depress entire sidewalk as required

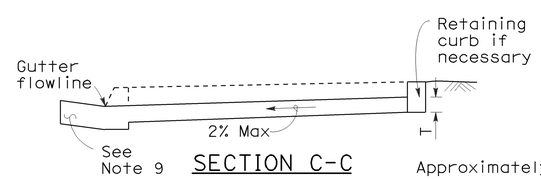

SECTION C-C

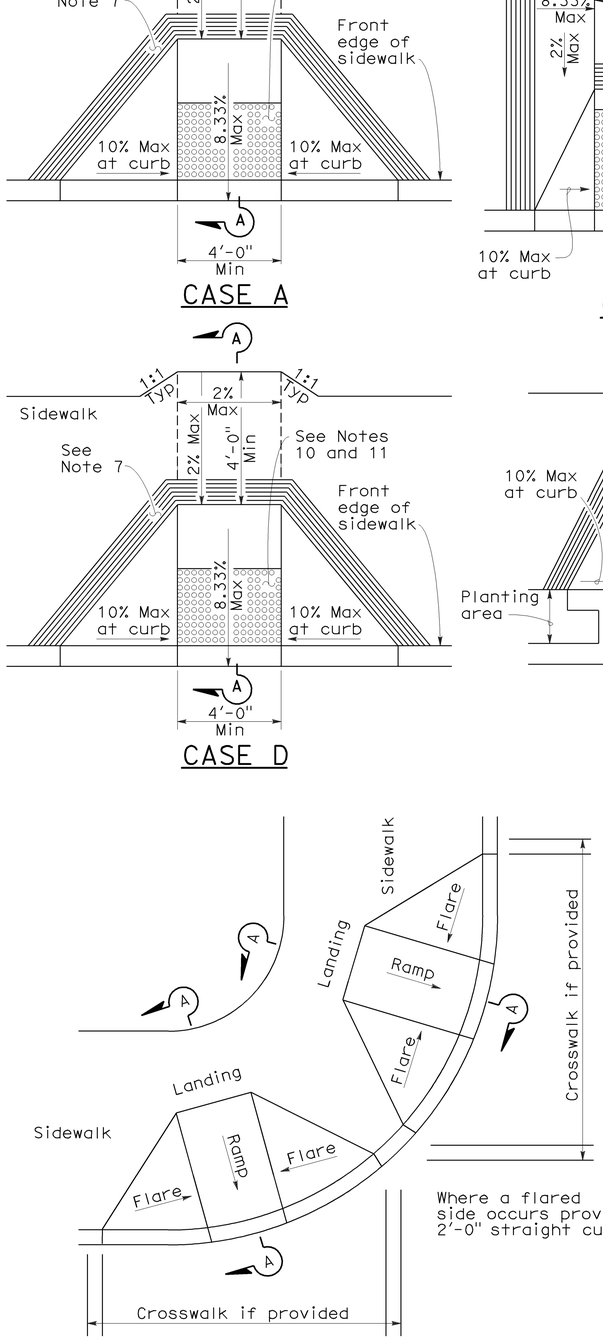

DETAIL A

TYPICAL TWO-RAMP CORNER INSTALLATION

See Note 1

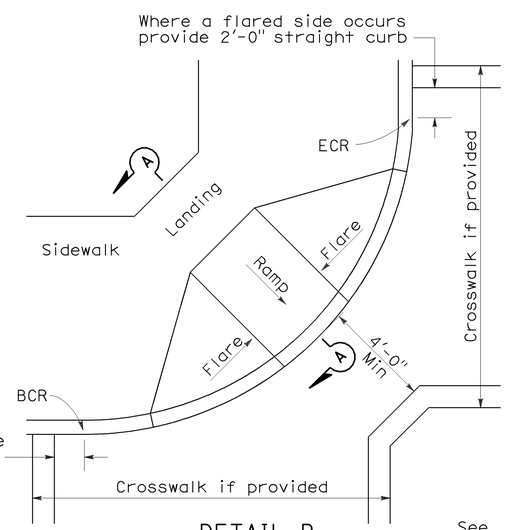

DETAIL B

TYPICAL ONE-RAMP CORNER INSTALLATION

See Notes 1 and 3

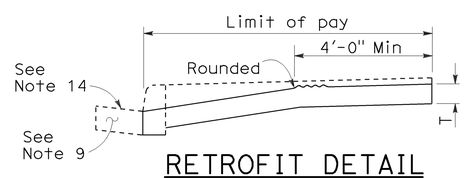

RETROFIT DETAIL

Existing curb and sidewalk

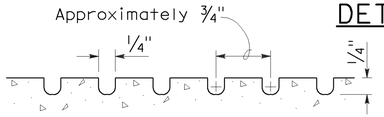

GROOVING DETAIL

NOTES:

1. As site conditions dictate, Case A through Case G curb ramps may be used for corner installations similar to those shown in Detail A and Detail B. The case of curb ramps used in Detail A do not have to be the same. Case A through Case G curb ramps also may be used at mid block locations, as site conditions dictate.
2. If distance from curb to back of sidewalk is too short to accommodate ramp and 4'-0" platform (landing) as shown in Case A, the sidewalk may be depressed longitudinally as in Case B, or C or may be widened as in Case D.
3. When ramp is located in center of curb return, crosswalk configuration must be similar to that shown for Detail B.
4. As site conditions dictate, the retaining curb side and the flared side of the Case G ramp shall be constructed in reversed position.
5. If located on a curve, the sides of the ramp need not be parallel, but the minimum width of the ramp shall be 4'-0".
6. Side slope of ramp flares vary uniformly from a maximum of 10% at curb to conform with longitudinal sidewalk slope adjacent to top of the ramp, except in Case C and Case F.
7. The curb ramp shall be outlined, as shown, with a 1'-0" wide border with 1/4" grooves approximately 3/4" on center. See grooving detail.
8. Transitions from ramps and landing to walks, gutters or streets shall be flush and free of abrupt changes.
9. Maximum slopes of adjoining gutters, the road surface immediately adjacent to the curb ramp or accessible route shall not exceed 5 percent within 4'-0" of the top and bottom of the curb ramp.
10. Curb ramps shall have a detectable warning surface that extends the full width and 3'-0" depth of the ramp. Detectable Warning Surfaces shall conform to the details on this plan and the requirements in the Special Provisions.
11. The edge of the detectable warning surface nearest the street shall be between 6" and 8" from the gutter flowline.
12. Sidewalk and ramp thickness, "T", shall be 3½" minimum.
13. Utility pull boxes, manholes, vaults and all other utility facilities within the boundaries of the curb ramp will be relocated or adjusted to grade by the owner prior to, or in conjunction with, curb ramp construction.
14. For retrofit conditions, removal and replacement of curb apron will be at the Contractor's option, unless otherwise shown on project plans.

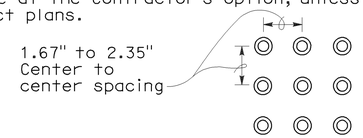

RAISED TRUNCATED DOME PATTERN (IN-LINE)

DETECTABLE WARNING SURFACE

See Note 10

STATE OF CALIFORNIA
DEPARTMENT OF TRANSPORTATION

CURB RAMP DETAILS

NO SCALE

RSP A88A DATED SEPTEMBER 1, 2006 SUPERSEDES STANDARD PLAN A88A DATED MAY 1, 2006 - PAGE 115 OF THE STANDARD PLANS BOOK DATED MAY 2006.

REVISED STANDARD PLAN RSP A88A

2006 REVISED STANDARD PLAN RSP A88A

8-3-06

DIST	COUNTY	ROUTE	POST MILES TOTAL PROJECT	SHEET NO.	TOTAL SHEETS
11	SD	125	10.6/10.9	47	64

Raymond Don Tsztoo
REGISTERED CIVIL ENGINEER

January 18, 2008
PLANS APPROVAL DATE

REGISTERED PROFESSIONAL ENGINEER
Raymond Don Tsztoo
No. C37332
Exp. 6-30-08
CIVIL
STATE OF CALIFORNIA

The State of California or its officers or agents shall not be responsible for the accuracy or completeness of electronic copies of this plan sheet.

To accompany plans dated 03-21-11

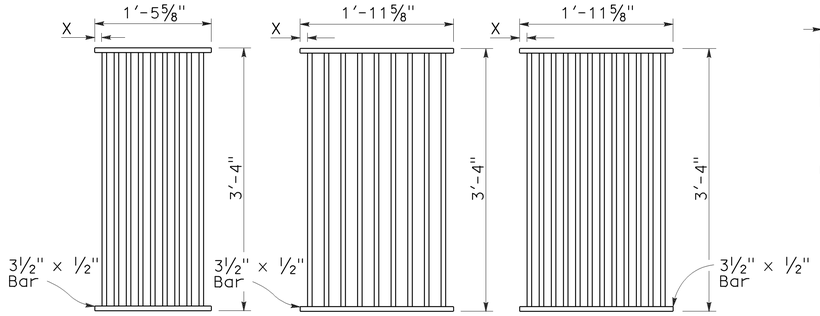

TYPE 18-9

1⅜" Clear spacing. Use within the roadbed on highways where bicycles and pedestrians are excluded.

TYPE 24-9

2" Clear spacing. Use in locations off the roadbed on all types of highways.

TYPE 24-12

1⅜" Clear spacing. Use within the roadbed on highways where bicycles and pedestrians are excluded.

RECTANGULAR GRATE DETAILS

(See table below)

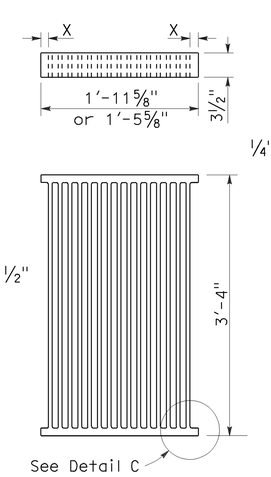

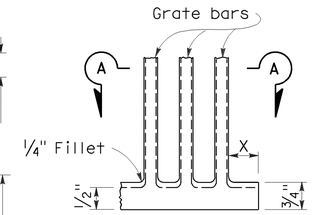

DETAIL C

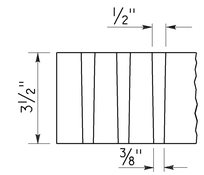

SECTION A-A

ALTERNATIVE CAST NODULAR IRON GRATE OR CAST STEEL GRATE

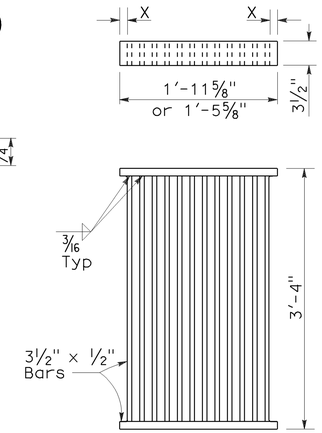

ALTERNATIVE WELDED GRATE

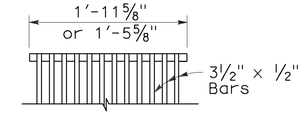

CAST END BLOCK

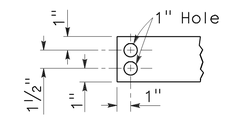

END OF BAR

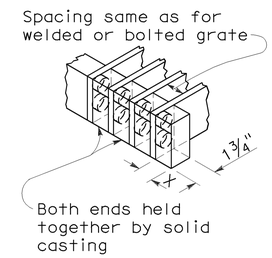

ALTERNATIVE CAST NODULAR IRON OR CAST STEEL END BLOCK GRATE

NOTES:

1. Grate type numbers refer to approximate width of grate in inches and number of bars, respectively.
2. Contractor has the option of using cast nodular iron, cast steel, welded, bolted, or cast end block grate.
3. See Special Provisions for requirements pertaining to galvanizing or asphalt dipping of grates and frames.
4. Rounded top of bars optional on all grates.
5. Pipe inlets with a grate shall be placed so that bars parallel direction of principle surface flow.
6. Full penetration butt welds may be substituted for the fillet welds on all anchors.
7. Standard square, hexagon, round or equivalent headed anchors may be substituted for the right angle hooks on the anchors shown on this plan.
8. Grate and frame weights are based on welded grates (weights of face angles, steps, protection bars, etc. are not included).

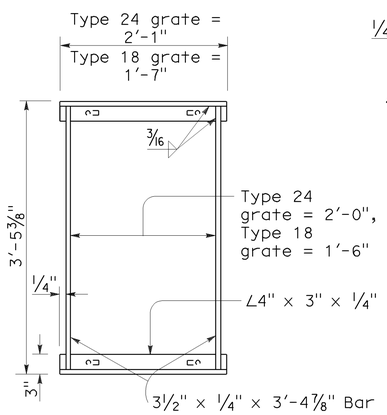

TYPICAL FRAME

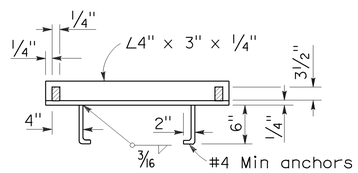

CROSS SECTION

(Thru frame)

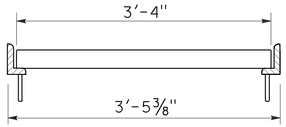

LONGITUDINAL SECTION

(Thru frame and grate)

RECTANGULAR FRAME DETAILS

(For all rectangular grates)

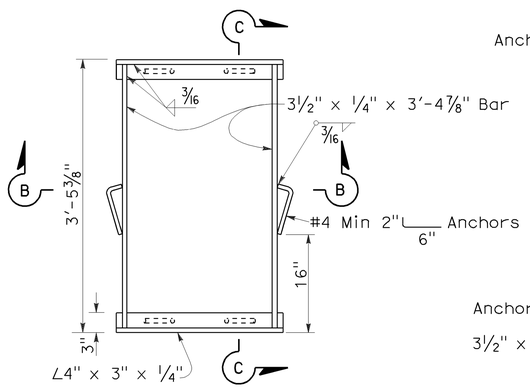

TYPICAL FRAME

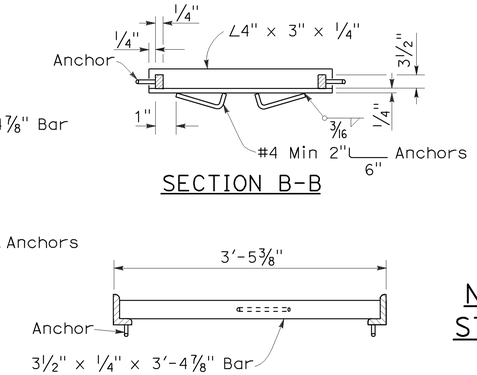

SECTION B-B

SECTION C-C

ALTERNATIVE ANCHOR FOR RECTANGULAR FRAME

(For details not shown, See Rectangular Frame Details)

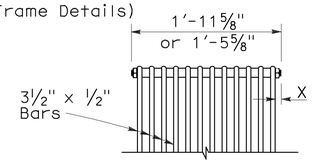

BOLTED END BLOCK

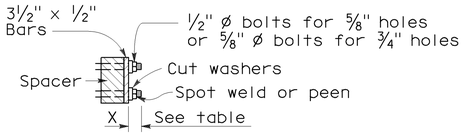

BOLTING DETAIL

ALTERNATIVE BOLTED GRATE

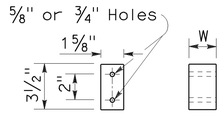

BAR SPACER

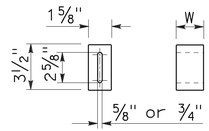

ALTERNATIVE SPACER

W = 1⅜" or 2"

GRATE BAR SPACING TABLE

TYPE	No. OF BARS	CLEAR BAR SPACING	X
18-9	9	1⅜"	1 1/16"
24-9	9	2"	1 9/16"
24-12	12	1⅜"	1¼"

INLET TYPE	COVER TYPE	WEIGHT LB
OS	PLATE	174
OL-7	PLATE	170
OL-10	PLATE	170
OL-14	PLATE	170
OL-21	PLATE	170
OCP	PLATE	112
OCPI	PLATE	112
OCPI	REDWOOD	42
OMP	PLATE	177
OMPI	PLATE	177

INLET TYPE	GRATE TYPE	No. OF GRATES	WEIGHT LB
GDO	24-12	2	634
GOL-7	24-12	1	326
GOL-10	24-12	1	326
GO,G1,G2,G3,G4 (TYPE 24)	24-9	1	263
	24-12	1	326
G4 (TYPE 18),G5,G6	18-9	1	249
GT1	18-9	2	498
GT2	18-9	2	498
GT3	24-12	2	652
GT4	24-12	2	652
TRASH RACK			22

BASIS FOR MISC IRON & STEEL FINAL PAY WEIGHTS FOR DRAINAGE INLETS

(See General Notes, No 8)

STATE OF CALIFORNIA
DEPARTMENT OF TRANSPORTATION

GRATE DETAILS

NO SCALE

RSP D77A DATED JANUARY 18, 2008 SUPERSEDES STANDARD PLAN D77A DATED MAY 1, 2006 - PAGE 155 OF THE STANDARD PLANS BOOK DATED MAY 2006.

REVISED STANDARD PLAN RSP D77A

2006 REVISED STANDARD PLAN RSP D77A

12-14-07

DIST	COUNTY	ROUTE	POST MILES TOTAL PROJECT	SHEET NO.	TOTAL SHEETS
11	SD	125	10.6/10.9	48	64

Raymond Don Tsztoo
REGISTERED CIVIL ENGINEER

June 6, 2008
PLANS APPROVAL DATE

REGISTERED PROFESSIONAL ENGINEER
Raymond Don Tsztoo
No. C37332
Exp. 6-30-08
CIVIL
STATE OF CALIFORNIA

The State of California or its officers or agents shall not be responsible for the accuracy or completeness of electronic copies of this plan sheet.

To accompany plans dated 03-21-11

ANNULAR AND HELICAL PROFILE

COUPLING TYPE	PIPE CORRUGATION	PIPE SIZE	W OR A	PIPE WALL THICKNESS		BAND THICKNESS		BAR AND STRAP (CSP ONLY)			ANGLE						
											DIMENSIONS		BOLTS (No.- Dia)		RIVETS ANGLE TO BAND		SPOT WELDS ANGLE TO BAND
				CSP	CAP	CSP	CAP	STRAP THICKNESS	BOLTS Dia	BAR Dia	CSP	CAP	CSP	CAP	CSP	CAP	CSP
TWO PIECE INTEGRAL FLANGE	1½′ × ¼"	6"	7"	0.064"-0.168"		0.052"							3-⅜"				
	1½′ × ¼"	8"-10"	7"	0.064"-0.168"	0.060"-0.164"	0.064"	0.060"						3-⅜"	3-⅜"			
ANNULAR	2⅔" × ½"	THROUGH 24"	12"	0.064"-0.168"	0.060"-0.164"	0.064"	0.060"				2" × 2" × 3/16"	2" × 2" × 3/16"	3-½"	3-½"	3-⅜"	3-⅜"	3-½"
HUGGER	2⅔" × ½" REROLLED END	THROUGH 24"	10½"	0.064"-0.168"		0.064"		0.079"	½"	⅞"							

SPIRAL RIB PROFILE

COUPLING TYPE	PIPE CORRUGATION	PIPE SIZE	W	PIPE WALL THICKNESS		BAND THICKNESS		BAR AND STRAP (SSRP ONLY)			ANGLE						
											DIMENSIONS		BOLTS (No.- Dia)		RIVETS ANGLE TO BAND		SPOT WELDS ANGLE TO BAND
				SSRP	ASRP	SSRP	ASRP	STRAP THICKNESS	BOLTS Dia	BAR Dia	SSRP	ASRP	SSRP	ASRP	SSRP	ASRP	SSRP
ANNULAR	2⅔" × ½" * REROLLED END	24"	12"	0.064"-0.168"	0.060"-0.164"	0.064"	0.060"				2" × 2" × 3/16"	2" × 2" × 3/16"	3-½"	3-½"	3-⅜"	3-⅜"	3-½"
HUGGER	2⅔" × ½" * REROLLED END	24"	10½"	0.064"-0.168"		0.064"		0.079"	½"	⅞"							

* See Note 12.

12. All profiles of Spiral Rib Pipe (¾" × ¾" ribs at 7½" pitch and ¾" × 1" ribs at 11½" pitch in both steel and aluminum and ¾" × 1" ribs at 8½" pitch in steel only) shall be manufactured with rerolled ends. Corrugation profile of the rerolled ends shall be 2⅔" × ½" annual corrugations with a minimum of two full corrugations at each end.

NOTES:

1. All ferrous metal coupling band connection hardware shall be galvanized or electro-plated in accordance with the Standard Specifications.
2. For helically corrugated coupling bands, the connection angles may be oriented parallel to the pipe axis, provided connecting holes are slotted lengthwise sufficiently to allow adjustment for the helix angle.
3. Tension strap may be connected to band with either spot welds or fillet welds that develop minimum required strength of strap.
4. Use 1¼" gage line dimension on attached angle leg for rivets and spot welds.
5. Band thickness shall not be less than:
   a. 3 standard thicknesses lighter than the thickness of the pipe for Corrugated Steel Pipe.
   b. 2 standard thicknesses lighter than the thickness of the pipe and in no case lighter than 0.060" for Corrugated Aluminum Pipe.
6. Dimensions, thicknesses and strengths shown are minimum.
7. For pipe arches use same width band as for round pipe of equal periphery.
8. Fillet welds of equivalent strenght may be substituted for spot welds or rivets.
9. Spot welds shall develop minimum required strength of strap.
10. Pipe with rerolled ends having at least two 2⅔" × ½" annular corrugations at each end with or without an upturned flange may be connected with any of the annular coupling bands shown for pipe of the same diameter and wall thickness and having 2⅔" × ½" corrugations.
11. For downdrain applications, two piece integral flange couplers shall have factory applied sleeve type rubber gaskets with a minimum length of 7" measured along the length of the pipe.

STATE OF CALIFORNIA
DEPARTMENT OF TRANSPORTATION

CORRUGATED METAL PIPE COUPLING DETAILS No. 7 DOWNDRAIN

NO SCALE

RSP D97G DATED JUNE 6, 2008 SUPERSEDES STANDARD PLAN D97G
DATED MAY 1, 2006 - PAGE 189 OF THE STANDARD PLANS BOOK DATED MAY 2006.

REVISED STANDARD PLAN RSP D97G

2006 REVISED STANDARD PLAN RSP D97G

4-4-08

DIST	COUNTY	ROUTE	POST MILES TOTAL PROJECT	SHEET NO.	TOTAL SHEETS
11	SD	125	10.6/10.9	49	64

REGISTERED ELECTRICAL ENGINEER

October 5, 2007
PLANS APPROVAL DATE

REGISTERED PROFESSIONAL ENGINEER Jeffery G. McRae No. E14512 Exp. 6-30-08 ELECTRICAL STATE OF CALIFORNIA

The State of California or its officers or agents shall not be responsible for the accuracy or completeness of electronic copies of this plan sheet.

To accompany plans dated 03-21-11

ELECTROLIERS

STANDARD TYPES
15, 15D
15 STRUCTURE
21, 21D STRUCTURE
30
31
32
35
36-20A

High mast light pole

Double Arm lighting standard

Existing electrolier

Electrolier foundation (Future installation)

NOTES:

1. Luminaires shall be 310 W HPS when installed on Type 21, 21D, 30, 31, 32, 35 and 36-20A Standards, unless otherwise specified. Luminaires shall be 200 W HPS when installed on other type standards or poles, unless otherwise specified.
2. Luminaires shall be the cutoff type, ANSI Type Ⅲ medium cutoff lighting distribution, unless otherwise specified.
3. Variations noted adjacent to symbol on project plans.

Electrolier (see project notes or project plans)

Luminaire on wood pole

STANDARD NOTES:

- AB — Abandon. If applied to conduit, remove conductors.
- BC — Install pull box in existing conduit run.
- BP — Pedestrian barricade, type as indicated on plan.
- CB — Install conduit into existing pull box.
- CC — Connect new and existing conduit. Remove existing conductors and install conductors as indicated.
- CF — Conduit to remain for future use. Remove conductors. Install pull wire or rope.
- DH — Detector handhole.
- FA — Foundation to be abandoned.
- IS — Install sign on signal mast arm.
- NS — No slip base on standard.
- PEC — Photoelectric control.
- PEU — Photoelectric unit.
- RC — Equipment or material to be removed and become the property of the Contractor.
- RE — Remove electrolier, fuses and ballast. Tape ends of conductors.
- RL — Relocate equipment.
- RR — Remove and reuse equipment.
- RS — Remove and salvage equipment.
- SC — Splice new to existing conductors.
- SD — Service disconnect.
- SF — Standard to remain for future use. Remove luminaire, pole conductors, fuses and ballast.
- TSP — Telephone service point.

ABBREVIATIONS AND EQUIPMENT DESIGNATIONS

PROPOSED	EXISTING	
BBS	bbs	Battery backup system
BC	bc	Bolt circle
C	C	Conduit
CCTV	cctv	Closed circuit television
CKT	ckt	Circuit
CMS	cms	Changeable message sign
DLC	dlc	Loop detector lead-in cable
EMS	ems	Extinguishable message sign
EVC	evc	Emergency vehicle cable
EVD	evd	Emergency vehicle detector
FB	fb	Flashing beacon
FBCA	fbca	Flashing beacon control assembly
FBS	fbs	Flashing beacon with slip base
FO	fo	Fiber optic
G	G	Ground (Equipment Grounding Conductor)
GFCI	GFCI	Ground fault circuit interrupt
HAR	har	Highway advisory radio
HEX	hex	Hexagonal
HPS	hps	High pressure sodium
IISNS	iisns	Internally illuminated street name sign
ISL	isl	Induction sign lighting
LED	led	Light emitting diode
LMA	lma	Luminaire mast arm
LPS	lps	Low pressure sodium
LTG	ltg	Lighting
LUM	lum	Luminaire
MAT	mat	Mast arm mounting vehicle signal faces, top attachment
MAS	mas	Mast arm mounting vehicle signal faces, side attachment
MAS-4A	mas-4A	Mast arm mounting vehicle signal faces, side attachment - 4 signal section
MAS-4B	mas-4B	
MAS-4C	mas-4C	
MAS-5A	mas-5A	Mast arm mounting vehicle signal faces, side attachment - 5 signal section
MAS-5B	mas-5B	
MC	mc	Mercury contactor
M/M	m/m	Multiple to multiple transformer
MT	mt	Conduit with pull wire or rope only
MTG	mtg	Mounting
	mv	Mercury vapor lighting fixture
N	N	Neutral (Grounded Conductor)
NC	NC	Normally closed
NO	NO	Normally open
PB	pb	Pull box
PEC	pec	Photoelectric control (Type Ⅰ, Ⅱ, Ⅲ, Ⅳ or Ⅴ as shown)
PED	ped	Pedestrian
PEU	peu	Photoelectric unit
PPB	ppb	Pedestrian push button
RL		Relocated equipment
RM	rm	Ramp metering
SB	sb	Slip base
SIC	sic	Signal interconnect cable
SIG	sig	Signal
SMA	sma	Signal mast arm
SNS	sns	Street name sign
SP	sp	Service point
TDC	tdc	Telephone demarcation cabinet
TMS	tms	Traffic monitoring station
TOS	tos	Traffic Operations System
VEH	veh	Vehicle
XFMR	xfmr	Transformer
COMM	comm	Communication
RWIS	rwis	Roadway weather information system

SOFFIT AND WALL MOUNTED LUMINAIRES

Pendant, 70 W HPS unless otherwise specified.

Flush, 70 W HPS unless otherwise specified.

Wall surface, 70 W HPS unless otherwise specified.

Existing soffit or wall luminaire to remain unmodified.

Existing soffit or wall luminaire to be modified as specified.

NOTE:

Arrow indicates "street side" of luminaire.

STATE OF CALIFORNIA
DEPARTMENT OF TRANSPORTATION

ELECTRICAL SYSTEMS (SYMBOLS AND ABBREVIATIONS)

NO SCALE

RSP ES-1A DATED OCTOBER 5, 2007 SUPERSEDES STANDARD PLAN ES-1A DATED MAY 1, 2006 - PAGE 400 OF THE STANDARD PLANS BOOK DATED MAY 2006.

REVISED STANDARD PLAN RSP ES-1A

2006 REVISED STANDARD PLAN RSP ES-1A

DIST	COUNTY	ROUTE	POST MILES TOTAL PROJECT	SHEET NO.	TOTAL SHEETS
11	SD	125	10.6/10.9	50	64

REGISTERED ELECTRICAL ENGINEER

October 5, 2007
PLANS APPROVAL DATE

REGISTERED PROFESSIONAL ENGINEER Jeffery G. McRae No. E14512 Exp. 6-30-08 ELECTRICAL STATE OF CALIFORNIA

The State of California or its officers or agents shall not be responsible for the accuracy or completeness of electronic copies of this plan sheet.

To accompany plans dated 03-21-11

CONDUIT

PROPOSED	EXISTING	
		Lighting Conduit, unless otherwise indicated or noted
		Traffic signal conduit
C	c	Communication conduit
T	t	Telephone conduit
F	f	Fire alarm conduit
FO	fo	Fiber optic conduit
		Conduit termination (RSP ES-9A C)
R	r	Conduit riser in/on structure or service pole

SERVICE EQUIPMENT

PROPOSED	EXISTING	
OH	oh	Overhead lines
U	U	Wood pole "U" indicates utility owned
		Pole guy with anchor
		Utility transformer - ground mounted
III		Service equipment enclosure type
		Service equipment enclosure door indicates front of enclosure
T	t	Telephone demarcation cabinet

POLE-MOUNTED SERVICE DESIGNATION

Type of installation

TYPE H SERVICE - 28'-10" ← Pole height above grade

ILLUMINATED OVERHEAD SIGN

PROPOSED	EXISTING	
		Overhead sign - Single post
		Overhead sign - Two post
		Overhead sign - Mounted on structure
		Overhead sign with electrolier

SIGNAL EQUIPMENT

PROPOSED	EXISTING	
		Pedestrian signal face
		Pedestrian push button post
		Pedestrian barricade
		Vehicle signal face (with backplate, 3-Section: red, yellow and green)
		Vehicle signal face with angle visors
PV	PV	Modifications of basic symbols: "L" Indicates all non-arrow sections louvered "LG" Indicates louvered green section only "PV" indicates 12" programmed visibility sections "8" indicates all 8" sections (only when specified)
		Type 15TS and Vehicle signal face
		Vehicle signal face with red, yellow and green left arrow sections
		Vehicle signal face with red and yellow sections and up green arrow
		Vehicle signal face (5 Section) with red, yellow and green sections and yellow and green right arrows
		Type 1 Standard and attached vehicle signal faces
		Standard with signal mast arm only and attached vehicle signal faces and internally illuminated street name sign
		Type 33 Standard, Left-turn vehicle signal face and sign
		Standard with luminaire and signal mast arms and attached vehicle signal faces
		Cantilever flashing beacon Type 9 Frame, with a sign unless otherwise specified or indicated
		Type 15-FBS Standard with two vehicle signal face sections with lens, backplate and visor with a sign
R	Y	Flashing beacon. One vehicle signal face section with lens, backplate and visor. "R" indicates red indication, "Y" indicates yellow indication
		Controller assembly. Door indicates front of cabinet

SIGNAL EQUIPMENT Cont

PROPOSED	EXISTING	
		Guard post
		Type 1 Standard with "Meter On" sign
		Emergency Vehicle detector

NOTES:

1. All signal sections shall be 12" unless shown otherwise.
2. Signal heads shall be provided with backplates unless shown otherwise.
3. Signal indication shall be LED.

STATE OF CALIFORNIA
DEPARTMENT OF TRANSPORTATION

ELECTRICAL SYSTEMS (SYMBOLS AND ABBREVIATIONS)

NO SCALE

RSP ES-1B DATED OCTOBER 5, 2007 SUPERCEDES STANDARD PLAN ES-1B DATED MAY 1, 2006 - PAGE 401 OF THE STANDARD PLANS BOOK DATED MAY 2006.

REVISED STANDARD PLAN RSP ES-1B

2006 REVISED STANDARD PLAN RSP ES-1B

7-10-07

DIST	COUNTY	ROUTE	POST MILES TOTAL PROJECT	SHEET NO.	TOTAL SHEETS
11	SD	125	10.6/10.9	51	64

REGISTERED ELECTRICAL ENGINEER

October 5, 2007
PLANS APPROVAL DATE

REGISTERED PROFESSIONAL ENGINEER Jeffery G. McRae No. E14512 Exp. 6-30-08 ELECTRICAL STATE OF CALIFORNIA

The State of California or its officers or agents shall not be responsible for the accuracy or completeness of electronic copies of this plan sheet.

To accompany plans dated 03-21-11

EQUIPMENT IDENTIFICATION

ILLUMINATED SIGN IDENTIFICATION NUMBER:

Sign No. 12345 — Sign number - Place on post or structure

10 ISL SCI 1.0

- 1.0 — Transformer rating (kVA)
- SCI — Lighting control type
- ISL — Number and type of fixtures

Do NOT place on standard or structure

ELECTROLIER OR EQUIPMENT IDENTIFICATION NUMBER:

12345 - 15'-0"

- 15'-0" — Mast arm length, if shown. Do not place on standard or structure.
- 12345 — Equipment number - Place on standard or structure. Existing equipment numbers are shown in parenthesis

CONDUIT AND CONDUCTOR IDENTIFICATION:

1½"C, 2#10, 15#14, 2 DLC

- 2#10, 15#14, 2 DLC — Number and size of conductors and cables
- 1½"C — Size of conduit in inches

Ø1, Ø2, Ø2P, etc.	Traffic phase identification for signal faces, detectors and phase diagrams
1 2 3	Project note numbers
A B C	Equipment description, installation or item numbers
1 2 3	Conduit run numbers

SIGNAL AND LIGHTING STANDARD (TYPICAL DESIGNATION):

19A - 3 - 100

- 100 — Wind velocity = 100 mph
- 3 — Case 3 arm loading
- 19A — Standard type
- Standard Plan sheet number
- Detail number or letter

MISCELLANEOUS EQUIPMENT

PROPOSED	EXISTING	
CMS	cms	Changeable message sign
		Closed circuit television camera
		Highway advisory radio pole and antenna
EMS	ems	Extinguishable message sign
M V	m v	Detection device M = Microwave sensor V = Video image sensor

WIRING DIAGRAM LEGEND

P	Pole
CB	Circuit breaker
A	Ampere
V	Volt
M	Metered
UM	Unmetered
NB	Neutral bus
GB	Ground bus
G	Equipment grounding conductor
N	Grounded conductor (Neutral)

External conductor
Conductor or bus
Tie point
Contactor coil
Contactor, Contact NO
Terminal blocks
Contactor, Contact NC
Enclosure bond
Grounding electrode
Circuit breaker
Receptacle

PULL BOXES

PROPOSED EXISTING

Pull box-No. 5 unless otherwise indicated or noted.

3 — 9A(21)

Pull box-Additional designations or descriptions

- 3 = No. 3½ pull box
- 5 = No. 5 pull box
- 6 = No. 6 pull box
- 7 = No. 7 (Ceiling pull box)
- 8 = No. 8 (Pendant soffit pull box)
- 9 = No. 9 pull box
- 9A = No. 9A pull box

- (C) = Communications pull box
- (E) = Pull box with extension
- (S) = Sprinkler control pull box
- (21) = Anchor bolts and conduit for future installation of Type 21 Standard
- (T) = Traffic pull box

VEHICLE DETECTORS

5 J 9 U

- U = Upper
- L = Lower
- Slot number in input file
- Input file (I or J)
- Phase

PROPOSED	EXISTING	
		Type A detector loop. Outline of sawcut shown.
		Type B detector loop. Outline of sawcut shown.
		Type C detector loop. Outline of sawcut shown.
		Type D detector loop. Outline of sawcut shown.
		Type E detector loop. Outline of sawcut shown.
		Type Q detector loop. Outline of sawcut shown.
		Magnetic detector
DH	dh	Detector handhole
		Microwave or video detection zone

STATE OF CALIFORNIA
DEPARTMENT OF TRANSPORTATION

ELECTRICAL SYSTEMS (SYMBOLS AND ABBREVIATIONS)

NO SCALE

RSP ES-1C DATED OCTOBER 5, 2007 SUPERCEDES STANDARD PLAN ES-1C DATED MAY 1, 2006 - PAGE 402 OF THE STANDARD PLANS BOOK DATED MAY 2006.

REVISED STANDARD PLAN RSP ES-1C

2006 REVISED STANDARD PLAN RSP ES-1C

7-10-07

DIST	COUNTY	ROUTE	POST MILES TOTAL PROJECT	SHEET NO.	TOTAL SHEETS
11	SD	125	10.6/10.9	52	64

REGISTERED ELECTRICAL ENGINEER

October 5, 2007
PLANS APPROVAL DATE

REGISTERED PROFESSIONAL ENGINEER Jeffery G. McRae No. E14512 Exp. 6-30-08 ELECTRICAL STATE OF CALIFORNIA

The State of California or its officers or agents shall not be responsible for the accuracy or completeness of electronic copies of this plan sheet.

To accompany plans dated 03-21-11

2006 REVISED STANDARD PLAN RSP ES-5A

LOOP INSTALLATION PROCEDURE

1. Loops shall be centered in lanes.
2. Saw slots in pavement for loop conductors as shown in details.
3. Distance between side of loop and a lead-in saw cut from adjacent detectors shall be 2'-0" minimum. Distance between lead-in saw cuts shall be 6" minimum.
4. Bottom of saw slot shall be smooth with no sharp edges.
5. Slots shall be washed until clean, blown out and thoroughly dried before installing loop conductors.
6. Adjacent loops on the same sensor unit channel shall be wound in opposite directions.
7. Identify and tag loop circuit pairs in the pull box with loop number, start (S) and finish (F) of conductor. Identify and tag lead-in-cable with sensor number and phase.
8. Install loop conductor in slot using a 3/16" to 1/4" thick wood paddle. Hold loop conductors with wood paddles (at the bottom of the sawed slot) during sealant placement.
9. No more than 2 twisted pairs shall be installed in one sawed slot.
10. Allow additional 5'-0" of slack length of conductor for the lead-in run to pull box.
11. The additional length of each conductor for each loop shall be twisted together into a pair (6 turns per 3'-4" minimum) before being placed in the slot and conduit leading to pull box.
12. Test each loop circuit for continuity, circuit resistance and insulation resistance at the pull box before filling slots.
13. Fill slots as shown in details.
14. Splice loop conductors to lead-in-cable. Splices shall be soldered.
15. End of lead-in-cable and Type 2 loop conductor shall be waterproofed prior to installing in conduit to prevent moisture from entering the cable.
16. Lead-in-cable shall not be spliced between the pull box and the controller cabinet terminals.
17. Test each loop circuit for continuity, circuit resistance and insulation resistance at the controller cabinet location.
18. Where loop conductors are not to be spliced to a lead-in-cable, the ends of the conductors shall be taped and waterproofed with electrical insulating coating.

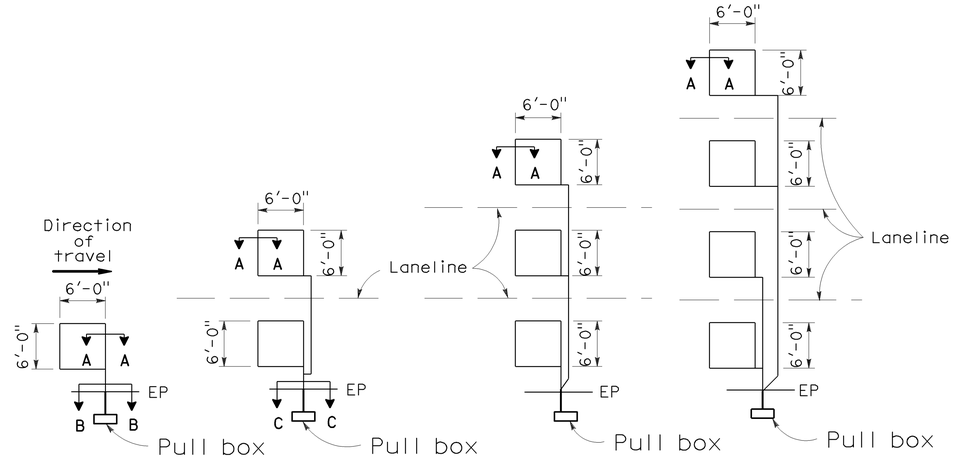

TYPE 1A INSTALLATION | TYPE 2A INSTALLATION | TYPE 3A INSTALLATION | TYPE 4A INSTALLATION

SAWCUT DETAILS

(Type A loop detector configurations illustrated)

1. 1A thru 4A = 1 Type A loop configuration in each lane.
2. 1B thru 4B = 1 Type B loop configuration in each lane.
3. 1C = 1 Type C loop configuration entering lanes as required.
4. 1D thru 4D = 1 Type D loop configuration in each lane.
5. 1E thru 4E = 1 Type E loop configuration in each lane.
6. 1Q thru 4Q = 1 Type Q loop configuration in each lane. (Use Type A, B, C, D, E or Q loop detector configurations only when specified or shown on plans)

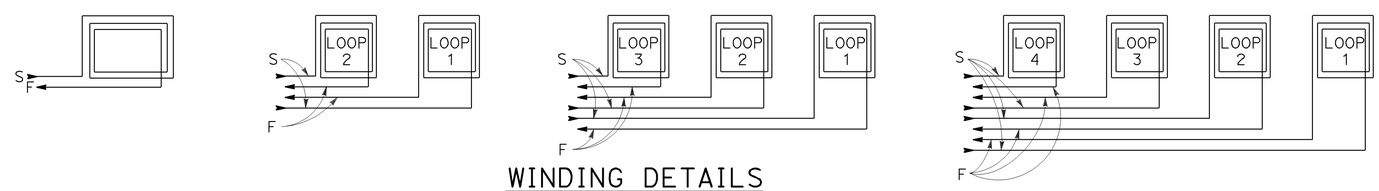

WINDING DETAILS

See Notes 6 and 7

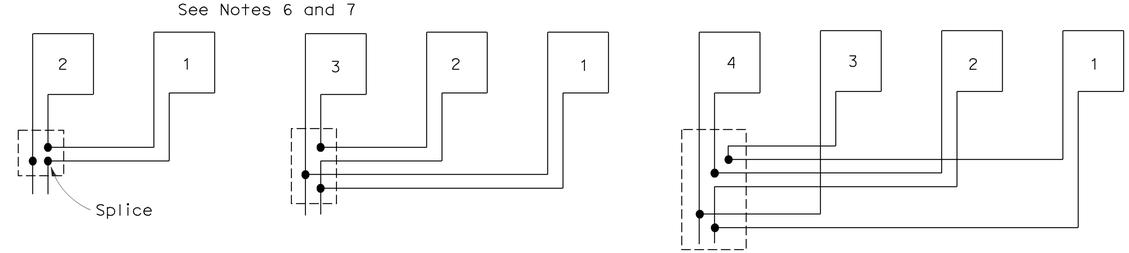

TYPICAL LOOP CONNECTIONS

(Dashed lines represent the pull box)

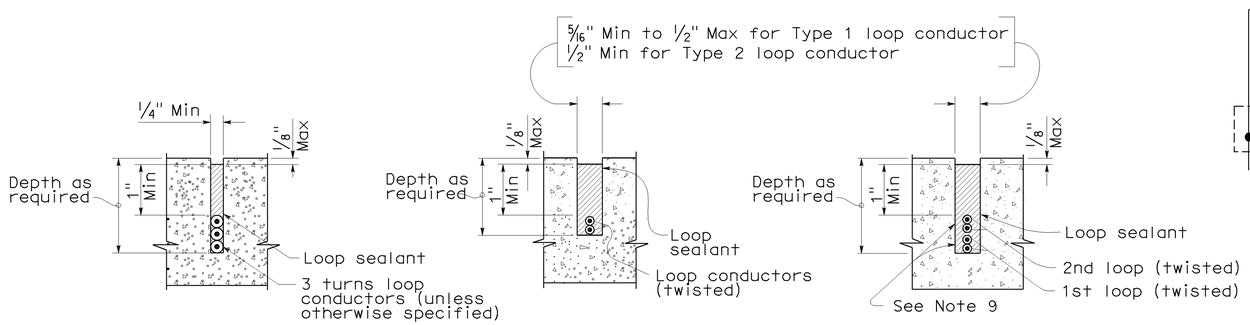

SECTION A-A | SECTION B-B | SECTION C-C

SLOT DETAILS - TYPE 1 AND TYPE 2 LOOP CONDUCTOR

STATE OF CALIFORNIA
DEPARTMENT OF TRANSPORTATION

ELECTRICAL SYSTEMS (DETECTORS)

NO SCALE

RSP ES-5A DATED OCTOBER 5, 2007 SUPERCEDES STANDARD PLAN ES-5A DATED MAY 1, 2006 - PAGE 423 OF THE STANDARD PLANS BOOK DATED MAY 2006.

REVISED STANDARD PLAN RSP ES-5A

8-17-07

DIST	COUNTY	ROUTE	POST MILES TOTAL PROJECT	SHEET NO.	TOTAL SHEETS
11	SD	125	10.6/10.9	53	64

REGISTERED CIVIL ENGINEER

October 5, 2007
PLANS APPROVAL DATE

REGISTERED PROFESSIONAL ENGINEER Stanley P. Johnson No. C57793 Exp. 3-31-08 CIVIL STATE OF CALIFORNIA

The State of California or its officers or agents shall not be responsible for the accuracy or completeness of electronic copies of this plan sheet.

To accompany plans dated 03-21-11

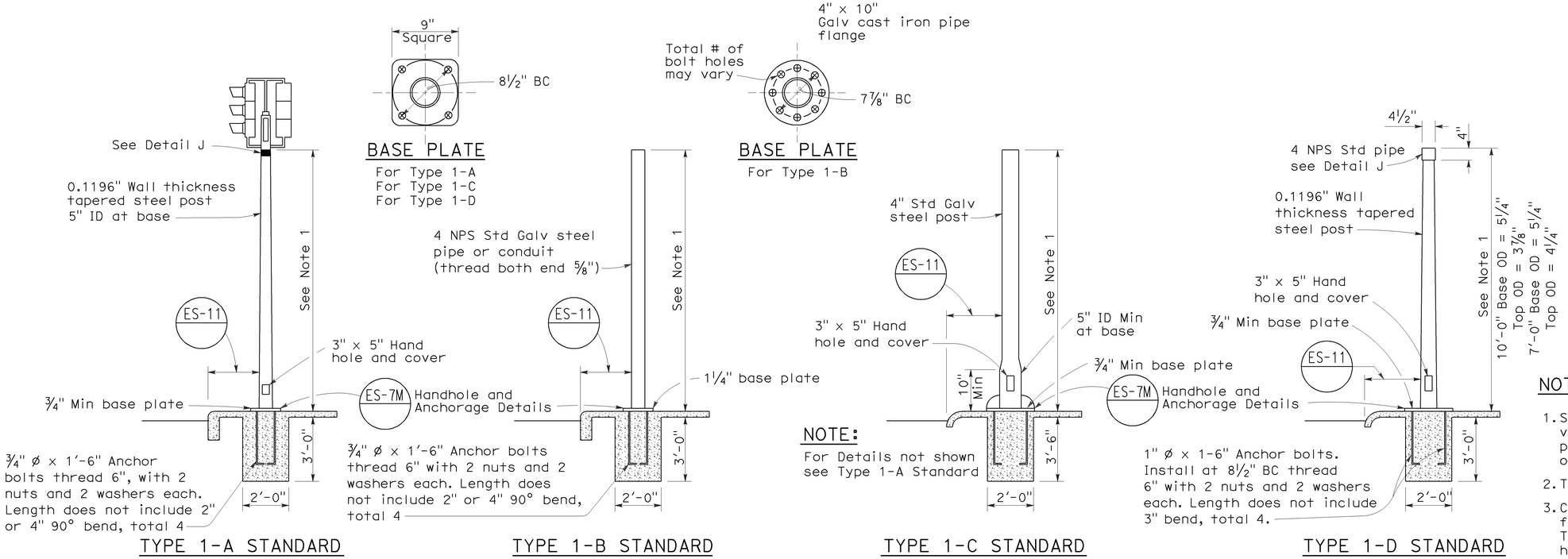

TYPE 1 SIGNAL STANDARDS

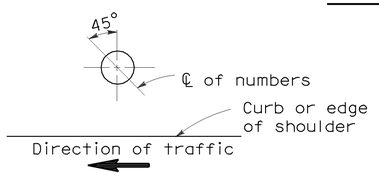

PLAN

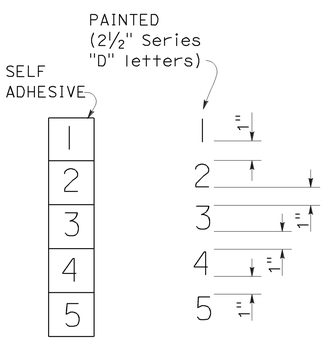

NUMBER DETAIL

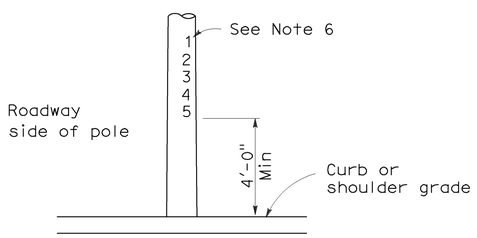

TYPICAL NUMBER FORMAT

LOCATION OF EQUIPMENT NUMBERS ON STANDARDS AND POSTS

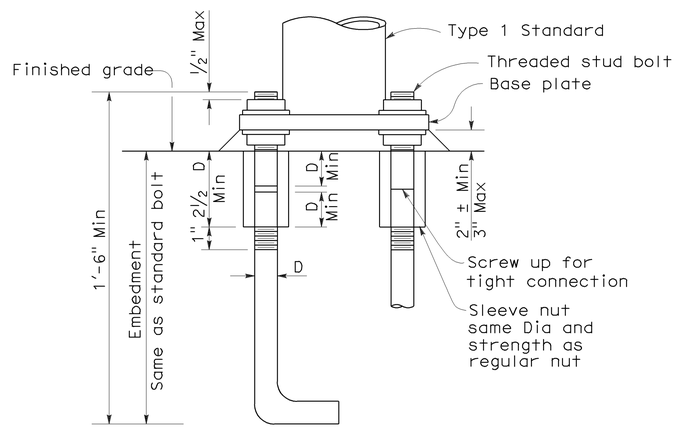

ANCHOR BOLTS WITH SLEEVE NUTS

Sleeve nuts to be used only when shown or specified on Project Plans

D = Diameter of anchor bolt

NOTES:

1. Standards shall be 10'-0" ± 2" for vehicle signals and 7'-0" ± 2" for pedestrian signals unless otherwise noted on plans.
2. Top of standards shall be 4½" OD.
3. Conduits shall extend 2" maximum above finished surface of foundation and for Types 1-A, 1-C and 1-D shall be sloped toward handhole.
4. Anchor bolts shall be bonded to conduit or grounding conductor.
5. Conduit between standard and adjacent pull box shall be 2" minimum.
6. Paint numbers on roadway side facing traffic when electrolier or post is left of direction of traffic.

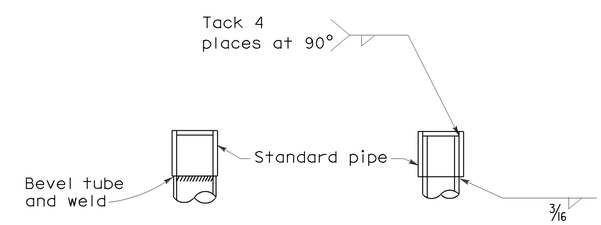

DETAIL J

Tube may be inserted into pipe or butted as required

STATE OF CALIFORNIA
DEPARTMENT OF TRANSPORTATION

ELECTRICAL SYSTEMS (SIGNAL AND LIGHTING STANDARD TYPE 1 STANDARD AND EQUIPMENT NUMBERING)

NO SCALE

RSP ES-7B DATED OCTOBER 5, 2007 SUPERCEDES STANDARD PLAN ES-7B DATED MAY 1, 2006 - PAGE 438 OF THE STANDARD PLANS BOOK DATED MAY 2006.

REVISED STANDARD PLAN RSP ES-7B

2006 REVISED STANDARD PLAN RSP ES-7B

7-10-07

DIST	COUNTY	ROUTE	POST MILES TOTAL PROJECT	SHEET NO.	TOTAL SHEETS
11	SD	125	10.6/10.9	54	64

REGISTERED CIVIL ENGINEER

October 5, 2007
PLANS APPROVAL DATE

REGISTERED PROFESSIONAL ENGINEER Stanley P. Johnson No. C57793 Exp. 3-31-08 CIVIL STATE OF CALIFORNIA

The State of California or its officers or agents shall not be responsible for the accuracy or completeness of electronic copies of this plan sheet.

To accompany plans dated 03-21-11

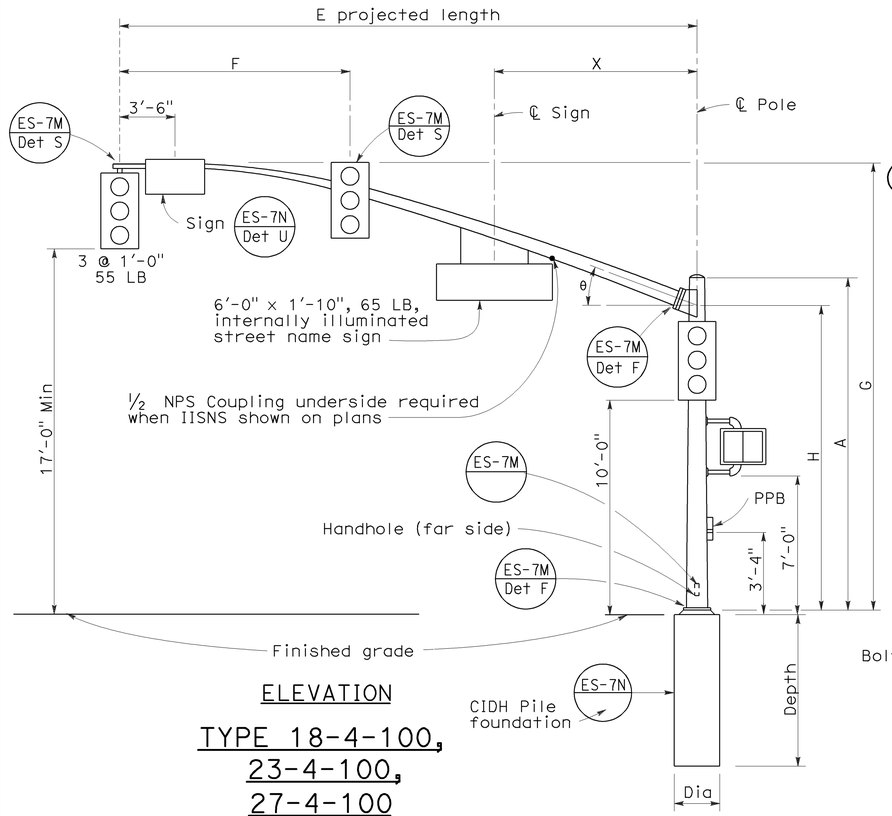

ELEVATION

TYPE 18-4-100, 23-4-100, 27-4-100

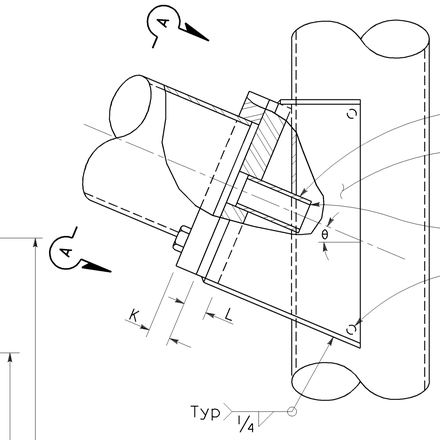

ELEVATION

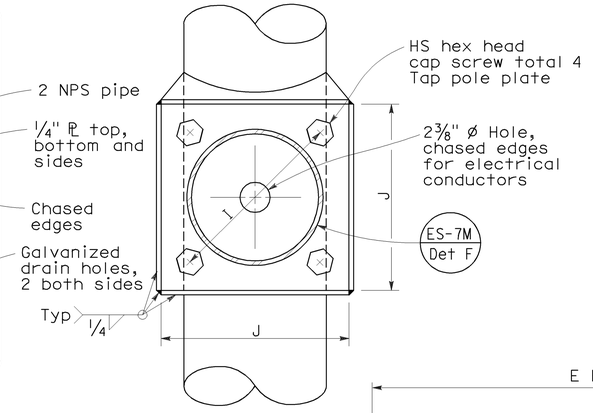

VIEW A-A

SIGNAL ARM CONNECTION DETAILS

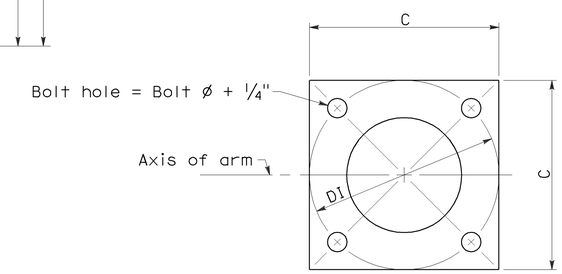

BASE PLATE

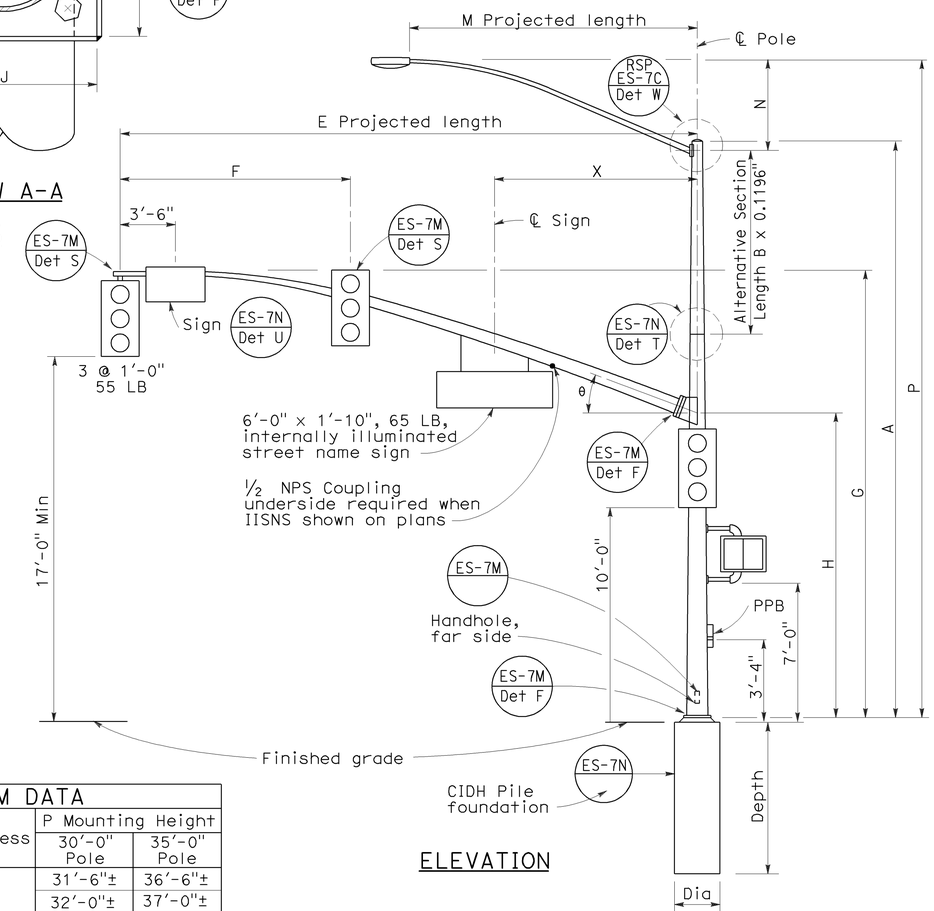

ELEVATION

TYPE 19-4-100, 19A-4-100, 24-4-100, 24A-4-100, 26-4-100, 26A-4-100

SIGNAL ARM DATA												
E Projected Length	F Min Spacing	G Mounting Height	H	Min OD at Pole	Thickness	I Bolt Circle	HS Cap Screws	J Plate Size	K Arm PL Thickness	L Pole PL Thickness	θ	X Max
25'-0"	10'-0"	22'-8"±	16'-0"	7 5/16"	0.2391"	12"	1¼"-7NC-3"	1'-0"	1¼"	1½"	23°	10'-6"
30'-0"	12'-0"	23'-0"±		8"								
35'-0"	14'-0"			8 11/16"		13½"		1'-1½"	1½"	1¾"	21°	
40'-0"	15'-0"			9⅜"							15°	13'-0"
45'-0"		23'-8"±		10¼"								

LUMINAIRE ARM DATA					
M Projected Length	N Rise	Min OD at Pole	Thickness	P Mounting Height 30'-0" Pole	P Mounting Height 35'-0" Pole
6'-0"	2'-0"±	3¼"	0.1196"	31'-6"±	36'-6"±
8'-0"	2'-6"±	3½"		32'-0"±	37'-0"±
10'-0"	3'-3"±	3⅞"		32'-9"±	37'-9"±
12'-0"	4'-3"±			33'-9"±	38'-9"±
15'-0"	4'-9"±	4¼"		34'-3"±	39'-3"±

POLE DATA									BASE PLATE DATA						CIDH PILE FOUNDATION		
Pole Type	Load Case	Wind Velocity mph	A Height	Min OD Base	Min OD Top	Thickness	Alternative Section B Length	Alternative Section Bottom	Alternative Section Top	C	DI Bolt Circle	Thickness	Anchor Bolts Size	Luminaire Arm	Signal Arm	Dia	Depth	Reinforced
18-4-100	4	100	17'-0"	12"	9"	0.2391"	None	9⅜"		1'-6"	1'-6"	1½"	2" Ø x 42" x 6"	None	25'-0", [30'-0"]	3'-0"	9'-0"	Yes
19-4-100			30'-0"		8"		10'-0"		8"					6'-15' [12'-0"]				
19A-4-100			35'-0"		7 5/16"		15'-0'		7 5/16"					6'-15' [15'-0"]				
23-4-100			17'-0"		9"		None							None	35'-0"			
24-4-100			30'-0"		8"		10'-0"	9⅜"	8"					6'-15' [12'-0"]				
24A-4-100			35'-0"		7 5/16"		15'-0"		7 5/16"					6'-15' [15'-0"]				
26-4-100			30'-0"	12½"	8"	0.3125"	10'-0"	9¾"	8⅜"					6'-15' [12'-0"]	40'-0", [45'-0"]			
26A-4-100			35'-0"		7 5/16"		15'-0"		7 11/16"					6'-15' [15'-0"]				
27-4-100			17'-0"		9¾"		None							None				

☐ Indicates arm length to be used unless otherwise noted on plans.

STATE OF CALIFORNIA
DEPARTMENT OF TRANSPORTATION

ELECTRICAL SYSTEMS (SIGNAL AND LIGHTING STANDARD CASE 4 ARM LOADING WIND VELOCITY=100 MPH ARM LENGTHS 25' TO 45')

NO SCALE

RSP ES-7F DATED OCTOBER 5, 2007 SUPERCEDES RSP ES-7F DATED NOVEMBER 17, 2006 AND STANDARD PLAN ES-7F DATED MAY 1, 2006 - PAGE 442 OF THE STANDARD PLANS BOOK DATED MAY 2006.

REVISED STANDARD PLAN RSP ES-7F

2006 REVISED STANDARD PLAN RSP ES-7F

7-10-07

DIST	COUNTY	ROUTE	POST MILES TOTAL PROJECT	SHEET NO.	TOTAL SHEETS
11	SD	125	10.6/10.9	55	64

Gregory A. Balzer
LICENSED LANDSCAPE ARCHITECT

June 5, 2009
PLANS APPROVAL DATE

LICENSED LANDSCAPE ARCHITECT
Gregory A. Balzer 2576
10-31-10 Renewal Date
2-28-11 Renewal Date
5-14-09 Date
STATE OF CALIFORNIA

The State of California or its officers or agents shall not be responsible for the accuracy or completeness of electronic copies of this plan sheet.

To accompany plans dated 03-21-11

A

AB	aggregate base
ABS	acrylonitrile-butadiene-styrene
AC	asphalt concrete
Adj	adjacent/adjustable
AIC	auxiliary irrigation controller
Alt	alternative
AMEND	amendment
ARV	air release valve
AUTO	automatic
AUX	auxiliary
AVB	atmospheric vacuum breaker

B

B&B	balled and burlapped
B/B	brass/bronze
B/B/PL	brass/bronze/plastic
B/PL	brass/plastic
BFM	bonded fiber matrix
Bit Ctd	bituminous coated
BP	booster pump
BPA	backflow preventer assembly
BPAE	backflow preventer assembly in enclosure
BPE	backflow preventer enclosure
BV	ball valve

C

CAP	corrugated aluminum pipe
CARV	combination air release valve
CCA	cam coupler assembly
CEC	controller enclosure cabinet
CHDPE	corrugated high density polyethylene
CL	chain link
CNC	control and neutral conductors
Conc	concrete
Cond	conduit
CSP	corrugated steel pipe
CST	center strip
CV	check valve

D

Dia	diameter
DIP	ductile iron pipe
DN	diameter nominal

E

EA	each
Elect	electric/electrical
Elev	elevation
ENCL	enclosure
EP	edge of pavement
ES	edge of shoulder
EST	end strip
ESTB	establishment
ETW	edge of traveled way

F

F	full circle
F/P	full/part circle
FAU	filter assembly unit
FCV	flow control valve
FERT	fertilizer
FG	finished grade
FIPT	female iron pipe thread
FIS	fertilizer injector system
FL	flow line
FM	flow monitor
FS	flow sensor
Ft	foot/feet
FV	flush valve

G

GAL	Gallon(s)
Galv	galvanized
GARV	garden valve
GPH	gallons per hour
GPM	gallons per minute
GSP	galvanized steel pipe
GV	gate valve

H

H	half circle
HB	hose bib
HDPE	high density polyethylene
HP	horsepower/hinge point
HPL	high pressure line
Hwy	highway

I

IC	irrigation controller
ICC	irrigation controller(s) in controller enclosure cabinet
ID	inside diameter
In	inches
IFS	irrigation filtration system
IPS	iron pipe size
IPT	iron pipe thread
Irr	irrigation

L

L	length
LF	linear foot

M

Max	maximum
MBGR	metal beam guard railing
MCV	manual control valve
MIC	master irrigation controller
Min	minimum
MIPT	male iron pipe thread
Misc	miscellaneous
Mtl	material
MVP	maintenance vehicle pullout

N

NCN	no common name
NL	nozzle line
No.	number
NPT	national pipe thread

O

O/C	on center
OD	outside diameter
Oz	ounce

P

P	part circle
PB	pull box
PCC	portland cement concrete
PE	polyethylene
Pkt	packet
PL	plastic
PLT	plant/planting
PLT ESTB	plant establishment
PM	post mile
PR	pressure rated
PRLV	pressure relief valve
PSFM	polymer stabilized fiber matrix
PSI	pounds per square inch
PRV	pressure reducing valve
PVC	polyvinyl chloride
Pvmt	pavement

Q

Q	quarter circle
QCV	quick coupling valve

R

R	radius
RCP	reinforced concrete pipe
RCV	remote control valve
RCVM	remote control valve (master)
RCVMF	remote control valve (master) w/ flow meter
RCW	recycled/reclaimed water
RECP	rolled erosion control product
REQ	required
R/W	right of way

S

S	slip
SCC	sprinkler control conduit
SCH	schedule
SF	state-furnished
Shld	shoulder
SQFT	square foot/feet
SQYD	square yard(s)
SST	side strip
Sta	station
Std	standard
SW	sidewalk/sound wall

T

T	third circle/thread
TLS	truck loading standpipe
TQ	three quarter circle
TRM	turf reinforcement mat
TRVD	traveled
TT	two third circle
Typ	typical

U

UG	underground

V

VAU	valve assembly unit

W

W	width
W/	with
WM	water meter
WS	wye strainer
WSP	welded steel pipe
WWM	welded wire mesh

NOTE:

FOR ADDITIONAL ABBREVIATIONS, SEE STANDARD PLANS A10A AND A10B.

STATE OF CALIFORNIA
DEPARTMENT OF TRANSPORTATION

PLANTING AND IRRIGATION ABBREVIATIONS

NO SCALE

RSP H1 DATED JUNE 5, 2009 SUPERSEDES STANDARD PLAN H1
DATED MAY 1, 2006 - PAGE 201 OF THE STANDARD PLANS BOOK DATED MAY 2006.

REVISED STANDARD PLAN RSP H1

2006 REVISED STANDARD PLAN RSP H1

DIST	COUNTY	ROUTE	POST MILES TOTAL PROJECT	SHEET NO.	TOTAL SHEETS
11	SD	125	10.6/10.9	56	64

LICENSED LANDSCAPE ARCHITECT

June 5, 2009
PLANS APPROVAL DATE

The State of California or its officers or agents shall not be responsible for the accuracy or completeness of electronic copies of this plan sheet.

Gregory A. Balzer 2576 — Registered Date 2-28-11 — Renewal Date 5-14-09 — Date — LICENSED LANDSCAPE ARCHITECT — STATE OF CALIFORNIA

To accompany plans dated 03-21-11

EXISTING	PROPOSED	ITEM DESCRIPTION
		WATER METER (WM)
		BACKFLOW PREVENTER ASSEMBLY (BPA)
		BACKFLOW PREVENTER ASSEMBLY IN ENCLOSURE (BPAE)
		BACKFLOW PREVENTER ENCLOSURE (BPE)
		BOOSTER PUMP (BP)
		TRUCK LOADING STANDPIPE (TLS)
	FS	FLOW SENSOR (FS)
X	X	MASTER IRRIGATION CONTROLLER (MIC)
		AUXILIARY IRRIGATION CONTROLLER (AIC)
		IRRIGATION CONTROLLER (IC)/ IRRIGATION CONTROLLER (IC) (BATTERY) IRRIGATION CONTROLLER (IC) (SOLAR)
		IRRIGATION CONTROLLER(S) IN CONTROLLER ENCLOSURE CABINET (ICC)
		CONTROL AND NEUTRAL CONDUCTORS (CNC)
SCC	SCC	SPRINKLER CONTROL CONDUIT (SCC)
		IRRIGATION CROSSOVER
		EXTEND IRRIGATION CROSSOVER
		IRRIGATION SLEEVE
dip	DIP	DUCTILE IRON PIPE (SUPPLY LINE) (MAIN) (DIP)
		GALVANIZED STEEL PIPE (SUPPLY LINE) (MAIN) (GSP)
		GALVANIZED STEEL PIPE (SUPPLY LINE) (LATERAL) (GSP)
		PLASTIC PIPE (PR 200) (SUPPLY LINE) (MAIN)
		PLASTIC PIPE (PR 200) (SUPPLY LINE) (LATERAL)
		PLASTIC PIPE (IRRIGATION LINE)
		REMOTE CONTROL VALVE (RCV) REMOTE CONTROL VALVE (MASTER) (RCVM) REMOTE CONTROL VALVE (MASTER) W/FLOW METER (RCVMF)
		MANUAL CONTROL VALVE (MCV)
		VALVE ASSEMBLY UNIT (VAU)
		WYE STRAINER (WS)
		FILTER ASSEMBLY UNIT (FAU)
		GATE VALVE (GV)
		BALL VALVE (BV)

EXISTING	PROPOSED	ITEM DESCRIPTION
		QUICK COUPLING VALVE (QCV)
		CAM COUPLER ASSEMBLY (CCA)
		PRESSURE REDUCING VALVE (PRV)
		PRESSURE RELIEF VALVE (PRLV)
		FLOW CONTROL VALVE (FCV)
		COMBINATION AIR RELEASE VALVE (CARV)
		CHECK VALVE (CV)
		FLUSH VALVE (FV)
		NOZZLE LINE W/TURNING UNION
		IRRIGATION SYSTEM
		IRRIGATION SYSTEM TO BE REMOVED
		CHAIN LINK GATE
		QUICK COUPLING VALVE W/SPRINKLER PROTECTOR
3	3	SPRINKLER W/SPRINKLER PROTECTOR
	C	CONNECT TO EXISTING SYSTEM
		CAP
		CAP EXISTING

VALVE CODE

RCV SIZE
IRRIGATION CONTROLLER
CONTROLLER STATION
VALVE IN PARALLEL (IF APPLICABLE)
GPM
QUANTITY OF SPRINKLERS (WHEN SHOWN)

* 2½"-A-2b-40 -60

MCV SIZE
VALVE NUMBER
GPM
QUANTITY OF TYPE SPRINKLERS (WHEN SHOWN)

* 2"-3-30 -50

* VALVE CODES FOR EXISTING VALVES ARE SHOWN IN A DASHED ENCLOSURE.

STATE OF CALIFORNIA
DEPARTMENT OF TRANSPORTATION

PLANTING AND IRRIGATION SYMBOLS

NO SCALE

RSP H2 DATED JUNE 5, 2009 SUPERSEDES RSP H2 DATED MARCH 7, 2008 AND STANDARD PLAN H2 DATED MAY 1, 2006 - PAGE 202 OF THE STANDARD PLANS BOOK DATED MAY 2006.

REVISED STANDARD PLAN RSP H2

2006 REVISED STANDARD PLAN RSP H2

5-11-09

DIST	COUNTY	ROUTE	POST MILES TOTAL PROJECT	SHEET NO.	TOTAL SHEETS
11	SD	125	10.6/10.9	57	64

LICENSED LANDSCAPE ARCHITECT

June 5, 2009
PLANS APPROVAL DATE

LICENSED LANDSCAPE ARCHITECT
Gregory A. Balzer 2576
10-31-10 Expiration Date
2-28-11 Renewal Date
5-14-09 Date
STATE OF CALIFORNIA

The State of California or its officers or agents shall not be responsible for the accuracy or completeness of electronic copies of this plan sheet.

To accompany plans dated 03-21-11

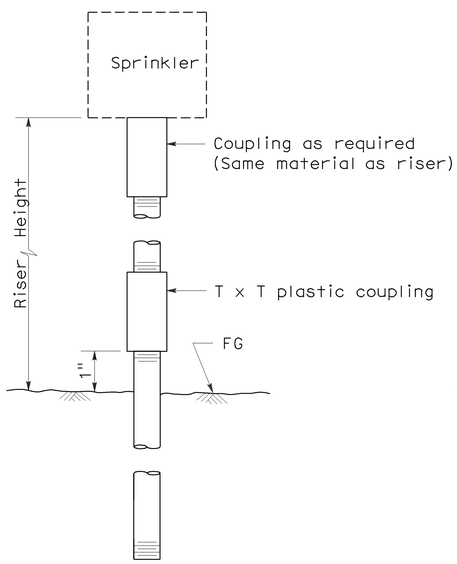

ELEVATION
RISER TYPE I

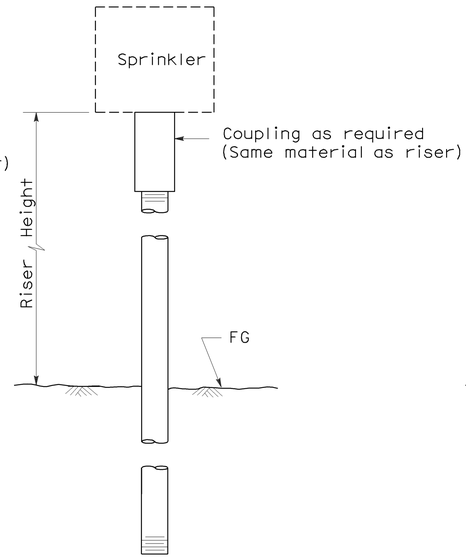

ELEVATION
RISER TYPE II

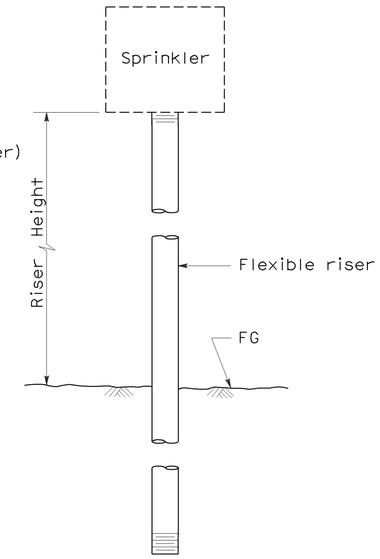

ELEVATION
RISER TYPE III

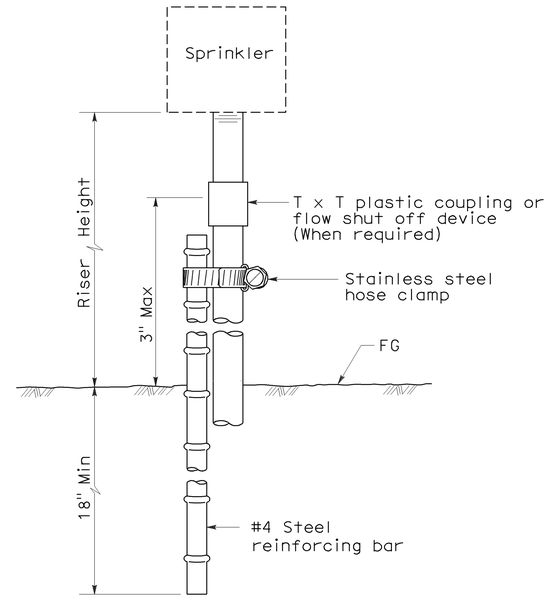

ELEVATION
RISER TYPE IV

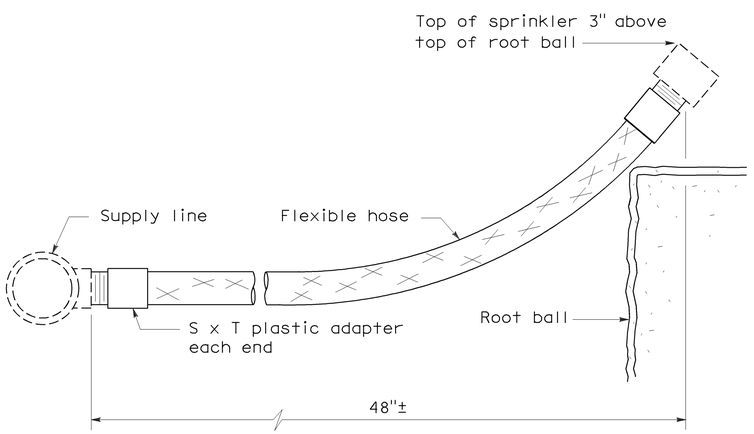

ELEVATION
RISER TYPE V

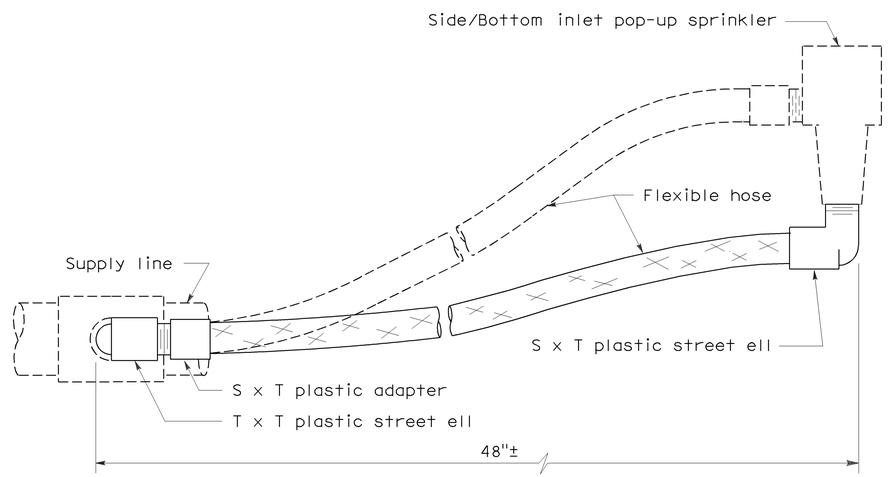

ELEVATION
RISER TYPE VI

STATE OF CALIFORNIA
DEPARTMENT OF TRANSPORTATION

PLANTING AND IRRIGATION DETAILS

NO SCALE

RSP H5 DATED JUNE 5, 2009 SUPERSEDES STANDARD PLAN H5
DATED MAY 1, 2006 - PAGE 205 OF THE STANDARD PLANS BOOK DATED MAY 2006.

REVISED STANDARD PLAN RSP H5

2006 REVISED STANDARD PLAN RSP H5

5-28-09

DIST	COUNTY	ROUTE	POST MILES TOTAL PROJECT	SHEET NO.	TOTAL SHEETS
11	SD	125	10.6/10.9	58	64

Gregory A. Balzer
LICENSED LANDSCAPE ARCHITECT

June 5, 2009
PLANS APPROVAL DATE

LICENSED LANDSCAPE ARCHITECT Gregory A. Balzer 2576 10-31-11 Expiration Date 2-28-11 Renewal Date 5-14-09 Date STATE OF CALIFORNIA

The State of California or its officers or agents shall not be responsible for the accuracy or completeness of electronic copies of this plan sheet.

To accompany plans dated 03-21-11

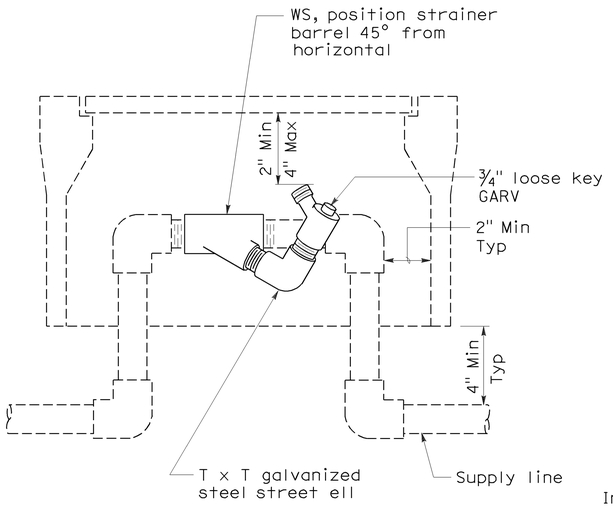

ELEVATION
WYE STRAINER

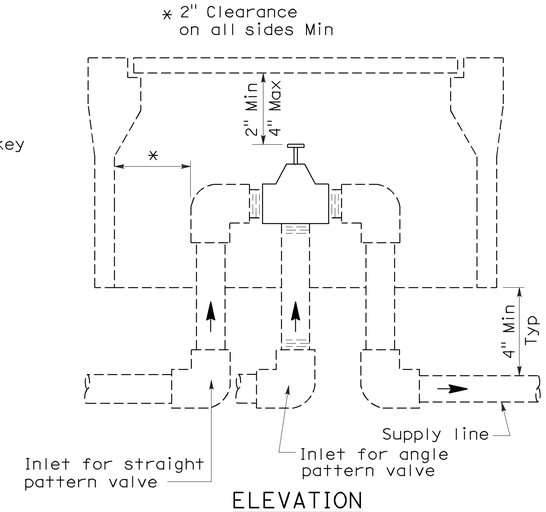

ELEVATION
VALVE

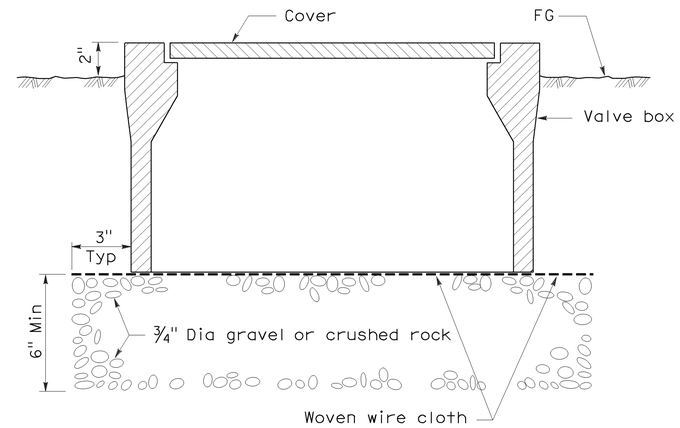

SECTION
VALVE BOX

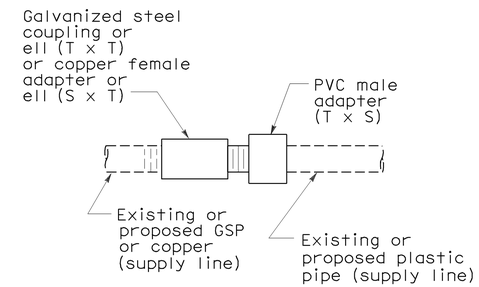

PLAN
GALVANIZED OR COPPER PIPE CONNECTION TO PLASTIC PIPE

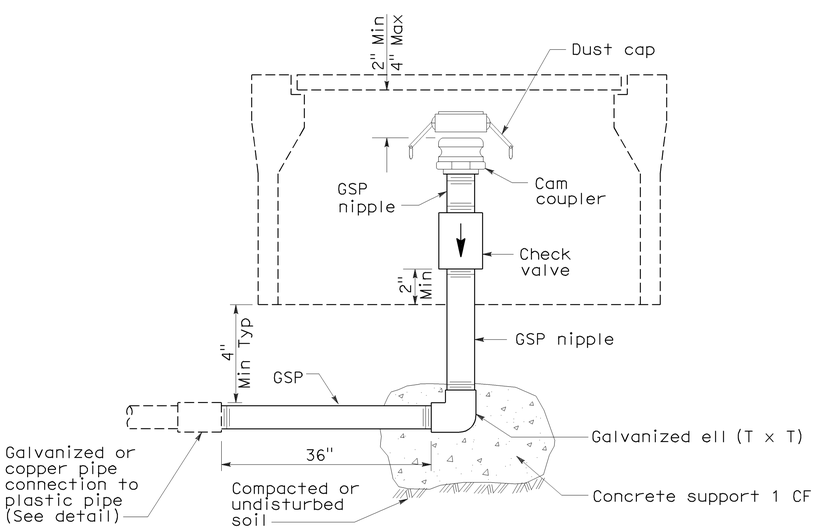

ELEVATION
CAM COUPLER ASSEMBLY

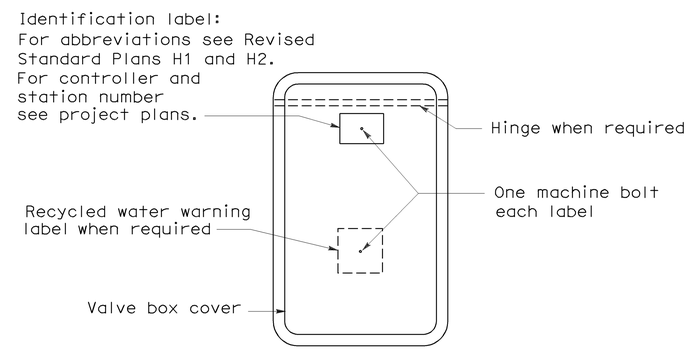

PLAN

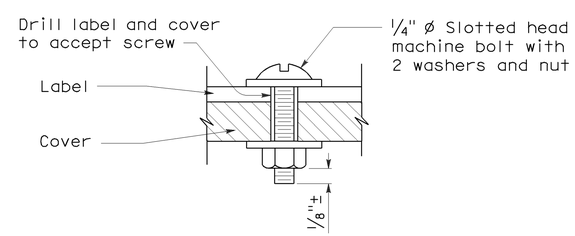

SECTION
VALVE BOX IDENTIFICATION

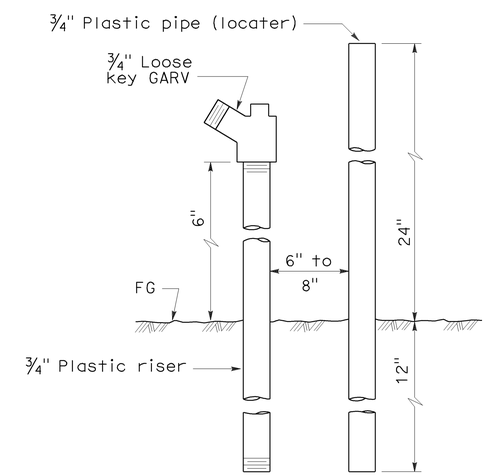

ELEVATION
FLUSH VALVE

STATE OF CALIFORNIA
DEPARTMENT OF TRANSPORTATION

PLANTING AND IRRIGATION DETAILS

NO SCALE

RSP H7 DATED JUNE 5, 2009 SUPERSEDES STANDARD PLAN H7
DATED MAY 1, 2006 - PAGE 207 OF THE STANDARD PLANS BOOK DATED MAY 2006.

REVISED STANDARD PLAN RSP H7

2006 REVISED STANDARD PLAN RSP H7

5-28-09

DIST	COUNTY	ROUTE	POST MILES TOTAL PROJECT	SHEET NO.	TOTAL SHEETS
11	SD	125	10.6/10.9	59	64

Gregory A. Balzer
LICENSED LANDSCAPE ARCHITECT

June 5, 2009
PLANS APPROVAL DATE

LICENSED LANDSCAPE ARCHITECT — Gregory A. Balzer — 2576 — STATE OF CALIFORNIA
10-31-10 Expiration Date
2-28-11 Renewal Date
5-14-09 Date

The State of California or its officers or agents shall not be responsible for the accuracy or completeness of electronic copies of this plan sheet.

To accompany plans dated 03-21-11

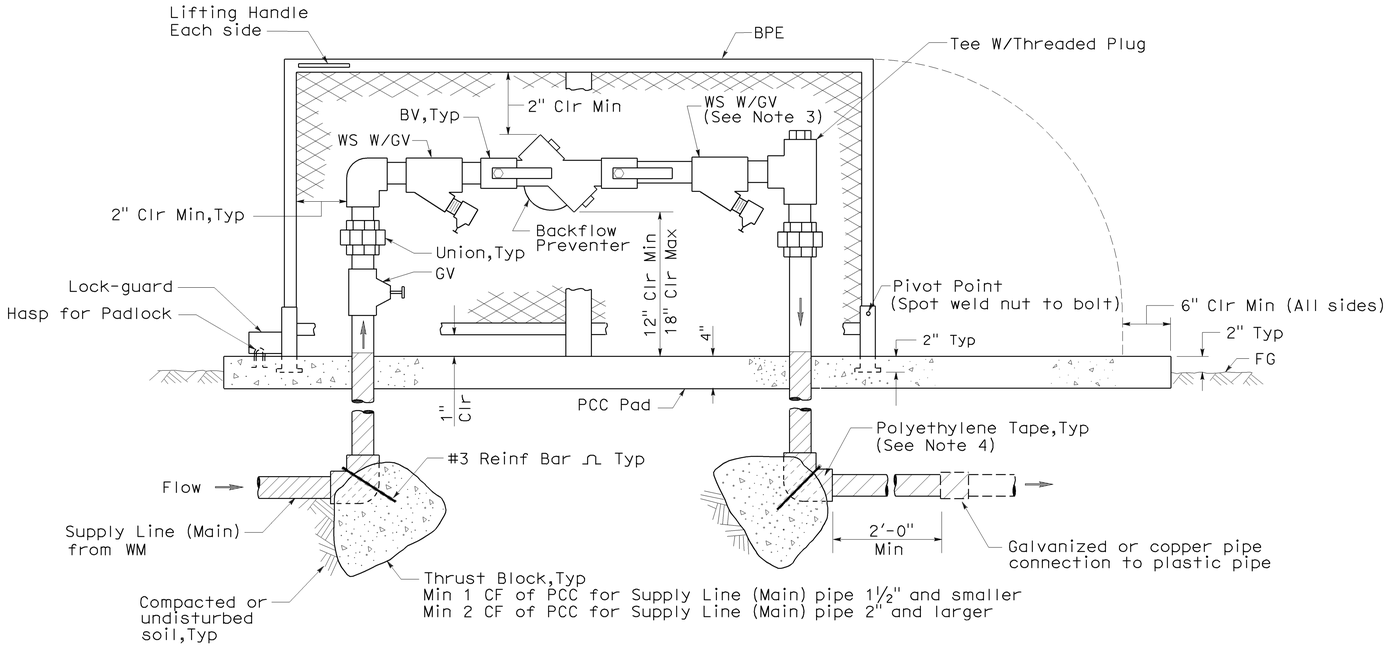

ELEVATION

BACKFLOW PREVENTER ASSEMBLY IN ENCLOSURE (ONE PIECE)

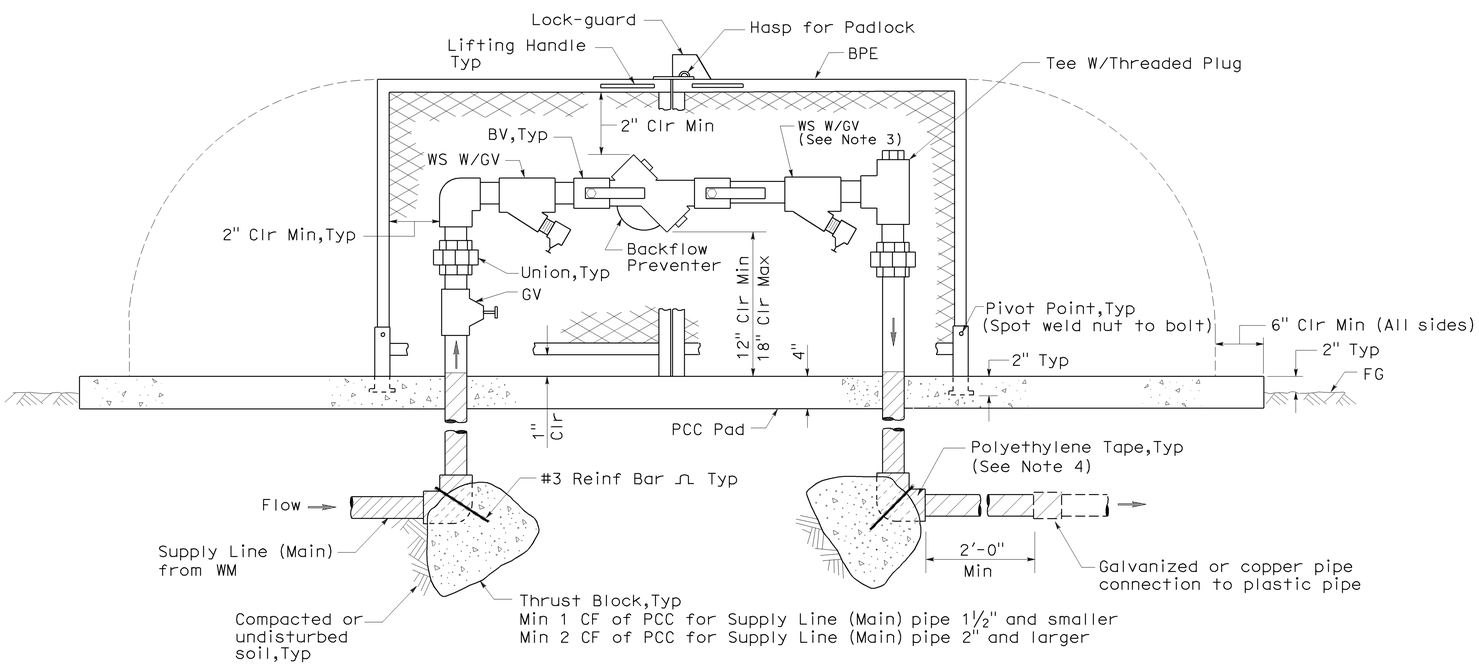

ELEVATION

BACKFLOW PREVENTER ASSEMBLY IN ENCLOSURE (TWO PIECE)

NOTES:

1. Wye strainer and fittings must be the same size as the backflow preventer shown on the plans.
2. Backflow preventer assembly manifold pipe must be the same pipe as the supply line (main) pipe to be installed from the water meter to the backflow preventer assembly.
3. Wye strainer location shown downstream of the backflow preventer is for District 11 projects only.
4. All metal in contact with soil and Portland Cement Concrete must be polyethylene wrapped using 2" wide plastic backed adhesive tape 20 mil thick with ½" overlap.

STATE OF CALIFORNIA
DEPARTMENT OF TRANSPORTATION

PLANTING AND IRRIGATION DETAILS

NO SCALE

RSP H8 DATED JUNE 5, 2009 SUPERSEDES STANDARD PLAN H8
DATED MAY 1, 2006 - PAGE 208 OF THE STANDARD PLANS BOOK DATED MAY 2006.

REVISED STANDARD PLAN RSP H8

2006 REVISED STANDARD PLAN RSP H8

5-28-09

DIST	COUNTY	ROUTE	POST MILES TOTAL PROJECT	SHEET NO.	TOTAL SHEETS
11	SD	125	10.6/10.9	60	64

Randell D. Hiatt
REGISTERED CIVIL ENGINEER

June 6, 2008
PLANS APPROVAL DATE

REGISTERED PROFESSIONAL ENGINEER
Randell D. Hiatt
No. C50200
Exp. 6-30-09
CIVIL
STATE OF CALIFORNIA

The State of California or its officers or agents shall not be responsible for the accuracy or completeness of electronic copies of this plan sheet.

To accompany plans dated 03-21-11

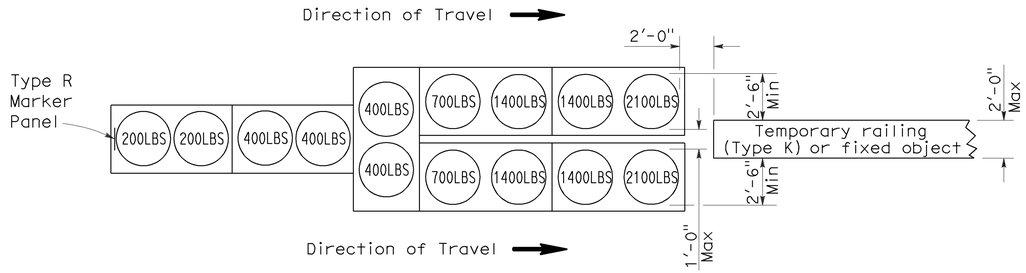

ARRAY 'TU14'

Approach speed 45 mph or more

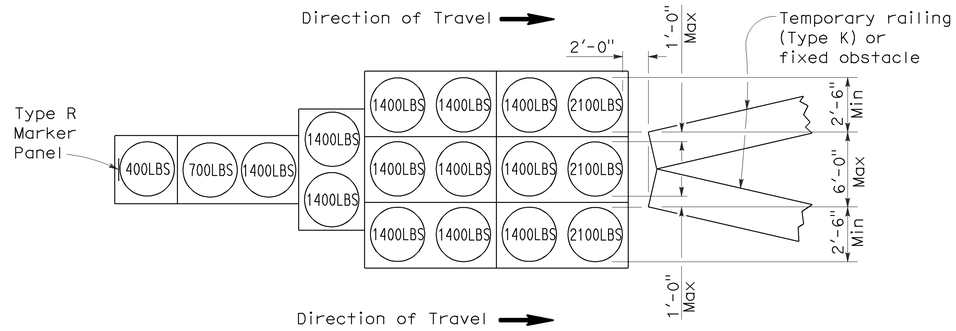

ARRAY 'TU17'

Approach speed less than 45 mph

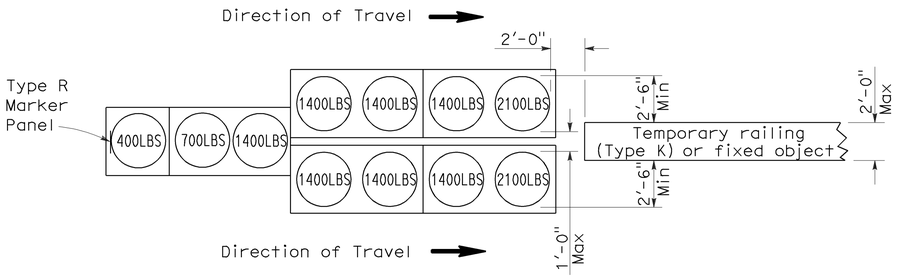

ARRAY 'TU11'

Approach speed less than 45 mph

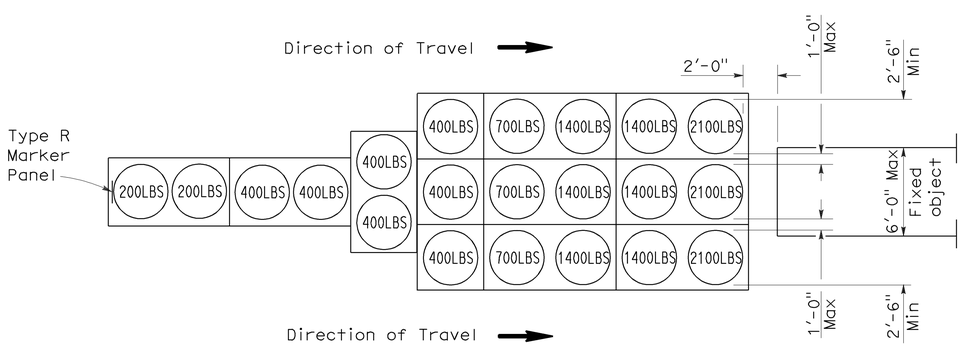

ARRAY 'TU21'

Approach speed 45 mph or more

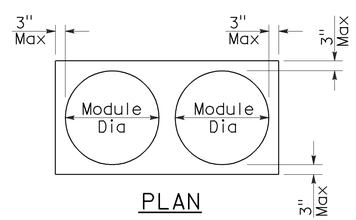

PLAN

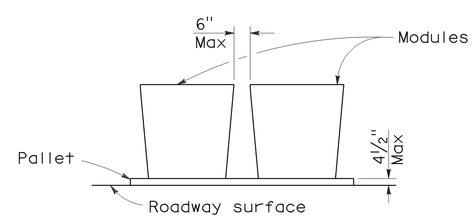

ELEVATION

CRASH CUSHION PALLET DETAIL

See Note 7

NOTES:

1. (XXX) Indicates sand filled module location and weight of sand in pounds for each module. Module spacing is based on the greater diameter of the module.
2. All sand weights are nominal.
3. Temporary crash cushion arrays shall not encroach on the traveled way.
4. Place the top of Type R marker panel 1" below the module lid.
5. Refer to Standard Plan A73B for marker details.
6. Approach speeds indicated conform to NCHRP 350 Report criteria.
7. Use of pallets is optional.

STATE OF CALIFORNIA
DEPARTMENT OF TRANSPORTATION

TEMPORARY CRASH CUSHION, SAND FILLED (UNIDIRECTIONAL)

NO SCALE

RSP T1A DATED JUNE 6, 2008 SUPERSEDES STANDARD PLAN T1A
DATED MAY 1, 2006 - PAGE 211 OF THE STANDARD PLANS BOOK DATED MAY 2006.

REVISED STANDARD PLAN RSP T1A

2006 REVISED STANDARD PLAN RSP T1A

5-15-08

DIST	COUNTY	ROUTE	POST MILES TOTAL PROJECT	SHEET NO.	TOTAL SHEETS
11	SD	125	10.6/10.9	61	64

Randell D. Hiatt
REGISTERED CIVIL ENGINEER

June 6, 2008
PLANS APPROVAL DATE

REGISTERED PROFESSIONAL ENGINEER
Randell D. Hiatt
No. C50200
Exp. 6-30-09
CIVIL
STATE OF CALIFORNIA

The State of California or its officers or agents shall not be responsible for the accuracy or completeness of electronic copies of this plan sheet.

To accompany plans dated 03-21-11

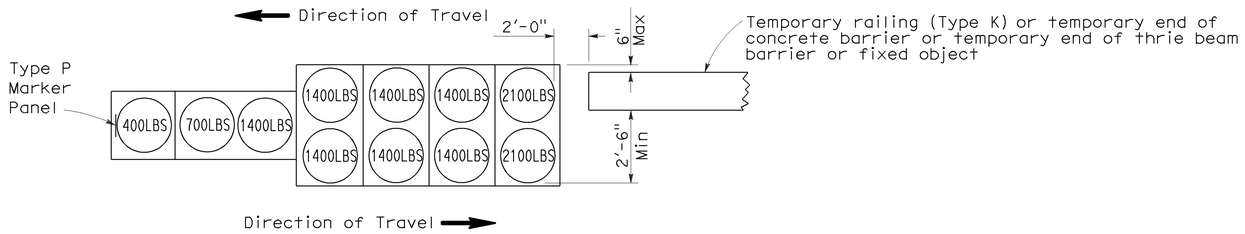

ARRAY 'TB11'

Approach speed less than 45 mph

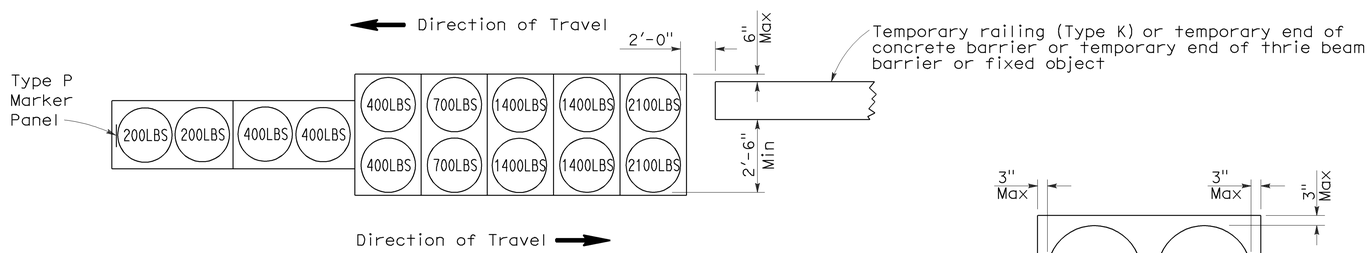

ARRAY 'TB14'

Approach speed 45 mph or more

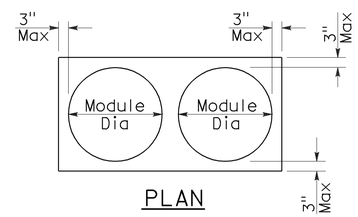

PLAN

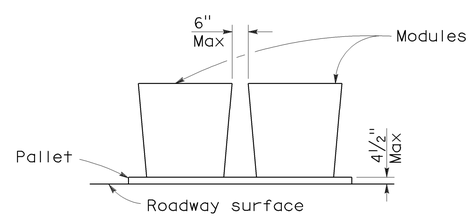

ELEVATION

CRASH CUSHION PALLET DETAIL

See Note 7

NOTES:

1. (XXX) Indicates sand filled module location and weight of sand in pounds for each module. Module spacing is based on the greater diameter of the module.
2. All sand weights are nominal.
3. Temporary crash cushion arrays shall not encroach on the traveled way.
4. Place the Type P marker panel so that the bottom of the panel rests upon the pallet.
5. Refer to Standard Plan A73B for marker details.
6. Approach speeds indicated conform to NCHRP 350 Report criteria.
7. Use of pallets is optional.

STATE OF CALIFORNIA
DEPARTMENT OF TRANSPORTATION

TEMPORARY CRASH CUSHION, SAND FILLED (BIDIRECTIONAL)

NO SCALE

RSP T1B DATED JUNE 6, 2008 SUPERSEDES STANDARD PLAN T1B
DATED MAY 1, 2006 - PAGE 212 OF THE STANDARD PLANS BOOK DATED MAY 2006.

REVISED STANDARD PLAN RSP T1B

2006 REVISED STANDARD PLAN RSP T1B

5-15-08

DIST	COUNTY	ROUTE	POST MILES TOTAL PROJECT	SHEET NO.	TOTAL SHEETS
11	SD	125	10.6/10.9	62	64

Randell D. Hiatt
REGISTERED CIVIL ENGINEER

June 6, 2008
PLANS APPROVAL DATE

REGISTERED PROFESSIONAL ENGINEER
Randell D. Hiatt
No. C50200
Exp. 6-30-09
CIVIL
STATE OF CALIFORNIA

The State of California or its officers or agents shall not be responsible for the accuracy or completeness of electronic copies of this plan sheet.

To accompany plans dated 03-21-11

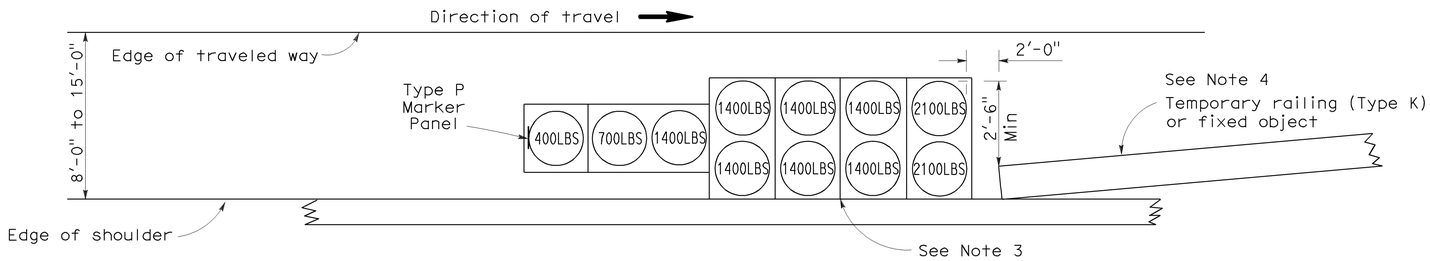

ARRAY 'TS11'

Approach speed less than 45 mph
See Note 9

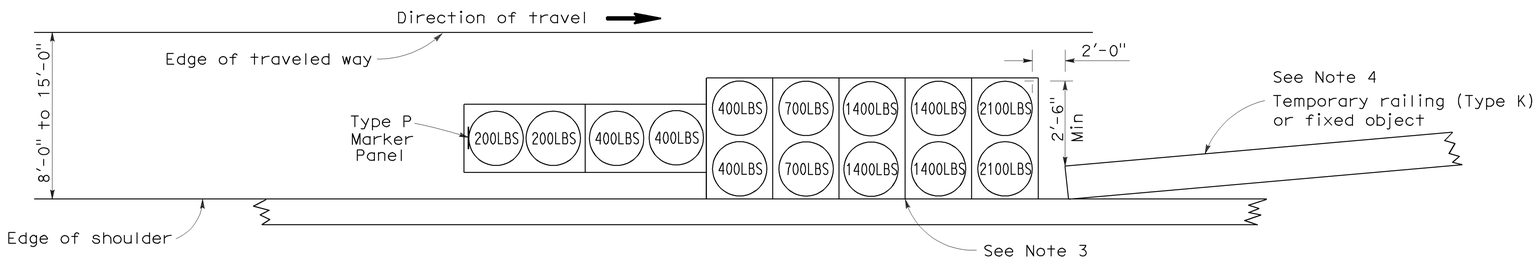

ARRAY 'TS14'

Approach speed 45 mph or more
See Note 9

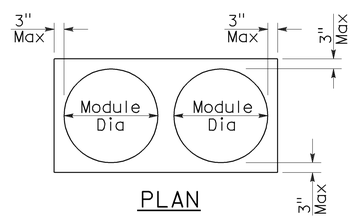

PLAN

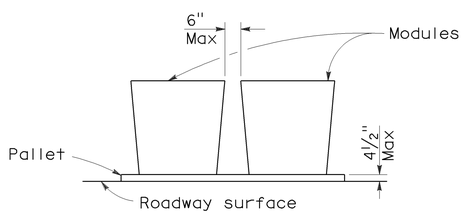

ELEVATION

CRASH CUSHION PALLET DETAIL

See Note 11

NOTES:

1. (XXX) Indicates sand filled module location and weight of sand in pounds for each module. Module spacing is based on the greater diameter of the module.
2. All sand weights are nominal.
3. The temporary crash cushion arrays shown on this plan shall be used only in locations where there will be traffic on one side of the temporary crash cushion array.
4. If the fixed object or approach end of the temporary railing is less than 15'-0" from the edge of traveled way, a temporary crash cushion is required in a construction or work zone.
5. Temporary crash cushion arrays shall not encroach on the traveled way.
6. Arrays for median shoulders shall conform to details shown on this plan for outside shoulders.
7. Place the Type P marker panel so that the bottom of the panel rests upon the pallet and faces traffic.
8. Refer to Standard Plan A73B for marker details.
9. For shoulder widths less than 8'-0", appropriate approved crash cushion protection, other than sand filled modules, shall be provided at fixed objects and at approach ends of temporary railing. The specific type of crash cushion shall be as shown on the project plans or as specified in the Special Provisions, or if not shown on the project plans or specified in the Special Provisions, shall be as approved by the Engineer.
10. Approach speeds indicated conform to NCHRP 350 Report criteria.
11. Use of pallets is optional.

STATE OF CALIFORNIA
DEPARTMENT OF TRANSPORTATION

TEMPORARY CRASH CUSHION, SAND FILLED (SHOULDER INSTALLATIONS)

NO SCALE

RSP T2 DATED JUNE 6, 2008 SUPERSEDES STANDARD PLAN T2
DATED MAY 1, 2006 - PAGE 213 OF THE STANDARD PLANS BOOK DATED MAY 2006.

REVISED STANDARD PLAN RSP T2

2006 REVISED STANDARD PLAN RSP T2

5-15-08

DIST	COUNTY	ROUTE	POST MILES TOTAL PROJECT	SHEET NO.	TOTAL SHEETS
11	SD	125	10.6/10.9	63	64

REGISTERED CIVIL ENGINEER

November 17, 2006
PLANS APPROVAL DATE

Greg W. Edwards No. C36386 Exp. 6-30-08 CIVIL — REGISTERED PROFESSIONAL ENGINEER — STATE OF CALIFORNIA

The State of California or its officers or agents shall not be responsible for the accuracy or completeness of electronic copies of this plan sheet.

To accompany plans dated 03-21-11

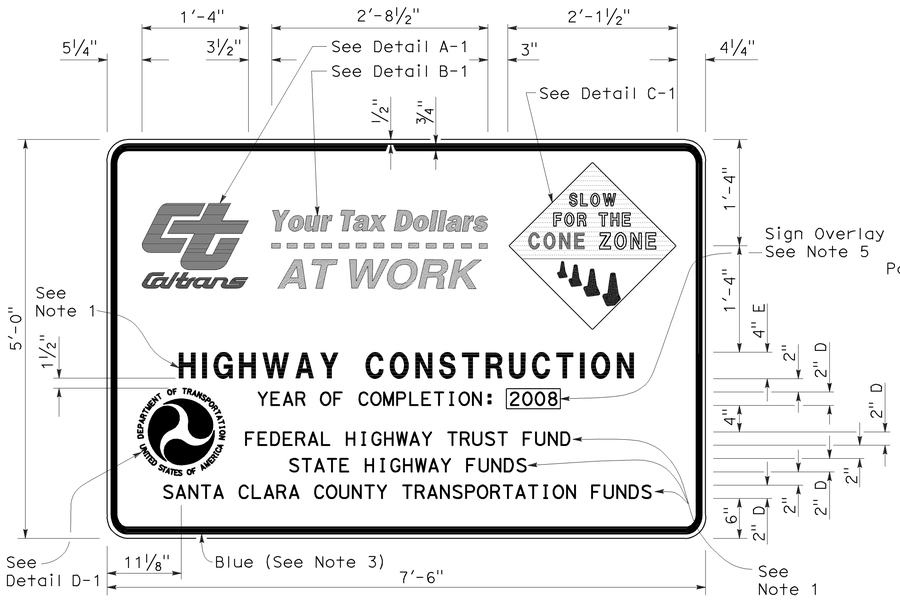

TYPE 1

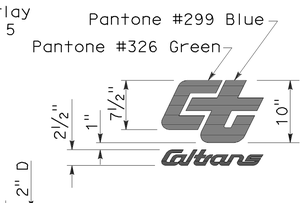

DETAIL A-1

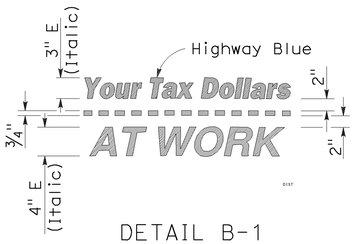

DETAIL B-1
(See Note 3)

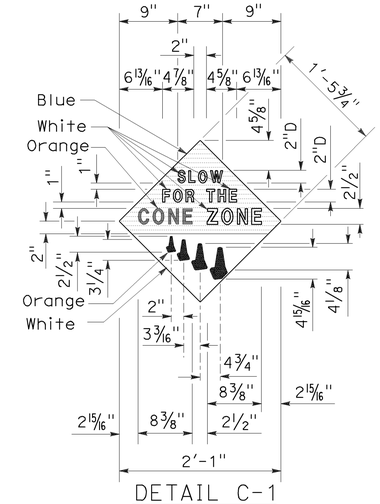

DETAIL C-1
(See Note 4)

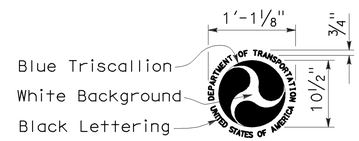

DETAIL D-1
(See Note 6)

NOTES:

1. The sign messages shown for type of project and fund types are examples only. See the Special Provisions for the applicable type of project and fund type messages to be used.
2. Except as otherwise shown, the legend of sign shall be black on a white background (non-reflective).
3. The border of the signs and details "B-1" and "B-2" shall be blue (non-reflective).
4. The diamond in details "C-1" and "C-2" shall be blue for the background of message, " SLOW FOR THE CONE ZONE", and white background for the orange cones. The color and type of font for the "SLOW FOR THE CONE ZONE" message shall be: "SLOW" white D; "FOR THE" white D; "CONE" orange Arial font; "ZONE" white Arial font.
5. Year of completion of project construction shown on the overlay is an example only. See the Special Provisions.
6. Use when the Project involves Federal Highway Trust Fund.

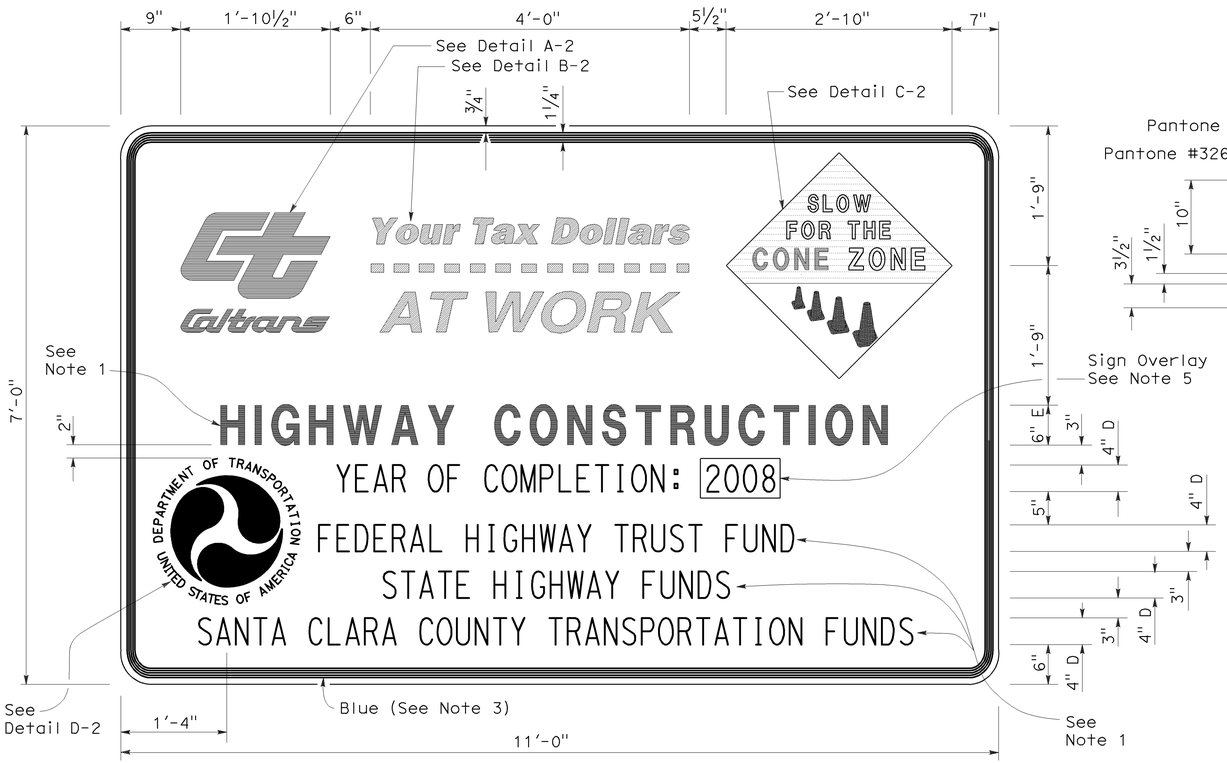

TYPE 2

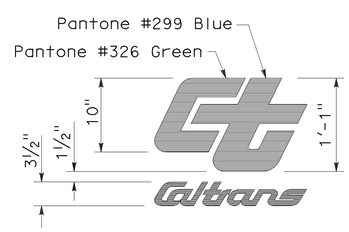

DETAIL A-2

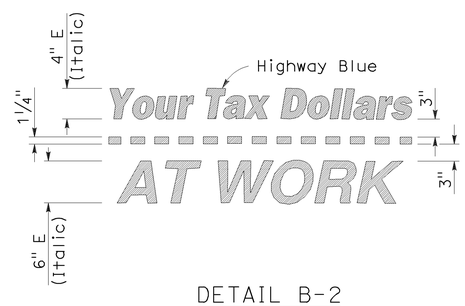

DETAIL B-2
(See Note 3)

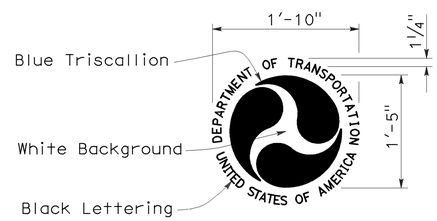

DETAIL D-2
(See Note 6)

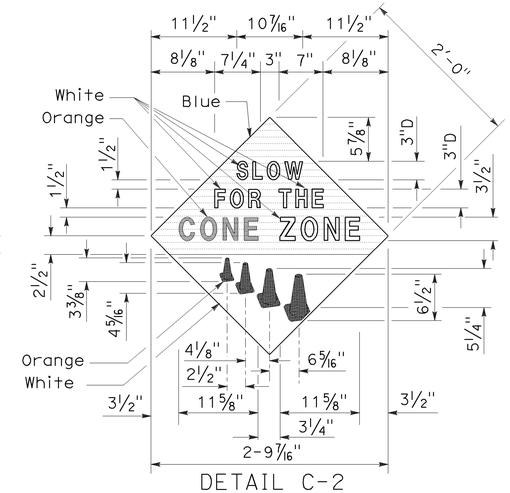

DETAIL C-2
(See Note 4)

STATE OF CALIFORNIA
DEPARTMENT OF TRANSPORTATION

CONSTRUCTION PROJECT FUNDING IDENTIFICATION SIGNS

NO SCALE

RSP T7 DATED NOVEMBER 17, 2006 SUPERSEDES STANDARD PLAN T7
DATED MAY 1, 2006 - PAGE 217 OF THE STANDARD PLANS BOOK DATED MAY 2006.

REVISED STANDARD PLAN RSP T7

2006 REVISED STANDARD PLAN RSP T7

9-7-06

DIST	COUNTY	ROUTE	POST MILES TOTAL PROJECT	SHEET NO.	TOTAL SHEETS
11	SD	125	10.6/10.9	64	64

LICENSED LANDSCAPE ARCHITECT

April 3, 2009
PLANS APPROVAL DATE

The State of California or its officers or agents shall not be responsible for the accuracy or completeness of electronic copies of this plan sheet.

LICENSED LANDSCAPE ARCHITECT — Robert B. Schott — 3635 — Expires 11-30-10 — Renewal Date 2-25-09 — Date — STATE OF CALIFORNIA

To accompany plans dated 03-21-11

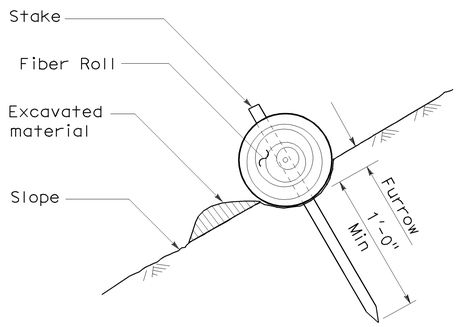

SECTION

TEMPORARY FIBER ROLL (TYPE 1)

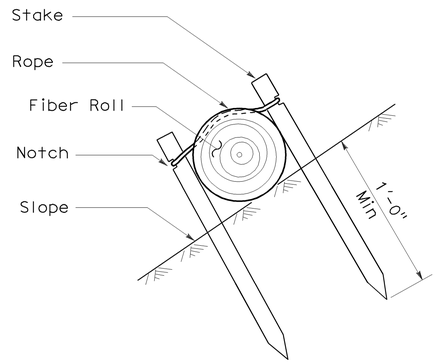

SECTION

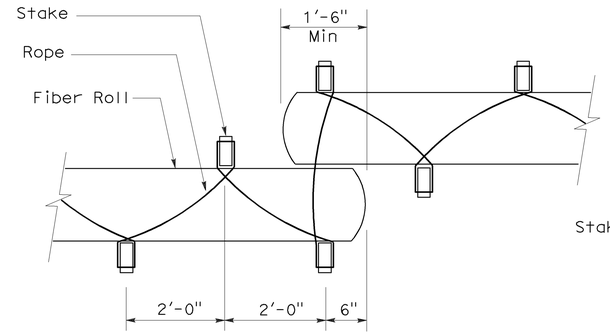

PLAN

TEMPORARY FIBER ROLL (TYPE 2)

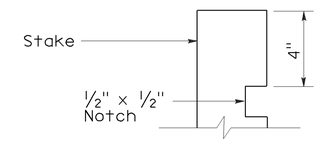

ELEVATION

STAKE NOTCH DETAIL

NOTES:

1. Temporary fiber roll spacing varies depending upon slope inclination.
2. Installations shown in the perspectives are for slope inclination of 10:1 and steeper.

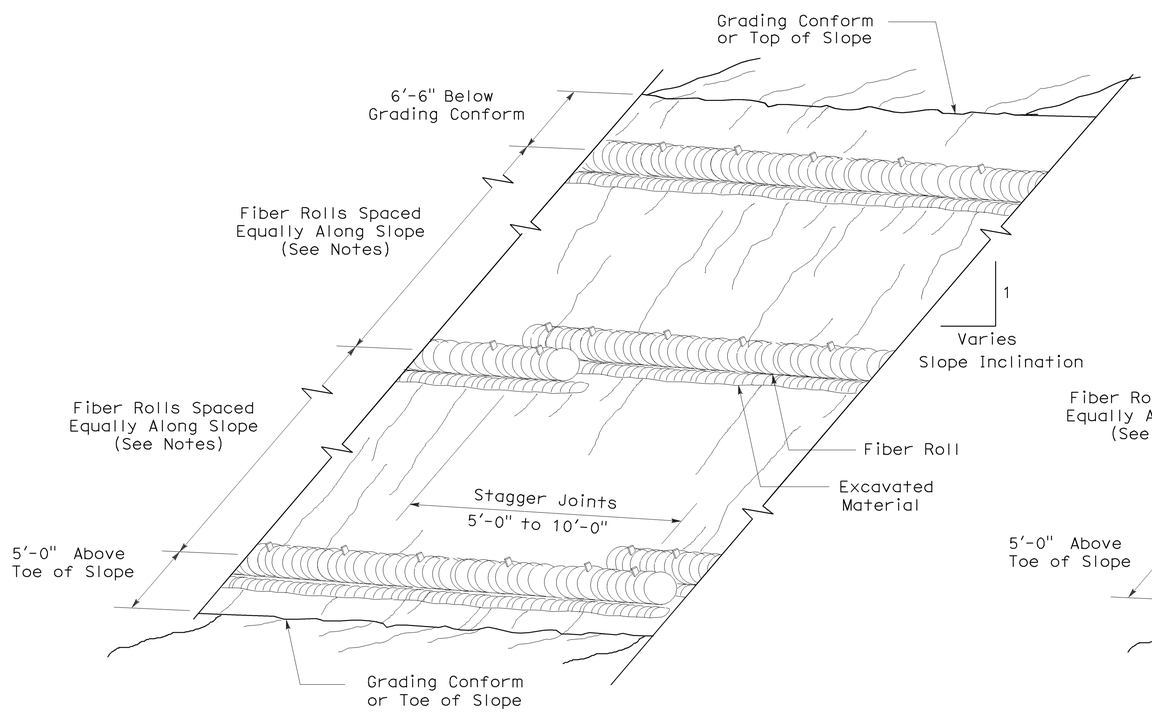

PERSPECTIVE

TEMPORARY FIBER ROLL (TYPE 1)

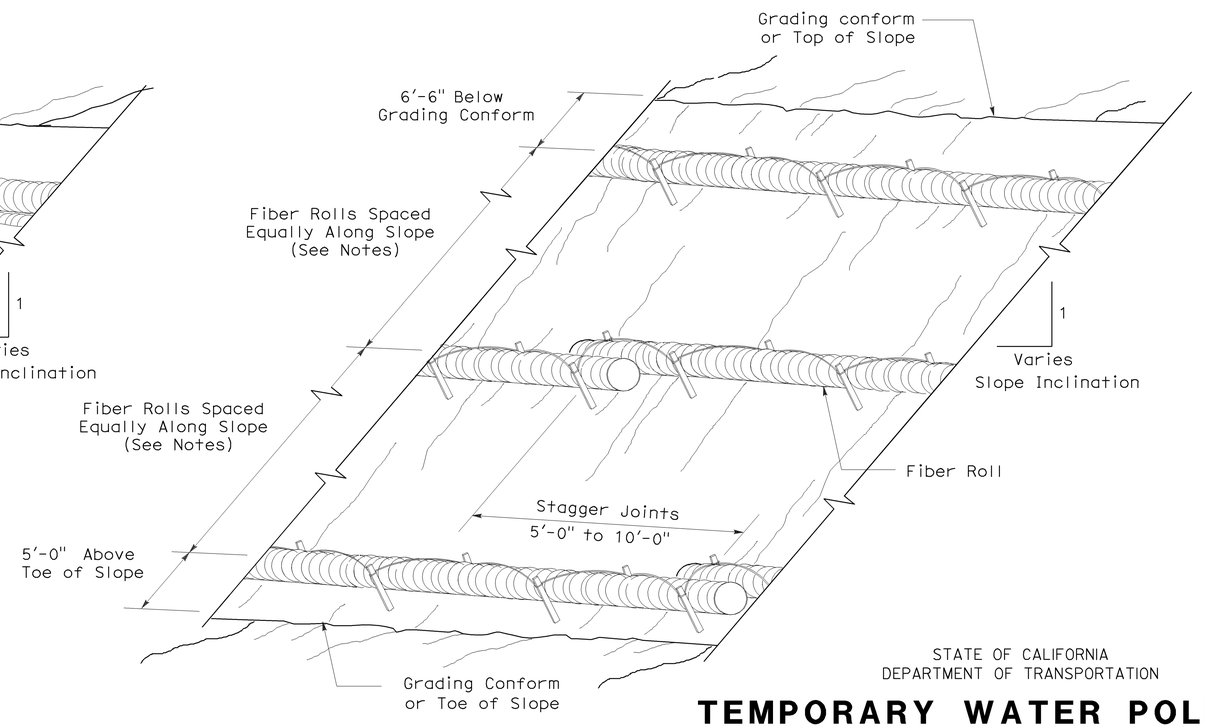

PERSPECTIVE

TEMPORARY FIBER ROLL (TYPE 2)

STATE OF CALIFORNIA
DEPARTMENT OF TRANSPORTATION

TEMPORARY WATER POLLUTION CONTROL DETAILS (TEMPORARY FIBER ROLL)

NO SCALE

RSP T56 DATED APRIL 3, 2009 SUPERSEDES STANDARD PLAN T56
DATED MAY 1, 2006 - PAGE 232 OF THE STANDARD PLANS BOOK DATED MAY 2006.

REVISED STANDARD PLAN RSP T56

2006 REVISED STANDARD PLAN RSP T56

232

2-23-09