Dist	COUNTY	ROUTE	POST MILES TOTAL PROJECT	SHEET No.	TOTAL SHEETS
11	SD	94	14.9/30.0	1	49

STATE OF CALIFORNIA

DEPARTMENT OF TRANSPORTATION

ACNH-P094(059)E

PROJECT PLANS FOR CONSTRUCTION ON

STATE HIGHWAY

IN SAN DIEGO COUNTY
NEAR JAMUL FROM ROUTE 54 TO
0.2 MILE EAST OF MARRON VALLEY ROAD

TO BE SUPPLEMENTED BY STANDARD PLANS DATED 2010

INDEX OF PLANS

SHEET NO.	DESCRIPTION
1	TITLE AND LOCATION MAP
2	TYPICAL CROSS SECTIONS
3	PROJECT CONTROL
4-16	CONSTRUCTION DETAILS
17	UTILITY PLAN
18	CONSTRUCTION AREA SIGNS
19-20	PAVEMENT DELINEATION DETAILS AND QUANTITIES
21-23	SIGN PLAN AND QUANTITIES
24-32	SUMMARY OF QUANTITIES
33-37	ELECTRICAL PLANS
38-42	TRAFFIC CONTROL SYSTEM
43-49	REVISED STANDARD PLANS

THE STANDARD PLANS LIST APPLICABLE TO THIS CONTRACT IS INCLUDED IN THE NOTICE TO BIDDERS AND SPECIAL PROVISIONS BOOK.

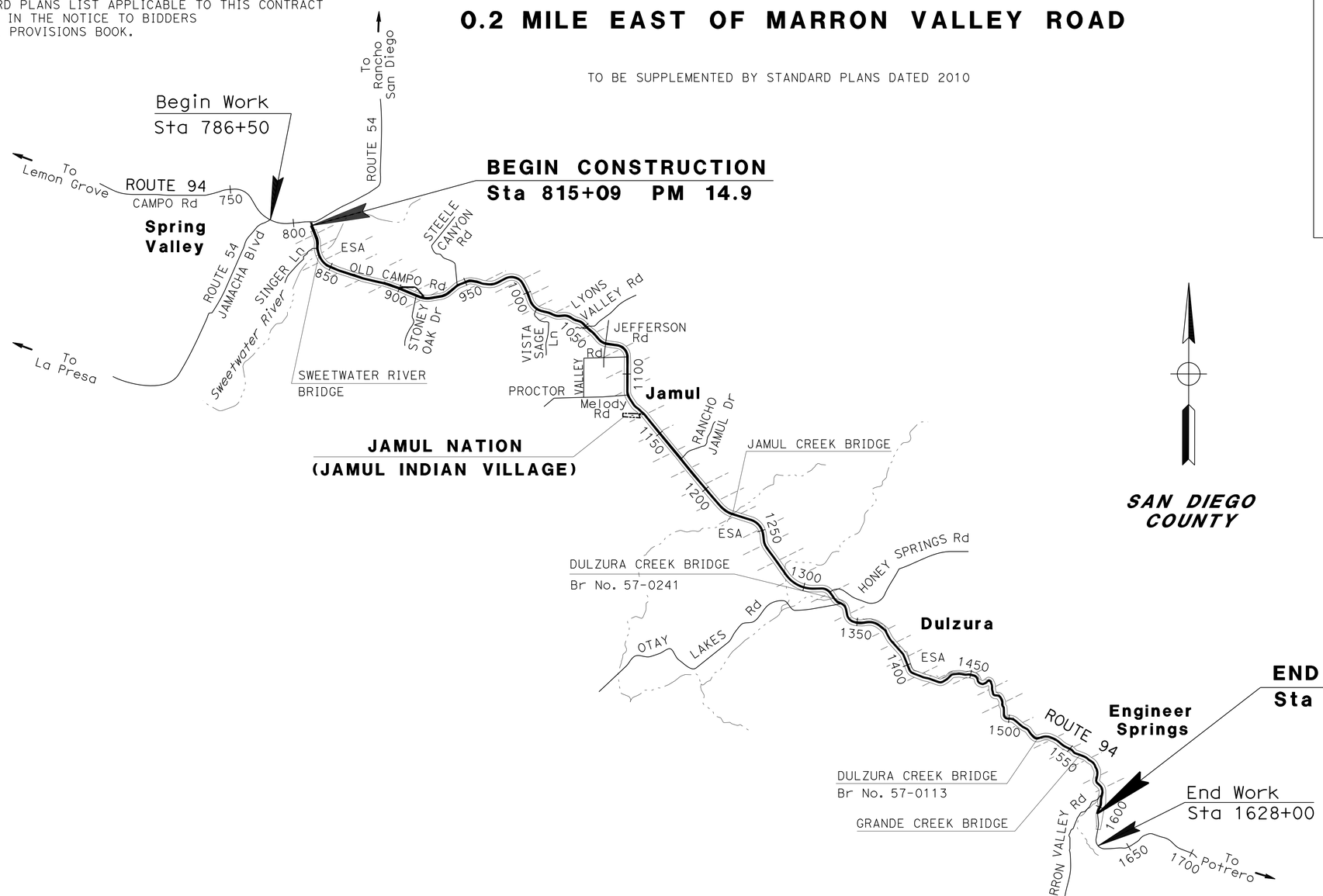

LOCATION MAP

THE CONTRACTOR SHALL POSSESS THE CLASS (OR CLASSES) OF LICENSE AS SPECIFIED IN THE "NOTICE TO BIDDERS."

NO SCALE

Bahman Yazdani 03-11-13
PROJECT ENGINEER DATE
REGISTERED CIVIL ENGINEER

March 11, 2013
PLANS APPROVAL DATE

REGISTERED PROFESSIONAL ENGINEER BAHMAN YAZDANI No. 58322 Exp. 06-30-14 CIVIL STATE OF CALIFORNIA

THE STATE OF CALIFORNIA OR ITS OFFICERS OR AGENTS SHALL NOT BE RESPONSIBLE FOR THE ACCURACY OR COMPLETENESS OF SCANNED COPIES OF THIS PLAN SHEET.

CONTRACT No.	11-290404
PROJECT ID	1100000360

PROJECT MANAGER: CHRIS M THOMAS
DESIGN ENGINEER: BAHMAN YAZDANI

LAST REVISION 03-21-13
DATE PLOTTED => 11-APR-2013
TIME PLOTTED => 13:54

Dist	COUNTY	ROUTE	POST MILES TOTAL PROJECT	SHEET No.	TOTAL SHEETS
11	SD	94	14.9/30.0	2	49

Bahman Yazdani 03-11-13
REGISTERED CIVIL ENGINEER DATE

03-11-13
PLANS APPROVAL DATE

REGISTERED PROFESSIONAL ENGINEER BAHMAN YAZDANI No. 58322 Exp. 06-30-14 CIVIL STATE OF CALIFORNIA

THE STATE OF CALIFORNIA OR ITS OFFICERS OR AGENTS SHALL NOT BE RESPONSIBLE FOR THE ACCURACY OR COMPLETENESS OF SCANNED COPIES OF THIS PLAN SHEET.

NOTES:

1. DIMENSIONS OF PAVEMENT STRUCTURES (STRUCTURAL SECTIONS) ARE SUBJECT TO TOLERANCES SPECIFIED IN THE STANDARD SPECIFICATIONS.
2. FOG SEAL COAT SHALL BE APPLIED TO ALL HMA SURFACES EXCEPT TRAVELED WAY.
3. SEE QUANTITIES SHEETS FOR LOCATIONS OF MBGR WORK, DIKE WORK, RUMBLE STRIP, AND SAFETY EDGE.

DESIGN DESIGNATION:

FROM PM 14.9 - 19.5	FROM PM 19.5- 20.7	FROM PM 20.7-30.0
2009 ADT = 16,600	2009 ADT = 11,000	2009 ADT = 7,800
2009 DHV = 2,370	2008 DHV = 1,570	2008 DHV = 1,240
2013 ADT = 18,900	2013 ADT = 12,900	2013 ADT = 9,000
2030 ADT = 33,000	2030 ADT = 25,000	2030 ADT = 16,500
2030 DHV = 4,100	2030 DHV = 3,130	2030 DHV = 2,100
D% = 54%	D% = 58%	D% = 57%
TRUCK % = 6.0%	TRUCK % = 7.0%	TRUCK % = 8.3%
V (SPEED) = (65 mph)	V (SPEED) = (65 mph)	V (SPEED) = (65 mph)

PAVEMENT CLIMATE REGION

SOUTH COAST

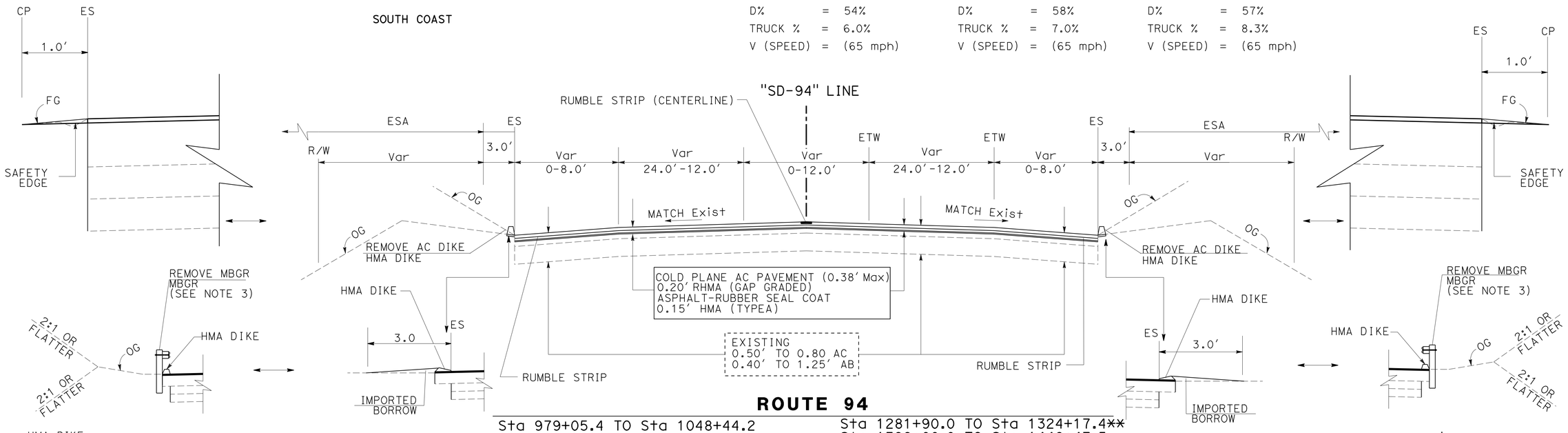

ROUTE 94

Sta 979+05.4 TO Sta 1048+44.2
Sta 1088+34.0 TO Sta 1098+50.0
Sta 1113+00.0 TO Sta 1123+50.0
Sta 1244+00.0 TO Sta 1261+98.2
Sta 1281+90.0 TO Sta 1324+17.4**
Sta 1399+00.0 TO Sta 1448+47.5
Sta 1454+88.2 TO Sta 1524+52.0
Sta 1525+22.6 TO Sta 1532+00.0

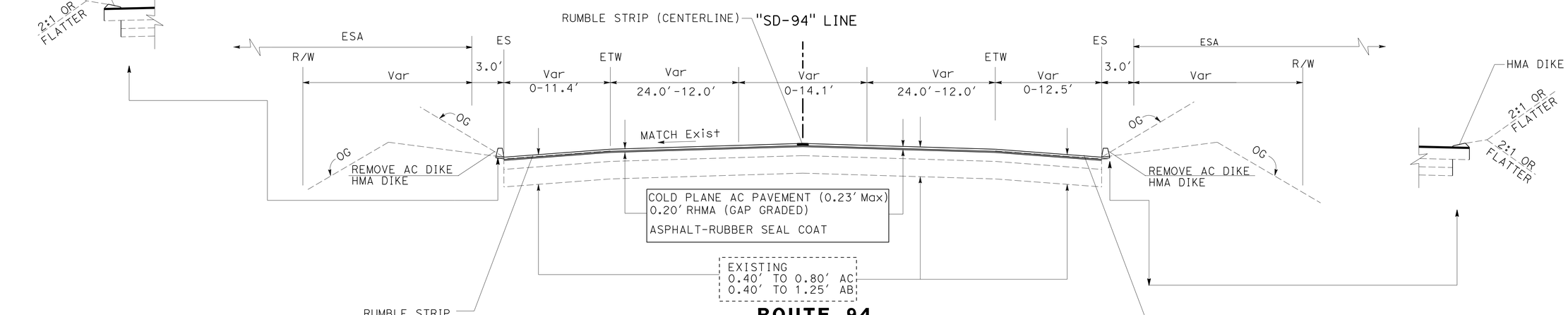

ROUTE 94

Sta 815+28.0 TO Sta 835+83.7
Sta 840+79.0 TO Sta 979+05.4
Sta 1048+44.2 TO Sta 1088+34.0
Sta 1098+50.0 TO Sta 1113+00.0
Sta 1123+50.0 TO Sta 1244+00.0
Sta 1261+98.2 TO Sta 1281+90.0
Sta 1325+77.4 TO Sta 1399+00.0
Sta 1448+47.5 TO Sta 1454+88.2
Sta 1532+00.0 TO Sta 1559+70.2
Sta 1559+70.2 TO Sta 1601+94.2*

* APPLY HIGH FRICTION SURFACE TREATMENT TO 0.20′ RHMA (GAP GRADED)
**ESA LIMIT FOR EASTBOUND ROUTE 94 BEGIN AT ES FROM 1307+50 TO 1309+00

TYPICAL CROSS SECTIONS

NO SCALE

X-1

REVISED BY | DATE REVISED
BAHMAN YAZDANI | RICARDO PADILLA
CALCULATED-DESIGNED BY | CHECKED BY
FUNCTIONAL SUPERVISOR: CHRIS M THOMAS
STATE OF CALIFORNIA - DEPARTMENT OF TRANSPORTATION
Caltrans® DESIGN

LAST REVISION 03-21-13 | DATE PLOTTED => 11-APR-2013 | TIME PLOTTED => 13:54

Dist	COUNTY	ROUTE	POST MILES TOTAL PROJECT	SHEET No.	TOTAL SHEETS
11	SD	94	14.9/30.0	3	49

George J. Schuh 03-11-13
LICENSED LAND SURVEYOR DATE

03-11-13
PLANS APPROVAL DATE

PROFESSIONAL LAND SURVEYOR GEORGE J. SCHUH L.S. 7121 Exp. 12/31/2014 STATE OF CALIFORNIA

THE STATE OF CALIFORNIA OR ITS OFFICERS OR AGENTS SHALL NOT BE RESPONSIBLE FOR THE ACCURACY OR COMPLETENESS OF SCANNED COPIES OF THIS PLAN SHEET.

NOTES:

FOR COMPLETE PROJECT CONTROL AND MONUMENTATION DATA, SEE THE SURVEY RECORDS ON FILE AT DISTRICT 11 SURVEYS.

BASIS OF BEARINGS AND COORDINATES

FOR THIS PROJECT IS THE CALIFORNIA COORDINATE SYSTEM OF 1983, HPGN EPOCH ADJUSTMENT [CCS 83 (1991.35)], ZONE 6. 2ND ORDER PROJECT CONTROL STATION VALUES WERE ESTABLISHED IN AUGUST 2002 BASED ON THE CRITERIA SET FORTH IN THE FEDERAL GEODETIC CONTROL SUBCOMMITTEE'S "GEOMETRIC GEODETIC ACCURACY STANDARDS AND SPECIFICATIONS FOR USING GPS RELATIVE POSITIONING TECHNIQUES" REPRINTED AUGUST 1, 1989.

BASIS OF ELEVATIONS

FOR THIS PROJECT IS THE NORTH AMERICAN VERTICAL DATUM OF 1988 (NAVD88 CGPS). ELEVATIONS WERE ESTABLISHED BY GPS FAST STATIC SURVEY.

LEGEND

2ND ORDER STATION

ABBREVIATIONS:

CADT	CALIFORNIA DEPARTMENT OF TRANSPORTATION
IP	IRON PIPE
USC&GS	UNITED STATES COAST AND GEODETIC SURVEY
BR	BRASS

CONTROL FOR DESIGN AND CONSTRUCTION

STATION DESIGNATION	ORDER	NORTHING	EASTING	ELEVATION	DESCRIPTION
94-14.9	2ND	1,849,467.60	6,348,707.74	348.96	2¼" CADT BR DISK IN SIDEWALK
94.15.1	2ND	1,848,362.23	6,349,248.87	334.27	2¼" CADT BR DISK IN SIDEWALK
94-15.99	2ND	1,845,652.72	6,352,369.11	393.54	2¼" CADT BRASS DISK IN 2" IP
94-17.2	2ND	1,844,748.12	6,358,411.85	553.73	2¼" CADT BRASS DISK IN DRAIN
94-17.4	2ND	1,845,329.23	6,359,111.09	563.77	2¼" CADT BRASS DISK IN DRAIN
K 574	2ND	1,841,228.13	6,369,065.35	996.12	USC&GS STD DISK "K 574 1939"

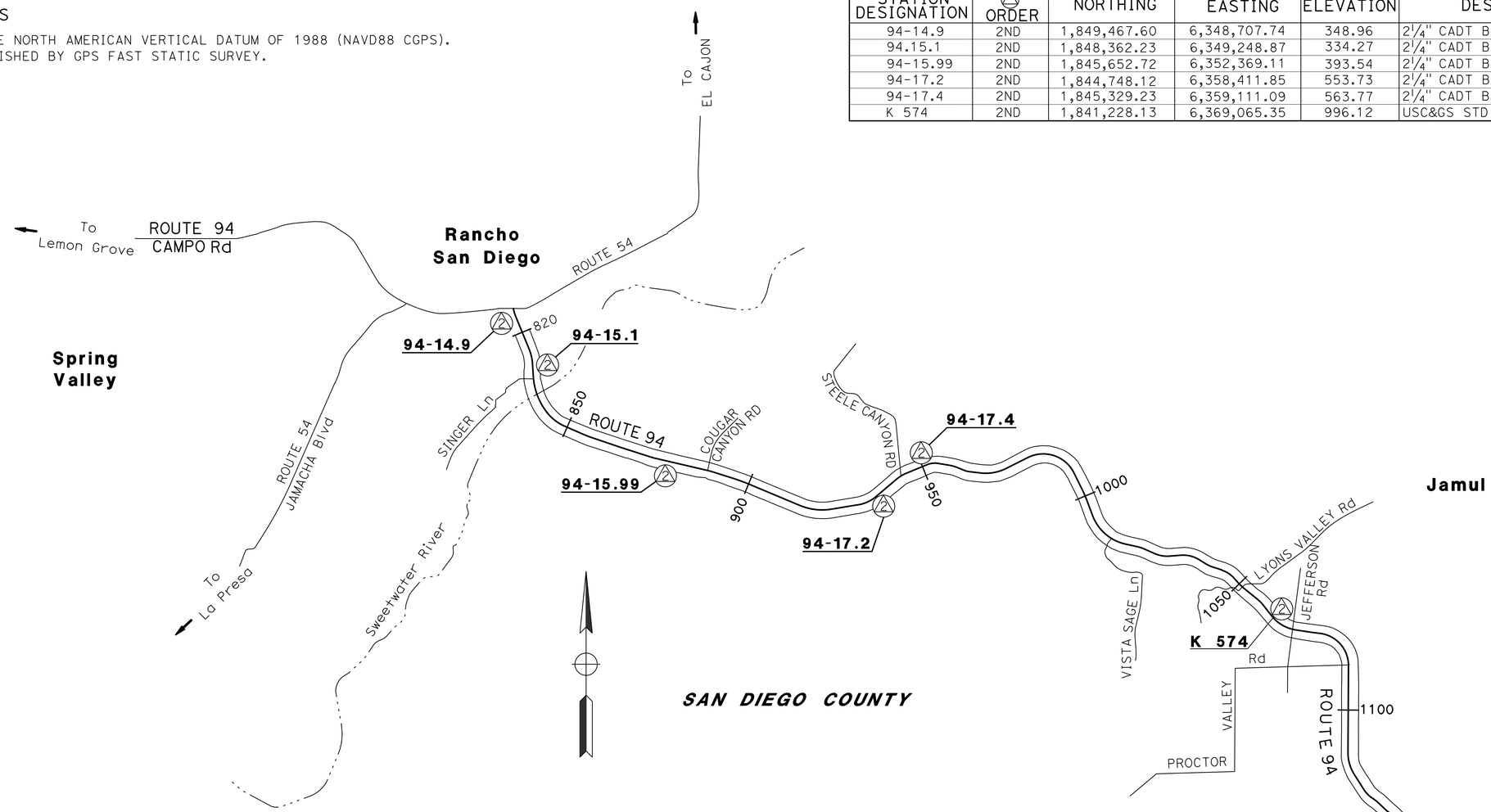

PROJECT CONTROL

NO SCALE

PC-1

APPROVED FOR PROJECT CONTROL INFORMATION ONLY

STATE OF CALIFORNIA - DEPARTMENT OF TRANSPORTATION
Caltrans® LAND SURVEYS DIVISION

FUNCTIONAL SUPERVISOR: BRUCE URQUHART
CALCULATED-DESIGNED BY: GEORGE SCHUH
CHECKED BY: NED SALMAN
REVISED BY
DATE REVISED

LAST REVISION 03-21-13
DATE PLOTTED => 11-APR-2013
TIME PLOTTED => 13:54

Dist	COUNTY	ROUTE	POST MILES TOTAL PROJECT	SHEET No.	TOTAL SHEETS
11	SD	94	14.9/30.0	4	49

Bahman Yazdani 03-11-13
REGISTERED CIVIL ENGINEER DATE

03-11-13
PLANS APPROVAL DATE

REGISTERED PROFESSIONAL ENGINEER BAHMAN YAZDANI No. 58322 Exp. 06-30-14 CIVIL STATE OF CALIFORNIA

THE STATE OF CALIFORNIA OR ITS OFFICERS OR AGENTS SHALL NOT BE RESPONSIBLE FOR THE ACCURACY OR COMPLETENESS OF SCANNED COPIES OF THIS PLAN SHEET.

NOTE:

THE CONTRACTOR SHALL VERIFY ALL CONTROLLING FIELD DIMENSIONS BEFORE ORDERING OR FABRICATING ANY MATERIAL.

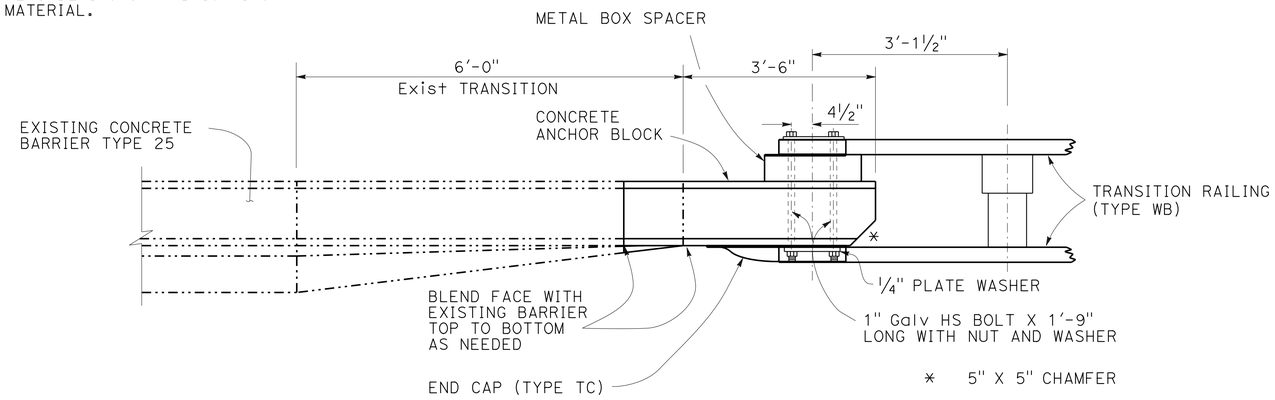

PLAN

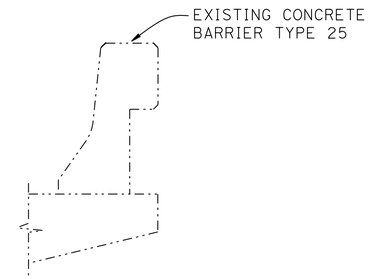

CONCRETE BARRIER TYPE 25

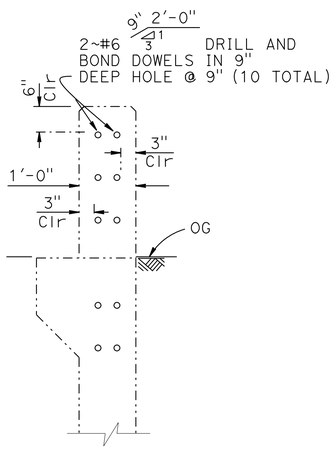

SECTION A-A

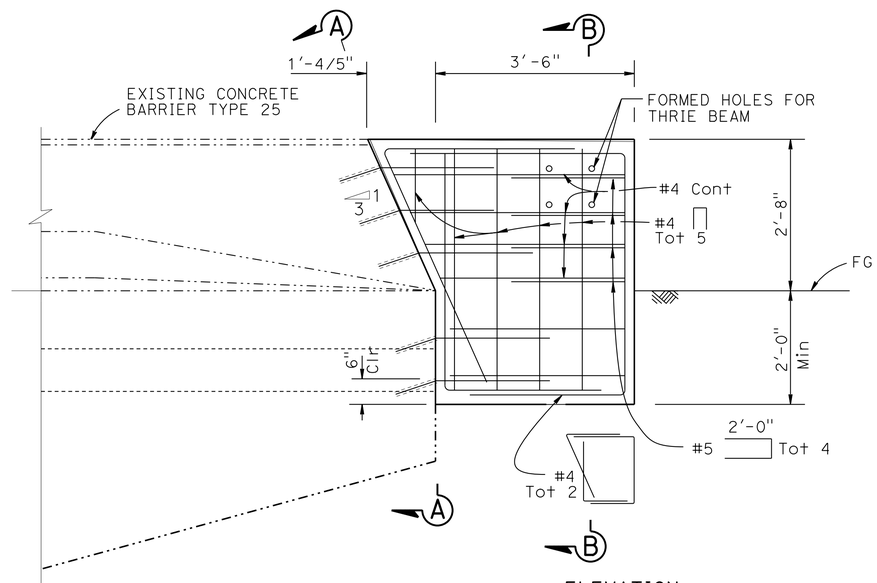

ELEVATION

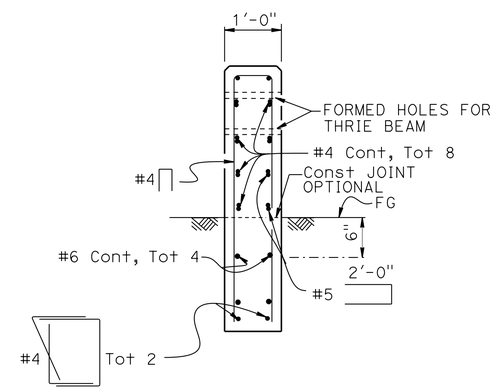

SECTION B-B

ANCHOR BLOCK

EB 94 "SD-94" Sta 835+64.80
EB 94 "SD-94" Sta 841+02.00
EB 94 "SD-94" Sta 1517+33.00
WB 94 "SD-94" Sta 1516+36.70
WB 94 "SD-94" Sta 1516+83.50

LEGEND:

-·-·-·- INDICATES EXISTING STRUCTURE
_____ INDICATES NEW CONSTRUCTION

CONSTRUCTION DETAILS

NO SCALE

C-1

STATE OF CALIFORNIA - DEPARTMENT OF TRANSPORTATION
Caltrans DESIGN
FUNCTIONAL SUPERVISOR: CHRIS M THOMAS
CALCULATED-DESIGNED BY: BAHMAN YAZDANI
CHECKED BY: RICARDO PADILLA
REVISED BY
DATE REVISED

LAST REVISION 03-21-13
DATE PLOTTED => 11-APR-2013
TIME PLOTTED => 13:54

Dist	COUNTY	ROUTE	POST MILES TOTAL PROJECT	SHEET No.	TOTAL SHEETS
11	SD	94	14.9/30.0	5	49

Bahman Yazdani 03-11-13
REGISTERED CIVIL ENGINEER DATE

03-11-13
PLANS APPROVAL DATE

REGISTERED PROFESSIONAL ENGINEER BAHMAN YAZDANI No. 58322 Exp. 06-30-14 CIVIL STATE OF CALIFORNIA

THE STATE OF CALIFORNIA OR ITS OFFICERS OR AGENTS SHALL NOT BE RESPONSIBLE FOR THE ACCURACY OR COMPLETENESS OF SCANNED COPIES OF THIS PLAN SHEET.

NOTES:

1. EXISTING ELEVATIONS SHOWN IN PARENTHESIS.
2. FOR ACCURATE RIGHT OF WAY DATA, CONTACT RIGHT OF WAY ENGINEERING AT THE DISTRICT OFFICE.

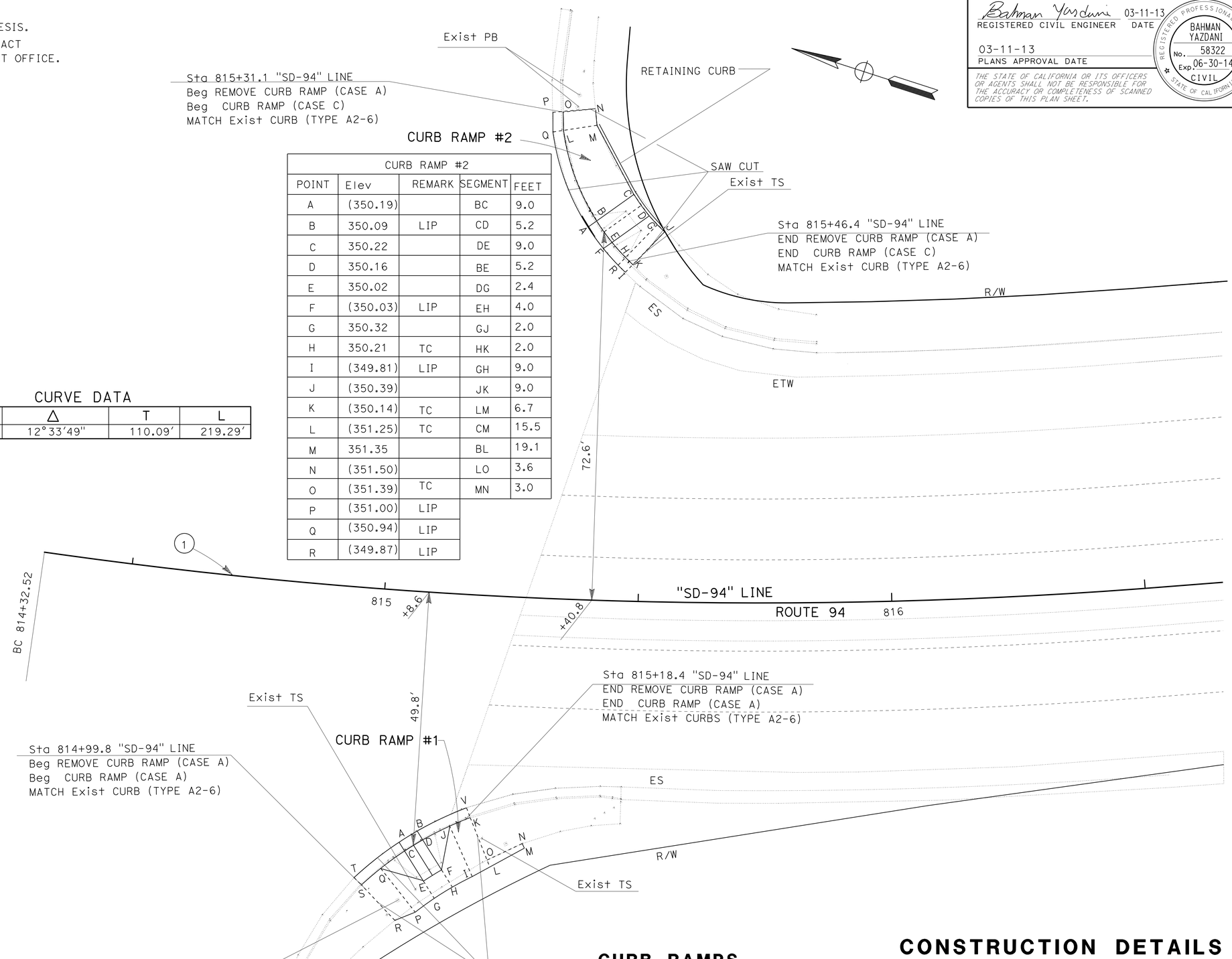

CURVE DATA

No.	R	Δ	T	L
1	1000'	12°33'49"	110.09'	219.29'

CURB RAMP #2				
POINT	Elev	REMARK	SEGMENT	FEET
A	(350.19)		BC	9.0
B	350.09	LIP	CD	5.2
C	350.22		DE	9.0
D	350.16		BE	5.2
E	350.02		DG	2.4
F	(350.03)	LIP	EH	4.0
G	350.32		GJ	2.0
H	350.21	TC	HK	2.0
I	(349.81)	LIP	GH	9.0
J	(350.39)		JK	9.0
K	(350.14)	TC	LM	6.7
L	(351.25)	TC	CM	15.5
M	351.35		BL	19.1
N	(351.50)		LO	3.6
O	(351.39)	TC	MN	3.0
P	(351.00)	LIP		
Q	(350.94)	LIP		
R	(349.87)	LIP		

CURB RAMP #1				
POINT	Elev	REMARK	SEGMENT	FEET
A	(349.40)	LIP	AB	4.2
B	(349.43)	LIP	CD	4.2
C	349.39		EF	4.2
D	349.33		GH	4.2
E	349.91		HI	4.5
F	349.85		IL	4.0
G	349.97		LM	7.8
H	349.91		MN	1.0
I	349.77		NO	8.8
J	349.61		LK	10.6
K	(349.42)	TC	KJ	4.4
L	(349.65)		JI	11.0
M	(349.46)		JD	6.0
N	(349.44)		CQ	5.8
O	(349.66)		QP	11.0
P	(350.05)		PR	4.3
Q	349.90	TC	RS	9.6
R	(350.12)		SQ	5.0
S	(349.91)	TC	CE	7.0
T	(349.59)	LIP	DF	7.0
V	(349.14)	LIP		

CURB RAMPS

CONSTRUCTION DETAILS

NO SCALE

C-2

STATE OF CALIFORNIA - DEPARTMENT OF TRANSPORTATION
Caltrans
DESIGN
FUNCTIONAL SUPERVISOR: CHRIS M THOMAS
CALCULATED-DESIGNED BY: BAHMAN YAZDANI
CHECKED BY: RICARDO PADILLA
REVISED BY
DATE REVISED

LAST REVISION 03-21-13
DATE PLOTTED => 11-APR-2013
TIME PLOTTED => 13:54

Dist	COUNTY	ROUTE	POST MILES TOTAL PROJECT	SHEET No.	TOTAL SHEETS
11	SD	94	14.9/30.0	6	49

Bahman Yazdani 03-11-13
REGISTERED CIVIL ENGINEER DATE

03-11-13
PLANS APPROVAL DATE

REGISTERED PROFESSIONAL ENGINEER BAHMAN YAZDANI No. 58322 Exp. 06-30-14 CIVIL STATE OF CALIFORNIA

THE STATE OF CALIFORNIA OR ITS OFFICERS OR AGENTS SHALL NOT BE RESPONSIBLE FOR THE ACCURACY OR COMPLETENESS OF SCANNED COPIES OF THIS PLAN SHEET.

NOTES:

1. EXISTING ELEVATIONS SHOWN IN PARENTHESIS.
2. FOR ACCURATE RIGHT OF WAY DATA, CONTACT RIGHT OF WAY ENGINEERING AT THE DISTRICT OFFICE.

LEGEND:

LIMITS OF WORK AT PRIVATE DRIVEWAYS
COLD PLANE AC PAVEMENT (0.23' Max)
0.2' RHMA (GAP GRADED)
ASPHALT-RUBBER SEAL COAT

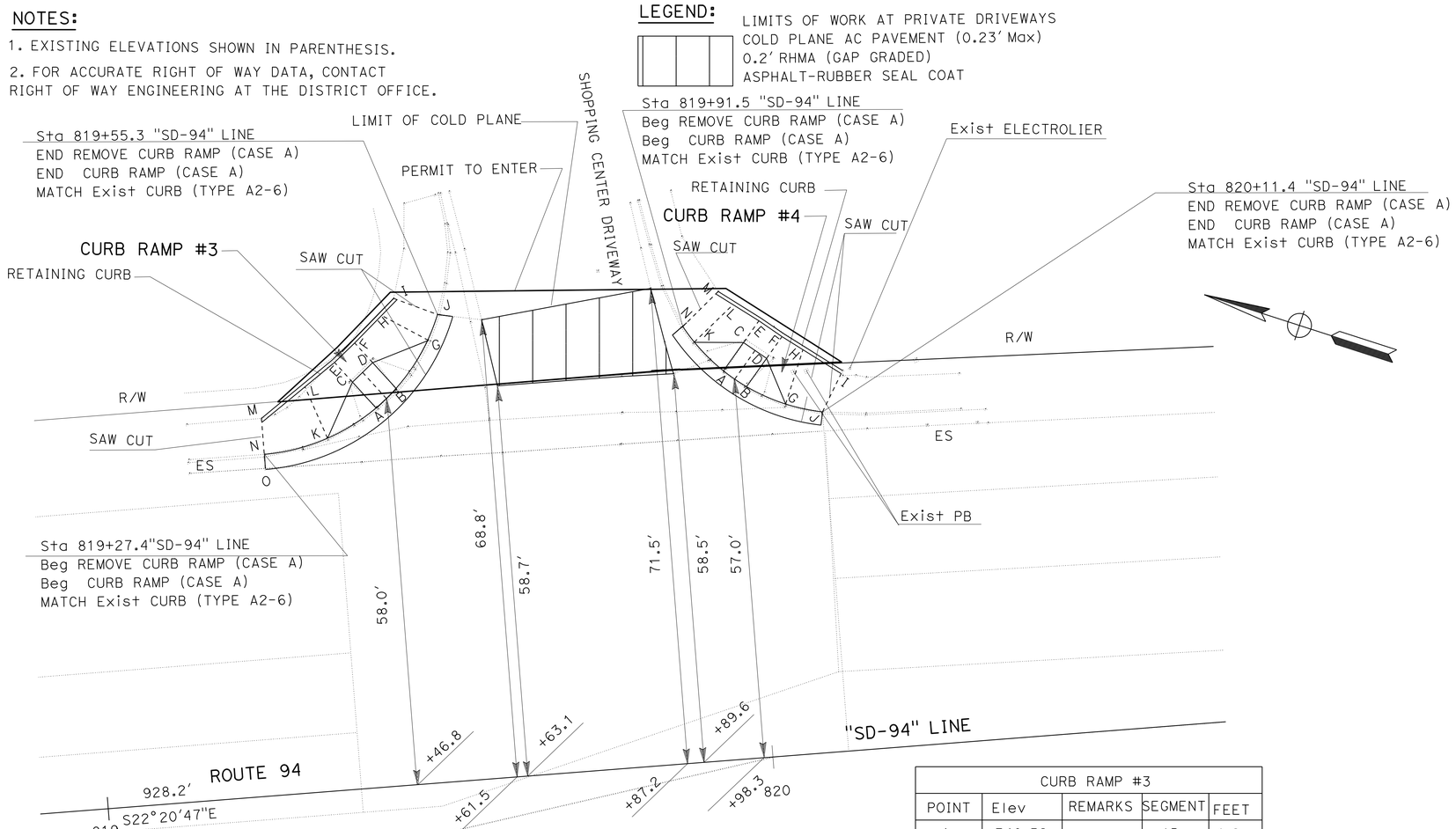

CURB RAMP #4				
POINT	Elev	REMARKS	SEGMENT	FEET
A	339.59		AB	4.2
B	339.53		CD	4.2
C	339.98		EF	4.2
D	339.92		FH	3.7
E	340.00		HI	6.7
F	339.94		IJ	6.4
G	339.87		JG	5.7
H	339.95		GH	8.6
I	(339.85)		GB	6.4
J	(339.76)	TC	EL	4.6
K	340.10		LM	3.0
L	340.22		MN	7.0
M	(340.37)		NK	2.9
N	(340.15)	TC	KA	6.3
			KL	8.1
			DB	5.2
			FD	4.0
			EC	4.0
			AC	5.2

CURB RAMP #3				
POINT	Elev	REMARKS	SEGMENT	FEET
A	340.52		AB	4.2
B	340.46		CD	4.2
C	340.90		EF	4.2
D	340.86		FH	5.7
E	340.96		HI	3.3
F	340.92		IJ	6.5
G	341.00		JG	4.1
H	341.12		GH	8.0
I	(341.13)		GB	8.6
J	(341.00)	TC	EL	5.7
K	341.08		LM	8.4
L	341.12		MN	4.8
M	(341.22)		NK	9.8
N	(341.10)	TC	KA	8.6
O	(340.79)		KL	8.4
			DB	5.3
			FD	4.0
			EC	4.0
			AC	5.3

CURB RAMP

CONSTRUCTION DETAILS

NO SCALE

C-3

STATE OF CALIFORNIA - DEPARTMENT OF TRANSPORTATION
DESIGN
Caltrans
FUNCTIONAL SUPERVISOR: CHRIS M THOMAS
CALCULATED-DESIGNED BY: BAHMAN YAZDANI
CHECKED BY: RICARDO PADILLA
REVISED BY
DATE REVISED

LAST REVISION 03-21-13
DATE PLOTTED => 11-APR-2013
TIME PLOTTED => 13:54

Dist	COUNTY	ROUTE	POST MILES TOTAL PROJECT	SHEET No.	TOTAL SHEETS
11	SD	94	14.9/30.0	7	49

Bahman Yazdani 03-11-13
REGISTERED CIVIL ENGINEER DATE

03-11-13
PLANS APPROVAL DATE

REGISTERED PROFESSIONAL ENGINEER BAHMAN YAZDANI No. 58322 Exp. 06-30-14 CIVIL STATE OF CALIFORNIA

THE STATE OF CALIFORNIA OR ITS OFFICERS OR AGENTS SHALL NOT BE RESPONSIBLE FOR THE ACCURACY OR COMPLETENESS OF SCANNED COPIES OF THIS PLAN SHEET.

NOTES:

1. EXISTING ELEVATIONS SHOWN IN PARENTHESIS.
2. FOR ACCURATE RIGHT OF WAY DATA, CONTACT RIGHT OF WAY ENGINEERING AT THE DISTRICT OFFICE.

LEGEND:

LIMITS OF WORK AT PRIVATE DRIVEWAYS
COLD PLANE AC PAVEMENT (0.23' Max)
0.2' RHMA (GAP GRADED)
ASPHALT-RUBBER SEAL COAT

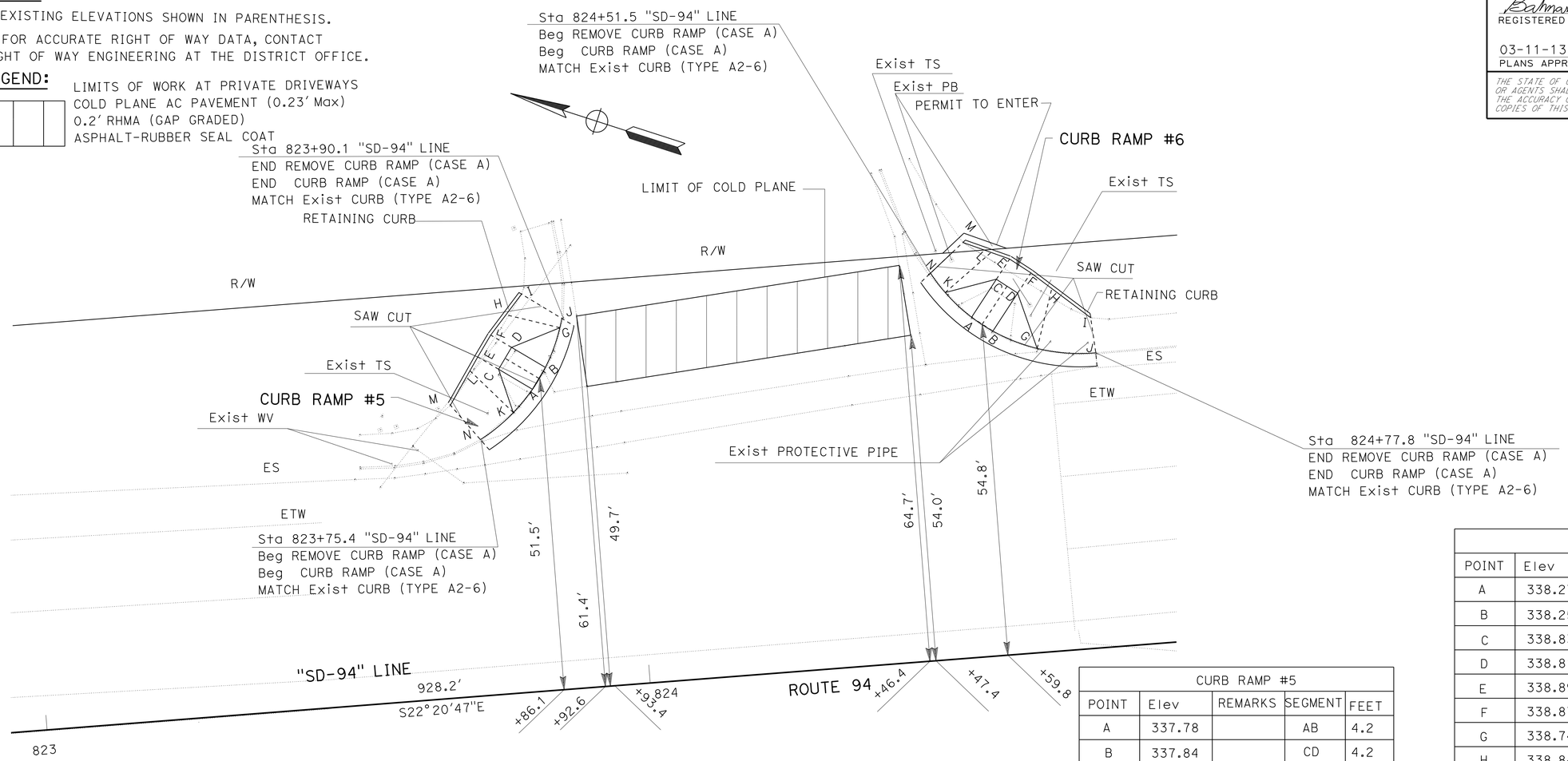

CURB RAMPS

CURB RAMP #5				
POINT	Elev	REMARKS	SEGMENT	FEET
A	337.78		AB	4.2
B	337.84		CD	4.2
C	338.26		EF	4.2
D	338.32		FH	4.2
E	338.32		HI	4.2
F	338.38		IJ	7.8
G	338.47		JG	1.5
H	338.56		GH	9.1
I	(338.72)		GB	7.0
J	(338.42)	TC	EL	2.6
K	338.21		LM	6.6
L	338.35		MN	7.6
M	(338.42)		NK	7.0
N	(338.22)	TC	KA	5.0
			KL	10.0
			DB	6.5
			FD	4.0
			EC	4.0
			AC	6.5

CURB RAMP #6				
POINT	Elev	REMARKS	SEGMENT	FEET
A	338.27		AB	4.2
B	338.25		CD	4.2
C	338.83		EF	4.2
D	338.81		FH	4.3
E	338.89		HI	8.0
F	338.87		IJ	5.9
G	338.74		JG	9.2
H	338.84		GH	10.1
I	(338.71)		GB	8.0
J	(338.62)	TC	EL	2.9
K	338.80		LM	4.9
L	338.95		MN	7.4
M	(338.88)		NK	4.0
N	(339.07)	TC	KA	6.0
			KL	10.1
			DB	7.5
			FD	4.0
			EC	4.0
			AC	7.5

CONSTRUCTION DETAILS

NO SCALE

C-4

REVISED BY | DATE REVISED
BAHMAN YAZDANI | RICARDO PADILLA
CALCULATED-DESIGNED BY | CHECKED BY
FUNCTIONAL SUPERVISOR: BRUCE LAMBERT
STATE OF CALIFORNIA - DEPARTMENT OF TRANSPORTATION
Caltrans®
DESIGN

LAST REVISION 03-21-13 | DATE PLOTTED => 11-APR-2013 | TIME PLOTTED => 13:54

Dist	COUNTY	ROUTE	POST MILES TOTAL PROJECT	SHEET No.	TOTAL SHEETS
11	SD	94	14.9/30.0	8	49

Bahman Yazdani 03-11-13
REGISTERED CIVIL ENGINEER DATE

03-11-13
PLANS APPROVAL DATE

REGISTERED PROFESSIONAL ENGINEER BAHMAN YAZDANI No. 58322 Exp. 06-30-14 CIVIL STATE OF CALIFORNIA

THE STATE OF CALIFORNIA OR ITS OFFICERS OR AGENTS SHALL NOT BE RESPONSIBLE FOR THE ACCURACY OR COMPLETENESS OF SCANNED COPIES OF THIS PLAN SHEET.

NOTES:

1. EXISTING ELEVATIONS SHOWN IN PARENTHESIS.
2. FOR ACCURATE RIGHT OF WAY DATA, CONTACT RIGHT OF WAY ENGINEERING AT THE DISTRICT OFFICE.

LEGEND:

LIMITS OF WORK AT PRIVATE DRIVEWAYS
COLD PLANE AC PAVEMENT (0.23' Max)
0.2' RHMA (GAP GRADED)
ASPHALT-RUBBER SEAL COAT

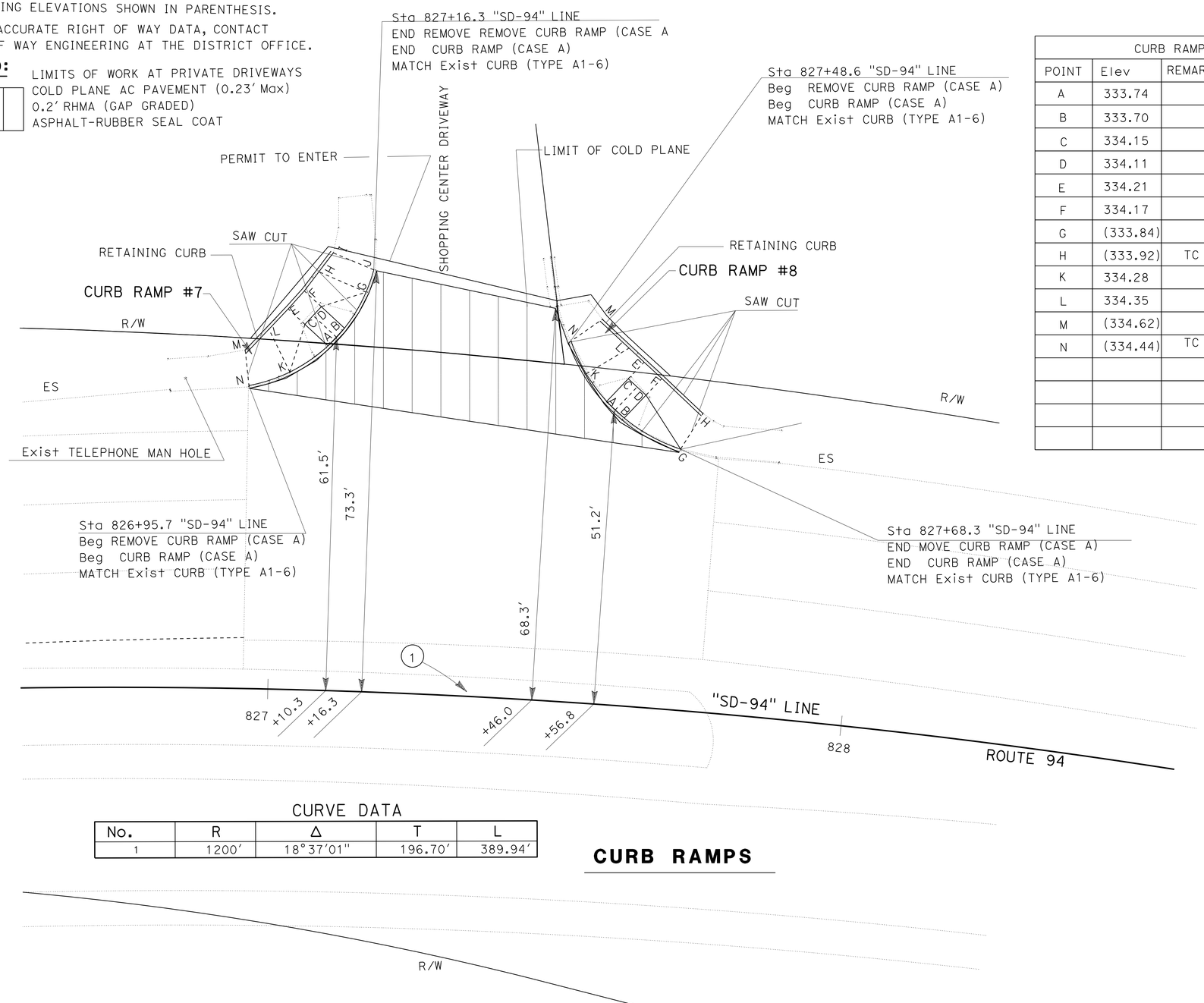

CURB RAMP #8				
POINT	Elev	REMARKS	SEGMENT	FEET
A	333.74		AB	4.2
B	333.70		CD	4.2
C	334.15		EF	4.2
D	334.11		FH	9.5
E	334.21		GH	6.8
F	334.17		GB	11.3
G	(333.84)		EL	3.6
H	(333.92)	TC	LM	6.8
K	334.28		MN	6.1
L	334.35		NK	6.1
M	(334.62)		KA	6.0
N	(334.44)	TC	KL	8.6
			DB	5.5
			FD	4.0
			EC	4.0
			AC	5.5

CURB RAMP #7				
POINT	Elev	REMARKS	SEGMENT	FEET
A	(335.20)		AB	4.2
B	(335.20)		CD	4.2
C	335.60		EF	4.2
D	335.61		FH	4.1
E	335.66		HI	4.1
F	335.67		IJ	7.6
G	335.72		JG	4.1
H	335.85		GH	8.9
I	(336.04)		GB	7.3
J	(335.47)	TC	EL	4.9
K	335.69		LM	5.9
L	335.75		MN	5.6
M	(335.97)		NK	7.5
N	(335.74)	TC	KA	8.1
			KL	8.3
			DB	5.5
			FD	4.0
			EC	4.0
			AC	5.5

CURVE DATA

No.	R	Δ	T	L
1	1200'	18°37'01"	196.70'	389.94'

CURB RAMPS

R/W

CONSTRUCTION DETAILS

NO SCALE

C-5

REVISED BY | DATE REVISED
BAHMAN YAZDANI | RICARDO PADILLA
CALCULATED-DESIGNED BY | CHECKED BY
FUNCTIONAL SUPERVISOR: BRUCE LAMBERT
STATE OF CALIFORNIA - DEPARTMENT OF TRANSPORTATION
Caltrans
DESIGN

LAST REVISION 03-21-13 | DATE PLOTTED => 11-APR-2013 | TIME PLOTTED => 13:54

Dist	COUNTY	ROUTE	POST MILES TOTAL PROJECT	SHEET No.	TOTAL SHEETS
11	SD	94	14.9/30.0	9	49

Bahman Yazdani 03-11-13
REGISTERED CIVIL ENGINEER DATE

03-11-13
PLANS APPROVAL DATE

REGISTERED PROFESSIONAL ENGINEER BAHMAN YAZDANI No. 58322 Exp. 06-30-14 CIVIL STATE OF CALIFORNIA

THE STATE OF CALIFORNIA OR ITS OFFICERS OR AGENTS SHALL NOT BE RESPONSIBLE FOR THE ACCURACY OR COMPLETENESS OF SCANNED COPIES OF THIS PLAN SHEET.

NOTES:

1. EXISTING ELEVATIONS SHOWN IN PARENTHESIS.
2. FOR ACCURATE RIGHT OF WAY DATA, CONTACT RIGHT OF WAY ENGINEERING AT THE DISTRICT OFFICE.

LEGEND:

LIMITS OF WORK
COLD PLANE AC PAVEMENT (0.23' Max)
Var RHMA (GAP GRADED) (0.20' TO 0.30')
ASPHALT-RUBBER SEAL COAT

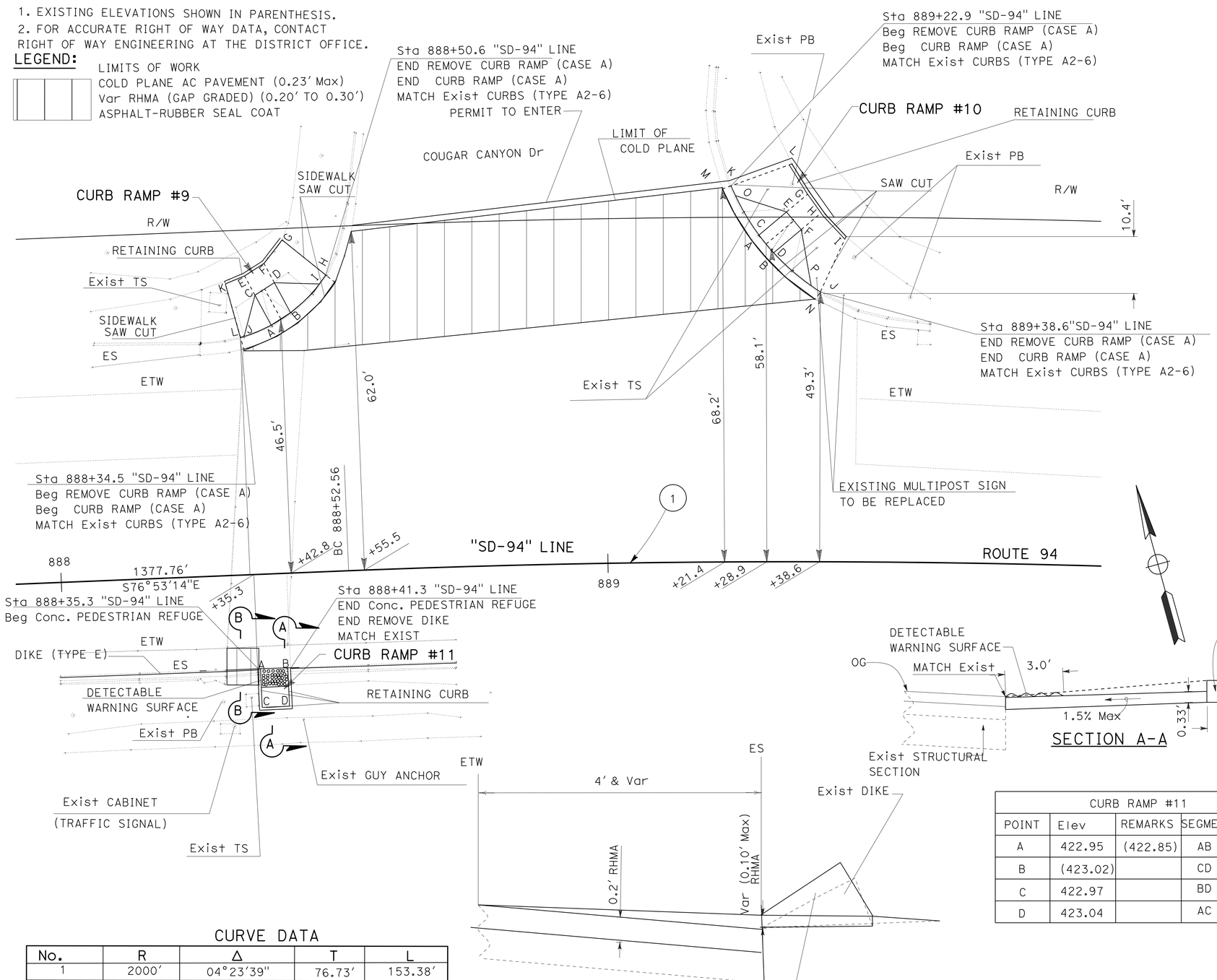

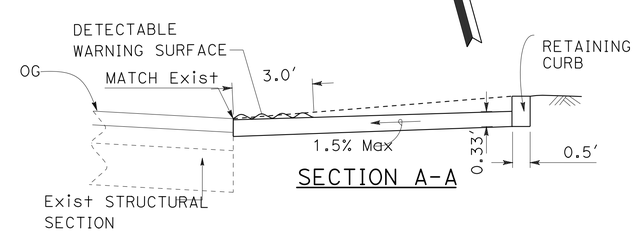

SECTION A-A

SECTION B-B

CURB RAMP #10				
POINT	Elev	REMARKS	SEGMENT	FEET
A	(425.94)	LIP	AB	4.2
B	(425.92)	LIP	CD	4.2
C	425.91		EF	4.2
D	425.89		GH	4.2
E	426.30		HI	6.5
F	426.24		IJ	7.6
G	426.36		JP	9.2
H	426.30		DF	6.6
I	(426.35)		CE	6.6
J	(426.19)	TC	CO	8.4
K	(426.45)	TC	KL	11.3
L	(426.59)		LG	6.3
M	(426.12)	LIP	OK	2.0
N	(425.80)	LIP	PJ	2.0
O	426.35		DP	9.2
P	426.09			

CURB RAMP #9				
POINT	Elev	REMARKS	SEGMENT	FEET
A	422.59		AB	4.2
B	422.65		CD	4.2
C	422.97		EF	4.2
D	423.03		FG	5.4
E	423.03		GH	10.3
F	423.09		IH	2.0
G	(423.89)		IB	7.5
H	(423.50)	TC	AJ	4.0
I	423.40	TC	LJ	2.0
J	422.69	TC	IK	10.2
K	(422.84)		KL	11.3
L	(422.61)	TC	AC	6.3
			BD	6.3
			CE	4.0
			DF	4.0

CURB RAMP #11				
POINT	Elev	REMARKS	SEGMENT	FEET
A	422.95	(422.85)	AB	5.0
B	(423.02)		CD	5.0
C	422.97		BD	7.0
D	423.04		AC	7.0

CURVE DATA

No.	R	Δ	T	L
1	2000'	04°23'39"	76.73'	153.38'

CURB RAMPS, Conc PEDESTRIAN AND STREET OVERLAY

CONSTRUCTION DETAILS

NO SCALE

C-6

STATE OF CALIFORNIA - DEPARTMENT OF TRANSPORTATION
Caltrans DESIGN
FUNCTIONAL SUPERVISOR: BRUCE LAMBERT
CALCULATED-DESIGNED BY: BAHMAN YAZDANI
CHECKED BY: RICARDO PADILLA
REVISED BY / DATE REVISED

LAST REVISION 03-21-13 | DATE PLOTTED => 11-APR-2013 | TIME PLOTTED => 13:54

Dist	COUNTY	ROUTE	POST MILES TOTAL PROJECT	SHEET No.	TOTAL SHEETS
11	SD	94	14.9/30.0	10	49

Bahman Yazdani 03-11-13
REGISTERED CIVIL ENGINEER DATE

03-11-13
PLANS APPROVAL DATE

REGISTERED PROFESSIONAL ENGINEER BAHMAN YAZDANI No. 58322 Exp. 06-30-14 CIVIL STATE OF CALIFORNIA

THE STATE OF CALIFORNIA OR ITS OFFICERS OR AGENTS SHALL NOT BE RESPONSIBLE FOR THE ACCURACY OR COMPLETENESS OF SCANNED COPIES OF THIS PLAN SHEET.

NOTES:

1. EXISTING ELEVATIONS SHOWN IN PARENTHESIS.
2. FOR ACCURATE RIGHT OF WAY DATA, CONTACT RIGHT OF WAY ENGINEERING AT THE DISTRICT OFFICE.

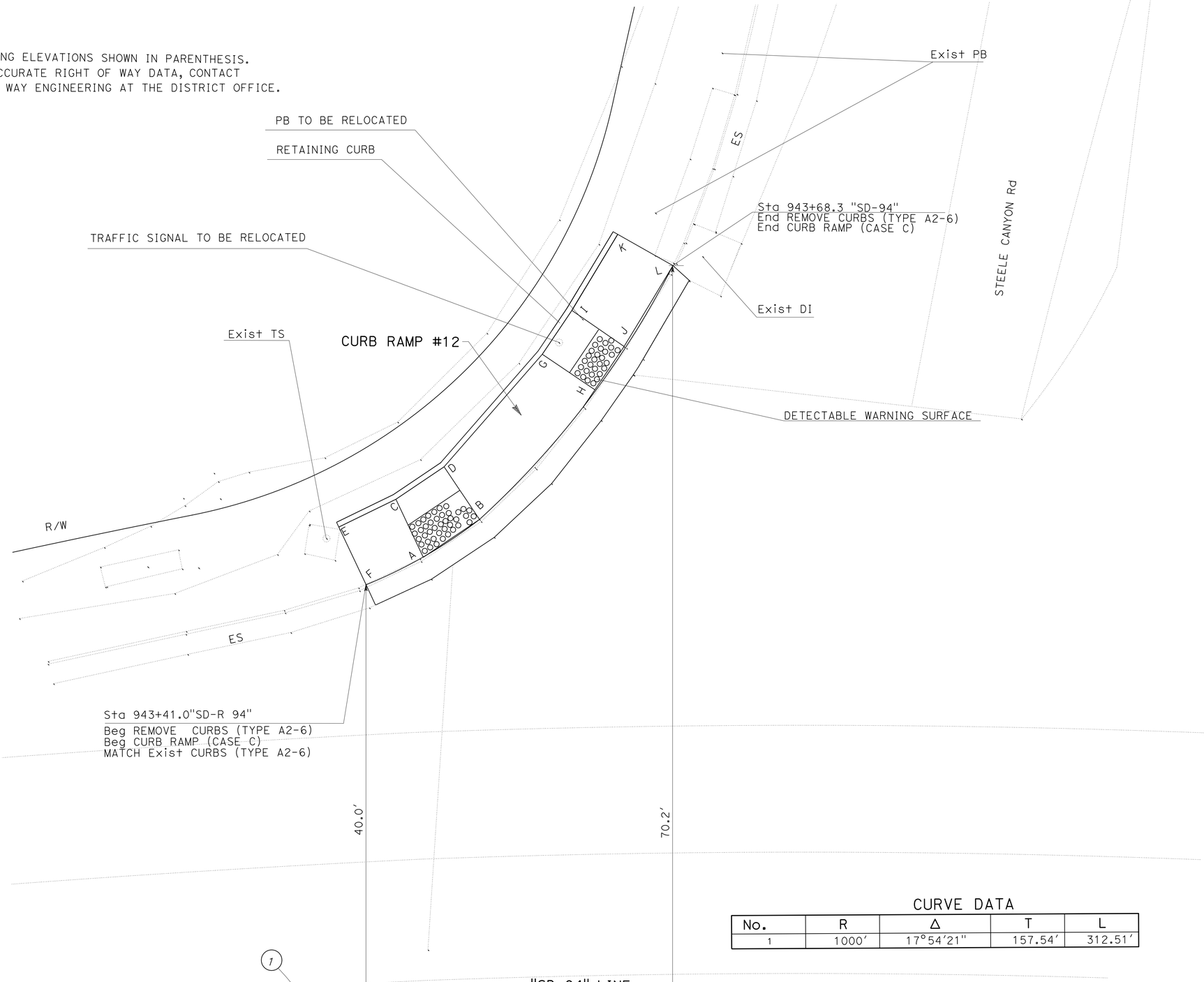

CURB RAMP #12				
POINT	Elev	REMARKS	SEGMENT	FEET
A	562.09		AB	6.4
B	562.15		CD	5.5
C	562.15		EC	6.0
D	562.24		FA	6.0
E	562.51		EF	6.0
F	(562.42)	TC	BH	16.5
G	562.73		GH	6.0
H	562.64		GD	14.2
I	562.80		GI	5.0
J	562.71		IJ	6.0
K	563.41		JH	5.0
L	(563.32)	TC	IK	8.4
			KL	6.0
			LJ	8.9
			CA	6.0
			DB	6.0

CURVE DATA

No.	R	Δ	T	L
1	1000'	17°54'21"	157.54'	312.51'

CURB RAMPS

CONSTRUCTION DETAILS

NO SCALE

C-7

STATE OF CALIFORNIA - DEPARTMENT OF TRANSPORTATION
DESIGN

FUNCTIONAL SUPERVISOR: BRUCE LAMBERT
CALCULATED-DESIGNED BY: BAHMAN YAZDANI
CHECKED BY: RICARDO PADILLA
REVISED BY
DATE REVISED

LAST REVISION DATE PLOTTED => 11-APR-2013
TIME PLOTTED => 13:55
03-21-13

Dist	COUNTY	ROUTE	POST MILES TOTAL PROJECT	SHEET No.	TOTAL SHEETS
11	SD	94	14.9/30.0	11	49

Bahman Yazdani 03-11-13
REGISTERED CIVIL ENGINEER DATE

03-11-13
PLANS APPROVAL DATE

REGISTERED PROFESSIONAL ENGINEER BAHMAN YAZDANI No. 58322 Exp. 06-30-14 CIVIL STATE OF CALIFORNIA

THE STATE OF CALIFORNIA OR ITS OFFICERS OR AGENTS SHALL NOT BE RESPONSIBLE FOR THE ACCURACY OR COMPLETENESS OF SCANNED COPIES OF THIS PLAN SHEET.

NOTES:

1. EXISTING ELEVATIONS SHOWN IN PARENTHESIS.
2. FOR ACCURATE RIGHT OF WAY DATA, CONTACT RIGHT OF WAY ENGINEERING AT THE DISTRICT OFFICE.

LEGEND:

LIMITS OF WORK
COLD PLANE AC PAVEMENT (0.23' Max)
0.2' RHMA (GAP GRADED)
ASPHALT-RUBBER SEAL COAT

CURB RAMP #14				
POINT	Elev	REMARKS	SEGMENT	FEET
A	(558.13)	LIP	AB	6.0
B	(558.17)	LIP	CD	5.0
C	558.10		EF	5.0
D	558.14		CE	5.0
E	558.18		DF	5.0
F	558.22			

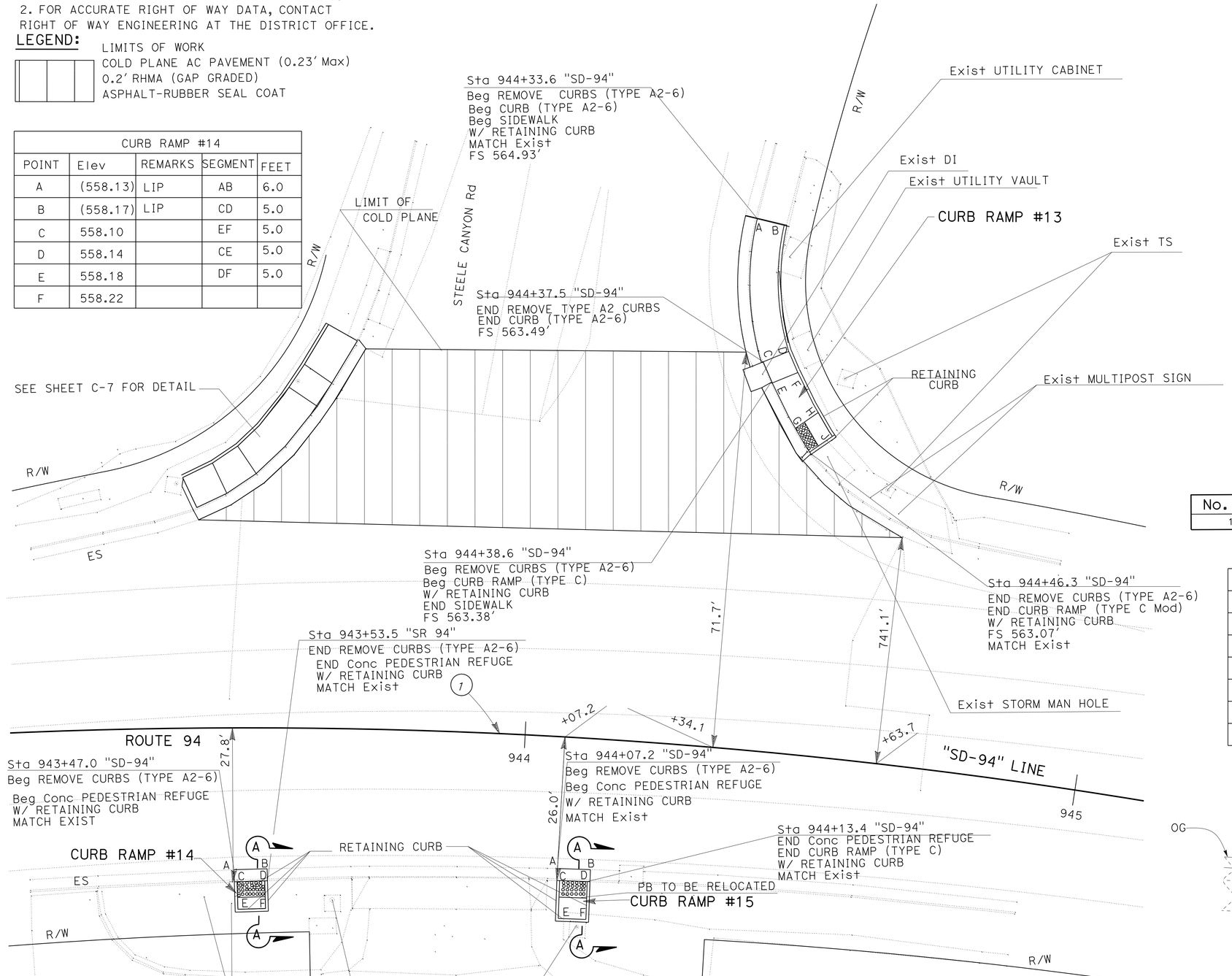

CURB RAMP #13				
POINT	Elev	REMARKS	SEGMENT	FEET
A	(564.93)	TC	AB	5.0
B	(565.10)	TC	CD	5.0
C	(563.49)	TC	EF	5.0
D	563.56		GH	5.0
E	(563.38)	TC	HI	5.0
F	563.38		IJ	5.0
G	562.65		AC	26.4
H	562.72		CE	4.1
I	562.57		EG	9.2
J	562.65		GI	5.0
			BD	23.2
			DF	4.1
			FH	8.2
			HJ	5.0

CURVE DATA

No.	R	Δ	T	L
1	1000'	17°54'21"	157.54'	312.51'

CURB RAMP #15				
POINT	Elev	REMARKS	SEGMENT	FEET
A	(558.74)	LIP	AB	6.0
B	(558.77)	LIP	CD	5.0
C	558.71		EF	5.0
D	558.74		CE	6.9
E	558.81		DF	6.9
F	558.84			

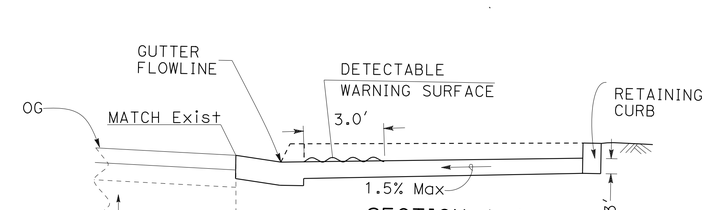

SECTION A-A

CURB RAMPS, Conc PEDESTRIAN REFUGES

CONSTRUCTION DETAILS

NO SCALE

C-8

REVISED BY | DATE REVISED
BAHMAN YAZDANI | RICARDO PADILLA
CALCULATED-DESIGNED BY | CHECKED BY
FUNCTIONAL SUPERVISOR: BRUCE LAMBERT
STATE OF CALIFORNIA - DEPARTMENT OF TRANSPORTATION
Caltrans DESIGN

LAST REVISION 03-21-13 | DATE PLOTTED => 11-APR-2013 | TIME PLOTTED => 13:55

Dist	COUNTY	ROUTE	POST MILES TOTAL PROJECT	SHEET No.	TOTAL SHEETS
11	SD	94	14.9/30.0	12	49

Bahman Yazdani 03-11-13
REGISTERED CIVIL ENGINEER DATE

03-11-13
PLANS APPROVAL DATE

REGISTERED PROFESSIONAL ENGINEER BAHMAN YAZDANI No. 58322 Exp. 06-30-14 CIVIL STATE OF CALIFORNIA

THE STATE OF CALIFORNIA OR ITS OFFICERS OR AGENTS SHALL NOT BE RESPONSIBLE FOR THE ACCURACY OR COMPLETENESS OF SCANNED COPIES OF THIS PLAN SHEET.

NOTES:

1. EXISTING ELEVATIONS SHOWN IN PARENTHESIS.
2. FOR ACCURATE RIGHT OF WAY DATA, CONTACT RIGHT OF WAY ENGINEERING AT THE DISTRICT OFFICE.

LEGEND:

LIMITS OF WORK
COLD PLANE AC PAVEMENT (0.23' Max)
Var RHMA (GAP GRADED) (0.20' TO 0.42')
ASPHALT-RUBBER SEAL COAT

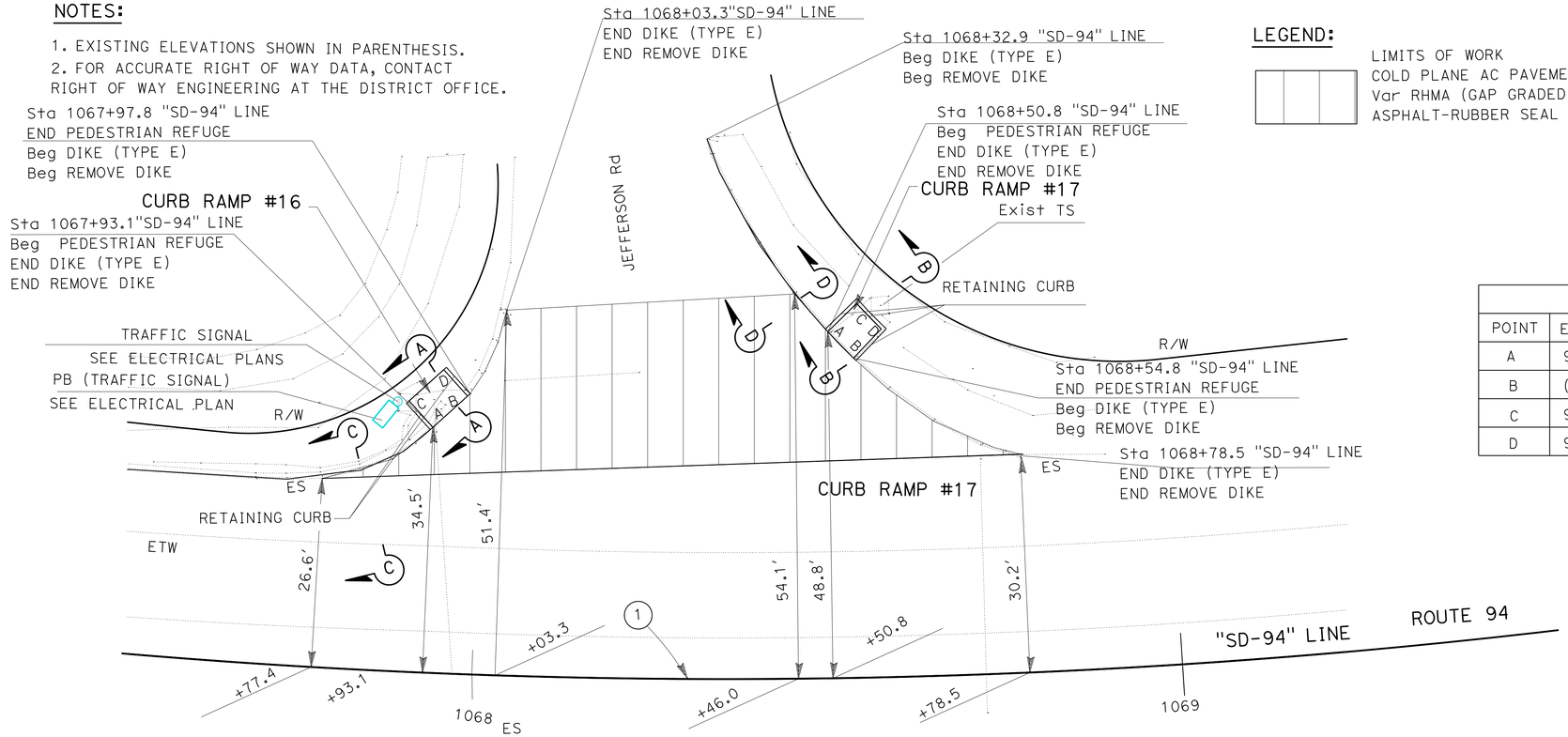

CURB RAMP #16				
POINT	Elev	REMARKS	SEGMENT	FEET
A	997.99	(997.75)	AB	6.6
B	(998.09)		CD	6.6
C	998.06		BD	5.0
D	998.16		AC	5.0

CURB RAMP #17				
POINT	Elev	REMARKS	SEGMENT	FEET
A	999.32	(999.19)	AB	5.2
B	(999.40)		CD	5.2
C	999.40		BD	5.7
D	999.48		AC	5.7

CURVE DATA

No. ⊕	R	Δ	T	L
1	1000'	43°22'30"	397.70'	757.04'

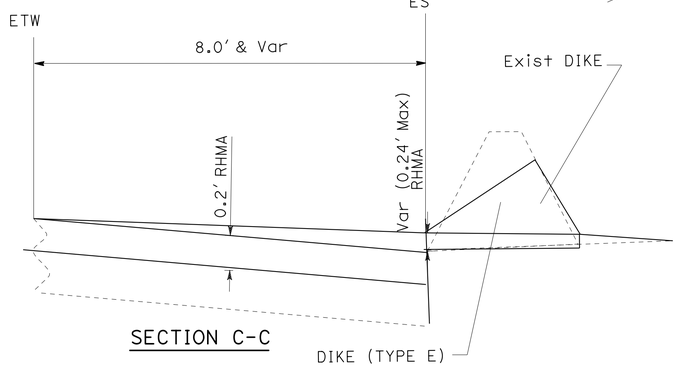

SECTION C-C

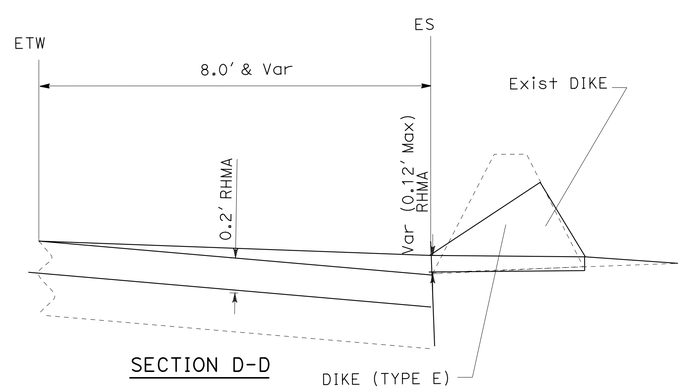

SECTION D-D

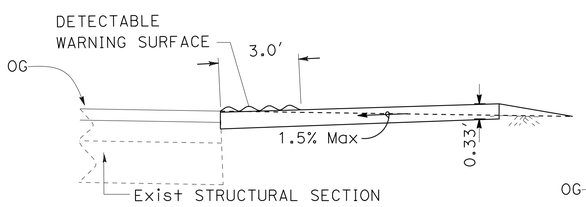

SECTION A-A

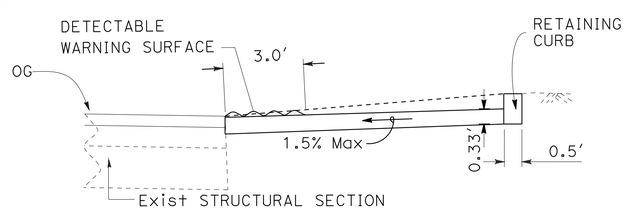

SECTION B-B

Conc PEDESTRIAN REFUGE AND STREET Overlay

CONSTRUCTION DETAILS

NO SCALE

C-9

STATE OF CALIFORNIA - DEPARTMENT OF TRANSPORTATION
Caltrans® DESIGN

FUNCTIONAL SUPERVISOR: BRUCE LAMBERT
CALCULATED-DESIGNED BY: BAHMAN YAZDANI
CHECKED BY: RICARDO PADILLA
REVISED BY / DATE REVISED

LAST REVISION 03-21-13 | DATE PLOTTED => 11-APR-2013 | TIME PLOTTED => 13:55

Dist	COUNTY	ROUTE	POST MILES TOTAL PROJECT	SHEET No.	TOTAL SHEETS
11	SD	94	14.9/30.0	13	49

Bahman Yazdani 03-11-13
REGISTERED CIVIL ENGINEER DATE

03-11-13
PLANS APPROVAL DATE

REGISTERED PROFESSIONAL ENGINEER BAHMAN YAZDANI No. 58322 Exp. 06-30-14 CIVIL STATE OF CALIFORNIA

THE STATE OF CALIFORNIA OR ITS OFFICERS OR AGENTS SHALL NOT BE RESPONSIBLE FOR THE ACCURACY OR COMPLETENESS OF SCANNED COPIES OF THIS PLAN SHEET.

NOTES:

1. EXISTING ELEVATIONS SHOWN IN PARENTHESIS.
2. FOR ACCURATE RIGHT OF WAY DATA, CONTACT RIGHT OF WAY ENGINEERING AT THE DISTRICT OFFICE.

LEGEND:

LIMITS OF WORK
COLD PLANE AC PAVEMENT (0.23' Max)
Var RHMA (GAP GRADED) (0.20' TO 0.33')
ASPHALT-RUBBER SEAL COAT

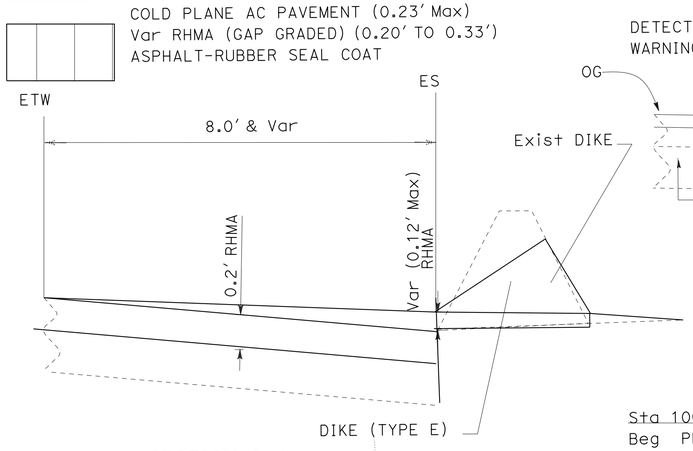

SECTION C-C

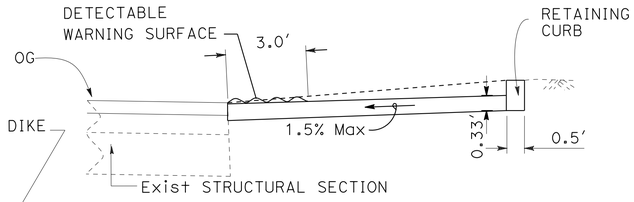

SECTION A-A

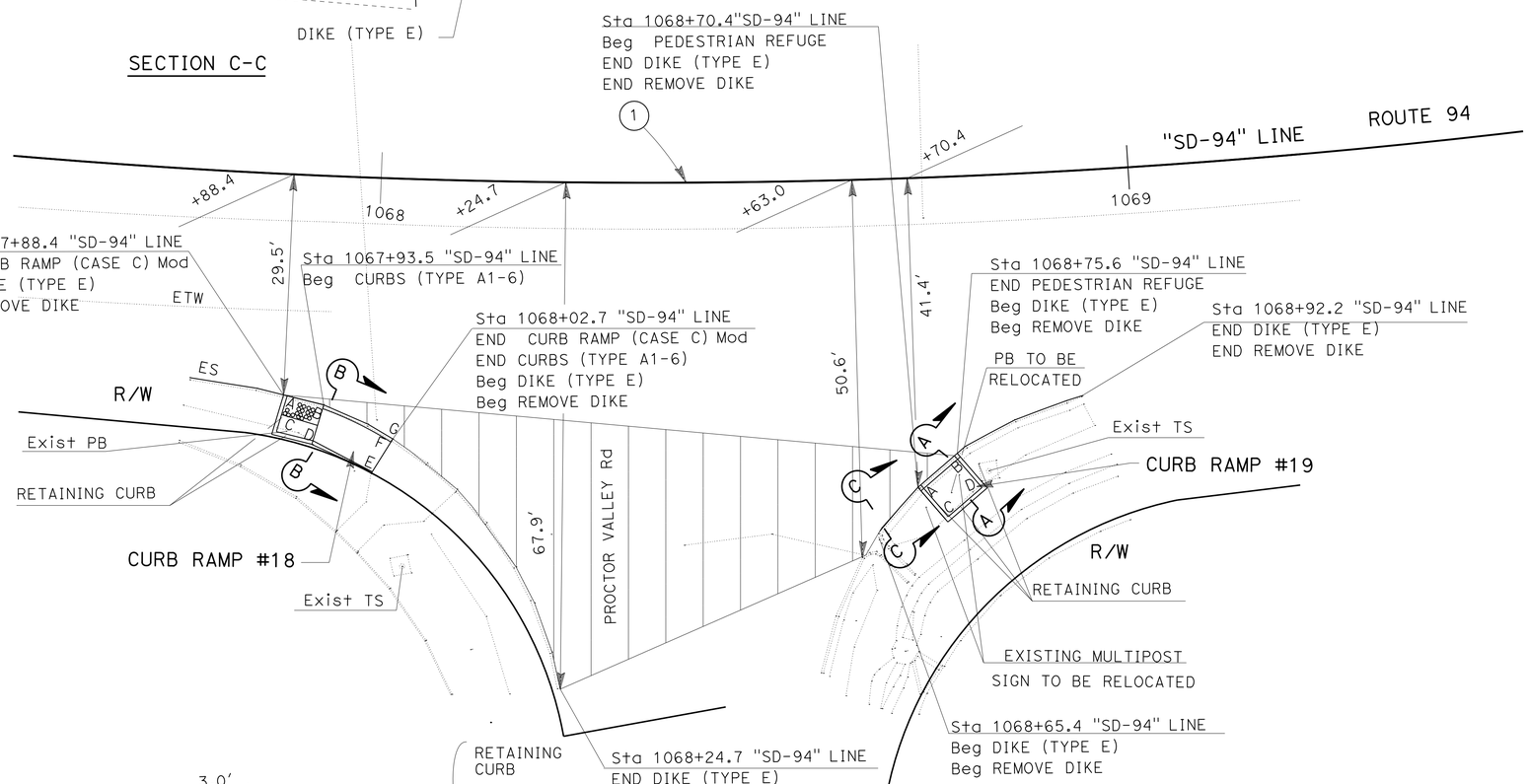

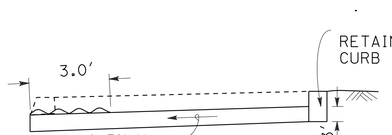

SECTION B-B

Conc PEDESTRIAN REFUGE AND STREET Overlay

CURVE DATA

No. ⊕	R	Δ	T	L
1	1000'	43°22'30"	397.70'	757.04'

CURB RAMP #18				
POINT	Elev	REMARKS	SEGMENT	FEET
A	(998.33)		AB	5.0
B	(998.41)		CD	5.0
C	998.40		BF	10.2
D	998.48		DE	9.0
E	(998.99)		DB	5.0
F	(999.09)		AC	5.0
G	(998.58)	FL		

CURB RAMP #19				
POINT	Elev	REMARKS	SEGMENT	FEET
A	1001.21	(1001.09)	AB	6.0
B	(1001.30)		CD	6.0
C	1001.29		BD	5.0
D	1001.38		AC	5.0

CONSTRUCTION DETAILS

NO SCALE

C-10

STATE OF CALIFORNIA - DEPARTMENT OF TRANSPORTATION
DESIGN
FUNCTIONAL SUPERVISOR: BRUCE LAMBERT
CALCULATED-DESIGNED BY: BAHMAN YAZDANI
CHECKED BY: RICARDO PADILLA
REVISED BY
DATE REVISED

LAST REVISION 03-21-13
DATE PLOTTED => 11-APR-2013
TIME PLOTTED => 13:55

Dist	COUNTY	ROUTE	POST MILES TOTAL PROJECT	SHEET No.	TOTAL SHEETS
11	SD	94	14.9/30.0	14	49

Bahman Yazdani 03-11-13
REGISTERED CIVIL ENGINEER DATE

03-11-13
PLANS APPROVAL DATE

REGISTERED PROFESSIONAL ENGINEER BAHMAN YAZDANI No. 58322 Exp. 06-30-14 CIVIL STATE OF CALIFORNIA

THE STATE OF CALIFORNIA OR ITS OFFICERS OR AGENTS SHALL NOT BE RESPONSIBLE FOR THE ACCURACY OR COMPLETENESS OF SCANNED COPIES OF THIS PLAN SHEET.

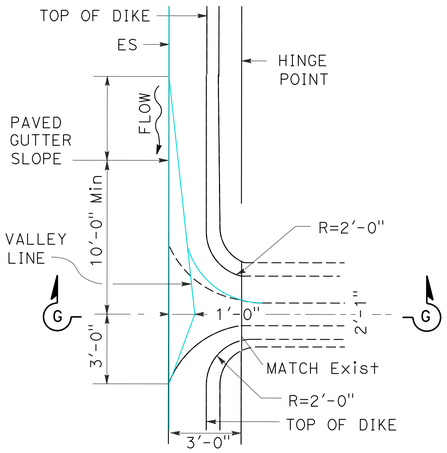

PLAN

MOUNTABLE DIKE

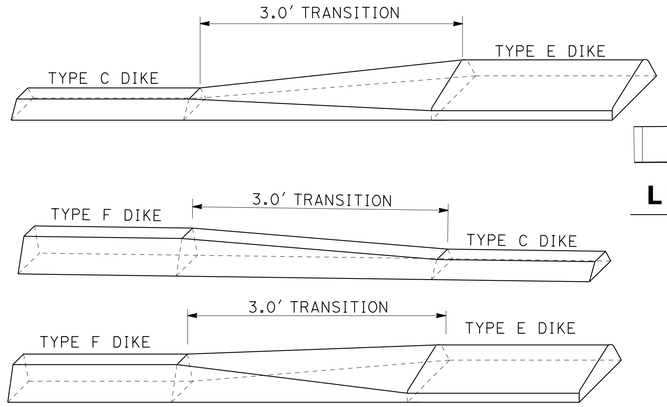

DIKE TRANSITION DETAILS

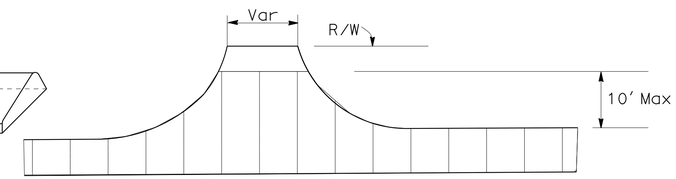

LIMITS OF WORK AT STREETS (TYPICAL)

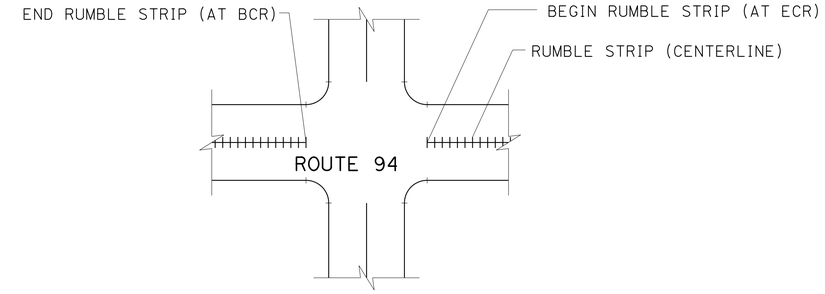

TYPICAL RUMBLE STRIP PLACEMENT AT INTERSECTIONS

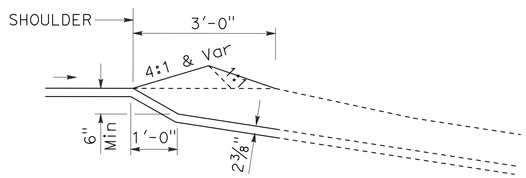

SECTION G-G

MODIFIED HMA OVERSIDE DRAINS

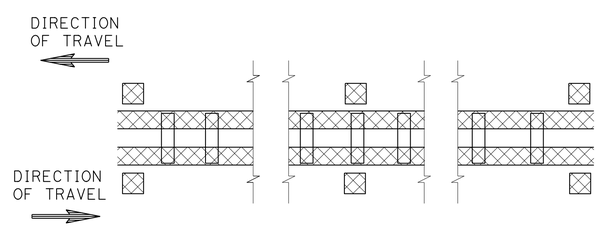

DETAIL 22 (WITH RUMBLE STRIP)

Sta "SD-94" 960+81.00 TO 1063+50.00
Sta "SD-94" 1066+66.00 TO 1090+16.00
Sta "SD-94" 1096+30.00 TO 1131+60.00
Sta "SD-94" 1068+00.00 TO 1263+00.00
Sta "SD-94" 1290+00.00 TO 1601+94.00

NOTES:

1. FOR INFORMATION NOT SHOWN SEE STANDARD PLAN SHEET A40A AND A40B.

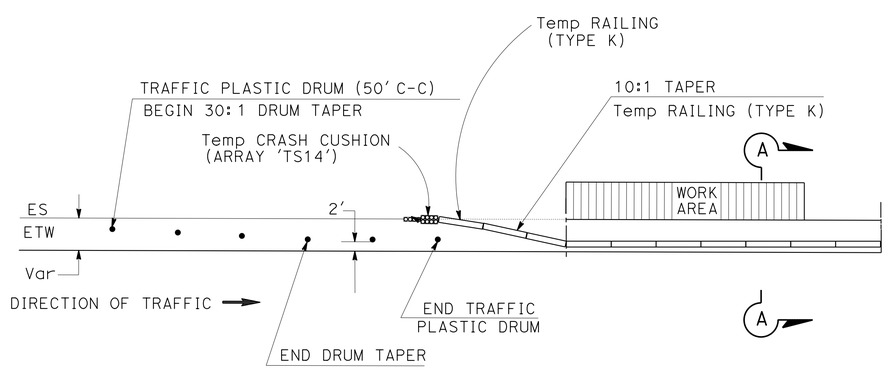

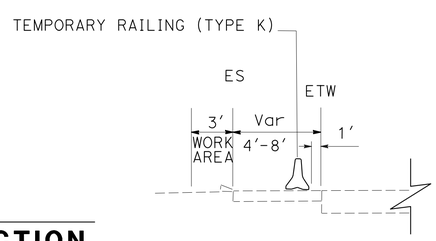

SECTION A-A

TEMPORARY RAILING (TYPE K), AND TRAFFIC PLASTIC DRUMS AT ANCHOR BLOCK CONSTRUCTION

SEE SUMMARY OF QUANTITIES FOR LOCATIONS

CONSTRUCTION DETAILS

NO SCALE

C-11

STATE OF CALIFORNIA - DEPARTMENT OF TRANSPORTATION
Caltrans DESIGN
FUNCTIONAL SUPERVISOR: CHRIS THOMAS
CALCULATED-DESIGNED BY: BAHMAN YAZDANI
CHECKED BY: RICARDO PADILLA
REVISED BY / DATE REVISED

LAST REVISION 03-21-13
DATE PLOTTED => 11-APR-2013
TIME PLOTTED => 13:55

Dist	COUNTY	ROUTE	POST MILES TOTAL PROJECT	SHEET No.	TOTAL SHEETS
11	SD	94	14.9/30.0	15	49

Bahman Yazdani 03-11-13
REGISTERED CIVIL ENGINEER DATE

03-11-13
PLANS APPROVAL DATE

REGISTERED PROFESSIONAL ENGINEER BAHMAN YAZDANI No. 58322 Exp. 06-30-14 CIVIL STATE OF CALIFORNIA

THE STATE OF CALIFORNIA OR ITS OFFICERS OR AGENTS SHALL NOT BE RESPONSIBLE FOR THE ACCURACY OR COMPLETENESS OF SCANNED COPIES OF THIS PLAN SHEET.

LEGEND:

LIMITS OF COLD PLANE

CURVE DATA

No.	R	Δ	T	L
1	100	69°05′32″	68.85′	120.59′
2	375	48°09′58″	167.61′	315.25′

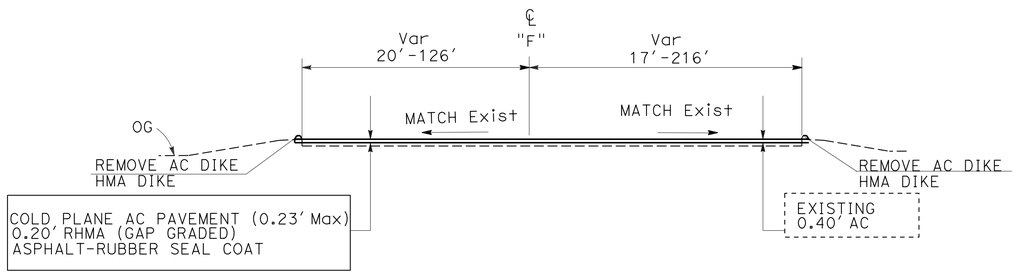

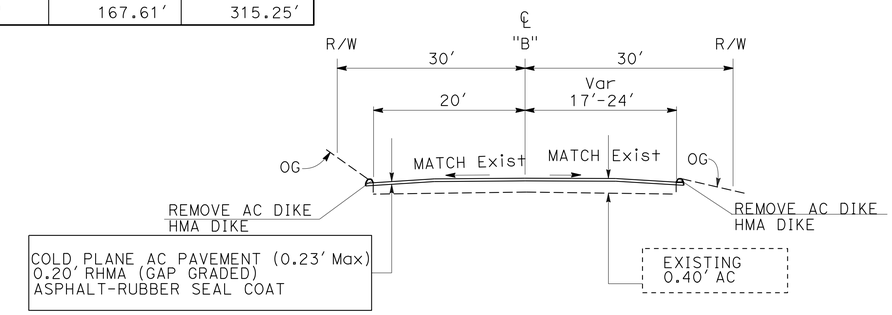

"F" LINE

Sta 319+40.61 TO Sta 326+56.46

"B" LINE

Sta 326+56.46 TO Sta 329+00.00

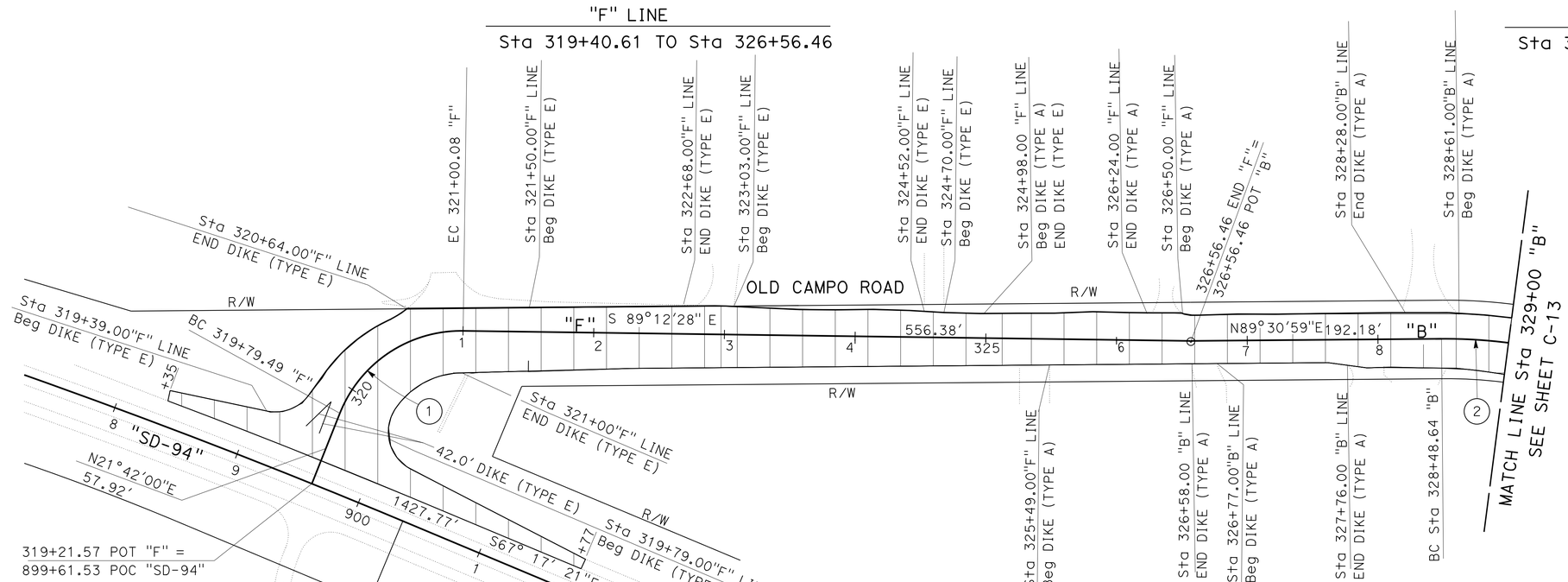

INTERSECTION AT "OLD CAMPO ROAD"

CONSTRUCTION DETAILS

SCALE: 1" = 50′

C-12

STATE OF CALIFORNIA - DEPARTMENT OF TRANSPORTATION
Caltrans® DESIGN

FUNCTIONAL SUPERVISOR: CHRIS THOMAS
CALCULATED-DESIGNED BY: RAYMOND ALCAFARAS
CHECKED BY: MARK KAEMS
REVISED BY
DATE REVISED

LAST REVISION 03-21-13
DATE PLOTTED => 11-APR-2013
TIME PLOTTED => 13:55

Dist	COUNTY	ROUTE	POST MILES TOTAL PROJECT	SHEET No.	TOTAL SHEETS
11	SD	94	14.9/30.0	16	49

Bahman Yazdani 03-11-13
REGISTERED CIVIL ENGINEER DATE

03-11-13
PLANS APPROVAL DATE

REGISTERED PROFESSIONAL ENGINEER
BAHMAN YAZDANI
No. 58322
Exp. 06-30-14
CIVIL
STATE OF CALIFORNIA

THE STATE OF CALIFORNIA OR ITS OFFICERS OR AGENTS SHALL NOT BE RESPONSIBLE FOR THE ACCURACY OR COMPLETENESS OF SCANNED COPIES OF THIS PLAN SHEET.

LEGEND:

LIMITS OF COLD PLANE

CURVE DATA

No.	R	Δ	T	L
2	375′	48°09′58"	167.61′	315.25′
3	450′	56°10′37"	240.16′	441.21′

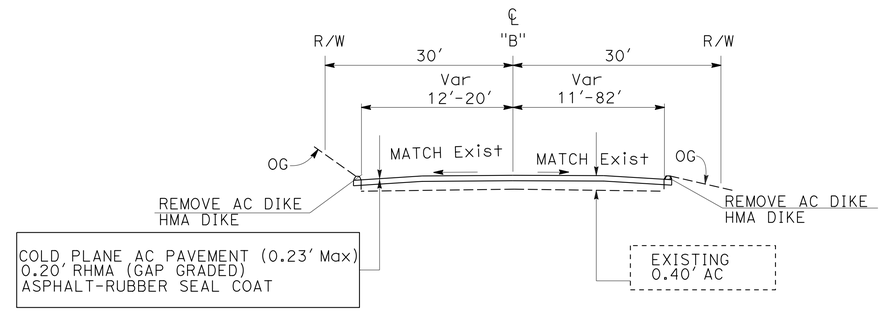

"B" LINE

Sta 329+00.00 TO Sta 338+47.45

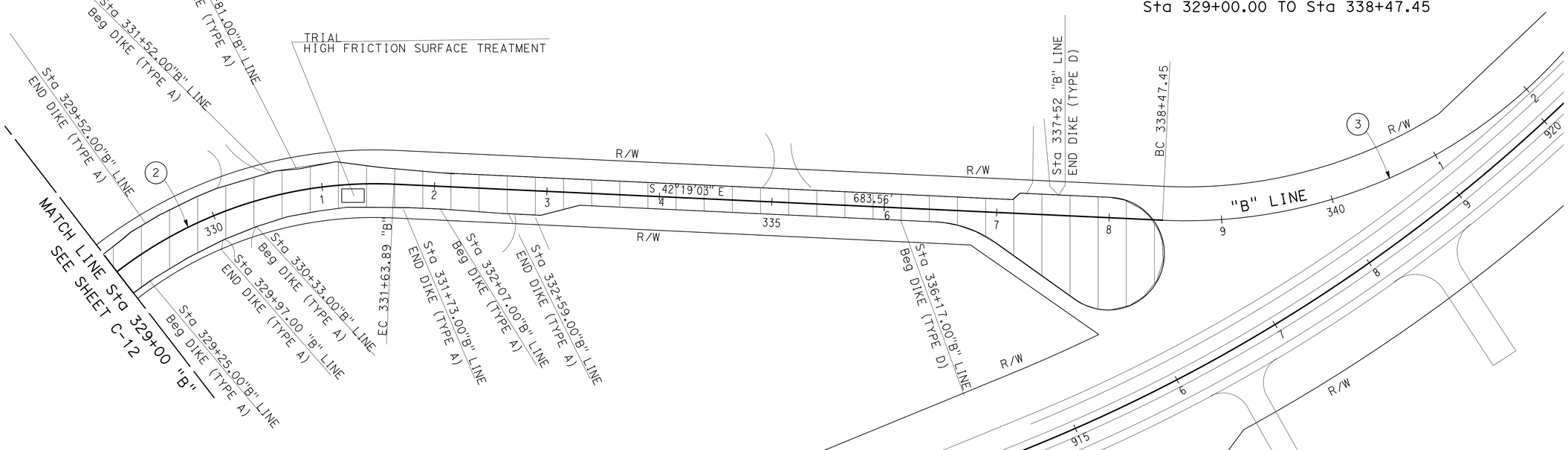

INTERSECTION AT "OLD CAMPO ROAD"

CONSTRUCTION DETAILS

SCALE: 1" = 50′

C-13

PROJECT DEVELOPMENT

STATE OF CALIFORNIA - DEPARTMENT OF TRANSPORTATION

Caltrans®

DESIGN

FUNCTIONAL SUPERVISOR: CHRIS THOMAS

CALCULATED-DESIGNED BY: MARK KAEMS

CHECKED BY: RAYMOND ALCAFARAS

REVISED BY

DATE REVISED

LAST REVISION 03-21-13

DATE PLOTTED => 11-APR-2013

TIME PLOTTED => 13:55

Dist	COUNTY	ROUTE	POST MILES TOTAL PROJECT	SHEET No.	TOTAL SHEETS
11	SD	94	14.9/30.0	17	49

REGISTERED CIVIL ENGINEER 03-11-13 DATE

03-11-13
PLANS APPROVAL DATE

REGISTERED PROFESSIONAL ENGINEER MICHAEL PEDERSEN No. 74073 Exp. 06-30-13 CIVIL STATE OF CALIFORNIA

THE STATE OF CALIFORNIA OR ITS OFFICERS OR AGENTS SHALL NOT BE RESPONSIBLE FOR THE ACCURACY OR COMPLETENESS OF SCANNED COPIES OF THIS PLAN SHEET.

NOTES:

1. FOR ACCURATE RIGHT OF WAY DATA, CONTACT RIGHT OF WAY ENGINEERING AT THE DISTRICT OFFICE
2. UTILITY OWNERSHIP:
   GAS - SAN DIEGO GAS & ELECTRIC (SDG&E)
   ELECTRICAL - SAN DIEGO GAS & ELECTRIC (SDG&E)
   WATER - OTAY WATER DISTRICT
   SEWER - CITY OF SAN DIEGO
   TELEPHONE - AMERICAN TELEPHONE & TELEGRAPH (AT&T)
   TELEPHONE - COX COMMUNICATIONS

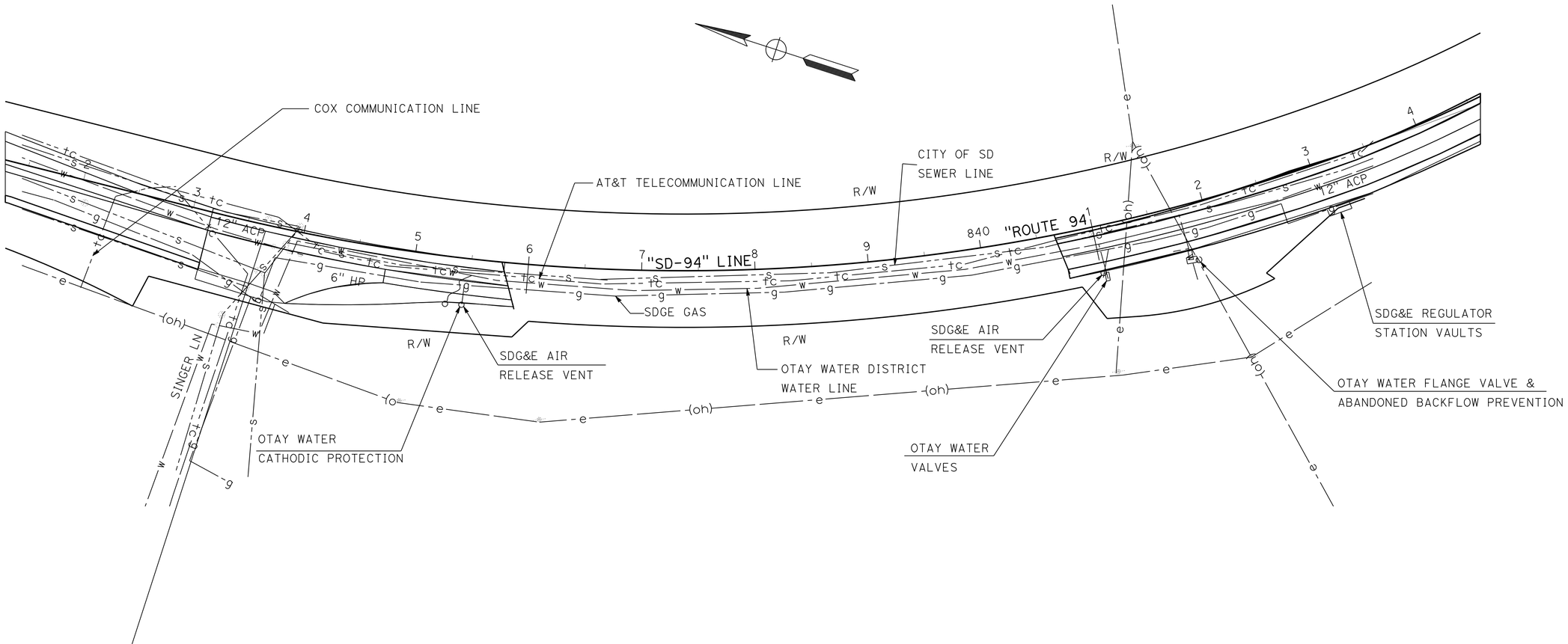

UTILITY PLAN

SCALE 1" = 50'

APPROVED FOR UTILITY INFORMATION ONLY

U-1

STATE OF CALIFORNIA - DEPARTMENT OF TRANSPORTATION
Caltrans
DESIGN

FUNCTIONAL SUPERVISOR: ABU-BAKR AI-JAFRI
CALCULATED-DESIGNED BY: MICHAEL PEDERSEN
CHECKED BY: ANH HOANG
REVISED BY
DATE REVISED

LAST REVISION 03-21-13
DATE PLOTTED => 11-APR-2013
TIME PLOTTED => 13:55

Dist	COUNTY	ROUTE	POST MILES TOTAL PROJECT	SHEET No.	TOTAL SHEETS
11	SD	94	14.9/30.0	18	49

REGISTERED CIVIL ENGINEER 03-11-13 DATE

03-11-13
PLANS APPROVAL DATE

REGISTERED PROFESSIONAL ENGINEER SHAHIN ADIBI No. 54839 Exp. 06-30-14 CIVIL STATE OF CALIFORNIA

THE STATE OF CALIFORNIA OR ITS OFFICERS OR AGENTS SHALL NOT BE RESPONSIBLE FOR THE ACCURACY OR COMPLETENESS OF SCANNED COPIES OF THIS PLAN SHEET.

NOTES:

1. EXACT LOCATION OF CONSTRUCTION AREA SIGNS WILL BE DETERMINED BY THE ENGINEER.
2. FEDERAL MANUAL ON UNIFORM TRAFFIC CONTROL DEVICES (MUTCD) SIGN CODES ARE SHOWN UNLESS DESIGNATED BY (CA), INDICATING CALIFORNIA MUTCD.
3. EXISTING UTILITIES ARE NOT SHOWN ON THESE PLAN SHEETS. THE CONTRACTOR SHALL VERIFY LOCATIONS OF EXISTING UTILITIES AND ADJUST THE FIELD LOCATION OF SIGN POSTS IN CONSULTATION WITH THE ENGINEER.

CONSTRUCTION AREA SIGNS

SIGN No.	TYPE	PANEL SIZE (In)x(In)	No. OF POST AND SIZE (In)x(In)	No. OF SIGNS
1	C40 (CA)	108 X 42	2-4 X 6 (s)	2
2	C14 (CA)	48 X 24	1-4 X 4 (s)	17
3	C23 (CA)	48 X 48	1-4 X 6 (s)	19
			TOTAL	38

(s) DENOTES STATIONARY MOUNTED SIGN

LEGEND:

X = CONSTRUCTION AREA SIGNS

→ = DIRECTION OF TRAFFIC

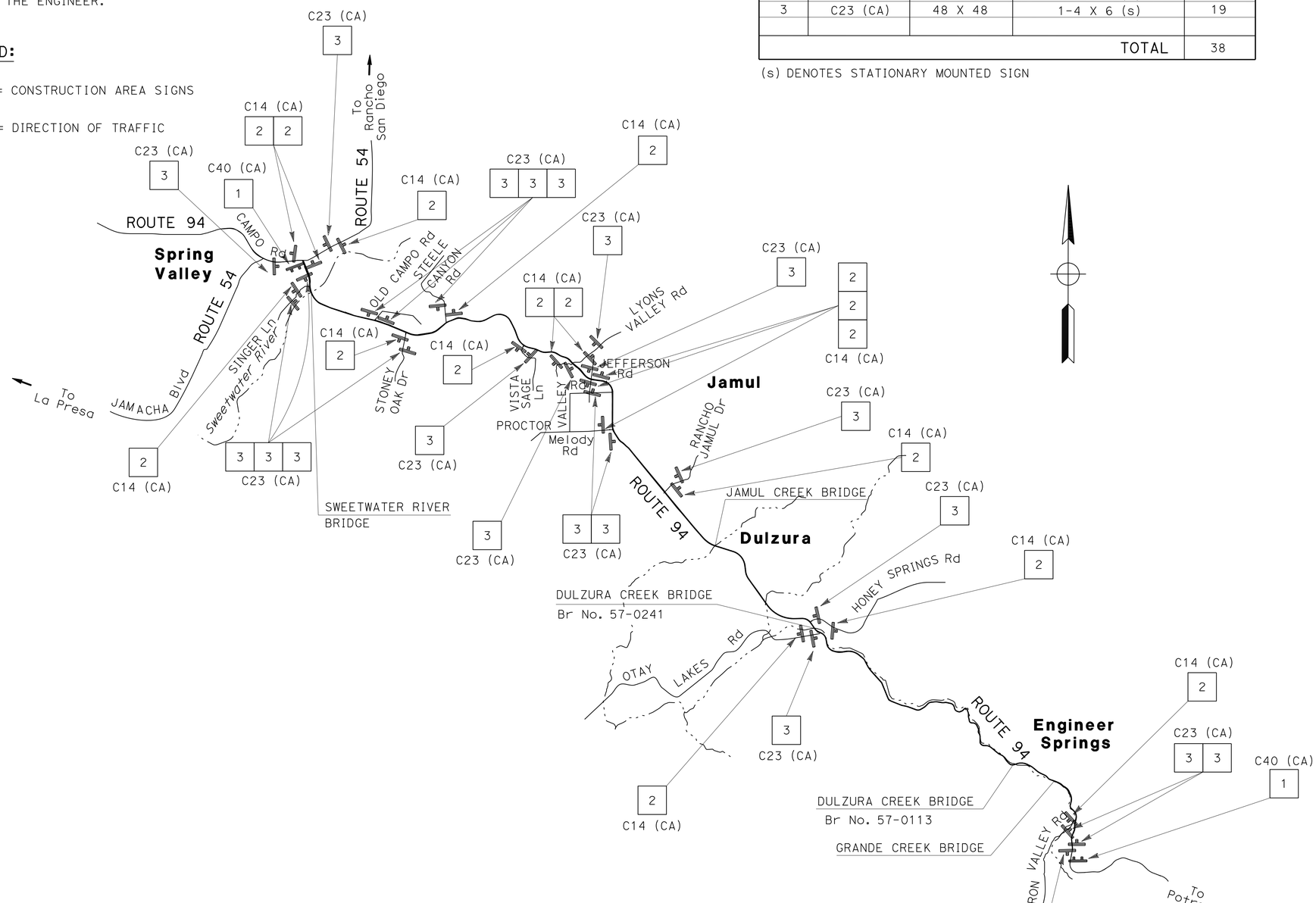

CONSTRUCTION AREA SIGNS

NO SCALE

CS-1

APPROVED FOR CONSTRUCTION AREA SIGN WORK ONLY

STATE OF CALIFORNIA - DEPARTMENT OF TRANSPORTATION
Caltrans® TRAFFIC DESIGN

FUNCTIONAL SUPERVISOR: CAMILLE ABOU-FADEL
CALCULATED-DESIGNED BY: SHAHIN ADIBI
CHECKED BY: RYAN CHAO
REVISED BY
DATE REVISED

LAST REVISION 03-21-13
DATE PLOTTED => 11-APR-2013
TIME PLOTTED => 13:55

Dist	COUNTY	ROUTE	POST MILES TOTAL PROJECT	SHEET No.	TOTAL SHEETS
11	SD	94	14.9/30.0	19	49

REGISTERED CIVIL ENGINEER 03-11-13 DATE

03-11-13
PLANS APPROVAL DATE

REGISTERED PROFESSIONAL ENGINEER
SHAHIN ADIBI
No. 54839
Exp. 06-30-14
CIVIL
STATE OF CALIFORNIA

THE STATE OF CALIFORNIA OR ITS OFFICERS OR AGENTS SHALL NOT BE RESPONSIBLE FOR THE ACCURACY OR COMPLETENESS OF SCANNED COPIES OF THIS PLAN SHEET.

NOTE: 1. ALL PAVEMENT DELINEATION SHALL BE REPLACED IN KIND UNLESS INDICATED OTHERWISE.

DETAIL 27B (Mod) (6")

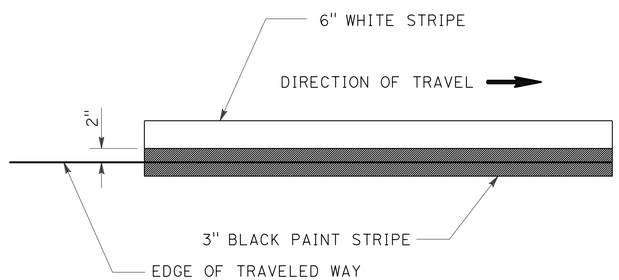

DETAIL 27B (6")

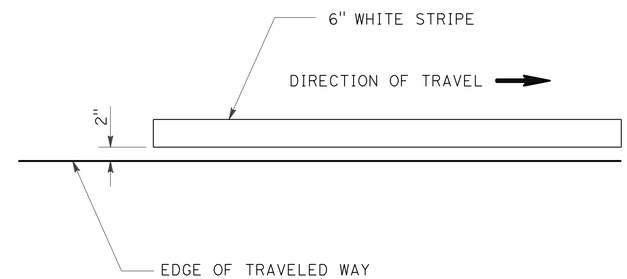

PAVEMENT DELINEATION DETAILS

NO SCALE

PDD-1

STATE OF CALIFORNIA - DEPARTMENT OF TRANSPORTATION
Caltrans® TRAFFIC DESIGN

FUNCTIONAL SUPERVISOR: CAMILLE ABOU-FADEL
CALCULATED-DESIGNED BY: RYAN CHAO
CHECKED BY: SHAHIN ADIBI
REVISED BY
DATE REVISED

LAST REVISION 03-21-13
DATE PLOTTED => 11-APR-2013
TIME PLOTTED => 13:55

Dist	COUNTY	ROUTE	POST MILES TOTAL PROJECT	SHEET No.	TOTAL SHEETS
11	SD	94	14.9/30.0	20	49

REGISTERED CIVIL ENGINEER 03-11-13 DATE

03-11-13
PLANS APPROVAL DATE

REGISTERED PROFESSIONAL ENGINEER SHAHIN ADIBI No. 54839 Exp. 06-30-14 CIVIL STATE OF CALIFORNIA

THE STATE OF CALIFORNIA OR ITS OFFICERS OR AGENTS SHALL NOT BE RESPONSIBLE FOR THE ACCURACY OR COMPLETENESS OF SCANNED COPIES OF THIS PLAN SHEET.

NOTE: 1. ALL PAVEMENT DELINEATION SHALL BE REPLACED IN KIND UNLESS INDICATED OTHERWISE.

PAVEMENT DELINEATION QUANTITIES

PAVEMENT MARKER SUMMARY / TRAFFIC STRIPE SUMMARY

ROUTE	DESCRIPTION	FROM Sta	TO Sta	DETAIL	RETROREFLECTIVE (EA) TYPE D YELLOW	RETROREFLECTIVE (EA) TYPE G CLEAR	RETROREFLECTIVE (EA) TYPE H YELLOW	PAINT (LF) BLACK (1-COAT)	THERMOPLASTIC (LF)* 4" BROKEN 36-12	THERMOPLASTIC (LF)* 4" SOLID	THERMOPLASTIC (LF)* 6" SOLID	THERMOPLASTIC (LF)* 8" SOLID	THERMOPLASTIC (LF)* 8" BROKEN 12-3	REMARKS
94	EB	815+09	1601+94	6	78				3,655					
				12		30			1,390					
				19	36		71	1,670	1,670	1,670				
				22	5,131			61,537		123,074				L=61,537′
				25			14			620				
				27B (6")							77,417			TO REPLACE DETAIL 27B
				27B(Mod)(6")				515			515			TO REPLACE 27B(Mod)
				29	211			5,010		10,020				L=2,505′
				32	761			14,540	14,540	14,540				L=7,270′
				38		111						2,620		
94	WB	815+09	1601+94	11					390					
				12		21			925					
				25			14			615				
				27B (6")							77,373			TO REPLACE DETAIL 27B
				27B(Mod)(6")				510			510			TO REPLACE 27B(Mod)
				37B		63							905	
				38		62						1,458		
94	OLD CAMPO Rd			22	147					3,470				L=1,735′
				38A								95		
				SUBTOTAL	6,750			83,782	22,570	154,009	155,815	4,173	905	

* ENHANCED WET NIGHT VISIBILITY

THERMOPLASTIC PAVEMENT MARKING (ENHANCED WET NIGHT VISIBILITY)

Rte	DIRECTION	FROM Sta	TO Sta	TYPE I-24′ SQFT	TYPE IV (L) SQFT	TYPE IV (R) SQFT	TYPE III (L) SQFT	TYPE III (R) SQFT	TYPE VI SQFT	STOP SQFT	SIGNAL SQFT	AHEAD SQFT	12" CROSSWALK SQFT	12" LIMIT LINE SQFT
94	EB	815+09	1601+94	31	45		1,470	84	126	154	32	31	255	405
94	WB	815+09	1601+94	93		45	1,344	294		22	128	124	404	465
94	OLD CAMPO Rd				15					66		31		28
			SUB TOTAL	124	60	45	2,814	378	126	242	160	186	659	898
			TOTAL	5,692										

REMOVE PAVEMENT MARKERS (N)

Rte	DESCRIPTION	FROM Sta	TO Sta	RETROREFLECTIVE (EA) TYPE D, G, H
94	EB	815+09	1601+94	6,443
94	WB	815+09	1601+94	160
94	OLD CAMPO Rd			147
			TOTAL	6,750

(N) - NOT A SEPARATE PAY ITEM, FOR INFORMATION ONLY.

REMOVE PAINTED TRAFFIC STRIPE

ROUTE	DESCRIPTION	FROM Sta	TO Sta	DETAIL	LENGTH (LF)	3" BLACK STRIPE (LF)	REMARKS
94	EB	815+09	1601+94	22	980	368	BRIDGE; L=490′
				27B(Mod)	490	368	BRIDGE
94	WB	815+09	1601+94	27B(Mod)	485	364	BRIDGE
				SUB TOTAL	1,955	1,100	
				TOTAL	3,055		

PAVEMENT DELINEATION QUANTITIES

PDQ-1

REVISED BY | DATE REVISED
RYAN CHAO | SHAHIN ADIBI
CALCULATED-DESIGNED BY | CHECKED BY
FUNCTIONAL SUPERVISOR | CAMILLE ABOU-FADEL

STATE OF CALIFORNIA - DEPARTMENT OF TRANSPORTATION
Caltrans® TRAFFIC DESIGN

LAST REVISION 03-21-13 | DATE PLOTTED => 11-APR-2013 | TIME PLOTTED => 13:55

Dist	COUNTY	ROUTE	POST MILES TOTAL PROJECT	SHEET No.	TOTAL SHEETS
11	SD	94	14.9/30.0	21	49

REGISTERED CIVIL ENGINEER 03-11-13 DATE

03-11-13
PLANS APPROVAL DATE

REGISTERED PROFESSIONAL ENGINEER SHAHIN ADIBI No. 54839 Exp. 06-30-14 CIVIL STATE OF CALIFORNIA

THE STATE OF CALIFORNIA OR ITS OFFICERS OR AGENTS SHALL NOT BE RESPONSIBLE FOR THE ACCURACY OR COMPLETENESS OF SCANNED COPIES OF THIS PLAN SHEET.

LEGEND:

S/S (XX) = INSTALL SIGN (STRAP AND SADDLE BRACKET METHOD)

RM (XX) = REMOVE ROADSIDE SIGN

(XX) = ROADSIDE SIGN

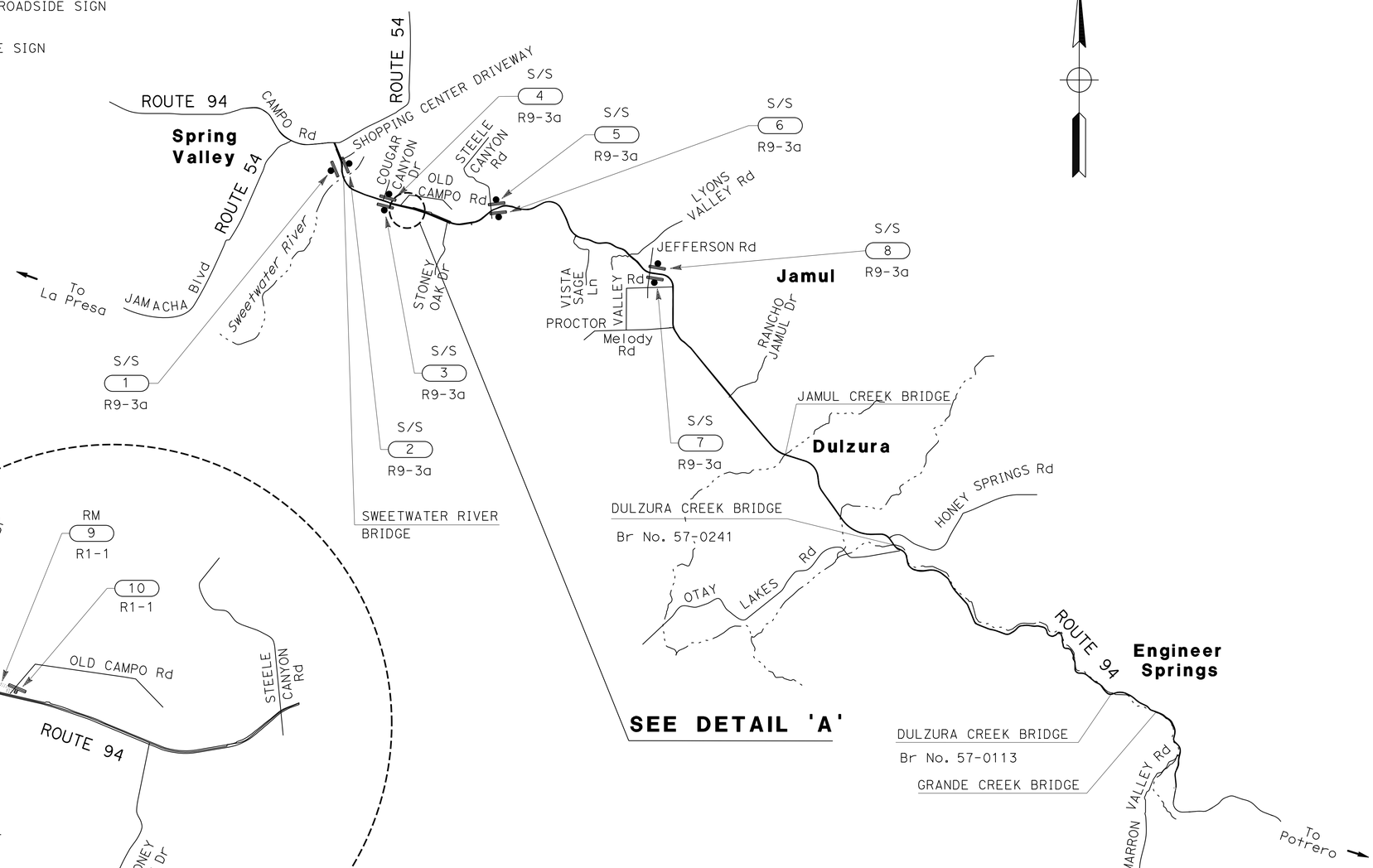

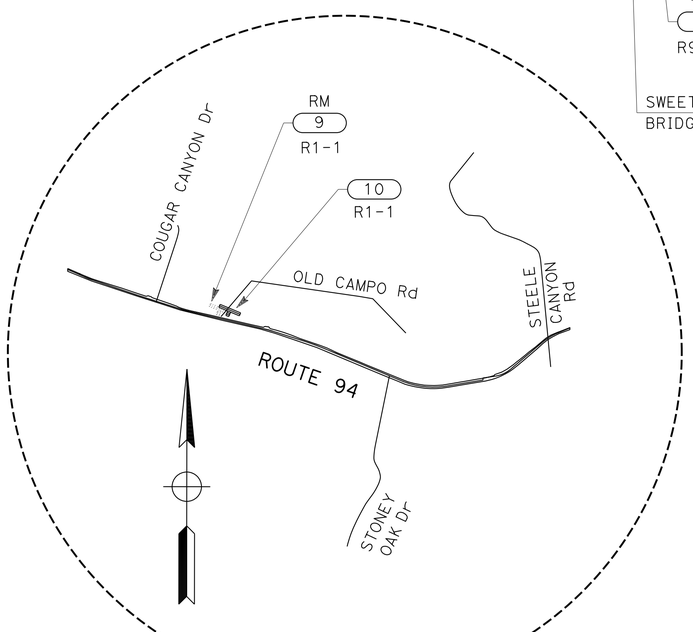

DETAIL 'A'

SIGN PLAN

NO SCALE

S-1

APPROVED FOR SIGN PLAN WORK ONLY

REVISED BY	DATE REVISED
RYAN CHAO	SHAHIN ADIBI
CALCULATED-DESIGNED BY	CHECKED BY
FUNCTIONAL SUPERVISOR	CAMILLE ABOU-FADEL

STATE OF CALIFORNIA - DEPARTMENT OF TRANSPORTATION
Caltrans TRAFFIC DESIGN

LAST REVISION 03-21-13 | DATE PLOTTED => 11-APR-2013 TIME PLOTTED => 13:55

Dist	COUNTY	ROUTE	POST MILES TOTAL PROJECT	SHEET No.	TOTAL SHEETS
11	SD	94	14.9/30.0	22	49

REGISTERED CIVIL ENGINEER 03-11-13 DATE

03-11-13
PLANS APPROVAL DATE

REGISTERED PROFESSIONAL ENGINEER SHAHIN ADIBI No. 54839 Exp. 06-30-14 CIVIL STATE OF CALIFORNIA

THE STATE OF CALIFORNIA OR ITS OFFICERS OR AGENTS SHALL NOT BE RESPONSIBLE FOR THE ACCURACY OR COMPLETENESS OF SCANNED COPIES OF THIS PLAN SHEET.

NOTES:

1. FEDERAL MANUAL ON UNIFORM TRAFFIC CONTROL DEVICES (MUTCD) SIGN CODES ARE SHOWN UNLESS DESIGNATED BY (CA) INDICATING STANDARD CALIFORNIA SIGN SPECIFICATIONS.
2. EXACT LOCATIONS OF SIGNS SHALL BE DETERMINED BY THE ENGINEER.
3. REFER TO "FURNISH ROADSIDE SIGN PANEL" CHART FOR FURTHER INFORMATION.

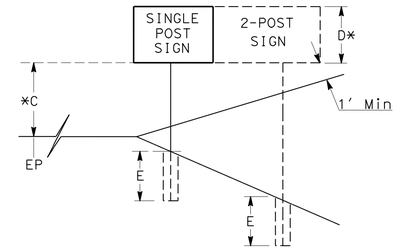

*TO BOTTOM OF LOWER PANEL ON MULTIPLE SIGN INSTALLATIONS.

ROADSIDE SIGN QUANTITIES

SIGN No.	ROUTE	CODE	PANEL SIZE Horiz	PANEL SIZE Vert	D	C	E	Min POST LENGTH	POST SIZE 4X4	REMOVE ROADSIDE SIGN	ROADSIDE SIGN - ONE POST	INSTALL SIGN (STRAP & SADDLE BRACKET METHOD)	REMARKS
			INCHES X INCHES		Ft	Ft	Ft	Ft	INCHES X INCHES	EA	EA	EA	
1	94	R9-3a	24x24									1	ATTACH TO EXISTING SIGNAL POLE - Rte 94/SHOPPING CENTER DRIVEWAY
2	94	R9-3a	24x24									1	ATTACH TO EXISTING SIGNAL POLE - Rte 94/SHOPPING CENTER DRIVEWAY
3	94	R9-3a	24x24									1	ATTACH TO EXISTING SIGNAL POLE - Rte 94/COUGAR CANYON DRIVE
4	94	R9-3a	24x24									1	ATTACH TO EXISTING SIGNAL POLE - Rte 94/COUGAR CANYON DRIVE
5	94	R9-3a	24x24									1	ATTACH TO EXISTING SIGNAL POLE - Rte 94/STEELE CANYON ROAD
6	94	R9-3a	24x24									1	ATTACH TO EXISTING SIGNAL POLE - Rte 94/STEELE CANYON ROAD
7	94	R9-3a	24x24									1	ATTACH TO EXISTING SIGNAL POLE - Rte 94/JEFFERSON Rd/PROCTOR VALLEY Rd
8	94	R9-3a	24x24									1	ATTACH TO EXISTING SIGNAL POLE - Rte 94/JEFFERSON Rd/PROCTOR VALLEY Rd
9	94	R1-1	30x30							1			OLD CAMPO Rd
10	94	R1-1	30x30		2.50	7.0	4.5	14.00	X		1		OLD CAMPO Rd
									TOTAL	1	1	8	

REVISED BY | DATE REVISED

RYAN CHAO | SHAHIN ADIBI

CALCULATED-DESIGNED BY | CHECKED BY

FUNCTIONAL SUPERVISOR: CAMILLE ABOU-FADEL

STATE OF CALIFORNIA - DEPARTMENT OF TRANSPORTATION
Caltrans
TRAFFIC DESIGN

SIGN QUANTITIES

SQ-1

LAST REVISION 03-21-13 | DATE PLOTTED => 11-APR-2013 | TIME PLOTTED => 13:55

Dist	COUNTY	ROUTE	POST MILES TOTAL PROJECT	SHEET No.	TOTAL SHEETS
11	SD	94	14.9/30.0	23	49

REGISTERED CIVIL ENGINEER 03-11-13 DATE

03-11-13
PLANS APPROVAL DATE

REGISTERED PROFESSIONAL ENGINEER SHAHIN ADIBI No. 54839 Exp. 06-30-14 CIVIL STATE OF CALIFORNIA

THE STATE OF CALIFORNIA OR ITS OFFICERS OR AGENTS SHALL NOT BE RESPONSIBLE FOR THE ACCURACY OR COMPLETENESS OF SCANNED COPIES OF THIS PLAN SHEET.

NOTES:

1. FEDERAL MANUAL ON UNIFORM TRAFFIC CONTROL DEVICES (MUTCD) SIGN CODES ARE SHOWN UNLESS DESIGNATED BY (CA) INDICATING STANDARD CALIFORNIA SIGN SPECIFICATIONS.
2. REFER TO "ROADSIDE SIGN QUANTITIES" CHART FOR FURTHER INFORMATION.
3. GREEN - Grn, WHITE - Wht, BLACK - Blk, BLUE - Blu, YELLOW - Ylw, BROWN - Brn, RED - Red, ORANGE - Org

FURNISH ROADSIDE SIGN PANEL

SIGN No.	CODE	PANEL SIZE		BACKGROUND		LEGEND			SIGN PANEL		REMARKS
		Horiz	Vert	SHEETING COLOR	RETRO-REFLECTIVE ASTM TYPE	SHEETING COLOR	REFLECTIVE ASTM TYPE	BLACK (NON-REFLECTIVE)	SINGLE SHEET ALUMINUM (SQFT) UNFRAMED 0.063 INCHES	PROTECTIVE OVERLAY PREMIUM FILM	
		INCHES X INCHES									
1	R9-3a	24 X 24		Wht	XI	Red/Blk	XI	X	4	X	
2	R9-3a	24 X 24		Wht	XI	Red/Blk	XI	X	4	X	
3	R9-3a	24 X 24		Wht	XI	Red/Blk	XI	X	4	X	
4	R9-3a	24 X 24		Wht	XI	Red/Blk	XI	X	4	X	
5	R9-3a	24 X 24		Wht	XI	Red/Blk	XI	X	4	X	
6	R9-3a	24 X 24		Wht	XI	Red/Blk	XI	X	4	X	
7	R9-3a	24 X 24		Wht	XI	Red/Blk	XI	X	4	X	
8	R9-3a	24 X 24		Wht	XI	Red/Blk	XI	X	4	X	
10	R1-1	30 X 30		Red	XI	Wht	XI	X	6.25	X	OLD CAMPO Rd
								TOTAL	38.25		

SIGN QUANTITIES

SQ-2

REVISED BY | DATE REVISED

RYAN CHAO | SHAHIN ADIBI

CALCULATED-DESIGNED BY | CHECKED BY

FUNCTIONAL SUPERVISOR: CAMILLE ABOU-FADEL

STATE OF CALIFORNIA - DEPARTMENT OF TRANSPORTATION

Caltrans® TRAFFIC DESIGN

LAST REVISION 03-21-13 | DATE PLOTTED => 11-APR-2013 | TIME PLOTTED => 13:55

Dist	COUNTY	ROUTE	POST MILES TOTAL PROJECT	SHEET No.	TOTAL SHEETS
11	SD	94	14.9/30.0	24	49

Bahman Yazdani 03-11-13
REGISTERED CIVIL ENGINEER DATE

03-11-13
PLANS APPROVAL DATE

REGISTERED PROFESSIONAL ENGINEER BAHMAN YAZDANI No. 58322 Exp. 06-30-14 CIVIL STATE OF CALIFORNIA

THE STATE OF CALIFORNIA OR ITS OFFICERS OR AGENTS SHALL NOT BE RESPONSIBLE FOR THE ACCURACY OR COMPLETENESS OF SCANNED COPIES OF THIS PLAN SHEET.

REMOVE CONCRETE

CURB RAMP #	SHEET	DIRECTION	ROUTE	LINE	SIDE	STATION	CURB RAMP		CURB		REMARKS
							SQFT(N)	CY	LF(N)	CY	
1	C-2	EB	94	"SD-94"	R+	815+08.6	227.6	2.8	25.4	1.5	ROUTE 54/ 94, Exist CURB RAMP (CASE A)
2	C-2	WB	94	"SD-94"	L+	815+40.8	259.7	3.2	34.6	2.0	ROUTE 54/ 94, Exist CURB RAMP (CASE A)
3	C-3	WB	94	"SD-94"	L+	819+46.8	253.3	3.1	38.2	2.3	SHOPPING CENTER DRIVEWAY ALONG WB 94, Exist CURB RAMP (CASE A)
4	C-3	WB	94	"SD-94"	L+	819+98.3	238.7	2.9	33.8	2.0	SHOPPING CENTER DRIVEWAY ALONG WB 94, Exist CURB RAMP (CASE A)
5	C-4	WB	94	"SD-94"	L+	823+86.1	209.5	2.6	24.9	1.5	SHOPPING CENTER DRIVEWAY ALONG WB 94, Exist CURB RAMP (CASE A)
6	C-4	WB	94	"SD-94"	L+	824+59.8	238.7	2.9	32.5	1.9	SHOPPING CENTER DRIVEWAY ALONG WB 94, Exist CURB RAMP (CASE A)
7	C-5	WB	94	"SD-94"	L+	827+10.3	192.6	2.4	27.4	0.7	SHOPPING CENTER DRIVEWAY ALONG WB 94, Exist CURB RAMP (CASE A)
8	C-5	WB	94	"SD-94"	L+	827+56.8	254.8	3.1	34.6	0.9	SHOPPING CENTER DRIVEWAY ALONG WB 94, Exist CURB RAMP (CASE A)
9	C-6	WB	94	"SD-94"	L+	888+42.8	169.9	2.1	21.3	1.3	WB ROUTE 94 & COUGAR CANYON DRIVE, Exist CURB RAMP (CASE A)
10	C-6	WB	94	"SD-94"	L+	889+28.9	248.5	3.1	25.9	1.5	WB ROUTE 94 & COUGAR CANYON DRIVE, Exist CURB RAMP (CASE A)
12	C-7	WB	94	"SD-94"	L+	943+41.0			43.7	2.6	WB ROUTE 94 & STEELE CANYON ROAD, Exist CURB
13	C-8	WB	94	"SD-94"	L+	944+33.8			42.6	2.5	WB ROUTE 94 & STEELE CANYON ROAD, Exist CURB
14	C-8	EB	94	"SD-94"	R+	943+47.0			6.0	0.4	EB ROUTE 94 & STEELE CANYON ROAD, Exist CURB
15	C-8	EB	94	"SD-94"	R+	944+07.2			6.0	0.4	EB ROUTE 94 & STEELE CANYON ROAD, Exist CURB
						SUB TOTAL		28.3		21.5	
						TOTAL		49.8			

MINOR CONCRETE
(CURB,SIDEWALK AND CURB RAMP)

CURB RAMP #	SHEET	DIRECTION	ROUTE	LINE	SIDE	STATION	CURB RAMP, SIDEWALK, AND PEDESTRIAN REFUGE		CURB		RETAINING CURB		REMARKS
							SQFT(N)	CY	LF(N)	CY	LF(N)	CY	
1	C-2	EB	94	"SD-94"	R+	815+08.6	260.8	3.2	25.4	1.5	0.0	0.0	ROUTE 54/ 94
2	C-2	WB	94	"SD-94"	L+	815+40.8	259.7	3.2	34.6	2.0	24.0	0.4	ROUTE 54/ 94
3	C-3	WB	94	"SD-94"	L+	819+46.8	250.6	3.1	38.2	2.3	27.7	0.4	SHOPPING CENTER DRIVEWAY ALONG WB 94
4	C-3	WB	94	"SD-94"	L+	819+98.3	198.3	2.4	26.0	1.5	22.1	0.3	SHOPPING CENTER DRIVEWAY ALONG WB 94
5	C-4	WB	94	"SD-94"	L+	823+86.1	220.32	2.7	24.9	1.5	21.9	0.3	SHOPPING CENTER DRIVEWAY ALONG WB 94
6	C-4	WB	94	"SD-94"	L+	824+59.8	266.8	3.3	33.9	2.0	24.8	0.4	SHOPPING CENTER DRIVEWAY ALONG WB 94
7	C-5	WB	94	"SD-94"	L+	827+10.3	183.8	2.3	27.8	0.7	17.3	0.3	SHOPPING CENTER DRIVEWAY ALONG WB 94
8	C-5	WB	94	"SD-94"	L+	827+56.8	212.0	2.6	27.7	0.7	24.0	0.4	SHOPPING CENTER DRIVEWAY ALONG WB 94
9	C-6	WB	94	"SD-94"	L+	888+42.8	169.9	2.1	21.3	1.3	13.3	0.2	WB ROUTE 94 & COUGAR CANYON DRIVE
10	C-6	WB	94	"SD-94"	L+	889+28.9	239.4	3.0	26.7	1.6	16.6	0.3	WB ROUTE 94 & COUGAR CANYON DRIVE
11	C-6	EB	94	"SD-94"	R+	888+35.3	34.5	0.4		0.0	19.8	0.3	EB ROUTE 94 & COUGAR CANYON DRIVE, CONSTRUCT NEW PEDESTRIAN REFUGE
12	C-7	WB	94	"SD-94"	L+	943+41.0	246.4	3.0	43.7	2.6	39.1	0.6	WB ROUTE 94 & STEELE CANYON ROAD, CONSTRUCT NEW CURB RAMP
13	C-8	WB	94	"SD-94"	L+	944+33.8	215.1	2.7	42.6	2.5	46.0	0.7	WB ROUTE 94 & STEELE CANYON ROAD, CONSTRUCT NEW CURB RAMP
14	C-8	EB	94	"SD-94"	R+	943+47.0	25.0	0.3	6	0.4	16.0	0.2	EB ROUTE 94 & STEELE CANYON ROAD, CONSTRUCT NEW PEDESTRIAN REFUGE
15	C-8	EB	94	"SD-94"	R+	944+07.2	34.5	0.4	6	0.4	19.8	0.3	EB ROUTE 94 & STEELE CANYON ROAD, CONSTRUCT NEW PEDESTRIAN REFUGE
16	C-9	WB	94	"SD-94"	L+	1067+93.1	32.8	0.4	0	0.0	10.0	0.2	WB ROUTE94 & JEFFERSON, NEW PEDESTRIAN REFUGE
17	C-9	WB	94	"SD-94"	L+	1068+50.8	28.8	0.4	0	0.0	17.6	0.3	WB ROUTE94 & JEFFERSON, NEW PEDESTRIAN REFUGE
18	C-10	EB	94	"SD-94"	R+	1067+88.4	50.7	0.6	10.2	0.6	16.4	0.3	EB ROUTE94 & PROCTOR VALLEY, NEW CURB RAMP
19	C-10	EB	94	"SD-94"	R+	1068+70.4	33.6	0.4	0	0.0	18.3	0.3	EB ROUTE94 & PROCTOR VALLEY, NEW PEDESTRIAN REFUGE
						SUB TOTAL		36.4		21.5		6.1	
						TOTAL		64.0					

(N) = NOT A SEPARATE PAY ITEM, FOR INFORMATION ONLY.

SUMMARY OF QUANTITIES
Q-1

REVISED BY | DATE REVISED
BAHMAN YAZDANI | RICARDO PADILLA
CALCULATED-DESIGNED BY | CHECKED BY
FUNCTIONAL SUPERVISOR: CHRIS M THOMAS
STATE OF CALIFORNIA - DEPARTMENT OF TRANSPORTATION
Caltrans® DESIGN

LAST REVISION 03-21-13 | DATE PLOTTED => 11-APR-2013 | TIME PLOTTED => 13:55

Dist	COUNTY	ROUTE	POST MILES TOTAL PROJECT	SHEET No.	TOTAL SHEETS
11	SD	94	14.9/30.0	25	49

Bahman Yazdani 03-11-13
REGISTERED CIVIL ENGINEER DATE

03-11-13
PLANS APPROVAL DATE

REGISTERED PROFESSIONAL ENGINEER
BAHMAN YAZDANI
No. 58322
Exp. 06-30-14
CIVIL
STATE OF CALIFORNIA

THE STATE OF CALIFORNIA OR ITS OFFICERS OR AGENTS SHALL NOT BE RESPONSIBLE FOR THE ACCURACY OR COMPLETENESS OF SCANNED COPIES OF THIS PLAN SHEET.

METAL BEAM GUARD RAILING

DIRECTION	LINE	SIDE	BEGIN Sta	END Sta	REMOVE MBGR (LF)	MBGR (STEEL POST) (LF)	ADJUST MBGR (LF)	LAYOUT TYPE (N)	TERMININAL SYSTEM (TYPE X - TENSION) (EA)	ALTERNATIVE FLARED TERMININAL SYSTEM (EA)	ALTERNATIVE IN-LINE TERMINAL SYSTEM (EA)	END ANCHOR ASSMBLY (TYPE SFT) (EA)	TRANSITION RAILING (TYPE WB) (EA)	GUARD RAILING DELINEATOR (EA)	TREATED WOOD WASTE (LB)	MINOR CONCRETE (MINOR STRUCTURE) (CY)	REMARKS
EB	"SD-94"	R+	834+64.80	835+64.80	62.5	37.5		12B	1				1	2	1045.0	0.7	
EB	"SD-94"	R+	841+02.00	841+77.00	62.5	12.5		12BB		1			1	2	970.3	0.7	
EB	"SD-94"	R+	1050+91.50	1053+66.50	275.0	200.0		16E	1	1				7	3284.2		TERMINAL SYSTEM (TYPE X-TENSION) AT APPROACH END
EB	"SD-94"	R+	1322+69.00	1323+69.00	100.0	37.5		12A			1		1	3	1418.2		ADJUST HEIGHT(Exist ANCHOR BLOCK)
EB	"SD-94"	R+	1326+05.00	1326+86.50	81.5	19.0		12BB		1			1	3	1418.2		ADJUST HEIGHT(Exist ANCHOR BLOCK)
EB	"SD-94"	R+	1517+33.00	1518+00.20	62.5	41.0		12AA			1		1	3	671.8	0.7	
EB	"SD-94"	R+	1545+35.40	1546+54.50	119.1	41.0		16H		1	1			3	1045.0		
WB	"SD-94"	L+	983+80.00	991+31.25	631.3	676.3		11H		1	1			16	8434.3		EXTENDING MBGR FOR RECOVERY ZONE
WB	"SD-94"	L+	1051+82.00	1054+44.50	250.0	187.5		11A			1	1		7	3060.2		
WB	"SD-94"	L+	1100+57.00	1101+57.00	100.0	25.0		16E		2				3	1268.9		
WB	"SD-94"	L+	1322+89.00	1323+89.00	100.0	37.5		12A			1		1	3	1418.2		ADJUST HEIGHT(Exist ANCHOR BLOCK)
WB	"SD-94"	L+	1326+38.00	1327+50.50	100.0	50.0		12AA			1		1	3	1343.5		ADJUST HEIGHT(Exist ANCHOR BLOCK)
WB	"SD-94"	L+	1463+51.00	1488+72.10	75.00		2,521.0	16E		2				65	1194.2		
WB	"SD-94"	L+	1515+33.70	1516+36.70	103.0	31.5		12BB		1			1	3	1045.0	0.7	
WB	"SD-94"	L+	1516+83.50	1517+58.50	75.0	12.5		12B		1			1	3	1045.0	0.7	
TOTAL					2197.4	1408.8	2,521.0		2	11	7	1	9	126	28661.8	3.5	

(N) = NOT A SEPARATE PAY ITEM, FOR INFORMATION ONLY.

SUMMARY OF QUANTITIES

Q-2

STATE OF CALIFORNIA - DEPARTMENT OF TRANSPORTATION
Caltrans® DESIGN

FUNCTIONAL SUPERVISOR: CHRIS M THOMAS
CALCULATED-DESIGNED BY: BAHMAN YAZDANI
CHECKED BY: RICARDO PADILLA
REVISED BY
DATE REVISED

LAST REVISION 03-21-13
DATE PLOTTED => 11-APR-2013
TIME PLOTTED => 13:55

Dist	COUNTY	ROUTE	POST MILES TOTAL PROJECT	SHEET No.	TOTAL SHEETS
11	SD	94	14.9/30.0	26	49

Bahman Yazdani 03-11-13
REGISTERED CIVIL ENGINEER DATE

03-11-13
PLANS APPROVAL DATE

REGISTERED PROFESSIONAL ENGINEER BAHMAN YAZDANI No. 58322 Exp. 06-30-14 CIVIL STATE OF CALIFORNIA

THE STATE OF CALIFORNIA OR ITS OFFICERS OR AGENTS SHALL NOT BE RESPONSIBLE FOR THE ACCURACY OR COMPLETENESS OF SCANNED COPIES OF THIS PLAN SHEET.

(N) = NOT A SEPARATE PAY ITEM, FOR INFORMATION ONLY.

ROADWAY QUANTITIES

LOCATION Beg Sta	LOCATION END Sta	LINE	MAIN LANE AVERAGE WIDTH FT	L+ SHOULDER (N) AVERAGE WIDTH FT	R+ SHOULDER (N) AVERAGE WIDTH FT	COLD PLANE AC PAVEMENT SQYD	HIGH FRICTION SURFACE TREATMENT SQYD	RUBBERIZED HOT MIX ASPHALT (GAP GRADED) TON	SAFTY EDGE (N) TON	HMA (TYPE A) TON	TACK COAT TON	ASPHALTIC EMULSION (FOG SEAL COAT) TON	ASPHALT - RUBBER BINDER TON	SCREENINGS (HOT-APPLIED) TON
815+28.28	835+83.70	"SD-94"	62.1			14,179.38		1,890.58			3.54		35.45	226.87
840+79.00	944+57.10	"SD-94"	39.1			45,110.50		6,014.73			11.28		112.78	721.77
944+57.10	979+05.40	"SD-94"	30.4			11,643.98		1,552.53			2.91		29.11	186.30
979+05.40	1048+44.20	"SD-94"	24.9			19,197.08		2,559.61		1,919.71	4.80		47.99	307.15
1048+44.20	1068+92.30	"SD-94"	36.2			8,242.44		1,098.99			2.06		20.61	131.88
1068+92.30	1088+34.00	"SD-94"	27.1			5,850.99		780.13			1.46		14.63	93.62
1088+34.00	1098+50.00	"SD-94"	34.2			3,865.53		515.40		386.55	0.97		9.66	61.85
1098+50.00	1113+00.00	"SD-94"	25.1			4,042.49		539.00			1.01		10.11	64.68
1113+00.00	1123+50.00	"SD-94"	31.3			3,657.18		487.62		365.72	0.91		9.14	58.51
1123+50.00	1244+00.00	"SD-94"	25.0			33,487.08		4,464.94			8.37		83.72	535.79
1244+00.00	1261+98.20	"SD-94"	24.0			4,804.31		640.57		480.43	1.20		12.01	76.87
1261+98.20	1281+90.00	"SD-94"	24.4			5,390.26		718.70			1.35		13.48	86.24
1281+90.00	1324+17.40	"SD-94"	25.5			11,999.46		1,599.93		1,199.95	3.00		30.00	191.99
1325+77.40	1329+93.40	"SD-94"	26.1			1,206.85		160.91			0.30		3.02	19.31
1329+93.40	1348+73.70	"SD-94"	26.1			5,454.92		727.32			1.36		13.64	87.28
1348+73.70	1372+50.00	"SD-94"	26.1			6,893.86		919.18			1.72		17.23	110.30
1372+50.00	1376+00.00	"SD-94"	26.1			1,015.38		135.38			0.25		2.54	16.25
1376+00.00	1399+00.00	"SD-94"	26.1			6,672.51		889.67			1.67		16.68	106.76
1399+00.00	1403+00.00	"SD-94"	24.0			1,068.48		142.46		106.85	0.27		2.67	17.10
1403+00.00	1405+00.00	"SD-94"	24.0			534.24		71.23		53.42	0.13		1.34	8.55
1405+00.00	1446+00.00	"SD-94"	24.0			10,951.94		1,460.26		1,095.19	2.74		27.38	175.23
1446+00.00	1448+47.50	"SD-94"	24.0			661.12		88.15		66.11	0.17		1.65	10.58
1448+47.50	1449+12.00	"SD-94"	23.8			170.35		22.71			0.04		0.43	2.73
1449+12.00	1454+88.20	"SD-94"	23.8			1,521.79		202.91			0.38		3.80	24.35
1454+88.20	1456+00.00	"SD-94"	24.0			297.60		39.68		29.76	0.07		0.74	4.76
1456+00.00	1459+00.00	"SD-94"	24.0			798.56		106.47		79.86	0.20		2.00	12.78
1459+00.00	1475+00.00	"SD-94"	24.0			4,259.00		567.87		425.90	1.06		10.65	68.14
1475+00.00	1479+50.00	"SD-94"	24.0			1,197.84		159.71		119.78	0.30		2.99	19.17
1479+50.00	1495+00.00	"SD-94"	24.0			4,125.90		550.12		412.59	1.03		10.31	66.01
1495+00.00	1498+50.00	"SD-94"	24.0			931.66		124.22		93.17	0.23		2.33	14.91
1498+50.00	1513+00.00	"SD-94"	24.0			3,859.72		514.63		385.97	0.96		9.65	61.76
1513+00.00	1516+00.00	"SD-94"	24.0			798.56		106.47		79.86	0.20		2.00	12.78
1516+00.00	1524+52.00	"SD-94"	24.0			2,267.92		302.39		226.79	0.57		5.67	36.29
1525+22.60	1532+00.00	"SD-94"	24.0			1,804.61		240.61		180.46	0.45		4.51	28.87
1532+00.00	1540+00.00	"SD-94"	25.2			2,237.09		298.28			0.56		5.59	35.79
1540+00.00	1542+00.00	"SD-94"	25.2			559.27		74.57			0.14		1.40	8.95
1542+00.00	1559+70.20	"SD-94"	25.2			4,950.12		660.02			1.24		12.38	79.20
1559+70.20	1596+00.00	"SD-94"	25.2			10,150.24	10,150.24	1,353.37			2.54		25.38	162.40
1596+00.00	1598+00.00	"SD-94"	25.2			559.27	559.27	74.57			0.14		1.40	8.95
1598+00.00	1601+94.20	"SD-94"	25.2			1,102.33	1,102.33	146.98			0.28		2.76	17.64
											0.00			0.00
815+28.28	833+17.09	"SD-94"			6.0	1,194.53		159.27			0.30	0.20	2.99	19.11
834+00.00	835+83.70	"SD-94"			12.5	255.14		34.02			0.06	0.04	0.64	4.08
840+79.00	848+80.70	"SD-94"			8.3	739.03		98.54			0.18	0.12	1.85	11.82
849+27.20	851+00.00	"SD-94"			6.6	125.97		17.24	0.45		0.03	0.02	0.31	2.02
851+00.00	895+09.60	"SD-94"			6.6	3,214.64		428.62			0.80	0.54	8.04	51.43
895+45.60	896+54.00	"SD-94"			8.5	102.54		13.67			0.03	0.02	0.26	1.64
897+10.70	912+52.11	"SD-94"			8.0	1,368.38		182.45			0.34	0.23	3.42	21.89
913+34.70	916+36.00	"SD-94"			7.5	250.79		33.44			0.06	0.04	0.63	4.01
917+00.00	918+25.00	"SD-94"			8.1	112.50		15.00			0.03	0.02	0.28	1.80
918+35.32	921+19.55	"SD-94"			6.7	212.98		28.40			0.05	0.04	0.53	3.41
921+70.87	922+69.26	"SD-94"			8.5	92.82		12.38			0.02	0.02	0.23	1.49
923+43.20	924+45.10	"SD-94"			8.0	90.80		12.11			0.02	0.02	0.23	1.45
					SUB TOTAL 1	255,281.94	11,811.84	34,038.04	*	7,708.07	63.82	1.29	638.20	4,084.51

* HMA QUANTITIES FOR SAFETY EDGE IS INCLUDED IN THE RUBBERIZED HMA (GAP GRADED)

(N) = NOT A SEPARATE PAY ITEM, FOR INFORMATION ONLY.

SUMMARY OF QUANTITIES

Q-3

REVISED BY | DATE REVISED
BAHMAN YAZDANI | RICARDO PADILLA
CALCULATED-DESIGNED BY | CHECKED BY
FUNCTIONAL SUPERVISOR: CHRIS M THOMAS
STATE OF CALIFORNIA - DEPARTMENT OF TRANSPORTATION
Caltrans DESIGN

LAST REVISION 03-21-13 | DATE PLOTTED => 11-APR-2013 | TIME PLOTTED => 13:55

Dist	COUNTY	ROUTE	POST MILES TOTAL PROJECT	SHEET No.	TOTAL SHEETS
11	SD	94	14.9/30.0	27	49

Bahman Yazdani 03-11-13
REGISTERED CIVIL ENGINEER DATE

03-11-13
PLANS APPROVAL DATE

REGISTERED PROFESSIONAL ENGINEER BAHMAN YAZDANI No. 58322 Exp. 06-30-14 CIVIL STATE OF CALIFORNIA

THE STATE OF CALIFORNIA OR ITS OFFICERS OR AGENTS SHALL NOT BE RESPONSIBLE FOR THE ACCURACY OR COMPLETENESS OF SCANNED COPIES OF THIS PLAN SHEET.

ROADWAY QUANTITIES

LOCATION Beg Sta	LOCATION END Sta	LINE	MAIN LANE AVERAGE WIDTH FT	L+ SHOULDER (N) AVERAGE WIDTH FT	R+ SHOULDER (N) AVERAGE WIDTH FT	COLD PLANE AC PAVEMENT SQYD	HIGH FRICTION SURFACE TREATMENT SQYD	RUBBERIZED HOT MIX ASPHALT (GAP GRADED) TON	SAFTY EDGE (N) TON	HMA (TYPE A) TON	TACK COAT TON	ASPHALTIC EMULSION (FOG SEAL COAT) TON	ASPHALT - RUBBER BINDER TON	SCREENINGS (HOT - APPLIED) TON
925+16.40	928+03.30	"SD-94"			8.0	255.34		34.79	0.74		0.06	0.04	0.64	4.09
928+49.50	944+57.10	"SD-94"			7.9	1,404.92		191.49	4.17		0.35	0.23	3.51	22.48
944+57.10	952+78.50	"SD-94"			7.4	674.44		89.93			0.17	0.11	1.69	10.79
953+35.90	976+39.00	"SD-94"			7.9	2,032.72		271.03			0.51	0.34	5.08	32.52
976+39.00	979+05.40	"SD-94"			7.9	235.12		32.04	0.69		0.06	0.04	0.59	3.76
979+05.40	1012+47.80	"SD-94"			8.0	2,964.91		395.32		296.49	0.74	0.49	7.41	47.44
1013+21.00	1016+88.20	"SD-94"			8.1	329.40		44.87	0.95	32.94	0.08	0.05	0.82	5.27
1018+31.90	1022+01.80	"SD-94"			8.1	333.07		44.41		33.31	0.08	0.06	0.83	5.33
1022+51.20	1026+41.40	"SD-94"			8.1	351.93		46.92		35.19	0.09	0.06	0.88	5.63
1027+51.20	1028+75.00	"SD-94"			7.9	109.18		14.56		10.92	0.03	0.02	0.27	1.75
1029+51.00	1047+60.00	"SD-94"			7.9	1,589.56		211.94		158.96	0.40	0.26	3.97	25.43
1048+44.00	1050+00.00	"SD-94"			8.5	146.76		19.57			0.04	0.02	0.37	2.35
1051+19.40	1063+75.30	"SD-94"			8.1	1,132.59		151.01			0.28	0.19	2.83	18.12
1064+16.10	1067+76.10	"SD-94"			8.3	332.86		44.38			0.08	0.06	0.83	5.33
1068+61.20	1087+81.30	"SD-94"			7.6	1,625.43		216.72			0.41	0.27	4.06	26.01
1088+76.50	1098+50.00	"SD-94"			4.1	439.83		58.64		43.98	0.11	0.07	1.10	7.04
1098+50.00	1108+00.00	"SD-94"			7.6	800.77		106.77			0.20	0.13	2.00	12.81
1108+00.00	1113+00.00	"SD-94"			7.6	421.46		57.49	1.30		0.11	0.07	1.05	6.74
1114+50.00	1115+86.00	"SD-94"			5.1	77.44		10.33		7.74	0.02	0.01	0.19	1.24
1211+04.40	1225+86.10	"SD-94"			7.8	1,288.68		171.82			0.32	0.21	3.22	20.62
1227+86.50	1244+00.00	"SD-94"			5.8	1,036.40		138.19			0.26	0.17	2.59	16.58
1244+00.00	1261+98.20	"SD-94"			5.8	1,156.97		154.26		115.70	0.29	0.19	2.89	18.51
1261+98.20	1281+00.00	"SD-94"			5.0	1,058.28		141.10			0.26	0.18	2.65	16.93
1281+90.00	1324+17.40	"SD-94"			4.5	2,100.60		280.08		210.06	0.53	0.35	5.25	33.61
1325+77.40	1327+11.60	"SD-94"			4.2	61.90		8.25			0.02	0.01	0.15	0.99
1348+73.70	1368+09.10	"SD-94"			6.7	1,432.12		190.95			0.36	0.24	3.58	22.91
1399+50.00	1401+50.00	"SD-94"			5.2	116.22		15.50		11.62	0.03	0.02	0.29	1.86
1451+00.00	1454+88.20	"SD-94"			6.0	256.84		34.25			0.06	0.04	0.64	4.11
1454+88.20	1455+66.90	"SD-94"			3.4	29.74		3.97		2.97	0.01	0.00	0.07	0.48
1462+25.50	1466+85.02	"SD-94"			6.9	353.52		47.14		35.35	0.09	0.06	0.88	5.66
1512+44.70	1524+50.00	"SD-94"			4.9	661.37		88.18		66.14	0.17	0.11	1.65	10.58
1526+34.30	1532+00.00	"SD-94"			3.7	233.69		31.16		23.37	0.06	0.04	0.58	3.74
1532+00.00	1559+70.20	"SD-94"			3.4	1,046.52		139.54			0.26	0.17	2.62	16.74
1559+70.20	1563+26.00	"SD-94"			3.4	134.41	134.41	17.92			0.03	0.02	0.34	2.15
1582+47.70	1590+66.20	"SD-94"			1.9	168.67	168.67	22.49			0.04	0.03	0.42	2.70
1590+66.20	1601+94.20	"SD-94"			8.2	1,026.53	1,026.53	136.87			0.26	0.17	2.57	16.42
					SUB TOTAL 2	27,420.20	1,329.61	3,663.88	*	1,084.74	6.86	4.57	68.55	438.72

(N) = NOT A SEPARATE PAY ITEM, FOR INFORMATION ONLY.
* HMA QUANTITIES FOR SAFETY EDGE IS INCLUDED IN THE RUBBERIZED HMA (GAP GRADED)

SUMMARY OF QUANTITIES

Q-4

STATE OF CALIFORNIA - DEPARTMENT OF TRANSPORTATION
Caltrans®
DESIGN

FUNCTIONAL SUPERVISOR: CHRIS M THOMAS
CALCULATED-DESIGNED BY: BAHMAN YAZDANI
CHECKED BY: RICARDO PADILLA
REVISED BY
DATE REVISED

LAST REVISION 03-21-13
DATE PLOTTED => 11-APR-2013
TIME PLOTTED => 13:55

Dist	COUNTY	ROUTE	POST MILES TOTAL PROJECT	SHEET No.	TOTAL SHEETS
11	SD	94	14.9/30.0	28	49

Bahman Yazdani 03-11-13
REGISTERED CIVIL ENGINEER DATE

03-11-13
PLANS APPROVAL DATE

REGISTERED PROFESSIONAL ENGINEER BAHMAN YAZDANI No. 58322 Exp. 06-30-14 CIVIL STATE OF CALIFORNIA

THE STATE OF CALIFORNIA OR ITS OFFICERS OR AGENTS SHALL NOT BE RESPONSIBLE FOR THE ACCURACY OR COMPLETENESS OF SCANNED COPIES OF THIS PLAN SHEET.

ROADWAY QUANTITIES

LOCATION Beg Sta	LOCATION END Sta	LINE	MAIN LANE AVERAGE WIDTH FT	L+ SHOULDER (N) AVERAGE WIDTH FT	R+ SHOULDER (N) AVERAGE WIDTH FT	COLD PLANE AC PAVEMENT SQYD	HIGH FRICTION SURFACE TREATMENT SQYD	RUBBERIZED HOT MIX ASPHALT (GAP GRADED) TON	SAFTY EDGE (N) TON	HMA (TYPE A) TON	TACK COAT TON	ASPHALTIC EMULSION (FOG SEAL COAT) TON	ASPHALT - RUBBER BINDER TON	SCREENINGS (HOT - APPLIED) TON
815+28.28	819+50.00	"SD-94"		4.5		211.85		28.25			0.05	0.04	0.53	3.39
820+11.59	822+98.00	"SD-94"		10.0		318.38		42.45			0.08	0.05	0.80	5.09
824+70.60	826+95.73	"SD-94"		5.1		128.40		17.12			0.03	0.02	0.32	2.05
827+79.70	835+79.00	"SD-94"		8.7		775.61		103.41			0.19	0.13	1.94	12.41
840+79.00	866+49.10	"SD-94"		7.9		2,265.39		302.05			0.57	0.38	5.66	36.25
867+49.50	888+34.70	"SD-94"		8.0		1,850.08		246.68			0.46	0.31	4.63	29.60
889+83.50	892+37.40	"SD-94"		8.0		226.22		30.16			0.06	0.04	0.57	3.62
893+08.70	898+85.60	"SD-94"		7.7		492.24		65.63			0.12	0.08	1.23	7.88
900+07.50	910+00.00	"SD-94"		7.8		860.49		114.73			0.22	0.14	2.15	13.77
910+00.00	922+00.00	"SD-94"		7.8		1,040.39		141.83	3.11		0.26	0.17	2.60	16.65
922+00.00	931+76.60	"SD-94"		7.8		846.70		112.89			0.21	0.14	2.12	13.55
932+45.81	943+42.30	"SD-94"		8.6		1,045.42		139.39			0.26	0.17	2.61	16.73
944+57.10	948+80.90	"SD-94"		6.7		313.63		41.82			0.08	0.05	0.78	5.02
949+29.50	956+73.50	"SD-94"		11.4		945.32		126.04			0.24	0.16	2.36	15.13
957+23.80	979+05.40	"SD-94"		7.8		1,880.10		250.68			0.47	0.31	4.70	30.08
979+05.40	1048+44.20	"SD-94"		8.0		6,161.47		821.53		616.15	1.54	1.03	15.40	98.58
1048+44.20	1049+93.60	"SD-94"		9.3		154.48		20.60			0.04	0.03	0.39	2.47
1051+16.80	1067+76.10	"SD-94"		7.9		1,450.96		193.46			0.36	0.24	3.63	23.22
1068+92.30	1082+00.00	"SD-94"		8.1		1,182.94		157.73			0.30	0.20	2.96	18.93
1082+00.00	1088+03.00	"SD-94"		8.1		545.47		74.29	1.56		0.14	0.09	1.36	8.73
1088+34.00	1095+95.00	"SD-94"		6.4		541.91		72.25		54.19	0.14	0.09	1.35	8.67
1096+34.30	1098+50.00	"SD-94"		8.0		190.79		25.44		19.08	0.05	0.03	0.48	3.05
1098+50.00	1101+68.20	"SD-94"		7.9		280.22		37.36			0.07	0.05	0.70	4.48
1102+08.80	1106+68.50	"SD-94"		8.2		416.34		55.51			0.10	0.07	1.04	6.66
1107+43.70	1113+00.00	"SD-94"		8.0		494.49		65.93			0.12	0.08	1.24	7.91
1113+00.00	1114+00.00	"SD-94"		8.0		88.89		11.85		8.89	0.02	0.01	0.22	1.42
1211+11.50	1226+72.40	"SD-94"		6.8		1,174.49		156.60			0.29	0.20	2.94	18.79
1228+91.70	1244+00.00	"SD-94"		5.7		958.09		127.75			0.24	0.16	2.40	15.33
1244+00.00	1261+98.20	"SD-94"		4.9		987.83		131.71		98.78	0.25	0.16	2.47	15.81
1261+98.20	1281+13.40	"SD-94"		5.0		1,064.22		141.90			0.27	0.18	2.66	17.03
1281+75.90	1281+90.00	"SD-94"		5.0		7.83		1.04		0.78	0.00	0.00	0.02	0.13
1281+90.00	1318+46.70	"SD-94"		5.0		2,031.50		270.87			0.51	0.34	5.08	32.50
1319+25.00	1324+17.40	"SD-94"		5.0		275.19		36.69		27.52	0.07	0.05	0.69	4.40
1325+77.40	1330+42.10	"SD-94"		3.4		174.32		23.24			0.04	0.03	0.44	2.79
1352+69.20	1369+20.00	"SD-94"		7.6		1,401.56		186.87			0.35	0.23	3.50	22.42
1399+29.00	1401+44.40	"SD-94"		5.8		139.67		18.62		13.97	0.03	0.02	0.35	2.23
1423+32.20	1428+90.00	"SD-94"		3.4		212.14		28.29		21.21	0.05	0.04	0.53	3.39
1448+47.50	1454+88.20	"SD-94"		3.7		263.37		36.78	1.66		0.07	0.04	0.66	4.21
1454+88.20	1468+85.00	"SD-94"		3.4		530.08		70.68		53.01	0.13	0.09	1.33	8.48
1526+34.30	1532+00.00	"SD-94"		4.1		256.60		34.21		25.66	0.06	0.04	0.64	4.11
1532+00.00	1559+70.20	"SD-94"		3.3		1,015.74		135.43			0.25	0.17	2.54	16.25
1559+70.20	1563+26.00	"SD-94"		3.3		130.46	130.46	17.39			0.03	0.02	0.33	2.09
1582+47.70	1601+94.20	"SD-94"		8.3		1,795.11	1,795.11	239.35			0.45	0.30	4.49	28.72
319+40.61	326+56.46	"F"	56.1			4,219.97		562.66			1.05		10.55	67.52
326+56.46	338+47.45	"B"	39.1			5,164.07		688.54			1.29		12.91	82.63
					SUB TOTAL 3	46,510.40	1,925.57	6,207.73		939.24	11.63	6.19	116.28	744.17
					SUB TOTAL 2	27,420.20	1,329.61	3,663.88		1,084.74	6.86	4.57	68.55	438.72
					SUB TOTAL 1	255,281.94	11,811.84	34,038.04		7,708.07	63.82	1.29	638.20	4,084.51
					TOTAL	329,212.55	15,067.02	43,909.65**	*	9,732.06	82.30	12.05	823.03	5,267.40

(N) = NOT A SEPARATE PAY ITEM, FOR INFORMATION ONLY.

* HMA QUANTITIES FOR SAFETY EDGE IS INCLUDED IN THE RUBBERIZED HMA (GAP GRADED)

** FOR ADDITIONAL QUANTITIES SEE HMA DIKE TABLE.

SUMMARY OF QUANTITIES

Q-5

REVISED BY | DATE REVISED

BAHMAN YAZDANI | RICARDO PADILLA

CALCULATED-DESIGNED BY | CHECKED BY

FUNCTIONAL SUPERVISOR: CHRIS M THOMAS

STATE OF CALIFORNIA - DEPARTMENT OF TRANSPORTATION

Caltrans® DESIGN

LAST REVISION 03-21-13 | DATE PLOTTED => 11-APR-2013 | TIME PLOTTED => 13:55

Dist	COUNTY	ROUTE	POST MILES TOTAL PROJECT	SHEET No.	TOTAL SHEETS
11	SD	94	14.9/30.0	29	49

Bahman Yazdani 03-11-13
REGISTERED CIVIL ENGINEER DATE

03-11-13
PLANS APPROVAL DATE

REGISTERED PROFESSIONAL ENGINEER BAHMAN YAZDANI No. 58322 Exp. 06-30-14 CIVIL STATE OF CALIFORNIA

THE STATE OF CALIFORNIA OR ITS OFFICERS OR AGENTS SHALL NOT BE RESPONSIBLE FOR THE ACCURACY OR COMPLETENESS OF SCANNED COPIES OF THIS PLAN SHEET.

TRAFFIC CONTROL SYSTEM

LOCATION	Rte	LINE	SIDE	BEGIN	END	TEMPORARY RAILING (TYPE K)	TEMPORARY CRASH CUSHION MODULE		TRAFFIC PLASTIC DRUM
				STATION	STATION	LF	TYPE	EACH	EACH
EB	94	"SD-94"	R+	834+90.50	835+90.50	100	TS-14	14	6
EB	94	"SD-94"	R+	840+74.00	841+74.00	100	TS-14	14	6
EB	94	"SD-94"	R+	1517+33.00	1518+33	100	TS-14	14	6
WB	94	"SD-94"	L+	1515+80.00	1516+80.00	100	TS-14	14	6
WB	94	"SD-94"	L+	1516+83.5	1517+83.5	100	TS-14	14	6
					TOTAL	500		70	30

RUMBLE STRIP

LOCATION		LINE	LANE LENGTH (N)	RUMBER STRIP	REMARKS
Beg Sta	END Sta		FT	Sta	
840+79.00	848+80.70	"SD-94"	801.7	8.0	R+ SHOULDER
849+27.20	895+09.60	"SD-94"	4582.4	45.8	R+ SHOULDER
895+45.60	896+54.00	"SD-94"	108.4	1.1	R+ SHOULDER
897+10.70	912+52.11	"SD-94"	1541.4	15.4	R+ SHOULDER
913+34.70	916+36.00	"SD-94"	301.3	3.0	R+ SHOULDER
917+00.00	918+25.00	"SD-94"	125.0	1.3	R+ SHOULDER
918+35.32	921+19.55	"SD-94"	284.2	2.8	R+ SHOULDER
921+70.87	922+69.26	"SD-94"	98.4	1.0	R+ SHOULDER
923+43.20	924+45.10	"SD-94"	101.9	1.0	R+ SHOULDER
925+16.40	928+03.30	"SD-94"	286.9	2.9	R+ SHOULDER
928+49.50	944+57.10	"SD-94"	1607.6	16.1	R+ SHOULDER
944+57.10	952+78.50	"SD-94"	821.4	8.2	R+ SHOULDER
953+35.90	979+05.40	"SD-94"	2569.5	25.7	R+ SHOULDER
979+05.40	1012+47.80	"SD-94"	3342.4	33.4	R+ SHOULDER
1013+21.00	1016+88.20	"SD-94"	367.2	3.7	R+ SHOULDER
1018+31.90	1022+01.80	"SD-94"	369.9	3.7	R+ SHOULDER
1022+51.20	1026+41.40	"SD-94"	390.2	3.9	R+ SHOULDER
1027+51.20	1028+75.00	"SD-94"	123.8	1.2	R+ SHOULDER
1029+51.00	1047+60.00	"SD-94"	1809.0	18.1	R+ SHOULDER
1048+44.00	1050+00.00	"SD-94"	156.0	1.6	R+ SHOULDER
1051+19.40	1063+75.30	"SD-94"	1255.9	12.6	R+ SHOULDER
1064+16.10	1067+76.10	"SD-94"	360.0	3.6	R+ SHOULDER
1068+61.20	1087+81.30	"SD-94"	1920.1	19.2	R+ SHOULDER
1098+50.00	1113+00.00	"SD-94"	1450.0	14.5	R+ SHOULDER
1114+50.00	1115+86.00	"SD-94"	136.0	1.4	R+ SHOULDER
1211+04.40	1225+86.10	"SD-94"	1481.7	14.8	R+ SHOULDER
1592+50.00	1601+94.20	"SD-94"	944.2	9.4	R+ SHOULDER
840+79.00	866+49.10	"SD-94"	2570.1	25.7	L+ SHOULDER
867+49.50	888+34.70	"SD-94"	2085.2	20.9	L+ SHOULDER
889+83.50	892+37.40	"SD-94"	253.9	2.5	L+ SHOULDER
893+08.70	898+85.60	"SD-94"	576.9	5.8	L+ SHOULDER
900+07.50	931+76.60	"SD-94"	3169.1	31.7	L+ SHOULDER
932+45.81	943+42.30	"SD-94"	1096.5	11.0	L+ SHOULDER
944+57.10	948+80.90	"SD-94"	423.8	4.2	L+ SHOULDER
949+29.50	956+73.50	"SD-94"	744.0	7.4	L+ SHOULDER
957+23.80	979+05.40	"SD-94"	2181.6	21.8	L+ SHOULDER
979+05.40	1048+44.20	"SD-94"	6938.8	69.4	L+ SHOULDER
1048+44.20	1049+93.60	"SD-94"	149.4	1.5	L+ SHOULDER
1051+16.80	1067+76.10	"SD-94"	1659.3	16.6	L+ SHOULDER
1068+92.30	1088+03.00	"SD-94"	1910.7	19.1	L+ SHOULDER
1088+34.00	1095+95.00	"SD-94"	761.0	7.6	L+ SHOULDER
1096+34.30	1098+50.00	"SD-94"	215.7	2.2	L+ SHOULDER
1098+50.00	1101+68.20	"SD-94"	318.2	3.2	L+ SHOULDER
1102+08.80	1106+68.50	"SD-94"	459.7	4.6	L+ SHOULDER
1107+43.70	1114+00.00	"SD-94"	656.3	6.6	L+ SHOULDER
1589+15.00	1601+94.20	"SD-94"	1279.2	12.8	L+ SHOULDER
			TOTAL	548.0	

(N) = NOT A SEPARATE PAY ITEM, FOR INFORMATION ONLY.

RUMBLE STRIP (CENTERLINE)

Rte	LOCATION		LINE	NUMBER (N)	LENGTH (N)	RUMBLE STRIP	REMARK
	Beg Sta	END Sta		EACH	FT	Sta	
94	960+81.00	1063+50.00	"SD-94"	1	10,269.0	102.7	CENTER LINE
94	1066+66.00	1090+16.00	"SD-94"	1	2,350.0	23.5	CENTER LINE
94	1096+30.00	1131+60.00	"SD-94"	1	3,530.0	35.3	CENTER LINE
94	1168+00.00	1263+00.00	"SD-94"	1	9,500.0	95.0	CENTER LINE
94	1290+00.00	1601+94.00	"SD-94"	1	31,194.0	311.9	CENTER LINE
			TOTAL			568.4	

IMPORTED BORROW

DIRECTION			BEGIN STATION	END STATION	LENGTH (FT)	AREA (N) (SQFT)	VOLUME (CY)	COMMENTS
WB	L+	"SD-94"	873+12.00	888+27.40	1,515.4	0.28	15.72	BEHIND TYPE E DIKE
WB	L+	"SD-94"	889+87.40	892+48.00	260.6	0.28	2.70	BEHIND TYPE E DIKE
WB	L+	"SD-94"	892+82.00	894+30.00	148.0	0.28	1.53	BEHIND TYPE E DIKE
WB	L+	"SD-94"	973+50.00	980+50.00	700.0	0.28	7.26	BEHIND TYPE E DIKE
WB	L+	"SD-94"	1002+33.80	1019+23.40	1,689.6	0.28	17.52	BEHIND TYPE E DIKE
WB	L+	"SD-94"	1067+97.80	1068+03.30	5.5	0.28	0.06	BEHIND TYPE E DIKE
WB	L+	"SD-94"	1068+32.90	1068+50.80	17.9	0.28	0.19	BEHIND TYPE E DIKE
WB	L+	"SD-94"	1068+54.80	1068+78.50	23.7	0.28	0.25	BEHIND TYPE E DIKE
WB	L+	"SD-94"	1073+65.80	1075+77.00	211.2	0.28	2.19	BEHIND TYPE E DIKE
WB	L+	"SD-94"	1326+80.00	1328+95.00	215.0	0.28	2.23	BEHIND TYPE E DIKE
WB	L+	"SD-94"	1454+00.00	1464+00.00	1,000.0	0.28	10.37	BEHIND TYPE E DIKE
WB	L+	"SD-94"	1489+50.00	1491+00.00	150.0	0.28	1.56	BEHIND TYPE E DIKE
EB	R+	"SD-94"	973+75.00	976+39.00	264.0	0.28	2.74	BEHIND TYPE E DIKE
EB	R+	"SD-94"	979+82.00	990+38.00	1,056.0	0.28	10.95	BEHIND TYPE E DIKE
EB	R+	"SD-94"	993+65.00	1001+70.00	805.0	0.28	8.35	BEHIND TYPE E DIKE
EB	R+	"SD-94"	1019+80.00	1022+05.00	225.0	0.28	2.33	BEHIND TYPE E DIKE
EB	R+	"SD-94"	1053+91.50	1057+40.50	349.0	0.28	3.62	BEHIND TYPE E DIKE
EB	R+	"SD-94"	1058+82.00	1063+75.30	493.3	0.28	5.12	BEHIND TYPE E DIKE
EB	R+	"SD-94"	1065+87.00	1067+91.20	204.2	0.28	2.12	BEHIND TYPE E DIKE
EB	R+	"SD-94"	1068+02.70	1068+24.70	22.0	0.28	0.23	BEHIND TYPE E DIKE
EB	R+	"SD-94"	1068+65.40	1068+70.40	5.0	0.28	0.05	BEHIND TYPE E DIKE
EB	R+	"SD-94"	1068+75.60	1068+92.20	16.6	0.28	0.17	BEHIND TYPE E DIKE
EB	R+	"SD-94"	1090+64.00	1091+87.00	123.0	0.28	1.28	BEHIND TYPE E DIKE
EB	R+	"SD-94"	1092+21.00	1096+36.00	415.0	0.28	4.30	BEHIND TYPE E DIKE
EB	R+	"SD-94"	1112+56.00	1114+00.00	144.0	0.28	1.49	BEHIND TYPE E DIKE
EB	R+	"SD-94"	1114+30.00	1115+86.00	156.0	0.28	1.62	BEHIND TYPE E DIKE
EB	R+	"SD-94"	1129+20.00	1131+87.00	267.0	0.28	2.77	BEHIND TYPE E DIKE
EB	R+	"SD-94"	1227+09.70	1255+05.00	2,795.3	0.28	28.99	BEHIND TYPE E DIKE
EB	R+	"SD-94"	1261+80.00	1282+60.00	2,080.0	0.28	21.57	BEHIND TYPE E DIKE
EB	R+	"SD-94"	1329+03.40	1329+93.40	90.0	0.28	0.93	BEHIND TYPE E DIKE
EB	R+	"SD-94"	1532+90.00	1538+60.00	570.0	0.28	5.91	BEHIND TYPE E DIKE
						TOTAL	166.11	

SUMMARY OF QUANTITIES

Q-6

STATE OF CALIFORNIA - DEPARTMENT OF TRANSPORTATION
Caltrans®
DESIGN

FUNCTIONAL SUPERVISOR: CHRIS M THOMAS
CALCULATED-DESIGNED BY: BAHMAN YAZDANI
CHECKED BY: RICARDO PADILLA
REVISED BY
DATE REVISED

LAST REVISION 03-21-13
DATE PLOTTED => 11-APR-2013
TIME PLOTTED => 13:55

Dist	COUNTY	ROUTE	POST MILES TOTAL PROJECT	SHEET No.	TOTAL SHEETS
11	SD	94	14.9/30.0	30	49

Bahman Yazdani 03-11-13
REGISTERED CIVIL ENGINEER DATE

03-11-13
PLANS APPROVAL DATE

REGISTERED PROFESSIONAL ENGINEER BAHMAN YAZDANI No. 58322 Exp. 06-30-14 CIVIL STATE OF CALIFORNIA

THE STATE OF CALIFORNIA OR ITS OFFICERS OR AGENTS SHALL NOT BE RESPONSIBLE FOR THE ACCURACY OR COMPLETENESS OF SCANNED COPIES OF THIS PLAN SHEET.

HMA DIKE

DIRECTION	Rte	SIDE	LINE	Beg STATION	END STATION	Exist DIKE TYPE	PLACE HMA DIKE (TYPE E) (LF)	(TYPE A) (LF)	(TYPE C) (LF)	(TYPE D) (LF)	(TYPE F) (LF)	MINOR HMA HMA DIKE (TON)	RHMA (GAP GRADED) RHMA DIKE PAD (TON)	REMOVE AC DIKE (LF)
WB	94	L+	"SD-94"	842+88.00	856+68.00	E	1,380.0					35.88	27.2	1,380.0
WB	94	L+	"SD-94"	873+12.00	888+27.40	A	1,515.4					39.40	29.9	1,515.4
WB	94	L+	"SD-94"	889+87.40	892+48.00	A	260.6					6.78	5.1	260.6
WB	94	L+	"SD-94"	892+82.00	894+30.00	A	148.0					3.85	2.9	148.0
WB	94	L+	"SD-94"	925+27.00	928+20.70	E	293.7					7.64	5.8	293.7
WB	94	L+	"SD-94"	928+41.80	930+39.80	E	198.0					5.15	3.9	198.0
WB	94	L+	"SD-94"	930+79.40	931+90.30	E	110.9					2.88	2.2	110.9
WB	94	L+	"SD-94"	932+21.96	938+98.00	E	676.0					17.58	13.3	676.0
WB	94	L+	"SD-94"	953+70.00	956+70.00	E	300.0					7.80	5.9	300.0
WB	94	L+	"SD-94"	959+50.00	973+50.00	A		1,400.0				37.80	19.1	1,400.0
WB	94	L+	"SD-94"	973+50.00	980+50.00	A	700.0					18.20	13.8	700.0
WB	94	L+	"SD-94"	1002+33.80	1019+23.40	A	1,689.6					43.93	33.3	1,689.6
WB	94	L+	"SD-94"	1023+10.00	1031+00.00	E	790.0					20.54	15.6	790.0
WB	94	L+	"SD-94"	1032+00.00	1050+16.20	A		1,816.2				49.04	24.8	1,816.2
WB	94	L+	"SD-94"	1051+72.00	1052+19.50	E			47.5			0.4	0.5	47.5
WB	94	L+	"SD-94"	1052+19.50	1054+07.00	F					187.5	2.48	1.9	187.5
WB	94	L+	"SD-94"	1054+07.00	1054+69.50	F			62.5			0.5	0.6	62.5
WB	94	L+	"SD-94"	1054+69.50	1064+40.00	E	970.5					25.23	19.1	970.5
WB	94	L+	"SD-94"	1065+88.00	1067+93.10	C	205.1					5.33	4.0	205.1
WB	94	L+	"SD-94"	1067+97.80	1068+03.30	A	13.0					0.34	0.3	13.0
WB	94	L+	"SD-94"	1068+32.90	1068+50.80	A	17.9					0.47	0.4	17.9
WB	94	L+	"SD-94"	1068+54.80	1068+78.50	A	23.7					0.62	0.5	23.7
WB	94	L+	"SD-94"	1073+65.80	1075+77.00	A	211.2					5.49	4.2	211.2
WB	94	L+	"SD-94"	1087+50.00	1105+00.00	E	1,750.0					45.50	34.5	1,750.0
WB	94	L+	"SD-94"	1215+15.00	1219+30.00	E	415.0					10.79	8.2	415.0
WB	94	L+	"SD-94"	1228+50.00	1236+50.00	E	800.0					20.80	15.8	800.0
WB	94	L+	"SD-94"	1244+80.00	1281+36.70	E	3,656.7					95.07	72.1	3,656.7
WB	94	L+	"SD-94"	1281+70.00	1309+00.00	E	2,730.0					70.98	53.8	2,730.0
WB	94	L+	"SD-94"	1326+38.00	1327+13.00	F					75.0	0.99	0.7	75.0
WB	94	L+	"SD-94"	1327+13.00	1327+75.50	C			62.5			0.5	0.6	62.5
WB	94	L+	"SD-94"	1327+75.50	1328+95.00	A	119.5					3.11	2.4	119.5
WB	94	L+	"SD-94"	1343+34.00	1347+00.00	A		366.0				9.88	5.0	366.0
WB	94	L+	"SD-94"	1454+00.00	1463+10.00	A	910.0					23.66	17.9	910.0
WB	94	L+	"SD-94"	1463+10.00	1463+50.00	A	40.0					0.3	0.6	40.0
WB	94	L+	"SD-94"	1463+50.00	1464+00.00	A					50.0	0.66	0.5	50.0
WB	94	L+	"SD-94"	1474+00.00	1478+50.00	A					450.0	5.94	4.5	450.0
WB	94	L+	"SD-94"	1489+50.00	1491+00.00	A	150.0					3.90	3.0	150.0
WB	94	L+	"SD-94"	1558+20.00	1562+60.00	E	440.0					11.44	8.7	440.0
WB	94	L+	"SD-94"	1595+80.00	1601+94.20	E	614.2					15.92	12.1	614.2
WB		L+	"F"	319+39.00	320+64.00	E	150.0					3.90	3.0	150.0
WB		L+	"F"	321+50.00	322+68.00	E	118.0					3.07	2.3	118.0
WB		L+	"F"	323+03.00	324+52.00	E	149.0					3.87	2.9	149.0
WB		L+	"F"	324+70.00	324+98.00	E	28.0					0.73	0.6	28.0
WB		L+	"F"	324+98.00	326+24.00	A		126.0				3.40	1.7	126.0
WB		L+	"F"	326+50.00	328+28.00	A		178.0				4.81	2.4	178.0
WB		L+	"B"	328+61.00	329+52.00	A		91.0				2.46	1.2	91.0
WB		L+	"B"	331+52.00	331+81.00	A		29.0				0.78	0.4	29.0
EB		L+	"F"	319+79.00	321+00.00	E	144.0					3.74	2.8	144.0
EB		L+	"B"	325+49.00	326+58.00	A		109.0				2.94	1.5	109.0
EB		R+	"F"	326+77.00	327+76.00	A		99.0				2.67	1.3	99.0
EB		R+	"B"	329+25.00	329+97.00	A		72.0				1.94	1.0	72.0
EB		R+	"B"	330+33.00	331+73.00	A		140.0				3.78	1.9	140.0
EB		R+	"B"	332+07.00	332+59.00	A		52.0				1.40	0.7	52.0
EB		R+	"B"	336+17.00	337+52.00	D				390.0		22.9	12.5	390.0
						SUB TOTAL 1	21,718.0	4,478.2	172.5	390.0	762.5	719.1	510.6	27,521.2

SUMMARY OF QUANTITIES

Q-7

STATE OF CALIFORNIA - DEPARTMENT OF TRANSPORTATION
DESIGN
Caltrans

FUNCTIONAL SUPERVISOR: CHRIS M THOMAS
CALCULATED-DESIGNED BY: BAHMAN YAZDANI
CHECKED BY: RICARDO PADILLA
REVISED BY
DATE REVISED

LAST REVISION 03-21-13
DATE PLOTTED => 11-APR-2013
TIME PLOTTED => 13:55

Dist	COUNTY	ROUTE	POST MILES TOTAL PROJECT	SHEET No.	TOTAL SHEETS
11	SD	94	14.9/30.0	31	49

Bahman Yazdani 03-11-13
REGISTERED CIVIL ENGINEER DATE

03-11-13
PLANS APPROVAL DATE

REGISTERED PROFESSIONAL ENGINEER BAHMAN YAZDANI No. 58322 Exp. 06-30-14 CIVIL STATE OF CALIFORNIA

THE STATE OF CALIFORNIA OR ITS OFFICERS OR AGENTS SHALL NOT BE RESPONSIBLE FOR THE ACCURACY OR COMPLETENESS OF SCANNED COPIES OF THIS PLAN SHEET.

HMA DIKE

DIRECTION	Rte	SIDE	LINE	Beg STATION	END STATION	Exist DIKE TYPE	PLACE HMA DIKE (TYPE E) (LF)	(TYPE A) (LF)	(TYPE C) (LF)	(TYPE D) (LF)	(TYPE F) (LF)	MINOR HMA HMA DIKE (TON)	RHMA (GAP GRADED) RHMA DIKE PAD (TON)	REMOVE AC DIKE (LF)
EB	94	R+	"SD-94"	831+39.00	833+17.50	E	178.5					4.6	3.5	178.5
EB	94	R+	"SD-94"	871+50.00	892+35.50	E	2,085.5					54.2	41.1	2,085.5
EB	94	R+	"SD-94"	892+77.30	895+09.60	E	232.3					6.0	4.6	232.3
EB	94	R+	"SD-94"	895+45.60	896+54.00	E	108.4					2.8	2.1	108.4
EB	94	R+	"SD-94"	897+10.70	903+25.00	E	614.3					16.0	12.1	614.3
EB	94	R+	"SD-94"	903+56.00	912+52.00	E	896.0					23.3	17.7	896.0
EB	94	R+	"SD-94"	913+34.70	916+36.00	E	301.3					7.8	5.9	301.3
EB	94	R+	"SD-94"	917+00.00	918+25.00	E	125.0					3.3	2.5	125.0
EB	94	R+	"SD-94"	918+35.30	921+19.60	E	284.3					7.4	5.6	284.3
EB	94	R+	"SD-94"	921+70.90	922+69.30	E	98.4					2.6	1.9	98.4
EB	94	R+	"SD-94"	923+43.20	923+50.00	E	6.8					0.2	0.1	6.8
EB	94	R+	"SD-94"	946+20.00	952+79.00	E	659.0					17.1	13.0	659.0
EB	94	R+	"SD-94"	953+35.90	960+81.00	E	745.1					19.4	14.7	745.1
EB	94	R+	"SD-94"	973+75.00	976+39.00	A	264.0					6.9	5.2	264.0
EB	94	R+	"SD-94"	979+82.00	990+38.00	A	1,056.0					27.5	20.8	1,056.0
EB	94	R+	"SD-94"	993+65.00	1001+70.00	A	805.0					20.9	15.9	805.0
EB	94	R+	"SD-94"	1019+80.00	1022+05.00	A	225.0					5.9	4.4	225.0
EB	94	R+	"SD-94"	1022+85.00	1023+60.00	E	75.0					2.0	1.5	75.0
EB	94	R+	"SD-94"	1031+56.00	1037+22.50	E	566.5					14.7	11.2	566.5
EB	94	R+	"SD-94"	1037+22.50	1037+62.50	E			40.0			0.3	0.4	40.0
EB	94	R+	"SD-94"	1037+62.50	1038+56.50	E	94.0					2.4	1.9	94.0
EB	94	R+	"SD-94"	1044+25.00	1046+97.50	F					272.5	3.6	2.7	272.5
EB	94	R+	"SD-94"	1046+97.50	1047+60.00	C			62.5			0.5	0.6	62.5
EB	94	R+	"SD-94"	1049+50.00	1050+05.00	E	55.0					1.4	1.1	55.0
EB	94	R+	"SD-94"	1050+91.50	1053+29.00	F					237.5	3.1	2.3	237.5
EB	94	R+	"SD-94"	1053+29.00	1053+91.50	C			62.5			0.5	0.6	62.5
EB	94	R+	"SD-94"	1053+91.50	1057+40.50	A	349.0					9.1	6.9	349.0
EB	94	R+	"SD-94"	1058+82.00	1063+75.30	A	493.3					12.8	9.7	493.3
EB	94	R+	"SD-94"	1064+16.10	1065+40.00	E	123.9					3.2	2.4	123.9
EB	94	R+	"SD-94"	1065+87.00	1067+91.20	A	204.2					5.3	4.0	204.2
EB	94	R+	"SD-94"	1068+02.70	1068+24.70	A	42.0					1.1	0.8	42.0
EB	94	R+	"SD-94"	1068+65.40	1068+70.40	A	7.7					0.2	0.2	7.7
EB	94	R+	"SD-94"	1068+75.60	1068+92.20	A	16.6					0.4	0.3	16.6
EB	94	R+	"SD-94"	1076+20.00	1087+76.00	E	1,156.0					30.1	22.8	1,156.0
EB	94	R+	"SD-94"	1088+50.00	1090+17.70	A		167.7				4.5	2.3	167.7
EB	94	R+	"SD-94"	1090+64.00	1091+87.00	A	123.0					3.2	2.4	123.0
EB	94	R+	"SD-94"	1092+21.00	1096+36.00	A	415.0					10.8	8.2	415.0
EB	94	R+	"SD-94"	1098+72.00	1104+15.00	E	543.0					14.1	10.7	543.0
EB	94	R+	"SD-94"	1104+50.00	1108+00.00	E	350.0					9.1	6.9	350.0
EB	94	R+	"SD-94"	1112+56.00	1114+00.00	A	144.0					3.7	2.8	144.0
EB	94	R+	"SD-94"	1114+30.00	1115+86.00	A	156.0					4.1	3.1	156.0
EB	94	R+	"SD-94"	1129+20.00	1131+87.00	A	267.0					6.9	5.3	267.0
EB	94	R+	"SD-94"	1227+09.70	1255+05.00	A	2,795.3					72.7	55.1	2,795.3
EB	94	R+	"SD-94"	1261+80.00	1282+60.00	A	2,080.0					54.1	41.0	2,080.0
EB	94	R+	"SD-94"	1314+66.00	1321+94.00	E	728.0					18.9	14.3	728.0
EB	94	R+	"SD-94"	1327+00.50	1327+85.50	A		85.0				2.3	1.2	85.0
EB	94	R+	"SD-94"	1329+03.40	1329+93.40	A	90.0					2.4	1.8	90.0
EB	94	R+	"SD-94"	1357+65.00	1365+00.00	E	735.0					19.1	14.5	735.0
EB	94	R+	"SD-94"	1368+50.00	1372+50.00	A		400.0				10.8	5.5	400.0
EB	94	R+	"SD-94"	1449+12.00	1455+66.90	E	654.9					17.0	12.9	654.9
EB	94	R+	"SD-94"	1463+52.00	1467+07.00	E	355.0					9.2	7.0	355.0
EB	94	R+	"SD-94"	1527+00.00	1532+90.00	A		590.0				15.9	8.0	590.0
EB	94	R+	"SD-94"	1532+90.00	1538+60.00	A	570.0					14.8	11.2	570.0
EB	94	R+	"SD-94"	1561+68.00	1562+70.00	E	102.0					2.7	2.0	102.0
EB	94	R+	"SD-94"	1584+50.00	1592+50.00	E	800.0					20.8	15.8	800.0
EB	94	R+	"SD-94"	1597+10.00	1601+94.20	E	484.2					12.6	9.5	484.2
						SUB TOTAL 2	23,260.5	1,242.7	165.0	0.0	510.0	646.4	481.9	25,178.2
						SUB TOTAL 1	21,718.0	4,478.2	172.5	390.0	762.5	719.1	510.6	27,521.2
						TOTAL	44,978.5*	5,720.9	337.5	390.0	1,272.5	1,365.5*	992.5**	52,699.4*

* - FOR ADDITIONAL QUANTITIES SEE OVERSIDE DRAINS TABLE.
** - FOR ADDITIONAL QUANTITIES SEE ROADWAY QUANTITIES TABLE.

SUMMARY OF QUANTITIES

Q-8

REVISED BY | DATE REVISED
BAHMAN YAZDANI | RICARDO PADILLA
CALCULATED-DESIGNED BY | CHECKED BY
FUNCTIONAL SUPERVISOR: CHRIS M THOMAS
STATE OF CALIFORNIA - DEPARTMENT OF TRANSPORTATION
Caltrans® DESIGN

LAST REVISION 03-21-13 | DATE PLOTTED => 11-APR-2013 | TIME PLOTTED => 13:55

Dist	COUNTY	ROUTE	POST MILES TOTAL PROJECT	SHEET No.	TOTAL SHEETS
11	SD	94	14.9/30.0	32	49

Bahman Yazdani 03-11-13
REGISTERED CIVIL ENGINEER DATE

03-11-13
PLANS APPROVAL DATE

REGISTERED PROFESSIONAL ENGINEER BAHMAN YAZDANI No. 58322 Exp. 06-30-14 CIVIL STATE OF CALIFORNIA

THE STATE OF CALIFORNIA OR ITS OFFICERS OR AGENTS SHALL NOT BE RESPONSIBLE FOR THE ACCURACY OR COMPLETENESS OF SCANNED COPIES OF THIS PLAN SHEET.

TEMPORARY WATER POLLUTION CONTROL

DIRECTION	SIDE	LINE	STATION	TEMPORARY DRAINAGE INLET PROTECTION (TYPE 5) EA	TEMPORARY DRAINAGE INLET PROTECTION (TYPE 6B) EA
EB	R+	SD-94	820+31.1	1	
EB	R+	SD-94	821+46.0	1	
EB	R+	SD-94	823+16.9	1	
EB	R+	SD-94	823+68.0	1	
EB	R+	SD-94	827+55.9	1	
EB	R+	SD-94	831+82.9	1	
EB	R+	SD-94	936+81.0	1	
EB	R+	SD-94	940+04.0	1	
EB	R+	SD-94	943+96.2	1	
EB	R+	SD-94	949+30.1	1	
EB	R+	SD-94	952+37.3	1	
EB	R+	SD-94	954+17.7	1	
EB	R+	SD-94	957+35.6	1	
EB	R+	SD-94	1057+84.1	1	
EB	R+	SD-94	1062+14.8	1	
EB	R+	SD-94	1068+67.5		1
EB	R+	SD-94	1101+58.6	1	
EB	R+	SD-94	1103+90.0	1	
EB	R+	SD-94	1215+71.0	1	
EB	R+	B	338+50	1	
WB	L+	SD-94	823+45.0	1	
WB	R+	SD-94	827+55.9	1	
WB	L+	SD-94	832+67.1	1	
WB	L+	SD-94	848+62.8	1	
WB	L+	SD-94	858+40.5	1	
WB	L+	SD-94	877+39.0		1
WB	L+	SD-94	876+45.0		1
WB	L+	SD-94	889+68.0		1
WB	L+	SD-94	893+05.0	1	
WB	L+	SD-94	924+35.0		1
WB	L+	SD-94	925+37.7		1
WB	L+	SD-94	932+51.8	1	
WB	L+	SD-94	934+49.8	1	
WB	L+	SD-94	936+26.1	1	
WB	L+	SD-94	940+03.8	1	
WB	L+	SD-94	944+37.0	1	
WB	L+	SD-94	944+39.0	1	
WB	L+	SD-94	944+49.0		1
WB	L+	SD-94	949+33.4	1	
WB	L+	SD-94	960+33.0	1	
WB	L+	SD-94	1028+06.0	1	
WB	L+	SD-94	1089+47.4	1	
WB	L+	SD-94	1091+47.0	1	
WB	L+	SD-94	1093+21.0	1	
WB	L+	SD-94	1095+88.0	1	
WB	L+	SD-94	1096+28.9	1	
WB	L+	SD-94	1098+00.0	1	
WB	L+	SD-94	1114+74.7	1	
WB	L+	SD-94	1214+92.7	1	
WB	L+	SD-94	1324+06.8	1	
WB	L+	SD-94	1326+22.3	1	
SUB TOTAL				44	7
TOTAL				51	

OVERSIDE DRAINS

DIRECTION	SIDE	LINE	STATION	PLACE HMA DIKE (TYPE E) (LF)	MINOR HMA (TON)	PLACE HMA (MISC AREA) (SQYD)	REMOVE AC DIKE (LF)
WB	L+	"SD-94"	1265+16.00	6.0	0.5	2.0	6.0
WB	L+	"SD-94"	1294+49.00	6.0	0.5	2.0	6.0
WB	L+	"SD-94"	1306+22.00	6.0	0.5	2.0	6.0
WB	L+	"SD-94"	1344+57.00	6.0	0.5	2.0	6.0
WB	L+	"SD-94"	1455+07.00	6.0	0.5	2.0	6.0
WB	L+	"SD-94"	1457+50.00	6.0	0.5	2.0	6.0
WB	L+	"SD-94"	1474+56.00	6.0	0.5	2.0	6.0
WB	L+	"SD-94"	1476+10.00	6.0	0.5	2.0	6.0
WB	L+	"SD-94"	1491+19.00	6.0	0.5	2.0	6.0
EB	R+	"SD-94"	900+65.00	6.0	0.5	2.0	6.0
EB	R+	"SD-94"	975+08.00	6.0	0.5	2.0	6.0
EB	R+	"SD-94"	982+50.00	6.0	0.5	2.0	6.0
EB	R+	"SD-94"	988+00.00	6.0	0.5	2.0	6.0
EB	R+	"SD-94"	1036+00.00	6.0	0.5	2.0	6.0
EB	R+	"SD-94"	1241+26.0	6.0	0.5	2.0	6.0
TOTAL				90.0*	7.5*	30.0	90.0*

* - FOR ADDITIONAL QUANTITIES SEE HMA DIKE TABLE.

SAFETY EDGE

LOCATION Beg Sta	LOCATION END Sta	L+	R+	SAFETY EDGE (N) LF
849+27.20	851+00.00		X	172.8
910+00.00	922+00.00	X		1200.0
925+16.40	928+03.30		X	286.9
928+49.50	944+57.10		X	1607.6
976+39.00	979+05.40		X	266.4
1013+21.00	1016+88.20		X	367.2
1082+00.00	1087+50.00	X		550.0
1108+00.00	1113+00.00		X	500.0
1448+47.50	1454+54.00	X		606.5
			TOTAL	5557.4

(N) = NOT A SEPARATE PAY ITEM, FOR INFORMATION ONLY.

CRACK TREATMENT

LOCATION Beg PM	LOCATION END PM	L+	R+	CRACK TREATMENT LNMI*
14.9	30.0		X	15.1
14.9	30.0	X		15.1
			TOTAL	30.2

* = LANE MILE

SUMMARY OF QUANTITIES

Q-9

STATE OF CALIFORNIA - DEPARTMENT OF TRANSPORTATION
Caltrans® DESIGN

FUNCTIONAL SUPERVISOR: CHRIS M THOMAS
CALCULATED-DESIGNED BY: BAHMAN YAZDANI
CHECKED BY: RICARDO PADILLA
REVISED BY
DATE REVISED

LAST REVISION 03-21-13
DATE PLOTTED => 11-APR-2013
TIME PLOTTED => 13:55

Dist	COUNTY	ROUTE	POST MILES TOTAL PROJECT	SHEET No.	TOTAL SHEETS
11	SD	94	14.9/30.0	33	49

Fariba Ramos 03-11-13
REGISTERED ELECTRICAL ENGINEER DATE

03-11-13
PLANS APPROVAL DATE

REGISTERED PROFESSIONAL ENGINEER FARIBA RAMOS No. E15619 Exp. 12-31-13 ELECTRICAL STATE OF CALIFORNIA

THE STATE OF CALIFORNIA OR ITS OFFICERS OR AGENTS SHALL NOT BE RESPONSIBLE FOR THE ACCURACY OR COMPLETENESS OF SCANNED COPIES OF THIS PLAN SHEET.

CONDUIT NOTES:

1 - 2"C, 2-3CSC.

2 - Exist 2-3"C, 2-3CSC, 3-12CSC, 2#10 (ltg), 3 dlc, 2 evc, 1 VIDEO CABLE HARNESS.

3 - Exist 2-3"C, 2-3CSC, 4-12CSC, 2#10 (ltg), 3 dlc, 3 evc, 1 sic, 2 VIDEO CABLE HARNESS.

4 - Exist 4-3"C, 6-3CSC, 9-12CSC, 2#6 (sig), 11 dlc, 3 evc, 3 sic, 4 VIDEO CABLE HARNESS.

N C 5 - Exist 3"C, 2-12CSC, 2#10 (ltg), 2 evc, 1 VIDEO CABLE HARNESS.

N C 6 - Exist 2"C, 3 dlc.

NOTES:

1 - INSTALL TYPE 1-D STANDARD PER ES-7B. Ø2 PPB (RIGHT), Ø3 PPB (RIGHT).

2 - INSTALL Ø2 EQUESTRIANS PUSH BUTTON AT 70" HEIGHT.

3 - RC EXISTING PEDESTRIANS AND EQUESTRIANS PUSH BUTTONS.

4 - TO EXISTING SD B4.84 120/240 V LOCATED AT 11590 CAMPO Rd.

5 - EXISTING SIGNAL PARTIALLY SHOWN.

6 - FOR ACCURATE RIGHT OF WAY AND ACCESS DATA, CONTACT RIGHT OF WAY ENGINEERING AT DISTRICT OFFICE.

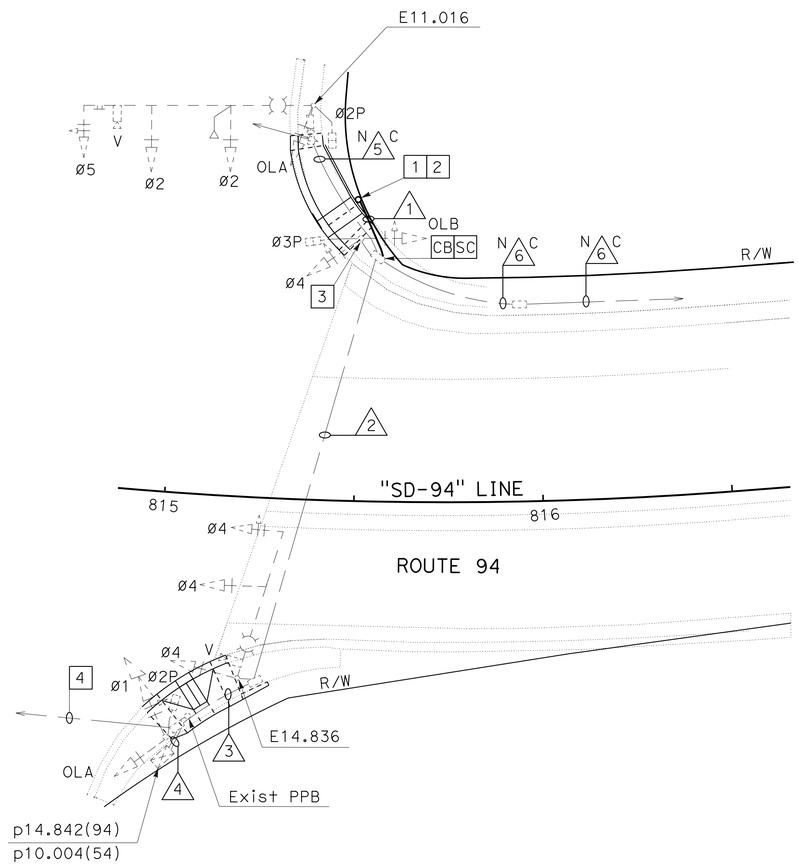

LEGEND:

N C = EXISTING CONDUIT NO CHANGE

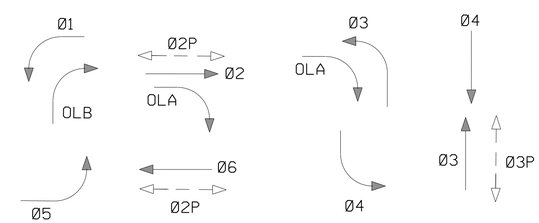

EXIST TRAFFIC PHASE DIAGRAM

p10.004 (Rte 94)
p14.842 (Rte 54)
Rte 94
AT CAMPO Rd
AND JAMACHA Rd

MODIFY SIGNAL AND LIGHTING
(LOCATION 1)

E-1

APPROVED FOR ELECTRICAL WORK ONLY

SCALE: 1" = 20'

STATE OF CALIFORNIA - DEPARTMENT OF TRANSPORTATION
Caltrans® TRAFFIC ELECTRICAL

FUNCTIONAL SUPERVISOR: BRIAN T PECUS
CALCULATED-DESIGNED BY: HENRY TSUI
CHECKED BY: FARIBA RAMOS
REVISED BY
DATE REVISED

LAST REVISION 03-21-13
DATE PLOTTED => 11-APR-2013
TIME PLOTTED => 13:55

Dist	COUNTY	ROUTE	POST MILES TOTAL PROJECT	SHEET No.	TOTAL SHEETS
11	SD	94	14.9/30.0	34	49

REGISTERED ELECTRICAL ENGINEER 03-11-13 DATE

03-11-13
PLANS APPROVAL DATE

REGISTERED PROFESSIONAL ENGINEER FARIBA RAMOS No. E15619 Exp. 12-31-13 ELECTRICAL STATE OF CALIFORNIA

THE STATE OF CALIFORNIA OR ITS OFFICERS OR AGENTS SHALL NOT BE RESPONSIBLE FOR THE ACCURACY OR COMPLETENESS OF SCANNED COPIES OF THIS PLAN SHEET.

NOTES:

1 - FURNISH AND INSTALL VDU, VIDEO DISPLAY AND COMMUNICATION CARD IN CABINET.

2 - RC EXISTING PEDESTRIAN BARRICADE.

3 - RC EXISTING DLCs IN CONDUIT.
INSTALL NEW DLCs PER CONDUIT AND CONDUCTOR SCHEDULE.

4 - TO SR-54/SR-94 SIGNAL CABINET p14.842.

5 - RC EXISTING PULL BOX.

6 - CONDUITS, CONDUCTORS, AND CABLES ARE EXISTING UNLESS OTHERWISE SHOWN.

7 - AB ALL EXISTING DETECTOR LOOPS.

8 - FOR ACCURATE RIGHT OF WAY AND ACCESS DATA, CONTACT RIGHT OF WAY ENGINEERING AT DISTRICT OFFICE.

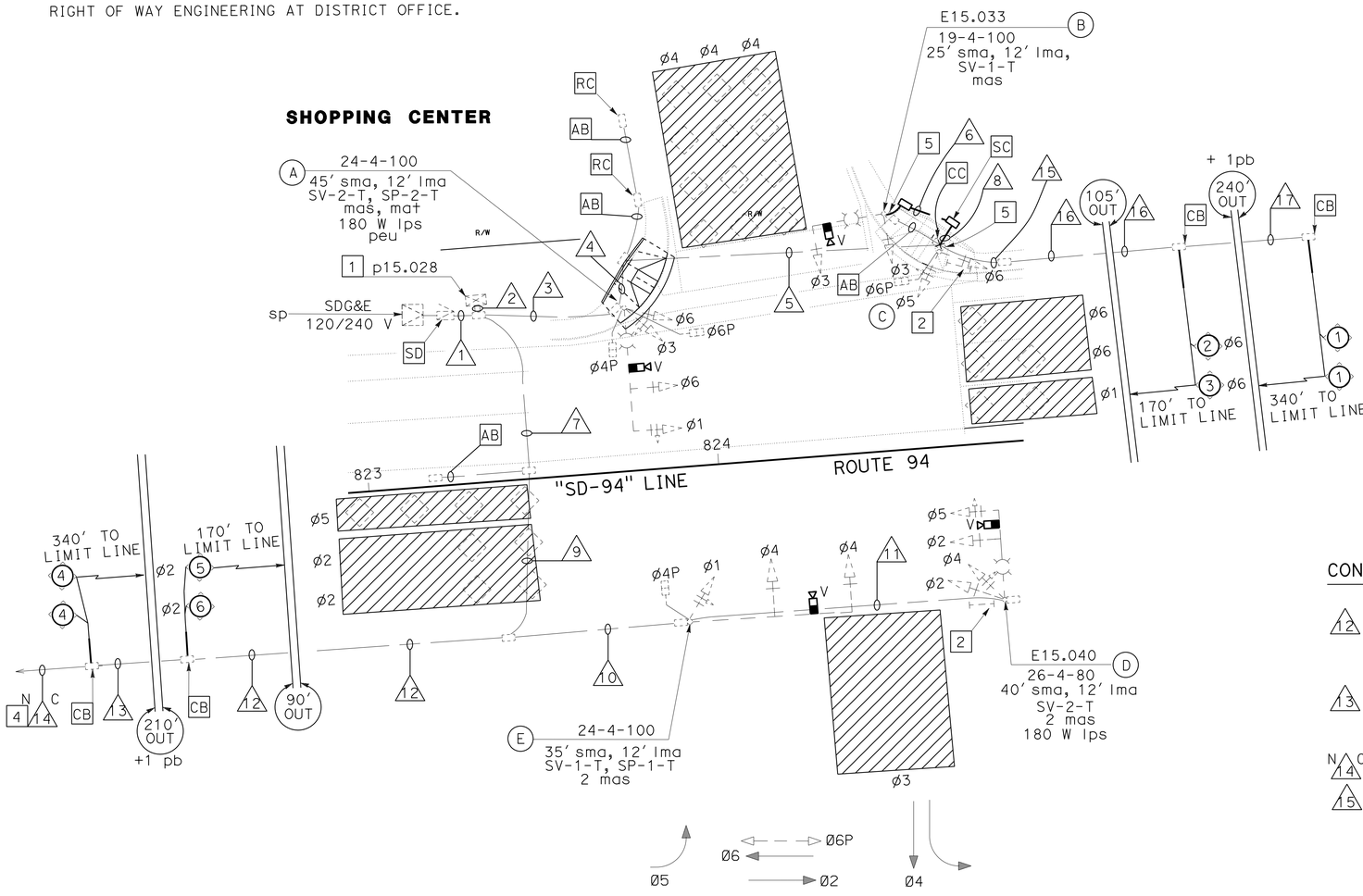

TRAFFIC PHASE DIAGRAM

CONDUIT AND CONDUCTOR SCHEDULE 6

AWG SIZE OR CABLE TYPE	PHASE	POLE OR CIRCUIT	EX 2" 1	4-EX 3" 2	2-EX 3" 3	EX 3" 4	EX 3" 5	NEW 2" 6	EX 3" 7	NEW 3" 8	EX 3" 9	EX 3" 10	EX 3" 11
3CSC		POLE-B											
		C		1 1	1 1	1 1	1 1			1 1			
		D		2					2		2	2	2
12CSC		E		1 1					1 1		1 1	1 1	
		A		2 2									
TOTAL CABLES-3CSC/12CSC				4 6	1 1	1 1	1 1		1 3	1 1	1 3	1 3	2
14		PEU	3		3								
10		LIGHTING (240 V)	2		2	2	2	2	2	2	2	2	2
6		SIGNAL (120 V)	2	2									
TYPE B DLC (NEW)	Ø2,Ø5			3					3		3		
	Ø4												
	Ø6			3	3	3	3			3			
EVC				2	1				1		1	1	1
SIC				1					1		1		
VIDEO CABLE HARNESS (NEW)	Ø2,Ø5	POLE - D		1					1		1	1	1
	Ø4	E		1					1		1	1	
	Ø6	A		1	1								
TOTAL CONDUCTORS/CABLES			7	24	12	7	7	2	13	7	13	9	6
NOTE				3	3	3	3		3	3	3		

CONDUIT NOTES:

12 - Exist 2"C, 3 dlc, 1 sic.
RC 3 dlc
ADD 3 DLC

13 - Exist 1 dlc, 1 sic.
RC 1 sic
ADD 1 DLC

N C 14 - Exist 2"C, 1 sic.

15 - Exist 2"C, 6 dlc.
RC ALL CONDUCTORS.
ADD 3 DLC.

16 - Exist 2"C, 3 dlc.
RC ALL CONDUCTORS.
ADD 3 DLC.

17 - Exist 2"C, 1 dlc.
RC ALL CONDUCTORS.
ADD 1 DLC.

p15.028
Rte 94
AT CAMPO ROAD

MODIFY SIGNAL AND LIGHTING
(LOCATION 2)

E-2

APPROVED FOR ELECTRICAL WORK ONLY

SCALE: 1" = 20'

STATE OF CALIFORNIA - DEPARTMENT OF TRANSPORTATION
Caltrans® TRAFFIC ELECTRICAL

FUNCTIONAL SUPERVISOR: BRIAN T PECUS
CALCULATED-DESIGNED BY: HENRY TSUI
CHECKED BY: FARIBA RAMOS
REVISED BY / DATE REVISED

LAST REVISION 03-21-13 | DATE PLOTTED => 11-APR-2013 | TIME PLOTTED => 13:55

Dist	COUNTY	ROUTE	POST MILES TOTAL PROJECT	SHEET No.	TOTAL SHEETS
11	SD	94	14.9/30.0	35	49

REGISTERED ELECTRICAL ENGINEER 03-11-13 DATE

03-11-13
PLANS APPROVAL DATE

REGISTERED PROFESSIONAL ENGINEER FARIBA RAMOS No. E15619 Exp. 12-31-13 ELECTRICAL STATE OF CALIFORNIA

THE STATE OF CALIFORNIA OR ITS OFFICERS OR AGENTS SHALL NOT BE RESPONSIBLE FOR THE ACCURACY OR COMPLETENESS OF SCANNED COPIES OF THIS PLAN SHEET.

NOTES:

1 - AB EXISTING DETECTOR LOOPS.

2 - CONDUITS, CONDUCTORS, AND CABLES ARE EXISTING UNLESS OTHERWISE SHOWN.

3 - FURNISH AND INSTALL VDU, VIDEO DISPLAY, AND COMMUNICATION CARD IN CABINET.

4 - RC EXISTING PEDESTRIAN BARRICADE.

5 - RC EXISTING DLCs IN CONDUIT.
INSTALL NEW DLCs PER CONDUIT AND CONDUCTOR SCHEDULE.

6 - RC EXISTING PEDESTRIAN PUSH BUTTON AND REPLACE WITH PPB (1-LEFT AND 1-RIGHT).

7 - RC EXISTING SP-2-T AND REPLACE WITH SP-2-T.

8 - RC EXISTING PEDESTRIAN PUSH BUTTON AND REPLACE WITH PPB (1-LEFT).

9 - RC EXISTING SP-1-T AND REPLACE WITH SP-1-T.

10 - RC EXISTING PEDESTRIAN PUSH BUTTON AND REPLACE WITH PPB (1-RIGHT).

11 - FOR ACCURATE RIGHT OF WAY AND ACCESS DATA, CONTACT RIGHT OF WAY ENGINEERING AT DISTRICT OFFICE.

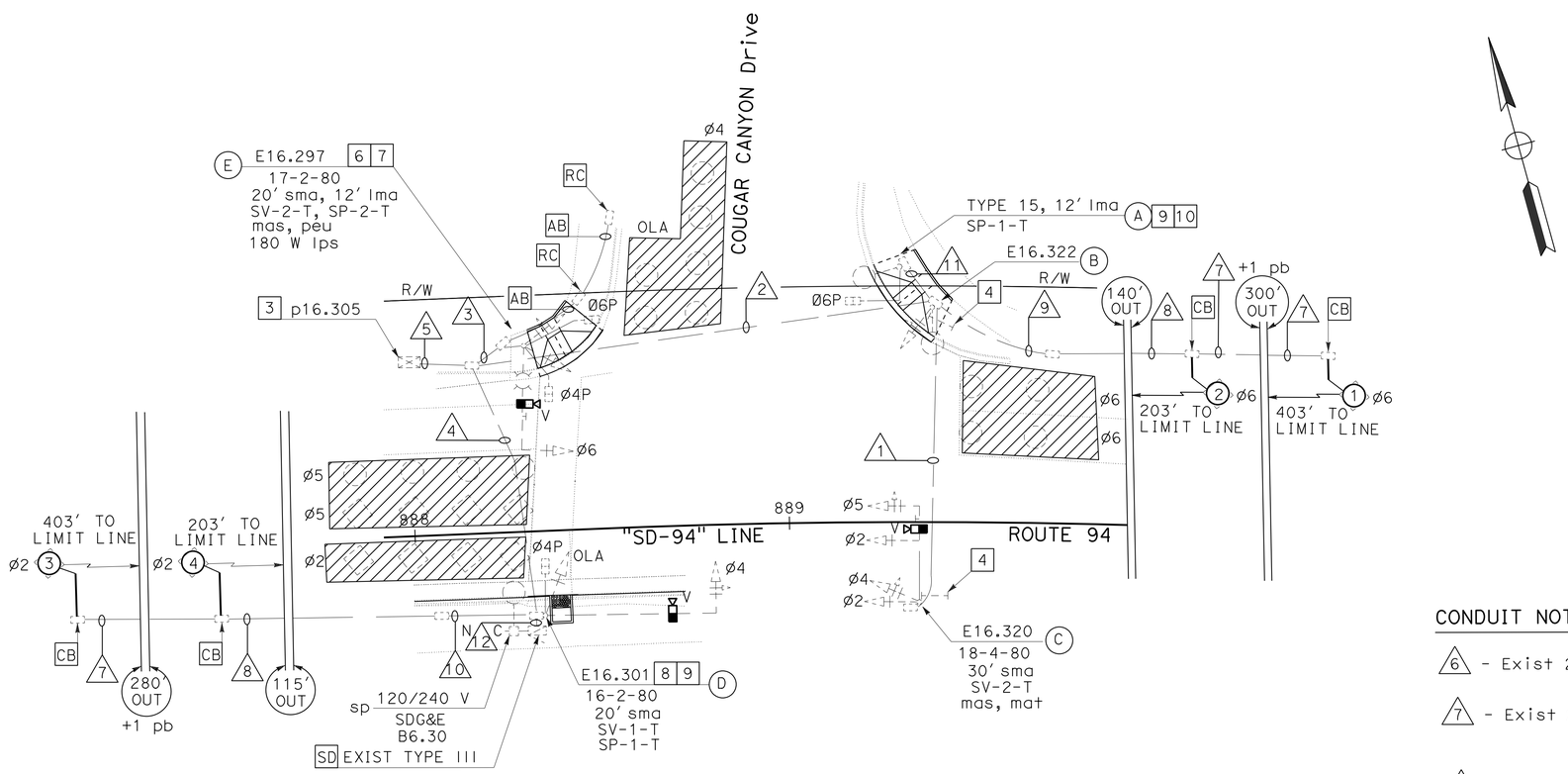

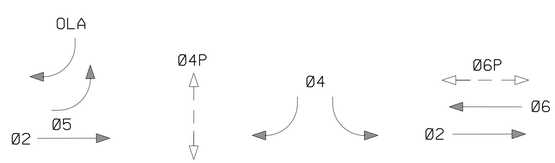

TRAFFIC PHASE DIAGRAM

CONDUIT AND CONDUCTOR SCHEDULE 2

AWG SIZE OR CABLE TYPE	PHASE	POLE OR CIRCUIT	CONDUIT SIZE/RUN FX 3"C 1	FX 3"C 2	FX 3"C 3	2-FX 3"C 4	2-FX 3"C 5
3CSC / 12CSC		POLE-A		1	1		1 1
		B			1		1
		C	2	2			2
		D				1 1	1 1
		E			2 1		2 1
TOTAL CABLES-3CSC/12CSC			2	1 4	2 1	1 1	4 6
14	PEU				3		
10	LIGHTING			2	2		
10	TDC						
8	SIG					2	2
TYPE B DLC (NEW)	Ø2,Ø5					2	2
	Ø6			2	2		2
EVC			1	1	1	1	3
VIDEO CABLE HARNESS (NEW)	Ø2,Ø5	POLE- C	1	1			1
	Ø4,OLA	D				1	1
	Ø6	E			1		1
TOTAL CONDUCTORS/CABLES			4	11	12	6	22
NOTE				5	5		5

CONDUIT NOTES:

6 - Exist 2"C, 3 dlc, RC dlc

7 - Exist 2"C, 1 dlc, RC dlc
ADD 1 DLC.

8 - Exist 2"C, 2 dlc, RC 2 dlc
ADD 2 DLC.

9 - Exist 2"C, 4 dlc, RC 4 dlc
ADD 2 DLC.

10 - Exist 2"C, 3 dlc, RC 3 dlc
ADD 2 DLC.

11 - Exist 3"C, 2#10 (ltg)
1-12 csc, 1-3 csc

N C 12 - EXIST 2"C, 2#10 (ltg), 2#8 (sig), 2#10 (tdc), 3#14 (peu).

p16.305
Rte 94
AT COUGAR CANYON Rd

MODIFY SIGNAL AND LIGHTING
(LOCATION 3)

E-3

APPROVED FOR ELECTRICAL WORK ONLY

SCALE: 1" = 20'

STATE OF CALIFORNIA - DEPARTMENT OF TRANSPORTATION
Caltrans
TRAFFIC ELECTRICAL

FUNCTIONAL SUPERVISOR: BRIAN T PECUS
CALCULATED-DESIGNED BY: HENRY TSUI
CHECKED BY: FARIBA RAMOS
REVISED BY
DATE REVISED

LAST REVISION 03-21-13
DATE PLOTTED => 11-APR-2013
TIME PLOTTED => 13:55

Dist	COUNTY	ROUTE	POST MILES TOTAL PROJECT	SHEET No.	TOTAL SHEETS
11	SD	94	14.9/30.0	36	49

REGISTERED ELECTRICAL ENGINEER 03-11-13 DATE

03-11-13
PLANS APPROVAL DATE

REGISTERED PROFESSIONAL ENGINEER FARIBA RAMOS No. E15619 Exp. 12-31-13 ELECTRICAL STATE OF CALIFORNIA

THE STATE OF CALIFORNIA OR ITS OFFICERS OR AGENTS SHALL NOT BE RESPONSIBLE FOR THE ACCURACY OR COMPLETENESS OF SCANNED COPIES OF THIS PLAN SHEET.

NOTES:

1 - RC EXISTING SP-1-T AND REPLACE WITH SP-1-T.

2 - RC EXISTING SP-2-T AND REPLACE WITH SP-2-T.

3 - RC EXISTING DLCs IN CONDUIT.
INSTALL NEW DLCs PER CONDUIT AND CONDUCTOR SCHEDULE.

4 - RC ppb AND REPLACE WITH PPB (RIGHT).

5 - RC ppb.

6 - RL EXISTING TYPE 1-A. RC EXISTING TV-1-T, SP-1-T, AND PPB.

7 - FURNISH AND INSTALL VDU, VIDEO DISPLAY AND COMMUNICATION CARD IN CABINET.

8 - RC EXISTING PEDESTRIAN BARRICADE.

9 - Ø6 PPB (LEFT).

10 - Ø4P PPB (RIGHT) AND Ø2P PPB (RIGHT).

11 - CONDUITS, CONDUCTORS, AND CABLES ARE EXISTING UNLESS OTHERWISE SHOWN.

12 - AB ALL EXISTING DETECTOR LOOPS.

13 - FOR ACCURATE RIGHT OF WAY AND ACCESS DATA, CONTACT RIGHT OF WAY ENGINEERING AT DISTRICT OFFICE.

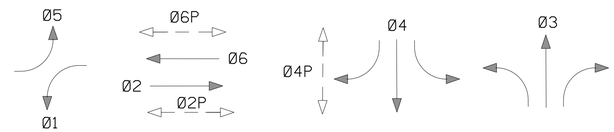

TRAFFIC PHASE DIAGRAM

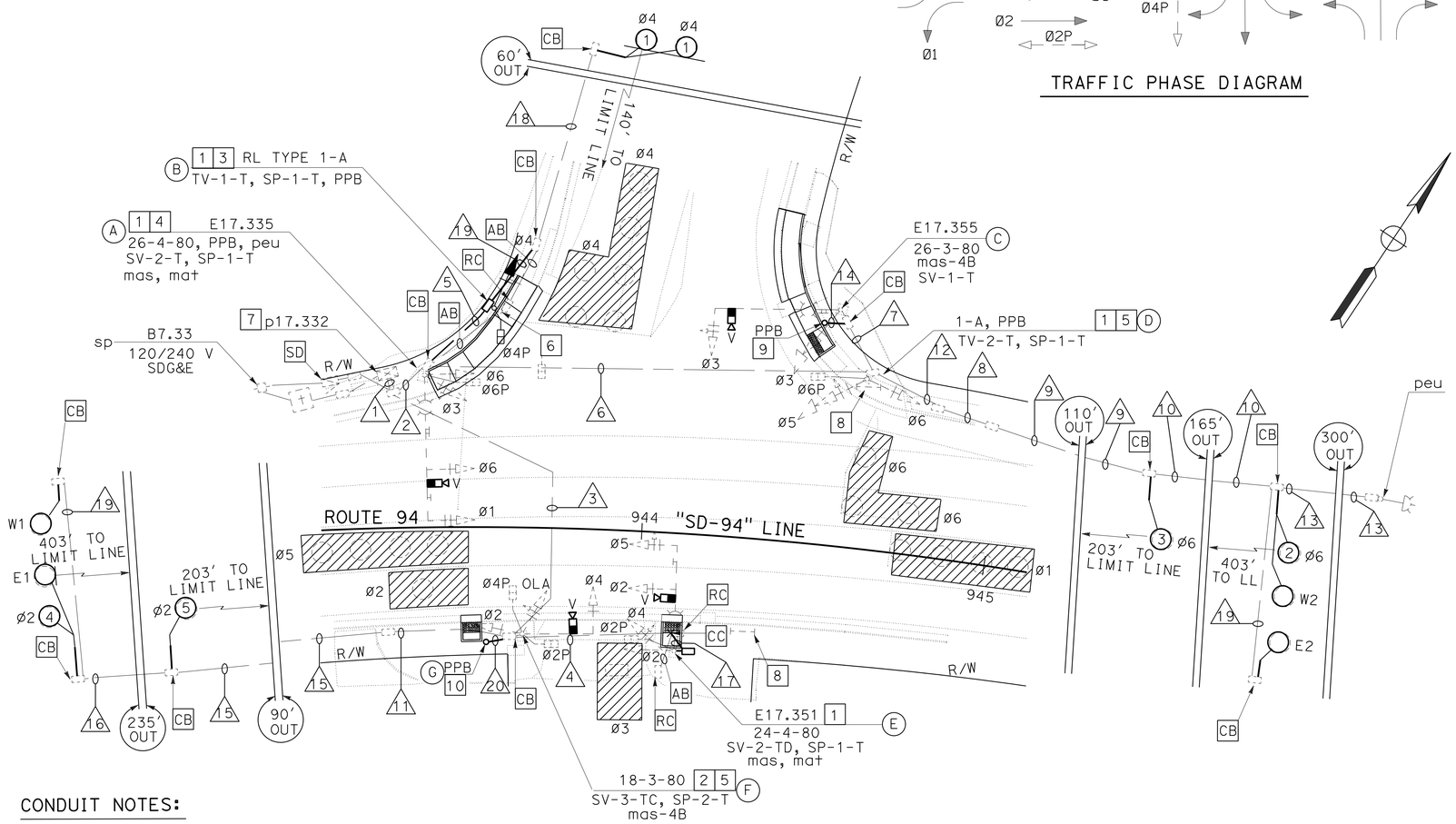

CONDUIT AND CONDUCTOR SCHEDULE 11

AWG SIZE OR CABLE TYPE	PHASE	POLE OR CIRCUIT	CONDUIT SIZE/RUN 2-EX 4"C 1	2-EX 4"C 2	EX 4"C 3	EX 3"C 4	NEW 2"C 5	EX 4"C 6	EX 2"C 7
3CSC / 12CSC		POLE-A	1 2	1 2					
		B	1 1	1 1			1 1		
		C	1 1	1 1				1 1	1 1
		D	1 1	1 1				1 1	
		E	1 2		1 2	1 2			
		F	1 2		1 2				
		(NEW) G	2 -		2 -				
		(NEW) PPB	1 -	1 -				1 -	1 -
TOTAL CABLES-3CSC/12CSC			9 9	5 5	4 4	1 2	1 1	3 2	2 1
6		SIGNAL	2						
10		LIGHTING		2	2	2		2	2
14		PEU		3					
8		FB		2				2	
TYPE B DLC (NEW)	Ø2,Ø5		4	4	4				
	Ø4,OLA						1		
	Ø1,Ø6		4	4				4	
EVC			4	2	2	1		1	1
VIDEO CABLE HARNESS (NEW)	Ø1,Ø6	POLE- A	1	1					
	Ø3	C	1	1				1	1
	Ø2,Ø5	E	1	1	1	1			
	Ø4	F	1	1	1				
TOTAL CONDUCTORS/CABLES			36	31	18	7	3	15	7
NOTE			3	3	3		3	3	

CONDUIT NOTES:

17 - 3"C, 1-3CSC, 2-12CSC, 2#10 (LTG), 1 EVC.
1 VIDEO CABLE HARNESS.

18 - Exist 2"C, 1 dlc,
RC 1 dlc
ADD 1 DLC.

19 - Exist 2"C, 3 dlc,
RC 3 dlc
ADD 1 DLC.

20 - 2"C, 2-3CSC.

CONDUIT NOTES:

8 - Exist 2"C, 6 dlc, 2#8 (fb),
RC 6 dlc,
ADD 4 DLC.

9 - Exist 2"C, 4 dlc, 2#8 (fb),
RC 4 dlc,
ADD 4 DLC.

10 - Exist 2"C, 3 dlc, 2#8 (fb),
RC 3 dlc,
ADD 3 DLC.

11 - Exist 2"C, 7 dlc,
RC 7 dlc,
ADD 4 DLC.

12 - Exist 2"C, 8 dlc, 2#8 (fb),
RC 8 dlc,
ADD 4 DLC.

13 - Exist 2"C, 2#8 (fb).

14 - 1"C, 1-3CSC.

15 - Exist 2"C, 4 dlc,
RC 4 dlc
ADD 4 DLC.

16 - Exist 2"C, 3 dlc,
RC 3 dlc
ADD 3 DLC.

APPROVED FOR ELECTRICAL WORK ONLY

SCALE: 1" = 20'

p17.345
Rte 94
AT STEEL CANYON Rd

MODIFY SIGNAL AND LIGHTING
(LOCATION 4)

E-4

STATE OF CALIFORNIA - DEPARTMENT OF TRANSPORTATION
Caltrans TRAFFIC ELECTRICAL

FUNCTIONAL SUPERVISOR: BRIAN T PECUS
CALCULATED-DESIGNED BY: HENRY TSUI
CHECKED BY: FARIBA RAMOS
REVISED BY
DATE REVISED

LAST REVISION 03-21-13
DATE PLOTTED => 11-APR-2013
TIME PLOTTED => 13:55

Dist	COUNTY	ROUTE	POST MILES TOTAL PROJECT	SHEET No.	TOTAL SHEETS
11	SD	94	14.9/30.0	37	49

REGISTERED ELECTRICAL ENGINEER 03-11-13 DATE

03-11-13
PLANS APPROVAL DATE

REGISTERED PROFESSIONAL ENGINEER FARIBA RAMOS No. E15619 Exp. 12-31-13 ELECTRICAL STATE OF CALIFORNIA

THE STATE OF CALIFORNIA OR ITS OFFICERS OR AGENTS SHALL NOT BE RESPONSIBLE FOR THE ACCURACY OR COMPLETENESS OF SCANNED COPIES OF THIS PLAN SHEET.

NOTES:

1 - RC EXISTING SP-1-T AND REPLACE WITH SP-1-T.

2 - RC EXISTING SP-2-T AND REPLACE WITH SP-2-T.

3 - RC EXISTING ppb AND REPLACE WITH PPB (LEFT).

4 - RC EXISTING ppb AND REPLACE WITH PPB (RIGHT).

5 - RC EXISTING TYPE 26 AND APPURTENANCES.

6 - FURNISH AND INSTALL VDU, VIDEO DISPLAY AND COMMUNICATION CARD IN CABINET.

7 - RC EXISTING PEDESTRIAN BARRICADE. SEE SIGN PLANS.

8 - CONDUITS, CONDUCTORS, AND CABLES ARE EXISTING UNLESS OTHERWISE SHOWN.

9 - TO EXISTING SD B9.78, 120/240 V ON WEST SIDE OF JEFFERSON Rd.

10 - RC EXISTING DLCs IN CONDUIT.
INSTALL NEW DLCs PER CONDUIT AND CONDUCTOR SCHEDULE.

11 - SEE DETAIL 'A' ON THIS SHEET FOR NEW POLE PLACEMENT.

12 - AB ALL EXISTING DETECTOR LOOPS.

13 - FOR ACCURATE RIGHT OF WAY AND ACCESS DATA, CONTACT RIGHT OF WAY ENGINEERING AT DISTRICT OFFICE.

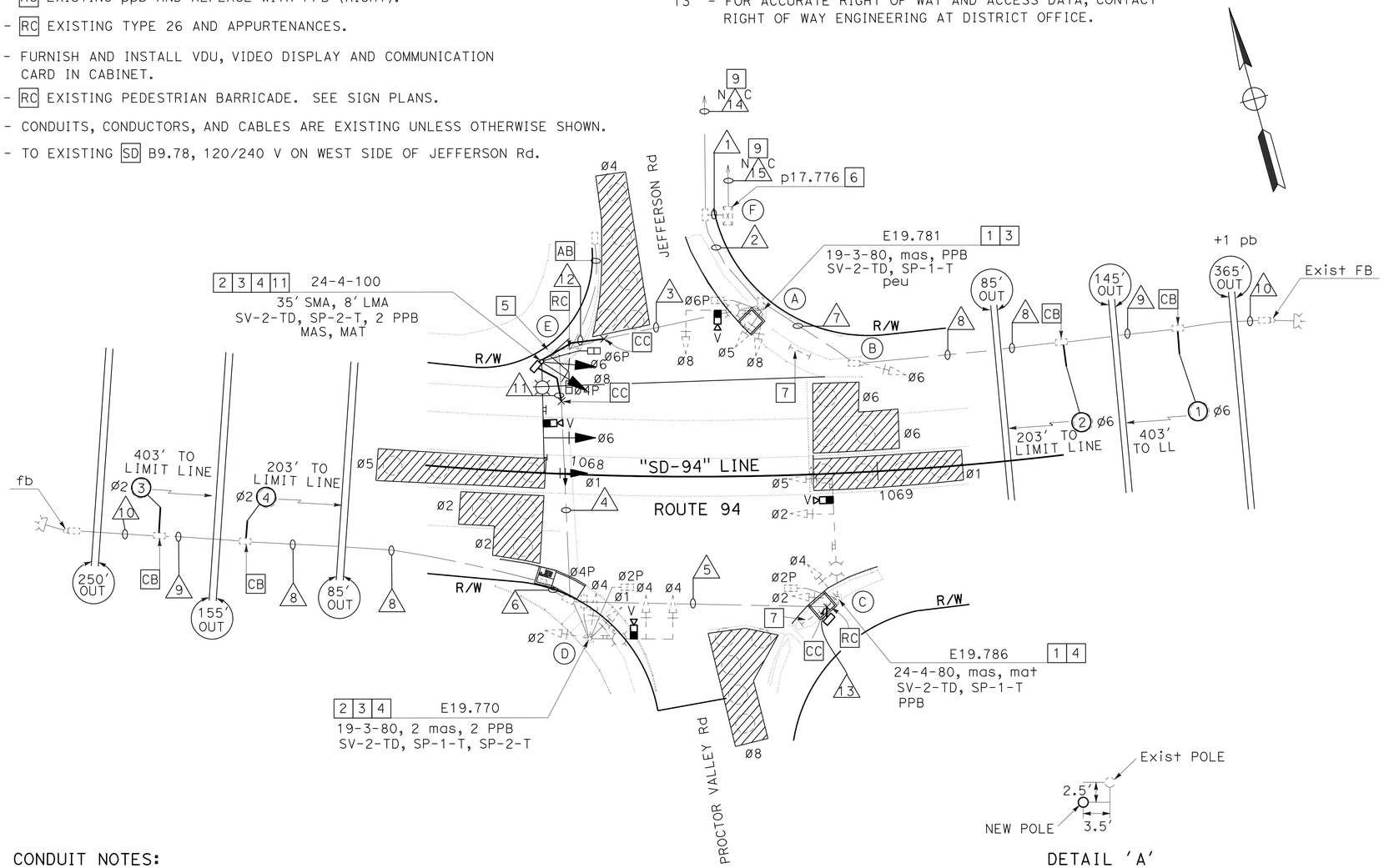

EXISTING CONDUIT AND CONDUCTOR SCHEDULE 8

AWG SIZE OR CABLE TYPE	PHASE	POLE OR CIRCUIT	CONDUIT SIZE/RUN 3-EX 3"C 1	3-EX 3"C 2	2-EX 3"C 3	2-EX 3"C 4	EX 3"C 5	EX 2"C 6	EX 2"C 7
3CSC		POLE-A	1 1						
		B	1						
		C	1 2	1 2	1 2	1 2	2		
12CSC		D	2 2	2 2	2 2	2 2			
		E	2 2	2 2	2 2				
TOTAL CABLES-3CSC/12CSC			6 8	6 8	5 6	3 4	1 2		
6		SIGNAL	2						
8		LIGHTING		2	2	2	2		
14		PEU		3					
14		FB		2	2	2		2	2
TYPE B DLC (NEW)	Ø2,Ø5		2	2	2	2		2	
	Ø6		2	2					2
EVC			4	4	3	2	1		
VIDEO CABLE HARNESS (NEW)	Ø8	POLE- A	1	1					
	Ø2,Ø5	C	1	1	1	1	1		
	Ø4	D	1	1	1	1			
	Ø1,Ø6	E	1	1	1				
TOTAL CONDUCTORS/CABLES			28	33	23	17	7	4	4
NOTE			10	10	10	10		10	10

DETAIL 'A'

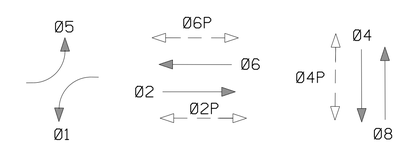

TRAFFIC PHASE DIAGRAM

CONDUIT NOTES:

8 - Exist 2"C, 2 dlc, 2#14 (fb),
RC 2 dlc,
ADD 2 DLC.

9 - Exist 2"C, 1 dlc, 2#14 (fb),
RC 1 dlc,
ADD 1 DLC.

10 - Exist 2"C, 2#14 (fb).

11 - 2-3"C, 3-3CSC, 4-12CSC, 2#14 (LTG), 2 DLC, 2#8 (FB), 2 EVC.
2 VIDEO CABLE HARNESS.

12 - 2-3"C, 5-3CSC, 6-12CSC, 2#8 (ltg), 2 DLC, 2#14 (fb), 3 EVC.
3 VIDEO CABLE HARNESS.

13 - 3"C, 1-3CSC, 2-12CSC, 2#8 (ltg), 1 EVC.
1 VIDEO CABLE HARNESS.

N 14 C - EXIST 2"C, 2#8 (ltg), 2#14 (fb), 3#14 (peu), 2#8 (tdc), 2#6 (sig).

N 15 C - EXIST 2"C, 2#6 (sig).
- EXIST 2"C, 1 sic (TELEPHONE).

p19.776
Rte 94
AT JEFFERSON Rd
AND PROCTOR VALLEY Rd

MODIFY SIGNAL AND LIGHTING
(LOCATION 5)

E-5

APPROVED FOR ELECTRICAL WORK ONLY

SCALE: 1" = 20'

STATE OF CALIFORNIA - DEPARTMENT OF TRANSPORTATION
Caltrans® TRAFFIC ELECTRICAL

FUNCTIONAL SUPERVISOR: BRIAN T PECUS
CALCULATED-DESIGNED BY: HENRY TSUI
CHECKED BY: FARIBA RAMOS
REVISED BY
DATE REVISED

LAST REVISION 03-21-13
DATE PLOTTED => 11-APR-2013
TIME PLOTTED => 13:55

Dist	COUNTY	ROUTE	POST MILES TOTAL PROJECT	SHEET No.	TOTAL SHEETS
11	SD	94	14.9/30.0	38	49

REGISTERED CIVIL ENGINEER 12-7-12 DATE

03-11-13
PLANS APPROVAL DATE

REGISTERED PROFESSIONAL ENGINEER Gurinderpal Bhullar No. C48815 Exp. 9-30-14 CIVIL STATE OF CALIFORNIA

THE STATE OF CALIFORNIA OR ITS OFFICERS OR AGENTS SHALL NOT BE RESPONSIBLE FOR THE ACCURACY OR COMPLETENESS OF SCANNED COPIES OF THIS PLAN SHEET.

TYPICAL LANE CLOSURE

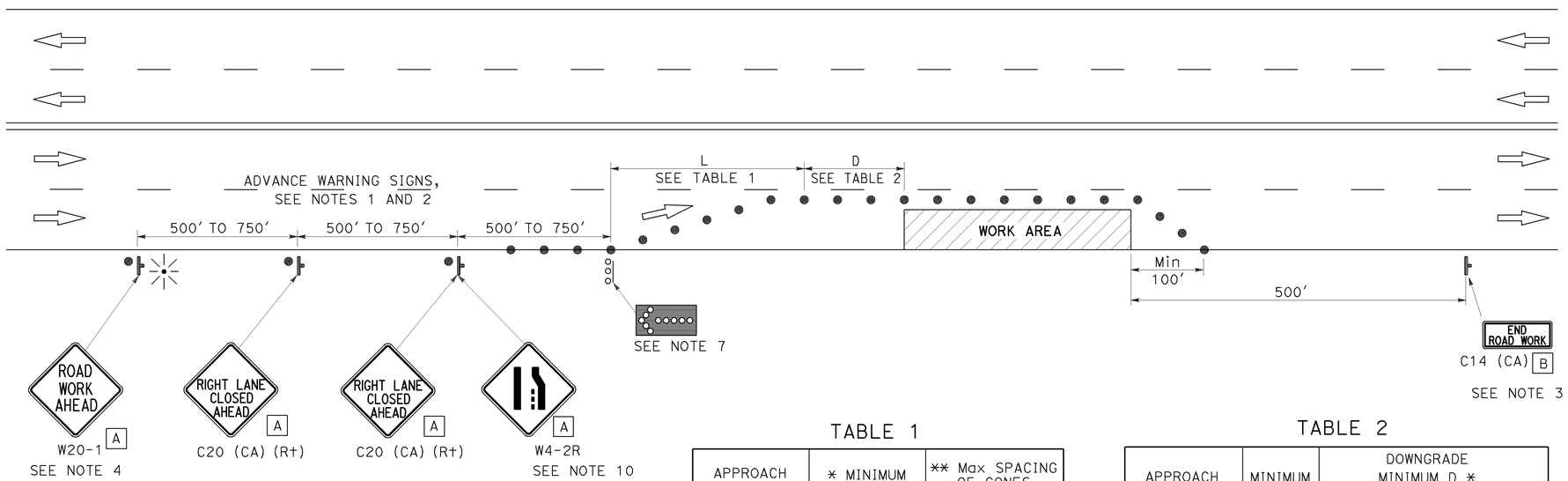

NOTES:

Unless otherwise specified in the special provisions, all temporary warning signs shall have black legend on orange background.

California code are designated by (CA). Otherwise, Federal (MUTCD) codes are shown.

LEGEND

- TRAFFIC CONE
- TEMPORARY SIGN
- FLASHING ARROW SIGN (FAS)
- FAS SUPPORT OR TRAILER
- PORTABLE FLASHING BEACON

SIGN PANEL SIZE (Min)

A 36" x 36"

B 36" x 18"

TABLE 1

APPROACH SPEED	* MINIMUM L	** Max SPACING OF CONES ALONG TAPER
mph	ft	ft
20 AND BELOW	80	20
25	125	25
30	180	30
35	245	35
40	320	40
45	540	45
50	600	50
Over 50	SEE NOTE 9	

* USE L FOR LANE WIDTHS LESS THAN OR EQUAL TO 12'.
** SEE NOTE 8.

TABLE 2

APPROACH SPEED	MINIMUM D	DOWNGRADE MINIMUM D *		
		-3%	-6%	-9%
mph	ft	ft	ft	ft
25 AND BELOW	155	158	165	173
30	200	205	215	227
35	250	257	271	287
40	305	315	333	354
45	360	378	400	427
50	425	446	474	507
OVER 50	SEE NOTE 9			

* USE ON SUSTAINED DOWNGRADE STEEPER THAN -3 PERCENT AND LONGER THAN 1 MILE.

NOTES:

1. Where approach speeds are low, advance warning signs may be placed at 300' spacing and placed closer in urban areas.
2. Each advance warning sign shall be equipped with at least two flags for daytime closure. Each flag shall be at least 16" x 16" in size and shall be orange or fluorescent red-orange in color. Flashing beacons shall be placed at the locations indicated for lane closure during hours of darkness.
3. A C14 (CA) "END ROAD WORK" sign, as appropriate, shall be placed at the end of the lane closure unless the end of work area is obvious, or ends within a larger project's limits.
4. If the W20-1 sign would follow within 2000' of a stationary W20-1 or C11 (CA) "ROAD WORK NEXT _____ MILES", use a C20 (CA) sign for the first advance warning sign.
5. All cones used for lane closures during the hours of darkness shall be fitted with retroreflective bands (or sleeves) as specified in the specifications.
6. Portable delineators, placed at one-half the spacing indicated for traffic cones, may be used instead of cones for daytime closures only.
7. Flashing arrow sign shall be either Type I or Type II.
8. The maximum spacing between cones along a tangent shall be 50' and along a taper shall be approximately as shown in Table 1.
9. For approach speeds over 50 mph, use the "Traffic Control System for Lane Closure On Freeways And Expressways" plan for lane closure details and requirements.
10. When specified in the special provisions, a W4-2 "LANE ENDS" symbol sign is to be used in place of the C20 (CA) "RIGHT LANE CLOSED AHEAD" sign.

STATE OF CALIFORNIA
DEPARTMENT OF TRANSPORTATION

TRAFFIC CONTROL SYSTEM FOR LANE CLOSURE ON MULTILANE CONVENTIONAL HIGHWAYS

NO SCALE

TCS-1

STATE OF CALIFORNIA - DEPARTMENT OF TRANSPORTATION

Caltrans

FUNCTIONAL SUPERVISOR

CALCULATED-DESIGNED BY | CHECKED BY

REVISED BY | DATE REVISED

LAST REVISION 03-11-13 | DATE PLOTTED => 10-DEC-2012 | TIME PLOTTED => 09:45

Dist	COUNTY	ROUTE	POST MILES TOTAL PROJECT	SHEET No.	TOTAL SHEETS
11	SD	94	14.9/30.0	39	49

REGISTERED CIVIL ENGINEER 12-7-12 DATE

03-11-13
PLANS APPROVAL DATE

REGISTERED PROFESSIONAL ENGINEER Gurinderpal Bhullar No. C48815 Exp. 9-30-14 CIVIL STATE OF CALIFORNIA

THE STATE OF CALIFORNIA OR ITS OFFICERS OR AGENTS SHALL NOT BE RESPONSIBLE FOR THE ACCURACY OR COMPLETENESS OF SCANNED COPIES OF THIS PLAN SHEET.

LEGEND

- TRAFFIC CONE
- TEMPORARY SIGN
- FLASHING ARROW SIGN (FAS)
- FAS SUPPORT OR TRAILER
- PORTABLE FLASHING BEACON

TABLE 1

APPROACH SPEED	* MINIMUM L	** Max SPACING OF CONES ALONG TAPER
mph	ft	ft
20 and below	80	20
25	125	25
30	180	30
35	245	35
40	320	40
45	540	45
50	600	50
OVER 50	SEE NOTE 11	

* USE L FOR LANE WIDTHS LESS THAN OR EQUAL TO 12'.
** SEE NOTE 10.

TABLE 2

APPROACH SPEED	MINIMUM D	DOWNGRADE MINIMUM D *		
		-3%	-6%	-9%
mph	ft	ft	ft	ft
25 AND BELOW	155	158	165	173
30	200	205	215	227
35	250	257	271	287
40	305	315	333	354
45	360	378	400	427
50	425	446	474	507
OVER 50	SEE NOTE 11			

* USE ON SUSTAINED DOWNGRADE STEEPER THAN -3 PERCENT AND LONGER THAN 1 MILE.

TYPICAL CLOSING OF HALF ROADWAY

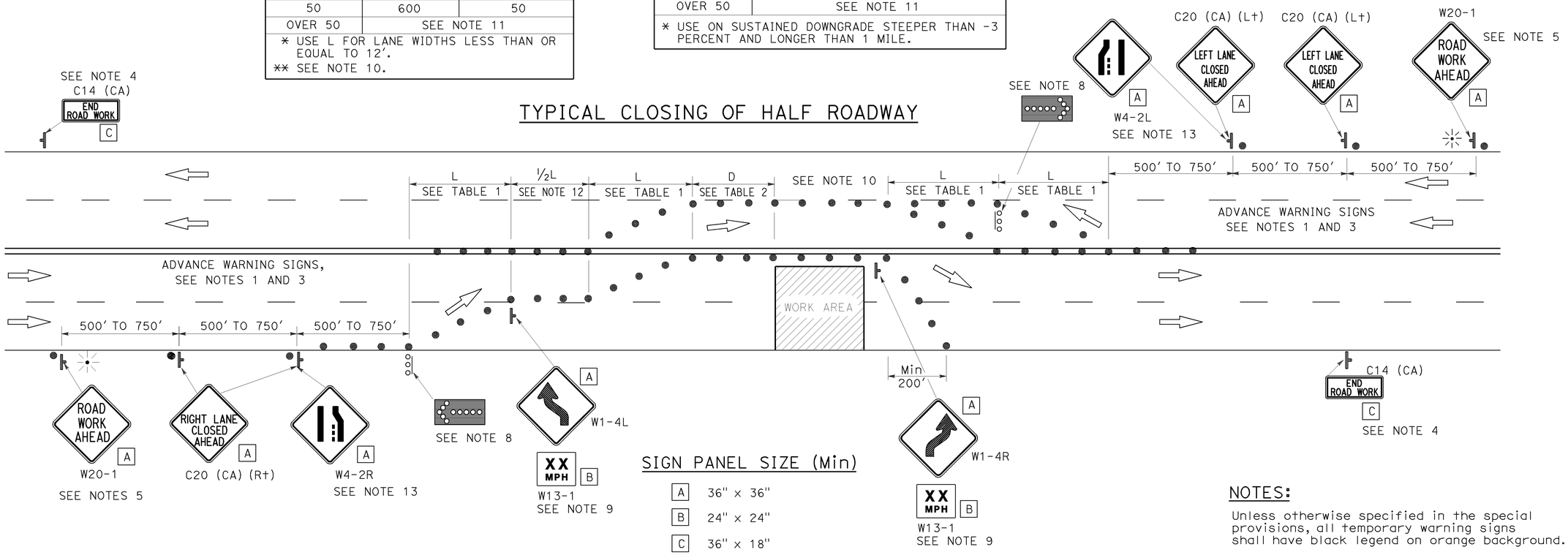

SIGN PANEL SIZE (Min)

A	36" x 36"
B	24" x 24"
C	36" x 18"

NOTES:

Unless otherwise specified in the special provisions, all temporary warning signs shall have black legend on orange background.

California code are designated by (CA). Otherwise, Federal (MUTCD) codes are shown.

NOTES:

1. Where Approach speeds are low, advance warning signs may be placed at 300' spacing and placed closer in urban areas.
2. At least one person shall be assigned to provide full time maintenance of traffic control devices for lane closure unless, otherwise directed by the Engineer.
3. Each advance warning sign in each direction of travel shall be equipped with at least two flags for daytime closure. Each flag shall be at least 16" x 16" in size and shall be orange or fluorescent red-orange in color. Flashing beacons shall be placed at the locations indicated for lane closure during hours of darkness.
4. A C14 (CA) "END ROAD WORK" sign, as appropriate, shall be placed at the end of the lane closure unless the end of work area is obvious, or ends within a larger project's limits.
5. If the W20-1 sign would follow within 2000' of a stationary W20-1 or C11 (CA) "ROAD WORK NEXT _____ MILES", use a C20 (CA) sign for the first advance warning sign.
6. All cones used for lane closures during the hours of darkness shall be fitted with retroreflective bands (or sleeves) as specified in the specifications.
7. Portable delineators, placed at one-half the spacing indicated for traffic cones, may be used instead of cones for daytime closures only.
8. Flashing arrow signs shall be either Type I or Type II.
9. Advisory speed will be determined by the Engineer. The W13-1 Sign will not be required when advisory speed is more than the posted or maximum speed limit.
10. The maximum spacing between cones along a tangent shall be 50' and along a taper shall be approximately as shown in Table 1.
11. For approach speeds over 50 mph, use the "Traffic Control System For Lane Closure On Freeways And Expressways" plan for lane closure details and requirements.
12. Unless otherwise specified in the special provisions, the (½ L) shown between the two (L) lane closure tapers shall be used.
13. When specified in the special provisions, a W4-2 "Lane Ends" symbol sign is to be used in place of the C20 (CA) "RIGHT (LEFT) LANE CLOSED AHEAD" sign.

STATE OF CALIFORNIA
DEPARTMENT OF TRANSPORTATION

TRAFFIC CONTROL SYSTEM FOR LANE CLOSURE ON MULTILANE CONVENTIONAL HIGHWAYS

NO SCALE

TCS-2

STATE OF CALIFORNIA - DEPARTMENT OF TRANSPORTATION
Caltrans

FUNCTIONAL SUPERVISOR | CALCULATED-DESIGNED BY | CHECKED BY | REVISED BY | DATE REVISED

LAST REVISION 03-11-13 | DATE PLOTTED => 10-DEC-2012 | TIME PLOTTED => 09:45

Dist	COUNTY	ROUTE	POST MILES TOTAL PROJECT	SHEET No.	TOTAL SHEETS
11	SD	94	14.9/30.0	40	49

REGISTERED CIVIL ENGINEER 12-7-12 DATE

03-11-13
PLANS APPROVAL DATE

REGISTERED PROFESSIONAL ENGINEER Gurinderpal Bhullar No. C48815 Exp. 9-30-14 CIVIL STATE OF CALIFORNIA

THE STATE OF CALIFORNIA OR ITS OFFICERS OR AGENTS SHALL NOT BE RESPONSIBLE FOR THE ACCURACY OR COMPLETENESS OF SCANNED COPIES OF THIS PLAN SHEET.

NOTES:

Unless otherwise specified in the special provisions, all temporary warning signs shall have black legend on orange background.

California code are designated by (CA). Otherwise, Federal (MUTCD) codes are shown.

TYPICAL LANE CLOSURE WITH REVERSIBLE CONTROL

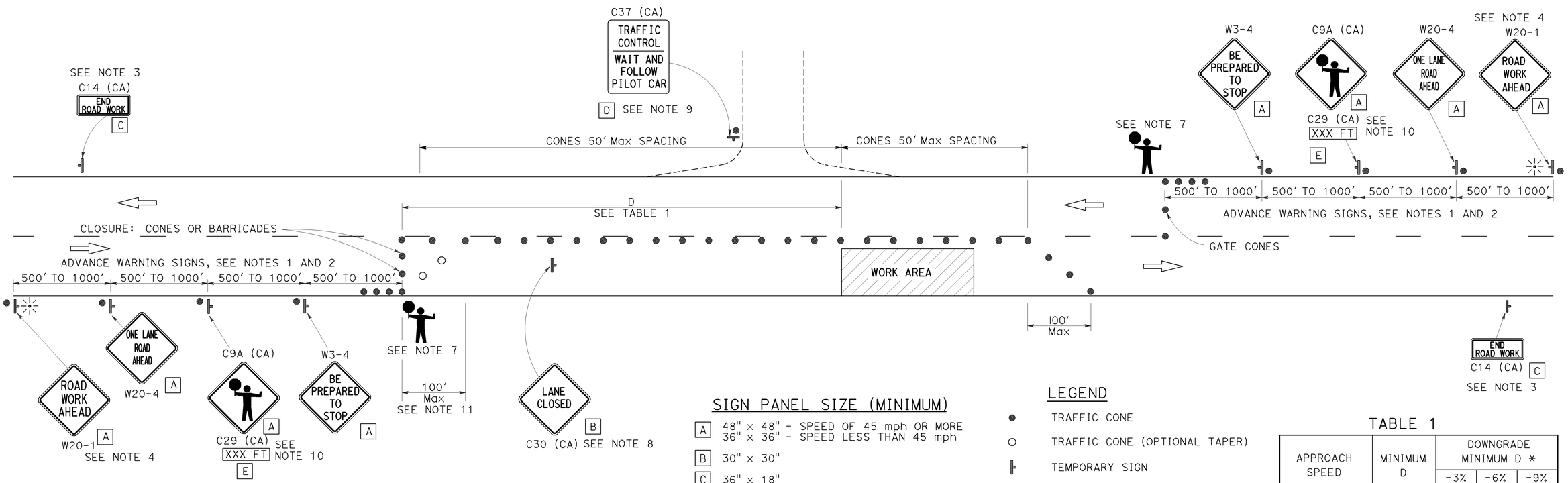

SIGN PANEL SIZE (MINIMUM)

- A — 48" x 48" - SPEED OF 45 mph OR MORE; 36" x 36" - SPEED LESS THAN 45 mph
- B — 30" x 30"
- C — 36" x 18"
- D — 36" x 42"
- E — 36" x 9"

LEGEND

- TRAFFIC CONE
- TRAFFIC CONE (OPTIONAL TAPER)
- TEMPORARY SIGN
- PORTABLE FLASHING BEACON
- FLAGGER

TABLE 1

APPROACH SPEED	MINIMUM D	DOWNGRADE MINIMUM D *		
		-3%	-6%	-9%
mph	ft	ft	ft	ft
25 AND BELOW	155	158	165	173
30	200	205	215	227
35	250	257	271	287
40	305	315	333	354
45	360	378	400	427
50	425	446	474	507
55	495	520	553	593
60	570	598	638	686
65	645	682	728	785

* USE ON SUSTAINED DOWNGRADE STEEPER THAN -3 PERCENT AND LONGER THAN 1 MILE.

NOTES:

1. Where approach speeds are low, advance warning signs may be placed at 300' spacing, and closer in urban areas.
2. Each advance warning sign in each direction of travel shall be equipped with at least two flags for daytime closure. Each flag shall be at least 16" x 16" in size and shall be orange or fluorescent red-orange in color. Flashing beacons shall be placed at the locations indicated for lane closure during hours of darkness.
3. A C14 (CA) "END ROAD WORK" sign, as appropriate, shall be placed at the end of the lane control unless the end of work area is obvious, or ends within a larger project's limits.
4. If the W20-1 sign would follow within 2000' of a stationary W20-1 or C11 (CA) "ROAD WORK NEXT _____MILES", use a W20-4 sign for the first advance warning sign.
5. All cones used for lane closures during the hours of darkness shall be fitted with retroreflective bands (or sleeves) as specified in the specifications.
6. Portable delineators, placed at one-half the spacing indicated for traffic cones, may be used instead of cones for daytime closures only.
7. Additional advance flaggers may be required. Flagger should stand in a conspicuous place, be visible to approaching traffic as well as approaching vehicles after the first vehicle has stopped. During the hours of darkness, the flagging-station and flagger shall be illuminated and clearly visible to approaching traffic. The illumination footprint of the lighting on the ground shall be at least 20' in diameter. Place a minimum of four cones at 50' intervals in advance of flagger station as shown.
8. Place C30 (CA) "LANE CLOSED" sign at 500' to 1000' intervals throughout extended work areas. They are optional if the work area is visible from the flagger station.
9. When a pilot car is used, place a C37 (CA) "TRAFFIC CONTROL-WAIT AND FOLLOW PILOT CAR" sign at all intersections within traffic control area. Signs shall be clean and visible at all times.
10. An optional C29 (CA) sign may be placed below the C9A (CA) sign.
11. Traffic cones or barricades may be placed on the optional taper as shown, barricades shall be Type I, II, or III.

STATE OF CALIFORNIA
DEPARTMENT OF TRANSPORTATION

TRAFFIC CONTROL SYSTEM FOR LANE CLOSURE ON TWO LANE CONVENTIONAL HIGHWAYS

NO SCALE

TCS-3

STATE OF CALIFORNIA - DEPARTMENT OF TRANSPORTATION
Caltrans

FUNCTIONAL SUPERVISOR | CALCULATED-DESIGNED BY | CHECKED BY | REVISED BY | DATE REVISED

LAST REVISION 03-11-13 | DATE PLOTTED => 10-DEC-2012 | TIME PLOTTED => 09:45

Dist	COUNTY	ROUTE	POST MILES TOTAL PROJECT	SHEET No.	TOTAL SHEETS
11	SD	94	14.9/30.0	41	49

REGISTERED CIVIL ENGINEER 12-7-12 DATE

03-11-13
PLANS APPROVAL DATE

REGISTERED PROFESSIONAL ENGINEER Gurinderpal Bhullar No. C48815 Exp. 9-30-14 CIVIL STATE OF CALIFORNIA

THE STATE OF CALIFORNIA OR ITS OFFICERS OR AGENTS SHALL NOT BE RESPONSIBLE FOR THE ACCURACY OR COMPLETENESS OF SCANNED COPIES OF THIS PLAN SHEET.

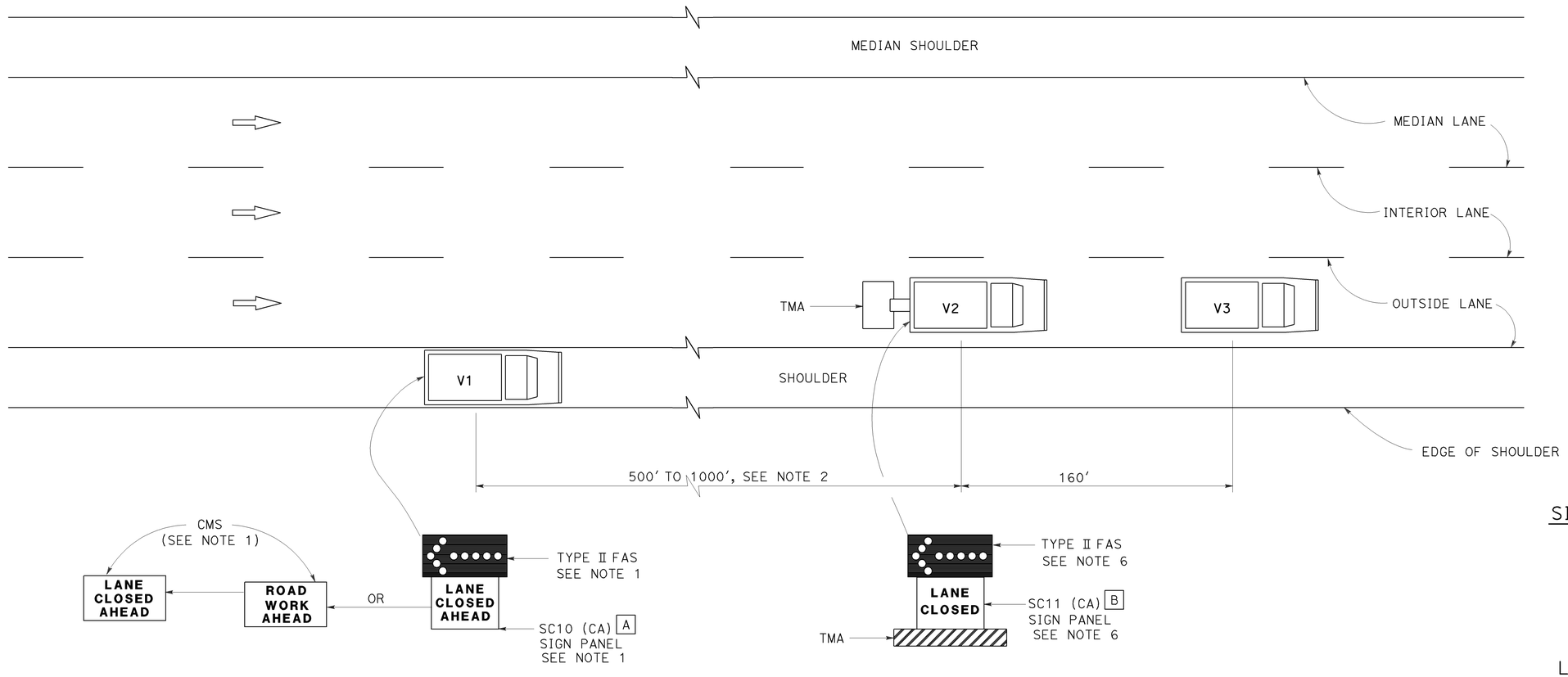

SIGN PANEL SIZE (Min)

A 66" x 36"

B 54" x 42"

LEGEND

V1	SIGN VEHICLE
V2	SHADOW VEHICLE
V3	WORK/APPLICATION VEHICLE
	FLASHING ARROW SIGN (FAS)
CMS	CHANGEABLE MESSAGE SIGN
TMA	TRUCK-MOUNTED ATTENUATOR

MOVING LANE CLOSURE ON MEDIAN LANE OR OUTSIDE LANE OF MULTILANE HIGHWAYS

NOTES:

1. Either a changeable message sign or a SC10 (CA) sign panel and a Type II flashing arrow sign shall be mounted on the rear of sign vehicle V1. A Type II flashing arrow sign shall be mounted on the rear of sign vehicle V1 and used with the SC10 (CA) sign panel. A Type II flashing arrow sign will not be required with the changeable message sign provided the flashing arrow sign symbol is displayed on the changeable message sign board. The changeable message sign shall be sequenced to show the "ROAD WORK AHEAD" message first, followed by the "LANE CLOSED AHEAD" message and then the flashing arrow sign symbol. For median lane closure, the flashing arrow symbol shall be reversed with the arrowhead on the right.

2. If traffic queues develop, sign vehicle V1 should be positioned upstream from the end of queue. Sign vehicle V1 shall be positioned where highly visible when shoulders are not available.

3. A minimum sight distance of 1500' should be provided in advance of sign vehicle V1.

4. Sign vehicle V1 should remain at the beginning of horizontal or vertical curves until the other vehicles (V2 and V3) are far enough beyond the curve to resume the minimum sight distance of 1500'.

5. Vehicle-mounted sign panels shall be Type III, IV, VII, VIII or IX retroreflective sheeting, black on white, black on orange, or black on fluorescent orange, with 6" minimum series D letters per Caltrans sign specifications.

6. Gross Vehicle Weight of shadow vehicle V2 shall be a minimum of 20,000 pounds and shall be equipped with a truck-mounted attenuator. The sign panel shown and a Type II flashing arrow sign shall be mounted on the rear of shadow vehicle V2. For median lane closure the flashing arrow sign symbol shall be displayed with the arrowhead on the right.

7. All vehicles used for lane closures shall be equipped with two-way radios, and the vehicle operators shall maintain communication during the work or application operation.

9. Where sufficient shoulder width is not available, sign vehicle V1 may encroach into the traffic lane staying as close to the edge of shoulder as practicable. Both V1 and V2 shall be equipped with a truck-mounted attenuator. The Gross Vehicle Weight of V1 and V2 shall be at least 20,000 pounds, respectively.

10. When multiple work vehicles are used in close proximity to each other, only one shadow vehicle is required, and spacing between work vehicles shall be minimized in order to deter traffic from entering the closed lane.

STATE OF CALIFORNIA
DEPARTMENT OF TRANSPORTATION

TRAFFIC CONTROL SYSTEM FOR MOVING LANE CLOSURE ON MULTILANE HIGHWAYS (OUTSIDE AND MEDIAN LANES)

NO SCALE

TCS-4

STATE OF CALIFORNIA - DEPARTMENT OF TRANSPORTATION
Caltrans

FUNCTIONAL SUPERVISOR | CALCULATED-DESIGNED BY | CHECKED BY | REVISED BY | DATE REVISED

LAST REVISION 03-11-13 | DATE PLOTTED => 10-DEC-2012 | TIME PLOTTED => 09:45

Dist	COUNTY	ROUTE	POST MILES TOTAL PROJECT	SHEET No.	TOTAL SHEETS
11	SD	94	14.9/30.0	42	49

REGISTERED CIVIL ENGINEER 12-7-12 DATE

03-11-13
PLANS APPROVAL DATE

REGISTERED PROFESSIONAL ENGINEER Gurinderpal Bhullar No. C48815 Exp. 9-30-14 CIVIL STATE OF CALIFORNIA

THE STATE OF CALIFORNIA OR ITS OFFICERS OR AGENTS SHALL NOT BE RESPONSIBLE FOR THE ACCURACY OR COMPLETENESS OF SCANNED COPIES OF THIS PLAN SHEET.

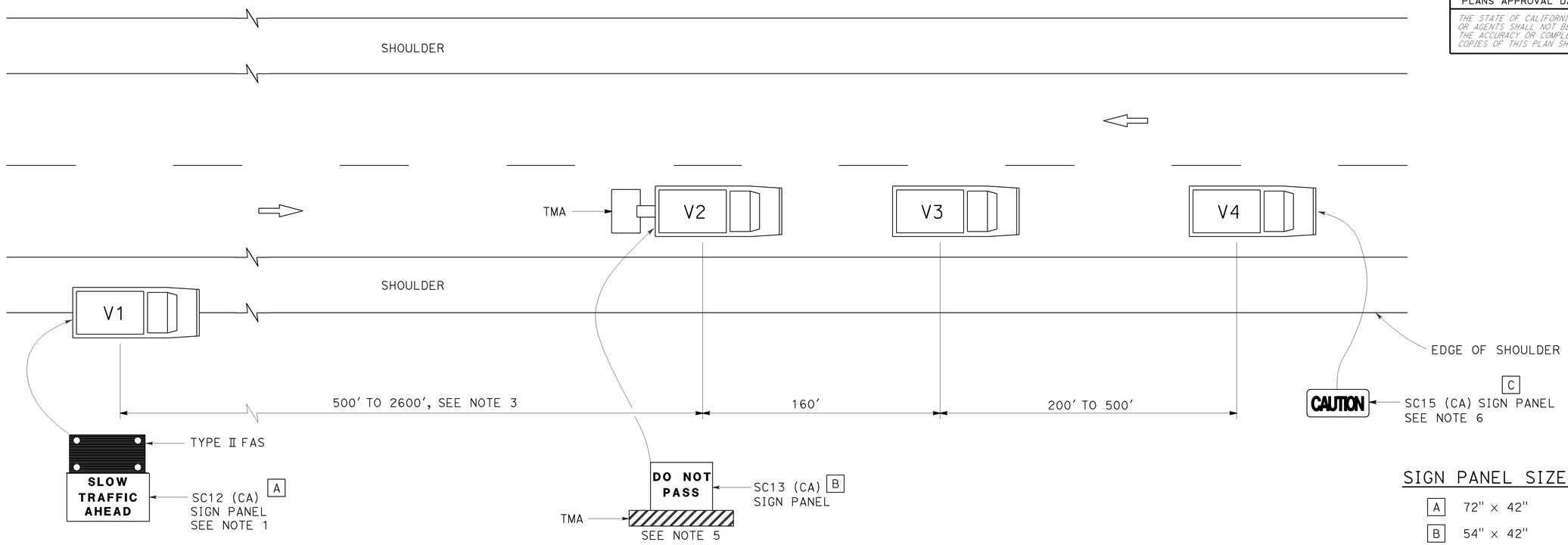

SIGN PANEL SIZE (Min)

A	72" × 42"
B	54" × 42"
C	54" × 24"

LEGEND

V1	SIGN VEHICLE
V2	SHADOW VEHICLE
V3	WORK/APPLICATION VEHICLE
V4	SIGN VEHICLE
TMA	TRUCK-MOUNTED ATTENUATOR
	FLASHING ARROW SIGN (FAS) IN FLASHING CAUTION MODE

NOTES:

1. Either a changeable message sign or a SC12 (CA) "SLOW TRAFFIC AHEAD" sign shall be mounted on the rear of sign vehicle V1. A Type II flashing arrow sign may be used with the SC12 (CA) sign panel.
2. Sign vehicle V1 should be positioned where highly visible when shoulders are not available.
3. If traffic queues develop, sign vehicle V1 should be positioned upstream from the end of queue.
4. Vehicle-mounted sign panels shall be Type III, IV VII, VIII or IX retroreflective sheeting, black on white, black on orange, or black on fluorescent orange, with 6" minimum series D letters per Caltrans sign specifications.
5. Gross Vehicle Weight of shadow vehicle shall be a minimum of 20,000 pounds and shall be equipped with a truck-mounted attenuator. The sign panel shown shall be mounted on the rear of shadow vehicle V2. The message "LANE CLOSED" may be used in place of the "DO NOT PASS" message.
6. The sign panel shown shall be mounted on the front of sign vehicle V4, facing opposing traffic.
7. All vehicles shall be equipped with flashing or rotating amber lights.
8. Sign vehicle V4 will not be required when the work and vehicles V2 and V3 are 2' or more from the centerline of the highway during the work or application operations.
9. All vehicles used for lane closures shall be equipped with two-way radios and the vehicle operators shall maintain communication during the work or application operation.
10. When multiple work vehicles are used in close proximity to each other, only one shadow vehicle is required and spacing between work vehicles shall be minimized in order to deter traffic from entering the closed lane.

STATE OF CALIFORNIA
DEPARTMENT OF TRANSPORTATION

TRAFFIC CONTROL SYSTEM FOR MOVING LANE CLOSURE ON TWO LANE HIGHWAYS

NO SCALE

TCS-5

STATE OF CALIFORNIA - DEPARTMENT OF TRANSPORTATION
Caltrans

FUNCTIONAL SUPERVISOR
CALCULATED-DESIGNED BY
CHECKED BY
REVISED BY
DATE REVISED

LAST REVISION 03-11-13
DATE PLOTTED => 10-DEC-2012
TIME PLOTTED => 09:45

Dist	COUNTY	ROUTE	POST MILES TOTAL PROJECT	SHEET No.	TOTAL SHEETS
11	SD	94	14.9/30.0	43	49

REGISTERED CIVIL ENGINEER

April 20, 2012
PLANS APPROVAL DATE

REGISTERED PROFESSIONAL ENGINEER
Roberta L. McLaughlin
No. C40375
Exp. 3-31-13
CIVIL
STATE OF CALIFORNIA

THE STATE OF CALIFORNIA OR ITS OFFICERS OR AGENTS SHALL NOT BE RESPONSIBLE FOR THE ACCURACY OR COMPLETENESS OF SCANNED COPIES OF THIS PLAN SHEET.

TO ACCOMPANY PLANS DATED 03-11-13

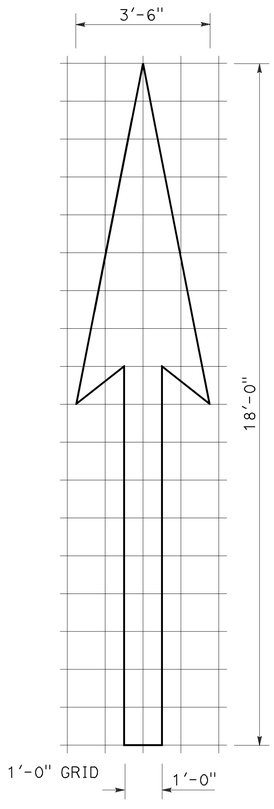

A=25 ft^2

TYPE I 18'-0" ARROW

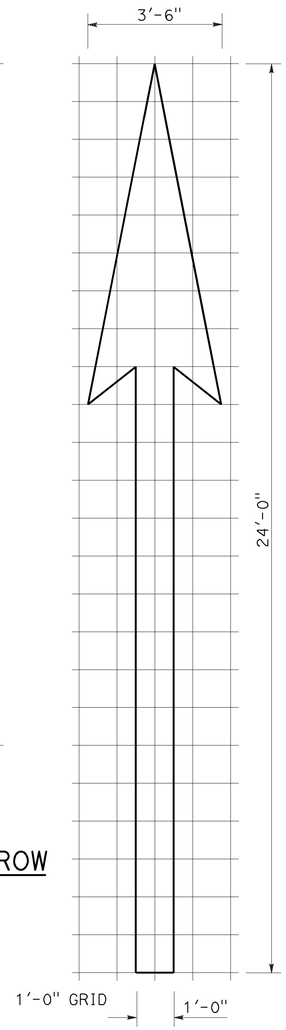

A=31 ft^2

TYPE I 24'-0" ARROW

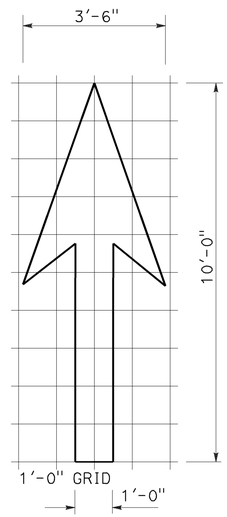

A=14 ft^2

TYPE I 10'-0" ARROW

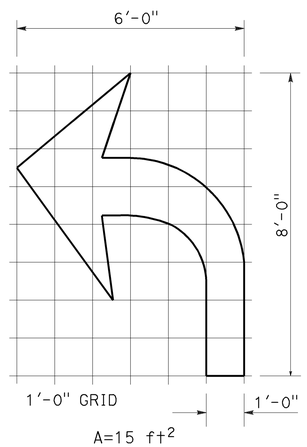

A=15 ft^2

TYPE IV (L) ARROW

(For Type IV (R) arrow, use mirror image)

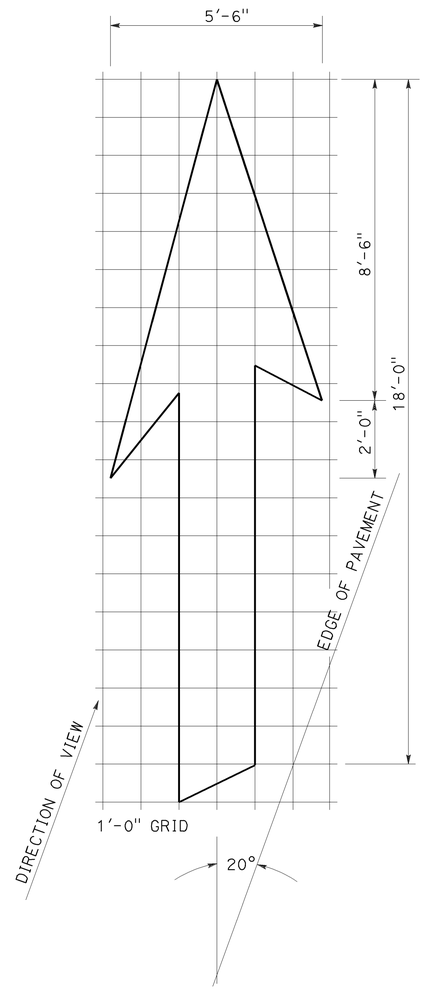

A=42 ft^2

TYPE VI ARROW

Right lane drop arrow
(For left lane, use mirror image)

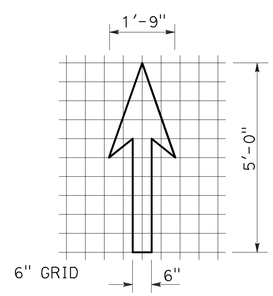

A=3.5 ft^2

BIKE LANE ARROW

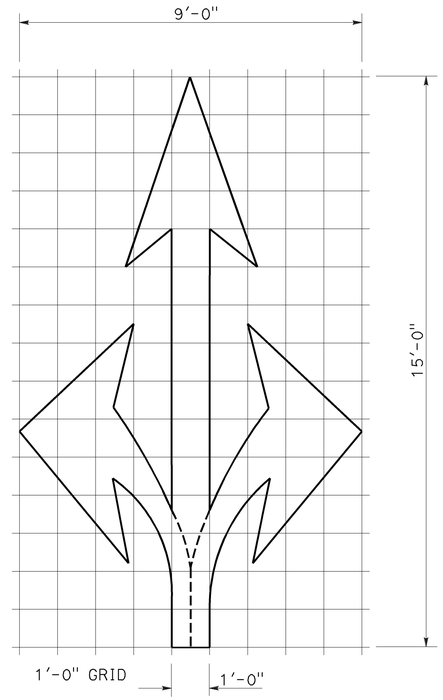

A=36 ft^2

TYPE VIII ARROW

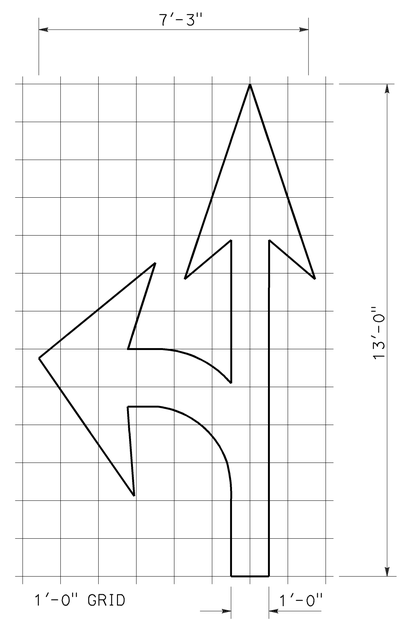

A=27 ft^2

TYPE VII (L) ARROW

(For Type VII (R) arrow, use mirror image)

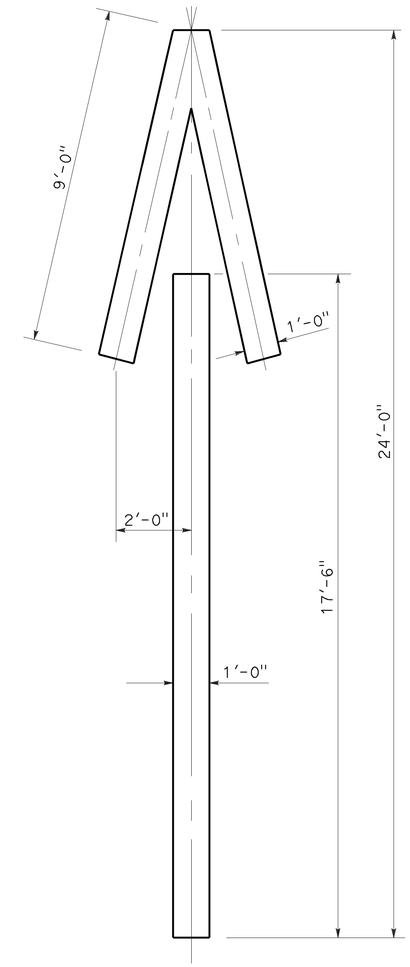

A=33 ft^2

TYPE V ARROW

NOTE:
Minor variations in dimensions may be accepted by the Engineer.

STATE OF CALIFORNIA
DEPARTMENT OF TRANSPORTATION

PAVEMENT MARKINGS ARROWS

NO SCALE

RSP A24A DATED APRIL 20, 2012 SUPERSEDES STANDARD PLAN A24A DATED MAY 20, 2011 - PAGE 13 OF THE STANDARD PLANS BOOK DATED 2010.

REVISED STANDARD PLAN RSP A24A

2010 REVISED STANDARD PLAN RSP A24A

3-14-12

Dist	COUNTY	ROUTE	POST MILES TOTAL PROJECT	SHEET No.	TOTAL SHEETS
11	SD	94	14.9/30.0	44	49

REGISTERED CIVIL ENGINEER

July 20, 2012
PLANS APPROVAL DATE

REGISTERED PROFESSIONAL ENGINEER
Roberta L. McLaughlin
No. C40375
Exp. 3-31-13
CIVIL
STATE OF CALIFORNIA

THE STATE OF CALIFORNIA OR ITS OFFICERS OR AGENTS SHALL NOT BE RESPONSIBLE FOR THE ACCURACY OR COMPLETENESS OF SCANNED COPIES OF THIS PLAN SHEET.

TO ACCOMPANY PLANS DATED 03-11-13

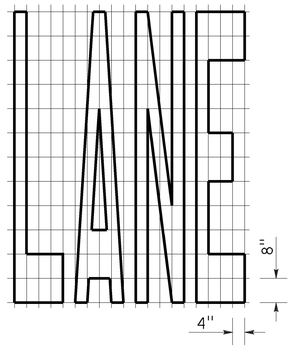

A=24 ft^2

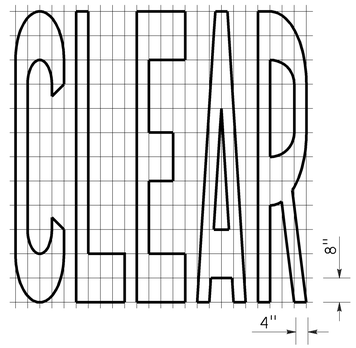

A=27 ft^2

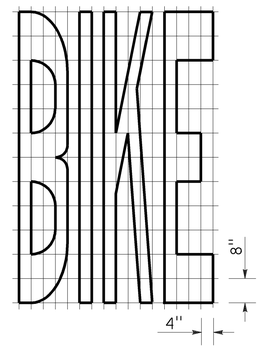

A=21 ft^2

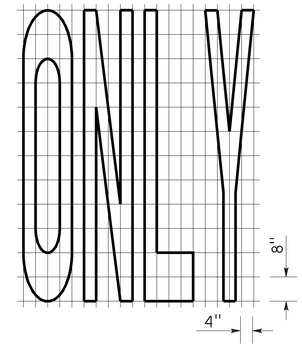

A=22 ft^2

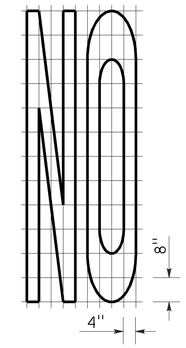

A=14 ft^2

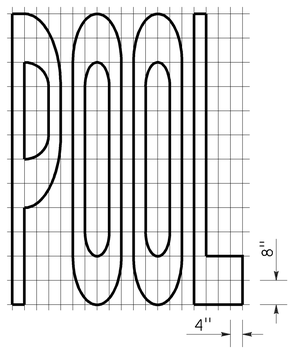

A=23 ft^2

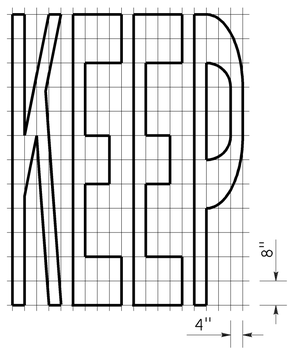

A=24 ft^2

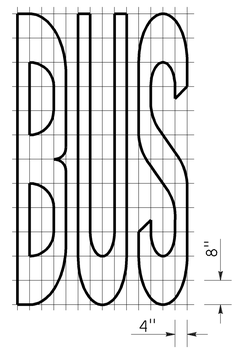

A=20 ft^2

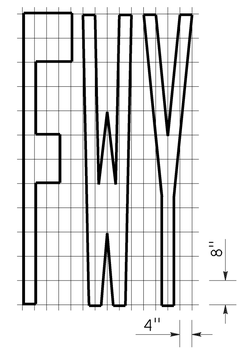

A=16 ft^2

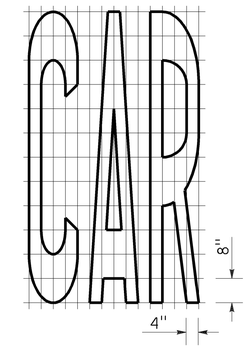

A=17 ft^2

WORD MARKINGS			
ITEM	ft^2	ITEM	ft^2
LANE	24	NO	14
POOL	23	BIKE	21
CAR	17	BUS	20
CLEAR	27	ONLY	22
KEEP	24	FWY	16

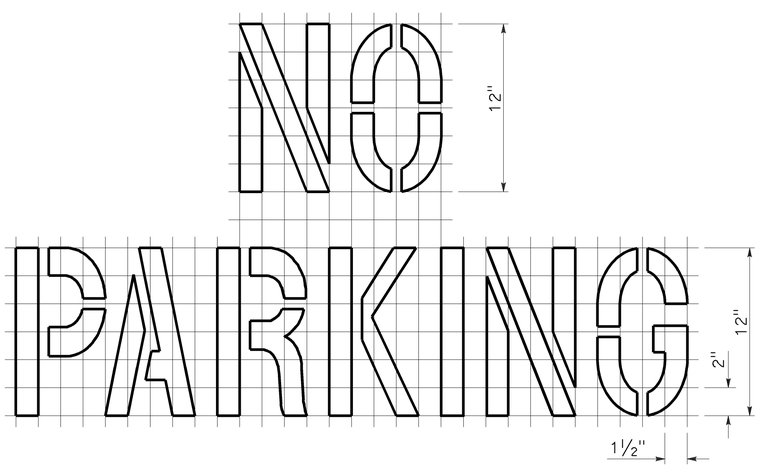

A=2 ft^2

See Notes 6 and 7

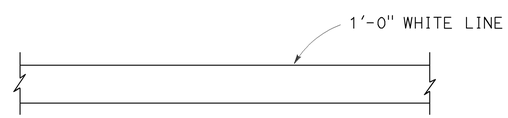

LIMIT LINE (STOP LINE)

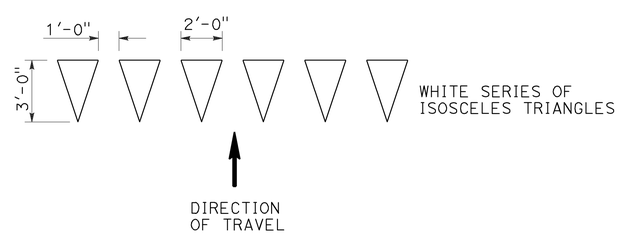

YIELD LINE

NOTES:

1. If a message consists of more than one word, it should read "UP", i.e., the first word should be nearest the driver.
2. The space between words should be at least four times the height of the characters for low speed roads, but not more than ten times the height of the characters. The space may be reduced appropriately where there is limited space because of local conditions.
3. Minor variations in dimensions may be accepted by the Engineer.
4. Portions of a letter, number or symbol may be separated by connecting segments not to exceed 2" in width.
5. The words "NO PARKING" pavement marking is to be used for parking facilities. For typical locations of markings, see Standard Plans A90A and A90B.
6. The words "NO PARKING", shall be painted in white letters no less than 1'-0" high on a contrasting background and located so that it is visible to traffic enforcement officials.

STATE OF CALIFORNIA
DEPARTMENT OF TRANSPORTATION

PAVEMENT MARKINGS WORDS, LIMIT AND YIELD LINES

NO SCALE

RSP A24E DATED JULY 20, 2012 SUPERSEDES STANDARD PLAN A24E
DATED MAY 20, 2011 - PAGE 17 OF THE STANDARD PLANS BOOK DATED 2010.

REVISED STANDARD PLAN RSP A24E

2010 REVISED STANDARD PLAN RSP A24E

6-12-12

Dist	COUNTY	ROUTE	POST MILES TOTAL PROJECT	SHEET No.	TOTAL SHEETS
11	SD	94	14.9/30.0	45	49

Roberta L. McLaughlin
REGISTERED CIVIL ENGINEER

July 20, 2012
PLANS APPROVAL DATE

REGISTERED PROFESSIONAL ENGINEER
Roberta L. McLaughlin
No. C40375
Exp. 3-31-13
CIVIL
STATE OF CALIFORNIA

THE STATE OF CALIFORNIA OR ITS OFFICERS OR AGENTS SHALL NOT BE RESPONSIBLE FOR THE ACCURACY OR COMPLETENESS OF SCANNED COPIES OF THIS PLAN SHEET.

TO ACCOMPANY PLANS DATED 03-11-13

2010 REVISED STANDARD PLAN RSP A24F

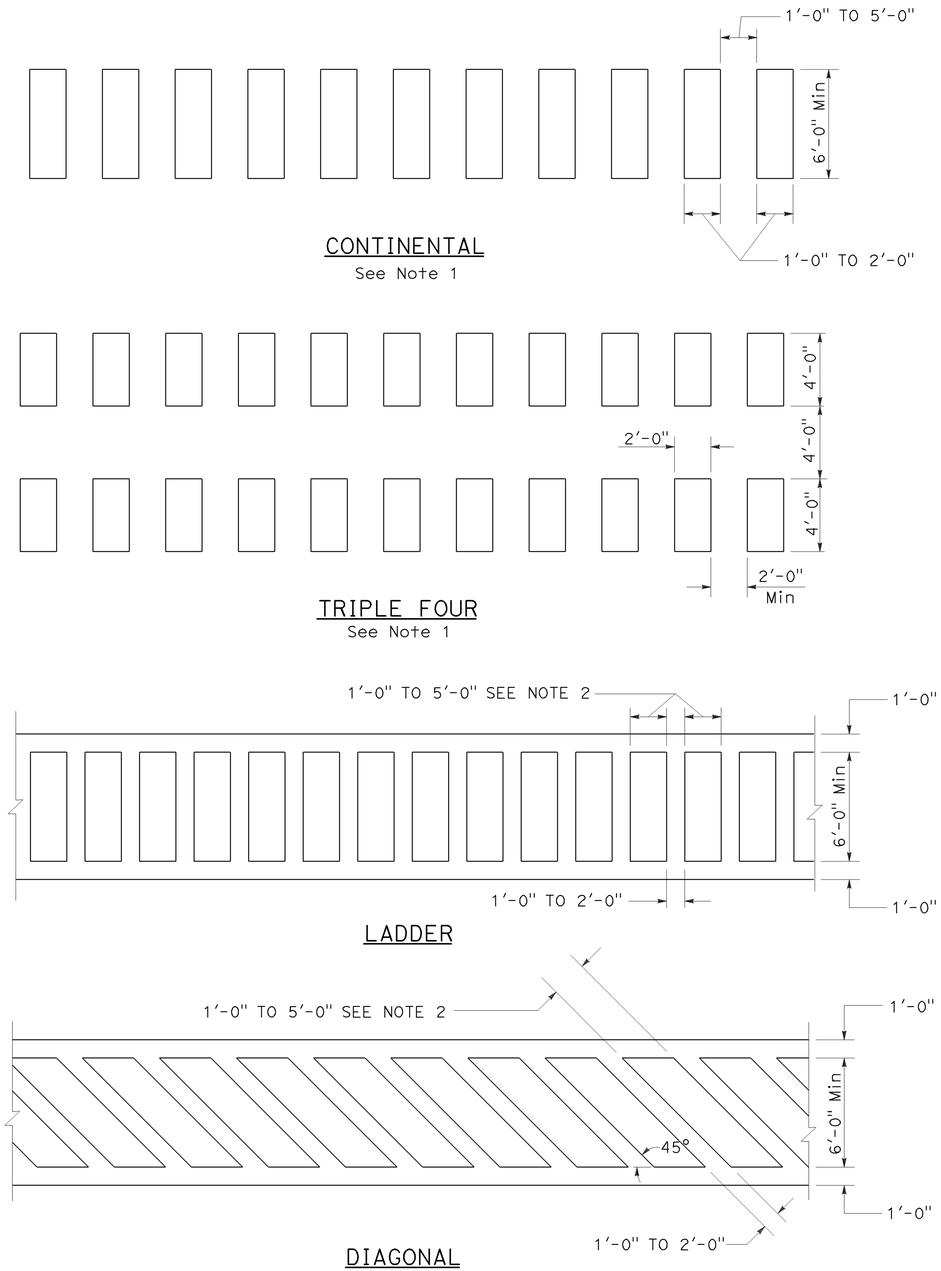

HIGHER VISIBILITY CROSSWALKS

NOTES:

1. Spaces between markings should be placed in wheel tracks of each lane.
2. Spacings not to exceed 2.5 times width of longitudinal line.
3. All crosswalk markings must be white except for those near schools must be yellow.

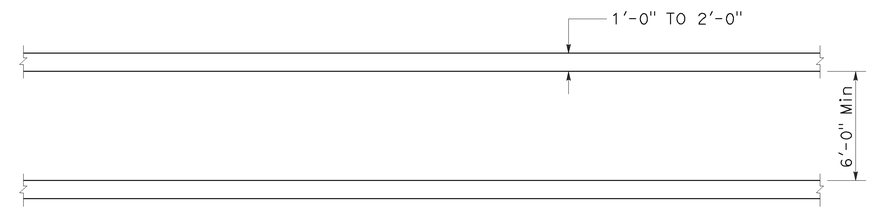

BASIC

STATE OF CALIFORNIA
DEPARTMENT OF TRANSPORTATION

PAVEMENT MARKINGS CROSSWALKS

NO SCALE

RSP A24F DATED JULY 20, 2012 SUPPLEMENTS THE STANDARD PLANS BOOK DATED 2010.

REVISED STANDARD PLAN RSP A24F

DIST	COUNTY	ROUTE	POST MILES TOTAL PROJECT	SHEET No.	TOTAL SHEETS
11	SD	94	14.9/30.0	46	49

REGISTERED CIVIL ENGINEER

January 20, 2012
PLANS APPROVAL DATE

REGISTERED PROFESSIONAL ENGINEER
Cornelis M. Hakim
No. C55610
Exp. 12-31-12
CIVIL
STATE OF CALIFORNIA

THE STATE OF CALIFORNIA OR ITS OFFICERS OR AGENTS SHALL NOT BE RESPONSIBLE FOR THE ACCURACY OR COMPLETENESS OF SCANNED COPIES OF THIS PLAN SHEET.

TO ACCOMPANY PLANS DATED 03-11-13

2010 REVISED STANDARD PLAN RSP P74

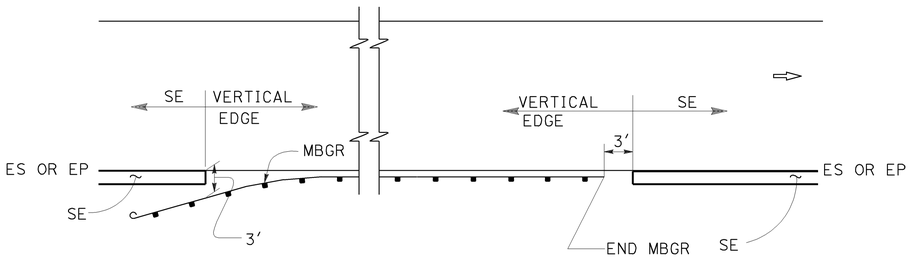

MBGR

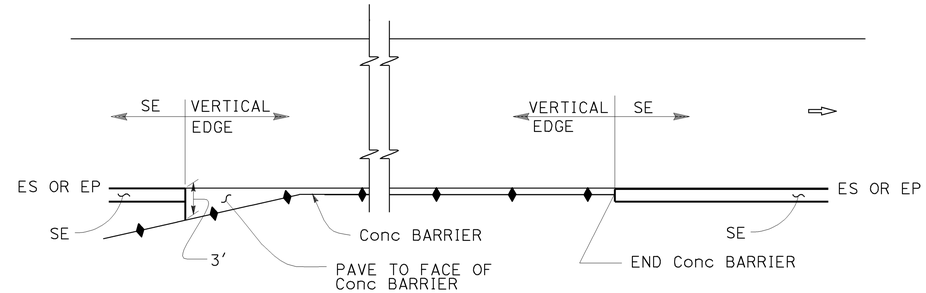

CONCRETE BARRIER

ABBREVIATIONS:

SE SAFETY EDGE

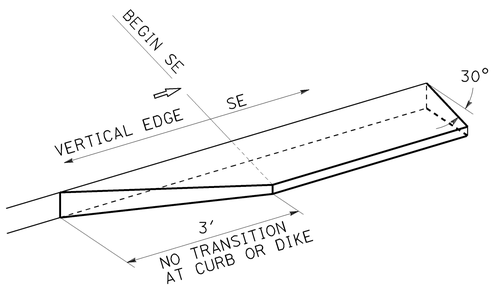

TRANSITION DETAIL FOR CONCRETE ONLY

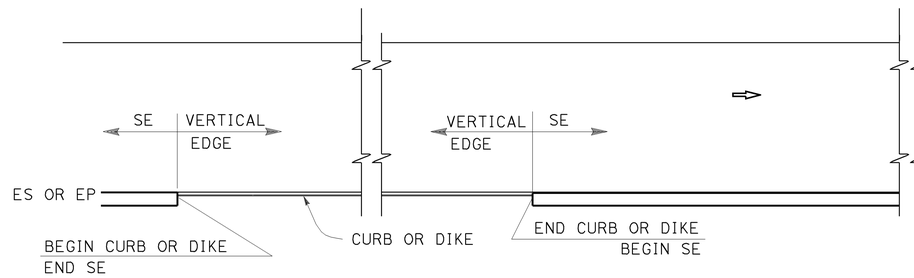

CURB OR DIKE

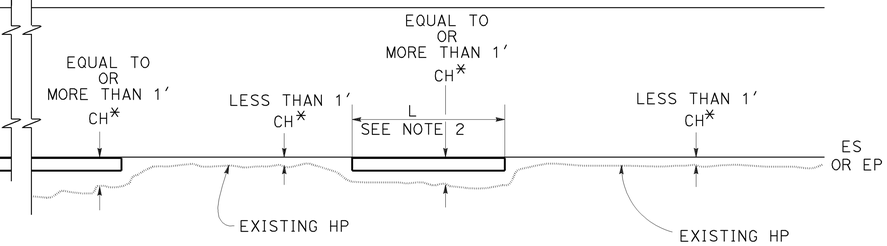

NARROW SIDE SLOPE

* CH = Distance from ES or EP to existing HP.

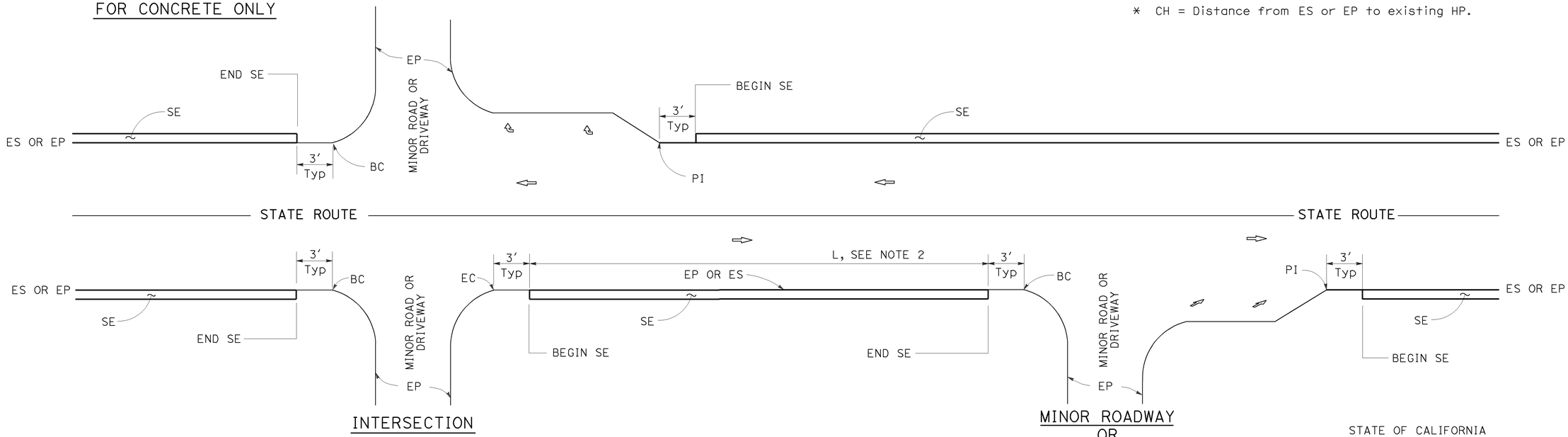

INTERSECTION

MINOR ROADWAY OR DRIVEWAY

DRIVEWAY AND INTERSECTION

NOTES:

1. For details not shown, see Revised Standard Plans RSP P75 and RSP P76.
2. Safety edge is optional when L is less than 30′.

STATE OF CALIFORNIA
DEPARTMENT OF TRANSPORTATION

PAVEMENT EDGE TREATMENTS

NO SCALE

RSP P74 DATED JANUARY 20, 2012 SUPPLEMENTS THE STANDARD PLANS BOOK DATED 2010.

REVISED STANDARD PLAN RSP P74

01-05-12

DIST	COUNTY	ROUTE	POST MILES TOTAL PROJECT	SHEET No.	TOTAL SHEETS
11	SD	94	14.9/30.0	47	49

REGISTERED CIVIL ENGINEER

January 20, 2012
PLANS APPROVAL DATE

REGISTERED PROFESSIONAL ENGINEER Cornelis M. Hakim No. C55610 Exp. 12-31-12 CIVIL STATE OF CALIFORNIA

THE STATE OF CALIFORNIA OR ITS OFFICERS OR AGENTS SHALL NOT BE RESPONSIBLE FOR THE ACCURACY OR COMPLETENESS OF SCANNED COPIES OF THIS PLAN SHEET.

TO ACCOMPANY PLANS DATED 03-11-13

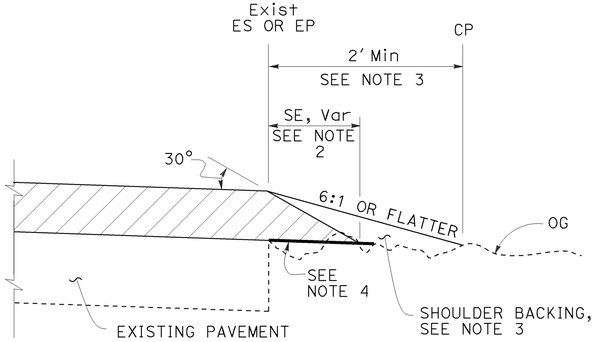

CASE A
Safety Edge

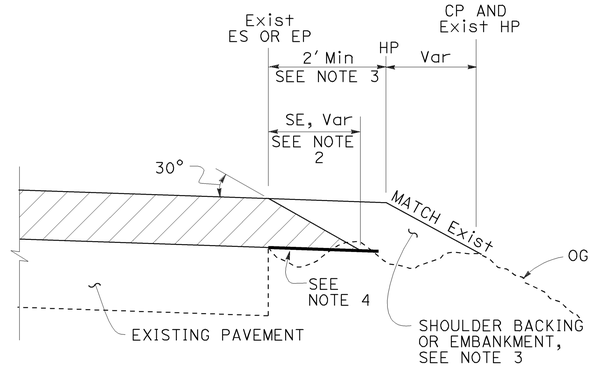

CASE B
Safety Edge

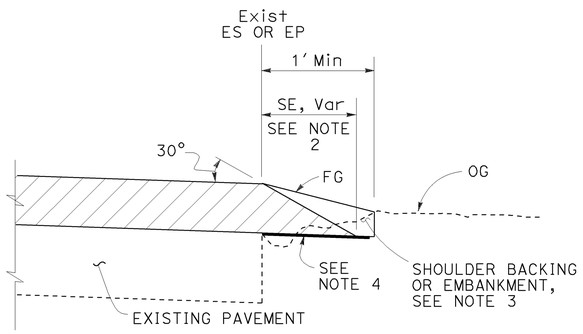

CASE C
Safety Edge

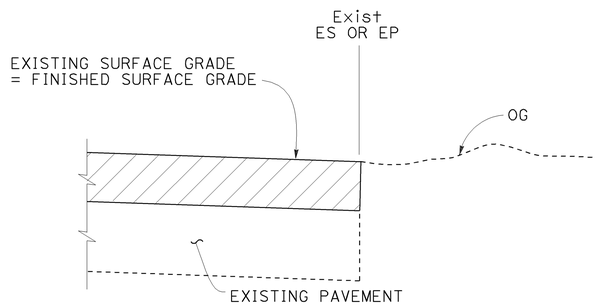

CASE D
Vertical Edge

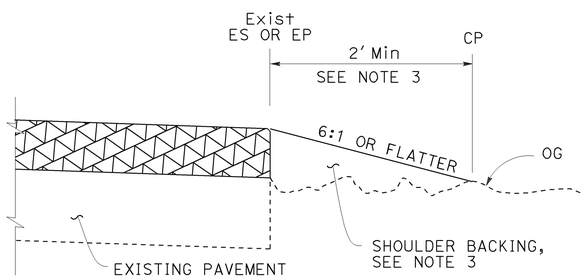

CASE E
Vertical Edge

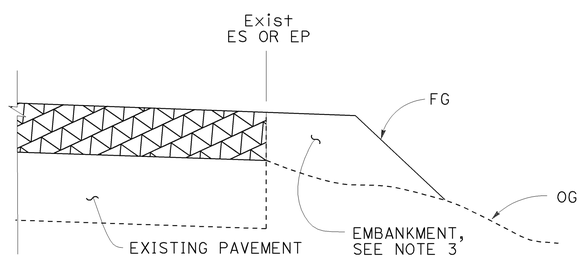

CASE F
Vertical Edge
* See Table A and Revised Std Plan RSP P74

LEGEND:

- HMA OVERLAY
- HMA OR CONCRETE OVERLAY
- CONCRETE OVERLAY

ABBREVIATIONS:

SE SAFETY EDGE
TT TOTAL THICKNESS OF SE

TABLE A
EDGE TREATMENT FOR VARIOUS OVERLAY THICKNESS AND CONDITIONS

	OVERLAY THICKNESS	
FIELD CONDITION	LESS THAN 0.15'	0.15' OR MORE
Exist SLOPE 6:1 OR FLATTER	CASE E	CASE A
Exist SLOPE 3:1 TO 6:1	CASE E	CASE B
Exist SLOPE STEEPER THAN 3:1	CASE F	CASE F
CUT SECTION (REPLACE, COLD PLANE, MILL PAVEMENT)	CASE D	CASE C

ADDITIONAL HMA OR CONCRETE QUANTITIES FOR SE/SIDE/MILE

TYPICAL CROSS SECTION	TT	TOTAL ADDITIONAL MATERIAL FOR SE/SIDE/MILE		
		HMA (TON)	CONCRETE (CY)*	CONCRETE (CY)**
TT	0.15'	NA	NA	NA
	0.20'	13.7	NA	NA
	0.30'	30.9	NA	NA
	0.40'	54.9	NA	NA
	0.45'	69.4	NA	NA
TT 0.43'	0.50'	84.2	NA	NA
	0.60'	113.9	NA	NA
	0.70'	143.6	70.9	94.2
	0.80'	173.3	85.6	112.2
	0.90'	203.0	100.3	130.2
	1.00'	232.7	114.9	148.2
	1.10'	262.4	129.6	166.2
	1.20'	292.1	144.3	184.2

* For Detail "A"
** For Optional Detail "A"

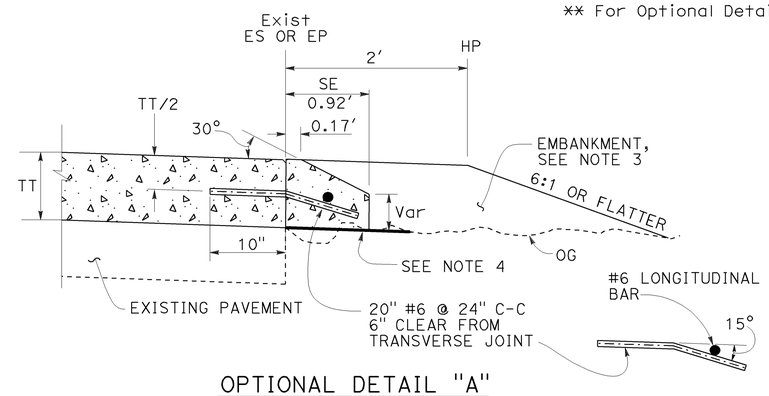

OPTIONAL DETAIL "A"
For concrete overlay
See Note 5

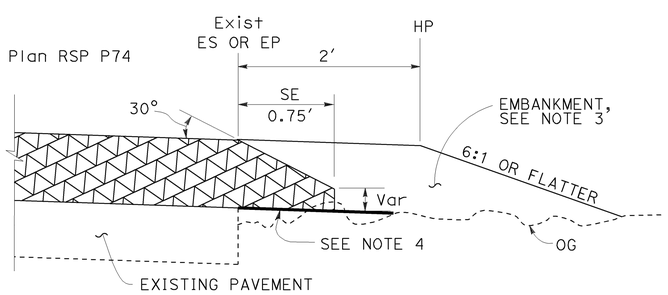

DETAIL "A"
For HMA overlay thickness more than 0.43' or concrete overlay

NOTES:

1. For limits of safety edge and vertical edge treatments, see Revised Standard Plan RSP P74.
2. Details shown for HMA overlay thickness less than 0.43'. See Detail "A" for HMA overlay thickness more than 0.43' or concrete overlay.
3. For locations and limits of shoulder backing or embankment see project plans.
4. Grade existing ground to place safety edge. 1' minimum width
5. Safety edge transverse joint must match overlay transverse joint. End of #6 longitudinal bar must be 2" ±½" clear from transverse joint.
6. Safety edge is not needed in the area of MBGR, barrier, right turn lane and acceleration lane. See Revised Standard Plan RSP P74.

STATE OF CALIFORNIA
DEPARTMENT OF TRANSPORTATION

PAVEMENT EDGE TREATMENTS-OVERLAYS

NO SCALE

RSP P75 DATED JANUARY 20, 2012 SUPPLEMENTS THE STANDARD PLANS BOOK DATED 2010.

REVISED STANDARD PLAN RSP P75

2010 REVISED STANDARD PLAN RSP P75

DIST	COUNTY	ROUTE	POST MILES TOTAL PROJECT	SHEET NO.	TOTAL SHEETS
11	SD	94	14.9/30.0	48	49

REGISTERED ELECTRICAL ENGINEER

January 20, 2012
PLANS APPROVAL DATE

REGISTERED PROFESSIONAL ENGINEER Jeffery G. McRae No. E14512 Exp. 6-30-12 ELECTRICAL STATE OF CALIFORNIA

THE STATE OF CALIFORNIA OR ITS OFFICERS OR AGENTS SHALL NOT BE RESPONSIBLE FOR THE ACCURACY OR COMPLETENESS OF SCANNED COPIES OF THIS PLAN SHEET.

TO ACCOMPANY PLANS DATED 03-11-13

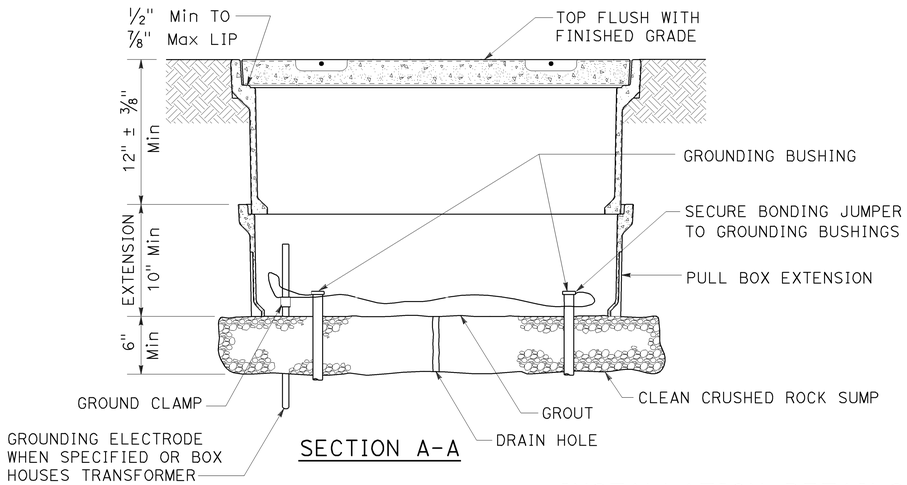

SECTION A-A

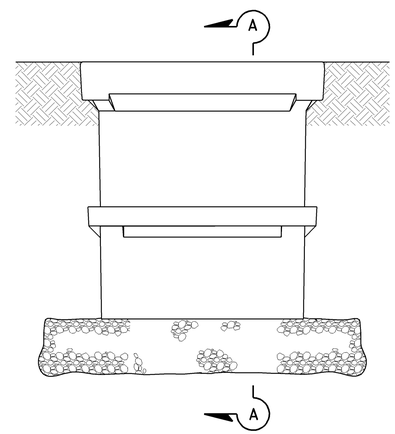

SIDE VIEW

INSTALLATION DETAILS

DETAIL A

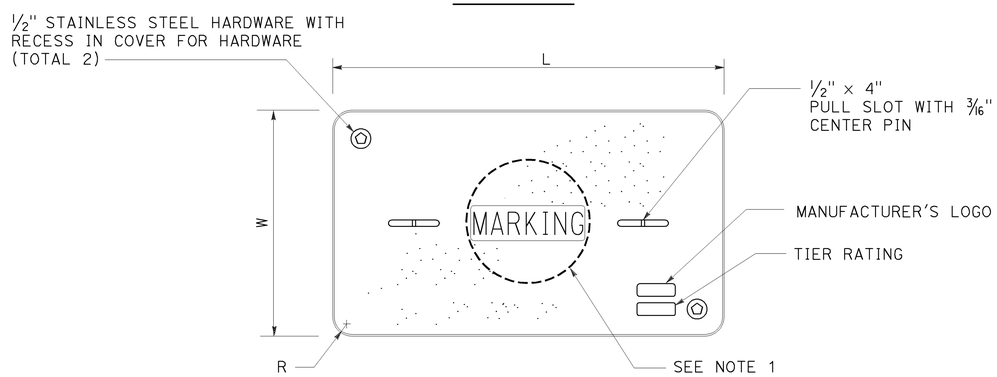

COVER TOP VIEW

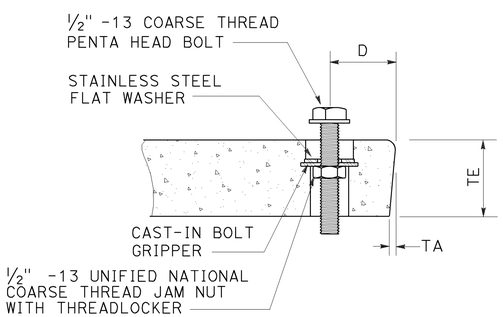

TYPICAL COVER CAPTIVE BOLT

OR SIMILAR

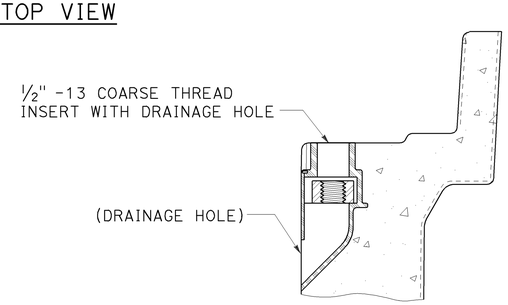

TYPICAL THREADED INSERT

OR SIMILAR

DIMENSION TABLE										
PULL BOX	PULL BOX			COVER						
	MINIMUM DEPTH BOX	MINIMUM DEPTH EXTENSION	MAXIMUM WEIGHT	L	W	R	TE	TA	D	MAXIMUM WEIGHT
No. 3 1/2	12"	N/A	40 lb	1' - 3 3/8"	10 1/8"	1 3/8"	2"	1/8"	1 3/4"	30 lb
No. 5	12"	10"	55 lb	1' - 11 1/4"	1' - 1 3/4"	1 3/8"	2"	1/8"	1 3/4"	60 lb
No. 6	12"	10"	70 lb	2' - 6 1/2"	1' - 5 1/2"	1 3/8"	2"	1/8"	2"	85 lb

NOTES ON PULL BOXES:

1. Pull box covers must be marked as follows: "SERVICE" Service circuits between service point and service disconnect; "SPRINKLER-CONTROL" sprinkler control circuits, 50 V or less; "CALTRANS" on all pull boxes, except pull boxes marked "SPRINKLER-CONTROL"; and "TELEPHONE" Telephone service;

   A) No. 3 1/2 pull box.
      1) "SIGNAL" - Traffic signal circuits with or without street or sign lighting circuits.
      2) "ST LIGHTING" - Street or sign lighting circuits where voltage is under 600 V.

   B) No. 5, 6, 9 or 9A pull box.
      1) "TRAFFIC SIGNAL" - Traffic signal circuits with or without street or sign lighting circuits.
      2) "STREET LIGHTING" - Street or sign lighting circuits where voltage is under 600 V.
      3) "STREET LIGHTING-HIGH VOLTAGE" - Street or sign lighting circuits where voltage is above 600 V.
      4) "IRRIGATION" - Circuits to irrigation controller 120 V or more.
      5) "RAMP METER" - Ramp meter circuits.
      6) "COUNT STATION" - Count or speed monitor circuits.
      7) "COMMUNICATIONS" - Communication circuits.
      8) "TOS COMMUNICATIONS" - TOS communication line.
      9) "TOS POWER" - TOS power.
      10) "TDC POWER" - Telephone demarcation cabinet power.
      11) "CCTV" - Closed circuit television circuits.
      12) "TMS" - Traffic monitoring station circuits.
      13) "CMS" - Changeable message sign circuits.
      14) "HAR" - Highway advisory radio circuits.

2. The nominal dimensions of the opening in which the cover sets must be the same as the cover dimensions (L and W) plus 1/8" or greater.
3. Covers and boxes must be interchangeable with California Standard. When interchanged with a standard, the top surfaces must be flush within 1/8". Top outside radius of covers and pull boxes must have a 1/8" radius.
4. Pull box extension may be another pull box as long as the bottom edge of the pull box can fit into the cover opening.

STATE OF CALIFORNIA
DEPARTMENT OF TRANSPORTATION

ELECTRICAL SYSTEMS (PULL BOX)

NO SCALE

RSP ES-8A DATED JANUARY 20, 2012 SUPPLEMENTS THE STANDARD PLANS BOOK DATED 2010.

REVISED STANDARD PLAN RSP ES-8A

2010 REVISED STANDARD PLAN RSP ES-8A

01-09-12

DIST	COUNTY	ROUTE	POST MILES TOTAL PROJECT	SHEET NO.	TOTAL SHEETS
11	SD	94	14.9/30.0	49	49

Jeffery G. McRae
REGISTERED ELECTRICAL ENGINEER

January 20, 2012
PLANS APPROVAL DATE

REGISTERED PROFESSIONAL ENGINEER
Jeffery G. McRae
No. E14512
Exp. 6-30-12
ELECTRICAL
STATE OF CALIFORNIA

THE STATE OF CALIFORNIA OR ITS OFFICERS OR AGENTS SHALL NOT BE RESPONSIBLE FOR THE ACCURACY OR COMPLETENESS OF SCANNED COPIES OF THIS PLAN SHEET.

TO ACCOMPANY PLANS DATED 03-11-13

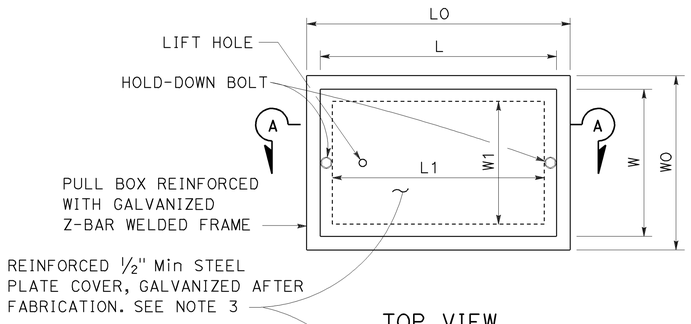

TOP VIEW

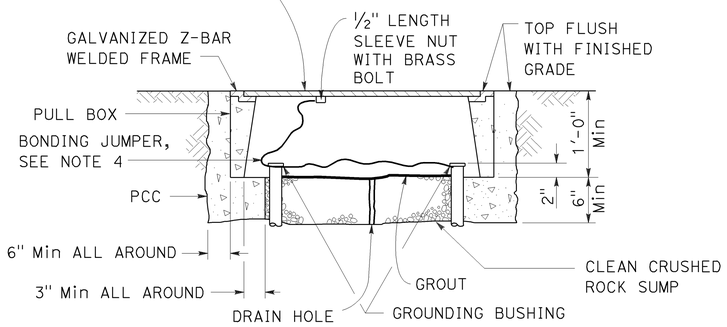

SECTION A-A

No. 3½(T), No. 5(T) AND No. 6(T) TRAFFIC PULL BOX

NOTES ON PULL BOXES:

1. Traffic pull box shall be provided with steel cover and special concrete footing. Steel cover shall have embossed non-skid pattern.
2. Steel reinforcing shall be as regularly used in the standard products of the respective manufacturer.
3. Pull box covers must be marked as follows: "SERVICE" Service circuits between service point and service disconnect; "SPRINKLER-CONTROL" Sprinkler control circuits, 50 V or less; "CALTRANS" On all pull boxes, except pull boxes marked "SPRINKLER-CONTROL"; and "TELEPHONE" Telephone service.
   A) No. 3½(T) pull box.
      1) "SIGNAL" - Traffic signal circuits with or without street or sign lighting circuits.
      2) "ST LIGHTING" - Street or sign lighting circuits where voltage is under 600 V.
   B) No. 5(T) or 6(T) pull box.
      1) "TRAFFIC SIGNAL" - Traffic signal circuits with or without street or sign lighting circuits.
      2) "STREET LIGHTING" - Street or sign lighting circuits where voltage is under 600 V.
      3) "STREET LIGHTING-HIGH VOLTAGE" - Street or sign lighting circuits where voltage is above 600 V.
      4) "IRRIGATION" - Circuits to irrigation controller 120 V or more.
      5) "RAMP METER" - Ramp meter circuits.
      6) "COUNT STATION" - Count or speed monitor circuits.
      7) "COMMUNICATION" - Communication circuits.
      8) "TOS COMMUNICATIONS" - TOS communications line.
      9) "TOS POWER" - TOS power.
      10) "TDC POWER" - Telephone demarcation cabinet power.
      11) "CCTV" - Closed circuit television circuits.
      12) "TMS" - Traffic monitoring station circuits.
      13) "CMS" - Changeable message sign circuits.
      14) "HAR" - Highway advisory radio circuits.
4. Bonding jumper for metal covers shall be 3' long, minimum.
5. The nominal dimensions of the opening in which the cover sets must be the same as the cover dimensions except the length and width dimensions shall be ⅛" greater.
6. Covers and boxes must be interchangeable with California standard male and female gages. When interchanged with a standard male or female gage, the top surfaces must be flush within ⅛".

DIMENSION TABLE

PULL BOX	BOX						COVER				
	MINIMUM * THICKNESS	MINIMUM DEPTH BOX AND EXTENSION	WO	LO	L1	W1	L **	W **	R	EDGE THICKNESS	EDGE TAPER
No. 3½(T)	1½"	1'-0"	1'-5"± 1"	1'-8⅞"±	1'-2½"±	10⅝"± 1"	1'-8"±	1'-1¾"±	0"	½"	NONE
No. 5(T)	1¾"	1'-0"	1'-11½"± 1"	2'-5½"±	1'-7"±	1'-1"± 1"	2'-3"±	1'-4"±	0"	½"	NONE
No. 6(T)	2"	1'-0"	2'-6"± 1"	2'-11½"±	1'-11½"±	1'-5"± 1"	2'-9"±	1'-8"±	0"	½"	NONE

* EXCLUDING CONDUIT WEB ** TOP DIMENSION

STATE OF CALIFORNIA
DEPARTMENT OF TRANSPORTATION

ELECTRICAL SYSTEMS (TRAFFIC RATED PULL BOX)

NO SCALE

RSP ES-8B DATED JANUARY 20, 2012 SUPPLEMENTS THE STANDARD PLANS BOOK DATED 2010.

REVISED STANDARD PLAN RSP ES-8B

2010 REVISED STANDARD PLAN RSP ES-8B