NOTE:
FOR ACCURATE RIGHT OF WAY DATA, CONTACT
RIGHT OF WAY ENGINEERING AT THE DISTRICT OFFICE

Dist	COUNTY	ROUTE	POST MILES TOTAL PROJECT	SHEET No.	TOTAL SHEETS
11	SD	15,76	R46.1/R47.3, R16.7/R17.7	301	477

LICENSED LANDSCAPE ARCHITECT

4-16-12
PLANS APPROVAL DATE

LICENSED LANDSCAPE ARCHITECT
EMILIO L. VIRAMONTES
No. 3534
10/31/12
Expiration Date
01/12/12
Date
STATE OF CALIFORNIA

THE STATE OF CALIFORNIA OR ITS OFFICERS OR AGENTS SHALL NOT BE RESPONSIBLE FOR THE ACCURACY OR COMPLETENESS OF SCANNED COPIES OF THIS PLAN SHEET.

DOKKEN ENGINEERING
5675 RUFFIN ROAD
SUITE 250
SAN DIEGO, CA 92123

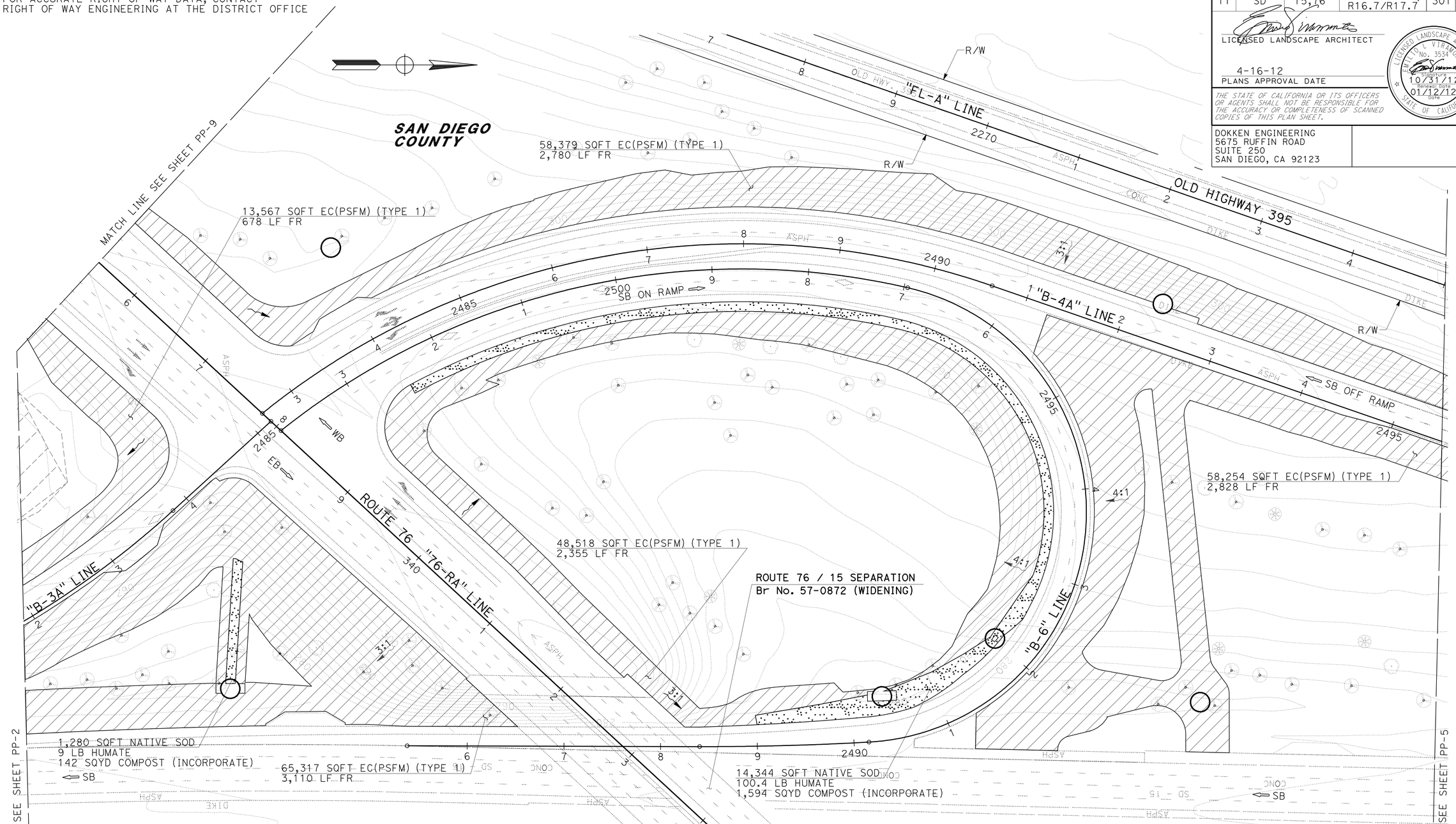

PLANTING PLAN
SCALE: 1" = 50'

PP-3

APPROVED FOR PLANTING WORK ONLY

STATE OF CALIFORNIA - DEPARTMENT OF TRANSPORTATION
Caltrans

CONSULTANT SENIOR LANDSCAPE ARCHITECT: EMILIO VIRAMONTES
CALCULATED-DESIGNED BY: KATHRYN WALKER
CHECKED BY: EMILIO VIRAMONTES
REVISED BY
DATE REVISED

LAST REVISION 01-24-12
DATE PLOTTED => 17-APR-2012
TIME PLOTTED => 15:19

NOTE:
FOR ACCURATE RIGHT OF WAY DATA, CONTACT
RIGHT OF WAY ENGINEERING AT THE DISTRICT OFFICE

Dist	COUNTY	ROUTE	POST MILES TOTAL PROJECT	SHEET No.	TOTAL SHEETS
11	SD	15,76	R46.1/R47.3, R16.7/R17.7	302	477

LICENSED LANDSCAPE ARCHITECT

4-16-12
PLANS APPROVAL DATE

LICENSED LANDSCAPE ARCHITECT
EMILIO L. VIRAMONTES
No. 3534
Expiration Date
10/31/12
Renewal Date
01/12/12
Date
STATE OF CALIFORNIA

THE STATE OF CALIFORNIA OR ITS OFFICERS OR AGENTS SHALL NOT BE RESPONSIBLE FOR THE ACCURACY OR COMPLETENESS OF SCANNED COPIES OF THIS PLAN SHEET.

DOKKEN ENGINEERING
5675 RUFFIN ROAD
SUITE 250
SAN DIEGO, CA 92123

SAN DIEGO COUNTY

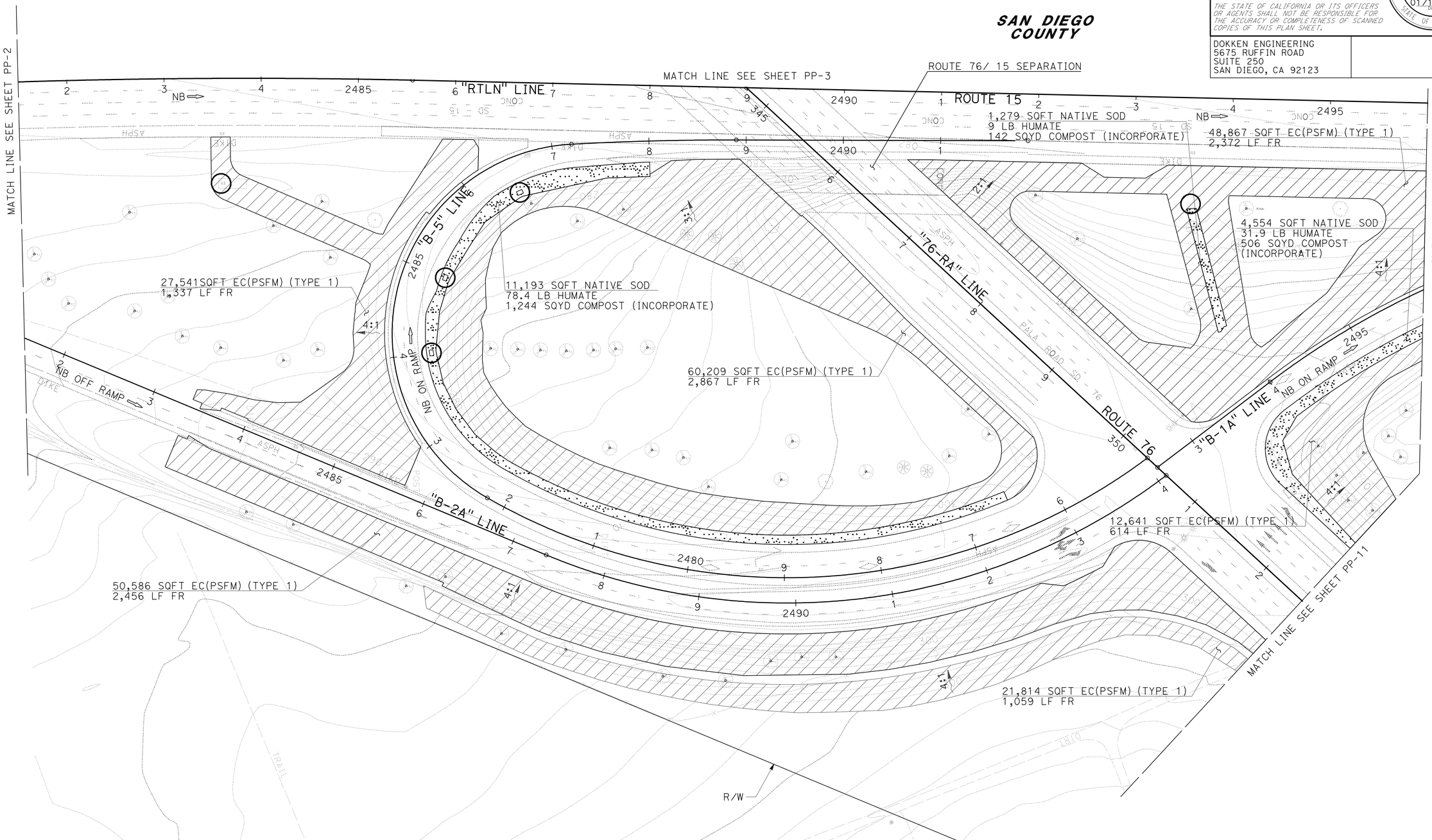

APPROVED FOR PLANTING WORK ONLY

PLANTING PLAN
SCALE: 1" = 50'

PP-4

REVISED BY	DATE REVISED
KATHRYN WALKER	
EMILIO VIRAMONTES	

CALCULATED-DESIGNED BY	CHECKED BY
EMILIO VIRAMONTES	

CONSULTANT SENIOR LANDSCAPE ARCHITECT

STATE OF CALIFORNIA - DEPARTMENT OF TRANSPORTATION
Caltrans

LAST REVISION 03-06-12
DATE PLOTTED => 17-APR-2012
TIME PLOTTED => 15:20

Dist	COUNTY	ROUTE	POST MILES TOTAL PROJECT	SHEET No.	TOTAL SHEETS
11	SD	15,76	R46.1/R47.3, R16.7/R17.7	303	477

LICENSED LANDSCAPE ARCHITECT

4-16-12
PLANS APPROVAL DATE

LICENSED LANDSCAPE ARCHITECT
EMILIO L. VIRAMONTES
No. 3534
10/31/12
Renewal Date
01/12/12
Date
STATE OF CALIFORNIA

THE STATE OF CALIFORNIA OR ITS OFFICERS OR AGENTS SHALL NOT BE RESPONSIBLE FOR THE ACCURACY OR COMPLETENESS OF SCANNED COPIES OF THIS PLAN SHEET.

DOKKEN ENGINEERING
5675 RUFFIN ROAD
SUITE 250
SAN DIEGO, CA 92123

NOTE:
FOR ACCURATE RIGHT OF WAY DATA, CONTACT RIGHT OF WAY ENGINEERING AT THE DISTRICT OFFICE

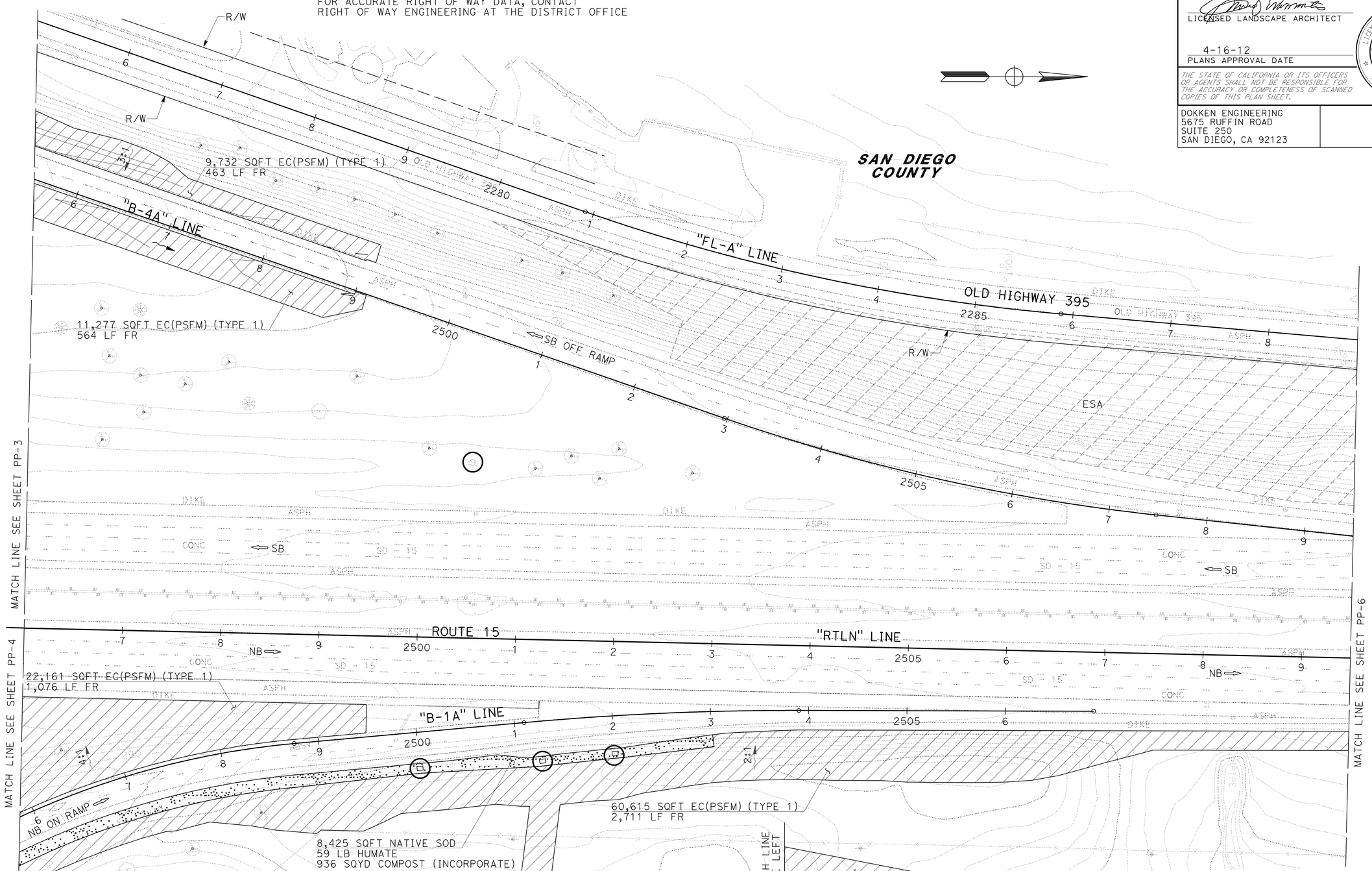

APPROVED FOR PLANTING WORK ONLY

PLANTING PLAN
SCALE: 1" = 50'

PP-5

REVISED BY	DATE REVISED
KATHRYN WALKER	EMILIO VIRAMONTES

CALCULATED-DESIGNED BY	CHECKED BY
CONSULTANT SENIOR LANDSCAPE ARCHITECT	EMILIO VIRAMONTES

STATE OF CALIFORNIA - DEPARTMENT OF TRANSPORTATION
Caltrans

LAST REVISION 01-24-12
DATE PLOTTED => 17-APR-2012
TIME PLOTTED => 15:20

Dist	COUNTY	ROUTE	POST MILES TOTAL PROJECT	SHEET No.	TOTAL SHEETS
11	SD	15,76	R46.1/R47.3, R16.7/R17.7	304	477

LICENSED LANDSCAPE ARCHITECT

4-16-12
PLANS APPROVAL DATE

LICENSED LANDSCAPE ARCHITECT EMILIO L. VIRAMONTES No. 3534 Expiration Date 10/31/12 Renewal Date 01/12/12 Date STATE OF CALIFORNIA

THE STATE OF CALIFORNIA OR ITS OFFICERS OR AGENTS SHALL NOT BE RESPONSIBLE FOR THE ACCURACY OR COMPLETENESS OF SCANNED COPIES OF THIS PLAN SHEET.

DOKKEN ENGINEERING
5675 RUFFIN ROAD
SUITE 250
SAN DIEGO, CA 92123

NOTE:

FOR ACCURATE RIGHT OF WAY DATA, CONTACT
RIGHT OF WAY ENGINEERING AT THE DISTRICT OFFICE

SAN DIEGO COUNTY

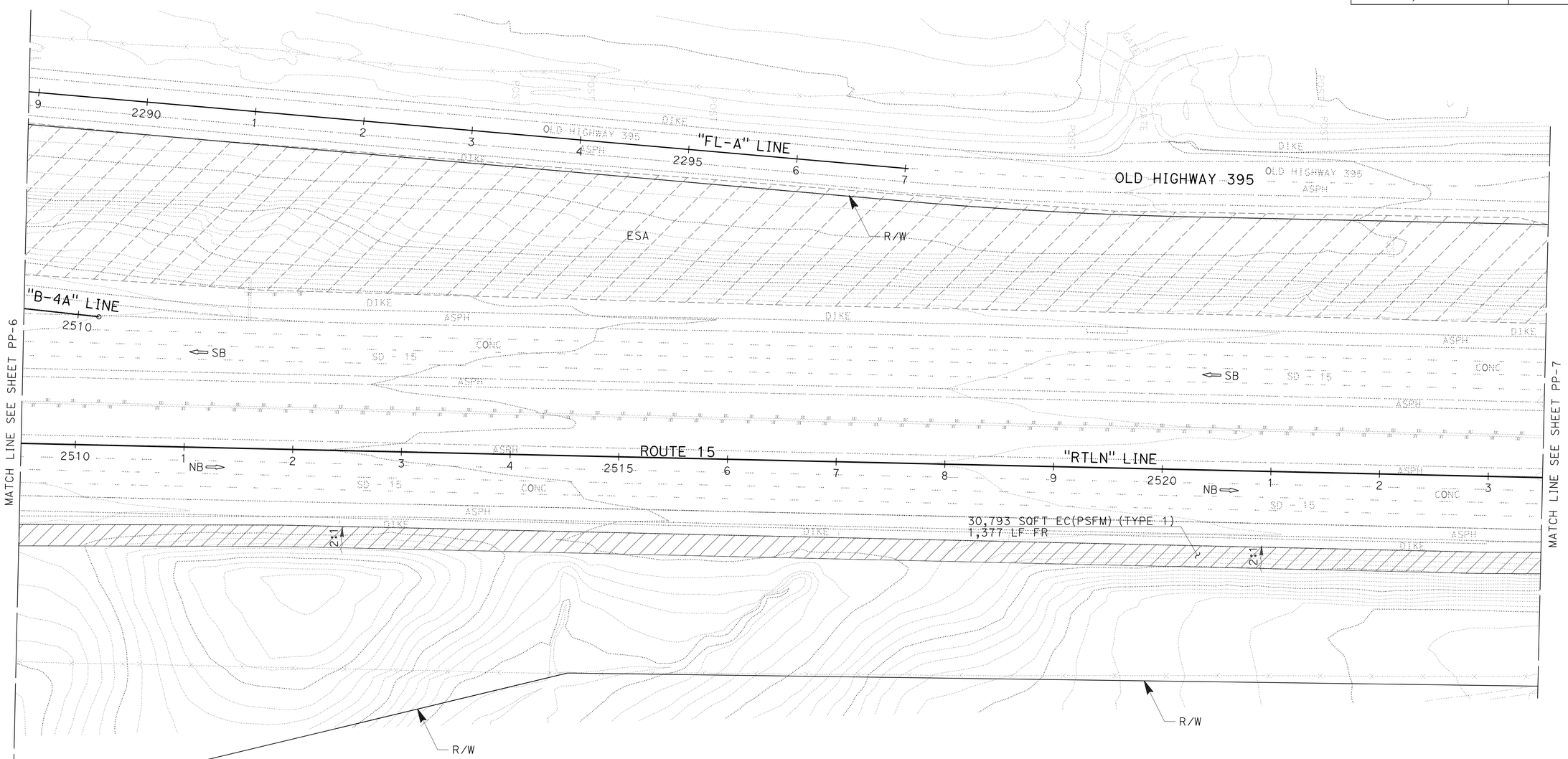

APPROVED FOR PLANTING WORK ONLY

PLANTING PLAN

SCALE: 1" = 50'

PP-6

STATE OF CALIFORNIA - DEPARTMENT OF TRANSPORTATION
Caltrans

CONSULTANT SENIOR LANDSCAPE ARCHITECT: EMILIO VIRAMONTES

CALCULATED-DESIGNED BY: KATHRYN WALKER
CHECKED BY: EMILIO VIRAMONTES

REVISED BY
DATE REVISED

LAST REVISION 01-24-12
DATE PLOTTED => 17-APR-2012
TIME PLOTTED => 15:20

Dist	COUNTY	ROUTE	POST MILES TOTAL PROJECT	SHEET No.	TOTAL SHEETS
11	SD	15,76	R46.1/R47.3, R16.7/R17.7	305	477

LICENSED LANDSCAPE ARCHITECT

4-16-12
PLANS APPROVAL DATE

LICENSED LANDSCAPE ARCHITECT
EMILIO L. VIRAMONTES
No. 3534
10/31/12
Renewal Date
01/12/12
Date
STATE OF CALIFORNIA

THE STATE OF CALIFORNIA OR ITS OFFICERS OR AGENTS SHALL NOT BE RESPONSIBLE FOR THE ACCURACY OR COMPLETENESS OF SCANNED COPIES OF THIS PLAN SHEET.

DOKKEN ENGINEERING
5675 RUFFIN ROAD
SUITE 250
SAN DIEGO, CA 92123

NOTE:
FOR ACCURATE RIGHT OF WAY DATA, CONTACT
RIGHT OF WAY ENGINEERING AT THE DISTRICT OFFICE

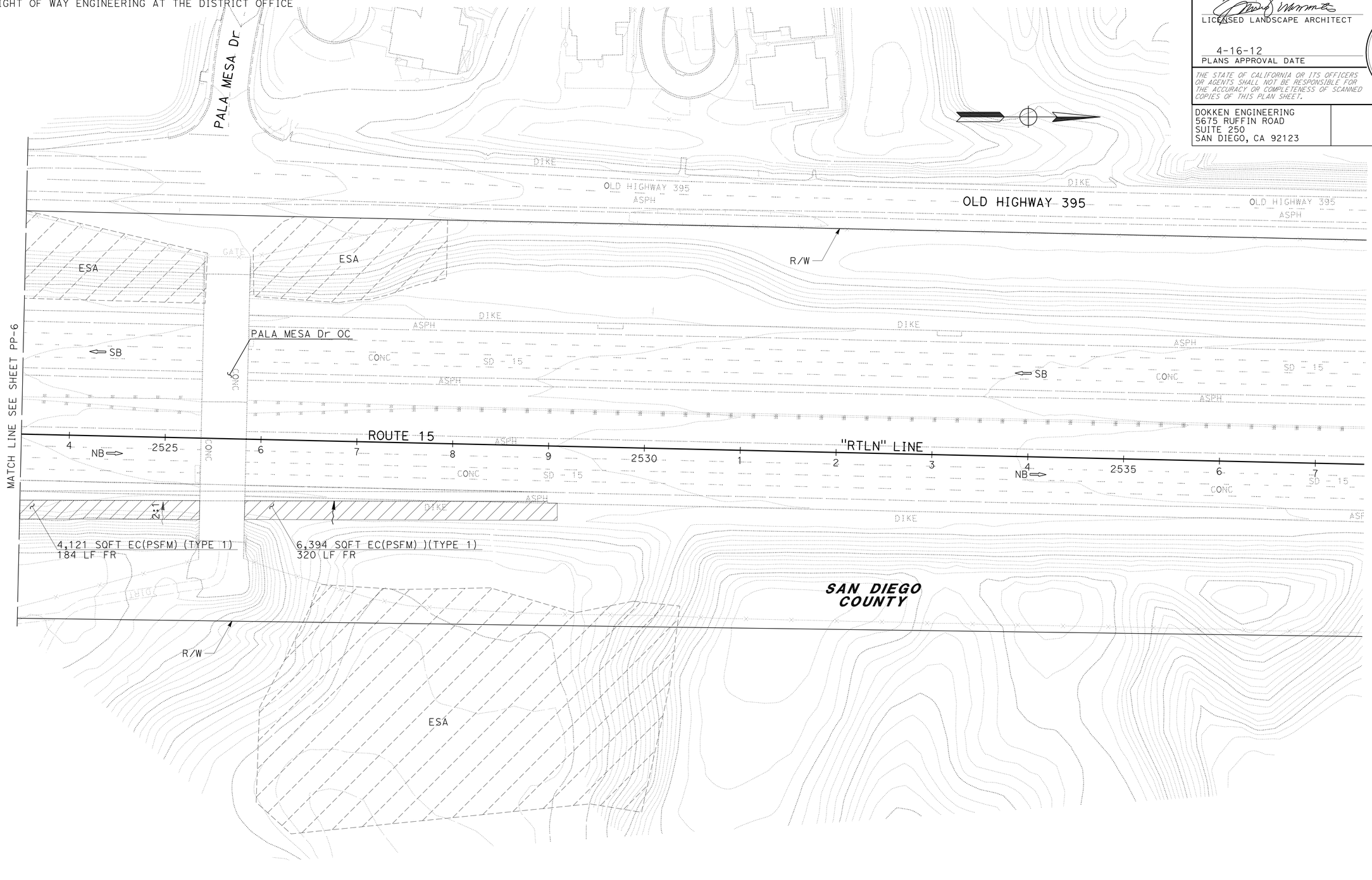

APPROVED FOR PLANTING WORK ONLY

PLANTING PLAN
SCALE: 1" = 50'

PP-7

REVISED BY	DATE REVISED

KATHRYN WALKER
EMILIO VIRAMONTES
CALCULATED-DESIGNED BY
CHECKED BY
CONSULTANT SENIOR LANDSCAPE ARCHITECT
EMILIO VIRAMONTES

STATE OF CALIFORNIA - DEPARTMENT OF TRANSPORTATION
Caltrans

LAST REVISION 01-24-12
DATE PLOTTED => 17-APR-2012
TIME PLOTTED => 15:20

Dist	COUNTY	ROUTE	POST MILES TOTAL PROJECT	SHEET No.	TOTAL SHEETS
11	SD	15,76	R46.1/R47.3, R16.7/R17.7	306	477

LICENSED LANDSCAPE ARCHITECT

4-16-12
PLANS APPROVAL DATE

LICENSED LANDSCAPE ARCHITECT
EMILIO L. VIRAMONTES
No. 3534
10/31/12
Renewal Date
01/12/12
Date
STATE OF CALIFORNIA

THE STATE OF CALIFORNIA OR ITS OFFICERS OR AGENTS SHALL NOT BE RESPONSIBLE FOR THE ACCURACY OR COMPLETENESS OF SCANNED COPIES OF THIS PLAN SHEET.

DOKKEN ENGINEERING
5675 RUFFIN ROAD
SUITE 250
SAN DIEGO, CA 92123

NOTE:
FOR ACCURATE RIGHT OF WAY DATA, CONTACT
RIGHT OF WAY ENGINEERING AT THE DISTRICT OFFICE

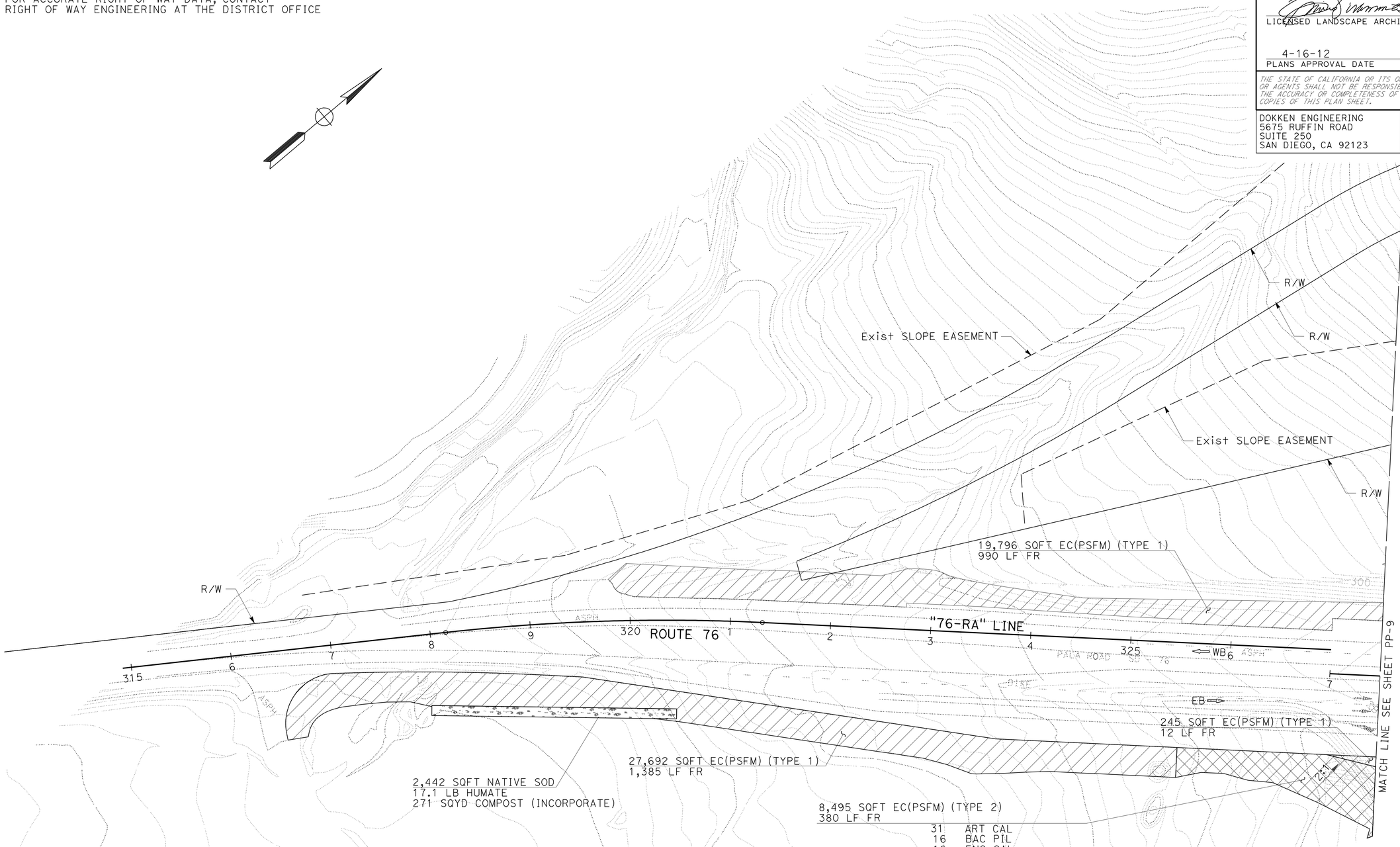

APPROVED FOR PLANTING WORK ONLY

PLANTING PLAN
SCALE: 1" = 50'

PP-8

STATE OF CALIFORNIA - DEPARTMENT OF TRANSPORTATION
Caltrans

CONSULTANT SENIOR LANDSCAPE ARCHITECT: EMILIO VIRAMONTES

CALCULATED-DESIGNED BY: KATHRYN WALKER
CHECKED BY: EMILIO VIRAMONTES

REVISED BY
DATE REVISED

LAST REVISION 01-24-12
DATE PLOTTED => 17-APR-2012
TIME PLOTTED => 15:20

Dist	COUNTY	ROUTE	POST MILES TOTAL PROJECT	SHEET No.	TOTAL SHEETS
11	SD	15,76	R46.1/R47.3, R16.7/R17.7	307	477

LICENSED LANDSCAPE ARCHITECT

4-16-12
PLANS APPROVAL DATE

LICENSED LANDSCAPE ARCHITECT EMILIO L. VIRAMONTES No. 3534 CALIFORNIA
10/31/12 Renewal Date
01/12/12 Date
STATE OF CALIFORNIA

THE STATE OF CALIFORNIA OR ITS OFFICERS OR AGENTS SHALL NOT BE RESPONSIBLE FOR THE ACCURACY OR COMPLETENESS OF SCANNED COPIES OF THIS PLAN SHEET.

DOKKEN ENGINEERING
5675 RUFFIN ROAD
SUITE 250
SAN DIEGO, CA 92123

NOTE:
FOR ACCURATE RIGHT OF WAY DATA, CONTACT RIGHT OF WAY ENGINEERING AT THE DISTRICT OFFICE

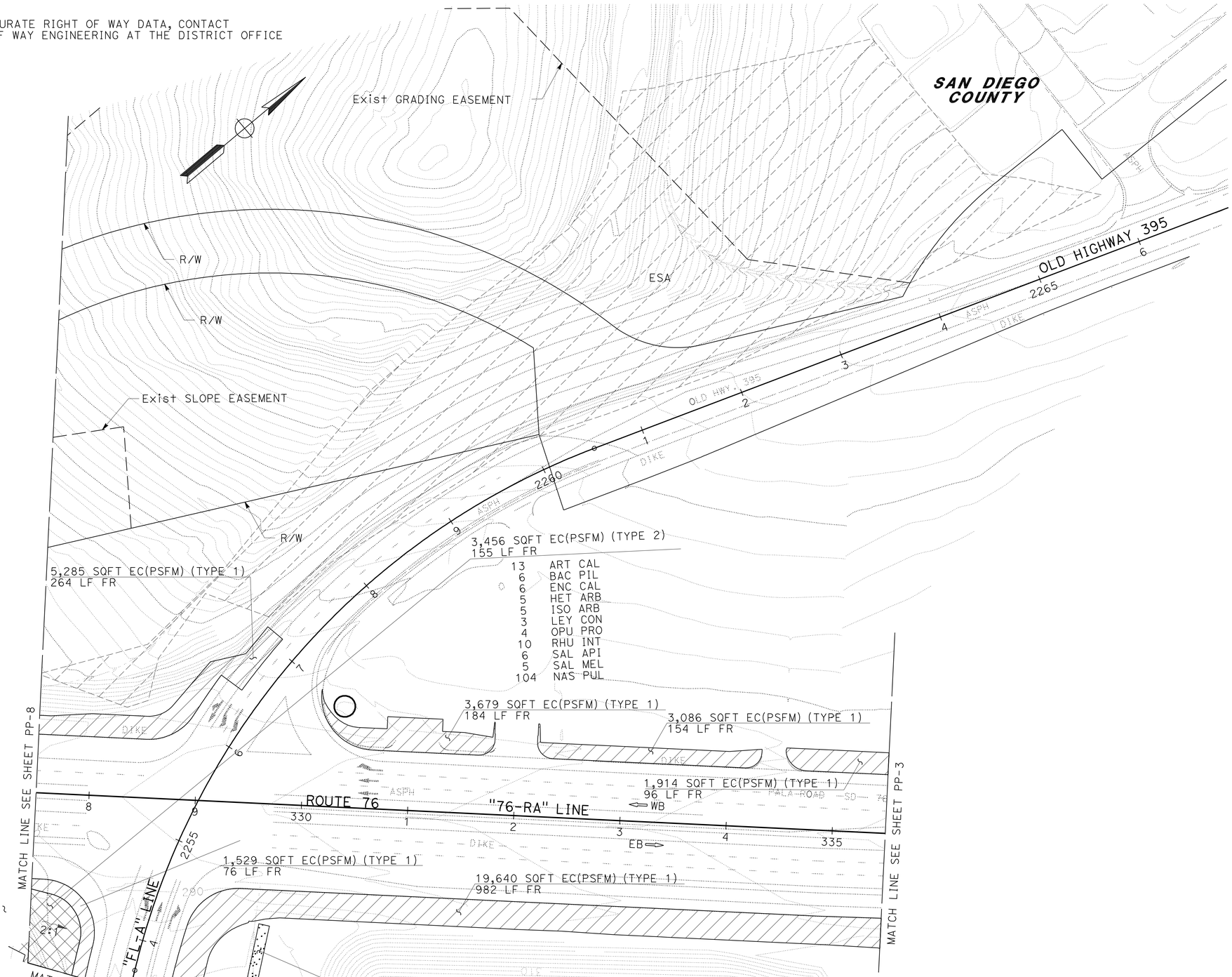

APPROVED FOR PLANTING WORK ONLY

PLANTING PLAN
SCALE: 1" = 50'

PP-9

STATE OF CALIFORNIA - DEPARTMENT OF TRANSPORTATION
Caltrans

CONSULTANT SENIOR LANDSCAPE ARCHITECT: EMILIO VIRAMONTES

CALCULATED-DESIGNED BY: KATHRYN WALKER
CHECKED BY: EMILIO VIRAMONTES

REVISED BY
DATE REVISED

LAST REVISION DATE PLOTTED => 17-APR-2012
01-24-12 TIME PLOTTED => 15:20

NOTE:

FOR ACCURATE RIGHT OF WAY DATA, CONTACT
RIGHT OF WAY ENGINEERING AT THE DISTRICT OFFICE

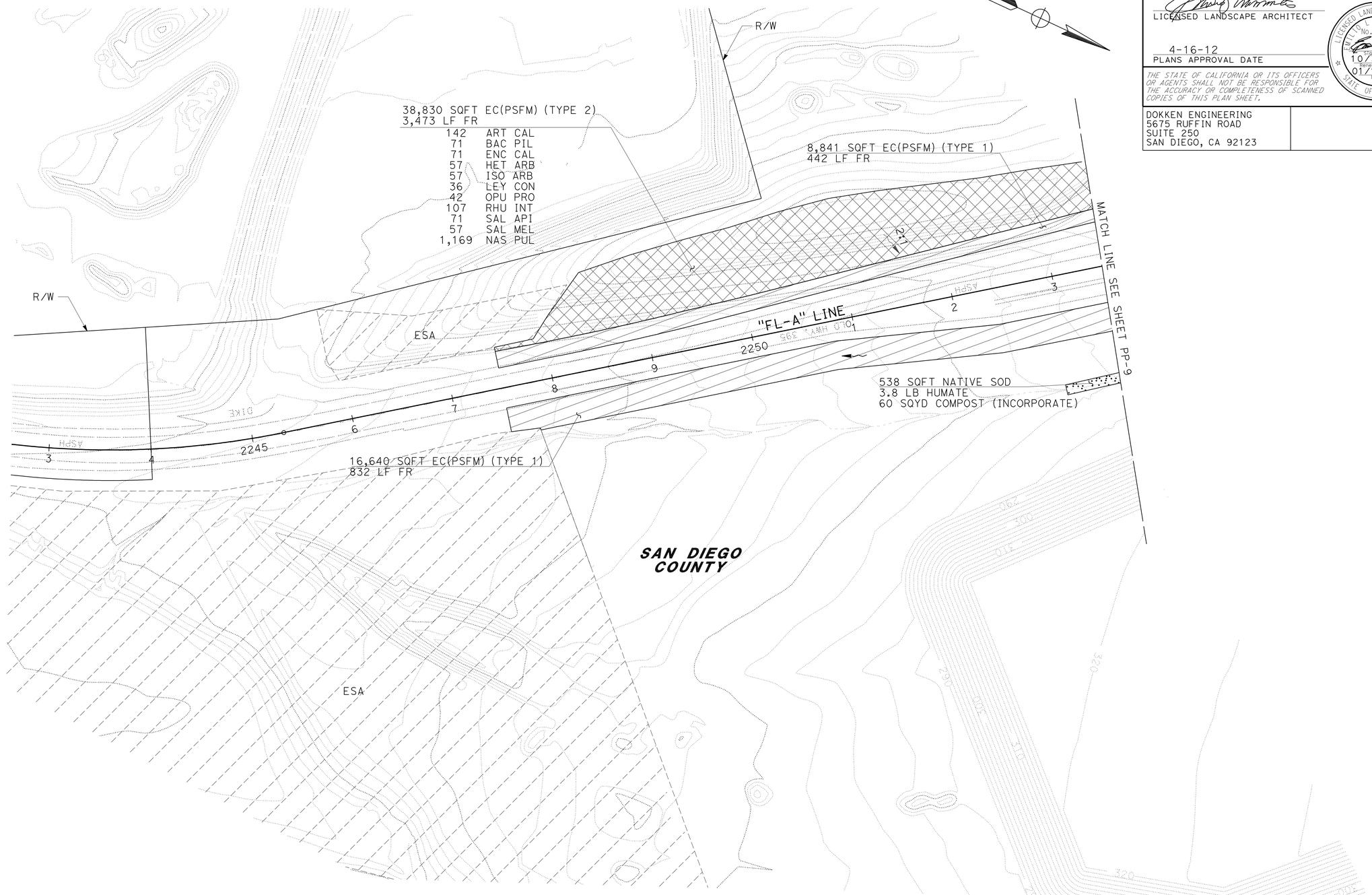

APPROVED FOR PLANTING WORK ONLY

PLANTING PLAN

SCALE: 1" = 50'

PP-10

Dist	COUNTY	ROUTE	POST MILES TOTAL PROJECT	SHEET No.	TOTAL SHEETS
11	SD	15,76	R46.1/R47.3, R16.7/R17.7	308	477

LICENSED LANDSCAPE ARCHITECT

4-16-12
PLANS APPROVAL DATE

LICENSED LANDSCAPE ARCHITECT
EMILIO L VIRAMONTES
No. 3534
Expiration Date
10/31/12
Renewal Date
01/12/12
Date
STATE OF CALIFORNIA

THE STATE OF CALIFORNIA OR ITS OFFICERS OR AGENTS SHALL NOT BE RESPONSIBLE FOR THE ACCURACY OR COMPLETENESS OF SCANNED COPIES OF THIS PLAN SHEET.

DOKKEN ENGINEERING
5675 RUFFIN ROAD
SUITE 250
SAN DIEGO, CA 92123

STATE OF CALIFORNIA - DEPARTMENT OF TRANSPORTATION
Caltrans

CONSULTANT SENIOR LANDSCAPE ARCHITECT: EMILIO VIRAMONTES

CALCULATED-DESIGNED BY: KATHRYN WALKER
CHECKED BY: EMILIO VIRAMONTES

REVISED BY
DATE REVISED

LAST REVISION 01-24-12
DATE PLOTTED => 17-APR-2012
TIME PLOTTED => 15:20

Dist	COUNTY	ROUTE	POST MILES TOTAL PROJECT	SHEET No.	TOTAL SHEETS
11	SD	15,76	R46.1/R47.3, R16.7/R17.7	309	477

LICENSED LANDSCAPE ARCHITECT

4-16-12
PLANS APPROVAL DATE

LICENSED LANDSCAPE ARCHITECT
EMILIO L. VIRAMONTES
No. 3534
Expiration Date
10/31/12
Renewal Date
01/12/12
STATE OF CALIFORNIA

THE STATE OF CALIFORNIA OR ITS OFFICERS OR AGENTS SHALL NOT BE RESPONSIBLE FOR THE ACCURACY OR COMPLETENESS OF SCANNED COPIES OF THIS PLAN SHEET.

DOKKEN ENGINEERING
5675 RUFFIN ROAD
SUITE 250
SAN DIEGO, CA 92123

NOTE:
FOR ACCURATE RIGHT OF WAY DATA, CONTACT
RIGHT OF WAY ENGINEERING AT THE DISTRICT OFFICE

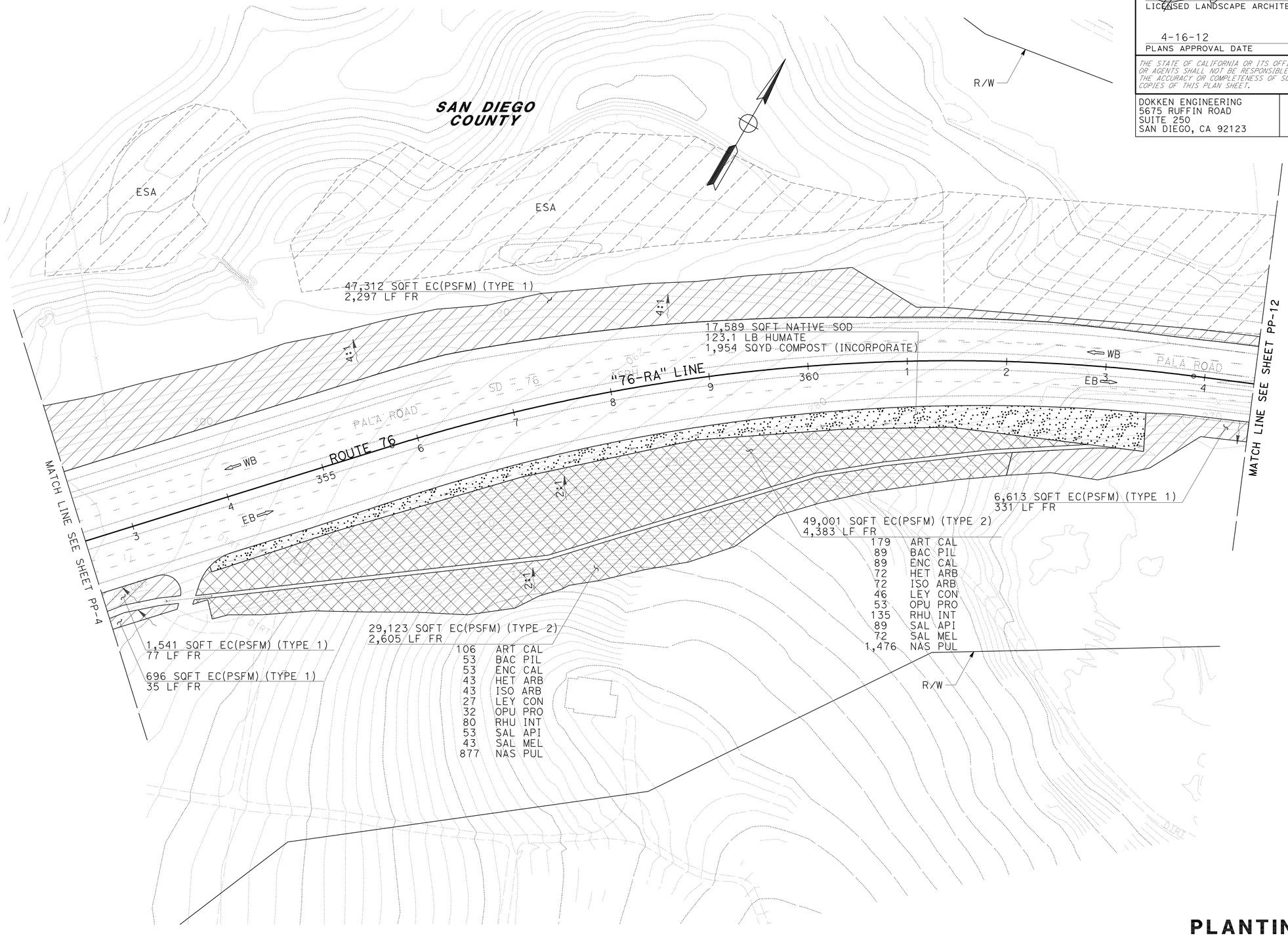

APPROVED FOR PLANTING WORK ONLY

PLANTING PLAN
SCALE: 1" = 50'

PP-11

STATE OF CALIFORNIA - DEPARTMENT OF TRANSPORTATION
Caltrans

CONSULTANT SENIOR LANDSCAPE ARCHITECT: EMILIO VIRAMONTES

CALCULATED-DESIGNED BY: KATHRYN WALKER
CHECKED BY: EMILIO VIRAMONTES

REVISED BY
DATE REVISED

LAST REVISION 01-24-12
DATE PLOTTED => 17-APR-2012
TIME PLOTTED => 15:20

Dist	COUNTY	ROUTE	POST MILES TOTAL PROJECT	SHEET No.	TOTAL SHEETS
11	SD	15,76	R46.1/R47.3, R16.7/R17.7	310	477

LICENSED LANDSCAPE ARCHITECT

4-16-12
PLANS APPROVAL DATE

LICENSED LANDSCAPE ARCHITECT
EMILIO L. VIRAMONTES
No. 3534
Expiration Date
10/31/12
Renewal Date
01/12/12
STATE OF CALIFORNIA

THE STATE OF CALIFORNIA OR ITS OFFICERS OR AGENTS SHALL NOT BE RESPONSIBLE FOR THE ACCURACY OR COMPLETENESS OF SCANNED COPIES OF THIS PLAN SHEET.

DOKKEN ENGINEERING
5675 RUFFIN ROAD
SUITE 250
SAN DIEGO, CA 92123

NOTE:
FOR ACCURATE RIGHT OF WAY DATA, CONTACT
RIGHT OF WAY ENGINEERING AT THE DISTRICT OFFICE

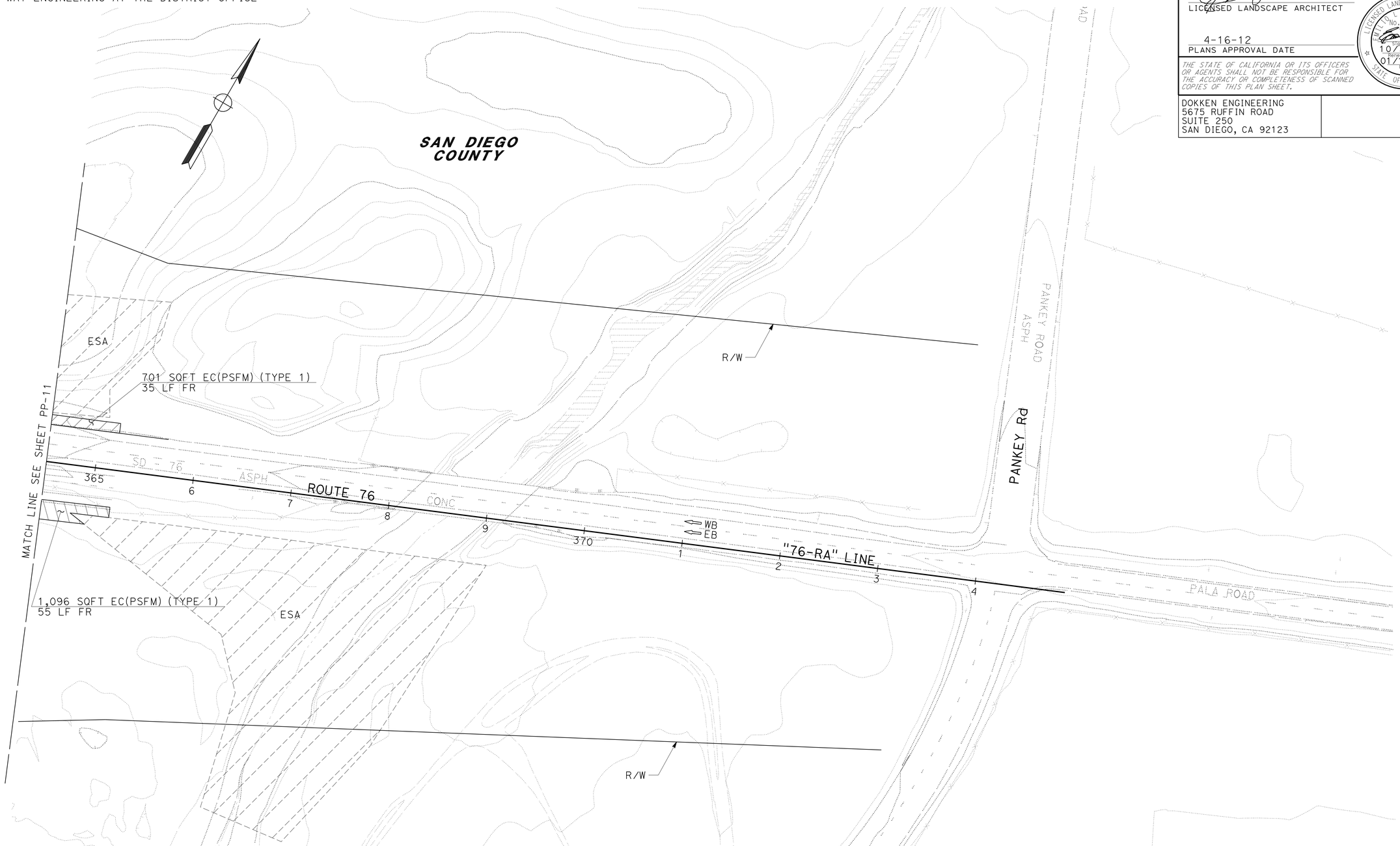

APPROVED FOR PLANTING WORK ONLY

PLANTING PLAN
SCALE: 1" = 50'
PP-12

STATE OF CALIFORNIA - DEPARTMENT OF TRANSPORTATION
Caltrans

CONSULTANT SENIOR LANDSCAPE ARCHITECT
EMILIO VIRAMONTES

CALCULATED-DESIGNED BY
KATHRYN WALKER

CHECKED BY
EMILIO VIRAMONTES

REVISED BY
DATE REVISED

LAST REVISION 01-24-12
DATE PLOTTED => 17-APR-2012
TIME PLOTTED => 15:20

Dist	COUNTY	ROUTE	POST MILES TOTAL PROJECT	SHEET No.	TOTAL SHEETS
11	SD	15,76	R46.1/R47.3, R16.7/R17.7	311	477

LICENSED LANDSCAPE ARCHITECT

4-16-12
PLANS APPROVAL DATE

LICENSED LANDSCAPE ARCHITECT EMILIO C. VIRAMONTES No. 3534 STATE OF CALIFORNIA
Signature 10/31/12
Renewal Date
01/12/12
Date

THE STATE OF CALIFORNIA OR ITS OFFICERS OR AGENTS SHALL NOT BE RESPONSIBLE FOR THE ACCURACY OR COMPLETENESS OF SCANNED COPIES OF THIS PLAN SHEET.

DOKKEN ENGINEERING
5675 RUFFIN ROAD
SUITE 250
SAN DIEGO, CA 92123

NOTE:
FOR ACCURATE RIGHT OF WAY DATA, CONTACT RIGHT OF WAY ENGINEERING AT THE DISTRICT OFFICE

EXISTING IRRIGATION EQUIPMENT TO BE REMOVED (QUANTITIES ARE APPROXIMATE)	
TYPE	QUANTITY
GATE VALVE	0
REMOTE CONTROL VALVE	1
IRRIGATION CONTROLLER CABINET	0
SPRINKLERS	0

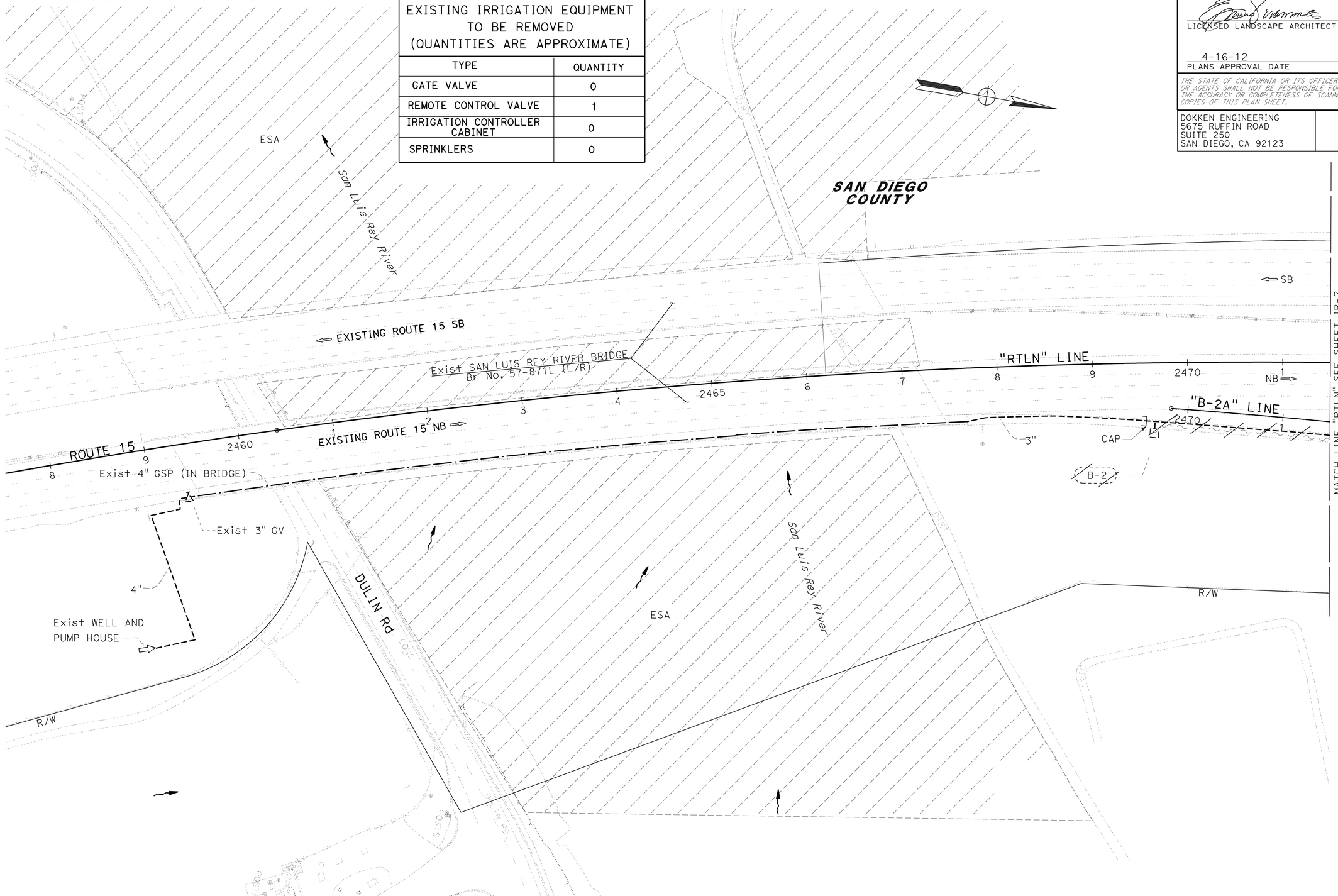

IRRIGATION REMOVAL PLAN

SCALE: 1" = 50'

IR-1

APPROVED FOR IRRIGATION REMOVAL WORK ONLY

STATE OF CALIFORNIA - DEPARTMENT OF TRANSPORTATION
Caltrans

CONSULTANT SENIOR LANDSCAPE ARCHITECT: EMILIO VIRAMONTES

CALCULATED-DESIGNED BY: JENA ADDENBROOKE
CHECKED BY: EMILIO VIRAMONTES
REVISED BY
DATE REVISED

LAST REVISION 01-24-12
DATE PLOTTED => 18-APR-2012
TIME PLOTTED => 09:02

NOTE:
FOR ACCURATE RIGHT OF WAY DATA, CONTACT
RIGHT OF WAY ENGINEERING AT THE DISTRICT OFFICE

Dist	COUNTY	ROUTE	POST MILES TOTAL PROJECT	SHEET No.	TOTAL SHEETS
11	SD	15,76	R46.1/R47.3, R16.7/R17.7	312	477

LICENSED LANDSCAPE ARCHITECT
4-16-12
PLANS APPROVAL DATE

LICENSED LANDSCAPE ARCHITECT
EMILIO C. VIRAMONTES
No. 3534
SIGNED FOR
10/31/12
EXPIRATION DATE
01/12/12
DATE
STATE OF CALIFORNIA

THE STATE OF CALIFORNIA OR ITS OFFICERS OR AGENTS SHALL NOT BE RESPONSIBLE FOR THE ACCURACY OR COMPLETENESS OF SCANNED COPIES OF THIS PLAN SHEET.

DOKKEN ENGINEERING
5675 RUFFIN ROAD
SUITE 250
SAN DIEGO, CA 92123

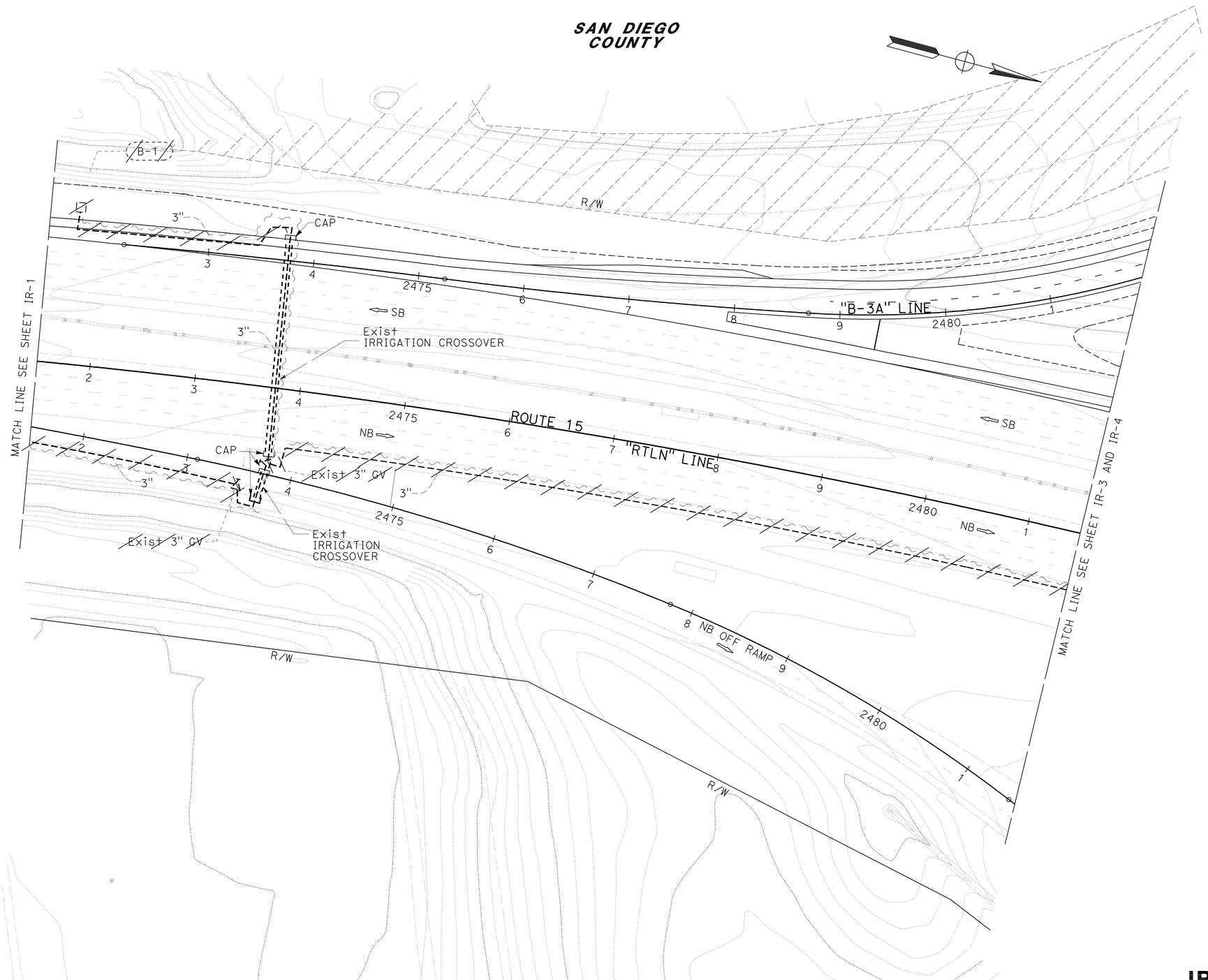

EXISTING IRRIGATION EQUIPMENT TO BE REMOVED (QUANTITIES ARE APPROXIMATE)	
TYPE	QUANTITY
GATE VALVE	2
REMOTE CONTROL VALVE	1
IRRIGATION CONTROLLER CABINET	0
SPRINKLERS	0

APPROVED FOR IRRIGATION REMOVAL WORK ONLY

IRRIGATION REMOVAL PLAN
SCALE: 1" = 50'
IR-2

STATE OF CALIFORNIA - DEPARTMENT OF TRANSPORTATION
Caltrans
CONSULTANT SENIOR LANDSCAPE ARCHITECT: EMILIO VIRAMONTES
CALCULATED-DESIGNED BY: JENA ADDENBROOKE
CHECKED BY: EMILIO VIRAMONTES
REVISED BY
DATE REVISED

LAST REVISION 01-24-12
DATE PLOTTED => 17-APR-2012
TIME PLOTTED => 15:21

NOTE:
FOR ACCURATE RIGHT OF WAY DATA, CONTACT
RIGHT OF WAY ENGINEERING AT THE DISTRICT OFFICE

EXISTING IRRIGATION EQUIPMENT TO BE REMOVED (QUANTITIES ARE APPROXIMATE)	
TYPE	QUANTITY
GATE VALVE	3
REMOTE CONTROL VALVE	4
IRRIGATION CONTROLLER CABINET	1
SPRINKLERS	0

Dist	COUNTY	ROUTE	POST MILES TOTAL PROJECT	SHEET No.	TOTAL SHEETS
11	SD	15,76	R46.1/R47.3, R16.7/R17.7	313	477

LICENSED LANDSCAPE ARCHITECT
4-16-12
PLANS APPROVAL DATE

LICENSED LANDSCAPE ARCHITECT EMILIO V. VIRAMONTES No. 3534 STATE OF CALIFORNIA
Signature 10/31/12
Renewal Date
01/12/12
Date

THE STATE OF CALIFORNIA OR ITS OFFICERS OR AGENTS SHALL NOT BE RESPONSIBLE FOR THE ACCURACY OR COMPLETENESS OF SCANNED COPIES OF THIS PLAN SHEET.

DOKKEN ENGINEERING
5675 RUFFIN ROAD
SUITE 250
SAN DIEGO, CA 92123

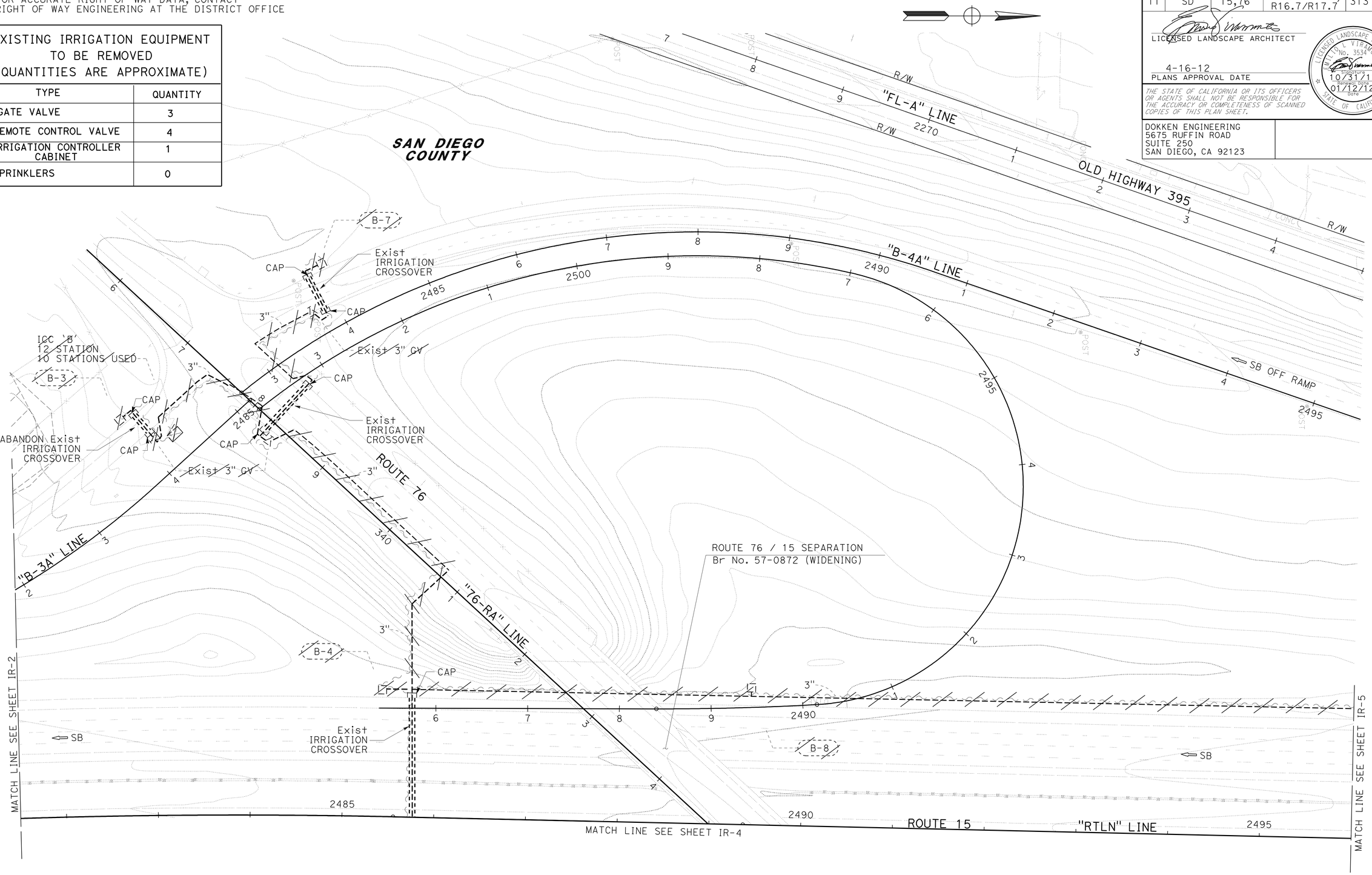

IRRIGATION REMOVAL PLAN

SCALE: 1" = 50'

APPROVED FOR IRRIGATION REMOVAL WORK ONLY

IR-3

STATE OF CALIFORNIA - DEPARTMENT OF TRANSPORTATION
Caltrans®

CONSULTANT SENIOR LANDSCAPE ARCHITECT: EMILIO VIRAMONTES
CALCULATED-DESIGNED BY: JENA ADDENBROOKE
CHECKED BY: EMILIO VIRAMONTES
REVISED BY
DATE REVISED

LAST REVISION 01-24-12
DATE PLOTTED => 17-APR-2012
TIME PLOTTED => 15:21

Dist	COUNTY	ROUTE	POST MILES TOTAL PROJECT	SHEET No.	TOTAL SHEETS
11	SD	15,76	R46.1/R47.3, R16.7/R17.7	314	477

LICENSED LANDSCAPE ARCHITECT

4-16-12
PLANS APPROVAL DATE

LICENSED LANDSCAPE ARCHITECT
EMILIO C. VIRAMONTES
No. 3534
Signature
10/31/12
Renewal Date
01/12/12
Date
STATE OF CALIFORNIA

THE STATE OF CALIFORNIA OR ITS OFFICERS OR AGENTS SHALL NOT BE RESPONSIBLE FOR THE ACCURACY OR COMPLETENESS OF SCANNED COPIES OF THIS PLAN SHEET.

DOKKEN ENGINEERING
5675 RUFFIN ROAD
SUITE 250
SAN DIEGO, CA 92123

NOTE:
FOR ACCURATE RIGHT OF WAY DATA, CONTACT RIGHT OF WAY ENGINEERING AT THE DISTRICT OFFICE

EXISTING IRRIGATION EQUIPMENT TO BE REMOVED (QUANTITIES ARE APPROXIMATE)	
TYPE	QUANTITY
GATE VALVE	2
REMOTE CONTROL VALVE	2
IRRIGATION CONTROLLER CABINET	0
SPRINKLERS	0

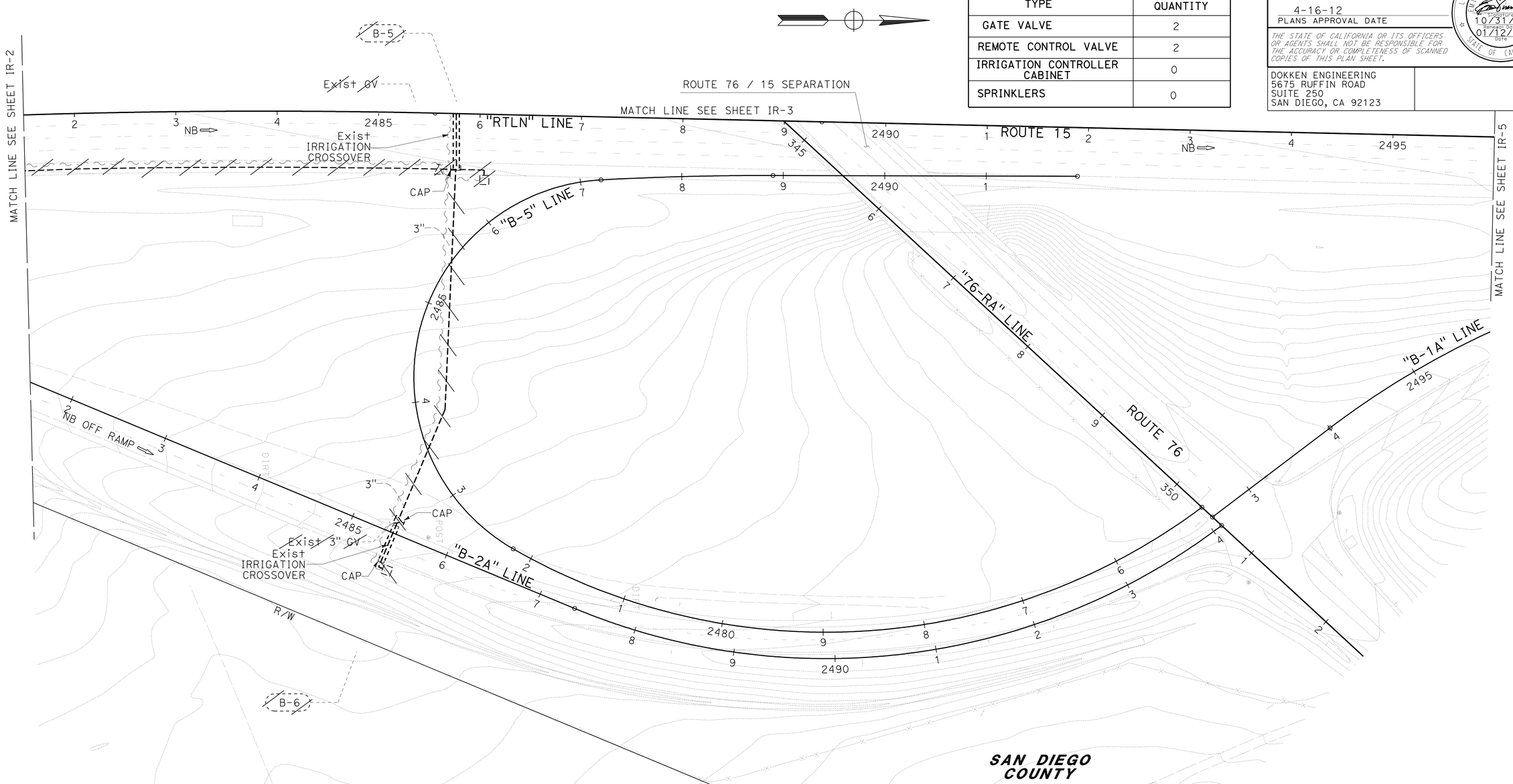

APPROVED FOR IRRIGATION REMOVAL WORK ONLY

IRRIGATION REMOVAL PLAN

SCALE: 1" = 50'

IR-4

STATE OF CALIFORNIA - DEPARTMENT OF TRANSPORTATION
Caltrans

CONSULTANT SENIOR LANDSCAPE ARCHITECT: EMILIO VIRAMONTES

CALCULATED-DESIGNED BY: JENA ADDENBROOKE
CHECKED BY: EMILIO VIRAMONTES

REVISED BY / DATE REVISED

LAST REVISION 01-24-12
DATE PLOTTED => 17-APR-2012
TIME PLOTTED => 15:21

NOTE:
FOR ACCURATE RIGHT OF WAY DATA, CONTACT
RIGHT OF WAY ENGINEERING AT THE DISTRICT OFFICE

Dist	COUNTY	ROUTE	POST MILES TOTAL PROJECT	SHEET No.	TOTAL SHEETS
11	SD	15,76	R46.1/R47.3, R16.7/R17.7	315	477

LICENSED LANDSCAPE ARCHITECT

4-16-12
PLANS APPROVAL DATE

LICENSED LANDSCAPE ARCHITECT
EMILIO C. VIRAMONTES
No. 3534
SIGNATURE
10/31/12
RENEWAL DATE
01/12/12
DATE
STATE OF CALIFORNIA

THE STATE OF CALIFORNIA OR ITS OFFICERS OR AGENTS SHALL NOT BE RESPONSIBLE FOR THE ACCURACY OR COMPLETENESS OF SCANNED COPIES OF THIS PLAN SHEET.

DOKKEN ENGINEERING
5675 RUFFIN ROAD
SUITE 250
SAN DIEGO, CA 92123

EXISTING IRRIGATION EQUIPMENT TO BE REMOVED (QUANTITIES ARE APPROXIMATE)

TYPE	QUANTITY
GATE VALVE	3
REMOTE CONTROL VALVE	4
IRRIGATION CONTROLLER CABINET	0
SPRINKLERS	0

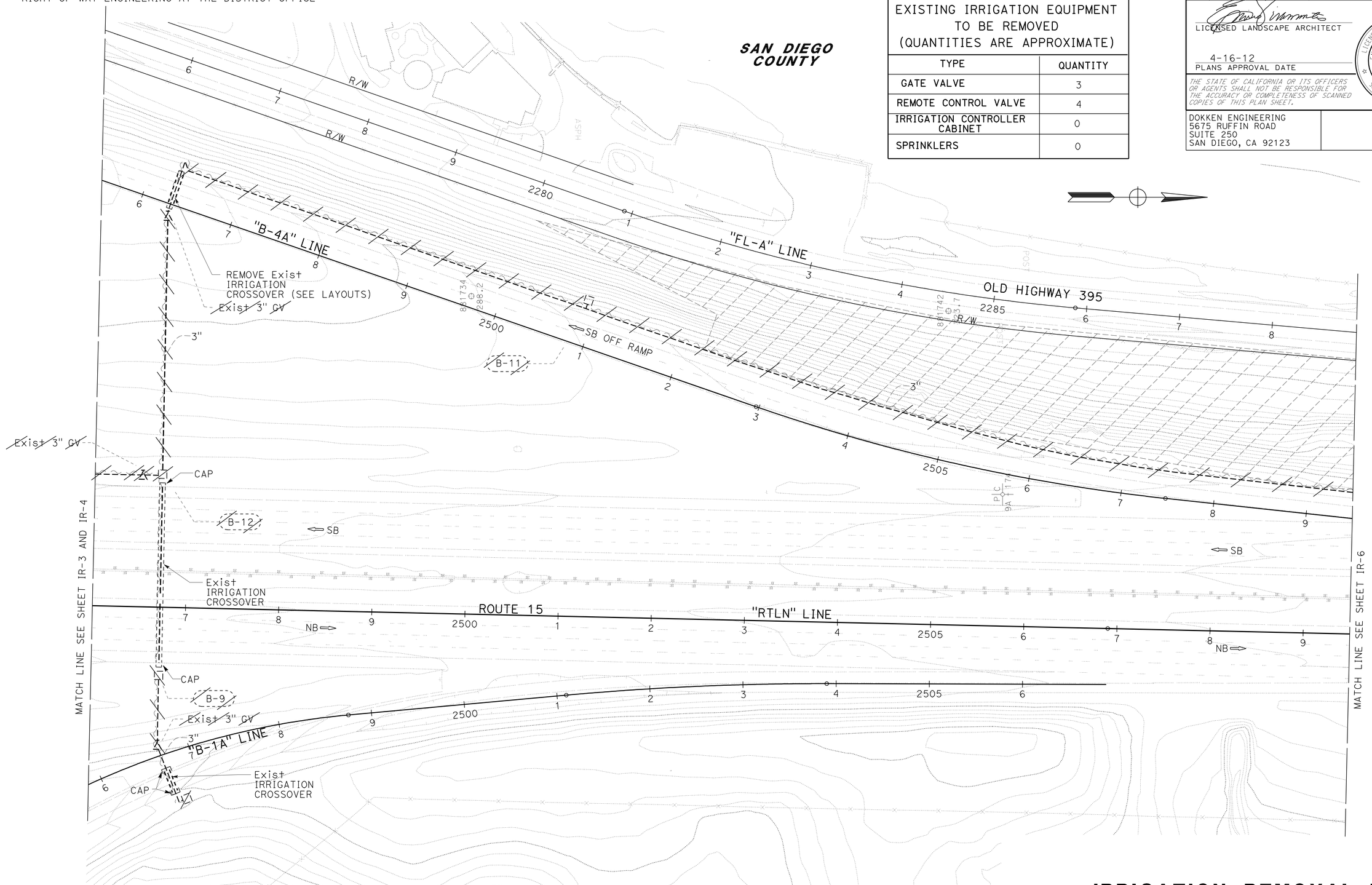

IRRIGATION REMOVAL PLAN

SCALE: 1" = 50'

IR-5

APPROVED FOR IRRIGATION REMOVAL WORK ONLY

STATE OF CALIFORNIA - DEPARTMENT OF TRANSPORTATION
Caltrans

CONSULTANT SENIOR LANDSCAPE ARCHITECT: EMILIO VIRAMONTES

CALCULATED-DESIGNED BY: JENA ADDENBROOKE
CHECKED BY: EMILIO VIRAMONTES

REVISED BY
DATE REVISED

LAST REVISION | DATE PLOTTED => 17-APR-2012
01-24-12 | TIME PLOTTED => 15:21

Dist	COUNTY	ROUTE	POST MILES TOTAL PROJECT	SHEET No.	TOTAL SHEETS
11	SD	15,76	R46.1/R47.3, R16.7/R17.7	316	477

LICENSED LANDSCAPE ARCHITECT

4-16-12
PLANS APPROVAL DATE

LICENSED LANDSCAPE ARCHITECT
EMILIO V. VIRAMONTES
No. 3534
signature
10/31/12
license date
01/12/12
date
STATE OF CALIFORNIA

THE STATE OF CALIFORNIA OR ITS OFFICERS OR AGENTS SHALL NOT BE RESPONSIBLE FOR THE ACCURACY OR COMPLETENESS OF SCANNED COPIES OF THIS PLAN SHEET.

DOKKEN ENGINEERING
5675 RUFFIN ROAD
SUITE 250
SAN DIEGO, CA 92123

NOTE:
FOR ACCURATE RIGHT OF WAY DATA, CONTACT RIGHT OF WAY ENGINEERING AT THE DISTRICT OFFICE

EXISTING IRRIGATION EQUIPMENT TO BE REMOVED (QUANTITIES ARE APPROXIMATE)

TYPE	QUANTITY
GATE VALVE	0
REMOTE CONTROL VALVE	0
IRRIGATION CONTROLLER CABINET	0
SPRINKLER	0

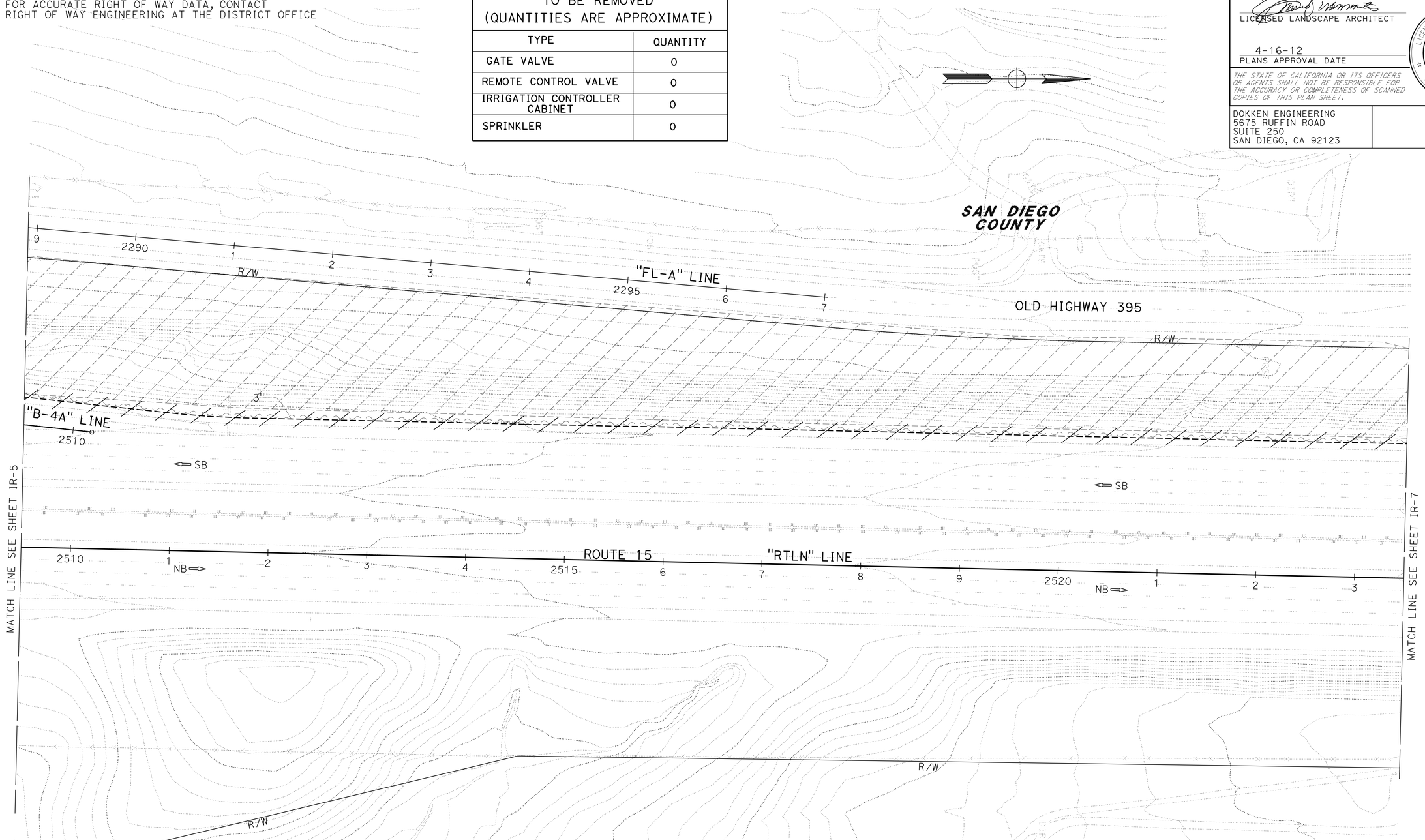

IRRIGATION REMOVAL PLAN

SCALE: 1" = 50'

IR-6

APPROVED FOR IRRIGATION REMOVAL WORK ONLY

STATE OF CALIFORNIA - DEPARTMENT OF TRANSPORTATION
Caltrans

CONSULTANT SENIOR LANDSCAPE ARCHITECT: EMILIO VIRAMONTES

CALCULATED-DESIGNED BY: JENA ADDENBROOKE
CHECKED BY: EMILIO VIRAMONTES

REVISED BY
DATE REVISED

LAST REVISION 01-24-12
DATE PLOTTED => 17-APR-2012
TIME PLOTTED => 15:21

Dist	COUNTY	ROUTE	POST MILES TOTAL PROJECT	SHEET No.	TOTAL SHEETS
11	SD	15,76	R46.1/R47.3, R16.7/R17.7	317	477

LICENSED LANDSCAPE ARCHITECT

4-16-12
PLANS APPROVAL DATE

LICENSED LANDSCAPE ARCHITECT
EMILIO C. VIRAMONTES
No. 3534
signature
10/31/12
license date
01/12/12
date
STATE OF CALIFORNIA

THE STATE OF CALIFORNIA OR ITS OFFICERS OR AGENTS SHALL NOT BE RESPONSIBLE FOR THE ACCURACY OR COMPLETENESS OF SCANNED COPIES OF THIS PLAN SHEET.

DOKKEN ENGINEERING
5675 RUFFIN ROAD
SUITE 250
SAN DIEGO, CA 92123

NOTE:
FOR ACCURATE RIGHT OF WAY DATA, CONTACT RIGHT OF WAY ENGINEERING AT THE DISTRICT OFFICE

EXISTING IRRIGATION EQUIPMENT TO BE REMOVED (QUANTITIES ARE APPROXIMATE)	
TYPE	QUANTITY
GATE VALVE	1
REMOTE CONTROL VALVE	1
MANUAL ANGLE VALVE	1
IRRIGATION CONTROLLER CABINET	0
SPRINKLERS	0

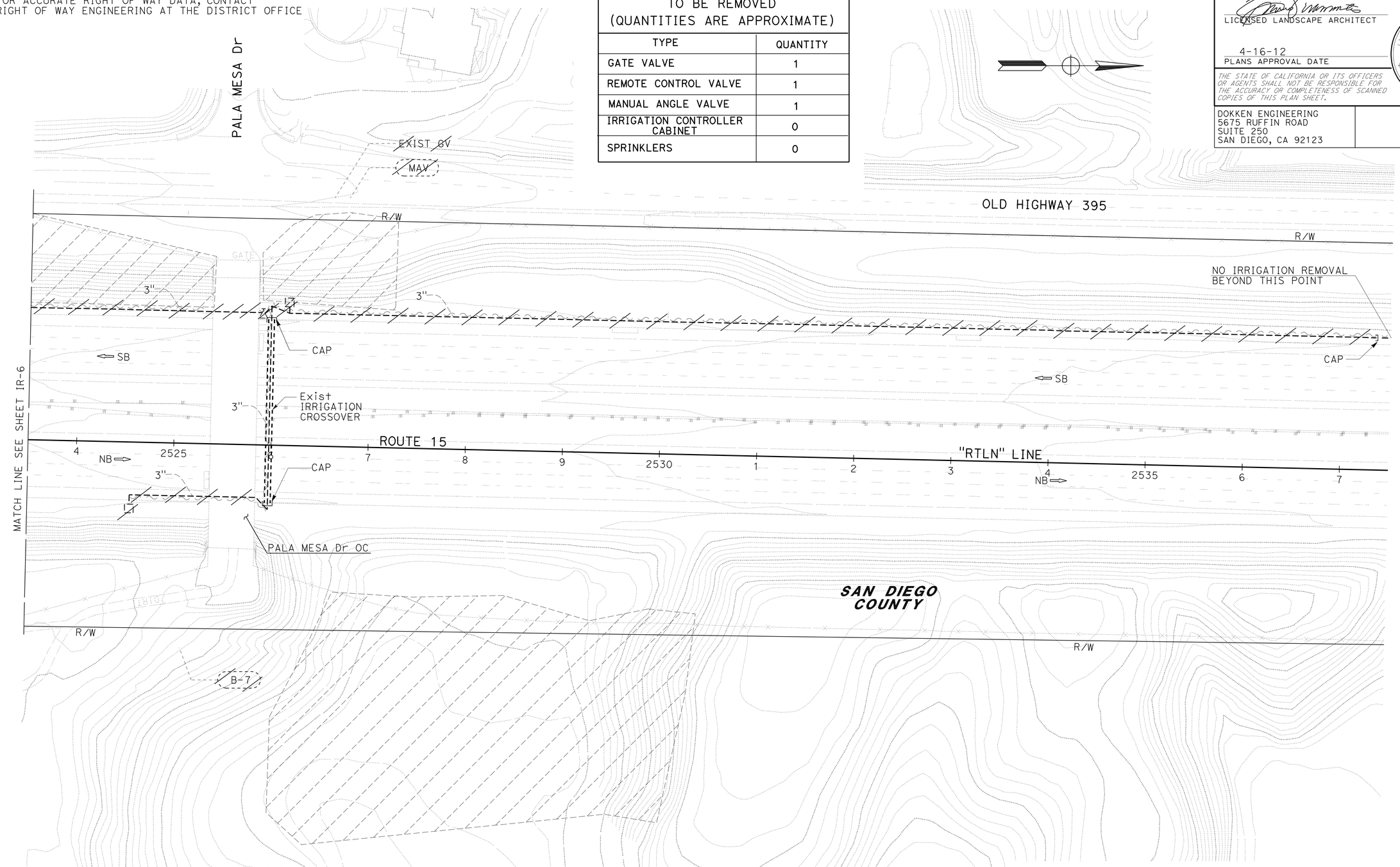

APPROVED FOR IRRIGATION REMOVAL WORK ONLY

IRRIGATION REMOVAL PLAN

SCALE: 1" = 50'

IR-7

STATE OF CALIFORNIA - DEPARTMENT OF TRANSPORTATION
Caltrans

CONSULTANT SENIOR LANDSCAPE ARCHITECT: EMILIO VIRAMONTES
CALCULATED-DESIGNED BY: JENA ADDENBROOKE
CHECKED BY: EMILIO VIRAMONTES
REVISED BY
DATE REVISED

LAST REVISION 01-24-12
DATE PLOTTED => 17-APR-2012
TIME PLOTTED => 15:21

Dist	COUNTY	ROUTE	POST MILES TOTAL PROJECT	SHEET No.	TOTAL SHEETS
11	SD	15,76	R46.1/R47.3, R16.7/R17.7	318	477

LICENSED LANDSCAPE ARCHITECT

4-16-12
PLANS APPROVAL DATE

LICENSED LANDSCAPE ARCHITECT
EMILIO VIRAMONTES
No. 3534
Signature
10/31/12
Renewal Date
01/12/12
Date
STATE OF CALIFORNIA

THE STATE OF CALIFORNIA OR ITS OFFICERS OR AGENTS SHALL NOT BE RESPONSIBLE FOR THE ACCURACY OR COMPLETENESS OF SCANNED COPIES OF THIS PLAN SHEET.

DOKKEN ENGINEERING
5675 RUFFIN ROAD
SUITE 250
SAN DIEGO, CA 92123

NOTES:

1. FOR ACCURATE RIGHT OF WAY DATA, CONTACT RIGHT OF WAY ENGINEERING AT THE DISTRICT OFFICE
2. SUPPLY LINES, VALVES, SPRINKLERS AND CONDUCTORS ADJACENT TO BIOSWALES SHALL BE INSTALLED ON THE NON PAVEMENT SIDE OF BIOSWALE.

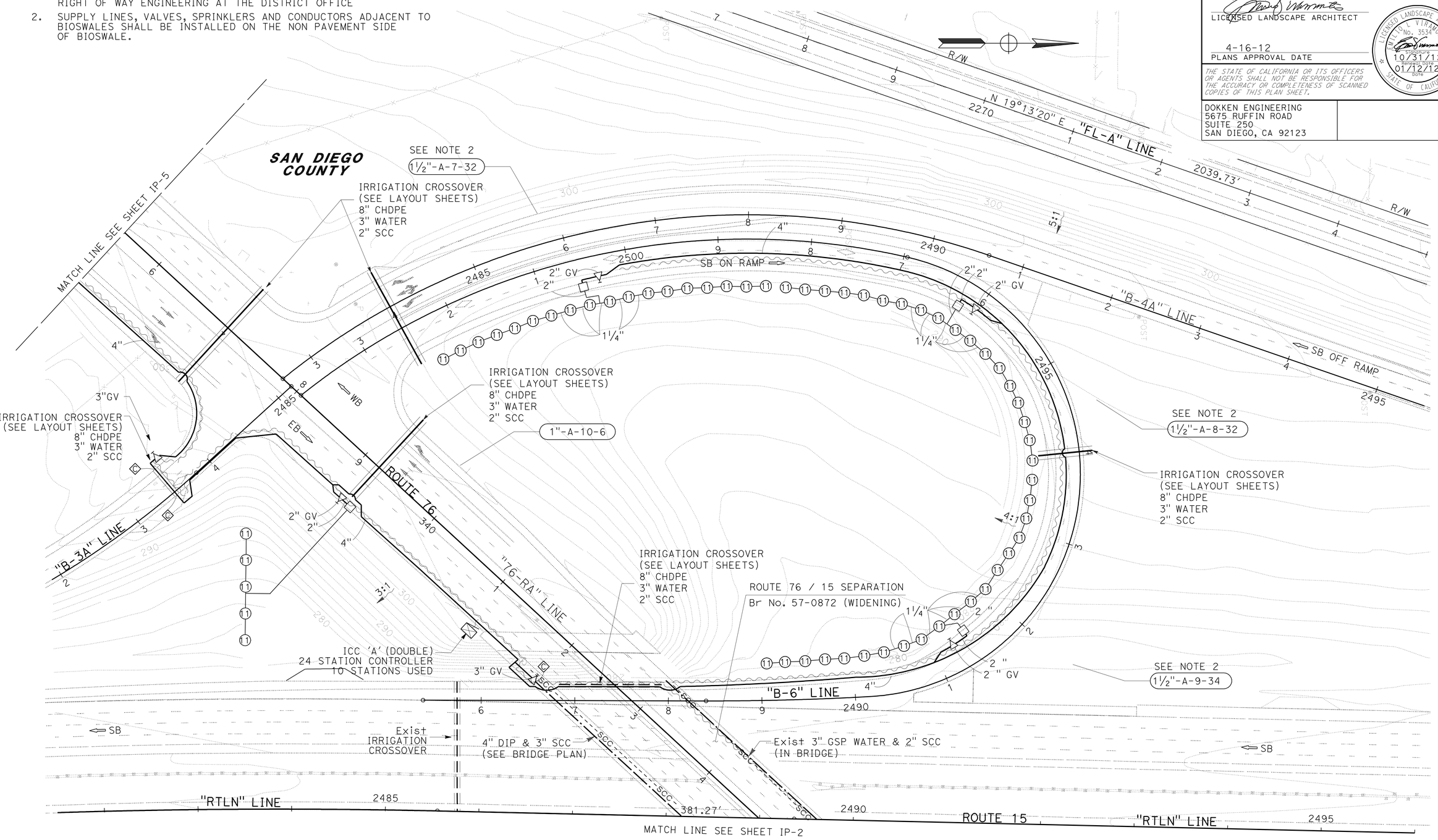

APPROVED FOR IRRIGATION WORK ONLY

IRRIGATION PLAN

SCALE: 1" = 50'

IP-1

STATE OF CALIFORNIA - DEPARTMENT OF TRANSPORTATION
Caltrans

CONSULTANT SENIOR LANDSCAPE ARCHITECT: EMILIO VIRAMONTES
CALCULATED-DESIGNED BY: JENA ADDENBROOKE
CHECKED BY: EMILIO VIRAMONTES
REVISED BY
DATE REVISED

LAST REVISION 01-24-12
DATE PLOTTED => 17-APR-2012
TIME PLOTTED => 15:21

Dist	COUNTY	ROUTE	POST MILES TOTAL PROJECT	SHEET No.	TOTAL SHEETS
11	SD	15,76	R46.1/R47.3, R16.7/R17.7	319	477

LICENSED LANDSCAPE ARCHITECT

4-16-12
PLANS APPROVAL DATE

LICENSED LANDSCAPE ARCHITECT EMILIO V. VIRAMONTES No. 3534 Signature 10/31/12 Renewal Date 01/12/12 Date STATE OF CALIFORNIA

THE STATE OF CALIFORNIA OR ITS OFFICERS OR AGENTS SHALL NOT BE RESPONSIBLE FOR THE ACCURACY OR COMPLETENESS OF SCANNED COPIES OF THIS PLAN SHEET.

DOKKEN ENGINEERING
5675 RUFFIN ROAD
SUITE 250
SAN DIEGO, CA 92123

NOTES:

1. FOR ACCURATE RIGHT OF WAY DATA, CONTACT RIGHT OF WAY ENGINEERING AT THE DISTRICT OFFICE
2. SUPPLY LINES, VALVES, SPRINKLERS AND CONDUCTORS ADJACENT TO BIOSWALES SHALL BE INSTALLED ON THE NON PAVEMENT SIDE OF BIOSWALE.

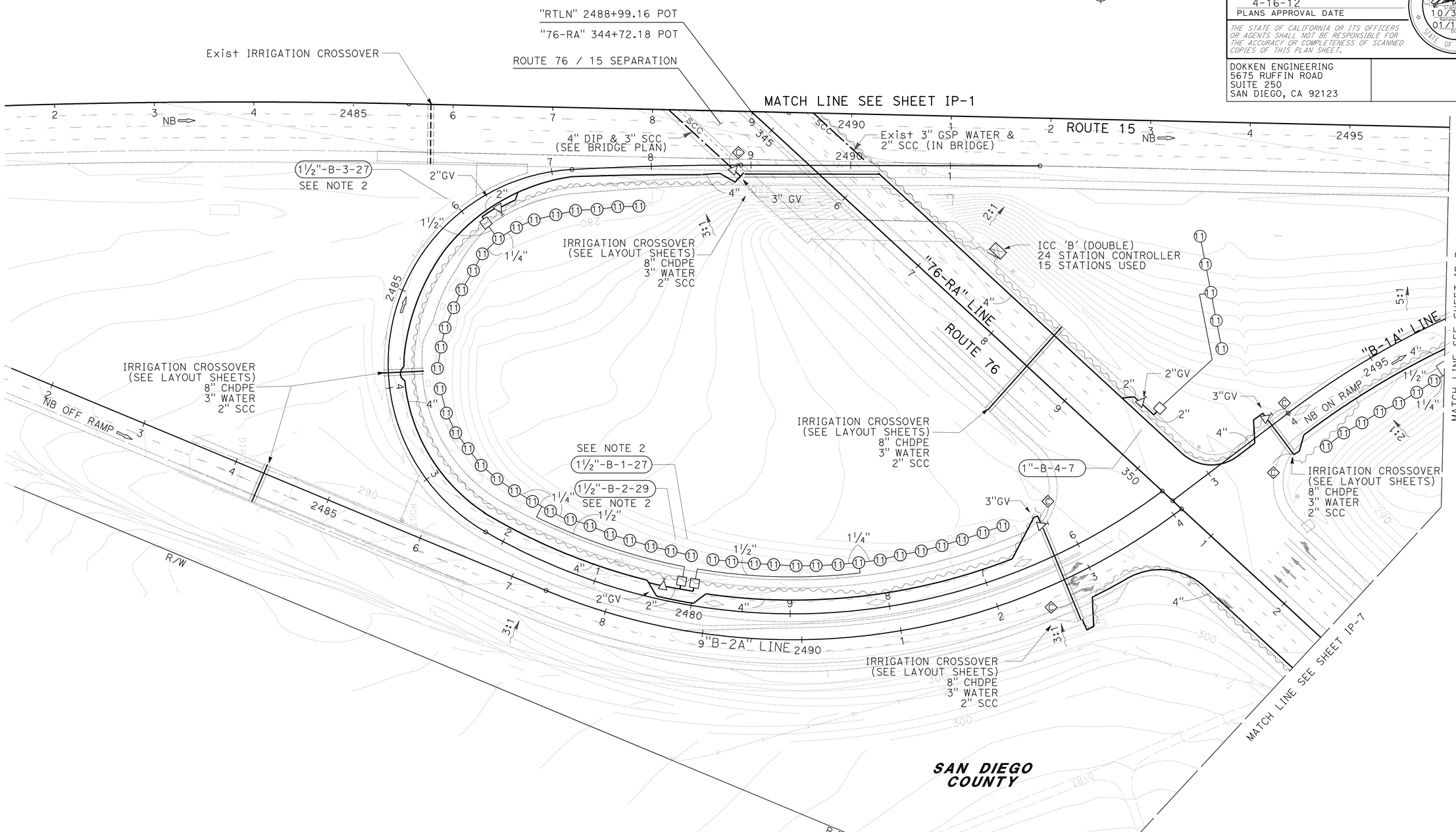

APPROVED FOR IRRIGATION WORK ONLY

IRRIGATION PLAN

SCALE: 1" = 50'

IP-2

STATE OF CALIFORNIA - DEPARTMENT OF TRANSPORTATION

Caltrans

CONSULTANT SENIOR LANDSCAPE ARCHITECT: EMILIO VIRAMONTES

CALCULATED-DESIGNED BY: JENA ADDENBROOKE

CHECKED BY: EMILIO VIRAMONTES

REVISED BY | DATE REVISED

LAST REVISION 01-24-12 | DATE PLOTTED => 17-APR-2012 | TIME PLOTTED => 15:21

Dist	COUNTY	ROUTE	POST MILES TOTAL PROJECT	SHEET No.	TOTAL SHEETS
11	SD	15,76	R46.1/R47.3, R16.7/R17.7	320	477

LICENSED LANDSCAPE ARCHITECT

4-16-12
PLANS APPROVAL DATE

LICENSED LANDSCAPE ARCHITECT EMILIO C. VIRAMONTES No. 3534 Signature 10/31/12 Renewal Date 01/12/12 Date STATE OF CALIFORNIA

THE STATE OF CALIFORNIA OR ITS OFFICERS OR AGENTS SHALL NOT BE RESPONSIBLE FOR THE ACCURACY OR COMPLETENESS OF SCANNED COPIES OF THIS PLAN SHEET.

DOKKEN ENGINEERING
5675 RUFFIN ROAD
SUITE 250
SAN DIEGO, CA 92123

NOTES:

1. FOR ACCURATE RIGHT OF WAY DATA, CONTACT RIGHT OF WAY ENGINEERING AT THE DISTRICT OFFICE
2. SUPPLY LINES, VALVES, SPRINKLERS AND CONDUCTORS ADJACENT TO BIOSWALES SHALL BE INSTALLED ON THE NON PAVEMENT SIDE OF BIOSWALE.

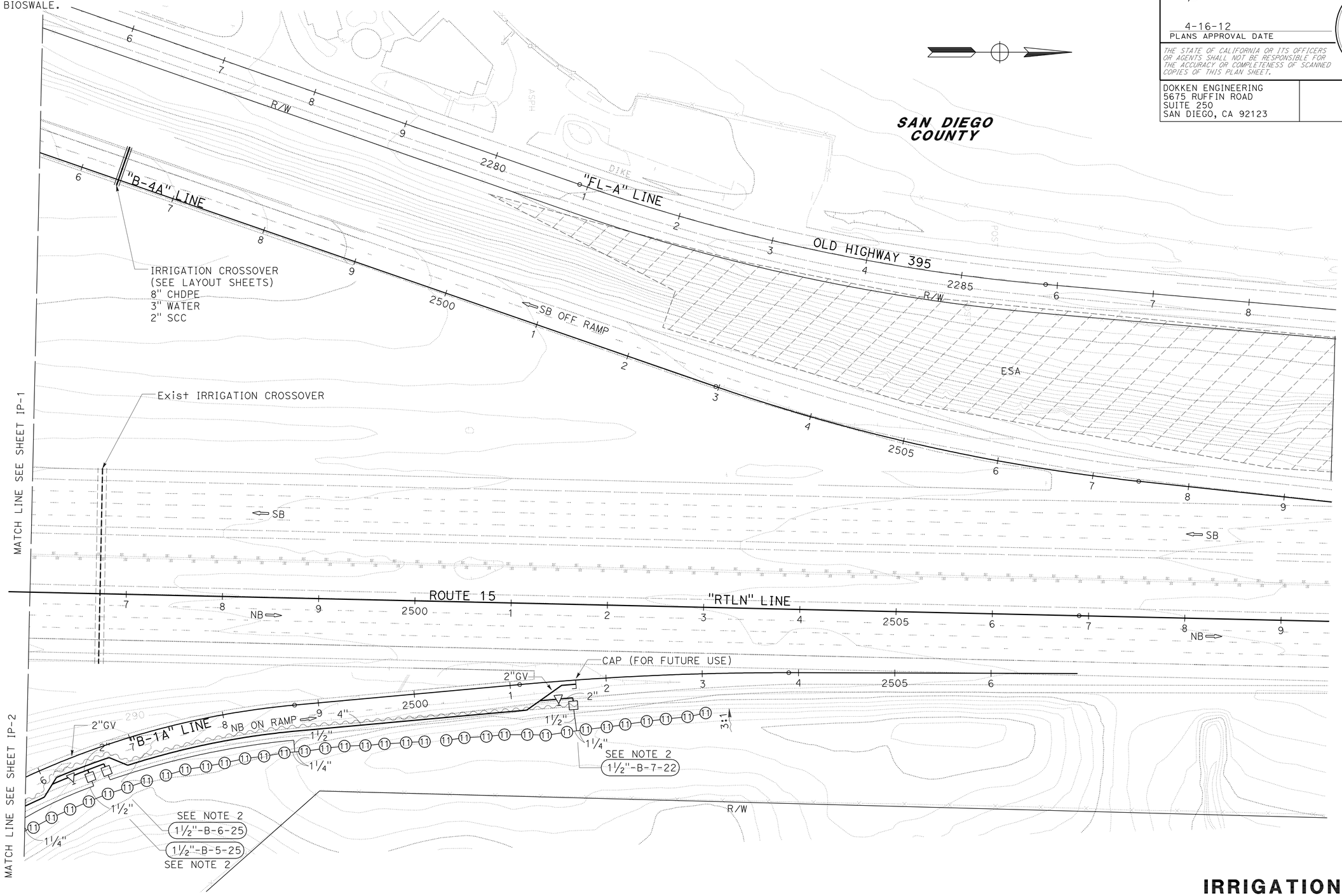

APPROVED FOR IRRIGATION WORK ONLY

IRRIGATION PLAN

SCALE: 1" = 50'

IP-3

STATE OF CALIFORNIA - DEPARTMENT OF TRANSPORTATION

Caltrans

CONSULTANT SENIOR LANDSCAPE ARCHITECT: EMILIO VIRAMONTES

CALCULATED-DESIGNED BY: JENA ADDENBROOKE

CHECKED BY: EMILIO VIRAMONTES

REVISED BY

DATE REVISED

LAST REVISION 01-24-12

DATE PLOTTED => 17-APR-2012
TIME PLOTTED => 15:22

Dist	COUNTY	ROUTE	POST MILES TOTAL PROJECT	SHEET No.	TOTAL SHEETS
11	SD	15,76	R46.1/R47.3, R16.7/R17.7	321	477

LICENSED LANDSCAPE ARCHITECT

4-16-12
PLANS APPROVAL DATE

LICENSED LANDSCAPE ARCHITECT
EMILIO VIRAMONTES
No. 3534
Signature
10/31/12
Renewal Date
01/12/12
Date
STATE OF CALIFORNIA

THE STATE OF CALIFORNIA OR ITS OFFICERS OR AGENTS SHALL NOT BE RESPONSIBLE FOR THE ACCURACY OR COMPLETENESS OF SCANNED COPIES OF THIS PLAN SHEET.

DOKKEN ENGINEERING
5675 RUFFIN ROAD
SUITE 250
SAN DIEGO, CA 92123

NOTES:

1. FOR ACCURATE RIGHT OF WAY DATA, CONTACT RIGHT OF WAY ENGINEERING AT THE DISTRICT OFFICE
2. SUPPLY LINES, VALVES, SPRINKLERS AND CONDUCTORS ADJACENT TO BIOSWALES SHALL BE INSTALLED ON THE NON PAVEMENT SIDE OF BIOSWALE.

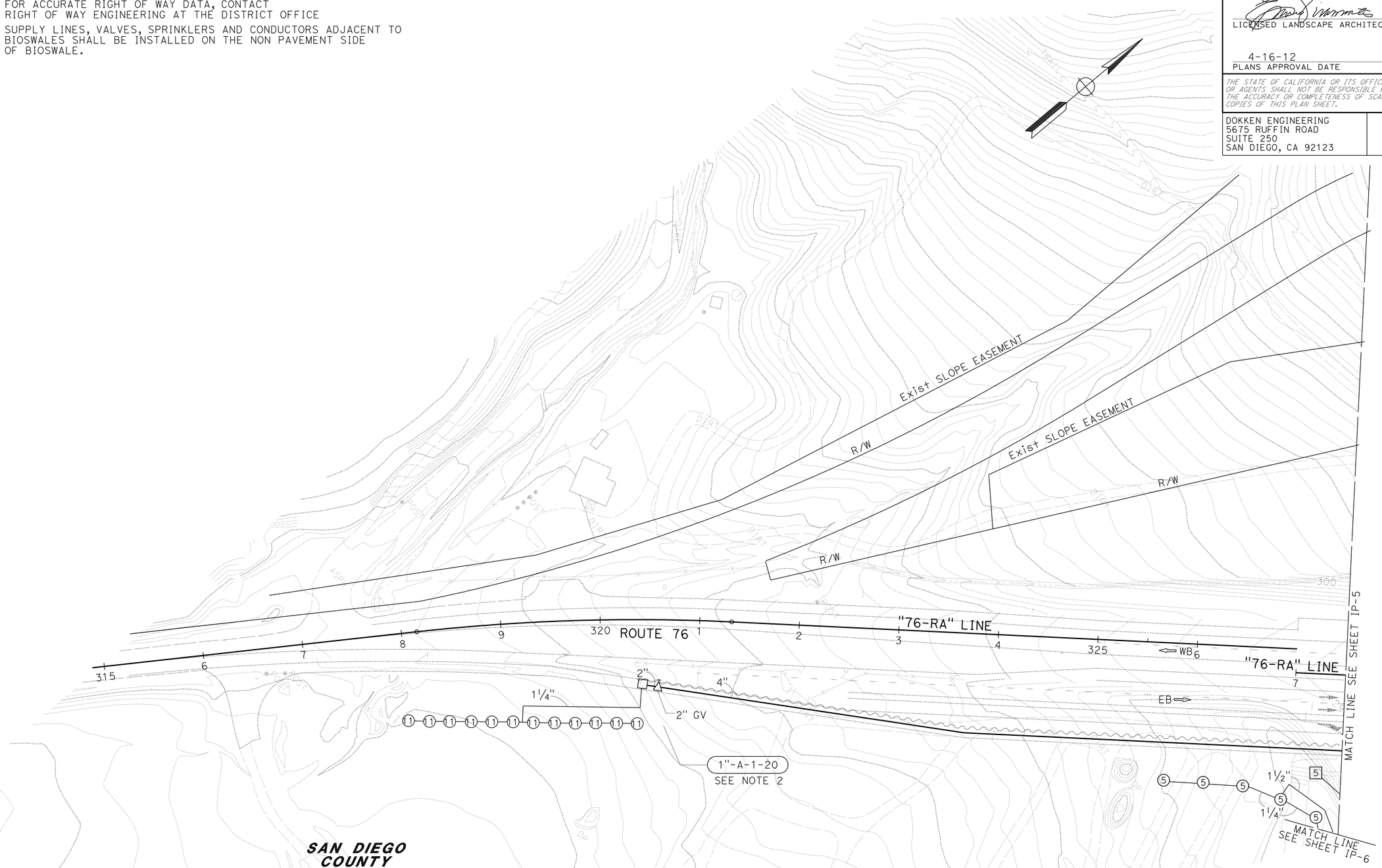

APPROVED FOR IRRIGATION WORK ONLY

IRRIGATION PLAN

SCALE: 1" = 50'

IP-4

STATE OF CALIFORNIA - DEPARTMENT OF TRANSPORTATION

Caltrans

CONSULTANT SENIOR LANDSCAPE ARCHITECT: EMILIO VIRAMONTES

CALCULATED-DESIGNED BY: JENA ADDENBROOKE

CHECKED BY: EMILIO VIRAMONTES

REVISED BY

DATE REVISED

LAST REVISION 01-24-12

DATE PLOTTED => 17-APR-2012
TIME PLOTTED => 15:22

Dist	COUNTY	ROUTE	POST MILES TOTAL PROJECT	SHEET No.	TOTAL SHEETS
11	SD	15,76	R46.1/R47.3, R16.7/R17.7	322	477

LICENSED LANDSCAPE ARCHITECT

4-16-12
PLANS APPROVAL DATE

LICENSED LANDSCAPE ARCHITECT
EMILIO C. VIRAMONTES
No. 3534
Signature
10/31/12
Renewal Date
01/12/12
Date
STATE OF CALIFORNIA

THE STATE OF CALIFORNIA OR ITS OFFICERS OR AGENTS SHALL NOT BE RESPONSIBLE FOR THE ACCURACY OR COMPLETENESS OF SCANNED COPIES OF THIS PLAN SHEET.

DOKKEN ENGINEERING
5675 RUFFIN ROAD
SUITE 250
SAN DIEGO, CA 92123

NOTES:

1. FOR ACCURATE RIGHT OF WAY DATA, CONTACT RIGHT OF WAY ENGINEERING AT THE DISTRICT OFFICE
2. SUPPLY LINES, VALVES, SPRINKLERS AND CONDUCTORS ADJACENT TO BIOSWALES SHALL BE INSTALLED ON THE NON PAVEMENT SIDE OF BIOSWALE.

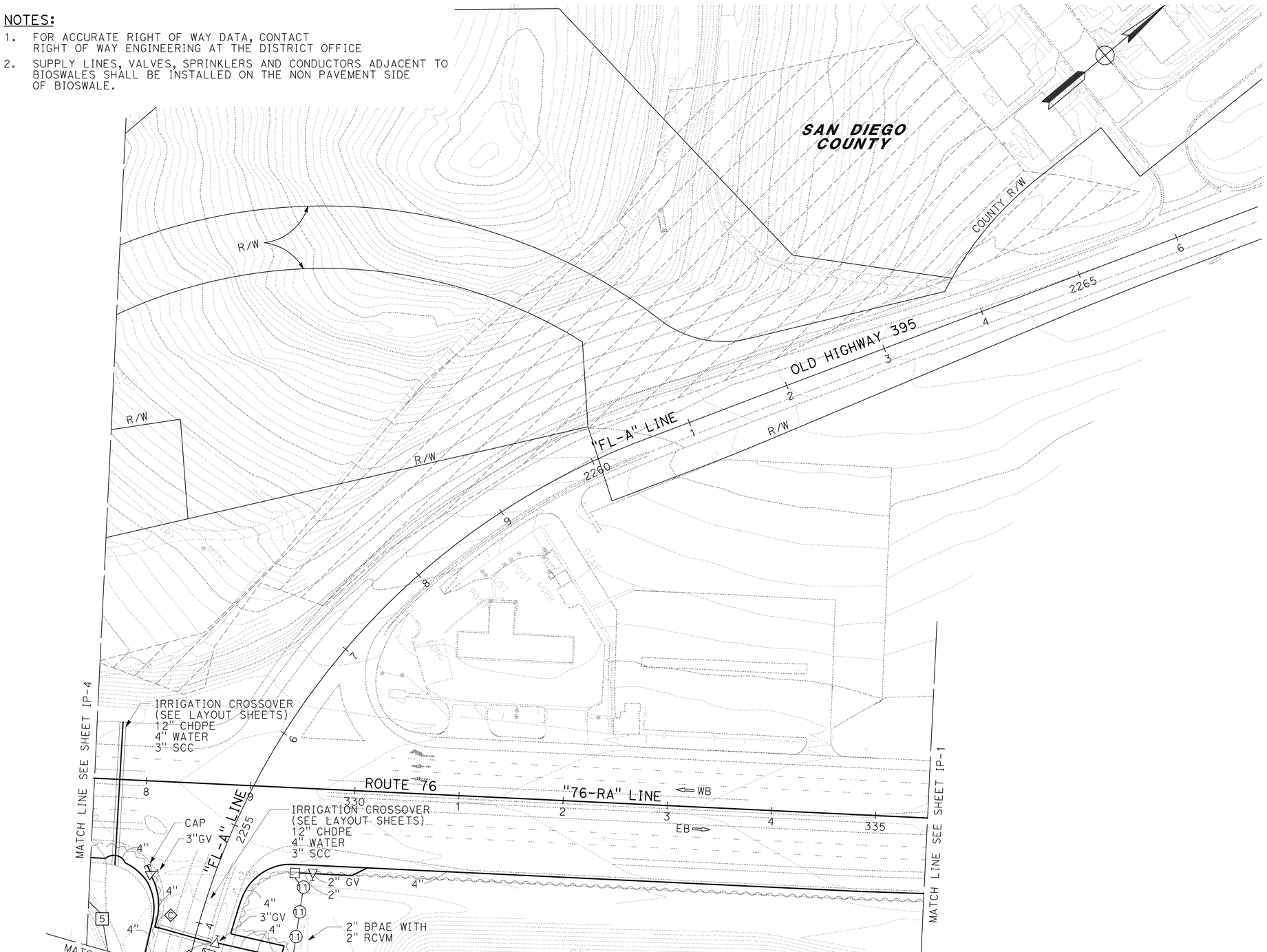

APPROVED FOR IRRIGATION WORK ONLY

IRRIGATION PLAN

SCALE: 1" = 50'

IP-5

STATE OF CALIFORNIA - DEPARTMENT OF TRANSPORTATION
Caltrans

CONSULTANT SENIOR LANDSCAPE ARCHITECT: EMILIO VIRAMONTES

CALCULATED-DESIGNED BY: JENA ADDENBROOKE
CHECKED BY: EMILIO VIRAMONTES

REVISED BY
DATE REVISED

LAST REVISION: DATE PLOTTED => 17-APR-2012
03-06-12 TIME PLOTTED => 15:22

Dist	COUNTY	ROUTE	POST MILES TOTAL PROJECT	SHEET No.	TOTAL SHEETS
11	SD	15,76	R46.1/R47.3, R16.7/R17.7	323	477

LICENSED LANDSCAPE ARCHITECT

4-16-12
PLANS APPROVAL DATE

LICENSED LANDSCAPE ARCHITECT
EMILIO C. VIRAMONTES
No. 3534
Signature
10/31/12
Renewal Date
01/12/12
Date
STATE OF CALIFORNIA

THE STATE OF CALIFORNIA OR ITS OFFICERS OR AGENTS SHALL NOT BE RESPONSIBLE FOR THE ACCURACY OR COMPLETENESS OF SCANNED COPIES OF THIS PLAN SHEET.

DOKKEN ENGINEERING
5675 RUFFIN ROAD
SUITE 250
SAN DIEGO, CA 92123

NOTES:

1. FOR ACCURATE RIGHT OF WAY DATA, CONTACT RIGHT OF WAY ENGINEERING AT THE DISTRICT OFFICE
2. SUPPLY LINES, VALVES, SPRINKLERS AND CONDUCTORS ADJACENT TO BIOSWALES SHALL BE INSTALLED ON THE NON PAVEMENT SIDE OF BIOSWALE.

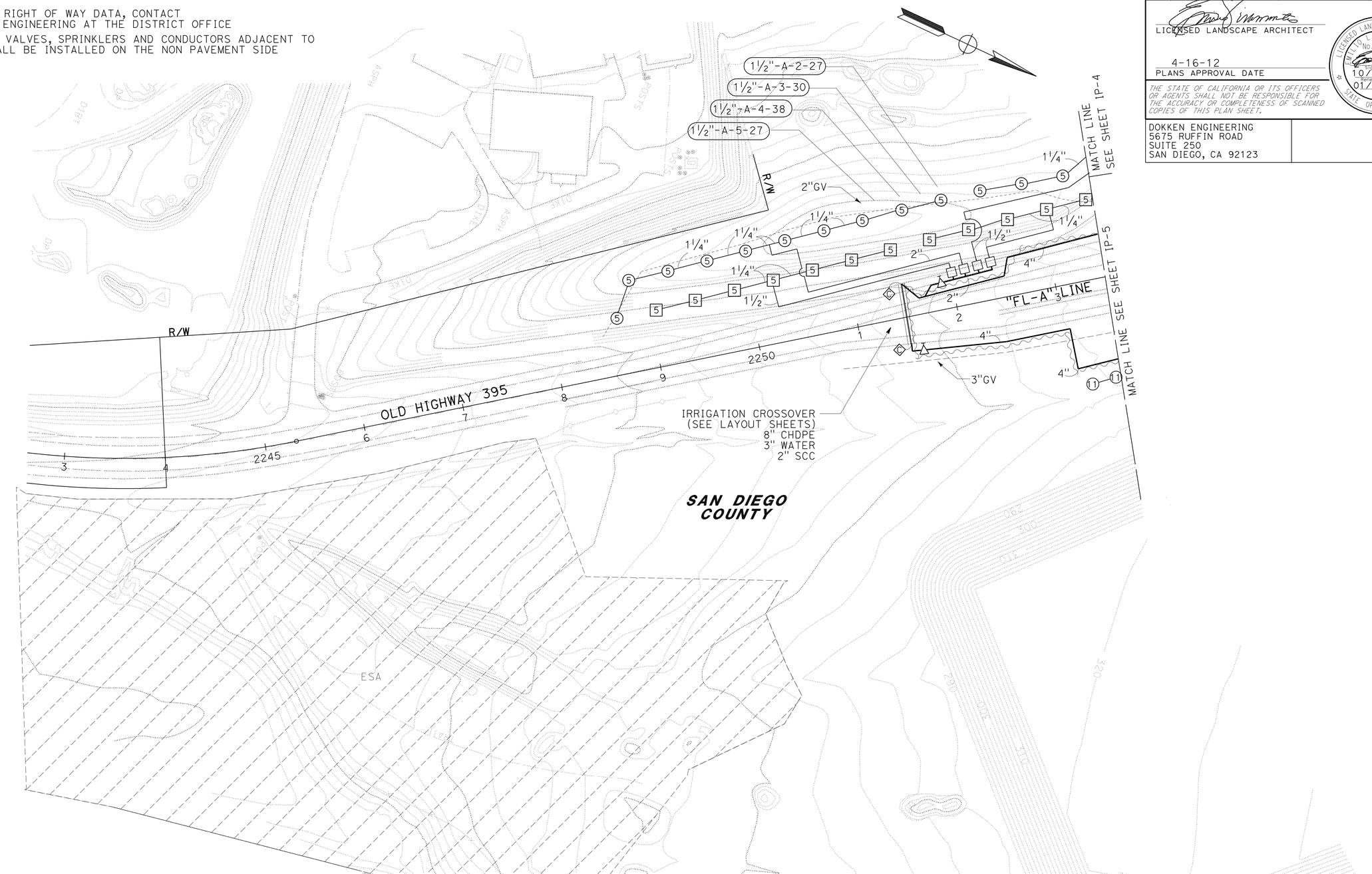

APPROVED FOR IRRIGATION WORK ONLY

IRRIGATION PLAN

SCALE: 1" = 50'

IP-6

STATE OF CALIFORNIA - DEPARTMENT OF TRANSPORTATION
Caltrans

CONSULTANT SENIOR LANDSCAPE ARCHITECT: EMILIO VIRAMONTES

CALCULATED-DESIGNED BY: EMILIO VIRAMONTES
CHECKED BY: JENA ADDENBROOKE
REVISED BY
DATE REVISED

LAST REVISION 03-06-12
DATE PLOTTED => 17-APR-2012
TIME PLOTTED => 15:22

Dist	COUNTY	ROUTE	POST MILES TOTAL PROJECT	SHEET No.	TOTAL SHEETS
11	SD	15,76	R46.1/R47.3, R16.7/R17.7	324	477

LICENSED LANDSCAPE ARCHITECT

4-16-12
PLANS APPROVAL DATE

LICENSED LANDSCAPE ARCHITECT
EMILIO C. VIRAMONTES
No. 3534
Signature
10/31/12
Renewal Date
01/12/12
Date
STATE OF CALIFORNIA

THE STATE OF CALIFORNIA OR ITS OFFICERS OR AGENTS SHALL NOT BE RESPONSIBLE FOR THE ACCURACY OR COMPLETENESS OF SCANNED COPIES OF THIS PLAN SHEET.

DOKKEN ENGINEERING
5675 RUFFIN ROAD
SUITE 250
SAN DIEGO, CA 92123

NOTES:

1. FOR ACCURATE RIGHT OF WAY DATA, CONTACT RIGHT OF WAY ENGINEERING AT THE DISTRICT OFFICE
2. SUPPLY LINES, VALVES, SPRINKLERS AND CONDUCTORS ADJACENT TO BIOSWALES SHALL BE INSTALLED ON THE NON PAVEMENT SIDE OF BIOSWALE.

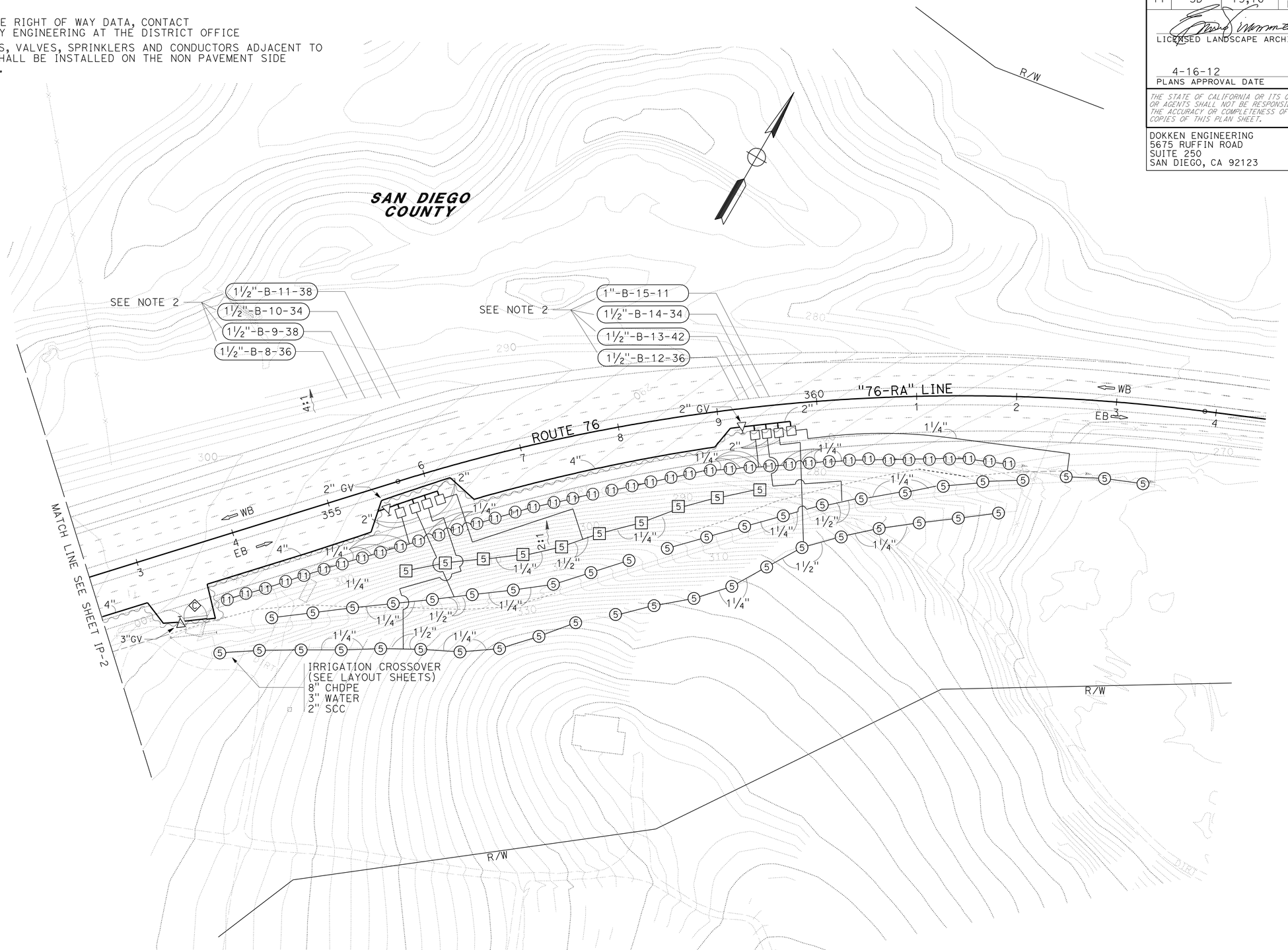

APPROVED FOR IRRIGATION WORK ONLY

IRRIGATION PLAN

SCALE: 1" = 50'

IP-7

STATE OF CALIFORNIA - DEPARTMENT OF TRANSPORTATION
Caltrans

CONSULTANT SENIOR LANDSCAPE ARCHITECT: EMILIO VIRAMONTES

CALCULATED-DESIGNED BY: JENA ADDENBROOKE
CHECKED BY: EMILIO VIRAMONTES

REVISED BY
DATE REVISED

LAST REVISION 01-24-12
DATE PLOTTED => 17-APR-2012
TIME PLOTTED => 15:22

Dist	COUNTY	ROUTE	POST MILES TOTAL PROJECT	SHEET No.	TOTAL SHEETS
11	SD	15,76	R46.1/R47.3, R16.7/R17.7	325	477

LICENSED LANDSCAPE ARCHITECT

4-16-12
PLANS APPROVAL DATE

EMILIO L. VIRAMONTES No. 3534 — Signature — Expiration Date 10/31/12 — Renewal Date 01/12/12 — Date — LICENSED LANDSCAPE ARCHITECT — STATE OF CALIFORNIA

THE STATE OF CALIFORNIA OR ITS OFFICERS OR AGENTS SHALL NOT BE RESPONSIBLE FOR THE ACCURACY OR COMPLETENESS OF SCANNED COPIES OF THIS PLAN SHEET.

DOKKEN ENGINEERING
5675 RUFFIN ROAD
SUITE 250
SAN DIEGO, CA 92123

SPRINKLER SCHEDULE

SYMBOL	TYPE	DESCRIPTION	SPRAY PATTERN	OPERATING PRESSURE (PSI)	PRESSURE COMPENSATING	PLUS / MINUS 5% ② DISCHARGE: GALLONS PER SECOND (GPS)	GALLONS PER MINUTE (GPM)	GALLONS PER HOUR (GPH)	RADIUS (F+)	WIDTH x LENGTH (F+)	MATERIAL	NOZZLE SIZE (INCH)	INLET CONNECTION (NPT) (DN IN INCHES)(INCH)	POSITIVE-LOCKING ADJ ARC STOP	BACKSPLASH PREVENTER	DIFFUSER PIN	DISTANCE CONTROL FLAP	ADJ DISCHARGE	RISER: TYPE	RISER MATERIAL: PLASTIC	GALVANIZED	RISER: SIZE (IPS) (INCH)	HEIGHT (INCH)	FLOW SHUTOFF DEVICE	SWING JOINT (TYPE)	RISER SUPPORT	SPRINKLER PROTECTOR (TYPE)	REMARKS
[5]	A-5	GEAR DRIVEN	F	50	-	-	3.8	-	40	-	PL	-	¾	-	-	X	-	-	I	X	-	¾	12	-	1	-	-	③
⑤	A-5	GEAR DRIVEN	P	50	-	-	3.8	-	40	-	PL	-	¾	-	-	X	-	-	I	X	-	¾	12	-	1	-	-	③⑦
⑪	A-11	GEAR DRIVEN	P	50	-	-	1.8	-	21	-	PL	-	¾	-	-	X	-	-	I	X	-	¾	12	-	1	-	-	③⑦

X IN BOX DENOTES REQUIREMENT

APPLICABLE WHEN CIRCLED BELOW:

1 - SEE SPECIAL PROVISIONS.
② - IF A PRESSURE COMPENSATING DEVICE IS SPECIFIED, THE DISCHARGE AND RADII SHOWN REFLECT ITS USE.
③ - SHALL HAVE AN INTERNAL OR EXTERNAL CHECK VALVE.
4 - NON-ADJUSTABLE DISCHARGE RATE.
5 - REQUIRED ADJACENT TO SHOULDERS, CURBS, SIDEWALKS, AND DIKES.
6 - UNLESS OTHERWISE SHOWN ON PLANS.
⑦ - ADJUSTABLE ARC.
8 - MATCHED PRECIPITATION RATE NOZZLES.
9 - REFER TO PIPE SIZING CHARTS.

ABBREVIATIONS

Adj — ADJUSTABLE
B/B — BRASS/BRONZE
B/B/PL — BRASS/BRONZE/PLASTIC
B/PL — BRASS/PLASTIC
CST — CENTER STRIP
DN — DIAMETER NOMINAL
EST — END STRIP
F+ — FEET
F — FULL CIRCLE
F/P — FULL/PART CIRCLE
GPM — GALLONS PER MINUTE
H — HALF CIRCLE
IPS — IRON PIPE SIZE
NPT — NATIONAL PIPE THREAD
P — PART CIRCLE
PL — PLASTIC
PSI — POUNDS PER SQUARE INCH
Q — QUARTER CIRCLE
SST — SIDE STRIP
T — THIRD CIRCLE
TQ — THREE QUARTER CIRCLE
TT — TWO THIRDS CIRCLE

NOTES:

1. ALL NEW LATERAL PIPE NOT LABELED SHALL BE 1 INCH.
2. PULL ONE ADDITIONAL CNC WIRE FROM EACH CONTROLLER TO THE LAST VALVE BOX AT EACH VALVE MANIFOLD. (FOR FUTURE USE)
3. ALL NEW MAINLINE PIPE WHICH HAS A CHANGE IN DIRECTION OF 90 DEGREES OR MORE SHALL HAVE (2)-45 DEGREE ELBOWS.
4. ALL SPRINKLER HEADS, VALVES, MAINLINE AND LATERAL LINE NEAR MVP LOCATIONS ARE TO BE INSTALLED OUTSIDE OF THE MVP AREA. VALVES TO BE INSTALLED AT THE EXITING END OF MVP.

LEGEND:

--SCC-------- — EXISTING SPRINKLER CONTROL CONDUIT (SCC)(IN BRIDGE)
— — · — — — EXISTING SUPPLY LINE (IN BRIDGE)

LANDSCAPE DETAILS

NO SCALE

LD-1

LAST REVISION 01-24-12 | DATE PLOTTED => 17-APR-2012 | TIME PLOTTED => 15:22

STATE OF CALIFORNIA - DEPARTMENT OF TRANSPORTATION
Caltrans®
CONSULTANT SENIOR LANDSCAPE ARCHITECT: EMILIO VIRAMONTES
CALCULATED-DESIGNED BY: EMILIO VIRAMONTES
CHECKED BY
REVISED BY
DATE REVISED

Dist	COUNTY	ROUTE	POST MILES TOTAL PROJECT	SHEET No.	TOTAL SHEETS
11	SD	15,76	R46.1/R47.3, R16.7/R17.7	326	477

LICENSED LANDSCAPE ARCHITECT

4-16-12
PLANS APPROVAL DATE

LICENSED LANDSCAPE ARCHITECT EMILIO L. VIRAMONTES No. 3534 Signature 10/31/12 Renewal Date 01/12/12 Date STATE OF CALIFORNIA

THE STATE OF CALIFORNIA OR ITS OFFICERS OR AGENTS SHALL NOT BE RESPONSIBLE FOR THE ACCURACY OR COMPLETENESS OF SCANNED COPIES OF THIS PLAN SHEET.

DOKKEN ENGINEERING
5675 RUFFIN ROAD
SUITE 250
SAN DIEGO, CA 92123

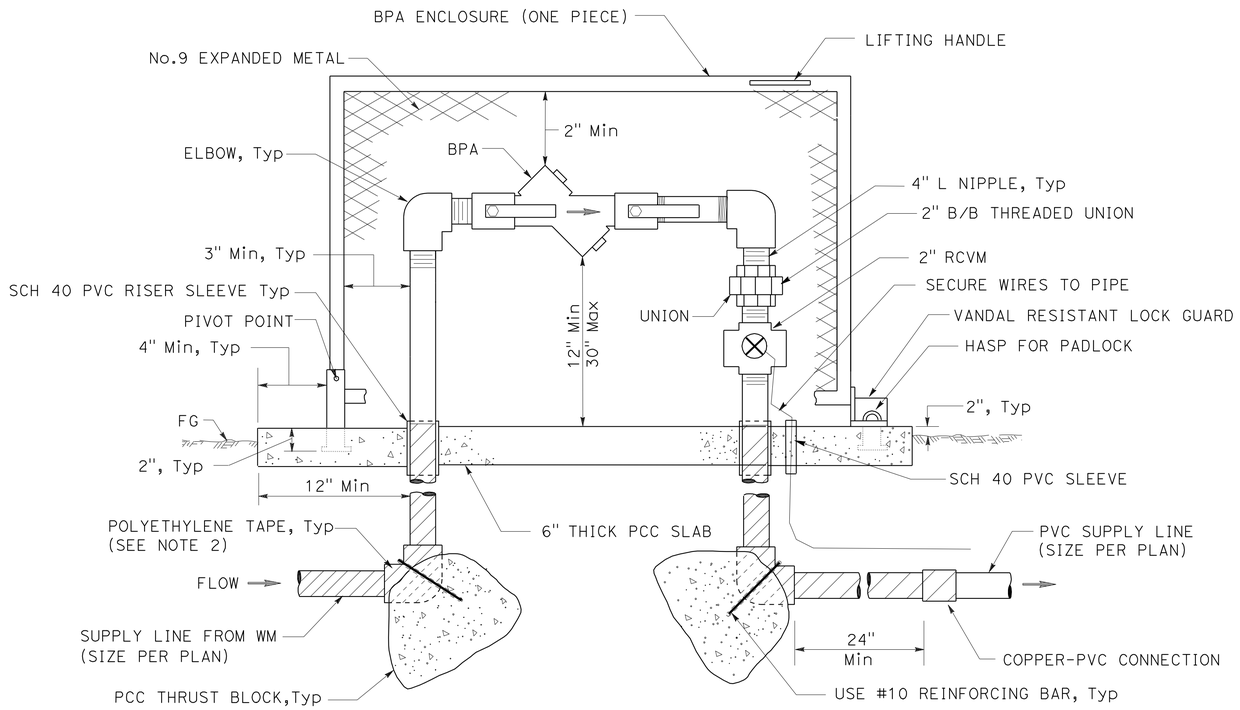

ELEVATION

NOTES:

1. WS AND FITTINGS SHALL BE SAME SIZE AS BACKFLOW PREVENTER SHOWN ON PLANS.
2. BPA SHALL BE CONSTRUCTED WITH COPPER PIPE FROM WM THROUGH BPA TO CONNECTION TO PVC AS SHOWN ON DETAIL.
3. ALL METAL IN CONTACT WITH SOIL AND PCC SHALL BE POLYETHYLENE WRAPPED USING 2 INCH WIDE PLASTIC ADHESIVE TAPE 0.020 INCH THICK WITH
4. EXPOSED COPPER PIPE SHALL BE PAINTED A TAN OR LIGHT BROWN COLOR TO MATCH ENCLOSURE.

BACKFLOW PREVENTER ASSEMBLY IN ENCLOSURE (BPAE) AND REMOTE CONTROL VALVE (MASTER) (RCVM)

(MODIFIED)

THRUST BLOCK DETAIL

INSTALLATION	TYPE FITTING	INSTALLATION	TYPE FITTING
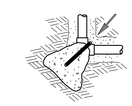	90° ELL	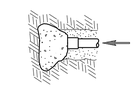	DEAD END
	BEND 45° 22.5° 11.25°		GATE VALVE
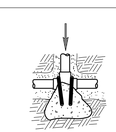	TEE		VERTICAL BEND (TYPE I) 45° 22.5° 11.25°
		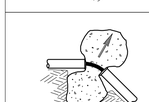	OR VERTICAL BEND (TYPE II) 45° 22.5° 11.25°

NOTES:

Min 1 CF PCC FOR 1½" PIPE SIZE AND SMALLER.
Min 2 CF PCC FOR 2" PIPE SIZE.
Min 3 CF PCC FOR 3" AND 4" PIPE SIZE.
USE #3 REINFORCING BAR WHERE SHOWN.

LANDSCAPE DETAILS

NO SCALE

LD-2

REVISED BY	DATE REVISED
EMILIO VIRAMONTES	EMILIO VIRAMONTES

CALCULATED-DESIGNED BY: EMILIO VIRAMONTES
CHECKED BY: EMILIO VIRAMONTES
CONSULTANT SENIOR LANDSCAPE ARCHITECT: EMILIO VIRAMONTES

STATE OF CALIFORNIA - DEPARTMENT OF TRANSPORTATION
Caltrans

LAST REVISION 01-24-12 | DATE PLOTTED => 17-APR-2012 | TIME PLOTTED => 15:22

Dist	COUNTY	ROUTE	POST MILES TOTAL PROJECT	SHEET No.	TOTAL SHEETS
11	SD	15,76	R46.1/R47.3, R16.7/R17.7	327	477

Fariba Ramos 01-20-12
REGISTERED ELECTRICAL ENGINEER DATE

4-16-12
PLANS APPROVAL DATE

REGISTERED PROFESSIONAL ENGINEER FARIBA RAMOS No. E15619 Exp. 12-31-13 ELECTRICAL STATE OF CALIFORNIA

THE STATE OF CALIFORNIA OR ITS OFFICERS OR AGENTS SHALL NOT BE RESPONSIBLE FOR THE ACCURACY OR COMPLETENESS OF SCANNED COPIES OF THIS PLAN SHEET.

FOR ACCURATE RIGHT OF WAY DATA, CONTACT RIGHT OF WAY ENGINEERING AT THE DISTRICT OFFICE.

ABBREVIATIONS AND LEGEND:

- N△C — EXISTING CONDUIT NO CHANGE
- L△S — FOR INFORMATION SEE LIGHTING AND SIGN ILLUMINATION PLANS.
- S△L — FOR INFORMATION SEE SIGNAL AND LIGHTING PLANS.
- TMS△ — FOR INFORMATION SEE TRAFFIC MONITORING STATION PLANS.
- F△O — FOR INFORMATION SEE FIBER OPTIC COMMUNICATION SYSTEM PLANS.
- C△C — COMMUNICATION CONDUIT
- SDG&E — SAN DIEGO GAS AND ELECTRIC COMPANY
- (TSO) — THIS SHEET ONLY
- AT&T — TELEPHONE COMPANY
- CON — CONTACTOR
- S — SIGN ILLUMINATION
- VLTG — VOLTAGE
- PWR — POWER
- OCC — OUTDOOR CATEGORY 5E CABLE
- VDU — VIDEO DETECTION UNIT
- VIS — VIDEO IMAGE SENSOR
- [ØX] — VIDEO DETECTION ZONE PHASE AS NOTED
- ▭ — SEE E-41 FOR PULL BOX DETAILS EXCEPT FOR TRAFFIC RATED PULL BOXES.
- T△ — TEMPORARY CONDUIT, 2"C TYPE 1. CONDUCTORS PER PLANS. SEE ELECTRICAL DETAILS
- CMSH — CHANGEABLE MESSAGE SIGN HARNESS
- SCM — STAGE CONSTRUCTION MOUNTING
- —— FO —— — MDCS FOR FO CABLE FOR TRENCH DETAILS SEE CONSTRUCTION DETAILS
- FOXX — FIBER OPTIC CABLE: XX DENOTES NUMBER OF SINGLEMODE FIBERS
- [V]S — FIBER OPTIC VAULT AND SPLICE CLOSURE SEE ELECTRICAL DETAILS
- [V] — FIBER OPTIC VAULT SEE ELECTRICAL DETAILS
- FIBER OPTIC TRENCH DELINEATOR
- FDU — FIBER DISTRIBUTION UNIT
- SMFO — SINGLEMODE FIBER OPTIC
- MDCS(X) — MULTIDUCT CONDUIT SYSTEM (X = No. OF DUCTS) SEE ELECTRICAL DETAILS
- S/F — STATE-FURNISHED
- VCH — VIDEO CABLE HARNESS
- NWR — NO WORK REQUIRED
- icc — Exist IRRIGATION CONTROLLER
- COAX — COAXIAL CABLE

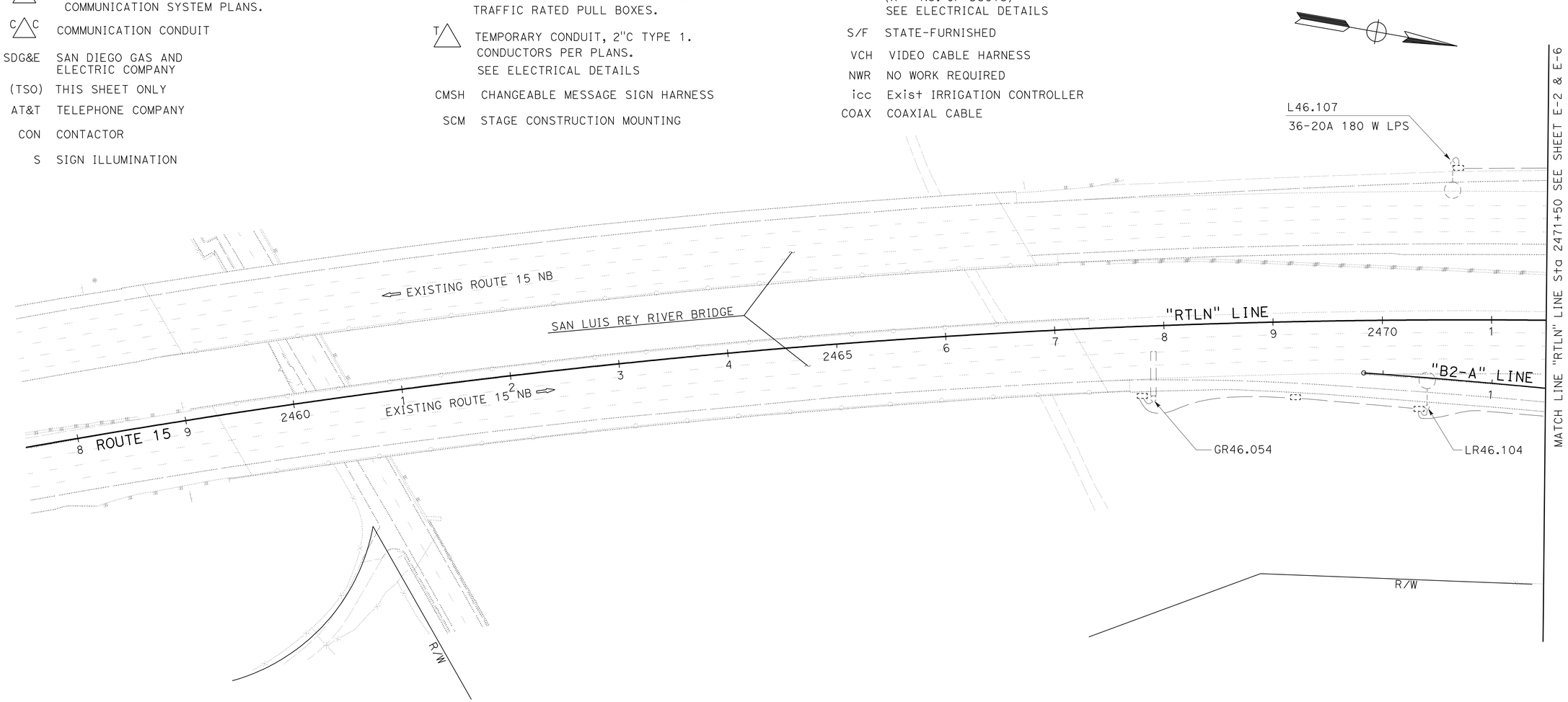

NOTES (TSO):

1. EXISTING CONDUITS, PULL BOXES, AND CONDUCTORS TO REMAIN.
2. EXISTING LIGHTING AND SIGN ILLUMINATION SYSTEM PARTIALLY SHOWN.

APPROVED FOR ELECTRICAL WORK ONLY

SCALE: 1" = 50'

LIGHTING (EXISTING)

E-1

STATE OF CALIFORNIA - DEPARTMENT OF TRANSPORTATION
Caltrans TRAFFIC ELECTRICAL

FUNCTIONAL SUPERVISOR: BRIAN PECUS
CALCULATED-DESIGNED BY: FARIBA RAMOS
CHECKED BY: ENRIQUE BERNAL
REVISED BY
DATE REVISED

LAST REVISION 01-23-12
DATE PLOTTED => 17-APR-2012
TIME PLOTTED => 13:41

Dist	COUNTY	ROUTE	POST MILES TOTAL PROJECT	SHEET No.	TOTAL SHEETS
11	SD	15,76	R46.1/R47.3, R16.7/R17.7	328	477

REGISTERED ELECTRICAL ENGINEER 01-20-12 DATE

4-16-12
PLANS APPROVAL DATE

REGISTERED PROFESSIONAL ENGINEER FARIBA RAMOS No. E15619 Exp. 12-31-13 ELECTRICAL STATE OF CALIFORNIA

THE STATE OF CALIFORNIA OR ITS OFFICERS OR AGENTS SHALL NOT BE RESPONSIBLE FOR THE ACCURACY OR COMPLETENESS OF SCANNED COPIES OF THIS PLAN SHEET.

FOR ACCURATE RIGHT OF WAY DATA, CONTACT
RIGHT OF WAY ENGINEERING AT THE DISTRICT OFFICE.

NOTES (TSO):

1. Exist CONDUIT AND CONDUCTORS TO REMAIN.
2. SEE LIGHTING PLANS SHEET E-6 FOR CIRCUIT CONTINUITY.
3. AB Exist COUNT STATION, TYPE A LOOPS.
4. Exist PULL BOX TO REMAIN.
5. RC Exist PULL BOXES UNLESS OTHERWISE NOTED.
6. AB Exist CONDUITS UNLESS OTHERWISE NOTED.

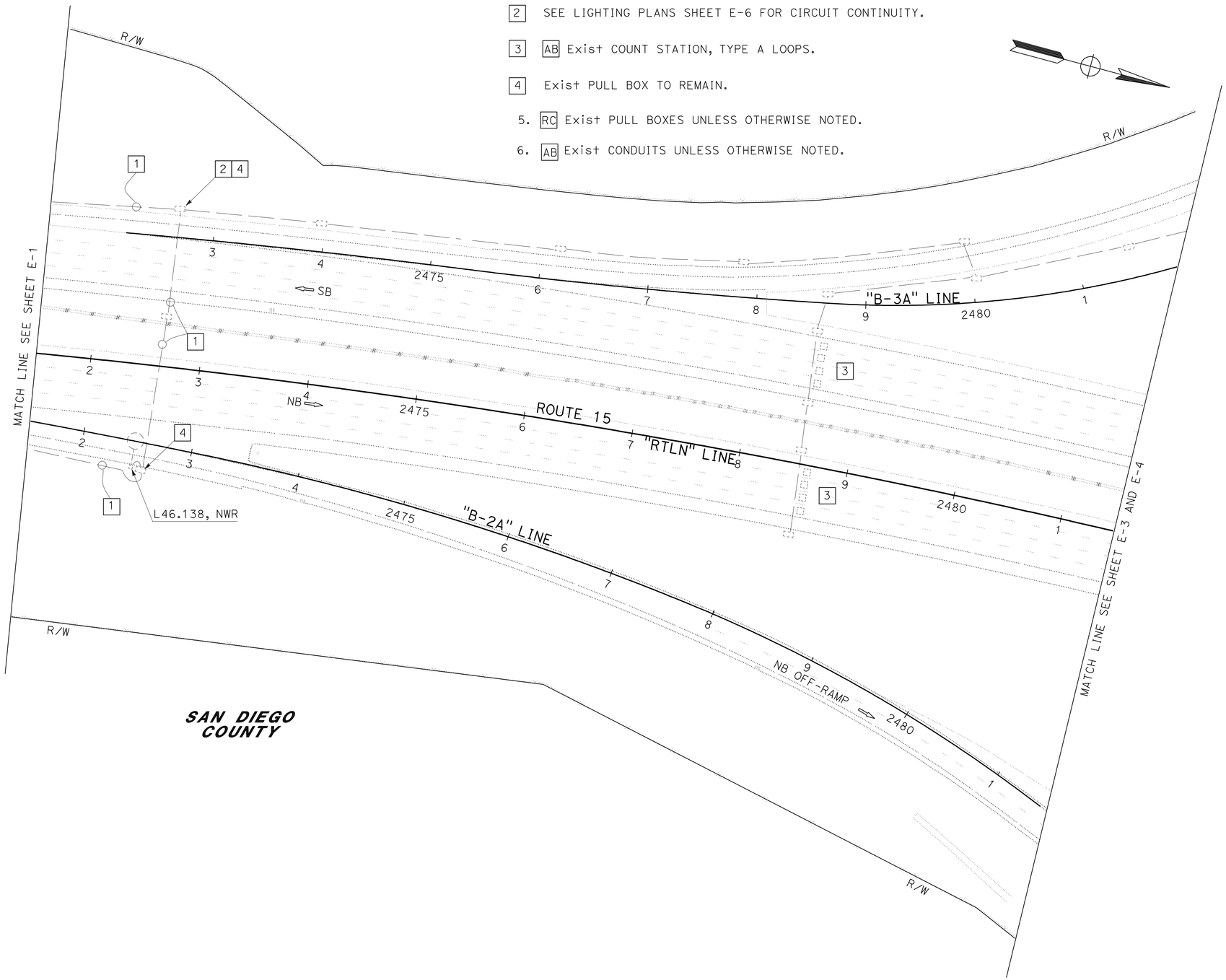

LIGHTING COUNT STATION (EXISTING AND REMOVE)

APPROVED FOR ELECTRICAL WORK ONLY

SCALE: 1" = 50'

E-2

STATE OF CALIFORNIA - DEPARTMENT OF TRANSPORTATION
Caltrans® TRAFFIC ELECTRICAL

FUNCTIONAL SUPERVISOR: BRIAN PECUS
CALCULATED-DESIGNED BY: FARIBA RAMOS
CHECKED BY: ENRIQUE BERNAL
REVISED BY
DATE REVISED

LAST REVISION 01-23-12
DATE PLOTTED => 17-APR-2012
TIME PLOTTED => 13:41

Dist	COUNTY	ROUTE	POST MILES TOTAL PROJECT	SHEET No.	TOTAL SHEETS
11	SD	15,76	R46.1/R47.3, R16.7/R17.7	329	477

Fariba Ramos 01-20-12
REGISTERED ELECTRICAL ENGINEER DATE

4-16-12
PLANS APPROVAL DATE

REGISTERED PROFESSIONAL ENGINEER FARIBA RAMOS No. E15619 Exp. 12-31-13 ELECTRICAL STATE OF CALIFORNIA

THE STATE OF CALIFORNIA OR ITS OFFICERS OR AGENTS SHALL NOT BE RESPONSIBLE FOR THE ACCURACY OR COMPLETENESS OF SCANNED COPIES OF THIS PLAN SHEET.

FOR ACCURATE RIGHT OF WAY DATA, CONTACT
RIGHT OF WAY ENGINEERING AT THE DISTRICT OFFICE.

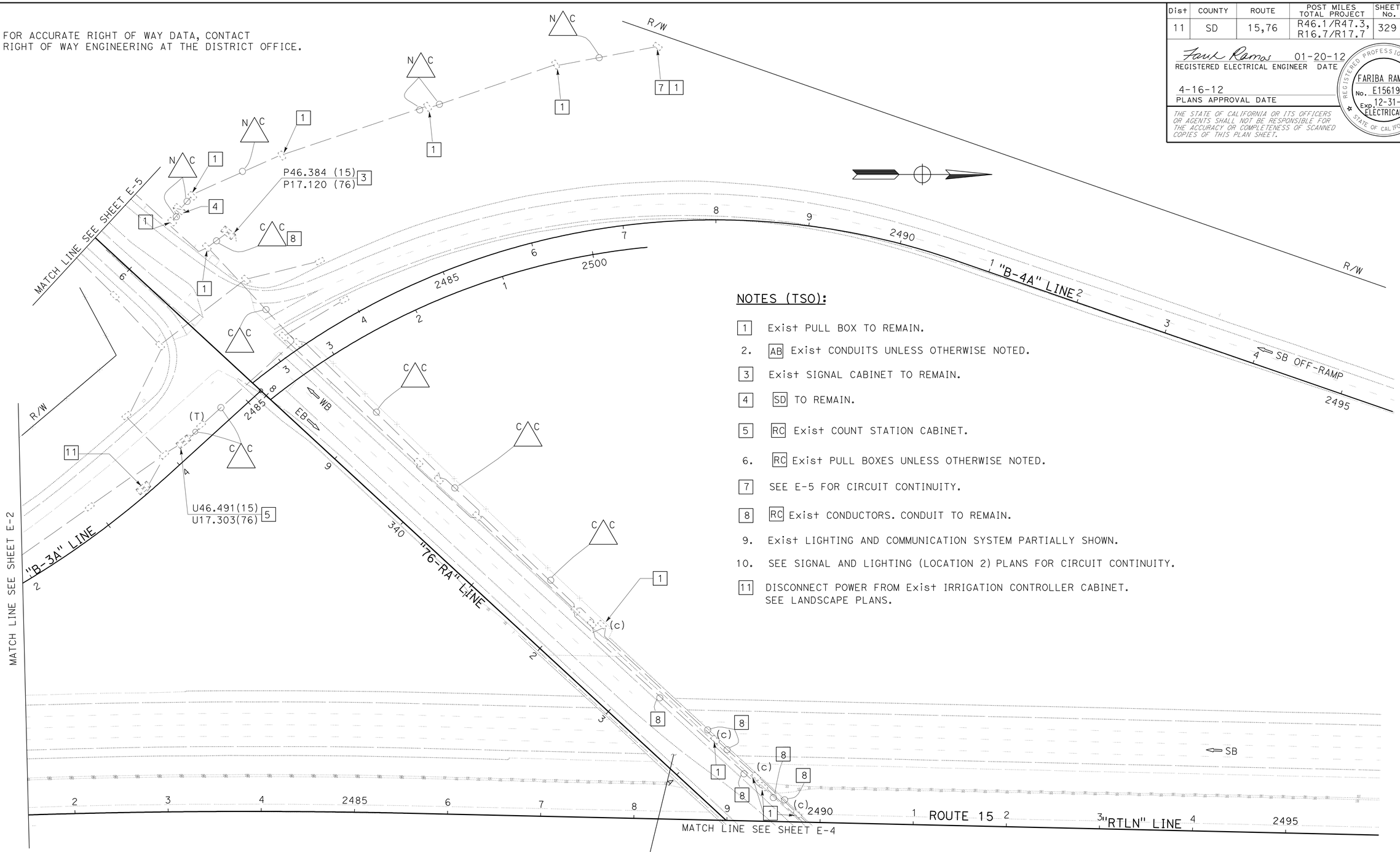

NOTES (TSO):

1. Exist PULL BOX TO REMAIN.
2. AB Exist CONDUITS UNLESS OTHERWISE NOTED.
3. Exist SIGNAL CABINET TO REMAIN.
4. SD TO REMAIN.
5. RC Exist COUNT STATION CABINET.
6. RC Exist PULL BOXES UNLESS OTHERWISE NOTED.
7. SEE E-5 FOR CIRCUIT CONTINUITY.
8. RC Exist CONDUCTORS. CONDUIT TO REMAIN.
9. Exist LIGHTING AND COMMUNICATION SYSTEM PARTIALLY SHOWN.
10. SEE SIGNAL AND LIGHTING (LOCATION 2) PLANS FOR CIRCUIT CONTINUITY.
11. DISCONNECT POWER FROM Exist IRRIGATION CONTROLLER CABINET. SEE LANDSCAPE PLANS.

APPROVED FOR ELECTRICAL WORK ONLY

LIGHTING COUNT STATION (EXISTING AND REMOVE)

SCALE: 1" = 50'

E-3

STATE OF CALIFORNIA - DEPARTMENT OF TRANSPORTATION
Caltrans® TRAFFIC ELECTRICAL

FUNCTIONAL SUPERVISOR: BRIAN PECUS
CALCULATED-DESIGNED BY: FARIBA RAMOS
CHECKED BY: ENRIQUE BERNAL
REVISED BY
DATE REVISED

LAST REVISION 01-23-12
DATE PLOTTED => 17-APR-2012
TIME PLOTTED => 13:41

Dist	COUNTY	ROUTE	POST MILES TOTAL PROJECT	SHEET No.	TOTAL SHEETS
11	SD	15,76	R46.1/R47.3, R16.7/R17.7	330	477

Fariba Ramos 01-20-12
REGISTERED ELECTRICAL ENGINEER DATE

4-16-12
PLANS APPROVAL DATE

REGISTERED PROFESSIONAL ENGINEER
FARIBA RAMOS
No. E15619
Exp. 12-31-13
ELECTRICAL
STATE OF CALIFORNIA

THE STATE OF CALIFORNIA OR ITS OFFICERS OR AGENTS SHALL NOT BE RESPONSIBLE FOR THE ACCURACY OR COMPLETENESS OF SCANNED COPIES OF THIS PLAN SHEET.

FOR ACCURATE RIGHT OF WAY DATA, CONTACT
RIGHT OF WAY ENGINEERING AT THE DISTRICT OFFICE.

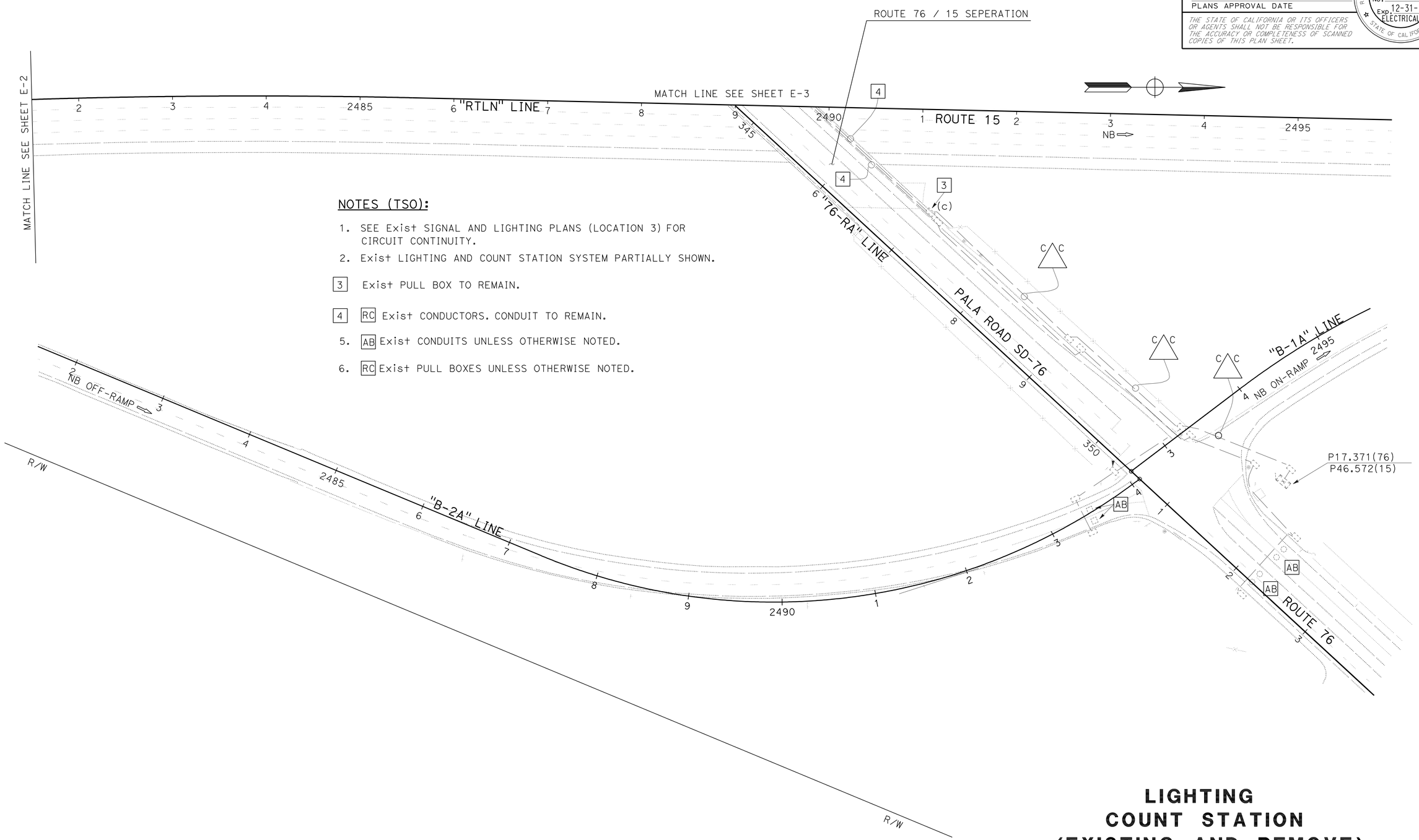

NOTES (TSO):

1. SEE Exist SIGNAL AND LIGHTING PLANS (LOCATION 3) FOR CIRCUIT CONTINUITY.
2. Exist LIGHTING AND COUNT STATION SYSTEM PARTIALLY SHOWN.

3 Exist PULL BOX TO REMAIN.

4 RC Exist CONDUCTORS. CONDUIT TO REMAIN.

5. AB Exist CONDUITS UNLESS OTHERWISE NOTED.

6. RC Exist PULL BOXES UNLESS OTHERWISE NOTED.

APPROVED FOR ELECTRICAL WORK ONLY

LIGHTING COUNT STATION (EXISTING AND REMOVE)

SCALE: 1" = 50'

E-4

STATE OF CALIFORNIA - DEPARTMENT OF TRANSPORTATION
Caltrans® TRAFFIC ELECTRICAL

FUNCTIONAL SUPERVISOR: BRIAN PECUS
CALCULATED-DESIGNED BY: FARIBA RAMOS
CHECKED BY: ENRIQUE BERNAL
REVISED BY
DATE REVISED

LAST REVISION 01-23-12
DATE PLOTTED => 17-APR-2012
TIME PLOTTED => 13:41

Dist	COUNTY	ROUTE	POST MILES TOTAL PROJECT	SHEET No.	TOTAL SHEETS
11	SD	15,76	R46.1/R47.3, R16.7/R17.7	331	477

Fariba Ramos 01-20-12
REGISTERED ELECTRICAL ENGINEER DATE

4-16-12
PLANS APPROVAL DATE

REGISTERED PROFESSIONAL ENGINEER FARIBA RAMOS No. E15619 Exp. 12-31-13 ELECTRICAL STATE OF CALIFORNIA

THE STATE OF CALIFORNIA OR ITS OFFICERS OR AGENTS SHALL NOT BE RESPONSIBLE FOR THE ACCURACY OR COMPLETENESS OF SCANNED COPIES OF THIS PLAN SHEET.

FOR ACCURATE RIGHT OF WAY DATA, CONTACT
RIGHT OF WAY ENGINEERING AT THE DISTRICT OFFICE.

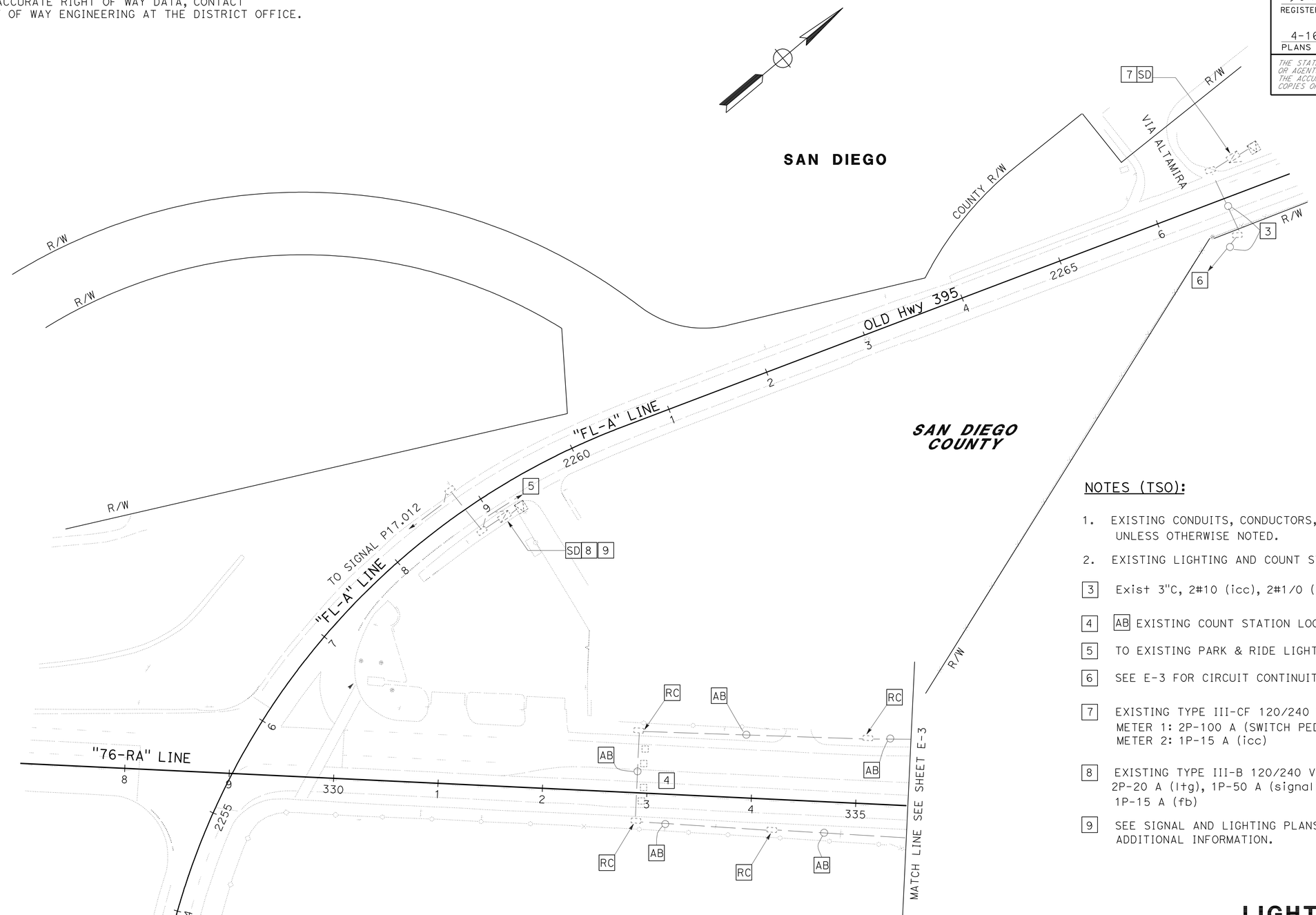

NOTES (TSO):

1. EXISTING CONDUITS, CONDUCTORS, AND PULL BOXES TO REMAIN UNLESS OTHERWISE NOTED.
2. EXISTING LIGHTING AND COUNT STATION SYSTEM PARTIALLY SHOWN.

3 Exist 3"C, 2#10 (icc), 2#1/0 (SWITCH PEDESTAL) TO REMAIN.

4 AB EXISTING COUNT STATION LOOPS, EB AND WB DIRECTIONS.

5 TO EXISTING PARK & RIDE LIGHTING, SEE E-17.

6 SEE E-3 FOR CIRCUIT CONTINUITY.

7 EXISTING TYPE III-CF 120/240 V TO REMAIN:
METER 1: 2P-100 A (SWITCH PEDESTAL)
METER 2: 1P-15 A (icc)

8 EXISTING TYPE III-B 120/240 V WITH:
2P-20 A (ltg), 1P-50 A (signal),
1P-15 A (fb)

9 SEE SIGNAL AND LIGHTING PLANS (LOCATION 1) FOR ADDITIONAL INFORMATION.

APPROVED FOR ELECTRICAL WORK ONLY

LIGHTING COUNT STATION (EXISTING AND REMOVE)

SCALE: 1" = 50'

E-5

STATE OF CALIFORNIA - DEPARTMENT OF TRANSPORTATION
Caltrans® TRAFFIC ELECTRICAL

FUNCTIONAL SUPERVISOR: BRIAN PECUS
CALCULATED-DESIGNED BY: FARIBA RAMOS
CHECKED BY: ENRIQUE BERNAL
REVISED BY
DATE REVISED

LAST REVISION 01-23-12
DATE PLOTTED => 17-APR-2012
TIME PLOTTED => 15:19

Dist	COUNTY	ROUTE	POST MILES TOTAL PROJECT	SHEET No.	TOTAL SHEETS
11	SD	15,76	R46.1/R47.3, R16.7/R17.7	332	477

REGISTERED ELECTRICAL ENGINEER 01-20-12 DATE

4-16-12
PLANS APPROVAL DATE

REGISTERED PROFESSIONAL ENGINEER FARIBA RAMOS No. E15619 Exp. 12-31-13 ELECTRICAL STATE OF CALIFORNIA

THE STATE OF CALIFORNIA OR ITS OFFICERS OR AGENTS SHALL NOT BE RESPONSIBLE FOR THE ACCURACY OR COMPLETENESS OF SCANNED COPIES OF THIS PLAN SHEET.

FOR ACCURATE RIGHT OF WAY DATA, CONTACT
RIGHT OF WAY ENGINEERING AT THE DISTRICT OFFICE.

CONDUIT NOTES (TSO):

- N/1 C — Exist 1½"C, 2#2(s), 2#6(ltg)
- N/2 C — Exist 1½"C, 2#10(ltg)
- 3 — 2"C, 2#2(LTG)
- 4 — 2"C, 2#2(S), 2#2(LTG)

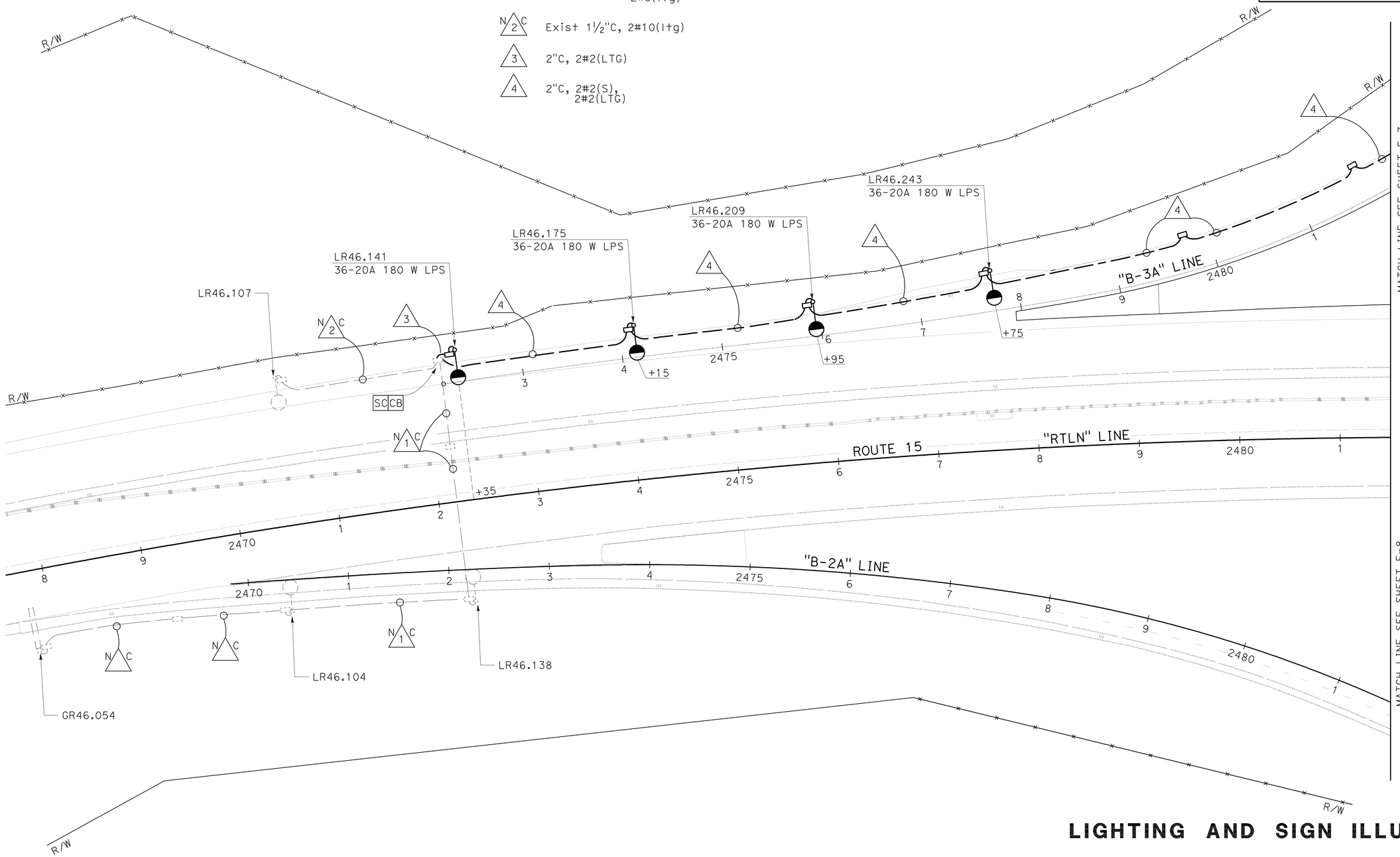

LIGHTING AND SIGN ILLUMINATION

APPROVED FOR ELECTRICAL WORK ONLY

SCALE: 1" = 50'

E-6

STATE OF CALIFORNIA - DEPARTMENT OF TRANSPORTATION
Caltrans® TRAFFIC ELECTRICAL

FUNCTIONAL SUPERVISOR: BRIAN PECUS
CALCULATED-DESIGNED BY: FARIBA RAMOS
CHECKED BY: ENRIQUE BERNAL
REVISED BY
DATE REVISED

LAST REVISION 01-23-12
DATE PLOTTED => 17-APR-2012
TIME PLOTTED => 15:19

Dist	COUNTY	ROUTE	POST MILES TOTAL PROJECT	SHEET No.	TOTAL SHEETS
11	SD	15,76	R46.1/R47.3, R16.7/R17.7	333	477

REGISTERED ELECTRICAL ENGINEER 01-20-12 DATE

4-16-12
PLANS APPROVAL DATE

REGISTERED PROFESSIONAL ENGINEER FARIBA RAMOS No. E15619 Exp. 12-31-13 ELECTRICAL STATE OF CALIFORNIA

THE STATE OF CALIFORNIA OR ITS OFFICERS OR AGENTS SHALL NOT BE RESPONSIBLE FOR THE ACCURACY OR COMPLETENESS OF SCANNED COPIES OF THIS PLAN SHEET.

FOR ACCURATE RIGHT OF WAY DATA, CONTACT RIGHT OF WAY ENGINEERING AT THE DISTRICT OFFICE.

ILLUMINATED SIGN AND APPURTENANCE				
SIGN No.	QUANTITY OF 85 W ISL FIXTURES	VOLTAGE (SERVICE)	LOAD	REMARKS
2	1	240 V	87 W	SEE Std PLAN ES-15C AND RSP ES-15D (SC1A)

CONDUIT NOTES (TSO):

1. MDCS(8), 1 FO72, 2 FO12
2. MDCS(8), 1 FO72
3. 2"C, 2#2(LTG)
4. 2"C, 2#2(S), 2#2(LTG)
5. 3"C, CAMERA CABLE
6. 2"C, 2#6(CCTV)
7. 2"C, 2#2(LTG), 2#10(ICC)
8. 2"C, 2#2(LTG), 2#6(CCTV), 2#10(ICC)
9. 2"C, 2#2(S), 2#2(LTG), 2#6(CCTV), 2#10(ICC)
10. 1"C, 1 FO12
11. 1½"C, 2#2 (S)

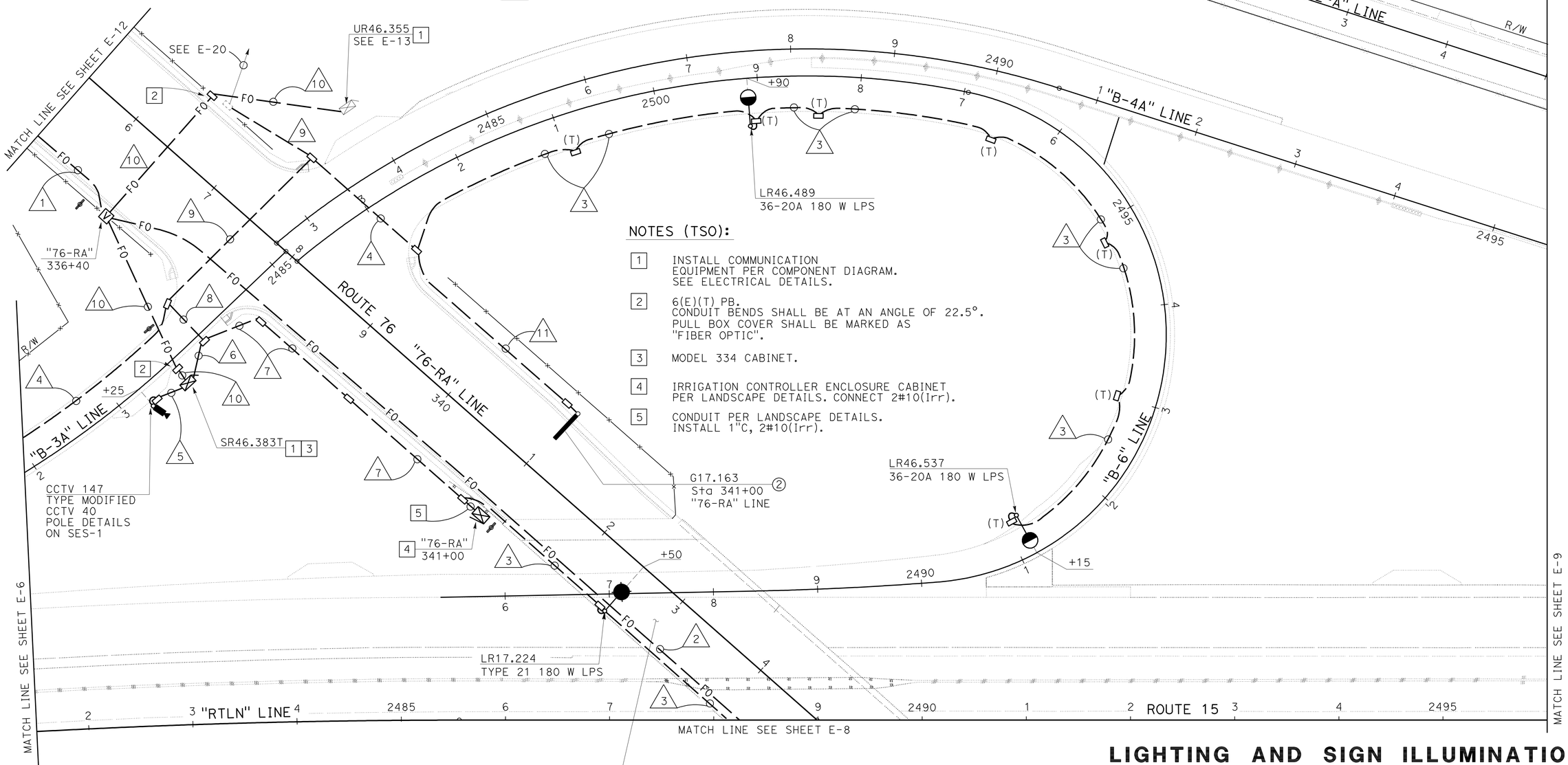

NOTES (TSO):

1. INSTALL COMMUNICATION EQUIPMENT PER COMPONENT DIAGRAM. SEE ELECTRICAL DETAILS.
2. 6(E)(T) PB. CONDUIT BENDS SHALL BE AT AN ANGLE OF 22.5°. PULL BOX COVER SHALL BE MARKED AS "FIBER OPTIC".
3. MODEL 334 CABINET.
4. IRRIGATION CONTROLLER ENCLOSURE CABINET PER LANDSCAPE DETAILS. CONNECT 2#10(Irr).
5. CONDUIT PER LANDSCAPE DETAILS. INSTALL 1"C, 2#10(Irr).

LIGHTING AND SIGN ILLUMINATION
FIBER OPTIC COMMUNICATION SYSTEM
ELECTRICAL SERVICE (IRRIGATION)

APPROVED FOR ELECTRICAL WORK ONLY

SCALE: 1" = 50'

E-7

STATE OF CALIFORNIA - DEPARTMENT OF TRANSPORTATION
Caltrans® TRAFFIC ELECTRICAL

FUNCTIONAL SUPERVISOR: BRIAN PECUS
CALCULATED-DESIGNED BY: ENRIQUE BERNAL
CHECKED BY: FARIBA RAMOS
REVISED BY
DATE REVISED

LAST REVISION 01-23-12
DATE PLOTTED => 17-APR-2012
TIME PLOTTED => 15:51

Dist	COUNTY	ROUTE	POST MILES TOTAL PROJECT	SHEET No.	TOTAL SHEETS
11	SD	15,76	R46.1/R47.3, R16.7/R17.7	334	477

REGISTERED ELECTRICAL ENGINEER 01-20-12 DATE

4-16-12
PLANS APPROVAL DATE

REGISTERED PROFESSIONAL ENGINEER FARIBA RAMOS No. E15619 Exp. 12-31-13 ELECTRICAL STATE OF CALIFORNIA

THE STATE OF CALIFORNIA OR ITS OFFICERS OR AGENTS SHALL NOT BE RESPONSIBLE FOR THE ACCURACY OR COMPLETENESS OF SCANNED COPIES OF THIS PLAN SHEET.

FOR ACCURATE RIGHT OF WAY DATA, CONTACT
RIGHT OF WAY ENGINEERING AT THE DISTRICT OFFICE.

NOTES (TSO):

1. INSTALL COMMUNICATION EQUIPMENT PER COMPONENT DIAGRAM. SEE ELECTRICAL DETAILS.
2. 6(E)(T) PB. CONDUIT BENDS SHALL BE AT AN ANGLE OF 22.5°. PULL BOX COVER SHALL BE MARKED AS "FIBER OPTIC".
3. IRRIGATION CONTROLLER ENCLOSURE CABINET PER LANDSCAPE DETAILS. CONNECT 2#10(Irr).
4. CONDUIT PER LANDSCAPE DETAILS. INSTALL 1"C, 2#10(Irr).

CONDUIT NOTES (TSO):

1. MDCS(8), 3 FO12
2. MDCS(8), 1 FO72
3. 2"C, 2#2(LTG)
4. 2"C, 2#6(LTG AND S)
5. 2"C, 2#10(ICC)
6. 2"C, 2#6(LTG AND S), 2#10(ICC)
7. 2"C, 2#2(LTG AND S), 2#10(ICC)
8. 2"C, MT
9. 1"C, 1 FO12

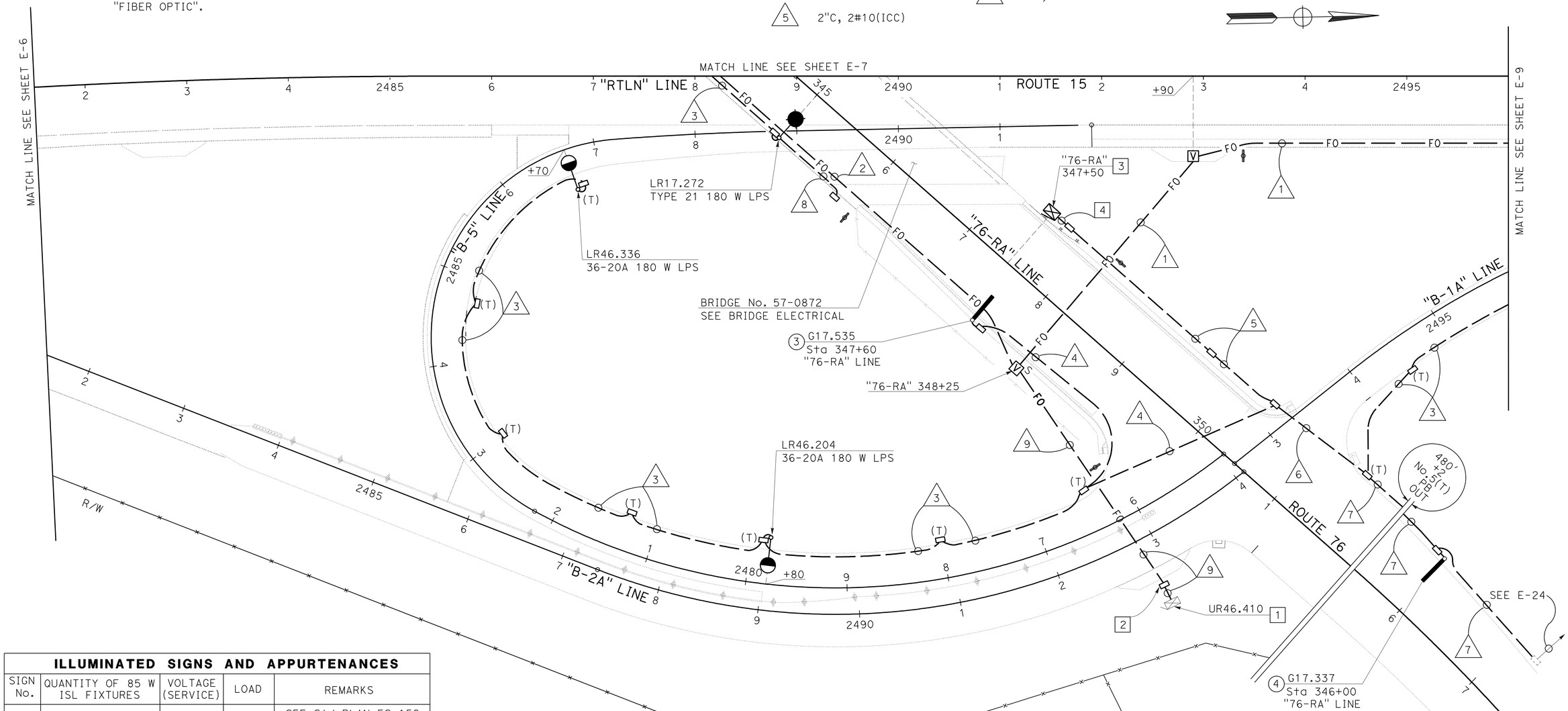

ILLUMINATED SIGNS AND APPURTENANCES				
SIGN No.	QUANTITY OF 85 W ISL FIXTURES	VOLTAGE (SERVICE)	LOAD	REMARKS
3	1	240 V	87 W	SEE Std PLAN ES-15C AND RSP ES-15D (SC1A)
4	1	240 V	87 W	SEE Std PLAN ES-15C AND RSP ES-15D (SC1A)

APPROVED FOR ELECTRICAL WORK ONLY

SCALE: 1" = 50'

LIGHTING AND SIGN ILLUMINATION
FIBER OPTIC COMMUNICATION SYSTEM
ELECTRICAL SERVICE (IRRIGATION)

E-8

STATE OF CALIFORNIA - DEPARTMENT OF TRANSPORTATION
Caltrans TRAFFIC ELECTRICAL

FUNCTIONAL SUPERVISOR: BRIAN PECUS
CALCULATED-DESIGNED BY: FARIBA RAMOS
CHECKED BY: ENRIQUE BERNAL
REVISED BY
DATE REVISED

LAST REVISION 01-23-12
DATE PLOTTED => 17-APR-2012
TIME PLOTTED => 15:19

FOR ACCURATE RIGHT OF WAY DATA, CONTACT
RIGHT OF WAY ENGINEERING AT THE DISTRICT OFFICE.

Dist	COUNTY	ROUTE	POST MILES TOTAL PROJECT	SHEET No.	TOTAL SHEETS
11	SD	15,76	R46.1/R47.3, R16.7/R17.7	335	477

Fariba Ramos 01-20-12
REGISTERED ELECTRICAL ENGINEER DATE

4-16-12
PLANS APPROVAL DATE

REGISTERED PROFESSIONAL ENGINEER
FARIBA RAMOS
No. E15619
Exp. 12-31-13
ELECTRICAL
STATE OF CALIFORNIA

THE STATE OF CALIFORNIA OR ITS OFFICERS OR AGENTS SHALL NOT BE RESPONSIBLE FOR THE ACCURACY OR COMPLETENESS OF SCANNED COPIES OF THIS PLAN SHEET.

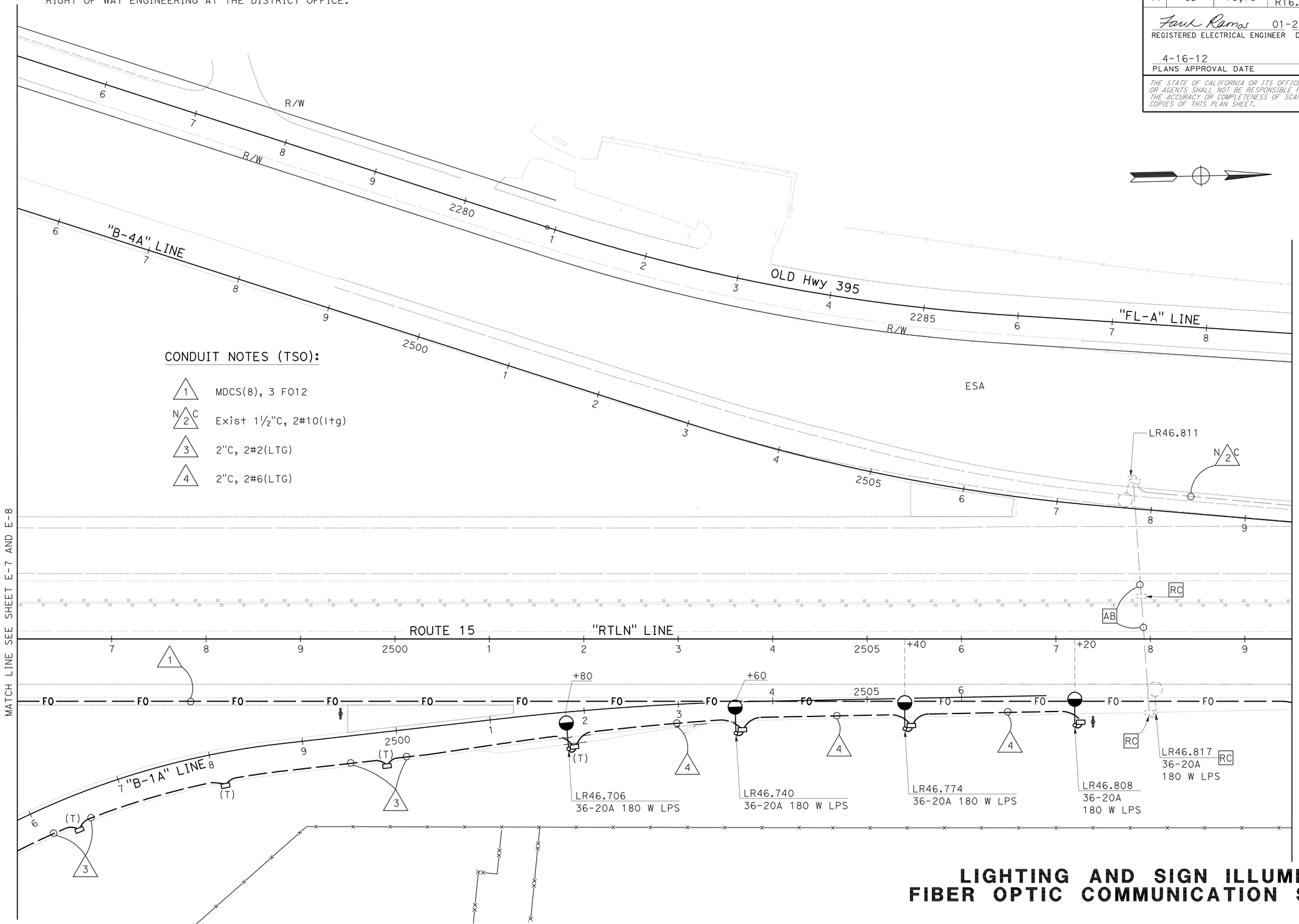

CONDUIT NOTES (TSO):

1. MDCS(8), 3 FO12
2. N/C Exist 1½"C, 2#10(ltg)
3. 2"C, 2#2(LTG)
4. 2"C, 2#6(LTG)

LIGHTING AND SIGN ILLUMINATION
FIBER OPTIC COMMUNICATION SYSTEM

APPROVED FOR ELECTRICAL WORK ONLY

SCALE: 1" = 50'

E-9

STATE OF CALIFORNIA - DEPARTMENT OF TRANSPORTATION
Caltrans® TRAFFIC ELECTRICAL

FUNCTIONAL SUPERVISOR: BRIAN PECUS
CALCULATED-DESIGNED BY: FARIBA RAMOS
CHECKED BY: ENRIQUE BERNAL
REVISED BY
DATE REVISED

LAST REVISION 01-23-12
DATE PLOTTED => 17-APR-2012
TIME PLOTTED => 15:19

Dist	COUNTY	ROUTE	POST MILES TOTAL PROJECT	SHEET No.	TOTAL SHEETS
11	SD	15,76	R46.1/R47.3, R16.7/R17.7	336	477

Fariba Ramos 01-20-12
REGISTERED ELECTRICAL ENGINEER DATE

4-16-12
PLANS APPROVAL DATE

REGISTERED PROFESSIONAL ENGINEER FARIBA RAMOS No. E15619 Exp. 12-31-13 ELECTRICAL STATE OF CALIFORNIA

THE STATE OF CALIFORNIA OR ITS OFFICERS OR AGENTS SHALL NOT BE RESPONSIBLE FOR THE ACCURACY OR COMPLETENESS OF SCANNED COPIES OF THIS PLAN SHEET.

FOR ACCURATE RIGHT OF WAY DATA, CONTACT RIGHT OF WAY ENGINEERING AT THE DISTRICT OFFICE.

CONDUIT NOTES (TSO):

1. MDCS(8), 3 FO12
2. N C — Exist 1½"C, 2#10(ltg)
3. 3"C, 3#0(CMS POWER), 2#2(CCTV), 2#2(CMS), 2#6(TMS)
4. N C — Exist 1½"C, 2#6(SPRINKLER CONTROLLER), 2#10(ltg)
5. 2"C, MT, (CONDUCTORS BY SDG&E)
6. N C — Exist 1½"C, 2#6(SPRINKLER CONTROLLER), 2#10(ltg), 3#14(peu)
7. N C — Exist 1½"C, 2#6(ltg), 3#14(peu)

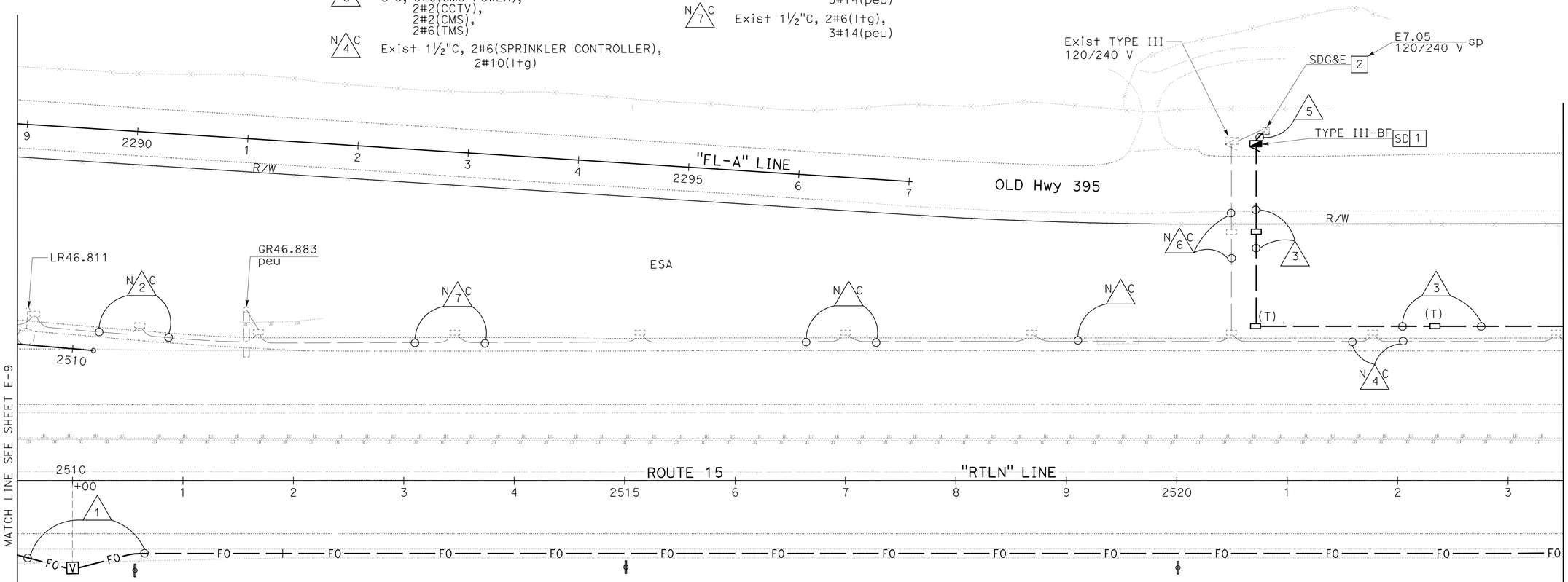

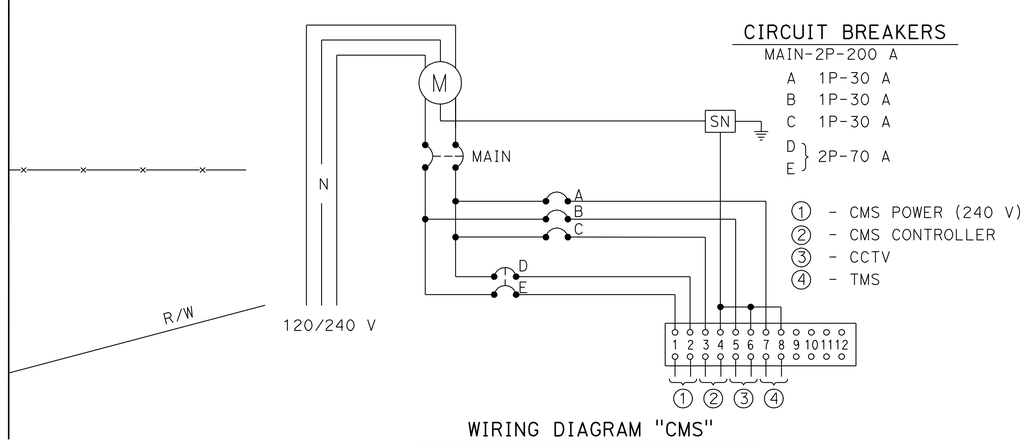

CIRCUIT BREAKERS

MAIN-2P-200 A
A 1P-30 A
B 1P-30 A
C 1P-30 A
D, E } 2P-70 A

1. - CMS POWER (240 V)
2. - CMS CONTROLLER
3. - CCTV
4. - TMS

WIRING DIAGRAM "CMS"

(TYPE III-BF SERVICE EQUIPMENT ENCLOSURE SEE RSP ES-2C AND RSP ES-2E)

NOTES (TSO):

1. TYPE III-BF, SEE WIRING DIAGRAM "CMS" ON THIS SHEET.
2. CONDUIT TO ENTER PER SDG&E REQUIREMENTS.

APPROVED FOR ELECTRICAL WORK ONLY

SCALE: 1" = 50'

CHANGEABLE MESSAGE SIGN SYSTEM
FIBER OPTIC COMMUNICATION SYSTEM

E-10

REVISED BY | DATE REVISED
FARIBA RAMOS | ENRIQUE BERNAL
CALCULATED-DESIGNED BY | CHECKED BY
FUNCTIONAL SUPERVISOR | BRIAN PECUS
STATE OF CALIFORNIA - DEPARTMENT OF TRANSPORTATION
Caltrans TRAFFIC ELECTRICAL

LAST REVISION 01-23-12 | DATE PLOTTED => 17-APR-2012 | TIME PLOTTED => 15:19

Dist	COUNTY	ROUTE	POST MILES TOTAL PROJECT	SHEET No.	TOTAL SHEETS
11	SD	15,76	R46.1/R47.3, R16.7/R17.7	337	477

REGISTERED ELECTRICAL ENGINEER 01-20-12 DATE

4-16-12
PLANS APPROVAL DATE

REGISTERED PROFESSIONAL ENGINEER FARIBA RAMOS No. E15619 Exp. 12-31-13 ELECTRICAL STATE OF CALIFORNIA

THE STATE OF CALIFORNIA OR ITS OFFICERS OR AGENTS SHALL NOT BE RESPONSIBLE FOR THE ACCURACY OR COMPLETENESS OF SCANNED COPIES OF THIS PLAN SHEET.

FOR ACCURATE RIGHT OF WAY DATA, CONTACT
RIGHT OF WAY ENGINEERING AT THE DISTRICT OFFICE.

NOTES (TSO):

1. INSTALL COMMUNICATION EQUIPMENT PER COMPONENT DIAGRAM. SEE ELECTRICAL DETAILS.
2. 6(E)(T) PB. CONDUIT BENDS SHALL BE AT AN ANGLE OF 22.5°. PULL BOX COVER SHALL BE MARKED AS "FIBER OPTIC".
3. STATE-FURNISHED CMS CONTROLLER ASSEMBLY MODEL 334 CABINET.
4. PLACE CABINETS, CMS AND CCTV 30' Min BEHIND THE ETW.
5. MODEL 334 CABINET.

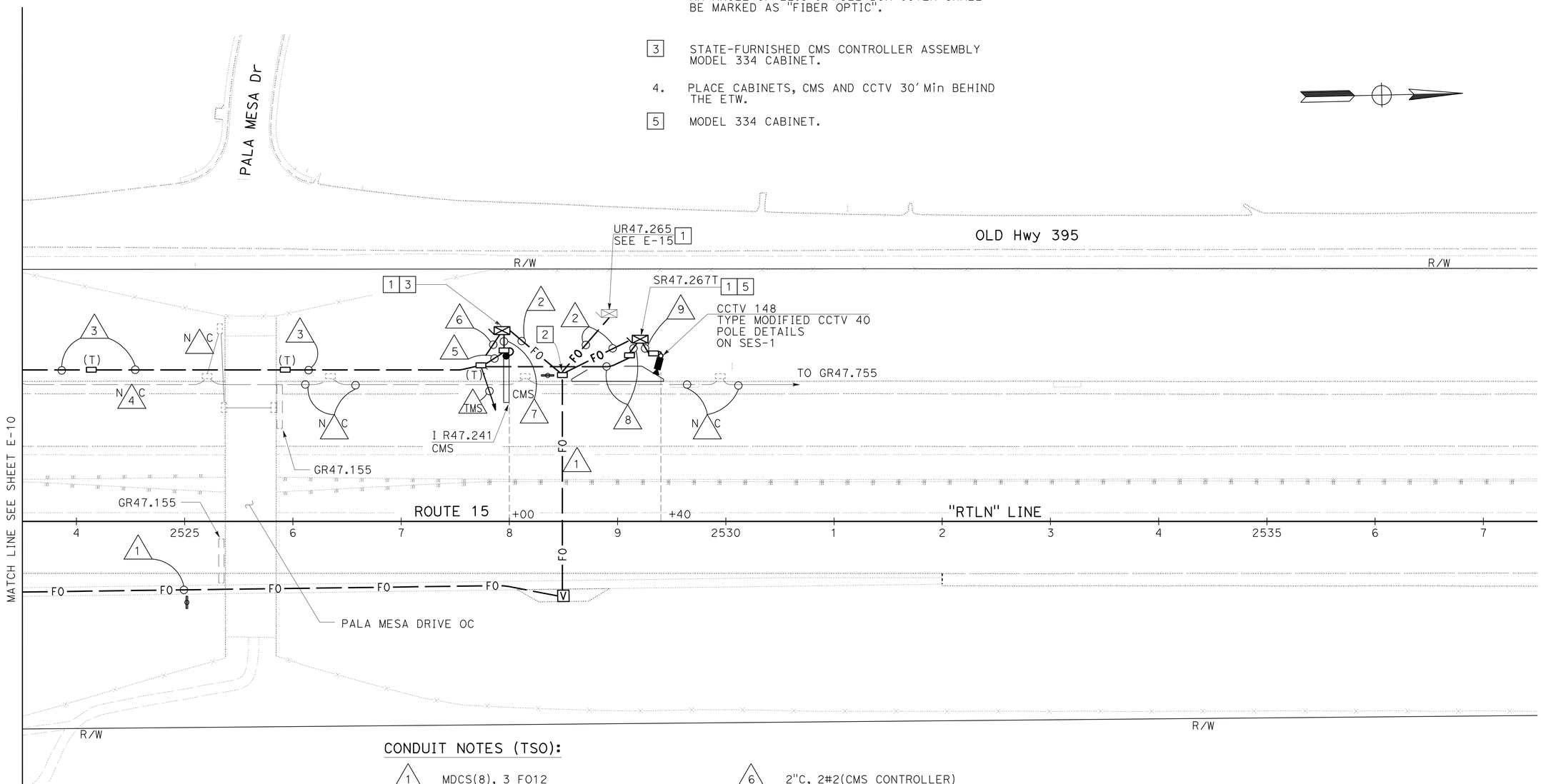

CONDUIT NOTES (TSO):

1. MDCS(8), 3 FO12
2. 1"C, 1 FO12
3. 3"C, 3#0(CMS POWER), 2#2(CCTV), 2#2(CMS), 2#6(TMS)
4. N/C Exist 1½"C, 2#6(SPRINKLER CONTROLLER), 2#10(I+g)
5. 3"C, 2#0(CMS POWER), 1#0(CMS NEUTRAL)
6. 2"C, 2#2(CMS CONTROLLER)
7. 3"C, CMSH#4, CMSH#5
8. 2"C, 2#2(CCTV)
9. 3"C, CAMERA CABLE

APPROVED FOR ELECTRICAL WORK ONLY

CHANGEABLE MESSAGE SIGN SYSTEM
FIBER OPTIC COMMUNICATION SYSTEM

SCALE: 1" = 50'

E-11

STATE OF CALIFORNIA - DEPARTMENT OF TRANSPORTATION
Caltrans® TRAFFIC ELECTRICAL

FUNCTIONAL SUPERVISOR: BRIAN PECUS
CALCULATED-DESIGNED BY: FARIBA RAMOS
CHECKED BY: ENRIQUE BERNAL
REVISED BY
DATE REVISED

LAST REVISION 01-23-12
DATE PLOTTED => 17-APR-2012
TIME PLOTTED => 15:51

Dist	COUNTY	ROUTE	POST MILES TOTAL PROJECT	SHEET No.	TOTAL SHEETS
11	SD	15,76	R46.1/R47.3, R16.7/R17.7	338	477

REGISTERED ELECTRICAL ENGINEER 01-20-12 DATE

4-16-12
PLANS APPROVAL DATE

REGISTERED PROFESSIONAL ENGINEER FARIBA RAMOS No. E15619 Exp. 12-31-13 ELECTRICAL STATE OF CALIFORNIA

THE STATE OF CALIFORNIA OR ITS OFFICERS OR AGENTS SHALL NOT BE RESPONSIBLE FOR THE ACCURACY OR COMPLETENESS OF SCANNED COPIES OF THIS PLAN SHEET.

FOR ACCURATE RIGHT OF WAY DATA, CONTACT
RIGHT OF WAY ENGINEERING AT THE DISTRICT OFFICE.

NOTES (TSO):

1. INSTALL COMMUNICATION EQUIPMENT PER COMPONENT DIAGRAM. SEE ELECTRICAL DETAILS.
2. 6(E)(T) PB. CONDUIT BENDS SHALL BE AT AN ANGLE OF 22.5°. PULL BOX COVER SHALL BE MARKED AS "FIBER OPTIC".
3. MODEL 334 CABINET.
4. INSTALL TYPE H SERVICE RISER PER AT&T REQUIREMENTS.

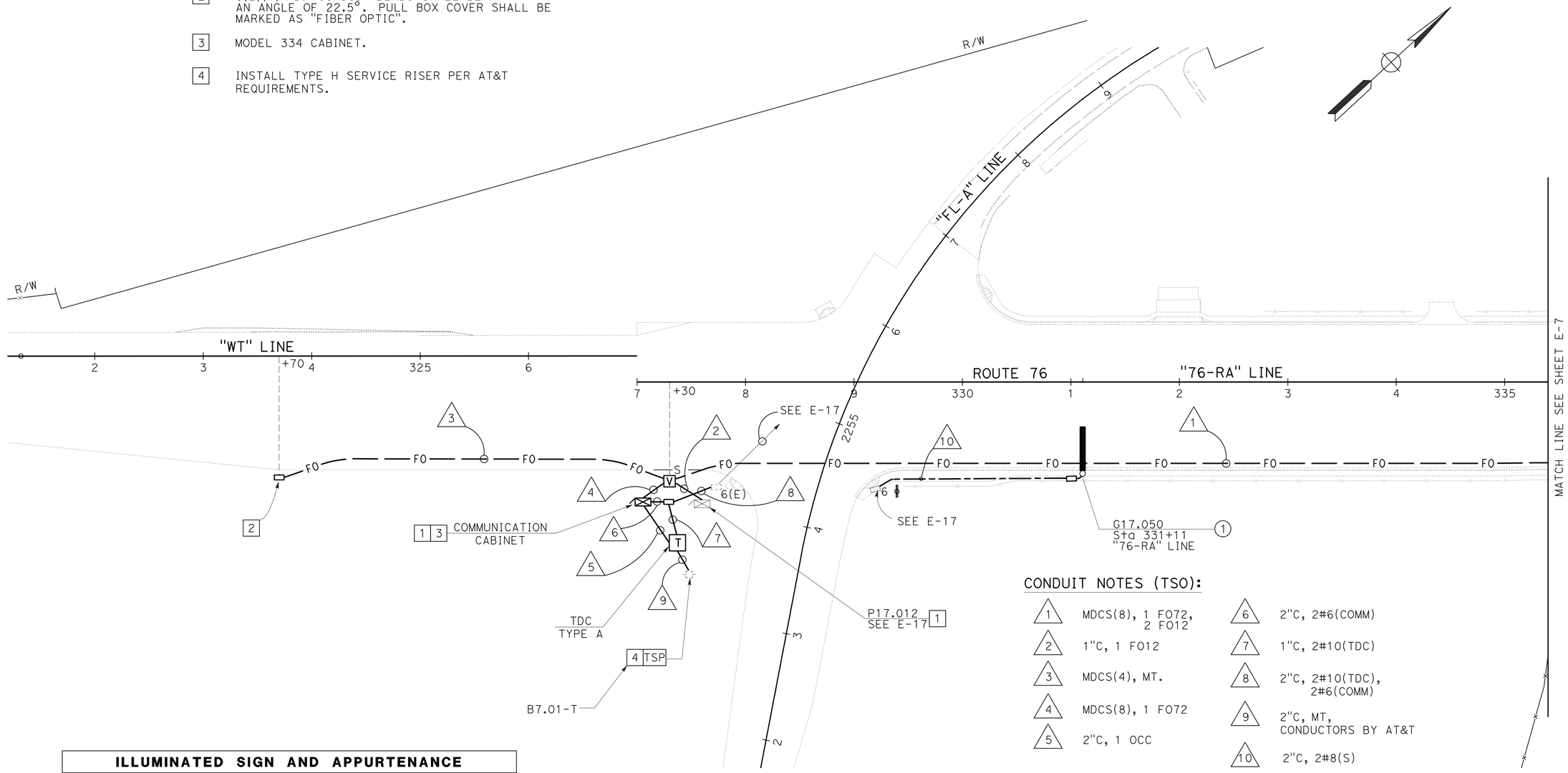

CONDUIT NOTES (TSO):

1. MDCS(8), 1 FO72, 2 FO12
2. 1"C, 1 FO12
3. MDCS(4), MT.
4. MDCS(8), 1 FO72
5. 2"C, 1 OCC
6. 2"C, 2#6(COMM)
7. 1"C, 2#10(TDC)
8. 2"C, 2#10(TDC), 2#6(COMM)
9. 2"C, MT, CONDUCTORS BY AT&T
10. 2"C, 2#8(S)

ILLUMINATED SIGN AND APPURTENANCE

SIGN No.	QUANTITY OF 85 W ISL FIXTURES	VOLTAGE (SERVICE)	LOAD	REMARKS
1	1	240 V	87 W	SEE Std PLAN ES-15C AND RSP ES-15D (LC3)

LIGHT AND SIGN ILLUMINATION
FIBER OPTIC COMMUNICATION SYSTEM

SCALE: 1" = 50'

E-12

APPROVED FOR ELECTRICAL WORK ONLY

REVISED BY | DATE REVISED
FARIBA RAMOS | ENRIQUE BERNAL
CALCULATED-DESIGNED BY | CHECKED BY
FUNCTIONAL SUPERVISOR: BRIAN PECUS
STATE OF CALIFORNIA - DEPARTMENT OF TRANSPORTATION
Caltrans TRAFFIC ELECTRICAL

LAST REVISION 01-23-12 | DATE PLOTTED => 17-APR-2012 | TIME PLOTTED => 15:19

Dist	COUNTY	ROUTE	POST MILES TOTAL PROJECT	SHEET No.	TOTAL SHEETS
11	SD	15,76	R46.1/R47.3, R16.7/R17.7	339	477

Fariba Ramos 01-20-12
REGISTERED ELECTRICAL ENGINEER DATE

4-16-12
PLANS APPROVAL DATE

REGISTERED PROFESSIONAL ENGINEER FARIBA RAMOS No. E15619 Exp. 12-31-13 ELECTRICAL STATE OF CALIFORNIA

THE STATE OF CALIFORNIA OR ITS OFFICERS OR AGENTS SHALL NOT BE RESPONSIBLE FOR THE ACCURACY OR COMPLETENESS OF SCANNED COPIES OF THIS PLAN SHEET.

FOR ACCURATE RIGHT OF WAY DATA, CONTACT RIGHT OF WAY ENGINEERING AT THE DISTRICT OFFICE.

CONDUIT NOTES:

1. 3"C, 4 DLC
2. 3"C, 8 DLC
3. 3"C, 10 DLC
4. 3"C, 13 DLC
5. 2"C, 2 DLC
6. 2"C, 4 DLC
7. 2"C, 3 DLC
8. 3"C, 6 DLC
9. 2"C, 2#8 (TMS)
10. 2"C, 9 DLC, 2#8 (TMS)
11. 3"C, 22 DLC, 2"C, 2#8 (TMS)
12. 2"C, 8 LOOP WIRES

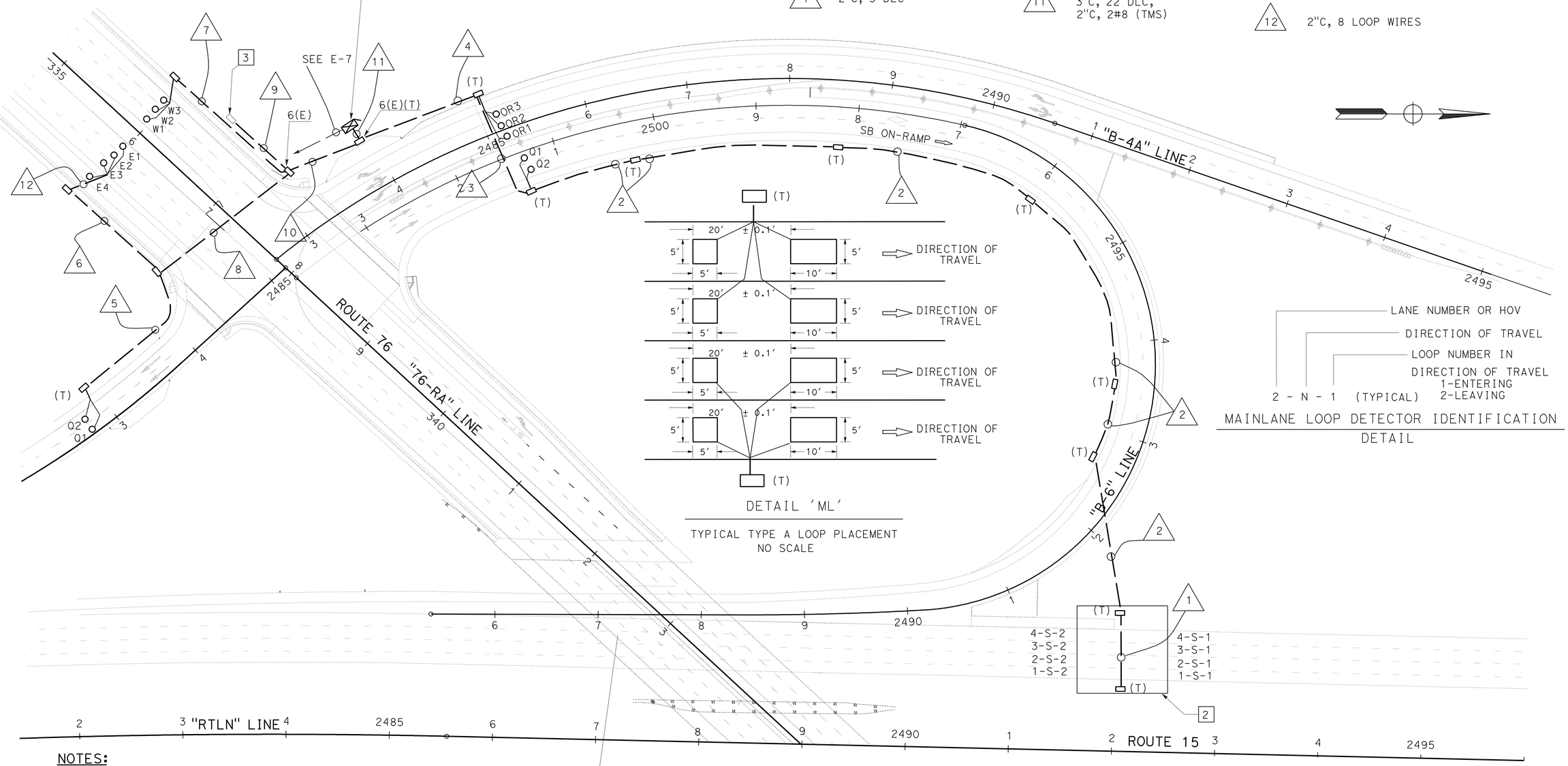

DETAIL 'ML'

TYPICAL TYPE A LOOP PLACEMENT
NO SCALE

MAINLANE LOOP DETECTOR IDENTIFICATION DETAIL

NOTES:

1. SEE LIGHTING AND SIGN ILLUMINATION PLANS FOR CIRCUIT CONTINUITY.
2. FOR LOOP PLACEMENT SEE DETAIL 'ML' ON THIS SHEET.
3. SEE SIGNAL AND LIGHTING (LOCATION 2) PLANS FOR CIRCUIT CONTINUITY, SEE E-20.
4. STATE-FURNISHED MODEL 170 CONTROLLER (2-170 CONTROLLERS) UNITS. TMS CABINET (MODEL 334).
5. SEE COMPONENT DIAGRAM IN ELECTRICAL DETAILS.
6. PLACE CABINET 30' Min BEHIND THE ETW.

APPROVED FOR ELECTRICAL WORK ONLY

TRAFFIC MONITORING STATION (LOCATION 1)

SCALE: 1" = 50'

E-13

STATE OF CALIFORNIA - DEPARTMENT OF TRANSPORTATION
Caltrans® TRAFFIC ELECTRICAL

FUNCTIONAL SUPERVISOR: BRIAN PECUS
CALCULATED-DESIGNED BY: FARIBA RAMOS
CHECKED BY: ENRIQUE BERNAL
REVISED BY
DATE REVISED

LAST REVISION 01-10-12
DATE PLOTTED => 17-APR-2012
TIME PLOTTED => 15:19

Dist	COUNTY	ROUTE	POST MILES TOTAL PROJECT	SHEET No.	TOTAL SHEETS
11	SD	15,76	R46.1/R47.3, R16.7/R17.7	340	477

Fariba Ramos 01-20-12
REGISTERED ELECTRICAL ENGINEER DATE

4-16-12
PLANS APPROVAL DATE

REGISTERED PROFESSIONAL ENGINEER
FARIBA RAMOS
No. E15619
Exp. 12-31-13
ELECTRICAL
STATE OF CALIFORNIA

THE STATE OF CALIFORNIA OR ITS OFFICERS OR AGENTS SHALL NOT BE RESPONSIBLE FOR THE ACCURACY OR COMPLETENESS OF SCANNED COPIES OF THIS PLAN SHEET.

FOR ACCURATE RIGHT OF WAY DATA, CONTACT RIGHT OF WAY ENGINEERING AT THE DISTRICT OFFICE.

NOTES:

1. SEE LIGHTING AND SIGN ILLUMINATION PLANS FOR CIRCUIT CONTINUITY.

[2] FOR LOOP PLACEMENT SEE DETAIL 'ML' ON SHEET E-13.

[3] SEE SIGNAL AND LIGHTING (LOCATION 3) PLANS FOR CIRCUIT CONTINUITY, SEE E-28.

[4] STATE-FURNISHED MODEL 170 CONTROLLER (2-170 CONTROLLERS) UNITS. TMS CABINET (MODEL 334).

[5] SEE COMPONENT DIAGRAM IN ELECTRICAL DETAILS.

[6] PLACE CABINET 30' Min BEHIND THE ETW.

7. FOR ACCURATE RIGHT OF WAY DATA, CONTACT RIGHT OF WAY ENGINEERING AT THE DISTRICT OFFICE.

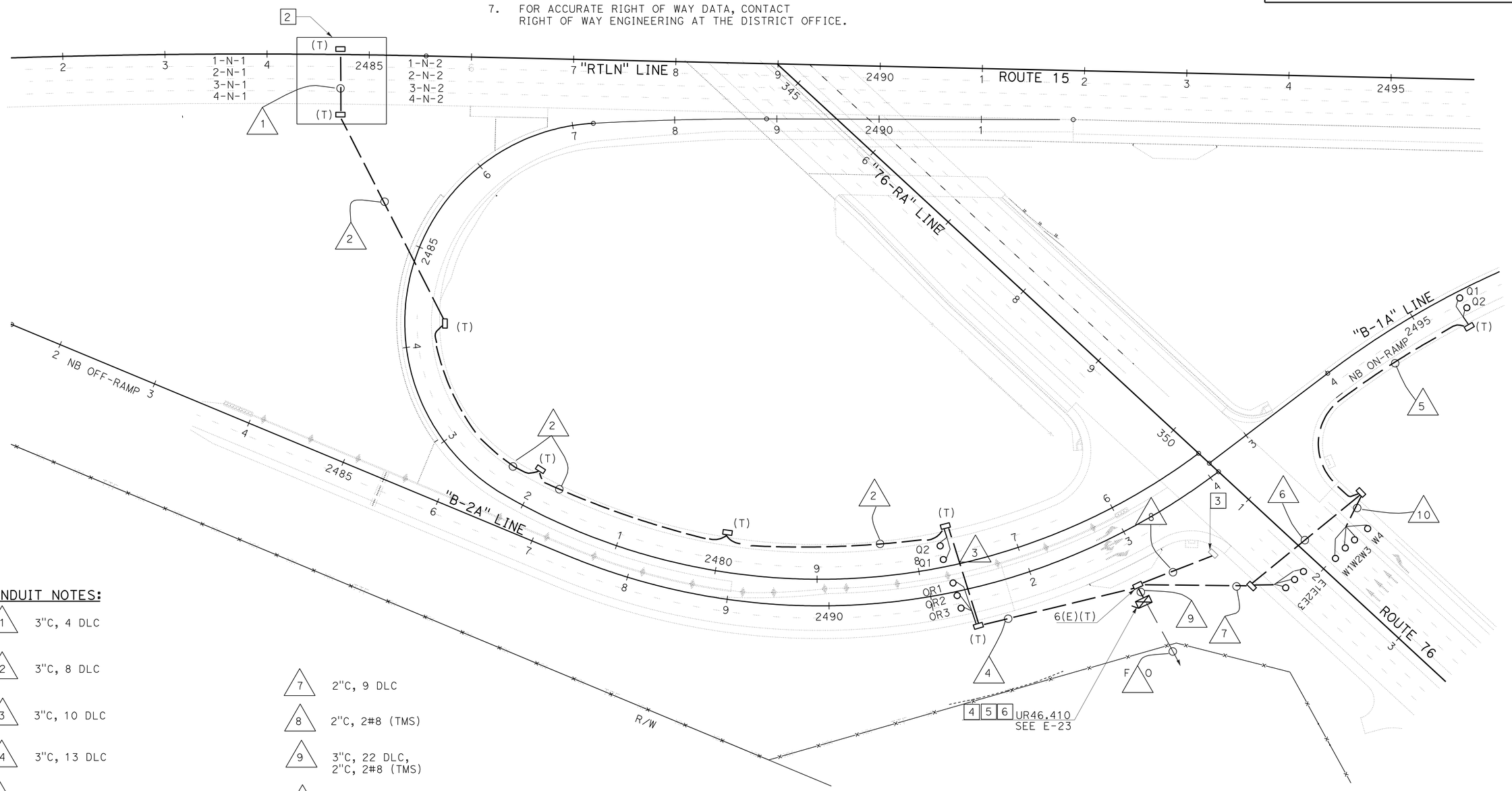

CONDUIT NOTES:

1	3"C, 4 DLC
2	3"C, 8 DLC
3	3"C, 10 DLC
4	3"C, 13 DLC
5	2"C, 2 DLC
6	2"C, 6 DLC
7	2"C, 9 DLC
8	2"C, 2#8 (TMS)
9	3"C, 22 DLC, 2"C, 2#8 (TMS)
10	2"C, 8 LOOP WIRES

APPROVED FOR ELECTRICAL WORK ONLY

TRAFFIC MONITORING STATION (LOCATION 2)

SCALE: 1" = 50'

E-14

STATE OF CALIFORNIA - DEPARTMENT OF TRANSPORTATION
Caltrans® TRAFFIC ELECTRICAL

FUNCTIONAL SUPERVISOR: BRIAN PECUS
CALCULATED-DESIGNED BY: FARIBA RAMOS
CHECKED BY: ENRIQUE BERNAL
REVISED BY
DATE REVISED

LAST REVISION 01-23-12
DATE PLOTTED => 17-APR-2012
TIME PLOTTED => 14:05

Dist	COUNTY	ROUTE	POST MILES TOTAL PROJECT	SHEET No.	TOTAL SHEETS
11	SD	15,76	R46.1/R47.3, R16.7/R17.7	341	477

Fariba Ramos 01-20-12
REGISTERED ELECTRICAL ENGINEER DATE

4-16-12
PLANS APPROVAL DATE

REGISTERED PROFESSIONAL ENGINEER FARIBA RAMOS No. E15619 Exp. 12-31-13 ELECTRICAL STATE OF CALIFORNIA

THE STATE OF CALIFORNIA OR ITS OFFICERS OR AGENTS SHALL NOT BE RESPONSIBLE FOR THE ACCURACY OR COMPLETENESS OF SCANNED COPIES OF THIS PLAN SHEET.

FOR ACCURATE RIGHT OF WAY DATA, CONTACT RIGHT OF WAY ENGINEERING AT THE DISTRICT OFFICE.

CONDUIT NOTES:

1. 3"C, 2 DLC, 4 TRANSMISSION CABLES
2. 3"C, 4 DLC, 8 TRANSMISSION CABLES
3. 3"C, 6 DLC, 12 TRANSMISSION CABLES
4. 3"C, 8 DLC, 16 TRANSMISSION CABLES
5. 2"C, 2#2(TMS)

NOTES:

1. EXISTING LIGHTING & SIGN ILLUMINATION PLANS PARTIALLY SHOWN.

[2] PIEZOELECTRIC SENSOR DETECTOR. FOR CONSTRUCTION DETAILS SEE E-39.

[3] SEE FIBER OPTIC COMMUNICATION SYSTEM PLANS FOR CIRCUIT CONTINUITY, SEE E-11.

[4] STATE-FURNISHED MODEL 170 CONTROLLER (2-170 CONTROLLERS) UNITS. TMS CABINET (MODEL).

[5] SEE COMPONENT DIAGRAM IN ELECTRICAL DETAILS.

[6] PLACE CABINET 30' Min BEHIND THE ETW.

[7] SEE DETAIL 'LOOP' THIS SHEET.

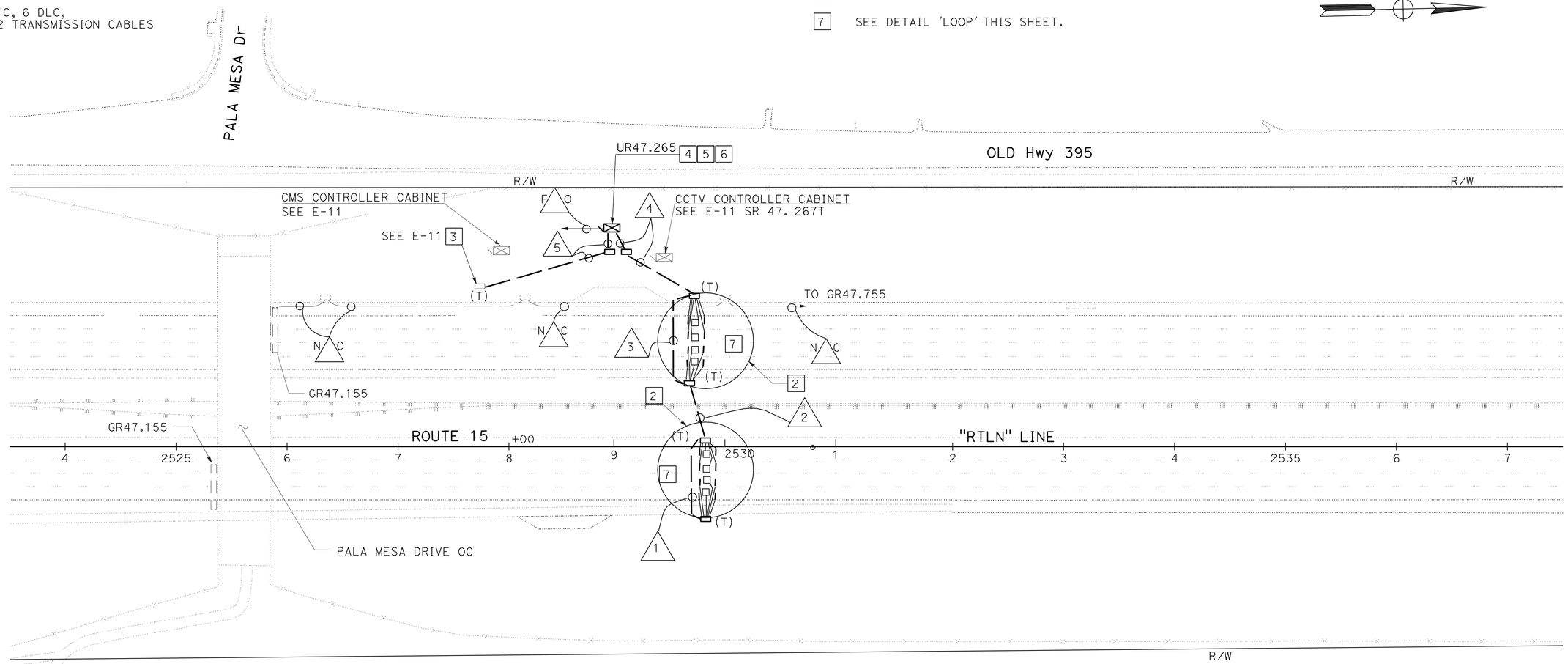

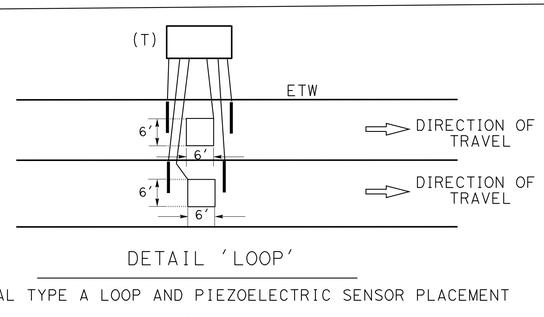

DETAIL 'LOOP'

TYPICAL TYPE A LOOP AND PIEZOELECTRIC SENSOR PLACEMENT

NO SCALE

APPROVED FOR ELECTRICAL WORK ONLY

TRAFFIC MONITORING STATION (LOCATION 3)

SCALE: 1" = 50'

E-15

STATE OF CALIFORNIA - DEPARTMENT OF TRANSPORTATION
Caltrans® TRAFFIC ELECTRICAL

FUNCTIONAL SUPERVISOR: BRIAN PECUS
CALCULATED-DESIGNED BY: ENRIQUE BERNAL
CHECKED BY: FARIBA RAMOS
REVISED BY
DATE REVISED

LAST REVISION DATE PLOTTED => 17-APR-2012
01-23-12 TIME PLOTTED => 14:05

Dist	COUNTY	ROUTE	POST MILES TOTAL PROJECT	SHEET No.	TOTAL SHEETS
11	SD	15,76	R46.1/R47.3, R16.7/R17.7	342	477

Fariba Ramos 01-20-12
REGISTERED ELECTRICAL ENGINEER DATE

4-16-12
PLANS APPROVAL DATE

REGISTERED PROFESSIONAL ENGINEER FARIBA RAMOS No. E15619 Exp. 12-31-13 ELECTRICAL STATE OF CALIFORNIA

THE STATE OF CALIFORNIA OR ITS OFFICERS OR AGENTS SHALL NOT BE RESPONSIBLE FOR THE ACCURACY OR COMPLETENESS OF SCANNED COPIES OF THIS PLAN SHEET.

FOR ACCURATE RIGHT OF WAY DATA, CONTACT
RIGHT OF WAY ENGINEERING AT THE DISTRICT OFFICE.

NOTES:

1. RC SIGNAL POLES AND APPURTENANCES EXCEPT AS NOTED.
2. AB CONDUIT AND DETECTOR LOOPS EXCEPT AS NOTED.

3 RL EXISTING MODEL 332 CABINET, P17.012.
RL EVD DISCRIMINATOR CARD.
RL EXISTING BATTERIES AND EXTERNAL BBS CABINET.

4 RL EVDs (2 EA).

5 RL EVD.

6. SEE SIGNAL AND LIGHTING PLANS (LOCATION 1) FOR CIRCUIT CONTINUITY.

7 RC EXISTING TYPE III-BF.

8. RC EXISTING PULL BOXES EXCEPT AS NOTED.
9. SEE SIGNAL AND LIGHTING STAGE CONSTRUCTION PLANS (LOCATION 1) FOR CIRCUIT CONTINUITY.

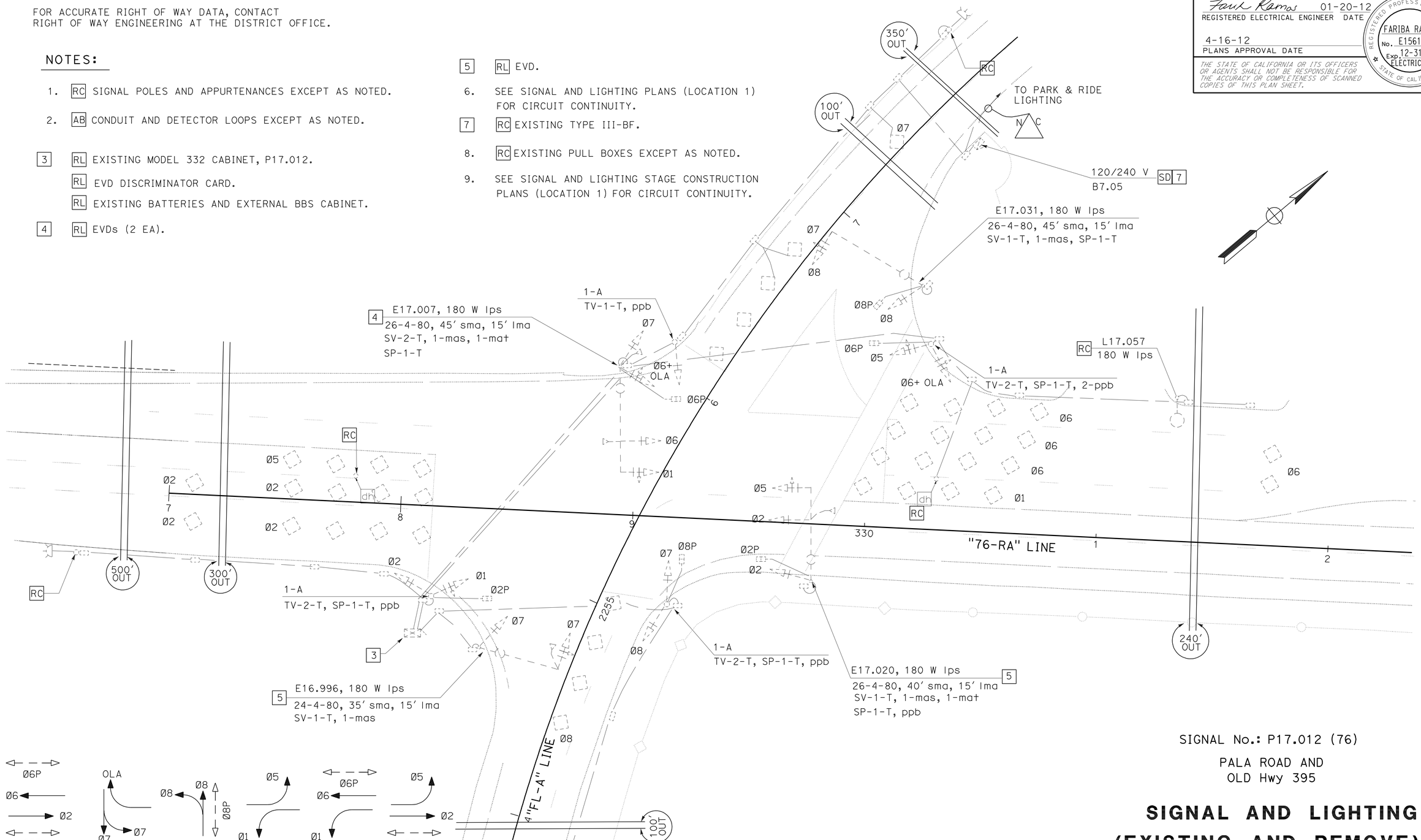

SIGNAL No.: P17.012 (76)

PALA ROAD AND
OLD Hwy 395

SIGNAL AND LIGHTING (EXISTING AND REMOVE) (LOCATION 1)

APPROVED FOR ELECTRICAL WORK ONLY

SCALE: 1" = 20'

E-16

STATE OF CALIFORNIA - DEPARTMENT OF TRANSPORTATION
Caltrans TRAFFIC ELECTRICAL

FUNCTIONAL SUPERVISOR: BRIAN PECUS
CALCULATED-DESIGNED BY: FARIBA RAMOS
CHECKED BY: ENRIQUE BERNAL
REVISED BY
DATE REVISED

LAST REVISION 01-23-12
DATE PLOTTED => 17-APR-2012
TIME PLOTTED => 14:05

Dist	COUNTY	ROUTE	POST MILES TOTAL PROJECT	SHEET No.	TOTAL SHEETS
11	SD	15,76	R46.1/R47.3, R16.7/R17.7	343	477

Fariba Ramos 01-20-12
REGISTERED ELECTRICAL ENGINEER DATE

4-16-12
PLANS APPROVAL DATE

REGISTERED PROFESSIONAL ENGINEER FARIBA RAMOS No. E15619 Exp. 12-31-13 ELECTRICAL STATE OF CALIFORNIA

THE STATE OF CALIFORNIA OR ITS OFFICERS OR AGENTS SHALL NOT BE RESPONSIBLE FOR THE ACCURACY OR COMPLETENESS OF SCANNED COPIES OF THIS PLAN SHEET.

FOR ACCURATE RIGHT OF WAY DATA, CONTACT
RIGHT OF WAY ENGINEERING AT THE DISTRICT OFFICE.

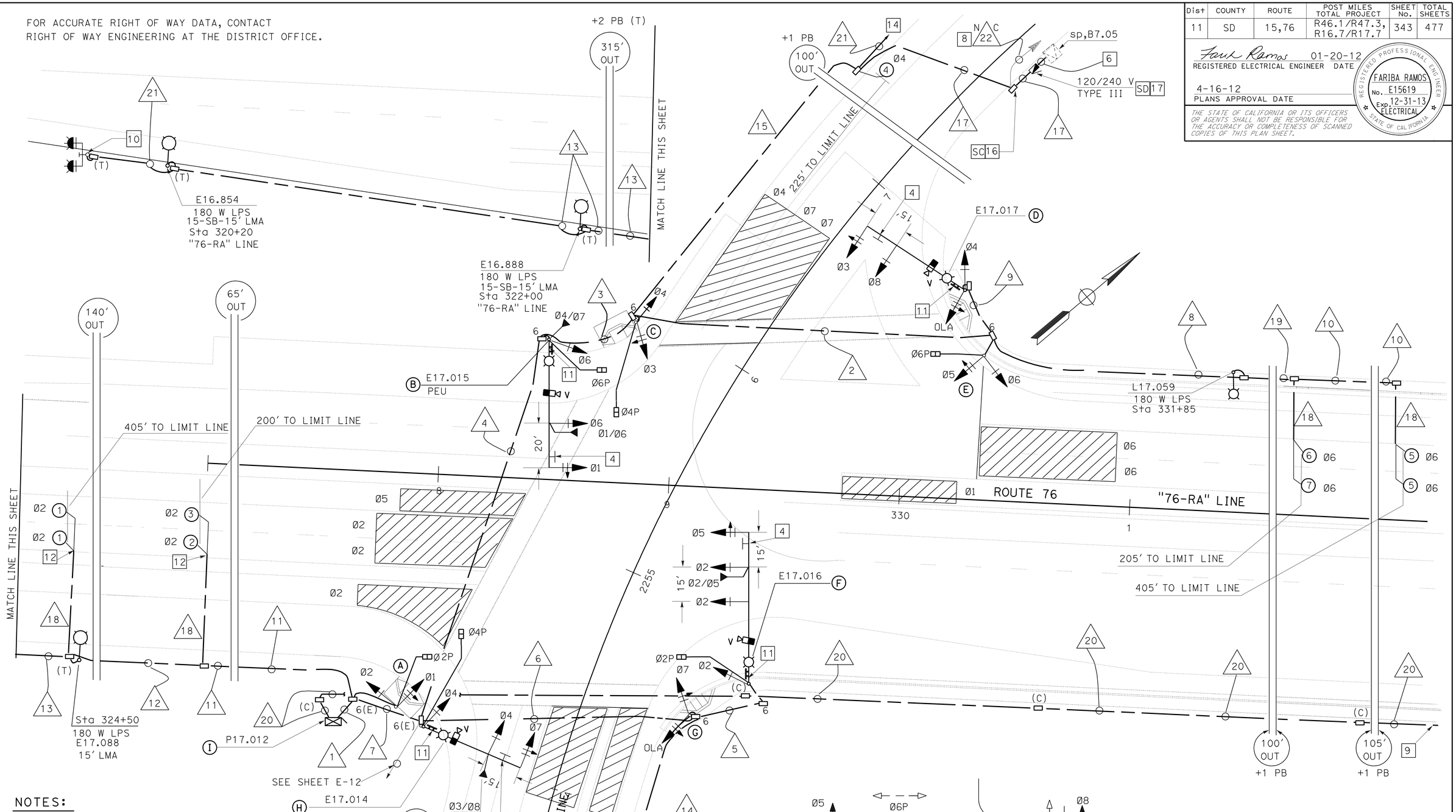

NOTES:

SEE SHEET E-18.

CONDUIT AND CONDUCTOR SCHEDULE:

SEE SHEET E-18.

EQUIPMENT AND POLE SCHEDULE:

SEE SHEET E-18.

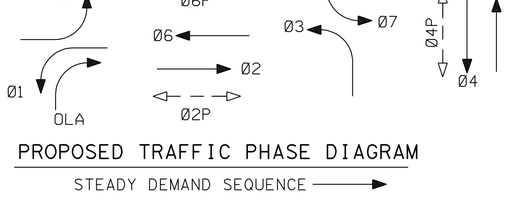

PROPOSED TRAFFIC PHASE DIAGRAM
STEADY DEMAND SEQUENCE

SIGNAL No.: P17.012
ROUTE 76 AND OLD Hwy 395

SIGNAL AND LIGHTING (LOCATION 1)

APPROVED FOR ELECTRICAL WORK ONLY

SCALE: 1" = 20'

E-17

STATE OF CALIFORNIA - DEPARTMENT OF TRANSPORTATION
Caltrans TRAFFIC ELECTRICAL

FUNCTIONAL SUPERVISOR: BRIAN PECUS
CALCULATED-DESIGNED BY: FARIBA RAMOS
CHECKED BY: ENRIQUE BERNAL
REVISED BY
DATE REVISED

LAST REVISION 01-23-12
DATE PLOTTED => 17-APR-2012
TIME PLOTTED => 15:38

Dist	COUNTY	ROUTE	POST MILES TOTAL PROJECT	SHEET No.	TOTAL SHEETS
11	SD	15,76	R46.1/R47.3, R16.7/R17.7	344	477

Fariba Ramos 01-20-12
REGISTERED ELECTRICAL ENGINEER DATE

4-16-12
PLANS APPROVAL DATE

REGISTERED PROFESSIONAL ENGINEER FARIBA RAMOS No. E15619 Exp. 12-31-13 ELECTRICAL STATE OF CALIFORNIA

THE STATE OF CALIFORNIA OR ITS OFFICERS OR AGENTS SHALL NOT BE RESPONSIBLE FOR THE ACCURACY OR COMPLETENESS OF SCANNED COPIES OF THIS PLAN SHEET.

NOTES:

1. RL BATTERIES AND EXTERNAL BBS CABINET. SEE E-40 FOR FOUNDATION DETAILS.
2. RL MODEL 332 CABINET. INSTALL VDU, VIDEO DISPLAY, AND COMMUNICATION CARD IN CABINET.
3. RL EVD DISCRIMINATOR CARDS.
4. DETAIL U ES-7N. SEE SIGN PLANS.
5. RL EVD, MOUNTING PER Std PLAN ES-4E.
6. 3"C, MT, (CONDUCTORS PER SDG&E).
7. SEE COMPONENT DIAGRAM IN ELECTRICAL DETAILS.
8. TO PARK & RIDE LIGHTING CIRCUIT, SEE SHEET E-5.
9. INTERCONNECT CONDUIT AND CABLE CONTINUTES TO SIGNAL AND LIGHTING (LOCATION 2), SEE SHEET E-20.
10. TYPE 15-FBS, ADVANCED FB INSTALLATION, SEE ES-7J. SEE SIGN PLANS.
11. SNS.
12. EXTEND TERMINATION CONDUIT.
13. RL EVD TO POLE TOP. MOUNTING PER Std PLANS ES-4E.
14. INSTALL TYPE 15-FBS, ADVANCED FB PER ES-7J, Sta. 2262+14, "FL-A" LINE. SEE SIGN AND STAGE CONSTRUCTION PLANS.
15. SV-1-T, 3 SECTION SIGNAL HEAD TO BE MOUNTED 17' ABOVE BASE PLATE FOR PHASE 4.
16. RC Exist PULL BOX. REPLACE WITH PB No. 6.
17. TYPE III-BR SERVICE EQUIPMENT ENCLOSURE. SEE WIRING DIAGRAM OLD HWY 395 THIS SHEET.
18. INSTALLED PER SIGNAL AND LIGHTING STAGE CONSTRUCTION.

CONDUIT NOTES:

16 - 2"C, 2 LOOP WIRES

17 - 3"C, 2#8 (LTG), 2#6 (SIGNAL), 4#10 (FB), 2#6 (COMM), 2#10 (TDC), 2#8 (S)

18 - 2"C, 4 LOOP WIRE

19 - 2"C, 3 DLC

20 - 2"C, 1 SIC (INTERCONNECT) 1 OCC

21 - 2"C, 2#10 (FB)

N C 22 - Exist 2"C, 2#10 (ltg), 3#14 (peu)

CONDUIT AND CONDUCTOR SCHEDULE

AWG SIZE OR CABLE TYPE	PHASE	POLE OR CIRCUIT	CONDUIT SIZE AND RUN 2-3" 1	3" 2	3" 3	3" 4	2" 5	3" 6	2-3" 7	2" 8	2" 9	2" 10	2" 11	2" 12	2" 13	2" 14	2" 15
No. 14 CONDUCTORS		POLE - A	2 1														
3CSC / 12CSC		B	1			1			1								
		C	2 1		2 1	2 1			2 1								
		D	2	2	2	2			2		2						
		E	1 1	1 1	1 1	1			1 1								
		F	1				1	1	1								
		G	1 1					1 1	1 1								
		H	1						1								
TOTAL 3CSC / 12CSC			6 9	1 3	3 4	3 5	1	1 2	4 8		2						
10		FB			2	2			2				2	2	2		2
8		LIGHTING		2	2	2	2	2	2	2	2		2	2	2		2
8		SIGN			2	2	2	2									2
6		SIGNAL	2		2	2			2								2
6		COMM			2	2											2
10		TDC			2	2											2
DLC	Ø2		3										3	1			
	Ø8		1					1	1							1	
	Ø4		1		1	1			1								1
	Ø6		3	3	3	3			3	3		1					
VIDEO CABLE HARNESS	Ø6 / Ø1		1			1			1								
	Ø2 / Ø5		1				1	1	1								
	Ø3/Ø8/OLA		1	1	1	1			1		1						
	Ø4		1						1								
EVC			4			2	1	1	4								
TOTAL CONDUCTORS / CABLES			33	10	24	28	7	10	31	5	5	1	7	5	4	1	13

EQUIPMENT AND POLE SCHEDULE

Loc	STANDARD TYPE	SMA (ft)	LMA (ft)	PLACEMENT DIMENSIONS A (ft)	B (ft)	SIGNAL MOUNTING AND PLACEMENT VEHICLE POLE	VEHICLE MASTARM	PEDESTRIAN SIGNAL	PEDESTRIAN PPB	REMARKS
A	1-A	-	-	17.0	7.0	TV-2-T	-	SP-1-T	Ø2P → Ø4P →	18
B	29-5-100	55	15	5.5	5.0	SV-1-T	MAS MAT 5	SP-1-T	-	180 W LPS VIS PEU 13 18
C	1-A	-	-	5.0	3.5	TV-2-T	-	SP-1-T	Ø6P → Ø4P ←	18
D	29-5-100	50	15	14.0	5.0	SV-1-T SV-1-T, 15	MAS MAT	-	-	180 W LPS VIS 18
E	1-A	-	-	30.0	7.0	TV-2-T	-	SP-1-T	Ø6P ←	18
F	61-5-100	65	15	7.5	4.0	SV-1-T	2-MAS MAT 5	SP-1-T	-	180 W LPS VIS 18
G	1-A	-	-	17.0	6.0	TV-2-T	-	-	Ø2P ←	18
H	24-4-100	35	15	30.0	4.0	SV-1-T	MAS MAT 5	SP-1-T	-	180 W LPS VIS 18
I	RL MODEL 170 CONTROLLER ASSEMBLY. 1 2 3 7									

APPROVED FOR ELECTRICAL WORK ONLY

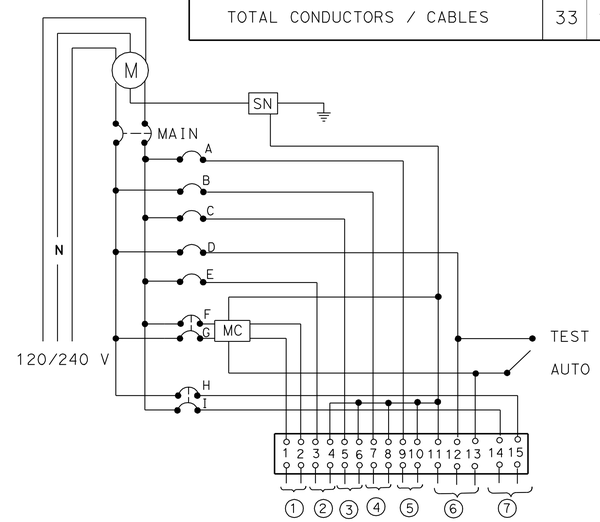

WIRING DIAGRAM, OLD Hwy 395

(TYPE III-BR SERVICE EQUIPMENT ENCLOSURE CABINET SEE RSP ES-2C AND RSP ES-2E)

CIRCUIT BREAKERS

MAIN-2P-100 A

A-1P-30 A
B-1P-15 A
C-1P-20 A
D-1P-15 A
E-1P-30 A
F, G 2P-30 A
H, I 2P-30 A

1 - LIGHTING
2 - SIGNAL
3 - FB
4 - TDC
5 - COMM
6 - PEU
7 - SIGN

SIGNAL No.: P17.012
ROUTE 76 AND OLD Hwy 395

SIGNAL AND LIGHTING (LOCATION 1)

NO SCALE

E-18

STATE OF CALIFORNIA - DEPARTMENT OF TRANSPORTATION
Caltrans TRAFFIC ELECTRICAL

FUNCTIONAL SUPERVISOR: BRIAN PECUS
CALCULATED-DESIGNED BY: FARIBA RAMOS
CHECKED BY: ENRIQUE BERNAL
REVISED BY
DATE REVISED

LAST REVISION 01-10-12 | DATE PLOTTED => 18-APR-2012 | TIME PLOTTED => 09:02

FOR ACCURATE RIGHT OF WAY DATA, CONTACT
RIGHT OF WAY ENGINEERING AT THE DISTRICT OFFICE.

NOTES:

1. RC SIGNAL POLES AND APPURTENANCES EXCEPT AS NOTED.
2. AB CONDUITS AND DETECTOR LOOPS EXCEPT AS NOTED.
3. EXISITNG MODEL 332 CABINET TO REMAIN.
4. SEE EXISITNG LIGHTING AND COMMUNICATION PLANS FOR CIRCUIT CONTINUITY.
5. SD UNMETERED SWITCH PEDESTAL TO REMAIN.
6. EXISITNG CONDUIT TO REMAIN.
7. EXISITNG PULL BOX TO REMAIN, SEE SHEET E-3.
8. RC Exist PULL BOXES EXCEPT AS NOTED.
9. RL ONE-2 CHANNEL EVD.
10. Exist 3"C, 2#10 (icc), 2#1/0 (SWITCH PEDESTAL) TO REMAIN.

Dist	COUNTY	ROUTE	POST MILES TOTAL PROJECT	SHEET No.	TOTAL SHEETS
11	SD	15,76	R46.1/R47.3, R16.7/R17.7	345	477

Fariba Ramos 01-20-12
REGISTERED ELECTRICAL ENGINEER DATE

4-16-12
PLANS APPROVAL DATE

REGISTERED PROFESSIONAL ENGINEER
FARIBA RAMOS
No. E15619
Exp. 12-31-13
ELECTRICAL
STATE OF CALIFORNIA

THE STATE OF CALIFORNIA OR ITS OFFICERS OR AGENTS SHALL NOT BE RESPONSIBLE FOR THE ACCURACY OR COMPLETENESS OF SCANNED COPIES OF THIS PLAN SHEET.

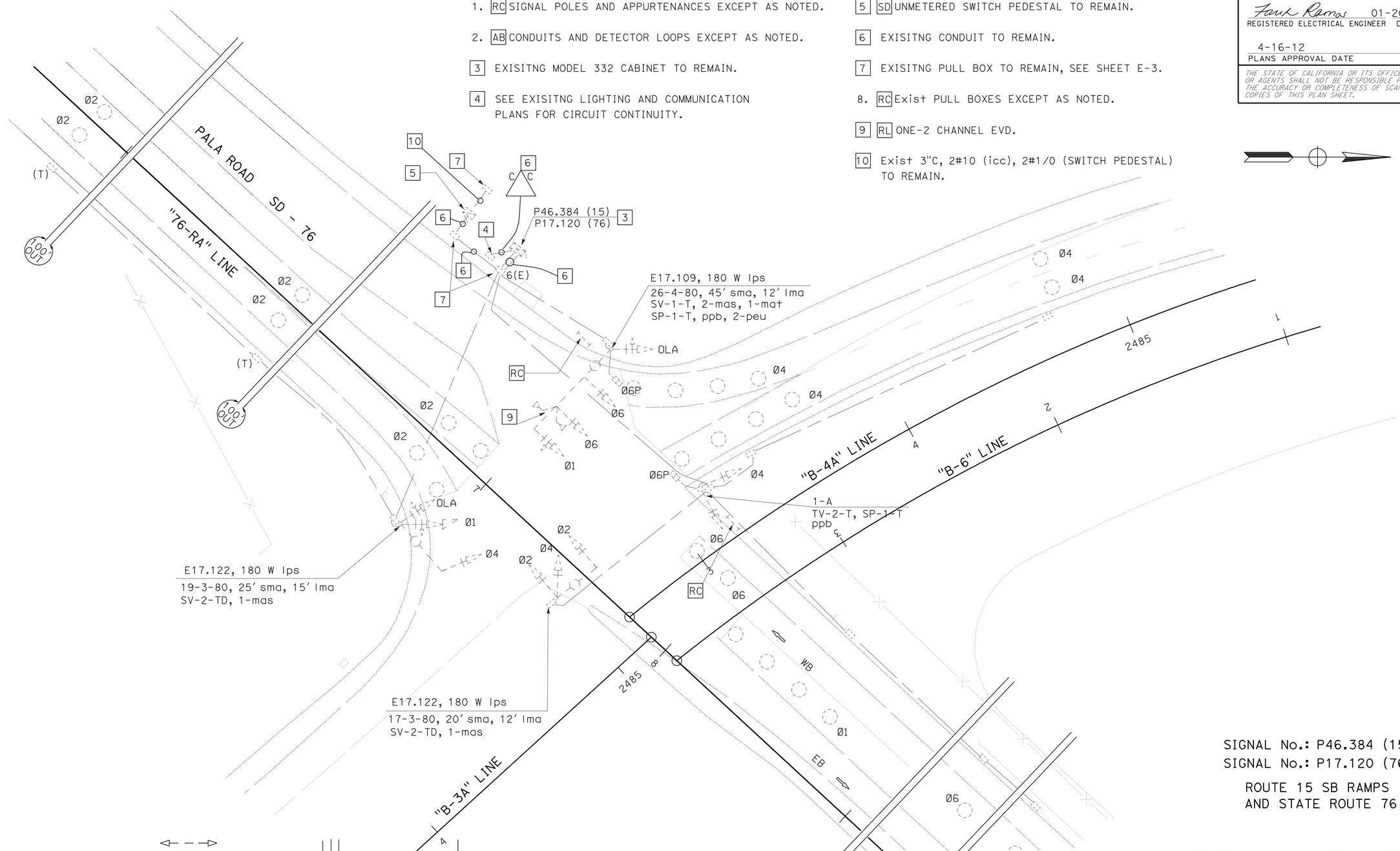

EXISTING TRAFFIC PHASE DIAGRAM
STEADY DEMAND SEQUENCE

APPROVED FOR ELECTRICAL WORK ONLY

SIGNAL No.: P46.384 (15)
SIGNAL No.: P17.120 (76)

ROUTE 15 SB RAMPS
AND STATE ROUTE 76

SIGNAL AND LIGHTING (EXISTING AND REMOVE) (LOCATION 2)

SCALE: 1" = 20'

E-19

STATE OF CALIFORNIA - DEPARTMENT OF TRANSPORTATION
Caltrans TRAFFIC ELECTRICAL

FUNCTIONAL SUPERVISOR: BRIAN PECUS
CALCULATED-DESIGNED BY: FARIBA RAMOS
CHECKED BY: ENRIQUE BERNAL
REVISED BY
DATE REVISED

LAST REVISION 01-23-12
DATE PLOTTED => 17-APR-2012
TIME PLOTTED => 15:19

Dist	COUNTY	ROUTE	POST MILES TOTAL PROJECT	SHEET No.	TOTAL SHEETS
11	SD	15,76	R46.1/R47.3, R16.7/R17.7	346	477

REGISTERED ELECTRICAL ENGINEER 01-20-12 DATE

4-16-12
PLANS APPROVAL DATE

REGISTERED PROFESSIONAL ENGINEER FARIBA RAMOS No. E15619 Exp. 12-31-13 ELECTRICAL STATE OF CALIFORNIA

THE STATE OF CALIFORNIA OR ITS OFFICERS OR AGENTS SHALL NOT BE RESPONSIBLE FOR THE ACCURACY OR COMPLETENESS OF SCANNED COPIES OF THIS PLAN SHEET.

FOR ACCURATE RIGHT OF WAY DATA, CONTACT RIGHT OF WAY ENGINEERING AT THE DISTRICT OFFICE.

NOTES:

1. 3 SECTION SIGNAL HEAD FOR PHASE 4 MOUNTED AT 17' ABOVE BASE PLATE.
2. INSTALL VDU, COMMUNICATION CARD AND VIDEO DISPLAY IN MODEL 332 CABINET.
3. INTERCONNECT CONDUIT AND CABLE CONTINUES TO SIGNAL AND LIGHTING (LOCATION 1), SEE SHEET E-17.
4. DTAIL U ES-7N. SEE SIGN PLANS.
5. RC EXISTING COMMUNICATION PULL BOX AND REPLACE WITH No. 6 (E) (C).
6. INTERCONNECT CONDUIT CONTINUES TO COMMUNICATION PB AT Approx 342+40. SEE E-3 FOR CIRCUIT CONTINUITY.
7. INTERCONNECT CONDUIT AND CABLE CONTINUES TO SIGNAL & LIGHTING, (LOCATION 3), SEE SHEET E-23.
8. EXTEND TERMINATION CONDUIT.

CONDUIT AND CONDUCTOR SCHEDULE:

SEE SHEET E-21.

EQUIPMENT AND POLE SCHEDULE:

SEE SHEET E-21.

NOTES (CONTINUED):

9. SEE COMPONENT DIAGRAM IN ELECTRICAL DETAILS.
10. Exist TYPE III-BF SERVICE EQUIPMENT ENCLOSURE:
    - 2P-30 A (ltg, 76)
    - 2P-30 A (ltg, 15)
    - 2P-30 A (sign)
    - 1P-50 A (signal)
    - 1P-30 A (tms)
    - 1P-15 A (peu)

    ADD: 1P-30 A (CCTV)
11. RC Exist PB AND INSTALL 6(E).

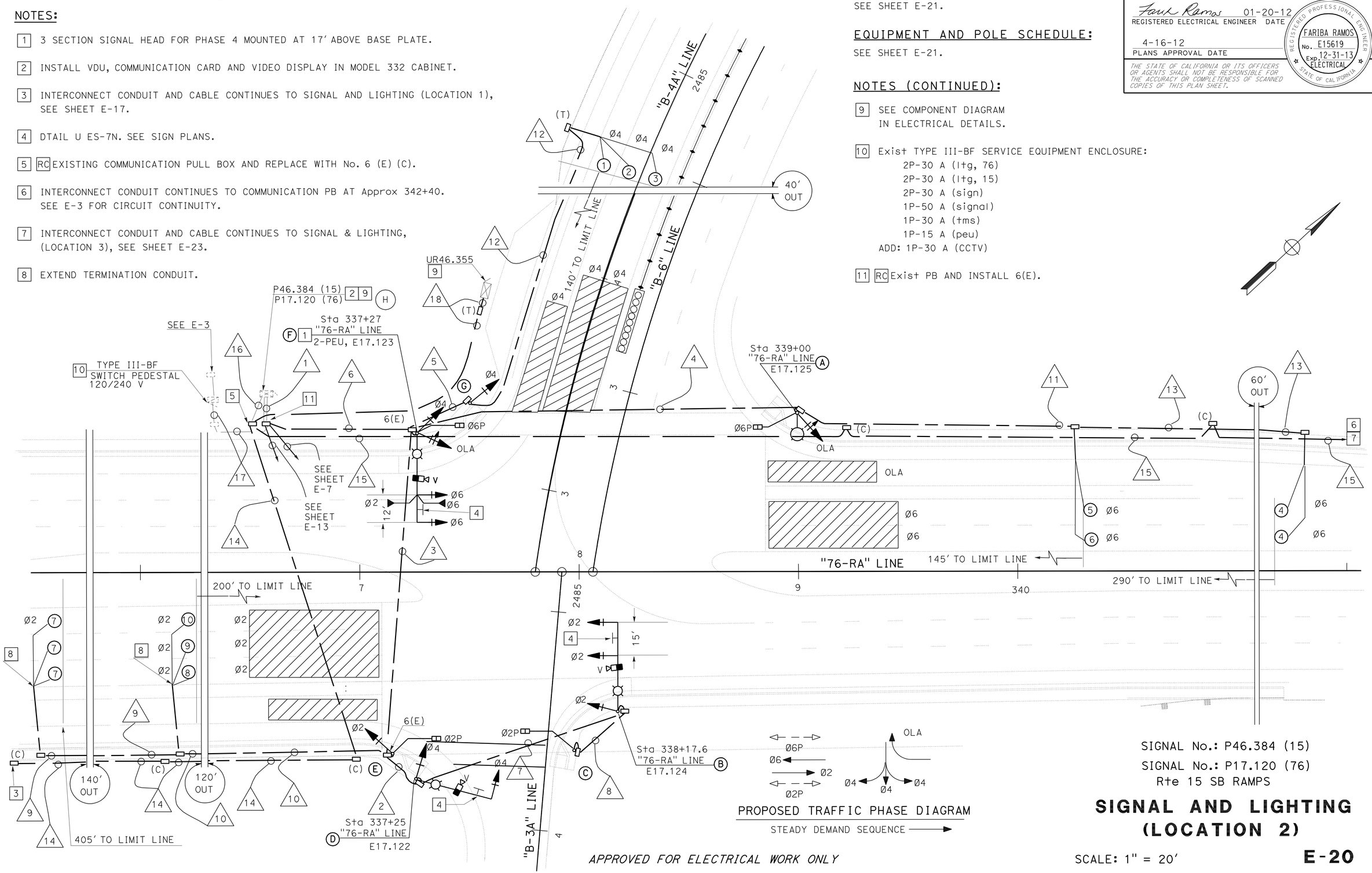

PROPOSED TRAFFIC PHASE DIAGRAM

STEADY DEMAND SEQUENCE

SIGNAL No.: P46.384 (15)

SIGNAL No.: P17.120 (76)

Rte 15 SB RAMPS

SIGNAL AND LIGHTING (LOCATION 2)

SCALE: 1" = 20'

E-20

APPROVED FOR ELECTRICAL WORK ONLY

STATE OF CALIFORNIA - DEPARTMENT OF TRANSPORTATION

Caltrans TRAFFIC ELECTRICAL

FUNCTIONAL SUPERVISOR: BRIAN PECUS

CALCULATED-DESIGNED BY: FARIBA RAMOS

CHECKED BY: ENRIQUE BERNAL

REVISED BY

DATE REVISED

LAST REVISION 01-23-12

DATE PLOTTED => 17-APR-2012

TIME PLOTTED => 15:51

Dist	COUNTY	ROUTE	POST MILES TOTAL PROJECT	SHEET No.	TOTAL SHEETS
11	SD	15,76	R46.1/R47.3, R16.7/R17.7	347	477

Fariba Ramos 01-20-12
REGISTERED ELECTRICAL ENGINEER DATE

4-16-12
PLANS APPROVAL DATE

REGISTERED PROFESSIONAL ENGINEER
FARIBA RAMOS
No. E15619
Exp. 12-31-13
ELECTRICAL
STATE OF CALIFORNIA

THE STATE OF CALIFORNIA OR ITS OFFICERS OR AGENTS SHALL NOT BE RESPONSIBLE FOR THE ACCURACY OR COMPLETENESS OF SCANNED COPIES OF THIS PLAN SHEET.

NOTES:

1 INSTALL NEW CONDUCTORS AND CABLES IN Exist CONDUIT. RC Exist CONDUCTORS.

2 RL ONE 2-CHANNEL EVD. MOUNTING PER Std PLAN ES-4E.

3 INSTALLED PER SIGNAL AND LIGHTING STAGE CONSTRUCTION.

CONDUIT AND CONDUCTOR SCHEDULE

AWG SIZE OR CABLE TYPE	PHASE	POLE OR CIRCUIT	CONDUIT SIZE AND RUN												
			2-3" (1)	3" (2)	3" (3)	3" (4)	2" (5)	3" (6)	3" (7)	2" (8)	2" (9)	2" (10)	2" (11)	2" (12)	2" (13)
No.14 CONDUCTORS		POLE - A	1 1			1 1		1 1							
3CSC / 12CSC		B	1	1	1			1	1						
		C	1 1	1 1	1			1 1	1 1	1					
		D	1	1	1			1							
		E	1 1	1	1			1 1							
		F	1					1							
		G	1 1				1	1 1							
TOTAL 3CSC / 12CSC			4 7	1 3	3 4	1 1	1 1	4 7	1 2	1 1					
14		PEU						4							
6		LIGHTING		2	2	2		2	2						
6		SIGNAL	2												
DLC	Ø2		4		4			4			1	4			
	Ø4		3				3	3						3	
	Ø6		3			3		3					3		
VIDEO CABLE HARNESS	Ø2		1	1	1			1	1						
	Ø4		1	1	1			1							
	Ø6		1					1							1
EVC			2					2							
TOTAL CONDUCTORS / CABLES			28	8	15	7	5	32	6	2	1	4	3	3	1
NOTE			1												

EQUIPMENT AND POLE SCHEDULE

Loc	STANDARD TYPE	SMA (ft)	LMA (ft)	PLACEMENT DIMENSIONS A (ft)	B (ft)	SIGNAL MOUNTING AND PLACEMENT VEHICLE POLE	VEHICLE MASTARM	PEDESTRIAN SIGNAL	PEDESTRIAN PPB	REMARKS
A	15TS	-	15	19.0	10.0	SV-1-T	-	SP-1-T	Ø6P ←	180 W LPS 3
B	26-4-100	40	15	6.0	8.0	SV-1-T	MAS MAT	-	-	180 W LPS 3 VIS
C	1-A	-	-	8.5	9.0	-	-	TP-1-T	Ø2P ←	3
D	24-3-100	35	15	39.0	8.5	SV-1-T	MAT	-	-	180 W LPS 3 VIS
E	1-A	-	-	17.0	3.5	TV-1-T	-	SP-1-T	Ø2P →	3
F	26-4-100	40	15	8.0	8.0	SV-1-T SV-1-T	MAS MAT	SP-1-T	-	180 W LPS 3 VIS 2
G	1-A	-	-	15.0	8.0	-	TV-1-T	-	Ø6P →	-
H	EXISTING MODEL 170 CONTROLLER ASSEMBLY.									

CONDUIT NOTES:

14 2"C, 1 SIC (INTERCONNECT), 1 OCC (TO OLD 395 SIGNAL)

15 3"C, 1 SIC (INTERCONNECT), 1 OCC (TO NB SIGNAL)

16 Exist 2"C, ADD SIC (INTERCONNECT), 1 SIC, 1 OCC (TO NB SIGNAL), 1 OCC (TO OLD 395 SIGNAL), 2 OCC (TO TMS CABINET)

17 Exist 3"C, 2#8 (ltg/15), 2#10 (Count Station), 2#8 (ltg/76), 2#2, 4#14 (peu), 2#10 (icc), 2#6 (signal). RC CONDUCTORS. ADD 2#6 (CCTV), 2#2 (LTG/15), 2#8 (TMS), 2#2 (S), 2#10 (ICC), 2#6 (SIGNAL), 2#6 (LTG)

18 2"C, 2 OCC

SIGNAL No.: P46.384 (15)
SIGNAL No.: P17.120 (76)
Rte 15 SB RAMPS

SIGNAL AND LIGHTING (LOCATION 2)

E-21

APPROVED FOR ELECTRICAL WORK ONLY

STATE OF CALIFORNIA - DEPARTMENT OF TRANSPORTATION
Caltrans TRAFFIC ELECTRICAL

FUNCTIONAL SUPERVISOR: BRIAN PECUS
CALCULATED-DESIGNED BY: FARIBA RAMOS
CHECKED BY: ENRIQUE BERNAL
REVISED BY
DATE REVISED

LAST REVISION 01-23-12
DATE PLOTTED => 17-APR-2012
TIME PLOTTED => 15:19

Dist	COUNTY	ROUTE	POST MILES TOTAL PROJECT	SHEET No.	TOTAL SHEETS
11	SD	15,76	R46.1/R47.3, R16.7/R17.7	348	477

Fariba Ramos 01-20-12
REGISTERED ELECTRICAL ENGINEER DATE

4-16-12
PLANS APPROVAL DATE

REGISTERED PROFESSIONAL ENGINEER FARIBA RAMOS No. E15619 Exp. 12-31-13 ELECTRICAL STATE OF CALIFORNIA

THE STATE OF CALIFORNIA OR ITS OFFICERS OR AGENTS SHALL NOT BE RESPONSIBLE FOR THE ACCURACY OR COMPLETENESS OF SCANNED COPIES OF THIS PLAN SHEET.

FOR ACCURATE RIGHT OF WAY DATA, CONTACT
RIGHT OF WAY ENGINEERING AT THE DISTRICT OFFICE.

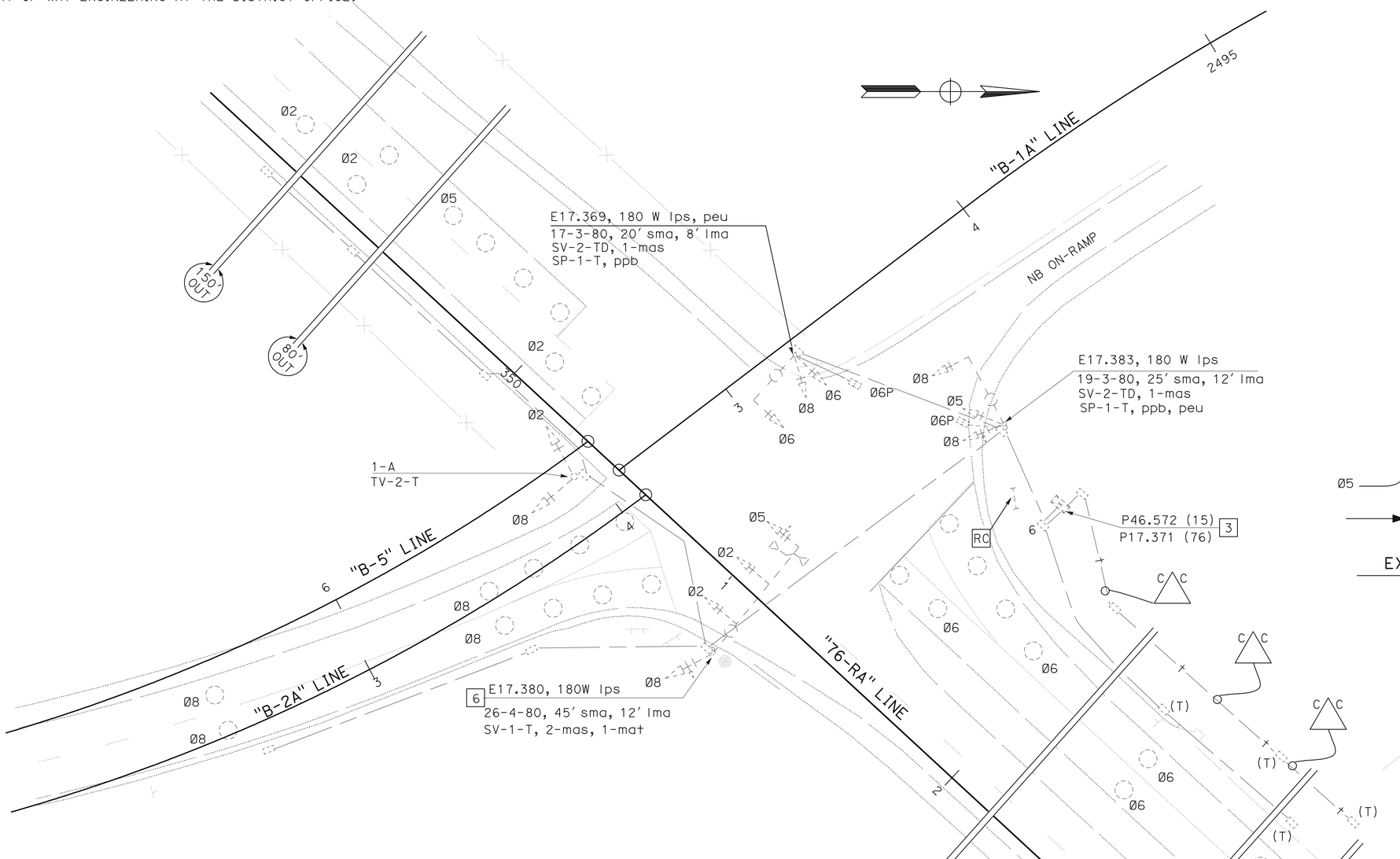

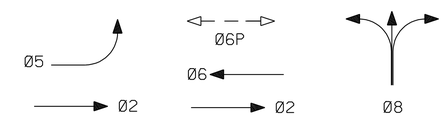

EXISTING TRAFFIC PHASE DIAGRAM

STEADY DEMAND SEQUENCE →

SIGNAL No.: P46.572 (15)
SIGNAL No.: P17.371 (76)

ROUTE 15 NB RAMPS
AND STATE ROUTE 76

NOTES:

1. RC SIGNAL POLES AND APPURTENANCES EXCEPT AS NOTED.
2. AB CONDUITS AND DETECTOR LOOPS EXCEPT AS NOTED.
3. RL EXISITNG MODEL 332 CABINET.
   RL EXISTING BATTERIES AND EXTERNAL BBS CAINET.
   RL EVD DISCRIMINATOR CARD.
4. RC Exist PULL BOXES EXCEPT AS NOTED.
5. SEE EXISTING LIGHTING & COMMUNICATION PLANS FOR CIRCUIT CONTINUITY.
6. RL ONE 2-CHANNEL EVD.

APPROVED FOR ELECTRICAL WORK ONLY

SIGNAL AND LIGHTING (EXISTING AND REMOVE) (LOCATION 3)

SCALE: 1" = 20'

E-22

REVISED BY | DATE REVISED
FARIBA RAMOS | ENRIQUE BERNAL
CALCULATED-DESIGNED BY | CHECKED BY
FUNCTIONAL SUPERVISOR | BRIAN PECUS

STATE OF CALIFORNIA - DEPARTMENT OF TRANSPORTATION
Caltrans® TRAFFIC ELECTRICAL

LAST REVISION 01-23-12 | DATE PLOTTED => 18-APR-2012 | TIME PLOTTED => 15:03

Dist	COUNTY	ROUTE	POST MILES TOTAL PROJECT	SHEET No.	TOTAL SHEETS
11	SD	15,76	R46.1/R47.3, R16.7/R17.7	349	477

Fariba Ramos 01-20-12
REGISTERED ELECTRICAL ENGINEER DATE

4-16-12
PLANS APPROVAL DATE

REGISTERED PROFESSIONAL ENGINEER FARIBA RAMOS No. E15619 Exp. 12-31-13 ELECTRICAL STATE OF CALIFORNIA

THE STATE OF CALIFORNIA OR ITS OFFICERS OR AGENTS SHALL NOT BE RESPONSIBLE FOR THE ACCURACY OR COMPLETENESS OF SCANNED COPIES OF THIS PLAN SHEET.

FOR ACCURATE RIGHT OF WAY DATA, CONTACT RIGHT OF WAY ENGINEERING AT THE DISTRICT OFFICE.

NOTES (TSO):

1. RL MODEL 332 CABINET. RL EVD DISCRIMINATION CARDS.
2. INSTALL VDU, COMMUNICATION CARD, AND VIDEO DISPLAY IN MODEL 332 CABINET.
3. RL BATTERIES AND EXTERNAL BBS CABINET. SEE E-40 FOR FOUNDATION DETAILS.
4. DETAIL U ES-7N. SEE SIGN PLANS.
5. EXTEND TERMINATION CONDUIT.
6. SEE BRIDGE ELECTRICAL PLAN.
7. INTERCONNECT CONDUIT AND CABLE CONTINUTES TO SIGNAL AND LIGHTING (LOCATION 2), SEE E-20.
8. SEE TRAFFIC MONITORING STATION PLANS FOR CIRCUIT CONTINUITY, SEE E-14.
9. PREFORMED LOOPS.
10. SEE COMPONENT DIAGRAM IN ELECTRICAL DETAILS.

CONDUIT AND CONDUCTOR SCHEDULE:

SEE SHEET E-25.

EQUIPMENT AND POLE SCHEDULE:

SEE SHEET E-25.

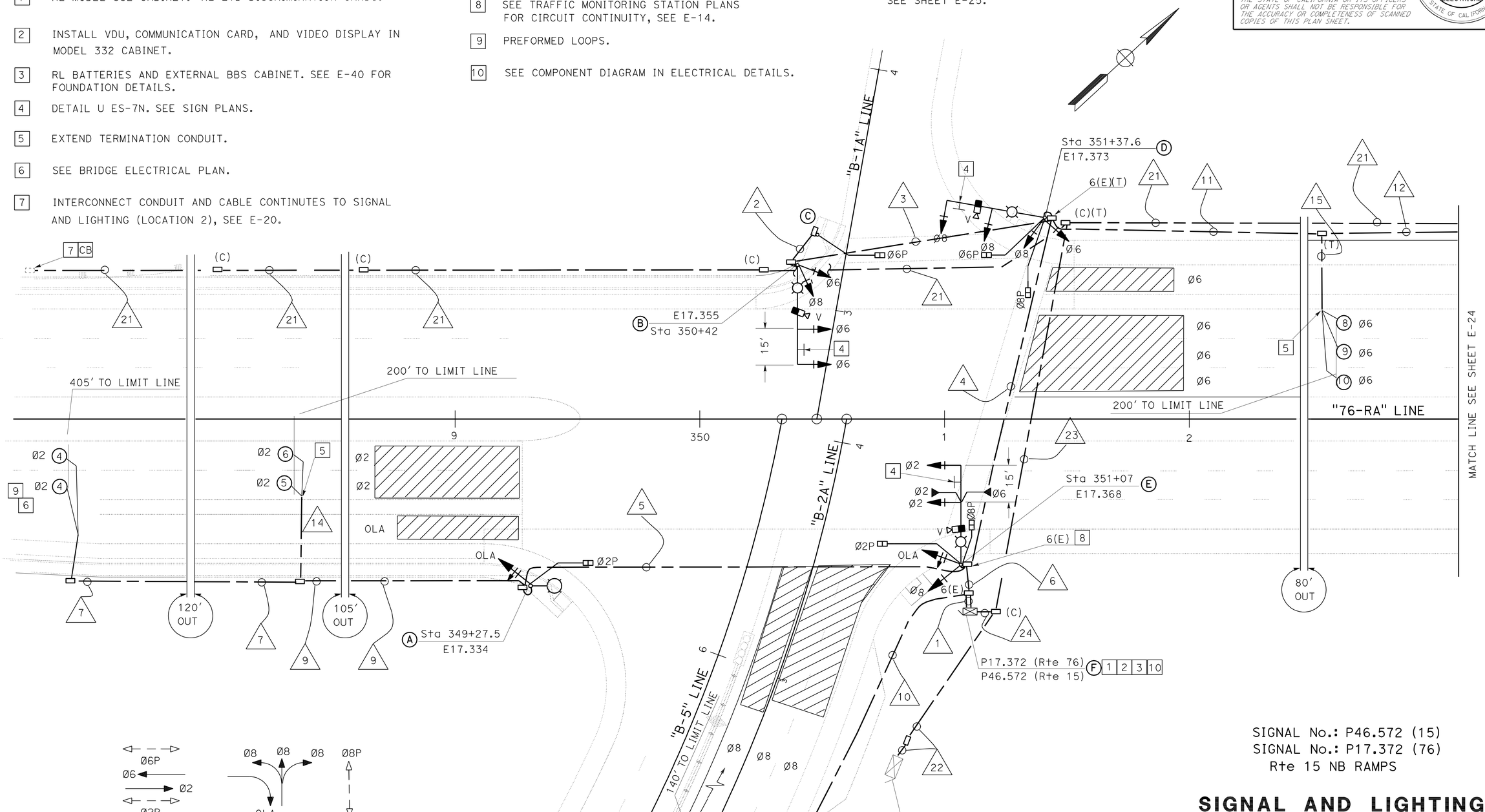

PROPOSED TRAFFIC PHASE DIAGRAM

STEADY DEMAND SEQUENCE

APPROVED FOR ELECTRICAL WORK ONLY

SIGNAL No.: P46.572 (15)
SIGNAL No.: P17.372 (76)
Rte 15 NB RAMPS

SIGNAL AND LIGHTING (LOCATION 3)

SCALE: 1" = 20'

E-23

STATE OF CALIFORNIA - DEPARTMENT OF TRANSPORTATION
Caltrans TRAFFIC ELECTRICAL

FUNCTIONAL SUPERVISOR: DALE WILSON
CALCULATED-DESIGNED BY: ENRIQUE BERNAL
CHECKED BY: FARIBA RAMOS
REVISED BY
DATE REVISED

LAST REVISION 01-23-12
DATE PLOTTED => 17-APR-2012
TIME PLOTTED => 15:51

Dist	COUNTY	ROUTE	POST MILES TOTAL PROJECT	SHEET No.	TOTAL SHEETS
11	SD	15,76	R46.1/R47.3, R16.7/R17.7	350	477

Fariba Ramos 01-20-12
REGISTERED ELECTRICAL ENGINEER DATE

4-16-12
PLANS APPROVAL DATE

REGISTERED PROFESSIONAL ENGINEER FARIBA RAMOS No. E15619 Exp. 12-31-13 ELECTRICAL STATE OF CALIFORNIA

THE STATE OF CALIFORNIA OR ITS OFFICERS OR AGENTS SHALL NOT BE RESPONSIBLE FOR THE ACCURACY OR COMPLETENESS OF SCANNED COPIES OF THIS PLAN SHEET.

FOR ACCURATE RIGHT OF WAY DATA, CONTACT RIGHT OF WAY ENGINEERING AT THE DISTRICT OFFICE.

NOTES (TSO):

1. FOR CIRCUIT CONTINUITY SEE LIGHTING AND TRAFFIC MONITORING STATION (LOCATION 2) PLANS.

2 RC Exist TYPE III-BF.

3 Exist TYPE 'H' CONDUIT RISER TO REMAIN.

4 3"C, MT. (CONDUCTORS PER SDG&E REQUIREMENTS).

5 TYPE III-CF MODIFIED SERVICE EQUIPMENT ENCLOSURE. SEE WIRING DIAGRAM ON THIS SHEET.

6 TYPE 15-FBS, ADVANCED FB INSTALLATION, SEE ES-7J. SEE SIGN PLANS.

7 EXTEND TERMINATION CONDUIT.

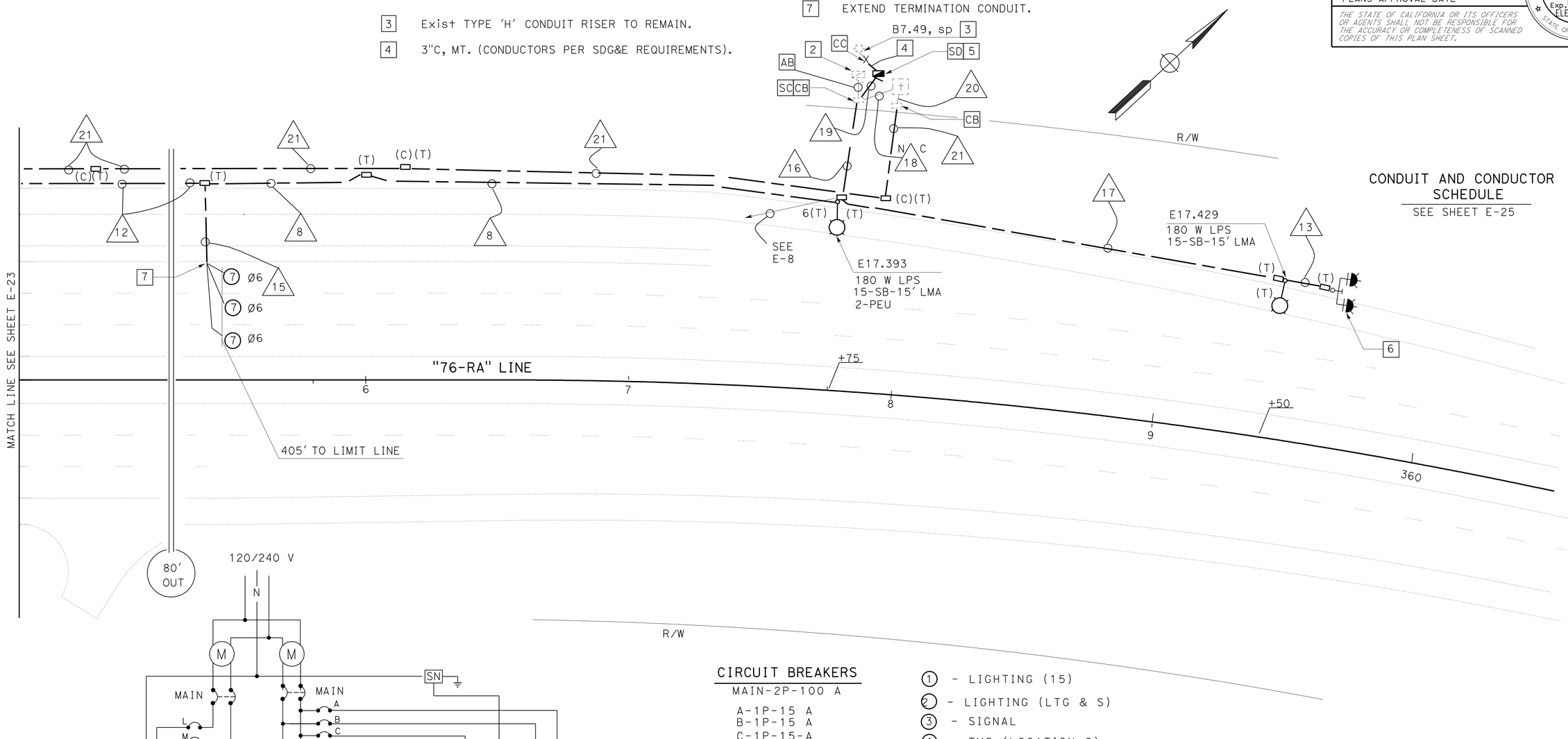

CONDUIT AND CONDUCTOR SCHEDULE
SEE SHEET E-25

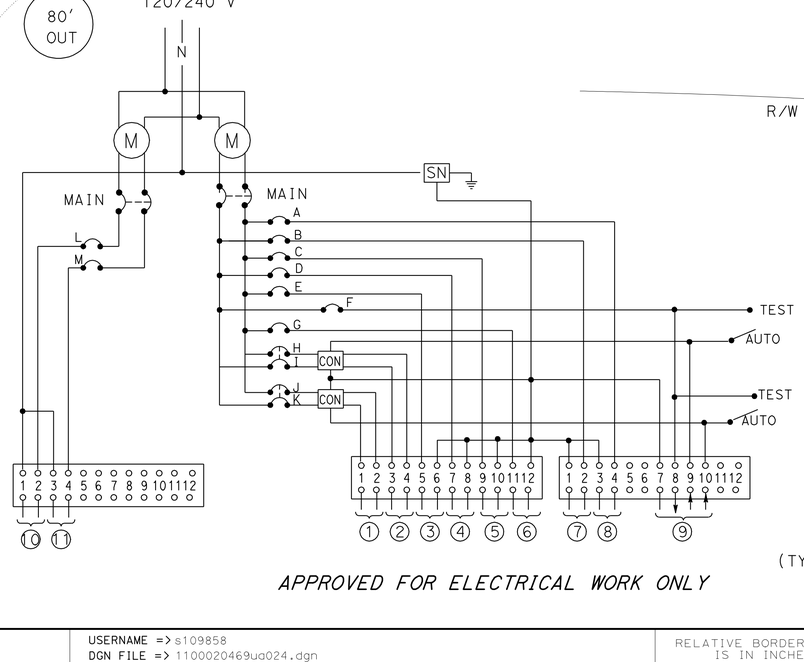

APPROVED FOR ELECTRICAL WORK ONLY

CIRCUIT BREAKERS

MAIN-2P-100 A

A-1P-15 A
B-1P-15 A
C-1P-15-A
D-1P-30 A
E-1P-30 A
F-1P-15 A
G-1P-20 A
H, I } 2P-30 A
J, K } 2P-30 A
L-1P-15 A
M-1P-15 A

1 - LIGHTING (15)
2 - LIGHTING (LTG & S)
3 - SIGNAL
4 - TMS (LOCATION 2)
5 - TDC
6 - FB
7 - SPARE
8 - SPARE
9 - PEU
10 - ICC-WB
11 - SPARE

WIRING DIAGRAM

(TYPE III-CF SERVICE EQUIPMENT ENCLOSURE CABINET SEE RSP ES-2C AND RSP ES-2F)

SIGNAL No.: P46.572 (15)
SIGNAL No.: P17.372 (76)
Rte 15 NB RAMPS

SIGNAL AND LIGHTING (LOCATION 3)

SCALE: 1" = 20'

E-24

STATE OF CALIFORNIA - DEPARTMENT OF TRANSPORTATION
Caltrans® TRAFFIC ELECTRICAL

FUNCTIONAL SUPERVISOR: BRIAN PECUS
CALCULATED-DESIGNED BY: FARIBA RAMOS
CHECKED BY: ENRIQUE BERNAL
REVISED BY
DATE REVISED

LAST REVISION 01-23-12
DATE PLOTTED => 17-APR-2012
TIME PLOTTED => 16:35

Dist	COUNTY	ROUTE	POST MILES TOTAL PROJECT	SHEET No.	TOTAL SHEETS
11	SD	15,76	R46.1/R47.3, R16.7/R17.7	351	477

Fariba Ramos 01-20-12
REGISTERED ELECTRICAL ENGINEER DATE

4-16-12
PLANS APPROVAL DATE

REGISTERED PROFESSIONAL ENGINEER FARIBA RAMOS No. E15619 Exp. 12-31-13 ELECTRICAL STATE OF CALIFORNIA

THE STATE OF CALIFORNIA OR ITS OFFICERS OR AGENTS SHALL NOT BE RESPONSIBLE FOR THE ACCURACY OR COMPLETENESS OF SCANNED COPIES OF THIS PLAN SHEET.

NOTES:

1. - SEE SIGNAL AND LIGHTING (LOCATION 3) PLANS.

[2] - INSTALLED PER SIGNAL AND LIGHTING STAGE CONSTRUCTION.

[3] - RL ONE 2-CHANNEL EVD. MOUNTING PER Std PLAN ES-4E.

CONDUIT & CONDUCTOR SCHEDULE

AWG SIZE OR CABLE TYPE	PHASE	POLE OR CIRCUIT	CONDUIT SIZE AND RUN 2-3" (1)	2" (2)	3" (3)	3" (4)	3" (5)	3" (6)	2" (7)	2" (8)	2" (9)	2" (10)
No. 14 CONDUCTORS		POLE - A	1 1				1 1	1 1				
3CSC / 12CSC		B	1		1	1		1				
		C	1 1 1	1 1	1 1	1		1 1				
		D	2 2			2 2		2 2				
		E	2 2					1 2				
TOTAL 3CSC / 12CSC			6 7 1	1 1	2 3	4 1	1 6	7				
6		LIGHTING			2	2	2			2	2	
4		SIGNAL	2			2		2		2		
6		TMS				2				2		
DLC	Ø2		3				3	3	1		3	
	Ø6		4			4		4				
	Ø8		3									3
	OLA											
VIDEO CABLE HARNESS	Ø2		1					1				
	Ø6		1		1	1		1				
	Ø8		1					1				
EVC			2					2				
TOTAL CONDUCTORS / CABLES			30	2	6	18	7	27	1	6	5	3

EQUIPMENT AND POLE SCHEDULE

Loc No.	STANDARD TYPE	SMA (ft)	LMA (ft)	PLACEMENT DIMENSIONS A (ft)	B (ft)	SIGNAL MOUNTING AND PLACEMENT VEHICLE POLE	VEHICLE MASTARM	PEDESTRIAN SIGNAL	PEDESTRIAN PPB	REMARKS
A	15TS	-	15	19	4.5	SV-1-T	-	SP-1-T	Ø2P →	180 W LPS
B	26-4-100	40	15	17	6.0	SV-2-TD	MAS MAT	-	-	180 W LPS VIS [2]
C	1-A	-	-	7.0	8.0	TP-1-T	-	SP-1-T	Ø6P →	-
D	26-4-100	40	15	11.5	6.5	SV-2-T	MAS MAS	SP-2-T	Ø6P ← Ø8P ←	180 W LPS VIS
E	26-4-100	40	15	11.5	3.0	SV-2-T	MAS MAT	SP-2-T	Ø2P ← Ø8P →	180 W LPS VIS [3]
F	RL MODEL 170 CONTROLLER ASSEMBLY.									

CONDUIT NOTES:

(11) 3"C, 2#4 (SIGNAL), 2#6 (LTG/76), 2#6 (TMS), 4 DLC

(12) 3"C, 2#4 (SIGNAL), 2#6 (LTG/76), 2#6 (TMS), 1 DLC

(13) 2"C, 2#10 (FB)

(14) 2"C, 4 LOOP WIRES

(15) 2"C, 6 LOOP WIRES

(16) 3"C, 2#4 (SIGNAL), 2#6 (LTG/76), 2#10 (FB), 4#14 (PEU), 2#6 (TMS), 2#2(LTG & S), 2#10 (ICC)

(17) 2"C, 2#10 (FB), 2#6(LTG/76)

N C (18) Exist 1"C, 2#14 (tdc)

(19) 3"C, 2#4 (SIGNAL), 2#6 (LTG/76), 2#6 (TMS), 2#10 (ICC), 2#10 (FB), 4#14 (PEU), 2#2 (LTG), 2#14 (TDC)

(20) Exist 2"C, [RC] 2 sic. ADD 1 OCC, 1 SIC

(21) 2"C, 1 SIC, 1 OCC

(22) 2"C, 2 OCC

(23) 3"C, 2 OCC, 2 SIC

(24) 3"C, 4 OCC, 2 SIC

SIGNAL No.: P46.572 (15)
SIGNAL No.: P17.372 (76)
Rte 15 NB RAMPS

SIGNAL AND LIGHTING (LOCATION 3)

E-25

APPROVED FOR ELECTRICAL WORK ONLY

STATE OF CALIFORNIA - DEPARTMENT OF TRANSPORTATION
Caltrans TRAFFIC ELECTRICAL

FUNCTIONAL SUPERVISOR: BRIAN PECUS
CALCULATED-DESIGNED BY: FARIBA RAMOS
CHECKED BY: ENRIQUE BERNAL
REVISED BY / DATE REVISED

LAST REVISION 01-23-12 | DATE PLOTTED => 17-APR-2012 | TIME PLOTTED => 16:35

Dist	COUNTY	ROUTE	POST MILES TOTAL PROJECT	SHEET No.	TOTAL SHEETS
11	SD	15,76	R46.1/R47.3, R16.7/R17.7	352	477

Fariba Ramos 01-20-12
REGISTERED ELECTRICAL ENGINEER DATE

4-16-12
PLANS APPROVAL DATE

REGISTERED PROFESSIONAL ENGINEER FARIBA RAMOS No. E15619 Exp. 12-31-13 ELECTRICAL STATE OF CALIFORNIA

THE STATE OF CALIFORNIA OR ITS OFFICERS OR AGENTS SHALL NOT BE RESPONSIBLE FOR THE ACCURACY OR COMPLETENESS OF SCANNED COPIES OF THIS PLAN SHEET.

FOR ACCURATE RIGHT OF WAY DATA, CONTACT RIGHT OF WAY ENGINEERING AT THE DISTRICT OFFICE.

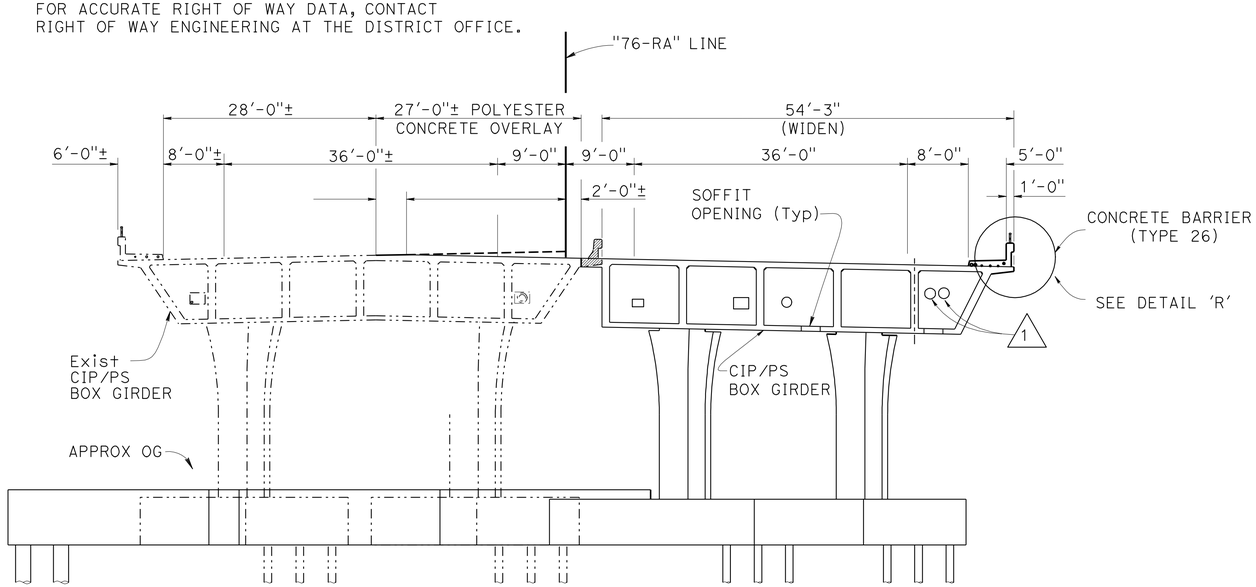

TYPICAL SECTION

NO SCALE

NOTES:

1. THE CONTRACTOR SHALL VERIFY ALL CONTROLLING FIELD DIMENSIONS BEFORE ORDERING OR FABRICATING ANY MATERIAL.

2. PREFORMED INDUCTIVE LOOPS. SEE SIGNAL AND LIGHTING (LOCATION 3) PLANS, SEE E-23.

CONDUIT NOTES:

1. MDCS (8), COMMUNICATION CONDUIT (MDCS) (SEE FIBER OPTIC COMMUNICATION SYSTEM PLANS)

2. 2"C, SEE LIGHTING AND SIGN ILLUMINATION PLANS

3. 2"C, MT (LIGHTING CONDUIT (BRIDGE))

4. 3"C, SPRINKLER CONTROL CONDUIT

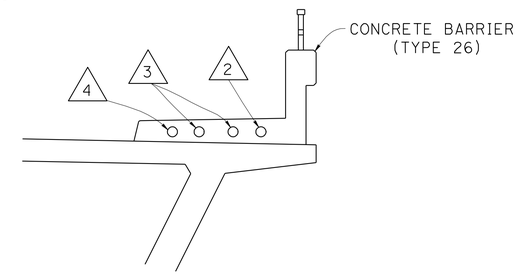

DETAIL 'R'

NO SCALE

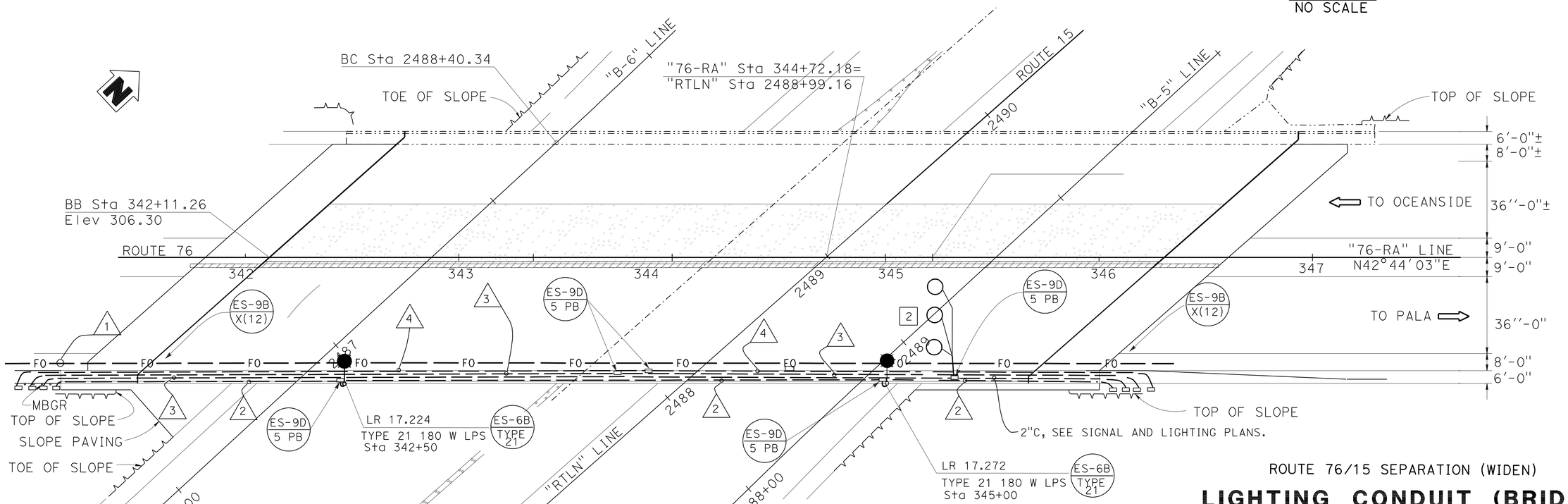

PLAN

SCALE: 1" = 30'

BRIDGE No. 57-082
ROUTE 76/15 SEPERATION (WIDEN)

ROUTE 76/15 SEPARATION (WIDEN)

LIGHTING CONDUIT (BRIDGE)
SPRINKLER CONTROL CONDUIT (BRIDGE)
BRIDGE ELECTRICAL

SCALE AS SHOWN

E-26

STATE OF CALIFORNIA - DEPARTMENT OF TRANSPORTATION
Caltrans TRAFFIC ELECTRICAL

FUNCTIONAL SUPERVISOR: BRIAN PECUS
CALCULATED-DESIGNED BY: FARIBA RAMOS
CHECKED BY: ENRIQUE BERNAL
REVISED BY
DATE REVISED

LAST REVISION 01-23-12 | DATE PLOTTED => 17-APR-2012 | TIME PLOTTED => 16:35

Dist	COUNTY	ROUTE	POST MILES TOTAL PROJECT	SHEET No.	TOTAL SHEETS
11	SD	15,76	R46.1/R47.3, R16.7/R17.7	353	477

REGISTERED ELECTRICAL ENGINEER 01-20-12 DATE

PLANS APPROVAL DATE 4-16-12

REGISTERED PROFESSIONAL ENGINEER FARIBA RAMOS No. E15619 Exp. 12-31-13 ELECTRICAL STATE OF CALIFORNIA

THE STATE OF CALIFORNIA OR ITS OFFICERS OR AGENTS SHALL NOT BE RESPONSIBLE FOR THE ACCURACY OR COMPLETENESS OF SCANNED COPIES OF THIS PLAN SHEET.

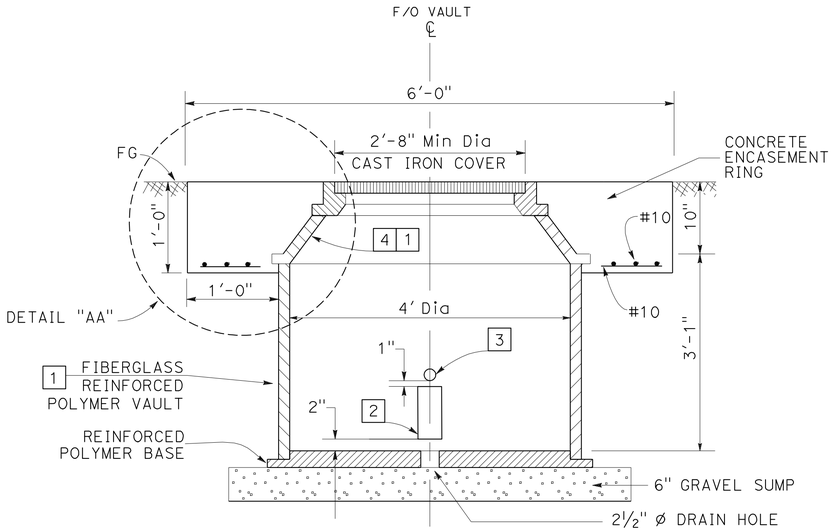

SECTION A-A

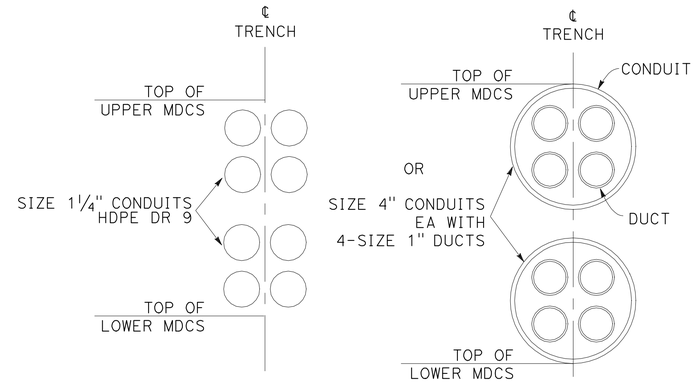

MDCS (Typ)

MDCS(8) SHOWN

SEE CONSTRUCTION DETAILS FOR TRENCHING

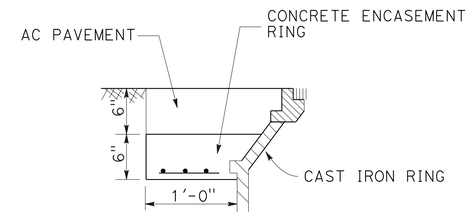

DETAIL "AA"

VAULT INSIDE OF PULLOUT

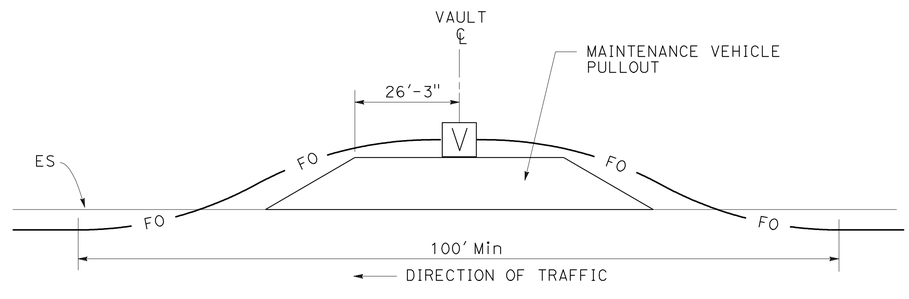

FIBER OPTIC VAULT INSTALLATION DETAIL

(TYPICAL)

(OUTSIDE OF PULLOUT)

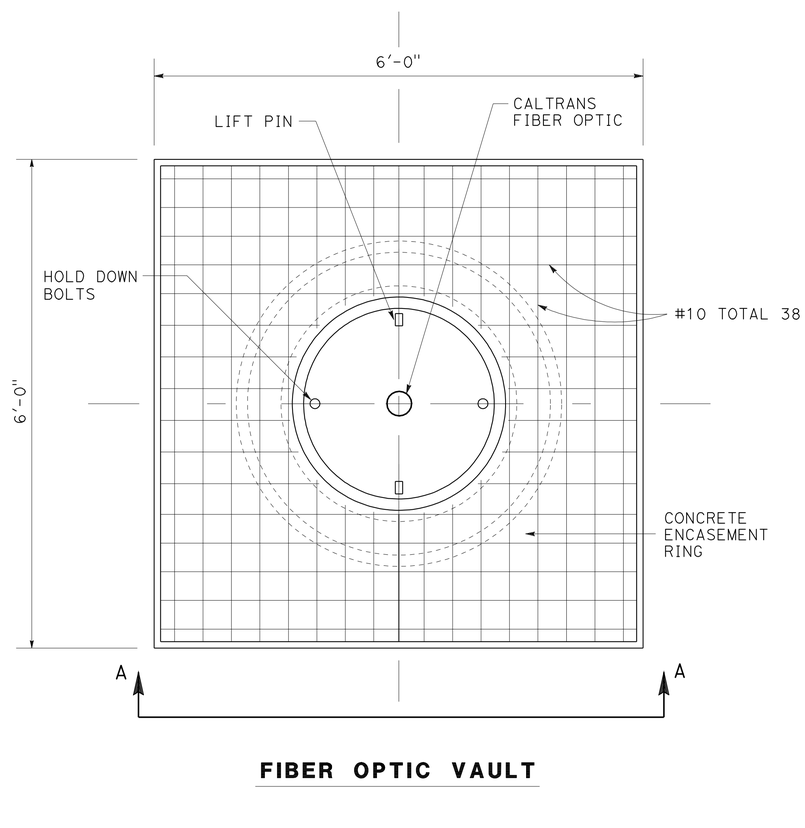

FIBER OPTIC VAULT

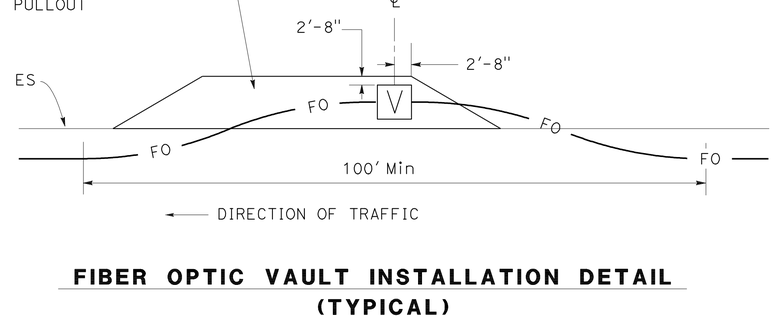

FIBER OPTIC VAULT INSTALLATION DETAIL

(TYPICAL)

(INSIDE OF PULLOUT)

NOTE: SEE DETAIL "AA"

NOTES:

1. INSTALL PER MANUFACTURER'S RECOMMENDATION.
2. KNOCKOUT FOR MDCS (8) PROVIDE TWO EQUALLY SPACED AROUND VAULT.
3. 2" KNOCKOUT (TOTAL 4) EQUALLY SPACED AROUND VAULT.
4. CAST IRON RING.

FIBER OPTIC COMMUNICATION SYSTEM (ELECTRICAL DETAILS)

NO SCALE

E-27

APPROVED FOR ELECTRICAL WORK ONLY

STATE OF CALIFORNIA - DEPARTMENT OF TRANSPORTATION
Caltrans TRAFFIC ELECTRICAL

FUNCTIONAL SUPERVISOR: BRIAN PECUS

CALCULATED-DESIGNED BY: FARIBA RAMOS | CHECKED BY: ENRIQUE BERNAL | REVISED BY | DATE REVISED

LAST REVISION 01-23-12 | DATE PLOTTED => 17-APR-2012 | TIME PLOTTED => 16:35

Dist	COUNTY	ROUTE	POST MILES TOTAL PROJECT	SHEET No.	TOTAL SHEETS
11	SD	15,76	R46.1/R47.3, R16.7/R17.7	354	477

REGISTERED ELECTRICAL ENGINEER 01-20-12 DATE

4-16-12
PLANS APPROVAL DATE

REGISTERED PROFESSIONAL ENGINEER FARIBA RAMOS No. E15619 Exp. 12-31-13 ELECTRICAL STATE OF CALIFORNIA

THE STATE OF CALIFORNIA OR ITS OFFICERS OR AGENTS SHALL NOT BE RESPONSIBLE FOR THE ACCURACY OR COMPLETENESS OF SCANNED COPIES OF THIS PLAN SHEET.

NOTES:

1. SEE CAMERA CABLE CROSS SECTION ON THIS SHEET.
2. SEE TABLE "A" FOR CONNECTOR 1 ASSIGNMENT.
3. SEE TABLE "B" FOR CONNECTOR 2 ASSIGNMENT.
4. SEE TABLE "C" FOR CONNECTOR 3 ASSIGNMENT.
5. Min 3' OF SLACK IS REQUIRED FROM CAMERA CABLE TO THE CONNECTORS.
   TERMINAL BLOCK
   EIA-422, Conn 2
6. SEE TABLE "D" FOR CONNECTOR ASSIGNMENT.
7. CONTRACTOR SHALL VERIFY THE LENGTH OF CAMERA CABLE AT EACH LOCATION AS SHOWN IN ELECTRICAL PLANS. A SLACK OF 6' IS REQUIRED AT EACH LOCATION.

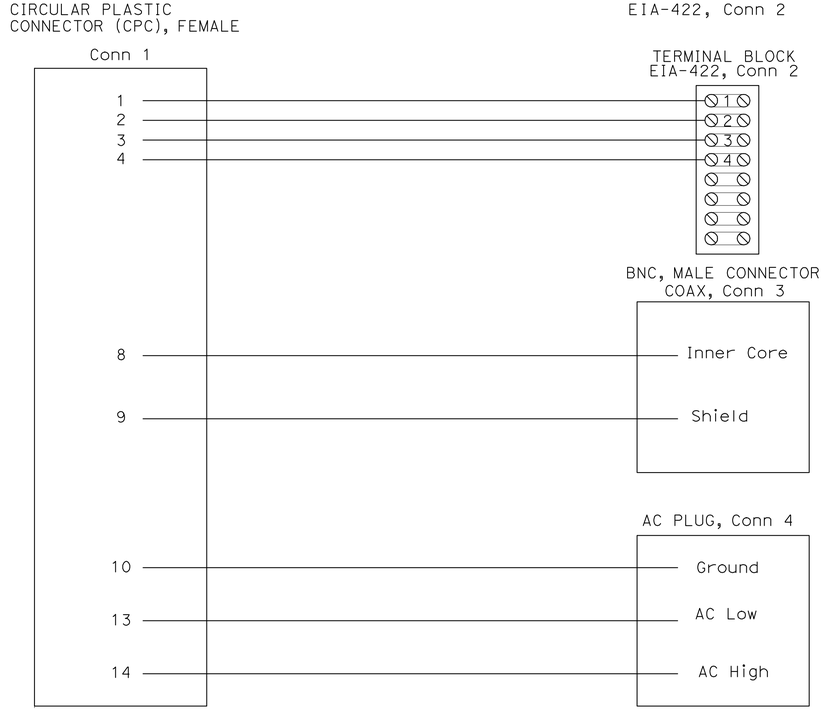

TABLE "C"

Conn 3 DESCRIPTION	
PIN	FUNCTION
CENTER	VIDEO SIGNAL INNER CORE,COAX
SHIELD	VIDEO SIGNAL SHIELD,COAX

TABLE "D"

CPC PIN DESCRIPTION
PIN 1 - 22 AWG,EIA-422
PIN 2 - 22 AWG,EIA-422
PIN 3 - 22 AWG,EIA-422
PIN 4 - 22 AWG,EIA-422
PIN 8 - RG-59,CORE WIRE
PIN 9 - RG-59,SHIELD
PIN 10 - 18 AWG,AC Gnd
PIN 13 - AC LOW
PIN 14 - AC HIGH

TABLE "A"

Conn 1 DESCRIPTION			
PIN	FUNCTION	WIRE COLOR	WIRE GAUGE
1	CAMERA CONTROL RX-	BROWN	22 AWG
2	CAMERA CONTROL RX+	YELLOW	22 AWG
3	CAMERA CONTROL TX-	BLUE	22 AWG
4	CAMERA CONTROL TX+	RED	22 AWG
8	VIDEO SIGNAL COAX INNER CORE	BARE	
9	VIDEO SIGNAL COAX SHIELD	WHITE/BLACK	22 AWG
10	CAMERA POWER,GROUND	GREEN	18 AWG
13	CAMERA POWER,AC LOW	WHITE	18 AWG
14	CAMERA POWER,AC HIGH	BLACK	18 AWG

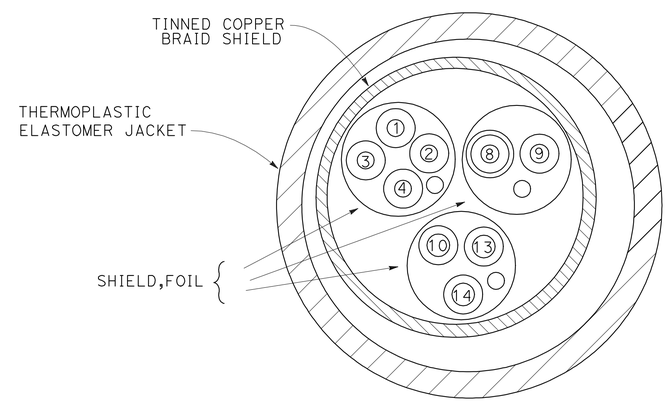

CAMERA CABLE CROSS SECTION 6

TABLE "B"

Conn 2 DESCRIPTION		
FUNCTION	WIRE COLOR	WIRE GAUGE
CAMERA CONTROL RX-	BROWN	22 AWG
CAMERA CONTROL RX+	YELLOW	22 AWG
CAMERA CONTROL TX-	BLUE	22 AWG
CAMERA CONTROL TX+	RED	22 AWG

CONNECTOR DESCRIPTIONS			
CONNECTOR	TYPE	FUNCTION	LOCATION
Conn 1	CPC	CONTROL,VIDEO,POWER	POLE TOP 2
Conn 2	DB-9,FEMALE	CAMERA CONTROL	CCTV CABINET 3
Conn 3	BNC,MALE	VIDEO	CCTV CABINET 4
Conn 4	AC PLUG,3 PRONG	CAMERA POWER	CCTV CABINET

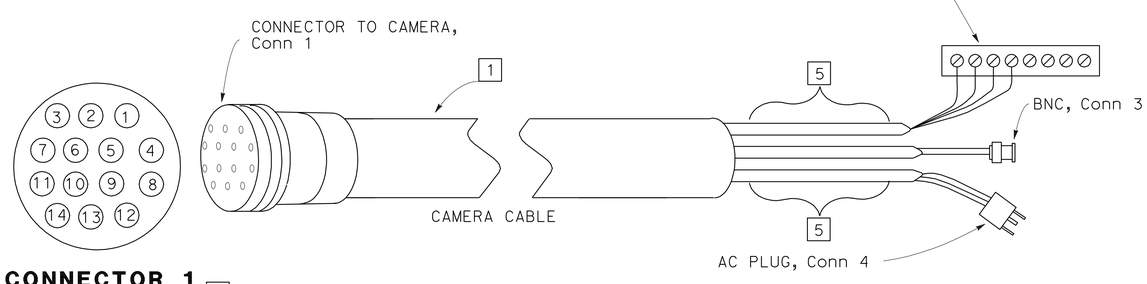

CONNECTOR 1
PIN ASSIGNMENT 2
(PLAN VIEW)

"CAMERA CABLE"

APPROVED FOR ELECTRICAL WORK ONLY

FIBER OPTIC COMMUNICATION SYSTEM (ELECTRICAL DETAILS)

NO SCALE

E-28

STATE OF CALIFORNIA - DEPARTMENT OF TRANSPORTATION
Caltrans® TRAFFIC ELECTRICAL

FUNCTIONAL SUPERVISOR: BRIAN PECUS
CALCULATED-DESIGNED BY: FARIBA RAMOS
CHECKED BY: ENRIQUE BERNAL
REVISED BY
DATE REVISED

LAST REVISION 01-23-12
DATE PLOTTED => 17-APR-2012
TIME PLOTTED => 16:36

Dist	COUNTY	ROUTE	POST MILES TOTAL PROJECT	SHEET No.	TOTAL SHEETS
11	SD	15,76	R46.1/R47.3, R16.7/R17.7	355	477

REGISTERED ELECTRICAL ENGINEER 01-20-12 DATE

4-16-12
PLANS APPROVAL DATE

REGISTERED PROFESSIONAL ENGINEER FARIBA RAMOS No. E15619 Exp. 12-31-13 ELECTRICAL STATE OF CALIFORNIA

THE STATE OF CALIFORNIA OR ITS OFFICERS OR AGENTS SHALL NOT BE RESPONSIBLE FOR THE ACCURACY OR COMPLETENESS OF SCANNED COPIES OF THIS PLAN SHEET.

LEGEND (THIS SHEET AND E-1):

- SURGE PROTECTOR
- CIRCUIT BREAKER
- (HT) RELAY COIL - HIGH TEMPERATURE
- HT RELAY CONTACT - NORMALLY CLOSED
- W\GFC1 WITH GROUND FAULT CURRENT INTERRUPT
- 8 WIRE SIZE, IF NOT INDICATED SHALL BE #12 AWG
- (F) FAN
- FIBER OPTIC TRANSMITTER/RECEIVER
- THERMO ADJUSTABLE CALIBRATED THERMOSTAT
- TBO TERMINAL BLOCK O
- NETWORK PORT
- (R) DUPLEX RECEPTACLE
- (L) INDICATOR LAMP
- THERMOSTATIC CONTROL

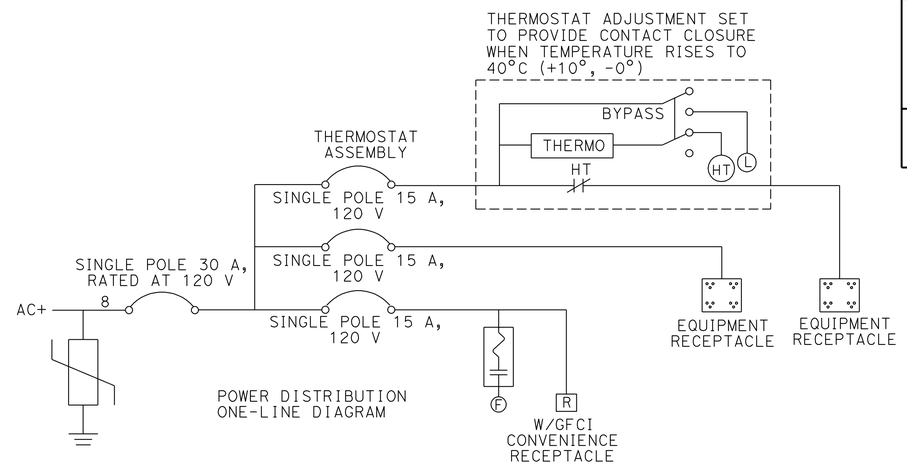

POWER DISTRIBUTION ONE-LINE DIAGRAM

CCTV SYSTEM CABINET POWER DISTRIBUTION ASSEMBLY

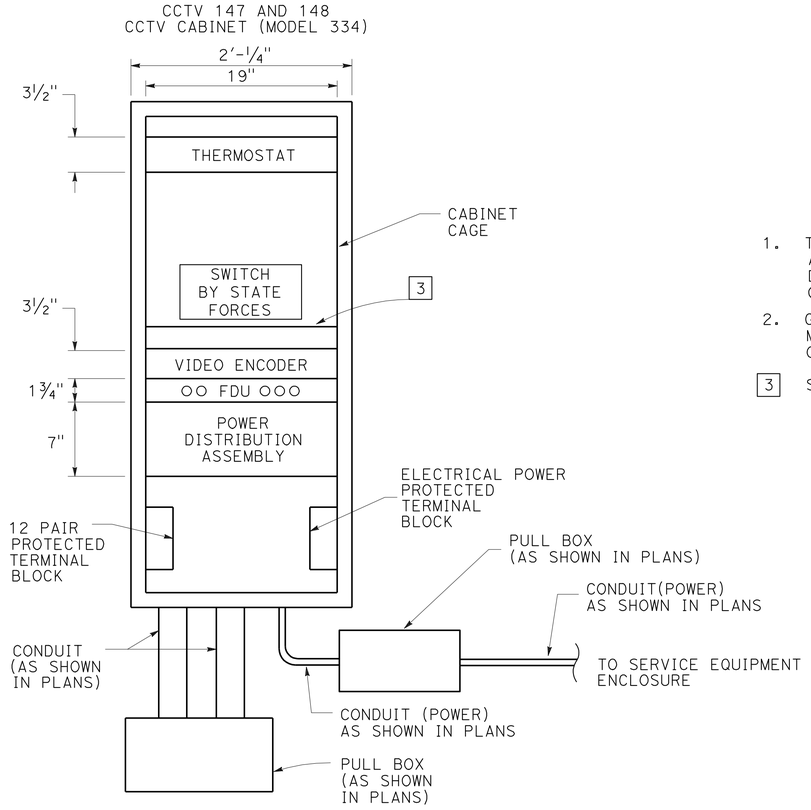

CCTV SYSTEM CABINET DETAIL AND EQUIPMENT PLACEMENT

DETAIL "CCTV" (TYPICAL)

NOTES:

1. THE CONTRACTOR SHALL VERIFY ALL CONTROLLING FIELD DIMENSIONS BEFORE ORDERING OR FABRICATING MATERIAL.
2. GFCI RECEPTACLES ARE FOR MAINTENANCE EQUIPMENT ONLY.

3 SHELF REQUIRED FOR EQUIPMENT.

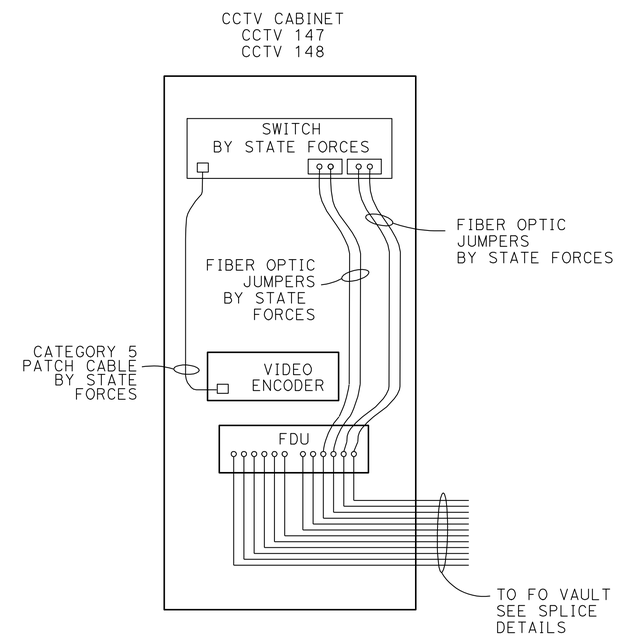

CCTV CABINET COMPONENT DIAGRAM (TYPICAL)

APPROVED FOR ELECTRICAL WORK ONLY

FIBER OPTIC COMMUNICATION SYSTEM (ELECTRICAL DETAILS)

NO SCALE

E-29

STATE OF CALIFORNIA - DEPARTMENT OF TRANSPORTATION
Caltrans TRAFFIC ELECTRICAL

FUNCTIONAL SUPERVISOR: BRIAN PECUS
CALCULATED-DESIGNED BY: ENRIQUE BERNAL
CHECKED BY: FARIBA RAMOS
REVISED BY
DATE REVISED

LAST REVISION 01-23-12 DATE PLOTTED => 17-APR-2012 TIME PLOTTED => 16:36

Dist	COUNTY	ROUTE	POST MILES TOTAL PROJECT	SHEET No.	TOTAL SHEETS
11	SD	15,76	R46.1/R47.3, R16.7/R17.7	356	477

Fariba Ramos 01-20-12
REGISTERED ELECTRICAL ENGINEER DATE

4-16-12
PLANS APPROVAL DATE

REGISTERED PROFESSIONAL ENGINEER FARIBA RAMOS No. E15619 Exp. 12-31-13 ELECTRICAL STATE OF CALIFORNIA

THE STATE OF CALIFORNIA OR ITS OFFICERS OR AGENTS SHALL NOT BE RESPONSIBLE FOR THE ACCURACY OR COMPLETENESS OF SCANNED COPIES OF THIS PLAN SHEET.

NOTES:

1. SHELF REQUIRED FOR EQUIPMENT.
2. 8 PAIR TERMINAL BLOCK, TB0.
3. REMOVE BLANK PANEL AND REPLACE WITH FDU.
4. INSTALL SECU IN 170 CONTROLLER CARD SLOT.
5. THE CONTRACTOR SHALL VERIFY ALL CONTROLLING FIELD DIMENSIONS BEFORE ORDERING AND INSTALLING EQUIPMENT.
6. THIS SHEET DEMONSTRATES TYPICAL EQUIPMENT CONNECTIONS. REFER TO SHEET E-7 TO E-12 FOR CONTRACT WORK REQUIRED.

LEGENDS (TSO):

SECU - SERIAL TO ETHERNET CONVERSION UNIT
- FIBER OPTIC TRANSMITTER/RECEIVER
- NETWORK PORT

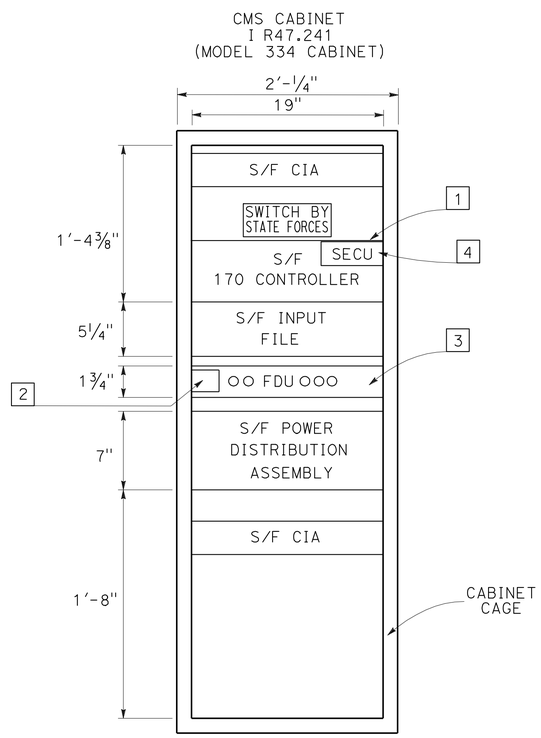

CMS CABINET EQUIPMENT PLACEMENT
DETAIL "CMS-SYS"

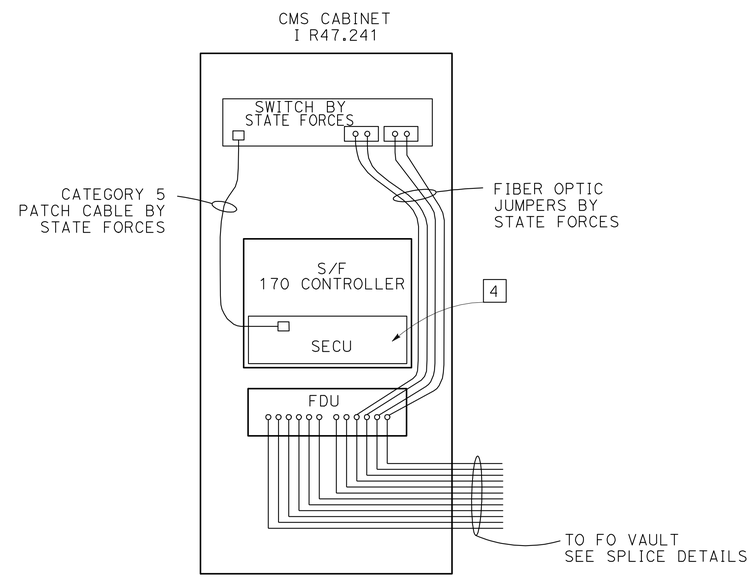

CMS CABINET
COMPONENT DIAGRAM

FIBER OPTIC COMMUNICATION SYSTEM (ELECTRICAL DETAILS)

APPROVED FOR ELECTRICAL WORK ONLY

NO SCALE

E-30

STATE OF CALIFORNIA - DEPARTMENT OF TRANSPORTATION
Caltrans TRAFFIC ELECTRICAL

FUNCTIONAL SUPERVISOR: BRIAN PECUS
CALCULATED-DESIGNED BY: ENRIQUE BERNAL
CHECKED BY: FARIBA RAMOS
REVISED BY
DATE REVISED

LAST REVISION 01-23-12
DATE PLOTTED => 17-APR-2012
TIME PLOTTED => 16:36

Dist	COUNTY	ROUTE	POST MILES TOTAL PROJECT	SHEET No.	TOTAL SHEETS
11	SD	15,76	R46.1/R47.3, R16.7/R17.7	357	477

Fariba Ramos 01-20-12
REGISTERED ELECTRICAL ENGINEER DATE

4-16-12
PLANS APPROVAL DATE

REGISTERED PROFESSIONAL ENGINEER FARIBA RAMOS No. E15619 Exp. 12-31-13 ELECTRICAL STATE OF CALIFORNIA

THE STATE OF CALIFORNIA OR ITS OFFICERS OR AGENTS SHALL NOT BE RESPONSIBLE FOR THE ACCURACY OR COMPLETENESS OF SCANNED COPIES OF THIS PLAN SHEET.

NOTES:

1. SHELF REQUIRED FOR EQUIPMENT.
2. 8 PAIR TERMINAL BLOCK, TBO.
3. REMOVE BLANK PANEL AND REPLACE WITH FDU.
4. INSTALL SECU IN 170 CONTROLLER CARD SLOT.
5. THE CONTRACTOR SHALL VERIFY ALL CONTROLLING FIELD DIMENSIONS BEFORE ORDERING AND INSTALLING EQUIPMENT.
6. THIS SHEET DEMONSTRATES TYPICAL EQUIPMENT CONNECTIONS. REFER TO SHEET E-7 TO E-12 FOR CONTRACT WORK REQUIRED.

LEGEND:
(THIS SHEET ONLY)

- FIBER OPTIC TRANSMITTER/RECEIVER
- NETWORK PORT

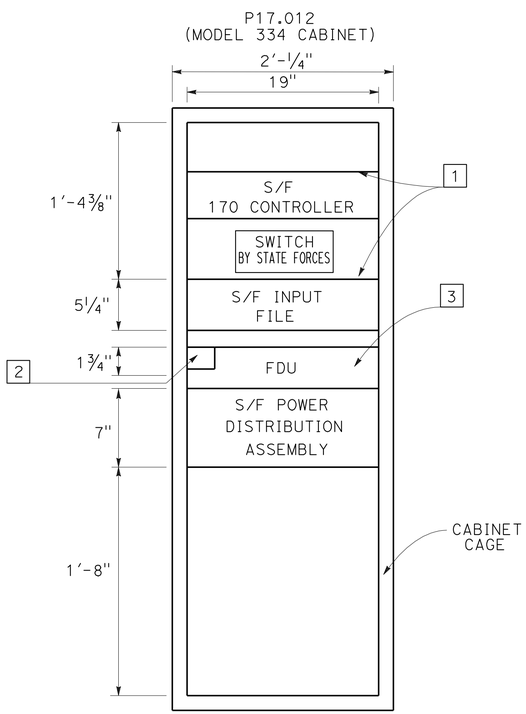

TRAFFIC SIGNAL CABINET EQUIPMENT PLACEMENT

DETAIL "SIG-SYSA"

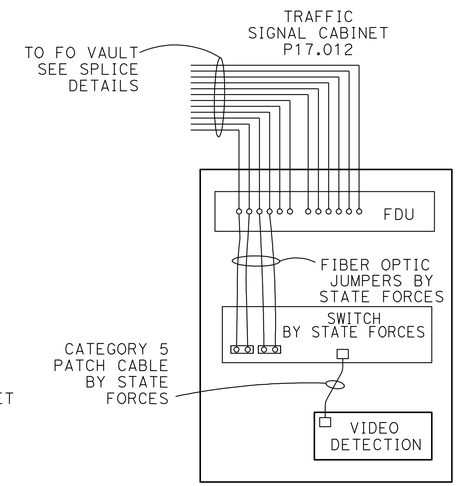

TRAFFIC SIGNAL CABINET COMPONENT DIAGRAM

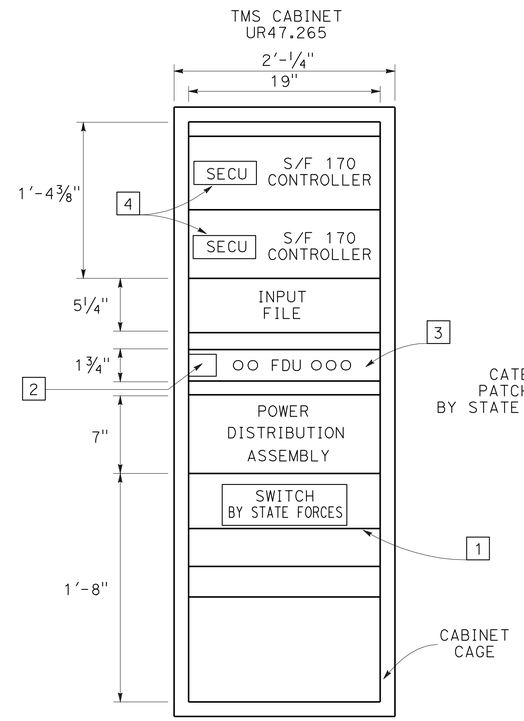

TMS CABINET EQUIPMENT PLACEMENT

DETAIL "TMS-SYSA" (TYPICAL)

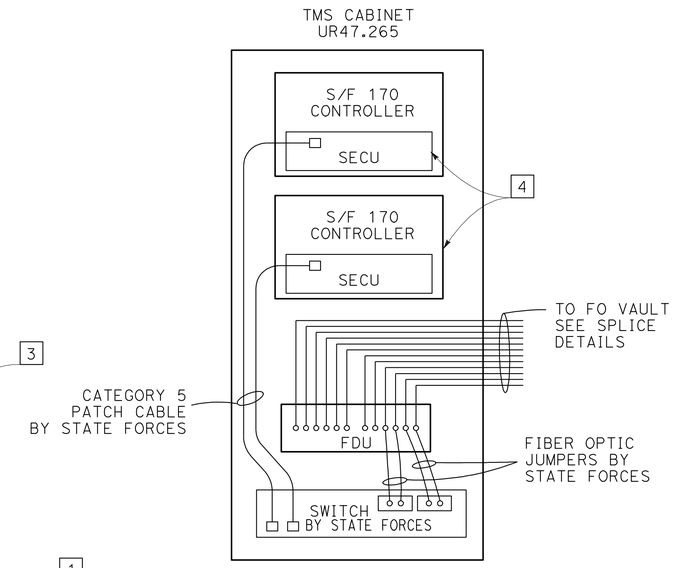

TMS CABINET COMPONENT DIAGRAM

FIBER OPTIC COMMUNICATION SYSTEM (ELECTRICAL DETAILS)

APPROVED FOR ELECTRICAL WORK ONLY

NO SCALE

E-31

STATE OF CALIFORNIA - DEPARTMENT OF TRANSPORTATION
Caltrans® TRAFFIC ELECTRICAL

FUNCTIONAL SUPERVISOR: BRIAN PECUS
CALCULATED-DESIGNED BY: ENRIQUE BERNAL
CHECKED BY: FARIBA RAMOS
REVISED BY
DATE REVISED

LAST REVISION DATE PLOTTED => 23-APR-2012
01-23-12 TIME PLOTTED => 16:19

Dist	COUNTY	ROUTE	POST MILES TOTAL PROJECT	SHEET No.	TOTAL SHEETS
11	SD	15,76	R46.1/R47.3, R16.7/R17.7	358	477

Fariba Ramos 01-20-12
REGISTERED ELECTRICAL ENGINEER DATE

4-16-12
PLANS APPROVAL DATE

REGISTERED PROFESSIONAL ENGINEER FARIBA RAMOS No. E15619 Exp. 12-31-13 ELECTRICAL STATE OF CALIFORNIA

THE STATE OF CALIFORNIA OR ITS OFFICERS OR AGENTS SHALL NOT BE RESPONSIBLE FOR THE ACCURACY OR COMPLETENESS OF SCANNED COPIES OF THIS PLAN SHEET.

LEGENDS (TSO):

SECU - SERIAL TO ETHERNET CONVERSION UNIT

- FIBER OPTIC TRANSMITTER/RECEIVER
- NETWORK PORT
- RJ45 CONNECTION

NOTES:

1. SHELF REQUIRED FOR EQUIPMENT.
2. 12 PAIR TERMINAL BLOCK, TBO(S/F).
3. 110 PUNCH BLOCK WITH RJ45 CONNECTION. TERMINATE OCC PER EIA/TIA 568B.
4. INSTALL SECU IN 170 CONTROLLER CARD SLOT.
5. THE CONTRACTOR SHALL VERIFY ALL CONTROLLING FIELD DIMENSIONS BEFORE ORDERING AND INSTALLING EQUIPMENT.
6. THIS SHEET DEMONSTRATES TYPICAL EQUIPMENT CONNECTIONS. REFER TO SHEET E-7 TO E-12 FOR CONTRACT WORK REQUIRED.
7. LABEL CABLE END IN EACH CABINET. THE LABEL NAME SHALL CORRESPOND TO TERMINAL BLOCK TERMINATION IN THE CCTV CABINET.

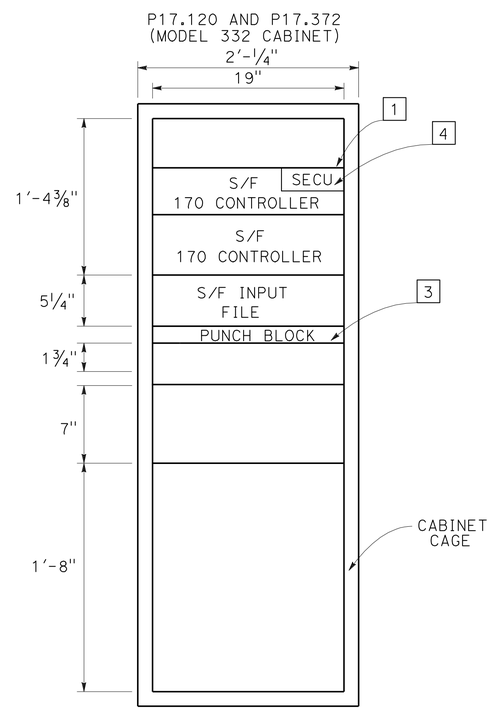

TRAFFIC SIGNAL CABINET EQUIPMENT PLACEMENT

DETAIL "SIG-SYSB"

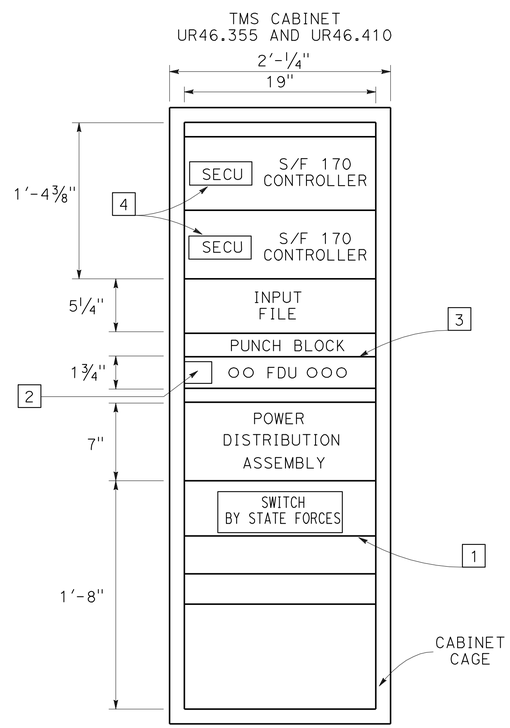

TMS CABINET EQUIPMENT PLACEMENT

DETAIL "TMS-SYSB" (TYPICAL)

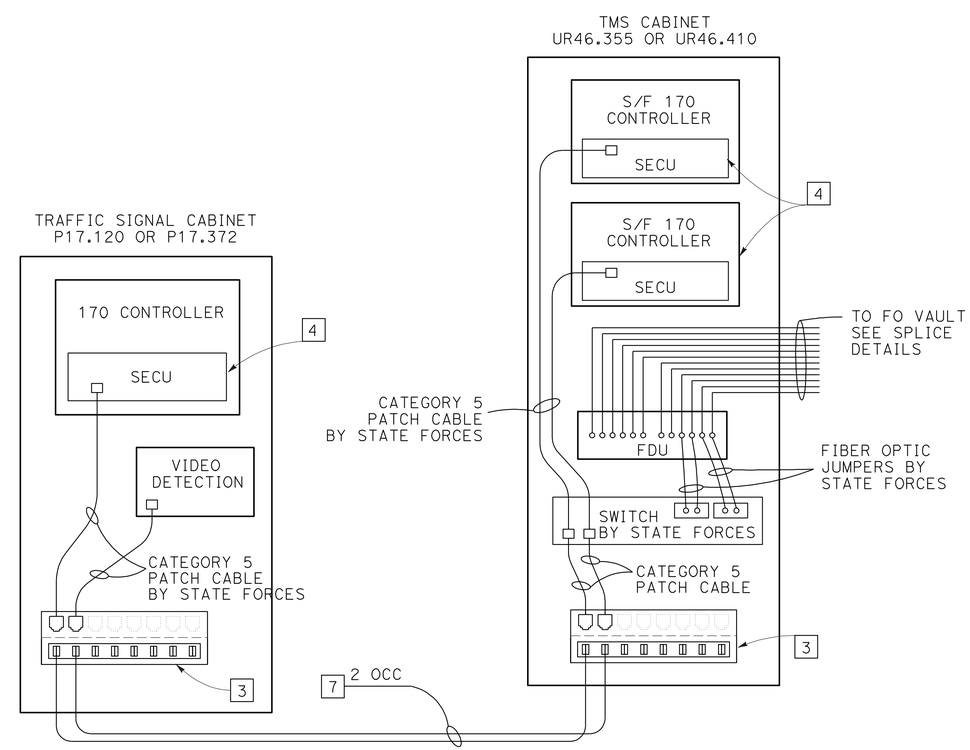

TMS-SIGNAL CABINET COMPONENT DIAGRAM

FIBER OPTIC COMMUNICATION SYSTEM (ELECTRICAL DETAILS)

APPROVED FOR ELECTRICAL WORK ONLY

NO SCALE

E-32

STATE OF CALIFORNIA - DEPARTMENT OF TRANSPORTATION
Caltrans® TRAFFIC ELECTRICAL

FUNCTIONAL SUPERVISOR: BRIAN PECUS
CALCULATED-DESIGNED BY: FARIBA RAMOS
CHECKED BY: ENRIQUE BERNAL
REVISED BY
DATE REVISED

LAST REVISION 01-23-12
DATE PLOTTED => 23-APR-2012
TIME PLOTTED => 16:19

Dist	COUNTY	ROUTE	POST MILES TOTAL PROJECT	SHEET No.	TOTAL SHEETS
11	SD	15,76	R46.1/R47.3, R16.7/R17.7	359	477

Fariba Ramos 01-20-12
REGISTERED ELECTRICAL ENGINEER DATE

4-16-12
PLANS APPROVAL DATE

REGISTERED PROFESSIONAL ENGINEER
FARIBA RAMOS
No. E15619
Exp. 12-31-13
ELECTRICAL
STATE OF CALIFORNIA

THE STATE OF CALIFORNIA OR ITS OFFICERS OR AGENTS SHALL NOT BE RESPONSIBLE FOR THE ACCURACY OR COMPLETENESS OF SCANNED COPIES OF THIS PLAN SHEET.

NOTES:

1. SHELF REQUIRED FOR EQUIPMENT.
2. 8 PAIR TERMINAL BLOCK, TBO.
3. REMOVE BLANK PANEL AND REPLACE WITH FDU.
4. THE CONTRACTOR SHALL VERIFY ALL CONTROLLING FIELD DIMENSIONS BEFORE ORDERING AND INSTALLING EQUIPMENT.
5. THIS SHEET DEMONSTRATES TYPICAL EQUIPMENT CONNECTIONS. REFER TO SHEET E-7 TO E-12 FOR CONTRACT WORK REQUIRED.

LEGEND:

(THIS SHEET ONLY)

- FIBER OPTIC TRANSMITTER/RECEIVER
- NETWORK PORT

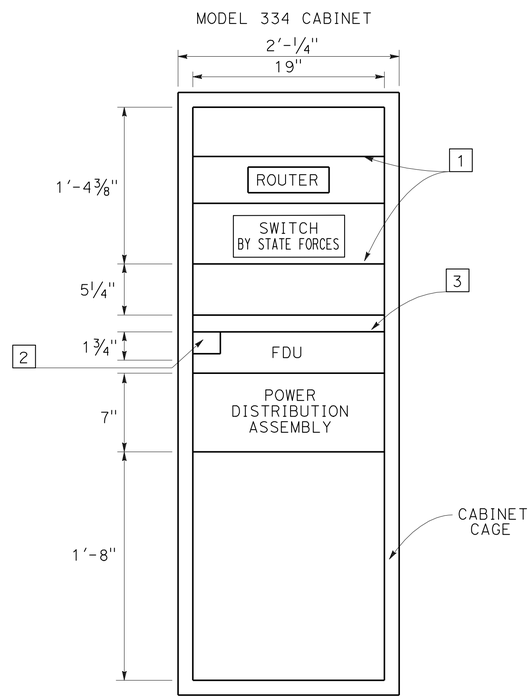

COMMUNICATION CABINET EQUIPMENT PLACEMENT

DETAIL "COMM"

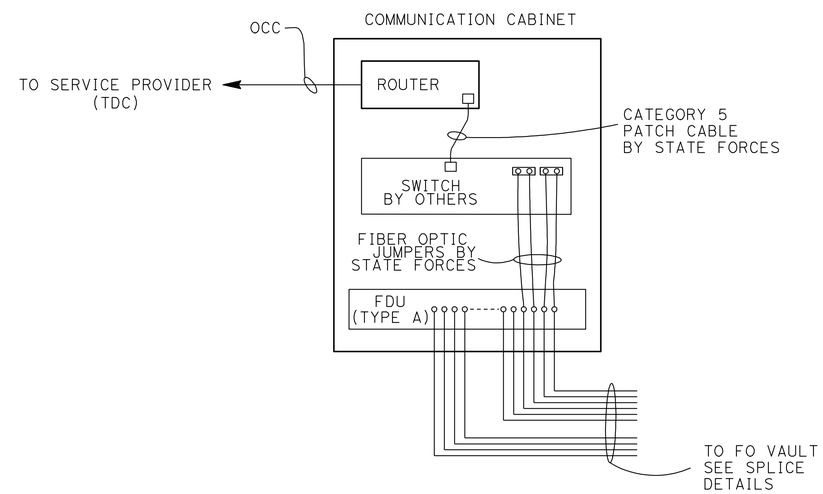

COMMUNICATION CABINET COMPONENT DIAGRAM

FIBER OPTIC COMMUNICATION SYSTEM (ELECTRICAL DETAILS)

APPROVED FOR ELECTRICAL WORK ONLY

NO SCALE

E-33

STATE OF CALIFORNIA - DEPARTMENT OF TRANSPORTATION
Caltrans® TRAFFIC ELECTRICAL

FUNCTIONAL SUPERVISOR: BRIAN PECUS
CALCULATED-DESIGNED BY: FARIBA RAMOS
CHECKED BY: ENRIQUE BERNAL
REVISED BY
DATE REVISED

LAST REVISION 01-23-12
DATE PLOTTED => 17-APR-2012
TIME PLOTTED => 16:36

Dist	COUNTY	ROUTE	POST MILES TOTAL PROJECT	SHEET No.	TOTAL SHEETS
11	SD	15,76	R46.1/R47.3, R16.7/R17.7	360	477

Fariba Ramos 01-20-12
REGISTERED ELECTRICAL ENGINEER DATE

4-16-12
PLANS APPROVAL DATE

REGISTERED PROFESSIONAL ENGINEER
FARIBA RAMOS
No. E15619
Exp. 12-31-13
ELECTRICAL
STATE OF CALIFORNIA

THE STATE OF CALIFORNIA OR ITS OFFICERS OR AGENTS SHALL NOT BE RESPONSIBLE FOR THE ACCURACY OR COMPLETENESS OF SCANNED COPIES OF THIS PLAN SHEET.

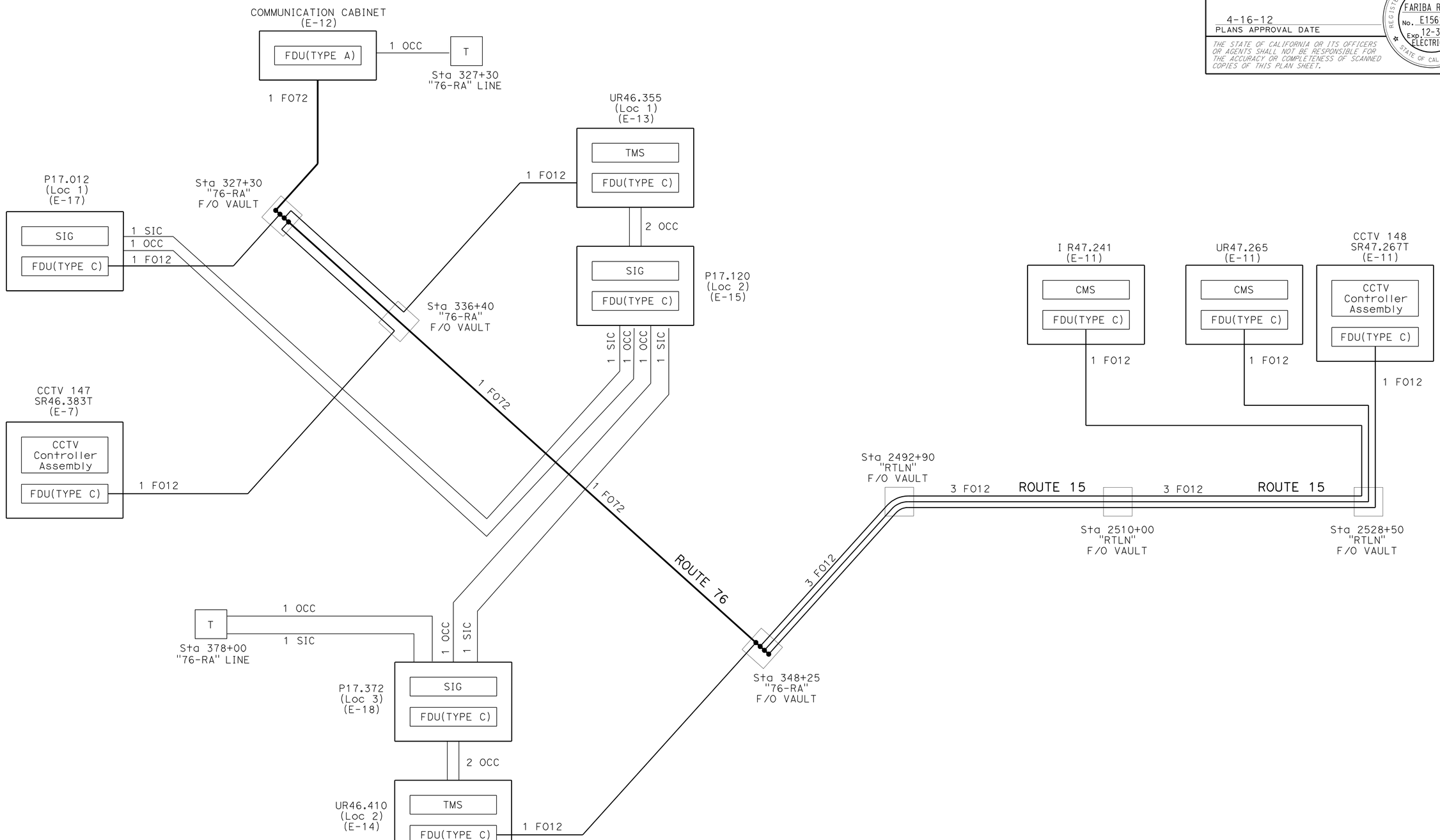

COMMUNICATION CIRCUIT DIAGRAM

APPROVED FOR ELECTRICAL WORK ONLY

NO SCALE

FIBER OPTIC COMMUNICATION SYSTEM (ELECTRICAL DETAILS)

E-34

STATE OF CALIFORNIA - DEPARTMENT OF TRANSPORTATION
Caltrans® TRAFFIC ELECTRICAL

FUNCTIONAL SUPERVISOR: BRIAN PECUS
CALCULATED-DESIGNED BY: FARIBA RAMOS
CHECKED BY: ENRIQUE BERNAL
REVISED BY
DATE REVISED

LAST REVISION 01-23-12
DATE PLOTTED => 17-APR-2012
TIME PLOTTED => 16:36

Dist	COUNTY	ROUTE	POST MILES TOTAL PROJECT	SHEET No.	TOTAL SHEETS
11	SD	15,76	R46.1/R47.3, R16.7/R17.7	361	477

Fariba Ramos 01-20-12
REGISTERED ELECTRICAL ENGINEER DATE

4-16-12
PLANS APPROVAL DATE

REGISTERED PROFESSIONAL ENGINEER
FARIBA RAMOS
No. E15619
Exp. 12-31-13
ELECTRICAL
STATE OF CALIFORNIA

THE STATE OF CALIFORNIA OR ITS OFFICERS OR AGENTS SHALL NOT BE RESPONSIBLE FOR THE ACCURACY OR COMPLETENESS OF SCANNED COPIES OF THIS PLAN SHEET.

COLOR CODES FOR BUFFER TUBES AND FIBERS:

1. BLUE (BL)
2. ORANGE (OR)
3. GREEN (GR)
4. BROWN (BR)
5. SLATE (SL)
6. WHITE (WT)
7. RED (RD)
8. BLACK (BK)
9. YELLOW (YL)
10. VIOLET (VL)
11. ROSE (RS)
12. AQUA (AQ)

NOTES (TSO):

1. THIS SHEET DOES NOT SHOW ALL FO VAULT/PULL BOXES. SEE CIRCUIT DIAGRAMS AND ELECTRICAL PLANS.
2. TERMINATE FO72 ON FDU, SEE SHEET E-38 FOR FIBER TERMINATION LAYOUT.

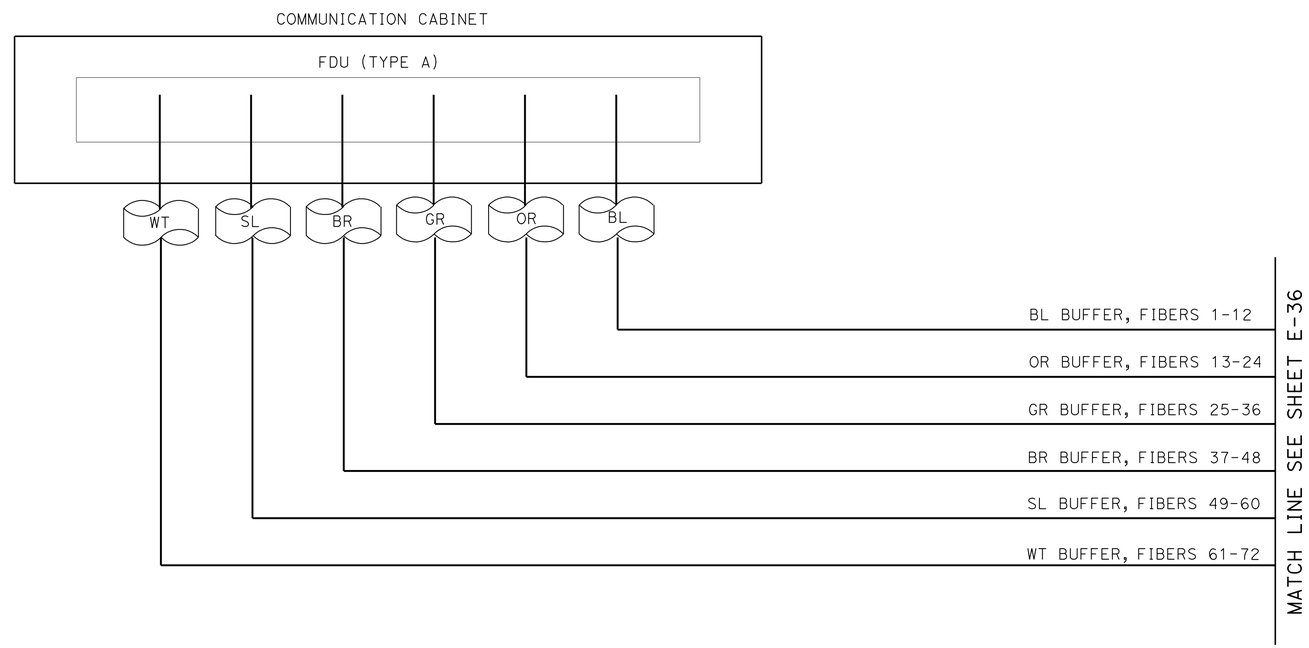

FIBER OPTIC SPLICE DETAILS

FIBER OPTIC COMMUNICATION SYSTEM (ELECTRICAL DETAILS)

APPROVED FOR ELECTRICAL WORK ONLY

NO SCALE

E-35

STATE OF CALIFORNIA - DEPARTMENT OF TRANSPORTATION
Caltrans TRAFFIC ELECTRICAL

FUNCTIONAL SUPERVISOR: BRIAN PECUS
CALCULATED-DESIGNED BY: FARIBA RAMOS
CHECKED BY: ENRIQUE BERNAL
REVISED BY
DATE REVISED

LAST REVISION 01-23-12
DATE PLOTTED => 17-APR-2012
TIME PLOTTED => 16:37

Dist	COUNTY	ROUTE	POST MILES TOTAL PROJECT	SHEET No.	TOTAL SHEETS
11	SD	15,76	R46.1/R47.3, R16.7/R17.7	362	477

REGISTERED ELECTRICAL ENGINEER 01-20-12 DATE

PLANS APPROVAL DATE 4-16-12

REGISTERED PROFESSIONAL ENGINEER FARIBA RAMOS No. E15619 Exp. 12-31-13 ELECTRICAL STATE OF CALIFORNIA

THE STATE OF CALIFORNIA OR ITS OFFICERS OR AGENTS SHALL NOT BE RESPONSIBLE FOR THE ACCURACY OR COMPLETENESS OF SCANNED COPIES OF THIS PLAN SHEET.

COLOR CODES FOR BUFFER TUBES AND FIBERS:

1. BLUE (BL)
2. ORANGE (OR)
3. GREEN (GR)
4. BROWN (BR)
5. SLATE (SL)
6. WHITE (WT)
7. RED (RD)
8. BLACK (BK)
9. YELLOW (YL)
10. VIOLET (VL)
11. ROSE (RS)
12. AQUA (AQ)

LEGEND:

- SPLICE OF TWO FIBER
- CUT END OF FIBER, NOT SPLICED
- SC FEMALE CONNECTOR ON AN FDU PANEL
- SC MALE CONNECTOR ON AN SMFO PATCHCORD

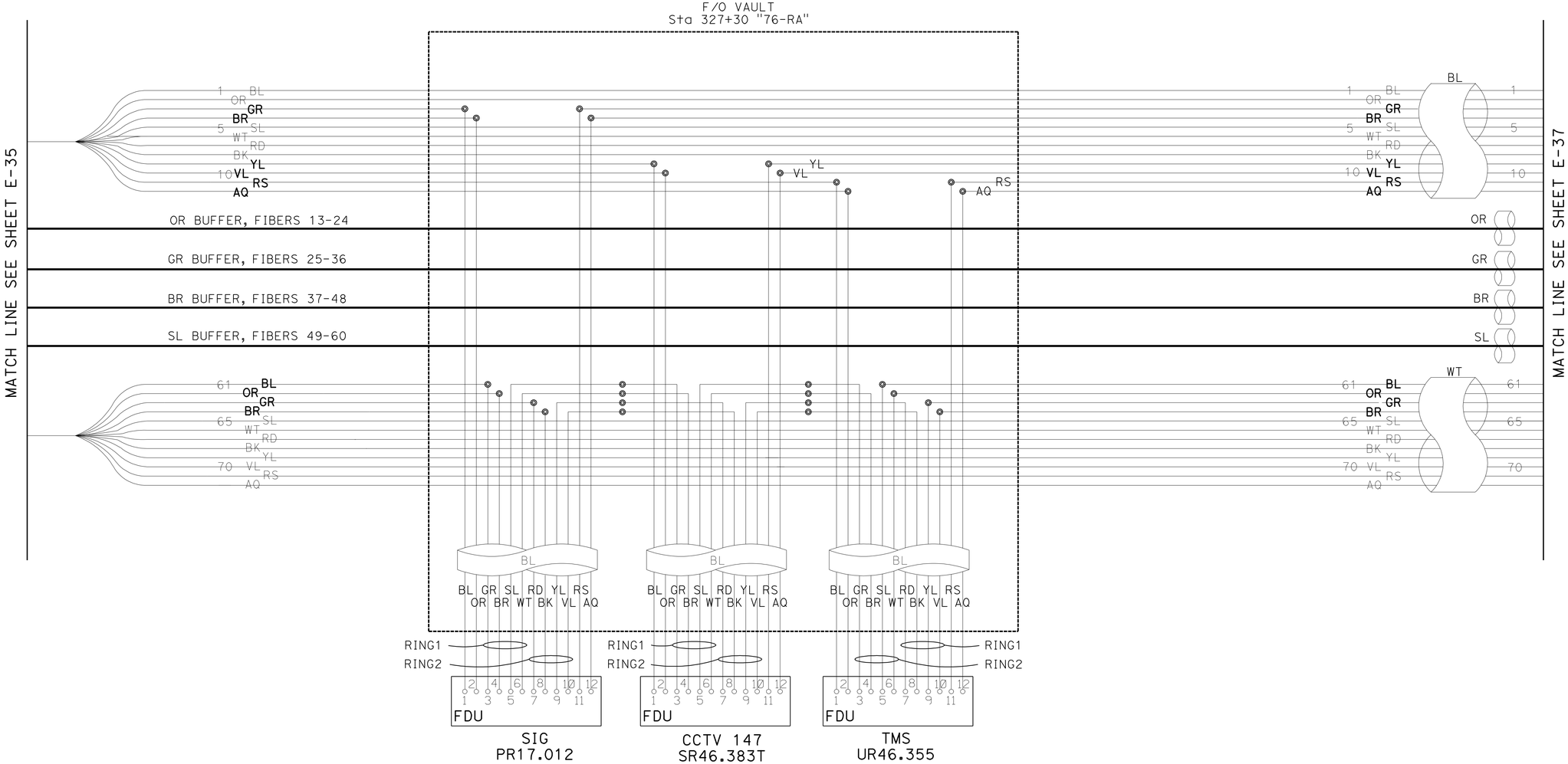

FIBER OPTIC SPLICE DETAILS

APPROVED FOR ELECTRICAL WORK ONLY

NO SCALE

FIBER OPTIC COMMUNICATION SYSTEM (ELECTRICAL DETAILS)

E-36

STATE OF CALIFORNIA - DEPARTMENT OF TRANSPORTATION
Caltrans TRAFFIC ELECTRICAL

FUNCTIONAL SUPERVISOR: BRIAN PECUS
CALCULATED-DESIGNED BY: FARIBA RAMOS
CHECKED BY: ENRIQUE BERNAL
REVISED BY
DATE REVISED

LAST REVISION 01-23-12
DATE PLOTTED => 17-APR-2012
TIME PLOTTED => 16:37

Dist	COUNTY	ROUTE	POST MILES TOTAL PROJECT	SHEET No.	TOTAL SHEETS
11	SD	15,76	R46.1/R47.3, R16.7/R17.7	363	477

REGISTERED ELECTRICAL ENGINEER 01-20-12 DATE

4-16-12
PLANS APPROVAL DATE

REGISTERED PROFESSIONAL ENGINEER FARIBA RAMOS No. E15619 Exp. 12-31-13 ELECTRICAL STATE OF CALIFORNIA

THE STATE OF CALIFORNIA OR ITS OFFICERS OR AGENTS SHALL NOT BE RESPONSIBLE FOR THE ACCURACY OR COMPLETENESS OF SCANNED COPIES OF THIS PLAN SHEET.

COLOR CODES FOR BUFFER TUBES AND FIBERS:

1. BLUE (BL)
2. ORANGE (OR)
3. GREEN (GR)
4. BROWN (BR)
5. SLATE (SL)
6. WHITE (WT)
7. RED (RD)
8. BLACK (BK)
9. YELLOW (YL)
10. VIOLET (VL)
11. ROSE (RS)
12. AQUA (AQ)

LEGEND:

- SPLICE OF TWO FIBER
- CUT END OF FIBER, NOT SPLICED
- SC FEMALE CONNECTOR ON AN FDU PANEL
- SC MALE CONNECTOR ON AN SMFO PATCHCORD

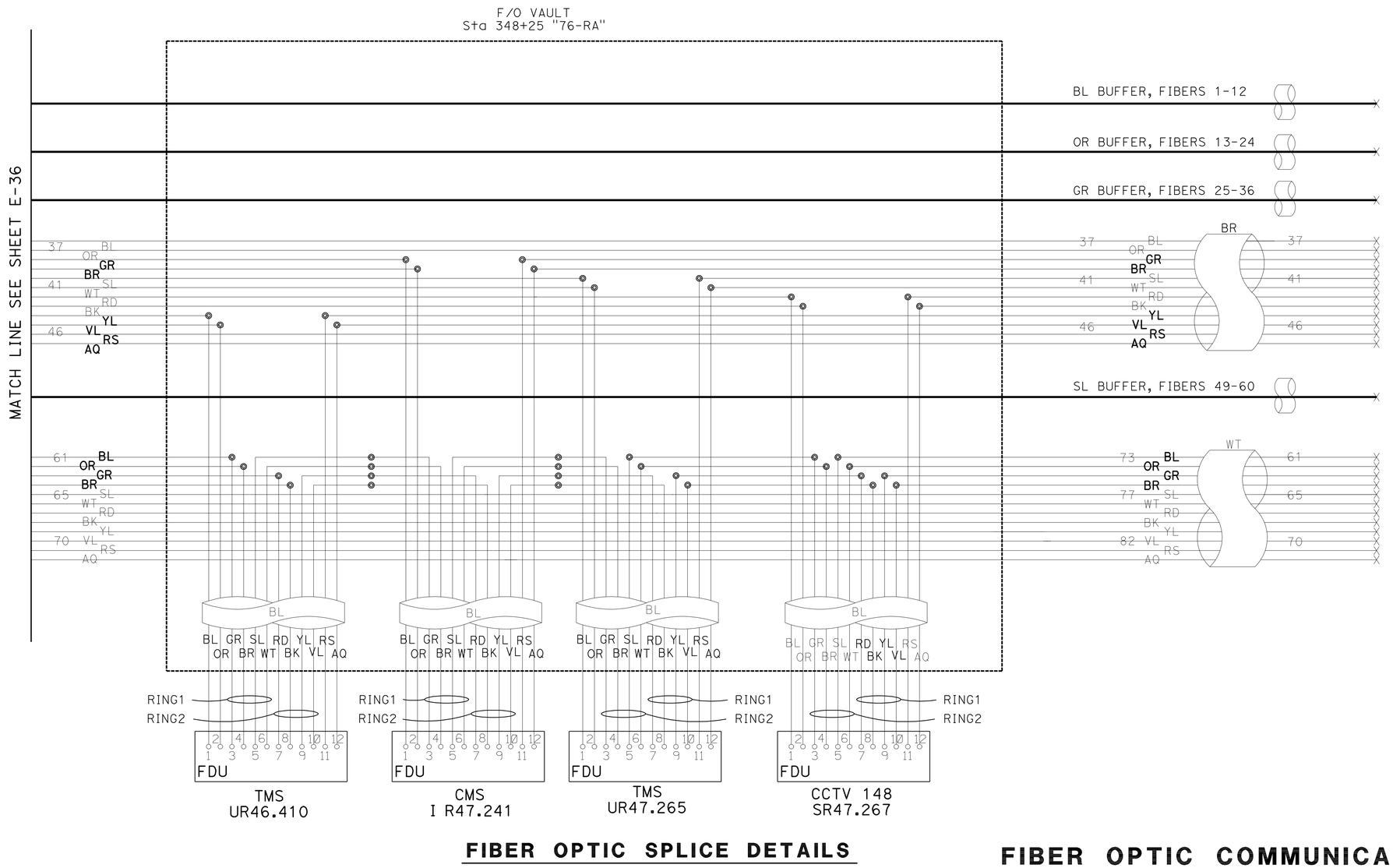

FIBER OPTIC SPLICE DETAILS

FIBER OPTIC COMMUNICATION SYSTEM (ELECTRICAL DETAILS)

E-37

APPROVED FOR ELECTRICAL WORK ONLY

NO SCALE

STATE OF CALIFORNIA - DEPARTMENT OF TRANSPORTATION
Caltrans TRAFFIC ELECTRICAL

FUNCTIONAL SUPERVISOR: BRIAN PECUS
CALCULATED-DESIGNED BY: FARIBA RAMOS
CHECKED BY: ENRIQUE BERNAL
REVISED BY
DATE REVISED

LAST REVISION 01-23-12
DATE PLOTTED => 17-APR-2012
TIME PLOTTED => 16:37

BORDER LAST REVISED 7/2/2010
USERNAME => s109858
DGN FILE => 1100020469ua037.dgn
RELATIVE BORDER SCALE IS IN INCHES 0 1 2 3
UNIT 2833
PROJECT NUMBER & PHASE 11000204691

Dist	COUNTY	ROUTE	POST MILES TOTAL PROJECT	SHEET No.	TOTAL SHEETS
11	SD	15,76	R46.1/R47.3, R16.7/R17.7	364	477

Fariba Ramos 01-20-12
REGISTERED ELECTRICAL ENGINEER DATE

4-16-12
PLANS APPROVAL DATE

REGISTERED PROFESSIONAL ENGINEER
FARIBA RAMOS
No. E15619
Exp. 12-31-13
ELECTRICAL
STATE OF CALIFORNIA

THE STATE OF CALIFORNIA OR ITS OFFICERS OR AGENTS SHALL NOT BE RESPONSIBLE FOR THE ACCURACY OR COMPLETENESS OF SCANNED COPIES OF THIS PLAN SHEET.

COLOR CODES FOR BUFFER TUBES AND FIBERS:

1. BLUE (BL)
2. ORANGE (OR)
3. GREEN (GR)
4. BROWN (BR)
5. SLATE (SL)
6. WHITE (WT)
7. RED (RD)
8. BLACK (BK)
9. YELLOW (YL)
10. VIOLET (VL)
11. ROSE (RS)
12. AQUA (AQ)

LEGEND:

- SPLICE OF TWO FIBER
- CUT END OF FIBER, NOT SPLICED
- SC FEMALE CONNECTOR ON AN FDU PANEL
- SC MALE CONNECTOR ON AN SMFO PATCHCORD

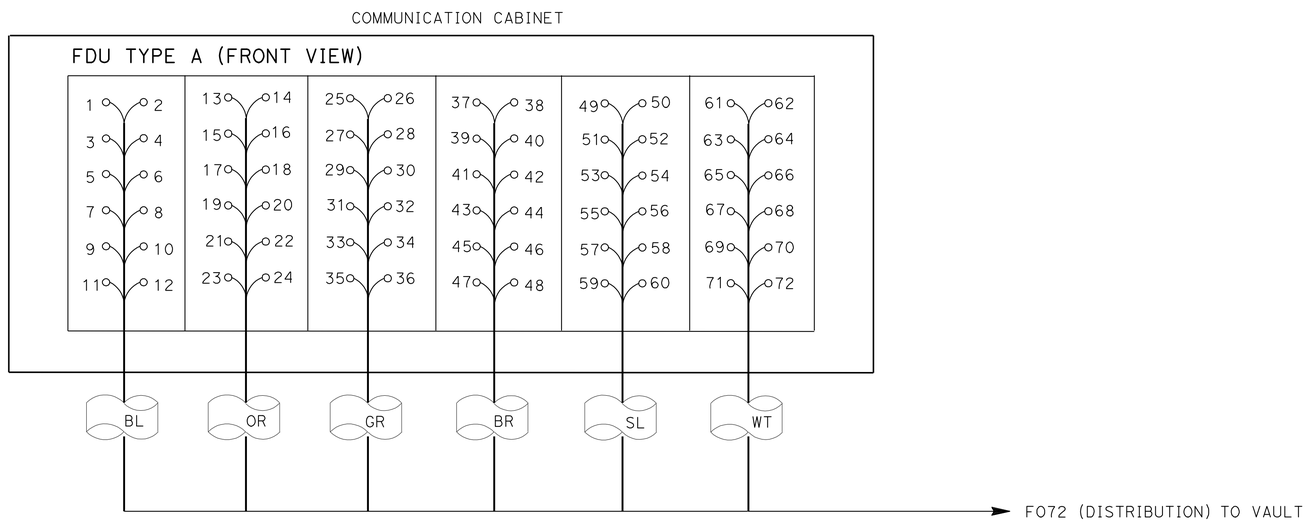

FDU TO FIBER CABLE TERMINATION DETAIL

FIBER OPTIC COMMUNICATION SYSTEM (ELECTRICAL DETAILS)

APPROVED FOR ELECTRICAL WORK ONLY

NO SCALE

E-38

STATE OF CALIFORNIA - DEPARTMENT OF TRANSPORTATION
Caltrans® TRAFFIC ELECTRICAL

FUNCTIONAL SUPERVISOR: BRIAN PECUS
CALCULATED-DESIGNED BY: FARIBA RAMOS
CHECKED BY: ENRIQUE BERNAL
REVISED BY
DATE REVISED

LAST REVISION 01-23-12
DATE PLOTTED => 17-APR-2012
TIME PLOTTED => 16:37

Dist	COUNTY	ROUTE	POST MILES TOTAL PROJECT	SHEET No.	TOTAL SHEETS
11	SD	15,76	R46.1/R47.3, R16.7/R17.7	365	477

Fariba Ramos 01-20-12
REGISTERED ELECTRICAL ENGINEER DATE

4-16-12
PLANS APPROVAL DATE

REGISTERED PROFESSIONAL ENGINEER FARIBA RAMOS No. E15619 Exp. 12-31-13 ELECTRICAL STATE OF CALIFORNIA

THE STATE OF CALIFORNIA OR ITS OFFICERS OR AGENTS SHALL NOT BE RESPONSIBLE FOR THE ACCURACY OR COMPLETENESS OF SCANNED COPIES OF THIS PLAN SHEET.

NOTE:

1 PLACE 2" DUCT TAPE ALONG THE EDGE OF SAWCUT BEFORE POURING EPOXY SEALANT. LEVEL EPOXY SEALANT TO FINISHED ROAD SURFACE AND REMOVE DUCT TAPE WHEN EPOXY IS CURED.

FIRST SENSOR TRANSMISSION CABLE	DLC	SECOND SENSOR TRANSMISSION CABLE
1-N-1	N-1	1-N-2

PIEZOELECTRIC SENSOR IDENTIFICATION

DIRECTION OF TRAVEL → (TYPICAL)

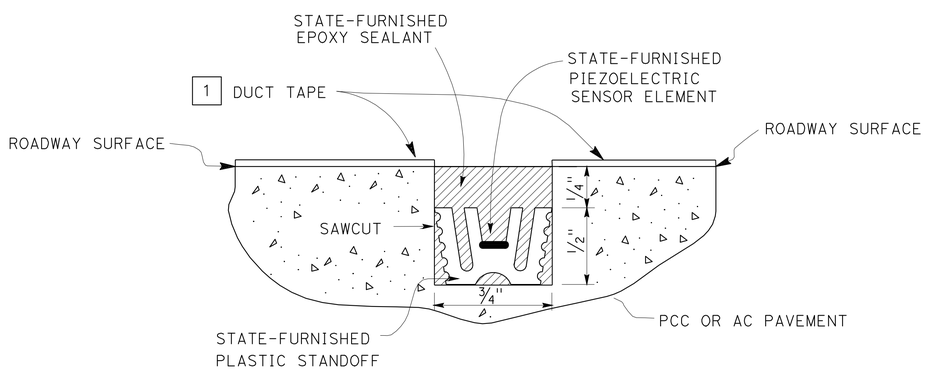

SECTION B-B

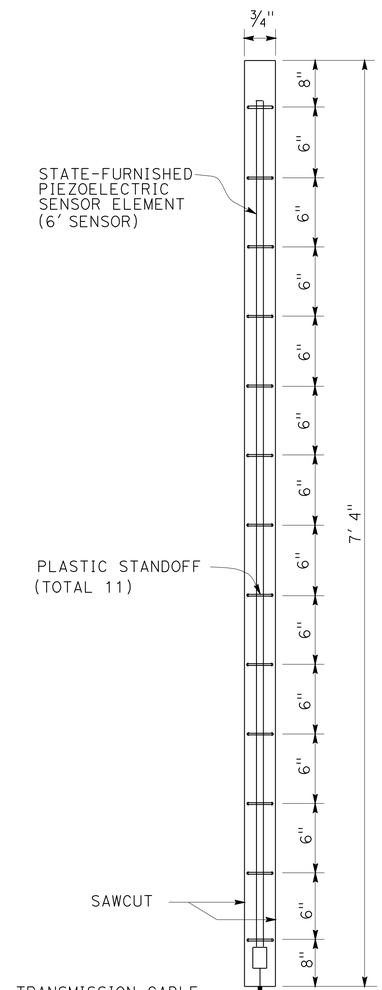

DETAIL "M"

SENSOR INSTALLATION

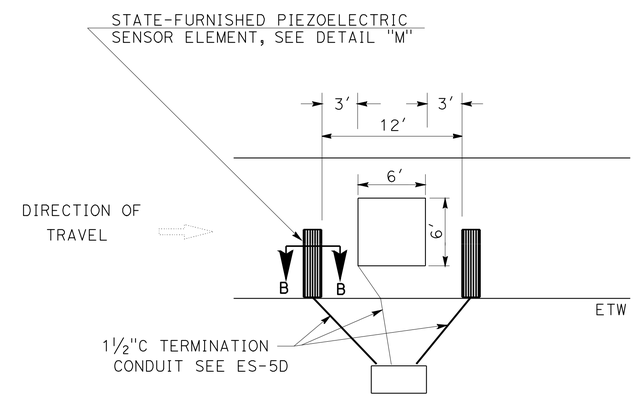

SENSOR PLACEMENT

TYPICAL

PIEZOELECTRIC SENSOR INSTALLATION DETAILS

APPROVED FOR ELECTRICAL WORK ONLY

TRAFFIC MONITORING STATION
(PIEZOELECTRIC SENSOR)
(ELECTRICAL DETAIL)

NO SCALE

E-39

STATE OF CALIFORNIA - DEPARTMENT OF TRANSPORTATION
Caltrans® TRAFFIC ELECTRICAL

FUNCTIONAL SUPERVISOR: BRIAN PECUS
CALCULATED-DESIGNED BY: FARIBA RAMOS
CHECKED BY: ENRIQUE BERNAL
REVISED BY
DATE REVISED

LAST REVISION 01-23-12 DATE PLOTTED => 17-APR-2012 TIME PLOTTED => 16:37

Dist	COUNTY	ROUTE	POST MILES TOTAL PROJECT	SHEET No.	TOTAL SHEETS
11	SD	15,76	R46.1/R47.3, R16.7/R17.7	366	477

Fariba Ramos 01-20-12
REGISTERED ELECTRICAL ENGINEER DATE

4-16-12
PLANS APPROVAL DATE

REGISTERED PROFESSIONAL ENGINEER FARIBA RAMOS No. E15619 Exp. 12-31-13 ELECTRICAL STATE OF CALIFORNIA

THE STATE OF CALIFORNIA OR ITS OFFICERS OR AGENTS SHALL NOT BE RESPONSIBLE FOR THE ACCURACY OR COMPLETENESS OF SCANNED COPIES OF THIS PLAN SHEET.

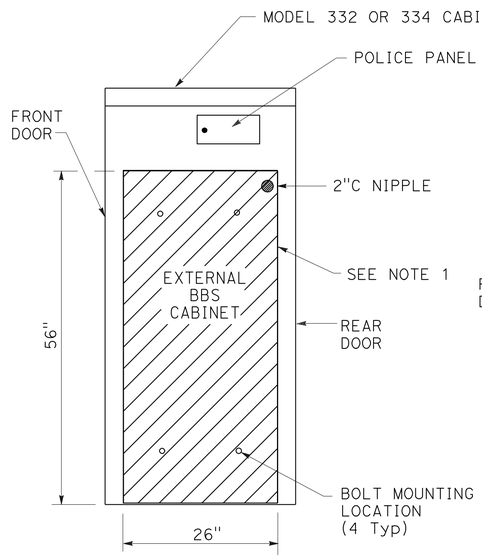

SIDE VIEW

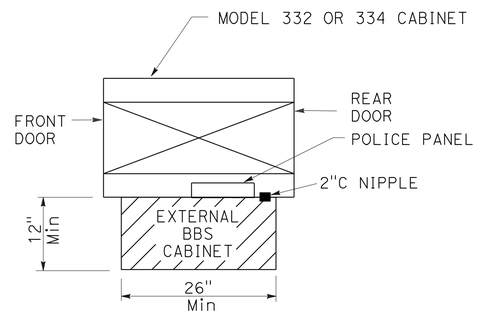

TOP VIEW

EXTERNAL BBS CABINET MOUNTED TO THE MODEL 332 OR 334 CABINET

NOTES: (THIS SHEET ONLY)

1. THE EXTERNAL BBS CABINET SHALL BE MOUNTED TO THE MODEL 332 OR 334 CABINET WITH FOUR 18-8 STAINLESS STEEL HEX HEAD, FULLY-THREADED, ⅜"-16 X 1" BOLTS; TWO WASHERS PER BOLT, DESIGNED FOR ⅜" BOLTS AND ARE 18-8 STAINLESS STEEL, 1" OUTSIDE DIAMETER, ROUND, AND FLAT; AND ONE K-LOCK NUT PER BOLT THAT IS 18-8 STAINLESS STEEL AND A HEX-NUT. THE ENGINEER WILL HAVE TO APPROVE THE BOLT MOUNTING LOCATION PRIOR TO INSTALLATION.
2. THE ANCHOR BOLTS SHALL BE ¾" Dia X 15" WITH A 2"-90° BEND. THE CABINET MANUFACTURER'S SPECIFICATION SHALL DETERMINE THE LOCATION OF THE ANCHOR BOLTS IN THE FOUNDATION. THE ENGINEER WILL HAVE TO APPROVE THE ANCHOR BOLTS AND ITS LOCATION IN THE FOUNDATION PRIOR TO CONSTRUCTION.
3. THE CONTRACTOR SHALL VERIFY THE DIMENSIONS OF THE BBS CABINET PRIOR TO CONSTRUCTING THE FOUNDATION OF THE MODIFIED PORTION OF THE Std MODEL 332 AND 334 CABINET FOUNDATION. THE ENGINEER WILL HAVE TO APPROVE ANY NECESSARY DEVIATIONS PRIOR TO CONSTRUCTION.
4. ALL DIMENSIONS ARE NOMINAL.

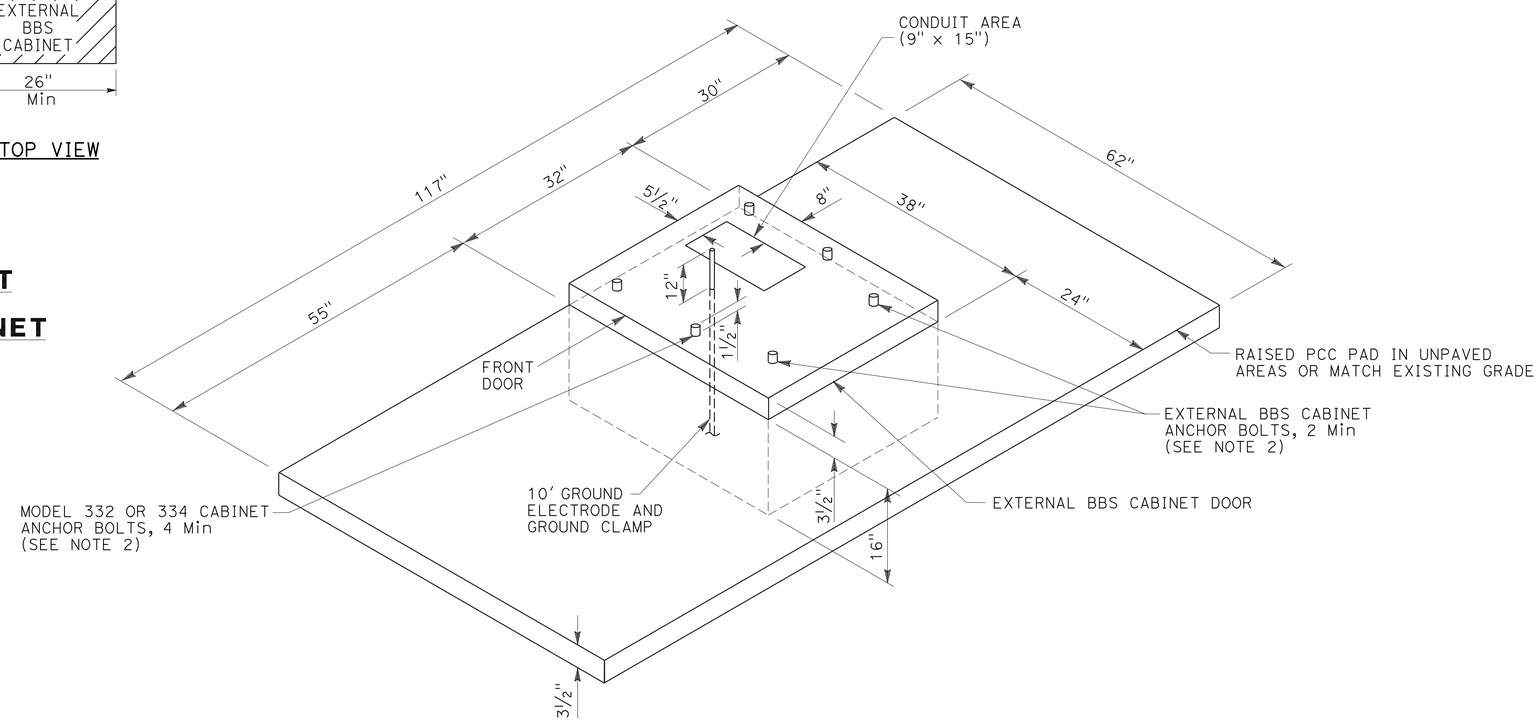

MODIFIED MODEL 332 AND 334 CABINET FOUNDATION DETAIL FOR BATTERY BACKUP SYSTEM (BBS)

(FOR DIMENSIONS AND DETAILS NOT SHOWN AND ADDITIONAL NOTES, SEE SHEET ES-3C OF THE STANDARD PLANS FOR MODEL 332 AND 334 CABINETS)

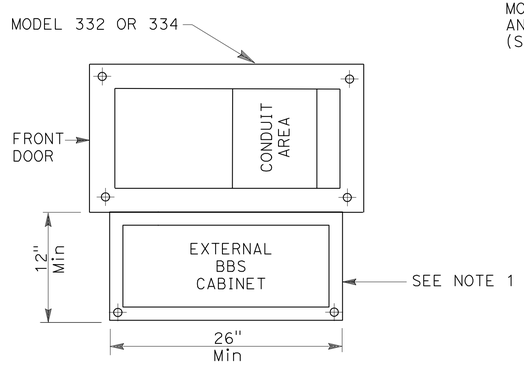

BASE PLAN FOR BBS MOUNTED TO THE MODEL 332 OR 334 CABINET

(FOR DIMENSIONS AND DETAILS NOT SHOWN, SEE SHEET A6-1 TO A6-4, CABINET HOUSING DETAILS OF THE TRANSPORTATION ELECTRICAL EQUIPMENT SPECIFICATION (TEES))

APPROVED FOR ELECTRICAL WORK ONLY

NO SCALE

SIGNAL AND LIGHTING ELECTRICAL DETAILS
(BBS FOUNDATION DETAILS)

E-40

STATE OF CALIFORNIA - DEPARTMENT OF TRANSPORTATION
Caltrans TRAFFIC ELECTRICAL

FUNCTIONAL SUPERVISOR: BRIAN PECUS
CALCULATED-DESIGNED BY: ENRIQUE BERNAL
CHECKED BY: FARIBA RAMOS
REVISED BY
DATE REVISED

LAST REVISION 01-23-12 | DATE PLOTTED => 17-APR-2012 | TIME PLOTTED => 16:37

Dist	COUNTY	ROUTE	POST MILES TOTAL PROJECT	SHEET No.	TOTAL SHEETS
11	SD	15,76	R46.1/R47.3, R16.7/R17.7	367	477

Fariba Ramos 01-20-12
REGISTERED ELECTRICAL ENGINEER DATE

4-16-12
PLANS APPROVAL DATE

REGISTERED PROFESSIONAL ENGINEER FARIBA RAMOS No. E15619 Exp. 12-31-13 ELECTRICAL STATE OF CALIFORNIA

THE STATE OF CALIFORNIA OR ITS OFFICERS OR AGENTS SHALL NOT BE RESPONSIBLE FOR THE ACCURACY OR COMPLETENESS OF SCANNED COPIES OF THIS PLAN SHEET.

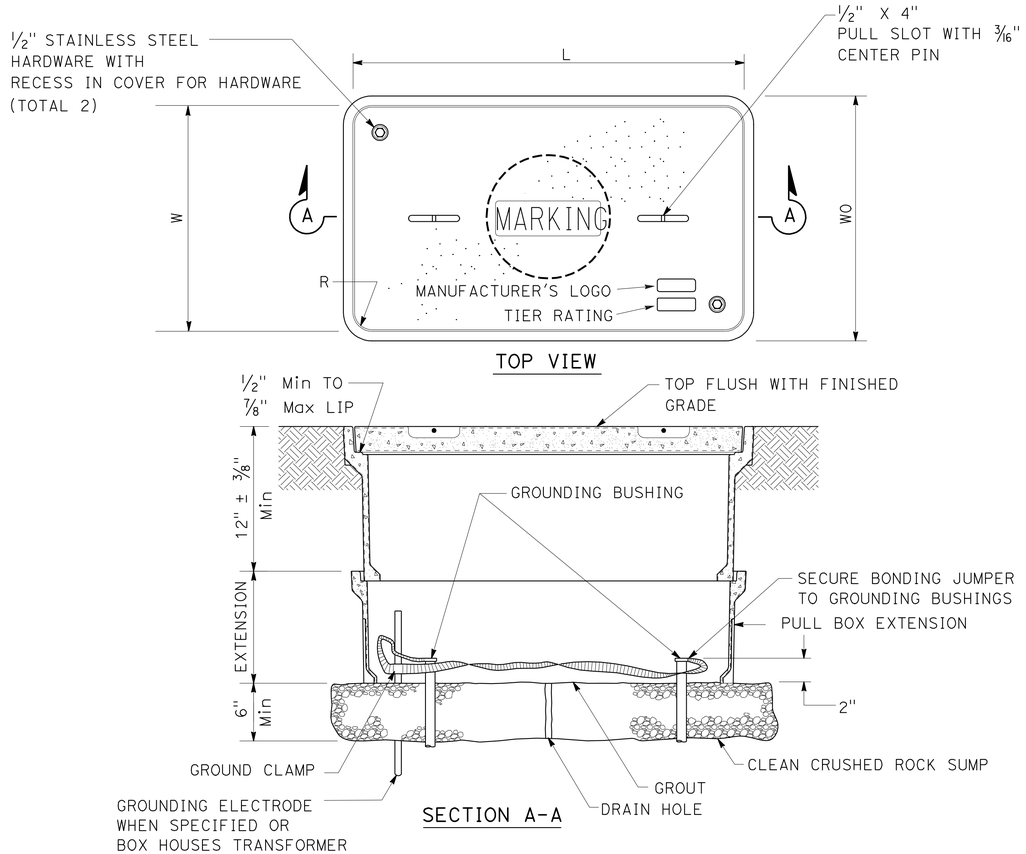

INSTALLATION DETAILS

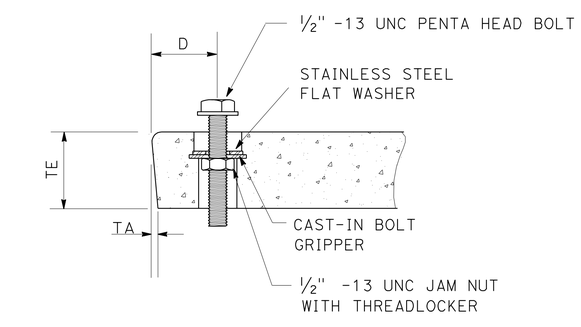

TYPICAL COVER CAPTIVE BOLTDOWN
(OR SIMILAR)

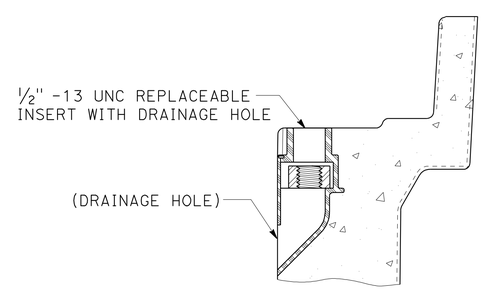

TYPICAL INSERT
(OR SIMILAR)

NOTES:

1. ALL NON-TRAFFIC RATED PULL BOXES AND COVERS, FOR IN GROUND AND IN SIDEWALK APPLICATIONS, MUST BE INDEPENDENTLY TESTED AND CERTIFIED AS COMPLYING WITH THE PROVISIONS OF ANSI/SCTE 77 2010 "SPECIFICATION FOR UNDERGROUND ENCLOSURE INTEGRITY." PULL BOXES MUST MEET THE TIER 22 APPLICATION. COVERS NOT INSTALLED IN SIDEWALKS MUST MEET THE TIER 22 APPLICATION. COVERS INSTALLED IN SIDEWALKS MUST MEET THE TIER 8 APPLICATION.
2. COVERS MUST BE SECURED WITH A CAPTIVE BOLT DESIGN USING 1/2"-13 UNC LARGE PENTA-HEAD BOLTS. THE BOLTS AND WASHERS MUST BE STAINLESS STEEL.
3. THE CAPTIVE BOLT DESIGN MUST BE INDEPENDENTLY TESTED AND CERTIFIED AS CAPABLE OF WITHSTANDING A TORQUE OF 56 Ft·Lb AND A MINIMUM PULL OUT STRENGTH OF 750 LBS. THE PULL OUT TEST MUST BE PERFORMED WITH THE COVER IN PLACE AND THE BOLTS TORQUED TO 56 Ft·Lb THE BOLTS, INSERTS, AND COVER MUST NOT BE DAMAGED WHEN TESTED UP TO THE MINIMUM PULL OUT STRENGTH.
4. MARKINGS, SHOWING THE TIER RATING, MUST BE LABELED OR STENCILED ON THE INSIDE AND OUTSIDE OF THE PULL BOX AND ON THE UNDERSIDE OF THE COVER.
5. THE TIER RATING MUST BE EMBOSSED ON THE TOP SURFACE OF THE COVER.
6. THE TOP OUTSIDE EDGE OF COVERS AND PULL BOXES MUST HAVE A 1/8" RADIUS. THE NOMINAL DIMENSION OF THE OPENING IN WHICH THE COVER SETS MUST BE THE SAME AS THE COVER DIMENSIONS EXCEPT THE LENGTH AND WIDTH DIMENSIONS MUST BE 1/8" GREATER. COVERS AND PULL BOXES MUST BE INTERCHANGEABLE WITH CALIFORNIA STANDARD MALE AND FEMALE GAGES. WHEN INTERCHANGED WITH A STANDARD, THE TOP SURFACES MUST BE FLUSH WITHIN 1/8".
7. PULL BOXES MUST NOT BE INSTALLED WITHIN THE BOUNDARIES OF NEW OR EXISTING CURB RAMPS OR DRIVEWAYS.
8. AN EXTENSION MAY BE SUBSTITUTED WITH A PULL BOX IF THE BOTTOM EDGE OF THE UPPER PULL BOX FITS EVENLY ONTO THE LIP OF THE LOWER PULL BOX.
9. PROVIDE 4" X 4" (MINIMUM, NOMINAL SIZE) KNOCKOUTS. QUANTITY AS SHOWN ON THE DIMENSION TABLE.
10. FOR ADDITIONAL PULL BOX COVER MARKING INFORMATION, SEE STANDARD PLAN NSP ES-8B, NOTE 3.
11. WHEN INSTALLED IN A SIDEWALK AREA, ADJUST THE DEPTH OF THE PULL BOX SO THAT THE TOP OF THE PULL BOX IS FLUSH WITH THE SIDEWALK. WHERE PRACTICAL, PLACE PULL BOXES ADJACENT TO THE BACK OF CURB WITH THE TOP OF THE PULL BOX FLUSH WITH THE TOP OF THE ADJACENT CURB. IN UNPAVED AREAS WERE THE PULL BOX IS NOT IMMEDIATELY ADJACENT TO AND PROTECTED BY A CONCRETE FOUNDATION, POLE OR OTHER PROTECTIVE CONSTRUCTION, PLACE THE PULL BOX 1 1/4" ABOVE THE SURROUNDING GRADE.
12. PULL BOXES FOR ELECTROLIERS, POST AND SIGNAL STANDARDS MUST BE LOCATED WITHIN 5'-0" FROM THE STATION OR PLACEMENT DIMENSIONS OF THE ADJACENT ELECTROLIER, POST OR SIGNAL STANDARD. PULL BOXES SHOWN ADJACENT TO STANDARD MUST BE PLACED ON THE SIDE OF THE FOUNDATION FACING AWAY FROM TRAFFIC, UNLESS OTHERWISE DIRECTED. PULL BOXES MUST BE PLACED ADJACENT TO THE BACK OF CURB OR EDGE OF SHOULDER EXCEPT WHERE THIS IS IMPRACTICAL, THEN A PULL BOX MAY BE PLACED IN ANOTHER SUITABLE PROTECTED AND ACCESSIBLE LOCATION.

DIMENSION TABLE

PULL BOX	PULL BOX			COVER							PULL BOX KNOCKOUTS		EXTENSION KNOCKOUTS	
	MINIMUM DEPTH BOX (In)	MINIMUM DEPTH EXTENSION (In)	MAXIMUM WEIGHT (Lb)	L (In)	W (In)	R (In)	TE (In)	TA (In)	D (In)	MAXIMUM WEIGHT (Lb)	SIDE	END	SIDE	END
No. 5	12	10	55	23 1/4	13 3/4	1 3/8	2	1/8	1 3/4	60	2	1	2	1
No. 6	12	10	70	30 1/2	17 1/2	1 3/8	2	1/8	2	85	2	2	2	2

APPROVED FOR ELECTRICAL WORK ONLY

ELECTRICAL SYSTEMS (NON-TRAFFIC RATED PULL BOX)

NO SCALE

E-41

STATE OF CALIFORNIA - DEPARTMENT OF TRANSPORTATION
Caltrans TRAFFIC ELECTRICAL

FUNCTIONAL SUPERVISOR: BRIAN PECUS
CALCULATED-DESIGNED BY: FARIBA RAMOS
CHECKED BY: ENRIQUE BERNAL
REVISED BY
DATE REVISED

LAST REVISION 01-23-12
DATE PLOTTED => 17-APR-2012
TIME PLOTTED => 16:37

Dist	COUNTY	ROUTE	POST MILES TOTAL PROJECT	SHEET No.	TOTAL SHEETS
11	SD	15,76	R46.1/R47.3, R16.7/R17.7	368	477

Fariba Ramos 01-20-12
REGISTERED ELECTRICAL ENGINEER DATE

4-16-12
PLANS APPROVAL DATE

REGISTERED PROFESSIONAL ENGINEER
FARIBA RAMOS
No. E15619
Exp. 12-31-13
ELECTRICAL
STATE OF CALIFORNIA

THE STATE OF CALIFORNIA OR ITS OFFICERS OR AGENTS SHALL NOT BE RESPONSIBLE FOR THE ACCURACY OR COMPLETENESS OF SCANNED COPIES OF THIS PLAN SHEET.

NOTES FOR SIGNAL AND LIGHTING (STAGE CONSTRUCTION)

1 - EXISTING AND TEMPORARY ELECTRICAL EQUIPMENT NO LONGER REQUIRED AT THE END OF A CONSTRUCTION STAGE SHALL BE REMOVED OR REUSED IN THE FOLLOWING STAGES.

2 - PERMANENT ELECTRICAL EQUIPMENT NOT SHOWN ON THE STAGE CONSTRUCTION PLANS MAY BE INSTALLED AT ANY STAGE IF NOT INTERFERING WITH CONSTRUCTION AND TRAFFIC AND AS DIRECTED BY THE ENGINEER.

3 - AT LOCATIONS WHERE PERMANENT CONDUIT INSTALLATION ARE SHOWN, CONDUCTORS AND CABLES REQUIRED ONLY DURINNG STAGE CONSTRUCTION ARE INDICATED ON THE PLANS. AT CONTRACTOR'S OPTION, OTHER PERMANENT CONDUCTORS AND CABLES MAY BE INSTALLED IF NOT INTERFERING WITH FUTURE STAGES OF CONSTRUCTION.

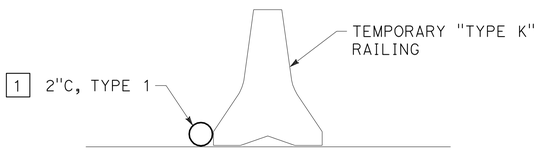

"TEMPORARY CONDUIT DETAIL"

NOTE:

1 SECURE CONDUIT TO CONCRETE BARRIER AT 10' INTERVALS.

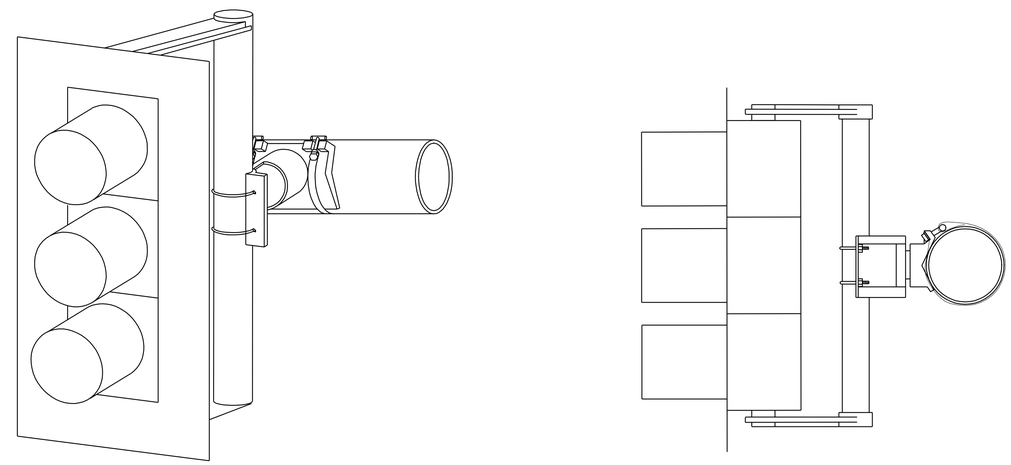

SCM DETAIL

APPROVED FOR ELECTRICAL WORK ONLY

ELECTRICAL DETAILS

NO SCALE

E-42

STATE OF CALIFORNIA - DEPARTMENT OF TRANSPORTATION
Caltrans TRAFFIC ELECTRICAL

FUNCTIONAL SUPERVISOR: BRIAN PECUS
CALCULATED-DESIGNED BY: FARIBA RAMOS
CHECKED BY: ENRIQUE BERNAL
REVISED BY
DATE REVISED

LAST REVISION 01-23-12
DATE PLOTTED => 17-APR-2012
TIME PLOTTED => 16:37

Dist	COUNTY	ROUTE	POST MILES TOTAL PROJECT	SHEET No.	TOTAL SHEETS
11	SD	15,76	R46.1/R47.3, R16.7/R17.7	369	477

REGISTERED ELECTRICAL ENGINEER 01-20-12 DATE

4-16-12
PLANS APPROVAL DATE

REGISTERED PROFESSIONAL ENGINEER FARIBA RAMOS No. E15619 Exp. 12-31-13 ELECTRICAL STATE OF CALIFORNIA

THE STATE OF CALIFORNIA OR ITS OFFICERS OR AGENTS SHALL NOT BE RESPONSIBLE FOR THE ACCURACY OR COMPLETENESS OF SCANNED COPIES OF THIS PLAN SHEET.

FOR ACCURATE RIGHT OF WAY DATA, CONTACT RIGHT OF WAY ENGINEERING AT THE DISTRICT OFFICE.

NOTES:

1. SEE SIGNAL AND LIGHTING PLANS (LOCATION 1) FOR POLE SCHEDULE AND ADDITIONAL INFORMATION.
2. ABANDON EXISTING DETECTOR LOOPS UNLESS OTHERWISE NOTED.

[3] INSTALL PERMANENT TRAFFIC SIGNAL EQUIPMENT, SEE E-17.

[4] INSTALL TEMPORARY TRAFFIC SIGNAL EQUIPMENT AS SHOWN. [RL] EQUIPMENT AT THE END OF STAGE 1 CONSTRUCTION. SEE SIGNAL AND LIGHTING (LOCATION 1) STAGE 2 FOR NEW LOCATION.

[5] EX LOOP(S) TO REMAIN.

[6] Exist FLASHING BEACON SHALL BE MAINTAINED THROUGHOUT THE STAGE CONSTRUCTIONS.

[7] INSTALL VIS. RELOCATE WHEN NO LONGER REQUIRED. SEE STAGE 2 CONSTRUCTION PLANS.

[8] INSTALL VDU, COMMUNICATION CARD AND VIDEO DISPLAY IN MODEL 332 CABINET.

CONDUIT NOTES:

(1) 2"C, 2#8 (LTG), 2#6 (SIGNAL), 2#10 (FB), 1 DLC, 2#6 (COMM), 2#10 (TDC)

(2) 3"C, 2#8 (LTG), 2#6 (SIGNAL), 2#10 (FB), 2#6 (COMM), 2#10 (TDC), 2-3CSC, 3-12CSC, 3 DLC, 1 VCH

(3) 2"C, 2#8 (LTG), 1-12CSC, 1 VCH

COPNDUIT NOTES CONTINUED:

(4) 3"C, 2#8 (LTG), 2 DLC, 1 VCH, 1-3CSC, 2-12CSC

(5) 3"C, 2#8 (LTG), 3 DLC, 2 VCH, 2-3CSC, 4-12CSC, 2#10 (FB), 2#6 (SIGNAL), 2#6 (COMM), 2#10 (TDC)

T (6) 2"C, 1-12CSC, 1 DLC

T (7) 2"C, 2-12CSC, 1 DLC, 2#8 (LTG), 1 VCH

(8) 3"C, 2-12CSC, 1 DLC, 2#8 (LTG), 1 VCH

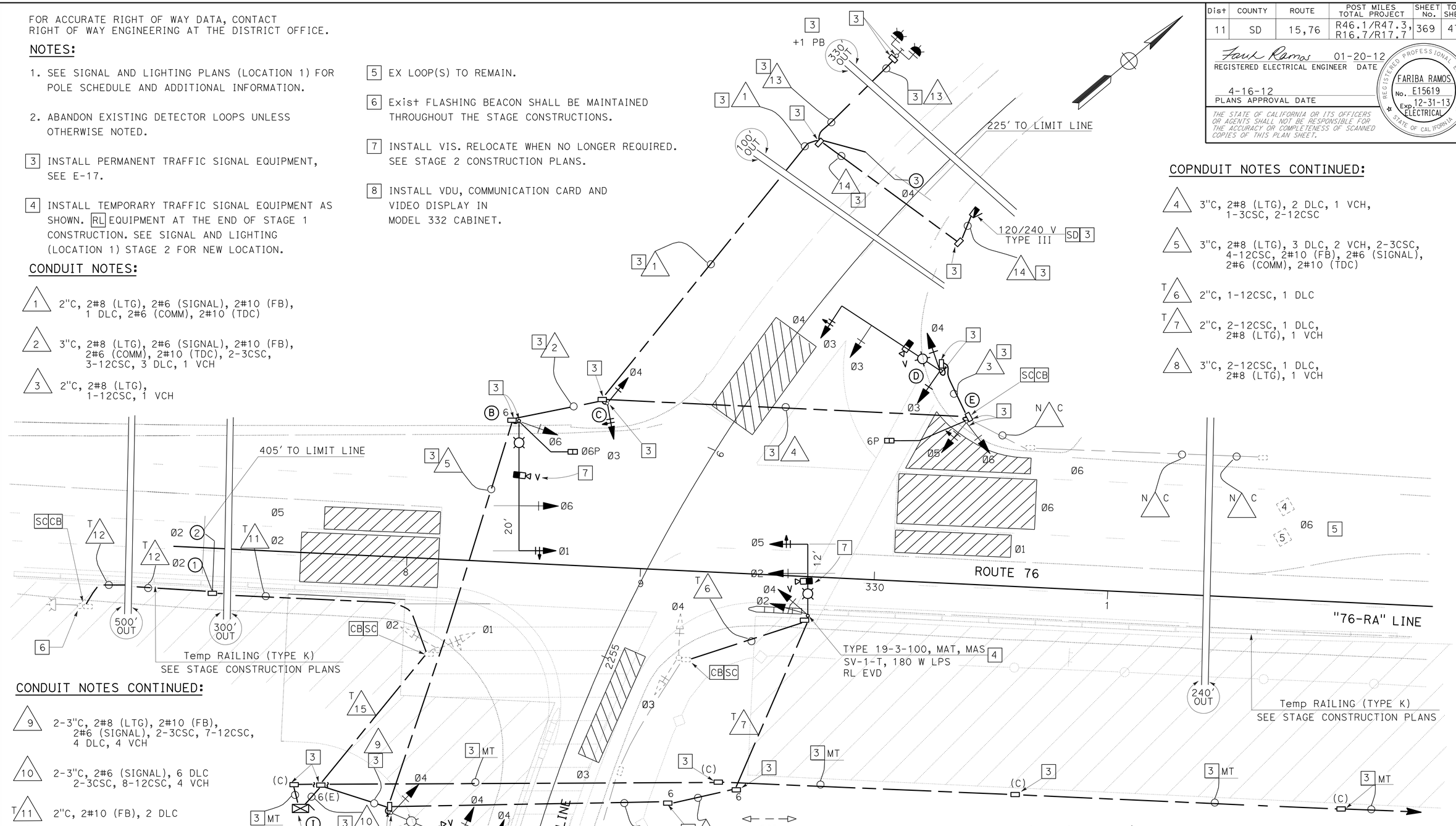

CONDUIT NOTES CONTINUED:

(9) 2-3"C, 2#8 (LTG), 2#10 (FB), 2#6 (SIGNAL), 2-3CSC, 7-12CSC, 4 DLC, 4 VCH

(10) 2-3"C, 2#6 (SIGNAL), 6 DLC 2-3CSC, 8-12CSC, 4 VCH

T (11) 2"C, 2#10 (FB), 2 DLC

T (12) 2"C, 2#10 (FB)

(13) 2"C, 2#10 (FB)

(14) 3"C, 2#8 (LTG), 2#6 (SIGNAL), 4#10 (FB) 2#6 (COMM), 2#10 (TDC)

T (15) 2"C, 1-12CSC, 2 DLC, 2#10 (FB)

TRAFFIC PHASE DIAGRAM
STEADY DEMAND SEQUENCE

SIGNAL AND LIGHTING (LOCATION 1) (STAGE CONSTRUCTION - STAGE 1A)

SCALE: 1" = 20'

E-43

APPROVED FOR ELECTRICAL WORK ONLY

STATE OF CALIFORNIA - DEPARTMENT OF TRANSPORTATION
Caltrans TRAFFIC ELECTRICAL

FUNCTIONAL SUPERVISOR: DALE WILSON
CALCULATED-DESIGNED BY: FARIBA RAMOS
CHECKED BY: ENRIQUE BERNAL
REVISED BY
DATE REVISED

LAST REVISION 01-23-12
DATE PLOTTED => 17-APR-2012
TIME PLOTTED => 16:37

Dist	COUNTY	ROUTE	POST MILES TOTAL PROJECT	SHEET No.	TOTAL SHEETS
11	SD	15,76	R46.1/R47.3, R16.7/R17.7	370	477

Fariba Ramos 01-20-12
REGISTERED ELECTRICAL ENGINEER DATE

4-16-12
PLANS APPROVAL DATE

REGISTERED PROFESSIONAL ENGINEER FARIBA RAMOS No. E15619 Exp. 12-31-13 ELECTRICAL STATE OF CALIFORNIA

THE STATE OF CALIFORNIA OR ITS OFFICERS OR AGENTS SHALL NOT BE RESPONSIBLE FOR THE ACCURACY OR COMPLETENESS OF SCANNED COPIES OF THIS PLAN SHEET.

FOR ACCURATE RIGHT OF WAY DATA, CONTACT
RIGHT OF WAY ENGINEERING AT THE DISTRICT OFFICE.

NOTES:

1. SEE SIGNAL AND LIGHTING PLANS (LOCATION 1) FOR POLE SCHEDULE AND ADDITIONAL INFORMATION.
2. SEE SIGNAL AND LIGHTING (LOCATION 1) STAGE CONSTRUCTION 1 PLANS FOR CIRCUIT CONTINUITY.

[3] INSTALL PERMANENT TRAFFIC SIGNAL EQUIPMEN, SEE E-17.

4. EXISTING PULL BOXES AND CONDUITS TO REMAIN UNLESS OTHERWISE NOTED.

[5] EQUIPMENT INSTALLED IN STAGE 1 CONSTRUCTION TO REMAIN.

[6] INSTALL TEMPORARY TRAFFIC SIGNAL EQUIPMENT AS SHOWN.

[7] SIGNAL HEADS SHALL BE COVERED DURING STAGE 2 CONSTRUCTION.

[9] Ø6 SIGNAL HEAD SHALL BE COVERED DURING STAGE 2 CONSTRUCTION.

[10] PEDESTRIAN SIGNAL HEAD SHALL BE COVERED DURING STAGE 2 CONSTRUCTION.

[11] INSTALL ARROW LENSES FOR Ø5. REMOVE WHEN DIRECTED BY THE ENGINEER.

12. THE CONTRACTOR SHALL MAINTAIN THE Exist FLASHING BEACON LOCATED APPROXIMATELY AT Sta 320+10 "76-RA" LINE FEBT UNTIL THE PERMANENT FB IS INSTALLED,SEE E-17.

[13] RELOCATE VIDEO IMAGE SENSOR WHEN REQUIRED. SEE POLE (B) SIGNAL AND LIGHTING (LOCATION 1).

[14] [RC] SIGNAL STANDARD AND EQUIPMENT WHEN DIRECTED BY THE ENGINEER.

[15] INSTALL 3 SECTION SIGNAL HEAD PER SCM DETAIL, SEE E-42.

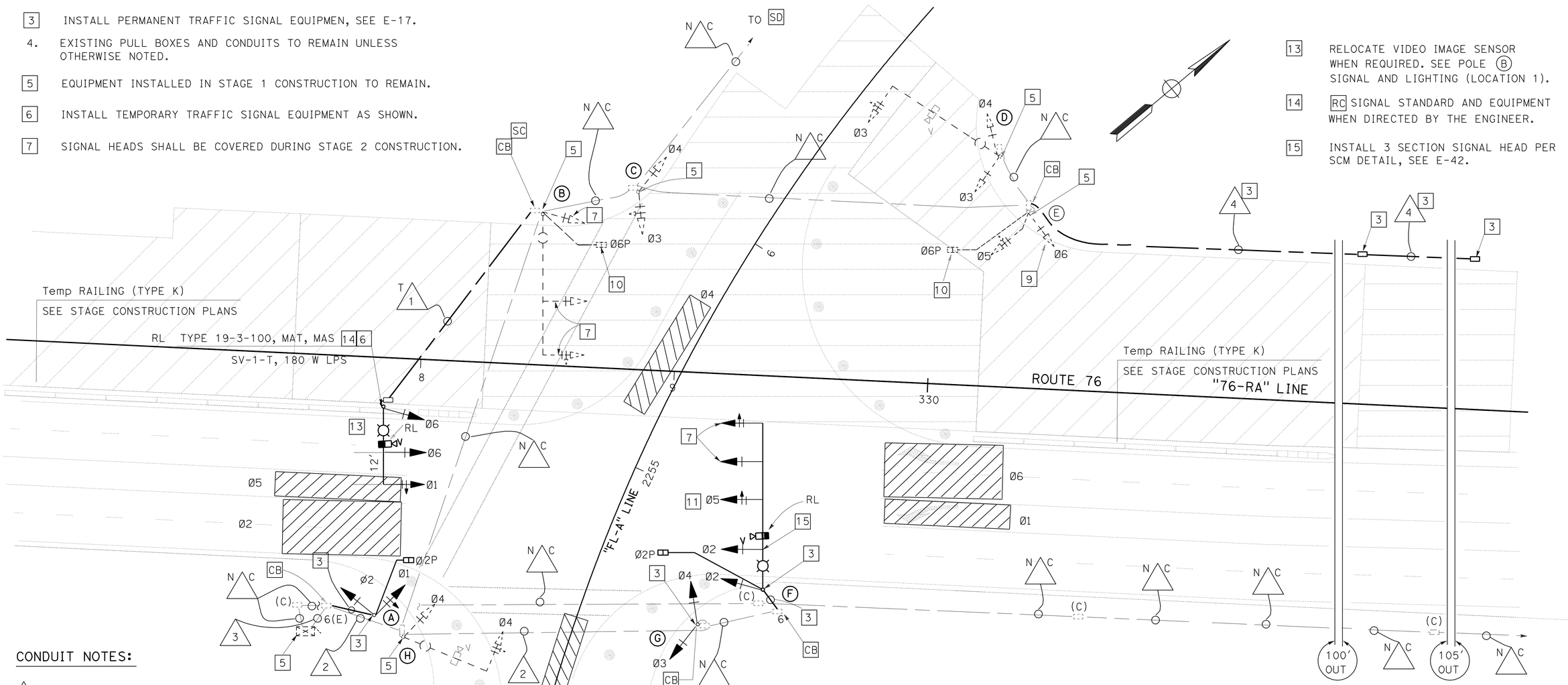

CONDUIT NOTES:

T 1 2"C, 2#8 (LTG), 1-12CSC, 1 VCH

2 ADD 1-3CSC

3 ADD 2-3CSC

4 2"C, MT

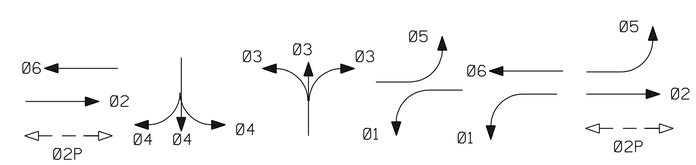

TRAFFIC PHASE DIAGRAM
STEADY DEMAND SEQUENCE

SIGNAL P17.012(76)
PALA ROAD AND
OLD Hwy 395

SIGNAL AND LIGHTING (LOCATION 1) (STAGE CONSTRUCTION - STAGE 2)

SCALE: 1" = 20'

E-44

APPROVED FOR ELECTRICAL WORK ONLY

STATE OF CALIFORNIA - DEPARTMENT OF TRANSPORTATION
Caltrans® TRAFFIC ELECTRICAL

FUNCTIONAL SUPERVISOR: DALE WILSON
CALCULATED-DESIGNED BY: FARIBA RAMOS
CHECKED BY: ENRIQUE BERNAL
REVISED BY
DATE REVISED

LAST REVISION 01-23-12 | DATE PLOTTED => 17-APR-2012 | TIME PLOTTED => 16:38

Dist	COUNTY	ROUTE	POST MILES TOTAL PROJECT	SHEET No.	TOTAL SHEETS
11	SD	15,76	R46.1/R47.3, R16.7/R17.7	371	477

REGISTERED ELECTRICAL ENGINEER 01-20-12 DATE

4-16-12
PLANS APPROVAL DATE

REGISTERED PROFESSIONAL ENGINEER FARIBA RAMOS No. E15619 Exp. 12-31-13 ELECTRICAL STATE OF CALIFORNIA

THE STATE OF CALIFORNIA OR ITS OFFICERS OR AGENTS SHALL NOT BE RESPONSIBLE FOR THE ACCURACY OR COMPLETENESS OF SCANNED COPIES OF THIS PLAN SHEET.

FOR ACCURATE RIGHT OF WAY DATA, CONTACT
RIGHT OF WAY ENGINEERING AT THE DISTRICT OFFICE.

CONDUIT NOTES:

T 1 — 2"C, 2 DLC

2 — Exist 3"C, 2-12CSC, 2#8 (ltg).
ADD 1 VCH

3 — Exist 3"C, 1-12CSC, 2#8 (ltg).
ADD 1 VCH

4 — Exist 3"C, 1-3CSC, 2-12CSC, 2#8 (ltg).
ADD 1 VCH

5 — Exist 3"C, 1-3CSC, 2-12CSC, 4#14 (peu), 2#8 (ltg)
2#10 (count station), 2#10 (icc),
2#2 (sign), 2 evc.
ADD 2 DLC, 1 VCH

6 — Exist 2-3"C, 2-3CSC, 6-12CSC, 2#6 (signal),
2 evc.
ADD 2 DLC, 3 VCH

N C 7 — Exist 3"C, 2#8 (ltg, 15), 2#10 (count station),
2#8 (ltg, 76), 2#6 (signal), 2#10 (icc), 4#14 (peu),
2#2 (sign)

N C 8 — Exist 2"C, 2 sic

T 9 — 2"C, 1 DLC

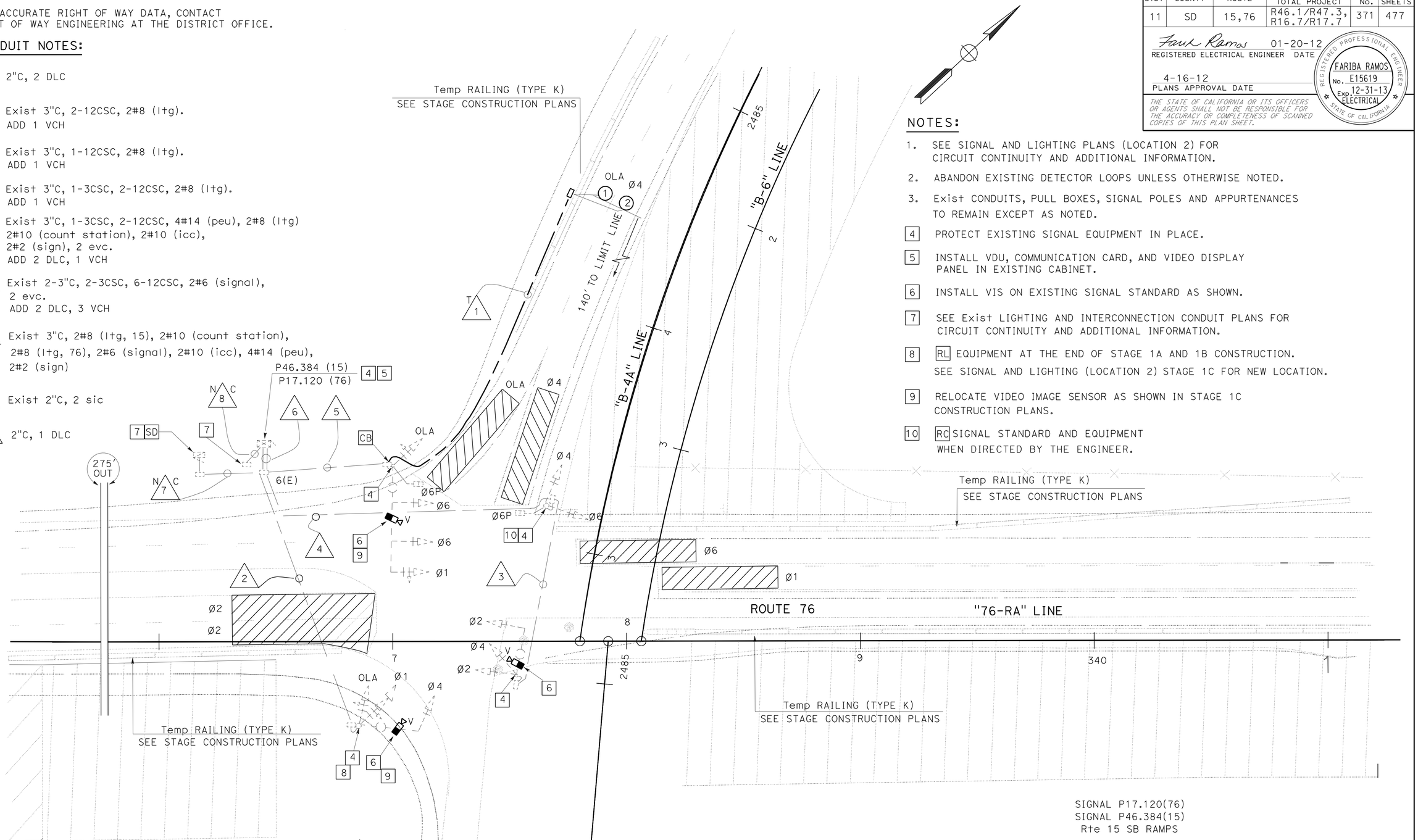

NOTES:

1. SEE SIGNAL AND LIGHTING PLANS (LOCATION 2) FOR CIRCUIT CONTINUITY AND ADDITIONAL INFORMATION.
2. ABANDON EXISTING DETECTOR LOOPS UNLESS OTHERWISE NOTED.
3. Exist CONDUITS, PULL BOXES, SIGNAL POLES AND APPURTENANCES TO REMAIN EXCEPT AS NOTED.

4 — PROTECT EXISTING SIGNAL EQUIPMENT IN PLACE.

5 — INSTALL VDU, COMMUNICATION CARD, AND VIDEO DISPLAY PANEL IN EXISTING CABINET.

6 — INSTALL VIS ON EXISTING SIGNAL STANDARD AS SHOWN.

7 — SEE Exist LIGHTING AND INTERCONNECTION CONDUIT PLANS FOR CIRCUIT CONTINUITY AND ADDITIONAL INFORMATION.

8 — RL EQUIPMENT AT THE END OF STAGE 1A AND 1B CONSTRUCTION. SEE SIGNAL AND LIGHTING (LOCATION 2) STAGE 1C FOR NEW LOCATION.

9 — RELOCATE VIDEO IMAGE SENSOR AS SHOWN IN STAGE 1C CONSTRUCTION PLANS.

10 — RC SIGNAL STANDARD AND EQUIPMENT WHEN DIRECTED BY THE ENGINEER.

SIGNAL P17.120(76)
SIGNAL P46.384(15)
Rte 15 SB RAMPS

TRAFFIC PHASE DIAGRAM

STEADY DEMAND SEQUENCE

APPROVED FOR ELECTRICAL WORK ONLY

SIGNAL AND LIGHTING (LOCATION 2) (STAGE CONSTRUCTION - STAGE 1A AND 1B)

SCALE: 1" = 20'

E-45

STATE OF CALIFORNIA - DEPARTMENT OF TRANSPORTATION
Caltrans TRAFFIC ELECTRICAL

FUNCTIONAL SUPERVISOR: BRIAN PECUS
CALCULATED-DESIGNED BY: FARIBA RAMOS
CHECKED BY: ENRIQUE BERNAL
REVISED BY
DATE REVISED

LAST REVISION 01-23-12
DATE PLOTTED => 17-APR-2012
TIME PLOTTED => 16:38

Dist	COUNTY	ROUTE	POST MILES TOTAL PROJECT	SHEET No.	TOTAL SHEETS
11	SD	15,76	R46.1/R47.3, R16.7/R17.7	372	477

Fariba Ramos 01-20-12
REGISTERED ELECTRICAL ENGINEER DATE

4-16-12
PLANS APPROVAL DATE

REGISTERED PROFESSIONAL ENGINEER FARIBA RAMOS No. E15619 Exp. 12-31-13 ELECTRICAL STATE OF CALIFORNIA

THE STATE OF CALIFORNIA OR ITS OFFICERS OR AGENTS SHALL NOT BE RESPONSIBLE FOR THE ACCURACY OR COMPLETENESS OF SCANNED COPIES OF THIS PLAN SHEET.

FOR ACCURATE RIGHT OF WAY DATA, CONTACT
RIGHT OF WAY ENGINEERING AT THE DISTRICT OFFICE.

NOTES:

1. SEE SIGNAL AND LIGHTING PLANS (LOCATION 2) FOR POLE SCHEDULE AND ADDITIONAL INFORMATION.

2 RC SIGNAL STANDARD AND EQUIPMENT WHEN DIRECTED BY THE ENGINEER.

3 INSTALL PERMANENT TRAFFIC SIGNAL EQUIPMENT, SEE E-20.

4 PROTECT EXISTING SIGNAL EQUIPMENT IN PLACE.

5 COVER YELLOW AND GREEN RIGHT ARROW SIGNAL HEADS.

6 SEE Exist LIGHTING AND INTERCONNECTION CONDUIT PLANS FOR CIRCUIT CONTINUITY AND ADDITIONAL INFORMATION.

7 RL EQUIPMENT AT THE END OF STAGE 1C CONSTRUCTION.
RL VIS FROM STAGES 1A AND 1B.
SEE SIGNAL AND LIGHTING (LOCATION 2) STAGE 1D FOR NEW LOCATION.

8 RL VIS FROM THE PREVIOUS STAGES 1A AND 1B.

9 RL TYPE 19-3-80 STANDARD FROM THE PREVIOUS STAGE CONSTRUCTION. RC sma, SV-2-T, mat.
RL VIS

CONDUIT NOTES:

T 1 2"C, 1-12CSC, 2#8 (LTG)

T 2 2"C, 2-12CSC, 2#8 (LTG), 2 VCH

3 3"C, 2-12CSC, 2#8 (LTG), 2 VCH

4 3"C, 3-12CSC, 2#8 (LTG), 3 VCH

5 Exist 2-3"C, 2-3CSC, 6-12CSC, 2#6 (signal), 2 evc, 3 VCH, 2 dlc.
RC 2-3CSC, 6-12CSC, 2 evc, 3 VCH, 2 dlc.
ADD 3-12CSC, 3 VCH

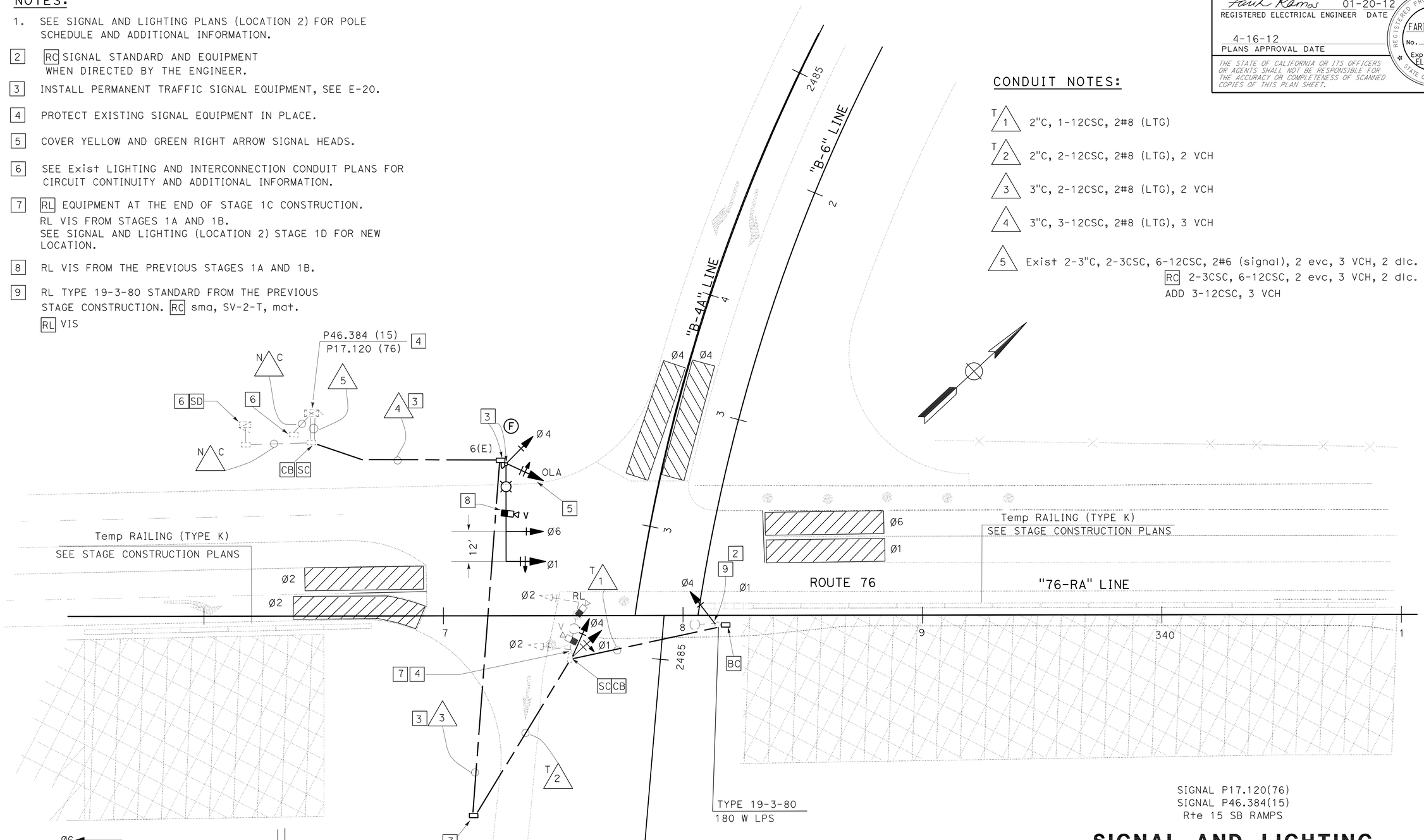

SIGNAL P17.120(76)
SIGNAL P46.384(15)
Rte 15 SB RAMPS

SIGNAL AND LIGHTING (LOCATION 2) STAGE CONSTRUCTION - STAGE 1C

SCALE: 1" = 20'

E-46

APPROVED FOR ELECTRICAL WORK ONLY

STATE OF CALIFORNIA - DEPARTMENT OF TRANSPORTATION
Caltrans® TRAFFIC ELECTRICAL

FUNCTIONAL SUPERVISOR: BRIAN PECUS
CALCULATED-DESIGNED BY: FARIBA RAMOS
CHECKED BY: ENRIQUE BERNAL
REVISED BY
DATE REVISED

LAST REVISION 01-23-12
DATE PLOTTED => 17-APR-2012
TIME PLOTTED => 16:38

Dist	COUNTY	ROUTE	POST MILES TOTAL PROJECT	SHEET No.	TOTAL SHEETS
11	SD	15,76	R46.1/R47.3, R16.7/R17.7	373	477

Fariba Ramos 01-20-12
REGISTERED ELECTRICAL ENGINEER DATE

4-16-12
PLANS APPROVAL DATE

REGISTERED PROFESSIONAL ENGINEER FARIBA RAMOS No. E15619 Exp. 12-31-13 ELECTRICAL STATE OF CALIFORNIA

THE STATE OF CALIFORNIA OR ITS OFFICERS OR AGENTS SHALL NOT BE RESPONSIBLE FOR THE ACCURACY OR COMPLETENESS OF SCANNED COPIES OF THIS PLAN SHEET.

FOR ACCURATE RIGHT OF WAY DATA, CONTACT
RIGHT OF WAY ENGINEERING AT THE DISTRICT OFFICE.

NOTES:

1. SEE SIGNAL AND LIGHTING PLANS (LOCATION 2) FOR POLE SCHEDULE AND ADDITIONAL INFORMATION.

2 RC SIGNAL STANDARD AND EQUIPMENT WHEN DIRECTED BY THE ENGINEER.

3 INSTALL PERMANENT TRAFFIC SIGNAL EQUIPMENT, SEE E-20.

4 PROTECT EXISTING SIGNAL EQUIPMENT IN PLACE.

5 SIGNAL HEADS SHALL BE COVERED DURING STAGE 1D CONSTRUCTION.

6 SEE Exist LIGHTING AND INTERCONNECTION CONDUIT PLANS FOR CIRCUIT CONTINUITY AND ADDITIONAL INFORMATION.

7 SIGNAL EQUIPMENT INSTALLED IN STAGE 1C TO REMAIN.

8 RL VIS. SEE TYPE 33 STANDARD ON SHEET E-48.

CONDUIT NOTES:

T 1 2"C, 1-12CSC, 2#8 (LTG), 1 VCH

2 3"C, 1-12CSC, 2#8 (LTG), 1 VCH

3 3"C, 2-12CSC, 2#8 (LTG), 2 VCH

4 Exist 3"C, 2-12CSC, 2#8 (LTG), 2 VCH

5 Exist 3"C, 3-12CSC, 3 VCH, 2#8 (ltg)

6 Exist 2-3"C, 3-12CSC, 2#6 (signal), 3 VCH

7 3"C, 1-12CSC, 2#8 (LTG)

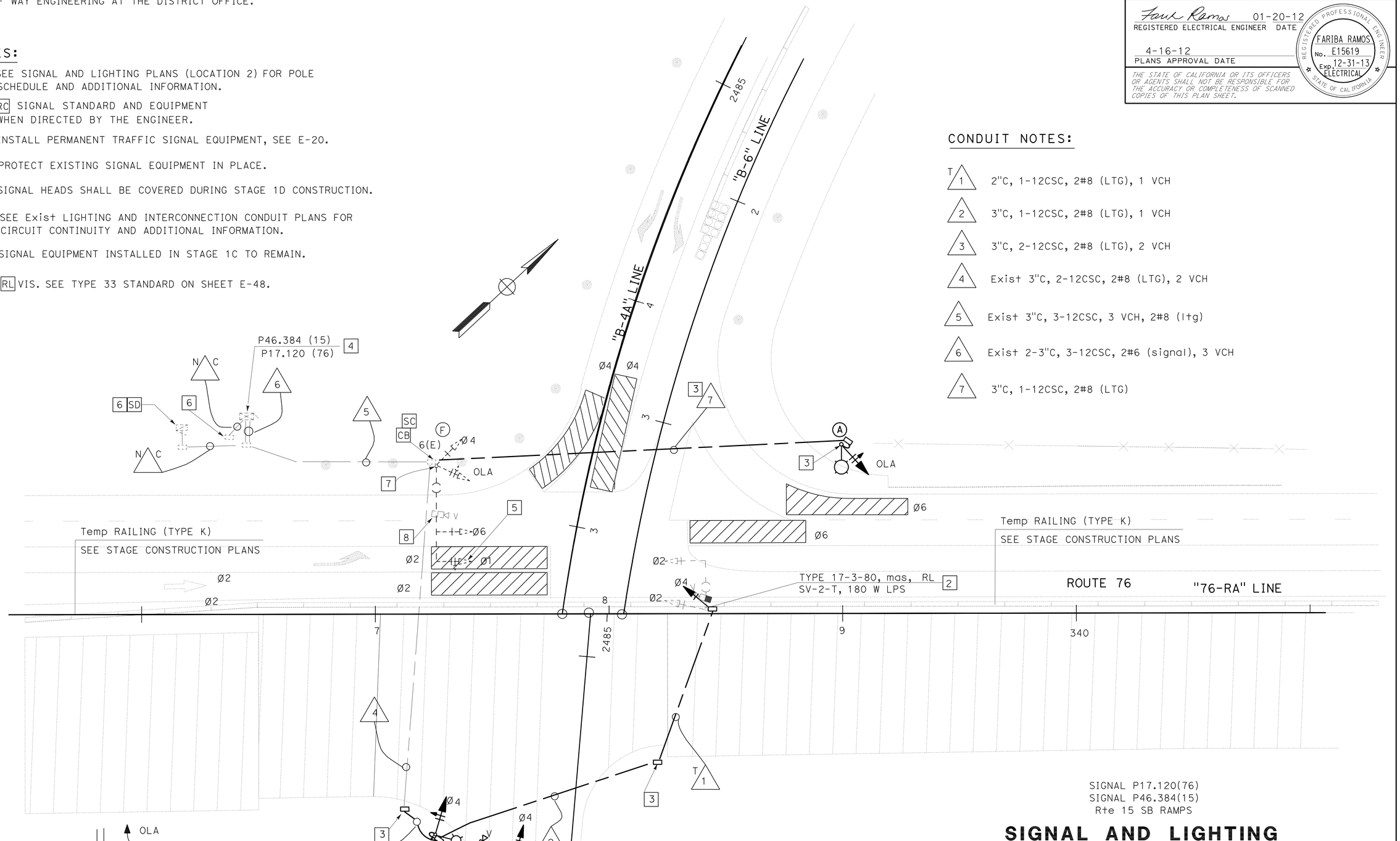

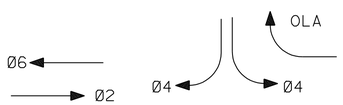

TRAFFIC PHASE DIAGRAM
STEADY DEMAND SEQUENCE

APPROVED FOR ELECTRICAL WORK ONLY

SIGNAL P17.120(76)
SIGNAL P46.384(15)
Rte 15 SB RAMPS

SIGNAL AND LIGHTING (LOCATION 2) (STAGE CONSTRUCTION - STAGE 1D)

SCALE: 1" = 20'

E-47

STATE OF CALIFORNIA - DEPARTMENT OF TRANSPORTATION
Caltrans TRAFFIC ELECTRICAL

FUNCTIONAL SUPERVISOR: BRIAN PECUS
CALCULATED-DESIGNED BY: FARIBA RAMOS
CHECKED BY: ENRIQUE BERNAL
REVISED BY
DATE REVISED

LAST REVISION 01-23-12
DATE PLOTTED => 17-APR-2012
TIME PLOTTED => 16:38

Dist	COUNTY	ROUTE	POST MILES TOTAL PROJECT	SHEET No.	TOTAL SHEETS
11	SD	15,76	R46.1/R47.3, R16.7/R17.7	374	477

Fariba Ramos 01-20-12
REGISTERED ELECTRICAL ENGINEER DATE

4-16-12
PLANS APPROVAL DATE

REGISTERED PROFESSIONAL ENGINEER FARIBA RAMOS No. E15619 Exp. 12-31-13 ELECTRICAL STATE OF CALIFORNIA

THE STATE OF CALIFORNIA OR ITS OFFICERS OR AGENTS SHALL NOT BE RESPONSIBLE FOR THE ACCURACY OR COMPLETENESS OF SCANNED COPIES OF THIS PLAN SHEET.

FOR ACCURATE RIGHT OF WAY DATA, CONTACT
RIGHT OF WAY ENGINEERING AT THE DISTRICT OFFICE.

NOTES:

1. SEE SIGNAL AND LIGHTING PLANS (LOCATION 2) FOR POLE SCHEDULE AND ADDITIONAL INFORMATION.

2 RC SIGNAL STANDARD AND EQUIPMENT WHEN DIRECTED BY THE ENGINEER.

3 INSTALL PERMANENT TRAFFIC SIGNAL EQUIPMENT, SEE E-20.

4 PROTECT EXISTING SIGNAL EQUIPMENT IN PLACE.

5 SIGNAL HEADS SHALL BE COVERED DURING STAGE 2 CONSTRUCTION.

6 SEE Exist LIGHTING AND INTERCONNECTION CONDUIT PLANS FOR CIRCUIT CONTINUITY AND ADDITIONAL INFORMATION.

7 SIGNAL EQUIPMENT INSTALLED IN PREVIOUS STAGE CONSTRUCTIO1C TO REMAIN.

CONDUIT NOTES:

T 1 2"C, 1-12CSC, 1 VCH

2 Exist 3"C, 1-12CSC, 2#8 (ltg), 1 VCH
ADD 1-3CSC

3 2"C, 1-12CSC, 1-3CSC

4 Exist 3"C, 2-12CSC, 2#8 (ltg), 2 VCH
ADD 1-3CSC

5 Exist 3"C, 2-12csc, 2#8 (ltg), 2 VCH
ADD 2-3CSC

6 Exist 3"C, 3-12CSC, 2#8 (ltg), 3 VCH. RC 1 VCH.
ADD 1-12CSC, 2-3CSC

7 Exist 2-3"C, 3-12CSC, 2#6 (signal), 3 VCH. RC 1 VCH.
ADD 2-12CSC, 2-3CSC, 1 VCH

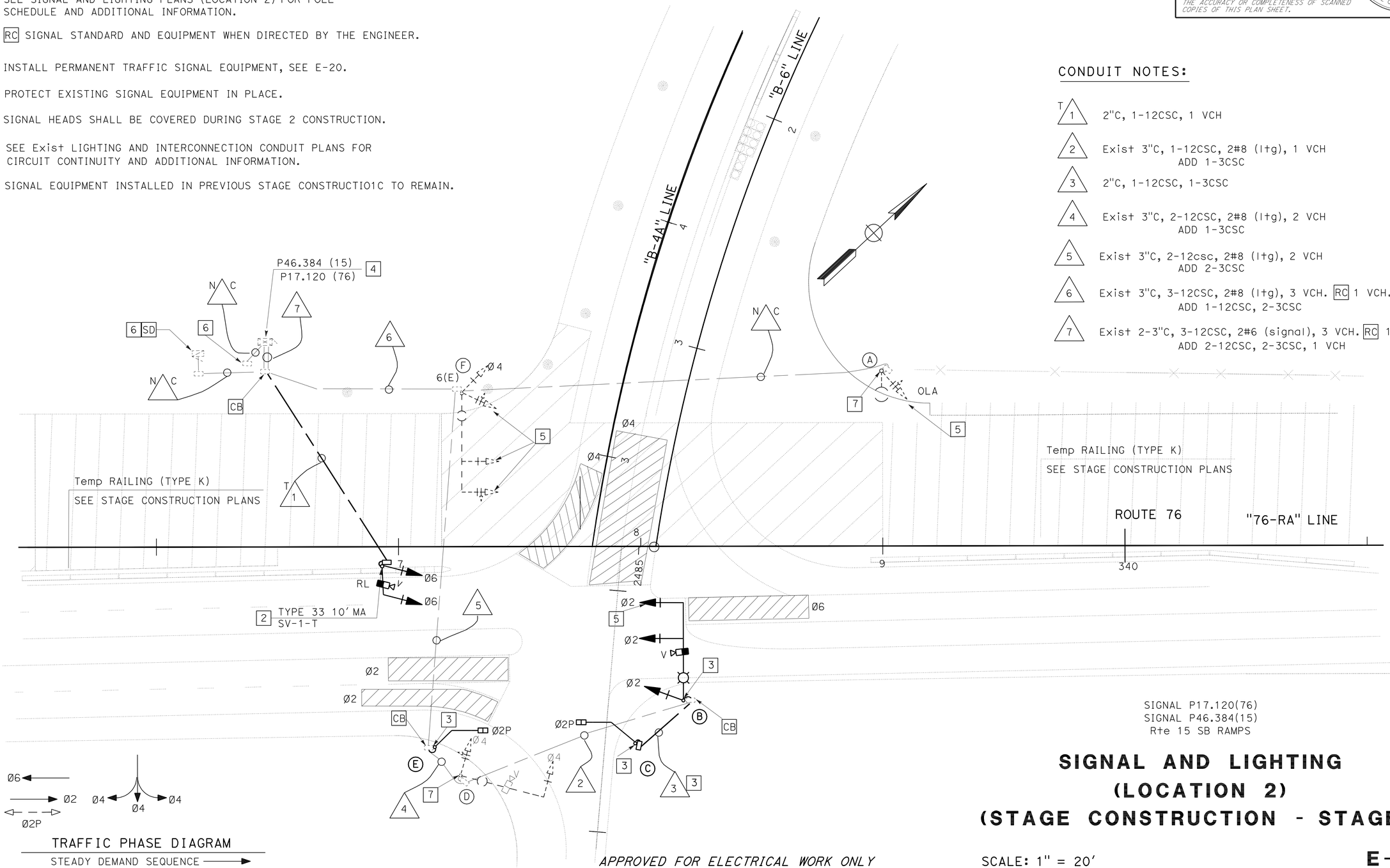

SIGNAL P17.120(76)
SIGNAL P46.384(15)
Rte 15 SB RAMPS

SIGNAL AND LIGHTING (LOCATION 2) (STAGE CONSTRUCTION - STAGE 2)

APPROVED FOR ELECTRICAL WORK ONLY

SCALE: 1" = 20'

E-48

STATE OF CALIFORNIA - DEPARTMENT OF TRANSPORTATION
Caltrans® TRAFFIC ELECTRICAL

FUNCTIONAL SUPERVISOR: BRIAN PECUS
CALCULATED-DESIGNED BY: FARIBA RAMOS
CHECKED BY: ENRIQUE BERNAL
REVISED BY / DATE REVISED

LAST REVISION 01-23-12
DATE PLOTTED => 17-APR-2012
TIME PLOTTED => 16:38

Dist	COUNTY	ROUTE	POST MILES TOTAL PROJECT	SHEET No.	TOTAL SHEETS
11	SD	15,76	R46.1/R47.3, R16.7/R17.7	375	477

REGISTERED ELECTRICAL ENGINEER 01-20-12 DATE

4-16-12
PLANS APPROVAL DATE

REGISTERED PROFESSIONAL ENGINEER FARIBA RAMOS No. E15619 Exp. 12-31-13 ELECTRICAL STATE OF CALIFORNIA

THE STATE OF CALIFORNIA OR ITS OFFICERS OR AGENTS SHALL NOT BE RESPONSIBLE FOR THE ACCURACY OR COMPLETENESS OF SCANNED COPIES OF THIS PLAN SHEET.

FOR ACCURATE RIGHT OF WAY DATA, CONTACT RIGHT OF WAY ENGINEERING AT THE DISTRICT OFFICE.

NOTES:

1. INSTALL VIDEO IMAGE SENSOR.
2. INSTALL VDU, COMMUNICATION CARD AND VIDEO DISPLAY IN MODEL 332 CABINET.
3. ALL CONDUCTORS/CABLES ARE EXISTING UNLESS OTHERWISE NOTED.
4. RELOCATE VIDEO IMAGE SENSOR WHEN REQUIRED. SEE POLE (C) ON SHEET E-50.
5. RC Exist SIGNAL, LIGHTING STANDARD AND ASSOCIATED EQUIPMENT WHEN NO LONGER REQUIRED.

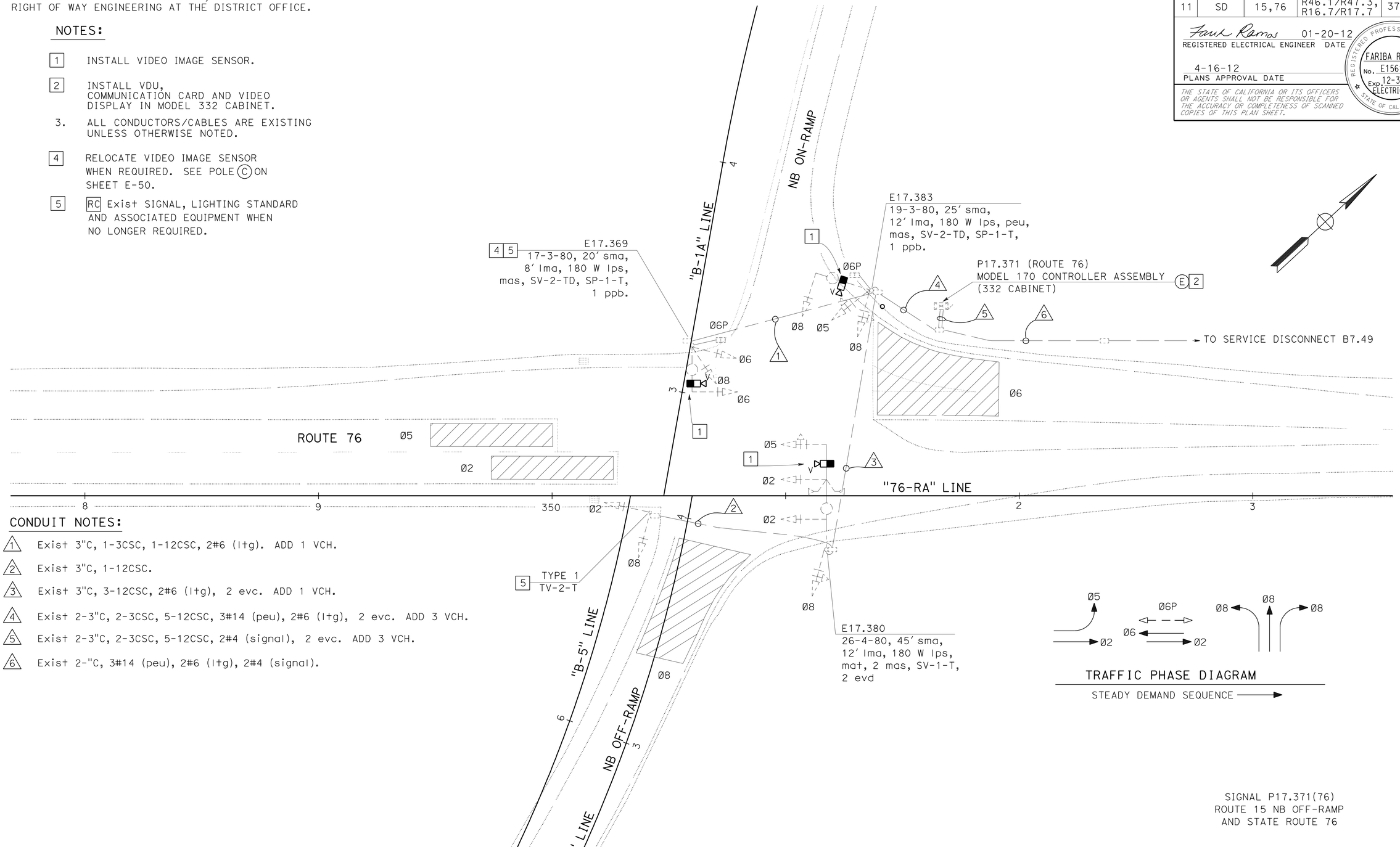

CONDUIT NOTES:

1. Exist 3"C, 1-3CSC, 1-12CSC, 2#6 (ltg). ADD 1 VCH.
2. Exist 3"C, 1-12CSC.
3. Exist 3"C, 3-12CSC, 2#6 (ltg), 2 evc. ADD 1 VCH.
4. Exist 2-3"C, 2-3CSC, 5-12CSC, 3#14 (peu), 2#6 (ltg), 2 evc. ADD 3 VCH.
5. Exist 2-3"C, 2-3CSC, 5-12CSC, 2#4 (signal), 2 evc. ADD 3 VCH.
6. Exist 2-"C, 3#14 (peu), 2#6 (ltg), 2#4 (signal).

SIGNAL P17.371(76)
ROUTE 15 NB OFF-RAMP
AND STATE ROUTE 76

SIGNAL AND LIGHTING (LOCATION 3) (STAGE CONSTRUCTION STAGE 1A TO STAGE 1C)

APPROVED FOR ELECTRICAL WORK ONLY

SCALE: 1" = 20'

E-49

REVISED BY | DATE REVISED
FARIBA RAMOS | ENRIQUE BERNAL
CALCULATED-DESIGNED BY | CHECKED BY
FUNCTIONAL SUPERVISOR | DALE WILSON

STATE OF CALIFORNIA - DEPARTMENT OF TRANSPORTATION
Caltrans® TRAFFIC ELECTRICAL

LAST REVISION 01-10-12 | DATE PLOTTED => 17-APR-2012 TIME PLOTTED => 16:38

Dist	COUNTY	ROUTE	POST MILES TOTAL PROJECT	SHEET No.	TOTAL SHEETS
11	SD	15,76	R46.1/R47.3, R16.7/R17.7	376	477

REGISTERED ELECTRICAL ENGINEER 01-20-12 DATE

4-16-12
PLANS APPROVAL DATE

REGISTERED PROFESSIONAL ENGINEER FARIBA RAMOS No. E15619 Exp. 12-31-13 ELECTRICAL STATE OF CALIFORNIA

THE STATE OF CALIFORNIA OR ITS OFFICERS OR AGENTS SHALL NOT BE RESPONSIBLE FOR THE ACCURACY OR COMPLETENESS OF SCANNED COPIES OF THIS PLAN SHEET.

FOR ACCURATE RIGHT OF WAY DATA, CONTACT RIGHT OF WAY ENGINEERING AT THE DISTRICT OFFICE.

NOTES:

1. INSTALL ARROW LENSES, THIS STAGE, REMOVE WHEN DIRECTED BY THE ENGINEER.
2. REMOVE SIGNAL HEADS THIS STAGE.
3. ALL CONDUCTORS/CABLES ARE EXISTING UNLESS OTHERWISE NOTED.
4. PERMANENT SIGNAL EQUIPMENT, SEE SHEET E-23.
5. RL EQUIPMENT WHEN DIRECTED BY THE ENGINEER.
6. RC WHEN NO LONGER REQUIRED.
7. RELOCATE VIDEO IMAGE SENSOR WHEN REQUIRED. SEE NOTE 3 ON SHEET E-51.

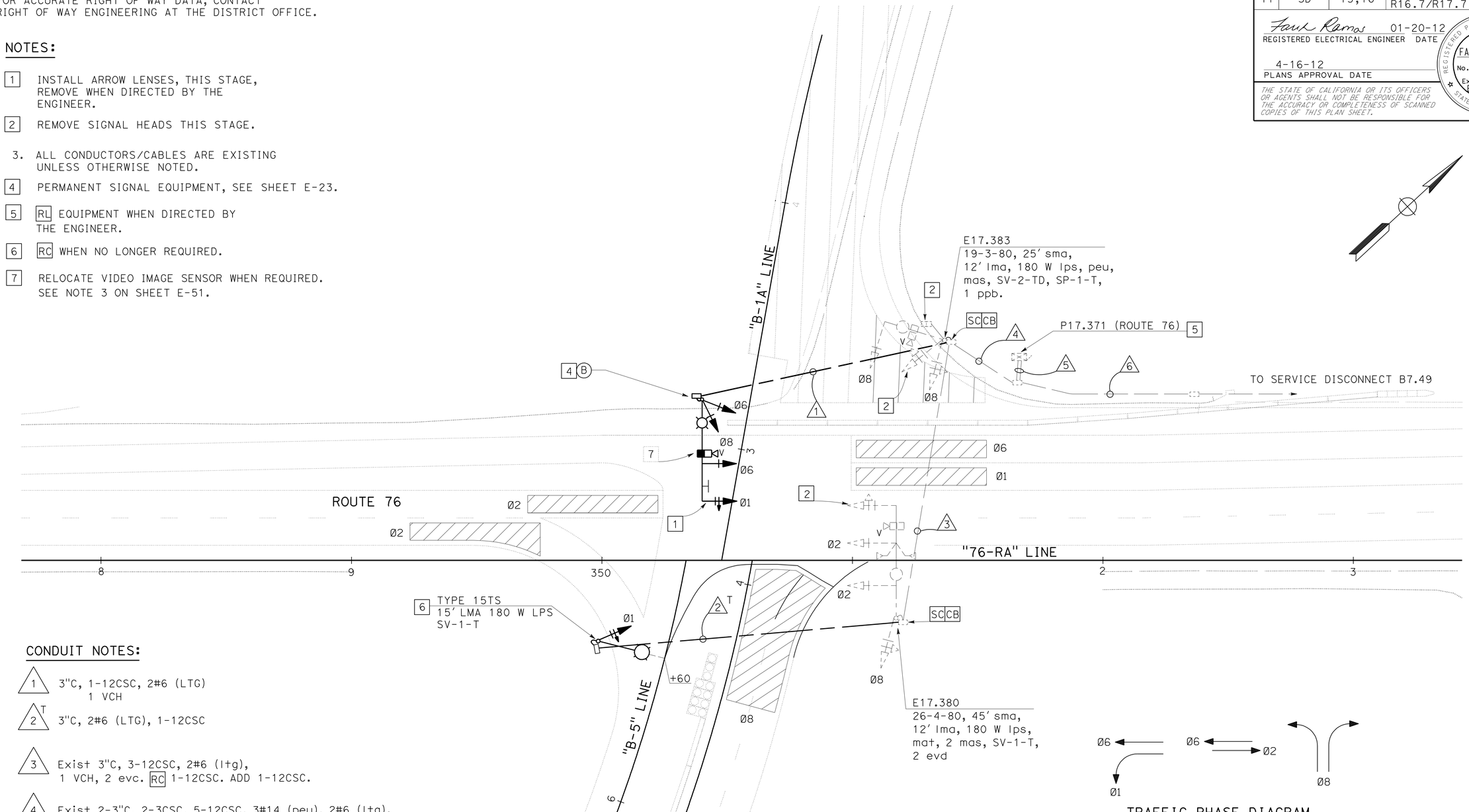

CONDUIT NOTES:

1. 3"C, 1-12CSC, 2#6 (LTG) 1 VCH
2. T 3"C, 2#6 (LTG), 1-12CSC
3. Exist 3"C, 3-12CSC, 2#6 (ltg), 1 VCH, 2 evc. RC 1-12CSC. ADD 1-12CSC.
4. Exist 2-3"C, 2-3CSC, 5-12CSC, 3#14 (peu), 2#6 (ltg), 2 evc. RC 2-3CSC, 1-12CSC.
5. Exist 2-3"C, 2-3CSC, 5-12CSC, 2#4 (signal), 2 evc, 3 VCH. RC 1 VCH, 2-3CSC, 1-12CSC. ADD 1 VCH
6. Exist 2"C, 3#14 (peu), 2#6 (ltg), 2#4 (signal).

APPROVED FOR ELECTRICAL WORK ONLY

SIGNAL P17.371(76)
ROUTE 15 NB OFF-RAMP
AND STATE ROUTE 76

SIGNAL AND LIGHTING (LOCATION 3) (STAGE CONSTRUCTION - STAGE 1D)

SCALE: 1" = 20'

E-50

STATE OF CALIFORNIA - DEPARTMENT OF TRANSPORTATION
Caltrans® TRAFFIC ELECTRICAL

FUNCTIONAL SUPERVISOR: DALE WILSON
CALCULATED-DESIGNED BY: ENRIQUE BERNAL
CHECKED BY: FARIBA RAMOS
REVISED BY
DATE REVISED

LAST REVISION 01-23-12
DATE PLOTTED => 17-APR-2012
TIME PLOTTED => 16:38

Dist	COUNTY	ROUTE	POST MILES TOTAL PROJECT	SHEET No.	TOTAL SHEETS
11	SD	15,76	R46.1/R47.3, R16.7/R17.7	377	477

Fariba Ramos 01-20-12
REGISTERED ELECTRICAL ENGINEER DATE

4-16-12
PLANS APPROVAL DATE

REGISTERED PROFESSIONAL ENGINEER FARIBA RAMOS No. E15619 Exp. 12-31-13 ELECTRICAL STATE OF CALIFORNIA

THE STATE OF CALIFORNIA OR ITS OFFICERS OR AGENTS SHALL NOT BE RESPONSIBLE FOR THE ACCURACY OR COMPLETENESS OF SCANNED COPIES OF THIS PLAN SHEET.

FOR ACCURATE RIGHT OF WAY DATA, CONTACT RIGHT OF WAY ENGINEERING AT THE DISTRICT OFFICE.

NOTES:

1. EQUIPMENT, CONDUIT AND PULL BOXES SHOWN AS EXISTING ARE ULTIMATE, SEE SHEET E-23.

2. PERMANENT SIGNAL EQUIPMENT, SEE E-23.

3. RELOCATE TO LOCATION 3 WHEN NO LONGER REQUIRED, SEE SHEET E-23.

4. COVER PEDESTRIAN SIGNAL HEADS THIS STAGE.

5. COVER SIGNAL HEADS THIS STAGE.

6. RC SIGNAL STANDARD AND EQUIPMENT WHEN DIRECTED BY THE ENGINEER.

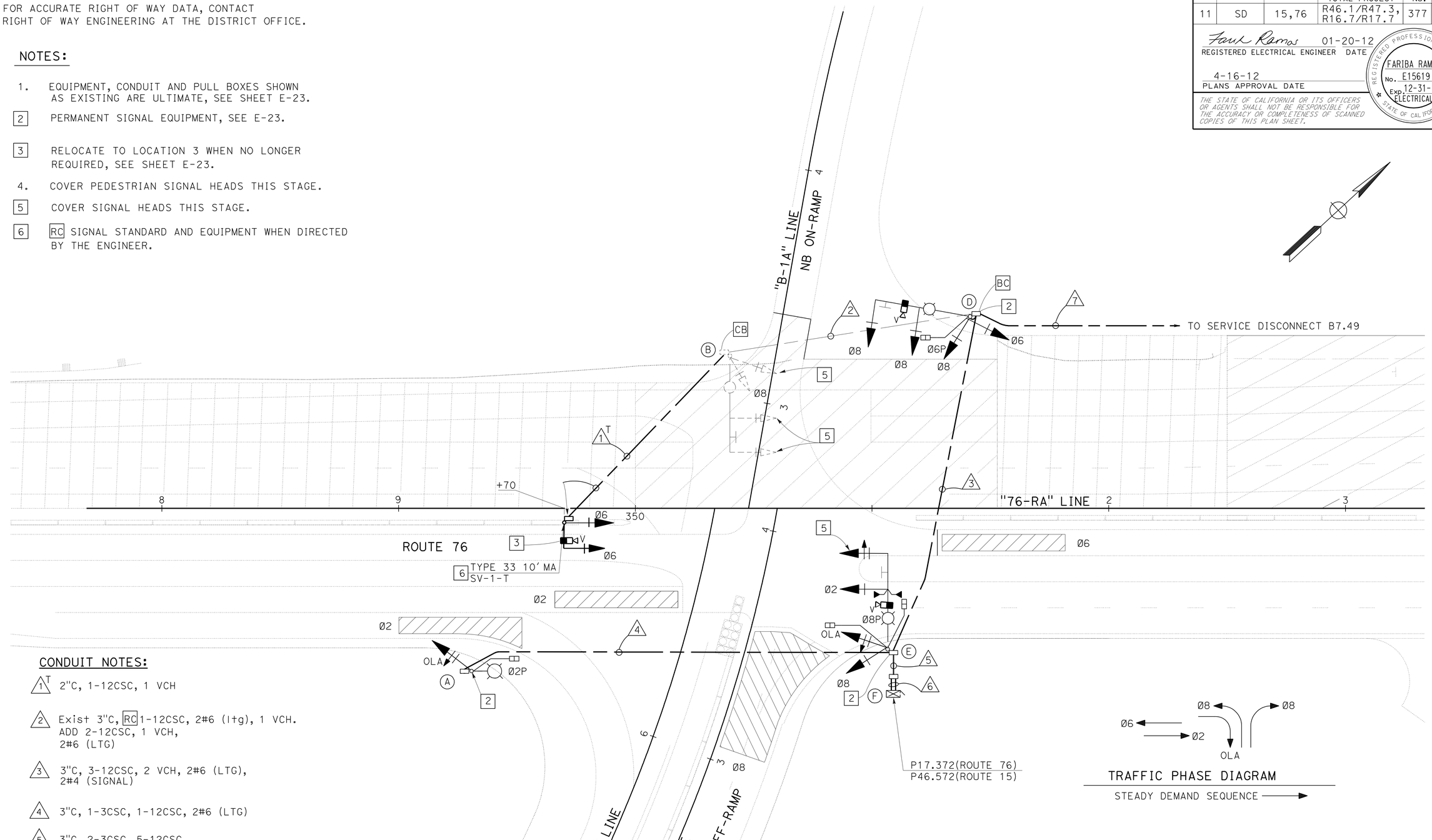

CONDUIT NOTES:

1. 2"C, 1-12CSC, 1 VCH

2. Exist 3"C, RC 1-12CSC, 2#6 (ltg), 1 VCH. ADD 2-12CSC, 1 VCH, 2#6 (LTG)

3. 3"C, 3-12CSC, 2 VCH, 2#6 (LTG), 2#4 (SIGNAL)

4. 3"C, 1-3CSC, 1-12CSC, 2#6 (LTG)

5. 3"C, 2-3CSC, 5-12CSC, 2#4 (SIGNAL), 3 VCH

6. 2-3"C, 2-3CSC, 5-12CSC, 2#4 (SIGNAL)

7. 3"C, 2#4 (SIGNAL), 2#6 (LTG)

APPROVED FOR ELECTRICAL WORK ONLY

SIGNAL P17.372 (ROUTE 76)
ROUTE 15 NB OFF-RAMP
AND STATE ROUTE 76

SIGNAL AND LIGHTING (LOCATION 3) (STAGE CONSTRUCTION - STAGE 2)

SCALE: 1" = 20'

E-51

STATE OF CALIFORNIA - DEPARTMENT OF TRANSPORTATION
Caltrans® TRAFFIC ELECTRICAL

FUNCTIONAL SUPERVISOR: DALE WILSON
CALCULATED-DESIGNED BY: FARIBA RAMOS
CHECKED BY: ENRIQUE BERNAL
REVISED BY / DATE REVISED

LAST REVISION 01-23-12
DATE PLOTTED => 17-APR-2012
TIME PLOTTED => 16:38

DIST	COUNTY	ROUTE	POST MILES TOTAL PROJECT	SHEET No	TOTAL SHEETS
11	SD	15,76	R46.1/R47.3, R16.7/R17.7	378	477

Eliseo Lopez 1-11-12
REGISTERED CIVIL ENGINEER DATE

4-16-12
PLANS APPROVAL DATE

REGISTERED PROFESSIONAL ENGINEER ELISEO LOPEZ No. C72910 Exp. 12/31/12 CIVIL STATE OF CALIFORNIA

The State of California or its officers or agents shall not be responsible for the accuracy or completeness of electronic copies of this plan sheet.

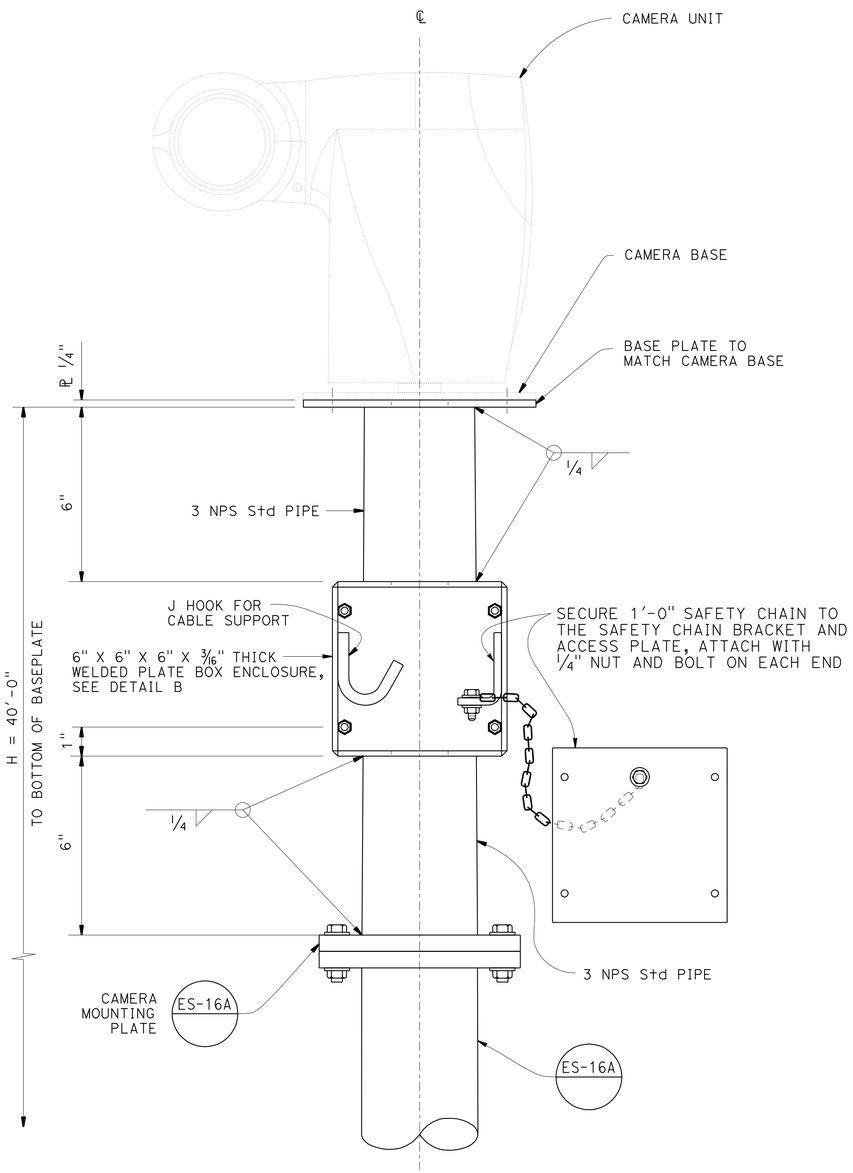

DETAIL A
MODIFIED CCTV 40 POLE

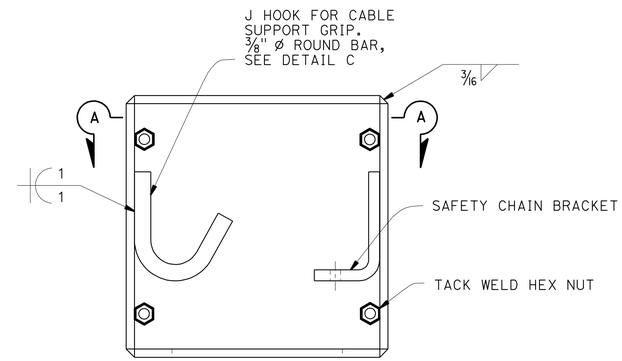

DETAIL B
BOX ENCLOSURE

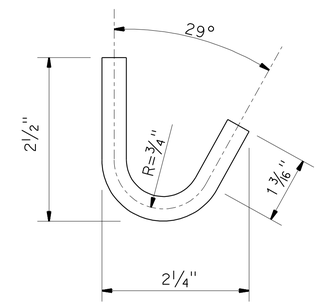

DETAIL C
J HOOK

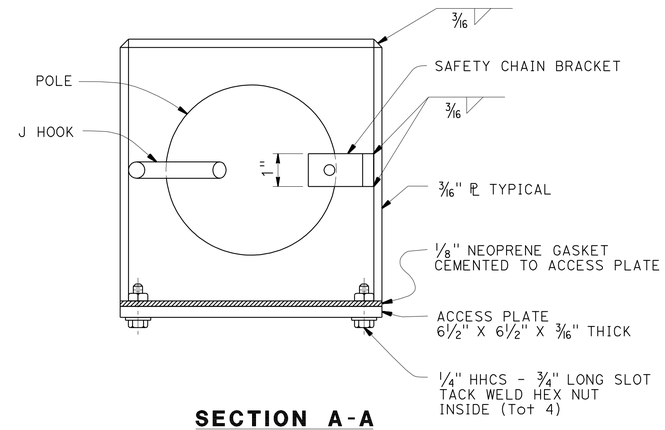

SECTION A-A

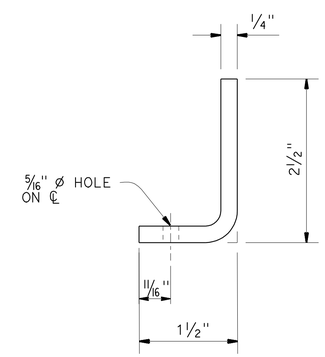

DETAIL D
SAFETY CHAIN BRACKET

NOTES:

1. For details not shown, See "2006 Standard Plans ES-16A" and "2006 Revised Standard Plans".

NOTE:
THE CONTRACTOR SHALL VERIFY ALL CONTROLLING FIELD DIMENSIONS BEFORE ORDERING OR FABRICATING ANY MATERIAL.

BRANCH CHIEF JEFF WOODY	DESIGN	BY E LOPEZ	CHECKED D VORA
	DETAILS	BY D W JUSTICE Jr	CHECKED E LOPEZ
	QUANTITIES	BY	CHECKED

STATE OF CALIFORNIA
DEPARTMENT OF TRANSPORTATION

DIVISION OF ENGINEERING SERVICES
DESIGN AND TECHNICAL SERVICES
SPECIAL DESIGNS BRANCH A

BRIDGE NO. N/A
POST MILE

CLOSED CIRCUIT TELEVISION SYSTEM
CAMERA MOUNTING DETAILS

SES-1

(ENGLISH) SPECIAL DESIGNS BRANCH BORDER SHEET (REV. 7-1-09)

ORIGINAL SCALE IN INCHES FOR REDUCED PLANS 0 1 2 3

UNIT: 3619
PROJECT NUMBER & PHASE: 1100020469-1
CONTRACT NO.: 11-257141

DISREGARD PRINTS BEARING EARLIER REVISION DATES

REVISION DATES 1-11-12 | SHEET | OF

FILE => spec_des_br_prj/2012sd/11-257141/11-257141_ses1.dgn

USERNAME => s124496 DATE PLOTTED => 17-APR-2012 TIME PLOTTED => 11:28

DIST	COUNTY	ROUTE	POST MILES TOTAL PROJECT	SHEET NO.	TOTAL SHEETS
11	SD	15,76	R46.1/R47.3, R16.7/R17.7	379	477

REGISTERED CIVIL ENGINEER

June 6, 2008
PLANS APPROVAL DATE

REGISTERED PROFESSIONAL ENGINEER
Donald E. Howe
No. C46402
Exp. 3-31-09
CIVIL
STATE OF CALIFORNIA

The State of California or its officers or agents shall not be responsible for the accuracy or completeness of electronic copies of this plan sheet.

To accompany plans dated 4-16-12

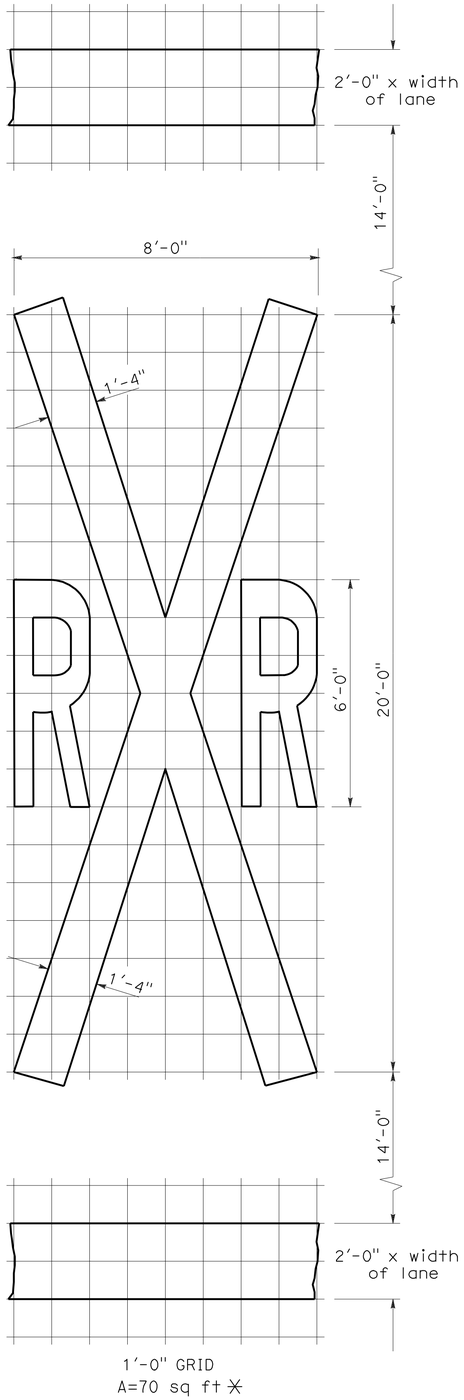

RAILROAD CROSSING SYMBOL

✳70 sq ft DOES NOT INCLUDE THE 2'-0" x VARIABLE WIDTH TRANSVERSE LINES.

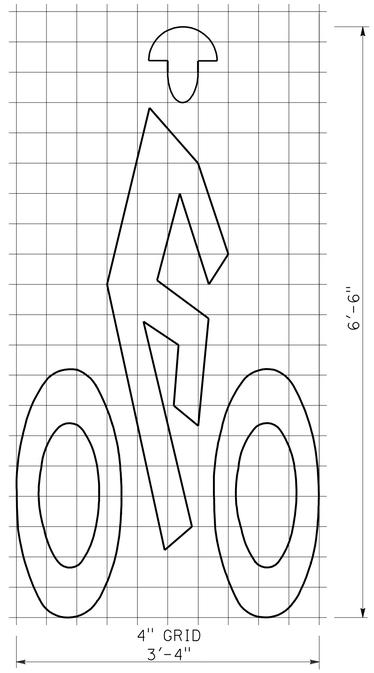

BIKE LANE SYMBOL

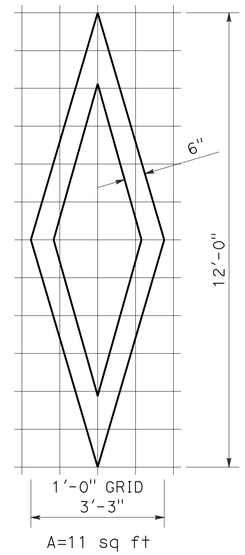

DIAMOND SYMBOL

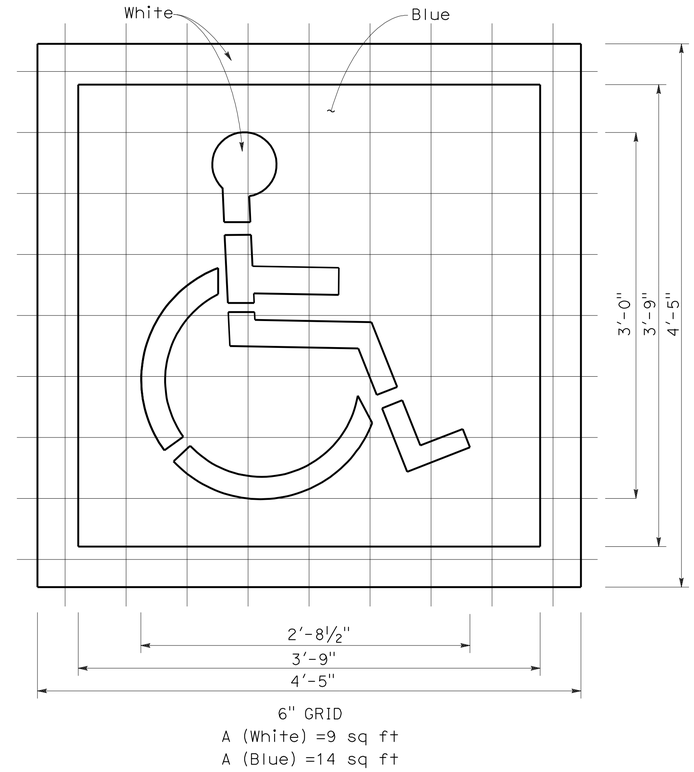

INTERNATIONAL SYMBOL OF ACCESSIBILITY MARKING

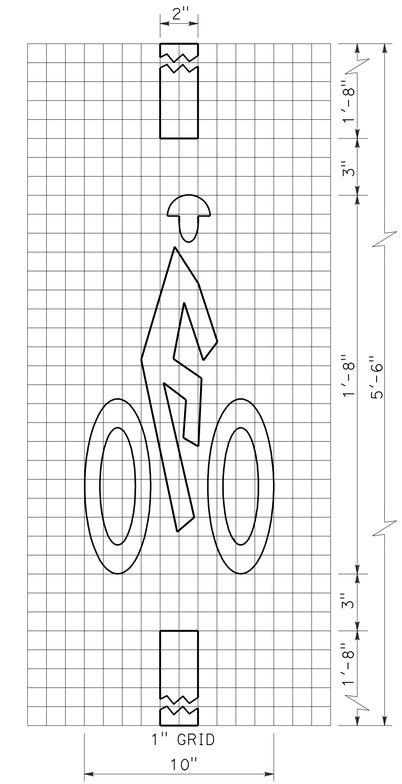

BICYCLE LOOP DETECTOR SYMBOL

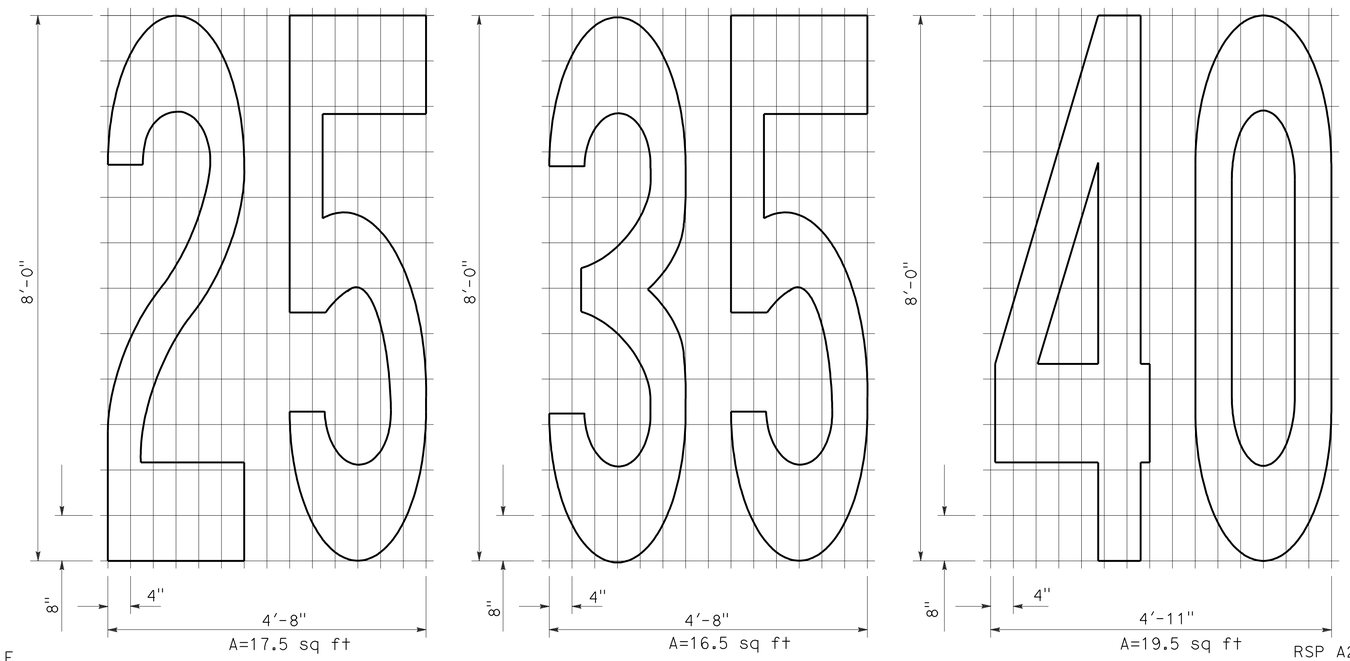

NUMERALS

NOTE:

1. Minor variations in dimensions may be accepted by the Engineer.

STATE OF CALIFORNIA
DEPARTMENT OF TRANSPORTATION

PAVEMENT MARKINGS SYMBOLS AND NUMERALS

NO SCALE

RSP A24C DATED JUNE 6, 2008 SUPERSEDES STANDARD PLAN A24C DATED MAY 1, 2006 - PAGE 11 OF THE STANDARD PLANS BOOK DATED MAY 2006.

REVISED STANDARD PLAN RSP A24C

2006 REVISED STANDARD PLAN RSP A24C

5-27-08

DIST	COUNTY	ROUTE	POST MILES TOTAL PROJECT	SHEET NO.	TOTAL SHEETS
11	SD	15,76	R46.1/R47.3, R16.7/R17.7	380	477

REGISTERED CIVIL ENGINEER

November 17, 2006
PLANS APPROVAL DATE

REGISTERED PROFESSIONAL ENGINEER Dallas Forester No. C37765 Exp. 12-31-06 CIVIL STATE OF CALIFORNIA

The State of California or its officers or agents shall not be responsible for the accuracy or completeness of electronic copies of this plan sheet.

To accompany plans dated 4-16-12

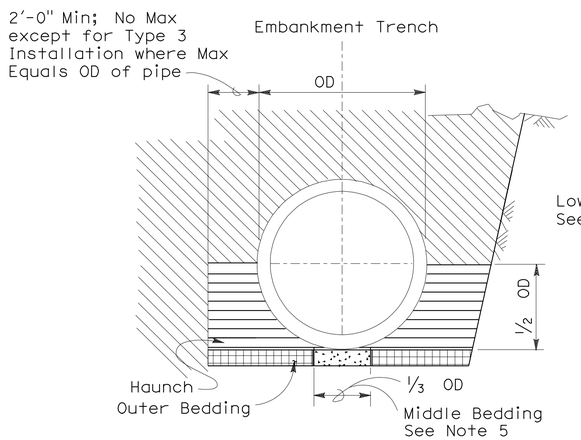

BACKFILL

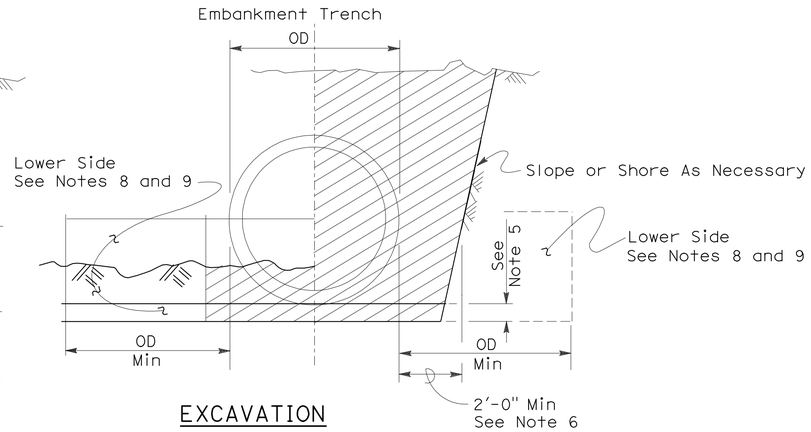

EXCAVATION

Roadway Embankment

Structure Backfill (Culvert) See Note 6

Structure Backfill (Culvert) See Note 6

Loose Backfill

Excavation Structure (Culvert)

TYPE 1 INSTALLATION:

The haunch and outer bedding shall be compacted to a minimum 90 percent relative compaction. In addition, the minimum sand equivalent in these areas shall be 30 and the maximum percentage passing the 75 μm sieve size shall be 12.

TYPE 2 INSTALLATION:

The haunch and outer bedding shall be compacted to a minimum 90 percent relative compaction. In addition, the minimum sand equivalent in these areas shall be 25.

TYPE 3 INSTALLATION:

The haunch and outer bedding shall be compacted to a minimum 85 percent relative compaction. 90 percent relative compaction will be required where the fill over the pipe is less than 4'-0" or 1/2 OD.

INSTALLATION TYPE 1

MINIMUM CLASS AND D-LOAD	COVER	
	108" Dia AND SMALLER	OVER 108" Dia
Class II 1000D	14.9'	12.9'
Class III 1350D	15.0' - 20.9'	13.0' - 18.9'
Class III Special 1700D	21.0' - 26.9'	19.0' - 24.9'
Class IV 2000D	27.0' - 31.9'	25.0' - 29.9'
Class IV Special 2500D	32.0' - 40.9'	30.0' - 38.9'
Class V 3000D	41.0' - 49.9'	39.0' - 46.9'
Class V Special 3600D	50.0' - 59.0'	47.0' - 58.0'

INSTALLATION TYPE 2

MINIMUM CLASS AND D-LOAD	COVER
Class II 1000D	9.9'
Class III 1350D	10.0'- 14.9'
Class III Special 1700D	15.0' - 19.9'
Class IV 2000D	20.0' - 24.9'
Class IV Special 2500D	25.0' - 31.9'
Class V 3000D	32.0' - 38.9'
Class V Special 3600D	39.0' - 47.0'

INSTALLATION TYPE 3

MINIMUM CLASS AND D-LOAD	COVER	
	48" Dia AND SMALLER	OVER 48" Dia
Class II 1000D	7.9'	5.9'
Class III 1350D	8.0' - 10.9'	6.0' - 8.9'
Class III Special 1700D	11.0' - 14.9'	9.0' - 12.9'
Class IV 2000D	15.0' - 17.9'	13.0' - 15.9'
Class IV Special 2500D	18.0' - 21.9'	16.0' - 19.9'
Class V 3000D	22.0' - 26.9'	20.0' - 24.9'
Class V Special 3600D	30.0' - 33.0'	25.0' - 31.0'

NOTES:

1. Unless otherwise shown on the plans or specified in the special provision, the Contractor shall have the option of selecting the class of RCP and the type of installation to be used, provided the height of cover does not exceed the value shown for the RCP selected.
   Example: 24" RCP culvert with maximum cover of 19'-0" the options are:
   a) Class III or stronger with Installation Type 1.
   b) Class III Special or stronger with Installation Type 2.
   c) Class IV Special or stronger with Installation Type 3.
   Cover is defined as the maximum vertical distance from top of the pipe to finished grade within the length of any given culvert.
2. The class of RCP and Installation Type selected shall be the same throughout the length of any given culvert.
3. The "length of any culvert" is defined as the culvert between:
   a) Successive drainage structure (inlets, junction boxes, headwalls, etc.).
   b) A drainage structure and the inlet or outlet end of the culvert.
   c) The inlet and outlet end of the culvert when there are no intervening drainage structures.
4. Oval and arch shaped RCP shall not be used.
5. 1/25 OD Min, not less than 3".
6. Slurry cement backfill may be substituted for backfill in the outer bedding and haunch areas. If slurry is used the outer and middle beddings shall be omitted. Prior to installation the soil under the middle 1/3 of the outside diameter of the pipe shall be softened by scarifying or other means to a minimum depth of 1/25 OD, but not less than 3". Where slurry cement backfill is used clear distance to trench wall may be reduced as set forth in Section 19-3.062 of the Standard Specifications.
7. Backfill shall be placed full width of excavation except where dimensions are shown for backfill width or thickness. Dimensions shown are minimums.
8. Lower side shall be suitable material as determined by the Engineer. Otherwise it shall be considered unsuitable as set forth in Section 19-2.02 of the Standard Specifications. See Note 9.
9. Where the pipe is placed in a trench, if the trench walls are sloped at 5 vertical to 1 horizontal or steeper for at least 90 percent of the trench height or up to not less than 12" from the grading plane, the firmness of the soil in the lower side need not be considered.
10. Non-reinforced precast concrete pipe sizes 3'-0" or smaller may be placed under installation Types 1, 2 or 3.

STATE OF CALIFORNIA
DEPARTMENT OF TRANSPORTATION

EXCAVATION AND BACKFILL CONCRETE PIPE CULVERTS

NO SCALE

RSP A62DA DATED NOVEMBER 17, 2006 SUPERSEDES STANDARD PLAN A62DA DATED MAY 1, 2006 - PAGE 20 OF THE STANDARD PLANS BOOK DATED MAY 2006.

REVISED STANDARD PLAN RSP A62DA

2006 REVISED STANDARD PLAN RSP A62DA

10-26-06

DIST	COUNTY	ROUTE	POST MILES TOTAL PROJECT	SHEET NO.	TOTAL SHEETS
11	SD	15,76	R46.1/R47.3, R16.7/R17.7	381	477

Mark S. Turner
PROFESSIONAL LAND SURVEYOR

June 30, 2006
PLANS APPROVAL DATE

LICENSED LAND SURVEYOR
Mark S. Turner
No. 6228
Exp. 3-31-08
STATE OF CALIFORNIA

The State of California or its officers or agents shall not be responsible for the accuracy or completeness of electronic copies of this plan sheet.

To accompany plans dated 4-16-12

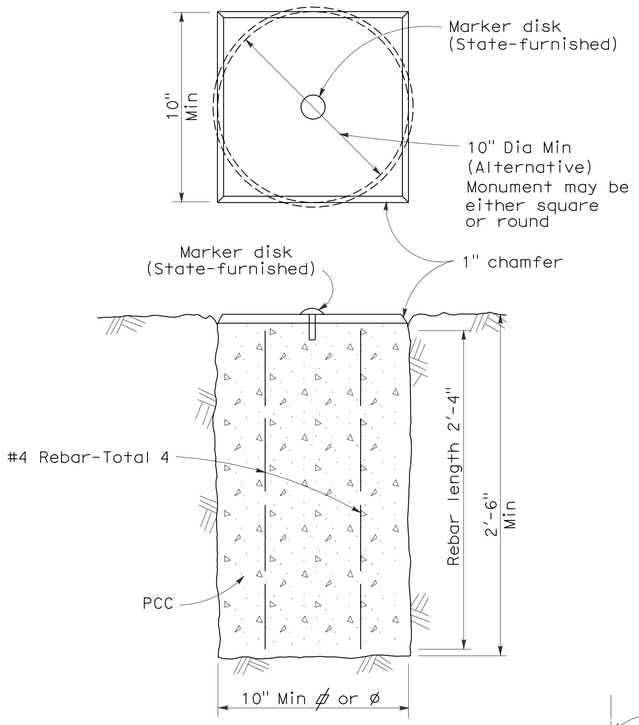

TYPE A

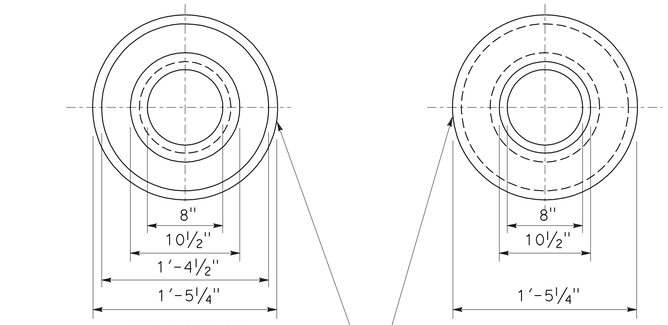

TOP VIEW OF
MONUMENT OF WELL RING

BOTTOM VIEW OF
MONUMENT OF WELL RING

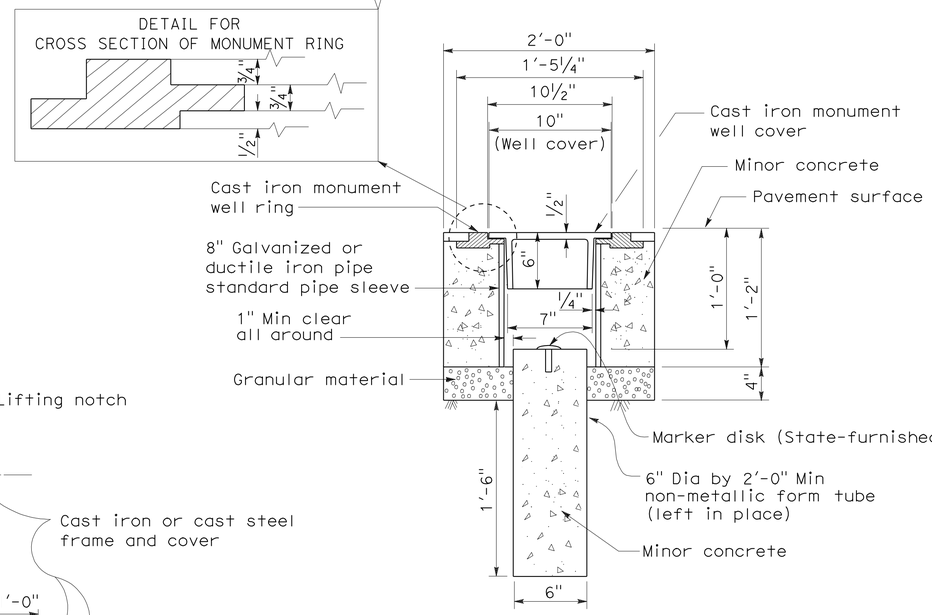

TYPE B

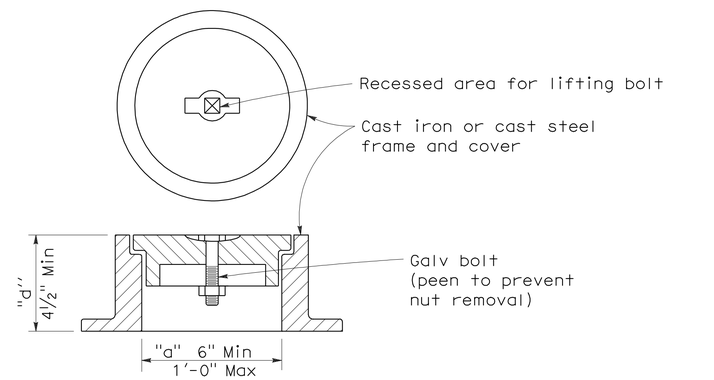

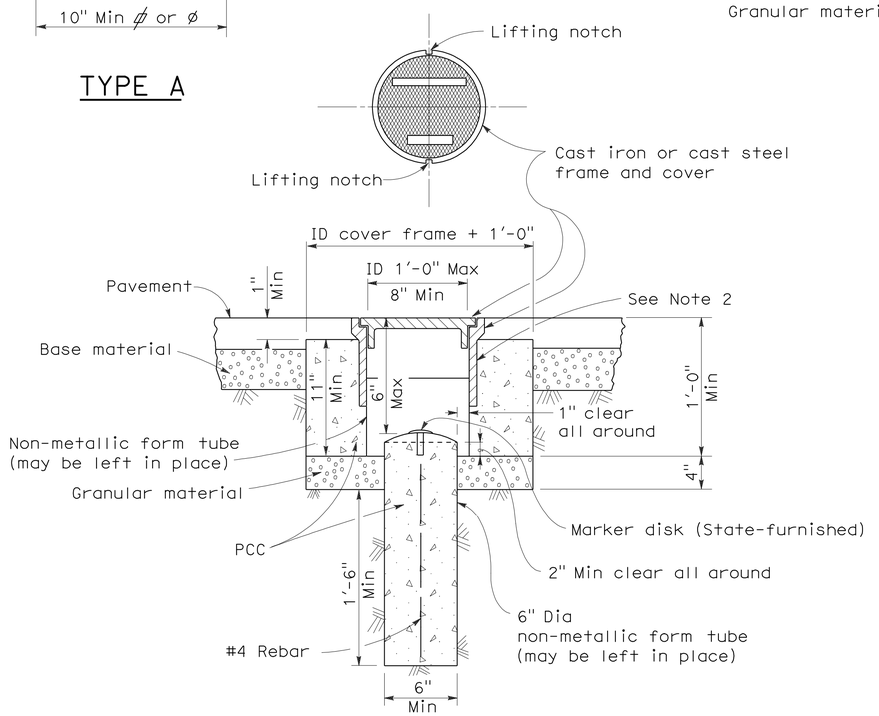

TYPE D
Alternative No. 1

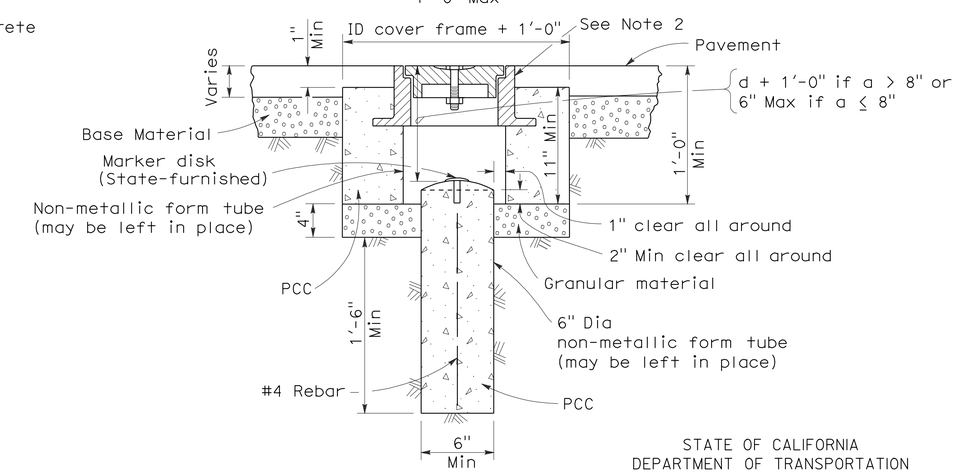

TYPE D
Alternative No. 2

NOTES:

1. The configuration of the cast iron or cast steel frame and cover may vary from that shown.
2. Frame shall be embedded in the concrete a minimum of 3".
3. Type D monument shall be either Alternative No. 1 or Alternative No. 2 at the contractor's option.
4. All portland cement concrete shall be Class 2 or minor concrete with 1" maximum aggregate.

STATE OF CALIFORNIA
DEPARTMENT OF TRANSPORTATION

SURVEY MONUMENTS

NO SCALE

RSP A74 DATED JUNE 30, 2006 SUPERSEDES STANDARD PLAN DATED MAY 1, 2006 - PAGE 28 OF THE STANDARD PLANS BOOK DATED MAY 2006.

REVISED STANDARD PLAN RSP A74

2006 REVISED STANDARD PLAN RSP A74

5-24-06

DIST	COUNTY	ROUTE	POST MILES TOTAL PROJECT	SHEET NO.	TOTAL SHEETS
11	SD	15,76	R46.1/R47.3, R16.7/R17.7	382	477

Randell D. Hiatt
REGISTERED CIVIL ENGINEER

June 6, 2008
PLANS APPROVAL DATE

REGISTERED PROFESSIONAL ENGINEER
Randell D. Hiatt
No. C50200
Exp. 6-30-09
CIVIL
STATE OF CALIFORNIA

The State of California or its officers or agents shall not be responsible for the accuracy or completeness of electronic copies of this plan sheet.

To accompany plans dated 4-16-12

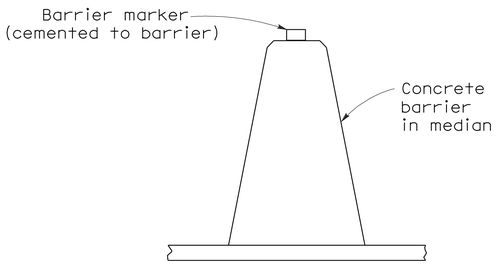

CONCRETE BARRIER TYPE 60 DELINEATION

See Notes 7 and 8

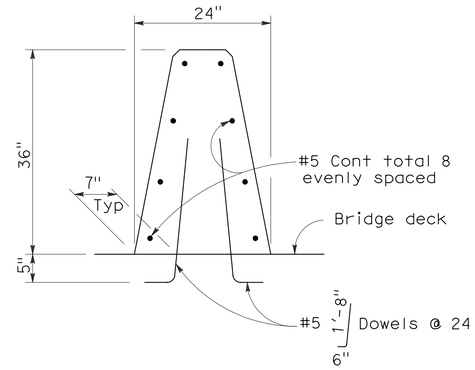

CONCRETE BARRIER TYPE 60A

Details similar to Type 60 except as noted.

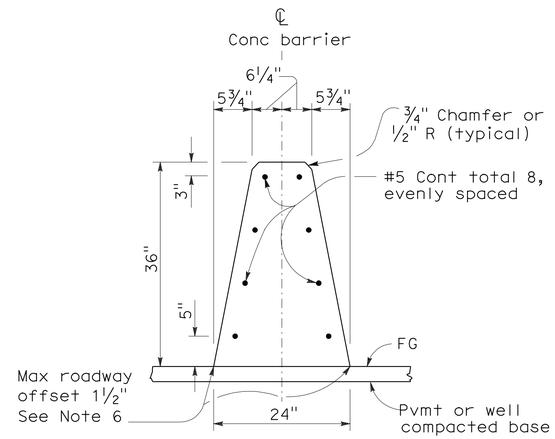

CONCRETE BARRIER TYPE 60

NOTES:

1. See Standard Plan A76B for details of Concrete Barrier Type 60 end anchors, connection to structures and transitions to Concrete Barrier Type 50 and Concrete Barrier Type 60S.
2. See Standard Plan A76C for Concrete Barrier Type 60 transitions at bridge column and sign pedestals.
3. Where glare screen is required on Concrete Barrier Type 60, use Concrete Barrier Type 60G.
4. Where the concrete barrier is added to the face of existing concrete structure, match existing weep holes.
5. Expansion joints in concrete barrier shall be located at all deck, pavement and principal wall joints. Expansion joint filler material shall be the same size as joint or ½" minimum.
6. Where roadway offset is greater than 1½", see Concrete Barrier Type 60C.
7. Barrier delineation to be used when required by the Special Provisions.
8. Spacing of barrier markers to match spacing of raised pavement markers on the adjacent median edgeline pavement delineation.
9. Reinforcing stirrup not required for roadway offsets less than 1'-0".
10. For roadway surfaces offset greater than 1½" to 3", no rebars required. For roadway surfaces offset greater than 3" to 8" use two #4 rebars at 3" above the lower roadway surface. For roadway surfaces offset greater than 8" to 12", use two #4 rebars at 3" above the lower roadway surface and two #4 rebars at 8" above the lower roadway surface. For roadway surfaces offset greater than 12" to 36", use two #4 rebars at 3" above the lower roadway surface and two #4 rebars at every 8" increment vertical spacing above the first two #4 rebars.

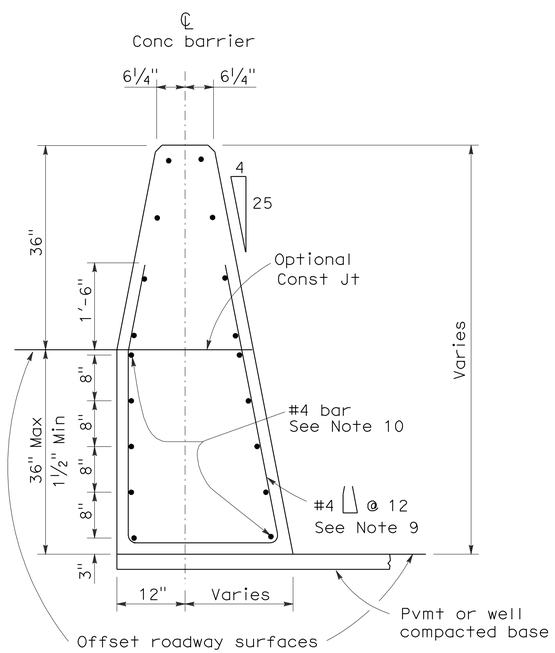

CONCRETE BARRIER TYPE 60C

Details similar to Type 60 except as noted.
Concrete barrier end anchor when necessary.
36" roadway surfaces offset shown.

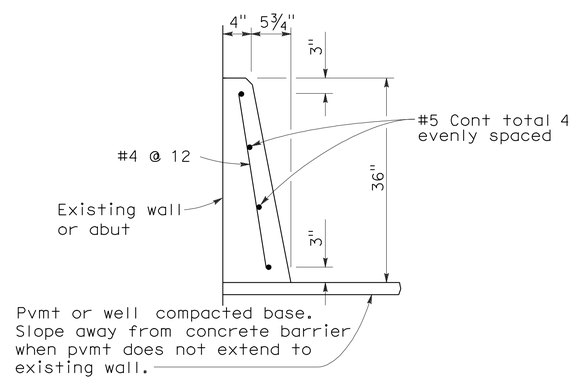

CONCRETE BARRIER TYPE 60D

STATE OF CALIFORNIA
DEPARTMENT OF TRANSPORTATION

CONCRETE BARRIER TYPE 60

NO SCALE

RSP A76A DATED JUNE 6, 2008 SUPERSEDES STANDARD PLAN A76A
DATED MAY 1, 2006 - PAGE 29 OF THE STANDARD PLANS BOOK DATED MAY 2006.

REVISED STANDARD PLAN RSP A76A

2006 REVISED STANDARD PLAN RSP A76A

5-21-08

To accompany plans dated 4-16-12

Dist	COUNTY	ROUTE	POST MILES TOTAL PROJECT	SHEET No.	TOTAL SHEETS
11	SD	15,76	R46.1/R47.3, R16.7/R17.7	383	477

Randell D. Hiatt
REGISTERED CIVIL ENGINEER

May 20, 2011
PLANS APPROVAL DATE

REGISTERED PROFESSIONAL ENGINEER
Randell D. Hiatt
No. C50200
Exp. 6-30-11
CIVIL
STATE OF CALIFORNIA

The State of California or its officers or agents shall not be responsible for the accuracy or completeness of electronic copies of this plan sheet.

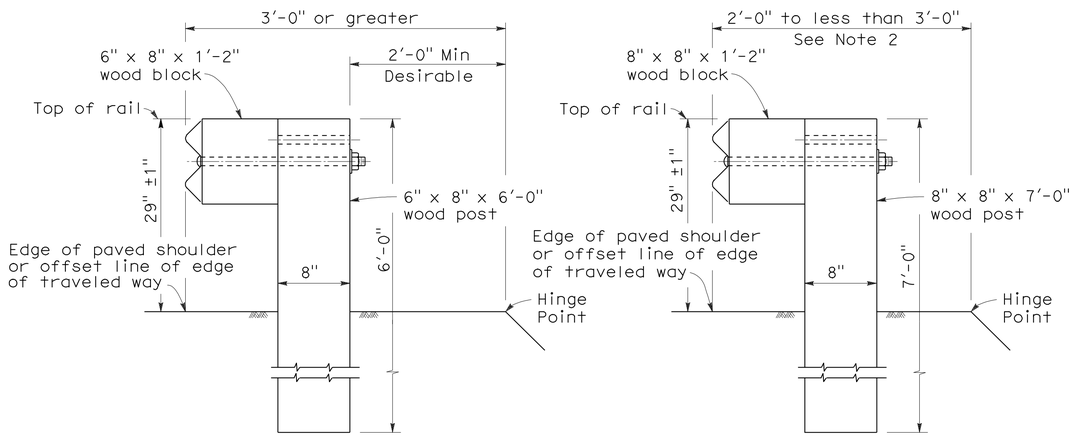

DETAIL A
TYPICAL ROADWAY INSTALLATION
See Note 1

DETAIL B
NARROW ROADWAY INSTALLATION
See Note 1

POST EMBEDMENT

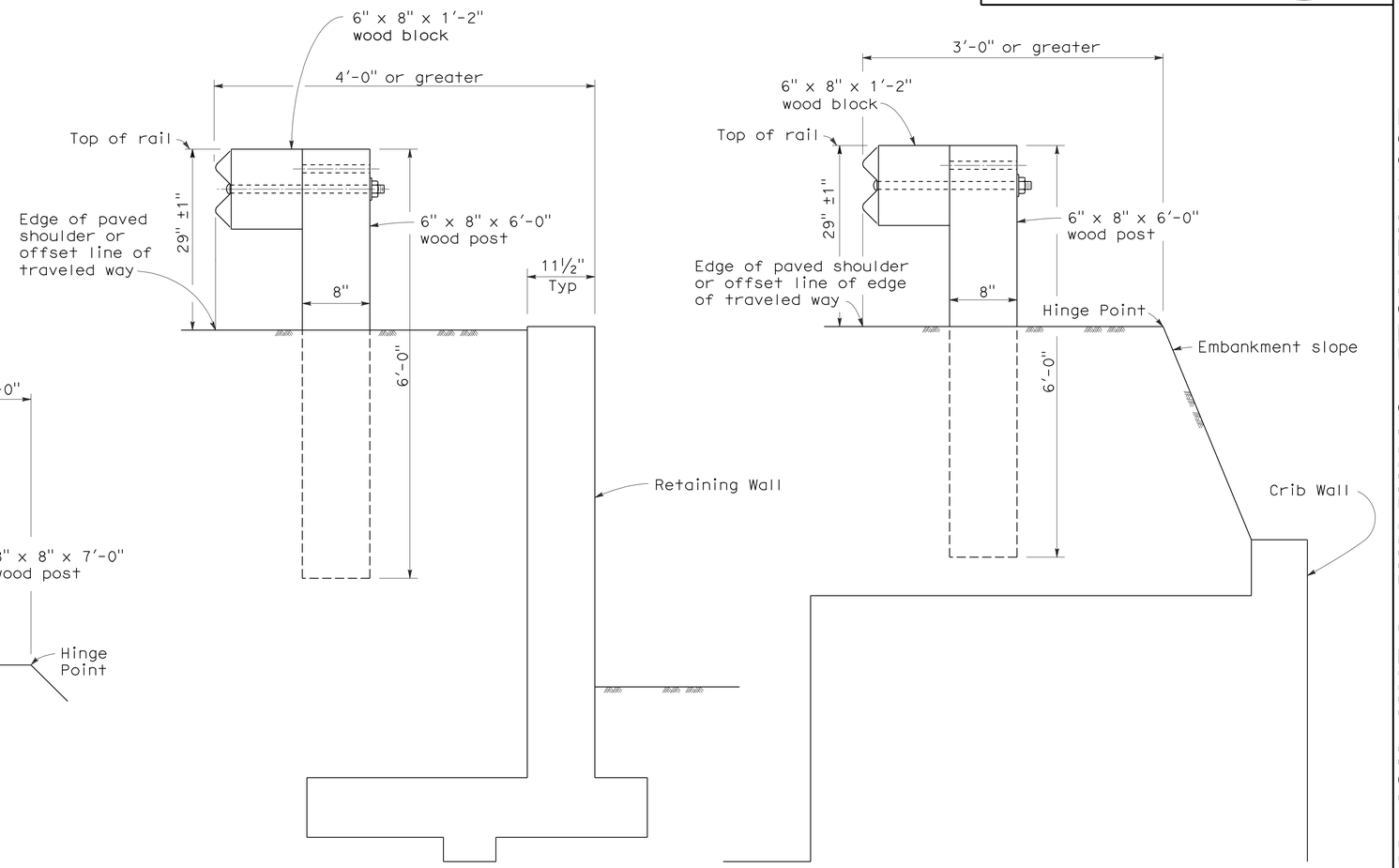

DETAIL C

DETAIL D

INSTALLATION AT EARTH RETAINING WALLS

NOTES:

1. These installation details also applicable to steel line post installations. For Detail A, C, and D, where steel line post installations are constructed, W6 x 9 steel post, 6'-0" in length, with 6" x 8" x 1'-2" notched wood blocks or notched recycled plastic blocks are to be used in place of the size of wood post and wood block shown. For Detail B, where steel line post installations are constructed, W6 x 9 steel post, 7'-0" in length, with 6" x 8" x 1'-2" notched wood blocks or notched recycled plastic blocks are to be used in place of the size of wood post and wood block shown. For additional installation details, see Standard Plans A77A1 and A77A2.
2. Where the distance between the face of the rail and the hinge point is less than 2'-0", see the Project Plans for special details.
3. For dike positioning with guard railing installations, see Standard Plan A77C4.

STATE OF CALIFORNIA
DEPARTMENT OF TRANSPORTATION

METAL BEAM GUARD RAILING TYPICAL LINE POST EMBEDMENT AND HINGE POINT OFFSET DETAILS

NO SCALE

RSP A77C3 DATED MAY 20, 2011 SUPERSEDES STANDARD PLAN A77C3
DATED MAY 1, 2006 - PAGE 46 OF THE STANDARD PLANS BOOK DATED MAY 2006.

REVISED STANDARD PLAN RSP A77C3

2006 REVISED STANDARD PLAN RSP A77C3

3-10-11

Dist	COUNTY	ROUTE	POST MILES TOTAL PROJECT	SHEET No.	TOTAL SHEETS
11	SD	15,76	R46.1/R47.3, R16.7/R17.7	384	477

Randell D. Hiatt
REGISTERED CIVIL ENGINEER

May 20, 2011
PLANS APPROVAL DATE

REGISTERED PROFESSIONAL ENGINEER
Randell D. Hiatt
No. C50200
Exp. 6-30-11
CIVIL
STATE OF CALIFORNIA

The State of California or its officers or agents shall not be responsible for the accuracy or completeness of electronic copies of this plan sheet.

To accompany plans dated 4-16-12

NOTES:

1. When necessary to place dike in front of face of guard railing, only Type C dike may be used. For dike details, see Standard Plan A87B.
2. For standard railing post embedment, see Standard Plans A77C3.
3. Guard railing delineation to be used where shown on the Project Plans.
4. When dike or curb is placed under guard railing, the maximum height of the dike or curb shall be 4". Mountable dike should not be used. For dike and curb details, see Standard Plans A87A and A87B.
5. For details of typical distance between the face of rail and hinge point, see Standard Plan A77C3.
6. For steel line posts, use ¼ - 20 self-tapping screws in 0.22" diameter holes or ¼" bolts in 9/32" diameter holes.

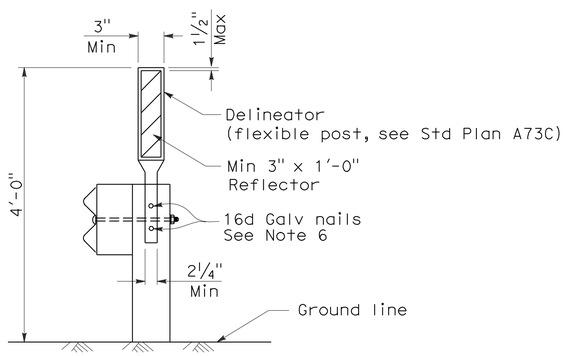

GUARD RAILING DELINEATION

See Note 3

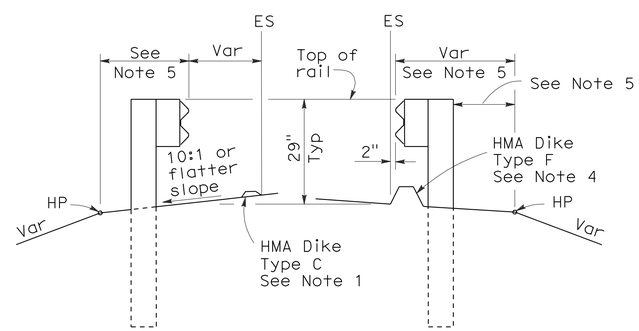

DIKE POSITIONING

See Note 1

STATE OF CALIFORNIA
DEPARTMENT OF TRANSPORTATION

METAL BEAM GUARD RAILING TYPICAL RAILING DELINEATION AND DIKE POSITIONING DETAILS

NO SCALE

RSP A77C4 DATED MAY 20, 2011 SUPERSEDES RSP A77C4 DATED JUNE 6, 2008 AND STANDARD PLAN A77C4 DATED MAY 1, 2006 - PAGE 47 OF THE STANDARD PLANS BOOK DATED MAY 2006.

REVISED STANDARD PLAN RSP A77C4

2006 REVISED STANDARD PLAN RSP A77C4

3-10-11

DIST	COUNTY	ROUTE	POST MILES TOTAL PROJECT	SHEET NO.	TOTAL SHEETS
11	SD	15,76	R46.1/R47.3, R16.7/R17.7	385	477

Randell D. Hiatt
REGISTERED CIVIL ENGINEER

October 20, 2006
PLANS APPROVAL DATE

REGISTERED PROFESSIONAL ENGINEER
Randell D. Hiatt
No. C50200
Exp. 6-30-07
CIVIL
STATE OF CALIFORNIA

The State of California or its officers or agents shall not be responsible for the accuracy or completeness of electronic copies of this plan sheet.

To accompany plans dated 4-16-12

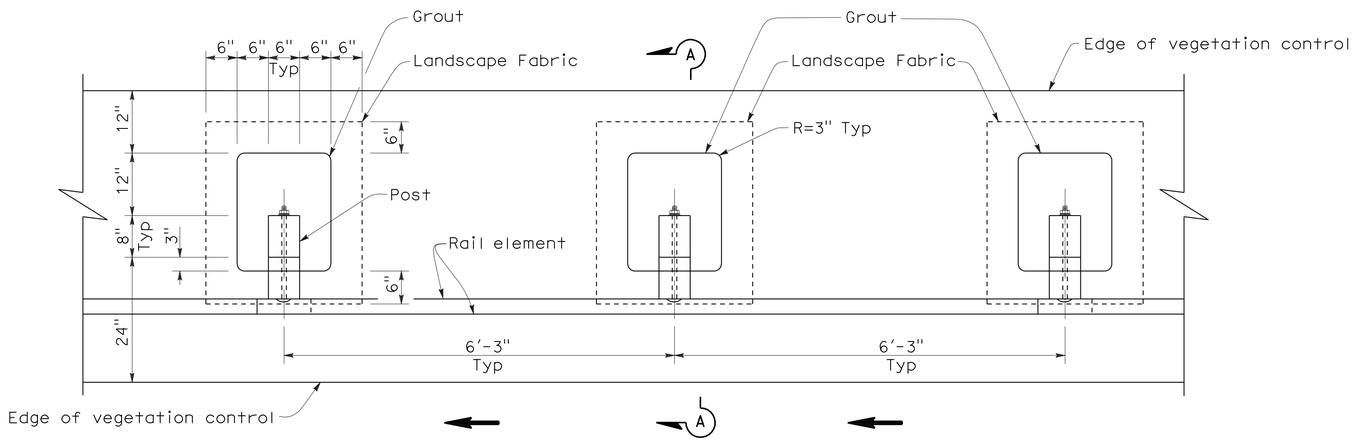

PLAN

NOTES:

1. Where the distance between back of post and hinge point is less than 24", vegetation control to be constructed flush with the back edge of the post.
2. Where dike is constructed under railing, construct vegetation control to back edge of dike. Where paved shoulder is constructed within 24" in front of the post, construct vegetation control to the edge of paved shoulder.
3. Direction of adjacent traffic indicated by ← .

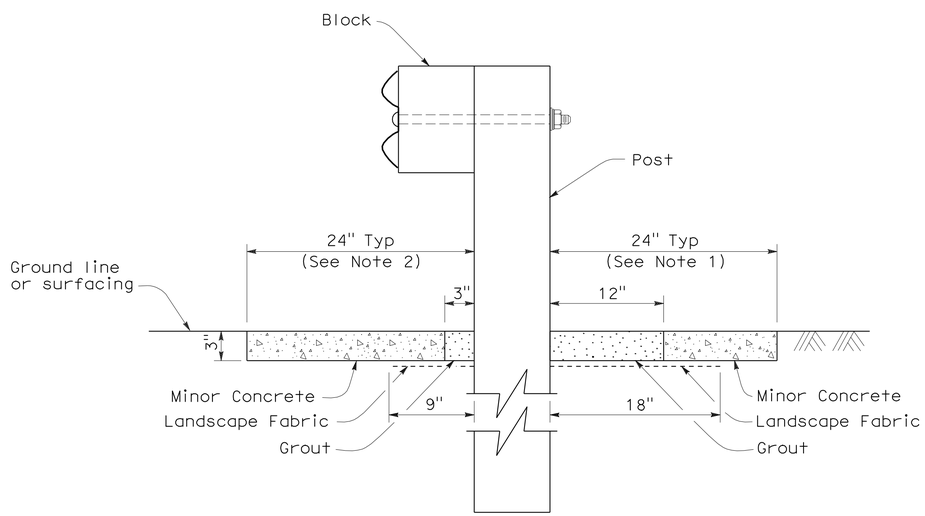

SECTION A-A

STATE OF CALIFORNIA
DEPARTMENT OF TRANSPORTATION

METAL BEAM GUARD RAILING TYPICAL VEGETATION CONTROL STANDARD RAILING SECTION

NO SCALE

NSP A77C5 DATED OCTOBER 20, 2006 SUPPLEMENTS THE STANDARD PLANS BOOK DATED MAY 2006.

NEW STANDARD PLAN NSP A77C5

2006 NEW STANDARD PLAN NSP A77C5

7-17-06

DIST	COUNTY	ROUTE	POST MILES TOTAL PROJECT	SHEET NO.	TOTAL SHEETS
11	SD	15,76	R46.1/R47.3, R16.7/R17.7	386	477

Randell D. Hiatt
REGISTERED CIVIL ENGINEER

October 20, 2006
PLANS APPROVAL DATE

REGISTERED PROFESSIONAL ENGINEER
Randell D. Hiatt
No. C50200
Exp. 6-30-07
CIVIL
STATE OF CALIFORNIA

The State of California or its officers or agents shall not be responsible for the accuracy or completeness of electronic copies of this plan sheet.

To accompany plans dated 4-16-12

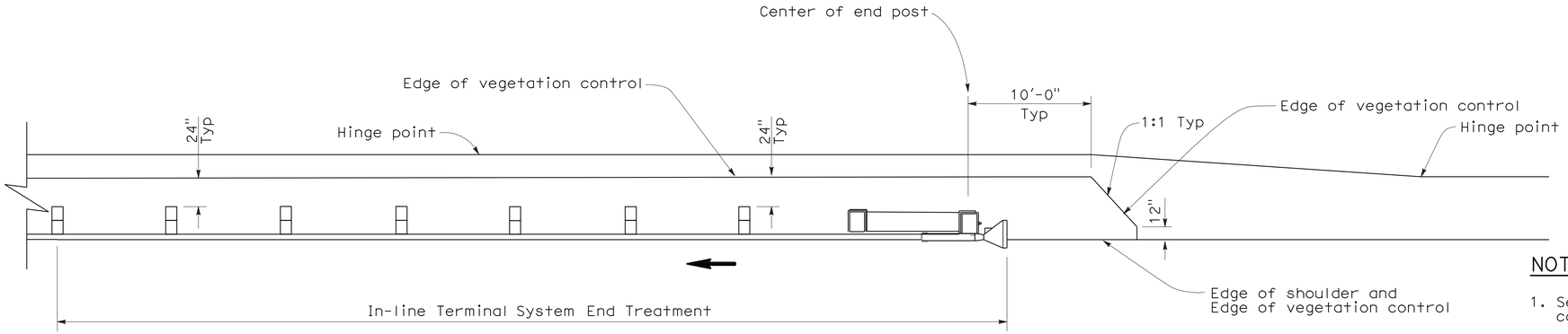

PLAN

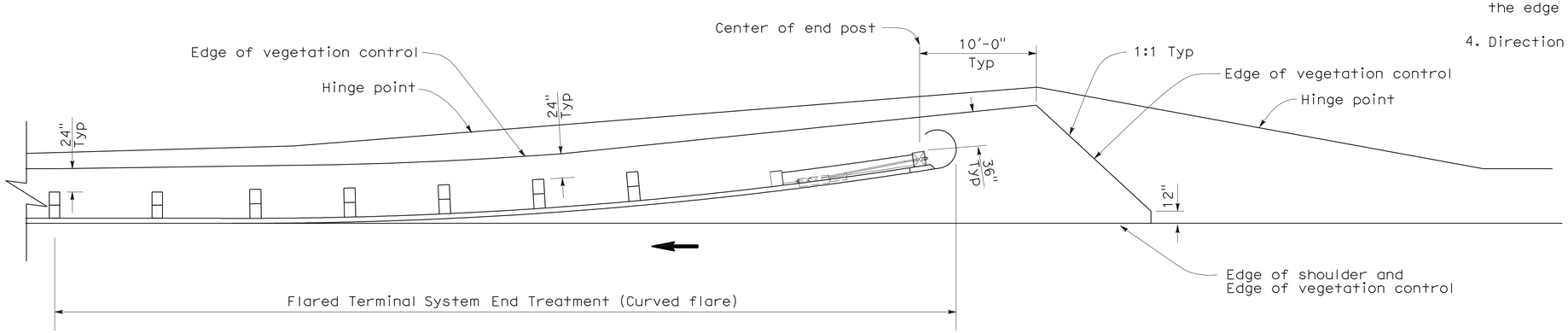

PLAN

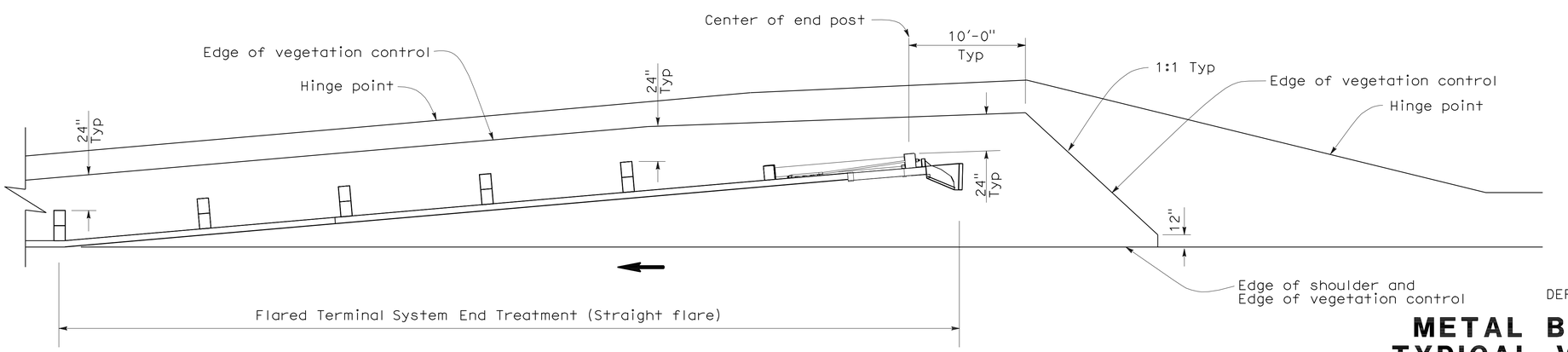

PLAN

NOTES:

1. See New Standard Plan NSP A77C5 for additional vegetation control details.
2. Where the distance between back of post and hinge point is less than 24", vegetation control to be constructed flush with the back edge of the post.
3. Where dike is constructed under railing, construct vegetation control to back edge of dike. Where paved shoulder is constructed within 24" in front of the post, construct vegetation control to the edge of paved shoulder.
4. Direction of adjacent traffic indicated by ←.

STATE OF CALIFORNIA
DEPARTMENT OF TRANSPORTATION

METAL BEAM GUARD RAILING TYPICAL VEGETATION CONTROL FOR TERMINAL SYSTEM END TREATMENTS

NO SCALE

NSP A77C6 DATED OCTOBER 20, 2006 SUPPLEMENTS THE STANDARD PLANS BOOK DATED MAY 2006.

NEW STANDARD PLAN NSP A77C6

2006 NEW STANDARD PLAN NSP A77C6

7-17-06

DIST	COUNTY	ROUTE	POST MILES TOTAL PROJECT	SHEET NO.	TOTAL SHEETS
11	SD	15,76	R46.1/R47.3, R16.7/R17.7	387	477

Randell D. Hiatt
REGISTERED CIVIL ENGINEER

October 20, 2006
PLANS APPROVAL DATE

REGISTERED PROFESSIONAL ENGINEER
Randell D. Hiatt
No. C50200
Exp. 6-30-07
CIVIL
STATE OF CALIFORNIA

The State of California or its officers or agents shall not be responsible for the accuracy or completeness of electronic copies of this plan sheet.

To accompany plans dated 4-16-12

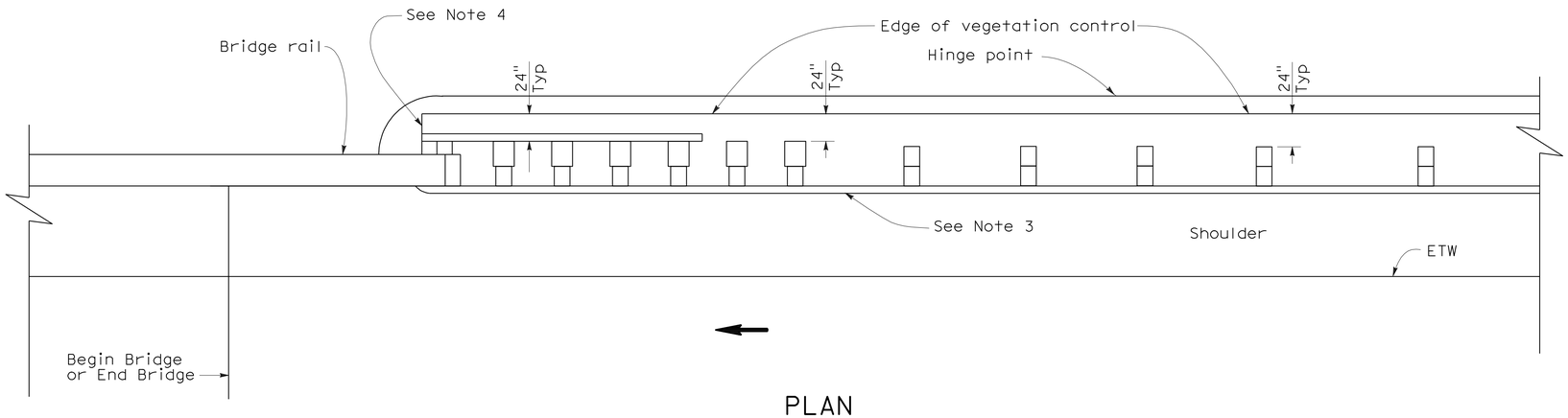

PLAN

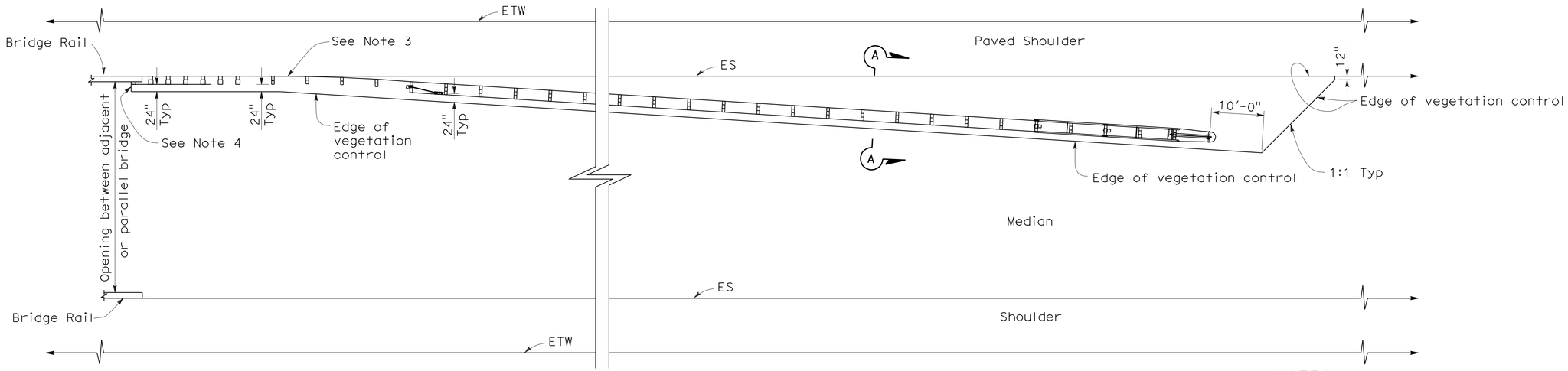

PLAN

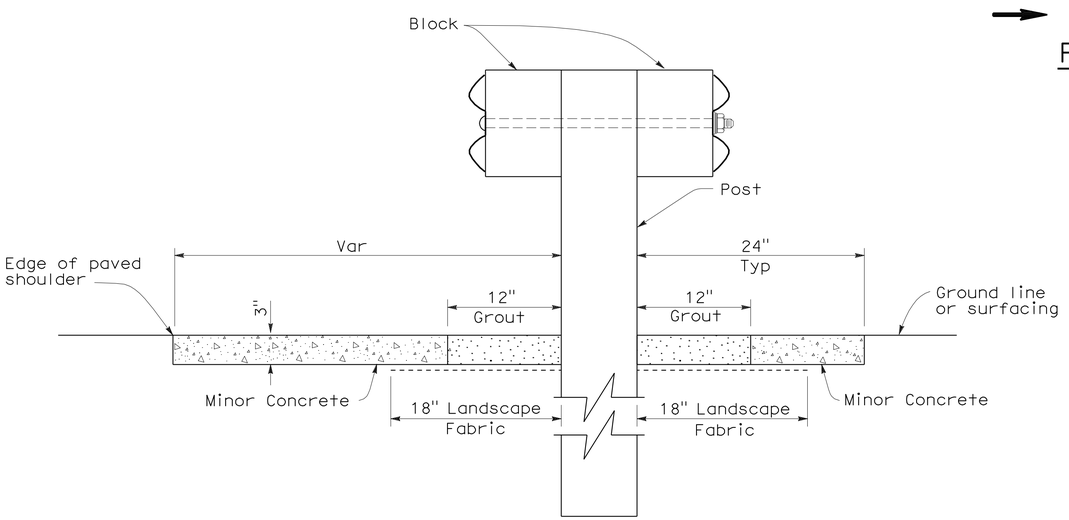

SECTION A-A

NOTES:

1. See New Standard Plan NSP A77C5 for additional vegetation control details.
2. Where the distance between back of post and hinge point is less than 24", vegetation control to be constructed flush with the back edge of the post.
3. Where dike is constructed under railing, construct vegetation control to back edge of dike. Where paved shoulder is constructed within 24" in front of the post, construct vegetation control to the edge of paved shoulder.
4. End vegetation control at end of backside rail element.
5. Direction of adjacent traffic indicated by ←.

STATE OF CALIFORNIA
DEPARTMENT OF TRANSPORTATION

METAL BEAM GUARD RAILING TYPICAL VEGETATION CONTROL AT STRUCTURE APPROACH AND DEPARTURE

NO SCALE

NSP A77C7 DATED OCTOBER 20, 2006 SUPPLEMENTS THE STANDARD PLANS BOOK DATED MAY 2006.

NEW STANDARD PLAN NSP A77C7

2006 NEW STANDARD PLAN NSP A77C7

7-17-06

DIST	COUNTY	ROUTE	POST MILES TOTAL PROJECT	SHEET NO.	TOTAL SHEETS
11	SD	15,76	R46.1/R47.3, R16.7/R17.7	388	477

Randell D. Hiatt
REGISTERED CIVIL ENGINEER

October 20, 2006
PLANS APPROVAL DATE

REGISTERED PROFESSIONAL ENGINEER
Randell D. Hiatt
No. C50200
Exp. 6-30-07
CIVIL
STATE OF CALIFORNIA

The State of California or its officers or agents shall not be responsible for the accuracy or completeness of electronic copies of this plan sheet.

To accompany plans dated 4-16-12

NOTES:

1. See New Standard Plan NSP A77C5 for additional vegetation control details.
2. Where the distance between back of post and hinge point is less than 24", vegetation control to be constructed flush with the back edge of the post.
3. Where dike is constructed under railing, construct vegetation control to back edge of dike. Where paved shoulder is constructed within 24" in front of the post, construct vegetation control to the edge of paved shoulder.
4. Direction of adjacent traffic indicated by ←.

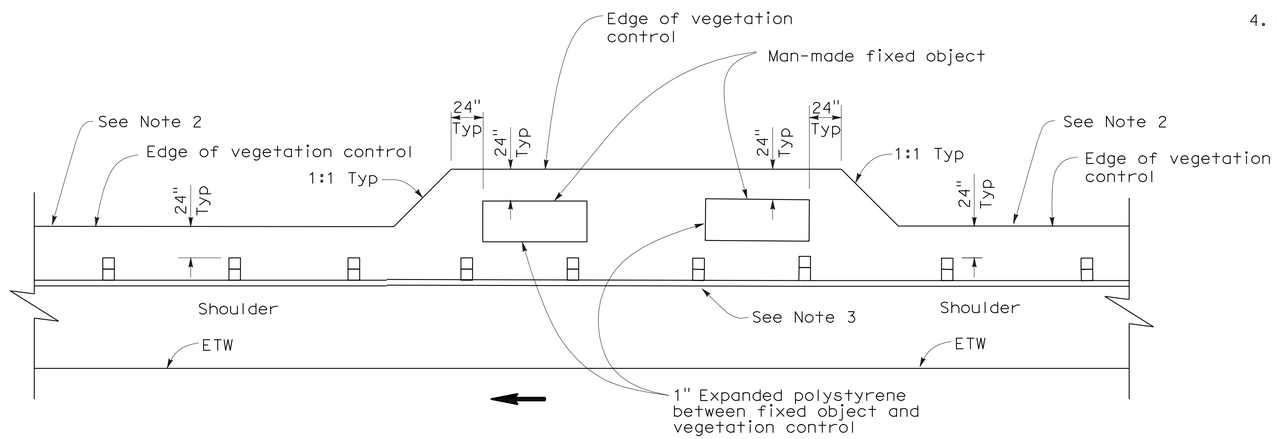

PLAN

FIXED OBJECT(S) ON SHOULDER

STATE OF CALIFORNIA
DEPARTMENT OF TRANSPORTATION

METAL BEAM GUARD RAILING TYPICAL VEGETATION CONTROL AT FIXED OBJECT

NO SCALE

NSP A77C8 DATED OCTOBER 20, 2006 SUPPLEMENTS THE STANDARD PLANS BOOK DATED MAY 2006.

NEW STANDARD PLAN NSP A77C8

2006 NEW STANDARD PLAN NSP A77C8

7-17-06

DIST	COUNTY	ROUTE	POST MILES TOTAL PROJECT	SHEET NO.	TOTAL SHEETS
11	SD	15,76	R46.1/R47.3, R16.7/R17.7	389	477

Randell D. Hiatt
REGISTERED CIVIL ENGINEER

October 20, 2006
PLANS APPROVAL DATE

REGISTERED PROFESSIONAL ENGINEER
Randell D. Hiatt
No. C50200
Exp. 6-30-07
CIVIL
STATE OF CALIFORNIA

The State of California or its officers or agents shall not be responsible for the accuracy or completeness of electronic copies of this plan sheet.

To accompany plans dated 4-16-12

NOTES:

1. See New Standard Plan NSP A77C5 for additional vegetation control details.
2. Where dike is constructed under railing, construct vegetation control to back edge of dike. Where paved shoulder is constructed within 24" in front of the post, construct vegetation control to the edge of paved shoulder.
3. Direction of adjacent traffic indicated by ← .

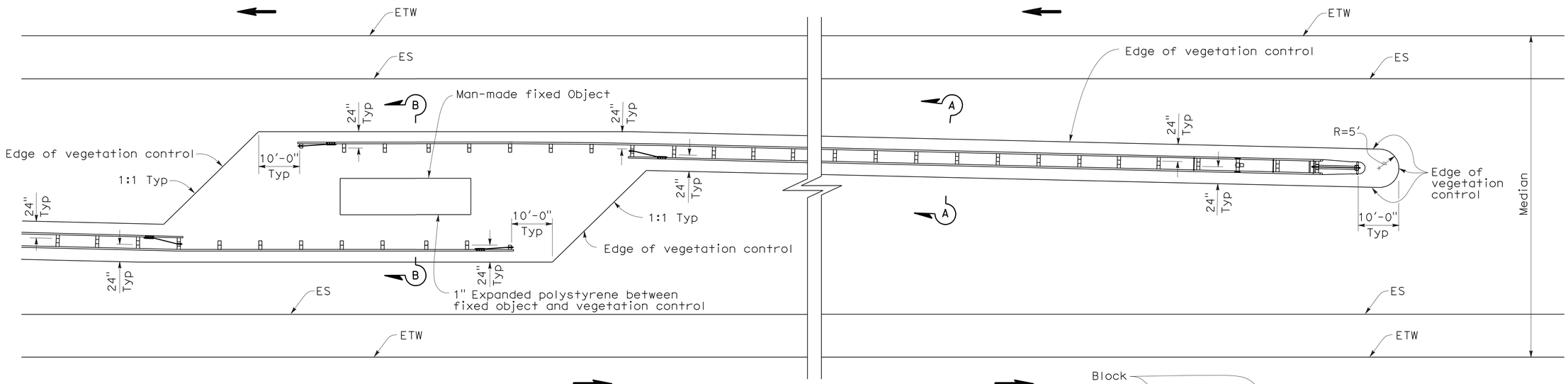

PLAN

FIXED OBJECT(S) IN MEDIAN

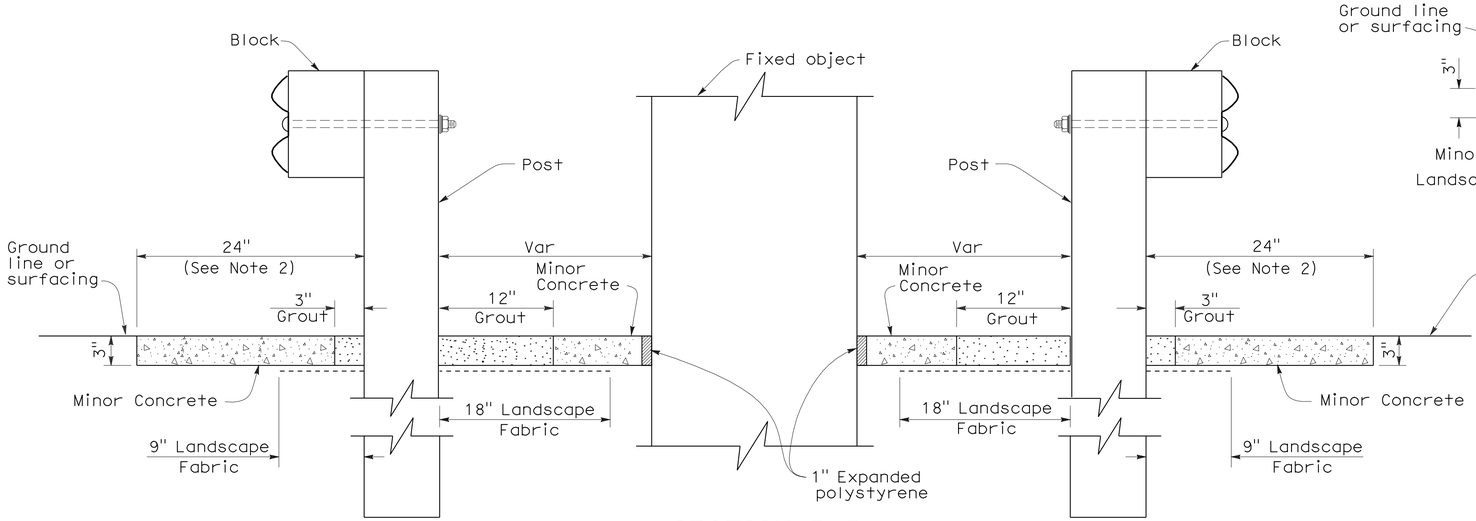

SECTION B-B

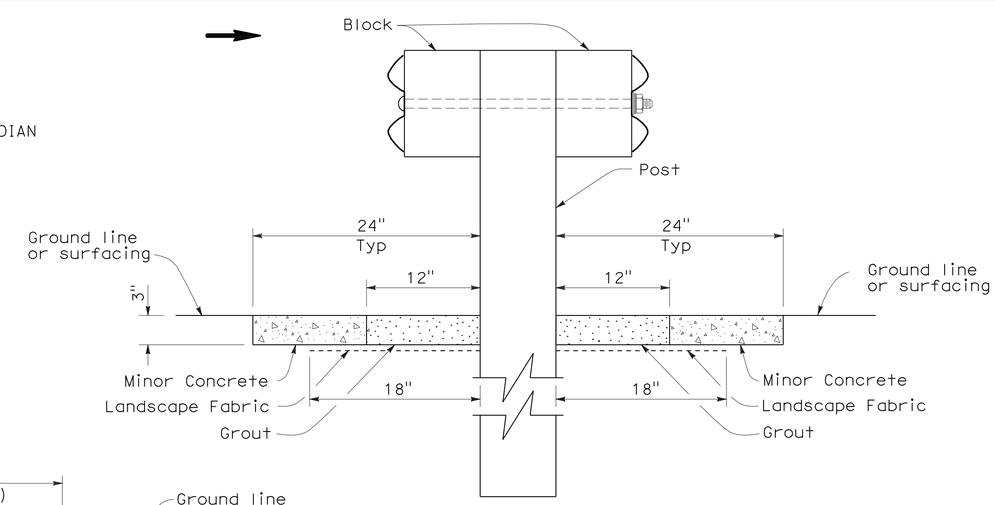

SECTION A-A

STATE OF CALIFORNIA
DEPARTMENT OF TRANSPORTATION

METAL BEAM GUARD RAILING TYPICAL VEGETATION CONTROL AT FIXED OBJECT

NO SCALE

NSP A77C9 DATED OCTOBER 20, 2006 SUPPLEMENTS THE STANDARD PLANS BOOK DATED MAY 2006.

NEW STANDARD PLAN NSP A77C9

2006 NEW STANDARD PLAN NSP A77C9

7-17-06

DIST	COUNTY	ROUTE	POST MILES TOTAL PROJECT	SHEET NO.	TOTAL SHEETS
11	SD	15,76	R46.1/R47.3, R16.7/R17.7	390	477

Randell D. Hiatt
REGISTERED CIVIL ENGINEER

October 20, 2006
PLANS APPROVAL DATE

REGISTERED PROFESSIONAL ENGINEER
Randell D. Hiatt
No. C50200
Exp. 6-30-07
CIVIL
STATE OF CALIFORNIA

The State of California or its officers or agents shall not be responsible for the accuracy or completeness of electronic copies of this plan sheet.

To accompany plans dated 4-16-12

NOTES:

1. See New Standard Plan NSP A77C5 for additional vegetation control details.
2. Where dike is constructed under railing, construct vegetation control to back edge of dike. Where paved shoulder is constructed within 24" in front of the post, construct vegetation control to the edge of paved shoulder.
3. Direction of adjacent traffic indicated by ←.

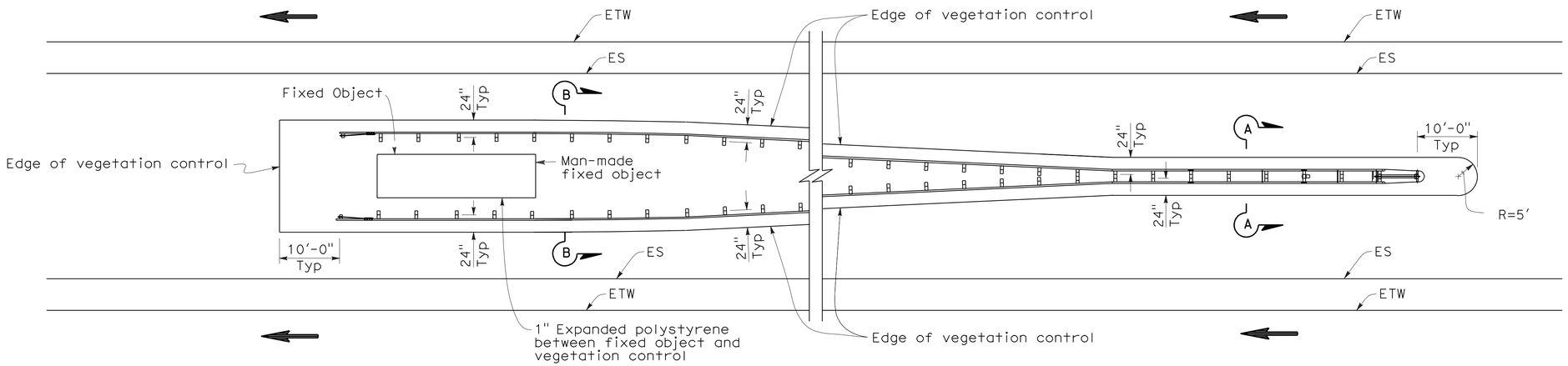

PLAN

FIXED OBJECT(S) BETWEEN SEPARATE ROADBEDS
(ONE-WAY TRAFFIC)

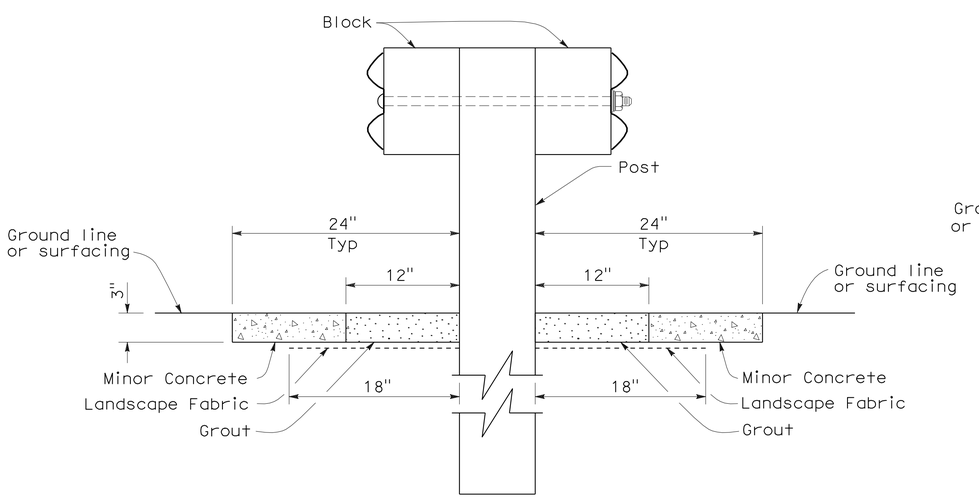

SECTION A-A

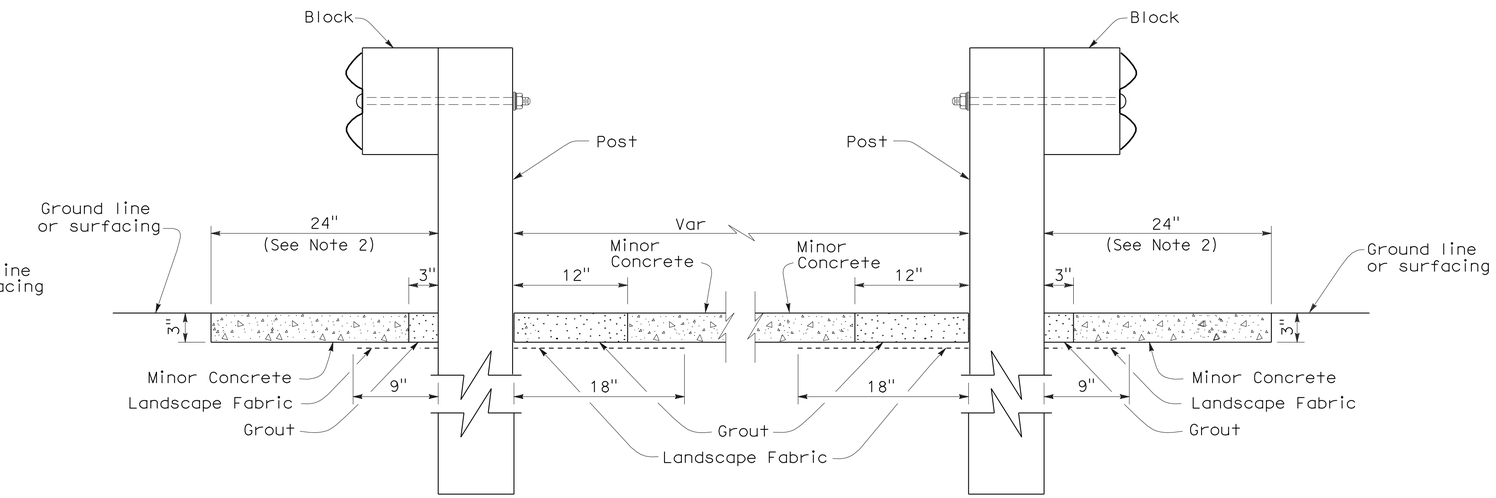

SECTION B-B

STATE OF CALIFORNIA
DEPARTMENT OF TRANSPORTATION

METAL BEAM GUARD RAILING TYPICAL VEGETATION CONTROL AT FIXED OBJECT

NO SCALE

NSP A77C10 DATED OCTOBER 20, 2006 SUPPLEMENTS THE STANDARD PLANS BOOK DATED MAY 2006.

NEW STANDARD PLAN NSP A77C10

2006 NEW STANDARD PLAN NSP A77C10

7-17-06

DIST	COUNTY	ROUTE	POST MILES TOTAL PROJECT	SHEET NO.	TOTAL SHEETS
11	SD	15,76	R46.1/R47.3, R16.7/R17.7	391	477

Randell D. Hiatt
REGISTERED CIVIL ENGINEER

June 6, 2008
PLANS APPROVAL DATE

REGISTERED PROFESSIONAL ENGINEER
Randell D. Hiatt
No. C50200
Exp. 6-30-09
CIVIL
STATE OF CALIFORNIA

The State of California or its officers or agents shall not be responsible for the accuracy or completeness of electronic copies of this plan sheet.

To accompany plans dated 4-16-12

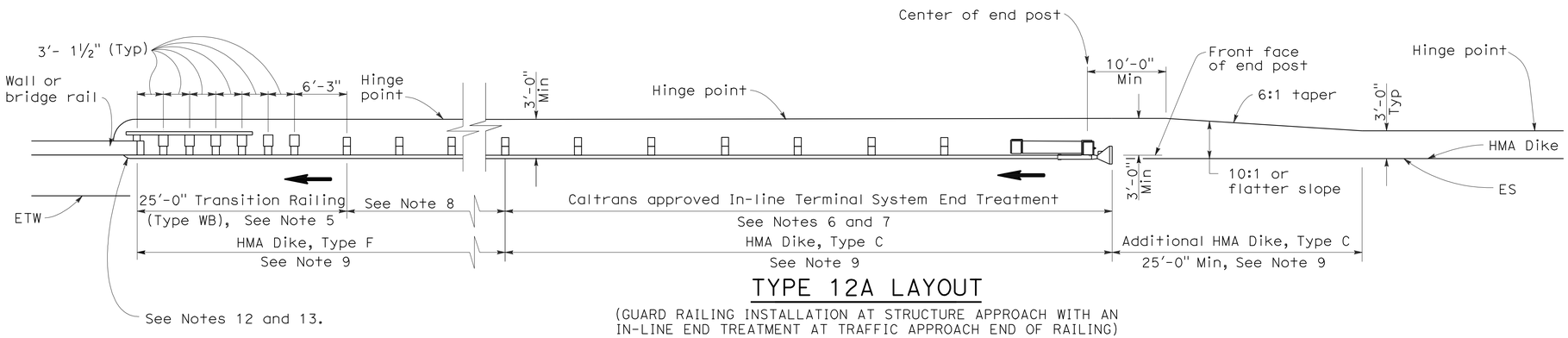

TYPE 12A LAYOUT

(GUARD RAILING INSTALLATION AT STRUCTURE APPROACH WITH AN IN-LINE END TREATMENT AT TRAFFIC APPROACH END OF RAILING)
See Notes 10

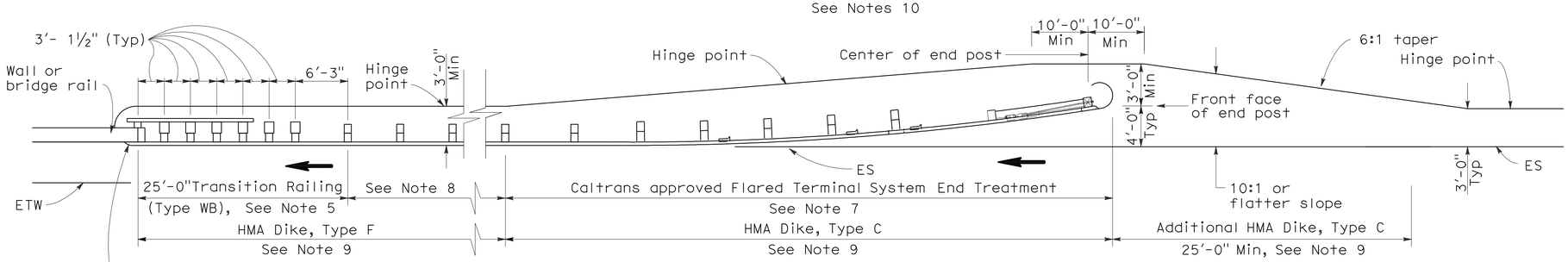

TYPE 12B LAYOUT

(GUARD RAILING INSTALLATION AT STRUCTURE APPROACH WITH A FLARED END TREATMENT AT TRAFFIC APPROACH END OF RAILING)
See Notes 10

NOTES:

1. Line post, blocks and hardware to be used are shown on Standard Plans A77A1, A77A2, A77B1, A77C1 and A77C2.
2. Guard rail post spacing to be 6'-3" center to center, except as otherwise noted.
3. Except as noted, line posts are 6" x 8" x 6'-0" wood with 6" x 8" x 1'-2" wood blocks. W6 x 9 steel posts, 6'-0" in length, with 6" x 8" x 1'-2" notched wood blocks or plastic blocks may be used for 6" x 8" x 6'-0" wood posts with 6" x 8" x 1'-2" wood blocks where applicable and when specified.
4. Direction of adjacent traffic indicated by ➡.
5. For Transition Railing (Type WB) details for Types 12A and 12B Layouts, see Standard Plan A77J4.
6. In-line Terminal System End Treatments are used where site conditions will not accommodate a flared end treatment.
7. The type of terminal system end treatment to be used will be shown on the Project Plans.
8. Dependent on site conditions (embankment height, side slopes, or other fixed objects), it may be advisable to construct additional guard railing (a length equal to multiples of 12'-6" with 6'-3" post spacing) between the transition railing and end treatment.
9. Where placement of dike is required with guard railing installations, see Revised Standard Plan RSP A77C4 for dike positioning details.
10. Type 12A or Type 12B Layouts are typically used:
    a. To the right of approaching traffic, at the end of a structure, on two-lane conventional highway where the roadbed width across the structure is less than 40 feet.
    b. To the left of approaching traffic, at the end of a structure, on two-lane conventional highway where the roadbed width across the structure is less than 40 feet.
    c. To the right of approaching traffic at the end of each structure on multilane freeways or expressways with separate adjacent or parallel bridges.
    d. To the right of approaching traffic at the end of the structure on multilane freeways or expressways with decked median on the bridge.
11. See Revised Standard Plan RSP A77F3 for typical layout used left of approaching traffic at the ends of each structure on multilane freeways or expressways with separate adjacent or parallel bridges.
12. For additional details of typical connections to bridge rail, see Connection Detail AA on Revised Standard Plans RSP A77J1 and RSP A77J2 and Connection Detail FF on Standard Plans A77K1 and A77K2.
13. For additional details of a typical connection to walls or abutments, see Standard Plan A77J3.

STATE OF CALIFORNIA
DEPARTMENT OF TRANSPORTATION

METAL BEAM GUARD RAILING TYPICAL LAYOUTS FOR STRUCTURE APPROACH

NO SCALE

RSP A77F1 DATED JUNE 6, 2008 SUPERSEDES STANDARD PLAN A77F1
DATED MAY 1, 2006 - PAGE 54 OF THE STANDARD PLANS BOOK DATED MAY 2006.

REVISED STANDARD PLAN RSP A77F1

2006 REVISED STANDARD PLAN RSP A77F1

12-10-07

DIST	COUNTY	ROUTE	POST MILES TOTAL PROJECT	SHEET NO.	TOTAL SHEETS
11	SD	15,76	R46.1/R47.3, R16.7/R17.7	392	477

Randell D. Hiatt
REGISTERED CIVIL ENGINEER

June 6, 2008
PLANS APPROVAL DATE

REGISTERED PROFESSIONAL ENGINEER
Randell D. Hiatt
No. C50200
Exp. 6-30-09
CIVIL
STATE OF CALIFORNIA

The State of California or its officers or agents shall not be responsible for the accuracy or completeness of electronic copies of this plan sheet.

To accompany plans dated 4-16-12

2006 REVISED STANDARD PLAN RSP A77G3

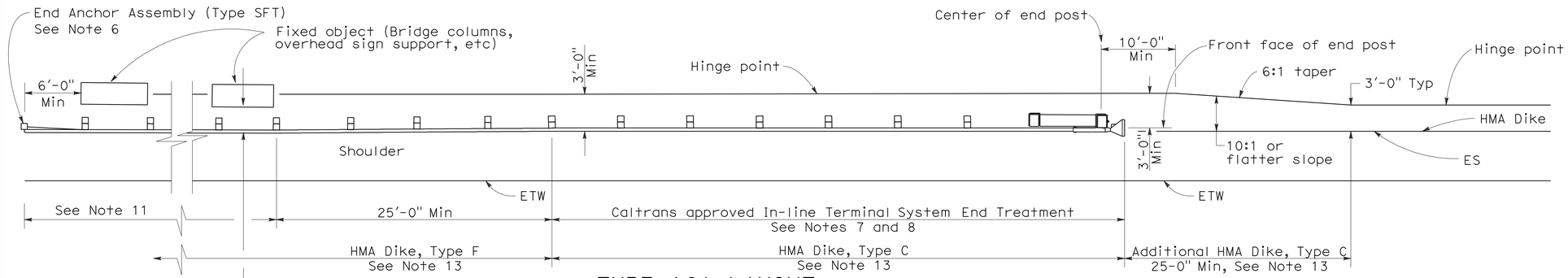

TYPE 16A LAYOUT

(GUARD RAILING INSTALLATION AT ROADSIDE FIXED OBJECT OR OBJECTS WITH AN IN-LINE END TREATMENT AT TRAFFIC APPROACH END OF RAILING)
See Notes 12 and 13

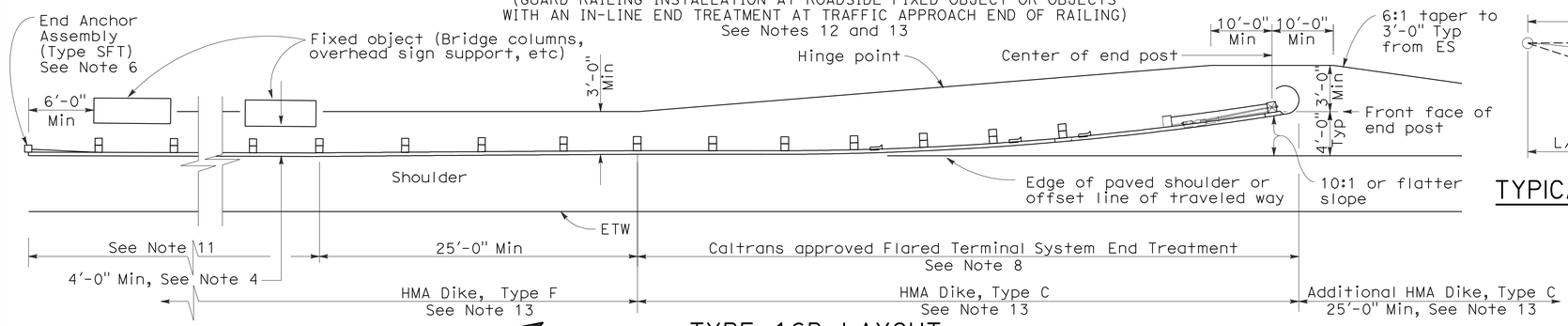

TYPE 16B LAYOUT

(GUARD RAILING INSTALLATION AT ROADSIDE FIXED OBJECT OR OBJECTS WITH A FLARED END TREATMENT AT TRAFFIC APPROACH END OF RAILING)
See Notes 12 and 13

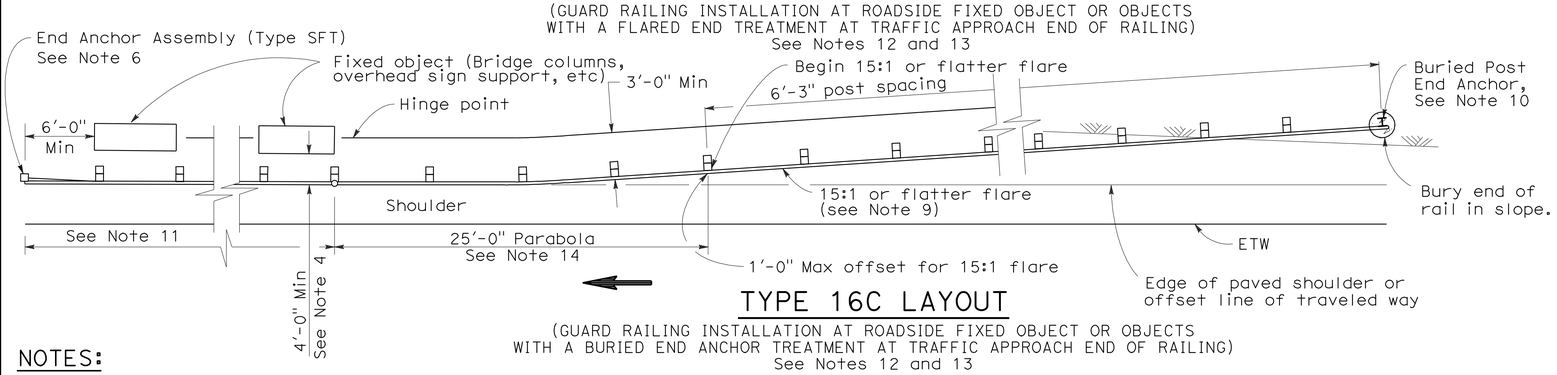

TYPE 16C LAYOUT

(GUARD RAILING INSTALLATION AT ROADSIDE FIXED OBJECT OR OBJECTS WITH A BURIED END ANCHOR TREATMENT AT TRAFFIC APPROACH END OF RAILING)
See Notes 12 and 13

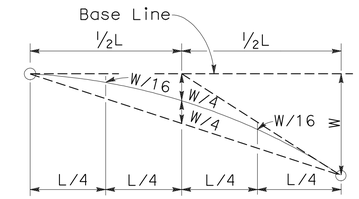

TYPICAL PARABOLIC LAYOUT

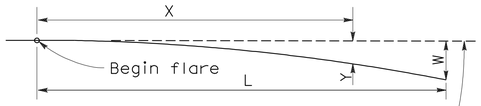

Base Line (Edge of paved shoulder or offset line of edge of traveled way)

$$Y = \frac{WX^2}{L^2}$$

Y = Offset from base line
W = Maximum offset
X = Distance along base line
L = Length of flare

PARABOLIC FLARE OFFSETS

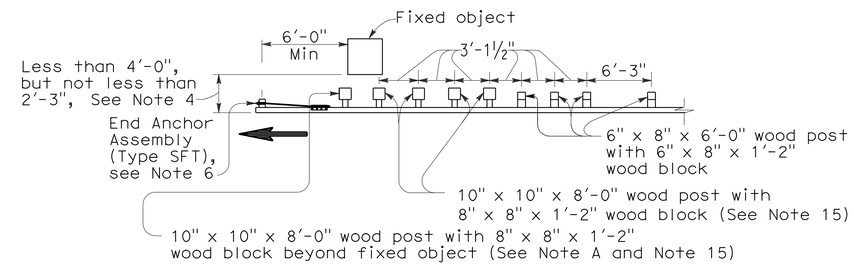

NOTE A: For a series of fixed objects (bridge columns, overhead sign supports, etc.) additional 10" x 10" x 8'-0" wood post with 8" x 8" x 1'-2" wood blocks at 3'-1½" center to center spacing are to be used between fixed objects.

STRENGTHENED RAILING SECTIONS FOR FIXED OBJECT

Use strengthened railing sections with Types 16A, 16B or 16C Layouts where minimum clearance between the face of the guard railing and fixed object(s) is less than 4'-0", but not less than 2'-3". See Note 4

NOTES:

1. Line post, blocks and hardware to be used are shown on Revised Standard Plans A77A1, A77A2, A77B1, A77C1 and A77C2.
2. Guard railing post spacing to be 6'-3" center to center, except as otherwise noted.
3. Except as noted, line posts are 6" x 8" x 6'-0" wood with 6" x 8" x 1'-2" wood blocks. W6 x 9 steel posts, 6'-0" in length, with 6" x 8" x 1'-2" notched wood blocks or notched recycled plastic blocks may be used for 6" x 8" x 6'-0" wood line posts with 6" x 8" x 1'-2" wood blocks where applicable and when specified.
4. A 4'-0" minimum clearance is required between the face of the railing and the face of a fixed object located directly behind standard guard railing sections with post spacing of 6'-3". Construct guard railing as shown in the detail "Strengthened Railing Sections for Fixed Objects" on this plan, where the clearance between the face of the railing and the face of a fixed object is less than 4'-0", but not less than 2'-3". Where the clearance is less than 2'-3", a concrete wall or barrier should be constructed to shield the fixed object(s).
5. Direction of adjacent traffic indicated by ⟶.
6. For End Anchor Assembly (Type SFT) details, see Standard Plan A77H1.
7. In-line Terminal System End Treatments are used where site conditions will not accommodate a flared end treatment.
8. The type of terminal system to be used will be shown on the Project Plans.
9. The 15:1 or flatter flare used with Type 16C Layout is based on the edge of the paved shoulder or offset line of edge of the traveled way. The length of guard railing within the 15:1 or flatter flare is based on site conditions and should be a length equal to multiples of 12'-6".
10. For details of the Buried Post End Anchor used with Type 16C Layout, see Standard Plan A77I2.
11. As site conditions dictate, construct additional guard railing to shield fixed object(s). Additional guard railing length equal to multiples of 12'-6". Post spacing at 6'-3" except as specified in Note 4.
12. Layout Types 16A, 16B or 16C are typically used where guard railing is recommended to shield roadside fixed object(s) and a crashworthy end treatment is required for only one direction of traffic.
13. Where placement of dike is required with guard railing, see Revised Standard Plan RSP A77C4 for dike positioning details.
14. For typical flare offsets for 25'-0" length parabola with maximum offset of 1'-0", see Revised Standard Plan RSP A77E1.
15. W6 x 15 steel post, 8'-0" in length, with 8" x 8" x 1'-2" notched wood block or notched recycled plastic blocks may be used in place of the 10" x 10" x 8'-0" wood post with 8" x 8" x 1'-2" wood block shown in the "Strengthened Railing Sections Detail".

STATE OF CALIFORNIA
DEPARTMENT OF TRANSPORTATION

METAL BEAM GUARD RAILING TYPICAL LAYOUTS FOR ROADSIDE FIXED OBJECTS

NO SCALE

RSP A77G3 DATED JUNE 6, 2008 SUPERSEDES STANDARD PLAN A77G3 DATED MAY 1, 2006 - PAGE 61 OF THE STANDARD PLANS BOOK DATED MAY 2006.

REVISED STANDARD PLAN RSP A77G3

12-10-07

Dist	COUNTY	ROUTE	POST MILES TOTAL PROJECT	SHEET No.	TOTAL SHEETS
11	SD	15,76	R46.1/R47.3, R16.7/R17.7	393	477

Randell D. Hiatt
REGISTERED CIVIL ENGINEER

May 20, 2011
PLANS APPROVAL DATE

REGISTERED PROFESSIONAL ENGINEER
Randell D. Hiatt
No. C50200
Exp. 6-30-11
CIVIL
STATE OF CALIFORNIA

The State of California or its officers or agents shall not be responsible for the accuracy or completeness of electronic copies of this plan sheet.

To accompany plans dated 4-16-12

2006 REVISED STANDARD PLAN RSP A77H1

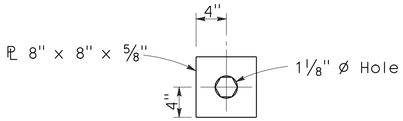

DETAIL A
CABLE CONNECTION
END PLATE

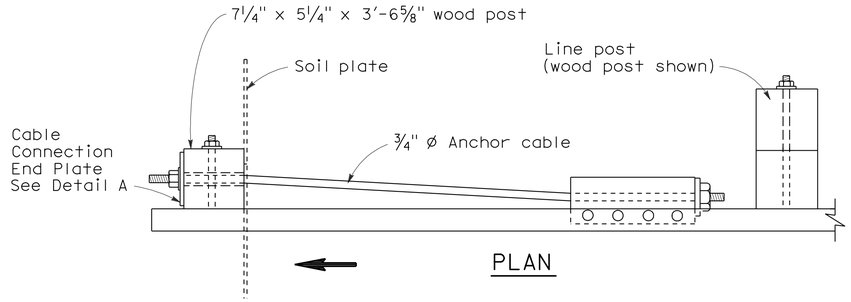

PLAN

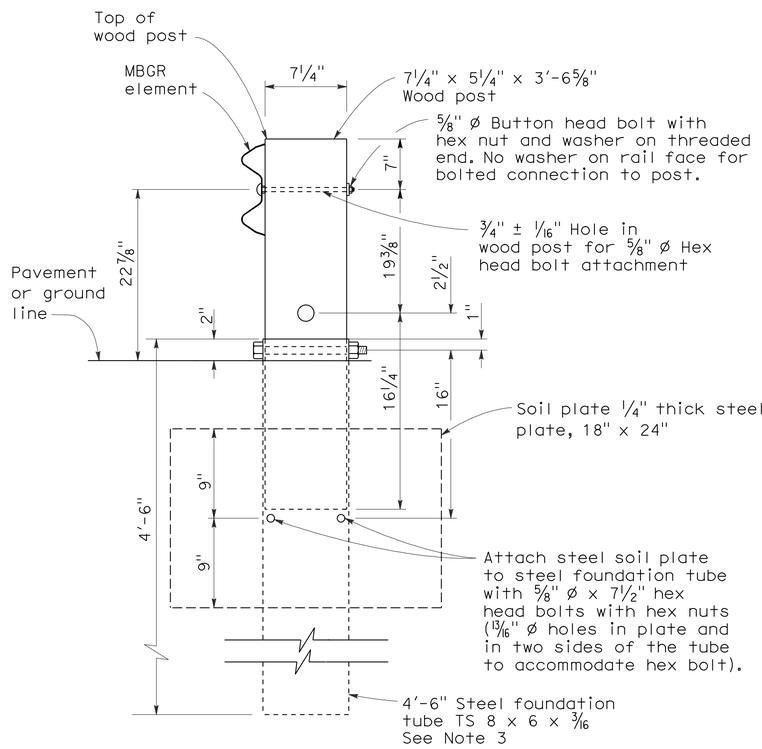

SECTION A-A

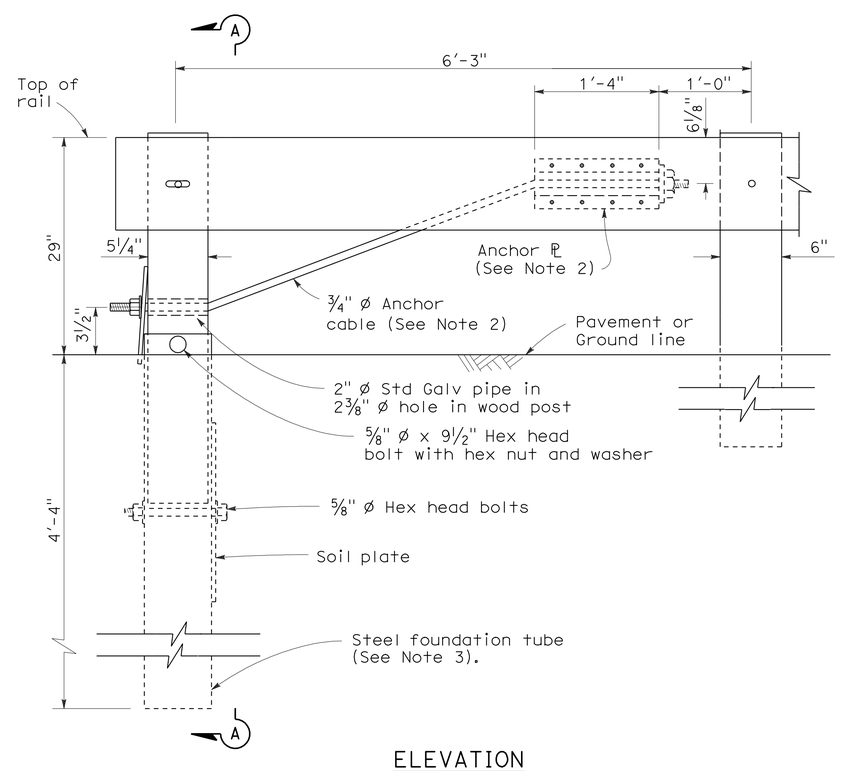

ELEVATION
END ANCHOR
ASSEMBLY (TYPE SFT)
See Note 1

NOTES:

1. See the A77E, A77F and A77G series of Standard Plans for typical use of End Anchor Assembly (Type SFT).
2. For details of the anchor plate and 3/4" cable, see Standard Plan A77H3.
3. A 6'-0" length steel foundation tube, TS 8 x 6 x 3/16, without a soil plate, may be furnished and installed in place of the 4'-6" length steel foundation tube and soil plate shown. Minimum embedment of the 6'-0" length tube shall be 5'-9". A 5/8" Ø hex head bolt and nut shall be installed in the hole in the 6'-0" length tube to keep the wood post from dropping into the tube.
4. Direction of traffic indicated by ⟹.
5. Install line post, steel foundation tube and soil plate in soil.

STATE OF CALIFORNIA
DEPARTMENT OF TRANSPORTATION

METAL RAILING END ANCHOR ASSEMBLY (TYPE SFT)

NO SCALE

RSP A77H1 DATED MAY 20, 2011 SUPERSEDES STANDARD PLAN A77H1
DATED MAY 1, 2006 - PAGE 67 OF THE STANDARD PLANS BOOK DATED MAY 2006.

REVISED STANDARD PLAN RSP A77H1

Dist	COUNTY	ROUTE	POST MILES TOTAL PROJECT	SHEET No.	TOTAL SHEETS
11	SD	15,76	R46.1/R47.3, R16.7/R17.7	394	477

Randell D. Hiatt
REGISTERED CIVIL ENGINEER

May 20, 2011
PLANS APPROVAL DATE

REGISTERED PROFESSIONAL ENGINEER Randell D. Hiatt No. C50200 Exp. 6-30-11 CIVIL STATE OF CALIFORNIA

To accompany plans dated 4-16-12

The State of California or its officers or agents shall not be responsible for the accuracy or completeness of electronic copies of this plan sheet.

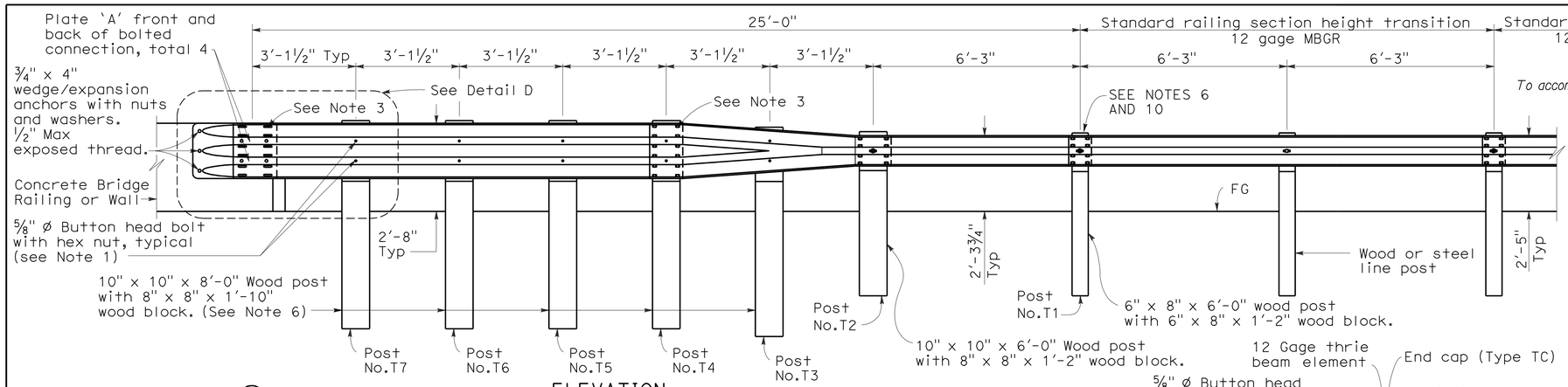

ELEVATION

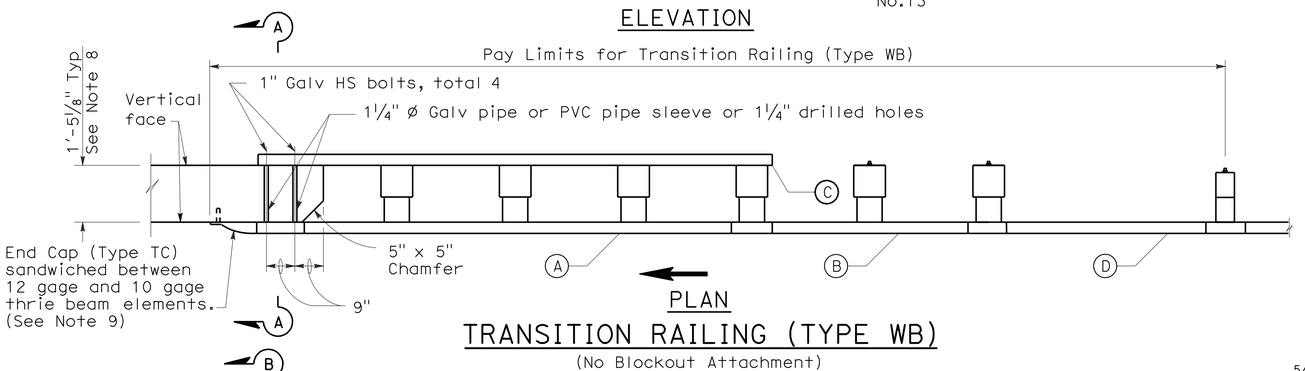

PLAN

TRANSITION RAILING (TYPE WB)

(No Blockout Attachment)

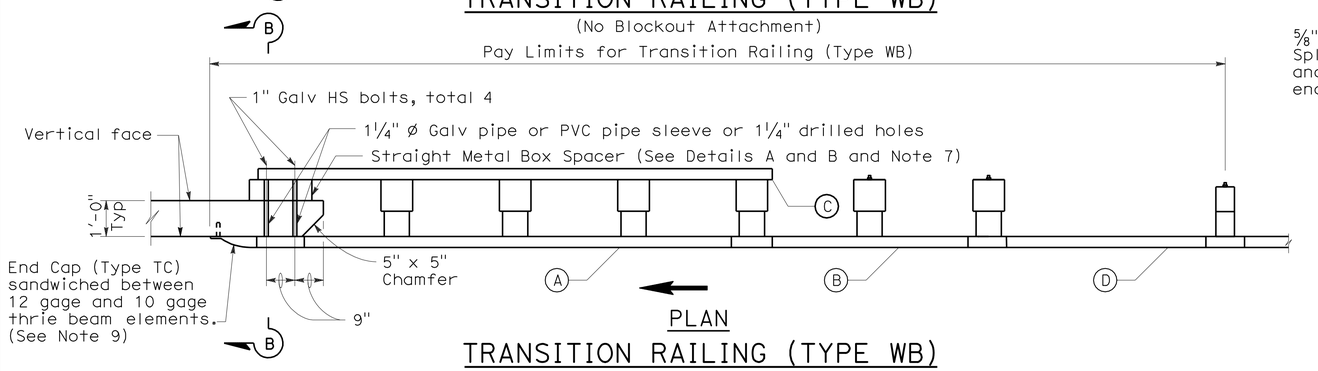

PLAN

TRANSITION RAILING (TYPE WB)

(Blockout Attachment)

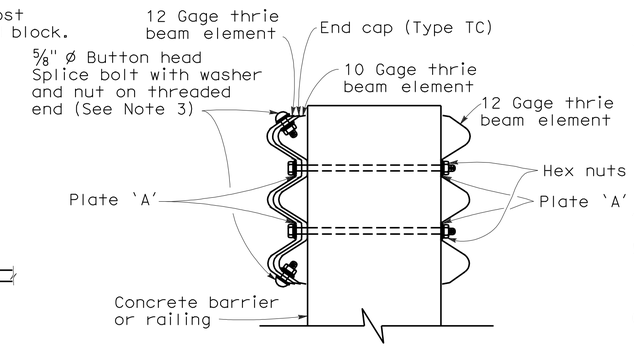

SECTION A-A

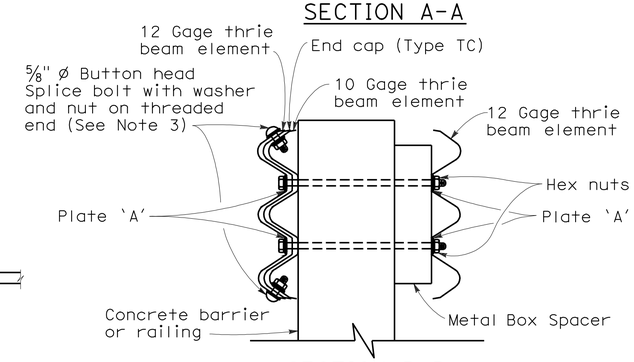

SECTION B-B

NOTES:

1. Use ⅝" ø Button head bolts and hex nuts for connections to posts. No washer on rail face for bolted connections to post.
2. The nested rail elements, end cap, and 'W' beam to thrie beam element may be spliced together prior to bolting the elements to the wood post and concrete barrier or railing.
3. Exterior splice bolt holes for rail element splices at Post No. T4 and the connection to the concrete barrier or railing shall be the standard 29/32" x 1⅛" slot size. Interior splice bolt holes at these locations may be increased up to 1¼" ø. Only the top 2 and the bottom 2 splice bolts with washers and nuts are required for rail splices at Post No. T4 and the connection to the concrete barrier or railing.
4. Direction of adjacent traffic indicated by ➡.
5. The top elevation of Posts No. T2 through No. T7 shall not project more than 1" above the top elevation of the rail element.
6. Typically, the railing connected to Transition Railing (Type WB) will be either standard railing section of metal beam guard railing with height transition ratio of 120:1 or an approved Caltrans end treatment attached to Post No. T1.
7. The depth of the metal box spacer varies from the 5⅛" to 1½" and is dependent on the width of the concrete railing or wall. The combined dimension for the depth of the metal box spacer plus the width of railing or wall is typically 17⅛". Where the space between the backside of the concrete railing or wall and the rear thrie beam element is less than 1½", metal plates similar to Plate 'A' are to be used as spacers.
8. Where the width of the concrete railing or wall is greater than 17⅛", wood blocks are to be used to fill the space created between the backside of Posts No. T4 through No. T7 and the rear thrie beam element. These wood blocks shall be 8" in width and 1'-2" in length. The dimension between the front thrie beam element and the rear thrie beam element is to match the width of the concrete railing or wall.
9. End cap may be installed over 12 gage and 10 gage thrie beam elements where transition railing is installed on the departure end of bridge railing.
10. Conform standard railing section height to 2'-3¾" at Post No. T1 using height transition ratio of 120:1.

LEGEND

(A) Nested thrie beam elements (one 12 gage element nested over one 10 gage element).

(B) One 10 gage "W" beam to thrie beam element.

(C) One 12 gage thrie beam element.

(D) One 10 gage "W" beam rail element (7'-3½" length)

10 gage = 0.135" thick

12 gage = 0.108" thick

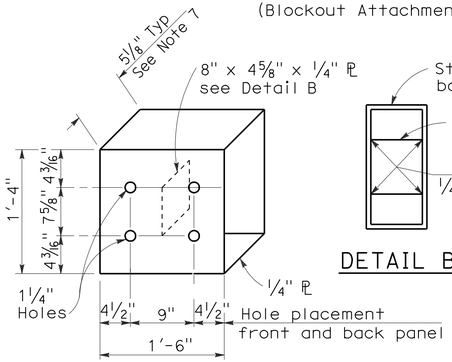

DETAIL A

STRAIGHT METAL BOX SPACER

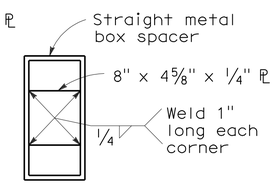

DETAIL B

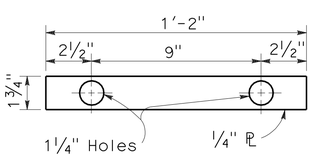

DETAIL C

PLATE 'A'

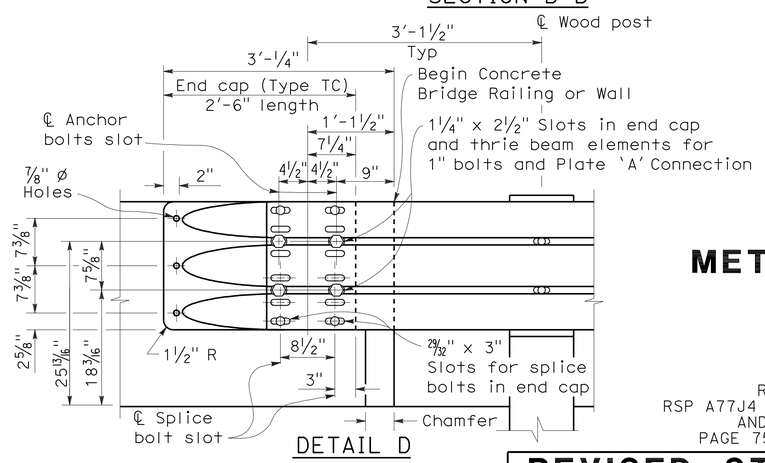

DETAIL D

STATE OF CALIFORNIA
DEPARTMENT OF TRANSPORTATION

METAL BEAM GUARD RAILING TRANSITION RAILING (TYPE WB)

NO SCALE

RSP A77J4 DATED MAY 20, 2011 SUPERSEDES
RSP A77J4 DATED JUNE 5, 2009, RSP A77J4 DATED JUNE 6, 2008
AND STANDARD PLAN A77J4 DATED MAY 1, 2006 -
PAGE 75 OF THE STANDARD PLANS BOOK DATED MAY 2006.

REVISED STANDARD PLAN RSP A77J4

2006 REVISED STANDARD PLAN RSP A77J4

5-14-09

Dist	COUNTY	ROUTE	POST MILES TOTAL PROJECT	SHEET No.	TOTAL SHEETS
11	SD	15,76	R46.1/R47.3, R16.7/R17.7	395	477

Randell D. Hiatt
REGISTERED CIVIL ENGINEER

May 20, 2011
PLANS APPROVAL DATE

REGISTERED PROFESSIONAL ENGINEER
Randell D. Hiatt
No. C50200
Exp. 6-30-11
CIVIL
STATE OF CALIFORNIA

The State of California or its officers or agents shall not be responsible for the accuracy or completeness of electronic copies of this plan sheet.

To accompany plans dated 4-16-12

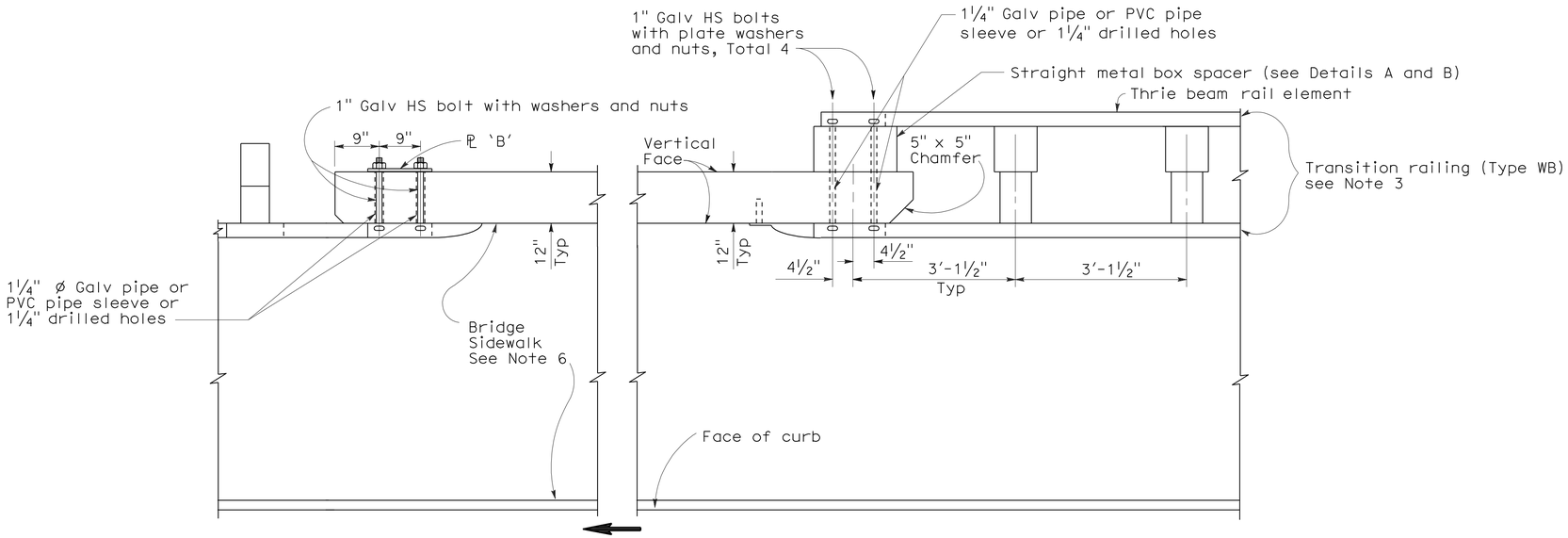

PLAN

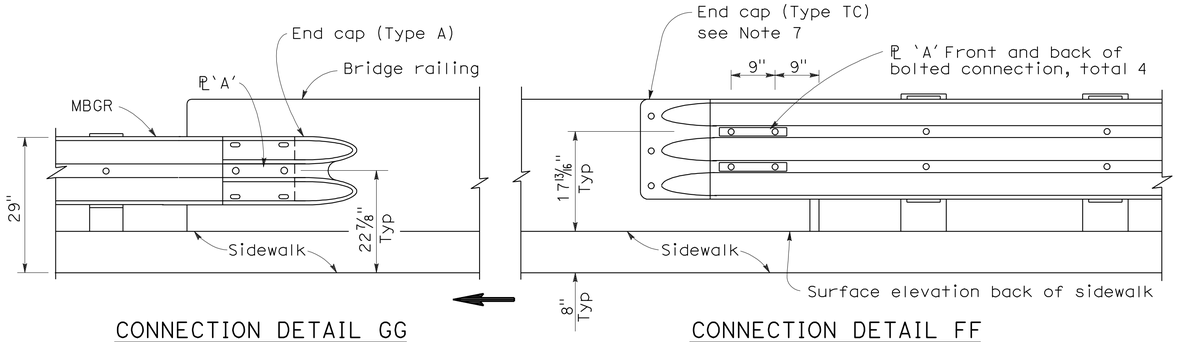

CONNECTION DETAIL GG
See Notes 5

ELEVATION

CONNECTION DETAIL FF
See Notes 4

GUARD RAILING CONNECTION TO BRIDGE RAILING WITH SIDEWALKS

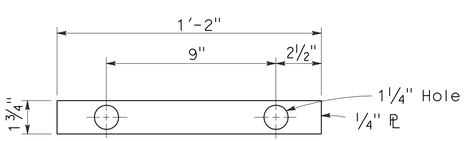

PLATE 'A'

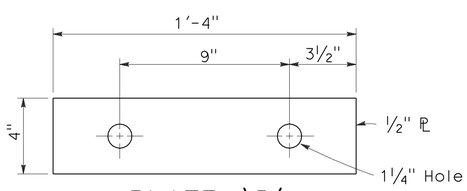

PLATE 'B'
(For backside of connection SB)

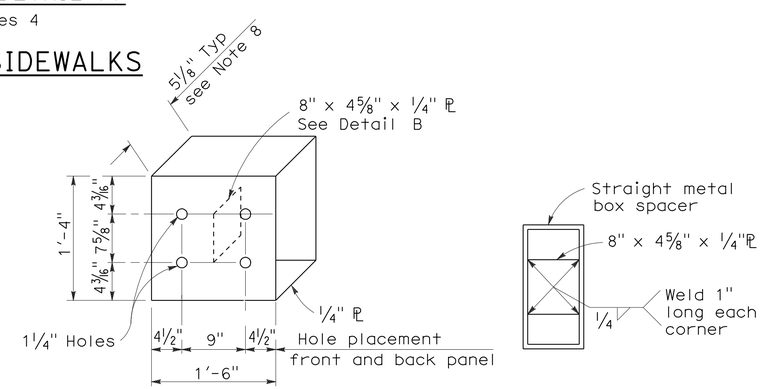

DETAIL A

DETAIL B

STRAIGHT METAL BOX SPACER

NOTES:

1. See Standard Plan A77K2 for additional connection details to bridges with sidewalks.
2. Direction of adjacent traffic indicated by ⟶.
3. For additional details of Transition Railing (Type WB), see Standard Plan A77J4. Transition Railing (Type WB) transitions the 12 gage w-beam standard railing section of guard railing to a heavier gage nested thrie beam railing which is connected to the concrete bridge railing.
4. For typical use of Connection Detail FF, see Layout Types 12A and 12B on Standard Plan A77F1.
5. For typical use of Connection Detail GG, see Layout Type 12D on Standard Plan A77F2 and Layout Type 12DD on Standard Plan A77F5.
6. Where the bridge sidewalk is not continued beyond the end of the bridge railing, the portion of the sidewalk beyond each end of the bridge railing shall be transitioned down from the top elevation of the sidewalk, for its entire width, to the finished grade of the adjacent roadbed. The longitudinal slope of each sidewalk elevation transition shall not exceed 8.33 percent.
7. For details of End Cap (Type TC), see Standard Plan A77J4.
8. See Standard Plan A77J4 for additional details regarding depth dimension for straight metal box spacer.

STATE OF CALIFORNIA
DEPARTMENT OF TRANSPORTATION

METAL BEAM GUARD RAILING CONNECTIONS TO BRIDGE RAILINGS WITH SIDEWALKS DETAILS No.1

NO SCALE

RSP A77K1 DATED MAY 20, 2011 SUPERSEDES STANDARD PLAN A77K1
DATED MAY 1, 2006 - PAGE 76 OF THE STANDARD PLANS BOOK DATED MAY 2006.

REVISED STANDARD PLAN RSP A77K1

2006 REVISED STANDARD PLAN RSP A77K1

3-10-11

DIST	COUNTY	ROUTE	POST MILES TOTAL PROJECT	SHEET No.	TOTAL SHEETS
11	SD	15,76	R46.1/R47.3, R16.7/R17.7	396	477

Randell D. Hiatt
REGISTERED CIVIL ENGINEER

June 6, 2008
PLANS APPROVAL DATE

REGISTERED PROFESSIONAL ENGINEER
Randell D. Hiatt
No. C50200
Exp. 6-30-09
CIVIL
STATE OF CALIFORNIA

The State of California or its officers or agents shall not be responsible for the accuracy or completeness of electronic copies of this plan sheet.

To accompany plans dated 4-16-12

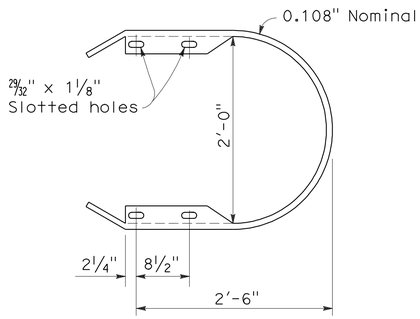

RETURN CAP
(TYPE TA)

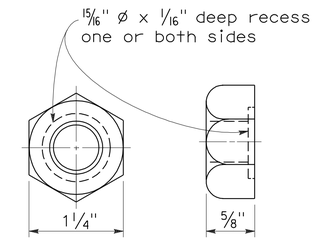

5/8" ø RECESS NUT

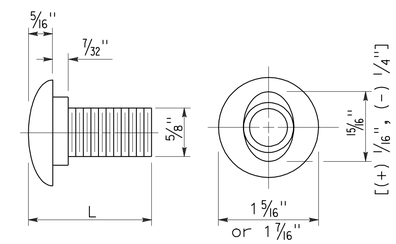

5/8" ø BUTTON HEAD BOLT

L	THREAD LENGTH
1 1/4"	full thread length
2"	full thread length
9 1/2"	4" Min thread length
18"	4" Min thread length

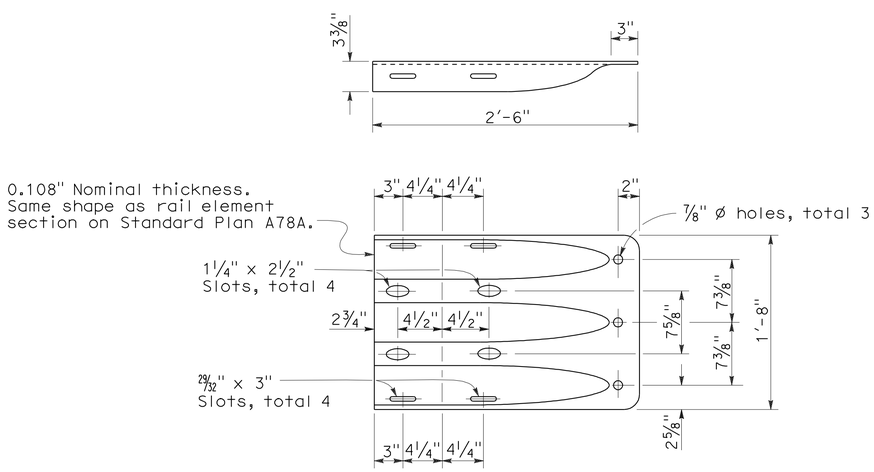

END CAP
(TYPE TC)

STATE OF CALIFORNIA
DEPARTMENT OF TRANSPORTATION

THRIE BEAM BARRIER STANDARD HARDWARE DETAILS

NO SCALE

RSP A78C1 DATED JUNE 6, 2008 SUPERSEDES STANDARD PLAN A78C1
DATED MAY 1, 2006 - PAGE 85 OF THE STANDARD PLANS BOOK DATED MAY 2006.

REVISED STANDARD PLAN RSP A78C1

2006 REVISED STANDARD PLAN RSP A78C1

4-21-08

DIST	COUNTY	ROUTE	POST MILES TOTAL PROJECT	SHEET NO.	TOTAL SHEETS
11	SD	15,76	R46.1/R47.3, R16.7/R17.7	397	477

Randell D. Hiatt
REGISTERED CIVIL ENGINEER

October 20, 2006
PLANS APPROVAL DATE

REGISTERED PROFESSIONAL ENGINEER
Randell D. Hiatt
No. C50200
Exp. 6-30-07
CIVIL
STATE OF CALIFORNIA

The State of California or its officers or agents shall not be responsible for the accuracy or completeness of electronic copies of this plan sheet.

To accompany plans dated 4-16-12

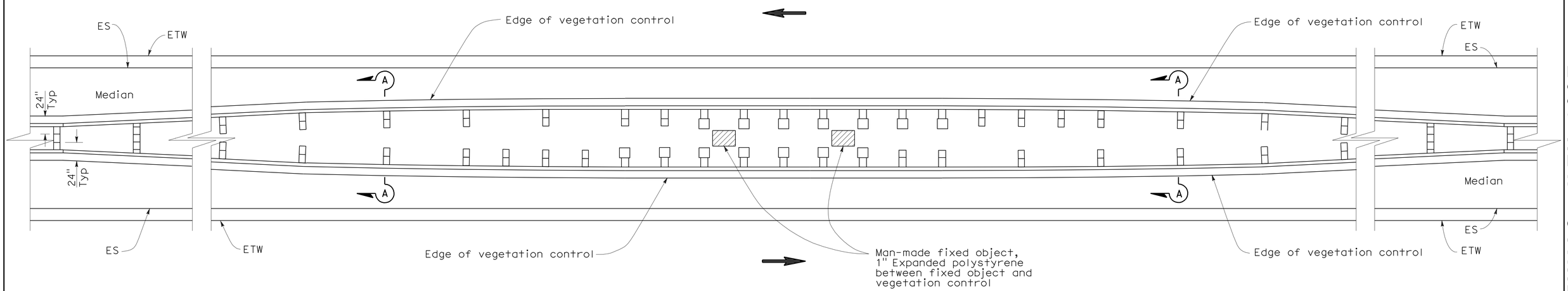

PLAN

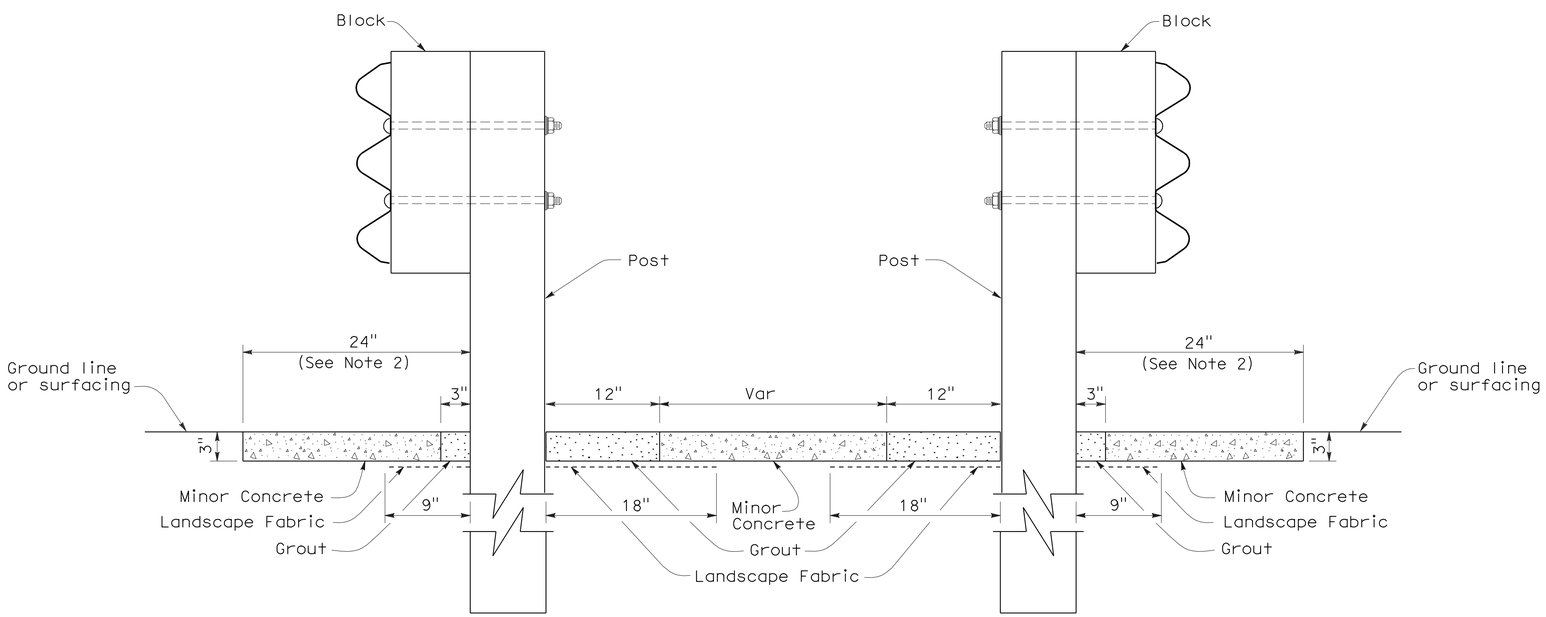

SECTION A-A

NOTES:

1. See New Standard Plan NSP A78C3 for additional vegetation control.
2. Where dike is constructed under barrier, construct vegetation control to back edge of dike. Where paved shoulder is constructed within 24" in front of the post, construct vegetation control to the edge of paved shoulder.
3. Direction of adjacent traffic indicated by ←.

STATE OF CALIFORNIA
DEPARTMENT OF TRANSPORTATION

THRIE BEAM BARRIER TYPICAL VEGETATION CONTROL AT FIXED OBJECTS IN MEDIAN

NO SCALE

NSP A78C5 DATED OCTOBER 20, 2006 SUPPLEMENTS THE STANDARD PLANS BOOK DATED MAY 2006.

NEW STANDARD PLAN NSP A78C5

2006 NEW STANDARD PLAN NSP A78C5

7-17-06

DIST	COUNTY	ROUTE	POST MILES TOTAL PROJECT	SHEET NO.	TOTAL SHEETS
11	SD	15,76	R46.1/R47.3, R16.7/R17.7	398	477

Randell D. Hiatt
REGISTERED CIVIL ENGINEER

June 6, 2008
PLANS APPROVAL DATE

REGISTERED PROFESSIONAL ENGINEER
Randell D. Hiatt
No. C50200
Exp. 6-30-09
CIVIL
STATE OF CALIFORNIA

The State of California or its officers or agents shall not be responsible for the accuracy or completeness of electronic copies of this plan sheet.

To accompany plans dated 4-16-12

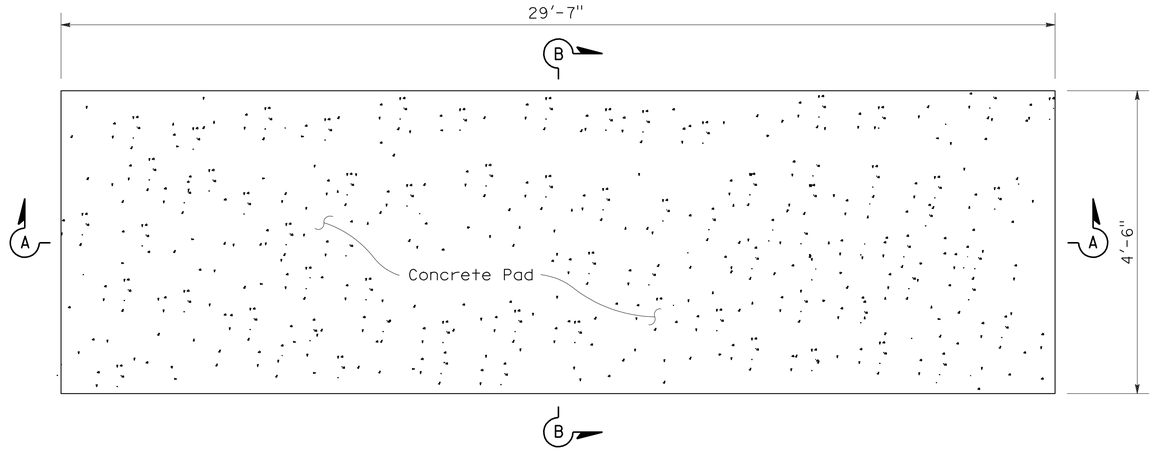

PLAN VIEW

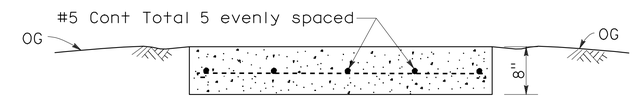

SECTION B-B

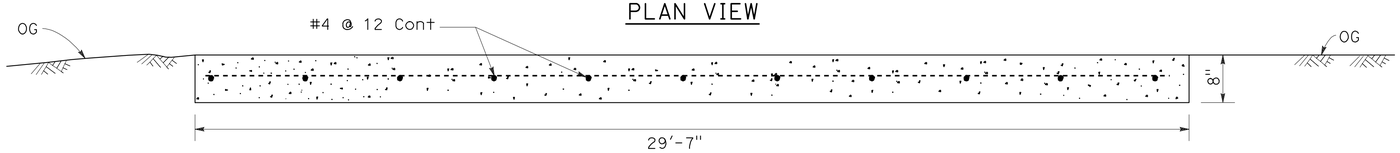

SECTION A-A

CONCRETE ANCHOR SLAB

NOTES:

1. For additional details of this crash cushion, refer to manufacturer's installation instructions.
2. For details of the REACT Crash Cushion with self contained backup support (no concrete backup block), see Standard Plan A82D1.
3. The base track frame with cylinders attached comes from the manufacturer as a completely pre-assembled unit.
4. Place the crash cushion unit on the cured concrete anchor slab and use the base track frame of the crash cushion as a template for drilling anchor bolt holes. Drill holes in slab and attach crash cushion with wedge anchor bolts supplied by the manufacturer.
5. Attach last cylinder to concrete backup block with manufacturer supplied fastener in such manner as recommended by the manufacturer.
6. Attach the manufacturer supplied side cable anchor plates to the cured concrete backup block with the manufacturer supplied bolts in such manner as recommended by the manufacturer.
7. Place manufacturer supplied cover over cylinders and attach cover to cylinders with manufacturer supplied fasteners.

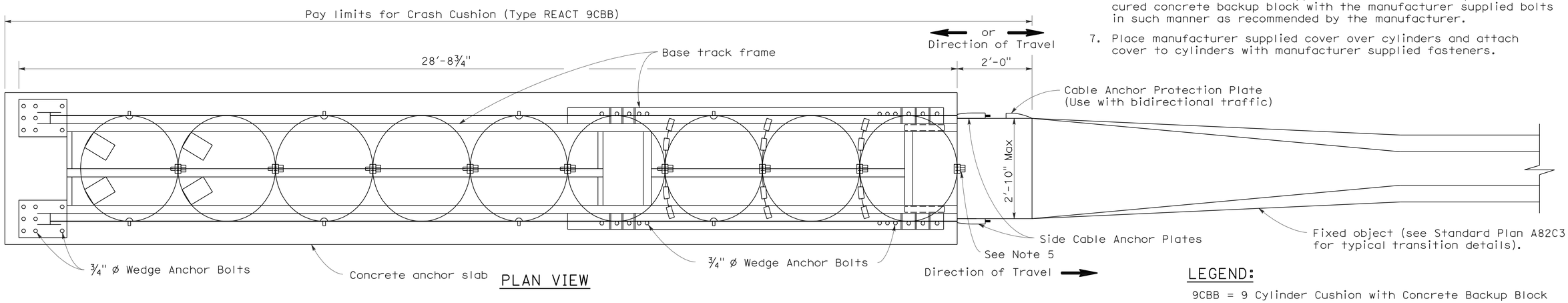

PLAN VIEW

LEGEND:

9CBB = 9 Cylinder Cushion with Concrete Backup Block

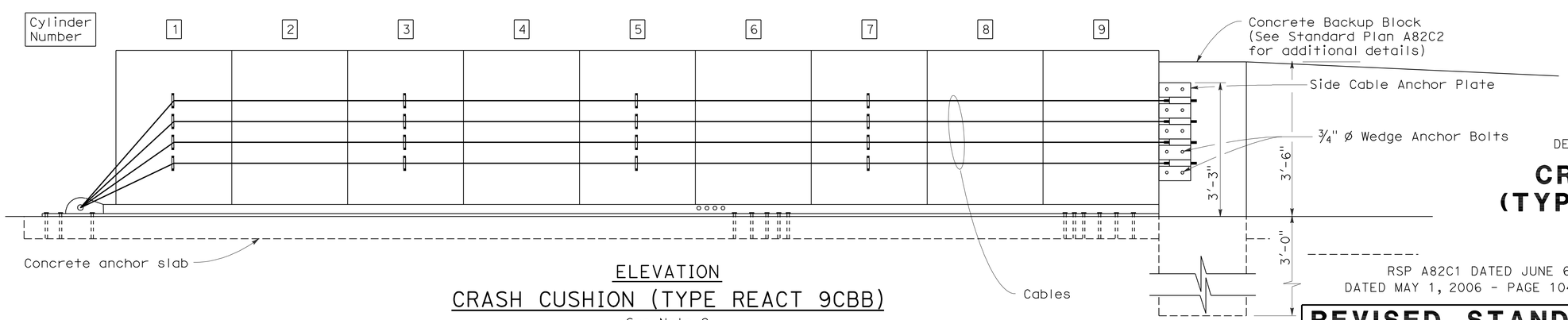

ELEVATION

CRASH CUSHION (TYPE REACT 9CBB)

See Note 2

STATE OF CALIFORNIA
DEPARTMENT OF TRANSPORTATION

CRASH CUSHION (TYPE REACT 9CBB)

NO SCALE

RSP A82C1 DATED JUNE 6, 2008 SUPERSEDES STANDARD PLAN A82C1
DATED MAY 1, 2006 - PAGE 104 OF THE STANDARD PLANS BOOK DATED MAY 2006.

REVISED STANDARD PLAN RSP A82C1

2006 REVISED STANDARD PLAN RSP A82C1

4-21-08

DIST	COUNTY	ROUTE	POST MILES TOTAL PROJECT	SHEET NO.	TOTAL SHEETS
11	SD	15,76	R46.1/R47.3, R16.7/R17.7	399	477

REGISTERED CIVIL ENGINEER

June 5, 2009
PLANS APPROVAL DATE

REGISTERED PROFESSIONAL ENGINEER Glenn DeCou No. C34547 Exp. 9-30-09 CIVIL STATE OF CALIFORNIA

The State of California or its officers or agents shall not be responsible for the accuracy or completeness of electronic copies of this plan sheet.

To accompany plans dated 4-16-12

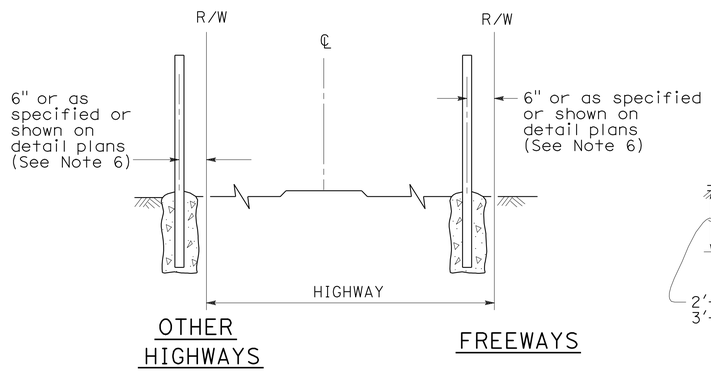

FENCE LOCATION

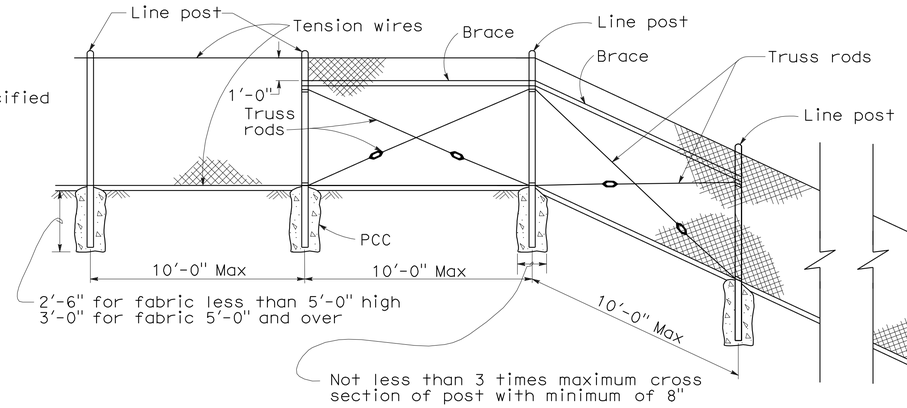

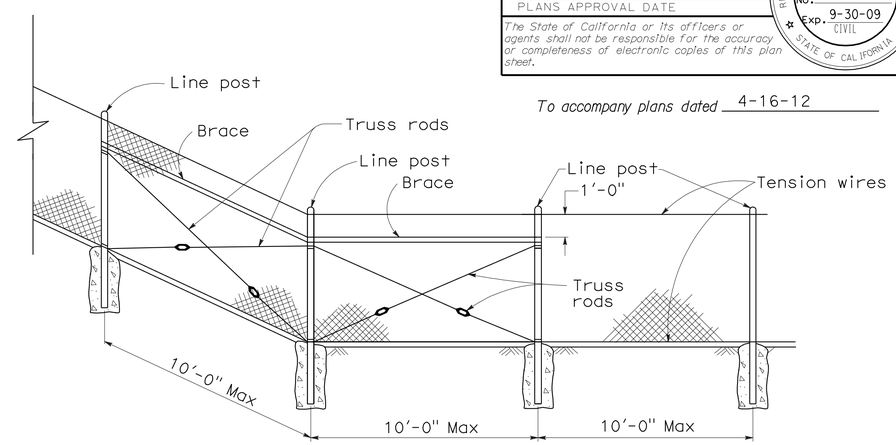

CHAIN LINK FENCE ON SHARP BREAK IN GRADE

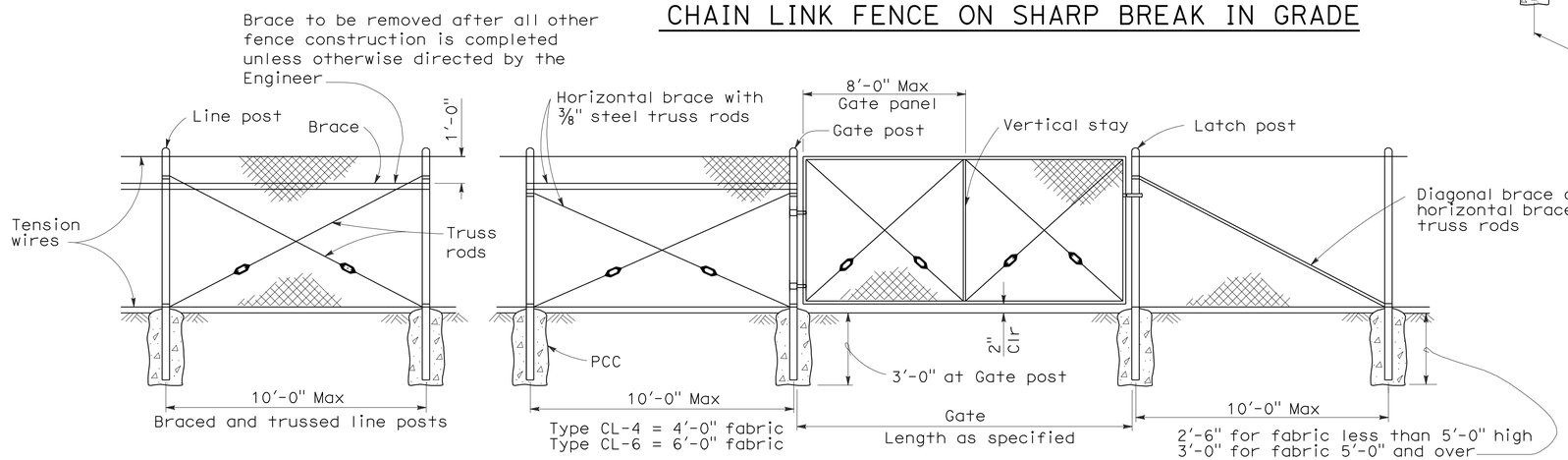

CHAIN LINK GATE INSTALLATION

GATE POST			
FENCE HEIGHT	GATE WIDTHS	NOMINAL ID	WEIGHT PER FOOT
6'-0" and Less	Up thru 6'-0"	2½"	4.95 LB
	Over 6'-0" thru 12'-0"	4"	10.79 LB
	Over 12'-0" thru 18'-0"	5"	14.62 LB
	Over 18'-0" to 24'-0" Max	6"	18.97 LB
Over 6'-0"	Up thru 6'-0"	3"	7.58 LB
	Over 6'-0" thru 12'-0"	5"	14.62 LB
	Over 12'-0" thru 18'-0"	6"	18.97 LB
	Over 18'-0" to 24'-0" Max	8"	28.55 LB

Above post dimensions and weights are minimums. Larger sizes may be used on approval of the Engineer.

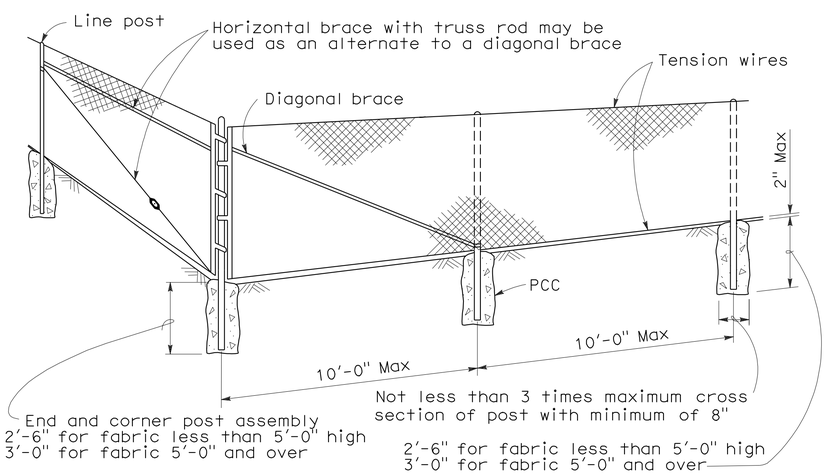

CORNER POST

NOTES:

1. The below table shows examples of post and brace sections which may comply with the Specifications.
2. Sections shown in the tables must also comply with the strength requirements and other provisions of the Specifications.
3. Other sections which comply with the strength requirements and other provisions of the Specifications may be used on approval of the Engineer.
4. Options exercised shall be uniform on any one project.
5. Dimensions shown are nominal.
6. Offset to be 2'-0" at monument locations, measured at right angles to R/W lines. Taper to achieve offset to be at least 20'-0" long.

TYPICAL MEMBER DIMENSIONS (See Notes)											
FENCE HEIGHT	LINE POSTS			END, LATCH & CORNER POSTS				BRACES			
	ROUND ID	H	ROLL FORMED	ROUND ID	ROLL FORMED			ROUND ID	H	ROLL FORMED	
6' & less	1½"	1⅞" × 1⅝"	1⅞" × 1⅝"	2"	3½" × 3½"	2" × 1¾"		1¼"	1½" × 1 5/16"	1⅝" × 1¼"	1¾" × 1¼"
Over 6'	2"	2¼" × 2"	2" × 1¾"	2½"	3½" × 3½"	2½" × 2½"		1¼"	1½" × 1 5/16"	1⅝" × 1¼"	1¾" × 1¼"

STATE OF CALIFORNIA
DEPARTMENT OF TRANSPORTATION

CHAIN LINK FENCE

NO SCALE

RSP A85 DATED JUNE 5, 2009 SUPERSEDES STANDARD PLAN A85
DATED MAY 1, 2006 - PAGE 111 OF THE STANDARD PLANS BOOK DATED MAY 2006.

REVISED STANDARD PLAN RSP A85

2006 REVISED STANDARD PLAN RSP A85

5-7-09

DIST	COUNTY	ROUTE	POST MILES TOTAL PROJECT	SHEET NO.	TOTAL SHEETS
11	SD	15,76	R46.1/R47.3, R16.7/R17.7	400	477

REGISTERED CIVIL ENGINEER

June 5, 2009
PLANS APPROVAL DATE

REGISTERED PROFESSIONAL ENGINEER Glenn DeCou No. C34547 Exp. 9-30-09 CIVIL STATE OF CALIFORNIA

The State of California or its officers or agents shall not be responsible for the accuracy or completeness of electronic copies of this plan sheet.

To accompany plans dated 4-16-12

NOTES:

1. H is 2'-6" for fabric less than 5'-0" high. H is 3'-0" for fabric 5'-0" and over.
2. T is not less than 3 times maximum cross section of post with minimum of 8".
3. Arms with barbed wire to be used where shown on plans.
4. See Revised Standard Plan RSP A85 for Chain Link Fencing dimensions.
5. Reinforcing must comply with ASTM A 706.
6. See Detail A on New Standard Plan NSP A86B for connection at headwall.

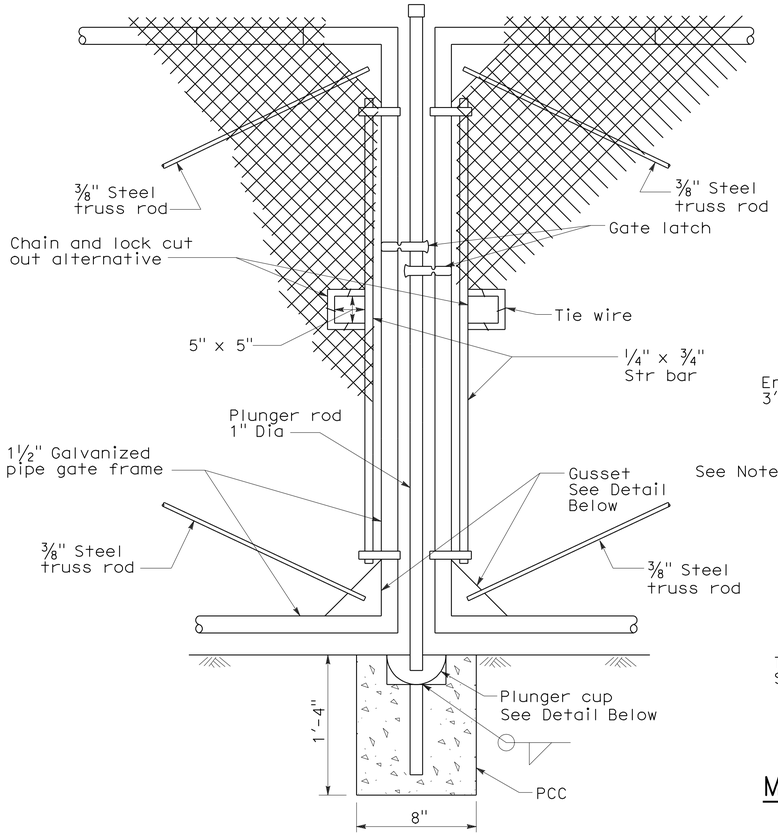

TYPICAL DOUBLE GATE REMOVABLE CENTER POST

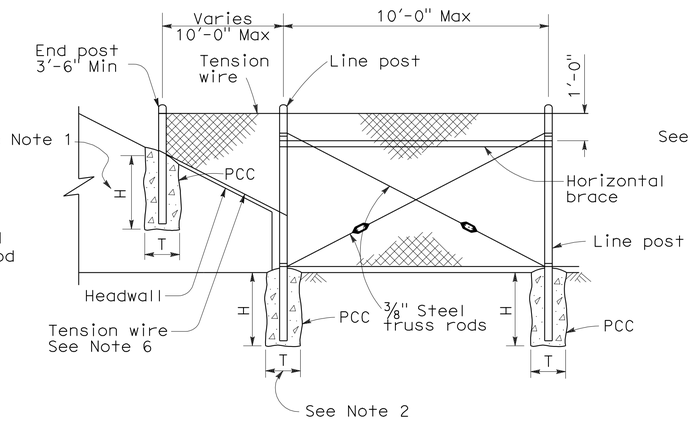

METHOD OF TYING FENCE TO HEADWALL

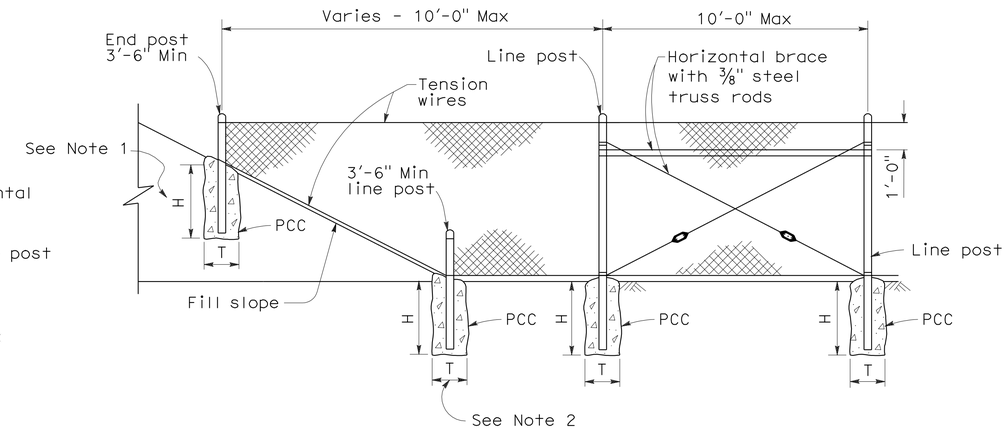

METHOD OF ERECTING FENCE FOR FILL SLOPE

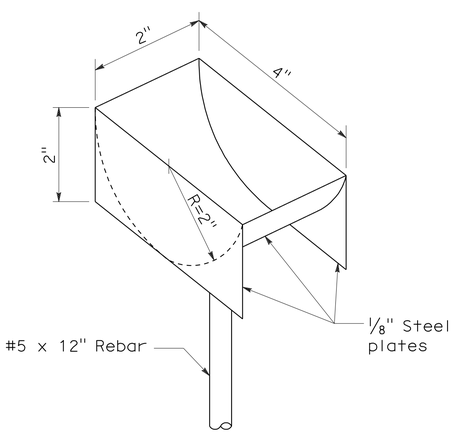

PLUNGER CUP DETAIL

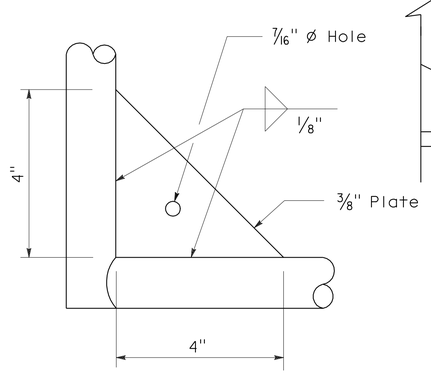

GUSSET DETAIL

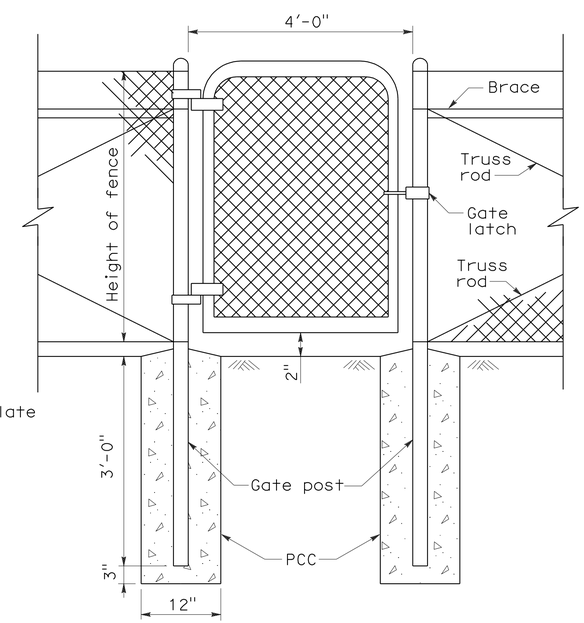

WALK GATE

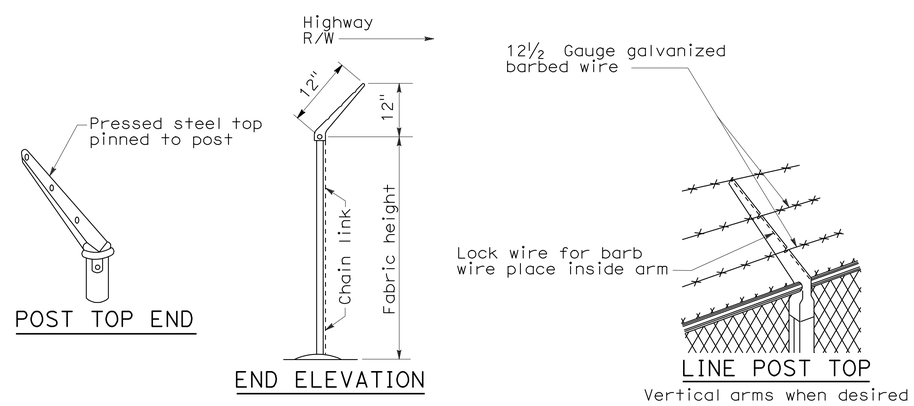

POST TOP END

END ELEVATION

LINE POST TOP
Vertical arms when desired

BARBED WIRE POST TOP
See Note 3

STATE OF CALIFORNIA
DEPARTMENT OF TRANSPORTATION

CHAIN LINK FENCE DETAILS

NO SCALE

NSP A85A DATED JUNE 5, 2009 SUPPLEMENTS THE STANDARD PLANS BOOK DATED MAY 2006.

NEW STANDARD PLAN NSP A85A

2006 NEW STANDARD PLAN NSP A85A

5-7-09