DIST	COUNTY	ROUTE	POST MILES TOTAL PROJECT	SHEET No.	TOTAL SHEETS
11	SD	15,76	R46.1/R47.3, R16.7/R17.7	101	477

J. Tesar 01-12-12
CERTIFIED ENGINEERING GEOLOGIST DATE

4-16-12
PLANS APPROVAL DATE

PROFESSIONAL GEOLOGIST Jeff Tesar No. 2137 Exp. 01-31-13 CERTIFIED ENGINEERING GEOLOGIST STATE OF CALIFORNIA

The State of California or its officers or agents shall not be responsible for the accuracy or completeness of electronic copies of this plan sheet.

This LOTB sheet was prepared in accordance with the Caltrans Soil & Rock Logging, Classification, & Presentation Manual (2010 Edition).

FOR PLAN VIEW, SEE
"LOG OF TEST BORINGS 1 OF 11"

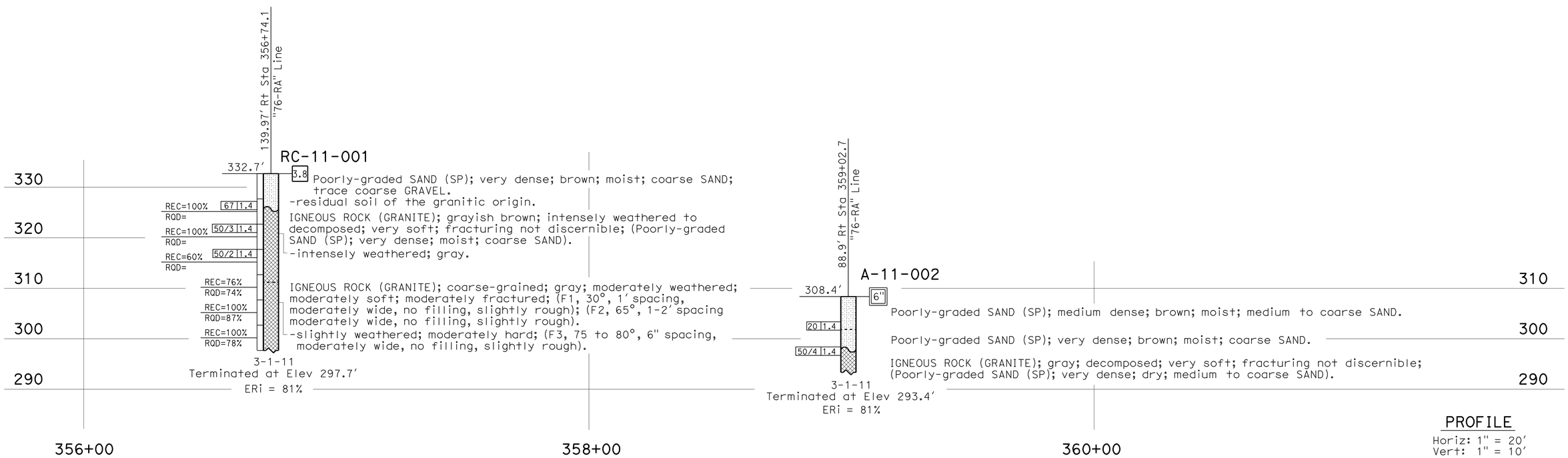

PROFILE
Horiz: 1" = 20'
Vert: 1" = 10'

G-17

ENGINEERING SERVICES	GEOTECHNICAL SERVICES	STATE OF CALIFORNIA DEPARTMENT OF TRANSPORTATION	DIVISION OF ENGINEERING SERVICES STRUCTURE DESIGN DESIGN BRANCH	BRIDGE NO. / POST MILE 46.1/47.3	CONTOUR AND GRADING LOG OF TEST BORINGS 5 OF 11
FUNCTIONAL SUPERVISOR NAME: B. Hinman	DRAWN BY: C. Christian , F. Nguyen, I-G-Remmen CHECKED BY: Z. Yazdani	FIELD INVESTIGATION BY: J. Tesar			

OGS CIVIL LOG OF TEST BORINGS SHEET

ORIGINAL SCALE IN INCHES FOR REDUCED PLANS 0 1 2 3

UNIT: 3643
PROJECT NUMBER & PHASE: 11000204691 CONTRACT NO.: 11-257141

DISREGARD PRINTS BEARING EARLIER REVISION DATES → REVISION DATES 05-04-11 05-10-11 SHEET X OF X

FILE => 1100020469ha017.dgn

USERNAME => s114640 DATE PLOTTED => 17-APR-2012 TIME PLOTTED => 13:31

DIST	COUNTY	ROUTE	POST MILES TOTAL PROJECT	SHEET No.	TOTAL SHEETS
11	SD	15,76	R46.1/R47.3, R16.7/R17.7	102	477

J. Tesar 01-12-12
CERTIFIED ENGINEERING GEOLOGIST DATE

4-16-12
PLANS APPROVAL DATE

PROFESSIONAL GEOLOGIST Jeff Tesar No. 2137 Exp. 01-31-13 CERTIFIED ENGINEERING GEOLOGIST STATE OF CALIFORNIA

The State of California or its officers or agents shall not be responsible for the accuracy or completeness of electronic copies of this plan sheet.

This LOTB sheet was prepared in accordance with the Caltrans Soil & Rock Logging, Classification, & Presentation Manual (2010 Edition).

FOR PLAN VIEW, SEE
"LOG OF TEST BORINGS 1 OF 11"

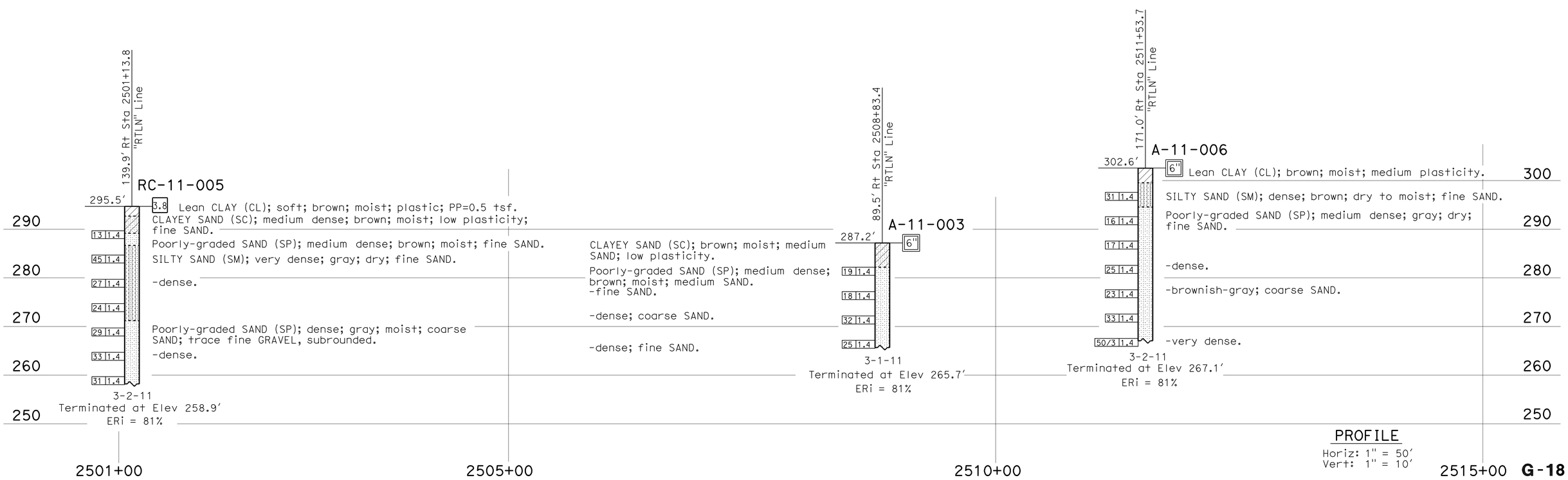

PROFILE
Horiz: 1" = 50'
Vert: 1" = 10'

G-18

ENGINEERING SERVICES	GEOTECHNICAL SERVICES	STATE OF CALIFORNIA DEPARTMENT OF TRANSPORTATION	DIVISION OF ENGINEERING SERVICES STRUCTURE DESIGN DESIGN BRANCH	BRIDGE NO. / POST MILE 46.1/47.3	CONTOUR AND GRADING LOG OF TEST BORINGS 6 OF 11
FUNCTIONAL SUPERVISOR NAME: B. Hinman	DRAWN BY: C. Christian , F. Nguyen, I-G-Remmen; CHECKED BY: Z. Yazdani	FIELD INVESTIGATION BY: J. Tesar			

OGS CIVIL LOG OF TEST BORINGS SHEET

ORIGINAL SCALE IN INCHES FOR REDUCED PLANS 0 1 2 3

UNIT: 3643
PROJECT NUMBER & PHASE: 11000204691 CONTRACT NO.: 11-257141

DISREGARD PRINTS BEARING EARLIER REVISION DATES

REVISION DATES				SHEET	OF
05-04-11	05-10-11			X	X

FILE => 1100020469ha018.dgn

USERNAME => s114640 DATE PLOTTED => 17-APR-2012 TIME PLOTTED => 13:31

DIST	COUNTY	ROUTE	POST MILES TOTAL PROJECT	SHEET No.	TOTAL SHEETS
11	SD	15,76	R46.1/R47.3, R16.7/R17.7	103	477

J. Tesar 01-12-12
CERTIFIED ENGINEERING GEOLOGIST DATE

4-16-12
PLANS APPROVAL DATE

PROFESSIONAL GEOLOGIST Jeff Tesar No. 2137 Exp. 01-31-13 CERTIFIED ENGINEERING GEOLOGIST STATE OF CALIFORNIA

The State of California or its officers or agents shall not be responsible for the accuracy or completeness of electronic copies of this plan sheet.

This LOTB sheet was prepared in accordance with the Caltrans Soil & Rock Logging, Classification, & Presentation Manual (2010 Edition).

FOR PLAN VIEW, SEE
"LOG OF TEST BORINGS 1 OF 11"

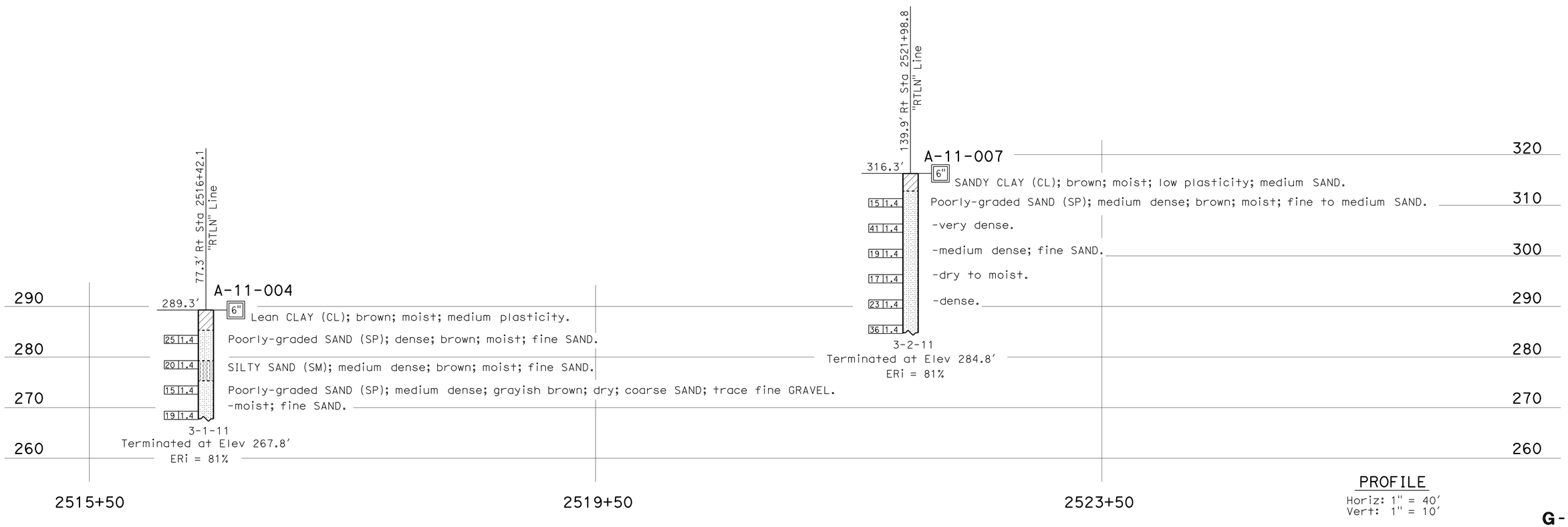

PROFILE
Horiz: 1" = 40'
Vert: 1" = 10'

G-19

ENGINEERING SERVICES	GEOTECHNICAL SERVICES	STATE OF CALIFORNIA DEPARTMENT OF TRANSPORTATION	DIVISION OF ENGINEERING SERVICES STRUCTURE DESIGN DESIGN BRANCH	BRIDGE NO. / POST MILE 46.1/47.3	CONTOUR AND GRADING LOG OF TEST BORINGS 7 OF 11
FUNCTIONAL SUPERVISOR NAME: B. Hinman	DRAWN BY: C. Christian , F. Nguyen, I-G-Remmen CHECKED BY: Z. Yazdani	FIELD INVESTIGATION BY: J. Tesar			

OGS CIVIL LOG OF TEST BORINGS SHEET

ORIGINAL SCALE IN INCHES FOR REDUCED PLANS 0 1 2 3

UNIT: 3643
PROJECT NUMBER & PHASE: 11000204691 CONTRACT NO.: 11-257141

DISREGARD PRINTS BEARING EARLIER REVISION DATES

REVISION DATES			SHEET	OF
05-04-11	05-10-11		X	X

FILE => 1100020469ha019.dgn

USERNAME => s114640 DATE PLOTTED => 17-APR-2012 TIME PLOTTED => 13:31

DIST	COUNTY	ROUTE	POST MILES TOTAL PROJECT	SHEET No.	TOTAL SHEETS
11	SD	15,76	R46.1/R47.3, R16.7/R17.7	104	477

Zia Yazdani 01-11-12
REGISTERED GEOTECHNICAL ENGINEER DATE

4-16-12
PLANS APPROVAL DATE

REGISTERED PROFESSIONAL ENGINEER Ziaullah Yazdani No. 2119 Exp. 03-31-13 GEOTECHNICAL STATE OF CALIFORNIA

The State of California or its officers or agents shall not be responsible for the accuracy or completeness of electronic copies of this plan sheet.

This LOTB sheet was prepared in accordance with the Caltrans Soil & Rock Logging, Classification, & Presentation Manual (2010 Edition).

NOTES:

1. AUTOMATIC HAMMER MALFUNCTIONED, USED MANUAL HAMMER INSTEAD. MANUAL HAMMER EFFICIENCY HAS NOT BEEN DETERMINED BY DRILLING SERVICES.
2. GROUND CONDITIONS DEPICTED BY THE LOTB ARE REPRESENTATIVE OF SUBSURFACE CONDITIONS ANTICIPATED AT THE LOCATION OF THE CMS SIGN.

FOR PLAN VIEW, SEE
"LOG OF TEST BORINGS 1 OF 11"

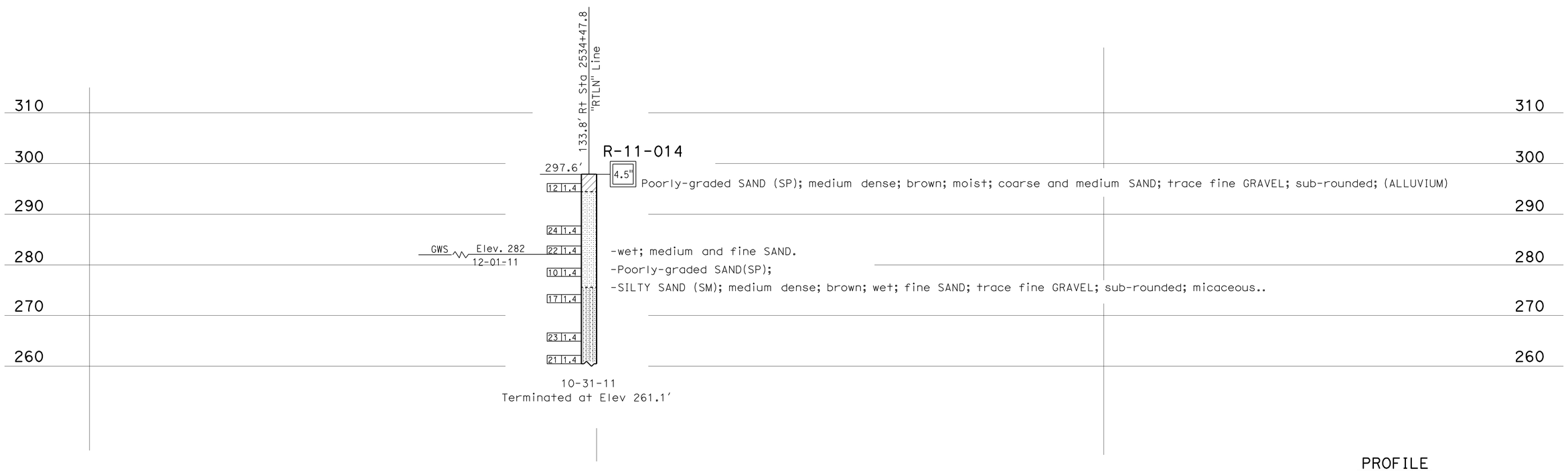

PROFILE
Horiz: 1" = 40'
Vert: 1" = 10'

G-20

ENGINEERING SERVICES	GEOTECHNICAL SERVICES	STATE OF CALIFORNIA DEPARTMENT OF TRANSPORTATION	DIVISION OF ENGINEERING SERVICES STRUCTURE DESIGN DESIGN BRANCH	BRIDGE NO. / POST MILE 46.1/47.3	CONTOUR AND GRADING LOG OF TEST BORINGS 8 OF 11
FUNCTIONAL SUPERVISOR NAME: B. Hinman	DRAWN BY: W. TOZY CHECKED BY: Z. Yazdani	FIELD INVESTIGATION BY: E. GALLETA			

OGS CIVIL LOG OF TEST BORINGS SHEET

ORIGINAL SCALE IN INCHES FOR REDUCED PLANS 0 1 2 3

UNIT: 3643
PROJECT NUMBER & PHASE: 11000204691 CONTRACT NO.: 11-257141

DISREGARD PRINTS BEARING EARLIER REVISION DATES

REVISION DATES: ~~05-04-11~~ 05-10-11 SHEET X OF X

FILE => 1100020469ha020.dgn

USERNAME => s114640 DATE PLOTTED => 17-APR-2012 TIME PLOTTED => 13:31

DIST	COUNTY	ROUTE	POST MILES TOTAL PROJECT	SHEET No.	TOTAL SHEETS
11	SD	15,76	R46.1/R47.3, R16.7/R17.7	105	477

J. Tesar 01-12-12
CERTIFIED ENGINEERING GEOLOGIST DATE

4-16-12
PLANS APPROVAL DATE

PROFESSIONAL GEOLOGIST Jeff Tesar No. 2137 Exp. 01-31-13 CERTIFIED ENGINEERING GEOLOGIST STATE OF CALIFORNIA

The State of California or its officers or agents shall not be responsible for the accuracy or completeness of electronic copies of this plan sheet.

REFERENCE: CALTRANS SOIL & ROCK LOGGING, CLASSIFICATION, AND PRESENTATION MANUAL (2010)

CEMENTATION

Description	Criteria
Weak	Crumbles or breaks with handling or little finger pressure.
Moderate	Crumbles or breaks with considerable finger pressure.
Strong	Will not crumble or break with finger pressure.

BOREHOLE IDENTIFICATION

Symbol	Hole Type	Description
Size	A	Auger Boring (hollow or solid stem bucket)
Size	R RW RC P	Rotary drilled boring (conventional) Rotary drilled with self-casing wire-line Rotary core with continuously-sampled, self-casing wire-line Rotary percussion boring (air)
Size	R	Rotary drilled diamond core
Size	HD HA	Hand driven (1-inch soil tube) Hand Auger
●	D	Dynamic Cone Penetration Boring
▲	CPT	Cone Penetration Test (ASTM D 5778)
⬚	O	Other (note on LOTB)

Note: Size in inches.

CONSISTENCY OF COHESIVE SOILS

Description	Shear Strength (tsf)	Pocket Penetrometer Measurement, PP, (tsf)	Torvane Measurement, TV, (tsf)	Vane Shear Measurement, VS, (tsf)
Very Soft	Less than 0.12	Less than 0.25	Less than 0.12	Less than 0.12
Soft	0.12 - 0.25	0.25 - 0.5	0.12 - 0.25	0.12 - 0.25
Medium Stiff	0.25 - 0.5	0.5 - 1	0.25 - 0.5	0.25 - 0.5
Stiff	0.5 - 1	1 - 2	0.5 - 1	0.5 - 1
Very Stiff	1 - 2	2 - 4	1 - 2	1 - 2
Hard	Greater than 2	Greater than 4	Greater than 2	Greater than 2

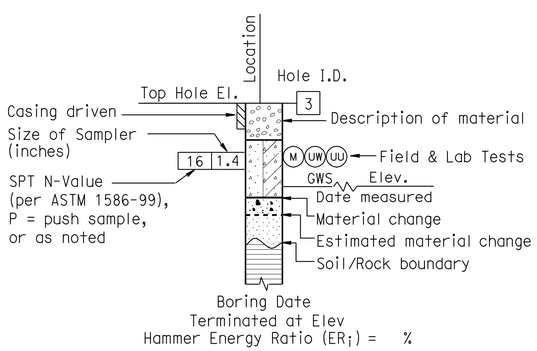

ROTARY BORING

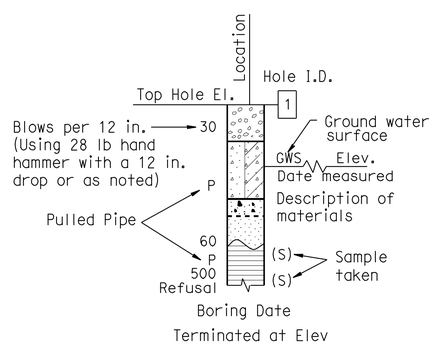

HAND BORING

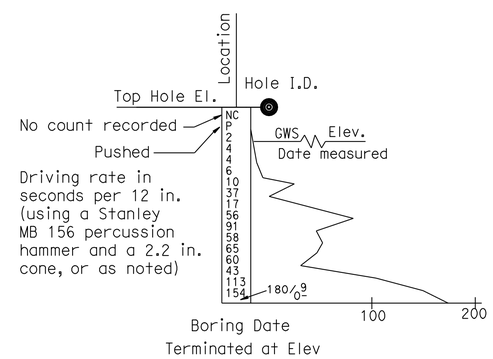

DYNAMIC CONE PENETRATION BORING

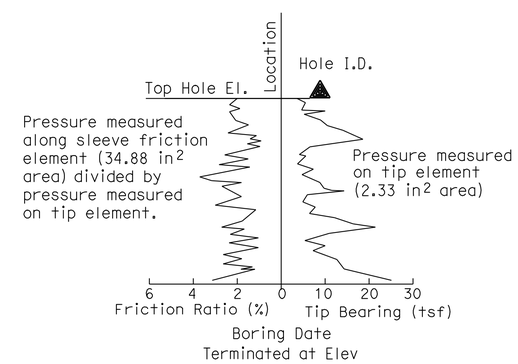

CONE PENETRATION TEST (CPT) BORING

G-21

ENGINEERING SERVICES	GEOTECHNICAL SERVICES	STATE OF CALIFORNIA DEPARTMENT OF TRANSPORTATION	DIVISION OF ENGINEERING SERVICES STRUCTURE DESIGN DESIGN BRANCH	BRIDGE NO. / POST MILE 46.1/47.3	CONTOUR AND GRADING LOG OF TEST BORINGS 9 OF 11
	PREPARED BY: F. Nguyen 4/11				

GS LOTB SOIL LEGEND

ORIGINAL SCALE IN INCHES FOR REDUCED PLANS 0 1 2 3

UNIT: 3643
PROJECT NUMBER & PHASE: 11000204691 CONTRACT NO.: 11-257141

DISREGARD PRINTS BEARING EARLIER REVISION DATES

REVISION DATES | SHEET X | OF X

FILE => 1100020469ha021.dgn

USERNAME => s114640 DATE PLOTTED => 17-APR-2012 TIME PLOTTED => 13:32

REFERENCE: CALTRANS SOIL & ROCK LOGGING, CLASSIFICATION, AND PRESENTATION MANUAL (2010)

DIST	COUNTY	ROUTE	POST MILES TOTAL PROJECT	SHEET No.	TOTAL SHEETS
11	SD	15,76	R46.1/R47.3, R16.7/R17.7	106	477

J. Tesar 01-12-12
CERTIFIED ENGINEERING GEOLOGIST DATE

4-16-12
PLANS APPROVAL DATE

PROFESSIONAL GEOLOGIST Jeff Tesar No. 2137 Exp. 01-31-13 CERTIFIED ENGINEERING GEOLOGIST STATE OF CALIFORNIA

The State of California or its officers or agents shall not be responsible for the accuracy or completeness of electronic copies of this plan sheet.

GROUP SYMBOLS AND NAMES

Graphic/Symbol	Group Names	Graphic/Symbol	Group Names
GW	Well-graded GRAVEL Well-graded GRAVEL with SAND	CL	Lean CLAY Lean CLAY with SAND Lean CLAY with GRAVEL SANDY lean CLAY SANDY lean CLAY with GRAVEL GRAVELLY lean CLAY GRAVELLY lean CLAY with SAND
GP	Poorly-graded GRAVEL Poorly-graded GRAVEL with SAND		
GW-GM	Well-graded GRAVEL with SILT Well-graded GRAVEL with SILT and SAND	CL-ML	SILTY CLAY SILTY CLAY with SAND SILTY CLAY with GRAVEL SANDY SILTY CLAY SANDY SILTY CLAY with GRAVEL GRAVELLY SILTY CLAY GRAVELLY SILTY CLAY with SAND
GW-GC	Well-graded GRAVEL with CLAY (or SILTY CLAY) Well-graded GRAVEL with CLAY and SAND (or SILTY CLAY and SAND)		
GP-GM	Poorly-graded GRAVEL with SILT Poorly-graded GRAVEL with SILT and SAND	ML	SILT SILT with SAND SILT with GRAVEL SANDY SILT SANDY SILT with GRAVEL GRAVELLY SILT GRAVELLY SILT with SAND
GP-GC	Poorly-graded GRAVEL with CLAY (or SILTY CLAY) Poorly-graded GRAVEL with CLAY and SAND (or SILTY CLAY and SAND)		
GM	SILTY GRAVEL SILTY GRAVEL with SAND	OL	ORGANIC lean CLAY ORGANIC lean CLAY with SAND ORGANIC lean CLAY with GRAVEL SANDY ORGANIC lean CLAY SANDY ORGANIC lean CLAY with GRAVEL GRAVELLY ORGANIC lean CLAY GRAVELLY ORGANIC lean CLAY with SAND
GC	CLAYEY GRAVEL CLAYEY GRAVEL with SAND		
GC-GM	SILTY, CLAYEY GRAVEL SILTY, CLAYEY GRAVEL with SAND	OL	ORGANIC SILT ORGANIC SILT with SAND ORGANIC SILT with GRAVEL SANDY ORGANIC SILT SANDY ORGANIC SILT with GRAVEL GRAVELLY ORGANIC SILT GRAVELLY ORGANIC SILT with SAND
SW	Well-graded SAND Well-graded SAND with GRAVEL		
SP	Poorly-graded SAND Poorly-graded SAND with GRAVEL	CH	Fat CLAY Fat CLAY with SAND Fat CLAY with GRAVEL SANDY fat CLAY SANDY fat CLAY with GRAVEL GRAVELLY fat CLAY GRAVELLY fat CLAY with SAND
SW-SM	Well-graded SAND with SILT Well-graded SAND with SILT and GRAVEL		
SW-SC	Well-graded SAND with CLAY (or SILTY CLAY) Well-graded SAND with CLAY and GRAVEL (or SILTY CLAY and GRAVEL)	MH	Elastic SILT Elastic SILT with SAND Elastic SILT with GRAVEL SANDY elastic SILT SANDY elastic SILT with GRAVEL GRAVELLY elastic SILT GRAVELLY elastic SILT with SAND
SP-SM	Poorly-graded SAND with SILT Poorly-graded SAND with SILT and GRAVEL		
SP-SC	Poorly-graded SAND with CLAY (or SILTY CLAY) Poorly-graded SAND with CLAY and GRAVEL (or SILTY CLAY and GRAVEL)	OH	ORGANIC fat CLAY ORGANIC fat CLAY with SAND ORGANIC fat CLAY with GRAVEL SANDY ORGANIC fat CLAY SANDY ORGANIC fat CLAY with GRAVEL GRAVELLY ORGANIC fat CLAY GRAVELLY ORGANIC fat CLAY with SAND
SM	SILTY SAND SILTY SAND with GRAVEL		
SC	CLAYEY SAND CLAYEY SAND with GRAVEL	OH	ORGANIC elastic SILT ORGANIC elastic SILT with SAND ORGANIC elastic SILT with GRAVEL SANDY ORGANIC elastic SILT SANDY ORGANIC elastic SILT with GRAVEL GRAVELLY ORGANIC elastic SILT GRAVELLY ORGANIC elastic SILT with SAND
SC-SM	SILTY, CLAYEY SAND SILTY, CLAYEY SAND with GRAVEL		
PT	PEAT	OL/OH	ORGANIC SOIL ORGANIC SOIL with SAND ORGANIC SOIL with GRAVEL SANDY ORGANIC SOIL SANDY ORGANIC SOIL with GRAVEL GRAVELLY ORGANIC SOIL GRAVELLY ORGANIC SOIL with SAND
	COBBLES COBBLES and BOULDERS BOULDERS		

FIELD AND LABORATORY TESTING

- (C) Consolidation (ASTM D 2435)
- (CL) Collapse Potential (ASTM D 5333)
- (CP) Compaction Curve (CTM 216)
- (CR) Corrosivity Testing (CTM 643, CTM 422, CTM 417)
- (CU) Consolidated Undrained Triaxial (ASTM D 4767)
- (DS) Direct Shear (ASTM D 3080)
- (EI) Expansion Index (ASTM D 4829)
- (M) Moisture Content (ASTM D 2216)
- (OC) Organic Content-% (ASTM D 2974)
- (P) Permeability (CTM 220)
- (PA) Particle Size Analysis (ASTM D 422)
- (PI) Plasticity Index (AASHTO T 90) Liquid Limit (AASHTO T 89)
- (PL) Point Load Index (ASTM D 5731)
- (PM) Pressure Meter
- (R) R-Value (CTM 301)
- (SE) Sand Equivalent (CTM 217)
- (SG) Specific Gravity (AASHTO T 100)
- (SL) Shrinkage Limit (ASTM D 427)
- (SW) Swell Potential (ASTM D 4546)
- (UC) Unconfined Compression-Soil (ASTM D 2166) Unconfined Compression-Rock (ASTM D 2938)
- (UU) Unconsolidated Undrained Triaxial (ASTM D 2850)
- (UW) Unit Weight (ASTM D 4767)

APPARENT DENSITY OF COHESIONLESS SOILS

Description	SPT N_{60} (Blows / 12 in.)
Very Loose	0 - 5
Loose	5 - 10
Medium Dense	10 - 30
Dense	30 - 50
Very Dense	Greater than 50

MOISTURE

Description	Criteria
Dry	No discernable moisture
Moist	Moisture present, but no free water
Wet	Visible free water

PERCENT OR PROPORTION OF SOILS

Description	Criteria
Trace	Particles are present but estimated to be less than 5%
Few	5% - 10%
Little	15% - 25%
Some	30% - 45%
Mostly	50% - 100%

PARTICLE SIZE

Description		Size (in.)
Boulder		Greater than 12
Cobble		3 - 12
Gravel	Coarse	3/4 - 3
	Fine	1/5 - 3/4
Sand	Coarse	1/16 - 1/5
	Medium	1/64 - 1/16
	Fine	1/300 - 1/64
Silt and Clay		Less than 1/300

G-22

ENGINEERING SERVICES

GEOTECHNICAL SERVICES
PREPARED BY: F. Nguyen 4/11

STATE OF CALIFORNIA DEPARTMENT OF TRANSPORTATION

DIVISION OF ENGINEERING SERVICES STRUCTURE DESIGN
DESIGN BRANCH

BRIDGE NO. X
POST MILE 46.1/47.3

CONTOUR AND GRADING
LOG OF TEST BORINGS 10 OF 11

GS LOTB SOIL LEGEND

ORIGINAL SCALE IN INCHES FOR REDUCED PLANS 0 1 2 3

UNIT: 3643
PROJECT NUMBER & PHASE: 11000204691
CONTRACT NO.: 11-257141

DISREGARD PRINTS BEARING EARLIER REVISION DATES

REVISION DATES | SHEET X | OF X

FILE => 1100020469ha022.dgn

USERNAME => s114640 DATE PLOTTED => 17-APR-2012 TIME PLOTTED => 13:32

DIST	COUNTY	ROUTE	POST MILES TOTAL PROJECT	SHEET No.	TOTAL SHEETS
11	SD	15,76	R46.1/R47.3, R16.7/R17.7	107	477

J. Tesar 01-12-12
CERTIFIED ENGINEERING GEOLOGIST DATE

4-16-12
PLANS APPROVAL DATE

PROFESSIONAL GEOLOGIST Jeff Tesar No. 2137 Exp. 01-31-13 CERTIFIED ENGINEERING GEOLOGIST STATE OF CALIFORNIA

The State of California or its officers or agents shall not be responsible for the accuracy or completeness of electronic copies of this plan sheet.

REFERENCE: CALTRANS SOIL & ROCK LOGGING, CLASSIFICATION, AND PRESENTATION MANUAL (2010)

PERCENT CORE RECOVERY (REC) & ROCK QUALITY DESIGNATION (RQD)

$$REC = \frac{\sum \text{Length of the recovered core pieces (in.)}}{\text{Total length of core run (in.)}} \times 100\%$$

$$RQD = \frac{\sum \text{Length of intact core pieces} \geq 4 \text{ in.}}{\text{Total length of core run (in.)}} \times 100\%$$

RQD* Indicates soundness criteria not met.

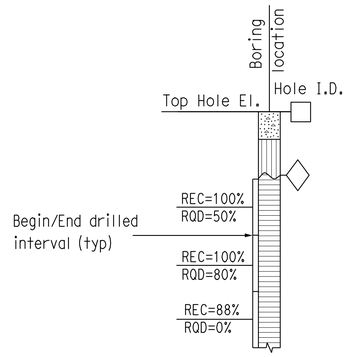

BEDDING SPACING

Description	Thickness / Spacing
Massive	Greater than 10 ft
Very Thickly Bedded	3 ft - 10 ft
Thickly Bedded	1 ft - 3 ft
Moderately Bedded	4 in. - 1 ft
Thinly Bedded	1 in. - 4 in.
Very Thinly Bedded	1/4 in. - 1 in.
Laminated	Less than 1/4 in.

LEGEND OF ROCK MATERIALS

- IGNEOUS ROCK
- SEDIMENTARY ROCK
- METAMORPHIC ROCK

ROCK HARDNESS

Description	Criteria
Extremely Hard	Cannot be scratched with a pocketknife or sharp pick. Can only be chipped with repeated heavy hammer blows.
Very Hard	Cannot be scratched with a pocketknife or sharp pick. Breaks with repeated heavy hammer blows.
Hard	Can be scratched with a pocketknife or sharp pick with difficulty (heavy pressure). Breaks with heavy hammer blows.
Moderately Hard	Can be scratched with pocketknife or sharp pick with light or moderate pressure. Breaks with moderate hammer blows.
Moderately Soft	Can be grooved 1/16 in. deep with a pocketknife or sharp pick with moderate or heavy pressure. Breaks with light hammer blow or heavy manual pressure.
Soft	Can be grooved or gouged easily by a pocketknife or sharp pick with light pressure, can be scratched with fingernail. Breaks with light to moderate manual pressure.
Very Soft	Can be readily indented, grooved or gouged with fingernail, or carved with a pocketknife. Breaks with light manual pressure.

FRACTURE DENSITY

Description	Observed Fracture Density
Unfractured	No fractures.
Very Slightly Fractured	Core lengths greater than 3 ft.
Slightly Fractured	Core lengths mostly from 1 to 3 ft.
Moderately Fractured	Core lengths mostly from 4 in. to 1 ft.
Intensely Fractured	Core lengths mostly from 1 to 4 in.
Very Intensely Fractured	Mostly chips and fragments.

WEATHERING DESCRIPTORS FOR INTACT ROCK

Description	Diagnostic Features					General Characteristics
	Chemical Weathering-Discoloration and/or Oxidation		Mechanical Weathering-Grain Boundary Conditions (Disaggregation) Primarily for Granitics and Some Coarse-Grained Sediments	Texture and Leaching		
	Body of Rock	Fracture Surfaces		Texture	Leaching	
Fresh	No discoloration, not oxidized.	No discoloration or oxidation.	No separation, intact (tight).	No change	No leaching	Hammer rings when crystalline rocks are struck.
Slightly Weathered	Discoloration or oxidation is limited to surface of, or short distance from, fractures; some feldspar crystals are dull.	Minor to complete discoloration or oxidation of most surfaces.	No visible separation, intact (tight).	Preserved	Minor leaching of some soluble minerals.	Hammer rings when crystalline rocks are struck. Body of rock not weakened.
Moderately Weathered	Discoloration or oxidation extends from fractures usually throughout; Fe-Mg minerals are "rusty," feldspar crystals are "cloudy."	All fracture surfaces are discolored or oxidized.	Partial separation of boundaries visible.	Generally preserved	Soluble minerals may be mostly leached.	Hammer does not ring when rock is struck. Body of rock is slightly weakened.
Intensely Weathered	Discoloration or oxidation throughout; all feldspars and Fe-Mg minerals are altered to clay to some extent; or chemical alteration produces in-situ disaggregation, see grain boundary conditions.	All fracture surfaces are discolored or oxidized, surfaces friable.	Partial separation, rock is friable; in semiarid conditions granitics are disaggregated.	Texture altered by chemical disintegration (hydration, argillation).	Leaching of soluble minerals may be complete.	Dull sound when struck with hammer, usually can be broken with moderate to heavy manual pressure or by light hammer blow without reference to planes of weakness such as incipient or hairline fractures, or veinlets. Rock is significantly weakened.
Decomposed	Discolored or oxidized throughout, but resistant minerals such as quartz may be unaltered; all feldspars and Fe-Mg minerals are completely altered to clay.		Complete separation of grain boundaries (disaggregated).	Resembles a soil, partial or complete remnant rock structure may be preserved; leaching of soluble minerals usually complete.		Can be granulated by hand. Resistant minerals such as quartz may be present as "stringers" or "dikes."

G-23

ENGINEERING SERVICES

GEOTECHNICAL SERVICES
PREPARED BY: F. Nguyen 4/11

STATE OF CALIFORNIA
DEPARTMENT OF TRANSPORTATION

DIVISION OF ENGINEERING SERVICES
STRUCTURE DESIGN
DESIGN BRANCH

BRIDGE NO.
POST MILE 46.1/47.3

CONTOUR AND GRADING
LOG OF TEST BORINGS 11 OF 11

GS LOTB SOIL LEGEND

ORIGINAL SCALE IN INCHES FOR REDUCED PLANS 0 1 2 3

UNIT: 3643
PROJECT NUMBER & PHASE: 11000204691
CONTRACT NO.: 11-257141

DISREGARD PRINTS BEARING EARLIER REVISION DATES

REVISION DATES | SHEET X | OF X

FILE => 1100020469ha023.dgn

USERNAME => s114640 DATE PLOTTED => 17-APR-2012 TIME PLOTTED => 13:32

Dist	COUNTY	ROUTE	POST MILES TOTAL PROJECT	SHEET No.	TOTAL SHEETS
11	SD	15,76	R46.1/R47.3, R16.7/R17.7	108	477

REGISTERED CIVIL ENGINEER 01-17-12 DATE

4-16-12
PLANS APPROVAL DATE

REGISTERED PROFESSIONAL ENGINEER JENNY YAN No. C62092 Exp. 09-30-13 CIVIL STATE OF CALIFORNIA

THE STATE OF CALIFORNIA OR ITS OFFICERS OR AGENTS SHALL NOT BE RESPONSIBLE FOR THE ACCURACY OR COMPLETENESS OF SCANNED COPIES OF THIS PLAN SHEET.

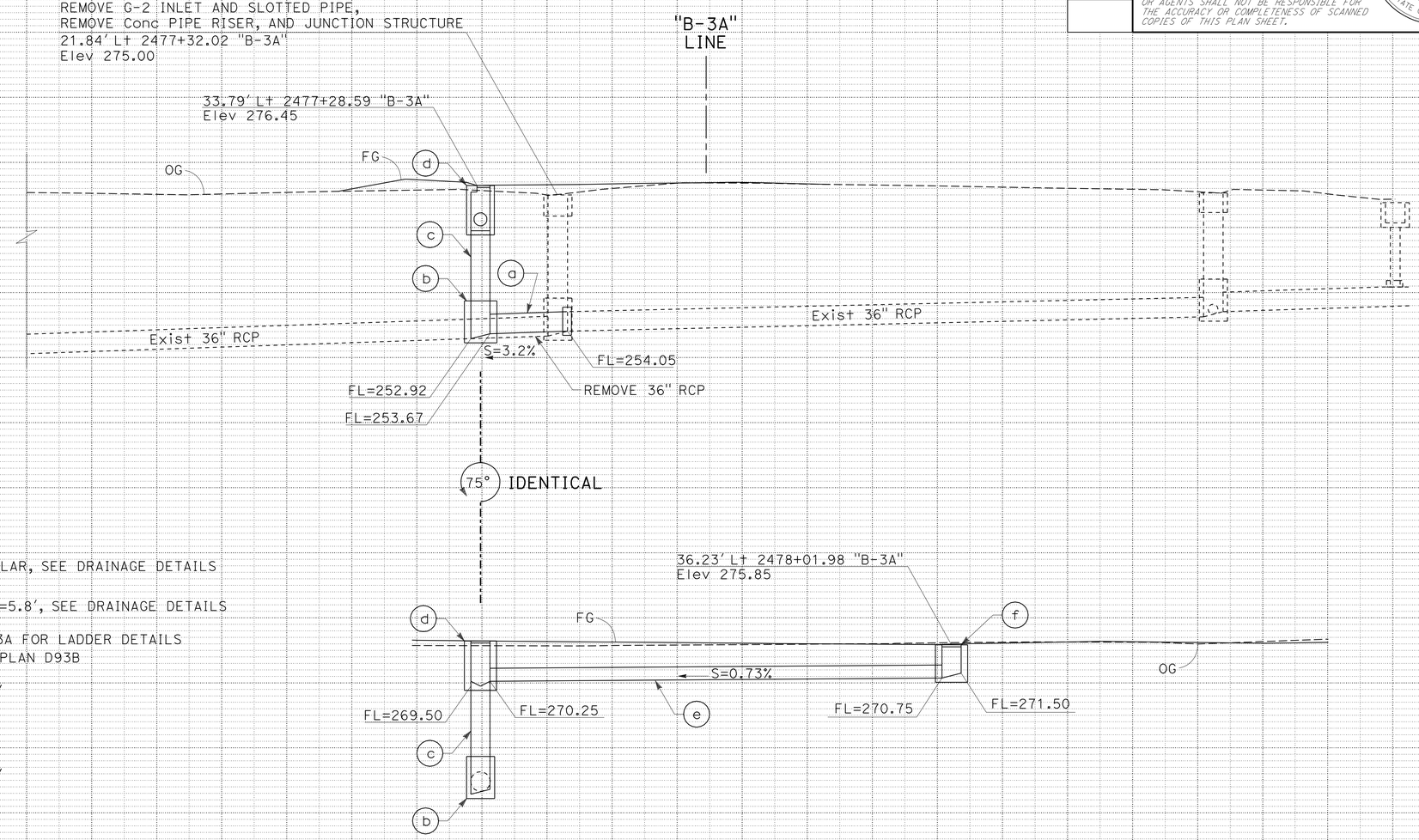

(a) 36" X 11.9' RCP W/ TYPE L-2 COLLAR, SEE DRAINAGE DETAILS

(b) JUNCTION STRUCTURE, H=10.8', Hb=5.8', SEE DRAINAGE DETAILS

(c) 36" RCP RISER, SEE Std PLAN D93A FOR LADDER DETAILS W/ RISER SAFETY CAGE, SEE Std PLAN D93B

(d) G-2 INLET W/24-12 GRATE, H=6.9'

(e) 24" APC x 69.5'

(f) G-2 INLET W/24-12 GRATE, H=5.1'

DRAINAGE SYSTEM No. 1

DRAINAGE PROFILES

SCALE: Horiz 1" = 10'
Vert 1" = 10'

DP-1

STATE OF CALIFORNIA - DEPARTMENT OF TRANSPORTATION
Caltrans® PROJECT DEVELOPMENT

FUNCTIONAL SUPERVISOR: CARL SAVAGE
CALCULATED-DESIGNED BY: JENNY YAN
CHECKED BY: JEFF BALUYUT
REVISED BY / DATE REVISED

LAST REVISION 01-23-12
DATE PLOTTED => 17-APR-2012
TIME PLOTTED => 11:50

Dist	COUNTY	ROUTE	POST MILES TOTAL PROJECT	SHEET No.	TOTAL SHEETS
11	SD	15,76	R46.1/R47.3, R16.7/R17.7	109	477

REGISTERED CIVIL ENGINEER 03-14-12 DATE

4-16-12
PLANS APPROVAL DATE

REGISTERED PROFESSIONAL ENGINEER JENNY YAN No. C62092 Exp. 09-30-13 CIVIL STATE OF CALIFORNIA

THE STATE OF CALIFORNIA OR ITS OFFICERS OR AGENTS SHALL NOT BE RESPONSIBLE FOR THE ACCURACY OR COMPLETENESS OF SCANNED COPIES OF THIS PLAN SHEET.

(a) RSP, SEE DRAINAGE DETAILS
(b) STRAIGHT HEADWALL, H=3.7'
(c) 24" APC x 65.1'
(d) OL INLET, H=9.9', L=10', W/ DRAINAGE INLET MARKER, SEE DRAINAGE DETAILS
(e) 24" RCP x 138.5'
(f) OL INLET, H=8.5', L=10', W/ DRAINAGE INLET MARKER, SEE DRAINAGE DETAILS
(g) 24" RCP x 221.6'
(h) OL INLET, H=6.7', L=10',W/ DRAINAGE INLET MARKER, SEE DRAINAGE DETAILS
(i) 24" APC x 246.5'
(j) OL INLET, H=9.7', L=10', W/ DRAINAGE INLET MARKER, SEE DRAINAGE DETAILS
(k) 6" X 20' PLASTIC PIPE, CONNECT TO BRIDGE DECK DRAIN, SEE STRUCTURE PLAN

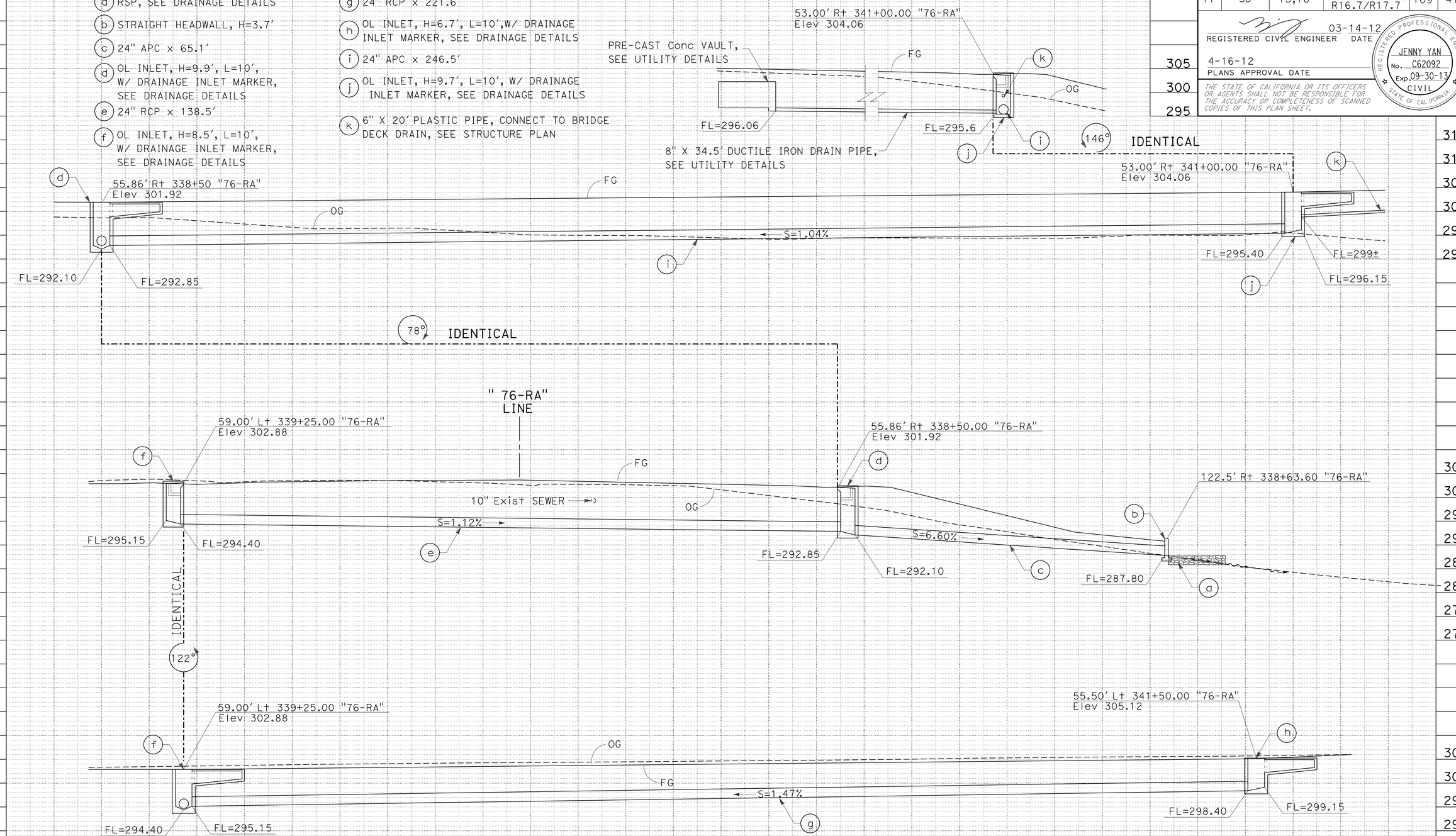

DRAINAGE SYSTEM No. 2

DRAINAGE PROFILES

SCALE: Horiz 1" = 10'
Vert 1" = 10'

DP-2

STATE OF CALIFORNIA - DEPARTMENT OF TRANSPORTATION
Caltrans® PROJECT DEVELOPMENT

FUNCTIONAL SUPERVISOR: CARL SAVAGE
CALCULATED-DESIGNED BY: JENNY YAN
CHECKED BY: JEFF BALUYUT
REVISED BY / DATE REVISED

LAST REVISION 03-16-12
DATE PLOTTED => 17-APR-2012
TIME PLOTTED => 11:50

Dist	COUNTY	ROUTE	POST MILES TOTAL PROJECT	SHEET No.	TOTAL SHEETS
11	SD	15,76	R46.1/R47.3, R16.7/R17.7	110	477

REGISTERED CIVIL ENGINEER 01-17-12 DATE

4-16-12
PLANS APPROVAL DATE

REGISTERED PROFESSIONAL ENGINEER JENNY YAN No. C62092 Exp. 09-30-13 CIVIL STATE OF CALIFORNIA

THE STATE OF CALIFORNIA OR ITS OFFICERS OR AGENTS SHALL NOT BE RESPONSIBLE FOR THE ACCURACY OR COMPLETENESS OF SCANNED COPIES OF THIS PLAN SHEET.

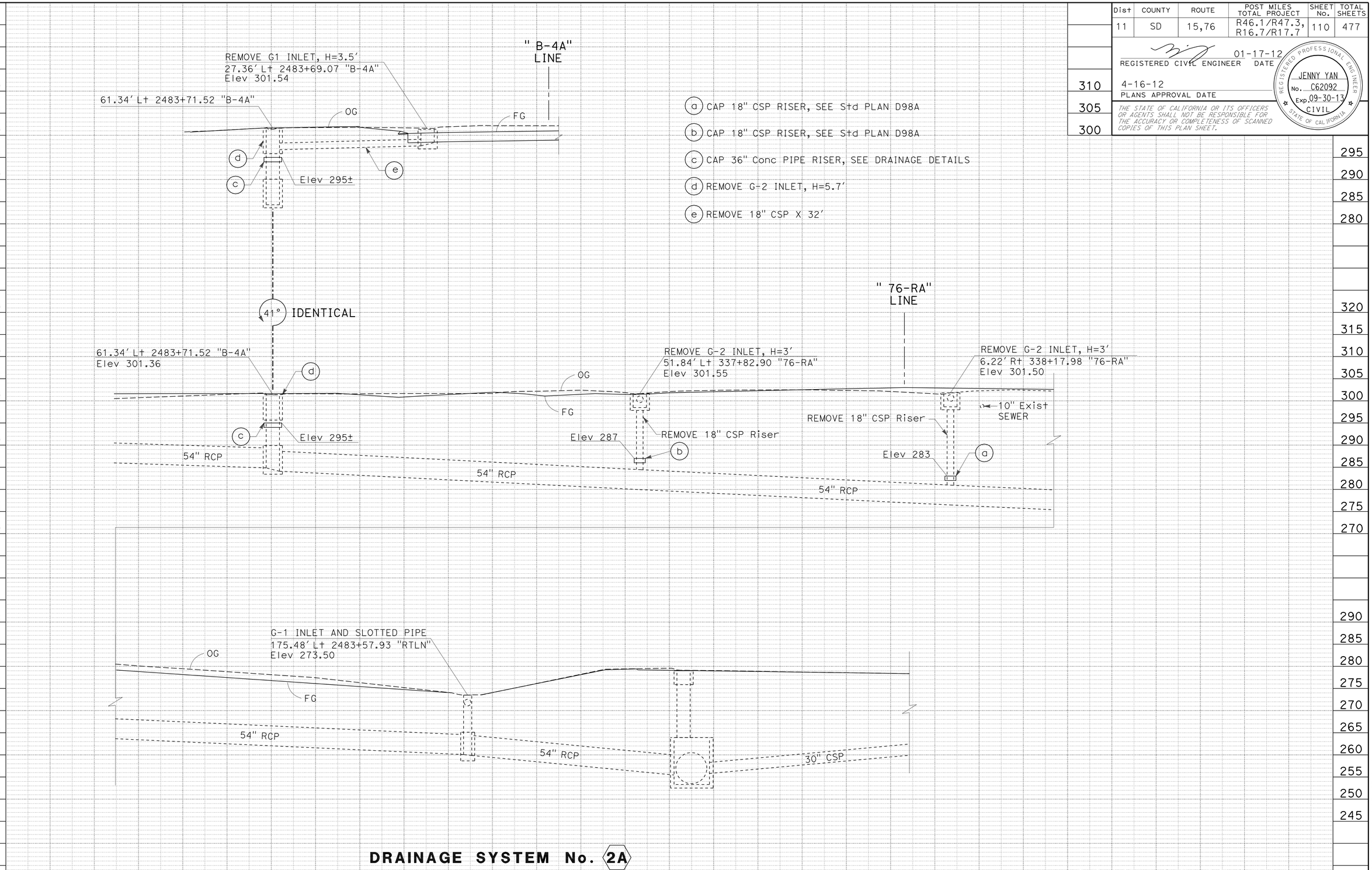

(a) CAP 18" CSP RISER, SEE Std PLAN D98A

(b) CAP 18" CSP RISER, SEE Std PLAN D98A

(c) CAP 36" Conc PIPE RISER, SEE DRAINAGE DETAILS

(d) REMOVE G-2 INLET, H=5.7'

(e) REMOVE 18" CSP X 32'

DRAINAGE SYSTEM No. 2A

DRAINAGE PROFILES

SCALE: Horiz 1" = 10'
Vert 1" = 10'

DP-3

REVISED BY | DATE REVISED

JENNY YAN | JEFF BALUYUT

CALCULATED-DESIGNED BY | CHECKED BY

FUNCTIONAL SUPERVISOR: CARL SAVAGE

STATE OF CALIFORNIA - DEPARTMENT OF TRANSPORTATION

Caltrans® PROJECT DEVELOPMENT

LAST REVISION 01-23-12 | DATE PLOTTED => 17-APR-2012 | TIME PLOTTED => 11:50

Dist	COUNTY	ROUTE	POST MILES TOTAL PROJECT	SHEET No.	TOTAL SHEETS
11	SD	15,76	R46.1/R47.3, R16.7/R17.7	111	477

REGISTERED CIVIL ENGINEER 01-17-12 DATE

4-16-12
PLANS APPROVAL DATE

REGISTERED PROFESSIONAL ENGINEER
JENNY YAN
No. C62092
Exp. 09-30-13
CIVIL
STATE OF CALIFORNIA

THE STATE OF CALIFORNIA OR ITS OFFICERS OR AGENTS SHALL NOT BE RESPONSIBLE FOR THE ACCURACY OR COMPLETENESS OF SCANNED COPIES OF THIS PLAN SHEET.

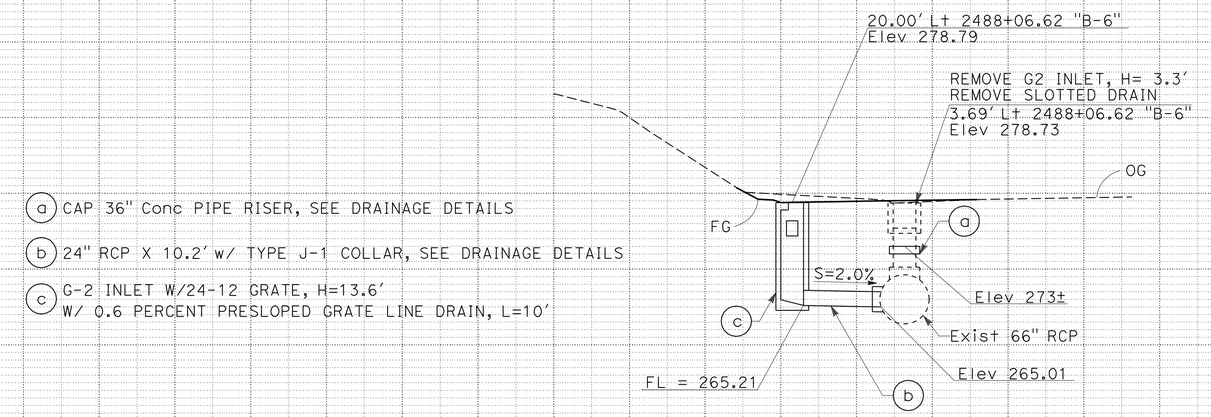

DRAINAGE SYSTEM No. 3

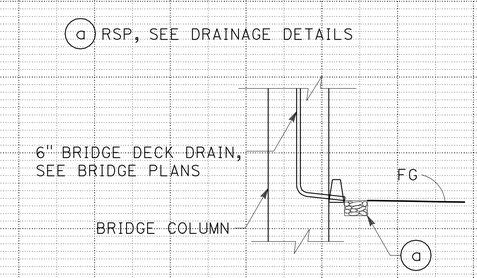

DRAINAGE SYSTEM No. 3A

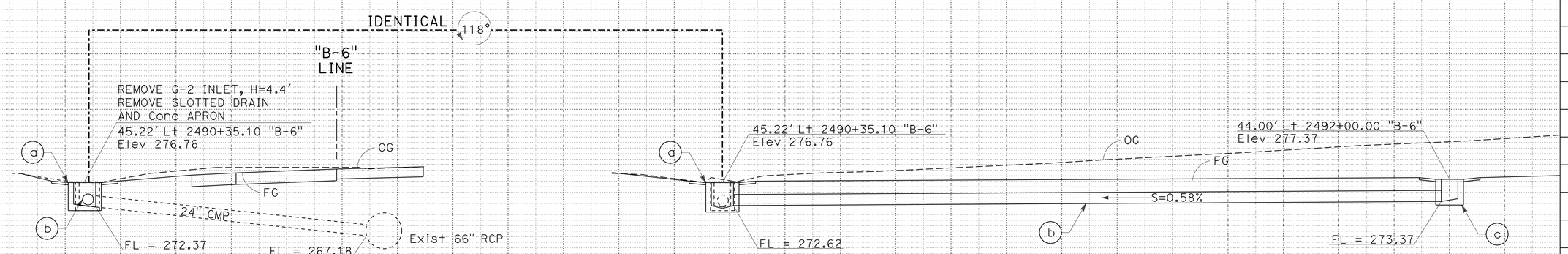

a GD1 INLET W/ DOUBLE 24-12 GRATE, H=4.4', W/Conc APRON, SEE DRAINAGE DETAILS

b 24" APC x 128.3'

c G-2 INLET W/ 24-12 GRATE, H=4.0', W/ Conc APRON, SEE DRAINAGE DETAILS

DRAINAGE SYSTEM No. 4

DRAINAGE PROFILES

SCALE: Horiz 1" = 10'
Vert 1" = 10'

DP-4

STATE OF CALIFORNIA - DEPARTMENT OF TRANSPORTATION
PROJECT DEVELOPMENT
FUNCTIONAL SUPERVISOR: CARL SAVAGE
CALCULATED-DESIGNED BY: JENNY YAN
CHECKED BY: JEFF BALUYUT
REVISED BY / DATE REVISED

LAST REVISION 01-23-12
DATE PLOTTED => 17-APR-2012
TIME PLOTTED => 11:50

Dist	COUNTY	ROUTE	POST MILES TOTAL PROJECT	SHEET No.	TOTAL SHEETS
11	SD	15,76	R46.1/R47.3, R16.7/R17.7	112	477

REGISTERED CIVIL ENGINEER 01-17-12 DATE

4-16-12
PLANS APPROVAL DATE

REGISTERED PROFESSIONAL ENGINEER JENNY YAN No. C62092 Exp. 09-30-13 CIVIL STATE OF CALIFORNIA

THE STATE OF CALIFORNIA OR ITS OFFICERS OR AGENTS SHALL NOT BE RESPONSIBLE FOR THE ACCURACY OR COMPLETENESS OF SCANNED COPIES OF THIS PLAN SHEET.

(a) 36" APC x 46.9' W/ TYPE L-3 COLLAR, SEE DRAINAGE DETAILS

(b) G-2 INLET W/24-12 GRATE, H=7.5' Conc Apron, SEE DRAINAGE DETAILS

(c) 36" APC x 364.8'

(d) G-2 INLET W/24-12 GRATE, H=9.8', SEE DRAINAGE DETAILS

(e) 36" RCP x 44.7'

(f) G-2 INLET W/24-12 GRATE, H=5.5'

(g) 36" APC x 19.2'

(h) JUNCTION STRUCTURE W/ MANHOLE COVER, Hb=12.5' SEE DRAINAGE DETAILS

(m) 24" APC x 175.0'

(n) G2 INLET W/24-12 GRATE, H=5'

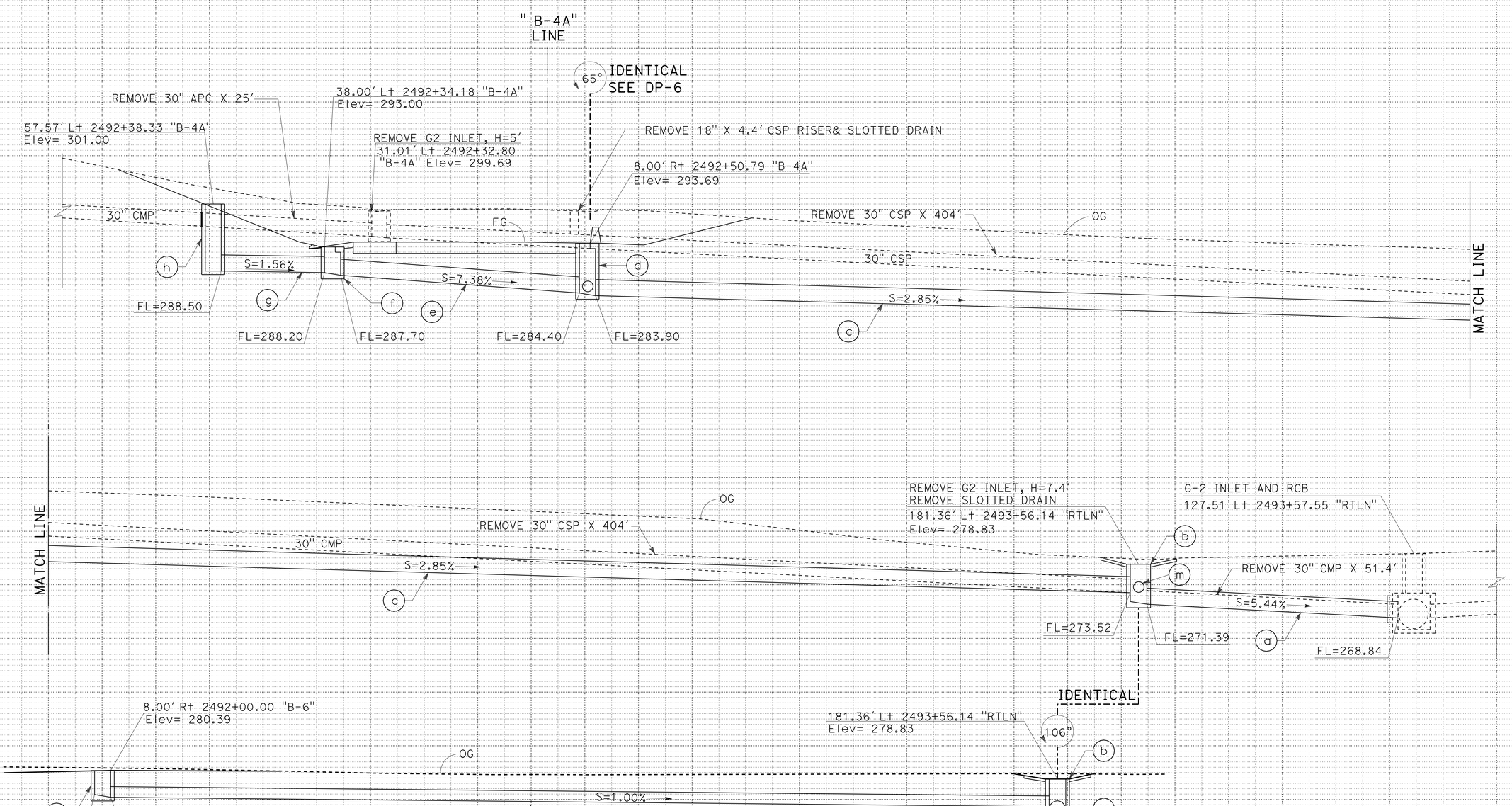

DRAINAGE SYSTEM No. 5

DRAINAGE PROFILES

SCALE: Horiz 1" = 10'
Vert 1" = 10'

DP-5

STATE OF CALIFORNIA - DEPARTMENT OF TRANSPORTATION
Caltrans PROJECT DEVELOPMENT

FUNCTIONAL SUPERVISOR: CARL SAVAGE
CALCULATED-DESIGNED BY: JENNY YAN
CHECKED BY: JEFF BALUYUT
REVISED BY / DATE REVISED

LAST REVISION 01-23-12
DATE PLOTTED => 17-APR-2012
TIME PLOTTED => 11:50

Dist	COUNTY	ROUTE	POST MILES TOTAL PROJECT	SHEET No.	TOTAL SHEETS
11	SD	15,76	R46.1/R47.3, R16.7/R17.7	113	477

REGISTERED CIVIL ENGINEER 01-17-12 DATE

4-16-12
PLANS APPROVAL DATE

REGISTERED PROFESSIONAL ENGINEER JENNY YAN No. C62092 Exp. 09-30-13 CIVIL STATE OF CALIFORNIA

THE STATE OF CALIFORNIA OR ITS OFFICERS OR AGENTS SHALL NOT BE RESPONSIBLE FOR THE ACCURACY OR COMPLETENESS OF SCANNED COPIES OF THIS PLAN SHEET.

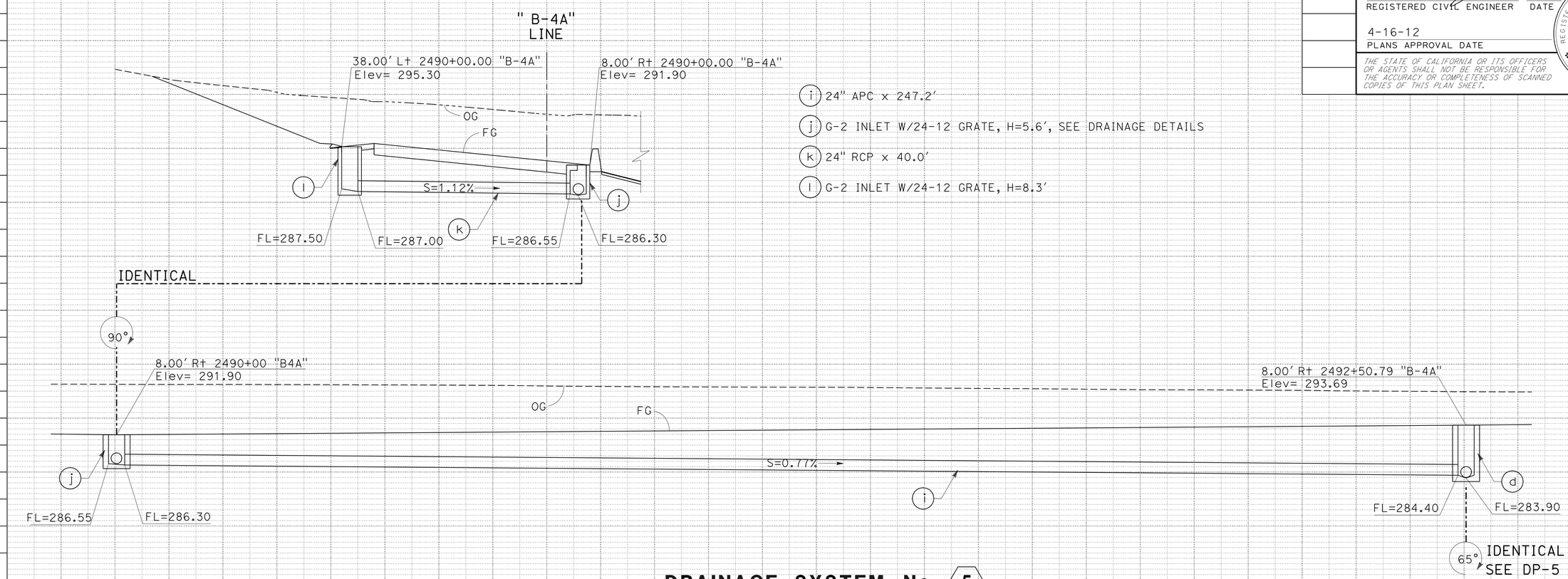

(i) 24" APC x 247.2'

(j) G-2 INLET W/24-12 GRATE, H=5.6', SEE DRAINAGE DETAILS

(k) 24" RCP x 40.0'

(l) G-2 INLET W/24-12 GRATE, H=8.3'

DRAINAGE SYSTEM No. 5

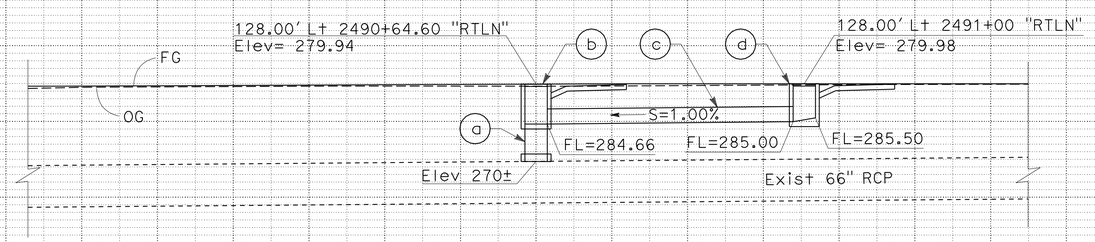

(a) 36" X 5' RCP RISER CONNECTION, SEE Std PLAN D93A W/ RISER SAFETY CAGE, SEE Std PLAN D93B

(b) G-2 INLET W/24-12 GRATE, H=5.3' W/ 0.6 PERCENT PRESLOPED GRATE LINE DRAIN, L=10'

(c) 24" RCP X 32.5'

(d) G-2 INLET W/24-12 GRATE, H=5.0' W/ 0.6 PERCENT PRESLOPED GRATE LINE DRAIN, L=10'

DRAINAGE SYSTEM No. 6A

DRAINAGE PROFILES

SCALE: Horiz 1" = 10'
Vert 1" = 10'

DP-6

REVISED BY | DATE REVISED
JENNY YAN | JEFF BALUYUT
CALCULATED-DESIGNED BY | CHECKED BY
FUNCTIONAL SUPERVISOR: CARL SAVAGE

STATE OF CALIFORNIA - DEPARTMENT OF TRANSPORTATION
Caltrans PROJECT DEVELOPMENT

LAST REVISION 01-23-12 | DATE PLOTTED => 17-APR-2012 | TIME PLOTTED => 11:50

Dist	COUNTY	ROUTE	POST MILES TOTAL PROJECT	SHEET No.	TOTAL SHEETS
11	SD	15,76	R46.1/R47.3, R16.7/R17.7	114	477

REGISTERED CIVIL ENGINEER 01-17-12 DATE

4-16-12
PLANS APPROVAL DATE

REGISTERED PROFESSIONAL ENGINEER JENNY YAN No. C62092 Exp. 09-30-13 CIVIL STATE OF CALIFORNIA

THE STATE OF CALIFORNIA OR ITS OFFICERS OR AGENTS SHALL NOT BE RESPONSIBLE FOR THE ACCURACY OR COMPLETENESS OF SCANNED COPIES OF THIS PLAN SHEET.

(a) 30" APC X 48.4' w/ TYPE L-3 COLLAR, SEE DRAINAGE DETAILS
(b) G-2 INLET W/24-12 GRATE, H=3.9', W/ Conc APRON, SEE DRAINAGE DETAILS
(c) 24" APC X 189.8'
(d) G-2 INLET, W/24-12 GRATE, H=7.8'
(e) 24" RCP X 49.2'
(f) G-2 INLET W/24-12 GRATE, H=4.0', Conc APRON, SEE DRAINAGE DETAILS
(g) 24" APC X 113.4'
(h) G-2 INLET W/24-12 GRATE, H=3.5', Conc APRON, SEE DRAINAGE DETAILS
(i) 24" APC X 75.5'
(j) G-2 INLET W/24-12 GRATE, H=4.3' Conc APRON, SEE DRAINAGE DETAILS

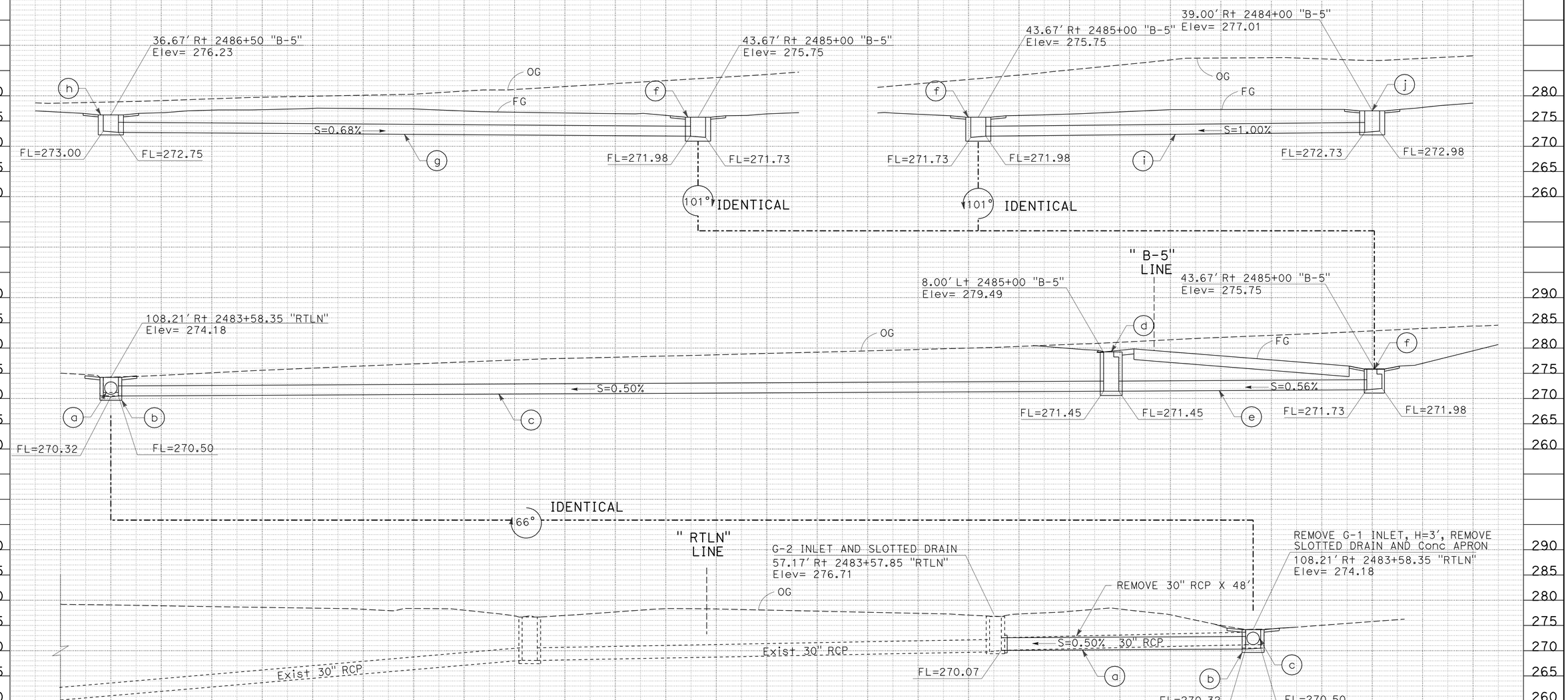

DRAINAGE SYSTEM No. 6

DRAINAGE PROFILES

SCALE: Horiz 1" = 10'
Vert 1" = 10'

DP-7

REVISED BY | DATE REVISED
JENNY YAN | JEFF BALUYUT
CALCULATED-DESIGNED BY | CHECKED BY
FUNCTIONAL SUPERVISOR | CARL SAVAGE

STATE OF CALIFORNIA - DEPARTMENT OF TRANSPORTATION
Caltrans® PROJECT DEVELOPMENT

LAST REVISION 01-23-12 | DATE PLOTTED => 17-APR-2012 | TIME PLOTTED => 11:50

Dist	COUNTY	ROUTE	POST MILES TOTAL PROJECT	SHEET No.	TOTAL SHEETS
11	SD	15,76	R46.1/R47.3, R16.7/R17.7	115	477

REGISTERED CIVIL ENGINEER 01-17-12 DATE

4-16-12
PLANS APPROVAL DATE

REGISTERED PROFESSIONAL ENGINEER JENNY YAN No. C62092 Exp. 09-30-13 CIVIL STATE OF CALIFORNIA

THE STATE OF CALIFORNIA OR ITS OFFICERS OR AGENTS SHALL NOT BE RESPONSIBLE FOR THE ACCURACY OR COMPLETENESS OF SCANNED COPIES OF THIS PLAN SHEET.

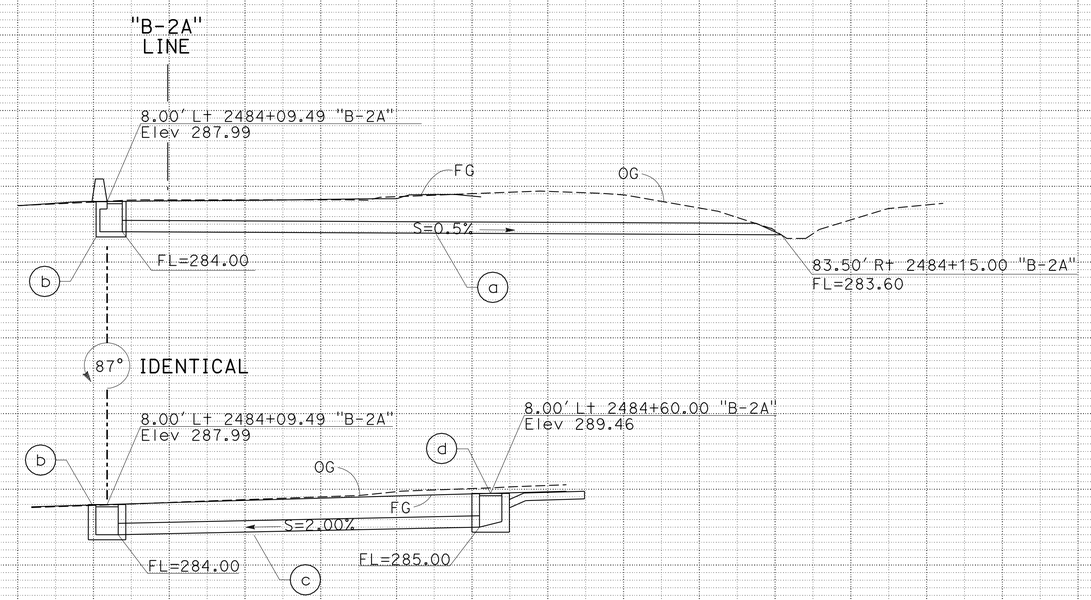

(a) 18" APC x 87.0', SEE DRAINAGE DETAILS

(b) G-2 INLET W/ 24-12 GRATE, H=4.0', SEE DRAINAGE DETAILS

(c) 18" APC x 47.7'

(d) G-2 INLET W/ 24-12 GRATE, H=4.5', W/ 0.6% PRESLOPED GRATED LINE DRAIN, L=20', SEE DRAINAGE DETAILS

DRAINAGE SYSTEM No. 7

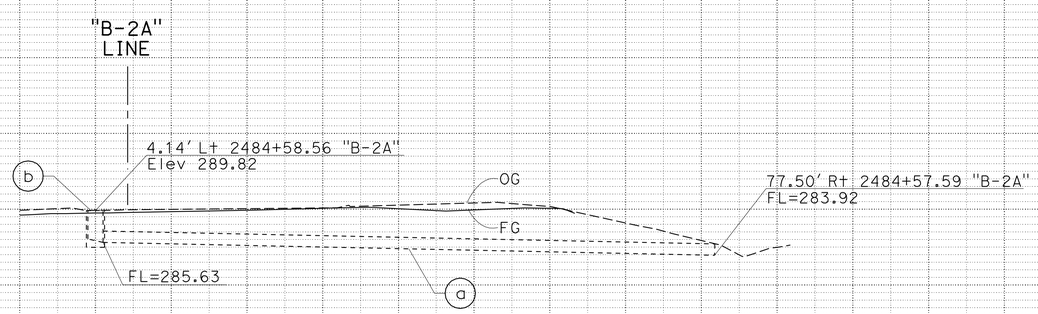

(a) REMOVE 18" CSP x 80.8'

(b) REMOVE G-1 INLET, H=4.2'

DRAINAGE SYSTEM No. 8

DRAINAGE PROFILES

SCALE: Horiz 1" = 10'
Vert 1" = 10'

DP-8

STATE OF CALIFORNIA - DEPARTMENT OF TRANSPORTATION
Caltrans® PROJECT DEVELOPMENT

FUNCTIONAL SUPERVISOR: CARL SAVAGE
CALCULATED-DESIGNED BY: JENNY YAN
CHECKED BY: JEFF BALUYUT
REVISED BY / DATE REVISED

LAST REVISION 01-23-12
DATE PLOTTED => 17-APR-2012
TIME PLOTTED => 11:50

Dist	COUNTY	ROUTE	POST MILES TOTAL PROJECT	SHEET No.	TOTAL SHEETS
11	SD	15,76	R46.1/R47.3, R16.7/R17.7	116	477

REGISTERED CIVIL ENGINEER 01-17-12 DATE

4-16-12
PLANS APPROVAL DATE

REGISTERED PROFESSIONAL ENGINEER JENNY YAN No. C62092 Exp. 09-30-13 CIVIL STATE OF CALIFORNIA

THE STATE OF CALIFORNIA OR ITS OFFICERS OR AGENTS SHALL NOT BE RESPONSIBLE FOR THE ACCURACY OR COMPLETENESS OF SCANNED COPIES OF THIS PLAN SHEET.

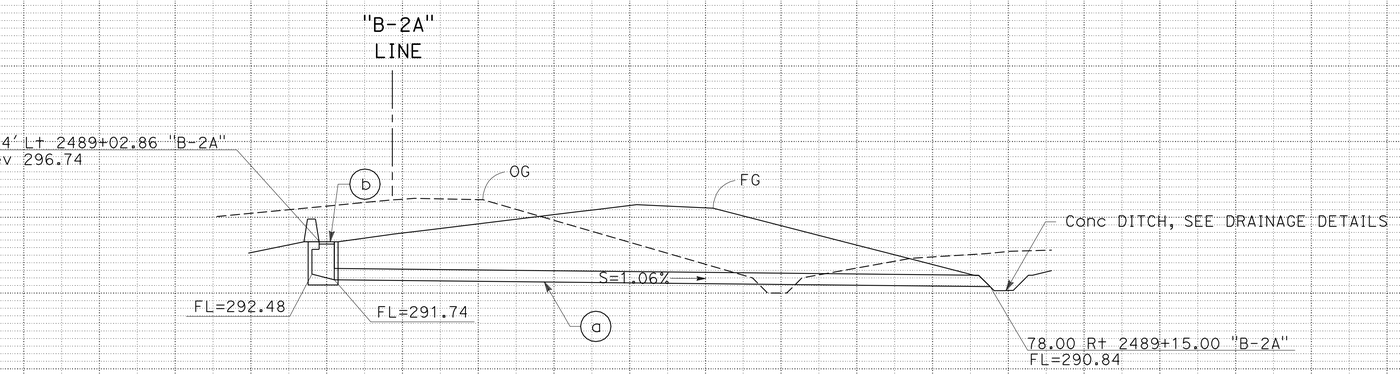

(a) 18" APC x 85.1', SEE DRAINAGE DETAILS

(b) G-2 INLET W/24-12 GRATE, H=5.0', SEE DRAINAGE DETAILS

DRAINAGE SYSTEM No. 9

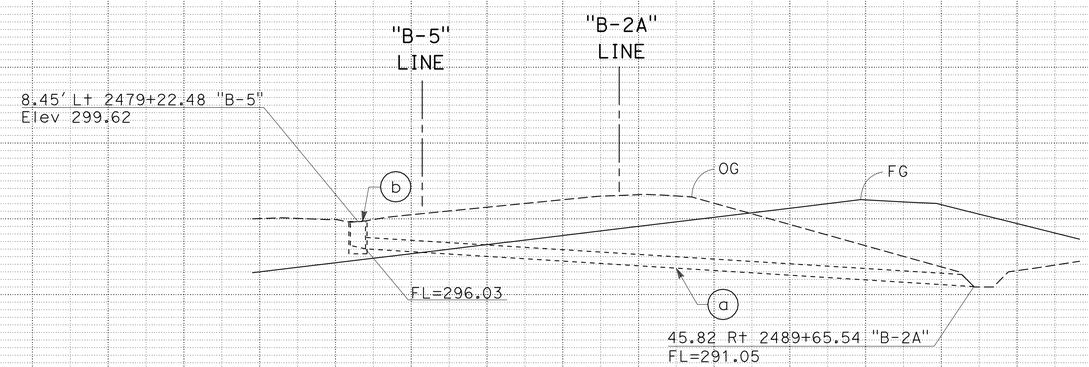

(a) REMOVE 18" CSP x 79.5'

(b) REMOVE G-1 INLET, H=3.6'

DRAINAGE SYSTEM No. 10

(a) REMOVE 18" CSP x 81.5'

(b) REMOVE G-1 INLET, H=3.0'

(c) REMOVE 18" CSP x 58.0'

(d) REMOVE G-1 INLET, H=5.0'

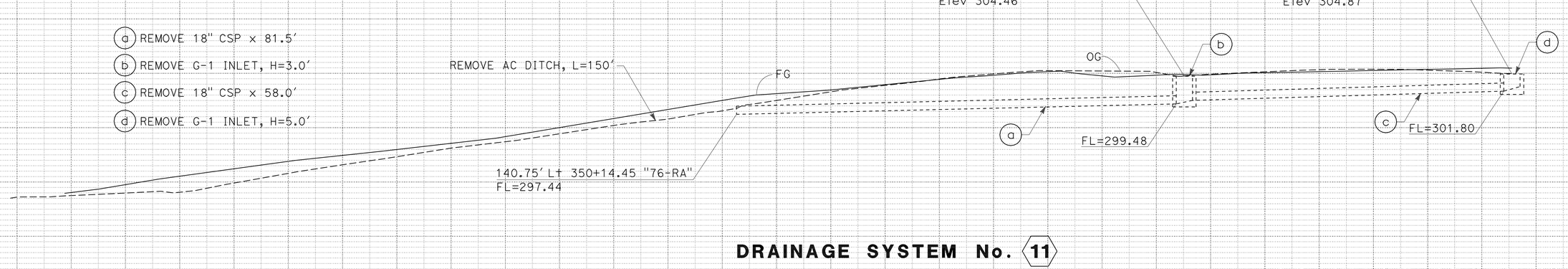

DRAINAGE SYSTEM No. 11

DRAINAGE PROFILES

SCALE: Horiz 1" = 10'
Vert 1" = 10'

DP-9

STATE OF CALIFORNIA - DEPARTMENT OF TRANSPORTATION
Caltrans® PROJECT DEVELOPMENT

FUNCTIONAL SUPERVISOR: CARL SAVAGE

CALCULATED-DESIGNED BY: JENNY YAN
CHECKED BY: JEFF BALUYUT

REVISED BY | DATE REVISED

LAST REVISION 01-23-12 | DATE PLOTTED => 17-APR-2012 | TIME PLOTTED => 11:50

Dist	COUNTY	ROUTE	POST MILES TOTAL PROJECT	SHEET No.	TOTAL SHEETS
11	SD	15,76	R46.1/R47.3, R16.7/R17.7	117	477

REGISTERED CIVIL ENGINEER 01-17-12 DATE

4-16-12
PLANS APPROVAL DATE

REGISTERED PROFESSIONAL ENGINEER JENNY YAN No. C62092 Exp. 09-30-13 CIVIL STATE OF CALIFORNIA

THE STATE OF CALIFORNIA OR ITS OFFICERS OR AGENTS SHALL NOT BE RESPONSIBLE FOR THE ACCURACY OR COMPLETENESS OF SCANNED COPIES OF THIS PLAN SHEET.

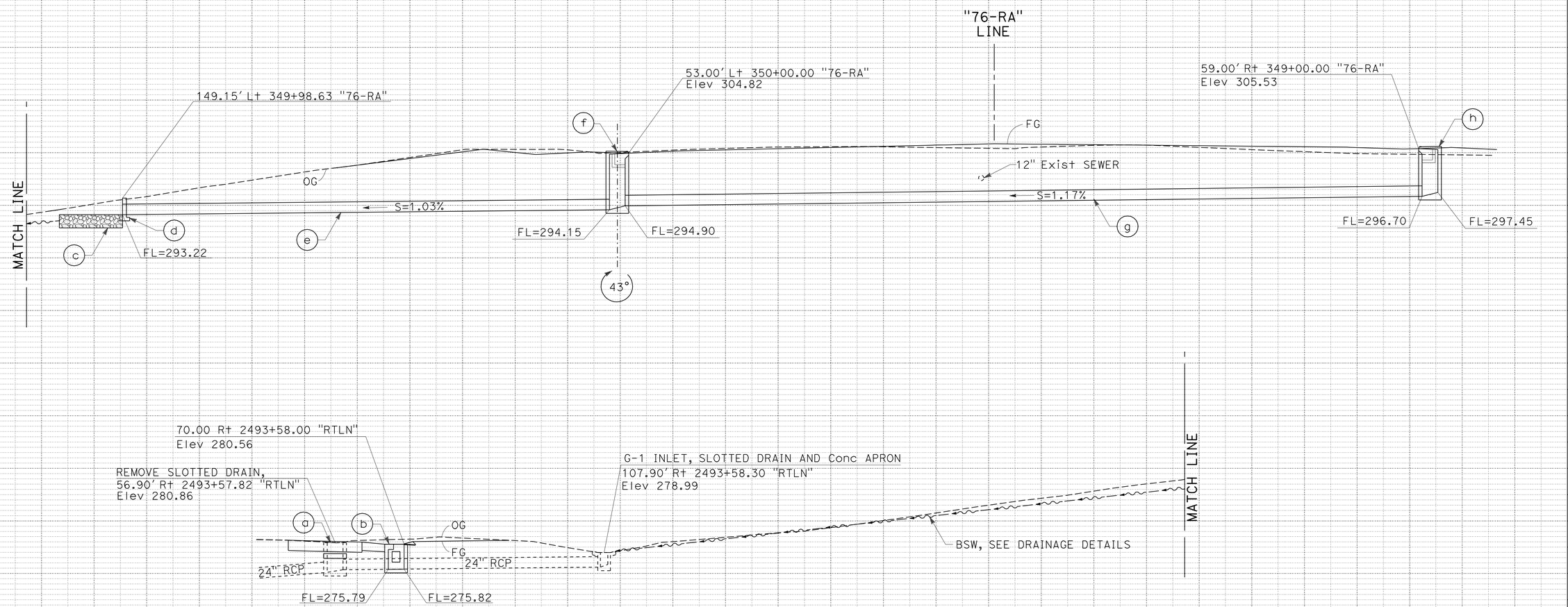

(a) CAP G-2 INLET, SEE DRAINAGE DETAILS

(b) G-2 INLET W/24-12 GRATE, H=4.8'
W/ 0.6% PRESLOPED GLD, L=15'

(c) RSP, SEE DRAINAGE DETAILS

(d) STRAIGHT HEADWALL, H=3.7'

(e) 24" APC x 92.6'

(f) OL INLET, H=10.8', L=10', W/ DRAINAGE
INLET MARKER, SEE DRAINAGE DETAILS

(g) 24" RCP x 151.5'

(h) OL INLET, H=9.1', L=10', W/ DRAINAGE
INLET MARKER, SEE DRAINAGE DETAILS

DRAINAGE SYSTEM No. 12

DRAINAGE PROFILES

SCALE: Horiz 1" = 10'
Vert 1" = 10'

DP-10

REVISED BY | DATE REVISED
JENNY YAN | JEFF BALUYUT
CALCULATED-DESIGNED BY | CHECKED BY
FUNCTIONAL SUPERVISOR | CARL SAVAGE

STATE OF CALIFORNIA - DEPARTMENT OF TRANSPORTATION
Caltrans® PROJECT DEVELOPMENT

LAST REVISION 01-23-12
DATE PLOTTED => 17-APR-2012
TIME PLOTTED => 11:50

Dist	COUNTY	ROUTE	POST MILES TOTAL PROJECT	SHEET No.	TOTAL SHEETS
11	SD	15,76	R46.1/R47.3, R16.7/R17.7	118	477

REGISTERED CIVIL ENGINEER 01-17-12 DATE

4-16-12
PLANS APPROVAL DATE

REGISTERED PROFESSIONAL ENGINEER JENNY YAN No. C62092 Exp. 09-30-13 CIVIL STATE OF CALIFORNIA

THE STATE OF CALIFORNIA OR ITS OFFICERS OR AGENTS SHALL NOT BE RESPONSIBLE FOR THE ACCURACY OR COMPLETENESS OF SCANNED COPIES OF THIS PLAN SHEET.

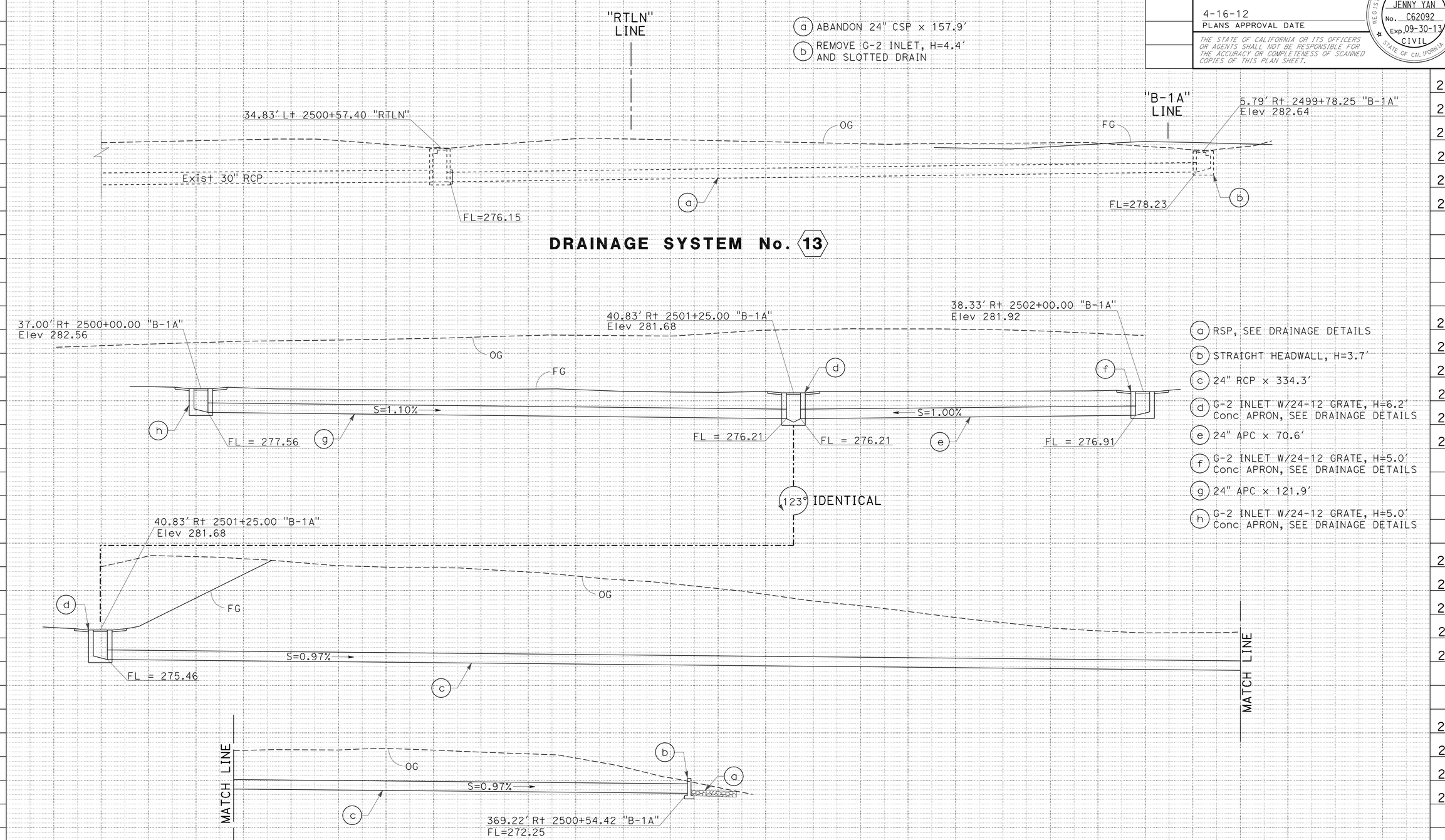

DRAINAGE PROFILES

SCALE: Horiz 1" = 10'
Vert 1" = 10'

DP-11

STATE OF CALIFORNIA - DEPARTMENT OF TRANSPORTATION
Caltrans PROJECT DEVELOPMENT

FUNCTIONAL SUPERVISOR: CARL SAVAGE
CALCULATED-DESIGNED BY: JENNY YAN
CHECKED BY: JEFF BALUYUT
REVISED BY / DATE REVISED

LAST REVISION 01-23-12
DATE PLOTTED => 17-APR-2012
TIME PLOTTED => 11:50

Dist	COUNTY	ROUTE	POST MILES TOTAL PROJECT	SHEET No.	TOTAL SHEETS
11	SD	15,76	R46.1/R47.3, R16.7/R17.7	119	477

REGISTERED CIVIL ENGINEER 01-17-12 DATE

4-16-12
PLANS APPROVAL DATE

REGISTERED PROFESSIONAL ENGINEER JENNY YAN No. C62092 Exp. 09-30-13 CIVIL STATE OF CALIFORNIA

THE STATE OF CALIFORNIA OR ITS OFFICERS OR AGENTS SHALL NOT BE RESPONSIBLE FOR THE ACCURACY OR COMPLETENESS OF SCANNED COPIES OF THIS PLAN SHEET.

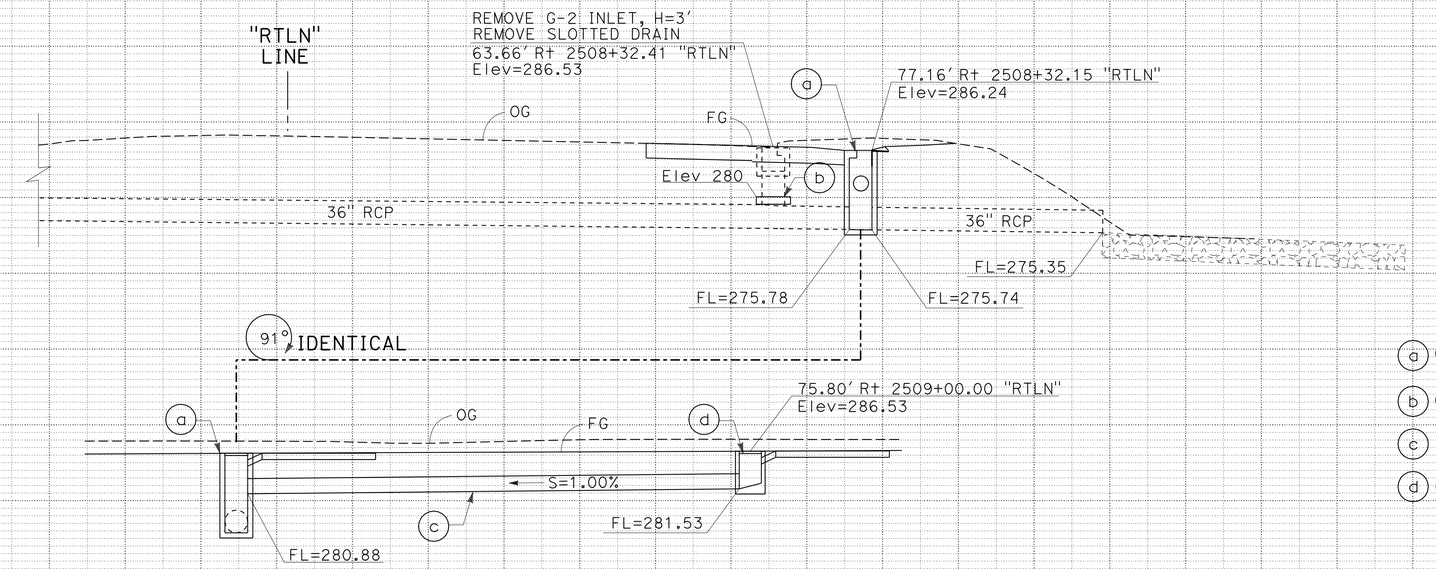

(a) G-2 INLET W/24-12 GRATE, H=10.5', W/0.6% PRESLOPED GLD, L=15'

(b) CAP 36" Conc PIPE RISER, SEE DRAINAGE DETAILS

(c) 24" APC x 64.9'

(d) G-2 INLET W/24-12 GRATE, H=5.0', W/0.6% PRESLOPED GLD, L=15'

DRAINAGE SYSTEM No. 15

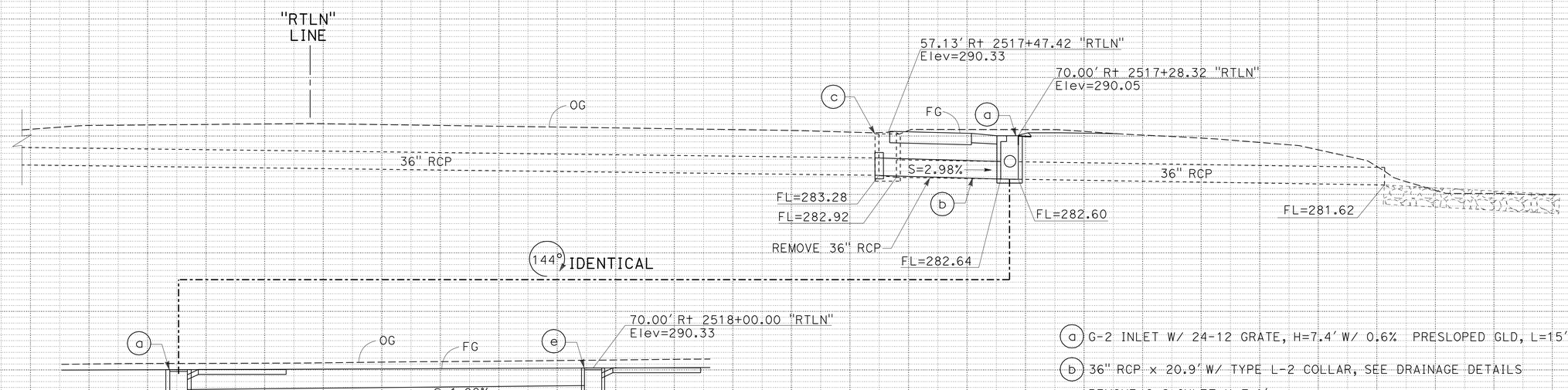

(a) G-2 INLET W/ 24-12 GRATE, H=7.4' W/ 0.6% PRESLOPED GLD, L=15'

(b) 36" RCP x 20.9' W/ TYPE L-2 COLLAR, SEE DRAINAGE DETAILS

(c) REMOVE G-2 INLET H=7.1'
REMOVE SLOTTED DRAIN

(d) 24" APC x 67.9'

(e) G-2 INLET W/ 24-12 GRATE, H=5.0' W/ 0.6% PRESLOPED GLD, L=15'

DRAINAGE SYSTEM No. 16

DRAINAGE PROFILES

SCALE: Horiz 1" = 10'
Vert 1" = 10'

DP-12

STATE OF CALIFORNIA - DEPARTMENT OF TRANSPORTATION
Caltrans® PROJECT DEVELOPMENT

FUNCTIONAL SUPERVISOR: CARL SAVAGE
CALCULATED-DESIGNED BY: JENNY YAN
CHECKED BY: JEFF BALUYUT
REVISED BY
DATE REVISED

LAST REVISION 01-23-12
DATE PLOTTED => 17-APR-2012
TIME PLOTTED => 11:51

Dist	COUNTY	ROUTE	POST MILES TOTAL PROJECT	SHEET No.	TOTAL SHEETS
11	SD	15,76	R46.1/R47.3, R16.7/R17.7	120	477

REGISTERED CIVIL ENGINEER 01-17-12 DATE

4-16-12
PLANS APPROVAL DATE

REGISTERED PROFESSIONAL ENGINEER JENNY YAN No. C62092 Exp. 09-30-13 CIVIL STATE OF CALIFORNIA

THE STATE OF CALIFORNIA OR ITS OFFICERS OR AGENTS SHALL NOT BE RESPONSIBLE FOR THE ACCURACY OR COMPLETENESS OF SCANNED COPIES OF THIS PLAN SHEET.

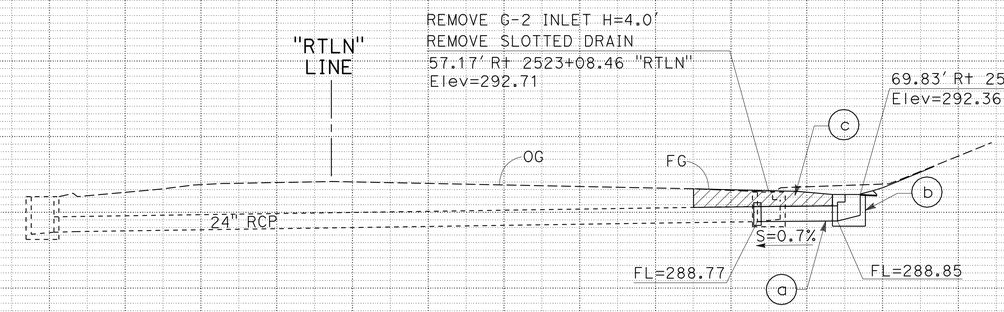

(a) 24" RCP x 10.6' W/ TYPE L-2 COLLAR, SEE DRAINAGE DETAILS
(b) G-2 INLET W/24-12 GRATE, H=3.5', W/0.6% PRESLOPED GLD, L=15'
(c) CULVERT ENCASE, SEE DRAINAGE DETAILS

DRAINAGE SYSTEM No. 17

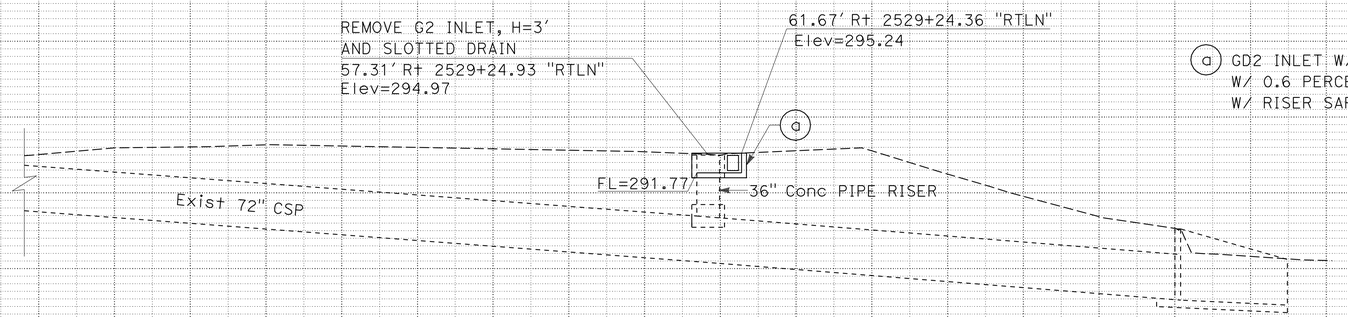

(a) GD2 INLET W/DOUBLE 24-12 GRATE, H=3.2', SEE DRAINAGE DETAILS W/ 0.6 PERCENT PRESLOPED GLD, L=15' W/ RISER SAFETY CAGE, SEE Std PLAN D93B

DRAINAGE SYSTEM No. 18

(a) RSP, SEE DRAINAGE DETAILS
(b) 18" CSP x 24.1' w/ TYPE L-2 COLLAR, SEE DRAINAGE DETAILS
(c) REMOVE MUD, SAND AND DEBRIS (IN CULVERT), L=66'

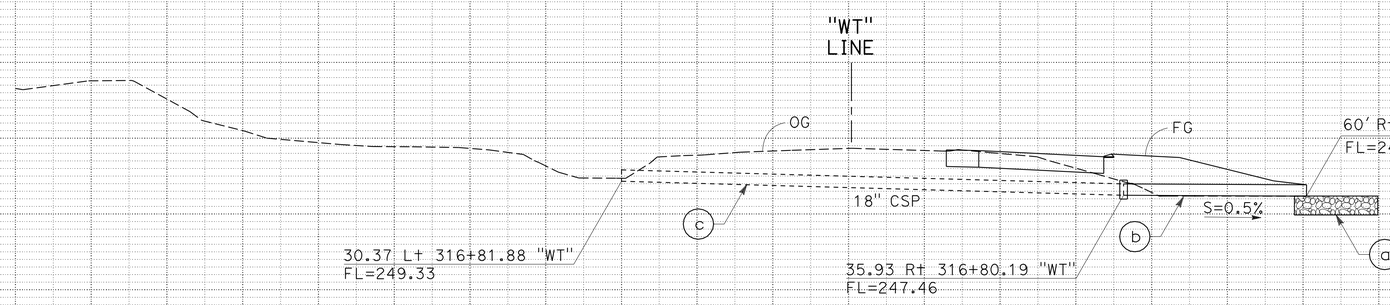

DRAINAGE SYSTEM No. 19

DRAINAGE PROFILES

SCALE: Horiz 1" = 10'
Vert 1" = 10'

DP-13

REVISED BY | DATE REVISED
JENNY YAN | JEFF BALUYUT
CALCULATED-DESIGNED BY | CHECKED BY
FUNCTIONAL SUPERVISOR | CARL SAVAGE

STATE OF CALIFORNIA - DEPARTMENT OF TRANSPORTATION
Caltrans® PROJECT DEVELOPMENT

LAST REVISION 01-23-12 | DATE PLOTTED => 17-APR-2012 | TIME PLOTTED => 11:51

Dist	COUNTY	ROUTE	POST MILES TOTAL PROJECT	SHEET No.	TOTAL SHEETS
11	SD	15,76	R46.1/R47.3, R16.7/R17.7	121	477

REGISTERED CIVIL ENGINEER 01-17-12 DATE

4-16-12
PLANS APPROVAL DATE

REGISTERED PROFESSIONAL ENGINEER JENNY YAN No. C62092 Exp. 09-30-13 CIVIL STATE OF CALIFORNIA

THE STATE OF CALIFORNIA OR ITS OFFICERS OR AGENTS SHALL NOT BE RESPONSIBLE FOR THE ACCURACY OR COMPLETENESS OF SCANNED COPIES OF THIS PLAN SHEET.

(a) RSP, SEE DRAINAGE DETAILS

(b) 48" CSP X 24.0' w/ TYPE L-2 COLLAR, SEE DRAINAGE DETAILS

(c) REMOVE MUD, SAND AND DEBRIS (IN CULVERT), L=66'

(d) CULVERT ENCASE, SEE DRAINAGE DETAILS

(e) 48" CSP X 24.0' w/ TYPE L-2 COLLAR, SEE DRAINAGE DETAILS

(f) REMOVE MUD, SAND AND DEBRIS (IN CULVERT), L=66'

(g) 48" CSP X 24.0' w/ TYPE L-2 COLLAR, SEE DRAINAGE DETAILS

(h) REMOVE MUD, SAND AND DEBRIS (IN CULVERT), L=66'

(i) RSP, SEE DRAINAGE DETAILS

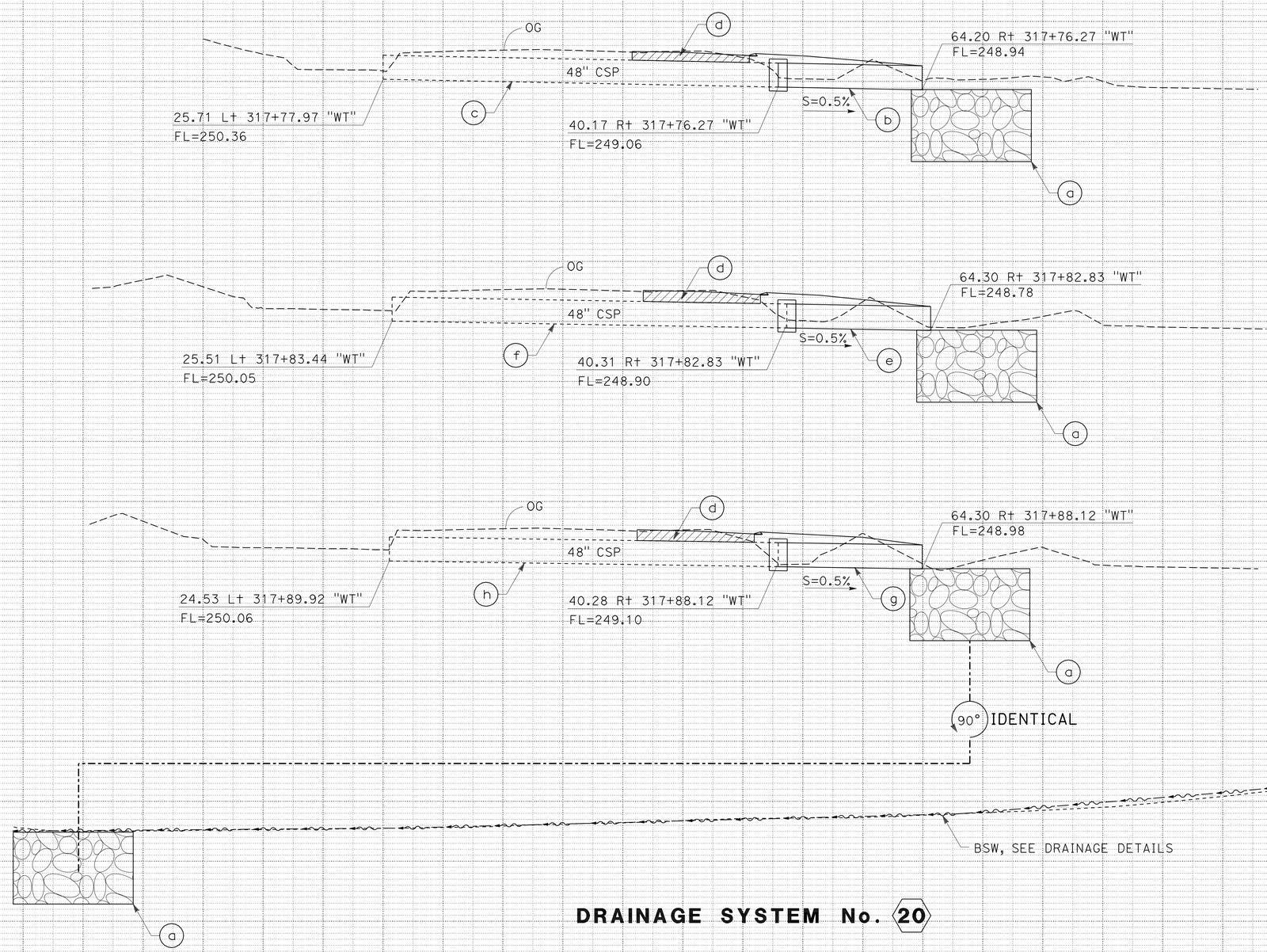

DRAINAGE SYSTEM No. 20

DRAINAGE PROFILES

SCALE: Horiz 1" = 10'
Vert 1" = 10'

DP-14

STATE OF CALIFORNIA - DEPARTMENT OF TRANSPORTATION
Caltrans® PROJECT DEVELOPMENT

FUNCTIONAL SUPERVISOR: CARL SAVAGE
CALCULATED-DESIGNED BY: JENNY YAN
CHECKED BY: JEFF BALUYUT
REVISED BY / DATE REVISED

LAST REVISION 01-23-12
DATE PLOTTED => 17-APR-2012
TIME PLOTTED => 11:51

Dist	COUNTY	ROUTE	POST MILES TOTAL PROJECT	SHEET No.	TOTAL SHEETS
11	SD	15,76	R46.1/R47.3, R16.7/R17.7	122	477

REGISTERED CIVIL ENGINEER 01-17-12 DATE

4-16-12
PLANS APPROVAL DATE

REGISTERED PROFESSIONAL ENGINEER JENNY YAN No. C62092 Exp. 09-30-13 CIVIL STATE OF CALIFORNIA

THE STATE OF CALIFORNIA OR ITS OFFICERS OR AGENTS SHALL NOT BE RESPONSIBLE FOR THE ACCURACY OR COMPLETENESS OF SCANNED COPIES OF THIS PLAN SHEET.

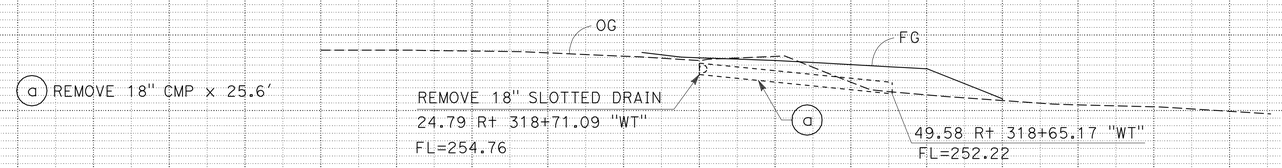

DRAINAGE SYSTEM No. 21

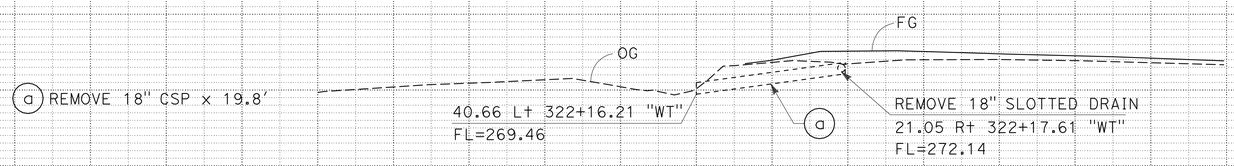

DRAINAGE SYSTEM No. 22A

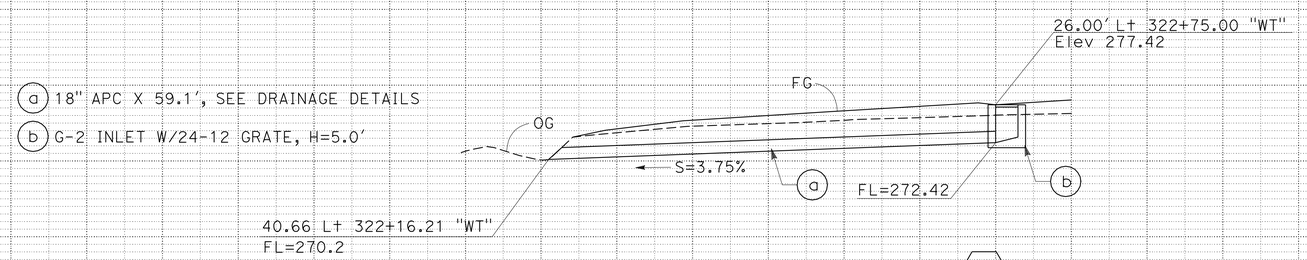

DRAINAGE SYSTEM No. 22

DRAINAGE PROFILES

SCALE: Horiz 1" = 10'
Vert 1" = 10'

DP-15

STATE OF CALIFORNIA - DEPARTMENT OF TRANSPORTATION
Caltrans® PROJECT DEVELOPMENT

FUNCTIONAL SUPERVISOR: CARL SAVAGE
CALCULATED-DESIGNED BY: JENNY YAN
CHECKED BY: JEFF BALUYUT
REVISED BY / DATE REVISED

LAST REVISION 01-23-12
DATE PLOTTED => 17-APR-2012
TIME PLOTTED => 11:51

Dist	COUNTY	ROUTE	POST MILES TOTAL PROJECT	SHEET No.	TOTAL SHEETS
11	SD	15,76	R46.1/R47.3, R16.7/R17.7	123	477

REGISTERED CIVIL ENGINEER 01-17-12 DATE

4-16-12
PLANS APPROVAL DATE

REGISTERED PROFESSIONAL ENGINEER JENNY YAN No. C62092 Exp. 09-30-13 CIVIL STATE OF CALIFORNIA

THE STATE OF CALIFORNIA OR ITS OFFICERS OR AGENTS SHALL NOT BE RESPONSIBLE FOR THE ACCURACY OR COMPLETENESS OF SCANNED COPIES OF THIS PLAN SHEET.

(a) RSP, SEE DRAINAGE DETAILS

(b) STRAIGHT HEADWALL, H=3.7′

(c) 24" APC X 22.0′

(d) TYPE OL INLET, H=5.7′, L=21′, W/ DRAINAGE INLET MARKER, SEE DRAINAGE DETAILS

(e) 24" RCP X 170.2′

(f) TYPE OL INLET, H=5.0′, L=21′, W/DRAINAGE INLET MARKER, SEE DRAINAGE DETAILS

(g) 18" APC X 47.9′ w/ TYPE L-3 COLLAR, SEE DRAINAGE DETAILS

(h) REMOVE 18" RCP X 29.2′

(i) REMOVE INLET, H=3.5′

(j) ABANDON 24" RCP X 84.5′

(k) REMOVE INLET H=4.6′

(l) REMOVE 24" RCP X 35.8′

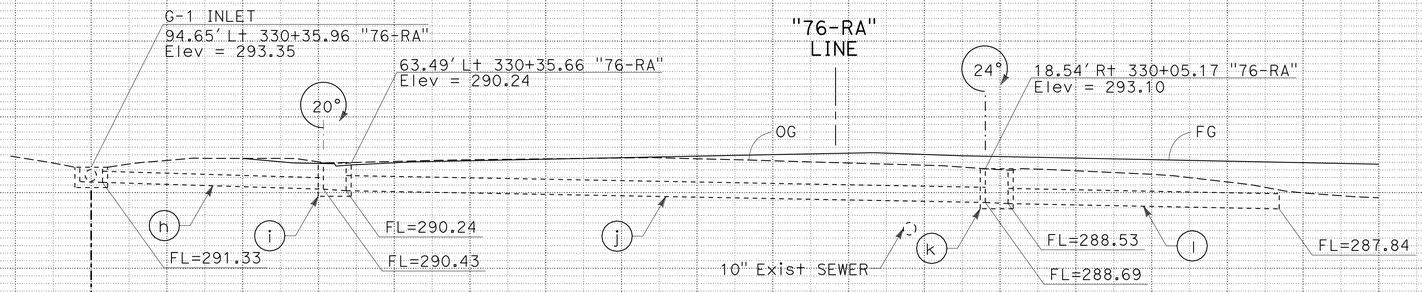

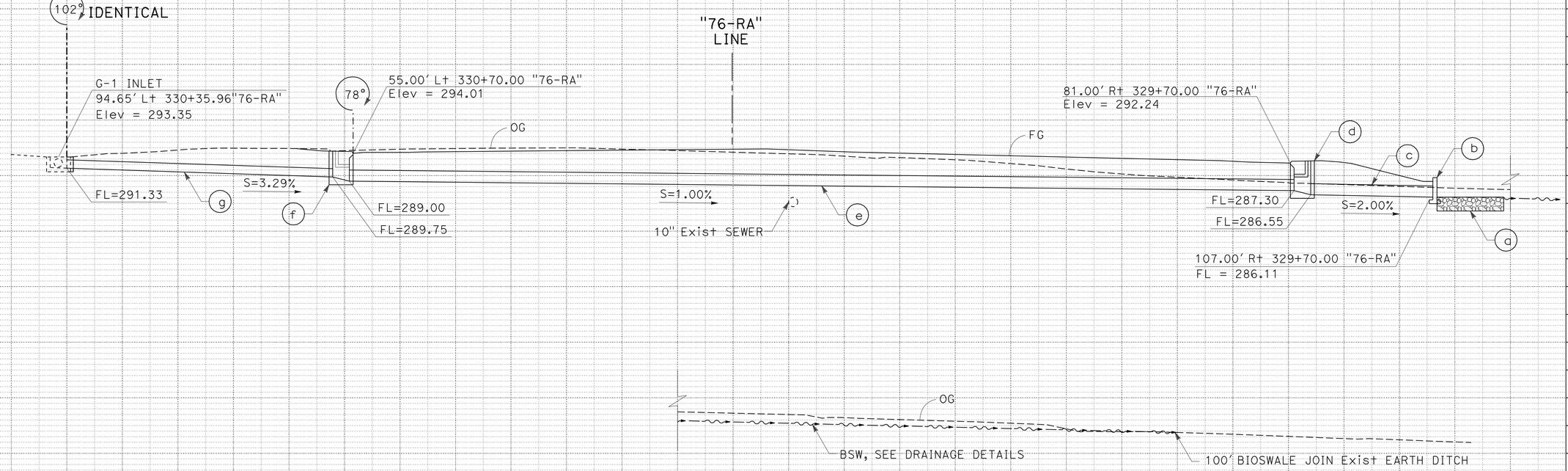

DRAINAGE SYSTEM No. 23

DRAINAGE PROFILES

SCALE: Horiz 1" = 10′
Vert 1" = 10′

DP-16

REVISED BY | DATE REVISED

JENNY YAN | JEFF BALUYUT

CALCULATED-DESIGNED BY | CHECKED BY

FUNCTIONAL SUPERVISOR | CARL SAVAGE

STATE OF CALIFORNIA - DEPARTMENT OF TRANSPORTATION

Caltrans® PROJECT DEVELOPMENT

LAST REVISION 01-23-12 | DATE PLOTTED => 17-APR-2012 | TIME PLOTTED => 11:51

Dist	COUNTY	ROUTE	POST MILES TOTAL PROJECT	SHEET No.	TOTAL SHEETS
11	SD	15,76	R46.1/R47.3, R16.7/R17.7	124	477

REGISTERED CIVIL ENGINEER 01-17-12 DATE

4-16-12
PLANS APPROVAL DATE

REGISTERED PROFESSIONAL ENGINEER JENNY YAN No. C62092 Exp. 09-30-13 CIVIL STATE OF CALIFORNIA

THE STATE OF CALIFORNIA OR ITS OFFICERS OR AGENTS SHALL NOT BE RESPONSIBLE FOR THE ACCURACY OR COMPLETENESS OF SCANNED COPIES OF THIS PLAN SHEET.

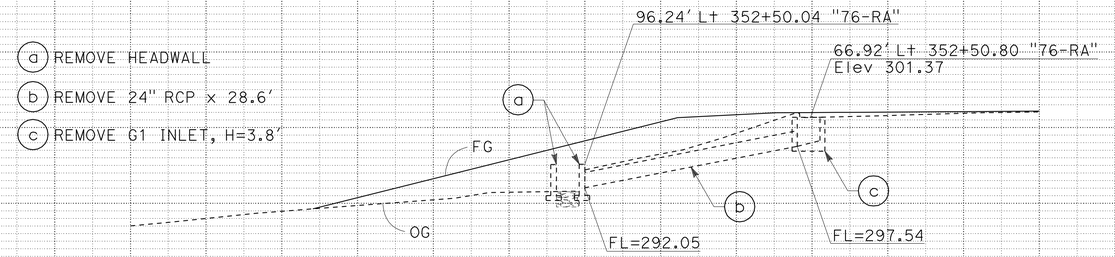

DRAINAGE SYSTEM No. 24

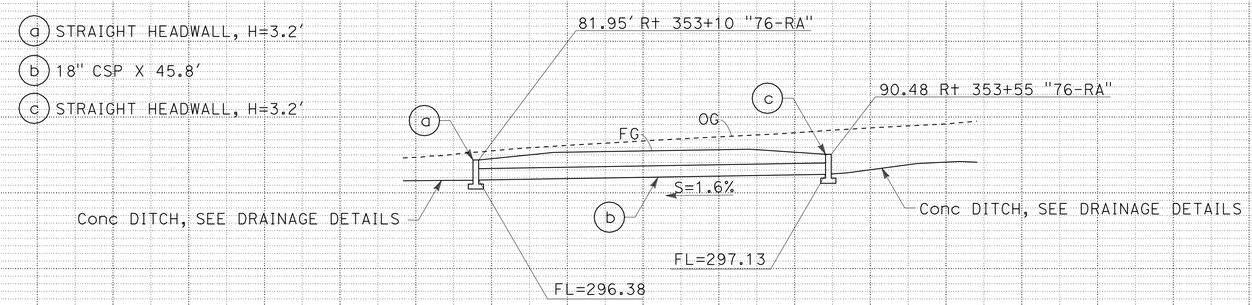

DRAINAGE SYSTEM No. 25

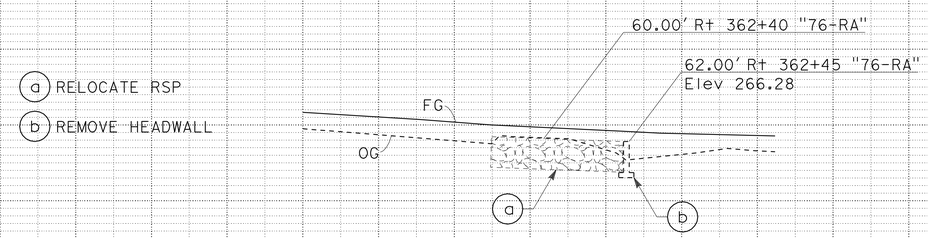

DRAINAGE SYSTEM No. 26

DRAINAGE PROFILES

SCALE: Horiz 1" = 10'
Vert 1" = 10'

DP-17

STATE OF CALIFORNIA - DEPARTMENT OF TRANSPORTATION
Caltrans® PROJECT DEVELOPMENT

FUNCTIONAL SUPERVISOR: CARL SAVAGE
CALCULATED-DESIGNED BY: JENNY YAN
CHECKED BY: JEFF BALUYUT
REVISED BY / DATE REVISED

LAST REVISION 01-23-12 | DATE PLOTTED => 17-APR-2012 | TIME PLOTTED => 11:51

Dist	COUNTY	ROUTE	POST MILES TOTAL PROJECT	SHEET No.	TOTAL SHEETS
11	SD	15,76	R46.1/R47.3, R16.7/R17.7	125	477

REGISTERED CIVIL ENGINEER 01-17-12 DATE

4-16-12
PLANS APPROVAL DATE

REGISTERED PROFESSIONAL ENGINEER JENNY YAN No. C62092 Exp. 09-30-13 CIVIL STATE OF CALIFORNIA

THE STATE OF CALIFORNIA OR ITS OFFICERS OR AGENTS SHALL NOT BE RESPONSIBLE FOR THE ACCURACY OR COMPLETENESS OF SCANNED COPIES OF THIS PLAN SHEET.

TABLE D

D1/D2	1'-6"	2'-0"	3'-0"	4'-0"	4'-6"	5'-0"	5'-6"	6'-0"
L (Min)	1'-0"	1'-0"	1'-6"	1'-6"	1'-6"	2'-0"	2'-0"	2'-0"
t (Min)	6"	6"	8"	8"	9"	1'-0"	1'-0"	1'-0"

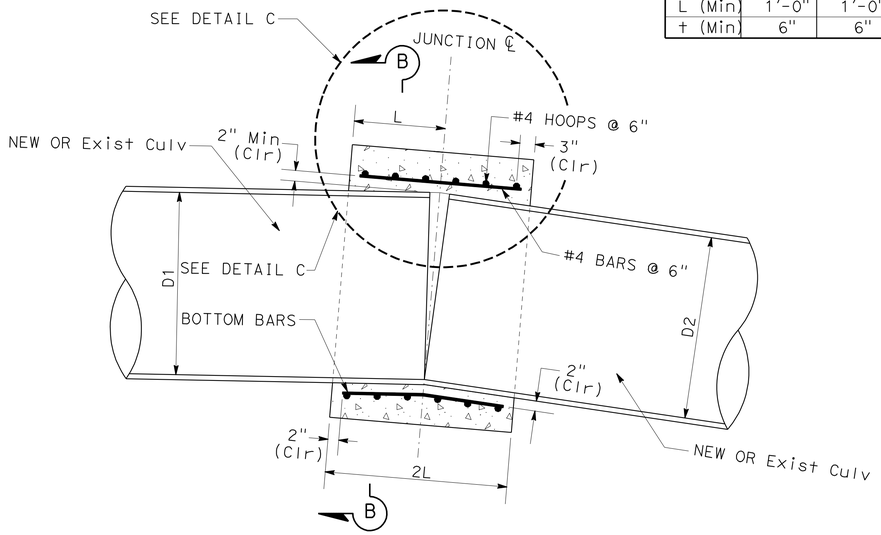

SECTION A-A

NOTE: BEND BOTTOM BARS AS NECESSARY TO MAINTAIN 2" CLEARANCE

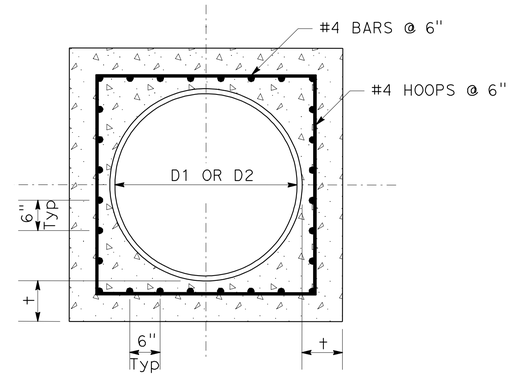

SECTION B-B

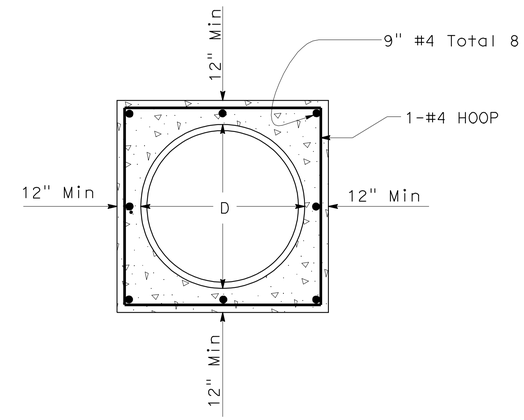

SECTION E-E

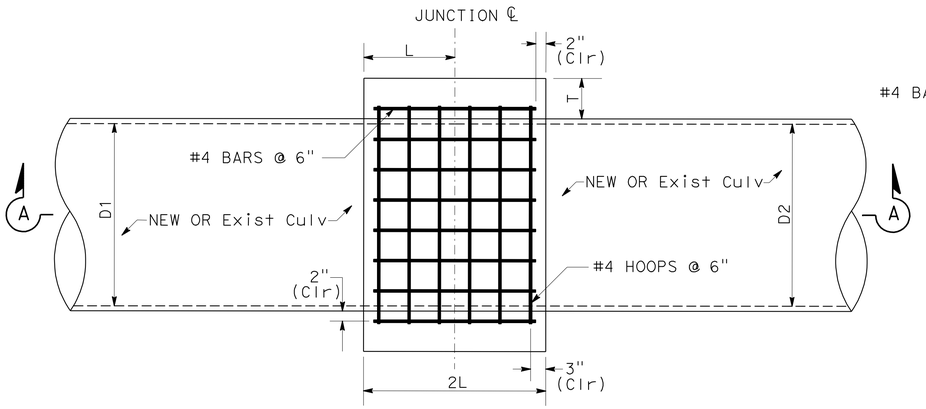

PLAN

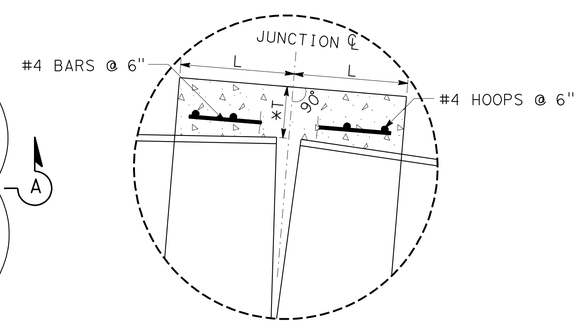

DETAIL C

*MEASURED ALONG JUNCTION ℄

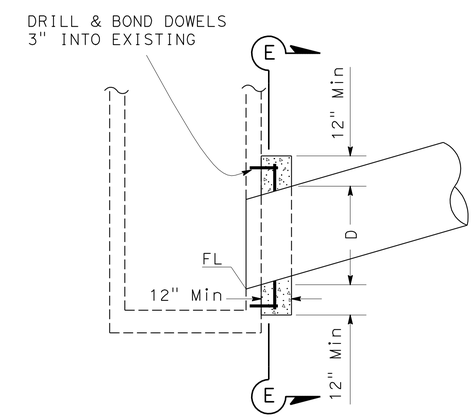

NOTE: BEND EXPOSED REBAR INTO CONCRETE COLLAR.

NOTES:

1. WHERE PIPES OF DIFFERENT DIAMETERS ARE JOINED WITH A Conc COLLAR, L & T SHALL CORRESPOND WITH THE LARGER OF THE TWO PIPE DIAMETERS.
2. JOIN PIPES AT INVERTS

TYPE L-2 COLLAR

1 a 16 b 17 a 19 b

20 b 20 e 20 g

TYPE L-3 COLLAR

5 a 6 a 23 g

DRAINAGE DETAILS

NO SCALE

DD-1

STATE OF CALIFORNIA - DEPARTMENT OF TRANSPORTATION
Caltrans PROJECT DEVELOPMENT

FUNCTIONAL SUPERVISOR: CARL SAVAGE
CALCULATED-DESIGNED BY: JENNY YAN
CHECKED BY: JEFF BALUYUT
REVISED BY
DATE REVISED

LAST REVISION 01-23-12
DATE PLOTTED => 17-APR-2012
TIME PLOTTED => 11:51

Dist	COUNTY	ROUTE	POST MILES TOTAL PROJECT	SHEET No.	TOTAL SHEETS
11	SD	15,76	R46.1/R47.3, R16.7/R17.7	126	477

REGISTERED CIVIL ENGINEER 01-17-12 DATE

4-16-12
PLANS APPROVAL DATE

REGISTERED PROFESSIONAL ENGINEER
JENNY YAN
No. C62092
Exp. 09-30-13
CIVIL
STATE OF CALIFORNIA

THE STATE OF CALIFORNIA OR ITS OFFICERS OR AGENTS SHALL NOT BE RESPONSIBLE FOR THE ACCURACY OR COMPLETENESS OF SCANNED COPIES OF THIS PLAN SHEET.

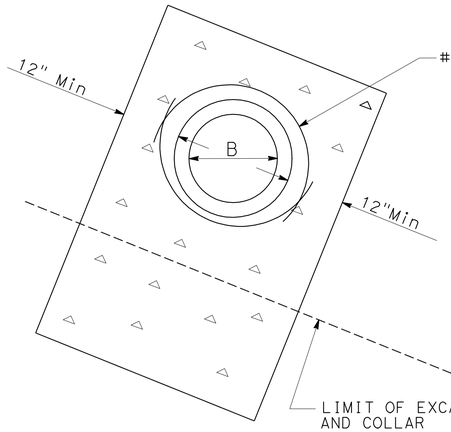

SECTION B-B

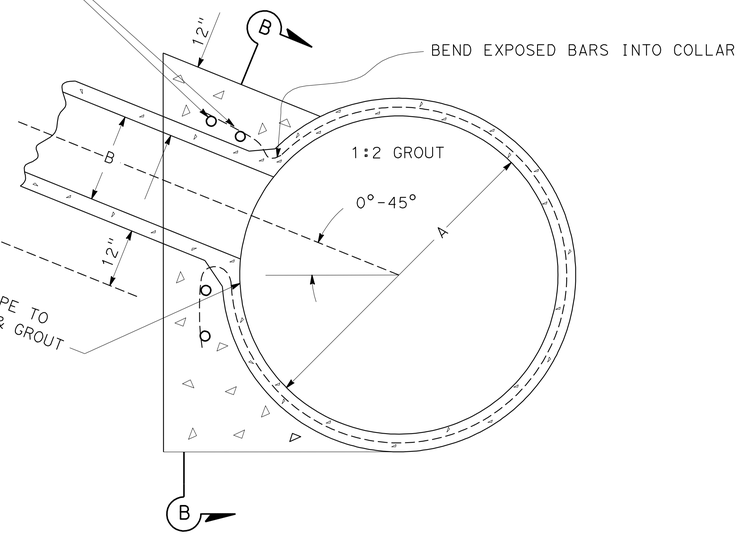

SECTION A-A

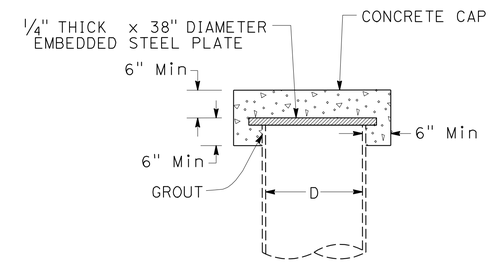

CAP RISER OR PIPE

2A (c) 3 (a) 15 (b)

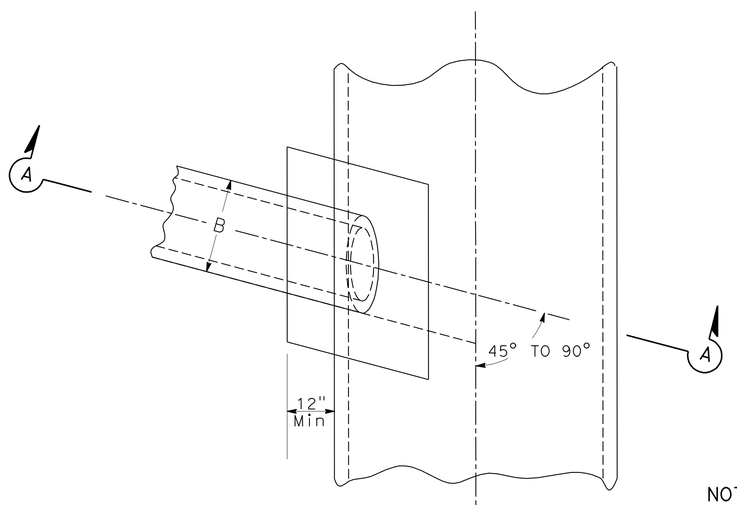

PLAN

NOTES:

1. CONCRETE SHALL EXTEND TO MINIMUM OF 12" BELOW INLET PIPE
2. "A" EQUALS LARGER PIPE'S DIAMETER.
3. "B" EQUALS SMALLER PIPE'S DIAMETER.

TYPE J-1 COLLAR

3 (b)

DRAINAGE DETAILS

NO SCALE

DD-2

STATE OF CALIFORNIA - DEPARTMENT OF TRANSPORTATION
Caltrans PROJECT DEVELOPMENT

FUNCTIONAL SUPERVISOR: CARL SAVAGE
CALCULATED-DESIGNED BY: JENNY YAN
CHECKED BY: JEFF BALUYUT
REVISED BY
DATE REVISED

LAST REVISION 01-23-12
DATE PLOTTED => 17-APR-2012
TIME PLOTTED => 11:51

Dist	COUNTY	ROUTE	POST MILES TOTAL PROJECT	SHEET No.	TOTAL SHEETS
11	SD	15,76	R46.1/R47.3, R16.7/R17.7	127	477

REGISTERED CIVIL ENGINEER 01-17-12 DATE

4-16-12
PLANS APPROVAL DATE

REGISTERED PROFESSIONAL ENGINEER JENNY YAN No. C62092 Exp. 09-30-13 CIVIL STATE OF CALIFORNIA

THE STATE OF CALIFORNIA OR ITS OFFICERS OR AGENTS SHALL NOT BE RESPONSIBLE FOR THE ACCURACY OR COMPLETENESS OF SCANNED COPIES OF THIS PLAN SHEET.

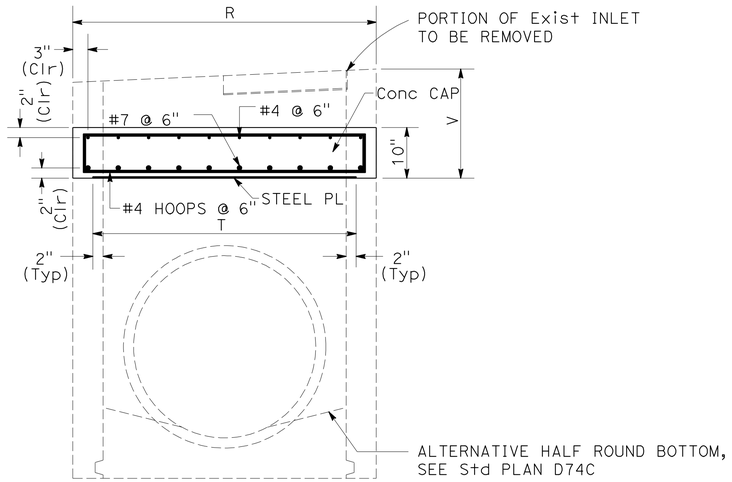

SECTION A-A

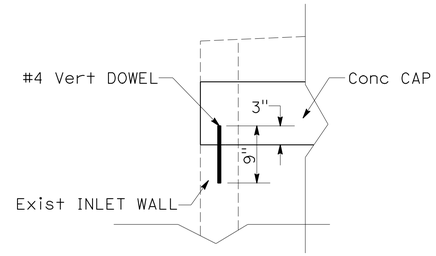

SECTION B-B

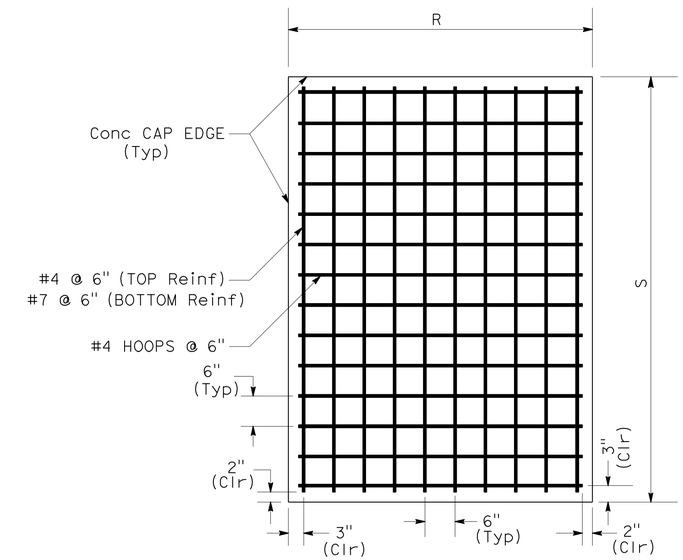

Conc CAP REINFORCEMENT PLAN

TABLE C

DRAINAGE SYSTEM	R	S	T	U	V
12 a	2.5′	4.0′	1.9′	3.4′	36"

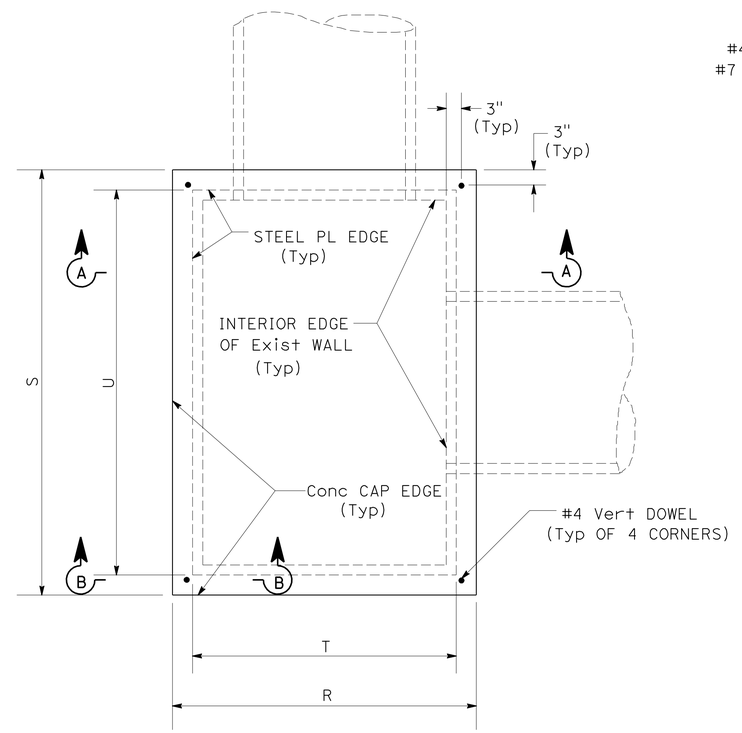

CAP INLET

12 a

NOTES:

1. DRILL & BOND Vert DOWELS INTO EXISTING DI WALLS AT LOCATIONS SHOWN
2. "V" IS THE DI REMOVAL HEIGHT
3. "R", "S", "T" AND "U" ARE SUBJECT TO FIELD VERIFICATION
4. STEEL PL IS "T" WIDE x "U" THICK x ¼" THICK

DRAINAGE DETAILS

NO SCALE

DD-3

STATE OF CALIFORNIA - DEPARTMENT OF TRANSPORTATION
Caltrans PROJECT DEVELOPMENT

FUNCTIONAL SUPERVISOR: CARL SAVAGE
CALCULATED-DESIGNED BY: JENNY YAN
CHECKED BY: JEFF BALUYUT
REVISED BY
DATE REVISED

LAST REVISION 01-23-12
DATE PLOTTED => 17-APR-2012
TIME PLOTTED => 11:51

Dist	COUNTY	ROUTE	POST MILES TOTAL PROJECT	SHEET No.	TOTAL SHEETS
11	SD	15,76	R46.1/R47.3, R16.7/R17.7	128	477

REGISTERED CIVIL ENGINEER 01-17-12 DATE

4-16-12
PLANS APPROVAL DATE

REGISTERED PROFESSIONAL ENGINEER JENNY YAN No. C62092 Exp. 09-30-13 CIVIL STATE OF CALIFORNIA

THE STATE OF CALIFORNIA OR ITS OFFICERS OR AGENTS SHALL NOT BE RESPONSIBLE FOR THE ACCURACY OR COMPLETENESS OF SCANNED COPIES OF THIS PLAN SHEET.

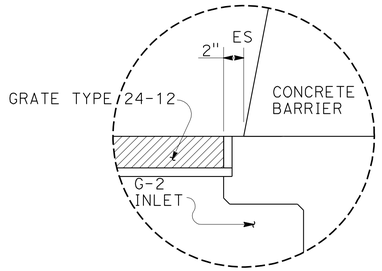

DETAIL "A"

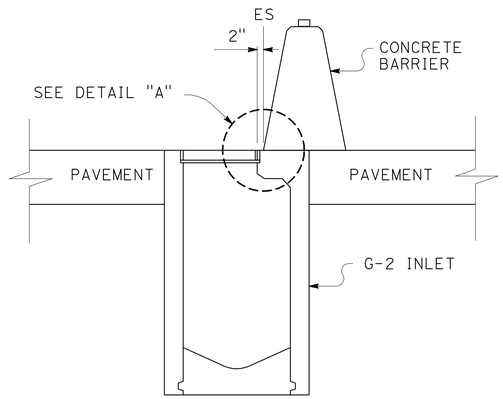

CASE 1

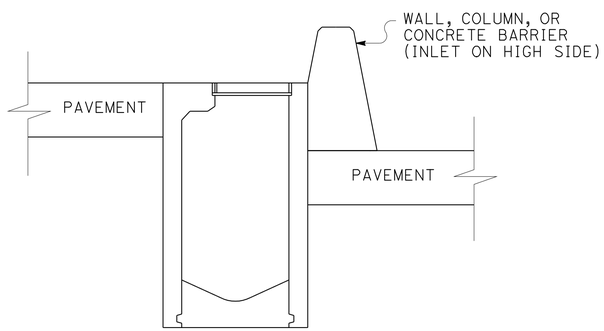

CASE 2

NOTE: FOR INLET DETAILS NOT SHOWN, SEE Std PLAN D73

INLET (G SERIES) AT BARRIER

5 d 5 j 7 b 7 d 9 b

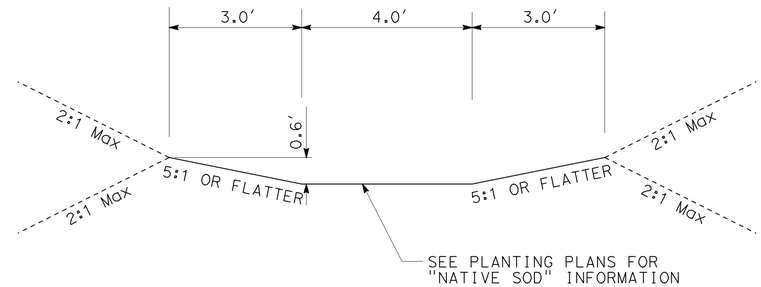

SECTION

BIOFILTRATION SWALE

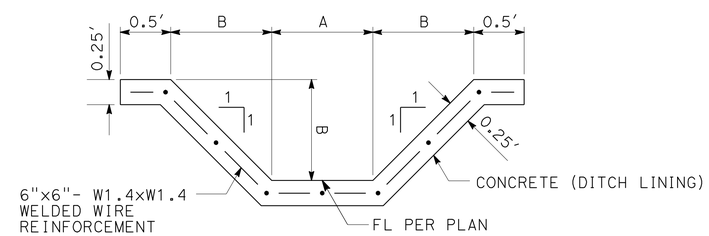

STATION AND OFFSET	A	B
74.50' Rt 2486+50 "B-2A" TO 81.95' Rt 353+10 "76-RA"	2.5'	2.0'
90.48' Rt 353+55 "76-RA" TO 74.00' Rt 363+85 "76-RA"	1.0'	1.0'

CONCRETE DITCH

DRAINAGE DETAILS

NO SCALE

DD-4

REVISED BY	DATE REVISED
JENNY YAN	JEFF BALUYUT
CALCULATED-DESIGNED BY	CHECKED BY
FUNCTIONAL SUPERVISOR	CARL SAVAGE

STATE OF CALIFORNIA - DEPARTMENT OF TRANSPORTATION
Caltrans PROJECT DEVELOPMENT

LAST REVISION 01-23-12 | DATE PLOTTED => 17-APR-2012 | TIME PLOTTED => 11:51

Dist	COUNTY	ROUTE	POST MILES TOTAL PROJECT	SHEET No.	TOTAL SHEETS
11	SD	15,76	R46.1/R47.3, R16.7/R17.7	129	477

REGISTERED CIVIL ENGINEER 01-17-12 DATE

4-16-12
PLANS APPROVAL DATE

REGISTERED PROFESSIONAL ENGINEER
JENNY YAN
No. C62092
Exp. 09-30-13
CIVIL
STATE OF CALIFORNIA

THE STATE OF CALIFORNIA OR ITS OFFICERS OR AGENTS SHALL NOT BE RESPONSIBLE FOR THE ACCURACY OR COMPLETENESS OF SCANNED COPIES OF THIS PLAN SHEET.

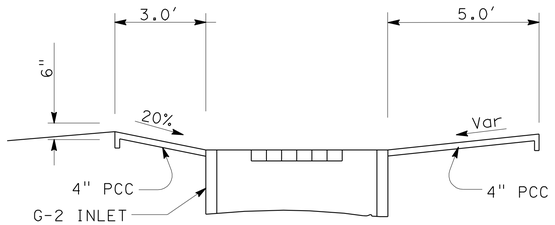

SECTION A-A

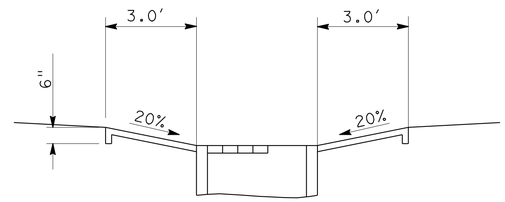

SECTION B-B

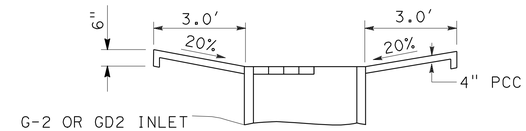

SECTION E-E

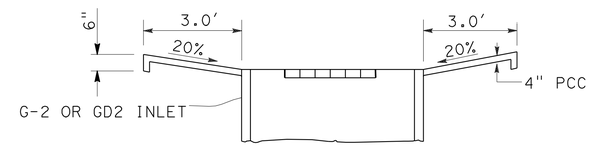

SECTION F-F

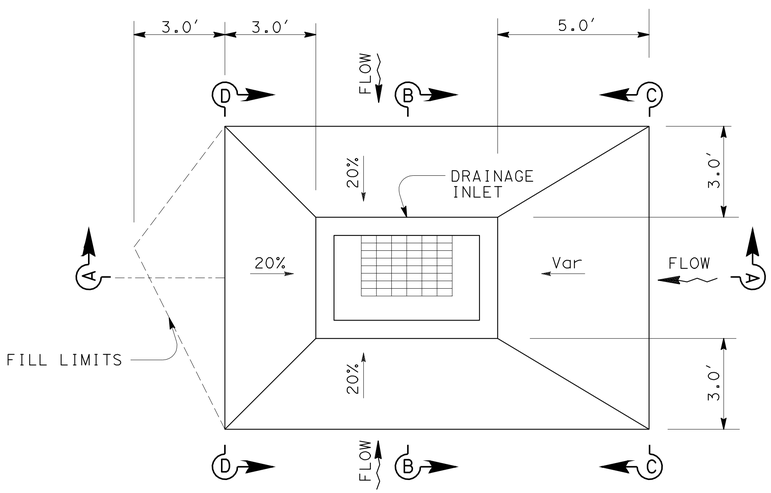

PLAN

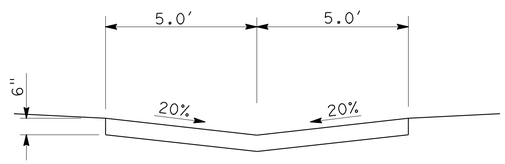

SECTION C-C

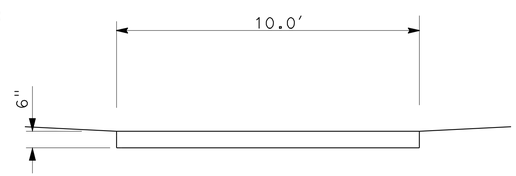

SECTION D-D

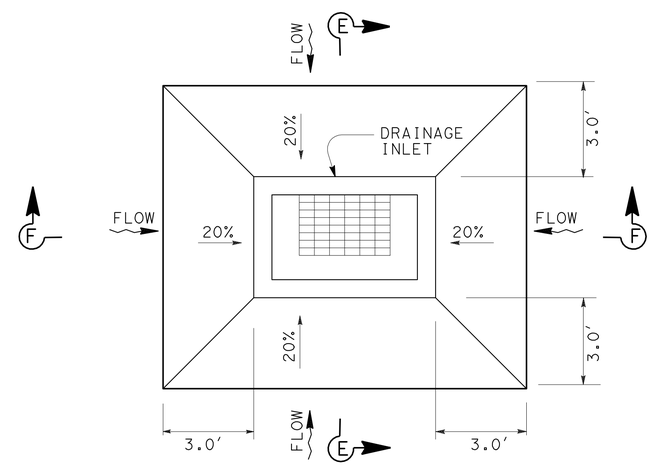

PLAN

Conc APRON w/ DRAINAGE INLET

ON GRADE

4 c 6 j 14 h 14 f

Conc APRON w/ DRAINAGE INLET

IN SAG

4 a 5 b 6 b

6 h 6 f 14 d

DRAINAGE DETAILS

NO SCALE

DD-5

STATE OF CALIFORNIA - DEPARTMENT OF TRANSPORTATION
Caltrans® PROJECT DEVELOPMENT

FUNCTIONAL SUPERVISOR: CARL SAVAGE
CALCULATED-DESIGNED BY: JENNY YAN
CHECKED BY: JEFF BALUYUT
REVISED BY
DATE REVISED

LAST REVISION 01-23-12
DATE PLOTTED => 17-APR-2012
TIME PLOTTED => 11:51

Dist	COUNTY	ROUTE	POST MILES TOTAL PROJECT	SHEET No.	TOTAL SHEETS
11	SD	15,76	R46.1/R47.3, R16.7/R17.7	130	477

REGISTERED CIVIL ENGINEER 01-17-12 DATE

4-16-12
PLANS APPROVAL DATE

REGISTERED PROFESSIONAL ENGINEER JENNY YAN No. C62092 Exp. 09-30-13 CIVIL STATE OF CALIFORNIA

THE STATE OF CALIFORNIA OR ITS OFFICERS OR AGENTS SHALL NOT BE RESPONSIBLE FOR THE ACCURACY OR COMPLETENESS OF SCANNED COPIES OF THIS PLAN SHEET.

NOTES:

1. RSP FABRIC TO BE PLACED UNDER ALL ROCK SLOPE PROTECTION PER FILTER FABRIC OVERLAP DETAIL.
2. ROCK SLOPE PROTECTION PLACED USING METHOD "B" SEE TABLE FOR SIZES.

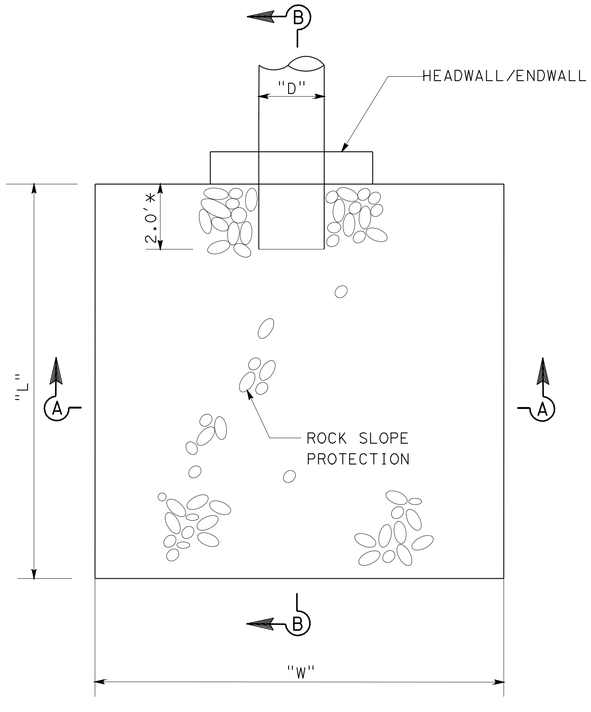

PLAN

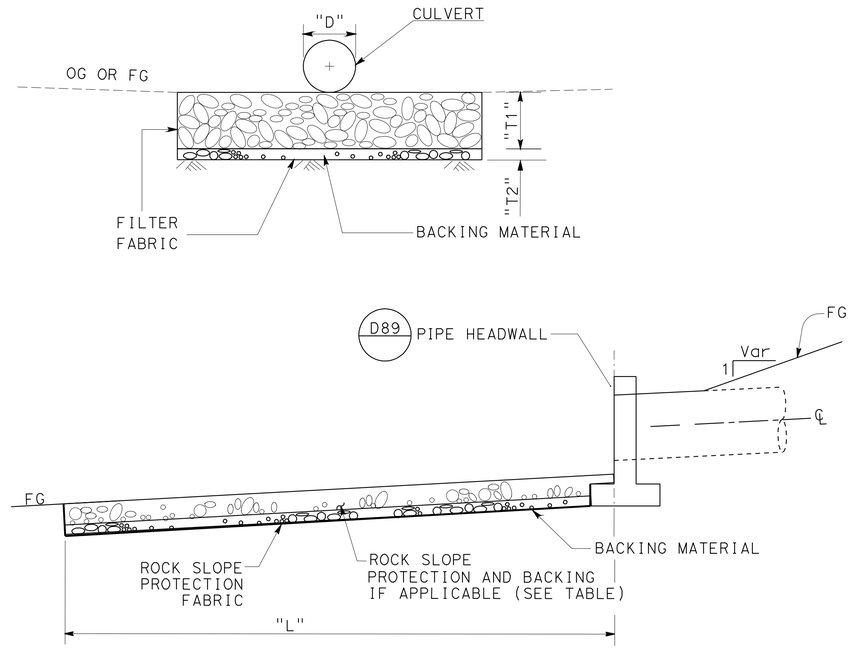

SECTION B-B

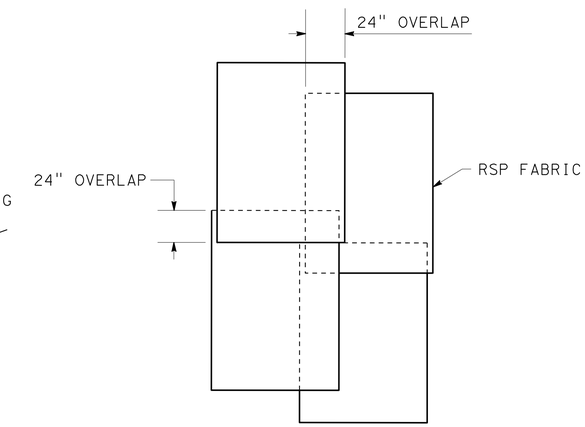

RSP FABRIC OVERLAP

DRAINAGE SYSTEM ROCK SLOPE PROTECTION

SYSTEM	PIPE DIAMETER	RSP DIMENSIONS		ROCK SLOPE PROTECTION		BACKING		TOTAL THICKNESS	REMARKS
	"D" (In)	"L" (ft)	"W" (ft)	TYPE	"T1" (ft)	TYPE	"T2" (ft)	"T1+T2" (ft)	
2 a	24	12	6	LIGHT	2.5	NONE	0	2.5	METHOD "B" PLACEMENT
3A a	**	3	3	NO.1	1.8	NONE	0	1.8	METHOD "B" PLACEMENT
12 d	24	12	6	LIGHT	2.5	NONE	0	2.5	METHOD "B" PLACEMENT
14 a	24	12	6	LIGHT	2.5	NONE	0	2.5	METHOD "B" PLACEMENT
19 a	18	11	4.5	LIGHT	2.5	NONE	0	2.5	METHOD "B" PLACEMENT
20 a	3x48	20	20	OUTSIDE LAYER 4T, INNER LAYER 1/2T,	T=6.8' T=3.4'	NO.1	1.8	12.0	METHOD "A" PLACEMENT
20 f	***	6	6	LIGHT	2.5	NONE	0	2.5	METHOD "B" PLACEMENT
23 a	24	12	6	LIGHT	2.5	NONE	0	2.5	METHOD "B" PLACEMENT

NOTES:

*: APPLY TO PROTRUDING PIPES DS19 AND DS20 ONLY

**: DISCHARGE FROM 6" BRIDGE DECK DRAIN

***: DISCHARGE FROM AC OVERSIDE DRAIN

DRAINAGE DETAILS

NO SCALE

DD- 6

STATE OF CALIFORNIA - DEPARTMENT OF TRANSPORTATION
Caltrans PROJECT DEVELOPMENT

FUNCTIONAL SUPERVISOR: CARL SAVAGE
CALCULATED-DESIGNED BY: JENNY YAN
CHECKED BY: JEFF BALUYUT
REVISED BY
DATE REVISED

LAST REVISION 01-23-12
DATE PLOTTED => 23-APR-2012
TIME PLOTTED => 07:27

Dist	COUNTY	ROUTE	POST MILES TOTAL PROJECT	SHEET No.	TOTAL SHEETS
11	SD	15,76	R46.1/R47.3, R16.7/R17.7	131	477

REGISTERED CIVIL ENGINEER 01-17-12 DATE

4-16-12
PLANS APPROVAL DATE

REGISTERED PROFESSIONAL ENGINEER JENNY YAN No. C62092 Exp. 09-30-13 CIVIL STATE OF CALIFORNIA

THE STATE OF CALIFORNIA OR ITS OFFICERS OR AGENTS SHALL NOT BE RESPONSIBLE FOR THE ACCURACY OR COMPLETENESS OF SCANNED COPIES OF THIS PLAN SHEET.

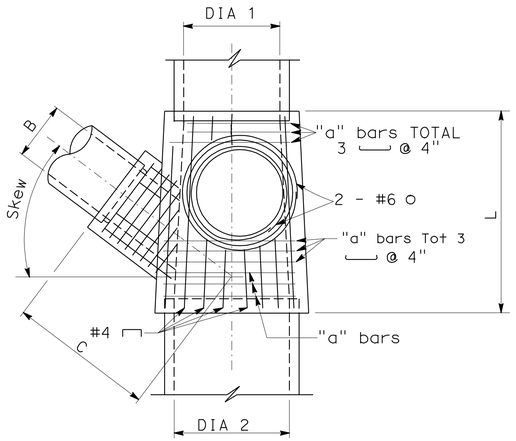

PLAN

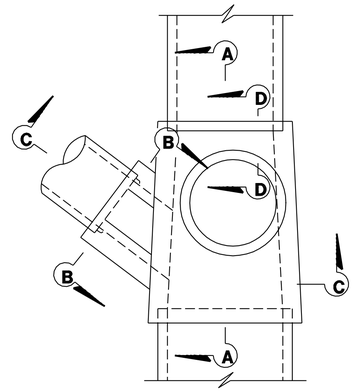

PLAN

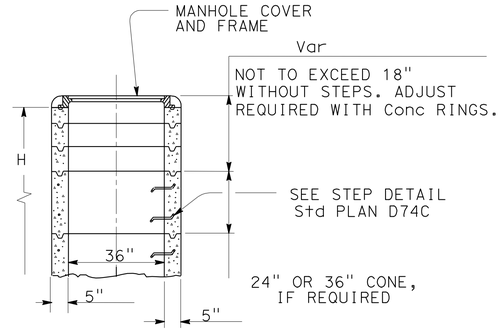

UPPER STRUCTURE
TYPE MH

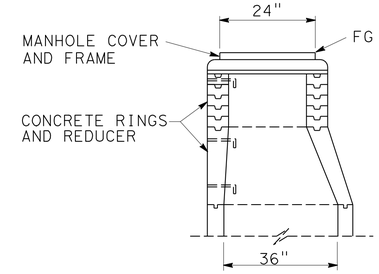

UPPER STRUCTURE
TYPE MH

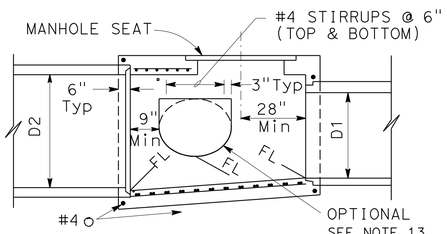

SECTION A-A

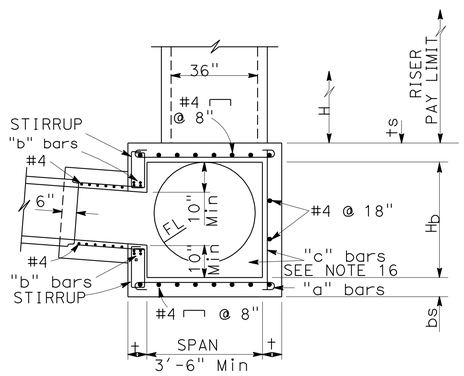

SECTION C-C

B	"b" bars TOP & BOTTOM
2.5'	#5 TOTAL 4
3.0'	#5 TOTAL 4
3.5'	#5 TOTAL 4
4.0'	#5 TOTAL 4
4.5'	#5 TOTAL 4
5.0'	#6 TOTAL 4

H_b	"c" bars	SIDEWALL THICKNESS(t)
5.5' OR LESS	#4 @ 4"	8"
6.5'	#5 @ 4"	8.5"
7.0'	#5 @ 4"	9"
8.0'	#6 @ 4"	9.5"

SPAN	"a" bars	TOP AND BOTTOM SLAB THICKNESS (ts, bs)*
3.5'	#4 @ 4"	8"
4.0'	#4 @ 4"	8"
4.5'	#5 @ 5"	8"
5.0'	#5 @ 4.5"	8"
5.5'	#6 @ 5.5"	8"
6.0'	#6 @ 5.5"	9"
6.5'	#6 @ 4.5"	9"
7.0'	#6 @ 4"	9.5"

* WHEN FILL OVER JUNCTION STRUCTURE IS 2'-0" OR LESS, ts SHALL BE INCREASED BY 2"

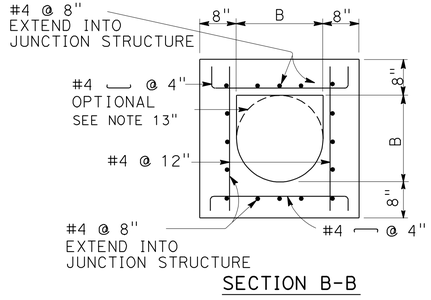

SECTION B-B

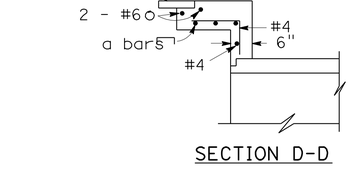

SECTION D-D

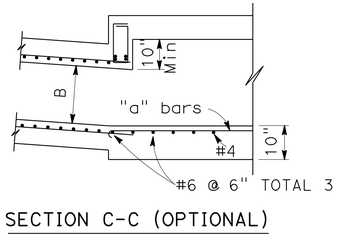

SECTION C-C (OPTIONAL)

Max FILL HEIGHT = 8'-0"
FOR INFORCEMENT AND DETAILS NOT SHOWN SEE SECTION C-C

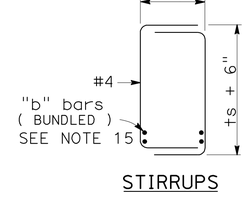

STIRRUPS

DESIGN NOTES:

1. DESIGNED IN CONFORMANCE WITH BRIDGE DESIGN SPECIFICATION (1983 AASHTO SPECIFICATIONS WITH REVISIONS BY CALTRANS).
2. LIVE LOAD: HS20-44 TRUCK. EARTH PRESSURES: 140 PCF VERTICAL, 100 PCF HORIZONTAL.
3. UNIT STRESSES: f'c = 3600 PSI; fy = 60,000 PSI
4. Max FILL HEIGHT = 20 ft.

GENERAL NOTES:

1. PLANS SHALL DESIGNATE: INLET AND OUTLET PIPE DIAMETERS UPPER STRUCTURE OR MANHOLE (IF REQUIRED), LATERAL PIPE DIAMETER AND SKEW (IF REQUIRED), C, H, AND H_b . MANHOLE OR LATERAL MAY BE OMITTED.
2. UPPER STRUCTURE, WHEN REQUIRED, MAY BE ANY DESIGNATED INLET TYPE AS SHOWN ON STANDARD PLAN D72, D73, D74, D75 OR THIS SHEET.
3. RISER SHALL BE POSITIONED TO EITHER SIDE OF THE STRUCTURE AS SHOWN.
4. EACH RISER SHALL HAVE A LADDER. FOR DETAILS SEE STANDARD PLANS
5. THICKNESS OF DECK SHALL VARY AS NECESSARY TO PROVIDE A LEVEL MANHOLE SEAT.
6. REINFORCING STEEL SHALL BE PLACED 2" CLEAR. EXCEPT AS SHOWN.
7. MAXIMUM SKEW OF LATERAL PIPE B IS 45° .
8. LATERAL MAY BE PLACED IN EITHER SIDE WALL.
9. WHERE DIA 1 AND/OR DIA 2 ARE LESS THAN 3.5', CLEAR DISTANCE BETWEEN SIDES WALLS SHALL BE 3.5'. END WALLS SHALL BE 6" THICK WITH #4 @ 12" PLACED BOTH WAYS
10. SIDE WALLS SHALL BE FLUSH WITH THE INSIDE OF THE INLET AND OUTLET PIPES WHEN PIPE DIAMETER ARE 3.5' OR MORE
11. L IS 5'-8" IF A RISER IS REQUIRED. IF NO RISER THEN L IS 5'-0".
12. WHEN C IS NOT SPECIFIED, BRING THE LATERAL DIRECTLY INTO THE WALL OF THE STRUCTURE
13. WHEN C IS SPECIFIED, CONTRACTOR MAY, AT HIS OPTION, BRING THE LATERAL DIRECTLY INTO THE WALL FOR USE AS AN INSIDE FORM. A COLLAR CONFORMING WITH THE WALL THICKNESS AND REINFORCEMENT AS SHOWN IN SECTION B-B SHALL BE POURED AROUND THE PIPE.
14. WHEN LATERAL IS EXTENDED DIRECTLY INTO THE WALL. IT SHALL BE MITERED AS NECESSARY TO BE FLUSH WITH WALL
15. "b" BARS SHALL EXTEND A MINIMUM OF 8" ON EITHER SIDE OF THE OPENING
16. ADJACENT TO EACH SIDE OF THE OPENING, PLACE ADDITIONAL REINFORCEMENT. EQUIVALENT TO HALF THE INTERRUPTED MAIN REINFORCEMENT.

JUNCTION STRUCTURE

1 b 5 h

DRAINAGE DETAILS

NO SCALE

DD-7

STATE OF CALIFORNIA - DEPARTMENT OF TRANSPORTATION
Caltrans® PROJECT DEVELOPMENT

FUNCTIONAL SUPERVISOR: CARL SAVAGE
CALCULATED-DESIGNED BY: JENNY YAN
CHECKED BY: JEFF BALUYUT
REVISED BY
DATE REVISED

LAST REVISION 01-23-12
DATE PLOTTED => 17-APR-2012
TIME PLOTTED => 11:48

Dist	COUNTY	ROUTE	POST MILES TOTAL PROJECT	SHEET No.	TOTAL SHEETS
11	SD	15,76	R46.1/R47.3, R16.7/R17.7	132	477

REGISTERED CIVIL ENGINEER 01-17-12 DATE

4-16-12
PLANS APPROVAL DATE

REGISTERED PROFESSIONAL ENGINEER JENNY YAN No. C62092 Exp. 09-30-13 CIVIL STATE OF CALIFORNIA

THE STATE OF CALIFORNIA OR ITS OFFICERS OR AGENTS SHALL NOT BE RESPONSIBLE FOR THE ACCURACY OR COMPLETENESS OF SCANNED COPIES OF THIS PLAN SHEET.

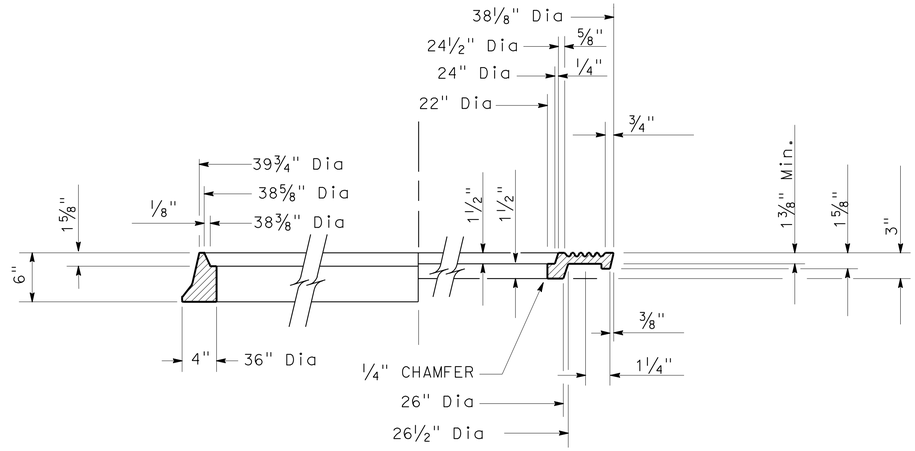

HALF SECTION FRAME AND COVER

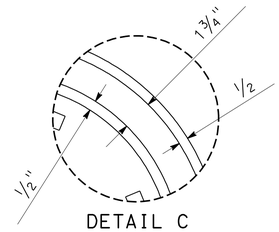

DETAIL C

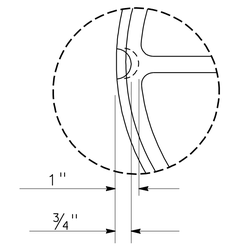

DETAIL F

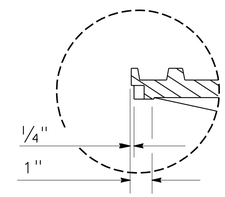

DETAIL D

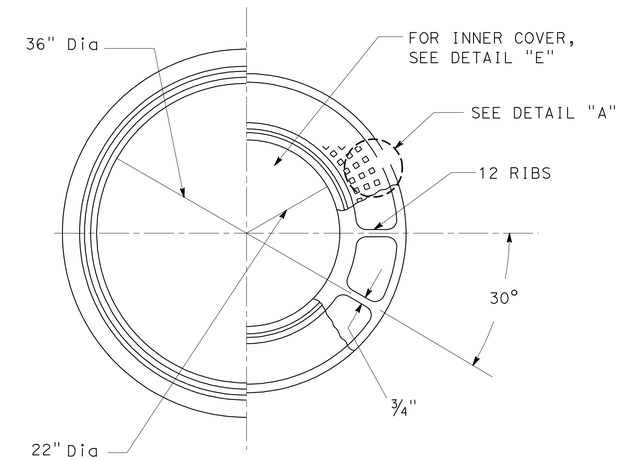

HALF PLAN FRAME AND COVER

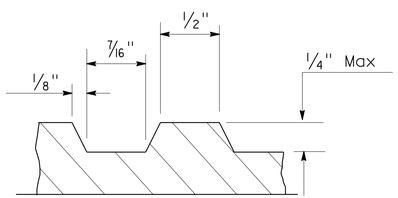

DETAIL A

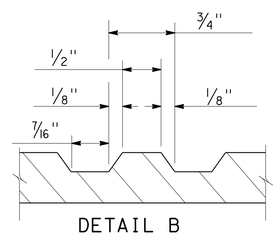

DETAIL B

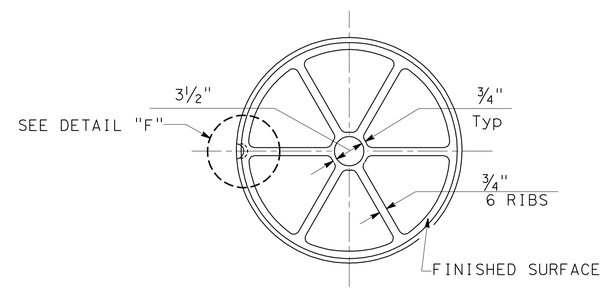

DETAIL E

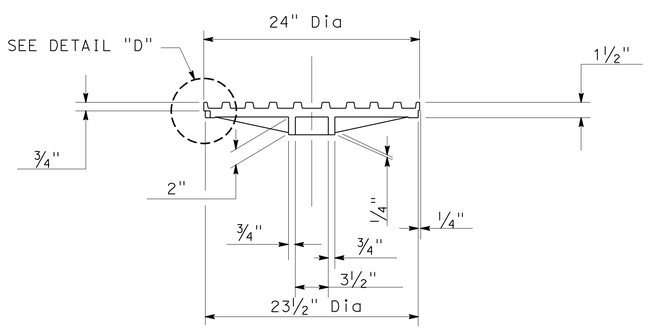

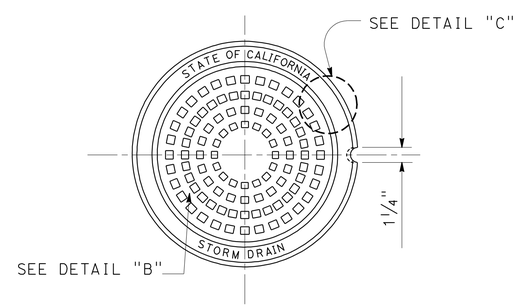

(TYPE A SHOWN)

36" MANHOLE FRAME AND TWO CONCENTRIC COVERS
HEAVY DUTY

5 h

NOTES:

1. FRAME AND COVER SHALL BE CAST IRON. CAST IRON SHALL . CONFORM TO ASTM48, CLASS 35B.
2. WEIGHT:

FRAME	314 - 363 LBS
OUTER COVER	285 - 330 LBS
INER COVER	147 - 171 LBS

3. MACHINE ALL MATCHING SURFACES AND SEATS OF FRAME AND COVER TO PREVENT ROCKING.
4. IMPORTED FRAMES AND COVERS SHALL HAVE THE COUNTRY OF ORIGIN MARKED IN COMPLIANCE WITH FEDERAL REGULATIONS.

DRAINAGE DETAILS

NO SCALE

DD-8

STATE OF CALIFORNIA - DEPARTMENT OF TRANSPORTATION
Caltrans PROJECT DEVELOPMENT

FUNCTIONAL SUPERVISOR: CARL SAVAGE
CALCULATED-DESIGNED BY: JENNY YAN
CHECKED BY: JEFF BALUYUT
REVISED BY
DATE REVISED

LAST REVISION 01-23-12
DATE PLOTTED => 17-APR-2012
TIME PLOTTED => 11:49

Dist	COUNTY	ROUTE	POST MILES TOTAL PROJECT	SHEET No.	TOTAL SHEETS
11	SD	15,76	R46.1/R47.3, R16.7/R17.7	133	477

REGISTERED CIVIL ENGINEER 01-17-12 DATE

4-16-12
PLANS APPROVAL DATE

REGISTERED PROFESSIONAL ENGINEER
JENNY YAN
No. C62092
Exp. 09-30-13
CIVIL
STATE OF CALIFORNIA

THE STATE OF CALIFORNIA OR ITS OFFICERS OR AGENTS SHALL NOT BE RESPONSIBLE FOR THE ACCURACY OR COMPLETENESS OF SCANNED COPIES OF THIS PLAN SHEET.

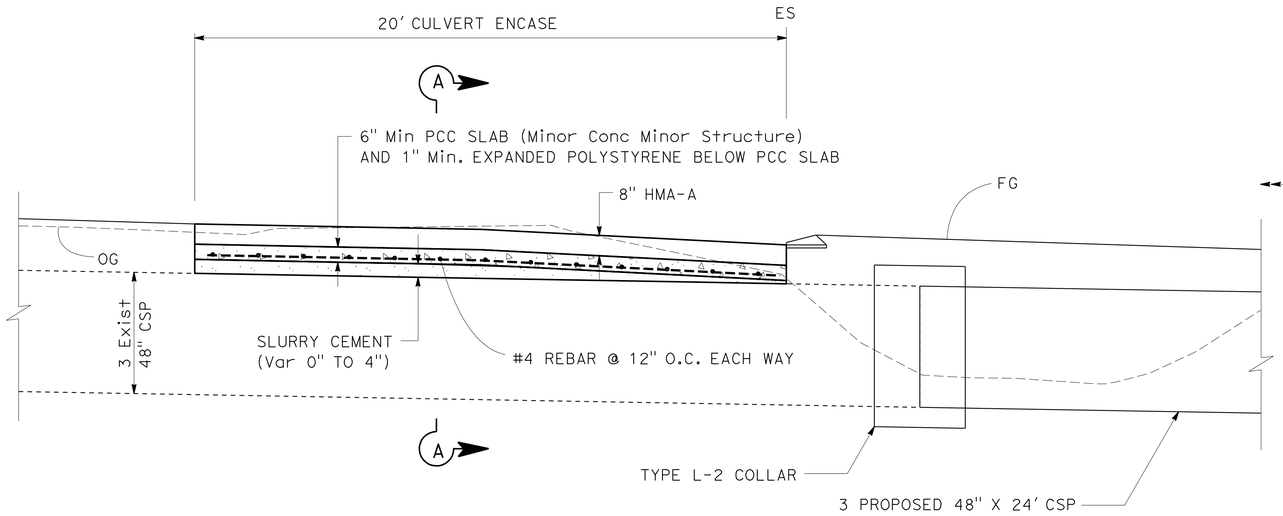

PROFILE

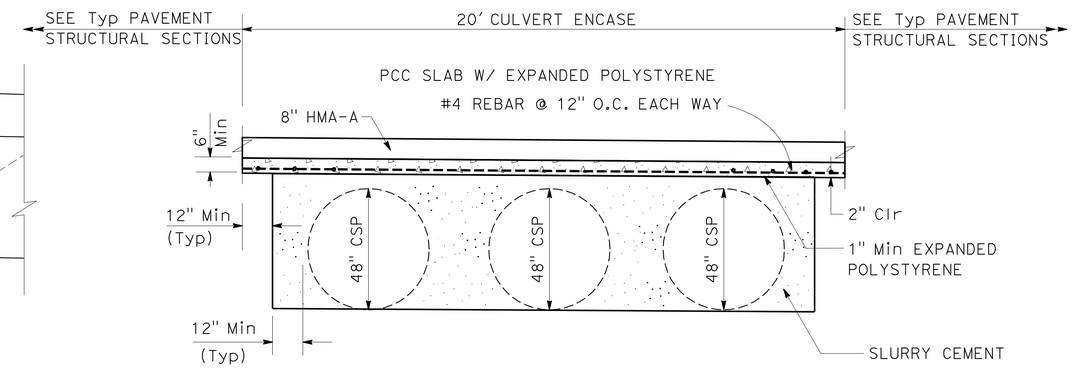

SECTION A-A

CULVERT ENCASE CASE 1

20 d

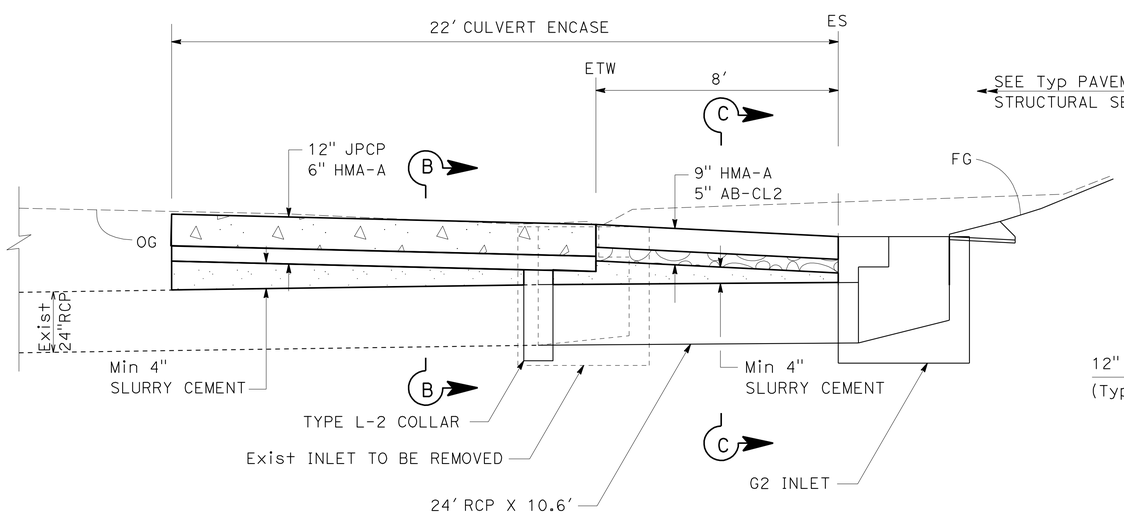

PROFILE

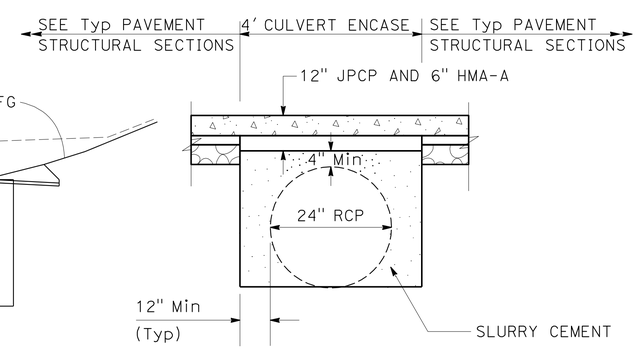

SECTION B-B

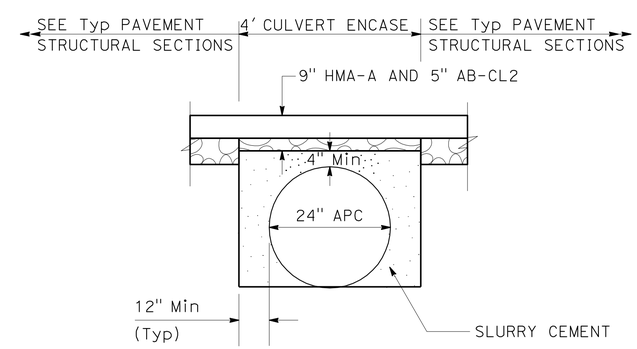

SECTION C-C

CULVERT ENCASE CASE 2

17 c

DRAINAGE DETAILS

NO SCALE

DD- 9

STATE OF CALIFORNIA - DEPARTMENT OF TRANSPORTATION
Caltrans® PROJECT DEVELOPMENT

FUNCTIONAL SUPERVISOR: CARL SAVAGE
CALCULATED-DESIGNED BY: JENNY YAN
CHECKED BY: JEFF BALUYUT
REVISED BY
DATE REVISED

LAST REVISION 01-23-12
DATE PLOTTED => 17-APR-2012
TIME PLOTTED => 11:49

Dist	COUNTY	ROUTE	POST MILES TOTAL PROJECT	SHEET No.	TOTAL SHEETS
11	SD	15,76	R46.1/R47.3, R16.7/R17.7	134	477

REGISTERED CIVIL ENGINEER 01-17-12 DATE

4-16-12
PLANS APPROVAL DATE

REGISTERED PROFESSIONAL ENGINEER JENNY YAN No. C62092 Exp. 09-30-13 CIVIL STATE OF CALIFORNIA

THE STATE OF CALIFORNIA OR ITS OFFICERS OR AGENTS SHALL NOT BE RESPONSIBLE FOR THE ACCURACY OR COMPLETENESS OF SCANNED COPIES OF THIS PLAN SHEET.

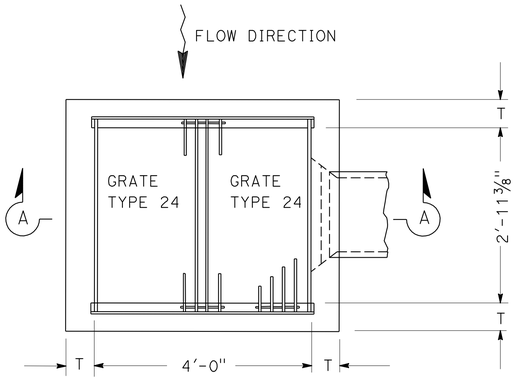

PLAN

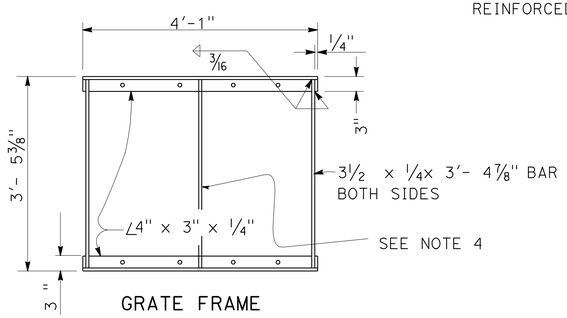

GRATE FRAME

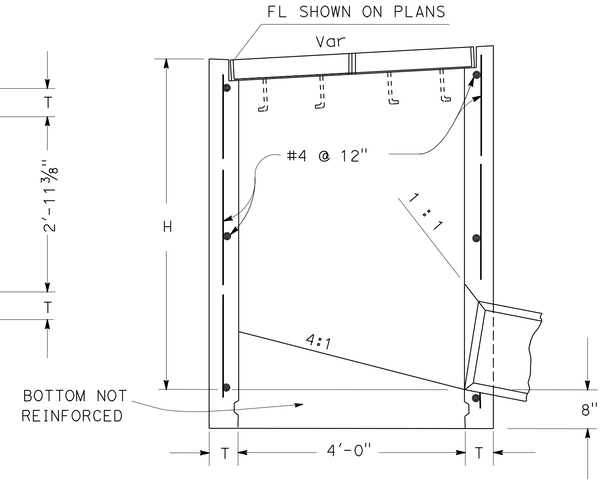

SECTION A-A

TYPE GD1 INLET

4 a

TABLE A

CONCRETE CUBIC YARD		
TYPE	H=3'-0" TO 8'-0" (T= 6")	
	H=3'-0"	ADDITIONAL PCC PER FT (CY3)
GD1	1.59	0.294
	H=8'-1" TO 20'-0" (T=8")	
	H=8'-1"	ADDITIONAL PCC PER FT (CY3)
	3.90	0.394

TABLE BASED ON 8" FLOOR SLAB. NO DEDUCTIONS OR ADJUSTMENTS ARE TO BE MADE TO THESE QUANTITIES BECAUSE OF PIPE OPENINGS, DIFFERENT FLOOR ALTERNATIVES OR DIFFERENT CURB TYPES.

MISCELLANEOUS IRON & STEEL

INLET TYPE	GRATE TYPE	No. OF GRATES	WEIGHT
GD1, GD2	24 - 12	2	616 lbs
	24 - 10C	2	373 lbs
	24 - 10S	2	438 lbs
	24 - 12X	2	455 lbs
	24 - 13	2	356 lbs

FOR DETAILS NOT SHOWN, SEE STANDARD PLAN D77A 1/2" FRAME ANCHOR MAY BE BENT AS NECESSARY TO CLEAR Reinf

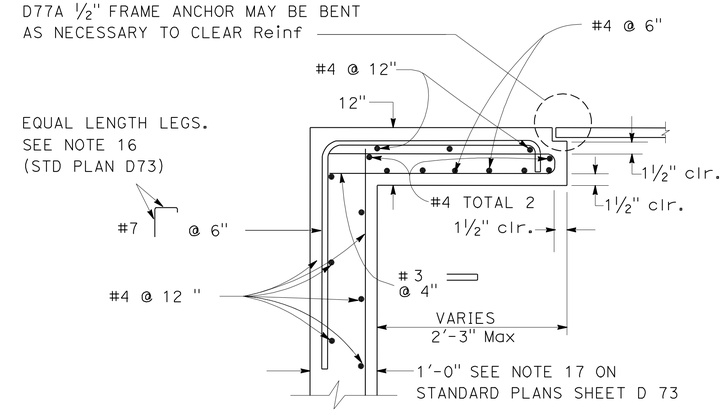

SECTION C-C

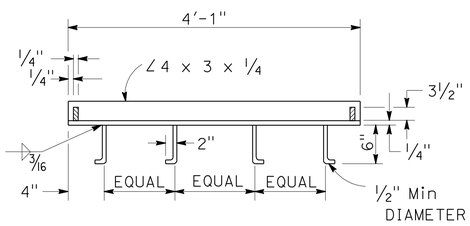

ANCHOR PLACEMENT

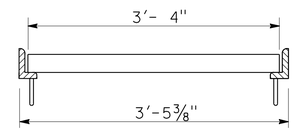

LONGITUDINAL SECTION

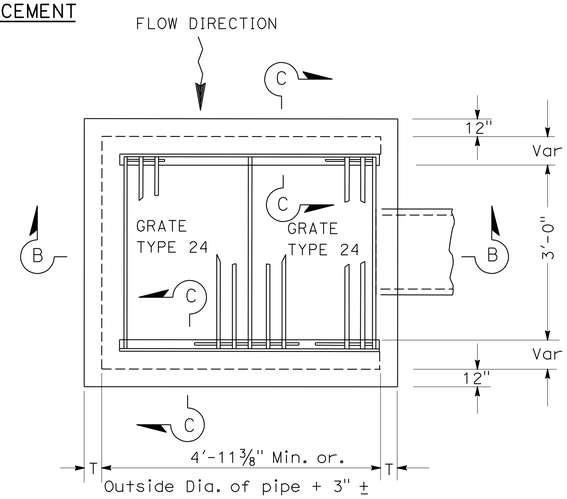

PLAN

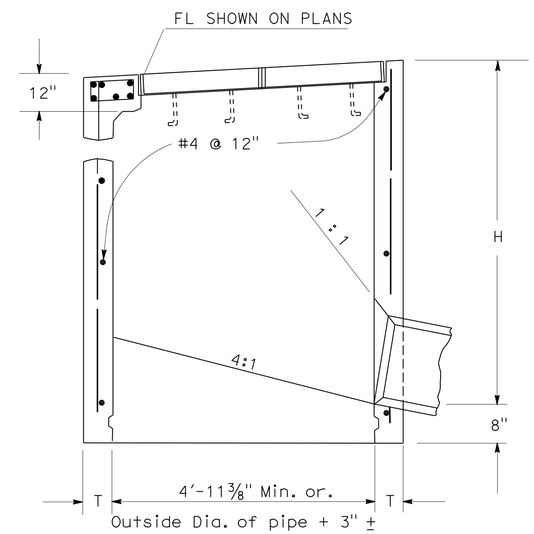

SECTION B-B

TYPE GD2 INLET

18 a

NOTES:

1. SEE STANDARD PLAN D77A AND D77B FOR ADDITIONAL FRAME AND GRATE DETAILS.
2. SEE NOTES FOR STANDARD PLAN D73 AND D74B.
3. FOR "T" WALL THICKNESS, SEE TABLE A, B.
4. WHEN TYPE 24-10S, 24-12X OR 24-13 GRATES ARE USED WITH. GD1 OR GD2 INLETS, A 1/4" X 3 1/2" X 3'-4 7/8"STEEL BAR SHALL BE WELDED ACSROSS THE CENTER OF INLET FRAME TO SEPARATE THE INDIVIDUAL GRATES.

TABLE B

CONCRETE QUANTITIES				
TYPE	H=3'-0" TO 8'-0" (T= 6")		H=8'-1"TO 20'-0" (T= 8")	
	H=3'-0" (CY)	ADDITIONAL PCC PER FOOT (CY)	H=8'-1" (CY)	ADDITIONAL PCC PER FOOT (CY)
GD2	2.84	0.552	6.15	0.615

TABLE BASED ON 8" FLOOR SLAB. NO DEDUCTIONS OR ADJUSTMENTS ARE TO BE MADE TO THESE QUANTITIES BECAUSE OF PIPE OPENINGS, DIFFERENT FLOOR ALTERNATIVES OR DIFFERENT CURB TYPES.

QUANTITIES FOR TYPE GD2 INLETS BASED ON Min INTERIOR DIMENSIONS SHOWN.

DRAINAGE DETAILS

NO SCALE

DD-10

STATE OF CALIFORNIA - DEPARTMENT OF TRANSPORTATION
Caltrans PROJECT DEVELOPMENT

FUNCTIONAL SUPERVISOR: CARL SAVAGE
CALCULATED-DESIGNED BY: JENNY YAN
CHECKED BY: JEFF BALUYUT
REVISED BY
DATE REVISED

LAST REVISION 01-23-12
DATE PLOTTED => 17-APR-2012
TIME PLOTTED => 11:49

Dist	COUNTY	ROUTE	POST MILES TOTAL PROJECT	SHEET No.	TOTAL SHEETS
11	SD	15,76	R46.1/R47.3, R16.7/R17.7	135	477

REGISTERED CIVIL ENGINEER 01-17-12 DATE

4-16-12
PLANS APPROVAL DATE

REGISTERED PROFESSIONAL ENGINEER
JENNY YAN
No. C62092
Exp. 09-30-13
CIVIL
STATE OF CALIFORNIA

THE STATE OF CALIFORNIA OR ITS OFFICERS OR AGENTS SHALL NOT BE RESPONSIBLE FOR THE ACCURACY OR COMPLETENESS OF SCANNED COPIES OF THIS PLAN SHEET.

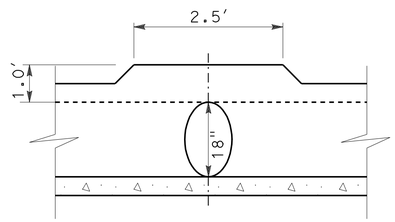

SECTION A-A

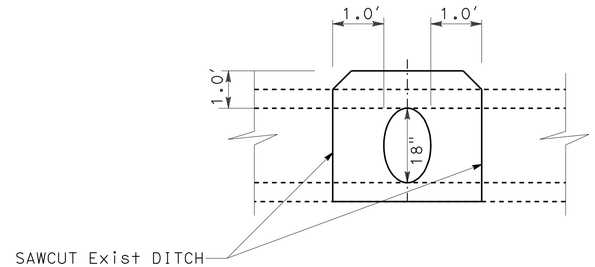

DETAIL B

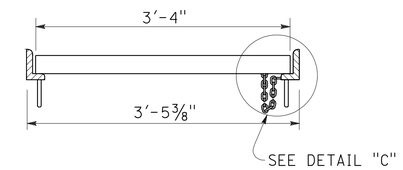

LONGITUDINAL SECTION
(THRU FRAME AND GRATE)

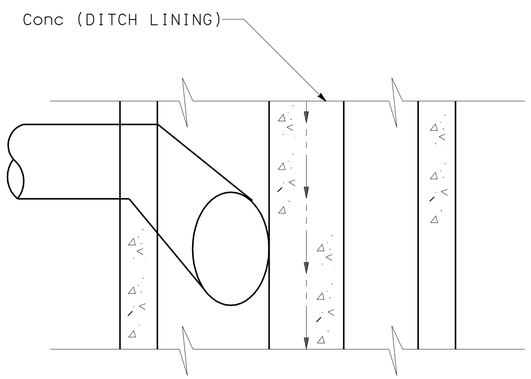

PLAN

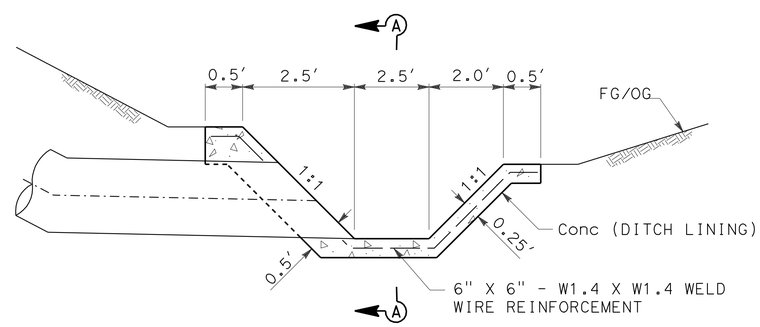

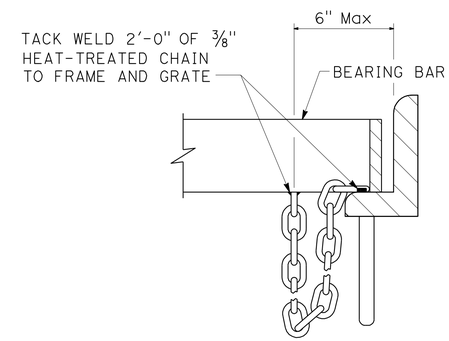

DETAIL "C"

NOTE: CHAIN WEIGHTS 3 LB

PIPE CONNECTION TO Conc DITCH

7 a* 9 a 22 a*

*: PIPE CONNECTION TO Exist DITCH SIMILAR, SEE DETAIL B

CHAIN DETAIL FOR FRAME TO GRATE CONNECTION

DRAINAGE DETAILS

NO SCALE

DD-11

STATE OF CALIFORNIA - DEPARTMENT OF TRANSPORTATION
Caltrans PROJECT DEVELOPMENT

FUNCTIONAL SUPERVISOR: CARL SAVAGE
CALCULATED-DESIGNED BY: JENNY YAN
CHECKED BY: JEFF BALUYUT
REVISED BY
DATE REVISED

LAST REVISION 01-23-12
DATE PLOTTED => 17-APR-2012
TIME PLOTTED => 11:49

Dist	COUNTY	ROUTE	POST MILES TOTAL PROJECT	SHEET No.	TOTAL SHEETS
11	SD	15,76	R46.1/R47.3, R16.7/R17.7	136	477

REGISTERED CIVIL ENGINEER 01-17-12 DATE

4-16-12
PLANS APPROVAL DATE

REGISTERED PROFESSIONAL ENGINEER JENNY YAN No. C62092 Exp. 09-30-13 CIVIL STATE OF CALIFORNIA

THE STATE OF CALIFORNIA OR ITS OFFICERS OR AGENTS SHALL NOT BE RESPONSIBLE FOR THE ACCURACY OR COMPLETENESS OF SCANNED COPIES OF THIS PLAN SHEET.

APC ALLOWABLE PIPE MATERIAL (18" - 36" Dia)

TYPE S CORRUGATED POLYETHYLENE PIPE OR
STEEL SPIRAL RIB PIPES (SSRP) WITH POLYMETRIC SHEET COATING AND POLYMERIZED ASPHALT INVERT OR
COMPOSITE STEEL SPIRAL RIB PIPES (CSSRP) WITH POLYMETRIC SHEET COATING AND POLYMERIZED ASPHALT INVERT
OR REINFORCED CONCRETE PIPE.

DRAINAGE QUANTITIES

DRAINAGE SHEET No.	DRAINAGE SYSTEM No. ⬡	DRAINAGE UNIT ○	ABANDON CULVERT	SAND BACKFILL	REMOVE CULVERT	RELOCATE ROCK SLOPE PROTECTION	REMOVE INLET	REMOVE HEADWALL	REMOVE MUD, SAND AND DEBRIS (IN CSP CULVERT)	CAP INLET	CAP RISER	APC (ALTERNATIVE PIPE CULVERT) 18"	24"	30"	36"	6" PLASTIC PIPE	18" BITUMINOUS C+d CORRUGATED STEEL PIPE (0.109" THICK)	48" BITUMINOUS C+d CORRUGATED STEEL PIPE (0.109" THICK)	24" REINFORCED CONCRETE PIPE	36" REINFORCED CONCRETE PIPE	36" REINFORCED CONCRETE PIPE RISER	CONCRETE COLLAR (N)	MANHOLE FRAME AND COVER (N)	PIPE JOINT TYPE (N)	MAXIMUM HEIGHT COVER (N)	STRUCTURE HEIGHT (N)	TYPE OL INLET (N)	TYPE G-2 INLET (N)	TYPE GD1/GD2 INLET (N)	DRAINAGE INLET MARKER	DRAINAGE SHEET No.	DRAINAGE SYSTEM No. ⬡	DRAINAGE UNIT ○
			EA	CY	LF	CY	EA	EA	LF	EA	EA	LF	LF	LF	LF	LF	LF	LF	LF	LF	LF	EA	EA	EA	LF	LF	EA	EA	EA	EA				
G-2	1	a																		11.9		1		S	19.8						G-2	1	a
G-2	1	b																								5.8					G-2	1	b
G-2	1	c																			10.8										G-2	1	c
G-2	1	d																								6.9		1			G-2	1	d
G-2	1	e											69.5											S	4.2						G-2	1	e
G-2	1	f																								5.1		1			G-2	1	f
G-3	2	a																													G-3	2	a
G-3	2	b																								3.7					G-3	2	b
G-3	2	c											65.1											S	8.5						G-3	2	c
G-3	2	d																								9.9	1			1	G-3	2	d
G-3	2	e																	138.5					S	7.9						G-3	2	e
G-3	2	f																								8.5	1			1	G-3	2	f
G-3	2	g																	221.6					S	5.8						G-3	2	g
G-3	2	h																								6.7	1			1	G-3	2	h
G-3	2	i											246.5											S	6.9						G-3	2	i
G-3	2	j																								9.7	1			1	G-3	2	j
G-3	2	k														20.0															G-3	2	k
G-3	2A	a									1																				G-3	2A	a
G-3	2A	b									1																				G-3	2A	b
G-3	2A	c									1																				G-3	2A	c
G-3	2A	d					1																								G-3	2A	d
G-3	2A	e			32.0																										G-3	2A	e
G-3	3	a									1																				G-3	3	a
G-3	3	b																	10.2			1		S	12.0						G-3	3	b
G-3	3	c																								13.6		1			G-3	3	c
G-3	3A	a																													G-3	3A	a
G-3	4	a																								4.4			1		G-3	4	a
G-3	4	b											128.3											S	2.4						G-3	4	b
G-3	4	c																								4.0		1			G-3	4	c
G-3	5	a													46.9							1		S	8.8						G-3	5	a
G-3	5	b																								7.5		1			G-3	5	b
G-3	5	c													364.8									S	12.3						G-3	5	c
SUBTOTAL			0	0	32.0	0	1	0	0	0	4	0	509.4	0	411.7	20.0	0	0	370.3	11.9	10.8	-	-	-	-	-	-	-	-	4				

1. FOR ADDITIONAL QUANTITIES SEE STAGE CONSTRUCTION AND TRAFFIC HANDLING QUANTITIES.
2. GLD - GRATED LINE DRAIN. ALL GLD TO BE WITH 0.6% PRESLOPED BOTTOM AND 12" Min DEPTH.
3. S - STANDARD JOINT TYPE.
4. (N) - NOT A SEPARATE PAY ITEM, FOR INFORMATION ONLY.

DRAINAGE QUANTITIES
DQ-1

REVISED BY | DATE REVISED
JENNY YAN | JEFF BALUYUT
CALCULATED-DESIGNED BY | CHECKED BY
CONSULTANT FUNCTIONAL SUPERVISOR: CARL SAVAGE

STATE OF CALIFORNIA - DEPARTMENT OF TRANSPORTATION
Caltrans® PROJECT DEVELOPMENT

LAST REVISION 01-23-12 | DATE PLOTTED => 17-APR-2012 | TIME PLOTTED =>

Dist	COUNTY	ROUTE	POST MILES TOTAL PROJECT	SHEET No.	TOTAL SHEETS
11	SD	15,76	R46.1/R47.3, R16.7/R17.7	137	477

REGISTERED CIVIL ENGINEER 01-17-12 DATE

4-16-12
PLANS APPROVAL DATE

REGISTERED PROFESSIONAL ENGINEER JENNY YAN No. C62092 Exp 09-30-13 CIVIL STATE OF CALIFORNIA

THE STATE OF CALIFORNIA OR ITS OFFICERS OR AGENTS SHALL NOT BE RESPONSIBLE FOR THE ACCURACY OR COMPLETENESS OF SCANNED COPIES OF THIS PLAN SHEET.

DRAINAGE QUANTITIES

DRAINAGE SHEET No.	DRAINAGE SYSTEM No. ⬡	DRAINAGE UNIT ○	GRATED LINE DRAIN LF	GRATE TYPE 24-12 (N) EA	MISCELLANEOUS IRON AND STEEL LB	MINOR CONCRETE (MINOR STRUCTURE) CY	STRUCTURE BACKFILL (SLURRY CEMENT) CY	CONCRETE (CONCRETE APRON) CY	STRUCTURAL CONCRETE, HEADWALL CY	STRUCTURAL CONCRETE, JUNCTION STRUCTURE CY	ROCK SLOPE PROTECTION (LIGHT, METHOD B) CY	ROCK SLOPE PROTECTION (4 TON, METHOD A) CY	ROCK SLOPE PROTECTION (1/2 TON, METHOD A) CY	ROCK SLOPE PROTECTION (NO. 1, METHOD B) CY	ROCK SLOPE PROTECTION FABRIC (CLASS 8) SQFT	ROCK SLOPE PROTECTION FABRIC (CLASS 10) SQFT	DESCRIPTION	STATION	DRAINAGE SHEET No.	DRAINAGE SYSTEM No. ⬡	DRAINAGE UNIT ○
G-2	1	a															36" RCP W/ TYPE L-2 COLLAR		G-2	1	a
G-2	1	b								2.03							JUNCTION STRUCTURE	33.79' Lt 2477+28.59 "B-3A"	G-2	1	b
G-2	1	c			20												36" CSP RISER W/ RISER SAFETY CAGE		G-2	1	c
G-2	1	d		1	329	2.30											TYPE G-2 INLET W/24-12 GRATE & CHAIN	33.79' Lt 2477+28.59 "B-3A"	G-2	1	d
G-2	1	e															24" APC		G-2	1	e
G-2	1	f		1	329	1.85											TYPE G-2 INLET W/24-12 GRATE & CHAIN	36.23' Lt 2478+01.98 "B-3A"	G-2	1	f
G-3	2	a									6.67				187.0		RSP		G-3	2	a
G-3	2	b							1.20								STRAIGHT HEADWALL	122.5' Rt 338+63.60 "76-RA"	G-3	2	b
G-3	2	c															24" APC		G-3	2	c
G-3	2	d			170	5.47											TYPE OL INLET W/ COVER PLATE	55.86' Lt 338+50.00 "76-RA"	G-3	2	d
G-3	2	e															24" RCP		G-3	2	e
G-3	2	f			170	4.93											TYPE OL INLET W/ COVER PLATE	59.00' Lt 339+25.00 "76-RA"	G-3	2	f
G-3	2	g															24" RCP		G-3	2	g
G-3	2	h			170	3.42											TYPE OL INLET W/ COVER PLATE	55.50' Lt 341+50.00 "76-RA"	G-3	2	h
G-3	2	i															24" APC		G-3	2	i
G-3	2	j			170	5.40											TYPE OL INLET W/ COVER PLATE	53.00' Rt 341+00.00 "76-RA"	G-3	2	j
G-3	2	k															6" PLASTIC PIPE		G-3	2	k
G-3	2A	a															CAP RISER	6.22' Rt 338+17.98 "76-RA"	G-3	2A	a
G-3	2A	b															CAP RISER	51.84' Lt 337+82.90 "76-RA"	G-3	2A	b
G-3	2A	c															CAP RISER		G-3	2A	c
G-3	2A	d															REMOVE G-2 INLET	61.34' Lt 2483+71.52 "B-4A"	G-3	2A	d
G-3	2A	e															REMOVE 18" CSP		G-3	2A	e
G-3	3	a															CAP RISER	3.69' Lt 2488+06.62 "B-6"	G-3	3	a
G-3	3	b															24" RCP W/ TYPE J-1 COLLAR		G-3	3	b
G-3	3	c	10.0	1	329	5.47											TYPE G-2 INLET W/24-12 GRATE & CHAIN AND GLD	20.00' Lt 2488+06.62 "B-6"	G-3	3	c
G-3	3A	a												0.60	43.6		RSP		G-3	3A	a
G-3	4	a		2	622	2.00		1.50									GD1 INLET W/ DOUBLE 24-12 GRATE & CHAIN, APRON	45.22' Lt 2490+35.10 "B-6"	G-3	4	a
G-3	4	b															24" APC		G-3	4	b
G-3	4	c		1	329	1.57		1.50									TYPE G-2 INLET W/24-12 GRATE & CHAIN, APRON	44.00' Lt 2492+00.00 "B-6"	G-3	4	c
G-3	5	a															36" APC		G-3	5	a
G-3	5	b		1	329	2.46		1.25									TYPE G-2 INLET W/24-12 GRATE & CHAIN	181.36' Lt 2493+56.14 "RTLN"	G-3	5	b
G-3	5	c															36" APC		G-3	5	c
SUBTOTAL			10.0	-	2967	34.87	0	4.25	1.20	2.03	6.67	0	0	0.60	230.6	0					

1. FOR ADDITIONAL QUANTITIES SEE STAGE CONSTRUCTION AND TRAFFIC HANDLING QUANTITIES.
2. GLD - GRATED LINE DRAIN. ALL GLD TO BE WITH 0.6% PRESLOPED BOTTOM AND 12" Min DEPTH.
3. S - STANDARD JOINT TYPE.
4. (N) - NOT A SEPARATE PAY ITEM, FOR INFORMATION ONLY.

DRAINAGE QUANTITIES
DQ-2

REVISED BY | DATE REVISED
JENNY YAN | JEFF BALUYUT
CALCULATED-DESIGNED BY | CHECKED BY
CONSULTANT FUNCTIONAL SUPERVISOR
CARL SAVAGE

STATE OF CALIFORNIA - DEPARTMENT OF TRANSPORTATION
Caltrans® PROJECT DEVELOPMENT

LAST REVISION 01-23-12 | DATE PLOTTED => 17-APR-2012 | TIME PLOTTED => 11:49

Dist	COUNTY	ROUTE	POST MILES TOTAL PROJECT	SHEET No.	TOTAL SHEETS
11	SD	15,76	R46.1/R47.3, R16.7/R17.7	138	477

REGISTERED CIVIL ENGINEER 01-17-12 DATE

4-16-12
PLANS APPROVAL DATE

REGISTERED PROFESSIONAL ENGINEER JENNY YAN No. C62092 Exp. 09-30-13 CIVIL STATE OF CALIFORNIA

THE STATE OF CALIFORNIA OR ITS OFFICERS OR AGENTS SHALL NOT BE RESPONSIBLE FOR THE ACCURACY OR COMPLETENESS OF SCANNED COPIES OF THIS PLAN SHEET.

DRAINAGE QUANTITIES

DRAINAGE SHEET No.	DRAINAGE SYSTEM No. ⬡	DRAINAGE UNIT ○	ABANDON CULVERT EA	SAND BACKFILL CY	REMOVE CULVERT LF	RELOCATE ROCK SLOPE PROTECTION CY	REMOVE INLET EA	REMOVE HEADWALL EA	REMOVE MUD, SAND AND DEBRIS (IN CSP CULVERT) LF	CAP INLET EA	CAP RISER EA	APC (ALTERNATIVE PIPE CULVERT) 18" LF	24" LF	30" LF	36" LF	6" PLASTIC PIPE LF	18" BITUMINOUS C+d CORRUGATED STEEL PIPE (0.109" THICK) LF	48" BITUMINOUS C+d CORRUGATED STEEL PIPE (0.109" THICK) LF	24" REINFORCED CONCRETE PIPE LF	36" REINFORCED CONCRETE PIPE LF	36" REINFORCED CONCRETE PIPE RISER LF	CONCRETE COLLAR (N) EA	MANHOLE FRAME AND COVER (N) EA	PIPE JOINT TYPE (N) EA	MAXIMUM HEIGHT COVER (N) LF	STRUCTURE HEIGHT (N) LF	TYPE OL INLET (N) EA	TYPE G-2 INLET (N) EA	TYPE GD1/GD2 INLET (N) EA	DRAINAGE INLET MARKER EA	DRAINAGE SHEET No.	DRAINAGE SYSTEM No. ⬡	DRAINAGE UNIT ○
G-3	5	d																								9.8		1			G-3	5	d
G-3	5	e																		44.7				S	6.6						G-3	5	e
G-3	5	f																								5.6		1			G-3	5	f
G-3	5	g													19.2									S	7.8						G-3	5	g
G-3	5	h																					1			12.5					G-3	5	h
G-3	5	i											247.2																		G-3	5	i
G-3	5	j																								5.6		1			G-3	5	j
G-3	5	k																	40.0					S	6.9						G-3	5	k
G-3	5	l																								8.3		1			G-3	5	l
G-3	5	m											175.0											S	4.1						G-3	5	m
G-3	5	n																								5.0		1			G-3	5	n
G-3	6A	a																			5.0										G-3	6A	a
G-3	6A	b																								5.3		1			G-3	6A	b
G-3	6A	c																	32.5					S	3.1						G-3	6A	c
G-3	6A	d																								5.0		1			G-3	6A	d
G-4	6	a												48.4								1		S	5.8						G-4	6	a
G-4	6	b																								3.9		1			G-4	6	b
G-4	6	c											189.8											S	7.1						G-4	6	c
G-4	6	d																								7.8		1			G-4	6	d
G-4	6	e																	49.2					S	6.4						G-4	6	e
G-4	6	f																								4.0		1			G-4	6	f
G-4	6	g											113.4											S	3.1						G-4	6	g
G-4	6	h																								3.5		1			G-4	6	h
G-4	6	i											75.5											S	2.9						G-4	6	i
G-4	6	j																								4.3		1			G-4	6	j
G-4	7	a										87.0												S	4.0						G-4	7	a
G-4	7	b																								4.0		1			G-4	7	b
G-4	7	c										47.7												S	2.9						G-4	7	c
G-4	7	d																								4.5		1			G-4	7	d
G-4	8	a			80.8																										G-4	8	a
G-4	8	b					1																								G-4	8	b
G-4	9	a										85.1												S	8.9						G-4	9	a
G-4	9	b																								5.0		1			G-4	9	b
SUBTOTAL			0	0	80.8	0	1	0	0	0	0	219.8	800.9	48.4	19.2	0	0	0	121.7	44.7	5.0	-	-	-	-	-	-	-	-	0			

1. FOR ADDITIONAL QUANTITIES SEE STAGE CONSTRUCTION AND TRAFFIC HANDLING QUANTITIES.
2. GLD - GRATED LINE DRAIN. ALL GLD TO BE WITH 0.6% PRESLOPED BOTTOM AND 12" Min DEPTH.
3. S - STANDARD JOINT TYPE.
4. (N) - NOT A SEPARATE PAY ITEM, FOR INFORMATION ONLY.

DRAINAGE QUANTITIES
DQ-3

REVISED BY | DATE REVISED
JENNY YAN | JEFF BALUYUT
CALCULATED-DESIGNED BY | CHECKED BY
CONSULTANT FUNCTIONAL SUPERVISOR: CARL SAVAGE

STATE OF CALIFORNIA - DEPARTMENT OF TRANSPORTATION
Caltrans® PROJECT DEVELOPMENT

LAST REVISION 01-23-12 | DATE PLOTTED => 17-APR-2012 | TIME PLOTTED => 11:49

Dist	COUNTY	ROUTE	POST MILES TOTAL PROJECT	SHEET No.	TOTAL SHEETS
11	SD	15,76	R46.1/R47.3, R16.7/R17.7	139	477

REGISTERED CIVIL ENGINEER 01-17-12 DATE

4-16-12
PLANS APPROVAL DATE

REGISTERED PROFESSIONAL ENGINEER JENNY YAN No. C62092 Exp. 09-30-13 CIVIL STATE OF CALIFORNIA

THE STATE OF CALIFORNIA OR ITS OFFICERS OR AGENTS SHALL NOT BE RESPONSIBLE FOR THE ACCURACY OR COMPLETENESS OF SCANNED COPIES OF THIS PLAN SHEET.

DRAINAGE QUANTITIES

DRAINAGE SHEET No.	DRAINAGE SYSTEM No. ⬡	DRAINAGE UNIT ○	GRATED LINE DRAIN LF	GRATE TYPE 24-12 (N) EA	MISCELLANEOUS IRON AND STEEL LB	MINOR CONCRETE (MINOR STRUCTURE) CY	STRUCTURE BACKFILL (SLURRY CEMENT) CY	CONCRETE (CONCRETE APRON) CY	STRUCTURAL CONCRETE, HEADWALL CY	STRUCTURAL CONCRETE, JUNCTION STRUCTURE CY	ROCK SLOPE PROTECTION (LIGHT, METHOD B) CY	ROCK SLOPE PROTECTION (4 TON, METHOD A) CY	ROCK SLOPE PROTECTION (1/2 TON, METHOD A) CY	ROCK SLOPE PROTECTION (NO. 1, METHOD B) CY	ROCK SLOPE PROTECTION FABRIC (CLASS 8) SQFT	ROCK SLOPE PROTECTION FABRIC (CLASS 10) SQFT	DESCRIPTION	STATION	DRAINAGE SHEET No.	DRAINAGE SYSTEM No. ⬡	DRAINAGE UNIT ○
G-3	5	d		1	329	4.11											TYPE G-2 INLET W/24-12 GRATE & CHAIN	8.00' R+ 2492+50.79 "B-4A"	G-3	5	d
G-3	5	e															36" RCP		G-3	5	e
G-3	5	f		1	329	1.95											TYPE G-2 INLET W/24-12 GRATE & CHAIN	38.00' L+ 2492+34.18 "B-4A"	G-3	5	f
G-3	5	g															36" APC		G-3	5	g
G-3	5	h			435					5.08							JUNCTION STRUCTURE W/ MANHOLE FRAME AND COVER	57.57' L+ 2492+38.33 "B4-A"	G-3	5	h
G-3	5	i															24" APC		G-3	5	i
G-3	5	j		1	329	1.97											TYPE G-2 INLET W/24-12 GRATE & CHAIN	8.00' R+ 2490+00.00 "B-4A"	G-3	5	j
G-3	5	k															24" RCP		G-3	5	k
G-3	5	l		1	329	3.58											TYPE G-2 INLET W/24-12 GRATE & CHAIN	38.00' L+ 2490+00.00 "B-4A"	G-3	5	l
G-3	5	m															24" APC		G-3	5	m
G-3	5	n		1	329	1.82											TYPE G-2 INLET W/24-12 GRATE & CHAIN	8.00' R+ 2492+00.00 "B-6"	G-3	5	n
G-3	6A	a			20												36" RCP RISER W/ RISER SAFETY CAGE		G-3	6A	a
G-3	6A	b	10.0	1	329	1.90											TYPE G-2 INLET W/24-12 GRATE & CHAIN	128.00' L+ 2490+64.60 "RTLN"	G-3	6A	b
G-3	6A	c															24" RCP		G-3	6A	c
G-3	6A	d	10.0	1	329	1.82											TYPE G-2 INLET W/24-12 GRATE & CHAIN	128.00' L+ 2491+00.00 "RTLN"	G-3	6A	d
G-4	6	a															30" APC W/ TYPE L-3 COLLAR		G-4	6	a
G-4	6	b		1	329	1.55		1.25									TYPE G-2 INLET W/24-12 GRATE & CHAIN AND APRON	108.21' R+ 2483+58.35 "RTLN"	G-4	6	b
G-4	6	c															24" APC		G-4	6	c
G-4	6	d		1	329	2.53											TYPE G-2 INLET W/24-12 GRATE & CHAIN	8.00' L+ 2485+00.00 "B-5"	G-4	6	d
G-4	6	e															24" APC		G-4	6	e
G-4	6	f		1	329	1.57		1.25									TYPE G-2 INLET W/24-12 GRATE & CHAIN	43.67' R+ 2485+00.00 "B-5"	G-4	6	f
G-4	6	g															24" APC		G-4	6	g
G-4	6	h		1	329	1.43		1.25									TYPE G-2 INLET W/24-12 GRATE & CHAIN	36.67' R+ 2486+50.00 "B-5"	G-4	6	h
G-4	6	i															24" APC		G-4	6	i
G-4	6	j		1	329	1.64		1.50									TYPE G-2 INLET W/24-12 GRATE & CHAIN	39.00' R+ 2484+00.00 "B-5"	G-4	6	j
G-4	7	a															18" APC		G-4	7	a
G-4	7	b		1	329	1.57											TYPE G-2 INLET W/24-12 GRATE & CHAIN	8.00' L+ 2484+09.49 "B-2A"	G-4	7	b
G-4	7	c															18" APC		G-4	7	c
G-4	7	d	20.0	1	329	1.70											TYPE G-2 INLET W/24-12 GRATE & CHAIN AND GLD	8.00' L+ 2484+60.00 "B-2A"	G-4	7	d
																				7	e
G-4	8	a															REMOVE 18" CSP		G-4	8	a
G-4	8	b															REMOVE G-1 INLET	4.14' L+ 2484+58.56 "B-2A"	G-4	8	b
G-4	9	a															18" APC		G-4	9	a
G-4	9	b		1	329	1.82											TYPE G-2 INLET W/24-12 GRATE & CHAIN	8.44' L+ 2489+02.86 "B-2A"	G-4	9	b
SUBTOTAL			40.0	-	5390	30.96	0	5.25	0	5.08	0	0	0	0	0	0					

1. FOR ADDITIONAL QUANTITIES SEE STAGE CONSTRUCTION AND TRAFFIC HANDLING QUANTITIES.
2. GLD - GRATED LINE DRAIN. ALL GLD TO BE WITH 0.6% PRESLOPED BOTTOM AND 12" Min DEPTH.
3. S - STANDARD JOINT TYPE.
4. (N) - NOT A SEPARATE PAY ITEM, FOR INFORMATION ONLY.

DRAINAGE QUANTITIES
DQ-4

JENNY YAN | JEFF BALUYUT | REVISED BY | DATE REVISED
CALCULATED-DESIGNED BY | CHECKED BY
CONSULTANT FUNCTIONAL SUPERVISOR | CARL SAVAGE
STATE OF CALIFORNIA - DEPARTMENT OF TRANSPORTATION
Caltrans® PROJECT DEVELOPMENT

LAST REVISION 01-23-12 | DATE PLOTTED => 17-APR-2012 | TIME PLOTTED => 11:49

Dist	COUNTY	ROUTE	POST MILES TOTAL PROJECT	SHEET No.	TOTAL SHEETS
11	SD	15,76	R46.1/R47.3, R16.7/R17.7	140	477

REGISTERED CIVIL ENGINEER 01-17-12 DATE

4-16-12
PLANS APPROVAL DATE

REGISTERED PROFESSIONAL ENGINEER JENNY YAN No. C62092 Exp. 09-30-13 CIVIL STATE OF CALIFORNIA

THE STATE OF CALIFORNIA OR ITS OFFICERS OR AGENTS SHALL NOT BE RESPONSIBLE FOR THE ACCURACY OR COMPLETENESS OF SCANNED COPIES OF THIS PLAN SHEET.

DRAINAGE QUANTITIES

DRAINAGE SHEET No.	DRAINAGE SYSTEM No. ⬡	DRAINAGE UNIT ○	ABANDON CULVERT EA	SAND BACKFILL CY	REMOVE CULVERT LF	RELOCATE ROCK SLOPE PROTECTION CY	REMOVE INLET EA	REMOVE HEADWALL EA	REMOVE MUD, SAND AND DEBRIS (IN CSP CULVERT) LF	CAP INLET EA	CAP RISER EA	APC (ALTERNATIVE PIPE CULVERT) 18" LF	24" LF	30" LF	36" LF	6" PLASTIC PIPE LF	18" BITUMINOUS C+d CORRUGATED STEEL PIPE (0.109" THICK) LF	48" BITUMINOUS C+d CORRUGATED STEEL PIPE (.109" THICK) LF	24" REINFORCED CONCRETE PIPE LF	36" REINFORCED CONCRETE PIPE LF	36" REINFORCED CONCRETE PIPE RISER LF	CONCRETE COLLAR (N) EA	MANHOLE FRAME AND COVER (N) EA	PIPE JOINT TYPE (N) EA	MAXIMUM HEIGHT COVER (N) LF	STRUCTURE HEIGHT (N) LF	TYPE OL INLET (N) EA	TYPE G-2 INLET (N) EA	TYPE GD1/GD2 INLET (N) EA	DRAINAGE INLET MARKER EA	DRAINAGE SHEET No.	DRAINAGE SYSTEM No. ⬡	DRAINAGE UNIT ○
G-4	10	a			79.5																										G-4	10	a
G-4	10	b					1																								G-4	10	b
G-4	11	a			81.5																										G-4	11	a
G-4	11	b					1																								G-4	11	b
G-4	11	c			58.0																										G-4	11	c
G-4	11	d					1																								G-4	11	d
G-4	12	a								1																					G-4	12	a
G-4	12	b																							4.8		1				G-4	12	b
G-4	12	c																													G-4	12	c
G-4	12	d																							3.7						G-4	12	d
G-4	12	e											92.6										S	9.7							G-4	12	e
G-4	12	f																							10.8	1					G-4	12	f
G-4	12	g																	151.5				S	8.9							G-4	12	g
G-4	12	h																							9.1	1					G-4	12	h
G-5	13	a	1	18.37																											G-5	13	a
G-5	13	b			20.0		1																								G-5	13	b
G-5	14	a																													G-5	14	a
G-5	14	b																							3.7						G-5	14	b
G-5	14	c																	334.3				S	19.2							G-5	14	c
G-5	14	d																							6.2		1				G-5	14	d
G-5	14	e											70.6										S	3.7							G-5	14	e
G-5	14	f																							5.0		1				G-5	14	f
G-5	14	g											121.9										S	3.7							G-5	14	g
G-5	14	h																							5.0		1				G-5	14	h
G-5	15	a																							10.5		1				G-5	15	a
G-5	15	b									1																				G-5	15	b
G-5	15	c											64.9										S	3.3							G-5	15	c
G-5	15	d																							5.0		1				G-5	15	d
G-6	16	a																							7.4		1				G-6	16	a
G-6	16	b	1																	20.9		1		S	4.7						G-6	16	b
G-6	16	c			10.0		1																								G-6	16	c
G-6	16	d											67.9										S	3.2							G-6	16	d
SUBTOTAL			1	18.37	249.0	0	5	0	0	1	1	0	417.9	0	0	0	0	0	485.8	20.9	0	-	-	-	-	-	-	-	-	2			

1. FOR ADDITIONAL QUANTITIES SEE STAGE CONSTRUCTION AND TRAFFIC HANDLING QUANTITIES.
2. GLD - GRATED LINE DRAIN. ALL GLD TO BE WITH 0.6% PRESLOPED BOTTOM AND 12" Min DEPTH.
3. S - STANDARD JOINT TYPE.
4. (N) - NOT A SEPARATE PAY ITEM, FOR INFORMATION ONLY.

DRAINAGE QUANTITIES
DQ-5

REVISED BY | DATE REVISED
JENNY YAN | JEFF BALUYUT
CALCULATED-DESIGNED BY | CHECKED BY
CONSULTANT FUNCTIONAL SUPERVISOR: CARL SAVAGE

STATE OF CALIFORNIA - DEPARTMENT OF TRANSPORTATION
Caltrans® PROJECT DEVELOPMENT

LAST REVISION 01-23-12 | DATE PLOTTED => 17-APR-2012 | TIME PLOTTED => 11:49

Dist	COUNTY	ROUTE	POST MILES TOTAL PROJECT	SHEET No.	TOTAL SHEETS
11	SD	15,76	R46.1/R47.3, R16.7/R17.7	141	477

REGISTERED CIVIL ENGINEER 01-17-12 DATE

4-16-12
PLANS APPROVAL DATE

REGISTERED PROFESSIONAL ENGINEER JENNY YAN No. C62092 Exp. 09-30-13 CIVIL STATE OF CALIFORNIA

THE STATE OF CALIFORNIA OR ITS OFFICERS OR AGENTS SHALL NOT BE RESPONSIBLE FOR THE ACCURACY OR COMPLETENESS OF SCANNED COPIES OF THIS PLAN SHEET.

DRAINAGE QUANTITIES

DRAINAGE SHEET No.	DRAINAGE SYSTEM No. ⬡	DRAINAGE UNIT ○	GRATED LINE DRAIN LF	GRATE TYPE 24-12 (N) EA	MISCELLANEOUS IRON AND STEEL LB	MINOR CONCRETE (MINOR STRUCTURE) CY	STRUCTURE BACKFILL (SLURRY CEMENT) CY	CONCRETE (CONCRETE APRON) CY	STRUCTURAL CONCRETE, HEADWALL CY	STRUCTURAL CONCRETE, JUNCTION STRUCTURE CY	ROCK SLOPE PROTECTION (LIGHT, METHOD B) CY	ROCK SLOPE PROTECTION (4 TON, METHOD A) CY	ROCK SLOPE PROTECTION (1/2 TON, METHOD A) CY	ROCK SLOPE PROTECTION (NO. 1, METHOD B) CY	ROCK SLOPE PROTECTION FABRIC (CLASS 8) SQFT	ROCK SLOPE PROTECTION FABRIC (CLASS 10) SQFT	DESCRIPTION	STATION	DRAINAGE SHEET No.	DRAINAGE SYSTEM No. ⬡	DRAINAGE UNIT ○
G-4	10	a															REMOVE 18" CSP		G-4	10	a
G-4	10	b															REMOVE G-1 INLET	8.45' L+ 2479+22.48 "B-5"	G-4	10	b
G-4	11	a															REMOVE 18" CSP		G-4	11	a
G-4	11	b															REMOVE G-1 INLET	58. 21' L+ 350+15.52 "76-RA"	G-4	11	b
G-4	11	c															REMOVE 18" CSP		G-4	11	c
G-4	11	d															REMOVE G-1 INLET	2.17' R+ 350+15.89 "76-RA"	G-4	11	d
G-4	12	a															CAP INLET	56.90' R+ 2493+57.82 "RTLN"	G-4	12	a
G-4	12	b	15.0	1	329	1.77											TYPE G-2 INLET W/24-12 GRATE & CHAIN AND GLD	70.00' R+ 2493+58.00 "RTLN"	G-4	12	b
G-4	12	c									6.67				187.0		RSP		G-4	12	c
G-4	12	d							1.20								STRAIGHT HEADWALL	149.15' L+ 349+98.63 "76-RA"	G-4	12	d
G-4	12	e															24" APC		G-4	12	e
G-4	12	f			170	5.80											TYPE OL INLET W/ COVER PLATE	53.00' L+ 350+00.00 "76-RA"	G-4	12	f
G-4	12	g															24" RCP		G-4	12	g
G-4	12	h			170	5.16											TYPE OL INLET W/ COVER PLATE	59.00' R+ 349+00.00 "76-RA"	G-4	12	h
G-5	13	a															ABANDON 24" CSP AND SAND BACKFILL		G-5	13	a
G-5	13	b															REMOVE G-2 INLET AND SLOTTED DRAINS	5.79' R+ 2499+78.25 "B-1A"	G-5	13	b
G-5	14	a									6.67				187.0		RSP		G-5	14	a
G-5	14	b							1.20								STRAIGHT HEADWALL	369.22' R+ 2500+54.42 "B-1A"	G-5	14	b
G-5	14	c															24" RCP		G-5	14	c
G-5	14	d		1	329	2.13		1.25									TYPE G-2 INLET W/24-12 GRATE & CHAIN AND APRON	40.83' R+ 2501+25.00 "B-1A"	G-5	14	d
G-5	14	e															24" APC		G-5	14	e
G-5	14	f		1	329	1.82		1.50									TYPE G-2 INLET W/24-12 GRATE & CHAIN AND APRON	38.33' R+ 2502+00.00 "B-1A"	G-5	14	f
G-5	14	g															24" APC		G-5	14	g
G-5	14	h		1	329	1.82		1.50									TYPE G-2 INLET W/24-12 GRATE & CHAIN AND APRON	37.00' R+ 2500+00.00 "B-1A"	G-5	14	h
G-5	15	a	15.0	1	329	4.36											TYPE G-2 INLET W/24-12 GRATE & CHAIN AND GLD	77.16' R+ 2508+32.15 "RTLN"	G-5	15	a
G-5	15	b															CAP RISER	63.66' R+ 2508+32.41 "RTLN"	G-5	15	b
G-5	15	c															24" APC		G-5	15	c
G-5	15	d	15.0	1	329	1.82											TYPE G-2 INLET W/24-12 GRATE & CHAIN AND GLD	75.80' R+ 2509+00.00 "RTLN"	G-5	15	d
G-6	16	a	15.0	1	329	2.45											TYPE G-2 INLET W/24-12 GRATE & CHAIN AND GLD	70.00' R+ 2517+28.32 "RTLN"	G-6	16	a
G-6	16	b															36" RCP W/ TYPE L-2 COLLAR		G-6	16	b
G-6	16	c															REMOVE G-2 INLET AND SLOTTED DRAIN	57.13' R+ 2517+47.42 "RTLN"	G-6	16	c
G-6	16	d															24" APC		G-6	16	d
SUBTOTAL			60.0	-	2643	27.13	0	4.25	2.40	0	13.34	0	0	0	374.0	0					

1. FOR ADDITIONAL QUANTITIES SEE STAGE CONSTRUCTION AND TRAFFIC HANDLING QUANTITIES.
2. GLD - GRATED LINE DRAIN. ALL GLD TO BE WITH 0.6% PRESLOPED BOTTOM AND 12" Min DEPTH.
3. S - STANDARD JOINT TYPE.
4. (N) - NOT A SEPARATE PAY ITEM, FOR INFORMATION ONLY.

DRAINAGE QUANTITIES
DQ-6

REVISED BY | DATE REVISED
JENNY YAN | JEFF BALUYUT
CALCULATED-DESIGNED BY | CHECKED BY
CONSULTANT FUNCTIONAL SUPERVISOR: CARL SAVAGE
STATE OF CALIFORNIA - DEPARTMENT OF TRANSPORTATION
PROJECT DEVELOPMENT
Caltrans

Dist	COUNTY	ROUTE	POST MILES TOTAL PROJECT	SHEET No.	TOTAL SHEETS
11	SD	15,76	R46.1/R47.3, R16.7/R17.7	142	477

REGISTERED CIVIL ENGINEER 01-17-12 DATE

PLANS APPROVAL DATE 4-16-12

REGISTERED PROFESSIONAL ENGINEER JENNY YAN No. C62092 Exp. 09-30-13 CIVIL STATE OF CALIFORNIA

THE STATE OF CALIFORNIA OR ITS OFFICERS OR AGENTS SHALL NOT BE RESPONSIBLE FOR THE ACCURACY OR COMPLETENESS OF SCANNED COPIES OF THIS PLAN SHEET.

DRAINAGE QUANTITIES

DRAINAGE SHEET No.	DRAINAGE SYSTEM No. ⬡	DRAINAGE UNIT ○	ABANDON CULVERT EA	SAND BACKFILL CY	REMOVE CULVERT LF	RELOCATE ROCK SLOPE PROTECTION CY	REMOVE INLET EA	REMOVE HEADWALL EA	REMOVE MUD, SAND AND DEBRIS (IN CSP CULVERT) LF	CAP INLET EA	CAP RISER EA	APC (ALTERNATIVE PIPE CULVERT) 18" LF	24" LF	30" LF	36" LF	6" PLASTIC PIPE LF	18" BITUMINOUS C+d CORRUGATED STEEL PIPE (0.109" THICK) LF	48" BITUMINOUS C+d CORRUGATED STEEL PIPE (.109" THICK) LF	24" REINFORCED CONCRETE PIPE LF	36" REINFORCED CONCRETE PIPE LF	36" REINFORCED CONCRETE PIPE RISER LF	CONCRETE COLLAR (N) EA	MANHOLE FRAME AND COVER (N) EA	PIPE JOINT TYPE (N) EA	MAXIMUM HEIGHT COVER (N) LF	STRUCTURE HEIGHT (N) LF	TYPE OL INLET (N) EA	TYPE G-2 INLET (N) EA	TYPE GD1/GD2 INLET (N) EA	DRAINAGE INLET MARKER EA	DRAINAGE SHEET No.	DRAINAGE SYSTEM No. ⬡	DRAINAGE UNIT ○
G-6	16	e																								5.0		1			G-6	16	e
G-6	17	a																	10.6			1		S	2.0						G-6	17	a
G-6	17	b																								3.5		1			G-6	17	b
G-6	17	c																													G-6	17	c
G-7	18	a																								3.2			1		G-7	18	a
G-8	19	a																													G-8	19	a
G-8	19	b															24.1					1		S	3.9						G-8	19	b
G-8	19	c							66.0																						G-8	19	c
G-8	20	a																													G-8	20	a
G-8	20	b																24.0				1		S	1.5						G-8	20	b
G-8	20	c							66.0																						G-8	20	c
G-8	20	d																													G-8	20	d
G-8	20	e																24.0				1		S	1.5						G-8	20	e
G-8	20	f							66.0																						G-8	20	f
G-8	20	g																24.0				1		S	1.5						G-8	20	g
G-8	20	h							66.0																						G-8	20	h
G-8	20	i																													G-8	20	i
G-8	21	a			25.6																										G-8	21	a
G-8	22A	a			19.8																										G-8	22A	a
G-8	22	a										59.1												S	3.9						G-8	22	a
G-8	22	b																								5.0		1			G-8	22	b
G-9	23	a																													G-9	23	a
G-9	23	b																								3.7					G-9	23	b
G-9	23	c											22.0											S	4.2						G-9	23	c
G-9	23	d																								5.7	1			1	G-9	23	d
G-9	23	e																	170.2					S	4.6						G-9	23	e
G-9	23	f																								5.0	1			1	G-9	23	f
G-9	23	g										47.9										1		S	3.4						G-9	23	g
G-9	23	h			29.2																										G-9	23	h
G-9	23	i					1																								G-9	23	i
SUBTOTAL			0	0	74.6	0	1	0	264.0	0	0	107.0	22.0	0	0	0	24.1	72.0	180.8	0	0	-	-	-	-	-	-	-	-	2			

1. FOR ADDITIONAL QUANTITIES SEE STAGE CONSTRUCTION AND TRAFFIC HANDLING QUANTITIES.
2. GLD - GRATED LINE DRAIN. ALL GLD TO BE WITH 0.6% PRESLOPED BOTTOM AND 12" Min DEPTH.
3. S - STANDARD JOINT TYPE.
4. (N) - NOT A SEPARATE PAY ITEM, FOR INFORMATION ONLY.

DRAINAGE QUANTITIES
DQ-7

JENNY YAN | JEFF BALUYUT | CARL SAVAGE | REVISED BY | DATE REVISED | CALCULATED-DESIGNED BY | CHECKED BY | CONSULTANT FUNCTIONAL SUPERVISOR

STATE OF CALIFORNIA - DEPARTMENT OF TRANSPORTATION
Caltrans PROJECT DEVELOPMENT

LAST REVISION 01-23-12 | DATE PLOTTED => 17-APR-2012 | TIME PLOTTED => 11:50

Dist	COUNTY	ROUTE	POST MILES TOTAL PROJECT	SHEET No.	TOTAL SHEETS
11	SD	15,76	R46.1/R47.3, R16.7/R17.7	143	477

REGISTERED CIVIL ENGINEER 01-17-12 DATE

4-16-12
PLANS APPROVAL DATE

REGISTERED PROFESSIONAL ENGINEER JENNY YAN No. C62092 Exp. 09-30-13 CIVIL STATE OF CALIFORNIA

THE STATE OF CALIFORNIA OR ITS OFFICERS OR AGENTS SHALL NOT BE RESPONSIBLE FOR THE ACCURACY OR COMPLETENESS OF SCANNED COPIES OF THIS PLAN SHEET.

DRAINAGE QUANTITIES

DRAINAGE SHEET No.	DRAINAGE SYSTEM No. ⬡	DRAINAGE UNIT ○	GRATED LINE DRAIN LF	GRATE TYPE 24-12 (N) EA	MISCELLANEOUS IRON AND STEEL LB	MINOR CONCRETE (MINOR STRUCTURE) CY	STRUCTURE BACKFILL (SLURRY CEMENT) CY	CONCRETE (CONCRETE APRON) CY	STRUCTURAL CONCRETE, HEADWALL CY	STRUCTURAL CONCRETE, JUNCTION STRUCTURE CY	ROCK SLOPE PROTECTION (LIGHT, METHOD B) CY	ROCK SLOPE PROTECTION (4 TON, METHOD A) CY	ROCK SLOPE PROTECTION (1/2 TON, METHOD A) CY	ROCK SLOPE PROTECTION (NO. 1, METHOD B) CY	ROCK SLOPE PROTECTION FABRIC (CLASS 8) SQFT	ROCK SLOPE PROTECTION FABRIC (CLASS 10) SQFT	DESCRIPTION	STATION	DRAINAGE SHEET No.	DRAINAGE SYSTEM No. ⬡	DRAINAGE UNIT ○
G-6	16	e	15.0	1	329	1.82											TYPE G-2 INLET W/24-12 GRATE & CHAIN AND GLD	70.00′ R+ 2518+00.00 "RTLN"	G-6	16	e
G-6	17	a															18" APC W/ TYPE L-2 COLLAR	57.17′ R+ 2523+08.46 "RTLN"	G-6	17	a
G-6	17	b	15.0	1	329	1.44											TYPE G-2 INLET W/24-12 GRATE & CHAIN AND GLD	69.83′ R+ 2523+08.47 "RTLN"	G-6	17	b
G-6	17	c					5.59										CULVERT ENCASE		G-6	17	c
G-7	18	a	15.0	2	642	2.95											GD2 INLET W/DOUBLE 24-12 GRATE &CHAIN, GLD, CAGE	61.67′ R+ 2529+24.36 "RTLN"	G-7	18	a
G-8	19	a									4.58				152.0		RSP		G-8	19	a
G-8	19	b															18" CSP W/ TYPE L-2 COLLAR	35.93 R+ 316+80.19 "WT"	G-8	19	b
G-8	19	c															REMOVE MUD, SAND, AND DEBRIS		G-8	19	c
G-8	20	a										100.74	50.37	26.67		1936.0	RSP		G-8	20	a
G-8	20	b															48" CSP W/ TYPE L-2 COLLAR	40.17′ R+ 317+76.27 "WT"	G-8	20	b
G-8	20	c															REMOVE MUD, SAND, AND DEBRIS		G-8	20	c
G-8	20	d				8.91	29.85										CULVERT ENCASE		G-8	20	d
G-8	20	e															48" CSP W/ TYPE L-2 COLLAR	40.31′ R+ 317+82.83 "WT"	G-8	20	e
G-8	20	f															REMOVE MUD, SAND, AND DEBRIS		G-8	20	f
G-8	20	g															48" CSP W/ TYPE L-2 COLLAR	40.28′ R+ 317+88.12 "WT"	G-8	20	g
G-8	20	h															REMOVE MUD, SAND, AND DEBRIS		G-8	20	h
G-8	20	i									3.33				121.0		RSP		G-8	20	i
G-8	21	a															REMOVE 18" CMP	49.58′ R+ 318+65.17 "WT"	G-8	21	a
G-8	22A	a															REMOVE 18" CSP	40.66′ L+ 322+16.21 "WT"	G-8	22A	a
G-8	22	a															18" APC		G-8	22	a
G-8	22	b		1	329	1.82											TYPE G-2 INLET W/24-12 GRATE & CHAIN	26.00′ L+ 322+75.00 "WT"	G-8	22	b
G-9	23	a									6.67				187.0		RSP		G-9	23	a
G-9	23	b							1.20								STRAIGHT HEADWALL	107.00′ R+ 329+70.00 "76-RA"	G-9	23	b
G-9	23	c															24" APC		G-9	23	c
G-9	23	d			170	5.15											TYPE OL INLET W/ COVER PLATE	81.00′ R+ 329+70.00 "76-RA"	G-9	23	d
G-9	23	e															24" RCP		G-9	23	e
G-9	23	f			170	4.95											TYPE OL INLET W/ COVER PLATE	55.00′ L+ 330+70.00 "76-RA"	G-9	23	f
G-9	23	g															18" APC W/ TYPE L-3 COLLAR		G-9	23	g
G-9	23	h															REMOVE 18" RCP		G-9	23	h
G-9	23	i															REMOVE INLET	63.49′ L+ 330+35.66 "76-RA"	G-9	23	i
SUBTOTAL			45.0	-	1969	27.04	35.44	0	1.20	0	14.58	100.74	50.37	26.67	460.0	1936.0					

1. FOR ADDITIONAL QUANTITIES SEE STAGE CONSTRUCTION AND TRAFFIC HANDLING QUANTITIES.
2. GLD - GRATED LINE DRAIN. ALL GLD TO BE WITH 0.6% PRESLOPED BOTTOM AND 12" Min DEPTH.
3. S - STANDARD JOINT TYPE.
4. (N) - NOT A SEPARATE PAY ITEM, FOR INFORMATION ONLY.

DRAINAGE QUANTITIES
DQ-8

JENNY YAN | REVISED BY | DATE REVISED
JEFF BALUYUT
CALCULATED-DESIGNED BY | CHECKED BY
CARL SAVAGE
CONSULTANT FUNCTIONAL SUPERVISOR
STATE OF CALIFORNIA - DEPARTMENT OF TRANSPORTATION
PROJECT DEVELOPMENT
Caltrans

DATE PLOTTED => 17-APR-2012
TIME PLOTTED => 11:50
LAST REVISION 01-23-12

Dist	COUNTY	ROUTE	POST MILES TOTAL PROJECT	SHEET No.	TOTAL SHEETS
11	SD	15,76	R46.1/R47.3, R16.7/R17.7	144	477

REGISTERED CIVIL ENGINEER 01-17-12 DATE

4-16-12
PLANS APPROVAL DATE

REGISTERED PROFESSIONAL ENGINEER JENNY YAN No. C62092 Exp. 09-30-13 CIVIL STATE OF CALIFORNIA

THE STATE OF CALIFORNIA OR ITS OFFICERS OR AGENTS SHALL NOT BE RESPONSIBLE FOR THE ACCURACY OR COMPLETENESS OF SCANNED COPIES OF THIS PLAN SHEET.

DRAINAGE QUANTITIES

DRAINAGE SHEET No.	DRAINAGE SYSTEM No. ⬡	DRAINAGE UNIT ○	ABANDON CULVERT EA	SAND BACKFILL CY	REMOVE CULVERT LF	RELOCATE ROCK SLOPE PROTECTION CY	REMOVE INLET EA	REMOVE HEADWALL EA	REMOVE MUD, SAND AND DEBRIS (IN CSP CULVERT) LF	CAP INLET EA	CAP RISER EA	APC (ALTERNATIVE PIPE CULVERT) 18" LF	24" LF	30" LF	36" LF	6" PLASTIC PIPE LF	18" BITUMINOUS C+d CORRUGATED STEEL PIPE (0.109" THICK) LF	48" BITUMINOUS C+d CORRUGATED STEEL PIPE (.109" THICK) LF	24" REINFORCED CONCRETE PIPE LF	36" REINFORCED CONCRETE PIPE LF	36" REINFORCED CONCRETE PIPE RISER LF	CONCRETE COLLAR (N) EA	MANHOLE FRAME AND COVER (N) EA	PIPE JOINT TYPE (N) EA	MAXIMUM HEIGHT COVER (N) LF	STRUCTURE HEIGHT (N) LF	TYPE OL INLET (N) EA	TYPE G-2 INLET (N) EA	TYPE GD1/GD2 INLET (N) EA	DRAINAGE INLET MARKER EA	DRAINAGE SHEET No.	DRAINAGE SYSTEM No. ⬡	DRAINAGE UNIT ○
G-9	23	j	1	9.83																												G-9	23	j
G-9	23	k					1																									G-9	23	k
G-9	23	l			35.8																											G-9	23	l
G-11	24	a						2																								G-11	24	a
G-11	24	b			28.6																											G-11	24	b
G-11	24	c					1																									G-11	24	c
G-11	25	a																							3.2							G-11	25	a
G-11	25	b															45.8							S	1.5							G-11	25	b
G-11	25	c																								3.2						G-11	25	c
G-11	26	a				38																										G-11	26	a
G-11	26	b						1																								G-11	26	b
SUBTOTAL			1	9.83	64.4	38	2	3	0	0	0	0	0	0	0	0	45.8	0	0	0	0	-	-	-	-	-	-	-	-	0				
GRAND TOTAL			2	28.20	500.8	38	10	3	264.0	1	5	326.8	1750.2	48.4	430.9	20.0	69.9	72.0	1158.6	77.5	15.8	-	-	-	-	-	-	-	-	8				

1. FOR ADDITIONAL QUANTITIES SEE STAGE CONSTRUCTION AND TRAFFIC HANDLING QUANTITIES.
2. GLD - GRATED LINE DRAIN. ALL GLD TO BE WITH 0.6% PRESLOPED BOTTOM AND 12" Min DEPTH.
3. S - STANDARD JOINT TYPE.
4. (N) - NOT A SEPARATE PAY ITEM, FOR INFORMATION ONLY.

DRAINAGE QUANTITIES
DQ-9

REVISED BY | DATE REVISED
JENNY YAN | JEFF BALUYUT
CALCULATED-DESIGNED BY | CHECKED BY
CONSULTANT FUNCTIONAL SUPERVISOR
CARL SAVAGE

STATE OF CALIFORNIA - DEPARTMENT OF TRANSPORTATION
Caltrans PROJECT DEVELOPMENT

LAST REVISION 01-23-12 | DATE PLOTTED => 17-APR-2012 | TIME PLOTTED => 11:50

Dist	COUNTY	ROUTE	POST MILES TOTAL PROJECT	SHEET No.	TOTAL SHEETS
11	SD	15,76	R46.1/R47.3, R16.7/R17.7	145	477

REGISTERED CIVIL ENGINEER 01-17-12 DATE

4-16-12
PLANS APPROVAL DATE

REGISTERED PROFESSIONAL ENGINEER JENNY YAN No. C62092 Exp. 09-30-13 CIVIL STATE OF CALIFORNIA

THE STATE OF CALIFORNIA OR ITS OFFICERS OR AGENTS SHALL NOT BE RESPONSIBLE FOR THE ACCURACY OR COMPLETENESS OF SCANNED COPIES OF THIS PLAN SHEET.

DRAINAGE QUANTITIES

DRAINAGE SHEET No.	DRAINAGE SYSTEM No. ⬡	DRAINAGE UNIT ○	GRATED LINE DRAIN LF	GRATE TYPE 24-12 (N) EA	MISCELLANEOUS IRON AND STEEL LB	MINOR CONCRETE (MINOR STRUCTURE) CY	STRUCTURE BACKFILL (SLURRY CEMENT) CY	CONCRETE (CONCRETE APRON) CY	STRUCTURAL CONCRETE, HEADWALL CY	STRUCTURAL CONCRETE, JUNCTION STRUCTURE CY	ROCK SLOPE PROTECTION (LIGHT, METHOD B) CY	ROCK SLOPE PROTECTION (4 TON, METHOD A) CY	ROCK SLOPE PROTECTION (1/2 TON, METHOD A) CY	ROCK SLOPE PROTECTION (NO. 1, METHOD B) CY	ROCK SLOPE PROTECTION FABRIC (CLASS 8) SQFT	ROCK SLOPE PROTECTION FABRIC (CLASS 10) SQFT	DESCRIPTION	STATION	DRAINAGE SHEET No.	DRAINAGE SYSTEM No. ⬡	DRAINAGE UNIT ○
G-9	23	j															ABANDON 24" RCP WITH SAND BACKFILL		G-9	23	j
G-9	23	k															REMOVE INLET	18.54' R+ 330+05.17 "76-RA"	G-9	23	k
G-9	23	l															REMOVE 24" RCP		G-9	23	l
G-11	24	a															REMOVE HEADWALL	96.24' R+ 352+50.04 "76-RA"	G-11	24	a
G-11	24	b															REMOVE 24" RCP		G-11	24	b
G-11	24	c															REMOVE INLET	66.92' L+ 352+50.80 "76-RA"	G-11	24	c
G-11	25	a							0.91								STRAIGHT HEADWALL	83.85' L+ 353+20.00 "76-RA"	G-11	25	a
G-11	25	b															18" CSP		G-11	25	b
G-11	25	c							0.91								STRAIGHT HEADWALL	87.63' L+ 353+40.00 "76-RA"	G-11	25	c
G-11	26	a															RELOCATE RSP	75.00' R+ 363+50.00 "76-RA"	G-11	26	a
G-11	26	b															REMOVE HEADWALL	62.00' R+ 362+45.00 "76-RA"	G-11	26	b
SUBTOTAL			0	-	0	0	0	0	1.82	0	0	0	0	0	0	0					
GRAND TOTAL			155.0	-	12969	120.0	35.4	13.8	6.6	7.1	34.6	100.7	50.4	27.3	1064.6	1936.0					

1. FOR ADDITIONAL QUANTITIES SEE STAGE CONSTRUCTION AND TRAFFIC HANDLING QUANTITIES.
2. GLD - GRATED LINE DRAIN. ALL GLD TO BE WITH 0.6% PRESLOPED BOTTOM AND 12" Min DEPTH.
3. S - STANDARD JOINT TYPE.
4. (N) - NOT A SEPARATE PAY ITEM, FOR INFORMATION ONLY.

DRAINAGE QUANTITIES
DQ-10

REVISED BY | DATE REVISED
JENNY YAN | JEFF BALUYUT
CALCULATED-DESIGNED BY | CHECKED BY
CONSULTANT FUNCTIONAL SUPERVISOR: CARL SAVAGE
STATE OF CALIFORNIA - DEPARTMENT OF TRANSPORTATION
Caltrans® PROJECT DEVELOPMENT
60099859 17-APR-2012 s50 s2363 #FILE#

LAST REVISION 01-23-12 | DATE PLOTTED => 17-APR-2012 | TIME PLOTTED => 11:50

Dist	COUNTY	ROUTE	POST MILES TOTAL PROJECT	SHEET No.	TOTAL SHEETS
11	SD	15,76	R46.1/R47.3, R16.7/R17.7	146	477

REGISTERED CIVIL ENGINEER 03-13-12 DATE

4-16-12
PLANS APPROVAL DATE

REGISTERED PROFESSIONAL ENGINEER JEFFREY C. HEDEN No. C31747 Exp. 12-31-12 CIVIL STATE OF CALIFORNIA

THE STATE OF CALIFORNIA OR ITS OFFICERS OR AGENTS SHALL NOT BE RESPONSIBLE FOR THE ACCURACY OR COMPLETENESS OF SCANNED COPIES OF THIS PLAN SHEET.

J.C. HEDEN & ASSOCIATES, INC.
6046 CORNERSTONE CT,
SUITE 207
SAN DIEGO, CA 92121

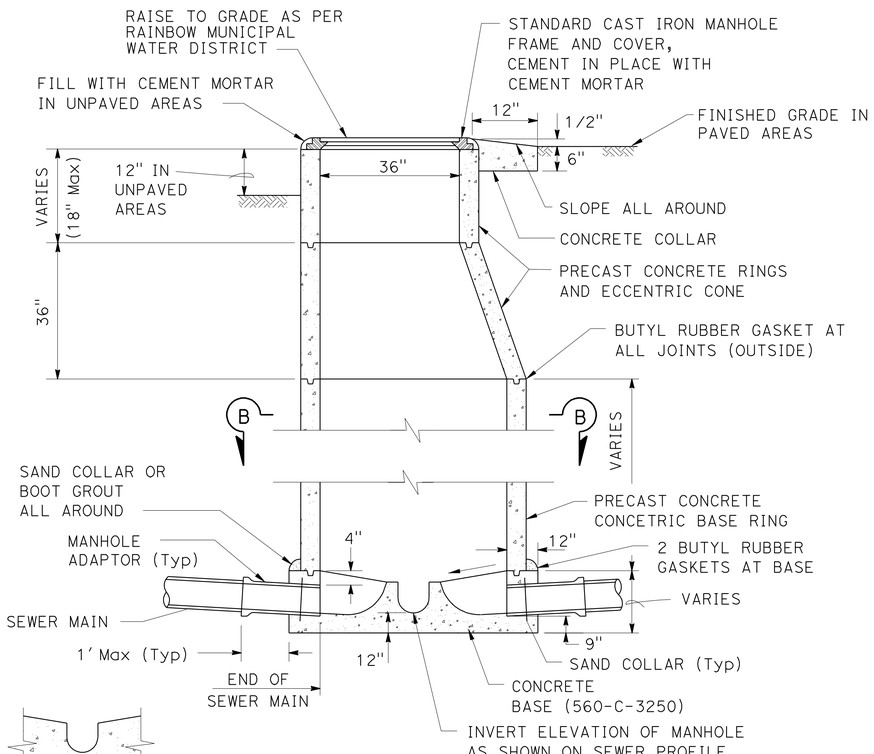

SECTION A-A

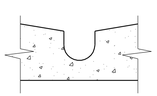

SECTION C-C

NOTES:

1. CONCRETE TO BE 560-C-3250
2. ALL JOINTS SHALL BE FILLED WITH 2"X2" BUTYL RUBBER GASKET
3. ALL PRECAST COMPONENTS SHALL BE MANUFACTURED IN ACCORDANCE WITH ASTM C-478, LATEST EDITION.
4. VERTICAL WALL OF CONE SHALL BE UPSTREAM SIDE OF MANHOLE.
5. NO MANHOLE STEPS ALLOWED.
6. ALL PRECAST COMPONENTS SHALL BE MANUFACTURED IN ACCORDANCE WITH ASTMC-478.

MANHOLE LINER:

SANCON 100 SYSTEM OR EQUAL. EPOXY PRIMER WITH 125 MIL POLYETHYLENE FINAL COAT. LINE BENCH, SHAFT AND CONE.

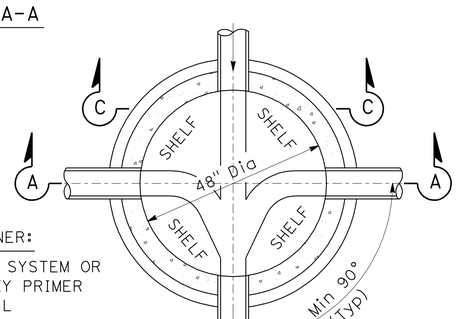

SECTION B-B

SEWER MANHOLE

(4' Dia)

GENERAL NOTES:

1) NO DIPS OR LOW SPOTS WILL BE ALLOWED IN PIPING INSTALLATION
2) ROLLED CURBS AND AC DIKE SHALL HAVE GUARD POSTS (2)
3) NUMBER EACH LINE VALVE, AIR AND VACUUM VALVE.
4) FIELD LOCATE CONCRETE PAD FOR AIR RELEASE AND VACUUM RELIEF VALVE.

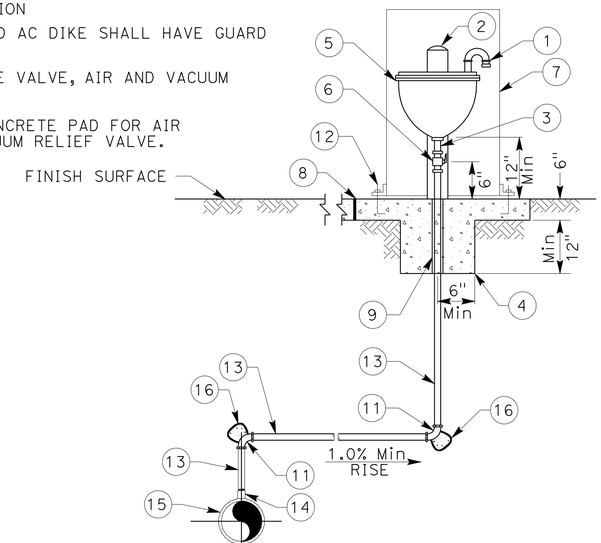

ITEM	SIZE & DESCRIPTION	ITEM	SIZE & DESCRIPTION
1	Galv CLOSE NIPPLE & RETURN BEND WITH INSECT SCREEN TURNED OUT	11	90° ELL, 2-INCH STEEL, SCH 40
2	GUARD POSTS	12	316 STAINLESS STEEL, BOLTS ON ENCLOSURE RED HEAD
3	BRASS CLOSE NIPPLE	13	2-INCH STEEL PIPE, SCH 40
4	SQUARE CONCRETE BASE, 2'-6"x2'-6"	14	FORGED STEEL HALF-COUPLING, THREADED, CLASS 3000 TO BE WELDED TO CML&C PIPE
5	WASTEWATER AIR/VACUUM VALVE VALMATIC VM-98AS WITH VACUUM OPTION	15	FORCE MAIN
6	BALL VALVE WITH HANDLE AND SERVICE STOP, 300 PSI, ISOLATION COUPLING	16	THRUST BLOCK (SEE UTILITY DETAILS)
7	HOUSING, 16" Dia X 24" TALL, PAINT GREEN	17	-
8	1/2" EXPANSION JOINT, IF REQUIRED	18	VALVE BOX INSTALLATION (SEE UTILITY DETAILS)
9	PVC SLEEVE, EXTEND 2" BELOW CONCRETE		
10	-		

SEWER AIR RELEASE AND VACUUM RELIEF VALVE

SANITARY SEWER DETAILS

NO SCALE

SSD-1

REVISED BY	DATE REVISED

CALCULATED-DESIGNED BY: JEFFREY C. HEDEN
CHECKED BY: ARTURO REYES
CONSULTANT FUNCTIONAL SUPERVISOR: JEFFREY C. HEDEN
STATE OF CALIFORNIA - DEPARTMENT OF TRANSPORTATION
Caltrans

LAST REVISION 03-16-12
DATE PLOTTED => 17-APR-2012
TIME PLOTTED => 12:15

Dist	COUNTY	ROUTE	POST MILES TOTAL PROJECT	SHEET No.	TOTAL SHEETS
11	SD	15,76	R46.1/R47.3, R16.7/R17.7	147	477

REGISTERED CIVIL ENGINEER 03-13-12 DATE

4-16-12
PLANS APPROVAL DATE

REGISTERED PROFESSIONAL ENGINEER JEFFREY C. HEDEN No. C31747 Exp. 12-31-12 CIVIL STATE OF CALIFORNIA

THE STATE OF CALIFORNIA OR ITS OFFICERS OR AGENTS SHALL NOT BE RESPONSIBLE FOR THE ACCURACY OR COMPLETENESS OF SCANNED COPIES OF THIS PLAN SHEET.

J.C. HEDEN & ASSOCIATES, INC.
6046 CORNERSTONE CT,
SUITE 207
SAN DIEGO, CA 92121

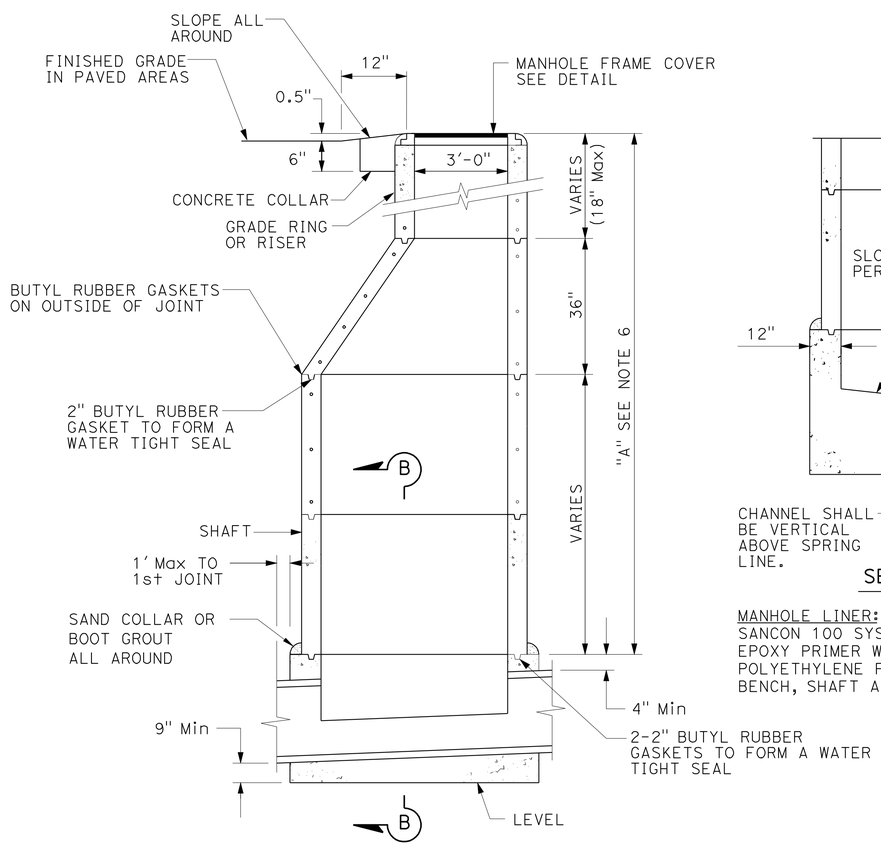

ELEVATION

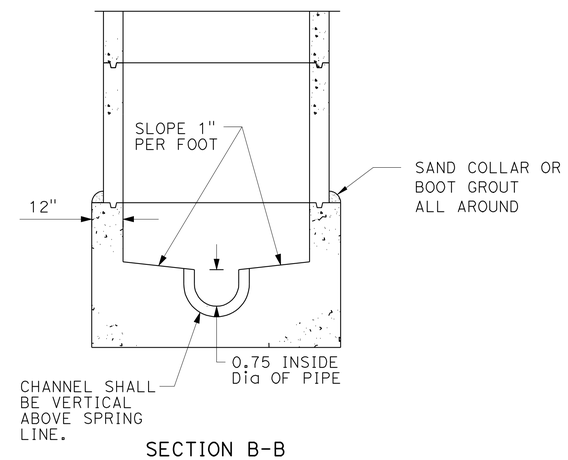

SECTION B-B

MANHOLE LINER:
SANCON 100 SYSTEM OR EQUAL. EPOXY PRIMER WITH 125 MIL POLYETHYLENE FINAL COAT. LINE BENCH, SHAFT AND CONE.

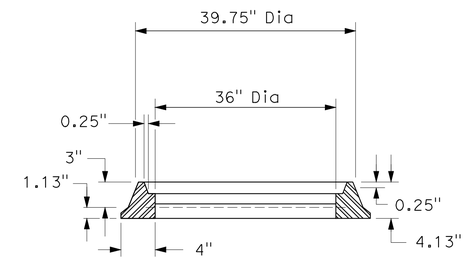

SECTION A-A

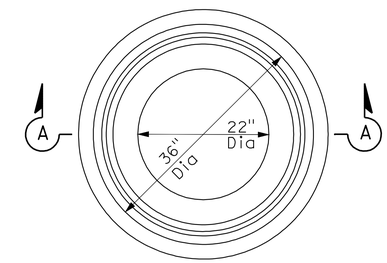

FRAME

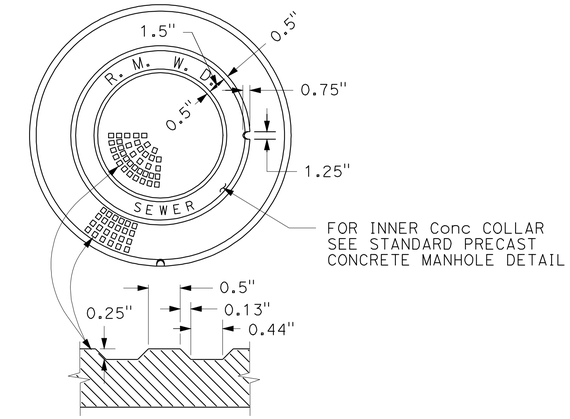

COVER

NOTES:
1. LOCKING FRAMES AND COVERS ARE REQUIRED IN REMOTE AREAS OR AS DETERMINED BY THE ENGINEER.

NOTES:
1. MANHOLE FRAME SHALL BE SET IN CLASS "C" MORTAR.
2. ALL PRECAST COMPONENTS SHALL BE MANUFACTURED IN ACCORDANCE WITH ASTM C-478
3. VERTICAL WALL OF CONE SHALL BE ON THE UPSTREAM SIDE OF THE MANHOLE.
4. CONCRETE SHALL BE 560-C-3250.
5. "SAND COLLAR" MANHOLE ADAPTORS SHALL BE PROVIDED FOR ALL MANHOLE CONNECTIONS.
6. PRECAST SECTIONS SHALL BE USED WITHIN DIMENSION "A" AS REQUIRED, IN ORDER OF PREFERENCE LISTED:
   A. CONE (NOTCHED FOR PIPE IF DIMENSION "A" IS LESS THEN 3').
   B. 6" TO 18" OF 3' Dia GRADE RINGS/AND/OR RISERS.
   C. 5' Dia SHAFT VARIABLE HEIGHT.
7. ALL PATCHING WITHIN MANHOLE BASE SHALL BE EPOXY MORTAR.
8. PRIOR APPROVAL OF PRECAST BASE IS REQUIRED BY THE ENGINEER.
9. MAXIMUM ALLOWABLE CHANGE OF DIRECTION AT MANHOLE=45°.
10. PROVIDE SPECIFIC DETAIL FOR REVIEW AND APPROVAL BY ENGINEER.

SEWER MANHOLE
(5' Dia)

MANHOLE FRAME AND COVER

SANITARY SEWER DETAILS

NO SCALE

SSD-2

STATE OF CALIFORNIA - DEPARTMENT OF TRANSPORTATION
Caltrans
CONSULTANT FUNCTIONAL SUPERVISOR: JEFFREY C. HEDEN
CALCULATED-DESIGNED BY: JEFFREY C. HEDEN
CHECKED BY: ARTURO REYES
REVISED BY
DATE REVISED

LAST REVISION 03-16-12
DATE PLOTTED => 17-APR-2012
TIME PLOTTED => 12:15

Dist	COUNTY	ROUTE	POST MILES TOTAL PROJECT	SHEET No.	TOTAL SHEETS
11	SD	15,76	R46.1/R47.3, R16.7/R17.7	148	477

REGISTERED CIVIL ENGINEER 03-13-12 DATE

4-16-12
PLANS APPROVAL DATE

REGISTERED PROFESSIONAL ENGINEER
JEFFREY C. HEDEN
No. C31747
Exp. 12-31-12
CIVIL
STATE OF CALIFORNIA

THE STATE OF CALIFORNIA OR ITS OFFICERS OR AGENTS SHALL NOT BE RESPONSIBLE FOR THE ACCURACY OR COMPLETENESS OF SCANNED COPIES OF THIS PLAN SHEET.

J.C. HEDEN & ASSOCIATES, INC.
6046 CORNERSTONE CT,
SUITE 207
SAN DIEGO, CA 92121

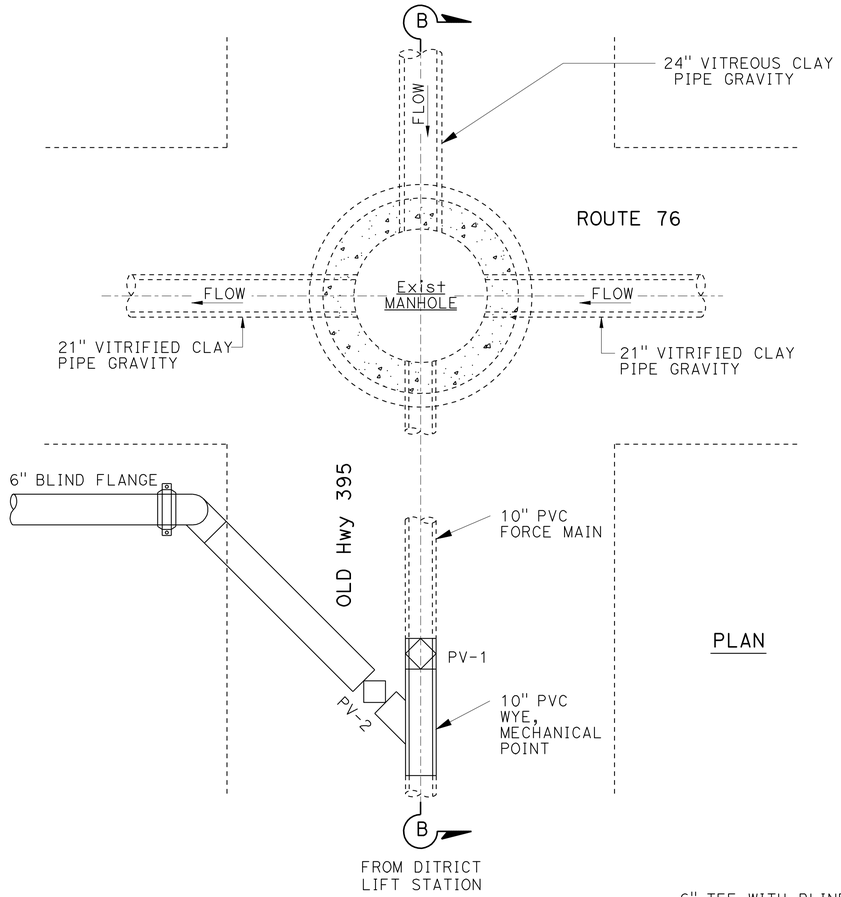

PLAN

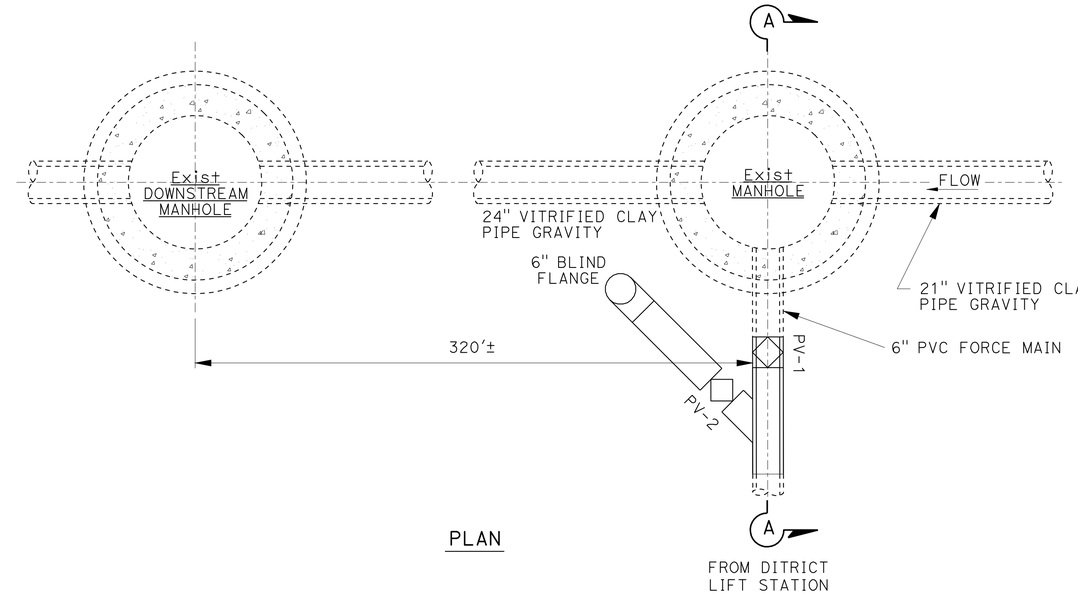

PLAN

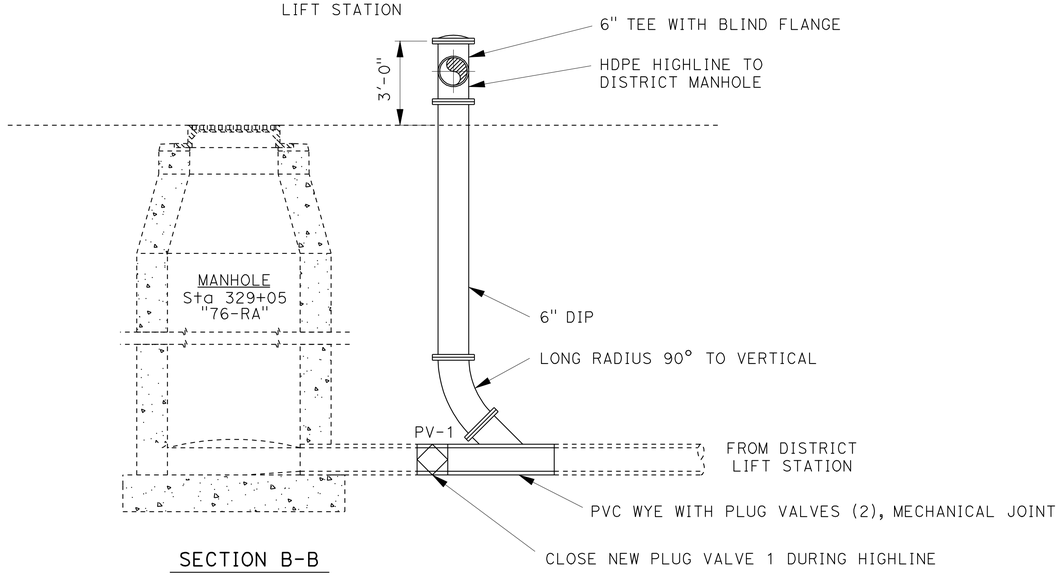

SECTION B-B

HIGHLINE No. 2 DETAIL

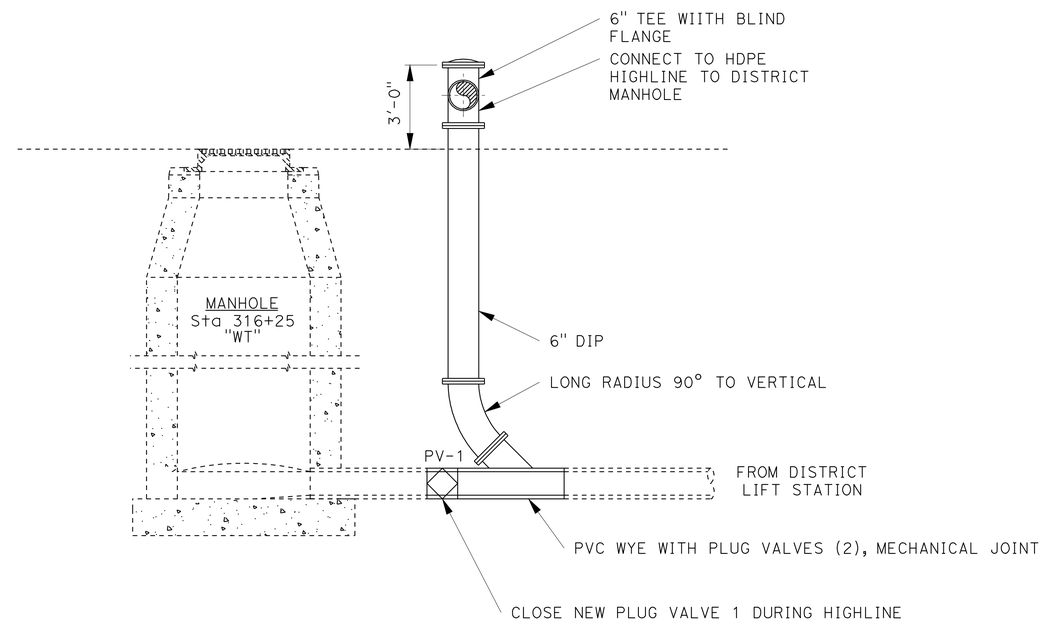

SECTION A-A

HIGHLINE No. 1 DETAIL

SANITARY SEWER DETAILS

NO SCALE

SSD-3

STATE OF CALIFORNIA - DEPARTMENT OF TRANSPORTATION
Caltrans
CONSULTANT FUNCTIONAL SUPERVISOR: JEFFREY C. HEDEN
CALCULATED-DESIGNED BY: JEFFREY C. HEDEN
CHECKED BY: ARTURO REYES
REVISED BY
DATE REVISED

LAST REVISION 03-16-12
DATE PLOTTED => 17-APR-2012
TIME PLOTTED => 12:15

Dist	COUNTY	ROUTE	POST MILES TOTAL PROJECT	SHEET No.	TOTAL SHEETS
11	SD	15,76	R46.1/R47.3, R16.7/R17.7	149	477

REGISTERED CIVIL ENGINEER 03-13-12 DATE

4-16-12
PLANS APPROVAL DATE

REGISTERED PROFESSIONAL ENGINEER JEFFREY C. HEDEN No. C31747 Exp. 12-31-12 CIVIL STATE OF CALIFORNIA

THE STATE OF CALIFORNIA OR ITS OFFICERS OR AGENTS SHALL NOT BE RESPONSIBLE FOR THE ACCURACY OR COMPLETENESS OF SCANNED COPIES OF THIS PLAN SHEET.

J.C. HEDEN & ASSOCIATES, INC.
6046 CORNERSTONE CT,
SUITE 207
SAN DIEGO, CA 92121

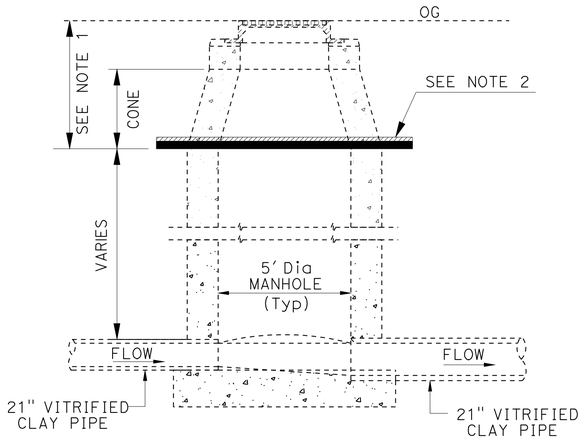

SECTION

CONCENTRIC

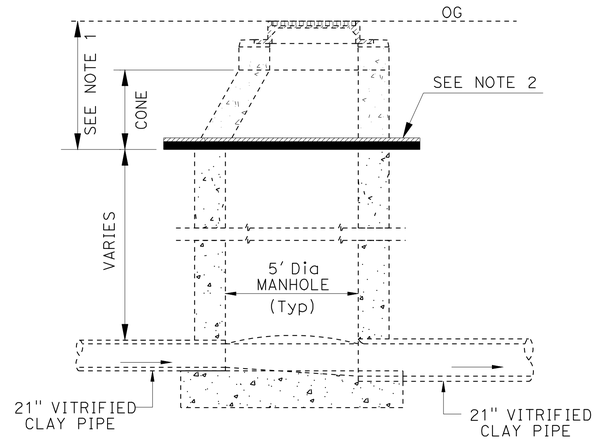

SECTION

ECCENTRIC

NOTES:

1. REMOVE CONE. GRADE RINGS. FRAME AND COVER SECTIONS.
2. SQUARE 0.75" THICK PLYWOOD (2) BENEATH 0.5" THICK STEEL PLATE (1). SIDE OF SQUARE LENGTH IS MANHOLE OUTSIDE DIAMETER PLUS 2'.
3. BACKFILL AND COMPACK UP TO OG

LOWER SEWER MANHOLE

(BELOW SUBGRADE)

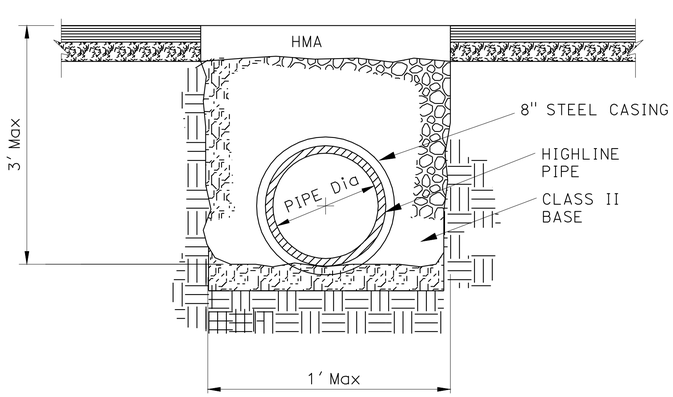

HIGHLINE No. 3 TRENCH SECTION

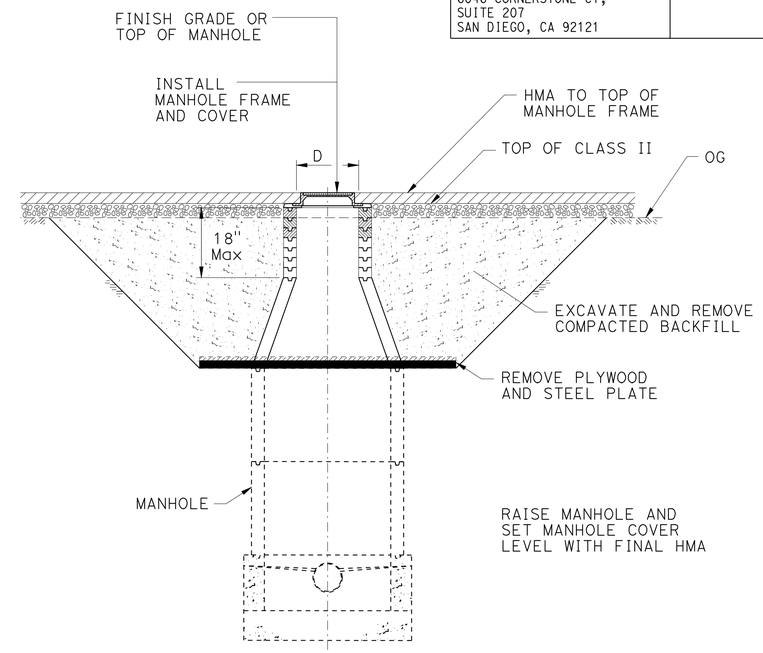

RAISING
PRECAST CONCRETE
SEWER MANHOLES

NOTES:

1. GENERAL

   A. DIMENSION "D" SHALL BE THE SAME AS THE SIZE OF MANHOLE FRAME AND COVER TO BE USED.
   B. THE CONTRACTOR MAY REUSE THE EXISTING MANHOLE FRAME AND COVER, UNLESS IT IS CALLED OUT TO BE REPLACED, OR WAS DAMAGED BY THE CONTRACTOR DURING CONSTRUCTION OPERATIONS. ITEMS DAMAGED BY THE CONTRACTOR SHALL BE REPLACED WITH IDENTICAL NEW ITEMS AT NO EXPENSE TO THE AGENCY.

2. RAISING PRECAST CONCRETE SEWER MANHOLES

   A. PRECAST CONCRETE MANHOLES TO BE RAISED LESS THAN 3" MAY BE RAISED BY APPLYING CLASS "D" MORTAR TO THE TOP OF THE Exist MANHOLE, PROVIDED THE TOTAL HEIGHT OF MORTAR, EXISTING AND NEWLY APPLIED DOES NOT EXCEED 3".
   B. WHERE THE PRECAST CONCRETE MANHOLE IS TO BE RAISED 3" OR MORE, OR WHERE THE TOTAL HEIGHT OF MORTAR, EXISTING AND NEWLY APPLIED, WOULD EXCEED 3" GRADE RINGS SHALL BE UTILIZED. CLASS "D" MORTAR MAY BE USED FOR FINAL ADJUSTMENT, BUT NOT MORE THAN 3" IN HEIGHT. WHERE RAISING THE MANHOLE WOULD RESULT IN THE UPPER SEGMENT OF THE SHAFT. INSTALL ADDITIONAL RINGS OR PIPE TO THE LOWER SEGMENT OF THE SHAFT AND REINSTALL THE REDUCER AND GRADE RINGS AS REQUIRED.

RAISE SEWER MANHOLE

SANITARY SEWER DETAILS

NO SCALE

SSD-4

REVISED BY	DATE REVISED
JEFFREY C. HEDEN	ARTURO REYES
CALCULATED-DESIGNED BY	CHECKED BY
CONSULTANT FUNCTIONAL SUPERVISOR	JEFFREY C. HEDEN

STATE OF CALIFORNIA - DEPARTMENT OF TRANSPORTATION

Caltrans

LAST REVISION 03-16-12 | DATE PLOTTED => 17-APR-2012 | TIME PLOTTED => 12:15

Dist	COUNTY	ROUTE	POST MILES TOTAL PROJECT	SHEET No.	TOTAL SHEETS
11	SD	15,76	R46.1/R47.3, R16.7/R17.7	150	477

REGISTERED CIVIL ENGINEER 03-13-12 DATE

4-16-12
PLANS APPROVAL DATE

REGISTERED PROFESSIONAL ENGINEER JEFFREY C. HEDEN No. C31747 Exp. 12-31-12 CIVIL STATE OF CALIFORNIA

THE STATE OF CALIFORNIA OR ITS OFFICERS OR AGENTS SHALL NOT BE RESPONSIBLE FOR THE ACCURACY OR COMPLETENESS OF SCANNED COPIES OF THIS PLAN SHEET.

J.C. HEDEN & ASSOCIATES, INC.
6046 CORNERSTONE CT,
SUITE 207
SAN DIEGO, CA 92121

SANITARY SEWER QUANTITIES

SHEET No.	REPLACE SEWER MANHOLE	LOWER SEWER MANHOLE	RAISE SEWER MANHOLE	STEEL PLATE AND PLYWOOD FOR MANHOLE (N)	RELOCATE SEWER AIR RELEASE AND VACUUM RELIEF VALVE
	EA	EA	EA	EA	EA
U-3		2	2	2	
U-4					1
U-8	3		2		
U-9	1	1	2	1	
TOTAL	4	3	6		1

SEWER FLOW DIVERSION PLAN (HIGH LINE)

SHEET No.	LENGTH (N)	6" DUCTILE IRON PIPE (N)	6" DUCTILE IRON WYE (N)	6" DUCTILE IRON LONG RADIUS BEND (N)	6" CONCENTRIC PLUG VALVES (N)	6" MECHANICAL JOINT COUPLING (N)	6" DUCTILE IRON BLIND FLANGE (N)
	LF	LF	EA	EA	EA	EA	EA
U-8	2,682	30	1	1	2	1	1
U-9	1,058	65	1	1	2	1	1

(N) NOT A SEPARATE PAY ITEM, FOR INFORMATION ONLY.

SANITARY SEWER QUANTITIES
SSQ-1

REVISED BY | DATE REVISED
JEFFREY C. HEDEN | ARTURO REYES
CALCULATED-DESIGNED BY | CHECKED BY
CONSULTANT FUNCTIONAL SUPERVISOR
JEFFREY C. HEDEN
STATE OF CALIFORNIA - DEPARTMENT OF TRANSPORTATION
Caltrans

LAST REVISION 03-16-12 | DATE PLOTTED => 17-APR-2012 | TIME PLOTTED => 12:15

Dist	COUNTY	ROUTE	POST MILES TOTAL PROJECT	SHEET No.	TOTAL SHEETS
11	SD	15,76	R46.1/R47.3, R16.7/R17.7	151	477

REGISTERED CIVIL ENGINEER 03-14-12 DATE

4-16-12
PLANS APPROVAL DATE

REGISTERED PROFESSIONAL ENGINEER ARTURO A. REYES No. C75491 Exp. 06-30-12 CIVIL STATE OF CALIFORNIA

THE STATE OF CALIFORNIA OR ITS OFFICERS OR AGENTS SHALL NOT BE RESPONSIBLE FOR THE ACCURACY OR COMPLETENESS OF SCANNED COPIES OF THIS PLAN SHEET.

NOTES:

1. LOCATION OF UTILITY FACILITIES SHOWN ON THESE PLANS WERE OBTAINED EITHER FROM THE OWNER'S RECORDS AND/OR FROM STATE SURVEYS.
2. LOCATION OF UTILITY LINES SHOWN ON THESE PLANS ARE APPROXIMATE. THE CONTRACTOR IS TO FIELD VERIFY OR POTHOLE IN ORDER TO DETERMINE EXACT LOCATION.
3. FOR ACCURATE RIGHT OF WAY DATA, CONTACT RIGHT OF WAY ENGINEERING AT THE DISTRICT OFFICE.

ABBREVIATIONS:

CML&C CEMENT-MORTAR LINED AND COATED
VC VITRIFIED CLAY

LEGEND:

SYMBOL	EXISTING UTILITY	OWNERS
—e— —e—	UNDERGROUND ELECTRICAL	SDG&E
—e— —(oh)—	OVERHEAD ELECTRICAL	SDG&E
—t— —t—	UNDERGROUND TELEPHONE	AT&T
—t— —(oh)—	OVERHEAD TELEPHONE	AT&T
—tv— —tv—	UNDERGROUND TELEVISION	TIME WARNER CABLE
—fo— —fo—	UNDERGROUND FIBEROPTIC	LEVEL 3 COMMUNICATIONS
—w— —w—	WATER	RAINBOW MUNICIPAL WATER
—s— —s—	SEWER	RAINBOW MUNICIPAL WATER
—E— —E—	PROPOSED UG ELECTRICAL	SDG&E
—W— —W—	PROPOSED WATER	RAINBOW MUNICIPAL WATER
—TV— —TV—	PROPOSED UG TELEVISION	TIME WARNER CABLE

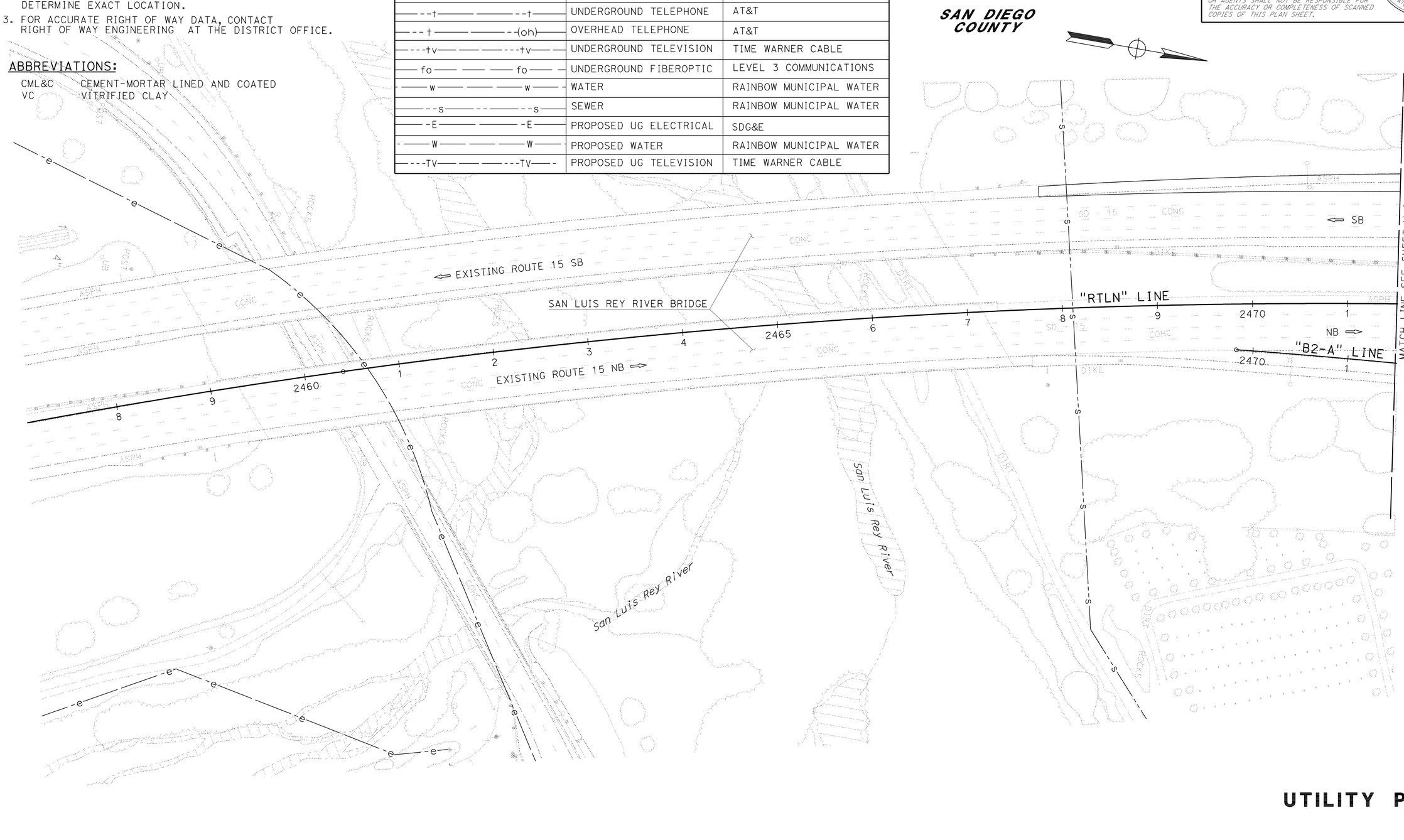

UTILITY PLAN

APPROVED FOR UTILITY INFORMATION ONLY

SCALE: 1" = 50'

U-1

STATE OF CALIFORNIA - DEPARTMENT OF TRANSPORTATION
Caltrans
PROJECT DEVELOPMENT

FUNCTIONAL SUPERVISOR: ABU-BAKR AL-JAFRI
CALCULATED-DESIGNED BY: ARTURO REYES
CHECKED BY: ANH HOANG
REVISED BY
DATE REVISED

LAST REVISION 03-16-12
DATE PLOTTED => 17-APR-2012
TIME PLOTTED => 12:15

Dist	COUNTY	ROUTE	POST MILES TOTAL PROJECT	SHEET No.	TOTAL SHEETS
11	SD	15,76	R46.1/R47.3, R16.7/R17.7	152	477

REGISTERED CIVIL ENGINEER 01-12-12 DATE

4-16-12
PLANS APPROVAL DATE

REGISTERED PROFESSIONAL ENGINEER ARTURO A. REYES No. C75491 Exp. 06-30-12 CIVIL STATE OF CALIFORNIA

THE STATE OF CALIFORNIA OR ITS OFFICERS OR AGENTS SHALL NOT BE RESPONSIBLE FOR THE ACCURACY OR COMPLETENESS OF SCANNED COPIES OF THIS PLAN SHEET.

NOTE:

1. LOCATION OF UTILITY FACILITIES SHOWN ON THESE PLANS WERE OBTAINED EITHER FROM THE OWNER'S RECORDS AND/OR FROM STATE SURVEYS.
2. LOCATION OF UTILITY LINES SHOWN ON THESE PLANS ARE APPROXIMATE. THE CONTRACTOR IS TO FIELD VERIFY OR POTHOLE IN ORDER TO DETERMINE EXACT LOCATION.
3. FOR ACCURATE RIGHT OF WAY DATA, CONTACT RIGHT OF WAY ENGINEERING AT THE DISTRICT OFFICE.

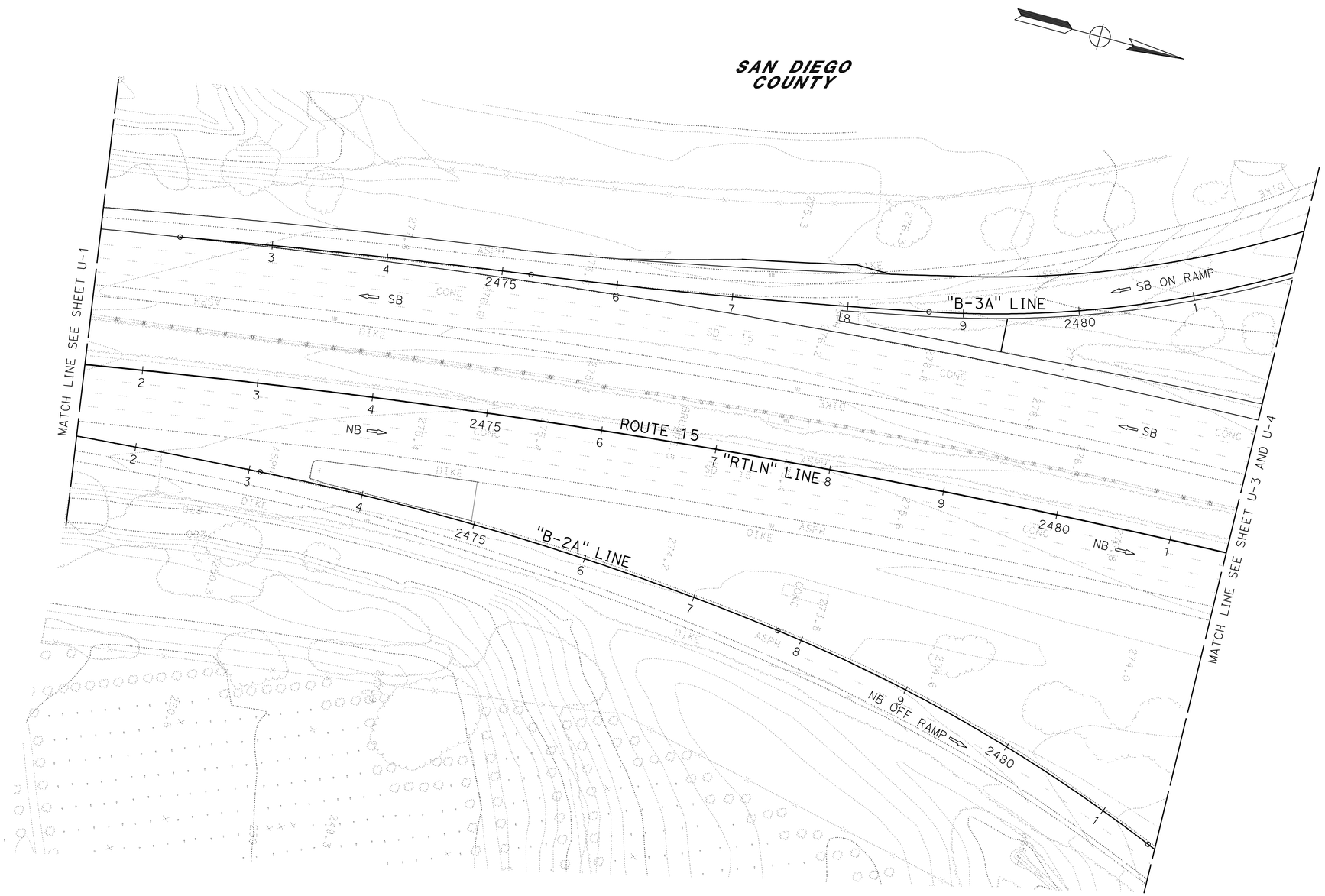

UTILITY PLAN

APPROVED FOR UTILITY INFORMATION ONLY

SCALE: 1" = 50'

U-2

STATE OF CALIFORNIA - DEPARTMENT OF TRANSPORTATION
Caltrans® PROJECT DEVELOPMENT

FUNCTIONAL SUPERVISOR: ABU-BAKR AL-JAFRI
CALCULATED-DESIGNED BY: ARTURO REYES
CHECKED BY: ANH HOANG
REVISED BY
DATE REVISED

LAST REVISION 01-21-12
DATE PLOTTED => 17-APR-2012
TIME PLOTTED => 12:15

Dist	COUNTY	ROUTE	POST MILES TOTAL PROJECT	SHEET No.	TOTAL SHEETS
11	SD	15,76	R46.1/R47.3, R16.7/R17.7	153	477

REGISTERED CIVIL ENGINEER 03-14-12 DATE

4-16-12
PLANS APPROVAL DATE

REGISTERED PROFESSIONAL ENGINEER ARTURO A. REYES No. C75491 Exp. 06-30-12 CIVIL STATE OF CALIFORNIA

THE STATE OF CALIFORNIA OR ITS OFFICERS OR AGENTS SHALL NOT BE RESPONSIBLE FOR THE ACCURACY OR COMPLETENESS OF SCANNED COPIES OF THIS PLAN SHEET.

NOTE:

1. LOCATION OF UTILITY FACILITIES SHOWN ON THESE PLANS WERE OBTAINED EITHER FROM THE OWNER'S RECORDS AND/OR FROM STATE SURVEYS.
2. LOCATION OF UTILITY LINES SHOWN ON THESE PLANS ARE APPROXIMATE. THE CONTRACTOR IS TO FIELD VERIFY OR POTHOLE IN ORDER TO DETERMINE EXACT LOCATION.
3. FOR ACCURATE RIGHT OF WAY DATA, CONTACT RIGHT OF WAY ENGINEERING AT THE DISTRICT OFFICE.

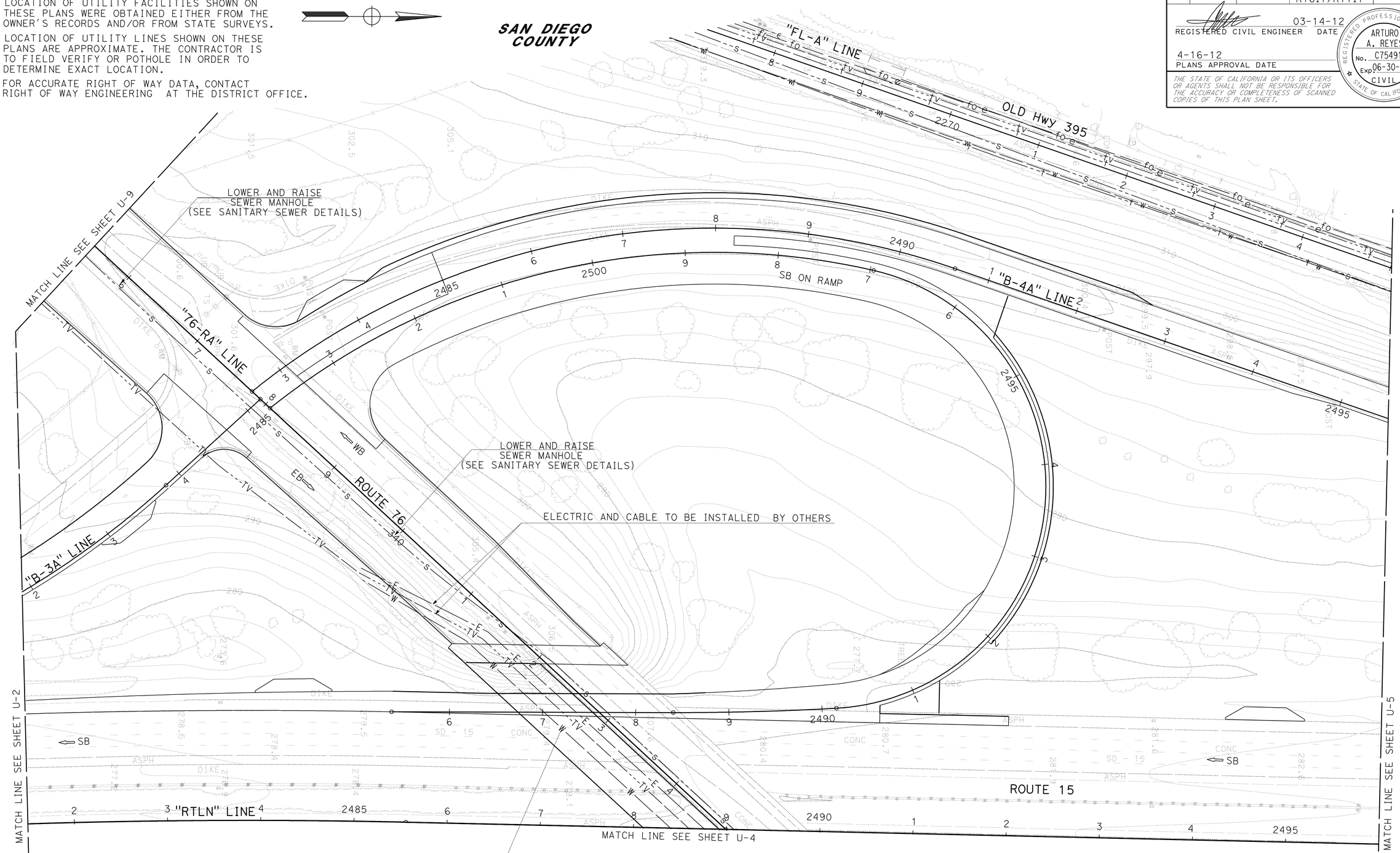

UTILITY PLAN

APPROVED FOR UTILITY INFORMATION ONLY

SCALE: 1" = 50'

U-3

STATE OF CALIFORNIA - DEPARTMENT OF TRANSPORTATION
Caltrans PROJECT DEVELOPMENT

FUNCTIONAL SUPERVISOR: ABU-BAKR AL-JAFRI
CALCULATED-DESIGNED BY: ARTURO REYES
CHECKED BY: ANH HOANG
REVISED BY
DATE REVISED

LAST REVISION 03-16-12
DATE PLOTTED => 17-APR-2012
TIME PLOTTED => 12:15

Dist	COUNTY	ROUTE	POST MILES TOTAL PROJECT	SHEET No.	TOTAL SHEETS
11	SD	15,76	R46.1/R47.3, R16.7/R17.7	154	477

REGISTERED CIVIL ENGINEER 03-14-12 DATE

4-16-12
PLANS APPROVAL DATE

REGISTERED PROFESSIONAL ENGINEER ARTURO A. REYES No. C75491 Exp. 06-30-12 CIVIL STATE OF CALIFORNIA

THE STATE OF CALIFORNIA OR ITS OFFICERS OR AGENTS SHALL NOT BE RESPONSIBLE FOR THE ACCURACY OR COMPLETENESS OF SCANNED COPIES OF THIS PLAN SHEET.

NOTES:

1. LOCATION OF UTILITY FACILITIES SHOWN ON THESE PLANS WERE OBTAINED EITHER FROM THE OWNER'S RECORDS AND/OR FROM STATE SURVEYS.
2. LOCATION OF UTILITY LINES SHOWN ON THESE PLANS ARE APPROXIMATE. THE CONTRACTOR IS TO FIELD VERIFY OR POTHOLE IN ORDER TO DETERMINE EXACT LOCATION.
3. FOR ACCURATE RIGHT OF WAY DATA, CONTACT RIGHT OF WAY ENGINEERING AT THE DISTRICT OFFICE.

SAN DIEGO COUNTY

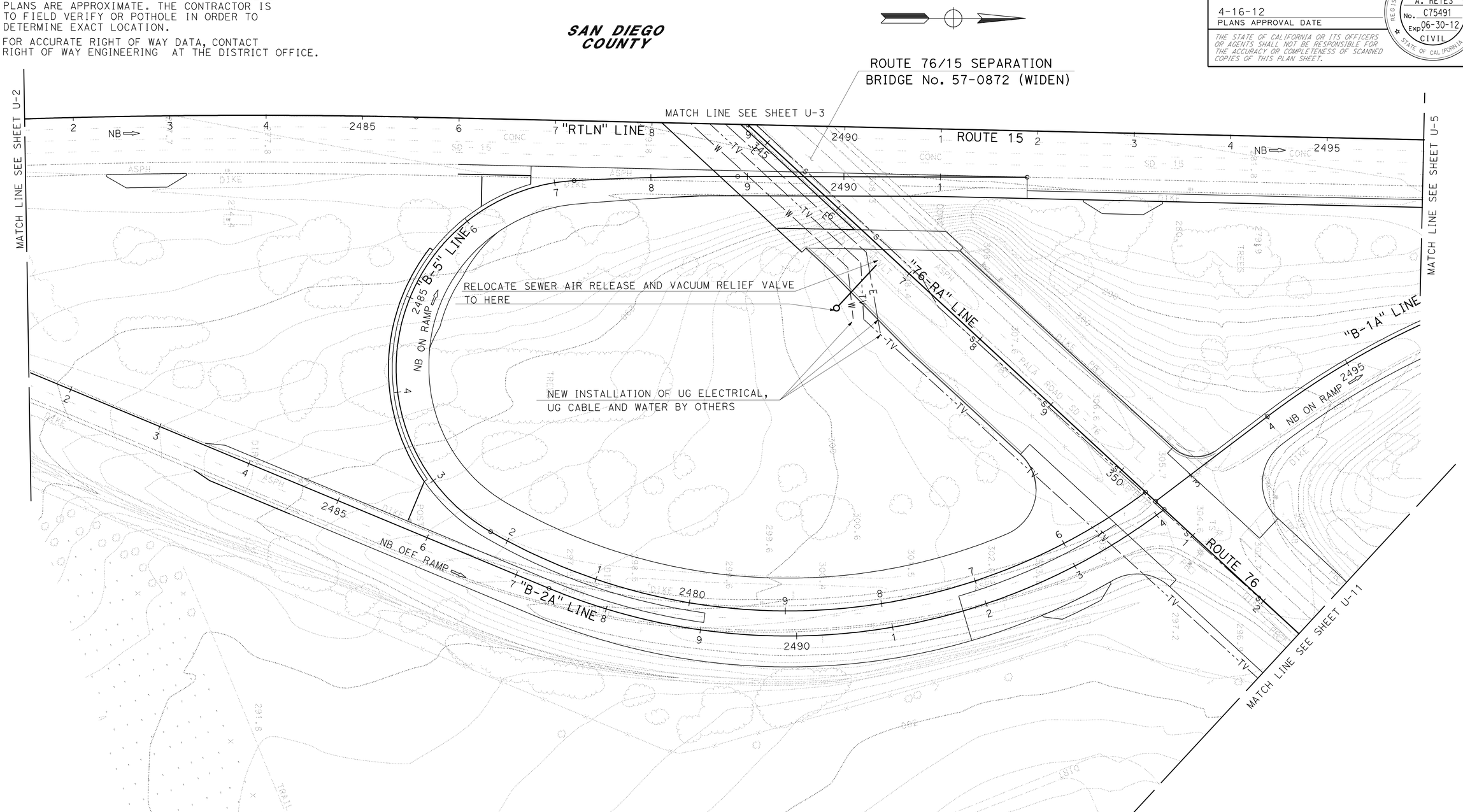

UTILITY PLAN

APPROVED FOR UTILITY INFORMATION ONLY

SCALE: 1" = 50'

U-4

STATE OF CALIFORNIA - DEPARTMENT OF TRANSPORTATION
Caltrans PROJECT DEVELOPMENT

FUNCTIONAL SUPERVISOR: ABU-BAKR AL-JAFRI
CALCULATED-DESIGNED BY: ARTURO REYES
CHECKED BY: ANH HOANG
REVISED BY
DATE REVISED

LAST REVISION 03-16-12
DATE PLOTTED => 17-APR-2012
TIME PLOTTED => 12:15

Dist	COUNTY	ROUTE	POST MILES TOTAL PROJECT	SHEET No.	TOTAL SHEETS
11	SD	15,76	R46.1/R47.3, R16.7/R17.7	155	477

REGISTERED CIVIL ENGINEER 01-12-12 DATE

4-16-12
PLANS APPROVAL DATE

REGISTERED PROFESSIONAL ENGINEER ARTURO A. REYES No. C75491 Exp. 06-30-12 CIVIL STATE OF CALIFORNIA

THE STATE OF CALIFORNIA OR ITS OFFICERS OR AGENTS SHALL NOT BE RESPONSIBLE FOR THE ACCURACY OR COMPLETENESS OF SCANNED COPIES OF THIS PLAN SHEET.

NOTE:

1. LOCATION OF UTILITY FACILITIES SHOWN ON THESE PLANS WERE OBTAINED EITHER FROM THE OWNER'S RECORDS AND/OR FROM STATE SURVEYS.
2. LOCATION OF UTILITY LINES SHOWN ON THESE PLANS ARE APPROXIMATE. THE CONTRACTOR IS TO FIELD VERIFY OR POTHOLE IN ORDER TO DETERMINE EXACT LOCATION.
3. FOR ACCURATE RIGHT OF WAY DATA, CONTACT RIGHT OF WAY ENGINEERING AT THE DISTRICT OFFICE.

SAN DIEGO COUNTY

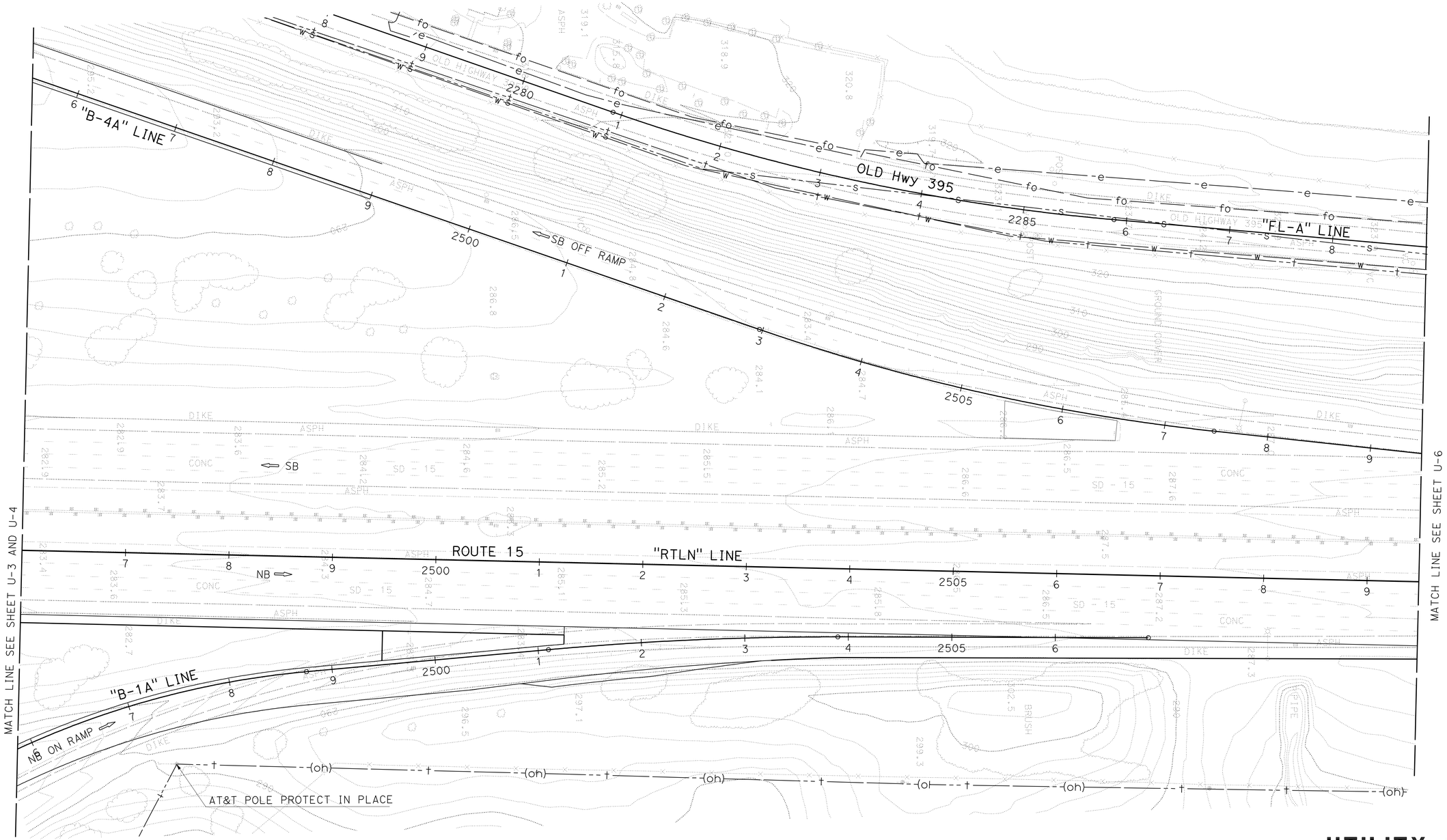

UTILITY PLAN

SCALE: 1" = 50'

U-5

APPROVED FOR UTILITY INFORMATION ONLY

STATE OF CALIFORNIA - DEPARTMENT OF TRANSPORTATION
Caltrans® PROJECT DEVELOPMENT

FUNCTIONAL SUPERVISOR: ABU-BAKR AL-JAFRI
CALCULATED-DESIGNED BY: ARTURO REYES
CHECKED BY: ANH HOANG
REVISED BY
DATE REVISED

LAST REVISION 01-21-12
DATE PLOTTED => 17-APR-2012
TIME PLOTTED => 12:15

Dist	COUNTY	ROUTE	POST MILES TOTAL PROJECT	SHEET No.	TOTAL SHEETS
11	SD	15,76	R46.1/R47.3, R16.7/R17.7	156	477

REGISTERED CIVIL ENGINEER 01-12-12 DATE

4-16-12
PLANS APPROVAL DATE

REGISTERED PROFESSIONAL ENGINEER ARTURO A. REYES No. C75491 Exp. 06-30-12 CIVIL STATE OF CALIFORNIA

THE STATE OF CALIFORNIA OR ITS OFFICERS OR AGENTS SHALL NOT BE RESPONSIBLE FOR THE ACCURACY OR COMPLETENESS OF SCANNED COPIES OF THIS PLAN SHEET.

NOTE:

1. LOCATION OF UTILITY FACILITIES SHOWN ON THESE PLANS WERE OBTAINED EITHER FROM THE OWNER'S RECORDS AND/OR FROM STATE SURVEYS.
2. LOCATION OF UTILITY LINES SHOWN ON THESE PLANS ARE APPROXIMATE. THE CONTRACTOR IS TO FIELD VERIFY OR POTHOLE IN ORDER TO DETERMINE EXACT LOCATION.
3. FOR ACCURATE RIGHT OF WAY DATA, CONTACT RIGHT OF WAY ENGINEERING AT THE DISTRICT OFFICE.

SAN DIEGO COUNTY

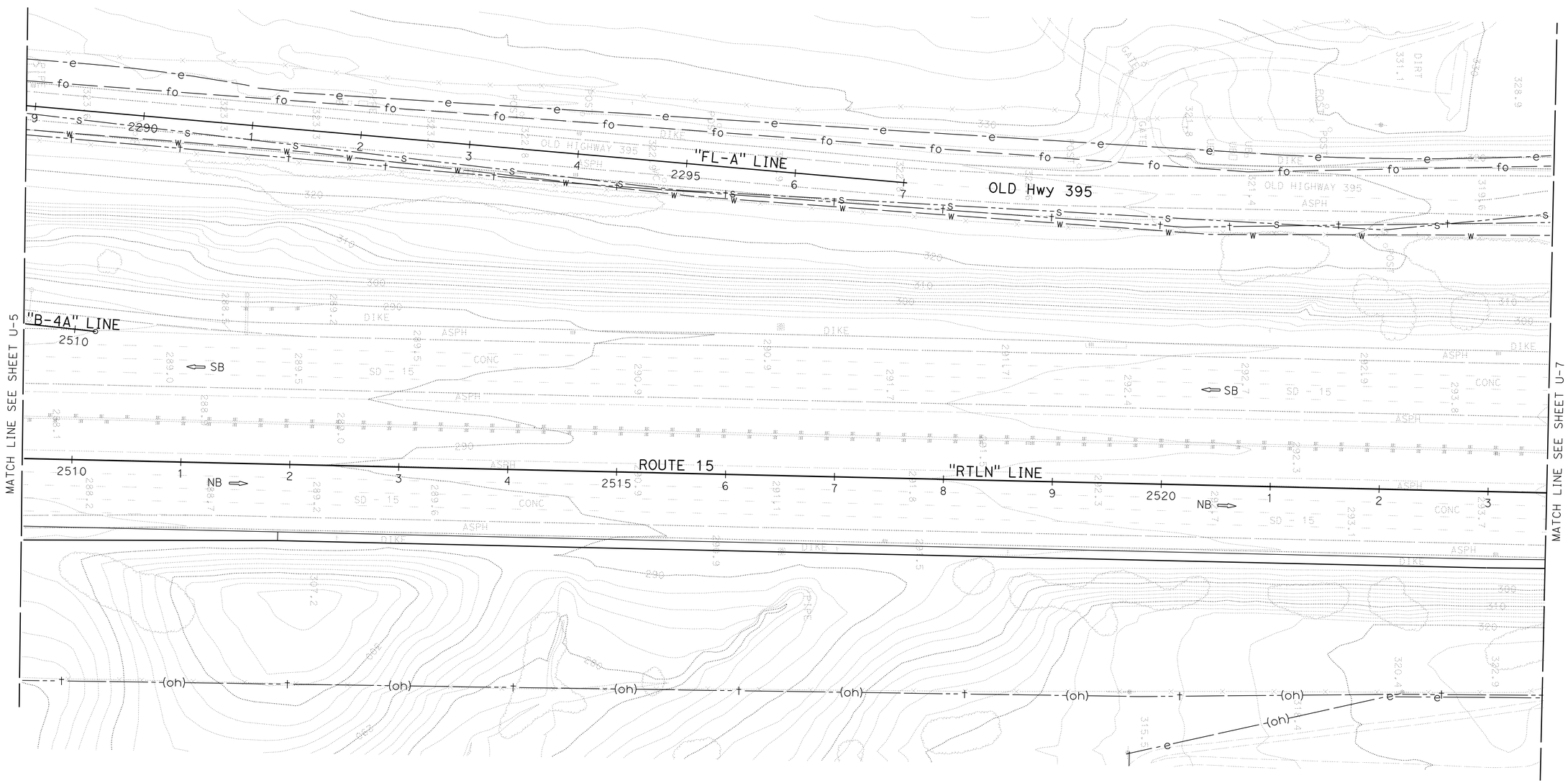

UTILITY PLAN

APPROVED FOR UTILITY INFORMATION ONLY

SCALE: 1" = 50'

U-6

STATE OF CALIFORNIA - DEPARTMENT OF TRANSPORTATION
Caltrans® PROJECT DEVELOPMENT

FUNCTIONAL SUPERVISOR: ABU-BAKR AL-JAFRI
CALCULATED-DESIGNED BY: ARTURO REYES
CHECKED BY: ANH HOANG
REVISED BY
DATE REVISED

LAST REVISION 01-21-12 | DATE PLOTTED => 17-APR-2012 | TIME PLOTTED => 12:15

Dist	COUNTY	ROUTE	POST MILES TOTAL PROJECT	SHEET No.	TOTAL SHEETS
11	SD	15,76	R46.1/R47.3, R16.7/R17.7	157	477

REGISTERED CIVIL ENGINEER 01-12-12 DATE

4-16-12
PLANS APPROVAL DATE

REGISTERED PROFESSIONAL ENGINEER ARTURO A. REYES No. C75491 Exp. 06-30-12 CIVIL STATE OF CALIFORNIA

THE STATE OF CALIFORNIA OR ITS OFFICERS OR AGENTS SHALL NOT BE RESPONSIBLE FOR THE ACCURACY OR COMPLETENESS OF SCANNED COPIES OF THIS PLAN SHEET.

NOTE:

1. LOCATION OF UTILITY FACILITIES SHOWN ON THESE PLANS WERE OBTAINED EITHER FROM THE OWNER'S RECORDS AND/OR FROM STATE SURVEYS.
2. LOCATION OF UTILITY LINES SHOWN ON THESE PLANS ARE APPROXIMATE. THE CONTRACTOR IS TO FIELD VERIFY OR POTHOLE IN ORDER TO DETERMINE EXACT LOCATION.
3. FOR ACCURATE RIGHT OF WAY DATA, CONTACT RIGHT OF WAY ENGINEERING AT THE DISTRICT OFFICE.

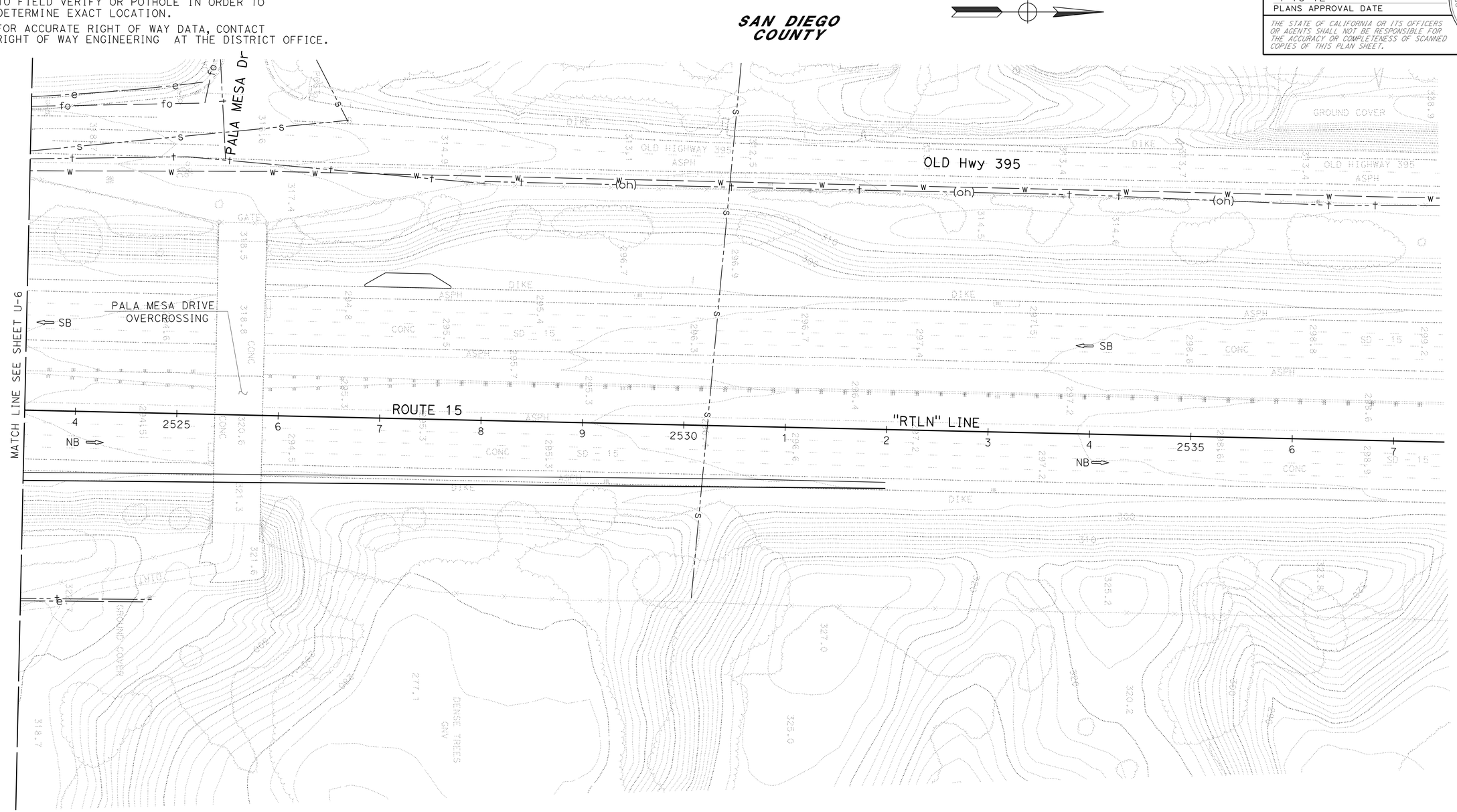

APPROVED FOR UTILITY INFORMATION ONLY

UTILITY PLAN

SCALE: 1" = 50'

U-7

STATE OF CALIFORNIA - DEPARTMENT OF TRANSPORTATION

Caltrans

FUNCTIONAL SUPERVISOR: ABU-BAKR AL-JAFRI

CALCULATED-DESIGNED BY: ARTURO REYES

CHECKED BY: ANH HOANG

REVISED BY / DATE REVISED

LAST REVISION 01-21-12 | DATE PLOTTED => 17-APR-2012 | TIME PLOTTED => 12:15

BORDER LAST REVISED 7/2/2010 | USERNAME => s124496 | DGN FILE => 1100020469ka007.dgn | RELATIVE BORDER SCALE IS IN INCHES 0 1 2 3 | UNIT 2796 | PROJECT NUMBER & PHASE 11000204691

Dist	COUNTY	ROUTE	POST MILES TOTAL PROJECT	SHEET No.	TOTAL SHEETS
11	SD	15,76	R46.1/R47.3, R16.7/R17.7	158	477

REGISTERED CIVIL ENGINEER 03-14-12 DATE

4-16-12
PLANS APPROVAL DATE

REGISTERED PROFESSIONAL ENGINEER ARTURO A. REYES No. C75491 Exp. 06-30-12 CIVIL STATE OF CALIFORNIA

THE STATE OF CALIFORNIA OR ITS OFFICERS OR AGENTS SHALL NOT BE RESPONSIBLE FOR THE ACCURACY OR COMPLETENESS OF SCANNED COPIES OF THIS PLAN SHEET.

NOTES:

1. LOCATION OF UTILITY FACILITIES SHOWN ON THESE PLANS WERE OBTAINED EITHER FROM THE OWNER'S RECORDS AND/OR FROM STATE SURVEYS.
2. LOCATION OF UTILITY LINES SHOWN ON THESE PLANS ARE APPROXIMATE. THE CONTRACTOR IS TO FIELD VERIFY OR POTHOLE IN ORDER TO DETERMINE EXACT LOCATION.
3. FOR ACCURATE RIGHT OF WAY DATA, CONTACT RIGHT OF WAY ENGINEERING AT THE DISTRICT OFFICE.

SAN DIEGO COUNTY

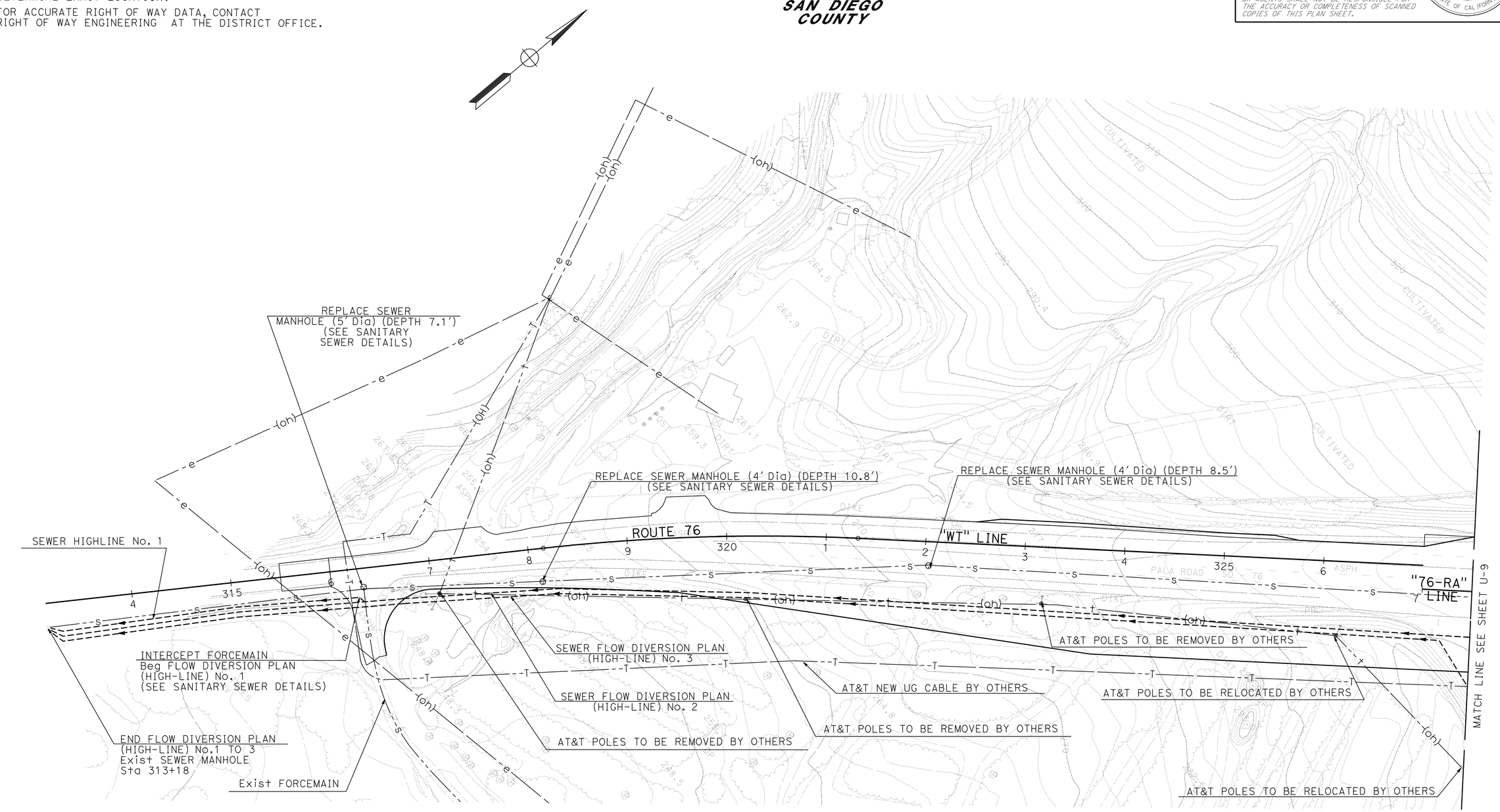

UTILITY PLAN

APPROVED FOR UTILITY INFORMATION ONLY

SCALE: 1" = 50'

U-8

STATE OF CALIFORNIA - DEPARTMENT OF TRANSPORTATION
Caltrans® PROJECT DEVELOPMENT

FUNCTIONAL SUPERVISOR: ABU-BAKR AL-JAFRI
CALCULATED-DESIGNED BY: ARTURO REYES
CHECKED BY: ANH HOANG
REVISED BY
DATE REVISED

LAST REVISION DATE PLOTTED => 17-APR-2012
03-16-12 TIME PLOTTED => 12:16

Dist	COUNTY	ROUTE	POST MILES TOTAL PROJECT	SHEET No.	TOTAL SHEETS
11	SD	15,76	R46.1/R47.3, R16.7/R17.7	159	477

REGISTERED CIVIL ENGINEER 03-14-12 DATE

4-16-12
PLANS APPROVAL DATE

REGISTERED PROFESSIONAL ENGINEER
ARTURO A. REYES
No. C75491
Exp. 06-30-12
CIVIL
STATE OF CALIFORNIA

THE STATE OF CALIFORNIA OR ITS OFFICERS OR AGENTS SHALL NOT BE RESPONSIBLE FOR THE ACCURACY OR COMPLETENESS OF SCANNED COPIES OF THIS PLAN SHEET.

NOTES:

1. LOCATION OF UTILITY FACILITIES SHOWN ON THESE PLANS WERE OBTAINED EITHER FROM THE OWNER'S RECORDS AND/OR FROM STATE SURVEYS.
2. LOCATION OF UTILITY LINES SHOWN ON THESE PLANS ARE APPROXIMATE. THE CONTRACTOR IS TO FIELD VERIFY OR POTHOLE IN ORDER TO DETERMINE EXACT LOCATION.
3. FOR ACCURATE RIGHT OF WAY DATA, CONTACT RIGHT OF WAY ENGINEERING AT THE DISTRICT OFFICE.

SAN DIEGO COUNTY

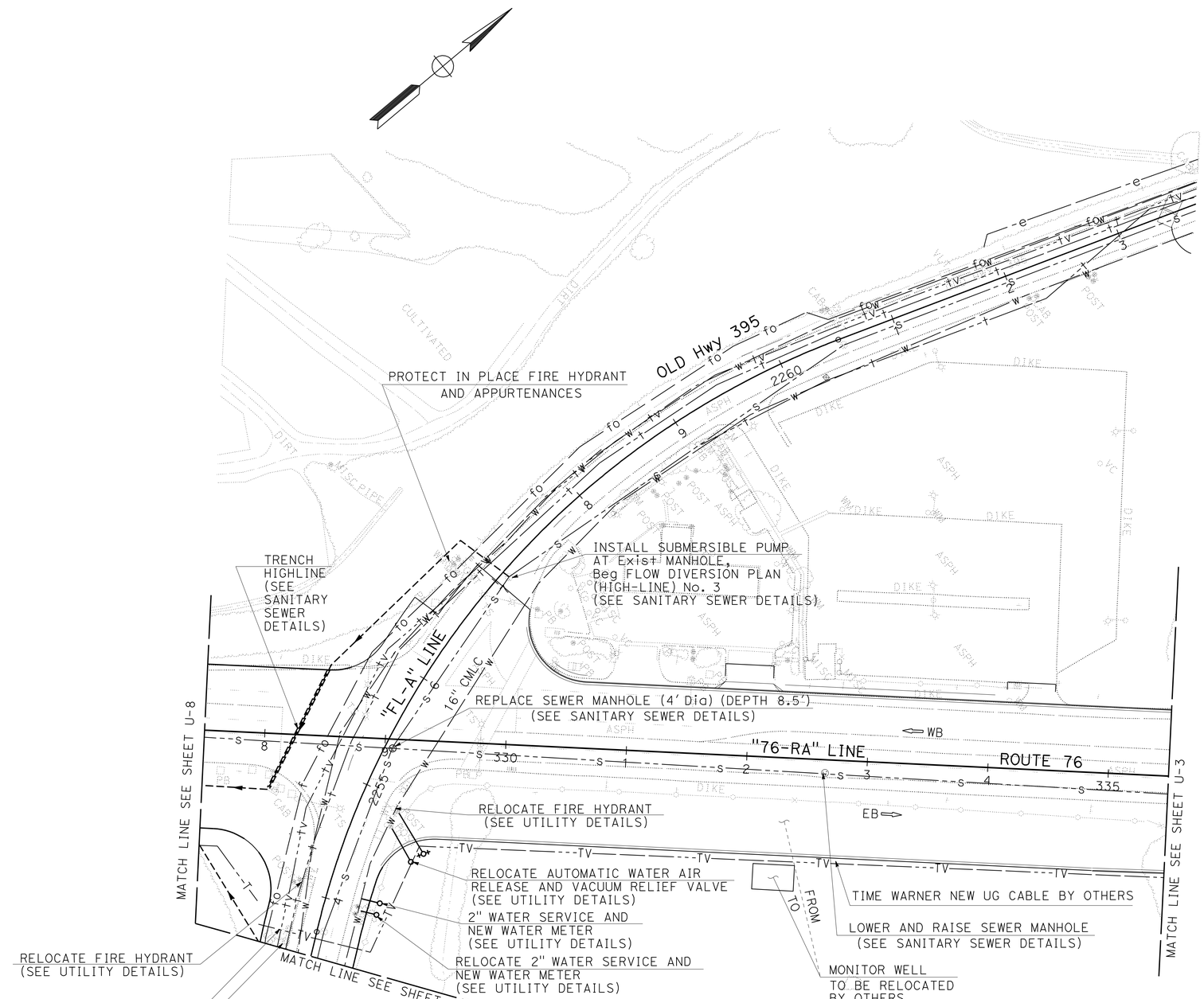

APPROVED FOR UTILITY INFORMATION ONLY

UTILITY PLAN

SCALE: 1" = 50'

U-9

STATE OF CALIFORNIA - DEPARTMENT OF TRANSPORTATION
Caltrans® PROJECT DEVELOPMENT

FUNCTIONAL SUPERVISOR: ABU-BAKR AL-JAFRI
CALCULATED-DESIGNED BY: ARTURO REYES
CHECKED BY: ANH HOANG
REVISED BY
DATE REVISED

LAST REVISION 03-16-12
DATE PLOTTED => 17-APR-2012
TIME PLOTTED => 12:16

Dist	COUNTY	ROUTE	POST MILES TOTAL PROJECT	SHEET No.	TOTAL SHEETS
11	SD	15,76	R46.1/R47.3, R16.7/R17.7	160	477

REGISTERED CIVIL ENGINEER 03-14-12 DATE

4-16-12
PLANS APPROVAL DATE

REGISTERED PROFESSIONAL ENGINEER ARTURO A. REYES No. C75491 Exp. 06-30-12 CIVIL STATE OF CALIFORNIA

THE STATE OF CALIFORNIA OR ITS OFFICERS OR AGENTS SHALL NOT BE RESPONSIBLE FOR THE ACCURACY OR COMPLETENESS OF SCANNED COPIES OF THIS PLAN SHEET.

NOTES:

1. LOCATION OF UTILITY FACILITIES SHOWN ON THESE PLANS WERE OBTAINED EITHER FROM THE OWNER'S RECORDS AND/OR FROM STATE SURVEYS.
2. LOCATION OF UTILITY LINES SHOWN ON THESE PLANS ARE APPROXIMATE. THE CONTRACTOR IS TO FIELD VERIFY OR POTHOLE IN ORDER TO DETERMINE EXACT LOCATION.
3. FOR ACCURATE RIGHT OF WAY DATA, CONTACT RIGHT OF WAY ENGINEERING AT THE DISTRICT OFFICE.

SAN DIEGO COUNTY

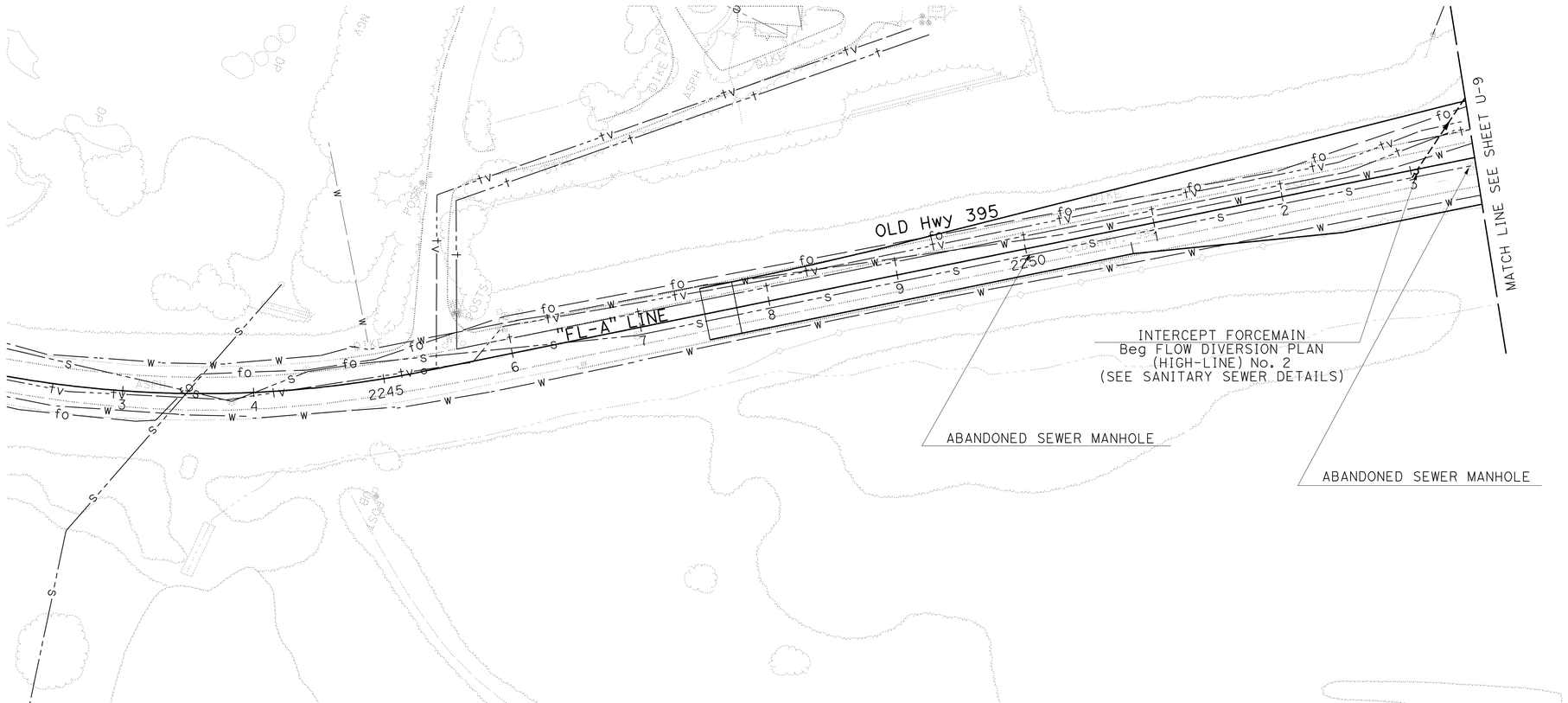

APPROVED FOR UTILITY INFORMATION ONLY

UTILITY PLAN

SCALE: 1" = 50'

U-10

STATE OF CALIFORNIA - DEPARTMENT OF TRANSPORTATION
Caltrans PROJECT DEVELOPMENT

FUNCTIONAL SUPERVISOR: ABU-BAKR AL-JAFRI
CALCULATED-DESIGNED BY: ARTURO REYES
CHECKED BY: ANH HOANG
REVISED BY
DATE REVISED

LAST REVISION 03-16-12 | DATE PLOTTED => 17-APR-2012 | TIME PLOTTED => 12:16

Dist	COUNTY	ROUTE	POST MILES TOTAL PROJECT	SHEET No.	TOTAL SHEETS
11	SD	15,76	R46.1/R47.3, R16.7/R17.7	161	477

01-12-12
REGISTERED CIVIL ENGINEER DATE

4-16-12
PLANS APPROVAL DATE

REGISTERED PROFESSIONAL ENGINEER
ARTURO A. REYES
No. C75491
Exp. 06-30-12
CIVIL
STATE OF CALIFORNIA

THE STATE OF CALIFORNIA OR ITS OFFICERS OR AGENTS SHALL NOT BE RESPONSIBLE FOR THE ACCURACY OR COMPLETENESS OF SCANNED COPIES OF THIS PLAN SHEET.

NOTE:

1. LOCATION OF UTILITY FACILITIES SHOWN ON THESE PLANS WERE OBTAINED EITHER FROM THE OWNER'S RECORDS AND/OR FROM STATE SURVEYS.
2. LOCATION OF UTILITY LINES SHOWN ON THESE PLANS ARE APPROXIMATE. THE CONTRACTOR IS TO FIELD VERIFY OR POTHOLE IN ORDER TO DETERMINE EXACT LOCATION.
3. FOR ACCURATE RIGHT OF WAY DATA, CONTACT RIGHT OF WAY ENGINEERING AT THE DISTRICT OFFICE.

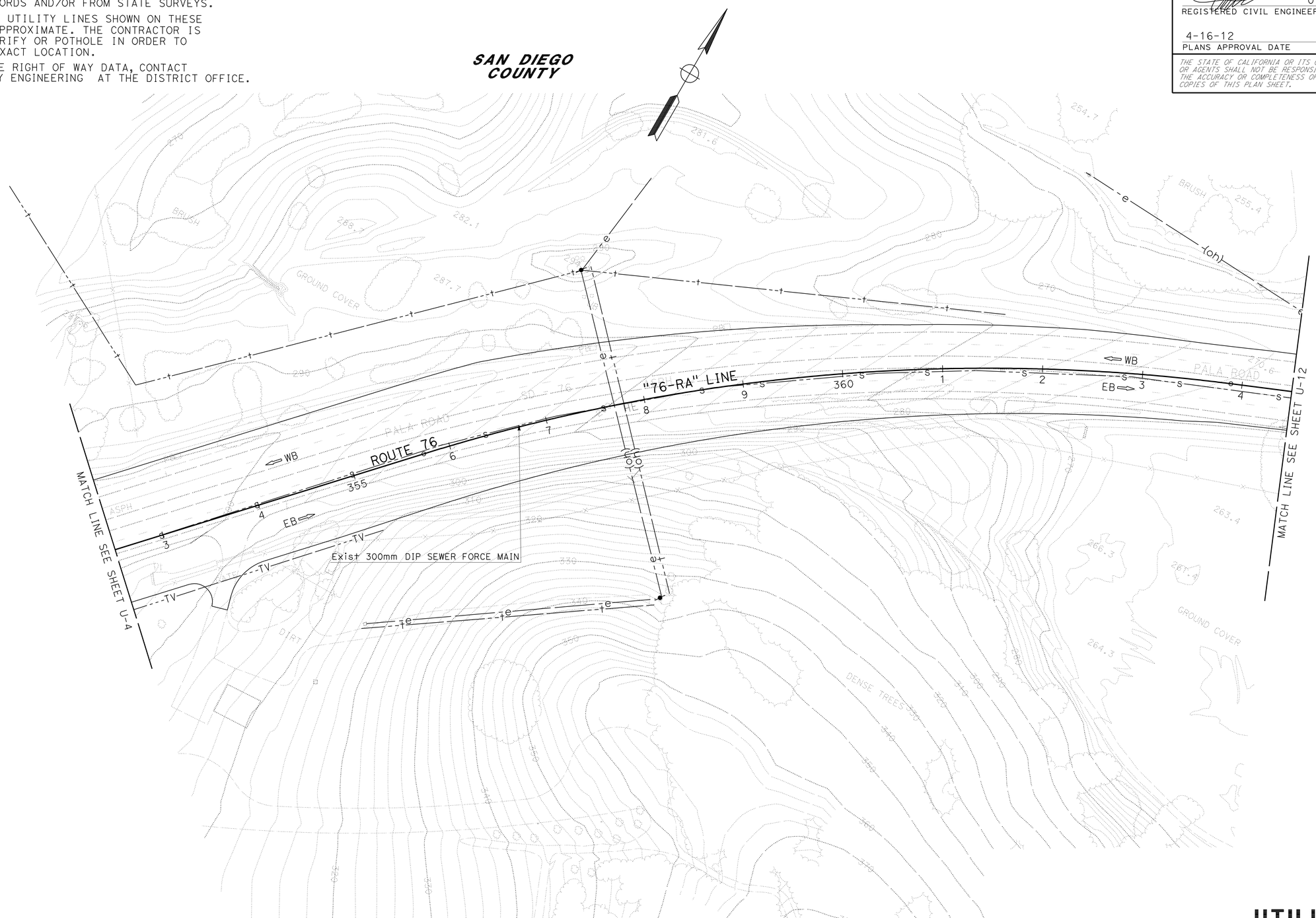

APPROVED FOR UTILITY INFORMATION ONLY

UTILITY PLAN

SCALE: 1" = 50'

U-11

STATE OF CALIFORNIA - DEPARTMENT OF TRANSPORTATION
Caltrans® PROJECT DEVELOPMENT

FUNCTIONAL SUPERVISOR: ABU-BAKR AL-JAFRI
CALCULATED-DESIGNED BY: ARTURO REYES
CHECKED BY: ANH HOANG
REVISED BY
DATE REVISED

LAST REVISION 01-21-12
DATE PLOTTED => 17-APR-2012
TIME PLOTTED => 12:16

Dist	COUNTY	ROUTE	POST MILES TOTAL PROJECT	SHEET No.	TOTAL SHEETS
11	SD	15,76	R46.1/R47.3, R16.7/R17.7	162	477

REGISTERED CIVIL ENGINEER 01-12-12 DATE

4-16-12
PLANS APPROVAL DATE

REGISTERED PROFESSIONAL ENGINEER ARTURO A. REYES No. C75491 Exp. 06-30-12 CIVIL STATE OF CALIFORNIA

THE STATE OF CALIFORNIA OR ITS OFFICERS OR AGENTS SHALL NOT BE RESPONSIBLE FOR THE ACCURACY OR COMPLETENESS OF SCANNED COPIES OF THIS PLAN SHEET.

NOTE:

1. LOCATION OF UTILITY FACILITIES SHOWN ON THESE PLANS WERE OBTAINED EITHER FROM THE OWNER'S RECORDS AND/OR FROM STATE SURVEYS.
2. LOCATION OF UTILITY LINES SHOWN ON THESE PLANS ARE APPROXIMATE. THE CONTRACTOR IS TO FIELD VERIFY OR POTHOLE IN ORDER TO DETERMINE EXACT LOCATION.
3. FOR ACCURATE RIGHT OF WAY DATA, CONTACT RIGHT OF WAY ENGINEERING AT THE DISTRICT OFFICE.

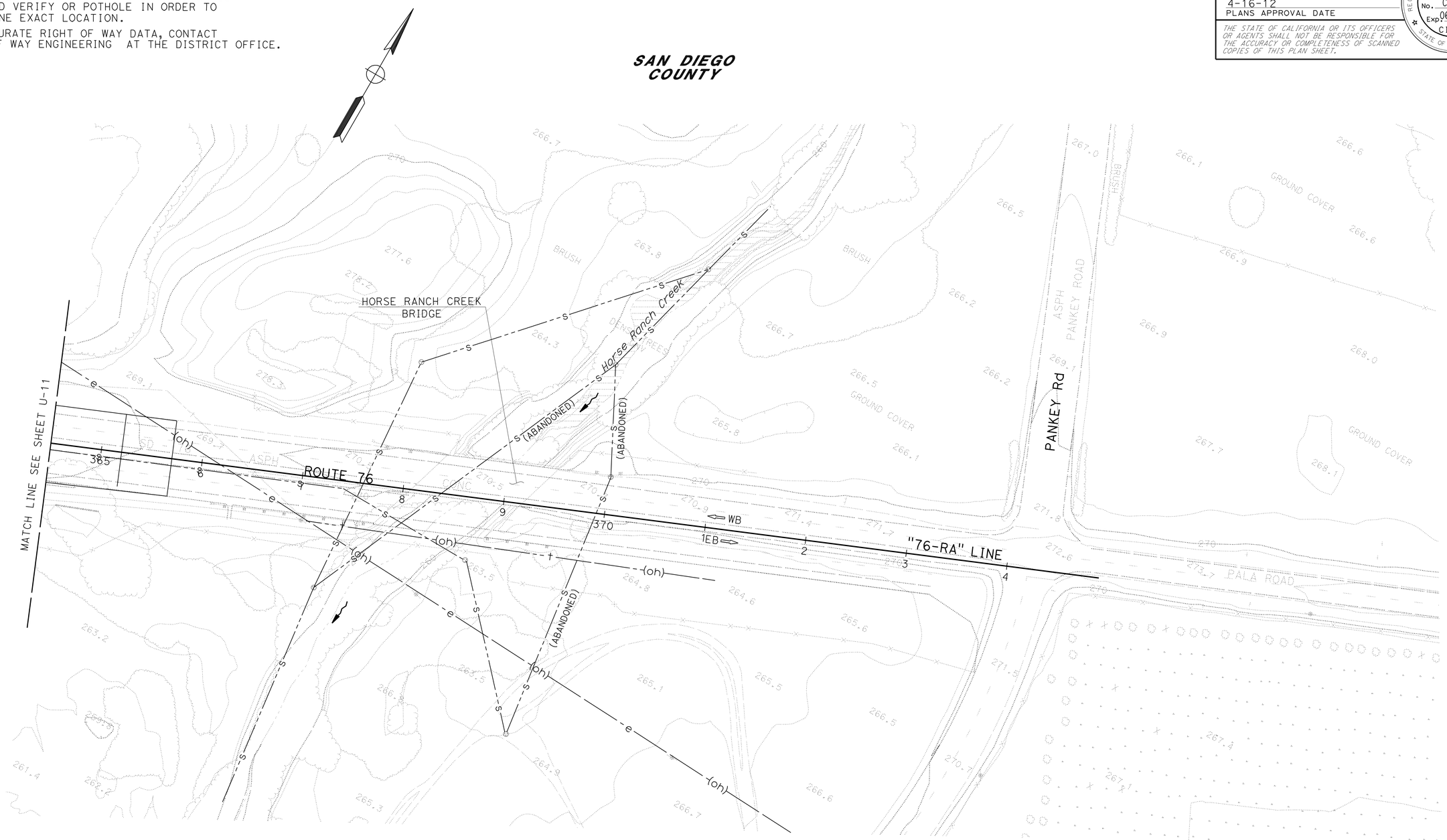

APPROVED FOR UTILITY INFORMATION ONLY

UTILITY PLAN

SCALE: 1" = 50'

U-12

STATE OF CALIFORNIA - DEPARTMENT OF TRANSPORTATION
Caltrans® PROJECT DEVELOPMENT

FUNCTIONAL SUPERVISOR: ABU-BAKR AL-JAFRI
CALCULATED-DESIGNED BY: ANH HOANG
CHECKED BY: ARTURO REYES
REVISED BY
DATE REVISED

LAST REVISION 01-21-12
DATE PLOTTED => 17-APR-2012
TIME PLOTTED => 12:16

Dist	COUNTY	ROUTE	POST MILES TOTAL PROJECT	SHEET No.	TOTAL SHEETS
11	SD	15,76	R46.1/R47.3, R16.7/R17.7	163	477

REGISTERED CIVIL ENGINEER 03-13-12 DATE

4-16-12
PLANS APPROVAL DATE

REGISTERED PROFESSIONAL ENGINEER JEFFREY C. HEDEN No. C31747 Exp. 12-31-12 CIVIL STATE OF CALIFORNIA

THE STATE OF CALIFORNIA OR ITS OFFICERS OR AGENTS SHALL NOT BE RESPONSIBLE FOR THE ACCURACY OR COMPLETENESS OF SCANNED COPIES OF THIS PLAN SHEET.

J.C. HEDEN & ASSOCIATES, INC.
6046 CORNERSTONE CT,
SUITE 207
SAN DIEGO, CA 92121

SAN DIEGO COUNTY

NOTES:

1. LOCATION OF UTILITY FACILITIES SHOWN ON THESE PLANS WERE OBTAINED EITHER FROM THE OWNER'S RECORDS AND/OR FROM STATE SURVEYS.
2. LOCATION OF UTILITY LINES SHOWN ON THESE PLANS ARE APPROXIMATE. THE CONTRACTOR IS TO FIELD VERIFY OR POTHOLE IN ORDER TO DETERMINE EXACT LOCATION.
3. FOR ACCURATE RIGHT OF WAY DATA, CONTACT RIGHT OF WAY ENGINEERING AT THE DISTRICT OFFICE.

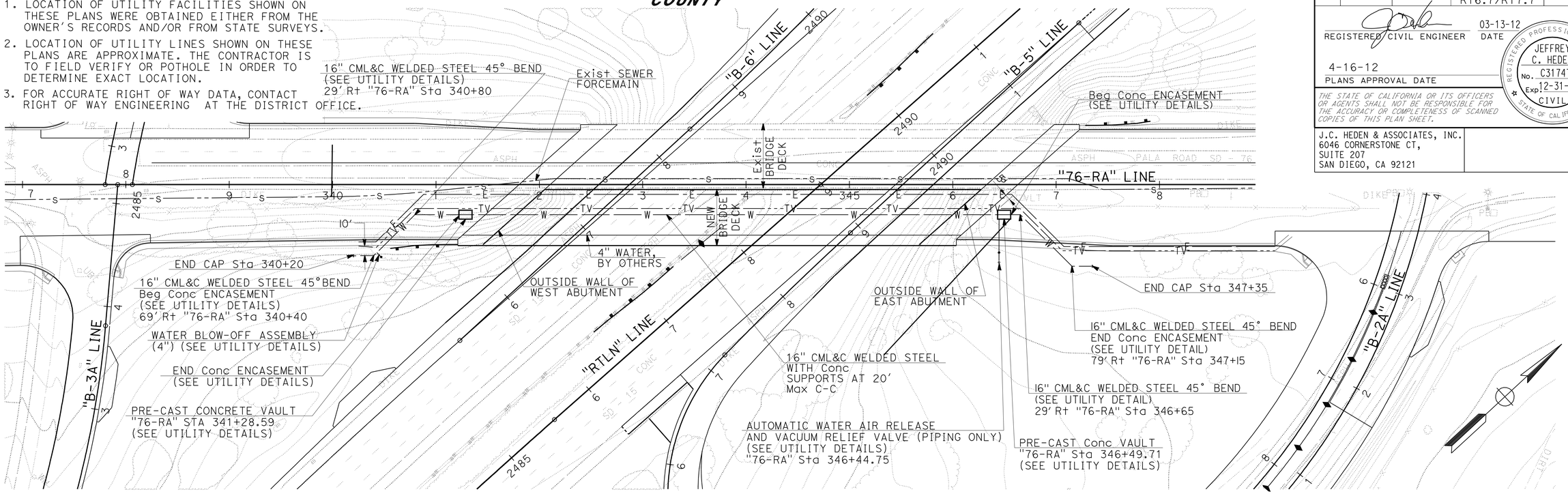

PLAN

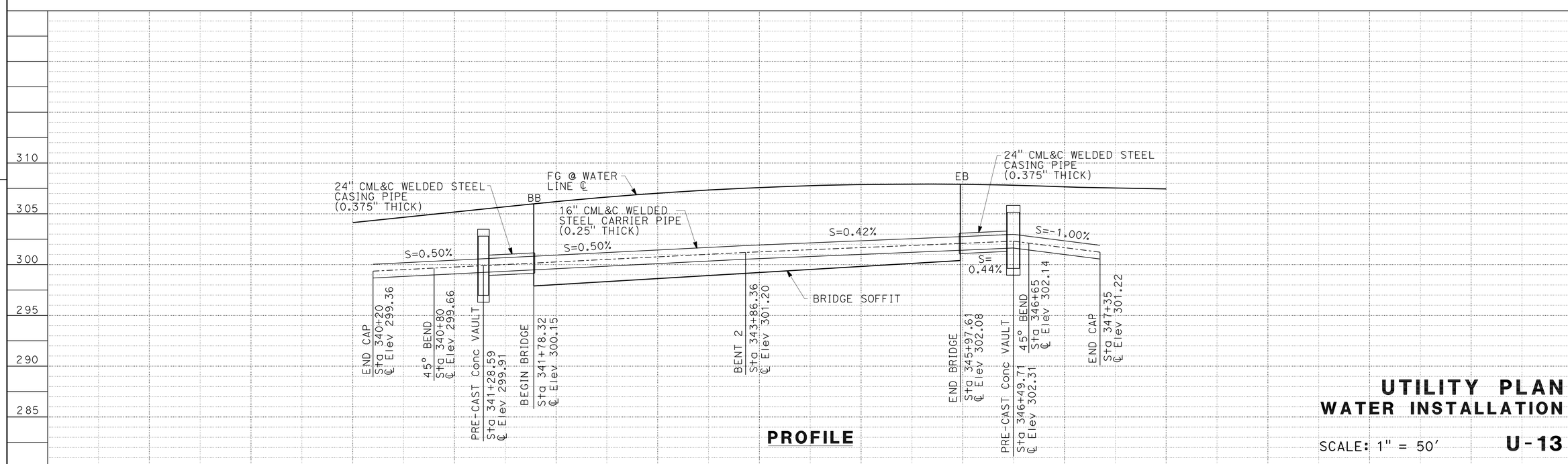

PROFILE

UTILITY PLAN
WATER INSTALLATION

SCALE: 1" = 50'

U-13

APPROVED FOR UTILITY INFORMATION ONLY

STATE OF CALIFORNIA - DEPARTMENT OF TRANSPORTATION

Caltrans

CONSULTANT FUNCTIONAL SUPERVISOR: JEFFREY C. HEDEN

CALCULATED-DESIGNED BY: JEFFREY C. HEDEN

CHECKED BY: ARTURO REYES

REVISED BY

DATE REVISED

LAST REVISION 03-16-12

DATE PLOTTED => 17-APR-2012
TIME PLOTTED => 12:16

Dist	COUNTY	ROUTE	POST MILES TOTAL PROJECT	SHEET No.	TOTAL SHEETS
11	SD	15,76	R46.1/R47.3, R16.7/R17.7	164	477

REGISTERED CIVIL ENGINEER 03-13-12 DATE

4-16-12
PLANS APPROVAL DATE

REGISTERED PROFESSIONAL ENGINEER JEFFREY C. HEDEN No. C31747 Exp. 12-31-12 CIVIL STATE OF CALIFORNIA

THE STATE OF CALIFORNIA OR ITS OFFICERS OR AGENTS SHALL NOT BE RESPONSIBLE FOR THE ACCURACY OR COMPLETENESS OF SCANNED COPIES OF THIS PLAN SHEET.

J.C. HEDEN & ASSOCIATES, INC.
6046 CORNERSTONE CT,
SUITE 207
SAN DIEGO, CA 92121

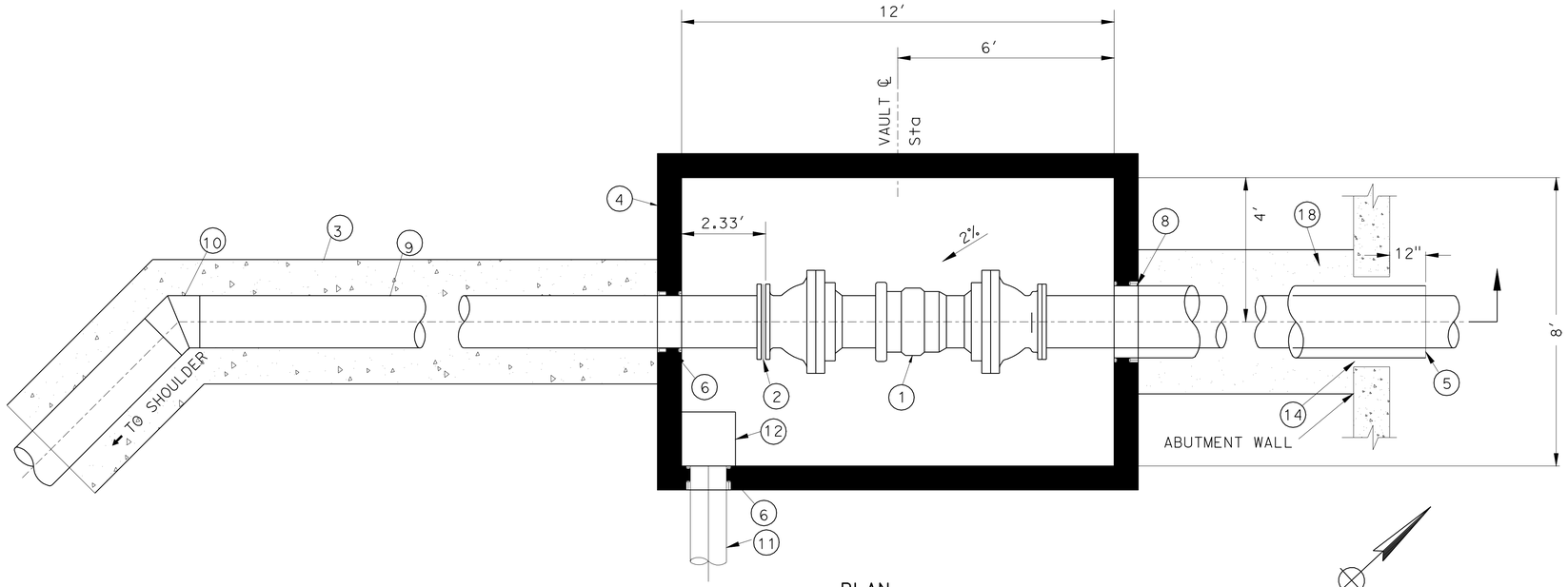

PLAN

Sta 341+28.59 "76-RA" LINE

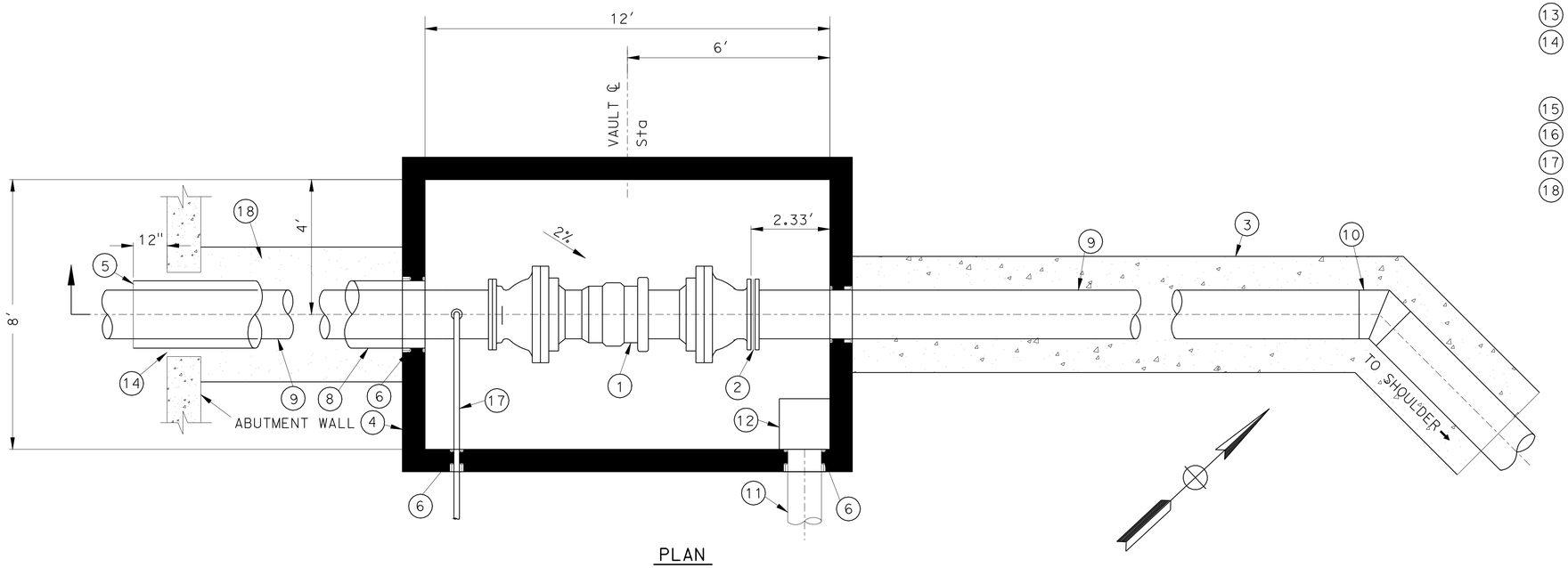

PLAN

Sta 346+49.71 "76-RA" LINE

WORK OR MATERIALS

1. 16" EBAA FLEX-TEND FORCE BALANCED FLEXIBLE EXPANSION JOINT, FLANGED (CLASS E), OR EQUAL
2. INSULATING FLANGE KIT
3. CONCRETE ENCASEMENT (SEE UTILITY DETAILS)
4. 5 SIDED PRE-CAST CONCRETE VAULT
5. STAINLESS STEEL CASING SPACERS (SEE UTILITY DETAILS)
6. WALL PENETRATION (SEE UTILITY DETAILS)
7. LIFTING EYE (4 EA)
8. 24" CML&C WELDED STEEL CASING PIPE, t=0.375"
9. 16" CML&C WELDED STEEL CARRIER PIPE, t=0.25"
10. 16" CML&C WELDED STEEL 45° BEND, t=0.25"
11. 8" DUCTILE IRON DRAIN PIPE (SEE DRAINAGE PROFILES)
12. 18" SQUARE x 8" DEEP SUMP TO FIT DUCTILE IRON DRAIN PIPE
13. PIPE SADDLE SUPPORT (SEE UTILITY DETAILS)
14. FILL SPACE BETWEEN ABUTMENT AND CASING WITH MORTAR AFTER TIGHTLY WRAPPING CASING WITH TWO (2) LAYERS OF 15 lb BUILDING PAPER, SEE STANDARD PLANS.
15. PRE-CAST CONCRETE VAULT TOP
16. ALUMINUM GRATING OVER SUMP (SEE UTILITY DETAILS)
17. 2" GALVANIZED STEEL PIPE
18. STEEL CASING PIPE ZONE AND TRENCH BACKFILL (SEE UTILITY DETAILS)

PRE-CAST CONCRETE VAULT

UTILITY DETAILS

NO SCALE

UD-1

STATE OF CALIFORNIA - DEPARTMENT OF TRANSPORTATION
Caltrans

CONSULTANT FUNCTIONAL SUPERVISOR: JEFFREY C. HEDEN
CALCULATED-DESIGNED BY: JEFFREY C. HEDEN
CHECKED BY: ARTURO REYES
REVISED BY
DATE REVISED

LAST REVISION 03-16-12
DATE PLOTTED => 17-APR-2012
TIME PLOTTED => 12:16

Dist	COUNTY	ROUTE	POST MILES TOTAL PROJECT	SHEET No.	TOTAL SHEETS
11	SD	15,76	R46.1/R47.3, R16.7/R17.7	165	477

REGISTERED CIVIL ENGINEER 03-13-12 DATE

4-16-12
PLANS APPROVAL DATE

REGISTERED PROFESSIONAL ENGINEER JEFFREY C. HEDEN No. C31747 Exp. 12-31-12 CIVIL STATE OF CALIFORNIA

THE STATE OF CALIFORNIA OR ITS OFFICERS OR AGENTS SHALL NOT BE RESPONSIBLE FOR THE ACCURACY OR COMPLETENESS OF SCANNED COPIES OF THIS PLAN SHEET.

J.C. HEDEN & ASSOCIATES, INC.
6046 CORNERSTONE CT,
SUITE 207
SAN DIEGO, CA 92121

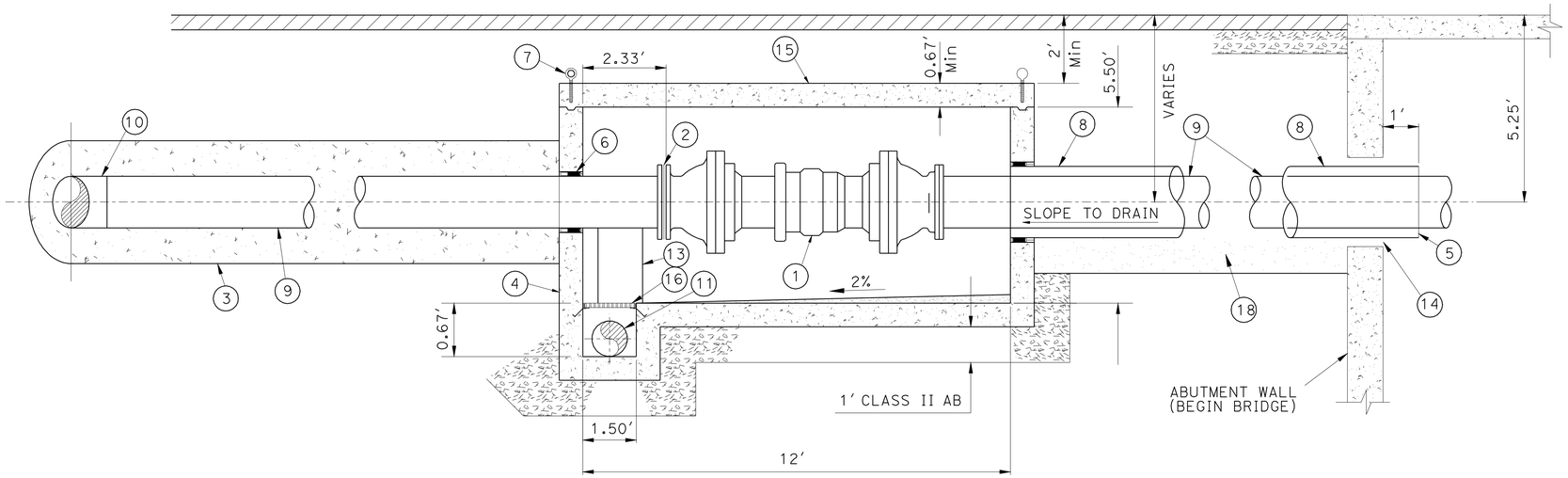

ELEVATION

Sta 341+28.59 "76-RA" LINE

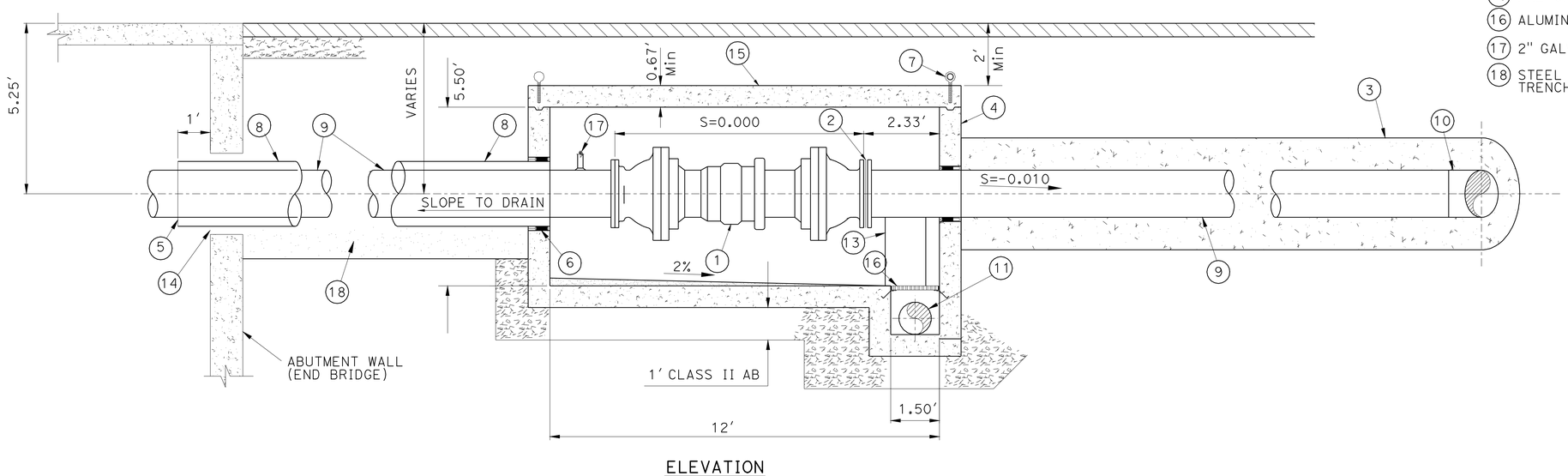

ELEVATION

Sta 346+49.71 "76-RA" LINE

PRE-CAST CONCRETE VAULT

WORK OR MATERIALS

1. 16" EBAA FLEX-TEND FORCE BALANCED FLEXIBLE EXPANSION JOINT, FLANGED (CLASS E), OR EQUAL
2. INSULATING FLANGE KIT
3. CONCRETE ENCASEMENT (SEE UTILITY DETAILS)
4. 5 SIDED PRE-CAST CONCRETE VAULT
5. STAINLESS STEEL CASING SPACERS (SEE UTILITY DETAILS)
6. WALL PENETRATION (SEE UTILITY DETAILS)
7. LIFTING EYE (4 EA)
8. 24" CML&C WELDED STEEL CASING PIPE, t=0.375"
9. 16" CML&C WELDED STEEL CARRIER PIPE, t=0.25"
10. 16" CML&C WELDED STEEL 45° BEND, t=0.25"
11. 8" DUCTILE IRON DRAIN PIPE (SEE DRAINAGE PROFILES)
12. 18" SQUARE x 8" DEEP SUMP TO FIT DUCTILE IRON DRAIN PIPE
13. PIPE SADDLE SUPPORT (SEE UTILITY DETAILS)
14. FILL SPACE BETWEEN ABUTMENT AND CASING WITH MORTAR AFTER TIGHTLY WRAPPING CASING WITH TWO (2) LAYERS OF 15 lb BUILDING PAPER, SEE STANDARD PLANS.
15. PRE-CAST CONCRETE VAULT TOP
16. ALUMINUM GRATING OVER SUMP (SEE UTILITY DETAILS)
17. 2" GALVANIZED STEEL PIPE
18. STEEL CASING PIPE ZONE AND TRENCH BACKFILL (SEE UTILITY DETAILS)

UTILITY DETAILS

NO SCALE

UD-2

STATE OF CALIFORNIA - DEPARTMENT OF TRANSPORTATION
Caltrans

CONSULTANT FUNCTIONAL SUPERVISOR: JEFFREY C. HEDEN
CALCULATED-DESIGNED BY: JEFFREY C. HEDEN
CHECKED BY: ARTURO REYES
REVISED BY
DATE REVISED

LAST REVISION 03-16-12
DATE PLOTTED => 17-APR-2012
TIME PLOTTED => 12:16

Dist	COUNTY	ROUTE	POST MILES TOTAL PROJECT	SHEET No.	TOTAL SHEETS
11	SD	15,76	R46.1/R47.3, R16.7/R17.7	166	477

REGISTERED CIVIL ENGINEER 03-13-12 DATE

4-16-12
PLANS APPROVAL DATE

REGISTERED PROFESSIONAL ENGINEER JEFFREY C. HEDEN No. C31747 Exp. 12-31-12 CIVIL STATE OF CALIFORNIA

THE STATE OF CALIFORNIA OR ITS OFFICERS OR AGENTS SHALL NOT BE RESPONSIBLE FOR THE ACCURACY OR COMPLETENESS OF SCANNED COPIES OF THIS PLAN SHEET.

J.C. HEDEN & ASSOCIATES, INC.
6046 CORNERSTONE CT,
SUITE 207
SAN DIEGO, CA 92121

NOTES:

1. RSP FABRIC TO BE PLACED UNDER ALL ROCK SLOPE PROTECTION PER FILTER FABRIC OVERLAP DETAIL.
2. ROCK SLOPE PROTECTION PLACED USING METHOD "B", SEE DETAIL BELOW FOR SIZES.

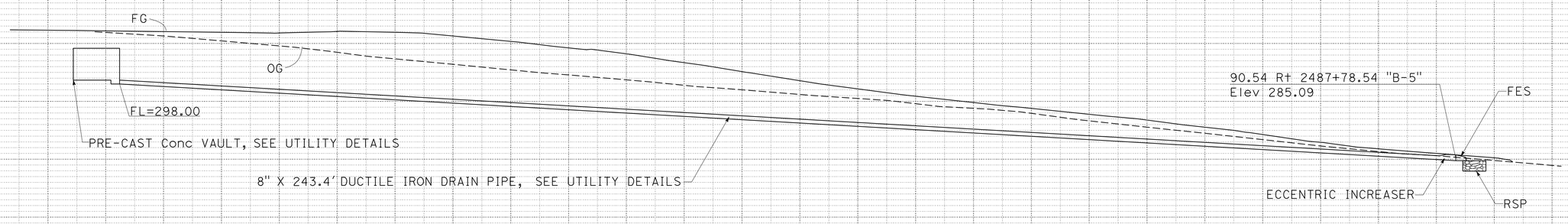

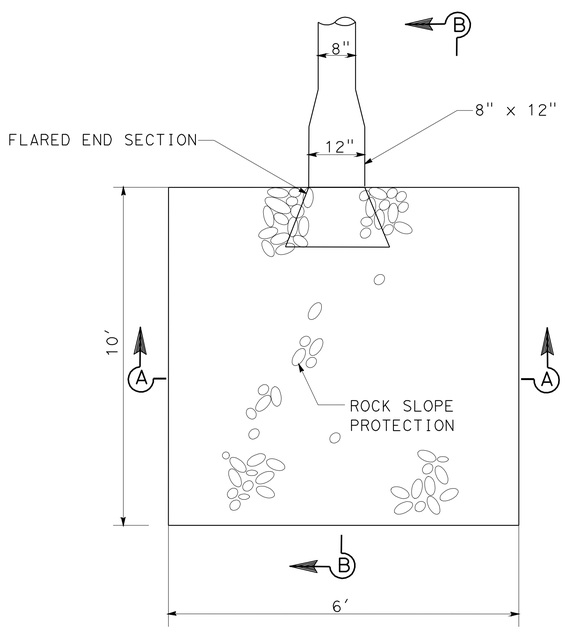

PLAN

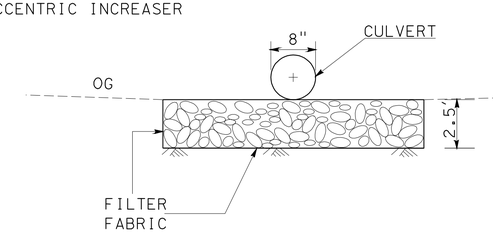

SECTION A-A

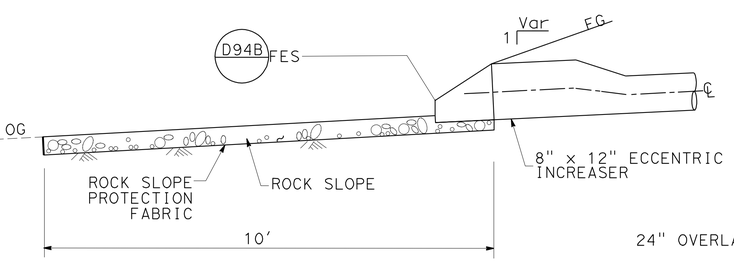

SECTION B-B

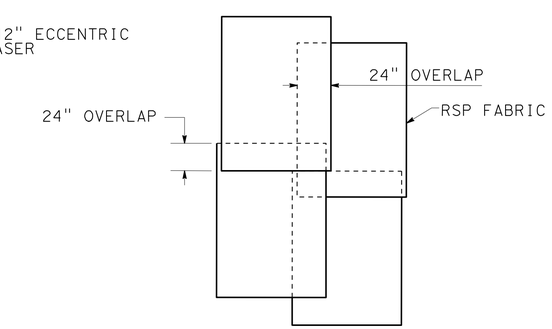

RSP FABRIC OVERLAP

ROCK SLOPE PROTECTION DETAIL

UTILITY DETAILS

NO SCALE

UD-3

REVISED BY | DATE REVISED
JEFFREY C. HEDEN | ARTURO REYES
CALCULATED-DESIGNED BY | CHECKED BY
CONSULTANT FUNCTIONAL SUPERVISOR: JEFFREY C. HEDEN

STATE OF CALIFORNIA - DEPARTMENT OF TRANSPORTATION
Caltrans

LAST REVISION 03-16-12 | DATE PLOTTED => 17-APR-2012 | TIME PLOTTED => 12:16

Dist	COUNTY	ROUTE	POST MILES TOTAL PROJECT	SHEET No.	TOTAL SHEETS
11	SD	15,76	R46.1/R47.3, R16.7/R17.7	167	477

REGISTERED CIVIL ENGINEER 03-13-12 DATE

4-16-12
PLANS APPROVAL DATE

REGISTERED PROFESSIONAL ENGINEER JEFFREY C. HEDEN No. C31747 Exp. 12-31-12 CIVIL STATE OF CALIFORNIA

THE STATE OF CALIFORNIA OR ITS OFFICERS OR AGENTS SHALL NOT BE RESPONSIBLE FOR THE ACCURACY OR COMPLETENESS OF SCANNED COPIES OF THIS PLAN SHEET.

J.C. HEDEN & ASSOCIATES, INC.
6046 CORNERSTONE CT,
SUITE 207
SAN DIEGO, CA 92121

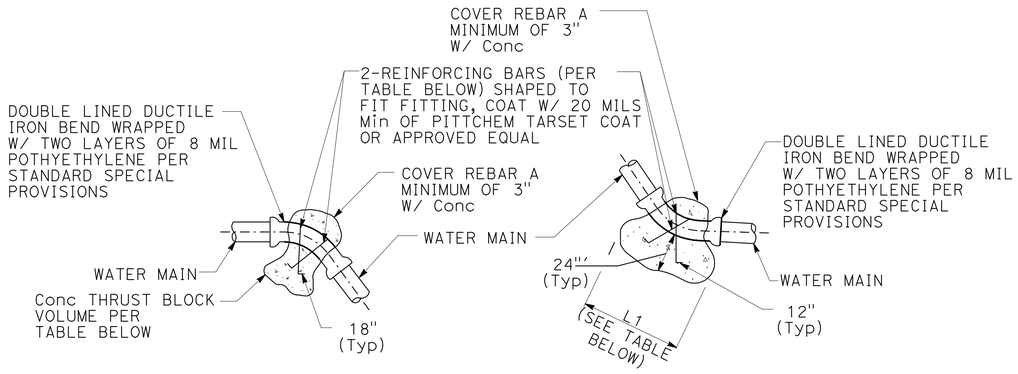

PROFILE
TYPICAL VERTICAL RESTRAINT

PROFILE
TYPICAL VERTICAL THRUST BLOCK

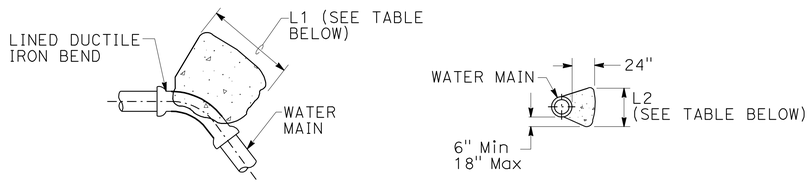

PROFILE
TYPICAL THRUST BLOCK HORIZONTAL

SECTION A
TYPICAL THRUST BLOCK HORIZONTAL

NOTES:

1. BEARING SURFACE OF ALL THRUST BLOCKS TO BE POURED AGAINST FIRM UNDISTURBED EARTH (FULL BEARING STRENGTH)
2. ALL CONCRETE TO BE 3000 psi
3. SPECIAL DESIGN REQUIRED FOR PRESSURES EXCEEDING 2000 psi, SOIL PRESSURES LESS THAN 14 psi, AND FOR FITTINGS LARGER THAN 12" DIAMETER.

TYPICAL THRUST BLOCK

THRUST BLOCK DIMENSIONS

PIPE SIZE	0 ° TO 11 1/4°			11 1/4° TO 22 1/2°			22 1/2° TO 45°			45° TO 90°			DEAD ENDS & TEES		PIPE SIZE
INCHES	Horiz L1 L2	Vert Vol CY	Vert REBAR	Horiz L1 L2	Vert Vol CY	Vert REBAR	Horiz L1 L2	Vert Vol CY	Vert REBAR	Horiz L1 L2	Vert Vol CY	Vert REBAR	Horiz L1 L2	Vert Vol CY	INCHES
6	12"x12"	0.014	#6	12"x18"	0.029	#6	18"x24"	0.055	#6	24"x36"	0.099	#6	24"x24"	0.069	6
8	12"x18"	0.021	#6	18"x24"	0.048	#6	24"x36"	0.093	#6	36"x42"	0.148	#6	30"x36"	0.122	8
10	12"x24"	0.041	#6	12"x12"	0.077	#6	36"x36"	0.152	#6	48"x48"	0.281	#8	36"x48"	0.200	10
12	18"x24"	0.055	#6	12"x12"	0.116	#6	36"x48"	0.218	#6	54"x60"	0.400	#8	48"x48"	0.281	12

TABLE BASED ON 200 psi PRESSURE AND 14 psi ALLOWABLE SOIL BEARING PRESSURE.

UTILITY DETAILS

NO SCALE

UD-4

REVISED BY | DATE REVISED
JEFFREY C. HEDEN | ARTURO REYES
CALCULATED-DESIGNED BY | CHECKED BY
CONSULTANT FUNCTIONAL SUPERVISOR
JEFFREY C. HEDEN
STATE OF CALIFORNIA - DEPARTMENT OF TRANSPORTATION
Caltrans

LAST REVISION 03-16-12 | DATE PLOTTED => 17-APR-2012 | TIME PLOTTED => 12:16

Dist	COUNTY	ROUTE	POST MILES TOTAL PROJECT	SHEET No.	TOTAL SHEETS
11	SD	15,76	R46.1/R47.3, R16.7/R17.7	168	477

REGISTERED CIVIL ENGINEER 03-13-12 DATE

4-16-12
PLANS APPROVAL DATE

REGISTERED PROFESSIONAL ENGINEER JEFFREY C. HEDEN No. C31747 Exp. 12-31-12 CIVIL STATE OF CALIFORNIA

THE STATE OF CALIFORNIA OR ITS OFFICERS OR AGENTS SHALL NOT BE RESPONSIBLE FOR THE ACCURACY OR COMPLETENESS OF SCANNED COPIES OF THIS PLAN SHEET.

J.C. HEDEN & ASSOCIATES, INC.
6046 CORNERSTONE CT,
SUITE 207
SAN DIEGO, CA 92121

NOTE:

REFER TO BELOW LEGEND FOR MATERIAL CALL OUTS.

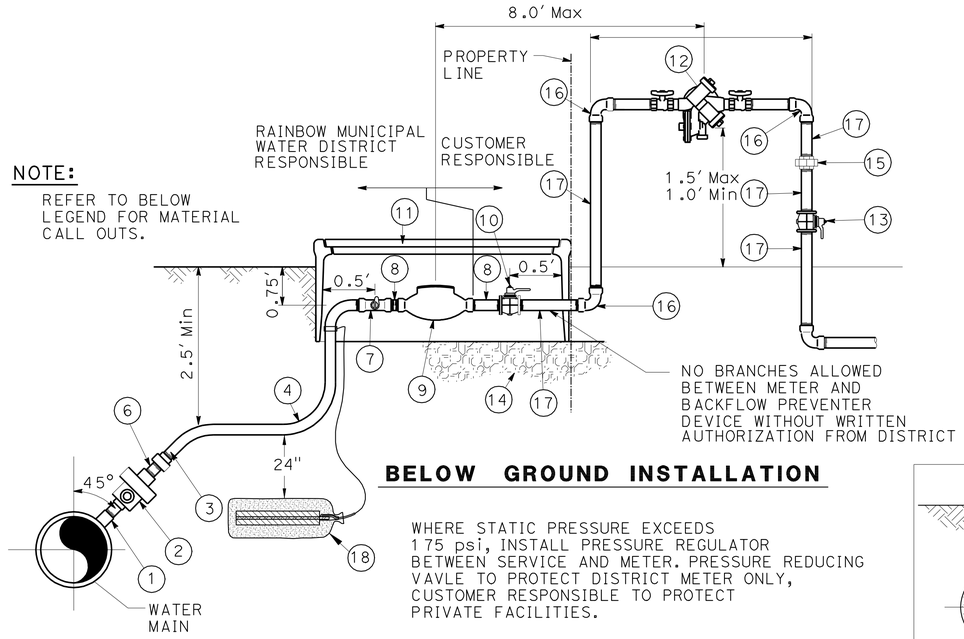

BELOW GROUND INSTALLATION

WHERE STATIC PRESSURE EXCEEDS 175 psi, INSTALL PRESSURE REGULATOR BETWEEN SERVICE AND METER. PRESSURE REDUCING VAVLE TO PROTECT DISTRICT METER ONLY, CUSTOMER RESPONSIBLE TO PROTECT PRIVATE FACILITIES.

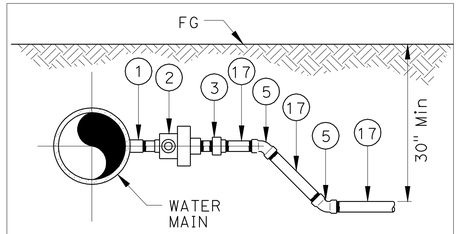

ALTERNATE: FOR SERVICE OF AN EXISTING SHALLOW WATER MAIN

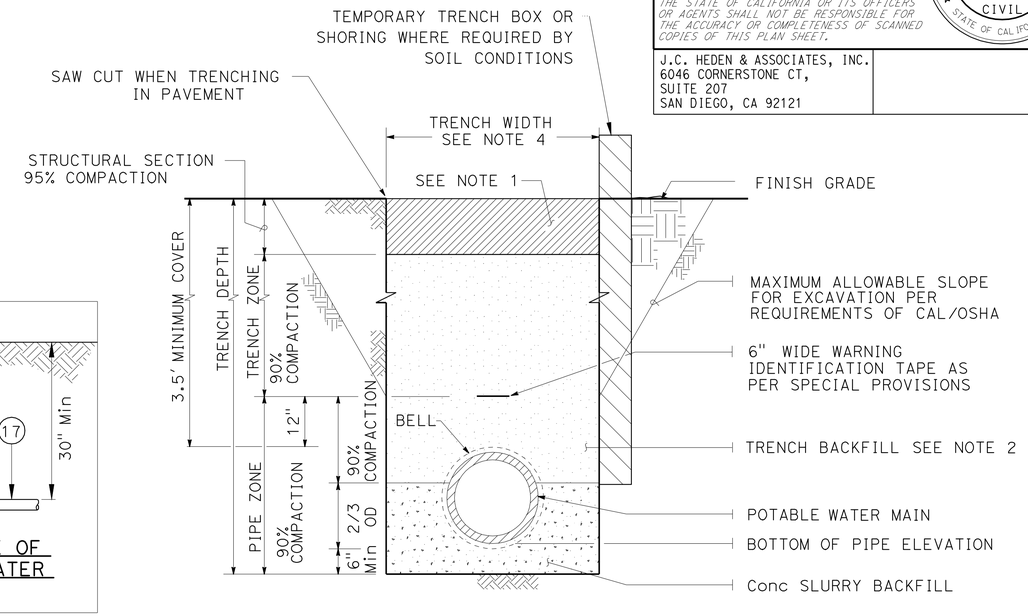

STEEL CASING PIPE ZONE AND TRENCH BACKFILL

MATERIAL LIST

1. FORGED STEEL HALF-COUPLING, THREADED, CLASS 3000 WELDED TO PIPE PER DETAIL TO THE RIGHT. (CML&C PIPE) OR DOUBLE STRAP, STAINLESS STEEL, TAPPING COLLAR (PVC OR DUCTILE IRON)
2. BRASS CORP STOP
3. BRASS MALE/COPPER ADAPTER
4. TYPE "K" COPPER TUBING
5. 45° COPPER ELL
6. BRASS NIPPLE, THREADED
7. BRASS SERVICE STOP, B-11 W INSTALLED FOR RIGHT HAND OPERATION PER SPECIAL PROVISIONS
8. BRASS METER TAILS WITH GASKETS
9. WATER METER SUPPLIED BY DISTRICT
10. BRASS BALL VALVE
11. HDPE PLASTIC METER BOX AND COVER, FOR 1" USE 20" X 26" BOX (BLACK) FOR 1.5" & 2" USE 26" X 39" BOX (BLACK).
12. STATE APPROVED REDUCED PRESSURE BACKFLOW PREVENTION DEVICE
13. BRONZE BALL VALVE, CLASS 125.
14. 6" BASE OF 0.75" ROCK
15. BRASS UNION
16. 90° METALLIC ELBOW (COPPER OR BRASS)
17. METALLIC PIPE (COPPER OR BRASS)
18. VALVE WELL INSTALLATION (SEE UTILITY DETAILS)

TYPICAL CONSTRUCTION NOTES:

1. USE SILVER SOLDER FOR COPPER PIPE JOINTS JOINTS.
2. MORTAR COUPLING AND MALE THREADS OF CORP STOP AFTER CONNECTING TO A MORTAR-COATED STEEL PIPE.
3. APPLY BITUMASTIC COMPOUND TO COUPLING AND MALE THREADS OF CORP STOP AFTER CONNECTING TO A TAR/ WRAPPED STEEL PIPE.
4. PIPE THREADS SHALL BE CLEAN, SHARP, AND WRAPPED WITH A PIPE THREAD SEAL TAPE.
5. WHERE METER BOX IS LOCATED IN CONCRETE OR ASPHALT TRAFFIC AREAS, CONTACT DISTRICT FOR AN APPROVED CONCRETE METER BOX.
6. ON 1.5" & 2" METERS (WHICH ARE FLANGED), PROVIDE THREADED COMPANION FLANGES, 150 lbs.
7. ALL BRASS FITTINGS TO BE DOMESTIC PRODUCTS.
8. WRAP BURIED COPPER WITH 10 MIL CALPICO TAPE OR POLYETHALENE ENCASEMENT.
9. METER TO BACKFLOW - ANY DISTANCE GREATER THAN 8' NEEDS APPROVAL FROM THE ENGINEER

NOTES:

1. WHEN TRENCHING IN ROADWAY PAVEMENT THE UPPER 0.5' OF MATERIAL SHALL BE THE SAME AS THE ADJACENT ROADWAY SURFACE OR AS PER THE ENGINEER
2. BACKFILL MATERIAL AS PER THE SPECIAL PROVISIONS
3. EXCAVATE BELL HOLES AT EACH PIPE JOINT TO PERMIT ASSEMBLY AND INSPECTION OF THE ENTIRE JOINT
4. ALL TRENCHES SHALL BE EXCAVATED SO THAT THE DISTANCE BETWEEN TRENCH WALLS AT THE TOP OF PIPE SHALL BE AS SHOWN BELOW:

TRENCH WIDTH

NOMINAL PIPE INSIDE DIAMETER	MINIMUM DISTANCE	MAXIMUM DISTANCE
4" AND SMALLER	18"	28"
6" AND 8"	24"	32"
10" AND 12"	28"	36"
16" THRU 36"	OD PLUS 24"	OD PLUS 36"

2" WATER SERVICE

UTILITY DETAILS

NO SCALE

UD-5

REVISED BY | DATE REVISED
JEFFREY C. HEDEN | ARTURO REYES
CALCULATED-DESIGNED BY | CHECKED BY
CONSULTANT FUNCTIONAL SUPERVISOR
JEFFREY C. HEDEN
STATE OF CALIFORNIA - DEPARTMENT OF TRANSPORTATION
Caltrans

LAST REVISION 03-16-12 | DATE PLOTTED => 17-APR-2012 TIME PLOTTED => 12:16

Dist	COUNTY	ROUTE	POST MILES TOTAL PROJECT	SHEET No.	TOTAL SHEETS
11	SD	15,76	R46.1/R47.3, R16.7/R17.7	169	477

REGISTERED CIVIL ENGINEER 03-13-12 DATE

4-16-12
PLANS APPROVAL DATE

REGISTERED PROFESSIONAL ENGINEER JEFFREY C. HEDEN No. C31747 Exp. 12-31-12 CIVIL STATE OF CALIFORNIA

THE STATE OF CALIFORNIA OR ITS OFFICERS OR AGENTS SHALL NOT BE RESPONSIBLE FOR THE ACCURACY OR COMPLETENESS OF SCANNED COPIES OF THIS PLAN SHEET.

J.C. HEDEN & ASSOCIATES, INC.
6046 CORNERSTONE CT,
SUITE 207
SAN DIEGO, CA 92121

NOTES:

1. FIRE HYDRANTS INSTALLED AT STREETS OR ROADS WITHOUT CURBS SHALL BE PROTECTED WITH GUARD POSTS (2).
2. ROLLED CURB OR AC CURBS SHALL HAVE GUARD POSTS (2).
3. FOR PRESSURE 250 psi AND BELOW GATE VALVE MAY BE USED.
4. 2′ FROM BACK OF SIDEWALK. 2′ FROM FACE OF CURB IF NO SIDEWALK EXISTS.

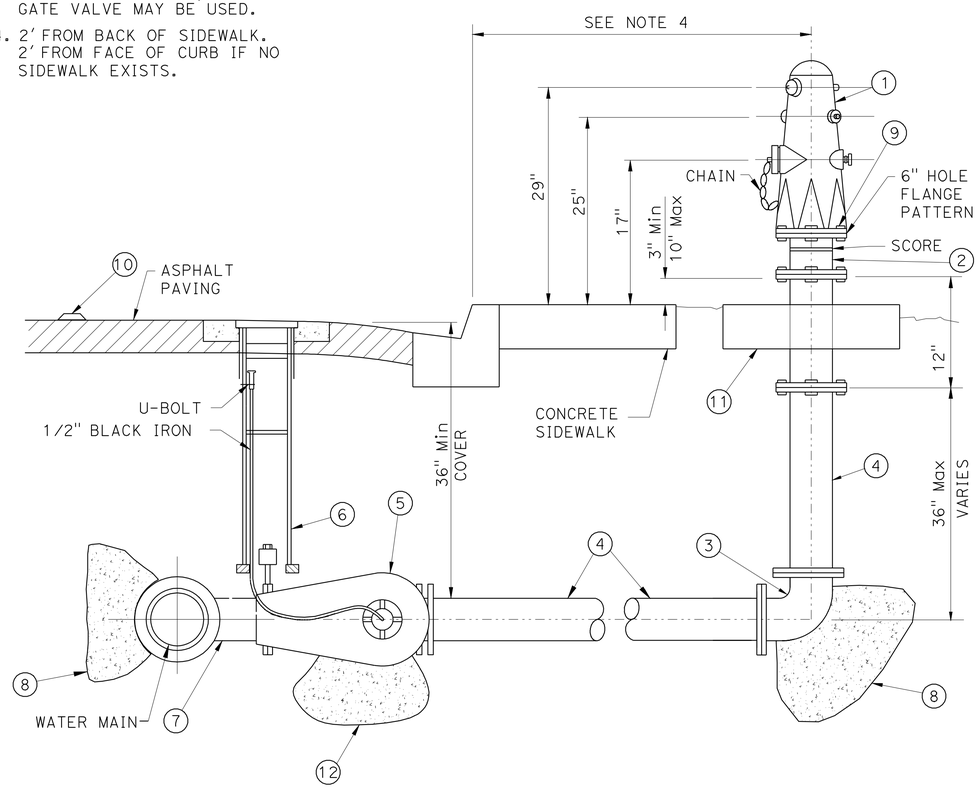

ITEM	NO.	DESCRIPTION	REMARKS
1	1	6" FIRE HYDRANT	6 BOLTS,
			SAFETY YELLOW
2	1	6" BREAK-OFF RISER,	SCORED (NOT MOLDED)
3	1	6" BURIED ELL, FLANGE	
4	-	6" STEEL PIPE	CL-300
5	1	6" PLUG VALVE, FLANGE	PER STANDARD SPECIFICATION
6	1	VALVE BOX INSTALLATION PER DISTRICT Std DWG# W-19	SEE STANDARD SPECIFICATION
7	1	6" FLANGED OUTLET	PER STANDARD SPECIFICATION
8	1	THRUST BLOCK	SEE UTILITY DETAILS
9	6	BOLTS BREAK OFF BELOW 300 psi.	PER STANDARD SPECIFICATIONS
10	1	REFLECTIVE PAVEMENT MARKER(BLUE) AT STREET CL	PER FIRE DISTRICT REQUIREMENTS
11	1	4′ x 4′ CONCRETE PAD 4" THICK, 520-C-2500	

6" FIRE HYDRANT ASSEMBLY
(FOR PRESSURE GREATER THAN 200 psi)

NOTES:

1. BLOWOFFS INSTALLED AT STREETS OR ROADS WITHOUT CURBS SHALL BE PROTECTED WITH GUARD POSTS (2).
2. FOR 6" BLOWOFF, SEE 6" FIRE HYDRANT ASSEMBLY DETAIL
3. COUPLING SHALL BE DRILLED AND TAPPED AS REQUIRED FOR THE PRESSURE RELEASE PET COCK
4. 2′ FROM BACK OF SIDEWALK. 2′ FROM FACE OF CURB IF NO SIDEWALK EXISTS.

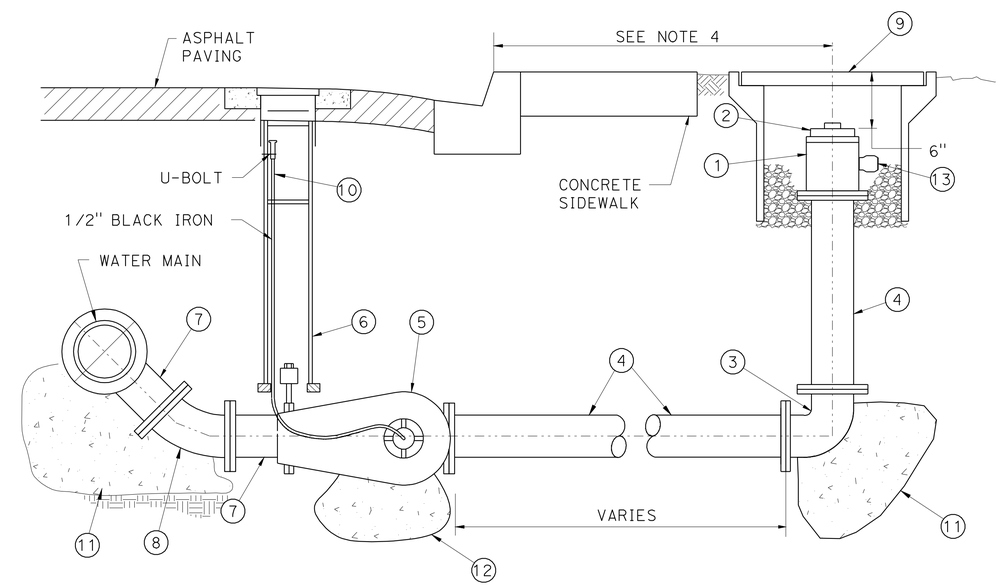

ITEM	NO.	DESCRIPTION	REMARKS
1	1	4" DIP COUPLING, FL	
2	1	4" BRASS PLUG	
3	1	4" 90°, FLANGE	LENGTH AS REQUIRED
4	-	4" DIP, FL X FL	LENGTH AS REQUIRED
5	1	4" PLUG VALVE, FLANGE	
6	1	VALVE BOX INSTALLATION	
7	1	4" FLANGED OUTLET	
8	1	4" FL X FL 45° ELL	
9	1	12" CAST IRON VALVE WELL COVER	
10	2	GREASE TUBE	
11	2	THRUST BLOCK	SEE UTILITY DETAILS
12	1	VALVE SUPPORT	SEE UTILITY DETAILS
13	1	1/4" PRESSURE RELEASE PET COCK	SEE NOTE 3

4" BLOW-OFF ASSEMBLY
(FOR PRESSURE GREATER THAN 250 psi)

UTILITY DETAILS

NO SCALE **UD-6**

STATE OF CALIFORNIA - DEPARTMENT OF TRANSPORTATION
Caltrans
CONSULTANT FUNCTIONAL SUPERVISOR: JEFFREY C. HEDEN
CALCULATED-DESIGNED BY: JEFFREY C. HEDEN
CHECKED BY: ARTURO REYES
REVISED BY
DATE REVISED

LAST REVISION 03-16-12 | DATE PLOTTED => 17-APR-2012 | TIME PLOTTED => 12:16

Dist	COUNTY	ROUTE	POST MILES TOTAL PROJECT	SHEET No.	TOTAL SHEETS
11	SD	15,76	R46.1/R47.3, R16.7/R17.7	170	477

REGISTERED CIVIL ENGINEER 03-13-12 DATE

4-16-12
PLANS APPROVAL DATE

REGISTERED PROFESSIONAL ENGINEER JEFFREY C. HEDEN No. C31747 Exp. 12-31-12 CIVIL STATE OF CALIFORNIA

THE STATE OF CALIFORNIA OR ITS OFFICERS OR AGENTS SHALL NOT BE RESPONSIBLE FOR THE ACCURACY OR COMPLETENESS OF SCANNED COPIES OF THIS PLAN SHEET.

J.C. HEDEN & ASSOCIATES, INC.
6046 CORNERSTONE CT,
SUITE 207
SAN DIEGO, CA 92121

GENERAL NOTES:

1. NO DIPS OR LOW SPOTS WILL BE ALLOWED IN PIPING INSTALLATION
2. ROLLED CURBS AND AC CURB SHALL HAVE GUARD POSTS (2)
3. COAT THREADS WITH ANTI-SIEZE
4. AIR VAC ASSEMBLY MUST MEET PRESSURE RATING

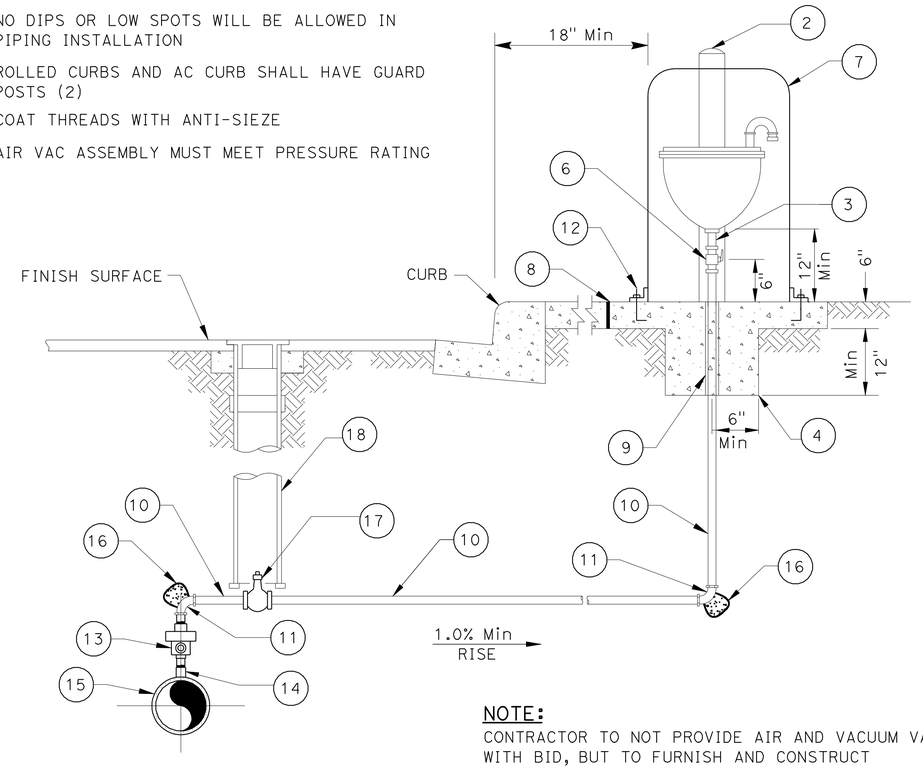

NOTE:
CONTRACTOR TO NOT PROVIDE AIR AND VACUUM VALVE WITH BID, BUT TO FURNISH AND CONSTRUCT BALANCE OF AIR AND VACUUM ASSEMBLY

ITEM	SIZE & DESCRIPTION	ITEM	SIZE & DESCRIPTION
1	GALVANIZED CLOSE NIPPLE & RETURN BEND WITH INSECT SCREEN TURNED OUT	11	90° BRASS ELL
		12	316 SST, BOLTS ON ENCLOSURE RED HEAD
2	GUARD POSTS	13	BRASS CORP STOP,
3	BRASS CLOSE NIPPLE	14	FORGED STEEL HALF-COUPLING, THREADED, CLASS 3000 TO BE WELDED TO CML&C PIPE OR DOUBLE STRAP, STAINLESS STEEL, TAPPING COLLAR (PVC OR DUCTILE IRON)
4	SQUARE CONCRETE BASE		
5			
6	BALL VALVE WITH HANDLE AND SERVICE STOP	15	CML&C OR DIP WATER MAIN
		16	THRUST BLOCK (SEE UTILITY DETAILS)
7	HOUSING, 18" Dia X 30" TALL	17	BALL VALVE
8	1/2" EXPANSION JOINT	18	VALVE BOX INSTALLATION (SEE UTILITY DETAILS)
9	PVC SLEEVE, EXTEND 2" BELOW CONCRETE		
10	BRASS PIPE		

1" AND 2"
AUTOMATIC AIR RELEASE
AND VACUUM RELIEF VALVE

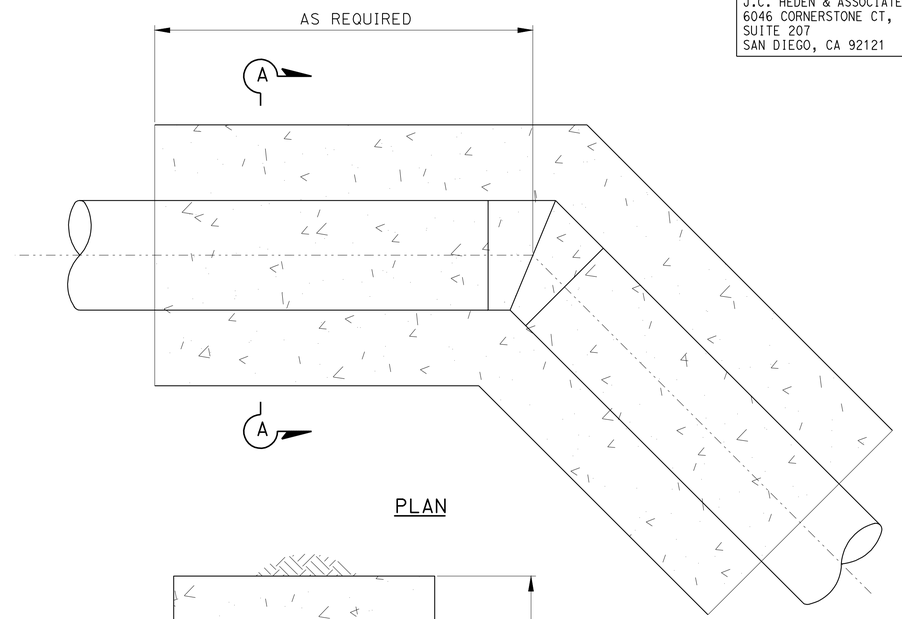

PLAN

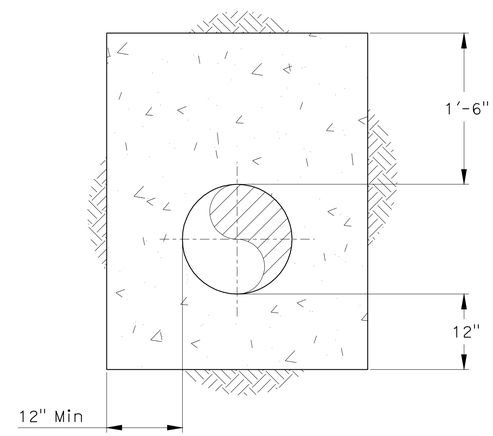

SECTION A-A

CONCRETE ENCASEMENT DETAIL

UTILITY DETAILS

NO SCALE **UD-7**

STATE OF CALIFORNIA - DEPARTMENT OF TRANSPORTATION
Caltrans
CONSULTANT FUNCTIONAL SUPERVISOR JEFFREY C. HEDEN
CALCULATED-DESIGNED BY JEFFREY C. HEDEN
CHECKED BY ARTURO REYES
REVISED BY
DATE REVISED

LAST REVISION 03-16-12
DATE PLOTTED => 17-APR-2012
TIME PLOTTED => 12:11

Dist	COUNTY	ROUTE	POST MILES TOTAL PROJECT	SHEET No.	TOTAL SHEETS
11	SD	15,76	R46.1/R47.3, R16.7/R17.7	171	477

REGISTERED CIVIL ENGINEER 03-13-12 DATE

4-16-12
PLANS APPROVAL DATE

REGISTERED PROFESSIONAL ENGINEER JEFFREY C. HEDEN No. C31747 Exp. 12-31-12 CIVIL STATE OF CALIFORNIA

THE STATE OF CALIFORNIA OR ITS OFFICERS OR AGENTS SHALL NOT BE RESPONSIBLE FOR THE ACCURACY OR COMPLETENESS OF SCANNED COPIES OF THIS PLAN SHEET.

J.C. HEDEN & ASSOCIATES, INC.
6046 CORNERSTONE CT,
SUITE 207
SAN DIEGO, CA 92121

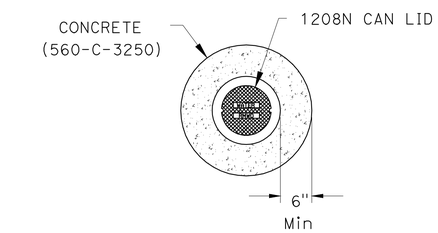

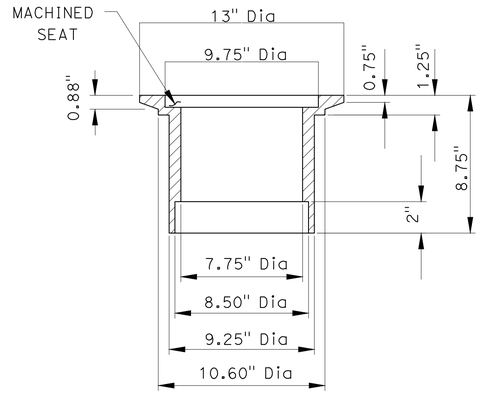

CAST IRON VALVE WELL FRAME

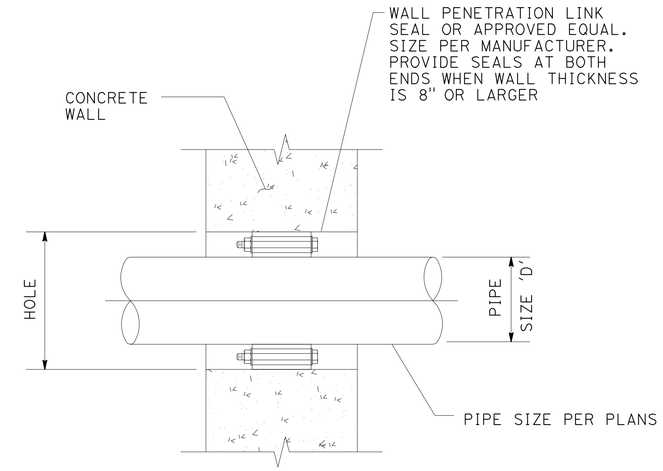

WALL PENETRATION DETAIL

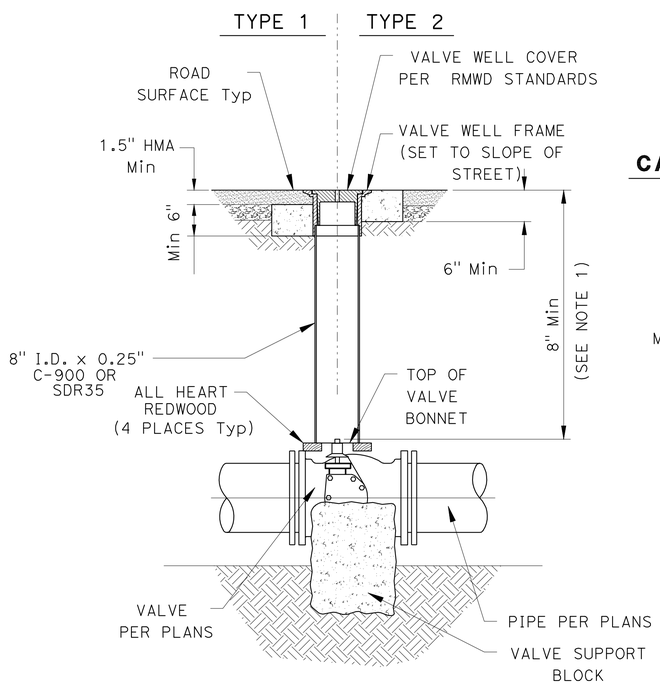

VALVE WELL AND FRAME
(FOR NEW INSTALLATIONS)

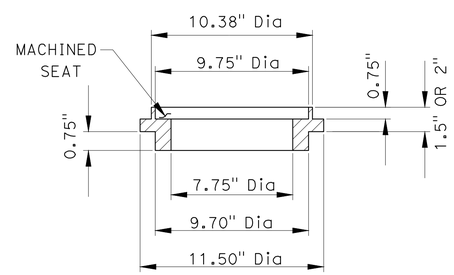

CAST IRON RISER RING
(FOR RETROFITTING
AND OVERLAY PROJECTS)

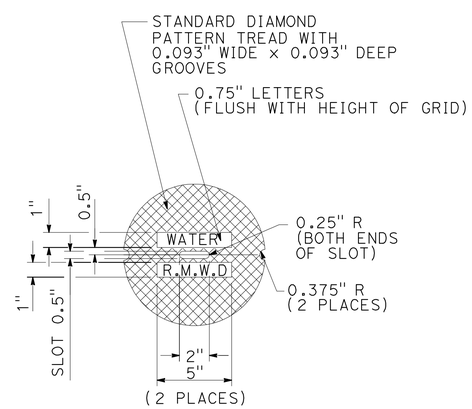

RAINBOW MUNICIPAL WATER DISTRICT

VALVE BOX AND COVERS

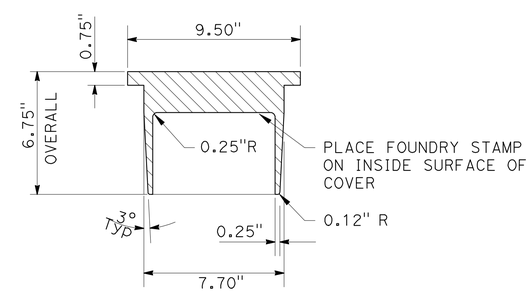

VALVE WELL COVER PAINT CHART

INLINE VALVES	B.O.s AND AIR VACS	HYDRANTS
WHITE	YELLOW	RED

VALVE WELL COVER

NOTES:

1. FOR GATE VALVES, PROVIDE VALVE KEY EXTENSION WHERE THIS DIMENSION EXCEEDS 25 INCHES.
2. THE SURFACE OF THE VALVE WELL COVER SHALL MATCH THE STREET CROSS SLOPE AND PROFILE.

UTILITY DETAILS

NO SCALE

UD-8

STATE OF CALIFORNIA - DEPARTMENT OF TRANSPORTATION

CONSULTANT FUNCTIONAL SUPERVISOR: JEFFREY C. HEDEN

CALCULATED-DESIGNED BY: JEFFREY C. HEDEN

CHECKED BY: ARTURO REYES

REVISED BY

DATE REVISED

LAST REVISION 03-16-12

DATE PLOTTED => 17-APR-2012
TIME PLOTTED => 12:11

Dist	COUNTY	ROUTE	POST MILES TOTAL PROJECT	SHEET No.	TOTAL SHEETS
11	SD	15,76	R46.1/R47.3, R16.7/R17.7	172	477

REGISTERED CIVIL ENGINEER 03-13-12 DATE

4-16-12
PLANS APPROVAL DATE

REGISTERED PROFESSIONAL ENGINEER JEFFREY C. HEDEN No. C31747 Exp. 12-31-12 CIVIL STATE OF CALIFORNIA

THE STATE OF CALIFORNIA OR ITS OFFICERS OR AGENTS SHALL NOT BE RESPONSIBLE FOR THE ACCURACY OR COMPLETENESS OF SCANNED COPIES OF THIS PLAN SHEET.

J.C. HEDEN & ASSOCIATES, INC.
6046 CORNERSTONE CT,
SUITE 207
SAN DIEGO, CA 92121

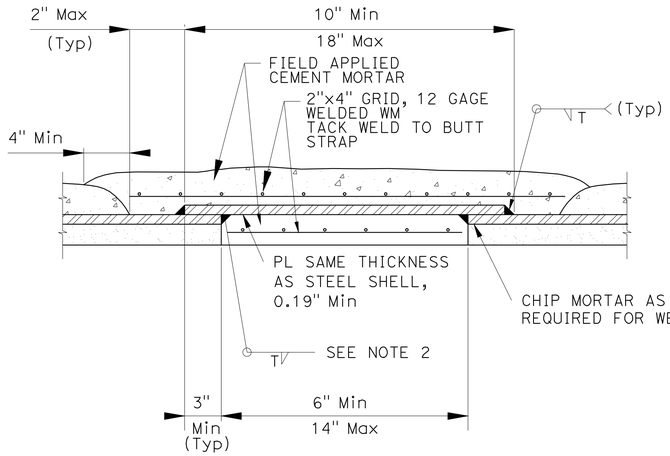

TYPICAL BUTT-STRAP JOINT

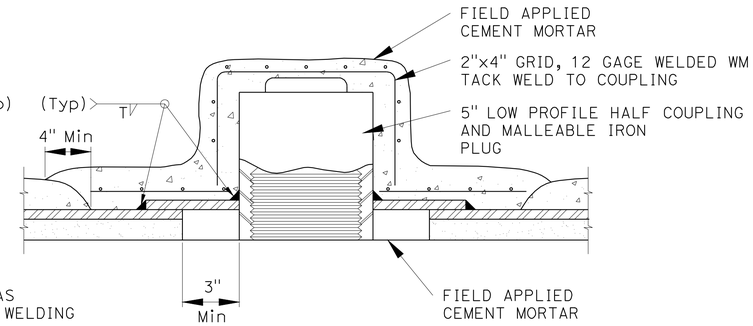

TYPICAL HANDHOLE

(REQUIRED ON PIPE SMALLER THAN 24" Dia)

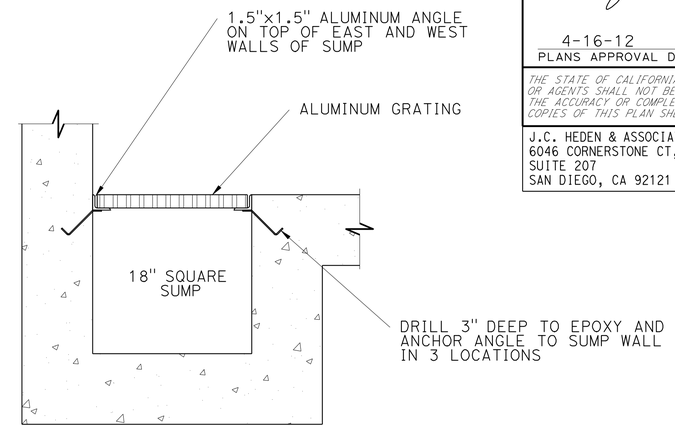

SUMP GRATING DETAIL

NOTES:

1. WELD BUTT-STRAP INSIDE AND OUTSIDE ON 36" Dia PIPES AND GREATER.

2. ALTERNATE WELD INSIDE OR OUTSIDE ON PIPES LESS THAN 36".

BUTT-STRAP JOINT AND HANDHOLE DETAIL FOR MORTAR LINED AND COATED STEEL PIPE

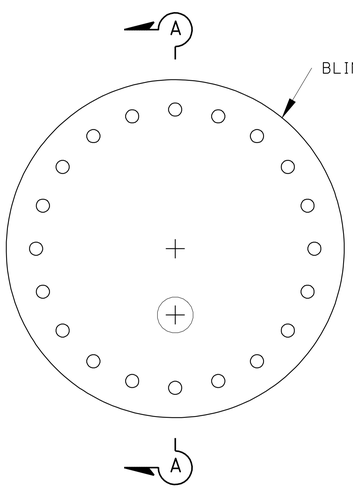

ELEVATION

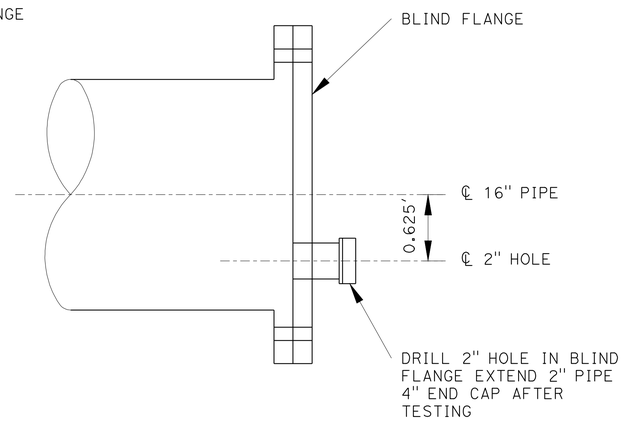

SECTION A-A

BLIND FLANGE DETAIL

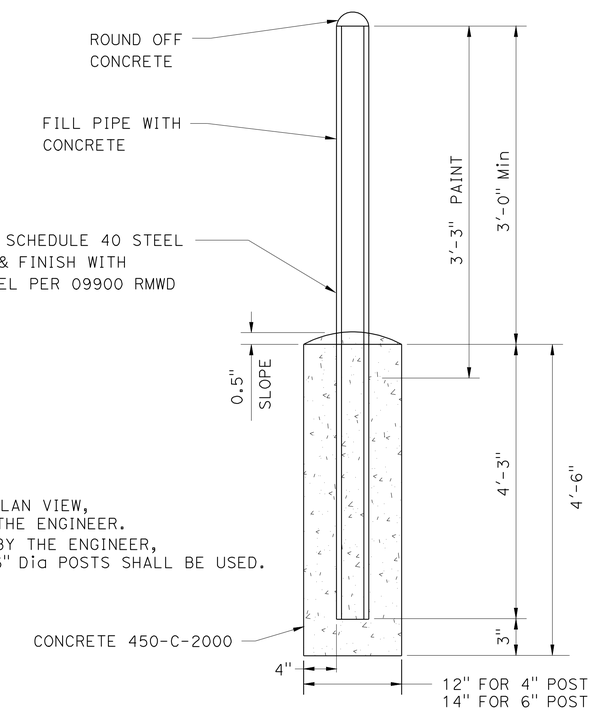

GUARD POST DETAIL

NOTES:

1. LOCATION SHALL BE AS SHOWN ON PLAN VIEW, OR AS DIRECTED IN THE FIELD BY THE ENGINEER.
2. 4" Dia POSTS SHALL BE APPROVED BY THE ENGINEER, FOR SPEED GREATER THAN 30 MPH 6" Dia POSTS SHALL BE USED.

UTILITY DETAILS

NO SCALE

UD-9

REVISED BY | DATE REVISED
JEFFREY C. HEDEN | ARTURO REYES
CALCULATED-DESIGNED BY | CHECKED BY
CONSULTANT FUNCTIONAL SUPERVISOR
JEFFREY C. HEDEN

STATE OF CALIFORNIA - DEPARTMENT OF TRANSPORTATION
Caltrans

LAST REVISION 03-16-12 | DATE PLOTTED => 17-APR-2012 | TIME PLOTTED => 12:11

Dist	COUNTY	ROUTE	POST MILES TOTAL PROJECT	SHEET No.	TOTAL SHEETS
11	SD	15,76	R46.1/R47.3, R16.7/R17.7	173	477

REGISTERED CIVIL ENGINEER 03-13-12 DATE

4-16-12
PLANS APPROVAL DATE

REGISTERED PROFESSIONAL ENGINEER JEFFREY C. HEDEN No. C31747 Exp. 12-31-12 CIVIL STATE OF CALIFORNIA

THE STATE OF CALIFORNIA OR ITS OFFICERS OR AGENTS SHALL NOT BE RESPONSIBLE FOR THE ACCURACY OR COMPLETENESS OF SCANNED COPIES OF THIS PLAN SHEET.

J.C. HEDEN & ASSOCIATES, INC.
6046 CORNERSTONE CT,
SUITE 207
SAN DIEGO, CA 92121

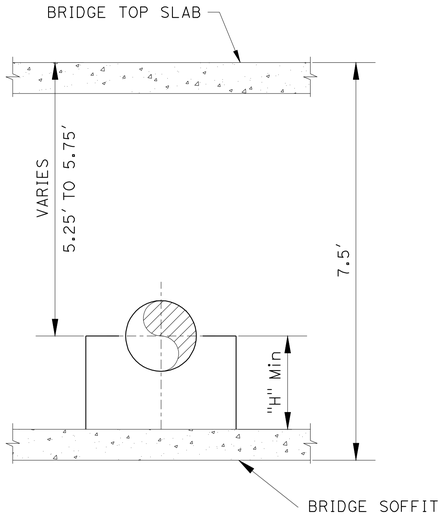

16-INCH CARRIER PIPE
SADDLE SUPPORT - Min SIZE

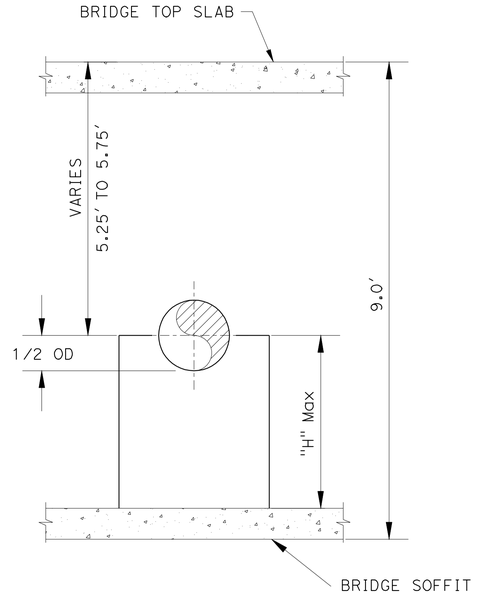

16-INCH CARRIER PIPE
SADDLE SUPPORT - Max SIZE

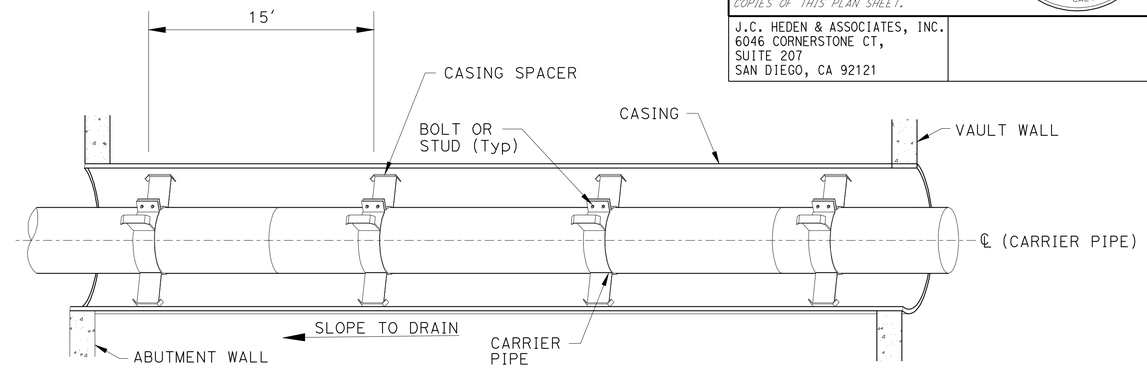

ELEVATION

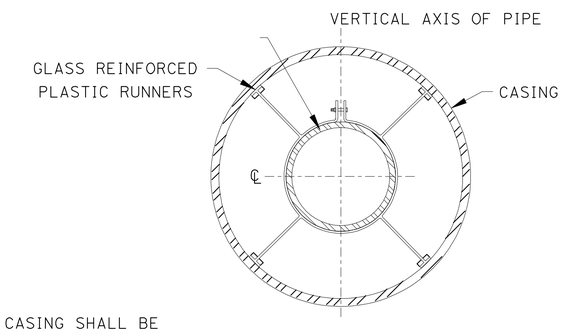

END ELEVATION

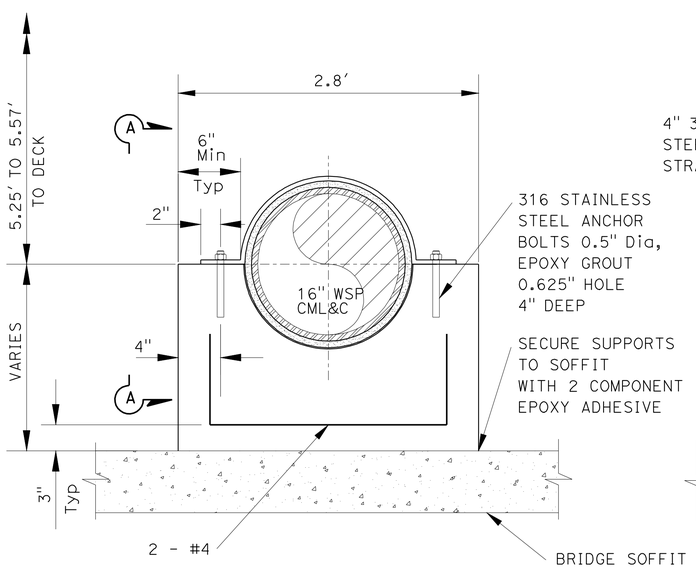

ELEVATION

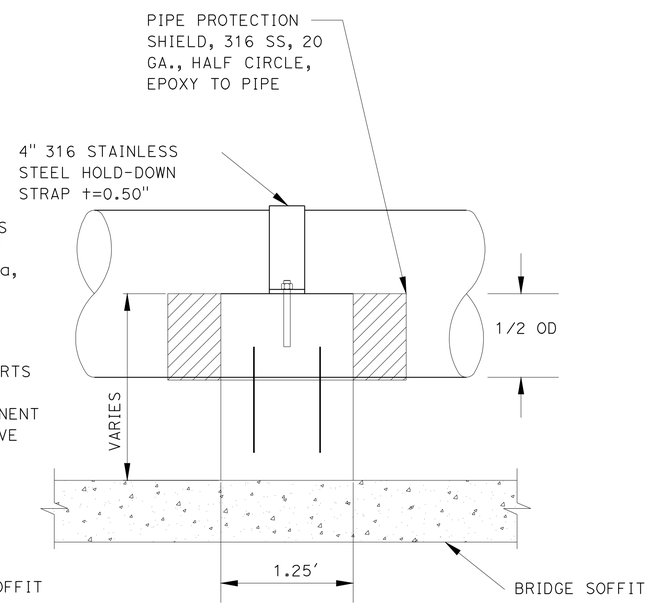

SECTION A-A

CONCRETE SADDLE SUPPORT DETAIL FOR STEEL PIPE

NOTES:

1. ALL JOINTS OF STEEL CASING PIPE WITHIN CASING SHALL BE WELDED.
2. SUPPORT CARRIER PIPE WITH CASING SPACERS AT 15' Max INTERVALS.
3. CASING SPACERS SHALL BE SO BOLTED AROUND THE PIPE THAT THE PLASTIC RUNNERS ARE LOCATED SYMMETRICALLY ABOUT THE VERTICAL AXIS OF PIPE.
4. INNER DIAMETER OF THE STEEL CASING SHALL BE AT LEAST 4 INCHES LARGER THAN THE OUTER DIAMETER OF THE CARRIER PIPE.

PLATE THICKNESS OF CASING PIPE				
DIAMETER	TO 12"	15" TO 27"	30" TO 54"	60" TO 72"
MINIMUM THICKNESS	1/4"	3/8"	1/2"	5/8"

STEEL CASING FOR WELDED STEEL CARRIER PIPE

UTILITY DETAILS

NO SCALE **UD-10**

STATE OF CALIFORNIA - DEPARTMENT OF TRANSPORTATION
Caltrans
CONSULTANT FUNCTIONAL SUPERVISOR: JEFFREY C. HEDEN
CALCULATED-DESIGNED BY: ARTURO REYES
CHECKED BY: JEFFREY C. HEDEN
REVISED BY
DATE REVISED

LAST REVISION 03-16-12
DATE PLOTTED => 17-APR-2012
TIME PLOTTED => 12:11

Dist	COUNTY	ROUTE	POST MILES TOTAL PROJECT	SHEET No.	TOTAL SHEETS
11	SD	15,76	R46.1/R47.3, R16.7/R17.7	174	477

REGISTERED CIVIL ENGINEER 03-13-12 DATE

4-16-12
PLANS APPROVAL DATE

REGISTERED PROFESSIONAL ENGINEER JEFFREY C. HEDEN No. C31747 Exp. 12-31-12 CIVIL STATE OF CALIFORNIA

THE STATE OF CALIFORNIA OR ITS OFFICERS OR AGENTS SHALL NOT BE RESPONSIBLE FOR THE ACCURACY OR COMPLETENESS OF SCANNED COPIES OF THIS PLAN SHEET.

J.C. HEDEN & ASSOCIATES, INC.
6046 CORNERSTONE CT,
SUITE 207
SAN DIEGO, CA 92121

WATER APPURTENANCES SUMMARY OF QUANTITIES

SHEET No.	AUTOMATIC WATER AIR RELEASE AND VACUUM RELIEF VALVE (PIPING ONLY)	2" GALVANIZED STEEL PIPE (N)	WATER BLOW-OFF ASSEMBLY	2" WATER SERVICE	RELOCATE 2" WATER SERVICE	WATER METER	RELOCATE AUTOMATIC WATER AIR RELEASE AND VACUUM RELIEF VALVE	RELOCATE FIRE HYDRANT
	EA	LF	EA	EA	EA	EA	EA	EA
U-9				1	1	2	1	2
U-13	1	50	1					
TOTAL	1		1	1	1	2	1	2

WATER LINES SUMMARY OF QUANTITIES

SHEET No.	16" CML&C WELDED STEEL CARRIER PIPE (0.25" THICK)	24" CML&C WELDED STEEL CASING PIPE (0.375" THICK)	24" CML&C WELDED STEEL 45-DEGREE BEND (0.375" THICK) (N)	16" CML&C STEEL BLIND FLANGE CLASS E (N)	PRE-CAST CONCRETE VAULT	FLEXIBLE EXPANSION JOINT	ALUMINUM GRATING OVER VAULT SUMP (N)	8" DUCTILE IRON DRAIN PIPE	ROCK SLOPE PROTECTION (LIGHT, METHOD B)	ROCK SLOPE PROTECTION FABRIC (CLASS 8)	12" STEEL FLARED END SECTION	8" x 12" DUCTILE IRON ECCENTRIC INCREASER (N)	CONCRETE ENCASEMENT (N)	PIPE SADDLE SUPPORT (N)	STAINLESS STEEL CASING SPACER (N)
	LF	LF	EA	EA	EA	EA	EA	LF	CY	SQFT	EA	EA	LF	EA	EA
U-13	715	92	4	1	2	2	2	278	5.56	210	1	1	120	22	92
TOTAL	715	92			2	2		278	5.56*	210*	1				

* FOR ADDITIONAL QUANTITIES, SEE DRAINAGE QUANTITY SHEETS.

(N) NOT A SEPARATE PAY ITEM, FOR INFORMATION ONLY.

UTILITY QUANTITIES
UQ-1

STATE OF CALIFORNIA - DEPARTMENT OF TRANSPORTATION
Caltrans
CONSULTANT FUNCTIONAL SUPERVISOR: JEFFREY C. HEDEN
CALCULATED-DESIGNED BY: JEFFREY C. HEDEN
CHECKED BY: ARTURO REYES
REVISED BY
DATE REVISED

LAST REVISION 03-16-12
DATE PLOTTED => 17-APR-2012
TIME PLOTTED => 12:12

Dist	COUNTY	ROUTE	POST MILES TOTAL PROJECT	SHEET No.	TOTAL SHEETS
11	SD	15,76	R46.1/R47.3, R16.7/R17.7	175	477

REGISTERED CIVIL ENGINEER 01-11-12 DATE

4-16-12
PLANS APPROVAL DATE

REGISTERED PROFESSIONAL ENGINEER SHAHIN T. ADIBI No. 54839 Exp. 06-30-12 CIVIL STATE OF CALIFORNIA

THE STATE OF CALIFORNIA OR ITS OFFICERS OR AGENTS SHALL NOT BE RESPONSIBLE FOR THE ACCURACY OR COMPLETENESS OF SCANNED COPIES OF THIS PLAN SHEET.

NOTES:

1. EXACT LOCATION OF CONSTRUCTION AREA SIGNS WILL BE DETERMINED BY THE ENGINEER.
2. FEDERAL MANUAL ON UNIFORM TRAFFIC CONTROL DEVICES (MUTCD) SIGN CODES ARE SHOWN UNLESS DESIGNATED BY (CA), INDICATING CALIFORNIA MUTCD.
3. EXISTING UTILITIES ARE NOT SHOWN ON THESE PLAN SHEETS. THE CONTRACTOR SHALL VERIFY LOCATIONS OF EXISTING UTILITIES AND ADJUST THE FIELD LOCATION OF THE SIGN POSTS IN CONSULTATION WITH THE ENGINEER.
4. SEE "MI", "SC", AND "TH" SHEETS FOR ADDITIONAL CONSTRUCTION AREA SIGNS.

LEGEND:

XX = CONSTRUCTION AREA SIGN

TYPICAL PLACEMENT OF TRAFFIC PLASTIC DRUM

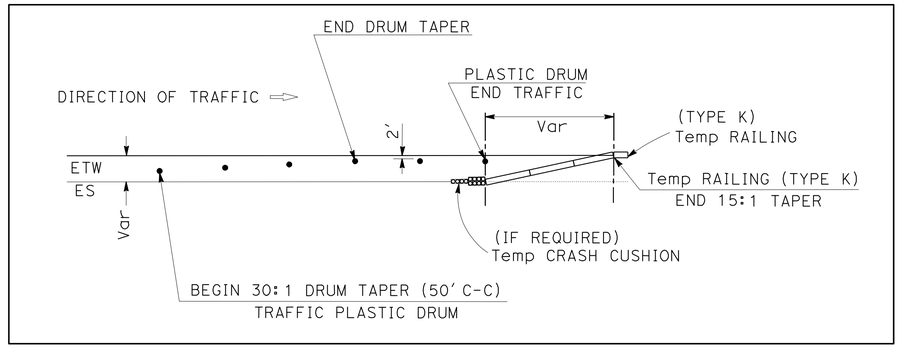

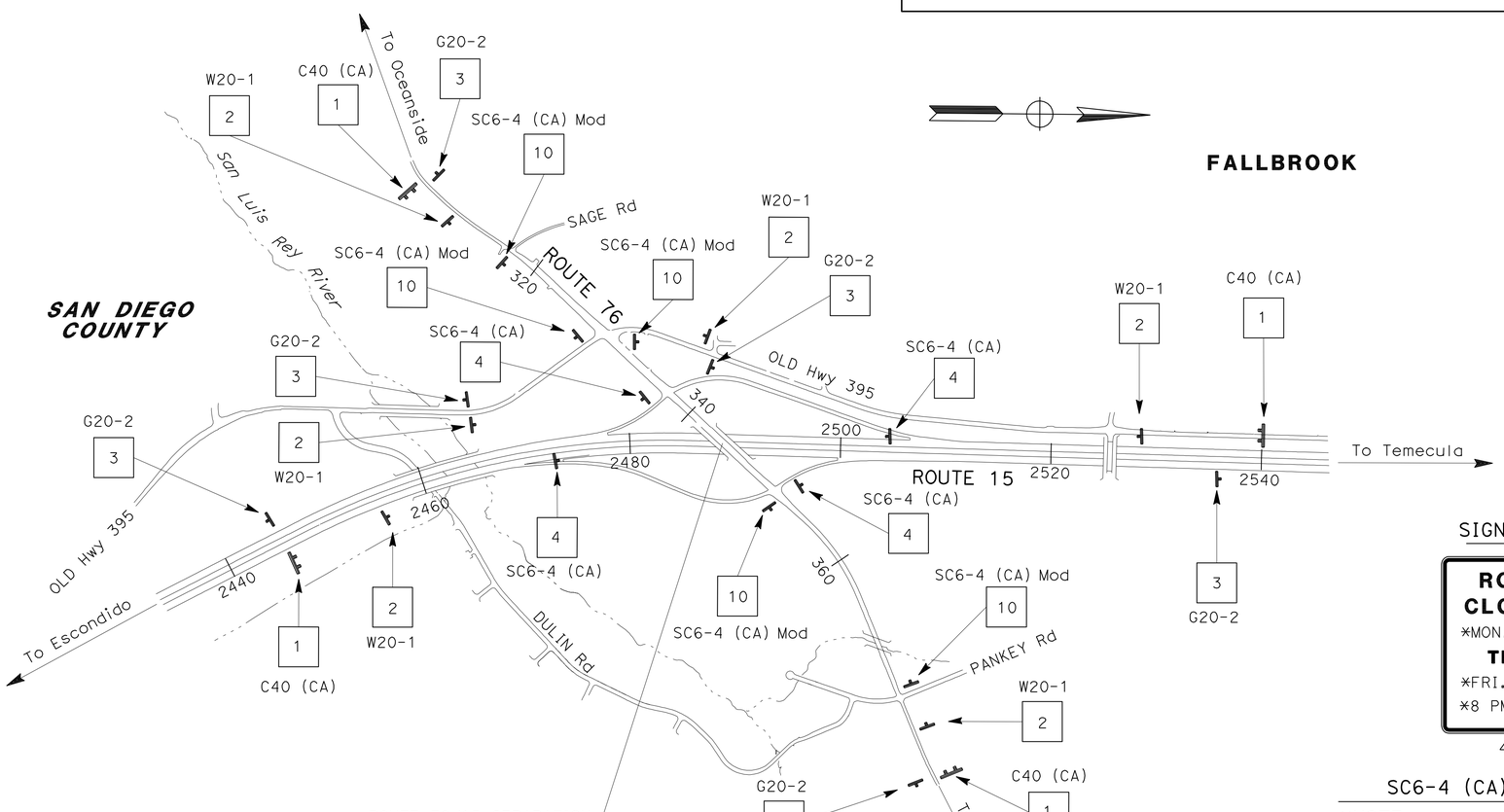

CONSTRUCTION AREA SIGNS

SIGN No.	TYPE	PANEL SIZE (In)	No. OF POST AND SIZE (In)	No. OF SIGNS
1	C40 (CA)	108 X 42	2-4 X 6 (S)	4
2	W20-1	48 X 24	1-4 X 6 (S)	6
3	G20-2	48 X 48	1-4 X 4 (S)	6
4	SC6-4 (CA)	36 X 36	PORTABLE	4
10	SC6-4 (CA) Mod	36 X 36	PORTABLE	5
			TOTAL	25

SIGN #10

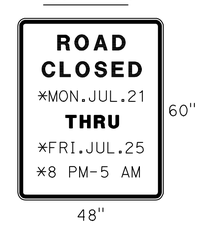

SC6-4 (CA) (Mod) (ROAD)

*NOTE: DAYS, DATES AND TIMES WILL VARY, SPECIFY WHEN ORDERING.

CONSTRUCTION AREA SIGNS

NO SCALE

CS-1

APPROVED FOR CONSTRUCTION AREA SIGN WORK ONLY.

STATE OF CALIFORNIA - DEPARTMENT OF TRANSPORTATION
Caltrans
TRAFFIC DESIGN

FUNCTIONAL SUPERVISOR: CAMILLE ABOU FADEL
CALCULATED-DESIGNED BY: SHAHIN ADIBI
CHECKED BY: ROBERT EDEJER
REVISED BY
DATE REVISED

LAST REVISION 01-19-12
DATE PLOTTED => 17-APR-2012
TIME PLOTTED => 12:12

Dist	COUNTY	ROUTE	POST MILES TOTAL PROJECT	SHEET No.	TOTAL SHEETS
11	SD	15,76	R46.1/R47.3, R16.7/R17.7	176	477

REGISTERED CIVIL ENGINEER 01-11-12 DATE

4-16-12
PLANS APPROVAL DATE

REGISTERED PROFESSIONAL ENGINEER SHAHIN T. ADIBI No. 54839 Exp. 06-30-12 CIVIL STATE OF CALIFORNIA

THE STATE OF CALIFORNIA OR ITS OFFICERS OR AGENTS SHALL NOT BE RESPONSIBLE FOR THE ACCURACY OR COMPLETENESS OF SCANNED COPIES OF THIS PLAN SHEET.

NOTES:

1. EXACT LOCATION OF CONSTRUCTION AREA SIGNS WILL BE DETERMINED BY THE ENGINEER.
2. FEDERAL MANUAL ON UNIFORM TRAFFIC CONTROL DEVICES (MUTCD) SIGN CODES ARE SHOWN UNLESS DESIGNATED BY (CA), INDICATING CALIFORNIA MUTCD.
3. SEE CONSTRUCTION AREA SIGN AND STAGE CONSTRUCTION PLANS FOR ADDITIONAL CONSTRUCTION AREA SIGNS.
3. EXISTING UTILITIES ARE NOT SHOWN ON THESE PLAN SHEETS. THE CONTRACTOR SHALL VERIFY LOCATIONS OF EXISTING UTILITIES AND ADJUST THE FIELD LOCATION OF THE SIGN POSTS IN CONSULTATION WITH THE ENGINEER.

LEGEND:

XX = CONSTRUCTION AREA SIGN

CONSTRUCTION AREA SIGNS

SIGN No.	TYPE	PANEL SIZE (In)	No. OF POST AND SIZE (In)	No. OF SIGNS
74	SC3(CA)	48 X 18	1-4 X 4 (S)	6
75	M4-8a	24 X 18	1-4 X 4 (S)	2
76	M4-9cR	30 X 24	1-4 X 4 (S)	2
77	M4-9cL	30 X 24	1-4 X 4 (S)	2
78	SPCL-1	30 X 18	1-4 X 4 (S)	2
	M4-9cR	30 X 24		
79	SPCL-1	30 X 18	1-4 X 4 (S)	1
	SC3	48 X 18		
80	SPCL-2	30 X 18	1-4 X 4 (S)	1
	M4-9cL	30 X 24		
			TOTAL	16

(S) DENOTES STATIONARY MOUNTED SIGN

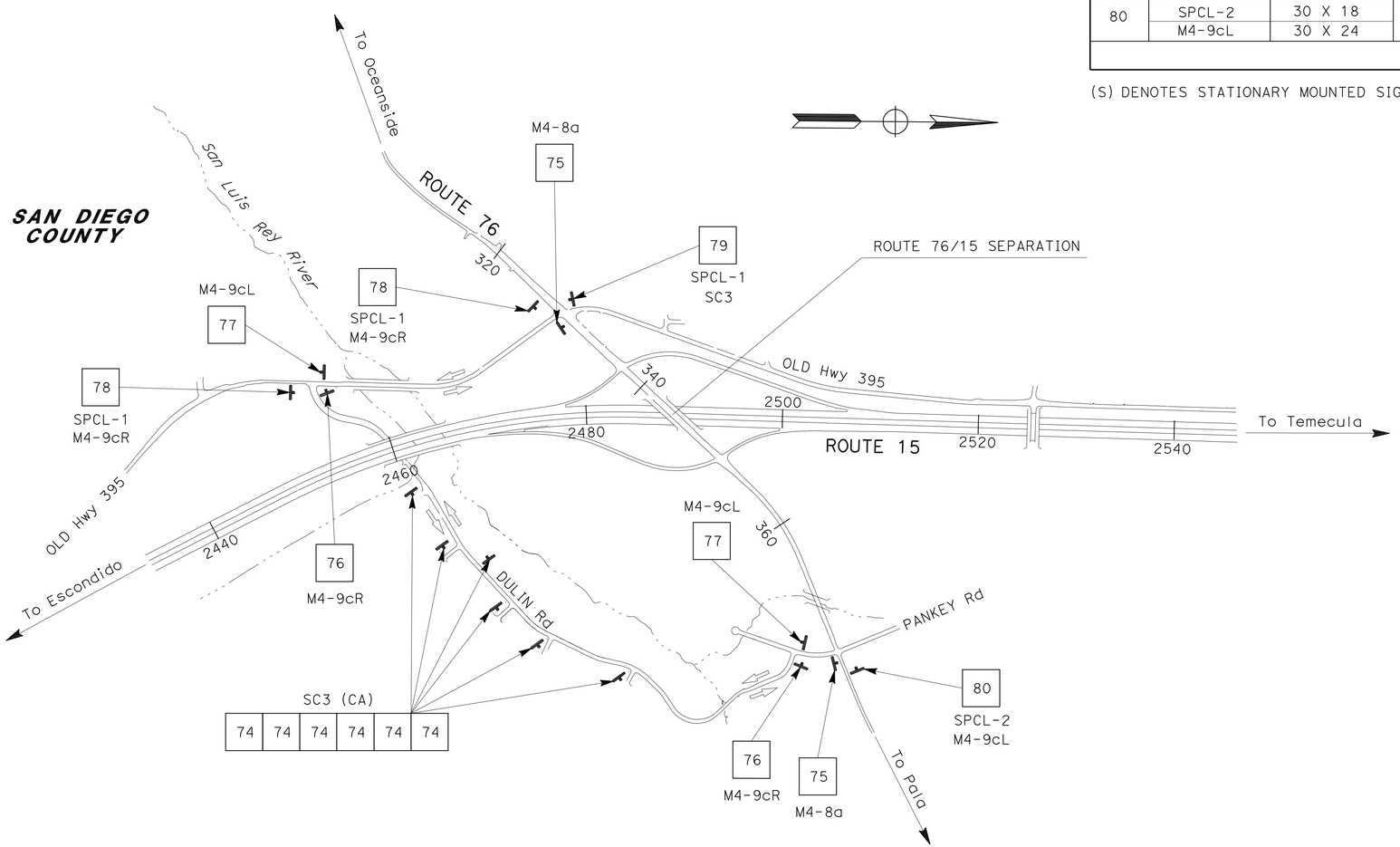

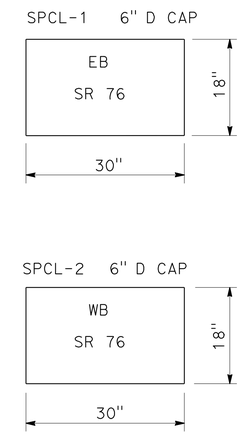

MOTORIST INFORMATION PLAN

BIKE DETOUR

NO SCALE

MI-1

APPROVED FOR MOTORIST INFORMATION WORK ONLY

STATE OF CALIFORNIA - DEPARTMENT OF TRANSPORTATION
Caltrans® TRAFFIC DESIGN

FUNCTIONAL SUPERVISOR: CAMILLE ABOU FADEL
CALCULATED-DESIGNED BY: MOHAMAD KHATIB
CHECKED BY: WAMEEDH TOZY
REVISED BY / DATE REVISED

LAST REVISION 01-19-12 | DATE PLOTTED => 17-APR-2012 | TIME PLOTTED => 12:12

Dist	COUNTY	ROUTE	POST MILES TOTAL PROJECT	SHEET No.	TOTAL SHEETS
11	SD	15,76	R46.1/R47.3, R16.7/R17.7	177	477

REGISTERED CIVIL ENGINEER 01-10-12 DATE

4-16-12
PLANS APPROVAL DATE

REGISTERED PROFESSIONAL ENGINEER MOHAMAD KHATIB No. C63411 Exp. 09-30-12 CIVIL STATE OF CALIFORNIA

THE STATE OF CALIFORNIA OR ITS OFFICERS OR AGENTS SHALL NOT BE RESPONSIBLE FOR THE ACCURACY OR COMPLETENESS OF SCANNED COPIES OF THIS PLAN SHEET.

LEGEND:

CONTINUOUS WORK FROM PREVIOUS STAGE

WORK ON THIS STAGE

TEMPORARY PAVEMENT

DIRECTION OF TRAFFIC

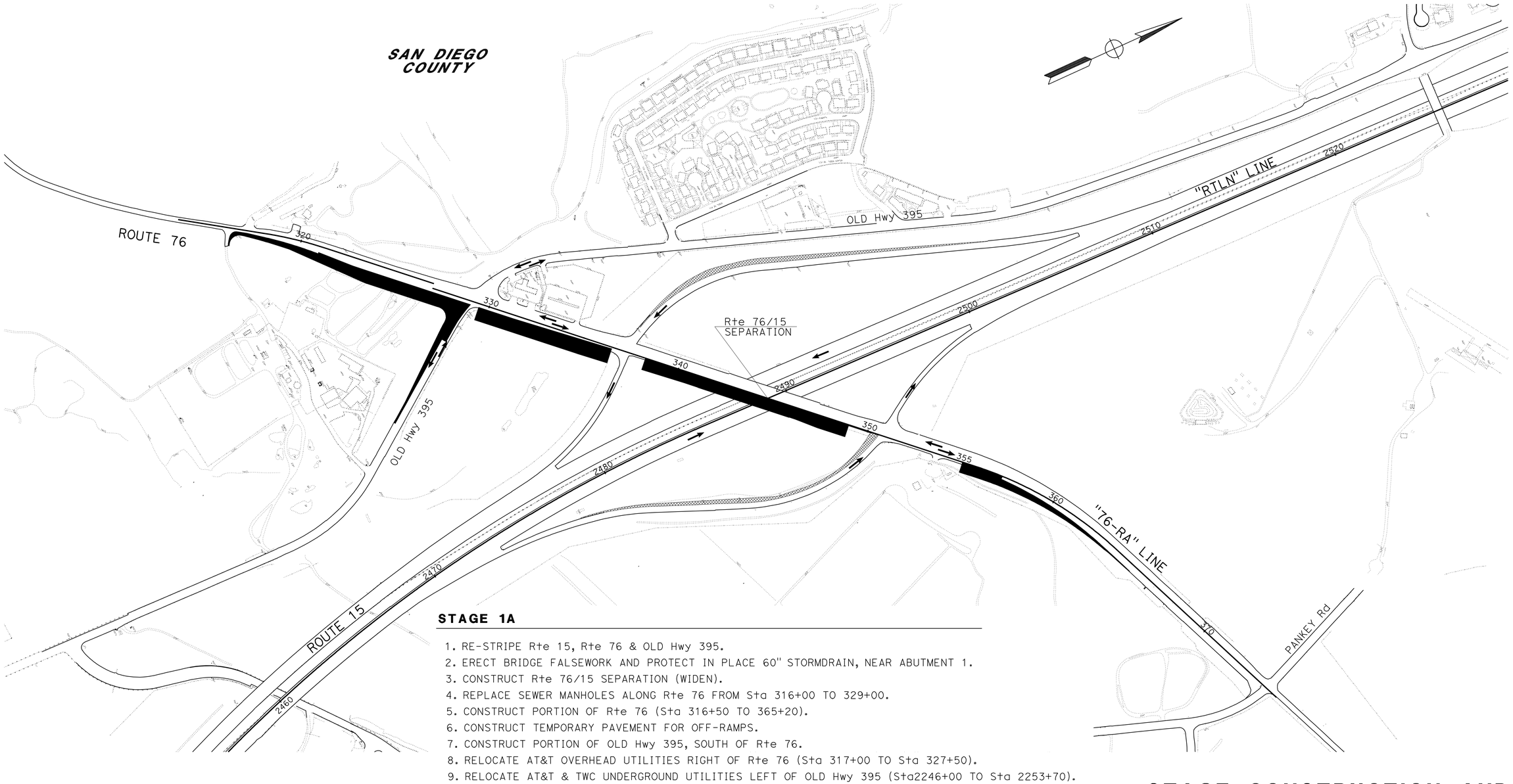

STAGE 1A

1. RE-STRIPE Rte 15, Rte 76 & OLD Hwy 395.
2. ERECT BRIDGE FALSEWORK AND PROTECT IN PLACE 60" STORMDRAIN, NEAR ABUTMENT 1.
3. CONSTRUCT Rte 76/15 SEPARATION (WIDEN).
4. REPLACE SEWER MANHOLES ALONG Rte 76 FROM Sta 316+00 TO 329+00.
5. CONSTRUCT PORTION OF Rte 76 (Sta 316+50 TO 365+20).
6. CONSTRUCT TEMPORARY PAVEMENT FOR OFF-RAMPS.
7. CONSTRUCT PORTION OF OLD Hwy 395, SOUTH OF Rte 76.
8. RELOCATE AT&T OVERHEAD UTILITIES RIGHT OF Rte 76 (Sta 317+00 TO Sta 327+50).
9. RELOCATE AT&T & TWC UNDERGROUND UTILITIES LEFT OF OLD Hwy 395 (Sta2246+00 TO Sta 2253+70).
10. INSTALL UTILITIES WITHIN STRUCTURE.

APPROVED FOR STAGE CONSTRUCTION AND TRAFFIC HANDLING WORK ONLY

STAGE CONSTRUCTION AND TRAFFIC HANDLING PLAN

NO SCALE

STAGE 1A

SC-1

STATE OF CALIFORNIA - DEPARTMENT OF TRANSPORTATION
Caltrans PROJECT DEVELOPMENT

FUNCTIONAL SUPERVISOR: CARL SAVAGE

CALCULATED-DESIGNED BY: MOHAMAD KHATIB
CHECKED BY: WAMEEDH TOZY

REVISED BY | DATE REVISED

LAST REVISION 01-20-12 | DATE PLOTTED => 17-APR-2012 | TIME PLOTTED => 12:12

Dist	COUNTY	ROUTE	POST MILES TOTAL PROJECT	SHEET No.	TOTAL SHEETS
11	SD	15,76	R46.1/R47.3, R16.7/R17.7	178	477

REGISTERED CIVIL ENGINEER 01-10-12 DATE

4-16-12
PLANS APPROVAL DATE

REGISTERED PROFESSIONAL ENGINEER MOHAMAD KHATIB No. C63411 Exp. 09-30-12 CIVIL STATE OF CALIFORNIA

THE STATE OF CALIFORNIA OR ITS OFFICERS OR AGENTS SHALL NOT BE RESPONSIBLE FOR THE ACCURACY OR COMPLETENESS OF SCANNED COPIES OF THIS PLAN SHEET.

LEGEND:

CONTINUOUS WORK FROM PREVIOUS STAGE

WORK ON THIS STAGE

TEMPORARY PAVEMENT

DIRECTION OF TRAFFIC

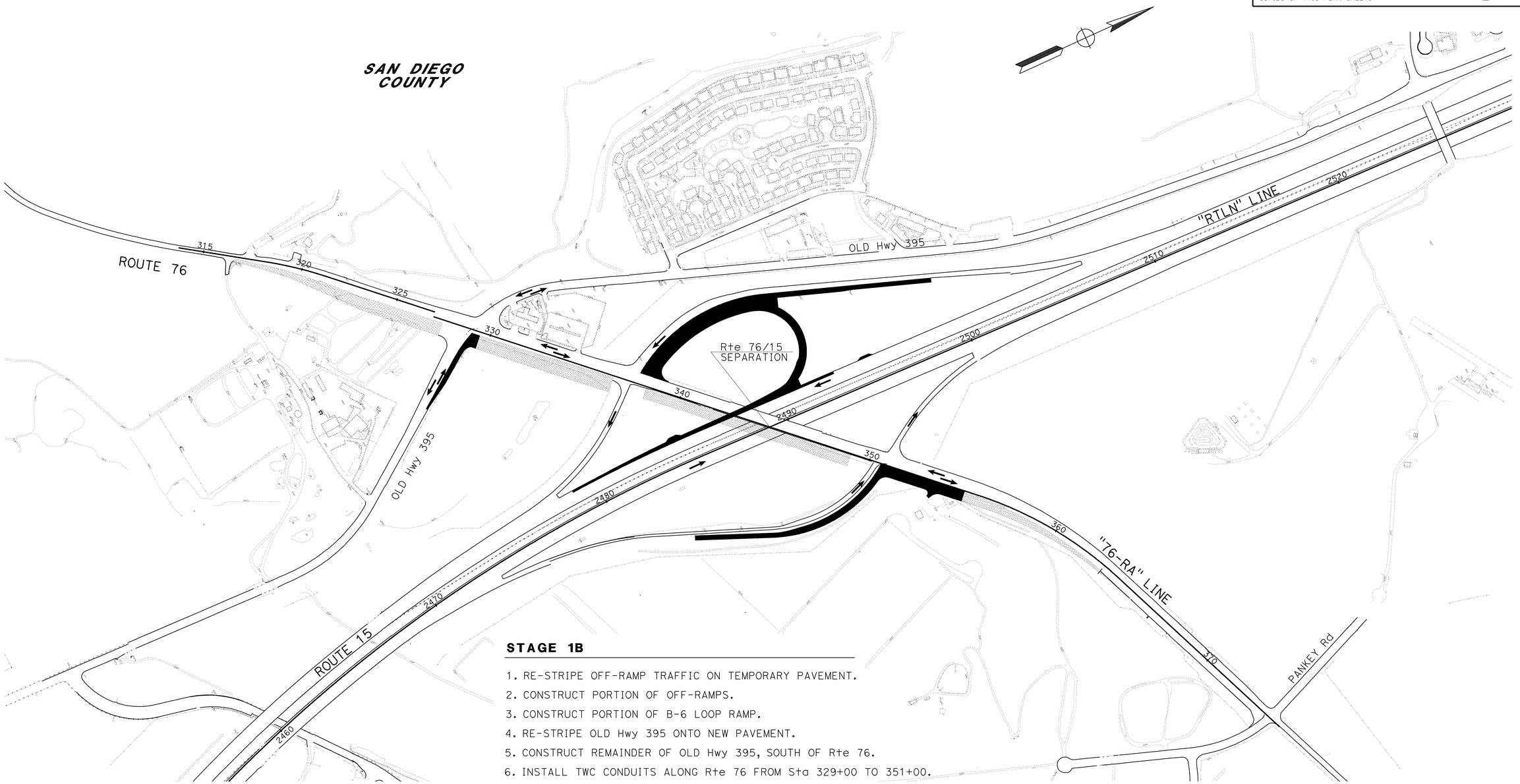

STAGE 1B

1. RE-STRIPE OFF-RAMP TRAFFIC ON TEMPORARY PAVEMENT.
2. CONSTRUCT PORTION OF OFF-RAMPS.
3. CONSTRUCT PORTION OF B-6 LOOP RAMP.
4. RE-STRIPE OLD Hwy 395 ONTO NEW PAVEMENT.
5. CONSTRUCT REMAINDER OF OLD Hwy 395, SOUTH OF Rte 76.
6. INSTALL TWC CONDUITS ALONG Rte 76 FROM Sta 329+00 TO 351+00.

APPROVED FOR STAGE CONSTRUCTION AND TRAFFIC HANDLING WORK ONLY

STAGE CONSTRUCTION AND TRAFFIC HANDLING PLAN

STAGE 1B

NO SCALE

SC-2

STATE OF CALIFORNIA - DEPARTMENT OF TRANSPORTATION

Caltrans®

PROJECT DEVELOPMENT

FUNCTIONAL SUPERVISOR: CARL SAVAGE

CALCULATED-DESIGNED BY: MOHAMAD KHATIB

CHECKED BY: WAMEEDH TOZY

REVISED BY

DATE REVISED

LAST REVISION 01-20-12

DATE PLOTTED => 17-APR-2012

TIME PLOTTED => 12:12

Dist	COUNTY	ROUTE	POST MILES TOTAL PROJECT	SHEET No.	TOTAL SHEETS
11	SD	15,76	R46.1/R47.3, R16.7/R17.7	179	477

REGISTERED CIVIL ENGINEER 01-10-12 DATE

4-16-12
PLANS APPROVAL DATE

REGISTERED PROFESSIONAL ENGINEER MOHAMAD KHATIB No. C63411 Exp. 09-30-12 CIVIL STATE OF CALIFORNIA

THE STATE OF CALIFORNIA OR ITS OFFICERS OR AGENTS SHALL NOT BE RESPONSIBLE FOR THE ACCURACY OR COMPLETENESS OF SCANNED COPIES OF THIS PLAN SHEET.

LEGEND:

CONTINUOUS WORK FROM PREVIOUS STAGE

WORK ON THIS STAGE

TEMPORARY PAVEMENT

DIRECTION OF TRAFFIC

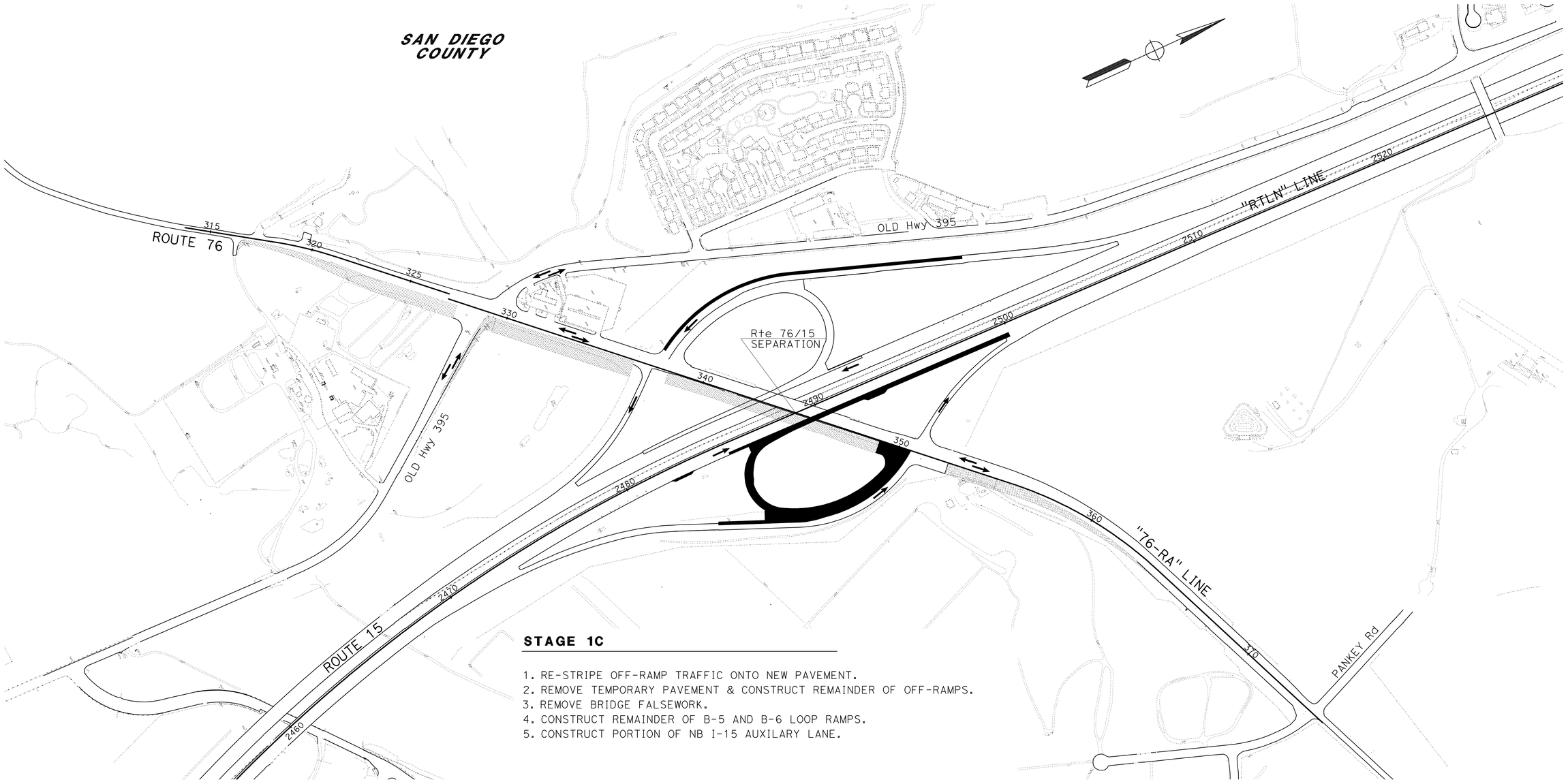

STAGE 1C

1. RE-STRIPE OFF-RAMP TRAFFIC ONTO NEW PAVEMENT.
2. REMOVE TEMPORARY PAVEMENT & CONSTRUCT REMAINDER OF OFF-RAMPS.
3. REMOVE BRIDGE FALSEWORK.
4. CONSTRUCT REMAINDER OF B-5 AND B-6 LOOP RAMPS.
5. CONSTRUCT PORTION OF NB I-15 AUXILARY LANE.

STAGE CONSTRUCTION AND TRAFFIC HANDLING PLAN

STAGE 1C

NO SCALE

SC-3

APPROVED FOR STAGE CONSTRUCTION AND TRAFFIC HANDLING WORK ONLY

STATE OF CALIFORNIA - DEPARTMENT OF TRANSPORTATION
Caltrans
PROJECT DEVELOPMENT

FUNCTIONAL SUPERVISOR: CARL SAVAGE

CALCULATED-DESIGNED BY: MOHAMAD KHATIB
CHECKED BY: WAMEEDH TOZY

REVISED BY
DATE REVISED

LAST REVISION 01-20-12
DATE PLOTTED => 17-APR-2012
TIME PLOTTED => 12:12

Dist	COUNTY	ROUTE	POST MILES TOTAL PROJECT	SHEET No.	TOTAL SHEETS
11	SD	15,76	R46.1/R47.3, R16.7/R17.7	180	477

REGISTERED CIVIL ENGINEER 01-10-12 DATE

4-16-12
PLANS APPROVAL DATE

REGISTERED PROFESSIONAL ENGINEER MOHAMAD KHATIB No. C63411 Exp. 09-30-12 CIVIL STATE OF CALIFORNIA

THE STATE OF CALIFORNIA OR ITS OFFICERS OR AGENTS SHALL NOT BE RESPONSIBLE FOR THE ACCURACY OR COMPLETENESS OF SCANNED COPIES OF THIS PLAN SHEET.

LEGEND:

CONTINUOUS WORK FROM PREVIOUS STAGE

WORK ON THIS STAGE

TEMPORARY PAVEMENT

DIRECTION OF TRAFFIC

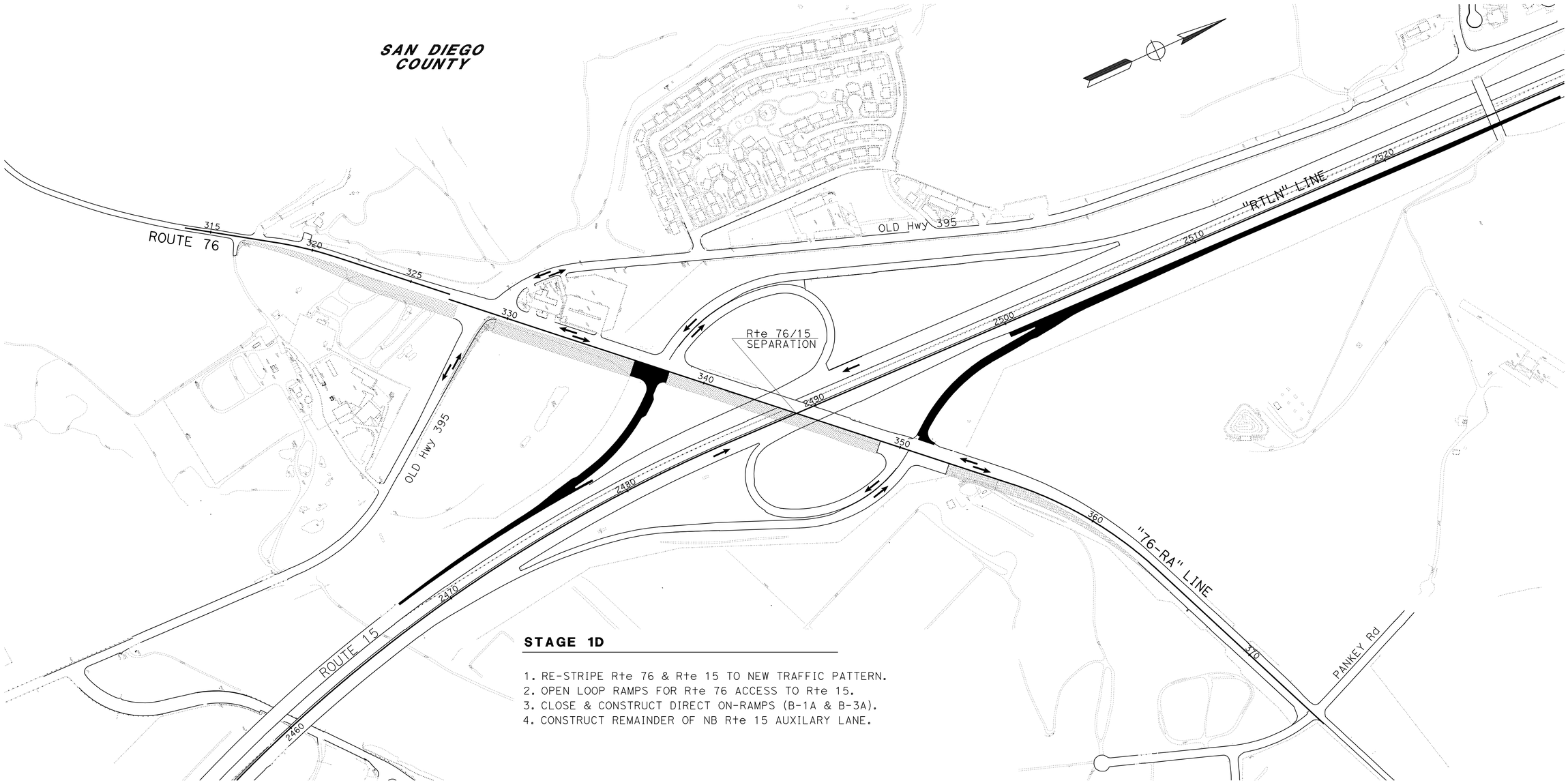

STAGE 1D

1. RE-STRIPE Rte 76 & Rte 15 TO NEW TRAFFIC PATTERN.
2. OPEN LOOP RAMPS FOR Rte 76 ACCESS TO Rte 15.
3. CLOSE & CONSTRUCT DIRECT ON-RAMPS (B-1A & B-3A).
4. CONSTRUCT REMAINDER OF NB Rte 15 AUXILARY LANE.

STAGE CONSTRUCTION AND TRAFFIC HANDLING PLAN

STAGE 1D

NO SCALE

SC-4

APPROVED FOR STAGE CONSTRUCTION AND TRAFFIC HANDLING WORK ONLY

REVISED BY | DATE REVISED

MOHAMAD KHATIB | WAMEEDH TOZY

CALCULATED-DESIGNED BY | CHECKED BY

FUNCTIONAL SUPERVISOR: CARL SAVAGE

STATE OF CALIFORNIA - DEPARTMENT OF TRANSPORTATION

Caltrans® PROJECT DEVELOPMENT

LAST REVISION 01-20-12 | DATE PLOTTED => 17-APR-2012 | TIME PLOTTED => 12:13

Dist	COUNTY	ROUTE	POST MILES TOTAL PROJECT	SHEET No.	TOTAL SHEETS
11	SD	15,76	R46.1/R47.3, R16.7/R17.7	181	477

REGISTERED CIVIL ENGINEER 01-10-12 DATE

4-16-12
PLANS APPROVAL DATE

REGISTERED PROFESSIONAL ENGINEER MOHAMAD KHATIB No. C63411 Exp. 09-30-12 CIVIL STATE OF CALIFORNIA

THE STATE OF CALIFORNIA OR ITS OFFICERS OR AGENTS SHALL NOT BE RESPONSIBLE FOR THE ACCURACY OR COMPLETENESS OF SCANNED COPIES OF THIS PLAN SHEET.

LEGEND:

CONTINUOUS WORK FROM PREVIOUS STAGE

WORK ON THIS STAGE

TEMPORARY PAVEMENT

DIRECTION OF TRAFFIC

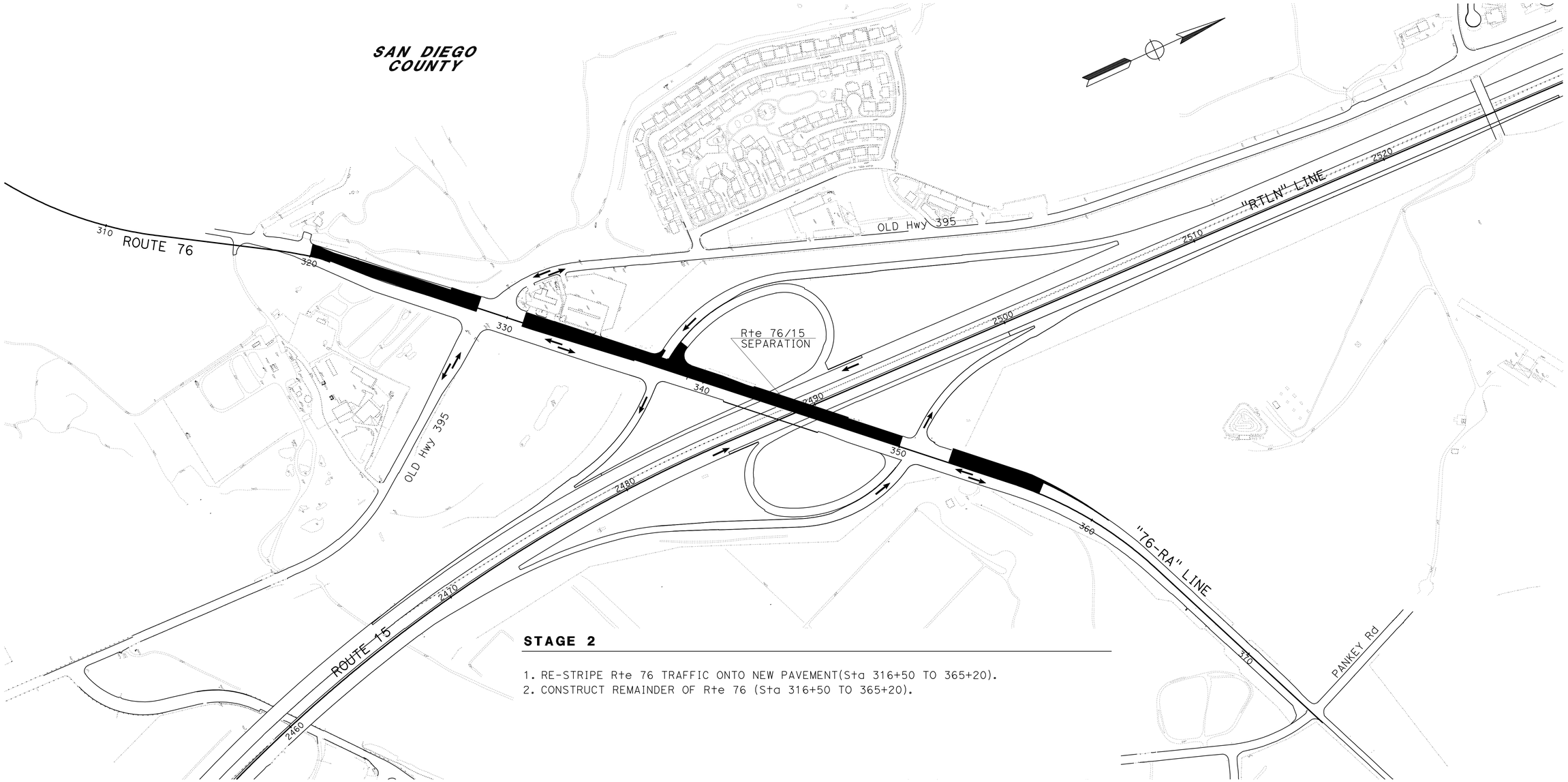

STAGE 2

1. RE-STRIPE Rte 76 TRAFFIC ONTO NEW PAVEMENT(Sta 316+50 TO 365+20).
2. CONSTRUCT REMAINDER OF Rte 76 (Sta 316+50 TO 365+20).

APPROVED FOR STAGE CONSTRUCTION AND TRAFFIC HANDLING WORK ONLY

STAGE CONSTRUCTION AND TRAFFIC HANDLING PLAN

NO SCALE

STAGE 2

SC-5

STATE OF CALIFORNIA - DEPARTMENT OF TRANSPORTATION

Caltrans® **PROJECT DEVELOPMENT**

FUNCTIONAL SUPERVISOR: CARL SAVAGE

CALCULATED-DESIGNED BY: MOHAMAD KHATIB

CHECKED BY: WAMEEDH TOZY

REVISED BY

DATE REVISED

LAST REVISION 01-20-12

DATE PLOTTED => 17-APR-2012
TIME PLOTTED => 12:13

Dist	COUNTY	ROUTE	POST MILES TOTAL PROJECT	SHEET No.	TOTAL SHEETS
11	SD	15,76	R46.1/R47.3, R16.7/R17.7	182	477

REGISTERED CIVIL ENGINEER 01-10-12 DATE

4-16-12
PLANS APPROVAL DATE

REGISTERED PROFESSIONAL ENGINEER MOHAMAD KHATIB No. C63411 Exp. 09-30-12 CIVIL STATE OF CALIFORNIA

THE STATE OF CALIFORNIA OR ITS OFFICERS OR AGENTS SHALL NOT BE RESPONSIBLE FOR THE ACCURACY OR COMPLETENESS OF SCANNED COPIES OF THIS PLAN SHEET.

NOTE:

1. SEE SCQ SHEETS FOR LOCATION OF TEMPORARY PAVEMENT DELINEATION "LESS THAN 180 DAYS" AND/OR "180 DAYS AND MORE".

LEGEND:

- CONSTRUCTION WORK AREA THIS STAGE
- CONTINUOUS WORK FROM PREVIOUS STAGE
- TEMPORARY PAVEMENT 0.75' HMA (TYPE A) 1.00' CLASS 2 AB
- REMOVE TEMPORARY PAVEMENT
- CONSTRUCTION WORK DURING LANE/RAMP CLOSURE (SEE LANE/CLOSURE CLOSURE CHARTS)
- DIRECTION OF TRAFFIC
- TEMPORARY CRASH CUSHION MODULE
- ALTERNATIVE CRASH CUSHION
- TRAFFIC PLASTIC DRUM
- TYPE III BARRICADE (NO BARRICADES WITH SIGNS)

B (XX) - BEGIN PAVEMENT DELINEATION DETAIL
E (XX) - END PAVEMENT DELINEATION DETAIL
(#) - CURVE NUMBER
(X) - TEMPORARY PORTABLE SIGN
[XX] - CONSTRUCTION AREA SIGN
BR (XX) - BEGIN REMOVE PAVEMENT DELINEATION DETAIL
ER (XX) - END REMOVE PAVEMENT DELINEATION DETAIL
BT (XX) - BEGIN TEMPORARY PAVEMENT DELINEATION DETAIL
ET (XX) - END TEMPORARY PAVEMENT DELINEATION DETAIL
T (XX) - TEMPORARY PAVEMENT DELINEATION DETAIL
R (XX) - REMOVE PAVEMENT DELINEATION DETAIL

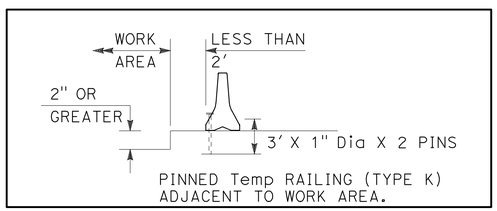

TYPICAL

STAGE CONSTRUCTION AND TRAFFIC HANDLING PLAN

STAGE

NO SCALE

SC-6

APPROVED FOR STAGE CONSTRUCTION AND TRAFFIC HANDLING WORK ONLY

REVISED BY | DATE REVISED
MOHAMAD KHATIB | WAMEEDH TOZY
CALCULATED-DESIGNED BY | CHECKED BY
FUNCTIONAL SUPERVISOR: CARL SAVAGE
STATE OF CALIFORNIA - DEPARTMENT OF TRANSPORTATION
Caltrans® PROJECT DEVELOPMENT

LAST REVISION 01-20-12 | DATE PLOTTED => 17-APR-2012 | TIME PLOTTED => 12:13

Dist	COUNTY	ROUTE	POST MILES TOTAL PROJECT	SHEET No.	TOTAL SHEETS
11	SD	15,76	R46.1/R47.3, R16.7/R17.7	183	477

REGISTERED CIVIL ENGINEER 01-10-12 DATE

4-16-12
PLANS APPROVAL DATE

REGISTERED PROFESSIONAL ENGINEER MOHAMAD KHATIB No. C63411 Exp. 09-30-12 CIVIL STATE OF CALIFORNIA

THE STATE OF CALIFORNIA OR ITS OFFICERS OR AGENTS SHALL NOT BE RESPONSIBLE FOR THE ACCURACY OR COMPLETENESS OF SCANNED COPIES OF THIS PLAN SHEET.

NOTE:

FOR ACCURATE RIGHT OF WAY DATA, CONTACT RIGHT OF WAY ENGINEERING AT THE DISTRICT OFFICE.

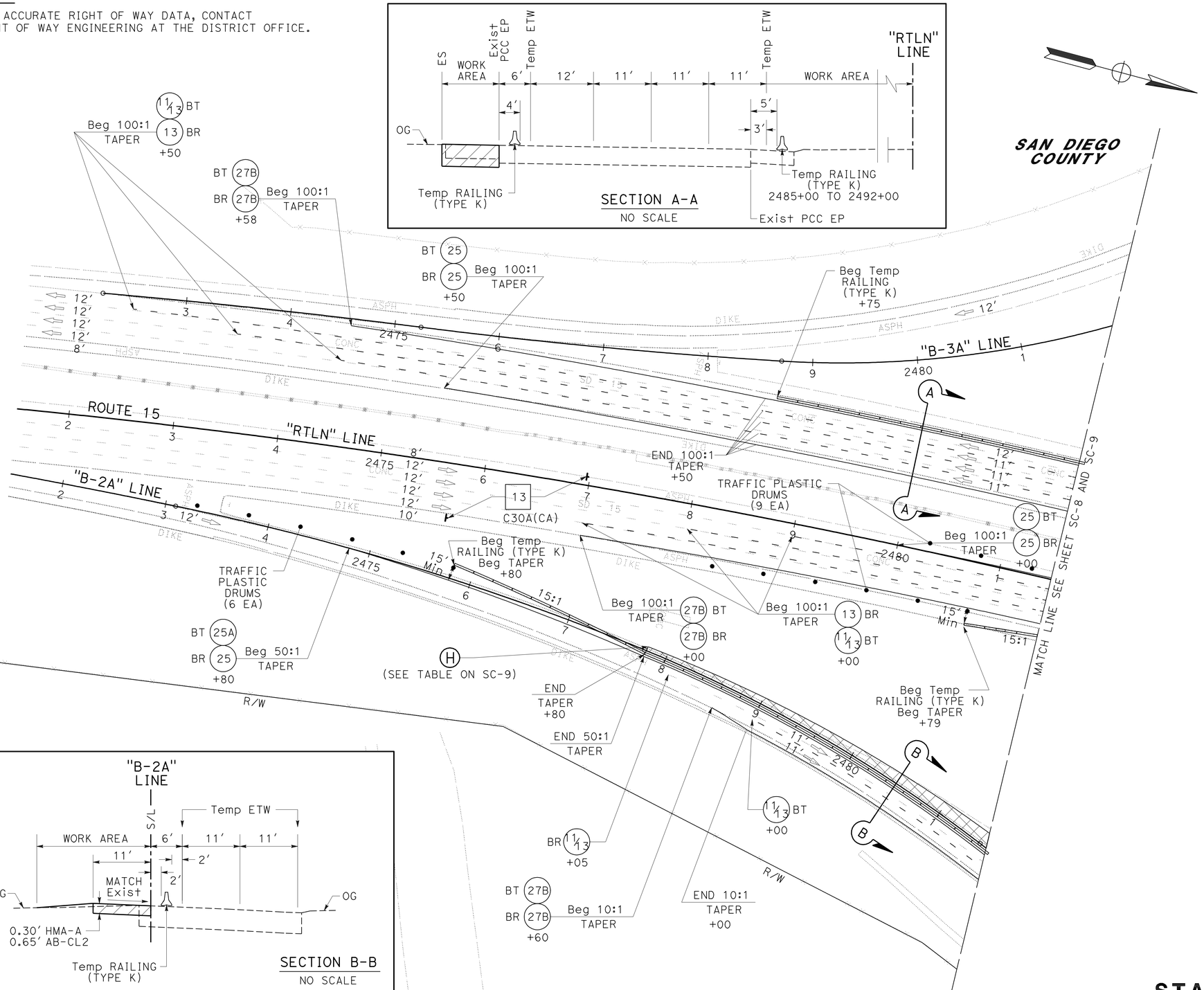

APPROVED FOR STAGE CONSTRUCTION AND TRAFFIC HANDLING WORK ONLY

STAGE CONSTRUCTION AND TRAFFIC HANDLING PLAN

STAGE 1A

SCALE: 1" = 50'

SC-7

STATE OF CALIFORNIA - DEPARTMENT OF TRANSPORTATION
Caltrans® PROJECT DEVELOPMENT

FUNCTIONAL SUPERVISOR: CARL SAVAGE
CALCULATED-DESIGNED BY: MOHAMAD KHATIB
CHECKED BY: WAMEEDH TOZY
REVISED BY / DATE REVISED

LAST REVISION 01-20-12
DATE PLOTTED => 17-APR-2012
TIME PLOTTED => 12:13

Dist	COUNTY	ROUTE	POST MILES TOTAL PROJECT	SHEET No.	TOTAL SHEETS
11	SD	15,76	R46.1/R47.3, R16.7/R17.7	184	477

REGISTERED CIVIL ENGINEER 01-10-12 DATE

4-16-12
PLANS APPROVAL DATE

REGISTERED PROFESSIONAL ENGINEER MOHAMAD KHATIB No. C63411 Exp. 09-30-12 CIVIL STATE OF CALIFORNIA

THE STATE OF CALIFORNIA OR ITS OFFICERS OR AGENTS SHALL NOT BE RESPONSIBLE FOR THE ACCURACY OR COMPLETENESS OF SCANNED COPIES OF THIS PLAN SHEET.

NOTE:

FOR ACCURATE RIGHT OF WAY DATA, CONTACT RIGHT OF WAY ENGINEERING AT THE DISTRICT OFFICE.

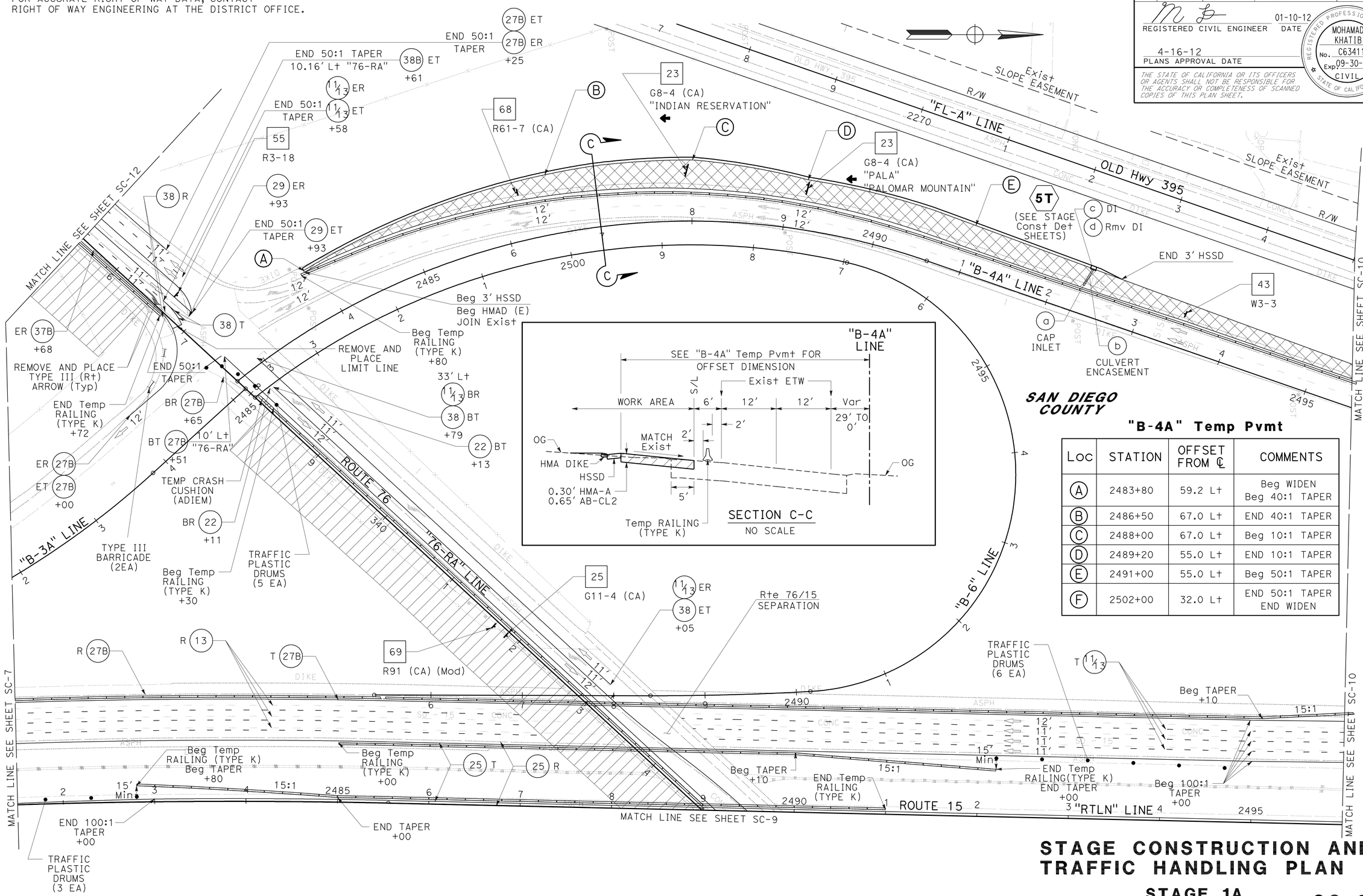

"B-4A" Temp Pvmt

Loc	STATION	OFFSET FROM ℄	COMMENTS
A	2483+80	59.2 Lt	Beg WIDEN Beg 40:1 TAPER
B	2486+50	67.0 Lt	END 40:1 TAPER
C	2488+00	67.0 Lt	Beg 10:1 TAPER
D	2489+20	55.0 Lt	END 10:1 TAPER
E	2491+00	55.0 Lt	Beg 50:1 TAPER
F	2502+00	32.0 Lt	END 50:1 TAPER END WIDEN

SAN DIEGO COUNTY

STAGE CONSTRUCTION AND TRAFFIC HANDLING PLAN

STAGE 1A

SCALE: 1" = 50'

SC-8

APPROVED FOR STAGE CONSTRUCTION AND TRAFFIC HANDLING WORK ONLY

STATE OF CALIFORNIA - DEPARTMENT OF TRANSPORTATION
Caltrans PROJECT DEVELOPMENT

FUNCTIONAL SUPERVISOR: CARL SAVAGE
CALCULATED-DESIGNED BY: MOHAMAD KHATIB
CHECKED BY: WAMEEDH TOZY
REVISED BY
DATE REVISED

LAST REVISION 01-20-12
DATE PLOTTED => 17-APR-2012
TIME PLOTTED => 12:13

Dist	COUNTY	ROUTE	POST MILES TOTAL PROJECT	SHEET No.	TOTAL SHEETS
11	SD	15,76	R46.1/R47.3, R16.7/R17.7	185	477

REGISTERED CIVIL ENGINEER 01-10-12 DATE

4-16-12
PLANS APPROVAL DATE

REGISTERED PROFESSIONAL ENGINEER MOHAMAD KHATIB No. C63411 Exp 09-30-12 CIVIL STATE OF CALIFORNIA

THE STATE OF CALIFORNIA OR ITS OFFICERS OR AGENTS SHALL NOT BE RESPONSIBLE FOR THE ACCURACY OR COMPLETENESS OF SCANNED COPIES OF THIS PLAN SHEET.

NOTE:

FOR ACCURATE RIGHT OF WAY DATA, CONTACT RIGHT OF WAY ENGINEERING AT THE DISTRICT OFFICE.

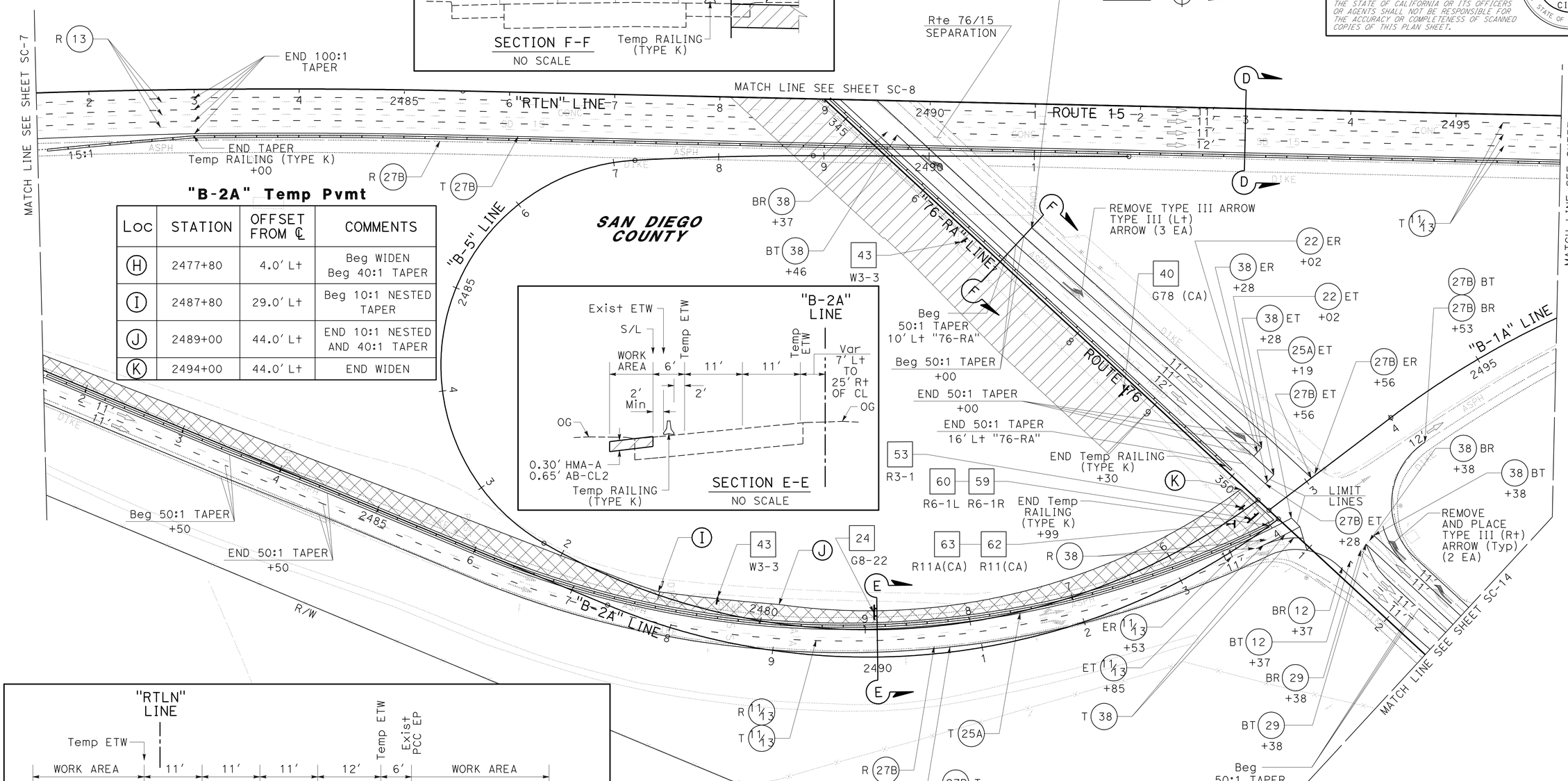

"B-2A" Temp Pvmt

Loc	STATION	OFFSET FROM ℄	COMMENTS
H	2477+80	4.0' Lt	Beg WIDEN Beg 40:1 TAPER
I	2487+80	29.0' Lt	Beg 10:1 NESTED TAPER
J	2489+00	44.0' Lt	END 10:1 NESTED AND 40:1 TAPER
K	2494+00	44.0' Lt	END WIDEN

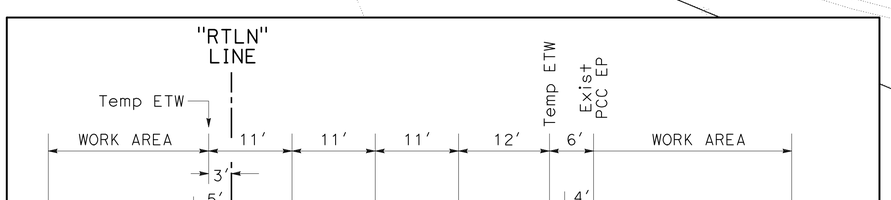

APPROVED FOR STAGE CONSTRUCTION AND TRAFFIC HANDLING WORK ONLY

STAGE CONSTRUCTION AND TRAFFIC HANDLING PLAN

STAGE 1A

SCALE: 1" = 50'

SC-9

STATE OF CALIFORNIA - DEPARTMENT OF TRANSPORTATION
Caltrans PROJECT DEVELOPMENT

FUNCTIONAL SUPERVISOR: CARL SAVAGE
CALCULATED-DESIGNED BY: MOHAMAD KHATIB
CHECKED BY: WAMEEDH TOZY
REVISED BY / DATE REVISED

LAST REVISION 01-20-12 | DATE PLOTTED => 17-APR-2012 | TIME PLOTTED => 12:13

Dist	COUNTY	ROUTE	POST MILES TOTAL PROJECT	SHEET No.	TOTAL SHEETS
11	SD	15,76	R46.1/R47.3, R16.7/R17.7	186	477

REGISTERED CIVIL ENGINEER 01-10-12 DATE

4-16-12
PLANS APPROVAL DATE

REGISTERED PROFESSIONAL ENGINEER MOHAMAD KHATIB No. C63411 Exp. 09-30-12 CIVIL STATE OF CALIFORNIA

THE STATE OF CALIFORNIA OR ITS OFFICERS OR AGENTS SHALL NOT BE RESPONSIBLE FOR THE ACCURACY OR COMPLETENESS OF SCANNED COPIES OF THIS PLAN SHEET.

NOTE:

FOR ACCURATE RIGHT OF WAY DATA, CONTACT RIGHT OF WAY ENGINEERING AT THE DISTRICT OFFICE.

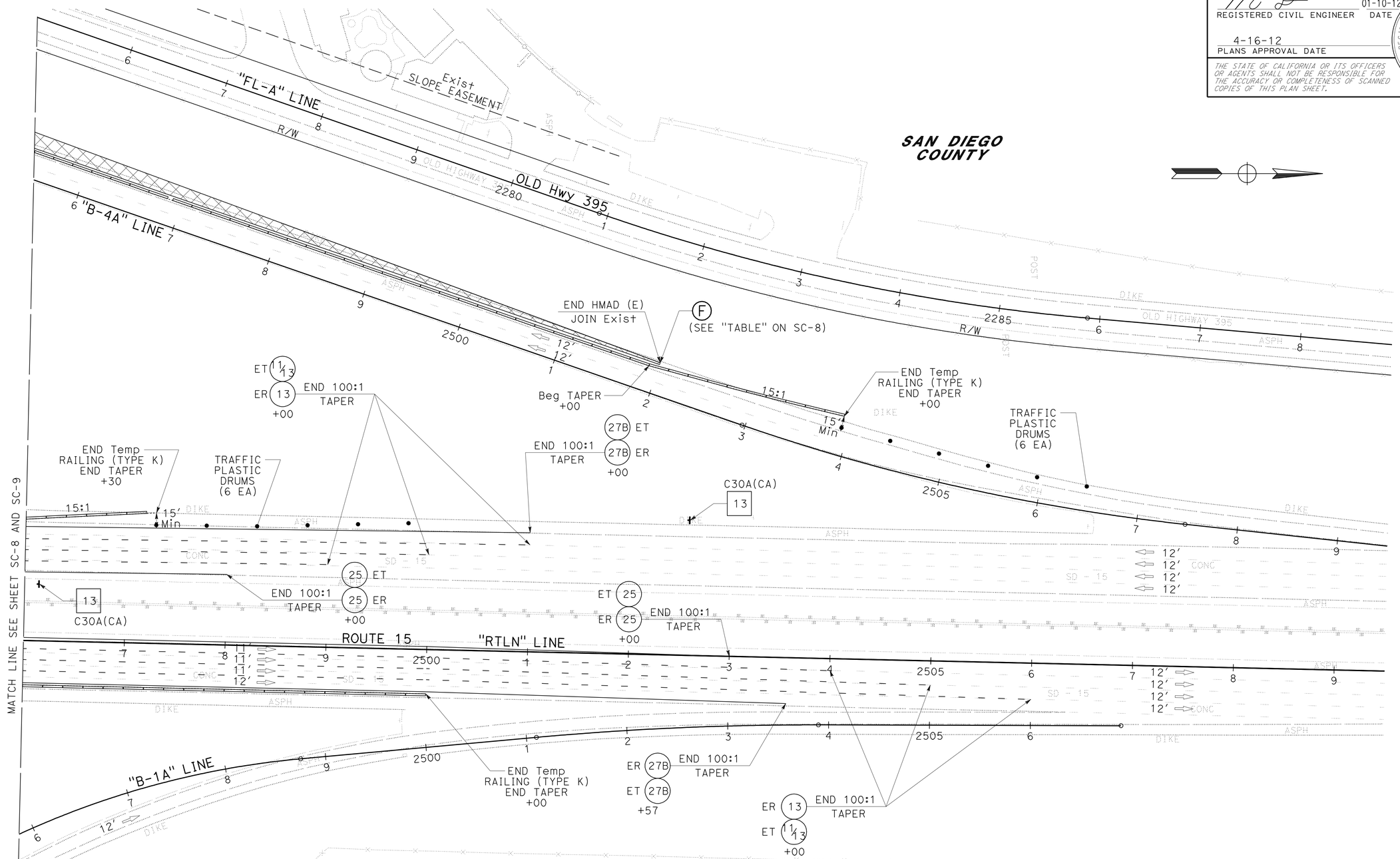

STAGE CONSTRUCTION AND TRAFFIC HANDLING PLAN

STAGE 1A

SCALE: 1" = 50'

SC-10

APPROVED FOR STAGE CONSTRUCTION AND TRAFFIC HANDLING WORK ONLY

STATE OF CALIFORNIA - DEPARTMENT OF TRANSPORTATION
Caltrans® PROJECT DEVELOPMENT

FUNCTIONAL SUPERVISOR: CARL SAVAGE
CALCULATED-DESIGNED BY: MOHAMAD KHATIB
CHECKED BY: WAMEEDH TOZY
REVISED BY
DATE REVISED

LAST REVISION 01-20-12
DATE PLOTTED => 17-APR-2012
TIME PLOTTED => 12:13

Dist	COUNTY	ROUTE	POST MILES TOTAL PROJECT	SHEET No.	TOTAL SHEETS
11	SD	15,76	R46.1/R47.3, R16.7/R17.7	187	477

REGISTERED CIVIL ENGINEER 01-10-12 DATE

4-16-12
PLANS APPROVAL DATE

REGISTERED PROFESSIONAL ENGINEER MOHAMAD KHATIB No. C63411 Exp. 09-30-12 CIVIL STATE OF CALIFORNIA

THE STATE OF CALIFORNIA OR ITS OFFICERS OR AGENTS SHALL NOT BE RESPONSIBLE FOR THE ACCURACY OR COMPLETENESS OF SCANNED COPIES OF THIS PLAN SHEET.

NOTE:

1. FOR ACCURATE RIGHT OF WAY DATA, CONTACT RIGHT OF WAY ENGINEERING AT THE DISTRICT OFFICE.
2. PRIOR TO CLOSURE OF DRIVEWAY, PROVIDE NOTIFICATION TO LESEE.

SECTION G-G
NO SCALE

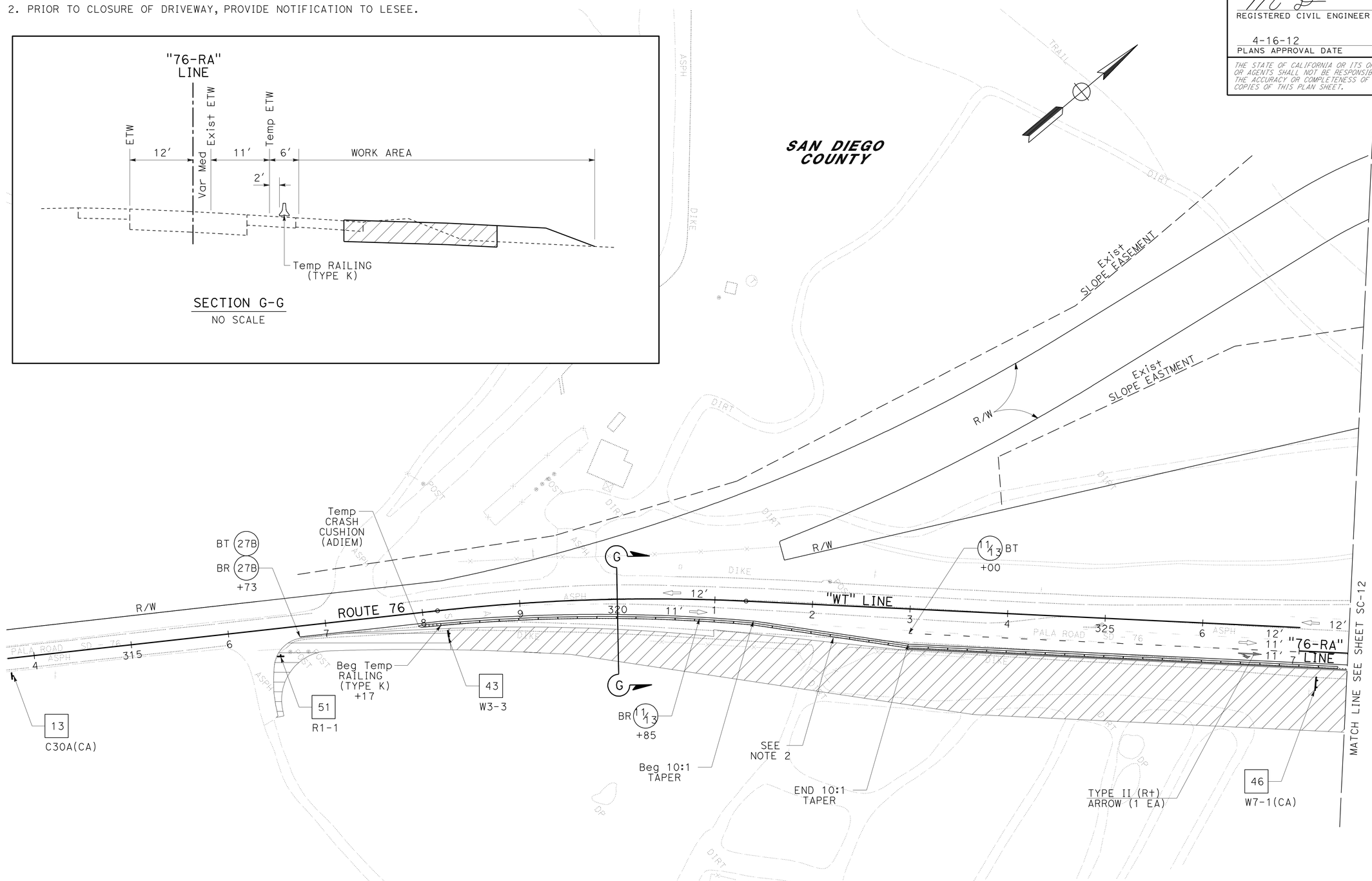

APPROVED FOR STAGE CONSTRUCTION AND TRAFFIC HANDLING WORK ONLY

STAGE CONSTRUCTION AND TRAFFIC HANDLING PLAN

STAGE 1A

SCALE: 1" = 50′

SC-11

STATE OF CALIFORNIA - DEPARTMENT OF TRANSPORTATION
Caltrans® PROJECT DEVELOPMENT

FUNCTIONAL SUPERVISOR: CARL SAVAGE
CALCULATED-DESIGNED BY: MOHAMAD KHATIB
CHECKED BY: WAMEEDH TOZY
REVISED BY
DATE REVISED

LAST REVISION 01-20-12
DATE PLOTTED => 17-APR-2012
TIME PLOTTED => 12:14

Dist	COUNTY	ROUTE	POST MILES TOTAL PROJECT	SHEET No.	TOTAL SHEETS
11	SD	15,76	R46.1/R47.3, R16.7/R17.7	188	477

REGISTERED CIVIL ENGINEER 01-10-12 DATE

4-16-12
PLANS APPROVAL DATE

REGISTERED PROFESSIONAL ENGINEER MOHAMAD KHATIB No. C63411 Exp. 09-30-12 CIVIL STATE OF CALIFORNIA

THE STATE OF CALIFORNIA OR ITS OFFICERS OR AGENTS SHALL NOT BE RESPONSIBLE FOR THE ACCURACY OR COMPLETENESS OF SCANNED COPIES OF THIS PLAN SHEET.

NOTE:

FOR ACCURATE RIGHT OF WAY DATA, CONTACT RIGHT OF WAY ENGINEERING AT THE DISTRICT OFFICE.

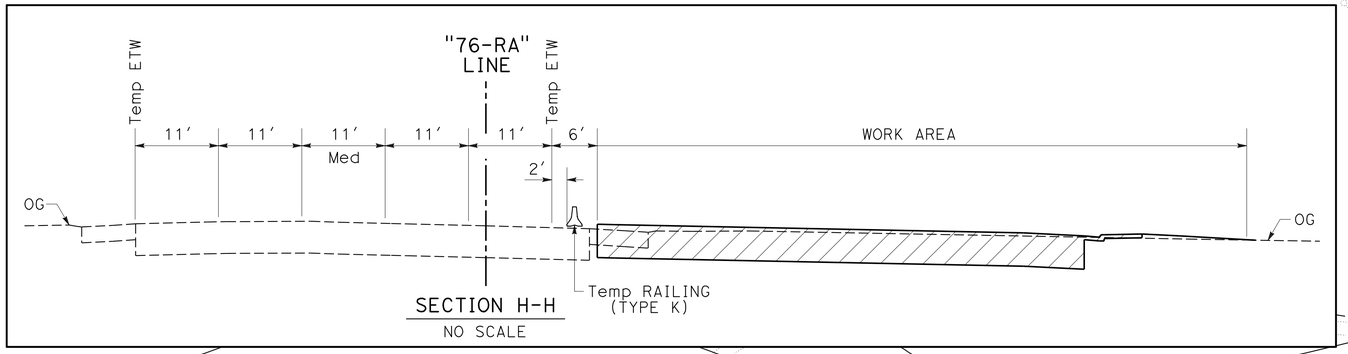

SECTION H-H
NO SCALE

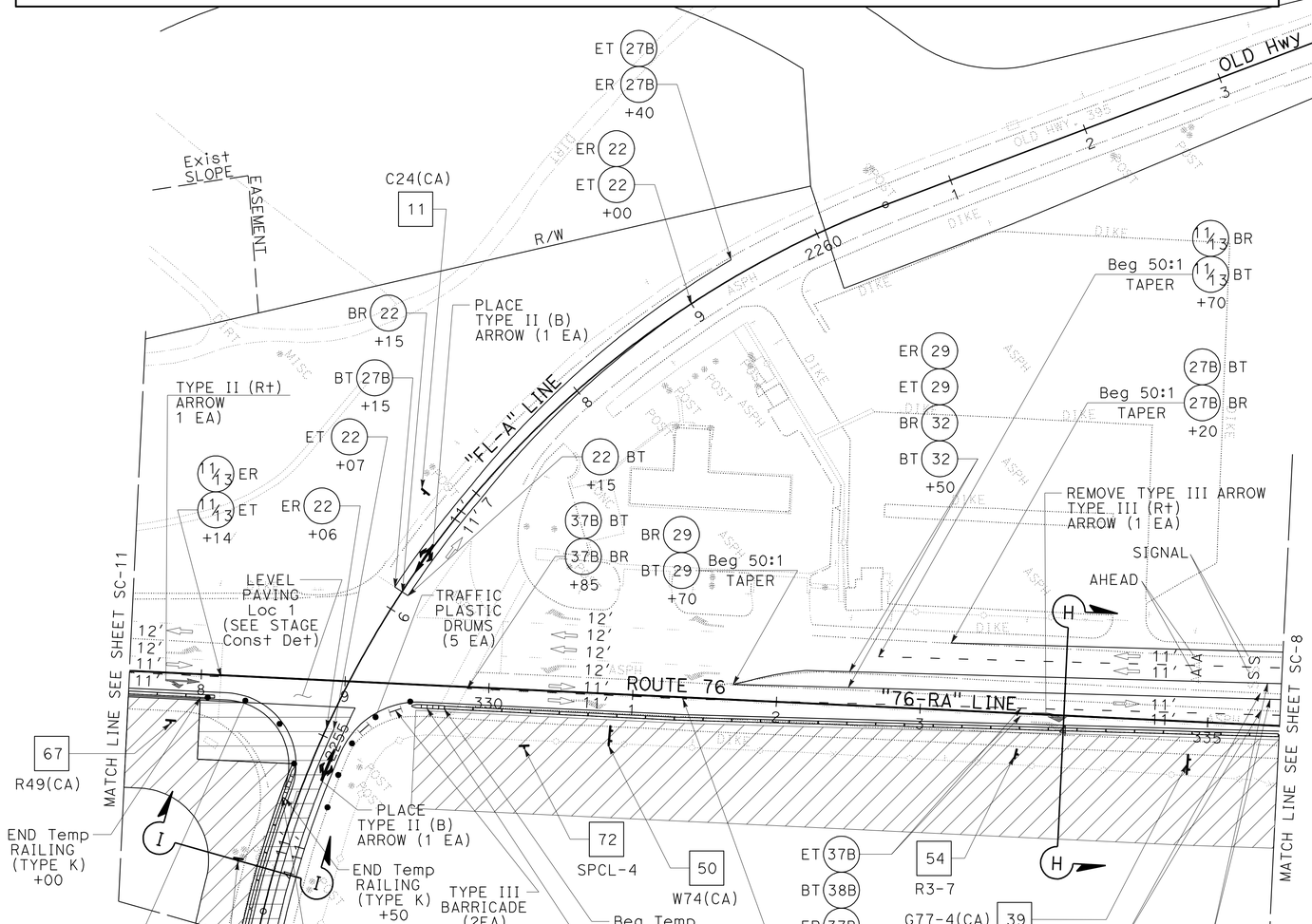

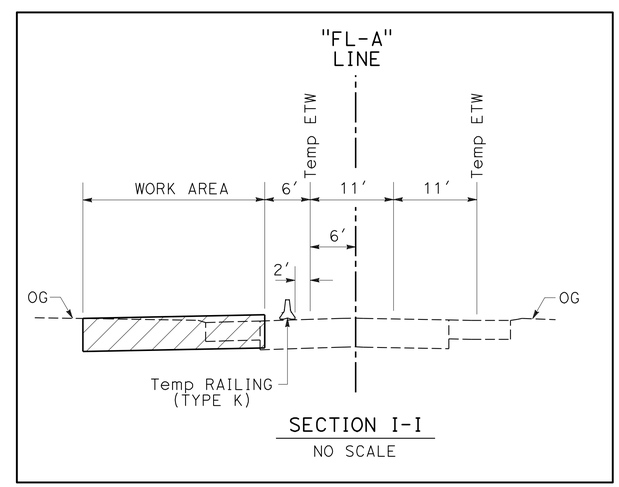

SECTION I-I
NO SCALE

APPROVED FOR STAGE CONSTRUCTION AND TRAFFIC HANDLING WORK ONLY

STAGE CONSTRUCTION AND TRAFFIC HANDLING PLAN

STAGE 1A

SCALE: 1" = 50′

SC-12

STATE OF CALIFORNIA - DEPARTMENT OF TRANSPORTATION
Caltrans® PROJECT DEVELOPMENT

FUNCTIONAL SUPERVISOR: CARL SAVAGE
CALCULATED-DESIGNED BY: MOHAMAD KHATIB
CHECKED BY: WAMEEDH TOZY
REVISED BY
DATE REVISED

LAST REVISION 01-20-12
DATE PLOTTED => 17-APR-2012
TIME PLOTTED => 12:14

Dist	COUNTY	ROUTE	POST MILES TOTAL PROJECT	SHEET No.	TOTAL SHEETS
11	SD	15,76	R46.1/R47.3, R16.7/R17.7	189	477

REGISTERED CIVIL ENGINEER 01-10-12 DATE

4-16-12
PLANS APPROVAL DATE

REGISTERED PROFESSIONAL ENGINEER MOHAMAD KHATIB No. C63411 Exp. 09-30-12 CIVIL STATE OF CALIFORNIA

THE STATE OF CALIFORNIA OR ITS OFFICERS OR AGENTS SHALL NOT BE RESPONSIBLE FOR THE ACCURACY OR COMPLETENESS OF SCANNED COPIES OF THIS PLAN SHEET.

NOTE:

FOR ACCURATE RIGHT OF WAY DATA, CONTACT RIGHT OF WAY ENGINEERING AT THE DISTRICT OFFICE.

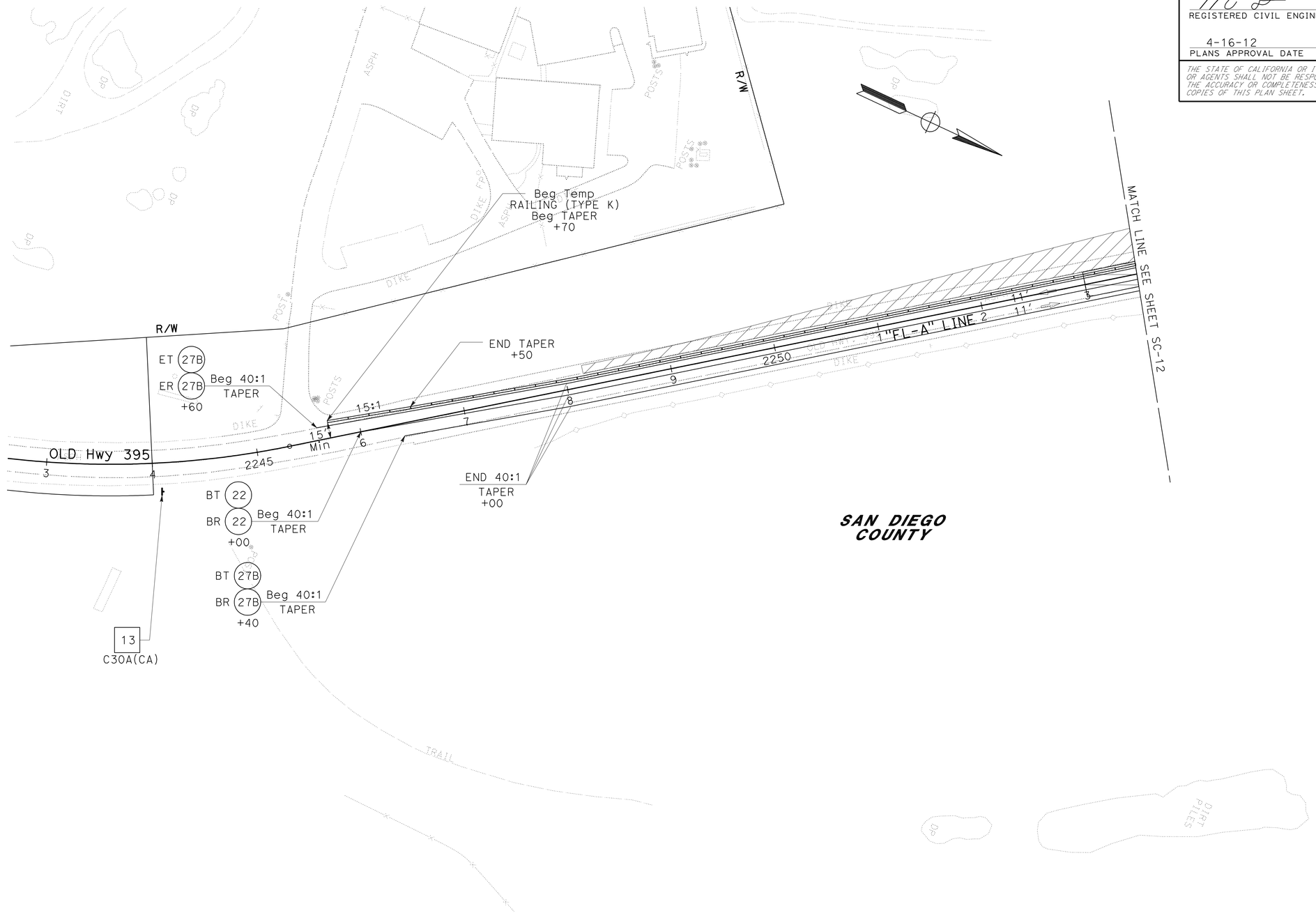

APPROVED FOR STAGE CONSTRUCTION AND TRAFFIC HANDLING WORK ONLY

STAGE CONSTRUCTION AND TRAFFIC HANDLING PLAN

SCALE: 1" = 50'

STAGE 1A

SC-13

STATE OF CALIFORNIA - DEPARTMENT OF TRANSPORTATION
Caltrans® PROJECT DEVELOPMENT

FUNCTIONAL SUPERVISOR: CARL SAVAGE
CALCULATED-DESIGNED BY: MOHAMAD KHATIB
CHECKED BY: WAMEEDH TOZY
REVISED BY
DATE REVISED

LAST REVISION 01-20-12
DATE PLOTTED => 17-APR-2012
TIME PLOTTED => 12:14

Dist	COUNTY	ROUTE	POST MILES TOTAL PROJECT	SHEET No.	TOTAL SHEETS
11	SD	15,76	R46.1/R47.3, R16.7/R17.7	190	477

REGISTERED CIVIL ENGINEER 01-10-12 DATE

4-16-12
PLANS APPROVAL DATE

REGISTERED PROFESSIONAL ENGINEER MOHAMAD KHATIB No. C63411 Exp. 09-30-12 CIVIL STATE OF CALIFORNIA

THE STATE OF CALIFORNIA OR ITS OFFICERS OR AGENTS SHALL NOT BE RESPONSIBLE FOR THE ACCURACY OR COMPLETENESS OF SCANNED COPIES OF THIS PLAN SHEET.

NOTE:

FOR ACCURATE RIGHT OF WAY DATA, CONTACT RIGHT OF WAY ENGINEERING AT THE DISTRICT OFFICE.

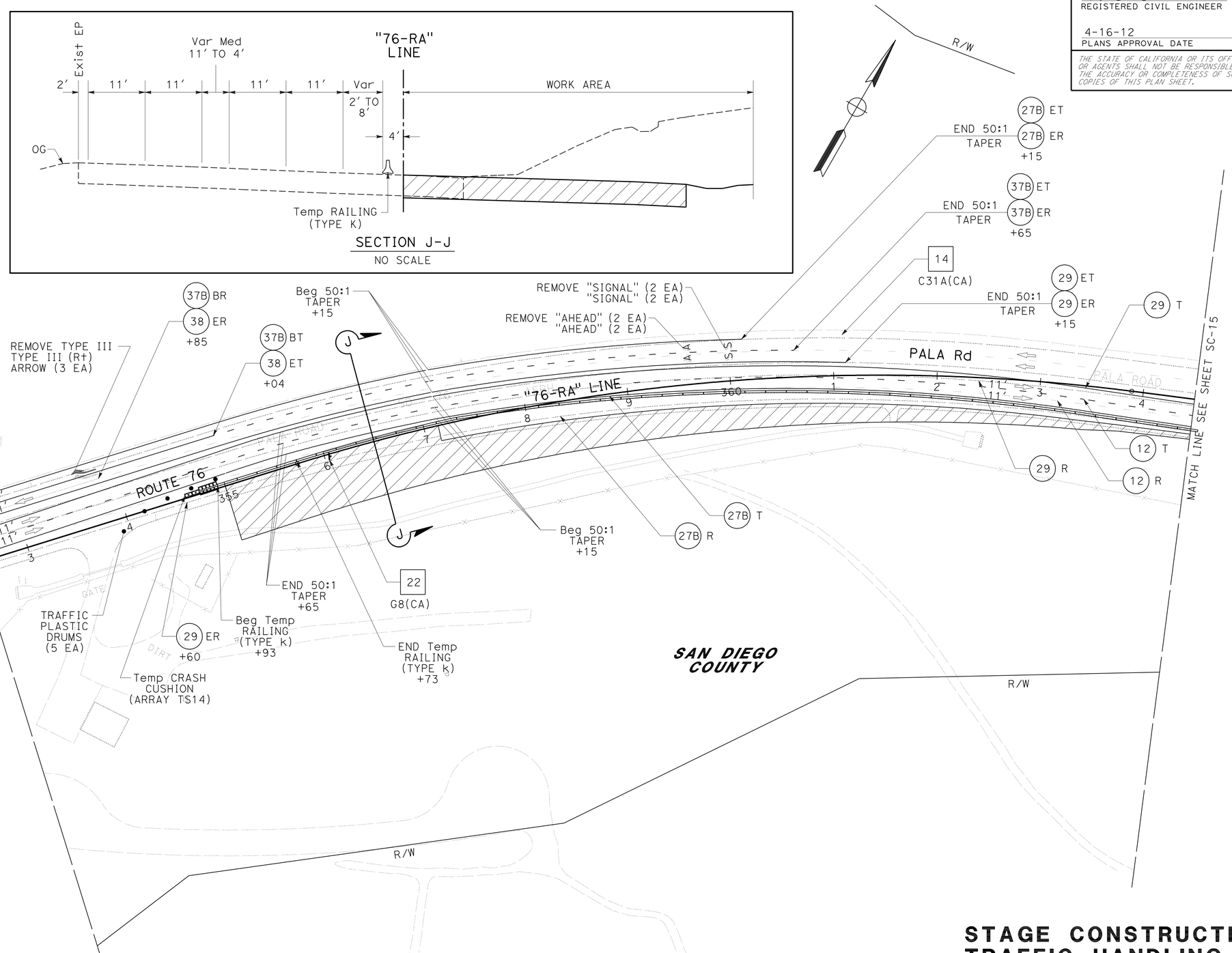

STAGE CONSTRUCTION AND TRAFFIC HANDLING PLAN

STAGE 1A

APPROVED FOR STAGE CONSTRUCTION AND TRAFFIC HANDLING WORK ONLY

SCALE: 1" = 50'

SC-14

STATE OF CALIFORNIA - DEPARTMENT OF TRANSPORTATION
PROJECT DEVELOPMENT

FUNCTIONAL SUPERVISOR: CARL SAVAGE
CALCULATED-DESIGNED BY: MOHAMAD KHATIB
CHECKED BY: WAMEEDH TOZY
REVISED BY
DATE REVISED

LAST REVISION 01-20-12
DATE PLOTTED => 17-APR-2012
TIME PLOTTED => 12:34

Dist	COUNTY	ROUTE	POST MILES TOTAL PROJECT	SHEET No.	TOTAL SHEETS
11	SD	15,76	R46.1/R47.3, R16.7/R17.7	191	477

REGISTERED CIVIL ENGINEER 01-10-12 DATE

4-16-12
PLANS APPROVAL DATE

REGISTERED PROFESSIONAL ENGINEER MOHAMAD KHATIB No. C63411 Exp. 09-30-12 CIVIL STATE OF CALIFORNIA

THE STATE OF CALIFORNIA OR ITS OFFICERS OR AGENTS SHALL NOT BE RESPONSIBLE FOR THE ACCURACY OR COMPLETENESS OF SCANNED COPIES OF THIS PLAN SHEET.

NOTE:

FOR ACCURATE RIGHT OF WAY DATA, CONTACT RIGHT OF WAY ENGINEERING AT THE DISTRICT OFFICE.

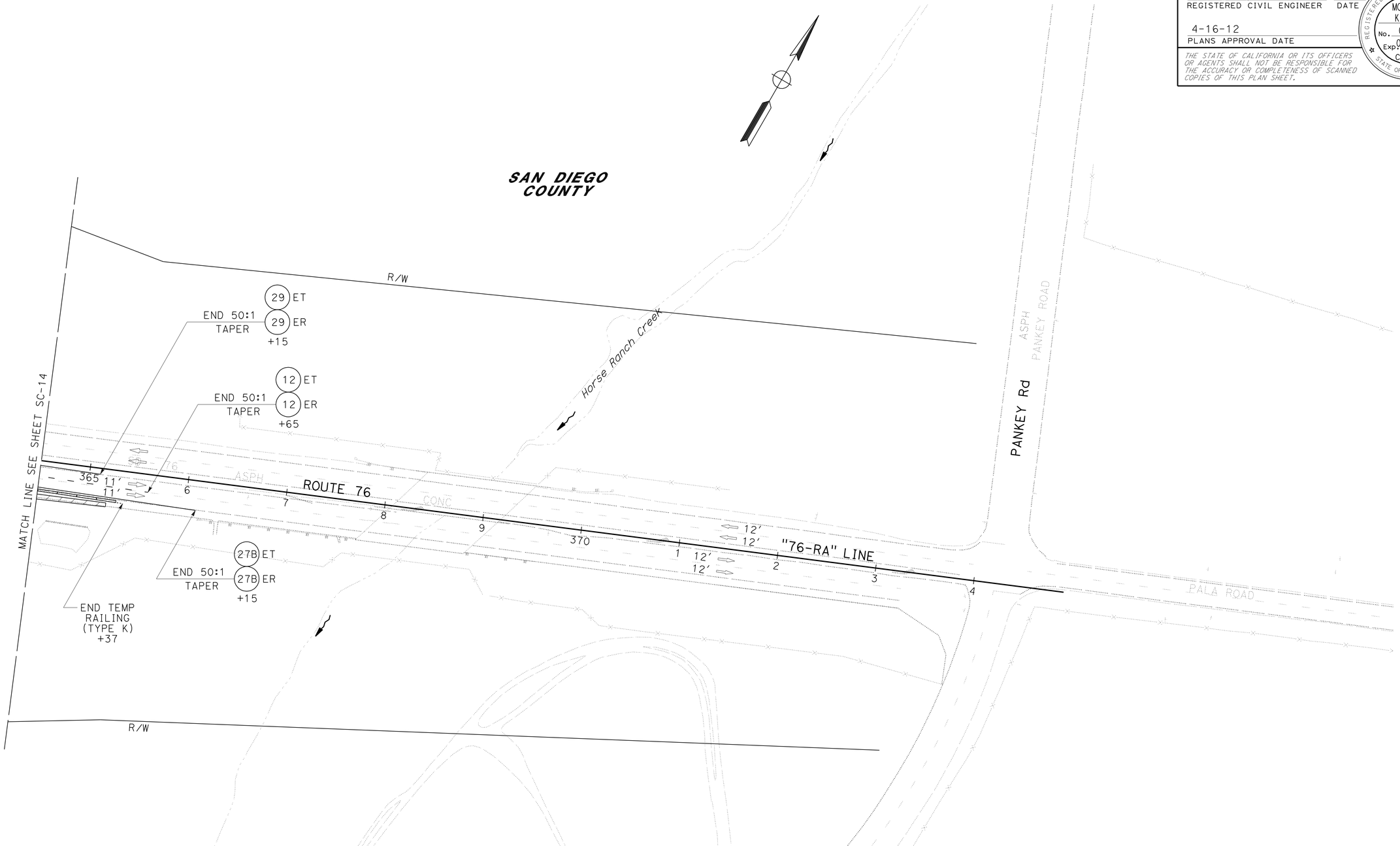

STAGE CONSTRUCTION AND TRAFFIC HANDLING PLAN

STAGE 1A

SCALE: 1" = 50'

SC-15

APPROVED FOR STAGE CONSTRUCTION AND TRAFFIC HANDLING WORK ONLY

STATE OF CALIFORNIA - DEPARTMENT OF TRANSPORTATION
Caltrans® **PROJECT DEVELOPMENT**

FUNCTIONAL SUPERVISOR: CARL SAVAGE

CALCULATED-DESIGNED BY: MOHAMAD KHATIB
CHECKED BY: WAMEEDH TOZY

REVISED BY
DATE REVISED

LAST REVISION 01-20-12
DATE PLOTTED => 17-APR-2012
TIME PLOTTED => 12:34

Dist	COUNTY	ROUTE	POST MILES TOTAL PROJECT	SHEET No.	TOTAL SHEETS
11	SD	15,76	R46.1/R47.3, R16.7/R17.7	192	477

REGISTERED CIVIL ENGINEER 01-10-12 DATE

4-16-12
PLANS APPROVAL DATE

REGISTERED PROFESSIONAL ENGINEER MOHAMAD KHATIB No. C63411 Exp. 09-30-12 CIVIL STATE OF CALIFORNIA

THE STATE OF CALIFORNIA OR ITS OFFICERS OR AGENTS SHALL NOT BE RESPONSIBLE FOR THE ACCURACY OR COMPLETENESS OF SCANNED COPIES OF THIS PLAN SHEET.

NOTE:

FOR ACCURATE RIGHT OF WAY DATA, CONTACT RIGHT OF WAY ENGINEERING AT THE DISTRICT OFFICE.

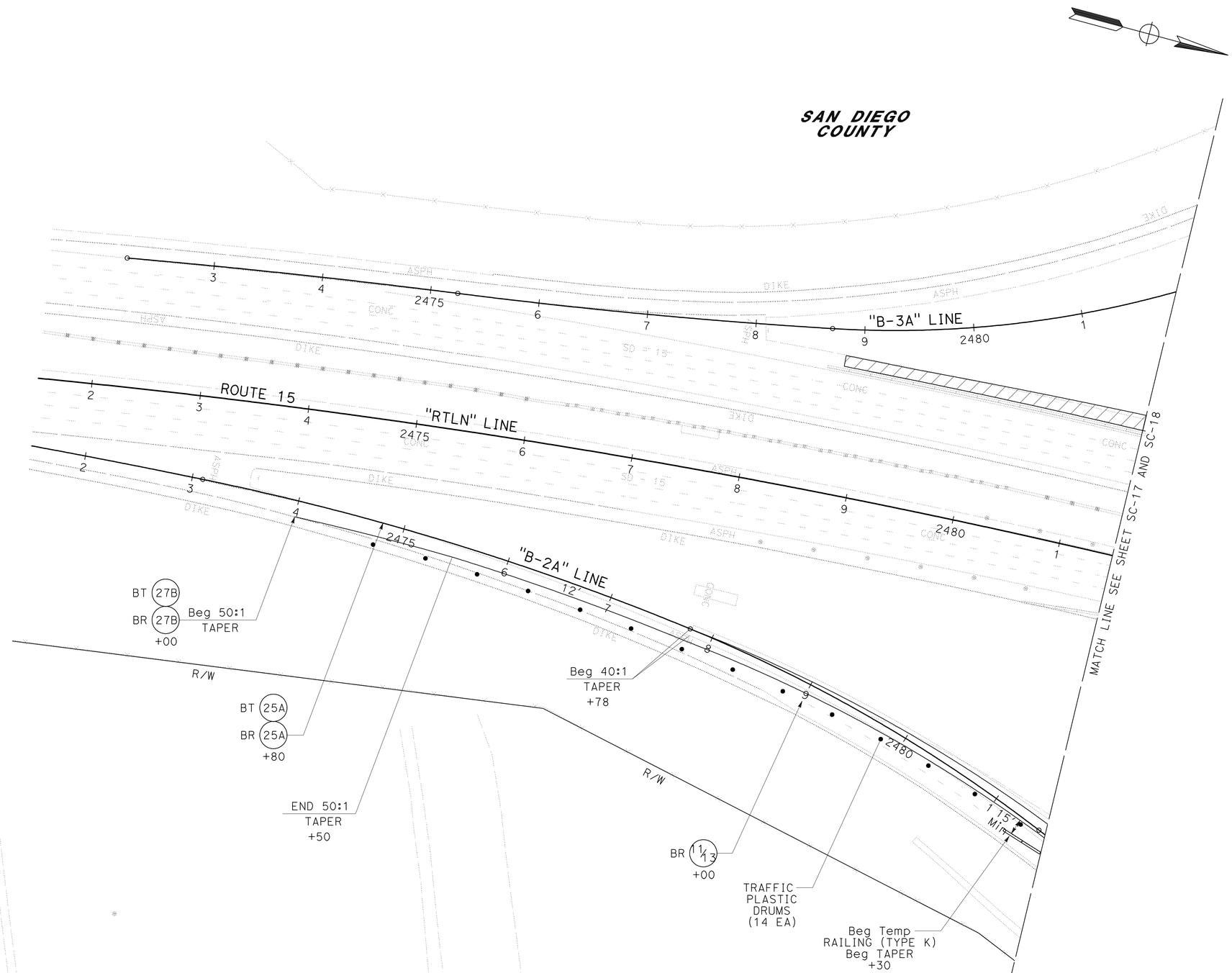

APPROVED FOR STAGE CONSTRUCTION AND TRAFFIC HANDLING WORK ONLY

STAGE CONSTRUCTION AND TRAFFIC HANDLING PLAN

STAGE 1B

SCALE: 1" = 50'

SC-16

STATE OF CALIFORNIA - DEPARTMENT OF TRANSPORTATION
Caltrans® PROJECT DEVELOPMENT

FUNCTIONAL SUPERVISOR: CARL SAVAGE
CALCULATED-DESIGNED BY: MOHAMAD KHATIB
CHECKED BY: WAMEEDH TOZY
REVISED BY
DATE REVISED

LAST REVISION 01-20-12
DATE PLOTTED => 17-APR-2012
TIME PLOTTED => 12:34

Dist	COUNTY	ROUTE	POST MILES TOTAL PROJECT	SHEET No.	TOTAL SHEETS
11	SD	15,76	R46.1/R47.3, R16.7/R17.7	193	477

REGISTERED CIVIL ENGINEER 01-10-12 DATE

4-16-12
PLANS APPROVAL DATE

REGISTERED PROFESSIONAL ENGINEER MOHAMAD KHATIB No. C63411 Exp 09-30-12 CIVIL STATE OF CALIFORNIA

THE STATE OF CALIFORNIA OR ITS OFFICERS OR AGENTS SHALL NOT BE RESPONSIBLE FOR THE ACCURACY OR COMPLETENESS OF SCANNED COPIES OF THIS PLAN SHEET.

NOTE:

FOR ACCURATE RIGHT OF WAY DATA, CONTACT RIGHT OF WAY ENGINEERING AT THE DISTRICT OFFICE.

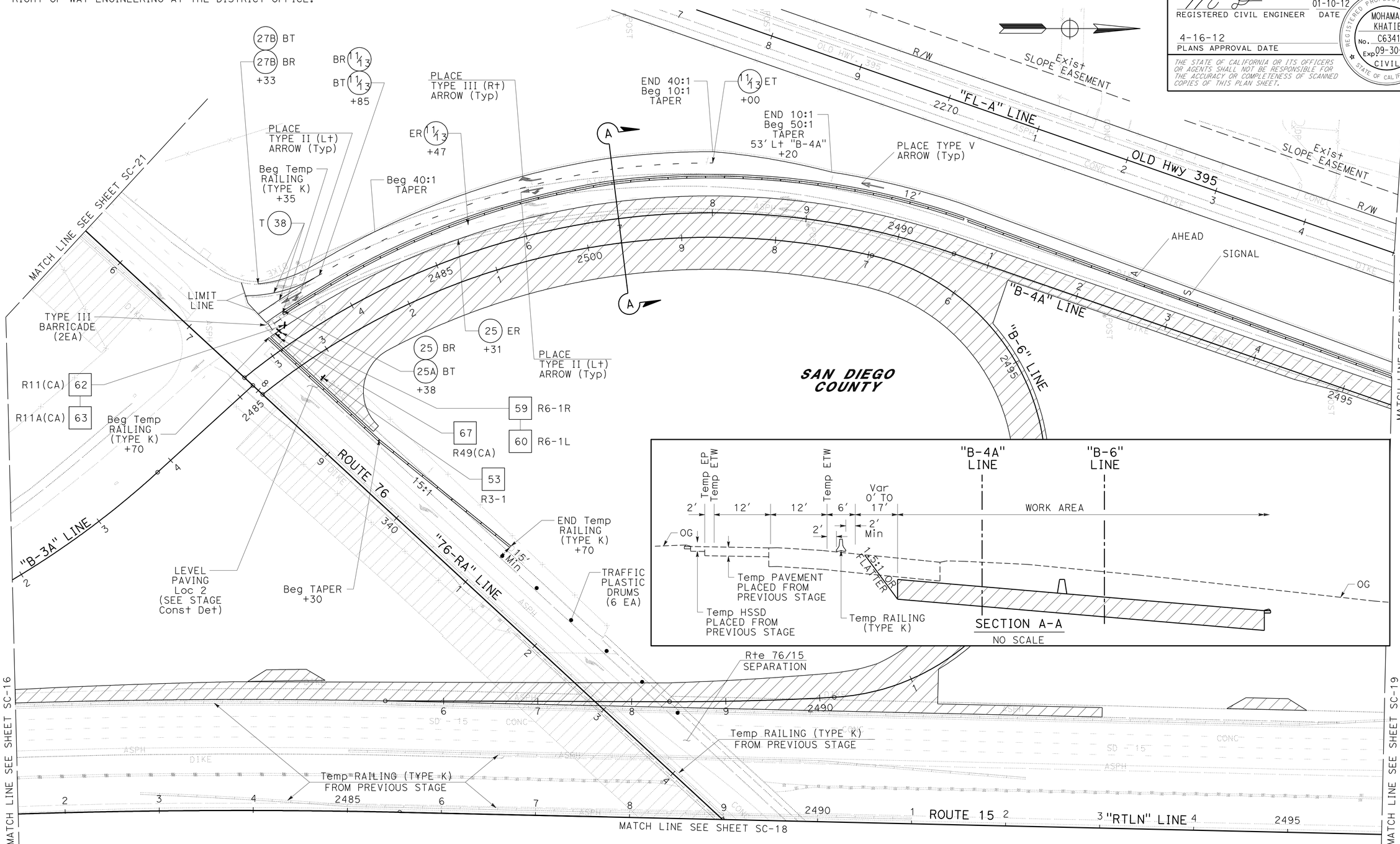

STAGE CONSTRUCTION AND TRAFFIC HANDLING PLAN

STAGE 1B

APPROVED FOR STAGE CONSTRUCTION AND TRAFFIC HANDLING WORK ONLY

SCALE: 1" = 50'

SC-17

STATE OF CALIFORNIA - DEPARTMENT OF TRANSPORTATION
Caltrans PROJECT DEVELOPMENT

FUNCTIONAL SUPERVISOR: CARL SAVAGE
CALCULATED-DESIGNED BY: MOHAMAD KHATIB
CHECKED BY: WAMEEDH TOZY
REVISED BY
DATE REVISED

LAST REVISION 01-20-12
DATE PLOTTED => 17-APR-2012
TIME PLOTTED => 12:34

Dist	COUNTY	ROUTE	POST MILES TOTAL PROJECT	SHEET No.	TOTAL SHEETS
11	SD	15,76	R46.1/R47.3, R16.7/R17.7	194	477

REGISTERED CIVIL ENGINEER 01-10-12 DATE

4-16-12
PLANS APPROVAL DATE

REGISTERED PROFESSIONAL ENGINEER MOHAMAD KHATIB No. C63411 Exp. 09-30-12 CIVIL STATE OF CALIFORNIA

THE STATE OF CALIFORNIA OR ITS OFFICERS OR AGENTS SHALL NOT BE RESPONSIBLE FOR THE ACCURACY OR COMPLETENESS OF SCANNED COPIES OF THIS PLAN SHEET.

NOTE:

FOR ACCURATE RIGHT OF WAY DATA, CONTACT RIGHT OF WAY ENGINEERING AT THE DISTRICT OFFICE.

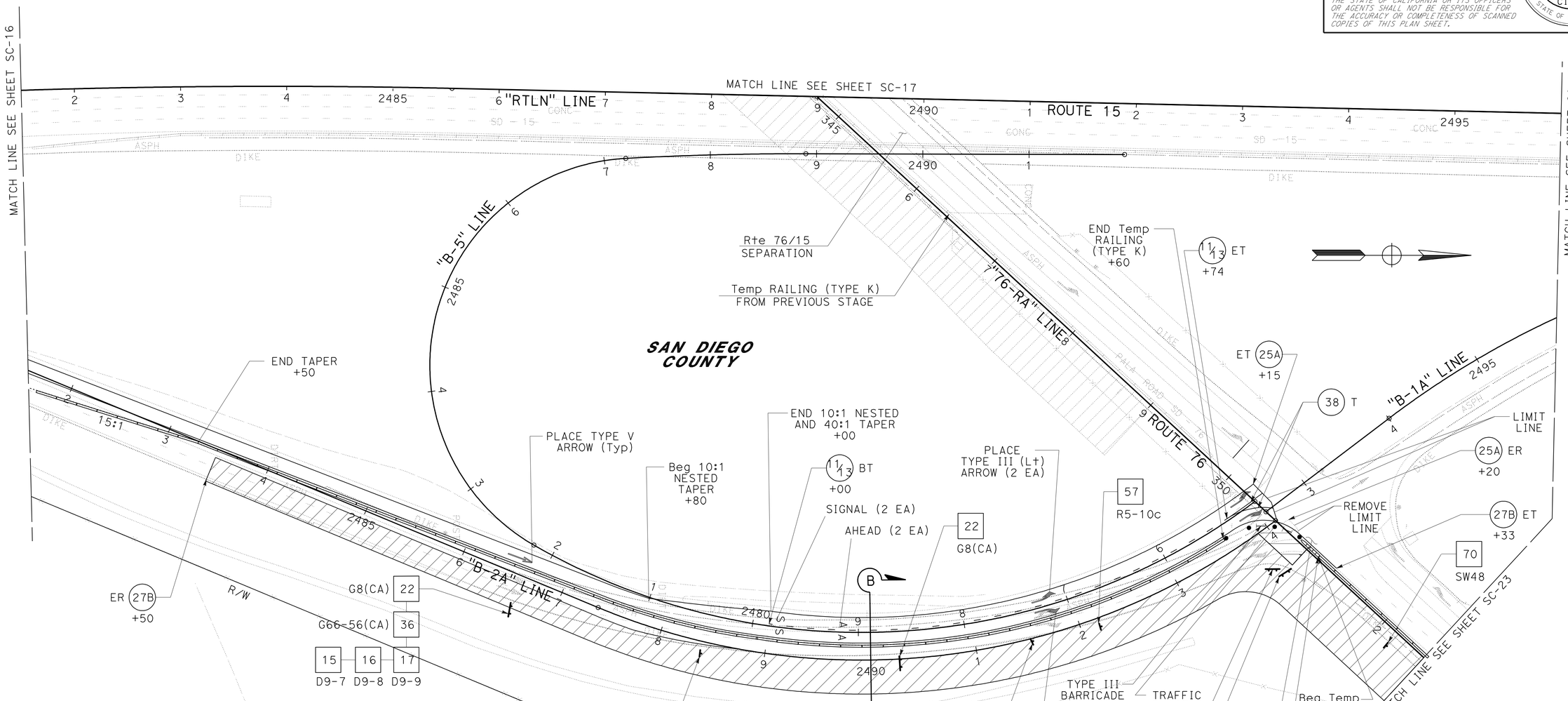

APPROVED FOR STAGE CONSTRUCTION AND TRAFFIC HANDLING WORK ONLY

STAGE CONSTRUCTION AND TRAFFIC HANDLING PLAN

SCALE: 1" = 50'

STAGE 1B

SC-18

STATE OF CALIFORNIA - DEPARTMENT OF TRANSPORTATION
Caltrans® PROJECT DEVELOPMENT

FUNCTIONAL SUPERVISOR: CARL SAVAGE
CALCULATED-DESIGNED BY: MOHAMAD KHATIB
CHECKED BY: WAMEEDH TOZY
REVISED BY / DATE REVISED

LAST REVISION 01-20-12 | DATE PLOTTED => 17-APR-2012 | TIME PLOTTED => 12:34

Dist	COUNTY	ROUTE	POST MILES TOTAL PROJECT	SHEET No.	TOTAL SHEETS
11	SD	15,76	R46.1/R47.3, R16.7/R17.7	195	477

REGISTERED CIVIL ENGINEER 01-10-12 DATE

4-16-12
PLANS APPROVAL DATE

REGISTERED PROFESSIONAL ENGINEER MOHAMAD KHATIB No. C63411 Exp. 09-30-12 CIVIL STATE OF CALIFORNIA

THE STATE OF CALIFORNIA OR ITS OFFICERS OR AGENTS SHALL NOT BE RESPONSIBLE FOR THE ACCURACY OR COMPLETENESS OF SCANNED COPIES OF THIS PLAN SHEET.

NOTE:

FOR ACCURATE RIGHT OF WAY DATA, CONTACT RIGHT OF WAY ENGINEERING AT THE DISTRICT OFFICE.

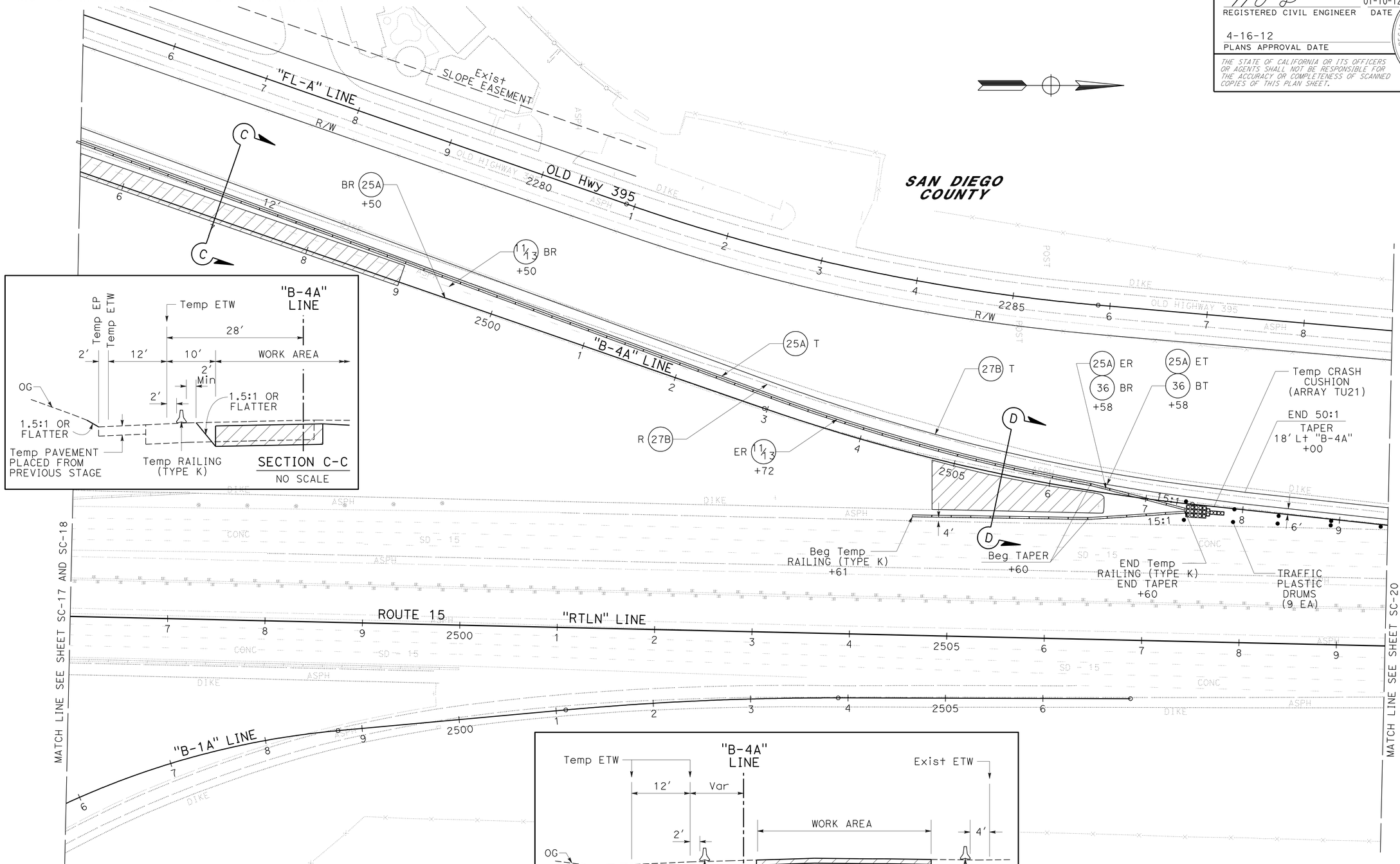

APPROVED FOR STAGE CONSTRUCTION AND TRAFFIC HANDLING WORK ONLY

STAGE CONSTRUCTION AND TRAFFIC HANDLING PLAN

STAGE 1B

SCALE: 1" = 50'

SC-19

STATE OF CALIFORNIA - DEPARTMENT OF TRANSPORTATION
Caltrans® PROJECT DEVELOPMENT

FUNCTIONAL SUPERVISOR: CARL SAVAGE
CALCULATED-DESIGNED BY: MOHAMAD KHATIB
CHECKED BY: WAMEEDH TOZY
REVISED BY
DATE REVISED

LAST REVISION 01-20-12
DATE PLOTTED => 17-APR-2012
TIME PLOTTED => 12:34

Dist	COUNTY	ROUTE	POST MILES TOTAL PROJECT	SHEET No.	TOTAL SHEETS
11	SD	15,76	R46.1/R47.3, R16.7/R17.7	196	477

REGISTERED CIVIL ENGINEER 01-10-12 DATE

4-16-12
PLANS APPROVAL DATE

REGISTERED PROFESSIONAL ENGINEER MOHAMAD KHATIB No. C63411 Exp. 09-30-12 CIVIL STATE OF CALIFORNIA

THE STATE OF CALIFORNIA OR ITS OFFICERS OR AGENTS SHALL NOT BE RESPONSIBLE FOR THE ACCURACY OR COMPLETENESS OF SCANNED COPIES OF THIS PLAN SHEET.

NOTE:

FOR ACCURATE RIGHT OF WAY DATA, CONTACT RIGHT OF WAY ENGINEERING AT THE DISTRICT OFFICE.

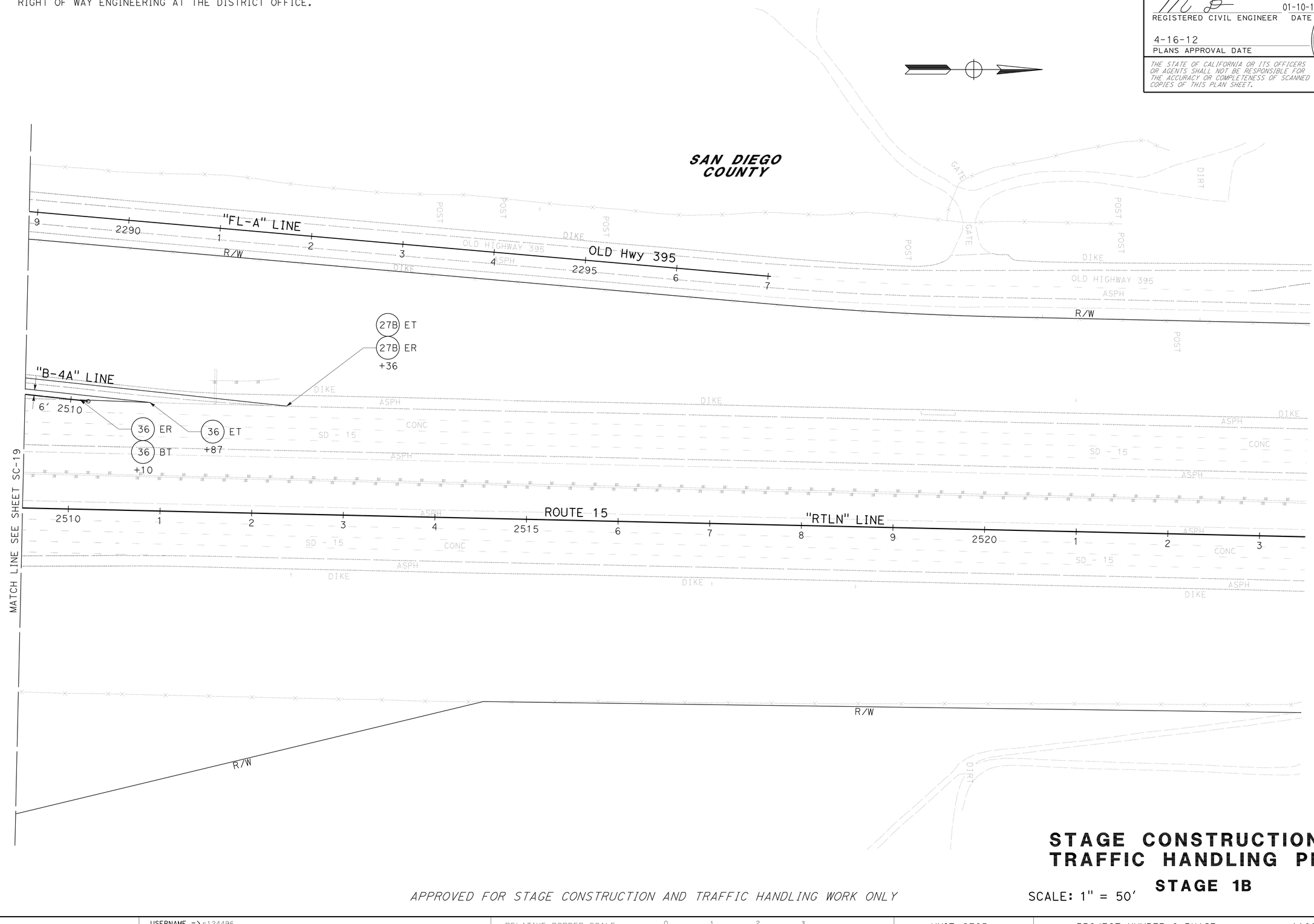

STAGE CONSTRUCTION AND TRAFFIC HANDLING PLAN

STAGE 1B

SCALE: 1" = 50'

SC-20

APPROVED FOR STAGE CONSTRUCTION AND TRAFFIC HANDLING WORK ONLY

STATE OF CALIFORNIA - DEPARTMENT OF TRANSPORTATION
Caltrans PROJECT DEVELOPMENT

FUNCTIONAL SUPERVISOR: CARL SAVAGE
CALCULATED-DESIGNED BY: MOHAMAD KHATIB
CHECKED BY: WAMEEDH TOZY
REVISED BY
DATE REVISED

LAST REVISION 01-20-12
DATE PLOTTED => 17-APR-2012
TIME PLOTTED => 12:34

Dist	COUNTY	ROUTE	POST MILES TOTAL PROJECT	SHEET No.	TOTAL SHEETS
11	SD	15,76	R46.1/R47.3, R16.7/R17.7	197	477

REGISTERED CIVIL ENGINEER 01-10-12 DATE

4-16-12
PLANS APPROVAL DATE

REGISTERED PROFESSIONAL ENGINEER MOHAMAD KHATIB No. C63411 Exp. 09-30-12 CIVIL STATE OF CALIFORNIA

THE STATE OF CALIFORNIA OR ITS OFFICERS OR AGENTS SHALL NOT BE RESPONSIBLE FOR THE ACCURACY OR COMPLETENESS OF SCANNED COPIES OF THIS PLAN SHEET.

NOTE:
FOR ACCURATE RIGHT OF WAY DATA, CONTACT RIGHT OF WAY ENGINEERING AT THE DISTRICT OFFICE.

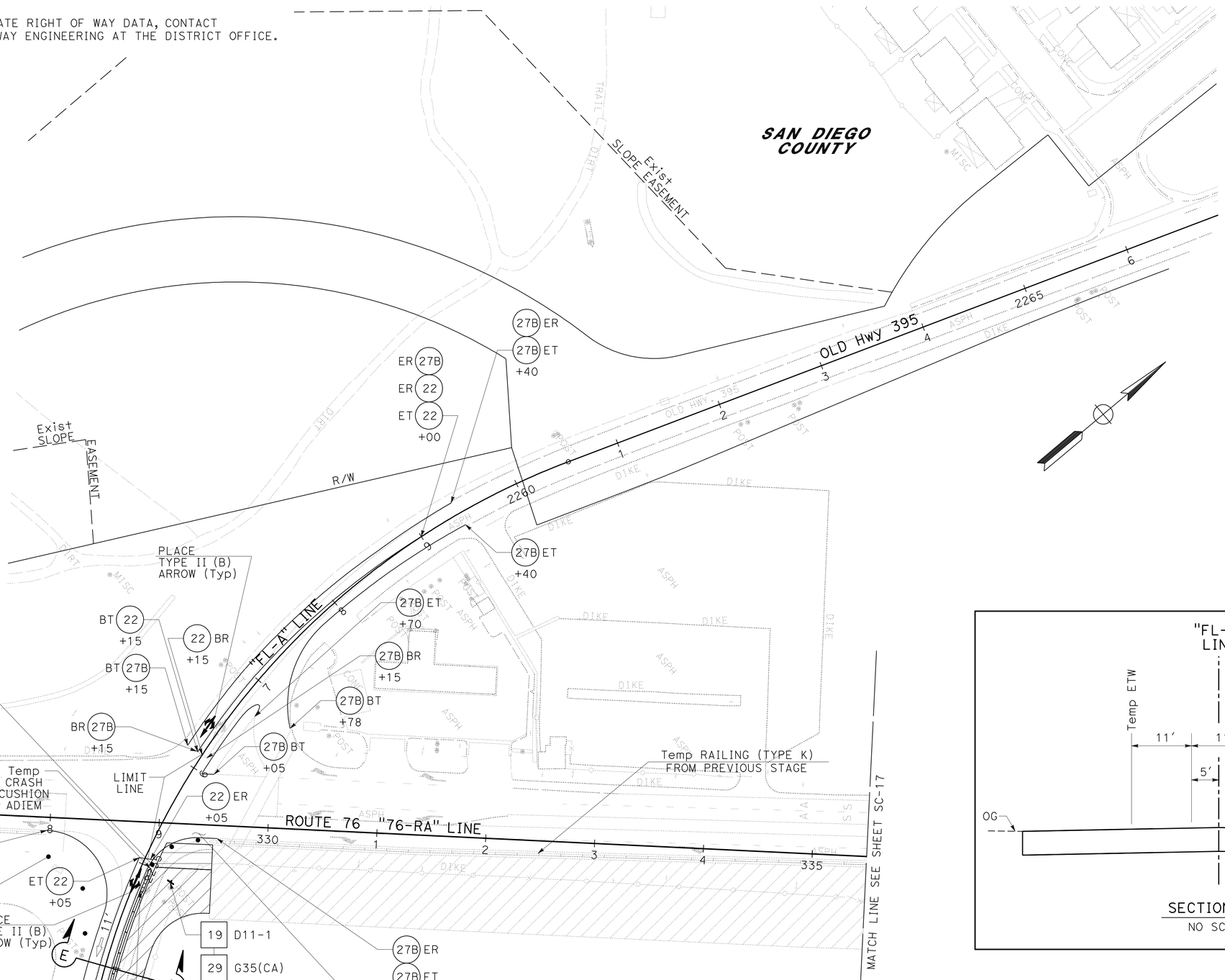

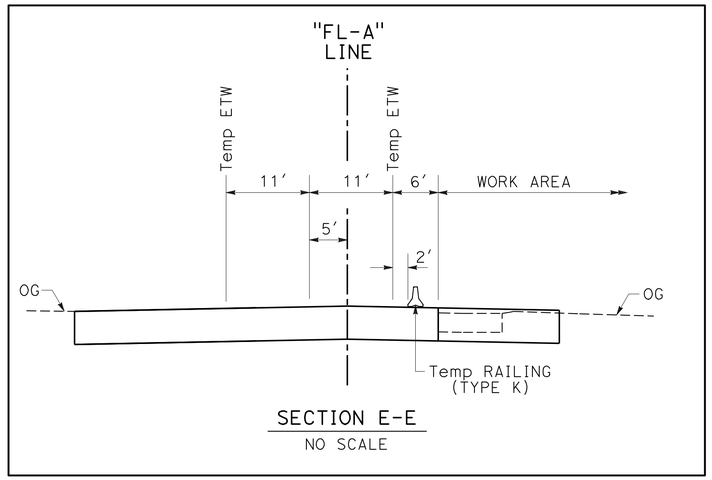

SECTION E-E
NO SCALE

APPROVED FOR STAGE CONSTRUCTION AND TRAFFIC HANDLING WORK ONLY

STAGE CONSTRUCTION AND TRAFFIC HANDLING PLAN

STAGE 1B

SCALE: 1" = 50′

SC-21

STATE OF CALIFORNIA - DEPARTMENT OF TRANSPORTATION
Caltrans® PROJECT DEVELOPMENT

FUNCTIONAL SUPERVISOR: CARL SAVAGE
CALCULATED-DESIGNED BY: MOHAMAD KHATIB
CHECKED BY: WAMEEDH TOZY
REVISED BY
DATE REVISED

LAST REVISION 01-20-12 | DATE PLOTTED => 17-APR-2012 | TIME PLOTTED => 12:34

Dist	COUNTY	ROUTE	POST MILES TOTAL PROJECT	SHEET No.	TOTAL SHEETS
11	SD	15,76	R46.1/R47.3, R16.7/R17.7	198	477

REGISTERED CIVIL ENGINEER 01-10-12 DATE

4-16-12
PLANS APPROVAL DATE

REGISTERED PROFESSIONAL ENGINEER MOHAMAD KHATIB No. C63411 Exp. 09-30-12 CIVIL STATE OF CALIFORNIA

THE STATE OF CALIFORNIA OR ITS OFFICERS OR AGENTS SHALL NOT BE RESPONSIBLE FOR THE ACCURACY OR COMPLETENESS OF SCANNED COPIES OF THIS PLAN SHEET.

NOTE:

FOR ACCURATE RIGHT OF WAY DATA, CONTACT RIGHT OF WAY ENGINEERING AT THE DISTRICT OFFICE.

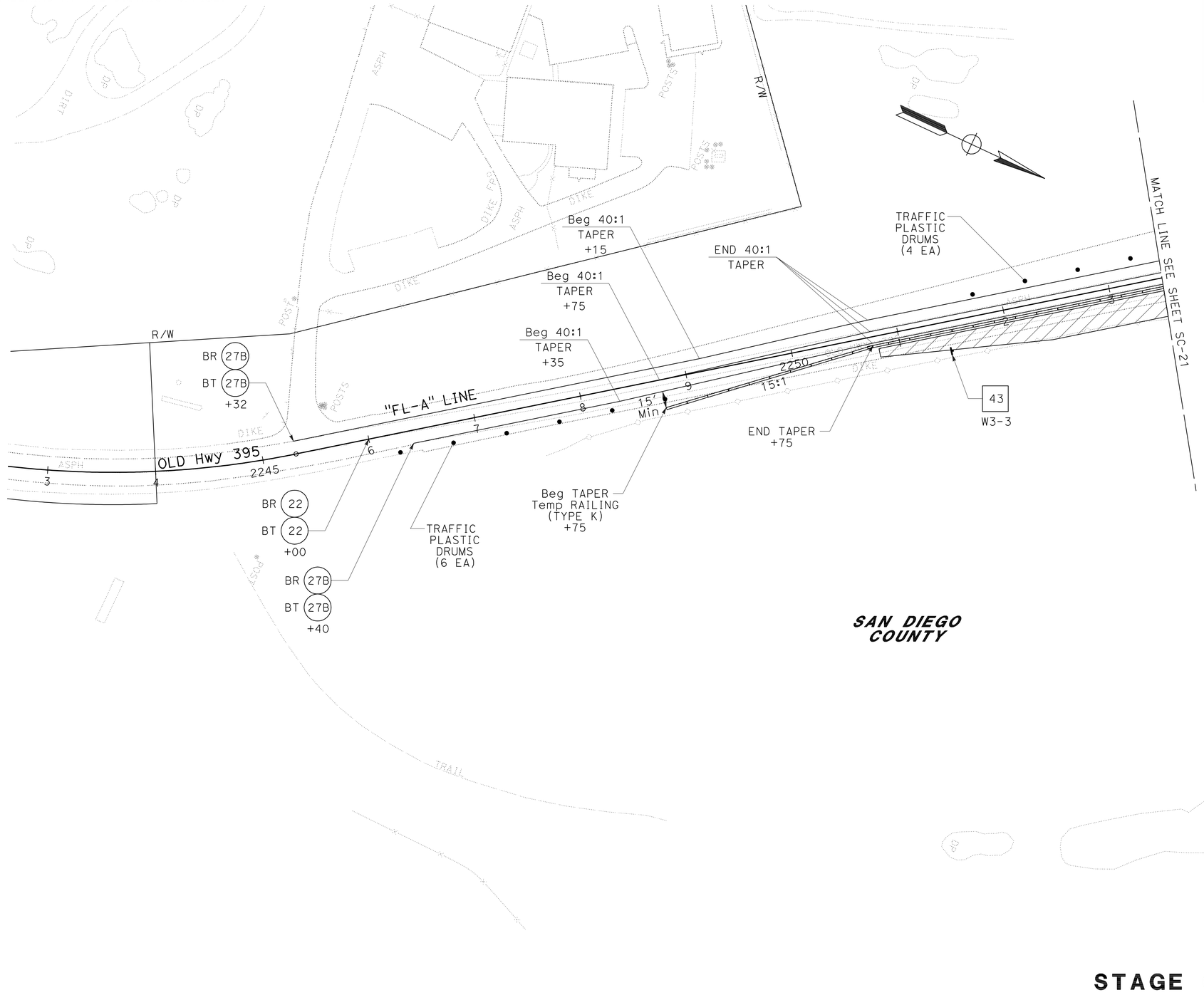

APPROVED FOR STAGE CONSTRUCTION AND TRAFFIC HANDLING WORK ONLY

STAGE CONSTRUCTION AND TRAFFIC HANDLING PLAN

STAGE 1B

SCALE: 1" = 50'

SC-22

STATE OF CALIFORNIA - DEPARTMENT OF TRANSPORTATION
Caltrans® PROJECT DEVELOPMENT

FUNCTIONAL SUPERVISOR: CARL SAVAGE
CALCULATED-DESIGNED BY: MOHAMAD KHATIB
CHECKED BY: WAMEEDH TOZY
REVISED BY
DATE REVISED

LAST REVISION 01-20-12
DATE PLOTTED => 17-APR-2012
TIME PLOTTED => 12:34

Dist	COUNTY	ROUTE	POST MILES TOTAL PROJECT	SHEET No.	TOTAL SHEETS
11	SD	15,76	R46.1/R47.3, R16.7/R17.7	199	477

REGISTERED CIVIL ENGINEER 01-10-12 DATE

4-16-12
PLANS APPROVAL DATE

REGISTERED PROFESSIONAL ENGINEER MOHAMAD KHATIB No. C63411 Exp. 09-30-12 CIVIL STATE OF CALIFORNIA

THE STATE OF CALIFORNIA OR ITS OFFICERS OR AGENTS SHALL NOT BE RESPONSIBLE FOR THE ACCURACY OR COMPLETENESS OF SCANNED COPIES OF THIS PLAN SHEET.

NOTE:

1. FOR ACCURATE RIGHT OF WAY DATA, CONTACT RIGHT OF WAY ENGINEERING AT THE DISTRICT OFFICE.
2. PRIOR TO CLOSURE OF DRIVEWAY, PROVIDE NOTIFICATION TO LESEE.

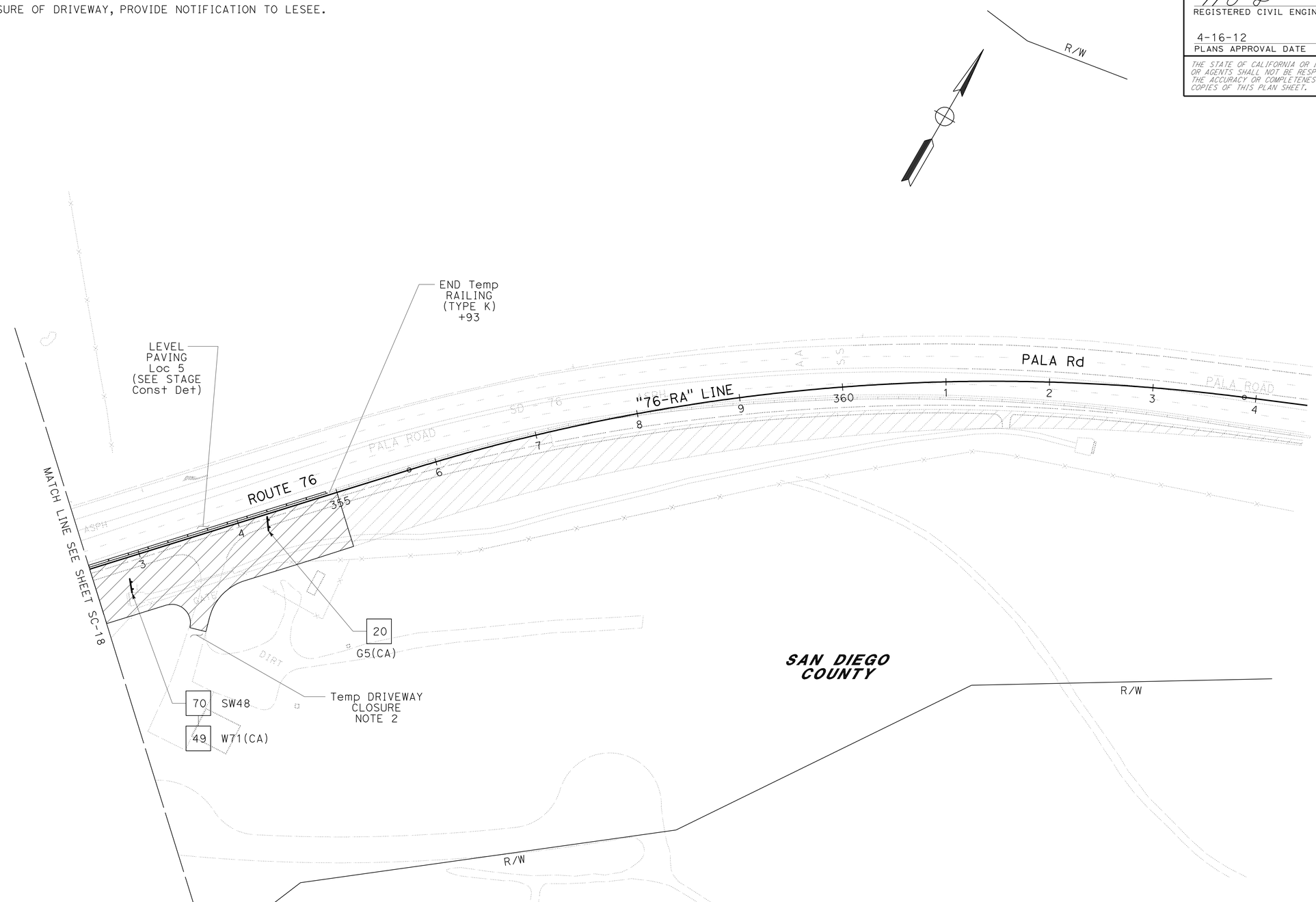

STAGE CONSTRUCTION AND TRAFFIC HANDLING PLAN

STAGE 1B

SCALE: 1" = 50'

SC-23

APPROVED FOR STAGE CONSTRUCTION AND TRAFFIC HANDLING WORK ONLY

STATE OF CALIFORNIA - DEPARTMENT OF TRANSPORTATION
Caltrans® PROJECT DEVELOPMENT

FUNCTIONAL SUPERVISOR: CARL SAVAGE
CALCULATED-DESIGNED BY: MOHAMAD KHATIB
CHECKED BY: WAMEEDH TOZY
REVISED BY
DATE REVISED

LAST REVISION 01-20-12
DATE PLOTTED => 17-APR-2012
TIME PLOTTED => 12:34

Dist	COUNTY	ROUTE	POST MILES TOTAL PROJECT	SHEET No.	TOTAL SHEETS
11	SD	15,76	R46.1/R47.3, R16.7/R17.7	200	477

REGISTERED CIVIL ENGINEER 01-10-12 DATE

4-16-12
PLANS APPROVAL DATE

REGISTERED PROFESSIONAL ENGINEER
MOHAMAD KHATIB
No. C63411
Exp. 09-30-12
CIVIL
STATE OF CALIFORNIA

THE STATE OF CALIFORNIA OR ITS OFFICERS OR AGENTS SHALL NOT BE RESPONSIBLE FOR THE ACCURACY OR COMPLETENESS OF SCANNED COPIES OF THIS PLAN SHEET.

NOTE:

FOR ACCURATE RIGHT OF WAY DATA, CONTACT RIGHT OF WAY ENGINEERING AT THE DISTRICT OFFICE.

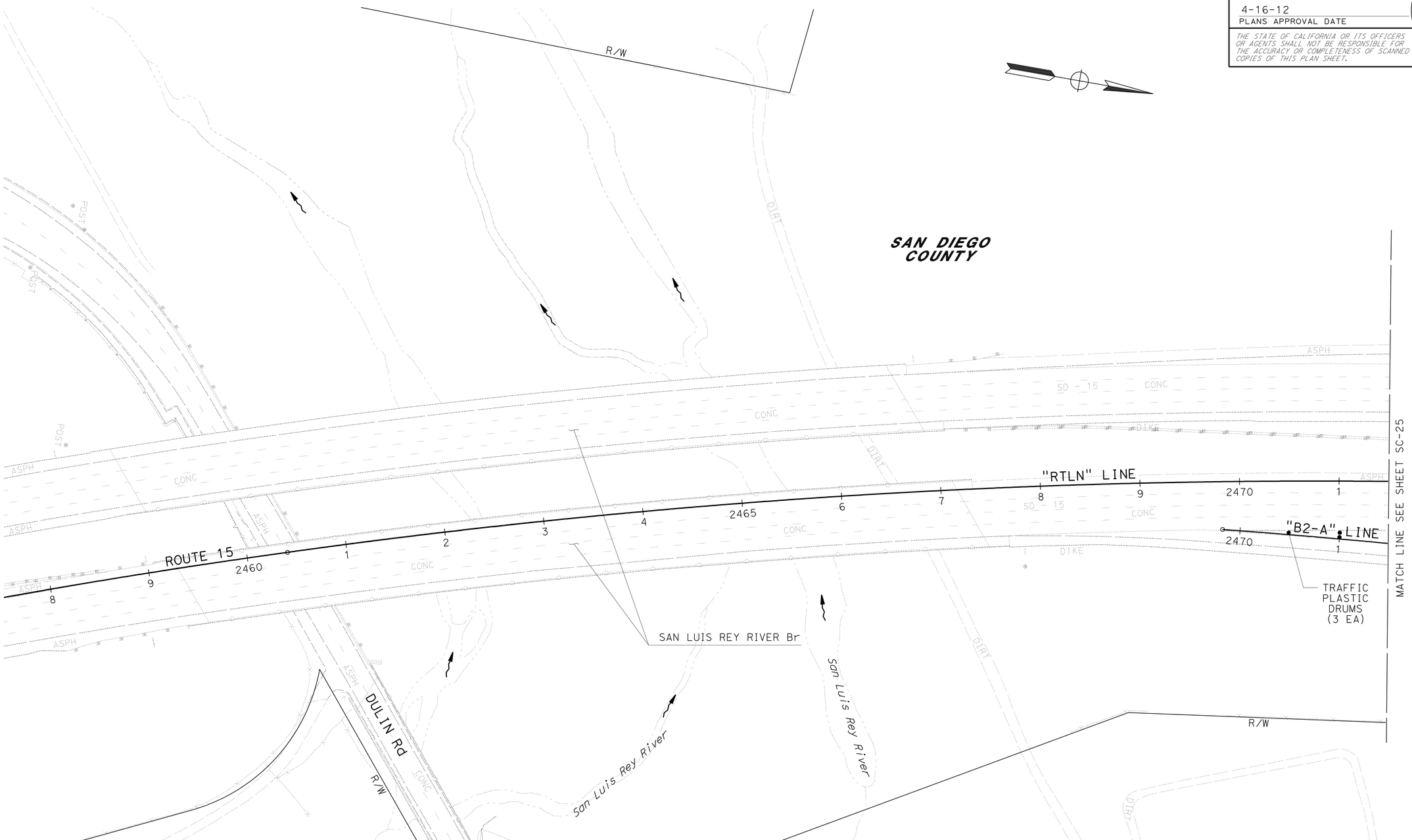

APPROVED FOR STAGE CONSTRUCTION AND TRAFFIC HANDLING WORK ONLY

STAGE CONSTRUCTION AND TRAFFIC HANDLING PLAN

STAGE 1C

SCALE: 1" = 50'

SC-24

STATE OF CALIFORNIA - DEPARTMENT OF TRANSPORTATION
Caltrans® PROJECT DEVELOPMENT

FUNCTIONAL SUPERVISOR: CARL SAVAGE

CALCULATED-DESIGNED BY: MOHAMAD KHATIB
CHECKED BY: WAMEEDH TOZY

REVISED BY
DATE REVISED

LAST REVISION 01-20-12
DATE PLOTTED => 17-APR-2012
TIME PLOTTED => 12:34