Dist	COUNTY	ROUTE	POST MILES TOTAL PROJECT	SHEET No.	TOTAL SHEETS
11	SD	163	3.8/R11.1	1	49

STATE OF CALIFORNIA

STP-P163 (027) E

DEPARTMENT OF TRANSPORTATION

PROJECT PLANS FOR CONSTRUCTION ON

STATE HIGHWAY

IN SAN DIEGO COUNTY IN SAN DIEGO

FROM ROUTE 8/163 SEPARATION TO

ROUTE 163/15 SEPARATION

TO BE SUPPLEMENTED BY STANDARD PLANS DATED MAY 2006

INDEX OF PLANS

Sheet No.	Description
1	Title and Location Map
2	Typical Cross Sections
3-6	Construction Details
7-8	Utility Plan
9	Construction Area Signs
10-25	Traffic Handling Plans
26	Pavement Delineation Quantities
27-31	Summary of Quantities
32-34	Electrical Plans
35-49	New and Revised Standard Plans

THE STANDARD PLANS LIST APPLICABLE TO THIS CONTRACT IS INCLUDED IN THE NOTICE TO BIDDERS AND SPECIAL PROVISIONS BOOK.

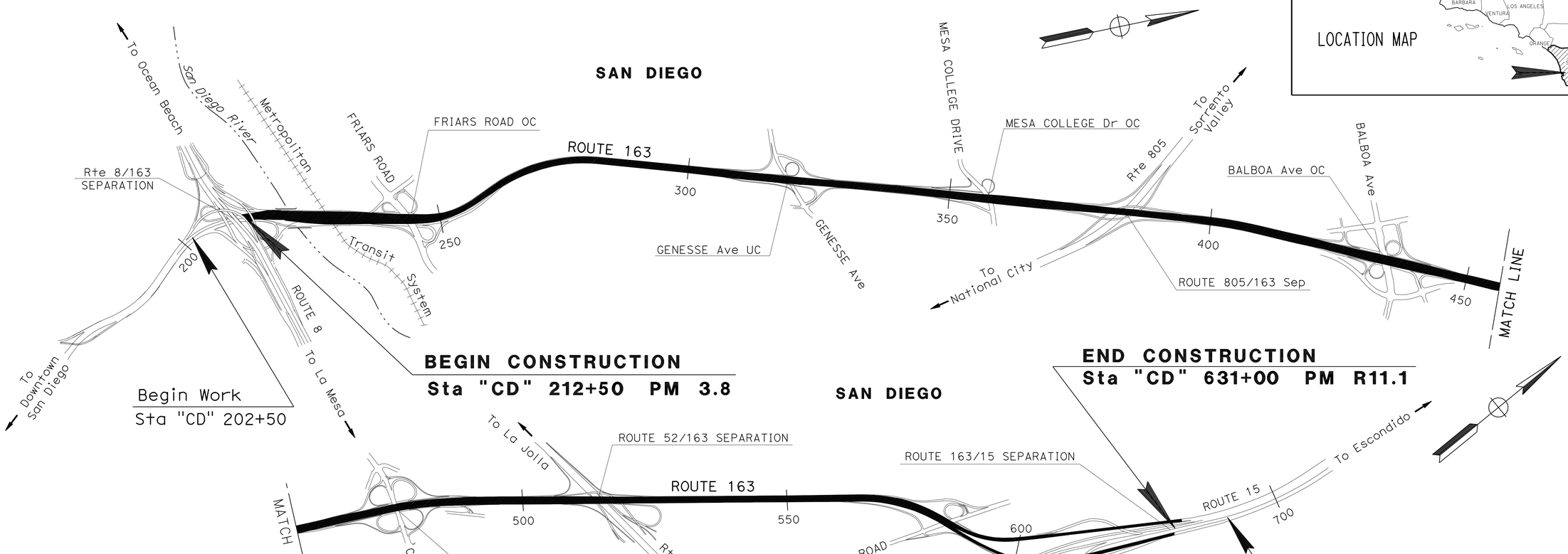

ENVIRONMENTALLY SENSITIVE AREA IS 3 FEET FROM EDGE OF PAVEMENT EXCEPT AT METAL BEAM GUARD RAIL LOCATIONS.

THE CONTRACTOR SHALL POSSESS THE CLASS (OR CLASSES) OF LICENSE AS SPECIFIED IN THE "NOTICE TO BIDDERS."

NO SCALE

PROJECT MANAGER: BRUCE LAMBERT

DESIGN ENGINEER: KAZIM MAMDANI

07-29-10

PROJECT ENGINEER REGISTERED CIVIL ENGINEER — DATE

August 2, 2010

PLANS APPROVAL DATE

REGISTERED PROFESSIONAL ENGINEER — MARVIN A. CANTON — No. C69855 — Exp. 09-30-10 — CIVIL — STATE OF CALIFORNIA

THE STATE OF CALIFORNIA OR ITS OFFICERS OR AGENTS SHALL NOT BE RESPONSIBLE FOR THE ACCURACY OR COMPLETENESS OF SCANNED COPIES OF THIS PLAN SHEET.

CONTRACT No.	11-239304
PROJECT ID	1100020021

LAST REVISION 08-05-10

DATE PLOTTED => 31-AUG-2010
TIME PLOTTED => 15:31

Dist	COUNTY	ROUTE	POST MILES TOTAL PROJECT	SHEET No.	TOTAL SHEETS
11	SD	163	3.8/R11.1	2	49

REGISTERED CIVIL ENGINEER 07-29-10 DATE

08-02-10
PLANS APPROVAL DATE

REGISTERED PROFESSIONAL ENGINEER MARVIN A.CANTON No. C69855 Exp. 09-30-10 CIVIL STATE OF CALIFORNIA

THE STATE OF CALIFORNIA OR ITS OFFICERS OR AGENTS SHALL NOT BE RESPONSIBLE FOR THE ACCURACY OR COMPLETENESS OF SCANNED COPIES OF THIS PLAN SHEET.

NOTES:

1. DIMENSIONS OF THE PAVEMENT STRUCTURES (STRUCTURAL SECTIONS) ARE SUBJECT TO TOLERANCES SPECIFIED IN THE STANDARD SPECIFICATIONS.
2. SUPERELEVATIONS AS SHOWN OR AS DIRECTED BY THE ENGINEER.
3. FOG SEAL COAT SHALL BE APPLIED TO ALL HMA SURFACES EXCEPT TRAVELED WAYS.
4. FOR LOCATION AND TYPE OF REMOVE AC DIKE/PLACE HMA DIKE, SEE SUMMARY OF QUANTITIES SHEET.
5. SEE CONSTRUCTION DETAIL AND SUMMARY OF QUANTITIES SHEETS FOR "REPLACE CONCRETE PAVEMENT".
6. SEE DETAIL "A" FOR COLD PLANE LIMITS AT EXISTING DIKE.
7. * MATCH EXISTING SLOPE.
8. EXISTING UTILITY FACILITIES HAVE NOT BEEN PLOTTED ON THESE PLANS.
9. LIMIT OF COLD PLANING / OVERLAY AND OR GRINDING WORK TO REACH END OF GORE AREAS.

ABBREVIATIONS:

ESA = ENVIRONMENTALLY SENSITIVE AREA

RHMA - G = RUBBERIZED HOT MIX ASPHALT (GAP GRADED)

DESIGN DESIGNATION (Rte-163)

ADT(1999)	86,000	D=60 %
ADT(2010)	89,640	T=5.1 %
DHV	8,600	V=65 MPH

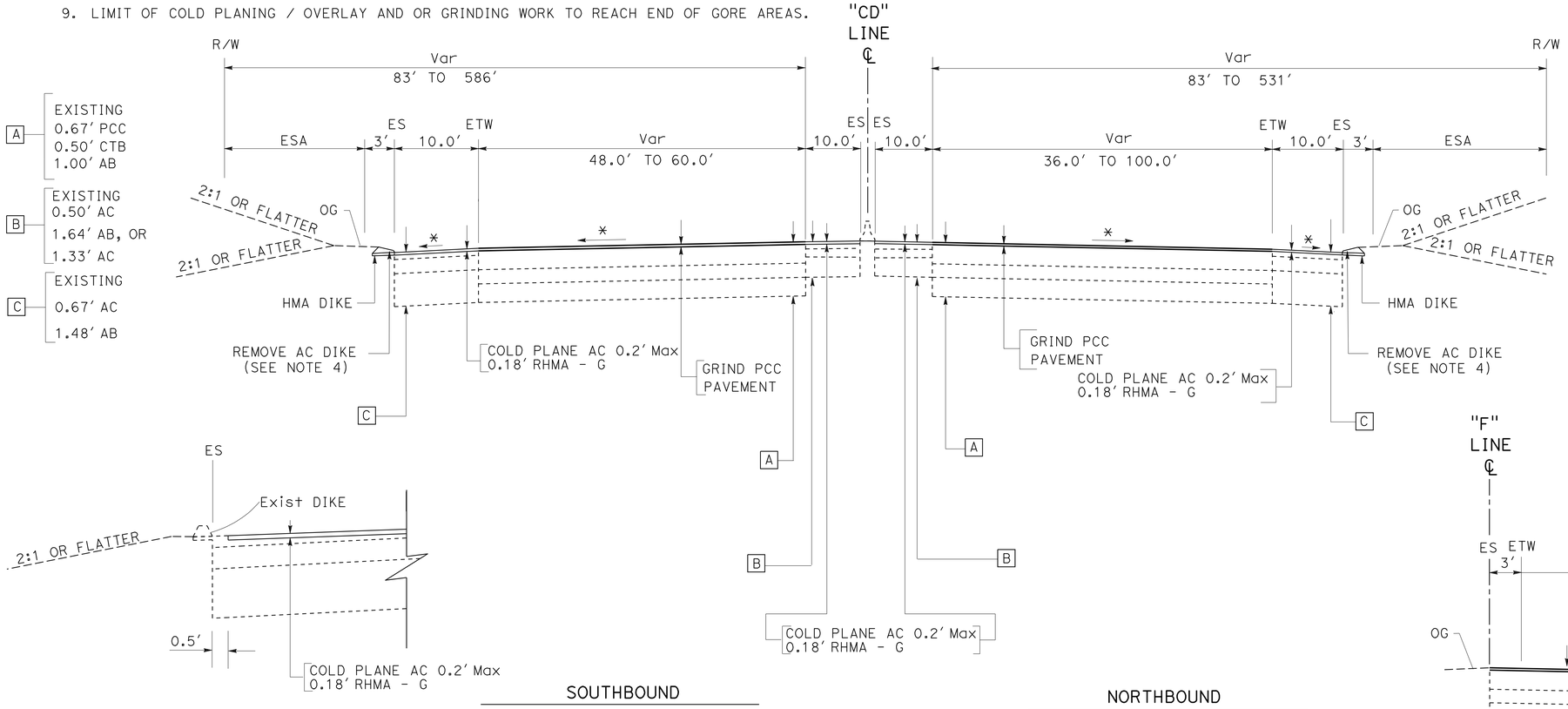

SOUTHBOUND
Sta 232+00 TO Sta 631+00

NORTHBOUND
Sta 232+00 TO Sta 625+50

DETAIL "A" (SEE NOTE 6)

ROUTE 163

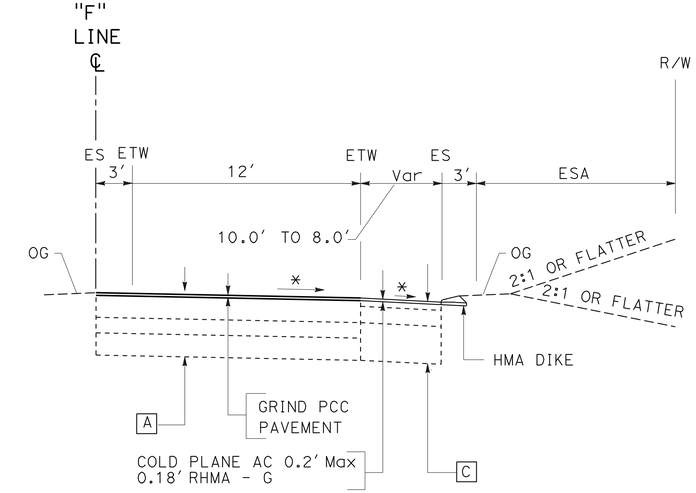

"F" LINE
Sta 240+50 TO Sta 247+65

NB OFF RAMP TO FRIARS Rd

TYPICAL CROSS SECTIONS

NO SCALE

X-1

STATE OF CALIFORNIA - DEPARTMENT OF TRANSPORTATION
Caltrans PROJECT DEVELOPMENT

FUNCTIONAL SUPERVISOR: KAZIM MAMDANI
CALCULATED-DESIGNED BY: AJMAL ZULALI
CHECKED BY: MARVIN CANTON
REVISED BY
DATE REVISED

LAST REVISION 08-06-10
DATE PLOTTED => 31-AUG-2010
TIME PLOTTED => 15:31

Dist	COUNTY	ROUTE	POST MILES TOTAL PROJECT	SHEET No.	TOTAL SHEETS
11	SD	163	3.8/R11.1	3	49

07-29-10
REGISTERED CIVIL ENGINEER DATE

08-02-10
PLANS APPROVAL DATE

REGISTERED PROFESSIONAL ENGINEER
MARVIN A.CANTON
No. C69855
Exp. 09-30-10
CIVIL
STATE OF CALIFORNIA

THE STATE OF CALIFORNIA OR ITS OFFICERS OR AGENTS SHALL NOT BE RESPONSIBLE FOR THE ACCURACY OR COMPLETENESS OF SCANNED COPIES OF THIS PLAN SHEET.

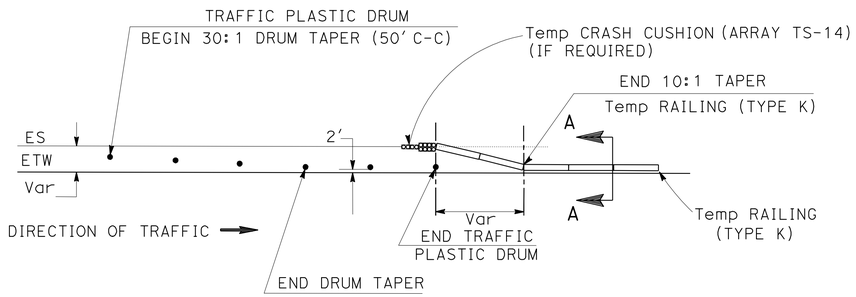

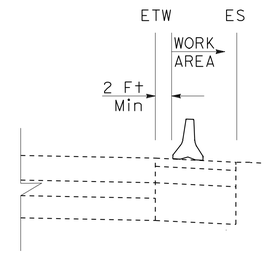

SECTION A-A

TEMPORARY PLACEMENT OF TEMPORARY RAILING (TYPE K)

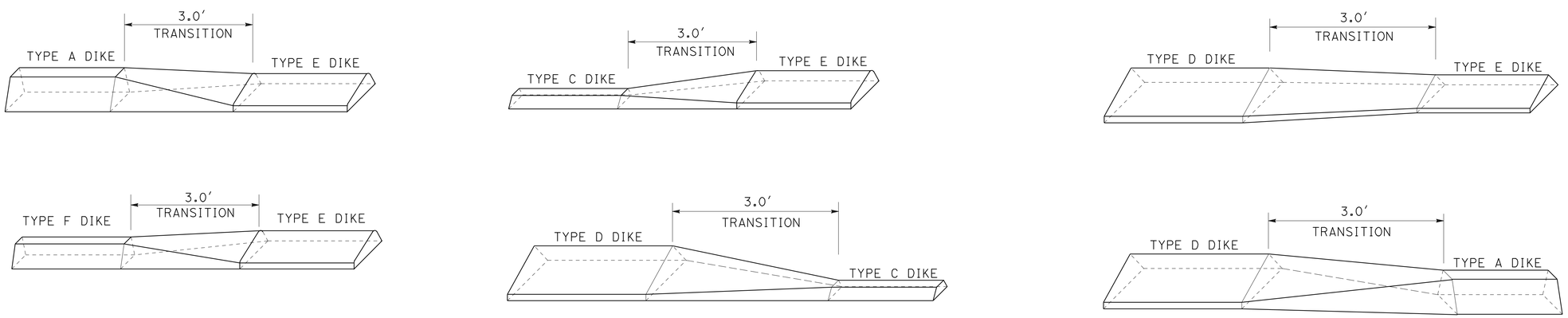

HMA DIKE TRANSITION

CONSTRUCTION DETAILS

NO SCALE

C-1

STATE OF CALIFORNIA - DEPARTMENT OF TRANSPORTATION
Caltrans® PROJECT DEVELOPMENT

FUNCTIONAL SUPERVISOR: KAZIM MAMDANI
CALCULATED-DESIGNED BY: AJMAL ZULALI
CHECKED BY: MARVIN CANTON
REVISED BY
DATE REVISED

LAST REVISION 08-06-10
DATE PLOTTED => 31-AUG-2010
TIME PLOTTED => 15:31

Dist	COUNTY	ROUTE	POST MILES TOTAL PROJECT	SHEET No.	TOTAL SHEETS
11	SD	163	3.8/R11.1	4	49

REGISTERED CIVIL ENGINEER 07-29-10 DATE

08-02-10
PLANS APPROVAL DATE

REGISTERED PROFESSIONAL ENGINEER MARVIN A.CANTON No. C69855 Exp. 09-30-10 CIVIL STATE OF CALIFORNIA

THE STATE OF CALIFORNIA OR ITS OFFICERS OR AGENTS SHALL NOT BE RESPONSIBLE FOR THE ACCURACY OR COMPLETENESS OF SCANNED COPIES OF THIS PLAN SHEET.

NOTES:

1. FOR DETAILS NOT SHOWN SEE STANDARD PLAN RSP P8
2. REMOVE ALL LOOSE MATERIAL AT SUBGRADE AND APPLY BOND BREAKER.

LEGEND:

▨ - REMOVE REINFORCEMENT BARS TO DEPTH SHOWN, BACKFILL WITH EPOXY

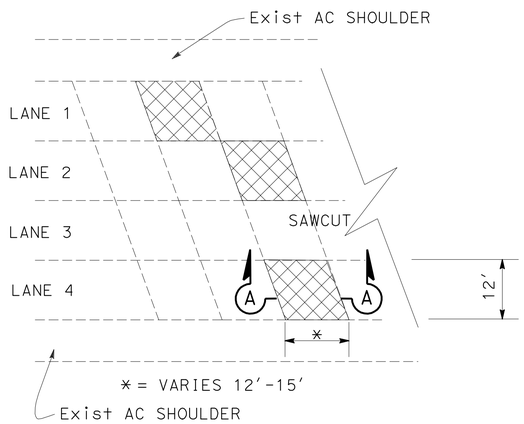

PLAN

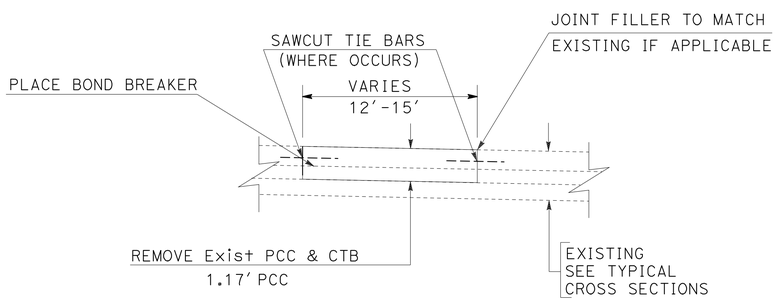

SECTION A-A

TYPICAL DETAIL

INDIVIDUAL SLAB REPLACEMENT (MODIFED)

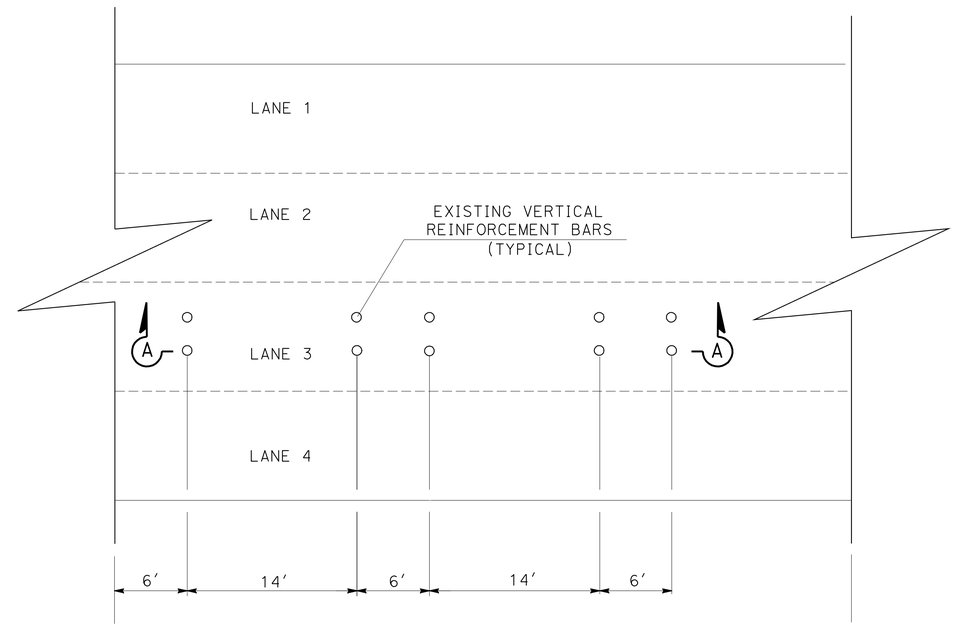

PLAN VIEW

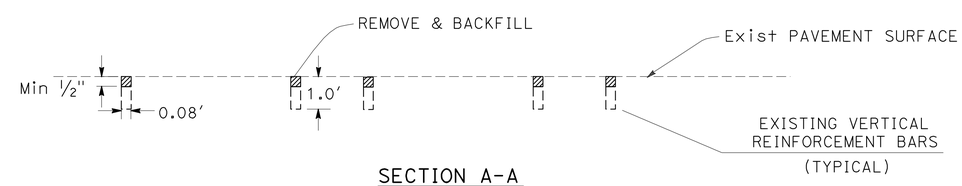

SECTION A-A

REMOVE REINFORCEMENT BARS
NB ROUTE 163 PM 4.3 TO 6.5

CONSTRUCTION DETAILS

NO SCALE

C-2

STATE OF CALIFORNIA - DEPARTMENT OF TRANSPORTATION
Caltrans® PROJECT DEVELOPMENT

FUNCTIONAL SUPERVISOR: KAZIM MAMDANI
CALCULATED-DESIGNED BY: AJMAL ZULALI
CHECKED BY: MARVIN CANTON
REVISED BY
DATE REVISED

LAST REVISION 08-06-10 | DATE PLOTTED => 31-AUG-2010 | TIME PLOTTED => 15:31

Dist	COUNTY	ROUTE	POST MILES TOTAL PROJECT	SHEET No.	TOTAL SHEETS
11	SD	163	3.8/R11.1	5	49

REGISTERED CIVIL ENGINEER 07-29-10 DATE

08-02-10
PLANS APPROVAL DATE

REGISTERED PROFESSIONAL ENGINEER MARVIN A.CANTON No. C69855 Exp. 09-30-10 CIVIL STATE OF CALIFORNIA

THE STATE OF CALIFORNIA OR ITS OFFICERS OR AGENTS SHALL NOT BE RESPONSIBLE FOR THE ACCURACY OR COMPLETENESS OF SCANNED COPIES OF THIS PLAN SHEET.

NOTES:

1. FOR DETAILS NOT SHOWN, SEE STANDARD PLAN A77J4.
2. DEPENDENT DIMENSIONS SHALL BE VERIFIED IN THE FIELD BEFORE FABRICATING ANY END CONNECTION TO CONFORM WITH EXISTING PAVED CONDITIONS.
3. ALL PLATES AND BOLTS ARE GALVANIZED.
4. CUT AND REMOVE PORTION OF CONCRETE BARRIER TYPE 1, AND BAGR AS REQUIRED.
5. TAPER THE TOP OF THE END OF THE ANCHOR BLOCK AT 4:1 TO MATCH THE TOP ELEVATION OF THE TRANSITION RAILING (TYPE WB).

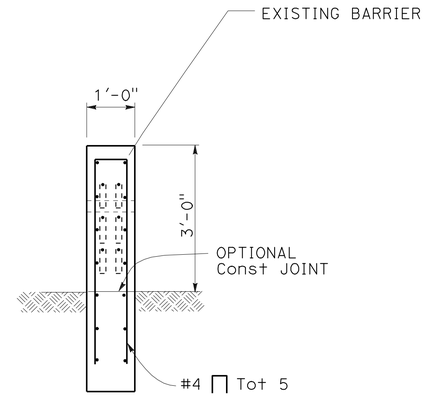

SECTION A-A

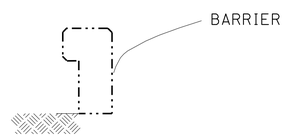

TYPICAL SECTION

(CONCRETE BARRIER TYPE 1)

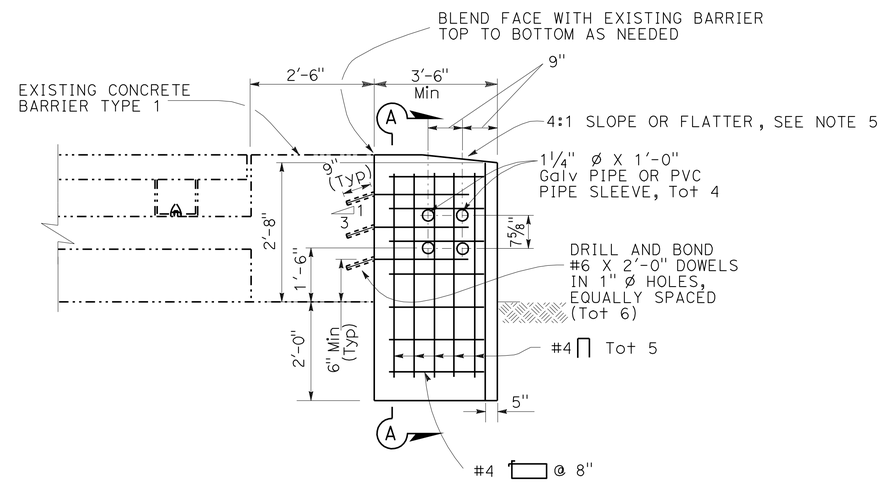

ELEVATION

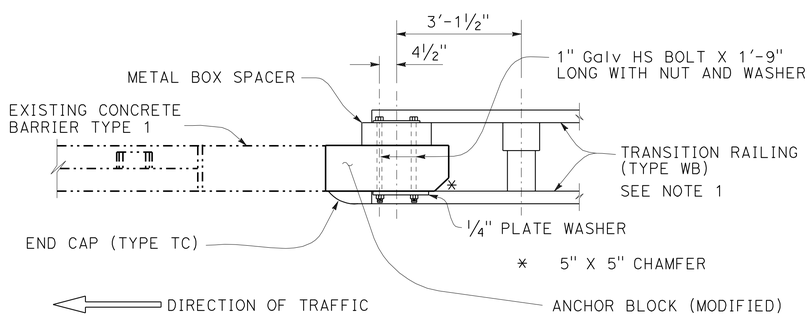

PLAN

ANCHOR BLOCK (MODIFIED)

(TO BE INSTALLED WITH MBGR No. 5 & 7)

CONSTRUCTION DETAILS

NO SCALE

C-3

STATE OF CALIFORNIA - DEPARTMENT OF TRANSPORTATION
Caltrans PROJECT DEVELOPMENT

FUNCTIONAL SUPERVISOR: KAZIM MAMDANI
CALCULATED-DESIGNED BY: AJMAL ZULALI
CHECKED BY: MARVIN CANTON
REVISED BY
DATE REVISED

LAST REVISION 08-06-10 | DATE PLOTTED => 31-AUG-2010 | TIME PLOTTED => 15:31

Dist	COUNTY	ROUTE	POST MILES TOTAL PROJECT	SHEET No.	TOTAL SHEETS
11	SD	163	3.8/R11.1	6	49

REGISTERED CIVIL ENGINEER 07-29-10 DATE

08-02-10
PLANS APPROVAL DATE

REGISTERED PROFESSIONAL ENGINEER
MARVIN A.CANTON
No. C69855
Exp. 09-30-10
CIVIL
STATE OF CALIFORNIA

THE STATE OF CALIFORNIA OR ITS OFFICERS OR AGENTS SHALL NOT BE RESPONSIBLE FOR THE ACCURACY OR COMPLETENESS OF SCANNED COPIES OF THIS PLAN SHEET.

NOTES:

1. NO JOINT SEAL WORK WITHIN THE HATCH AREA.
2. Exist INDUCTIVE LOOP DETECTORS PROTECT IN PLACE.

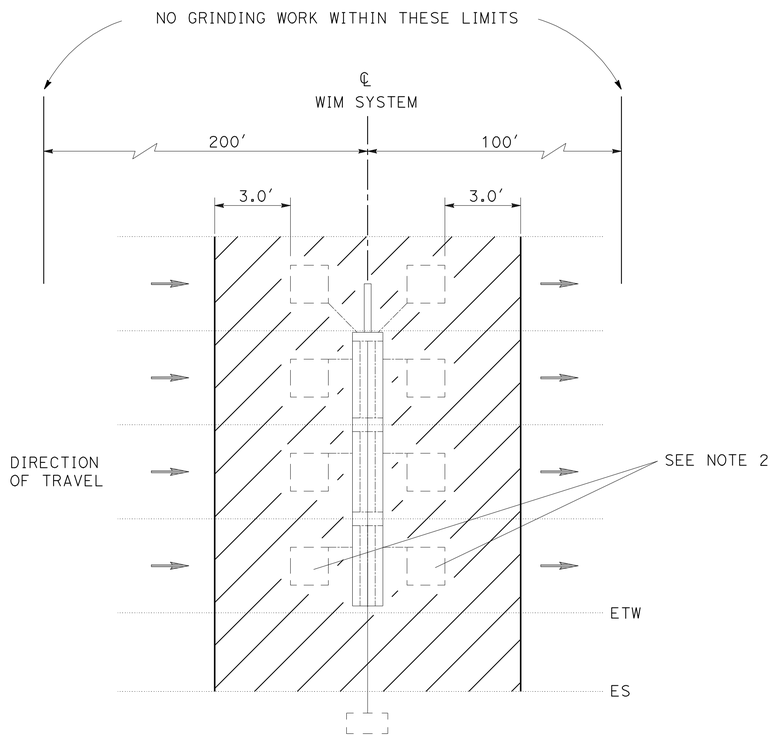

EXISTING WEIGH IN MOTION (WIM) SYSTEM (Typ)

Rte 163 NB Sta 169+00 TO 172+00
Rte 163 SB Sta 170+60 TO 173+60

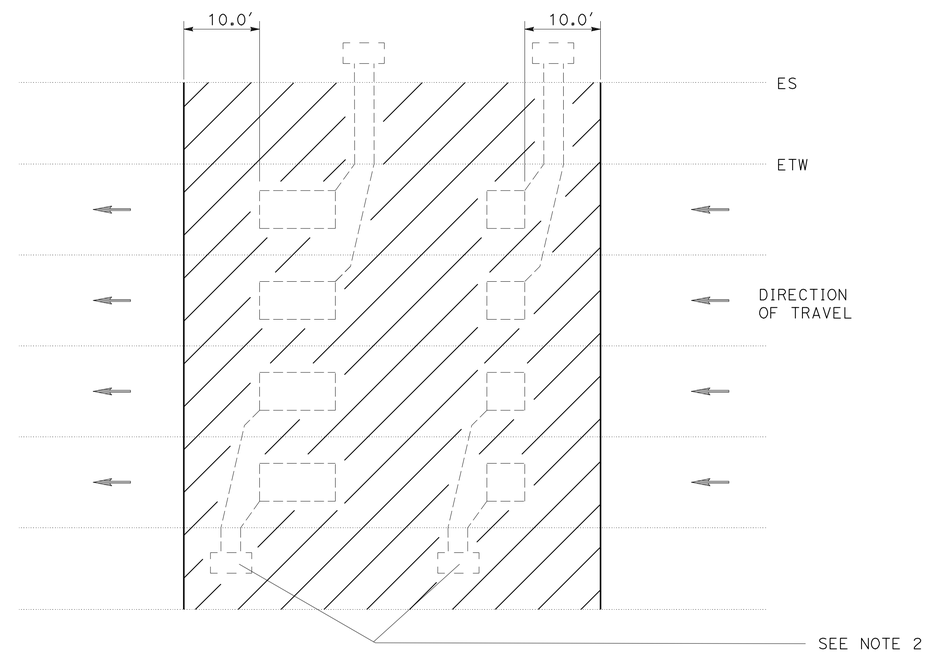

EXISTING INDUCTIVE LOOP (Typ)

ROUTE 163

CONSTRUCTION DETAILS

NO SCALE

C-4

STATE OF CALIFORNIA - DEPARTMENT OF TRANSPORTATION
Caltrans PROJECT DEVELOPMENT

FUNCTIONAL SUPERVISOR: KAZIM MAMDANI
CALCULATED-DESIGNED BY: AJMAL ZULALI
CHECKED BY: MARVIN CANTON
REVISED BY
DATE REVISED

LAST REVISION 08-06-10 | DATE PLOTTED => 31-AUG-2010 | TIME PLOTTED => 15:31

Dist	COUNTY	ROUTE	POST MILES TOTAL PROJECT	SHEET No.	TOTAL SHEETS
11	SD	163	3.8/R11.1	7	49

Anh Hoang 07-30-10
REGISTERED CIVIL ENGINEER DATE

08-02-10
PLANS APPROVAL DATE

REGISTERED PROFESSIONAL ENGINEER
ANH HOANG
No. C66009
Exp. 06-30-12
CIVIL
STATE OF CALIFORNIA

THE STATE OF CALIFORNIA OR ITS OFFICERS OR AGENTS SHALL NOT BE RESPONSIBLE FOR THE ACCURACY OR COMPLETENESS OF SCANNED COPIES OF THIS PLAN SHEET.

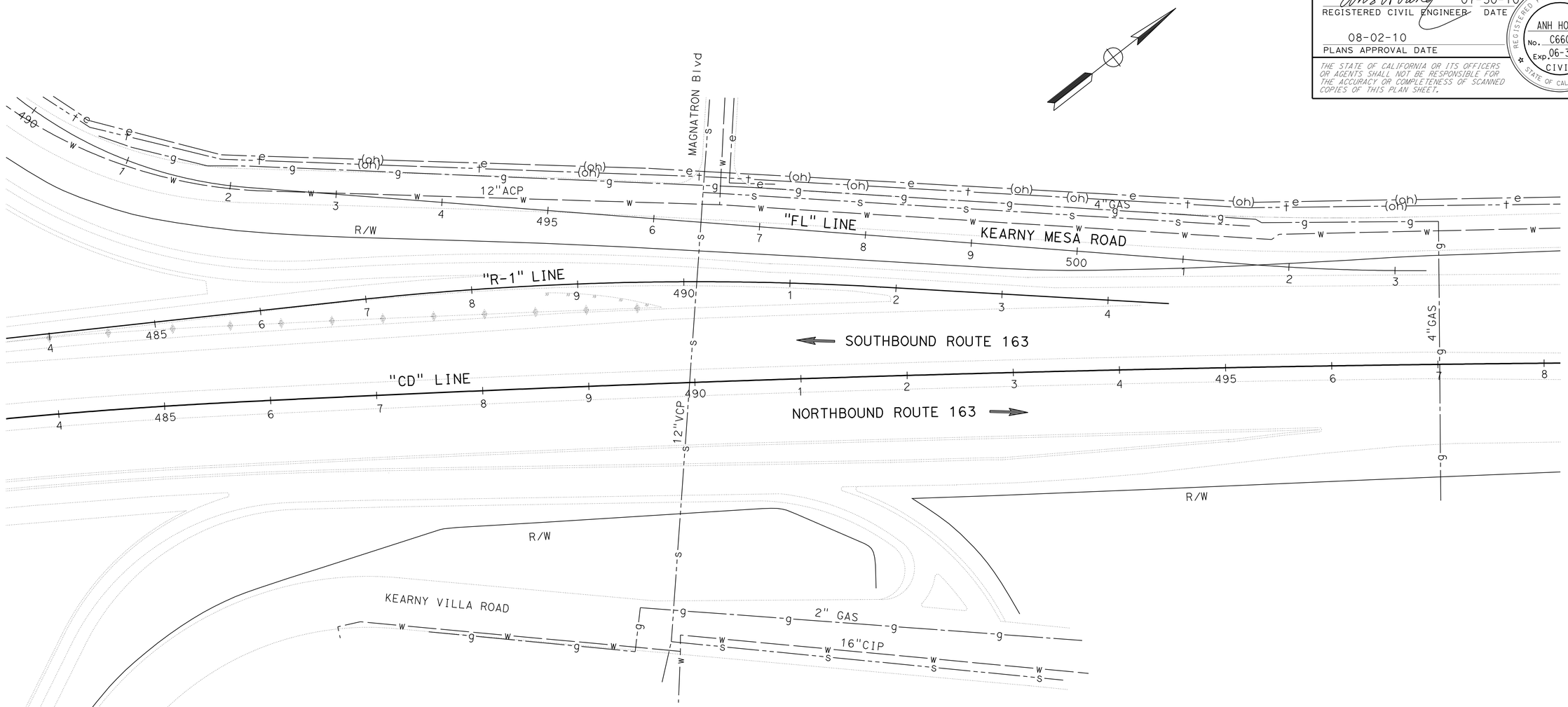

NOTES:

1. LOCATION OF UTILITY FACILITIES SHOWN ON THESE PLANS WERE OBTAINED FROM OWNERS RECORDS AND/OR FROM STATE SURVEYS.
2. FOR ACCURATE RIGHT OF WAY DATA, CONTACT RIGHT OF WAY ENGINEERING AT DISTRICT OFFICE.
3. ALL UTILITIES TO BE FIELD VERIFIED PRIOR TO CONSTRUCTION.

LEGEND

EXISTING	FACILITY	OWNER
—— - e —— —— -(oh)-	ELECTRIC	SAN DIEGO GAS & ELECTRIC
—— -g—— - —— -g—	GAS	SAN DIEGO GAS & ELECTRIC
—— - † —— —— - -(oh)—	TELEPHONE	AT&T
—— - - s —— - - —— - - s-	SEWER	CITY OF SAN DIEGO
- —— w —— —— —— w —	WATER	CITY OF SAN DIEGO

THIS PLAN ACCURATE FOR UTILITY INFORMATION ONLY

UTILITY PLAN

SCALE: 1" = 50'

U-1

REVISED BY	DATE REVISED

CALCULATED-DESIGNED BY	CHECKED BY
LANCHI HOANG	ANH HOANG

FUNCTIONAL SUPERVISOR: ABU-BAKR AL-JAFRI

STATE OF CALIFORNIA - DEPARTMENT OF TRANSPORTATION
Caltrans® ENGINEERING SERVICES

LAST REVISION 08-06-10 | DATE PLOTTED => 31-AUG-2010 | TIME PLOTTED => 15:31

Dist	COUNTY	ROUTE	POST MILES TOTAL PROJECT	SHEET No.	TOTAL SHEETS
11	SD	163	3.8/R11.1	8	49

REGISTERED CIVIL ENGINEER 07-30-10 DATE

08-02-10
PLANS APPROVAL DATE

REGISTERED PROFESSIONAL ENGINEER
ANH HOANG
No. C66009
Exp. 06-30-12
CIVIL
STATE OF CALIFORNIA

THE STATE OF CALIFORNIA OR ITS OFFICERS OR AGENTS SHALL NOT BE RESPONSIBLE FOR THE ACCURACY OR COMPLETENESS OF SCANNED COPIES OF THIS PLAN SHEET.

NOTES:

1. LOCATION OF UTILITY FACILITIES SHOWN ON THESE PLANS WERE OBTAINED FROM OWNERS RECORDS AND/OR FROM STATE SURVEYS.
2. FOR ACCURATE RIGHT OF WAY DATA, CONTACT RIGHT OF WAY ENGINEERING AT DISTRICT OFFICE.
3. ALL UTILITIES TO BE FIELD VERIFIED PRIOR TO CONSTRUCTION.

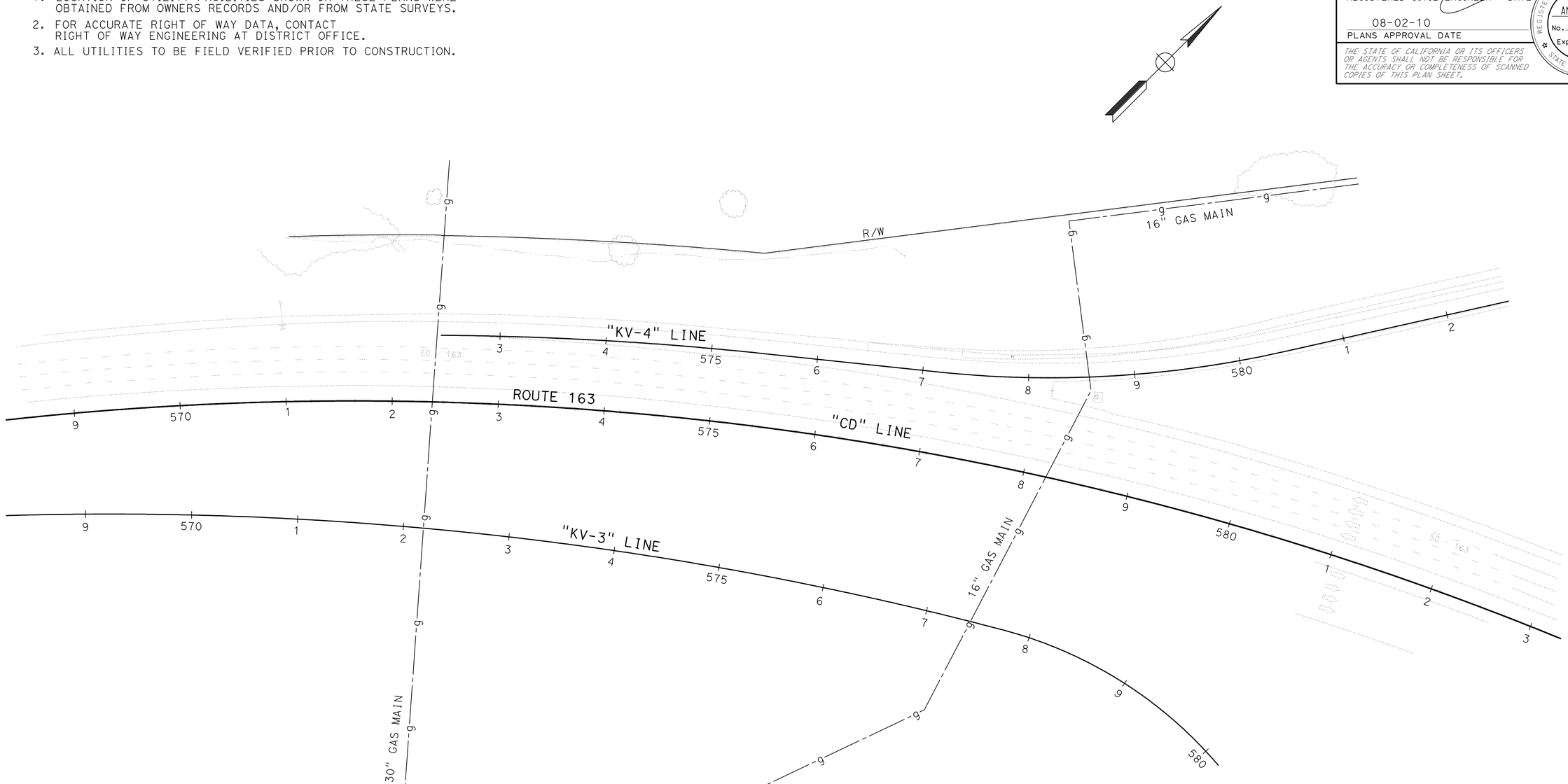

THIS PLAN ACCURATE FOR UTILITY INFORMATION ONLY

UTILITY PLAN

SCALE: 1" = 50'

U-2

STATE OF CALIFORNIA - DEPARTMENT OF TRANSPORTATION
Caltrans ENGINEERING SERVICES

FUNCTIONAL SUPERVISOR: ABU-BAKR AL-JAFRI

CALCULATED-DESIGNED BY: LANCHI HOANG
CHECKED BY: ANH HOANG

REVISED BY | DATE REVISED

LAST REVISION 08-06-10 | DATE PLOTTED => 31-AUG-2010 | TIME PLOTTED => 15:31

BORDER LAST REVISED 7/2/2010 | USERNAME => s127400 | DGN FILE => 11000200211ka002.dgn | RELATIVE BORDER SCALE IS IN INCHES 0 1 2 3 | UNIT 2786 | PROJECT NUMBER & PHASE 11000200211

Dist	COUNTY	ROUTE	POST MILES TOTAL PROJECT	SHEET No.	TOTAL SHEETS
11	SD	163	3.8/R11.1	9	49

REGISTERED CIVIL ENGINEER 08-02-10 DATE

08-02-10
PLANS APPROVAL DATE

REGISTERED PROFESSIONAL ENGINEER SHAHIN T. ADIBI No. 54839 Exp. 06-30-12 CIVIL STATE OF CALIFORNIA

THE STATE OF CALIFORNIA OR ITS OFFICERS OR AGENTS SHALL NOT BE RESPONSIBLE FOR THE ACCURACY OR COMPLETENESS OF SCANNED COPIES OF THIS PLAN SHEET.

LEGEND

[XX] = CONSTRUCTION AREA SIGN

NOTES:

1. EXACT LOCATION OF CONSTRUCTION AREA SIGNS SHALL BE DETERMINED BY THE ENGINEER.
2. FEDERAL MANUAL ON UNIFORM TRAFFIC CONTROL DEVICES (MUTCD) SIGN CODES ARE SHOWN UNLESS DESIGNATED BY (CA), INDICATING CALIFORNIA MUTCD.
3. SEE TRAFFIC HANDLING PLANS FOR ADDITIONAL CONSTRUCTION AREA SIGNS.
4. EXISTING UTILITIES ARE NOT SHOWN ON THESE PLAN SHEETS. THE CONTRACTOR SHALL VERIFY LOCATIONS OF EXISTING UTILITIES AND ADJUST THE FIELD LOCATION OF SIGN POSTS IN CONSULTATION WITH THE ENGINEER.

CONSTRUCTION AREA SIGNS

SIGN No.	CODE	PANEL SIZE (In)	No. OF POST AND SIZE (In)	No. OF SIGNS
1	C40 (CA)	108 X 42	2-4 X 6 (S)	4
2	C23 (CA)	48 X 48	1-4 X 6 (S)	26
3	C14 (CA)	48 X 24	1-4 X 4 (S)	21
			TOTAL	51

(S) DENOTES STATIONARY MOUNTED SIGN

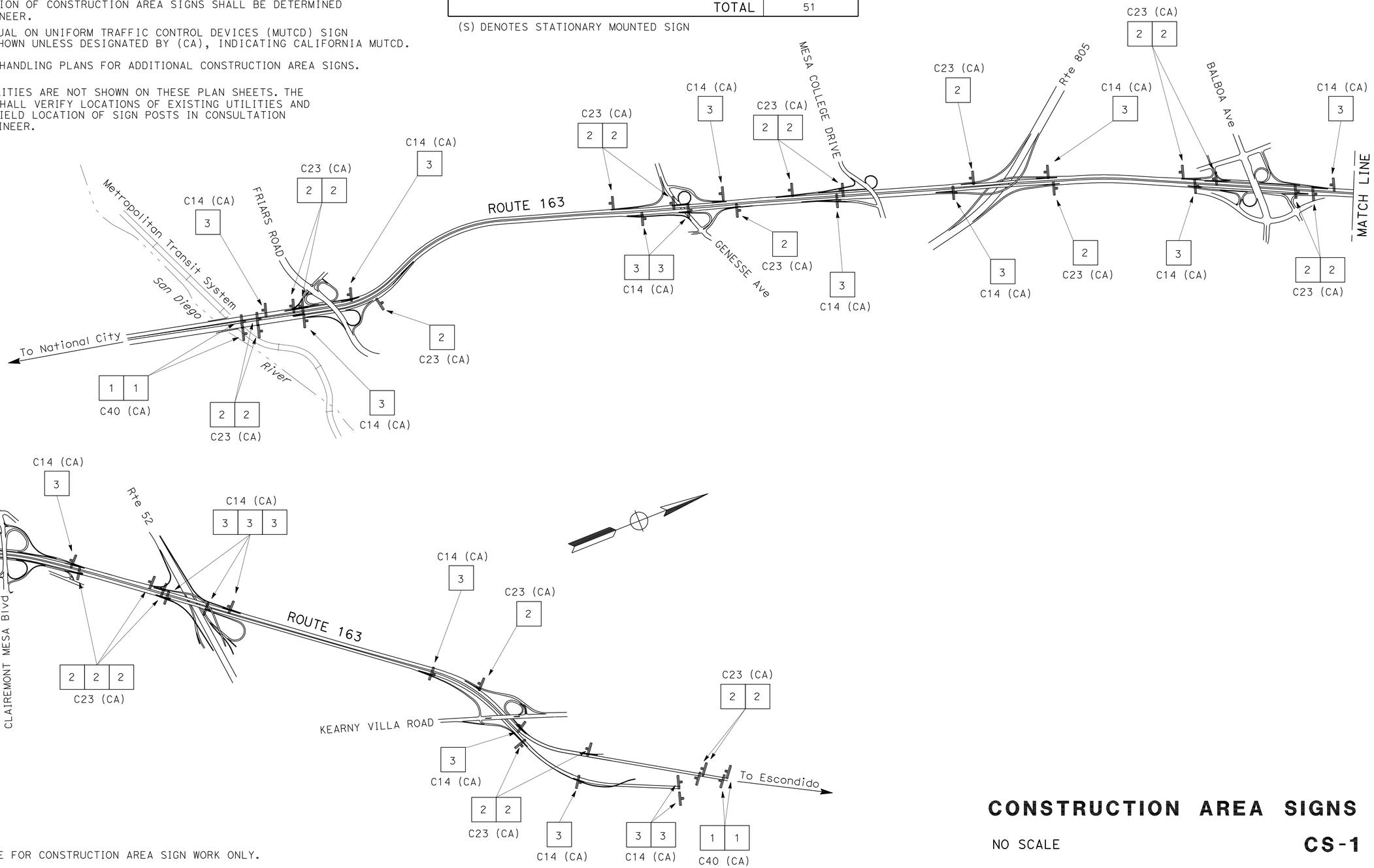

THIS PLAN ACCURATE FOR CONSTRUCTION AREA SIGN WORK ONLY.

CONSTRUCTION AREA SIGNS

NO SCALE

CS-1

STATE OF CALIFORNIA - DEPARTMENT OF TRANSPORTATION
Caltrans
TRAFFIC DESIGN

FUNCTIONAL SUPERVISOR: CAMILLE ABOUFADEL
CALCULATED-DESIGNED BY: NOEL TAPIA
CHECKED BY: SHAHIN T. ADIBI
REVISED BY
DATE REVISED

LAST REVISION DATE PLOTTED => 31-AUG-2010
08-09-10 TIME PLOTTED => 15:31

Dist	COUNTY	ROUTE	POST MILES TOTAL PROJECT	SHEET No.	TOTAL SHEETS
11	SD	163	3.8/R11.1	10	49

08-02-10
REGISTERED CIVIL ENGINEER DATE

08-02-10
PLANS APPROVAL DATE

REGISTERED PROFESSIONAL ENGINEER
SHAHIN T. ADIBI
No. 54839
Exp. 06-30-12
CIVIL
STATE OF CALIFORNIA

THE STATE OF CALIFORNIA OR ITS OFFICERS OR AGENTS SHALL NOT BE RESPONSIBLE FOR THE ACCURACY OR COMPLETENESS OF SCANNED COPIES OF THIS PLAN SHEET.

LEGEND:

XX = CONSTRUCTION AREA SIGNS

SPCL = SPECIAL CONSTRUCTION AREA SIGN

Caps = CAPITAL LETTERING

Num = "NUMERALS"

→ = DETOUR DIRECTION OF TRAVEL

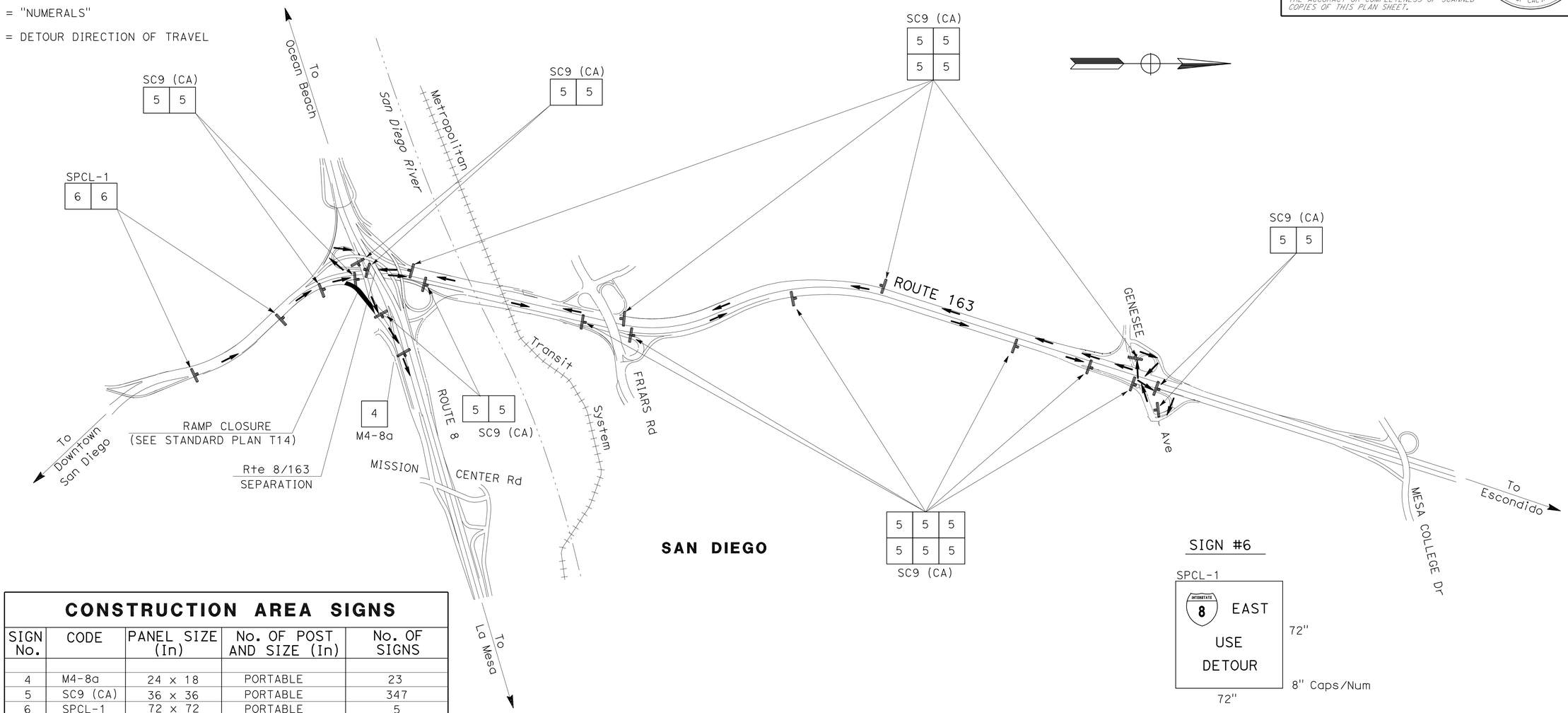

SIGN #6

SPCL-1

INTERSTATE 8 EAST
USE
DETOUR

72"

72"

8" Caps/Num

CONSTRUCTION AREA SIGNS

SIGN No.	CODE	PANEL SIZE (In)	No. OF POST AND SIZE (In)	No. OF SIGNS
4	M4-8a	24 x 18	PORTABLE	23
5	SC9 (CA)	36 x 36	PORTABLE	347
6	SPCL-1	72 x 72	PORTABLE	5
7	SPCL-2	72 x 72	PORTABLE	7
8	SPCL-3	72 x 72	PORTABLE	7
9	SPCL-4	72 x 72	PORTABLE	2
10	SPCL-5	72 x 72	PORTABLE	2
11	SPCL-6	72 x 72	PORTABLE	4
12	SPCL-7	72 x 72	PORTABLE	10
13	SPCL-8	72 x 72	PORTABLE	7
			TOTAL	414

NOTES:

1. LOCATIONS OF CONSTRUCTION AREA SIGNS WILL BE DETERMINED BY THE ENGINEER.
2. FEDERAL MANUAL ON UNIFORM TRAFFIC CONTROL DEVICES (MUTCD) SIGN CODES ARE SHOWN UNLESS DESIGNATED BY (CA), INDICATING CALIFORNIA MUTCD.
3. ROTATE ARROW ON SC9 (CA) PANEL TO REFLECT DIRECTION OF DETOUR.
4. SEE CONSTRUCTION AREA SIGN PLAN FOR ADDITIONAL CONSTRUCTION AREA SIGNS.
5. EXISTING UTILITIES ARE NOT SHOWN ON THESE PLAN SHEETS.

NB 163 CONNECTOR TO EB 8

THIS PLAN ACCURATE FOR TRAFFIC HANDLING WORK ONLY

TRAFFIC HANDLING PLAN

NO SCALE

TH-1

REVISED BY | DATE REVISED
MARY BETH HAYES | NOEL TAPIA
CALCULATED-DESIGNED BY | CHECKED BY
FUNCTIONAL SUPERVISOR
CAMILLE ABOUFADEL

STATE OF CALIFORNIA - DEPARTMENT OF TRANSPORTATION
Caltrans
TRAFFIC DESIGN

LAST REVISION 08-09-10 | DATE PLOTTED => 31-AUG-2010 | TIME PLOTTED => 15:31

Dist	COUNTY	ROUTE	POST MILES TOTAL PROJECT	SHEET No.	TOTAL SHEETS
11	SD	163	3.8/R11.1	11	49

08-02-10
REGISTERED CIVIL ENGINEER DATE

08-02-10
PLANS APPROVAL DATE

REGISTERED PROFESSIONAL ENGINEER
SHAHIN T. ADIBI
No. 54839
Exp. 06-30-12
CIVIL
STATE OF CALIFORNIA

THE STATE OF CALIFORNIA OR ITS OFFICERS OR AGENTS SHALL NOT BE RESPONSIBLE FOR THE ACCURACY OR COMPLETENESS OF SCANNED COPIES OF THIS PLAN SHEET.

SIGN #7

SPCL-2

INTERSTATE 8 WEST
USE
DETOUR

72"
8" Caps/Num
72"

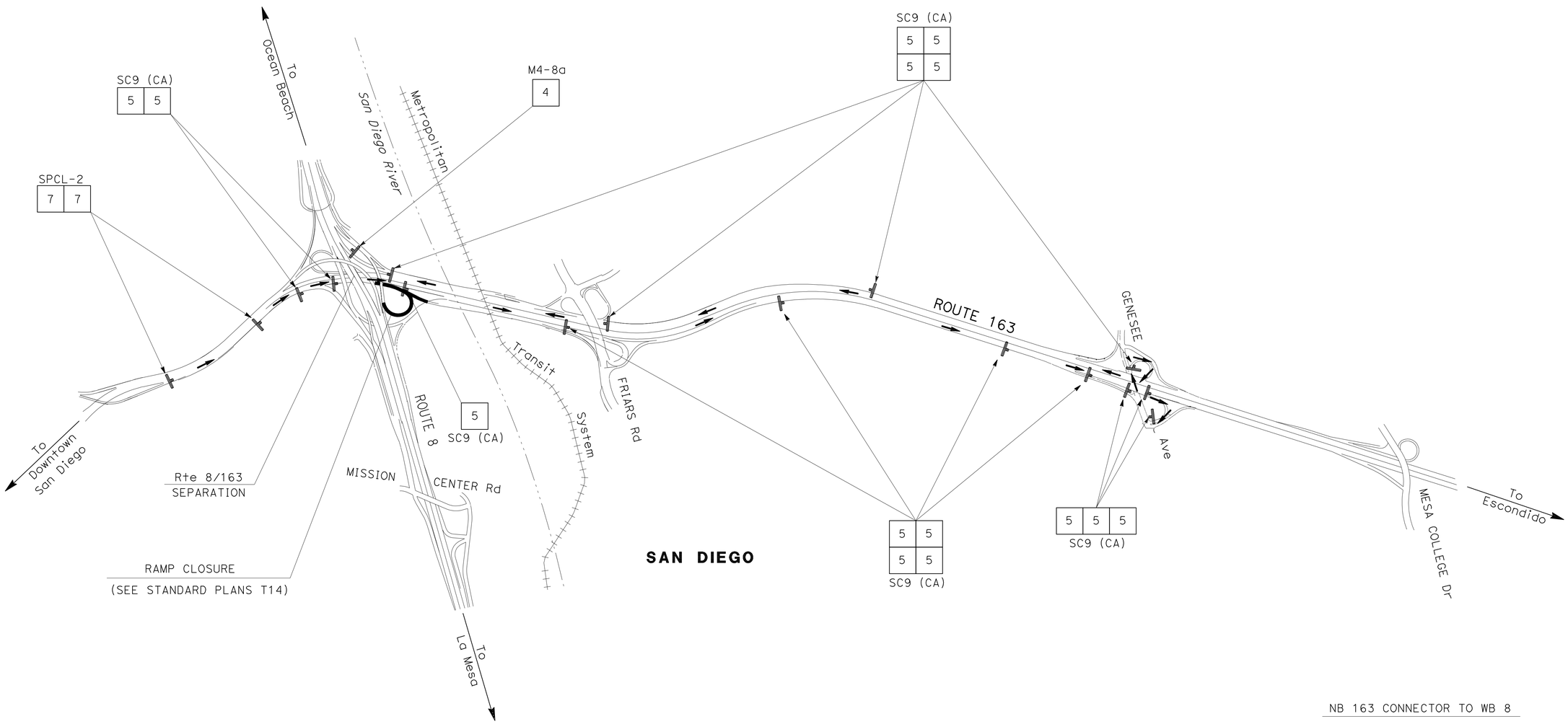

NB 163 CONNECTOR TO WB 8

TRAFFIC HANDLING PLAN

NO SCALE

TH-2

THIS PLAN ACCURATE FOR TRAFFIC HANDLING WORK ONLY

STATE OF CALIFORNIA - DEPARTMENT OF TRANSPORTATION
Caltrans
TRAFFIC DESIGN

FUNCTIONAL SUPERVISOR: CAMILLE ABOUFADEL
CALCULATED-DESIGNED BY: MARY BETH HAYES
CHECKED BY: NOEL TAPIA
REVISED BY
DATE REVISED

LAST REVISION 08-09-10
DATE PLOTTED => 31-AUG-2010
TIME PLOTTED => 15:32

Dist	COUNTY	ROUTE	POST MILES TOTAL PROJECT	SHEET No.	TOTAL SHEETS
11	SD	163	3.8/R11.1	12	49

08-02-10
REGISTERED CIVIL ENGINEER DATE

08-02-10
PLANS APPROVAL DATE

REGISTERED PROFESSIONAL ENGINEER
SHAHIN T. ADIBI
No. 54839
Exp. 06-30-12
CIVIL
STATE OF CALIFORNIA

THE STATE OF CALIFORNIA OR ITS OFFICERS OR AGENTS SHALL NOT BE RESPONSIBLE FOR THE ACCURACY OR COMPLETENESS OF SCANNED COPIES OF THIS PLAN SHEET.

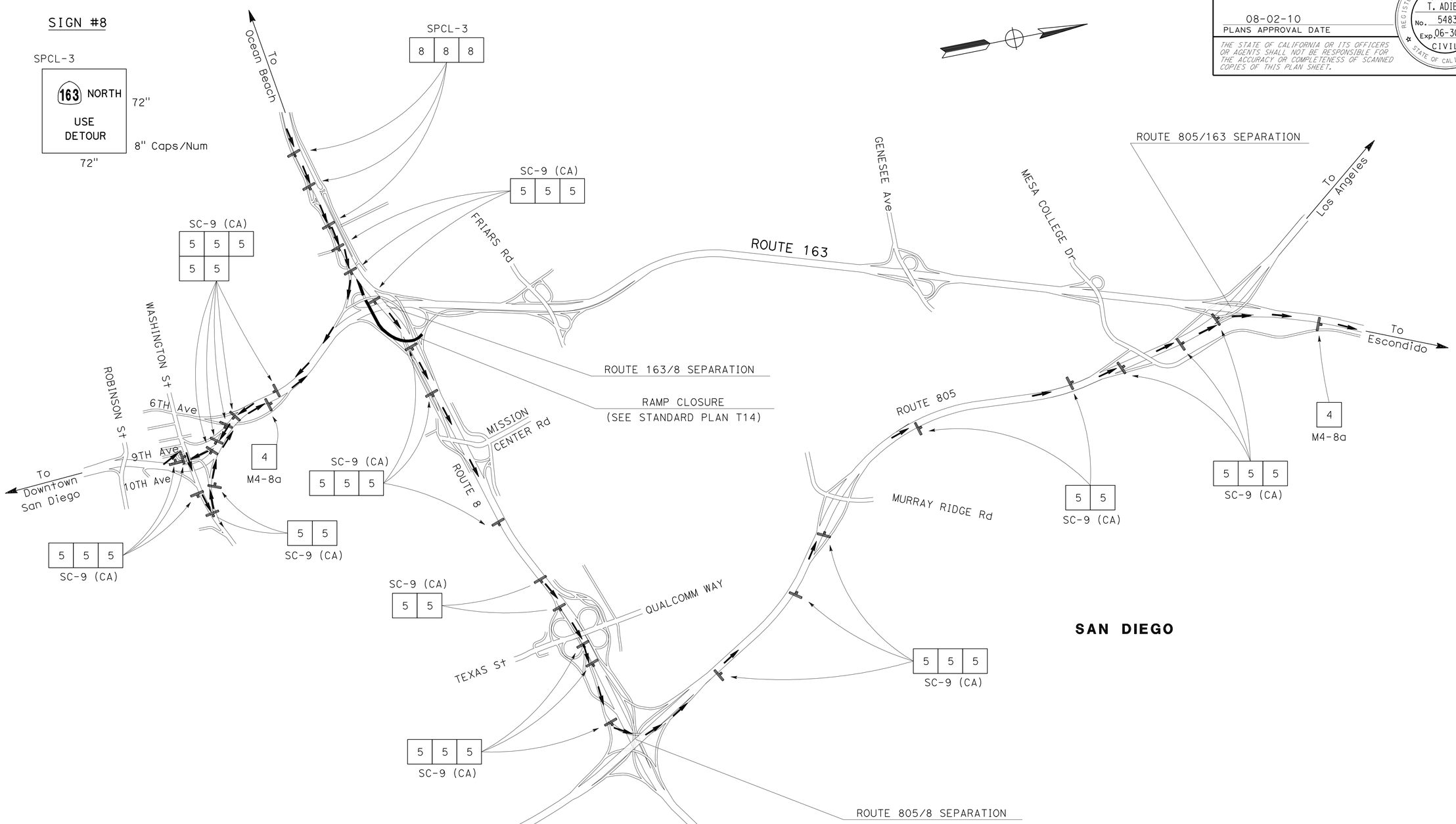

SAN DIEGO

EB 8 CONNECTOR TO NB 163

TRAFFIC HANDLING PLAN

NO SCALE

TH-3

THIS PLAN ACCURATE FOR TRAFFIC HANDLING WORK ONLY

STATE OF CALIFORNIA - DEPARTMENT OF TRANSPORTATION
Caltrans
TRAFFIC DESIGN

FUNCTIONAL SUPERVISOR: CAMILLE ABOUFADEL
CALCULATED-DESIGNED BY: NOEL TAPIA
CHECKED BY: SHAHIN T. ADIBI
REVISED BY
DATE REVISED

LAST REVISION 08-09-10
DATE PLOTTED => 31-AUG-2010
TIME PLOTTED => 15:32

Dist	COUNTY	ROUTE	POST MILES TOTAL PROJECT	SHEET No.	TOTAL SHEETS
11	SD	163	3.8/R11.1	13	49

08-02-10
REGISTERED CIVIL ENGINEER DATE

08-02-10
PLANS APPROVAL DATE

REGISTERED PROFESSIONAL ENGINEER
SHAHIN T. ADIBI
No. 54839
Exp. 06-30-12
CIVIL
STATE OF CALIFORNIA

THE STATE OF CALIFORNIA OR ITS OFFICERS OR AGENTS SHALL NOT BE RESPONSIBLE FOR THE ACCURACY OR COMPLETENESS OF SCANNED COPIES OF THIS PLAN SHEET.

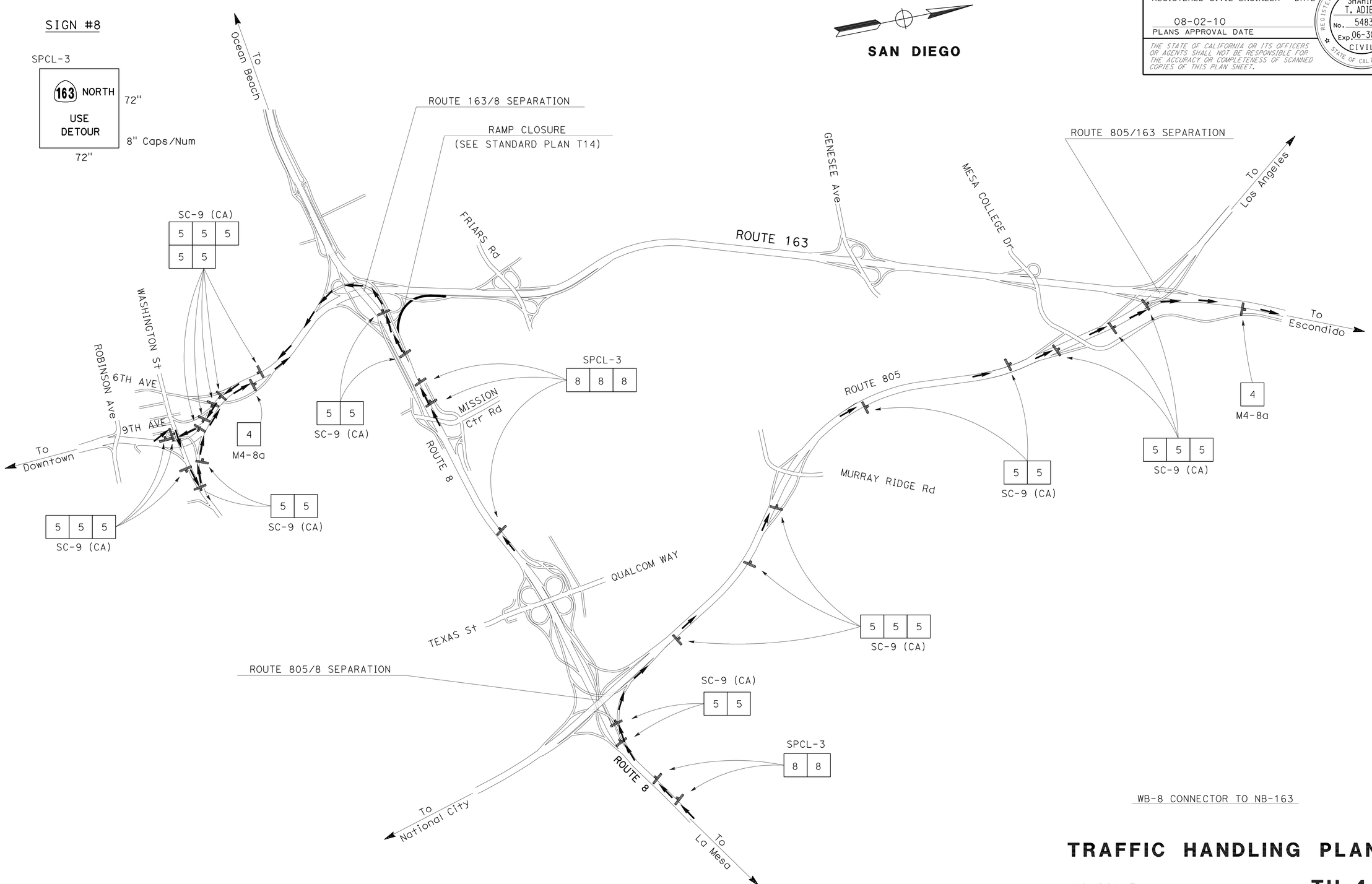

WB-8 CONNECTOR TO NB-163

THIS PLAN ACCURATE FOR TRAFFIC HANDLING WORK ONLY

TRAFFIC HANDLING PLAN

NO SCALE

TH-4

STATE OF CALIFORNIA - DEPARTMENT OF TRANSPORTATION
Caltrans
TRAFFIC DESIGN

FUNCTIONAL SUPERVISOR: CAMILLE ABOUFADEL
CALCULATED-DESIGNED BY: NOEL TAPIA
CHECKED BY: SHAHIN T. ADIBI
REVISED BY
DATE REVISED

LAST REVISION 08-31-10
DATE PLOTTED => 31-AUG-2010
TIME PLOTTED => 16:12

Dist	COUNTY	ROUTE	POST MILES TOTAL PROJECT	SHEET No.	TOTAL SHEETS
11	SD	163	3.8/R11.1	14	49

08-02-10
REGISTERED CIVIL ENGINEER DATE

08-02-10
PLANS APPROVAL DATE

REGISTERED PROFESSIONAL ENGINEER
SHAHIN T. ADIBI
No. 54839
Exp. 06-30-12
CIVIL
STATE OF CALIFORNIA

THE STATE OF CALIFORNIA OR ITS OFFICERS OR AGENTS SHALL NOT BE RESPONSIBLE FOR THE ACCURACY OR COMPLETENESS OF SCANNED COPIES OF THIS PLAN SHEET.

SAN DIEGO

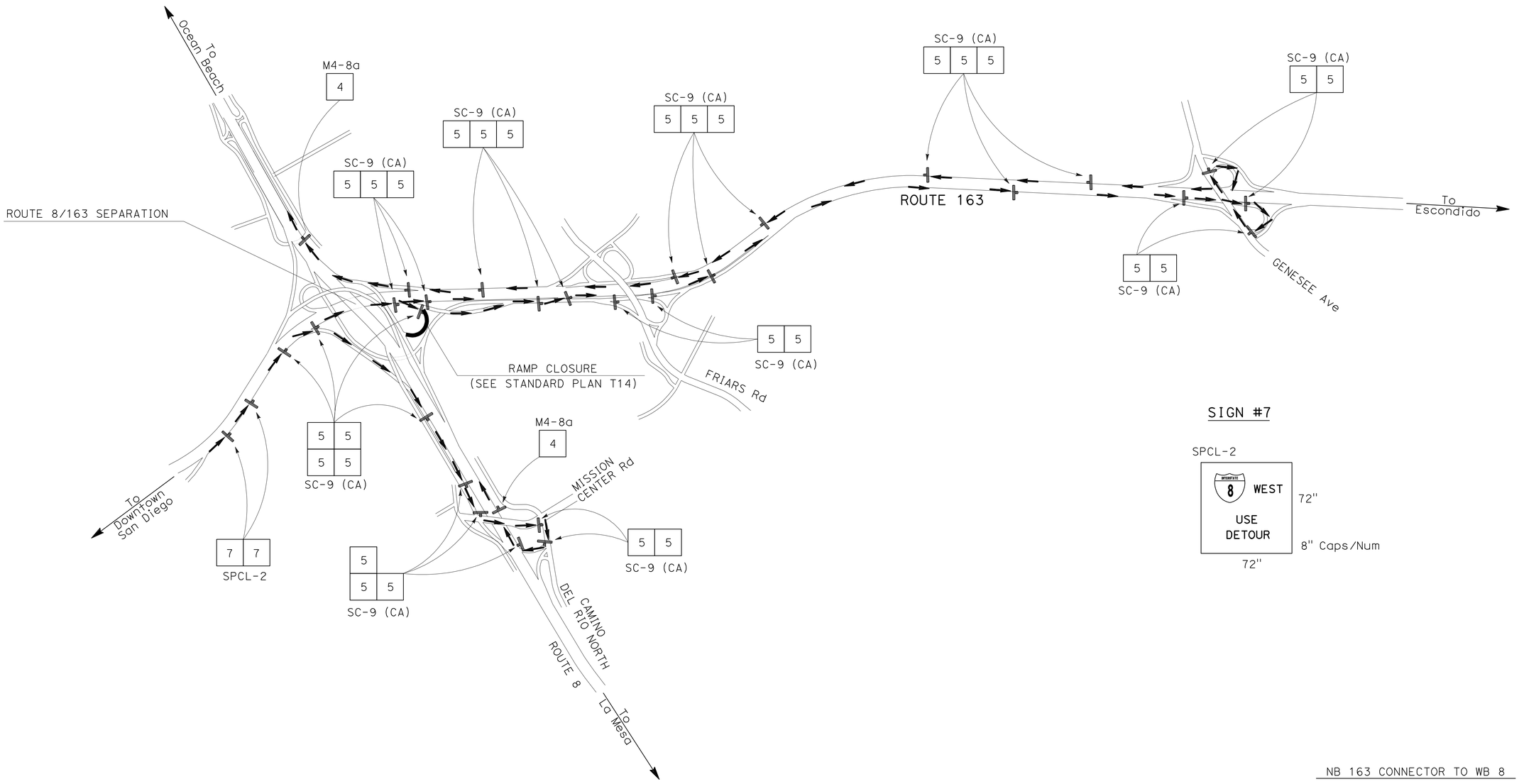

SIGN #7

SPCL-2

NB 163 CONNECTOR TO WB 8

TRAFFIC HANDLING PLAN

NO SCALE

TH-5

THIS PLAN ACCURATE FOR TRAFFIC HANDLING WORK ONLY

STATE OF CALIFORNIA - DEPARTMENT OF TRANSPORTATION
Caltrans® TRAFFIC DESIGN

FUNCTIONAL SUPERVISOR: CAMILLE ABOUFADEL
CALCULATED-DESIGNED BY: NOEL TAPIA
CHECKED BY: SHAHIN T. ADIBI
REVISED BY
DATE REVISED

LAST REVISION 08-09-10
DATE PLOTTED => 31-AUG-2010
TIME PLOTTED => 15:32

Dist	COUNTY	ROUTE	POST MILES TOTAL PROJECT	SHEET No.	TOTAL SHEETS
11	SD	163	3.8/R11.1	15	49

08-02-10
REGISTERED CIVIL ENGINEER DATE

08-02-10
PLANS APPROVAL DATE

REGISTERED PROFESSIONAL ENGINEER
SHAHIN T. ADIBI
No. 54839
Exp. 06-30-12
CIVIL
STATE OF CALIFORNIA

THE STATE OF CALIFORNIA OR ITS OFFICERS OR AGENTS SHALL NOT BE RESPONSIBLE FOR THE ACCURACY OR COMPLETENESS OF SCANNED COPIES OF THIS PLAN SHEET.

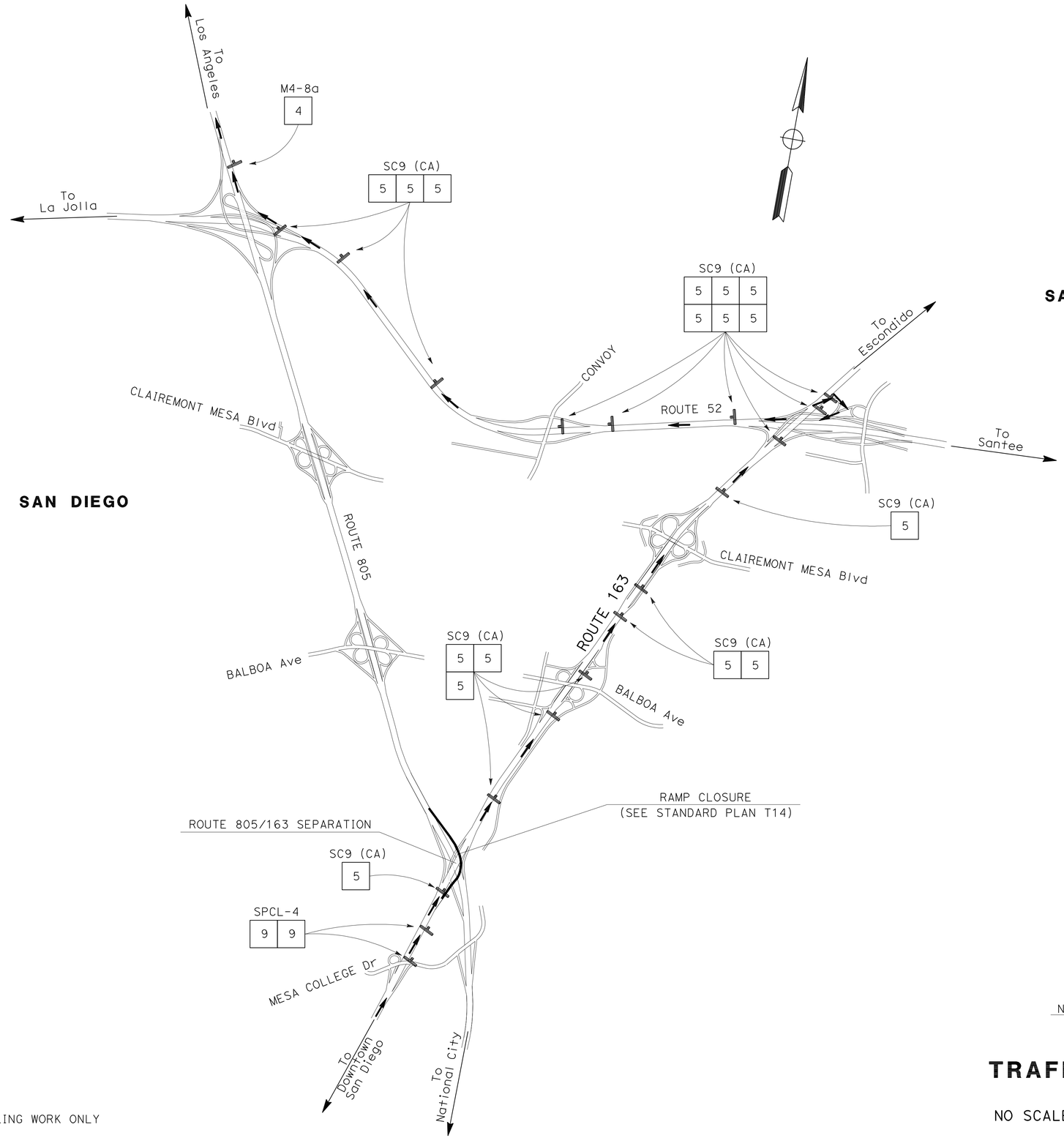

SIGN #9

SPCL-4

72"
72"
8" Caps/Num

NB 163 CONNECTOR TO NB 805

THIS PLAN ACCURATE FOR TRAFFIC HANDLING WORK ONLY

TRAFFIC HANDLING PLAN

NO SCALE

TH-6

STATE OF CALIFORNIA - DEPARTMENT OF TRANSPORTATION
Caltrans®
TRAFFIC DESIGN

FUNCTIONAL SUPERVISOR: CAMILLE ABOUFADEL
CALCULATED-DESIGNED BY: NOEL TAPIA
CHECKED BY: SHAHIN T. ADIBI
REVISED BY
DATE REVISED

LAST REVISION DATE PLOTTED => 31-AUG-2010
TIME PLOTTED => 15:32
08-09-10

Dist	COUNTY	ROUTE	POST MILES TOTAL PROJECT	SHEET No.	TOTAL SHEETS
11	SD	163	3.8/R11.1	16	49

REGISTERED CIVIL ENGINEER 08-02-10 DATE

08-02-10
PLANS APPROVAL DATE

REGISTERED PROFESSIONAL ENGINEER
SHAHIN T. ADIBI
No. 54839
Exp. 06-30-12
CIVIL
STATE OF CALIFORNIA

THE STATE OF CALIFORNIA OR ITS OFFICERS OR AGENTS SHALL NOT BE RESPONSIBLE FOR THE ACCURACY OR COMPLETENESS OF SCANNED COPIES OF THIS PLAN SHEET.

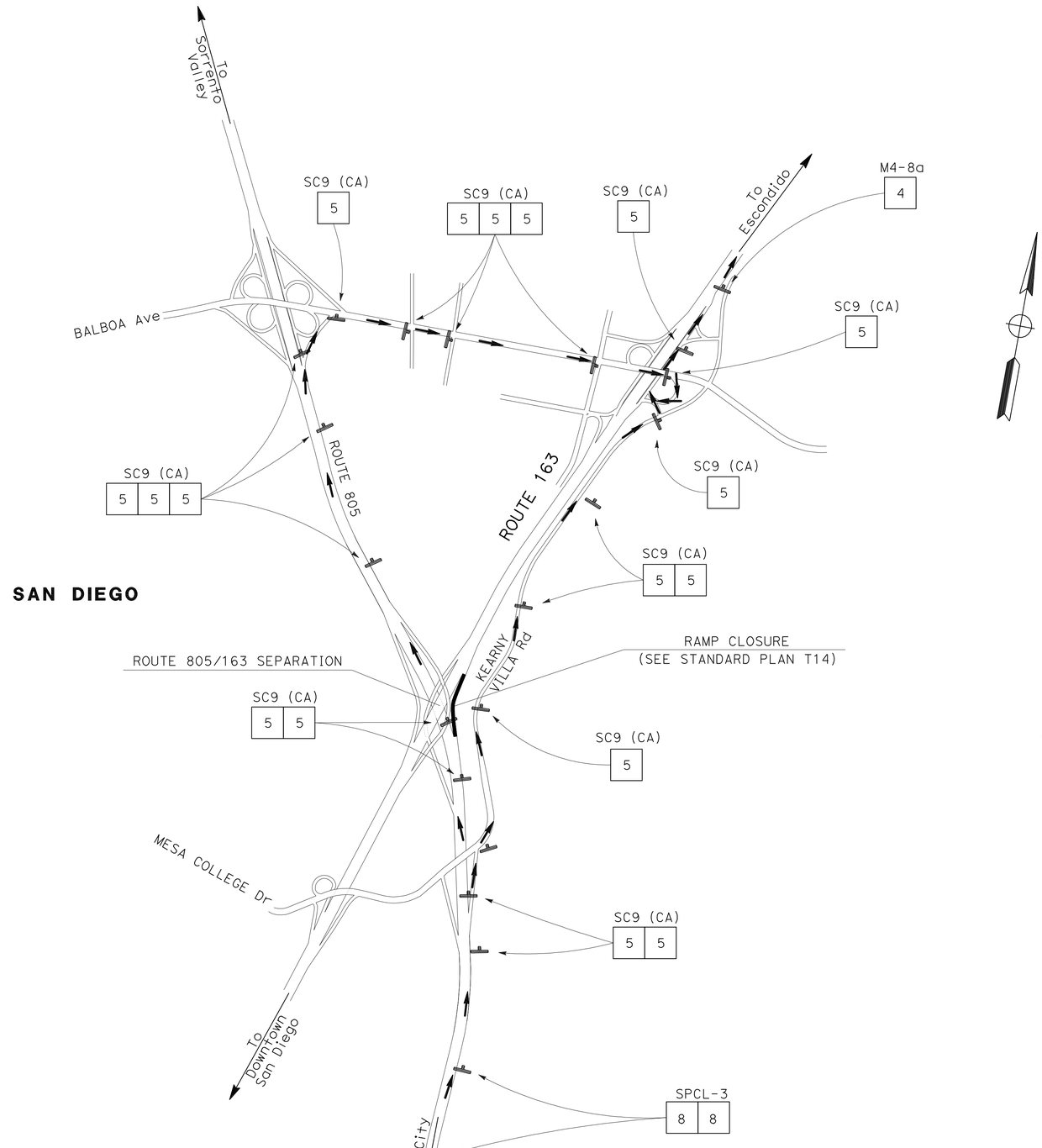

SIGN #8

SPCL-3

163 NORTH
USE DETOUR

72"
8" Caps/Num
72"

NB 163 CONNECTOR FROM NB 805

TRAFFIC HANDLING PLAN

NO SCALE

TH-7

THIS PLAN ACCURATE FOR TRAFFIC HANDLING WORK ONLY

STATE OF CALIFORNIA - DEPARTMENT OF TRANSPORTATION
Caltrans
TRAFFIC DESIGN

FUNCTIONAL SUPERVISOR: CAMILLE ABOUFADEL
CALCULATED-DESIGNED BY: NOEL TAPIA
CHECKED BY: SHAHIN T. ADIBI
REVISED BY
DATE REVISED

LAST REVISION 08-09-10
DATE PLOTTED => 31-AUG-2010
TIME PLOTTED => 15:32

BORDER LAST REVISED 7/2/2010
USERNAME => s127400
DGN FILE => 1100020021md007.dgn
RELATIVE BORDER SCALE IS IN INCHES 0 1 2 3
UNIT 2786
PROJECT NUMBER & PHASE 11000200211

Dist	COUNTY	ROUTE	POST MILES TOTAL PROJECT	SHEET No.	TOTAL SHEETS
11	SD	163	3.8/R11.1	17	49

08-02-10
REGISTERED CIVIL ENGINEER DATE

08-02-10
PLANS APPROVAL DATE

REGISTERED PROFESSIONAL ENGINEER
SHAHIN T. ADIBI
No. 54839
Exp. 06-30-12
CIVIL
STATE OF CALIFORNIA

THE STATE OF CALIFORNIA OR ITS OFFICERS OR AGENTS SHALL NOT BE RESPONSIBLE FOR THE ACCURACY OR COMPLETENESS OF SCANNED COPIES OF THIS PLAN SHEET.

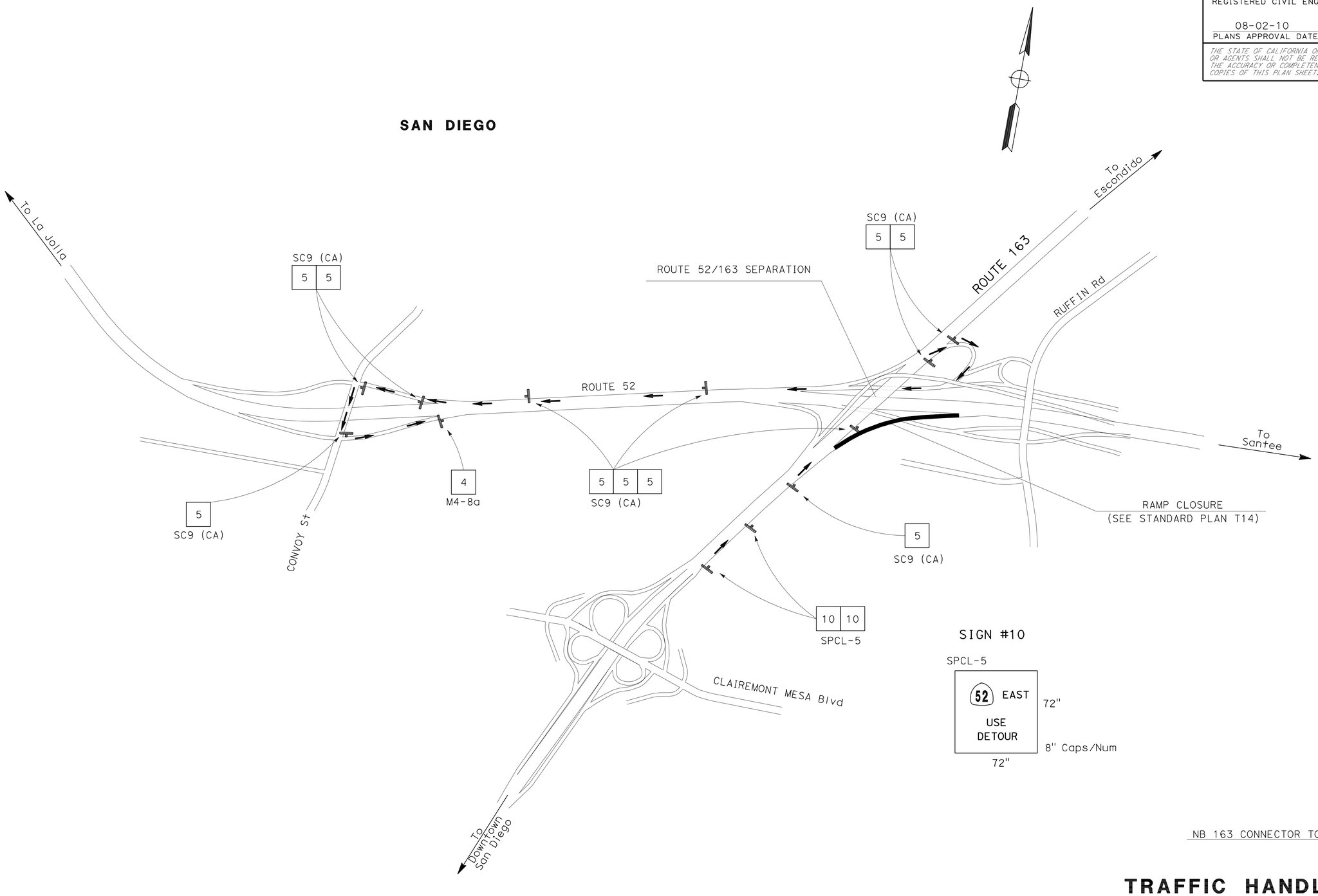

SIGN #10

SPCL-5

52 EAST
USE DETOUR

72"
8" Caps/Num
72"

NB 163 CONNECTOR TO EB 52

TRAFFIC HANDLING PLAN

NO SCALE

TH-8

THIS PLAN ACCURATE FOR TRAFFIC HANDLING WORK ONLY

STATE OF CALIFORNIA - DEPARTMENT OF TRANSPORTATION
Caltrans
TRAFFIC DESIGN

FUNCTIONAL SUPERVISOR: CAMILLE ABOUFADEL
CALCULATED-DESIGNED BY: NOEL TAPIA
CHECKED BY: SHAHIN T. ADIBI
REVISED BY
DATE REVISED

LAST REVISION DATE PLOTTED => 31-AUG-2010
08-09-10 TIME PLOTTED => 15:32

Dist	COUNTY	ROUTE	POST MILES TOTAL PROJECT	SHEET No.	TOTAL SHEETS
11	SD	163	3.8/R11.1	18	49

08-02-10
REGISTERED CIVIL ENGINEER DATE

08-02-10
PLANS APPROVAL DATE

REGISTERED PROFESSIONAL ENGINEER
SHAHIN T. ADIBI
No. 54839
Exp. 06-30-12
CIVIL
STATE OF CALIFORNIA

THE STATE OF CALIFORNIA OR ITS OFFICERS OR AGENTS SHALL NOT BE RESPONSIBLE FOR THE ACCURACY OR COMPLETENESS OF SCANNED COPIES OF THIS PLAN SHEET.

SAN DIEGO

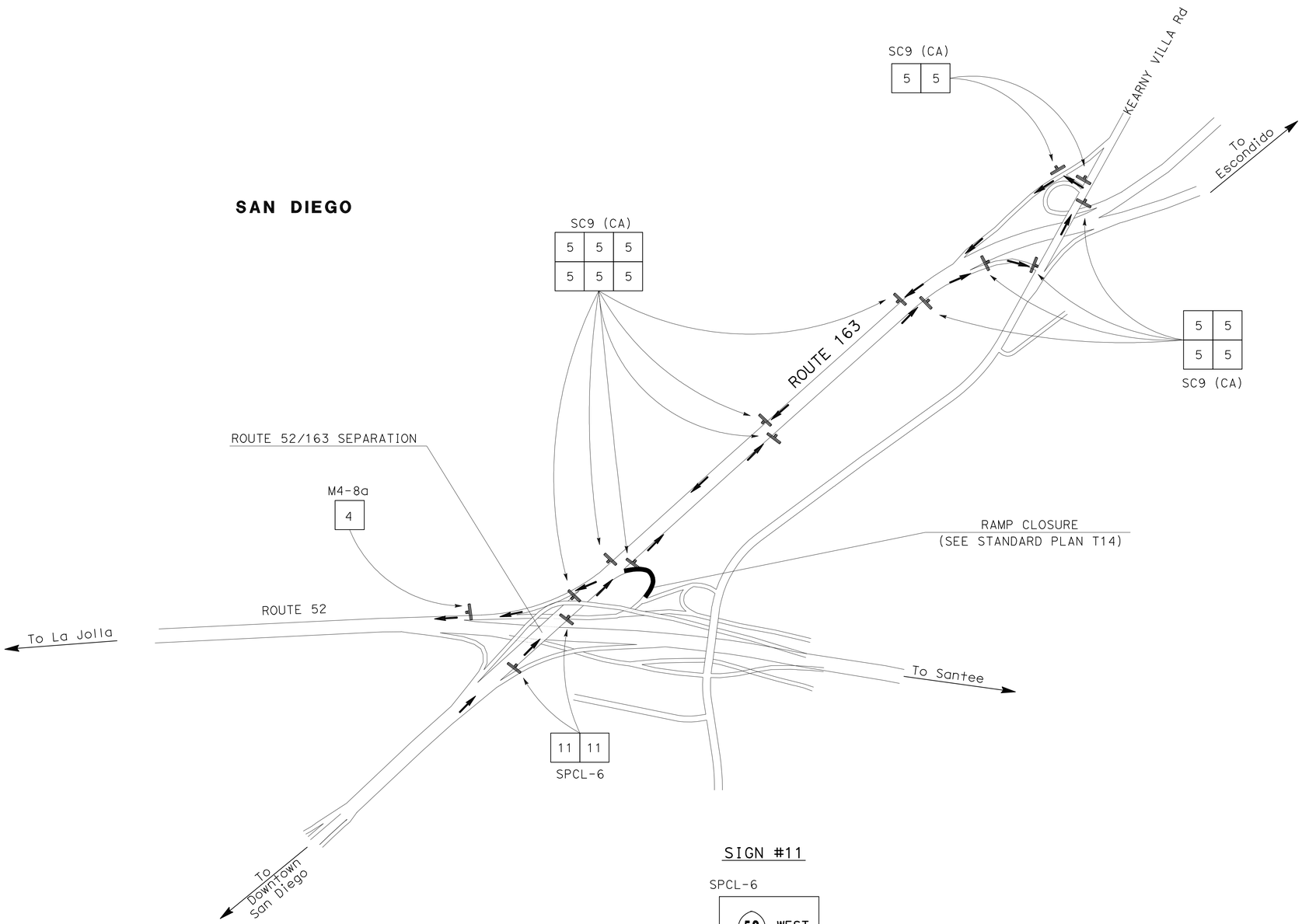

SIGN #11

SPCL-6

52 WEST
USE DETOUR

72"

8" Caps/Num

72"

NB 163 CONNECTOR TO WB 52

TRAFFIC HANDLING PLAN

NO SCALE

TH-9

THIS PLAN ACCURATE FOR TRAFFIC HANDLING WORK ONLY

STATE OF CALIFORNIA - DEPARTMENT OF TRANSPORTATION
Caltrans
TRAFFIC DESIGN

FUNCTIONAL SUPERVISOR: CAMILLE ABOUFADEL
CALCULATED-DESIGNED BY: NOEL TAPIA
CHECKED BY: SHAHIN T. ADIBI
REVISED BY
DATE REVISED

LAST REVISION DATE PLOTTED => 31-AUG-2010
TIME PLOTTED => 15:32
08-09-10

Dist	COUNTY	ROUTE	POST MILES TOTAL PROJECT	SHEET No.	TOTAL SHEETS
11	SD	163	3.8/R11.1	19	49

08-02-10
REGISTERED CIVIL ENGINEER DATE

08-02-10
PLANS APPROVAL DATE

REGISTERED PROFESSIONAL ENGINEER
SHAHIN T. ADIBI
No. 54839
Exp. 06-30-12
CIVIL
STATE OF CALIFORNIA

THE STATE OF CALIFORNIA OR ITS OFFICERS OR AGENTS SHALL NOT BE RESPONSIBLE FOR THE ACCURACY OR COMPLETENESS OF SCANNED COPIES OF THIS PLAN SHEET.

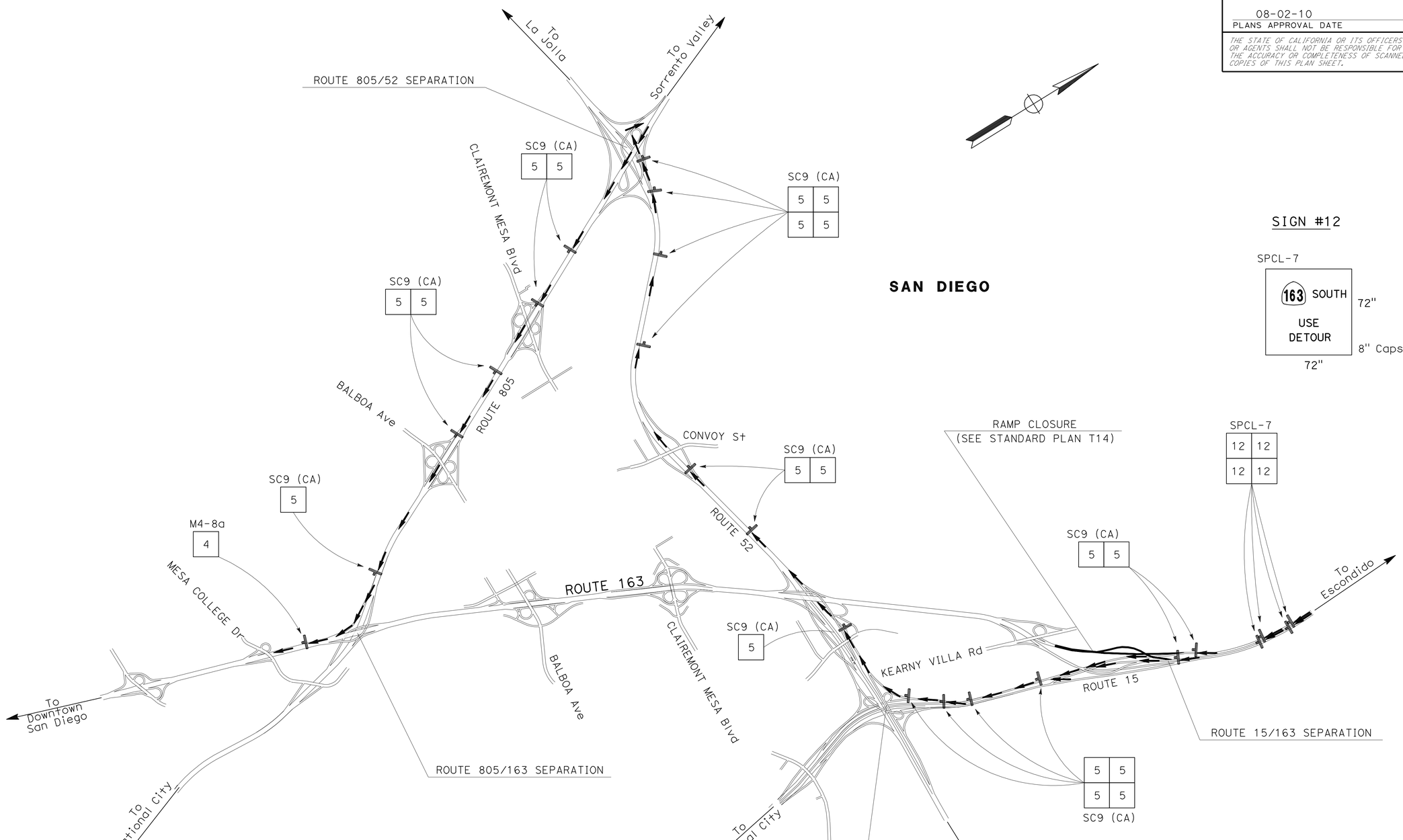

SIGN #12

SPCL-7

163 SOUTH
USE DETOUR

72"
8" Caps/Num
72"

SB 163 AT SB 15 FULL CLOSURE

TRAFFIC HANDLING PLAN

NO SCALE

TH-10

THIS PLAN ACCURATE FOR TRAFFIC HANDLING WORK ONLY

STATE OF CALIFORNIA - DEPARTMENT OF TRANSPORTATION
Caltrans
TRAFFIC DESIGN

FUNCTIONAL SUPERVISOR: CAMILLE ABOUFADEL
CALCULATED-DESIGNED BY: NOEL TAPIA
CHECKED BY: SHAHIN T. ADIBI
REVISED BY
DATE REVISED

LAST REVISION 08-09-10
DATE PLOTTED => 31-AUG-2010
TIME PLOTTED => 15:32

Dist	COUNTY	ROUTE	POST MILES TOTAL PROJECT	SHEET No.	TOTAL SHEETS
11	SD	163	3.8/R11.1	20	49

08-02-10
REGISTERED CIVIL ENGINEER DATE

08-02-10
PLANS APPROVAL DATE

REGISTERED PROFESSIONAL ENGINEER
SHAHIN T. ADIBI
No. 54839
Exp. 06-30-12
CIVIL
STATE OF CALIFORNIA

THE STATE OF CALIFORNIA OR ITS OFFICERS OR AGENTS SHALL NOT BE RESPONSIBLE FOR THE ACCURACY OR COMPLETENESS OF SCANNED COPIES OF THIS PLAN SHEET.

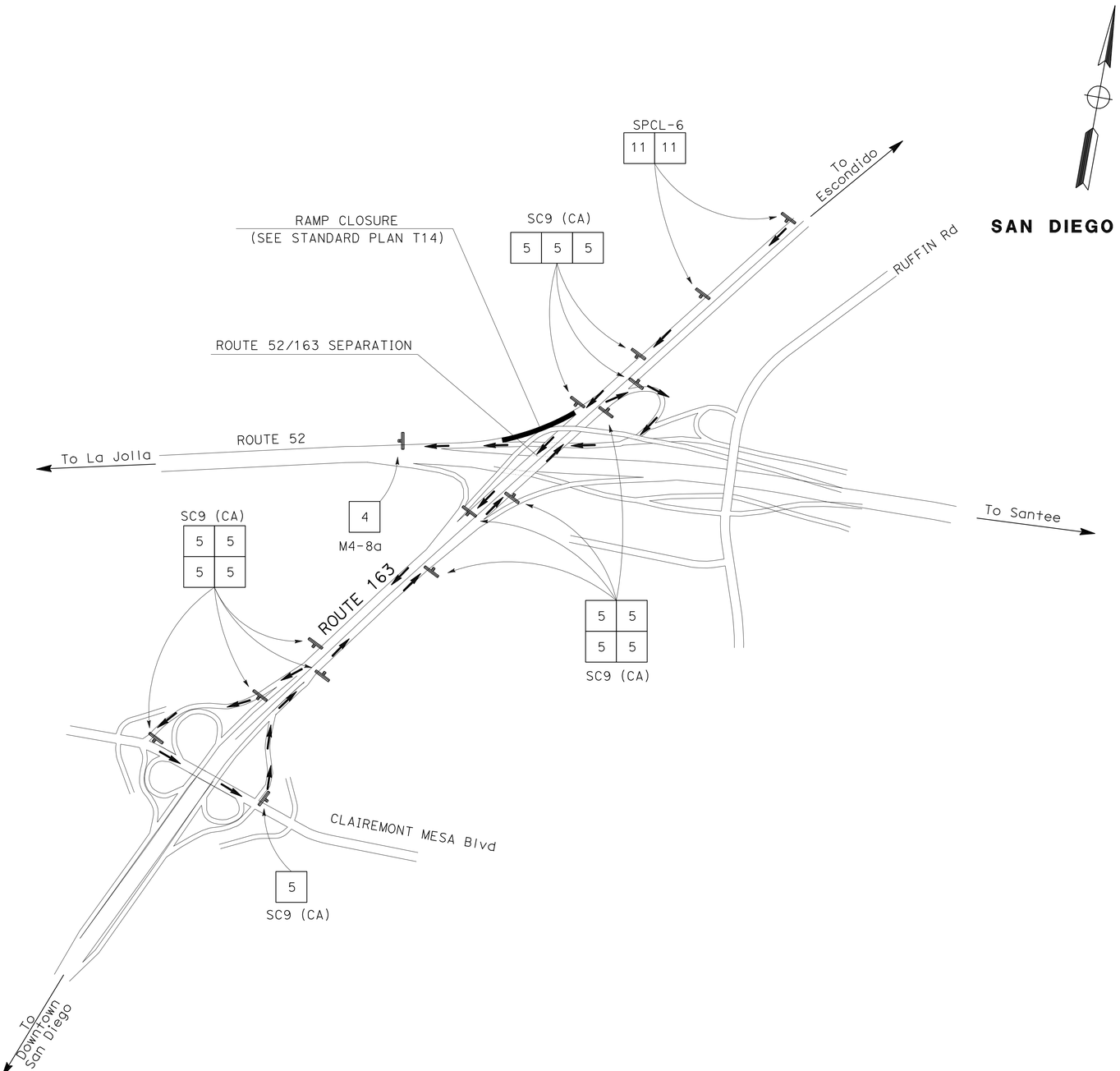

SIGN #11

SPCL-6

52 WEST
USE DETOUR

72"
8" Caps/Num
72"

SB 163 CONNECTOR TO WB 52

TRAFFIC HANDLING PLAN

NO SCALE

TH-11

THIS PLAN ACCURATE FOR TRAFFIC HANDLING WORK ONLY

STATE OF CALIFORNIA - DEPARTMENT OF TRANSPORTATION
Caltrans
TRAFFIC DESIGN

FUNCTIONAL SUPERVISOR: CAMILLE ABOUFADEL
CALCULATED-DESIGNED BY: NOEL TAPIA
CHECKED BY: SHAHIN T. ADIBI
REVISED BY
DATE REVISED

LAST REVISION DATE PLOTTED => 31-AUG-2010
TIME PLOTTED => 15:32
08-09-10

Dist	COUNTY	ROUTE	POST MILES TOTAL PROJECT	SHEET No.	TOTAL SHEETS
11	SD	163	3.8/R11.1	21	49

08-02-10
REGISTERED CIVIL ENGINEER DATE

08-02-10
PLANS APPROVAL DATE

REGISTERED PROFESSIONAL ENGINEER
SHAHIN T. ADIBI
No. 54839
Exp. 06-30-12
CIVIL
STATE OF CALIFORNIA

THE STATE OF CALIFORNIA OR ITS OFFICERS OR AGENTS SHALL NOT BE RESPONSIBLE FOR THE ACCURACY OR COMPLETENESS OF SCANNED COPIES OF THIS PLAN SHEET.

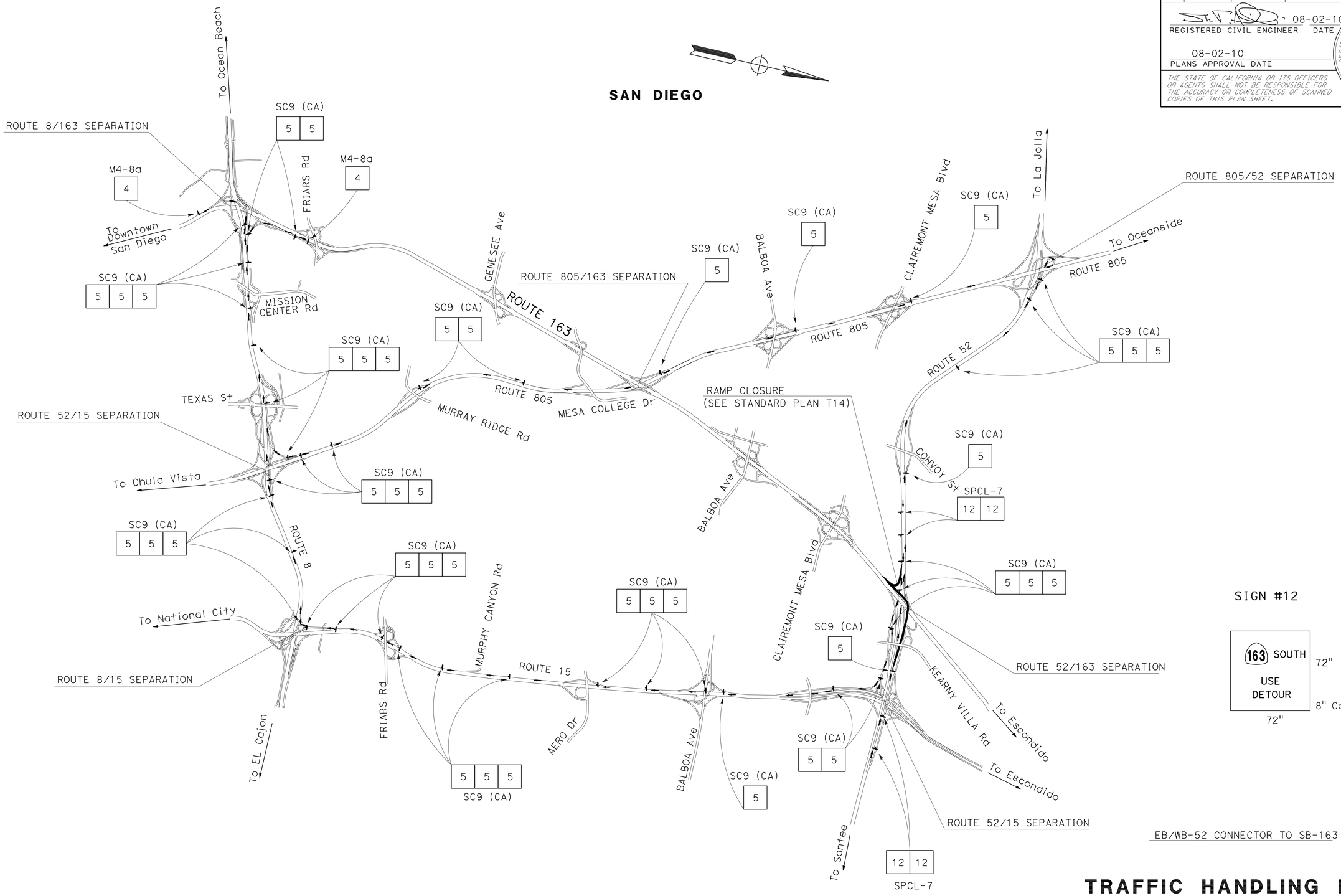

SIGN #12

163 SOUTH
USE DETOUR
72"
8" Caps/Num
72"

TRAFFIC HANDLING PLAN

NO SCALE

TH-12

THIS PLAN ACCURATE FOR TRAFFIC HANDLING WORK ONLY

REVISED BY | DATE REVISED
NOEL TAPIA | SHAHIN T. ADIBI
CALCULATED-DESIGNED BY | CHECKED BY
FUNCTIONAL SUPERVISOR
CAMILLE ABOUFADEL

STATE OF CALIFORNIA - DEPARTMENT OF TRANSPORTATION
Caltrans
TRAFFIC DESIGN

LAST REVISION 08-09-10
DATE PLOTTED => 31-AUG-2010
TIME PLOTTED => 15:32

Dist	COUNTY	ROUTE	POST MILES TOTAL PROJECT	SHEET No.	TOTAL SHEETS
11	SD	163	3.8/R11.1	22	49

08-02-10
REGISTERED CIVIL ENGINEER DATE

08-02-10
PLANS APPROVAL DATE

REGISTERED PROFESSIONAL ENGINEER
SHAHIN T. ADIBI
No. 54839
Exp. 06-30-12
CIVIL
STATE OF CALIFORNIA

THE STATE OF CALIFORNIA OR ITS OFFICERS OR AGENTS SHALL NOT BE RESPONSIBLE FOR THE ACCURACY OR COMPLETENESS OF SCANNED COPIES OF THIS PLAN SHEET.

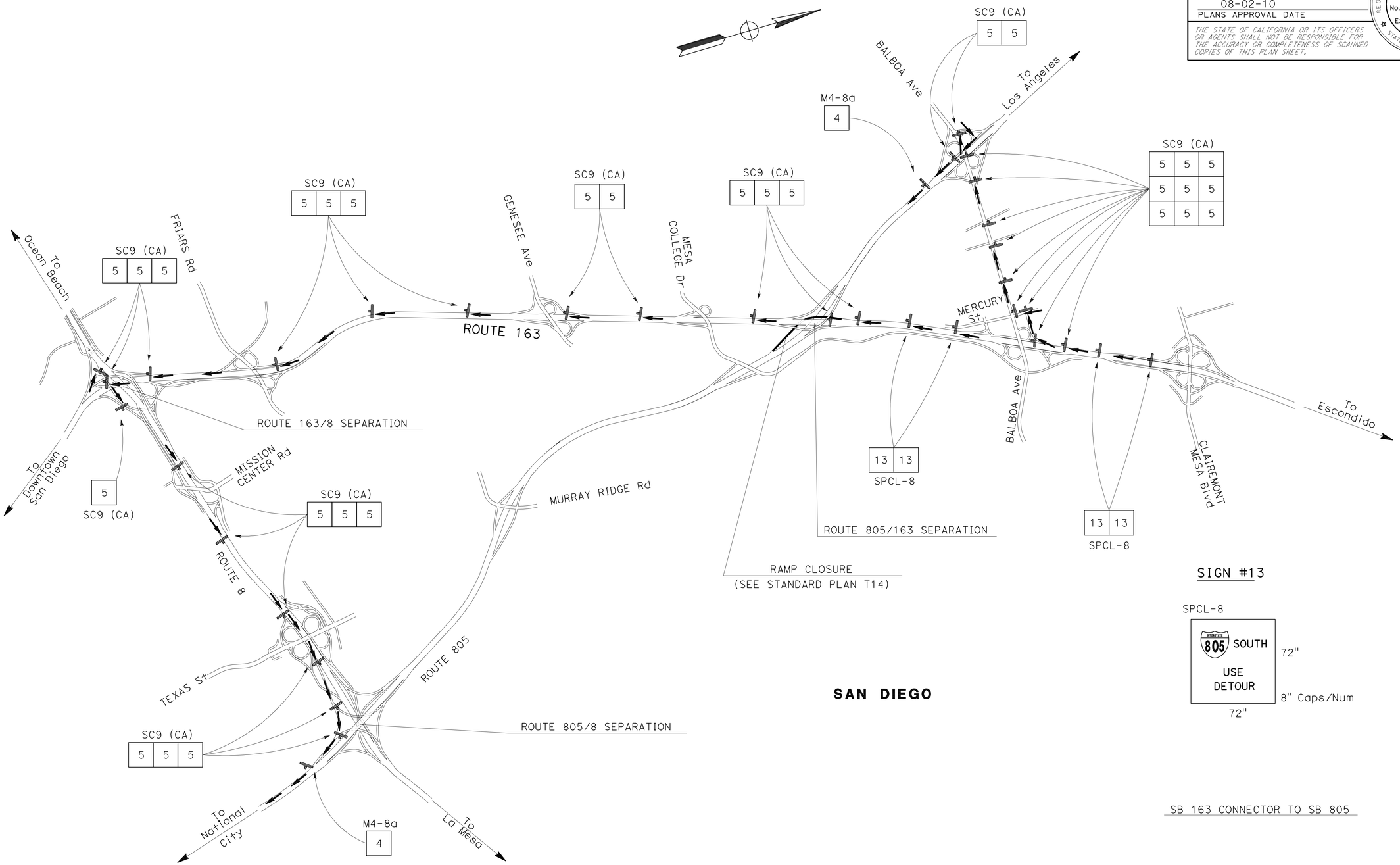

SIGN #13

SPCL-8

SB 163 CONNECTOR TO SB 805

THIS PLAN ACCURATE FOR TRAFFIC HANDLING WORK ONLY

TRAFFIC HANDLING PLAN

NO SCALE

TH-13

STATE OF CALIFORNIA - DEPARTMENT OF TRANSPORTATION
Caltrans
TRAFFIC DESIGN

FUNCTIONAL SUPERVISOR: CAMILLE ABOUFADEL
CALCULATED-DESIGNED BY: NOEL TAPIA
CHECKED BY: SHAHIN T. ADIBI
REVISED BY
DATE REVISED

LAST REVISION 08-09-10
DATE PLOTTED => 31-AUG-2010
TIME PLOTTED => 15:33

Dist	COUNTY	ROUTE	POST MILES TOTAL PROJECT	SHEET No.	TOTAL SHEETS
11	SD	163	3.8/R11.1	23	49

08-02-10
REGISTERED CIVIL ENGINEER DATE

08-02-10
PLANS APPROVAL DATE

REGISTERED PROFESSIONAL ENGINEER
SHAHIN T. ADIBI
No. 54839
Exp. 06-30-12
CIVIL
STATE OF CALIFORNIA

THE STATE OF CALIFORNIA OR ITS OFFICERS OR AGENTS SHALL NOT BE RESPONSIBLE FOR THE ACCURACY OR COMPLETENESS OF SCANNED COPIES OF THIS PLAN SHEET.

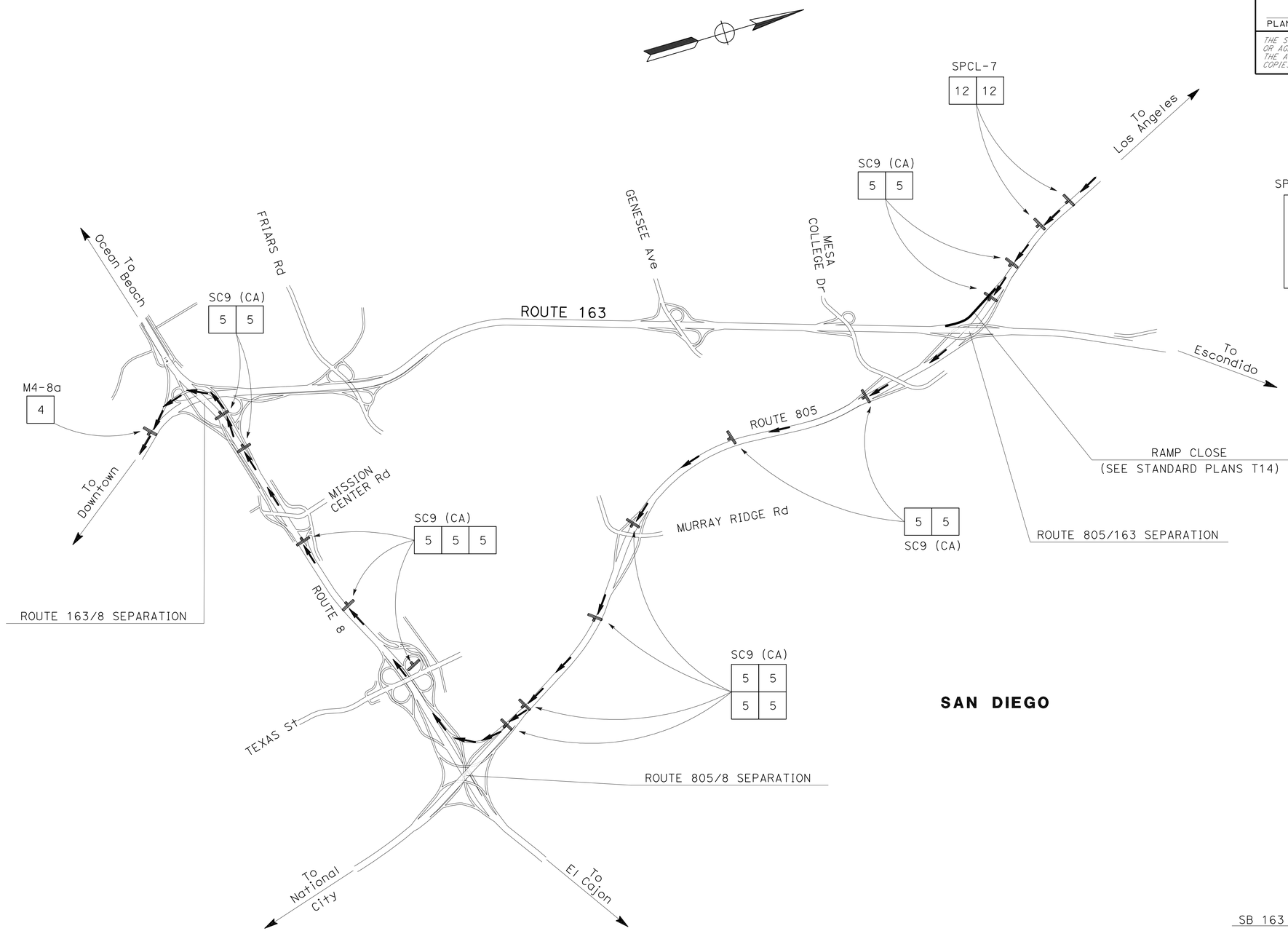

SAN DIEGO

SIGN #12

SPCL-7

163 SOUTH
USE DETOUR

72"
8" Caps/Num
72"

SB 163 CONNECTOR FROM SB 805

THIS PLAN ACCURATE FOR TRAFFIC HANDLING WORK ONLY

TRAFFIC HANDLING PLAN

NO SCALE

TH-14

REVISED BY	DATE REVISED
NOEL TAPIA	SHAHIN T. ADIBI
CALCULATED-DESIGNED BY	CHECKED BY
FUNCTIONAL SUPERVISOR	CAMILLE ABOUFADEL

STATE OF CALIFORNIA - DEPARTMENT OF TRANSPORTATION
Caltrans
TRAFFIC DESIGN

LAST REVISION 08-09-10 | DATE PLOTTED => 31-AUG-2010 | TIME PLOTTED => 15:33

Dist	COUNTY	ROUTE	POST MILES TOTAL PROJECT	SHEET No.	TOTAL SHEETS
11	SD	163	3.8/R11.1	24	49

08-02-10
REGISTERED CIVIL ENGINEER DATE

08-02-10
PLANS APPROVAL DATE

REGISTERED PROFESSIONAL ENGINEER
SHAHIN T. ADIBI
No. 54839
Exp. 06-30-12
CIVIL
STATE OF CALIFORNIA

THE STATE OF CALIFORNIA OR ITS OFFICERS OR AGENTS SHALL NOT BE RESPONSIBLE FOR THE ACCURACY OR COMPLETENESS OF SCANNED COPIES OF THIS PLAN SHEET.

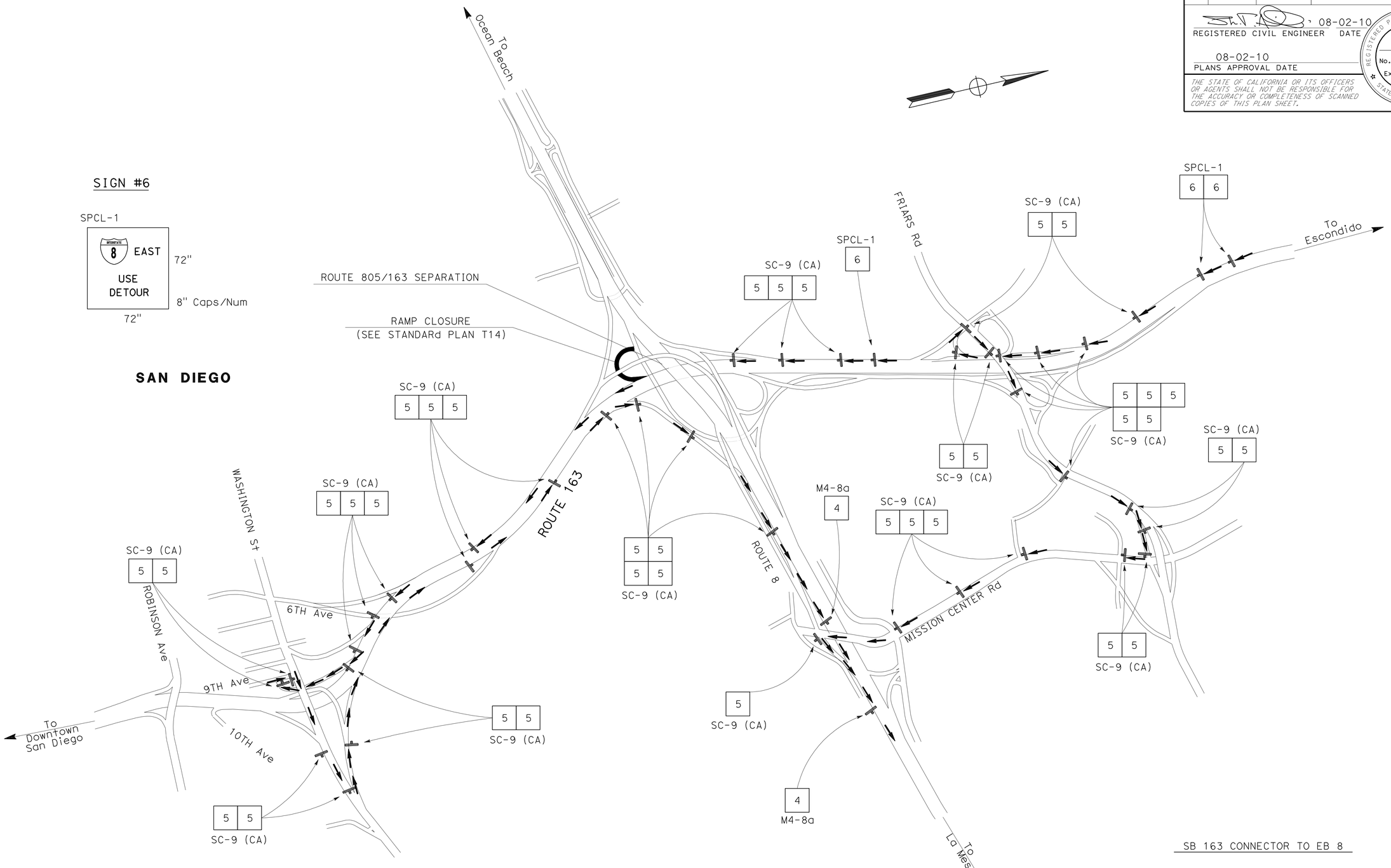

TRAFFIC HANDLING PLAN

NO SCALE

TH-15

THIS PLAN ACCURATE FOR TRAFFIC HANDLING WORK ONLY

STATE OF CALIFORNIA - DEPARTMENT OF TRANSPORTATION
Caltrans
TRAFFIC DESIGN

FUNCTIONAL SUPERVISOR: CAMILLE ABOUFADEL
CALCULATED-DESIGNED BY: NOEL TAPIA
CHECKED BY: SHAHIN T. ADIBI
REVISED BY
DATE REVISED

LAST REVISION 08-09-10
DATE PLOTTED => 31-AUG-2010
TIME PLOTTED => 15:33

Dist	COUNTY	ROUTE	POST MILES TOTAL PROJECT	SHEET No.	TOTAL SHEETS
11	SD	163	3.8/R11.1	25	49

08-02-10
REGISTERED CIVIL ENGINEER DATE

08-02-10
PLANS APPROVAL DATE

REGISTERED PROFESSIONAL ENGINEER
SHAHIN T. ADIBI
No. 54839
Exp. 06-30-12
CIVIL
STATE OF CALIFORNIA

THE STATE OF CALIFORNIA OR ITS OFFICERS OR AGENTS SHALL NOT BE RESPONSIBLE FOR THE ACCURACY OR COMPLETENESS OF SCANNED COPIES OF THIS PLAN SHEET.

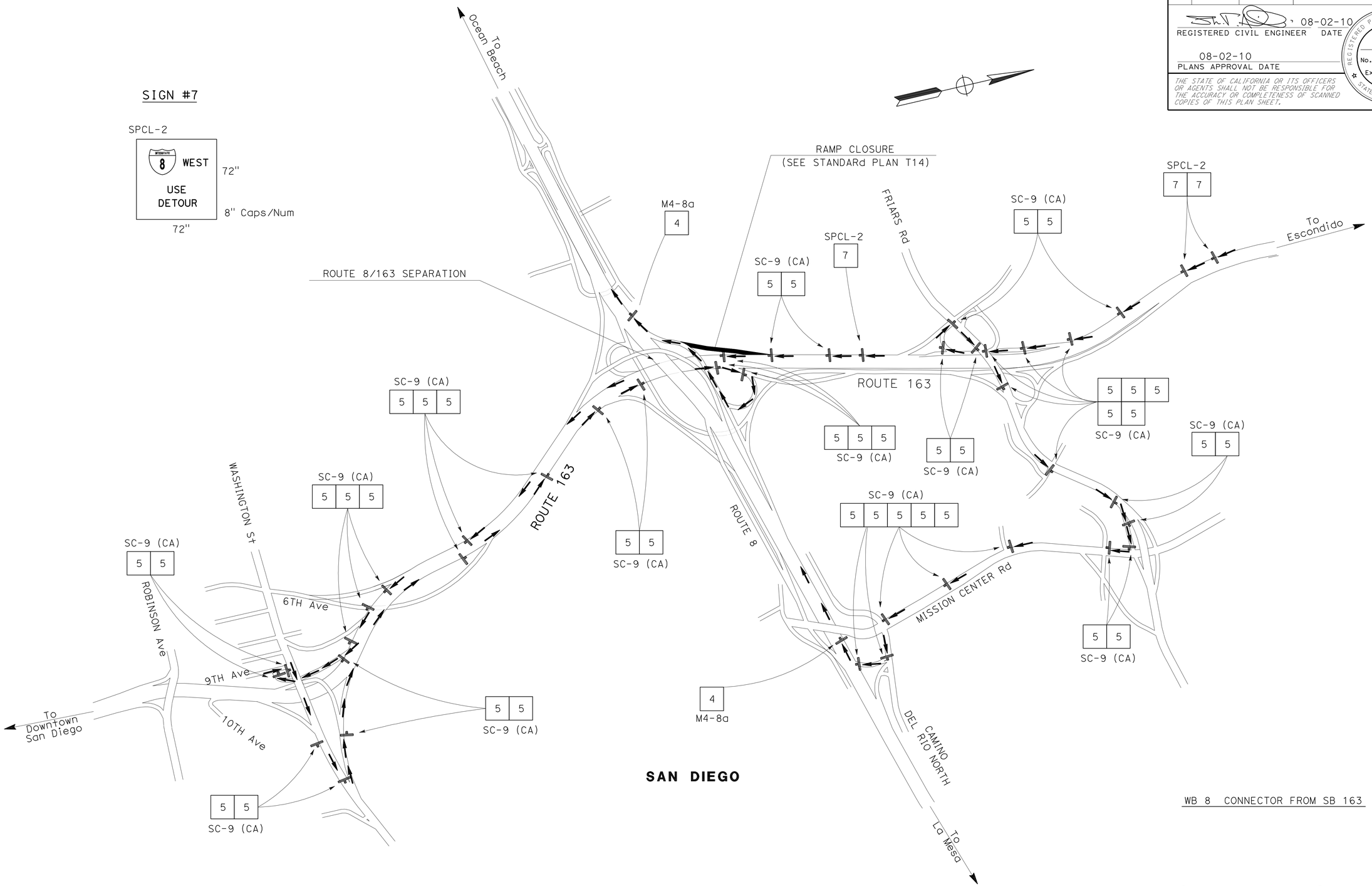

WB 8 CONNECTOR FROM SB 163

THIS PLAN ACCURATE FOR TRAFFIC HANDLING WORK ONLY

TRAFFIC HANDLING PLAN

NO SCALE

TH-16

STATE OF CALIFORNIA - DEPARTMENT OF TRANSPORTATION
Caltrans
TRAFFIC DESIGN

FUNCTIONAL SUPERVISOR: CAMILLE ABOUFADEL
CALCULATED-DESIGNED BY: NOEL TAPIA
CHECKED BY: SHAHIN T. ADIBI
REVISED BY
DATE REVISED

LAST REVISION 08-09-10
DATE PLOTTED => 31-AUG-2010
TIME PLOTTED => 15:33

Dist	COUNTY	ROUTE	POST MILES TOTAL PROJECT	SHEET No.	TOTAL SHEETS
11	SD	163	3.8/R11.1	26	49

REGISTERED CIVIL ENGINEER 08-02-10 DATE

08-02-10
PLANS APPROVAL DATE

REGISTERED PROFESSIONAL ENGINEER SHAHIN T. ADIBI No. 54839 Exp. 06-30-12 CIVIL STATE OF CALIFORNIA

THE STATE OF CALIFORNIA OR ITS OFFICERS OR AGENTS SHALL NOT BE RESPONSIBLE FOR THE ACCURACY OR COMPLETENESS OF SCANNED COPIES OF THIS PLAN SHEET.

LOCATION	DETAIL No.	LENGTH (LF) (N)	PAVEMENT MARKER SUMMARY: NON-REFLECTIVE (EA) TYPE A WHITE	RETROREFLECTIVE (EA) TYPE C RED/CLEAR	TYPE G CLEAR	TYPE H YELLOW	TRAFFIC STRIPE SUMMARY: PAINT (LF) (2 COAT)	THERMOPLASTIC (LF) 4" BROKEN 17'-7'	8" SOLID	8" BROKEN 12'-3'	REMARKS
SB-163	11/13	132,051	11,015		2,788		132,051				
	11/14	2,448	204	68			2,448				
	25	42,350				885	42,350				
	27B	44,150					44,150				
	36	7,320			331				7,320		
	36A	1,470			71				1,470		
	37	11,250		56	709					11,250	
	38B	2,005			185				2,005		
	8	280						280			
NB-163	11/13	106,568	8,889		2,239		106,568				
	11/14	2,160	180	60			2,160				
	25	40,000				835	40,000				
	27B	43,000					43,000				
	36	4,550			202				4,550		
	36A	3,225			153				3,225		
	37	11,650		64	732					11,650	
	38B	1,950			176				1,950		
	8	1,275						1,275			
SUBTOTAL			20,288	248	7,586	1,720	412,727	1,555	20,520	22,900	
TOTAL			20,301*	9,554			412,727	1,555	20,520	22,900	

(N) = NOT A SEPARATE PAY ITEM, FOR INFORMATION ONLY
* SEE Q-SHEETS FOR THIS TOTAL

REMOVE PAVEMENT MARKER

LOCATION	DETAIL No.	TYPE A, C, G, H (EA)
SB-163	13	13,803
	14	272
	25	885
	36	331
	36A	71
	37	765
	38B	185
NB-163	13	11,128
	14	240
	25	835
	36	202
	36A	153
	37	796
	38B	176
TOTAL		29,842

THERMOPLASTIC PAVEMENT MARKING

ROUTE	LOCATION	ARROW TYPE VI SQFT	REMARKS
163	NB	126	
TOTAL		126	

PAVEMENT DELINEATION QUANTITIES

PDQ-1

STATE OF CALIFORNIA - DEPARTMENT OF TRANSPORTATION
Caltrans® TRAFFIC DESIGN

FUNCTIONAL SUPERVISOR: CAMILLE ABOUFADEL
CALCULATED-DESIGNED BY: NOEL TAPIA
CHECKED BY: SHAHIN T. ADIBI
REVISED BY
DATE REVISED

LAST REVISION 08-09-10 | DATE PLOTTED => 31-AUG-2010 | TIME PLOTTED => 15:33

Dist	COUNTY	ROUTE	POST MILES TOTAL PROJECT	SHEET No.	TOTAL SHEETS
11	SD	163	3.8/R11.1	27	49

REGISTERED CIVIL ENGINEER 07-29-10 DATE

08-02-10
PLANS APPROVAL DATE

REGISTERED PROFESSIONAL ENGINEER MARVIN A.CANTON No. C69855 Exp. 09-30-10 CIVIL STATE OF CALIFORNIA

THE STATE OF CALIFORNIA OR ITS OFFICERS OR AGENTS SHALL NOT BE RESPONSIBLE FOR THE ACCURACY OR COMPLETENESS OF SCANNED COPIES OF THIS PLAN SHEET.

ROADWAY QUANTITIES (NB ROUTE 163)

LOCATION (STATION)			LENGTH	TRAVELED WAY WIDTH LF (N)		GRIND EXISTING CONCRETE PAVEMENT	SHOULDER WIDTH (LF) (N)				COLD PLANE AC PAVEMENT	RUBBERIZED HOT MIX ASPHALT (GAP GRADED)	TACK COAT	ASPHALTIC EMULSION (FOG SEAL COAT)	SEAL JOINT (EXISTING CONCRETE PAVEMENT) *	REMARKS
							INSIDE		OUTSIDE							
DIRECTION	Beg	END	LF (N)	Beg	END	SQYD	Beg	END	Beg	END	SQYD	TON	TON	TON	LF	
NB Rte 163	232+00	235+82	382	36	36	1,528.00	10	10	0	0	424.44	50.93	0.085	0.127	764	
"CD" LINE	235+82	236+34	52	75	75	433.33	10	10	10	31	176.22	21.15	0.035	0.053	312	
	236+34	239+00	266	69	59	1,891.56	10	10	10	10	591.11	70.93	0.118	0.177	1,330	FRIARS Rd ON RAMP
	239+00	259+59	2,059	48	48	10,981.33	10	10	8	8	4,118.00	494.16	0.824	1.235	6,177	FRIARS Rd OFF RAMP
	259+59	264+90	531	60	60	3,540.00	10	10	28.5	10	1,725.75	207.09	0.345	0.518	2,124	
	264+90	307+85	4,295	60	60	28,633.33	10	10	10	10	9,544.44	1,145.33	1.909	2.863	17,180	
	307+85	312+00	415	60	60	2,766.67	10	10	10	47	1,775.28	213.03	0.355	0.533	1,660	GENESEE Ave ON RAMP
	312+00	317+30	530	60	60	3,533.33	10	10	10	10	1,177.78	141.33	0.236	0.353	2,120	
	317+30	319+00	170	60	60	1,133.33	10	10	10	35	613.89	73.67	0.123	0.184	680	
	319+00	320+60														GENESEE Ave UC
	320+60	322+00	140	60	60	933.33	10	10	37	51	840.00	100.80	0.168	0.252	560	
	322+00	327+70	570	60	48	3,420.00	10	10	10	10	1,266.67	152.00	0.253	0.380	2,280	
	327+70	334+00	630	48	48	3,360.00	10	10	62	22	3,640.00	436.80	0.728	1.092	1,890	GENESEE Ave OFF RAMP
	334+00	347+30	1,330	48	48	7,093.33	10	10	22	22	4,728.89	567.47	0.946	1.419	3,990	
	347+30	351+00	370	48	48	1,973.33	10	10	22	40	1,685.56	202.27	0.337	0.506	1,110	MESA COLLEGE Dr ON RAMP
	351+00	353+00	200	48	48	1,066.67	10	10	10	10	444.44	53.33	0.089	0.133	600	
	353+00	357+60	460	48	72	3,066.67	10	10	10	10	1,022.22	122.67	0.204	0.307	2,300	
	357+60	371+30	1,370	72	72	10,960.00	10	10	10	10	3,044.44	365.33	0.609	0.913	6,850	ROUTE 805 ON RAMP
	371+30	374+75	345	72	100	3,296.67	10	10	10	10	766.67	92.00	0.153	0.230	2,760	
	374+75	380+80	605	48	48	3,226.67	10	10	10	10	1,344.44	161.33	0.269	0.403	1,815	
	387+00	393+00	600	48	48	3,200.00	10	10	10	10	1,333.33	160.00	0.267	0.400	1,800	ROUTE 805 OFF RAMP
	393+00	398+00	500	72	90	4,500.00	10	10	10	10	1,111.11	133.33	0.222	0.333	3,500	
	398+00	400+00	200	72	72	1,600.00	10	10	10	10	444.44	53.33	0.089	0.133	1000	
	400+00	404+00	400	72	60	2,933.33	10	10	10	22	1,155.56	138.67	0.231	0.347	2,000	
	404+00	421+00	1,700	60	60	11,333.33	10	10	10	22	4,911.11	589.33	0.982	1.473	6,800	BALBOA Ave OFF RAMP
	421+00	425+25	425	48	48	2,266.67	10	10	34	58	2,644.44	317.33	0.529	0.793	1,275	
	425+25	444+50	1,925	48	48	10,266.67	10	10	10	10	4,277.78	513.33	0.856	1.283	5,775	
	444+50	455+00	1,050	48	48	5,600.00	10	10	72	22	6,650.00	798.00	1.330	1.995	3,150	
	455+00	459+00	400	48	48	2,133.33	10	10	22	22	1,422.22	170.67	0.284	0.427	1,200	
	459+00	463+00	400	48	48	2,133.33	10	10	22	60	2,266.67	272.00	0.453	0.680	1,200	CLAIREMONT MESA Ave OFF RAMP
	463+00	474+70	1170	48	48	6,240.00	10	10	10	10	2,600.00	312.00	0.520	0.780	3,510	
	474+70	476+00	130	48	48	693.33	10	10	82	55	1,133.89	136.07	0.227	0.340	390	
	476+00	481+55	555	48	48	2,960.00	10	10	55	55	4,008.33	481.00	0.802	1.203	1,665	
	481+55	486+20	465	48	48	2,480.00	10	10	10	10	1,033.33	124.00	0.207	0.310	1,395	CLAIREMONT MESA Ave ON RAMP
	486+20	490+80	460	48	48	2,453.33	10	10	10	10	1,022.22	122.67	0.204	0.307	1,380	
	490+80	491+80	100	48	48	533.33	10	10	10	10	222.22	26.67	0.044	0.067	300	
	491+80	498+79	699	48	48	3,728.00	10	10	42	30	3,572.67	428.72	0.715	1.072	2,097	
	498+79	510+20	1,141	60	60	7,606.67	10	10	10	10	2,535.56	304.27	0.507	0.761	4,564	ROUTE 52 ON RAMP
	510+20	513+00	280	60	80	2,177.78	10	10	10	10	622.22	74.67	0.124	0.187	1,680	
	513+00	515+50	250	48	48	1,333.33	10	10	10	10	555.56	66.67	0.111	0.167	750	
	515+50	521+10										0.00				BRIDGE - ROUTE 52
	521+10	524+00	290	48	48	1,546.67	10	10	22	44	1,385.56	166.27	0.277	0.416	870	
	524+00	564+00	4,000	48	48	21,333.33	10	10	10	10	8,888.89	1066.67	1.778	2.667	12,000	
	564+00	568+50	450	48	48	2,400.00	10	10	10	50	2,000.00	240.00	0.400	0.600	1,350	KEARNY VILLA Rd OFF RAMP
	568+50	587+50	1,900	48	48	10,133.33	10	10	10	10	4,222.22	506.67	0.844	1.267	5,700	
NB Rte 163	587+50	592+80	530	48	48	2,826.67	10	10	62	22	3,062.22	367.47	0.612	0.919	1,590	
					SUBTOTAL 1	207,249.98					102,011.79	12,241.43	20.401	30.189	123,443	

(N) NOT A SEPARATE PAY ITEM, FOR INFORMATION ONLY.
* SEAL LONGITUDINAL JOINT BETWEEN Exist LANES.

SUMMARY OF QUANTITIES
Q-1

REVISED BY | DATE REVISED
JIM ALSHEIKH | MARVIN CANTON
CALCULATED-DESIGNED BY | CHECKED BY
FUNCTIONAL SUPERVISOR
KAZIM MAMDANI
STATE OF CALIFORNIA - DEPARTMENT OF TRANSPORTATION
Caltrans PROJECT DEVELOPMENT

LAST REVISION 08-09-10 | DATE PLOTTED => 31-AUG-2010 | TIME PLOTTED => 15:33

Dist	COUNTY	ROUTE	POST MILES TOTAL PROJECT	SHEET No.	TOTAL SHEETS
11	SD	163	3.8/R11.1	28	49

REGISTERED CIVIL ENGINEER 07-29-10 DATE

08-02-10
PLANS APPROVAL DATE

REGISTERED PROFESSIONAL ENGINEER MARVIN A.CANTON No. C69855 Exp. 09-30-10 CIVIL STATE OF CALIFORNIA

THE STATE OF CALIFORNIA OR ITS OFFICERS OR AGENTS SHALL NOT BE RESPONSIBLE FOR THE ACCURACY OR COMPLETENESS OF SCANNED COPIES OF THIS PLAN SHEET.

ROADWAY QUANTITIES (NB ROUTE 163)

LOCATION (STATION)			LENGTH	TRAVELED WAY WIDTH LF (N)		GRIND EXISTING CONCRETE PAVEMENT	SHOULDER WIDTH (LF) (N)				COLD PLANE AC PAVEMENT	RUBBERIZED HOT MIX ASPHALT (GAP GRADED)	TACK COAT	ASPHALTIC EMULSION (FOG SEAL COAT)	SEAL JOINT (EXISTING CONCRETE PAVEMENT) *	REMARKS
							INSIDE		OUTSIDE							
DIRECTION	Beg	END	LF (N)	Beg	END	SQYD	Beg	END	Beg	END	SQYD	TON	TON	TON	LF	
NB Rte 163	592+80	599+00	620	60	60	4,133.33	10	10	30	30	2,755.56	330.67	0.551	0.827	2,480	
"CD" LINE	599+00	600+50	150	60	60	1,000.00	10	10	30	13	525.00	63.00	0.105	0.158	600	
	606+40	612+00	560	62	48	3,422.22	10	10	10	10	1,244.44	149.33	0.249	0.373	2,800	
	612+00	622+70	1070	48	48	5,706.67	10	10	10	10	2,377.78	285.33	0.476	0.713	3,210	
	622+70	625+50	280	48	48	1,493.33	10	10	17	0	575.56	69.07	0.115	0.173	840	
Jct WB Rte 8 - NB Rte 163																
	232+00	235+74	374	48	48	1,994.67	14	4	10	10	789.56	94.75	0.158	0.237	1,122	
	235+74	237+00	126	48	48	672.00	0	5	10	10	175.00	21.00	0.035	0.053	378	
	237+00	240+15	315	48	48	1,680.00	0	0	10	36	805.00	96.60	0.161	0.242	945	
	240+15	245+50	535	36	36	2,140.00	0	0	10	10	594.44	71.33	0.119	0.178	1,070	
	245+50	247+65	215	36	36	860.00	0	0	10	42	621.11	74.53	0.124	0.186	430	
	247+65	251+70	405	24	24	1,080.00	5	5	10	10	675.00	81.00	0.135	0.203	405	
	251+70	257+65	595	36	36	2,380.00	5	5	26	13	1,619.72	194.37	0.324	0.486	1,190	
NB Rte 163	257+65	260+00	235	36	27	822.50	5	5	10	10	391.67	47.00	0.078	0.118	470	
"F" LINE	240+50	247+65	715	15	15	1191.67	0	0	10	10	794.44	95.33	0.159	0.238	715	
SUBTOTAL 2						28,576.39					13,944.28	1673.31	2.789	4.185	16,655	

(N) NOT A SEPARATE PAY ITEM, FOR INFORMATION ONLY.

REMOVE STEEL REINFORCEMENT BAR

ROUTE	LOCATION	LANE	No. OF BARS (EA)
163 NORTH	PM 4.3 TO PM 6.5	3	2330
		TOTAL	2330

MILE POST MARKER

ROUTE	POST MILE	EA	REMARK
163 NB	5.5	1	ON THE BRIDGE (REPAINT THE NUMBERS OR REPLACE)
163 NB	6.5	1	ON THE BRIDGE (REPAINT THE NUMBERS OR REPLACE)
163 NB	8.0	1	ON THE BRIDGE (REPAINT THE NUMBERS OR REPLACE)
163 NB	9.5	1	MISSING
163 NB	R11.0	1	MISSING
163 SB	4.0	1	ON THE BRIDGE (REPAINT THE NUMBERS OR REPLACE)
163 SB	5.5	1	ON THE BRIDGE (REPAINT THE NUMBERS OR REPLACE)
163 SB	6.0	1	ON THE BRIDGE (REPAINT THE NUMBERS OR REPLACE)
163 SB	6.5	1	ON THE BRIDGE (REPAINT THE NUMBERS OR REPLACE)
163 SB	10.0	1	MISSING
163 SB	R10.5	1	ON THE BRIDGE (REPAINT THE NUMBERS OR REPLACE)
TOTAL		11	

* SEAL LONGITUDINAL JOINT BETWEEN Exist LANES.

SUMMARY OF QUANTITIES

Q-2

REVISED BY | DATE REVISED
JIM ALSHEIKH | MARVIN CANTON
CALCULATED-DESIGNED BY | CHECKED BY
FUNCTIONAL SUPERVISOR
KAZIM MAMDANI

STATE OF CALIFORNIA - DEPARTMENT OF TRANSPORTATION
Caltrans® PROJECT DEVELOPMENT

LAST REVISION 08-09-10 | DATE PLOTTED => 31-AUG-2010 TIME PLOTTED => 15:33

Dist	COUNTY	ROUTE	POST MILES TOTAL PROJECT	SHEET No.	TOTAL SHEETS
11	SD	163	3.8/R11.1	29	49

REGISTERED CIVIL ENGINEER 07-29-10 DATE

08-02-10
PLANS APPROVAL DATE

REGISTERED PROFESSIONAL ENGINEER MARVIN A.CANTON No. C69855 Exp. 09-30-10 CIVIL STATE OF CALIFORNIA

THE STATE OF CALIFORNIA OR ITS OFFICERS OR AGENTS SHALL NOT BE RESPONSIBLE FOR THE ACCURACY OR COMPLETENESS OF SCANNED COPIES OF THIS PLAN SHEET.

ROADWAY QUANTITIES (SB ROUTE 163)

(STATION) LOCATION			LENGTH	TRAVELED WAY WIDTH LF (N)		GRIND EXISTING CONCRETE PAVEMENT	SHOULDER WIDTH (LF) (N) INSIDE		SHOULDER WIDTH (LF) (N) OUTSIDE		COLD PLANE AC PAVEMENT	RUBBERIZED HOT MIX ASPHALT (GAP GRADED)	TACK COAT	ASPHALTIC EMULSION (FOG SEAL COAT)	SEAL JOINT (EXISTING CONCRETE PAVEMENT) *	REMARKS
DIRECTION	Beg	END	LF (N)	Beg	END	SQYD	Beg	END	Beg	END	SQYD	TON	TON	TON	LF	
SB Rte 163	232+00	236+00	400	66	60	2,800.00	10	10	16	23	1,311.11	157.33	0.262	0.393	2,000	
"CD" LINE	236+00	239+00	300	60	60	2,000.00	10	10	10	22	866.67	104.00	0.173	0.260	1,200	
	239+00	240+00	100	60	60	666.67	10	10	42	26	488.89	58.67	0.098	0.147	400	
	240+00	244+00	400	72	72	3,200.00	10	10	14	18	1,155.56	138.67	0.231	0.347	2,000	
	244+00	244+60	60	72	72	480.00	10	10	18	28	220.00	26.40	0.044	0.066	300	
	244+60	246+00	140	72	72	1,120.00	10	10	18	30	528.89	63.47	0.106	0.159	700	
	246+00	249+30	330	72	72	2,640.00	10	10	30	10	1,100.00	132.00	0.220	0.330	1,650	FRIARS Rd OFF RAMP
	249+30	250+26	96	60	56	618.67	10	10	10	10	213.33	25.60	0.043	0.064	384	
	250+26	301+00	5074	48	48	27,061.33	10	10	10	10	11,275.56	1353.07	2.255	3.383	15,222	
	301+00	307+00	600	48	48	3,200.00	10	10	10	24	1,800.00	216.00	0.360	0.540	1,800	
	307+00	311+36	436	48	48	2,325.33	10	10	24	50	2,276.89	273.23	0.455	0.683	1,308	GENESEE Ave ON RAMP
	311+36	313+00	164	48	48	874.67	10	10	12	22	492.00	59.04	0.098	0.148	492	
	313+00	319+00	600	48	48	3,200.00	10	10	22	32	2,466.67	296.00	0.493	0.740	1,800	
	319+00	320+55														BRIDGE GENESEE
	320+55	321+36	81	48	48	432.00	10	10	32	60	504.00	60.48	0.101	0.151	243	
	321+36	326+00	464	48	48	2,474.67	10	10	10	10	1,031.11	123.73	0.206	0.309	1,392	
	326+00	329+00	300	48	48	1,600.00	10	10	50	22	1,533.33	184.00	0.307	0.460	900	
	329+00	342+50	1350	48	48	7,200.00	10	10	22	30	5,400.00	648.00	1.080	1.620	4,050	GENESEE Ave OFF RAMP
	342+50	347+40	490	48	48	2,613.33	10	10	30	34	2,286.67	274.40	0.457	0.686	1,470	
	347+40	350+26	286	48	48	1,525.33	10	10	34	60	1,811.33	217.36	0.362	0.543	858	MESA COLLEGE Dr ON RAMP
	350+26	351+80	154	48	48	821.33	10	10	42	42	889.78	106.77	0.178	0.267	462	
	351+80	358+40	660	56	60	4,253.33	10	10	34	42	3,520.00	422.40	0.704	1.056	2,640	
	358+40	370+00	1160	60	66	8,120.00	10	10	10	10	2,577.78	309.33	0.516	0.773	5,800	
	370+00	375+50	550	66	72	4,216.67	10	10	10	10	1,222.22	146.67	0.244	0.367	2,750	
	375+50	379+60	410	72	84	3,553.33	10	10	10	10	911.11	109.33	0.182	0.273	2,460	
	379+60	381+56	196	60	60	1,306.67	10	10	10	20	544.44	65.33	0.109	0.163	784	ROUTE 805 ON RAMP
	381+56	387+00														BRIDGE ROUTE 805 & ROUTE 163
	387+00	391+20	420	60	60	2,800.00	10	10	10	10	933.33	112.00	0.187	0.280	1,680	
	391+20	392+60	140	48	48	746.67	10	10	10	30	466.67	56.00	0.093	0.140	420	
	392+60	396+34	374	93	72	3,428.33	10	10	10	10	831.11	99.73	0.166	0.249	2,618	ROUTE 805 OFF RAMP
	396+34	398+13	179	72	60	1,312.67	10	10	10	10	397.78	47.73	0.080	0.119	895	
	398+13	414+00	1587	60	60	10,580.00	10	10	10	10	3,526.67	423.20	0.705	1.058	6,348	
	414+00	420+28	628	60	60	4,186.67	10	10	10	68	3,419.11	410.29	0.684	1.026	2,512	
	420+28	423+68	340	60	60	2,266.67	10	10	25	42	1,643.33	197.20	0.329	0.493	1,360	
	423+68	425+50	182	48	48	970.67	10	10	54	74	1,496.44	179.57	0.299	0.449	546	ON RAMP
	425+50	428+36	286	48	48	1,525.33	10	10	22	36	1,239.33	148.72	0.248	0.372	858	
	428+36	437+22	886	48	48	4,725.33	10	10	96	42	7,777.11	933.25	1.555	2.333	2,658	
	437+22	438+22	100	48	48	533.33	10	10	42	64	700.00	84.00	0.140	0.210	300	BALBOA Ave ON RAMP
	438+22	440+55	233	48	48	1,242.67	10	10	30	30	1,035.56	124.27	0.207	0.311	699	
	440+55	447+56	701	48	48	3,738.67	10	10	62	34	4,517.56	542.11	0.904	1.355	2,103	
	447+56	450+16	260	48	48	1,386.67	10	10	34	22	1,097.78	131.73	0.220	0.329	780	
	450+16	463+40	1324	60	60	8,826.67	10	10	10	10	2,942.22	353.07	0.588	0.883	5,296	BALBOA Ave OFF RAMP
	463+40	471+10	770	48	48	4,106.67	10	10	22	60	4,363.33	523.60	0.873	1.309	2,310	CLAIREMONT MESA Ave ON RAMP
	471+10	474+24	314	48	48	1,674.67	10	10	22	32	1,290.89	154.91	0.258	0.387	942	
SB Rte 163	474+24	480+82	658	48	48	3,509.33	10	10	90	42	5,556.44	666.77	1.111	1.667	1,974	CLAIREMONT MESA Ave OFF RAMP
			SUBTOTAL 3			145,864.35					89,662.00	10,759.43	17.931	26.898	87,364	

(N) NOT A SEPARATE PAY ITEM, FOR INFORMATION ONLY.
* SEAL LONGITUDINAL JOINT BETWEEN Exist LANES.

SUMMARY OF QUANTITIES
Q-3

STATE OF CALIFORNIA - DEPARTMENT OF TRANSPORTATION
Caltrans PROJECT DEVELOPMENT

FUNCTIONAL SUPERVISOR: KAZIM MAMDANI
CALCULATED-DESIGNED BY: JIM ALSHEIKH
CHECKED BY: MARVIN CANTON
REVISED BY
DATE REVISED

LAST REVISION DATE PLOTTED => 31-AUG-2010
08-09-10 TIME PLOTTED => 15:33

Dist	COUNTY	ROUTE	POST MILES TOTAL PROJECT	SHEET No.	TOTAL SHEETS
11	SD	163	3.8/R11.1	30	49

07-29-10
REGISTERED CIVIL ENGINEER DATE

08-02-10
PLANS APPROVAL DATE

REGISTERED PROFESSIONAL ENGINEER
MARVIN A.CANTON
No. C69855
Exp. 09-30-10
CIVIL
STATE OF CALIFORNIA

THE STATE OF CALIFORNIA OR ITS OFFICERS OR AGENTS SHALL NOT BE RESPONSIBLE FOR THE ACCURACY OR COMPLETENESS OF SCANNED COPIES OF THIS PLAN SHEET.

ROADWAY QUANTITIES (SB ROUTE 163)

LOCATION (STATION)			LENGTH	TRAVELED WAY WIDTH LF (N)		GRIND EXISTING CONCRETE PAVEMENT	SHOULDER WIDTH (LF) (N)				COLD PLANE AC PAVEMENT	RUBBERIZED HOT MIX ASPHALT (GAP GRADED)	TACK COAT	ASPHALTIC EMULSION (FOG SEAL COAT)	SEAL JOINT (EXISTING CONCRETE PAVEMENT) *	REMARKS
							INSIDE		OUTSIDE							
DIRECTION	Beg	END	LF (N)	Beg	END	SQYD	Beg	END	Beg	END	SQYD	TON	TON	TON	LF	
SB Rte 163	480+82	481+00	18	48	48	96.00	10	10	42	100	162.00	19.44	0.032	0.049	54	CLAIREMONT MESA Ave ON RAMP
"CD" LINE	481+00	485+40	440	48	48	2,346.67	10	10	36	90	3,568.89	428.27	0.714	1.071	1,320	
	485+40	494+40	900	48	48	4,800.00	10	10	90	22	6,600.00	792.00	1.320	1.980	2,700	
	494+40	496+72	232	48	48	1,237.33	10	10	22	22	824.89	98.99	0.165	0.247	696	CLAIREMONT MESA Ave OFF RAMP
	496+72	501+00	428	60	60	2,853.33	10	10	10	10	951.11	114.13	0.190	0.285	1,712	
	501+00	509+00	800	60	72	5,866.67	10	10	10	22	2,311.11	277.33	0.462	0.693	4,000	
	509+00	511+30	230	72	68	1,788.89	10	10	22	100	1,814.44	217.73	0.363	0.544	1,150	ROUTE 52 ON RAMP
	511+30	515+30	400	48	48	2,133.33	10	10	10	10	888.89	106.67	0.178	0.267	1,200	
	515+30	520+38														BRIDGE Rte 52 & Rte 163
	520+38	521+20	82	48	48	437.33	10	10	10	10	182.22	21.87	0.036	0.055	246	
	521+20	523+40	220	60	60	1,466.67	10	10	30	28	953.33	114.40	0.191	0.286	880	ROUTE 52 OFF RAMP
	523+40	529+00	560	86	60	4,542.22	10	10	10	10	1,244.44	149.33	0.249	0.373	3,920	
	529+00	550+20	2,120	60	60	14,133.33	10	10	10	10	4,711.11	565.33	0.942	1.413	8,480	
	550+20	563+80	1,360	60	72	9,973.33	10	10	0	50	5,288.89	634.67	1.058	1.587	6,800	
	563+80	567+30	350	60	60	2,333.33	10	10	10	10	777.78	93.33	0.156	0.233	1,400	ON RAMP
	567+30	578+18	1,088	60	60	7,253.33	10	10	10	61	5,500.44	660.05	1.100	1.650	4,352	
	578+18	588+00	982	60	60	6,546.67	10	10	10	10	2,182.22	261.87	0.436	0.655	3,928	OFF RAMP
	588+00	592+00	400	60	60	2,666.67	10	10	42	10	1,600.00	192.00	0.320	0.480	1,600	
	592+00	597+00	500	60	60	3,333.33	10	10	10	10	1,111.11	133.33	0.222	0.333	2,000	
	597+00	603+46	646	60	60	4,306.67	10	10	10	10	1,435.56	172.27	0.287	0.431	2,584	
	603+46	606+42	296	48	48	1,578.67	10	10	22	36	1,282.67	153.92	0.257	0.385	888	
SB Rte 163	606+42	631+00	2,458	48	48	13,109.33	10	10	10	10	5,462.22	655.47	1.092	1.639	7,374	
SUBTOTAL 4						92,803.10					48,853.32	5,862.40	9.770	14.656	57,284	
SUBTOTAL 1						207,249.98					102,011.79	12,241.43	20.401	30.189	123,443	
SUBTOTAL 2						28,576.39					13,944.28	1,673.31	2.789	4.185	16,655	
SUBTOTAL 3						145,864.35					89,662.00	10,759.43	17.931	26.898	87,364	
SUBTOTAL 4						92,803.10					48,853.32	5,862.40	9.770	14.656	57,284	
TOTAL						474,493.82					254,471.39	30,736.57	50.891	75.928	284,746	

(N) NOT A SEPARATE PAY ITEM, FOR INFORMATION ONLY.

* SEAL LONGITUDINAL JOINT BETWEEN Exist LANES.

SUMMARY OF QUANTITIES
Q-4

REVISED BY | DATE REVISED
JIM ALSHEIKH | MARVIN CANTON
CALCULATED-DESIGNED BY | CHECKED BY
FUNCTIONAL SUPERVISOR: KAZIM MAMDANI
STATE OF CALIFORNIA - DEPARTMENT OF TRANSPORTATION
Caltrans PROJECT DEVELOPMENT

LAST REVISION 08-09-10 | DATE PLOTTED => 31-AUG-2010 | TIME PLOTTED => 15:33

Dist	COUNTY	ROUTE	POST MILES TOTAL PROJECT	SHEET No.	TOTAL SHEETS
11	SD	163	3.8/R11.1	31	49

REGISTERED CIVIL ENGINEER 07-29-10 DATE

08-02-10
PLANS APPROVAL DATE

REGISTERED PROFESSIONAL ENGINEER MARVIN A.CANTON No. C69855 Exp. 09-30-10 CIVIL STATE OF CALIFORNIA

THE STATE OF CALIFORNIA OR ITS OFFICERS OR AGENTS SHALL NOT BE RESPONSIBLE FOR THE ACCURACY OR COMPLETENESS OF SCANNED COPIES OF THIS PLAN SHEET.

REPLACE CONCRETE PAVEMENT (RAPID STRENGTH CONCRETE)

ROUTE	LOCATION	LANE	No. OF SLABS (N)	CY
163 SOUTH	233+00	4	1	6.6
163 SOUTH	322+00	1	1	6.6
163 SOUTH	393+00	4	1	6.6
163 SOUTH	455+00	4	1	6.6
163 SOUTH	459+00	4	1	6.6
163 SOUTH	476+00	2	1	6.6
163 SOUTH	490+80	3	1	6.6
163 SOUTH	515+50	3	1	6.6
163 SOUTH	524+00	4	1	6.6
163 SOUTH	564+00	3	1	6.6
163 NORTH	235+00	4	1	6.6
163 NORTH	312+00	2	1	6.6
163 NORTH	322+00	4	1	6.6
163 NORTH	352+00	3	1	6.6
163 NORTH	400+00	4	1	6.6
163 NORTH	444+50	4	1	6.6
163 NORTH	476+00	3	1	6.6
163 NORTH	510+20	4	1	6.6
163 NORTH	524+00	3	1	6.6
163 NORTH	564+00	1	1	6.6
			TOTAL	132

LINE	STATION	DIRECTION	TEMPORARY RAILING (TYPE K)	TEMPORARY CRASH CUSHION MODULE	TRAFFIC PLASTIC DRUMS
			LF	EA	EA
"NE"	364+00	NB Rte 163	100	14	6
"CD"	232+00	SB Rte 163	100	14	6
"CD"	329+00	SB Rte 163	100	14	6
		TOTAL	300	42	18

HMA DIKE

LOCATION			REMOVE AC DIKE		PLACE HMA DIKE		MINOR HMA
DIRECTION	STATION		TYPE	LENGTH	TYPE	LENGTH	
	BEGIN	END		LF		LF	TON
NB Rte 163	272+80	312+00	E	3920.00	E	3920.00	101.92
NB Rte 163	328+00	333+00	E	500.00	E	500.00	13.00
NB Rte 163	399+00	423+00	E	2400.00	E	2400.00	62.40
NB Rte 163	440+00	451+00	E	1100.00	E	1100.00	28.60
NB Rte 163	493+00	516+00	E	2300.00	E	2300.00	59.80
NB Rte 163	524+00	584+00	E	6000.00	E	6000.00	156.00
SB Rte 163	246+00	252+00	E	600.00	E	600.00	15.60
SB Rte 163	279+00	310+00	E	3100.00	E	3100.00	80.60
SB Rte 163	332+00	350+00	E	1800.00	E	1800.00	46.80
SB Rte 163	494+00	497+00	E	300.00	E	300.00	7.80
SB Rte 163	591+00	599+00	E	800.00	E	800.00	20.80
SB Rte 163	509+00	515+00	E	600.00	E	600.00	15.60
SB Rte 163	521+00	600+00	E	7900.00	E	7900.00	205.40
SB Rte 163	600+00	631+00	D	3100.00	D	3100.00	181.66
			TOTAL	34,420.00		34,420.00	995.98

EXISTING IRRIGATION CROSS OVER MARKER

DIRECTION		STATION	PAVEMENT MARKER NON-REFLECTIVE (EA)
			TYPE A
Rte 163			WHITE
	SB	272+80	1
NB		277+50	1
NB	SB	285+00	2
NB	SB	291+00	2
NB	SB	318+00	2
NB		328+40	1
	SB	585+00 TO 631+00	4
		** SUB-TOTAL	13

METAL BEAM GUARD RAILING

MBGR No.	DIRECTION	LINE	STATION	(N) LAYOUT TYPE	EXISTING MBGR (N)	REMOVE METAL BEAM GUARD RAILING	METAL BEAM GUARD RAILING	ALTERNATIVE FLARED TERMINAL SYSTEM	GUARD RAILING DELINEATOR	STRENGTHEND RAILING SECTIONS FOR FIXED OBJECT (N)	ANCHOR BLOCK (N)	TRANSITION RAILING (TYPE WB)	MINOR CONCRETE (MINOR STRUCTURE)	ALTERNATIVE IN_LINE TERMINAL SYSTEM	END ANCHOR ASSEMBLY (TYPE SFT)
					(LF)	(LF)	(LF)	EA	EA	EA		EA	(CY)	EA	EA
1	NB Rte 163	"CD"	429+00 R+ (OFF RAMP 163 TO BALBOA Ave E)	16B	43.0	43.0	37.50	1	3	X					1
2	NB Rte 163	"CD"	439+00 R+ (OFF RAMP 163 TO BALBOA Ave W)	16B	49.0	49.0	37.50	1	3						1
3	NB Rte 163	"ART3"	354+60 L+ & 354+60 L+, 382.0' (OFF RAMP 163 TO MESA COLLEGE Dr)	16A	154.0	154.0	43.75		3					1	1
4	NB Rte 163	"NE"	364+00 L+ (ON RAMP 163 TO 52 E)	12B	158.0	158.0	100.00	1	3		*	1	2.00		1
5	SB Rte 163	"CD"	232+00 R+ (AT THE SAN DIEGO BAGR)	12B	120.0	120.0	62.50	1	3		TYPE 1	1	0.65		
6	SB Rte 163	"CD"	304+50 R+ (AT THE COLUMN OF PEDESTRIAN OC)	16B	75.0	75.0	37.50	1	3	X					1
7	SB Rte 163	"CD"	329+00 R+ (OFF RAMP 163 TO GENESEE Ave W)	12A	100.0	100.0	37.50		3		*	1	2.00	1	
8	SB Rte 163	"CD"	432+30 R+ (OFF RAMP 163 TO BALBOA Ave E)	16B	50.0	50.0	37.50	1	3	X					1
9	SB Rte 163	"CD"	444+70 R+ (OFF RAMP 163 TO BALBOA Ave W)	16B	59.0	59.0	37.50	1	3	X					1
10	SB Rte 163	"KV4"	584+50 R+ (ON RAMP KEARNY VILLA Rd TO 163)	16B	112.0	112.0	75.00	1	3						1
			TOTAL			920.0	506.25	8	30			3	4.65	2	8

(N) NOT A SEPARATE PAY ITEM, FOR INFORMATION ONLY
SEE CONSTRUCTION DETAILS SHEETS FOR TYPE 1 CONNECTION DETAIL.
* SEE STANDARD PLANS SHEET A78G, FOR ANCHOR BLOCK DETAIL.
** SEE PDQ SHEET FOR TOTAL.

SUMMARY OF QUANTITIES
Q-5

REVISED BY | DATE REVISED
JIM ALSHEIKH | MARVIN CANTON
CALCULATED-DESIGNED BY | CHECKED BY
FUNCTIONAL SUPERVISOR
KAZIM MAMDANI

STATE OF CALIFORNIA - DEPARTMENT OF TRANSPORTATION
Caltrans® PROJECT DEVELOPMENT

LAST REVISION 08-09-10 | DATE PLOTTED => 31-AUG-2010 | TIME PLOTTED => 15:33

Dist	COUNTY	ROUTE	POST MILES TOTAL PROJECT	SHEET No.	TOTAL SHEETS
11	SD	163	3.8/R11.1	32	49

Enrique P Bernal 07-29-10
REGISTERED ELECTRICAL ENGINEER DATE

08-02-10
PLANS APPROVAL DATE

REGISTERED PROFESSIONAL ENGINEER ENRIQUE P. BERNAL No. 15675 Exp. 06-30-12 ELECTRICAL STATE OF CALIFORNIA

THE STATE OF CALIFORNIA OR ITS OFFICERS OR AGENTS SHALL NOT BE RESPONSIBLE FOR THE ACCURACY OR COMPLETENESS OF SCANNED COPIES OF THIS PLAN SHEET.

CONDUIT AND CONDUCTOR SCHEDULE [8]

AWG SIZE OR CABLE TYPE	PHASE	POLE OR CIRCUIT	EX 3" (1)	EX 2" (2)	EX 4" (3)	EX 4" (4)	EX 2-3" (5)	EX 2-4" (6)	EX 1½" (7)	EX 3" (8)	EX 2-4" (9)	EX 2" N/C (10)	NOTES
3CSC / 12CSC		POLE - A								1	2	1 2	
		B							1	1	1	1 1	
		C	1 1		1	1 1	1 1	1 1	1			1 1	
		D	1 2		1	2 1	2 1	2 1	2			1 2	
		E		1	2 1	2 1	2 1	2 1	2			1 2	
		F				1 1	1 1	1 1	1			1 1	
		G					1 1	1 1	1			1 1	
		H						1 1	1			1 1	
TOTAL 3CSC / 12CSC			2 3	1 2	3 5	4 6	5 7	6 8	1 1	2 3	8 11		
14		PEU					3	3			3		
8		LIGHTING	2	2	2	2	2	2		2			
2		CONTROLLER										2	
TYPE B DLC	Ø1			2	2	2	2	2			2		RC 2 dlc
	Ø2										5		RC 2 dlc
	Ø3					4	4	4			4		RC 4 dlc
	Ø4								2	2	2		RC 1 dlc
	Ø5										1		RC 1 dlc
	Ø6		1	4	5	5	5	5			5		RC 2 dlc
	Ø7								4	4	4		RC 2 dlc
	Ø8					1	1	1			1		RC 1 dlc
	OLA								2	2	2		RC 1 dlc
	OLB		2		2	2	2	2			2		RC 2 dlc
TOTAL dlc (WITHOUT REMOVAL)			3	6	9	14	14	14	8	8	28		
TOTAL dlc				3	3	3	3	3	4	4	10		
VIDEO CABLE HARNESS	Ø1 Ø6	POLE - A								1	1		[9]
	Ø3 Ø8	C	1	1	1	1	1	1			1		
	Ø5 Ø2	E			1	1	1	1			1		
	Ø7 Ø4	G					1	1			1		
EVC			2		3	3	3	3		1	4		
TOTAL CONDUCTORS / CABLES			10	9	18	20	26	28	6	13	41	2	

CONDUIT NOTES:

- N 11 C - EX 1"C, 3 dlc
- 12 - EX 2"C, WITH 5 dlc [RC] 2 dlc
- N 13 C - EX 1"C, 4 dlc
- 14 - EX 1½" C, WITH 8 dlc [RC] 4 dlc.
- 15 - EX 2"C, WITH 6 dlc [RC] 3 dlc
- N 16 C - EX 2"C, 1 sic
- N 17 C - EX 2"C, 2#6 rm, 2#8 ltg, 3#14 peu
- N 18 C - EX 2"C, 2#2 sig, 2#6 rm, 2#8 ltg, 3#14 peu
- N 19 C - EX 2"C, 2 sic

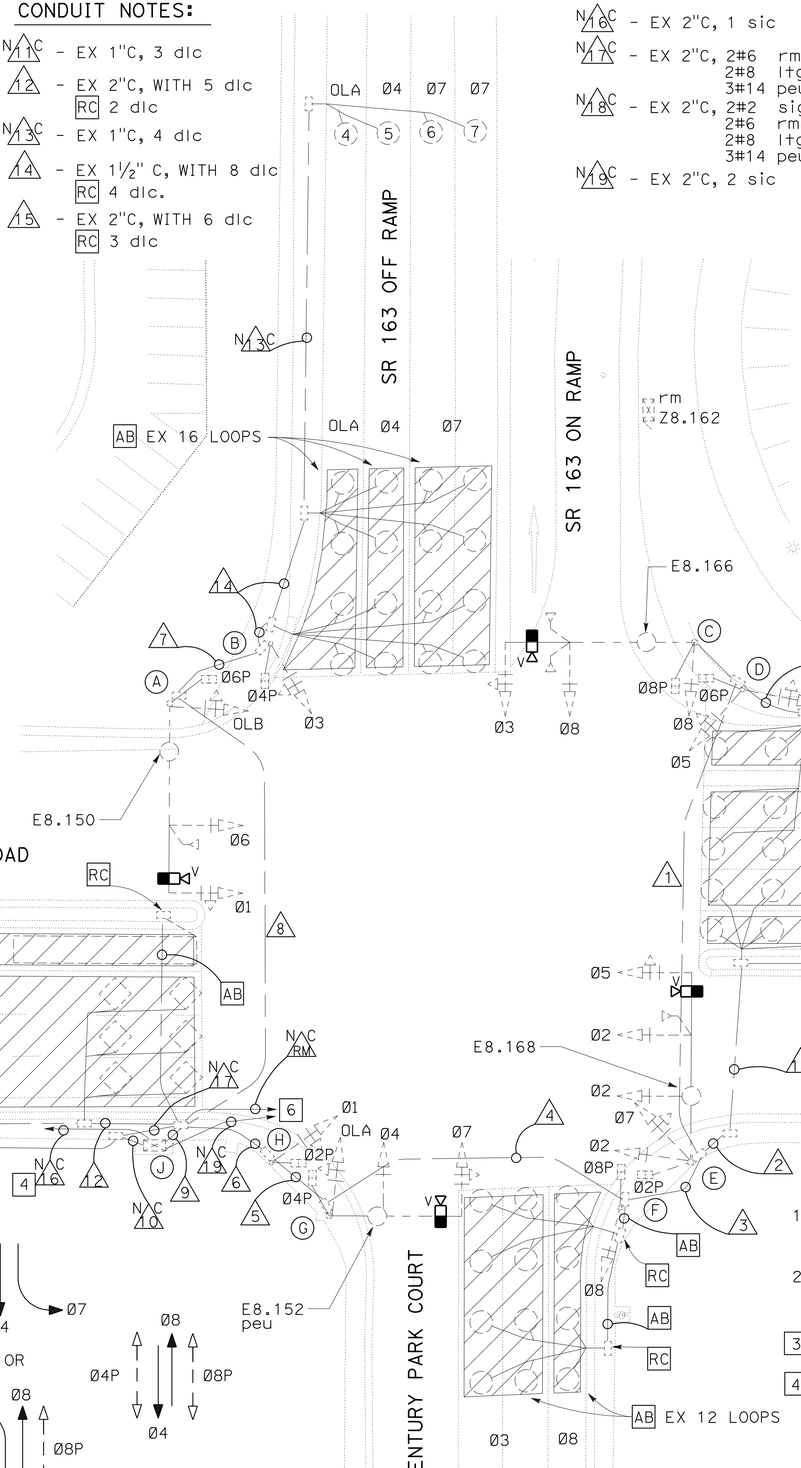

EXISTING EQUIPMENT AND POLE SCHEDULE

LOC	STANDARD TYPE	STANDARD SMA FT	STANDARD LMA FT	PLACEMENT DIMENSIONS A FT	PLACEMENT DIMENSIONS B FT	SIGNAL MOUNTING AND PLACEMENT VEHICLE POLE	VEHICLE MASTARM	PEDESTRIAN SIGNAL	PEDESTRIAN PPB	REMARKS
A	26-4-80	50	15	Exist		SV-1-T	MAT MAS [3]	SP-1-T	Ø4P Exist	200 W hps
B	TYPE 1-A (10')	—	—	Exist		SV-2-TB	—	SP-1-T	Ø6P Exist	
C	29-5-80	50	15	Exist		SV-1-T	MAT MAS [3]	SP-1-T	Ø6P Exist	200 W hps
D	TYPE 1-A (10')	—	—	Exist		SV-2-TB	—	SP-1-T	Ø8P Exist	
E	26-4-80	50	15	Exist		SV-2-TB	MAT 2 MAS [3]	SP-1-T	Ø8P Exist	200 W hps
F	TYPE 1-A (10')	—	—	Exist		SV-1-T	—	SP-1-T	Ø2P Exist	
G	24-3-80	35	15	Exist		SV-1-T	MAT MAS [3]	SP-1-T	Ø2P Exist	200 W hps peu
H	TYPE 1-A (10')	—	—	Exist		SV-1-T	—	SP-1-T	Ø4P Exist	
J	Exist MODEL 170 CONTROLLER ASSEMBLY [7]									

ABBREVIATIONS AND LEGENDS:

- N C = EXISTING CONDUIT NO CHANGE.
- N C RM = RAMP METERING CIRCUIT NO CHANGE.
- EX = EXISTING
- VDU = VIDEO DETECTION UNIT
- s = Exist SIGN ILLUMINATION
- foXX = Exist FIBER OPTIC CABLE: XX DENOTES NUMBER OF SINGLEMODE FIBERS
- MDCS(X) = MULTIDUCT CONDUIT SYSTEM (X = NUMBER OF DUCTS)

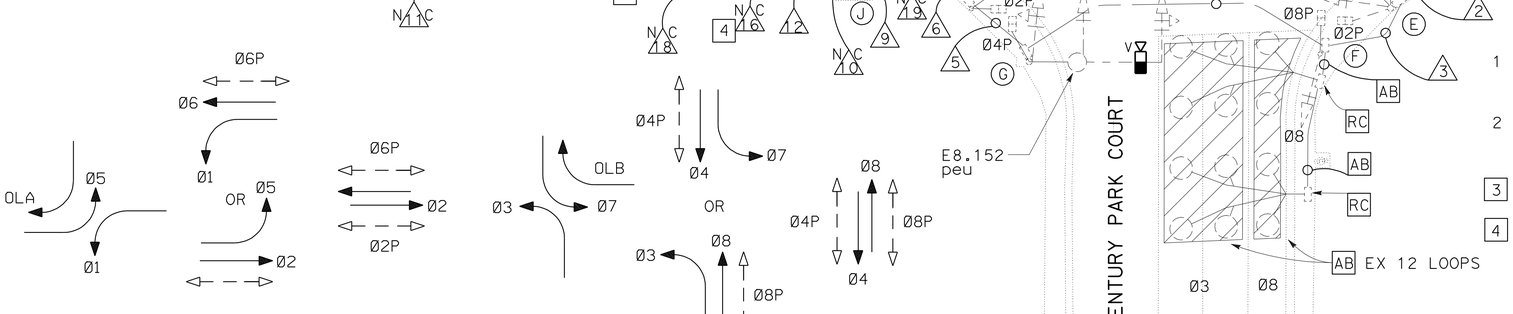

TRAFFIC PHASE DIAGRAM

STEADY DEMAND SEQUENCE →

NOTES:

1. Exist SIGNAL, LIGHTING STANDARD AND ASSOCIATED EQUIPMENT TO REMAIN UNLESS OTHERWISE NOTED.
2. Exist CONDUIT, PULL BOXES AND DETECTOR LOOPS TO REMAIN UNLESS OTHERWISE NOTED.
3. [3] - INSTALL VIDEO IMAGE SENSOR.
4. [4] - Exist SIGNAL INTERCONNECT TO SIGNAL P8.420 (BALBOA AVENUE).
5. [5] - TO EXISTING SERVICE DISCONNECT LOCATED AT 8601 BALBOA AVENUE. 240 V METERED POLE (PP96282, A8.04).
6. [6] - TO EXISTING RAMP METER Z8.162.
7. [7] - FURNISH AND INSTALL VDU, COMMUNICATION CARD AND VIDEO DISPLAY IN TYPE 332 CABINET.
8. [8] - ALL CONDUCTORS/CABLES ARE EXISTING UNLESS OTHERWISE NOTED.
9. [9] - INSTALL NEW VIDEO CABLES AS SHOWN IN SCHEDULE.

THIS PLAN IS ACCURATE FOR ELECTRICAL WORK ONLY.

KEARNY VILLA ROAD AND SR 163 ON/OFF RAMP AT CENTURY PARK COURT

SIGNAL AND LIGHTING

SCALE: 1" = 20'

E-1

STATE OF CALIFORNIA - DEPARTMENT OF TRANSPORTATION
Caltrans TRAFFIC ELECTRICAL

FUNCTIONAL SUPERVISOR: DALE WILSON
CALCULATED-DESIGNED BY: HUA SAWAYA
CHECKED BY: ENRIQUE BERNAL
REVISED BY / DATE REVISED

LAST REVISION 08-09-10 | DATE PLOTTED => 31-AUG-2010 | TIME PLOTTED => 15:34

Dist	COUNTY	ROUTE	POST MILES TOTAL PROJECT	SHEET No.	TOTAL SHEETS
11	SD	163	3.8/R11.1	33	49

Enrique P Bernal 07-29-10
REGISTERED ELECTRICAL ENGINEER DATE

08-02-10
PLANS APPROVAL DATE

REGISTERED PROFESSIONAL ENGINEER ENRIQUE P. BERNAL No. 15675 Exp. 06-30-12 ELECTRICAL STATE OF CALIFORNIA

THE STATE OF CALIFORNIA OR ITS OFFICERS OR AGENTS SHALL NOT BE RESPONSIBLE FOR THE ACCURACY OR COMPLETENESS OF SCANNED COPIES OF THIS PLAN SHEET.

NOTES:

1 - Exist CONDUIT, PULL BOXES AND DETECTOR LOOPS TO REMAIN UNLESS OTHERWISE NOTED.

[2] - TO EXISTING SERVICE DISCONNECT A7.17 (240/480 V) LOCATED ON 8297 LINDA VISTA ROAD AT AERO DRIVE.

[3] - EXTEND LOOP CONDUIT TERMINATIONS TO EP AS SHOWN.

4 - FOR LOOP PLACEMENT AND IDENTIFICATION SEE DETAILS ON SHEET E-3.

[5] - REPLACE Exist LOOPS IN THE SAME PLACES.

CONDUIT NOTES:

N/1 C - EX 3"C, 6 dlc

N/2 C - EX 3"C, 10 dlc

N/3 C - EX 3"C, 14 dlc

N/4 C - EX 3"C, 22 dlc

N/5 C - EX 1"C, 1 fo12
- EX 1"C, mt.

N/6 C - EX 2"C, 2#6(tms)

N/7 C - EX 2"C, 2#8(SERVICE DISCONNECT)

N/8 C - EX MDCS(8), 1 fo60
1 fo84

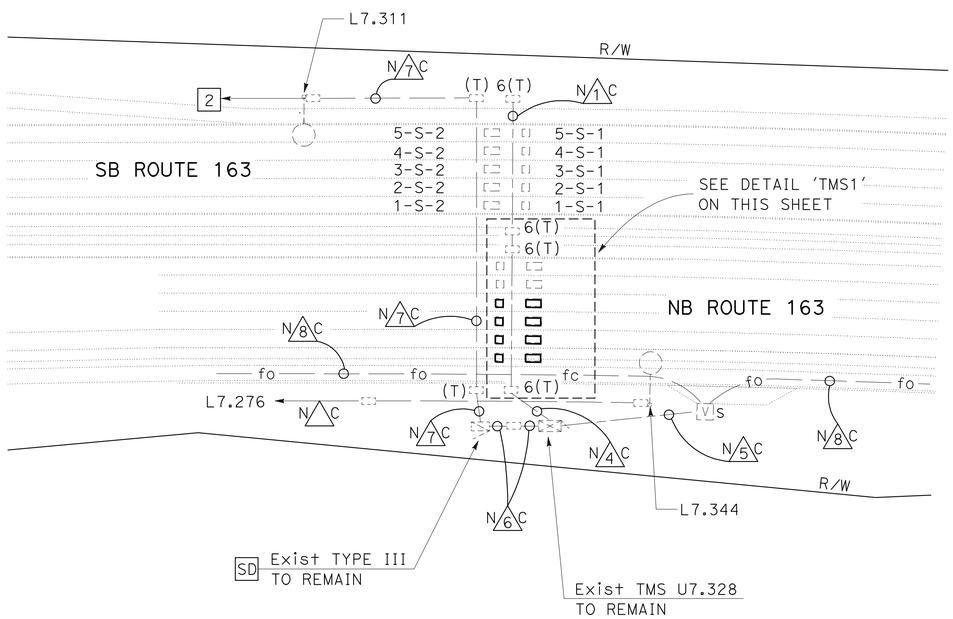

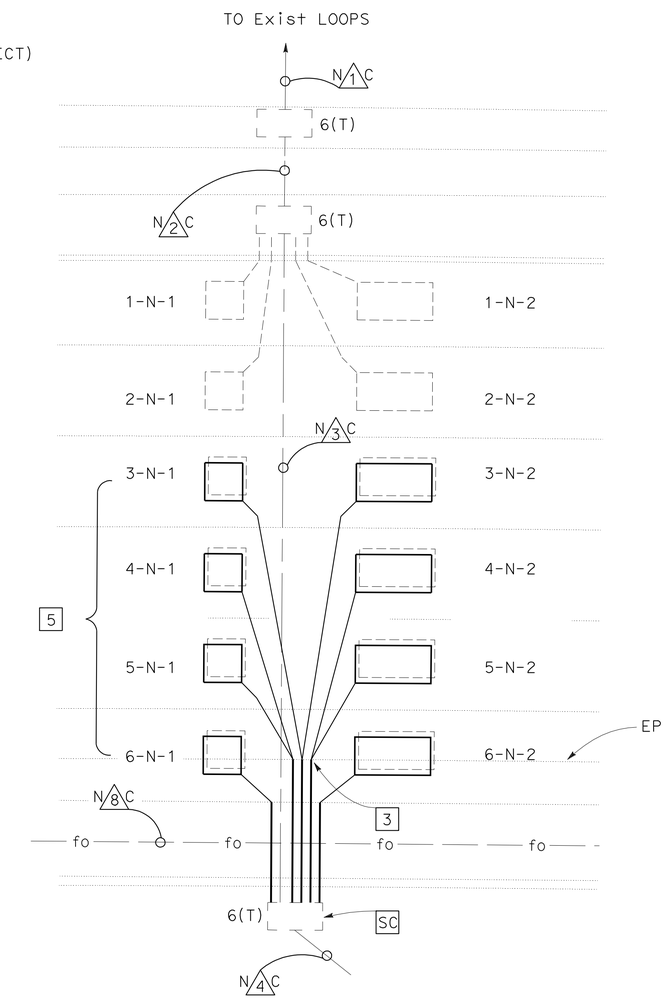

DETAIL "TMS1"
NO SCALE

TMS U7.328

TRAFFIC MONITORING STATION (LOCATION 1)

SCALE: 1" = 50'

E-2

THIS PLAN IS ACCURATE FOR ELECTRICAL WORK ONLY.

STATE OF CALIFORNIA - DEPARTMENT OF TRANSPORTATION
Caltrans TRAFFIC ELECTRICAL

FUNCTIONAL SUPERVISOR: DALE WILSON
CALCULATED-DESIGNED BY: HUA SAWAYA
CHECKED BY: ENRIQUE BERNAL
REVISED BY
DATE REVISED

LAST REVISION DATE PLOTTED => 31-AUG-2010
08-09-10 TIME PLOTTED => 15:34

Dist	COUNTY	ROUTE	POST MILES TOTAL PROJECT	SHEET No.	TOTAL SHEETS
11	SD	163	3.8/R11.1	34	49

Enrique P Bernal 07-29-10
REGISTERED ELECTRICAL ENGINEER DATE

08-02-10
PLANS APPROVAL DATE

REGISTERED PROFESSIONAL ENGINEER
ENRIQUE P. BERNAL
No. 15675
Exp. 06-30-12
ELECTRICAL
STATE OF CALIFORNIA

THE STATE OF CALIFORNIA OR ITS OFFICERS OR AGENTS SHALL NOT BE RESPONSIBLE FOR THE ACCURACY OR COMPLETENESS OF SCANNED COPIES OF THIS PLAN SHEET.

NOTES:

1 - Exist CONDUIT, PULL BOXES AND DETECTOR LOOPS TO REMAIN UNLESS OTHERWISE NOTED.

[2] - TO EXISTING SERVICE DISCONNECT A8.28 (240/480 V) LOCATED ON 4999 KEARNY VILLA ROAD AT TECH Ave.

[3] - EXTEND LOOP CONDUIT TERMINATIONS TO EP AS SHOWN.

4 - FOR LOOP PLACEMENT AND IDENTIFICATION SEE DETAILS ON THIS SHEET.

[5] - REPLACE Exist LOOPS IN THE SAME PLACES.

CONDUIT NOTES:

N/1 C - EX 3"C, 6 dlc

N/2 C - EX 3"C, 10 dlc

N/3 C - EX 3"C, 14 dlc

N/4 C - EX 3"C, 20 dlc
- EX 2"C, 2#6(tms)

N/5 C - EX 1"C, 1 fo12
- EX 1"C, mt.

N/6 C - EX 2"C, 2#6(tms)

N/7 C - EX 2"C, 2#8(ltg)
2#8(s)
2#6(tms)

N/8 C - EX MDCS(8), 1 fo60
1 fo84

LANE NUMBER
DIRECTION OF TRAVEL
LOOP NUMBER IN DIRECTION OF TRAVEL

2 - N - 1 (TYPICAL)

MAINLINE LOOP DETECTOR IDENTIFICATION

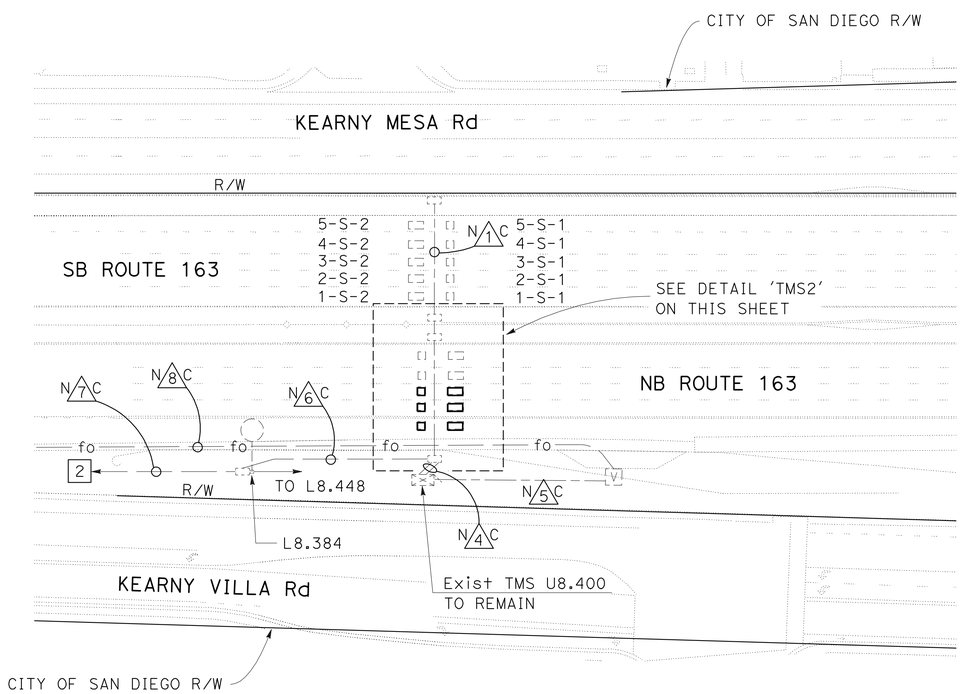

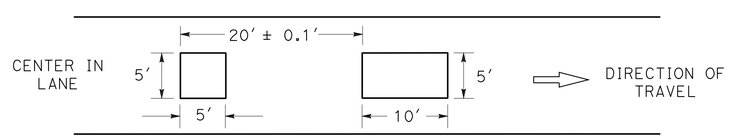

TYPE A LOOP PLACEMENT (Typ)

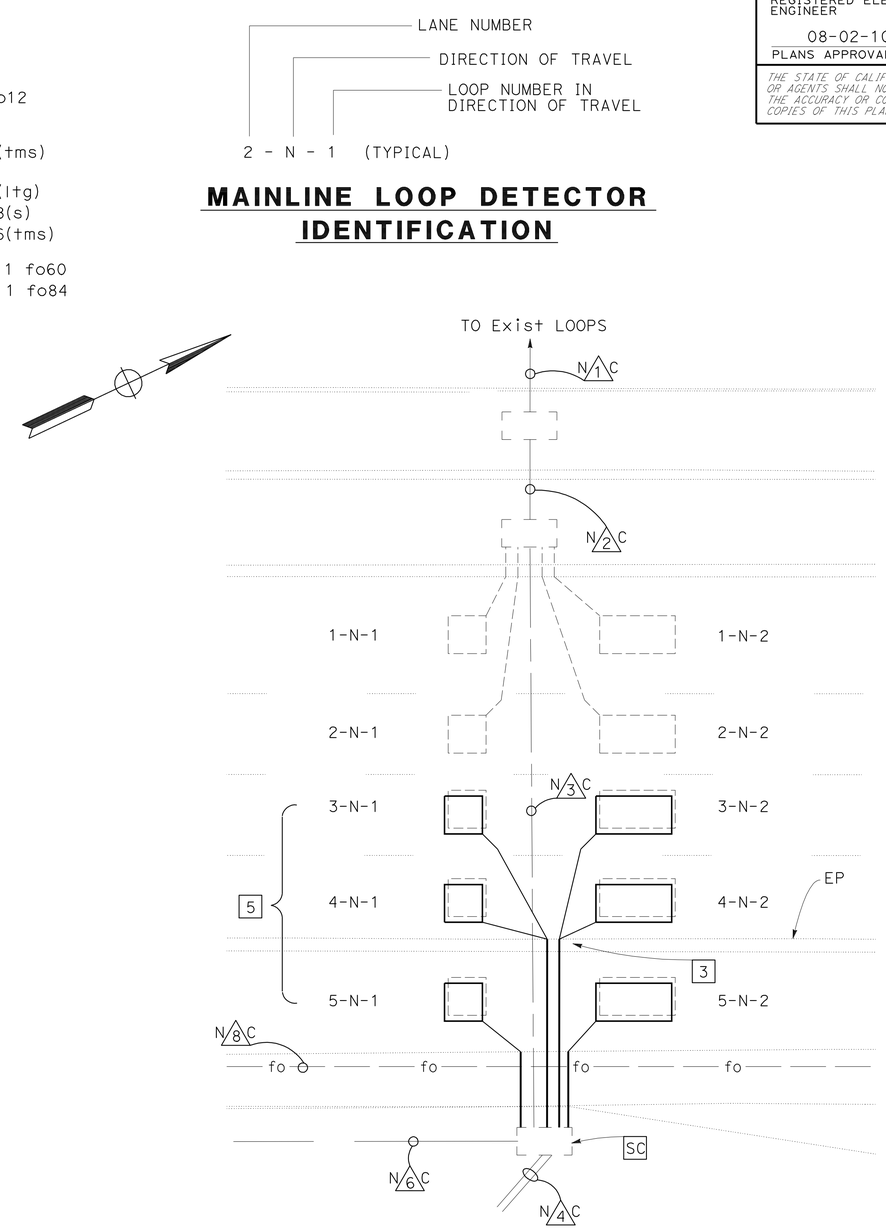

DETAIL "TMS2"
NO SCALE

TRAFFIC MONITORING STATION (LOCATION 2)

TMS U8.400

SCALE: 1" = 50'

E-3

THIS PLAN IS ACCURATE FOR ELECTRICAL WORK ONLY.

REVISED BY | DATE REVISED
HUA SAWAYA | ENRIQUE BERNAL
CALCULATED-DESIGNED BY | CHECKED BY
FUNCTIONAL SUPERVISOR | DALE WILSON

STATE OF CALIFORNIA - DEPARTMENT OF TRANSPORTATION
Caltrans® TRAFFIC ELECTRICAL

LAST REVISION 08-09-10 | DATE PLOTTED => 31-AUG-2010 | TIME PLOTTED => 15:34

DIST	COUNTY	ROUTE	POST MILES TOTAL PROJECT	SHEET NO.	TOTAL SHEETS
11	SD	163	3.8/R11.1	35	49

Randell D. Hiatt
REGISTERED CIVIL ENGINEER

June 6, 2008
PLANS APPROVAL DATE

REGISTERED PROFESSIONAL ENGINEER
Randell D. Hiatt
No. C50200
Exp. 6-30-09
CIVIL
STATE OF CALIFORNIA

The State of California or its officers or agents shall not be responsible for the accuracy or completeness of electronic copies of this plan sheet.

To accompany plans dated 08-02-10

NOTES:

1. When necessary to place dike in front of face of guard railing, only Type C dike may be used. For dike details, see Standard Plan A87B.
2. For standard railing post embedment, see Standard Plans A77C3.
3. Guard railing delineation to be used where shown on the Project Plans.
4. When dike or curb is placed under guard railing, the maximum height of the dike or curb shall be 4". Mountable dike should not be used. For dike and curb details, see Revised Standard Plans RSP A87A and Standard Plan A87B.
5. For details of typical distance between the face of rail and hinge point, see Standard Plan A77C3.

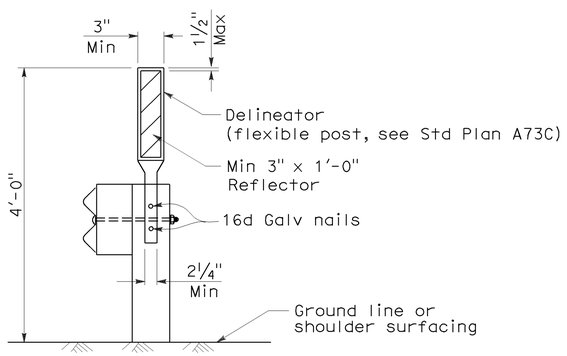

GUARD RAILING DELINEATION

See Note 3

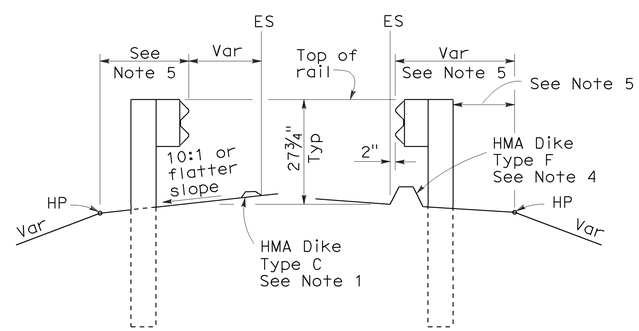

DIKE POSITIONING

See Note 1

STATE OF CALIFORNIA
DEPARTMENT OF TRANSPORTATION

METAL BEAM GUARD RAILING TYPICAL RAILING DELINEATION AND DIKE POSITIONING DETAILS

NO SCALE

RSP A77C4 DATED JUNE 6, 2008 SUPERSEDES STANDARD PLAN A77C4
DATED MAY 1, 2006 - PAGE 47 OF THE STANDARD PLANS BOOK DATED MAY 2006.

REVISED STANDARD PLAN RSP A77C4

2006 REVISED STANDARD PLAN RSP A77C4

12-10-07

DIST	COUNTY	ROUTE	POST MILES TOTAL PROJECT	SHEET NO.	TOTAL SHEETS
11	SD	163	3.8/R11.1	36	49

Randell D. Hiatt
REGISTERED CIVIL ENGINEER

June 6, 2008
PLANS APPROVAL DATE

REGISTERED PROFESSIONAL ENGINEER
Randell D. Hiatt
No. C50200
Exp. 6-30-09
CIVIL
STATE OF CALIFORNIA

The State of California or its officers or agents shall not be responsible for the accuracy or completeness of electronic copies of this plan sheet.

To accompany plans dated 08-02-10

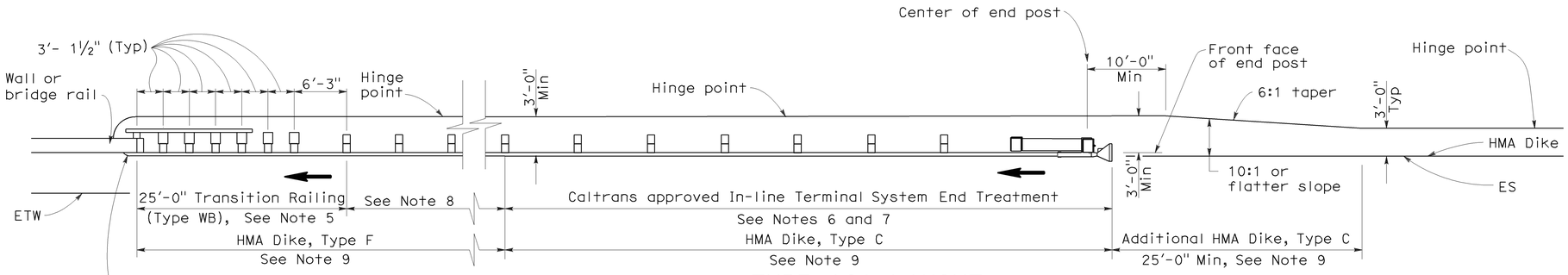

TYPE 12A LAYOUT

(GUARD RAILING INSTALLATION AT STRUCTURE APPROACH WITH AN IN-LINE END TREATMENT AT TRAFFIC APPROACH END OF RAILING)
See Notes 10

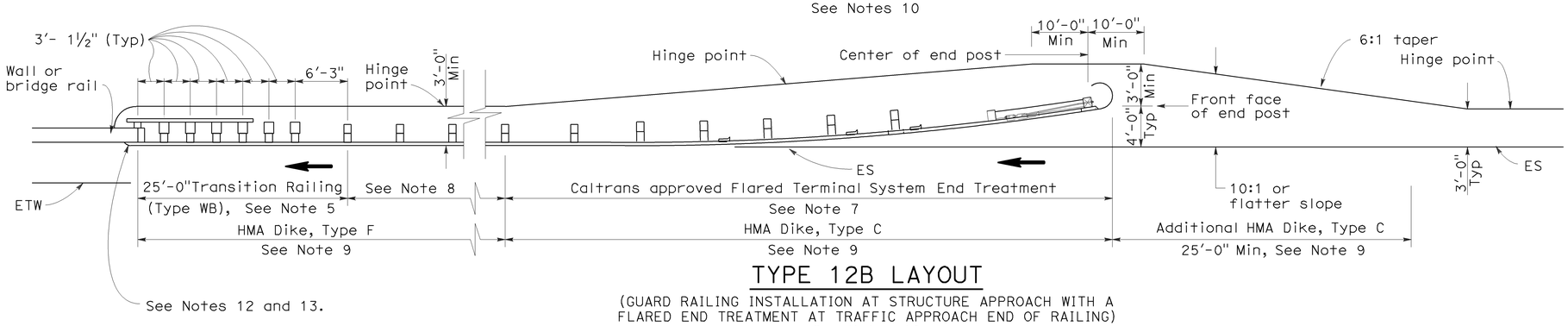

TYPE 12B LAYOUT

(GUARD RAILING INSTALLATION AT STRUCTURE APPROACH WITH A FLARED END TREATMENT AT TRAFFIC APPROACH END OF RAILING)
See Notes 10

NOTES:

1. Line post, blocks and hardware to be used are shown on Standard Plans A77A1, A77A2, A77B1, A77C1 and A77C2.
2. Guard rail post spacing to be 6'-3" center to center, except as otherwise noted.
3. Except as noted, line posts are 6" x 8" x 6'-0" wood with 6" x 8" x 1'-2" wood blocks. W6 x 9 steel posts, 6'-0" in length, with 6" x 8" x 1'-2" notched wood blocks or plastic blocks may be used for 6" x 8" x 6'-0" wood posts with 6" x 8" x 1'-2" wood blocks where applicable and when specified.
4. Direction of adjacent traffic indicated by ➡.
5. For Transition Railing (Type WB) details for Types 12A and 12B Layouts, see Standard Plan A77J4.
6. In-line Terminal System End Treatments are used where site conditions will not accommodate a flared end treatment.
7. The type of terminal system end treatment to be used will be shown on the Project Plans.
8. Dependent on site conditions (embankment height, side slopes, or other fixed objects), it may be advisable to construct additional guard railing (a length equal to multiples of 12'-6" with 6'-3" post spacing) between the transition railing and end treatment.
9. Where placement of dike is required with guard railing installations, see Revised Standard Plan RSP A77C4 for dike positioning details.
10. Type 12A or Type 12B Layouts are typically used:
    a. To the right of approaching traffic, at the end of a structure, on two-lane conventional highway where the roadbed width across the structure is less than 40 feet.
    b. To the left of approaching traffic, at the end of a structure, on two-lane conventional highway where the roadbed width across the structure is less than 40 feet.
    c. To the right of approaching traffic at the end of each structure on multilane freeways or expressways with separate adjacent or parallel bridges.
    d. To the right of approaching traffic at the end of the structure on multilane freeways or expressways with decked median on the bridge.
11. See Revised Standard Plan RSP A77F3 for typical layout used left of approaching traffic at the ends of each structure on multilane freeways or expressways with separate adjacent or parallel bridges.
12. For additional details of typical connections to bridge rail, see Connection Detail AA on Revised Standard Plans RSP A77J1 and RSP A77J2 and Connection Detail FF on Standard Plans A77K1 and A77K2.
13. For additional details of a typical connection to walls or abutments, see Standard Plan A77J3.

STATE OF CALIFORNIA
DEPARTMENT OF TRANSPORTATION

METAL BEAM GUARD RAILING TYPICAL LAYOUTS FOR STRUCTURE APPROACH

NO SCALE

RSP A77F1 DATED JUNE 6, 2008 SUPERSEDES STANDARD PLAN A77F1
DATED MAY 1, 2006 - PAGE 54 OF THE STANDARD PLANS BOOK DATED MAY 2006.

REVISED STANDARD PLAN RSP A77F1

2006 REVISED STANDARD PLAN RSP A77F1

DIST	COUNTY	ROUTE	POST MILES TOTAL PROJECT	SHEET NO.	TOTAL SHEETS
11	SD	163	3.8/R11.1	37	49

Randell D. Hiatt
REGISTERED CIVIL ENGINEER

June 6, 2008
PLANS APPROVAL DATE

REGISTERED PROFESSIONAL ENGINEER
Randell D. Hiatt
No. C50200
Exp. 6-30-09
CIVIL
STATE OF CALIFORNIA

The State of California or its officers or agents shall not be responsible for the accuracy or completeness of electronic copies of this plan sheet.

To accompany plans dated 08-02-10

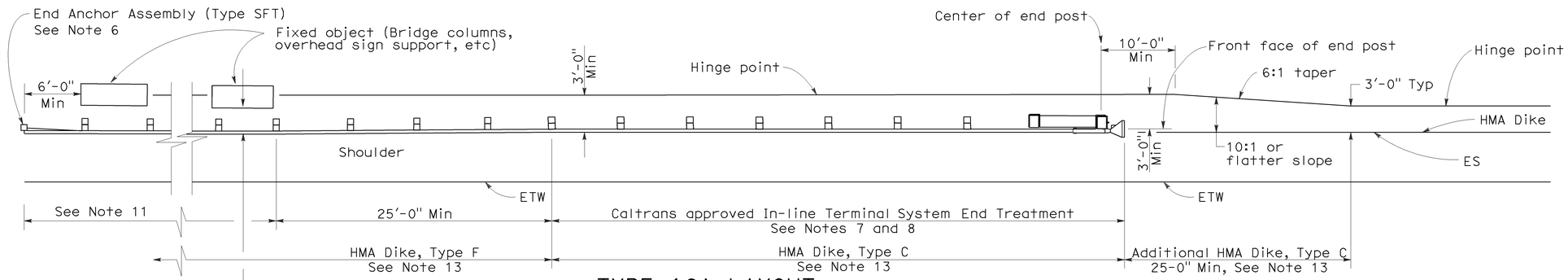

TYPE 16A LAYOUT

(GUARD RAILING INSTALLATION AT ROADSIDE FIXED OBJECT OR OBJECTS WITH AN IN-LINE END TREATMENT AT TRAFFIC APPROACH END OF RAILING)
See Notes 12 and 13

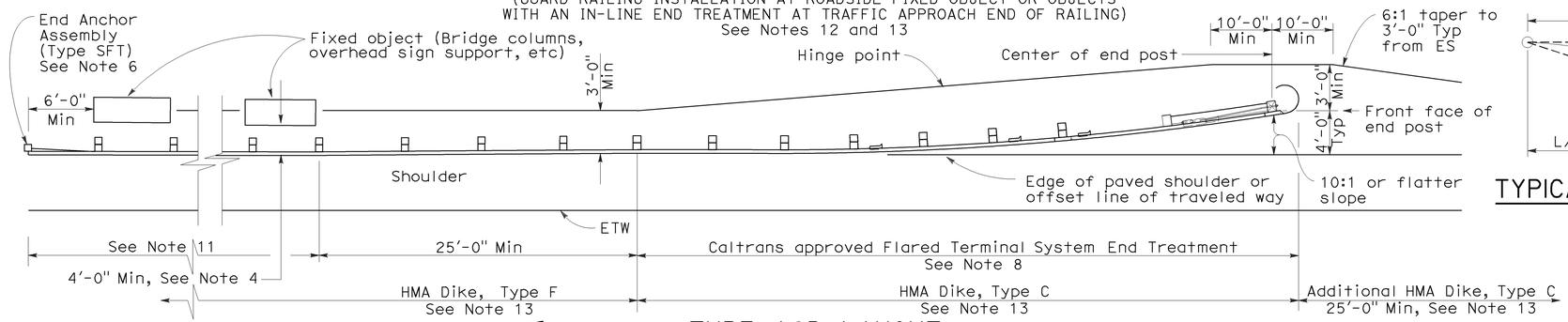

TYPE 16B LAYOUT

(GUARD RAILING INSTALLATION AT ROADSIDE FIXED OBJECT OR OBJECTS WITH A FLARED END TREATMENT AT TRAFFIC APPROACH END OF RAILING)
See Notes 12 and 13

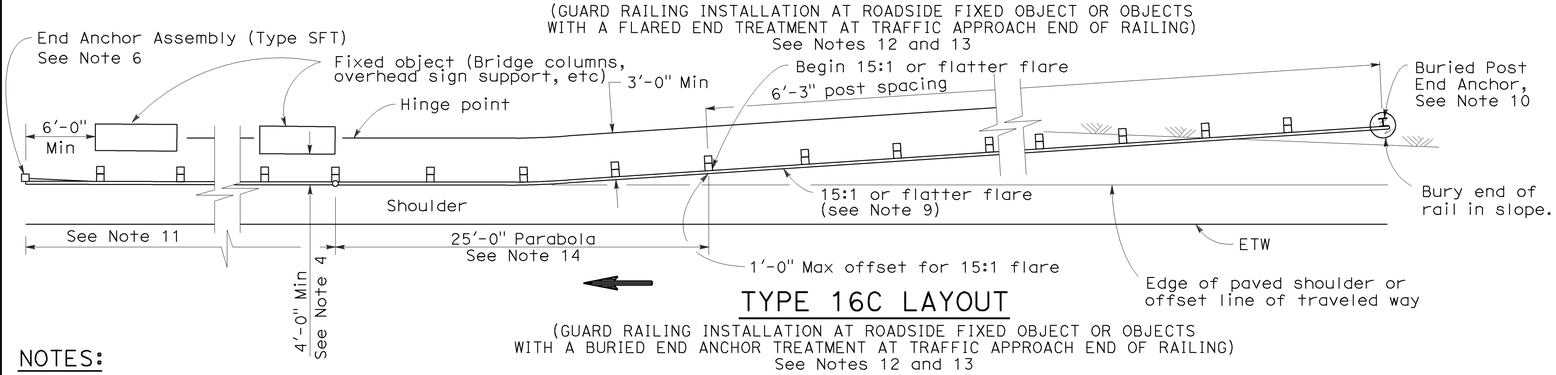

TYPE 16C LAYOUT

(GUARD RAILING INSTALLATION AT ROADSIDE FIXED OBJECT OR OBJECTS WITH A BURIED END ANCHOR TREATMENT AT TRAFFIC APPROACH END OF RAILING)
See Notes 12 and 13

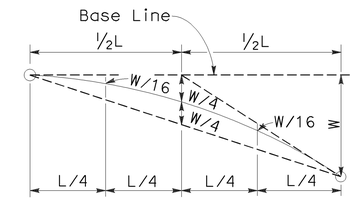

TYPICAL PARABOLIC LAYOUT

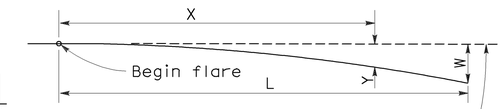

Base Line (Edge of paved shoulder or offset line of edge of traveled way)

$$Y = \frac{WX^2}{L^2}$$

Y = Offset from base line
W = Maximum offset
X = Distance along base line
L = Length of flare

PARABOLIC FLARE OFFSETS

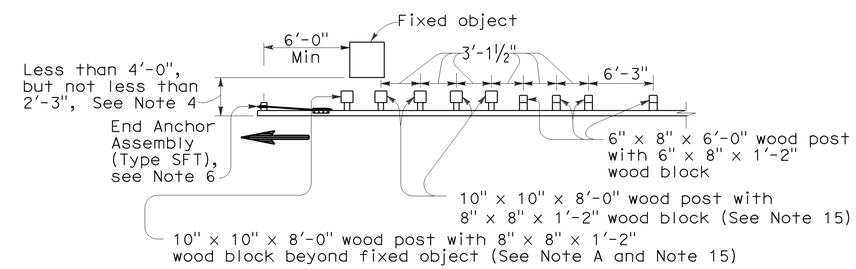

NOTE A: For a series of fixed objects (bridge columns, overhead sign supports, etc.) additional 10" x 10" x 8'-0" wood post with 8" x 8" x 1'-2" wood blocks at 3'-1½" center to center spacing are to be used between fixed objects.

STRENGTHENED RAILING SECTIONS FOR FIXED OBJECT

Use strengthened railing sections with Types 16A, 16B or 16C Layouts where minimum clearance between the face of the guard railing and fixed object(s) is less than 4'-0", but not less than 2'-3". See Note 4

NOTES:

1. Line post, blocks and hardware to be used are shown on Revised Standard Plans A77A1, A77A2, A77B1, A77C1 and A77C2.
2. Guard railing post spacing to be 6'-3" center to center, except as otherwise noted.
3. Except as noted, line posts are 6" x 8" x 6'-0" wood with 6" x 8" x 1'-2" wood blocks. W6 x 9 steel posts, 6'-0" in length, with 6" x 8" x 1'-2" notched wood blocks or notched recycled plastic blocks may be used for 6" x 8" x 6'-0" wood line posts with 6" x 8" x 1'-2" wood blocks where applicable and when specified.
4. A 4'-0" minimum clearance is required between the face of the railing and the face of a fixed object located directly behind standard guard railing sections with post spacing of 6'-3". Construct guard railing as shown in the detail "Strengthened Railing Sections for Fixed Objects" on this plan, where the clearance between the face of the railing and the face of a fixed object is less than 4'-0", but not less than 2'-3". Where the clearance is less than 2'-3", a concrete wall or barrier should be constructed to shield the fixed object(s).
5. Direction of adjacent traffic indicated by ⟶.
6. For End Anchor Assembly (Type SFT) details, see Standard Plan A77H1.
7. In-line Terminal System End Treatments are used where site conditions will not accommodate a flared end treatment.
8. The type of terminal system to be used will be shown on the Project Plans.
9. The 15:1 or flatter flare used with Type 16C Layout is based on the edge of the paved shoulder or offset line of edge of the traveled way. The length of guard railing within the 15:1 or flatter flare is based on site conditions and should be a length equal to multiples of 12'-6".
10. For details of the Buried Post End Anchor used with Type 16C Layout, see Standard Plan A77I2.
11. As site conditions dictate, construct additional guard railing to shield fixed object(s). Additional guard railing length equal to multiples of 12'-6". Post spacing at 6'-3" except as specified in Note 4.
12. Layout Types 16A, 16B or 16C are typically used where guard railing is recommended to shield roadside fixed object(s) and a crashworthy end treatment is required for only one direction of traffic.
13. Where placement of dike is required with guard railing, see Revised Standard Plan RSP A77C4 for dike positioning details.
14. For typical flare offsets for 25'-0" length parabola with maximum offset of 1'-0", see Revised Standard Plan RSP A77E1.
15. W6 x 15 steel post, 8'-0" in length, with 8" x 8" x 1'-2" notched wood block or notched recycled plastic blocks may be used in place of the 10" x 10" x 8'-0" wood post with 8" x 8" x 1'-2" wood block shown in the "Strengthened Railing Sections Detail".

STATE OF CALIFORNIA
DEPARTMENT OF TRANSPORTATION

METAL BEAM GUARD RAILING TYPICAL LAYOUTS FOR ROADSIDE FIXED OBJECTS

NO SCALE

RSP A77G3 DATED JUNE 6, 2008 SUPERSEDES STANDARD PLAN A77G3 DATED MAY 1, 2006 - PAGE 61 OF THE STANDARD PLANS BOOK DATED MAY 2006.

REVISED STANDARD PLAN RSP A77G3

2006 REVISED STANDARD PLAN RSP A77G3

12-10-07

DIST	COUNTY	ROUTE	POST MILES TOTAL PROJECT	SHEET NO.	TOTAL SHEETS
11	SD	163	3.8/R11.1	38	49

Randell D. Hiatt
REGISTERED CIVIL ENGINEER

June 5, 2009
PLANS APPROVAL DATE

REGISTERED PROFESSIONAL ENGINEER
Randell D. Hiatt
No. C50200
Exp. 6-30-09
CIVIL
STATE OF CALIFORNIA

The State of California or its officers or agents shall not be responsible for the accuracy or completeness of electronic copies of this plan sheet.

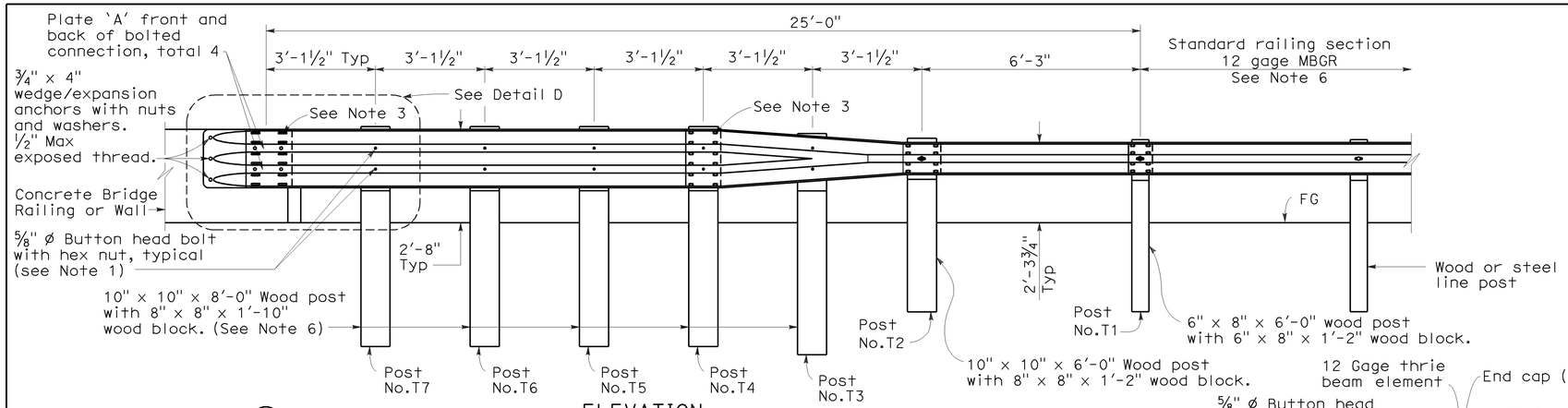

ELEVATION

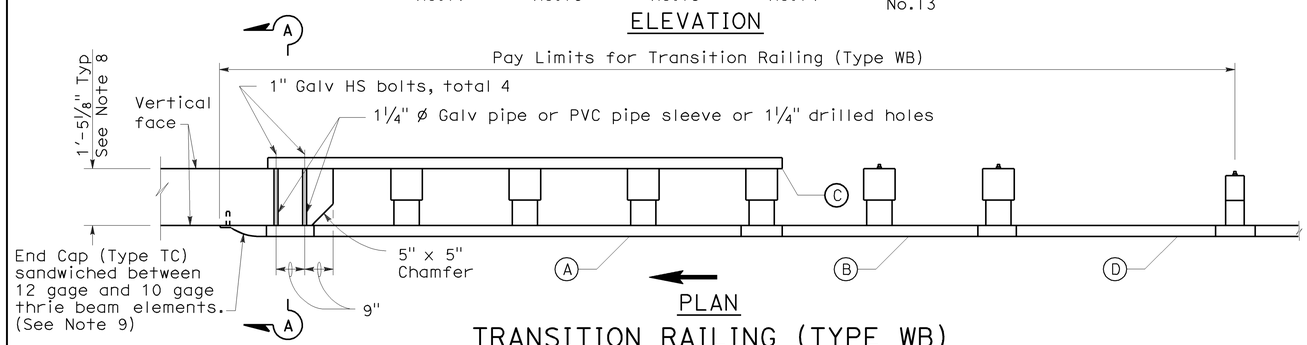

PLAN

TRANSITION RAILING (TYPE WB)

(No Blockout Attachment)

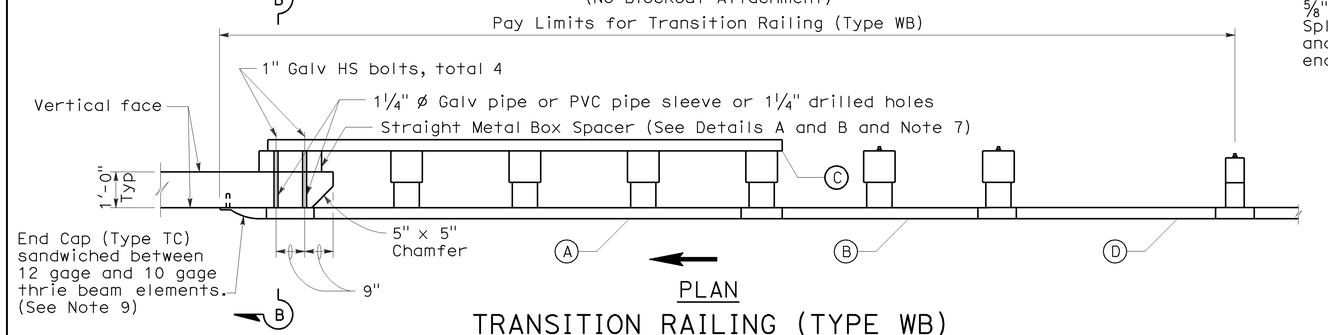

PLAN

TRANSITION RAILING (TYPE WB)

(Blockout Attachment)

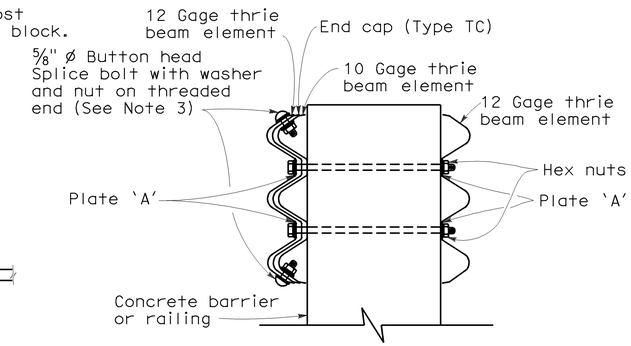

SECTION A-A

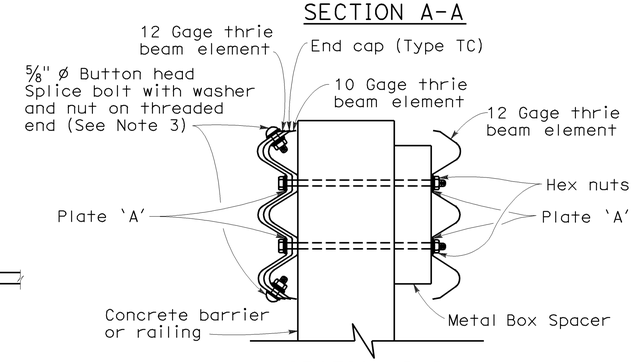

SECTION B-B

LEGEND

(A) Nested thrie beam elements (one 12 gage element nested over one 10 gage element).

(B) One 10 gage "W" beam to thrie beam element.

(C) One 12 gage thrie beam element.

(D) One 10 gage "W" beam rail element (7'-3½" length)

10 gage = 0.135" thick

12 gage = 0.108" thick

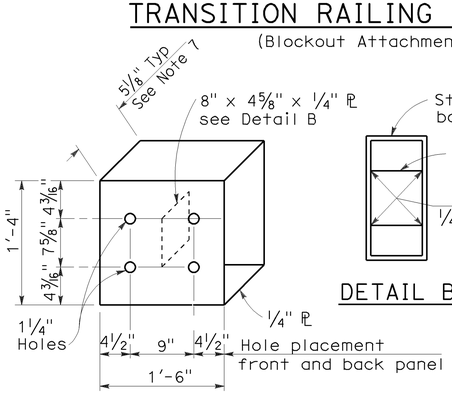

DETAIL A

STRAIGHT METAL BOX SPACER

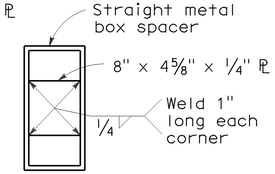

DETAIL B

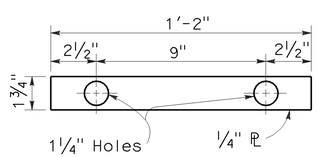

DETAIL C

PLATE 'A'

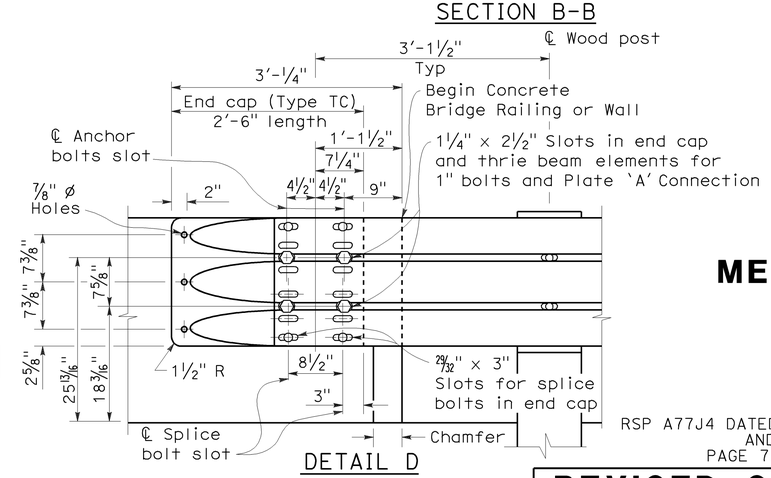

DETAIL D

NOTES: *To accompany plans dated* 08-02-10

1. Use 5/8 " ø Button head bolts and hex nuts for connections to posts. No washer on rail face for bolted connections to post.
2. The nested rail elements, end cap, and 'W' beam to thrie beam element may be spliced together prior to bolting the elements to the wood post and concrete barrier or railing.
3. Exterior splice bolt holes for rail element splices at Post No.T4 and the connection to the concrete barrier or railing shall be the standard 29/32 " x 1 1/8 " slot size. Interior splice bolt holes at these locations may be increased up to 1 1/4 " ø. Only the top 2 and the bottom 2 splice bolts with washers and nuts are required for rail splices at Post No.T4 and the connection to the concrete barrier or railing.
4. Direction of adjacent traffic indicated by →.
5. The top elevation of Post Nos.T2 through T7 shall not project more than 1" above the top elevation of the rail element.
6. Typically, the railing connected to Transition Railing (Type WB) will be either standard railing section of metal beam guard railing or an approved Caltrans end treatment attached to Post No.T1.
7. The depth of the metal box spacer varies from the 5 1/8 " to 1 1/2 " and is dependent on the width of the concrete railing or wall. The combined dimension for the depth of the metal box spacer plus the width of railing or wall is typically 17 1/8 ". Where the space between the backside of the concrete railing or wall and the rear thrie beam element is less than 1 1/2 ", metal plates similar to Plate 'A' are to be used as spacers.
8. Where the width of the concrete railing or wall is greater than 17 1/8 ", wood blocks are to be used to fill the space created between the backside of Posts No.4 through No.7 and the rear thrie beam element. These wood blocks shall be 8" in width and 1'-2" in length. The dimension between the front thrie beam element and the rear thrie beam element is to match the width of the concrete railing or wall.
9. End cap may be installed over 12 gage and 10 gage thrie beam elements where transition railing is installed on the departure end of bridge railing.

STATE OF CALIFORNIA
DEPARTMENT OF TRANSPORTATION

METAL BEAM GUARD RAILING TRANSITION RAILING (TYPE WB)

NO SCALE

RSP A77J4 DATED JUNE 5, 2009 SUPERSEDES RSP A77J4 DATED JUNE 6, 2008 AND STANDARD PLAN A77J4 DATED MAY 1, 2006 - PAGE 75 OF THE STANDARD PLANS BOOK DATED MAY 2006.

REVISED STANDARD PLAN RSP A77J4

2006 REVISED STANDARD PLAN RSP A77J4

5-14-09

DIST	COUNTY	ROUTE	POST MILES TOTAL PROJECT	SHEET NO.	TOTAL SHEETS
11	SD	163	3.8/R11.1	39	49

REGISTERED ELECTRICAL ENGINEER

October 5, 2007
PLANS APPROVAL DATE

REGISTERED PROFESSIONAL ENGINEER Jeffery G. McRae No. E14512 Exp. 6-30-08 ELECTRICAL STATE OF CALIFORNIA

The State of California or its officers or agents shall not be responsible for the accuracy or completeness of electronic copies of this plan sheet.

To accompany plans dated 08-02-10

2006 REVISED STANDARD PLAN RSP ES-1A

ELECTROLIERS

STANDARD TYPES
15, 15D
15 STRUCTURE
21, 21D STRUCTURE
30
31
32
35
36-20A

High mast light pole

Double Arm lighting standard

Existing electrolier

Electrolier foundation (Future installation)

NOTES:

1. Luminaires shall be 310 W HPS when installed on Type 21, 21D, 30, 31, 32, 35 and 36-20A Standards, unless otherwise specified. Luminaires shall be 200 W HPS when installed on other type standards or poles, unless otherwise specified.
2. Luminaires shall be the cutoff type, ANSI Type III medium cutoff lighting distribution, unless otherwise specified.
3. Variations noted adjacent to symbol on project plans.

Electrolier (see project notes or project plans)

Luminaire on wood pole

STANDARD NOTES:

- AB — Abandon. If applied to conduit, remove conductors.
- BC — Install pull box in existing conduit run.
- BP — Pedestrian barricade, type as indicated on plan.
- CB — Install conduit into existing pull box.
- CC — Connect new and existing conduit. Remove existing conductors and install conductors as indicated.
- CF — Conduit to remain for future use. Remove conductors. Install pull wire or rope.
- DH — Detector handhole.
- FA — Foundation to be abandoned.
- IS — Install sign on signal mast arm.
- NS — No slip base on standard.
- PEC — Photoelectric control.
- PEU — Photoelectric unit.
- RC — Equipment or material to be removed and become the property of the Contractor.
- RE — Remove electrolier, fuses and ballast. Tape ends of conductors.
- RL — Relocate equipment.
- RR — Remove and reuse equipment.
- RS — Remove and salvage equipment.
- SC — Splice new to existing conductors.
- SD — Service disconnect.
- SF — Standard to remain for future use. Remove luminaire, pole conductors, fuses and ballast.
- TSP — Telephone service point.

ABBREVIATIONS AND EQUIPMENT DESIGNATIONS

PROPOSED	EXISTING	
BBS	bbs	Battery backup system
BC	bc	Bolt circle
C	C	Conduit
CCTV	cctv	Closed circuit television
CKT	ckt	Circuit
CMS	cms	Changeable message sign
DLC	dlc	Loop detector lead-in cable
EMS	ems	Extinguishable message sign
EVC	evc	Emergency vehicle cable
EVD	evd	Emergency vehicle detector
FB	fb	Flashing beacon
FBCA	fbca	Flashing beacon control assembly
FBS	fbs	Flashing beacon with slip base
FO	fo	Fiber optic
G	G	Ground (Equipment Grounding Conductor)
GFCI	GFCI	Ground fault circuit interrupt
HAR	har	Highway advisory radio
HEX	hex	Hexagonal
HPS	hps	High pressure sodium
IISNS	iisns	Internally illuminated street name sign
ISL	isl	Induction sign lighting
LED	led	Light emitting diode
LMA	lma	Luminaire mast arm
LPS	lps	Low pressure sodium
LTG	ltg	Lighting
LUM	lum	Luminaire
MAT	mat	Mast arm mounting vehicle signal faces, top attachment
MAS	mas	Mast arm mounting vehicle signal faces, side attachment
MAS-4A	mas-4A	Mast arm mounting vehicle signal faces, side attachment - 4 signal section
MAS-4B	mas-4B	
MAS-4C	mas-4C	
MAS-5A	mas-5A	Mast arm mounting vehicle signal faces, side attachment - 5 signal section
MAS-5B	mas-5B	
MC	mc	Mercury contactor
M/M	m/m	Multiple to multiple transformer
MT	mt	Conduit with pull wire or rope only
MTG	mtg	Mounting
	mv	Mercury vapor lighting fixture
N	N	Neutral (Grounded Conductor)
NC	NC	Normally closed
NO	NO	Normally open
PB	pb	Pull box
PEC	pec	Photoelectric control (Type I, II, III, IV or V as shown)
PED	ped	Pedestrian
PEU	peu	Photoelectric unit
PPB	ppb	Pedestrian push button
RL		Relocated equipment
RM	rm	Ramp metering
SB	sb	Slip base
SIC	sic	Signal interconnect cable
SIG	sig	Signal
SMA	sma	Signal mast arm
SNS	sns	Street name sign
SP	sp	Service point
TDC	tdc	Telephone demarcation cabinet
TMS	tms	Traffic monitoring station
TOS	tos	Traffic Operations System
VEH	veh	Vehicle
XFMR	xfmr	Transformer
COMM	comm	Communication
RWIS	rwis	Roadway weather information system

SOFFIT AND WALL MOUNTED LUMINAIRES

Pendant, 70 W HPS unless otherwise specified.

Flush, 70 W HPS unless otherwise specified.

Wall surface, 70 W HPS unless otherwise specified.

Existing soffit or wall luminaire to remain unmodified.

Existing soffit or wall luminaire to be modified as specified.

NOTE:

Arrow indicates "street side" of luminaire.

STATE OF CALIFORNIA
DEPARTMENT OF TRANSPORTATION

ELECTRICAL SYSTEMS (SYMBOLS AND ABBREVIATIONS)

NO SCALE

RSP ES-1A DATED OCTOBER 5, 2007 SUPERSEDES STANDARD PLAN ES-1A DATED MAY 1, 2006 - PAGE 400 OF THE STANDARD PLANS BOOK DATED MAY 2006.

REVISED STANDARD PLAN RSP ES-1A

DIST	COUNTY	ROUTE	POST MILES TOTAL PROJECT	SHEET NO.	TOTAL SHEETS
11	SD	163	3.8/R11.1	40	49

REGISTERED ELECTRICAL ENGINEER

October 5, 2007
PLANS APPROVAL DATE

REGISTERED PROFESSIONAL ENGINEER Jeffery G. McRae No. E14512 Exp. 6-30-08 ELECTRICAL STATE OF CALIFORNIA

The State of California or its officers or agents shall not be responsible for the accuracy or completeness of electronic copies of this plan sheet.

To accompany plans dated 08-02-10

CONDUIT

PROPOSED	EXISTING	
		Lighting Conduit, unless otherwise indicated or noted
		Traffic signal conduit
C	c	Communication conduit
T	t	Telephone conduit
F	f	Fire alarm conduit
FO	fo	Fiber optic conduit
		Conduit termination (RSP ES-9A C)
R	r	Conduit riser in/on structure or service pole

SERVICE EQUIPMENT

PROPOSED	EXISTING	
OH	oh	Overhead lines
U	U	Wood pole "U" indicates utility owned
		Pole guy with anchor
		Utility transformer - ground mounted
III		Service equipment enclosure type
		Service equipment enclosure door indicates front of enclosure
T	t	Telephone demarcation cabinet

POLE-MOUNTED SERVICE DESIGNATION

Type of installation

TYPE H SERVICE - 28'-10" ← Pole height above grade

ILLUMINATED OVERHEAD SIGN

PROPOSED	EXISTING	
		Overhead sign - Single post
		Overhead sign - Two post
		Overhead sign - Mounted on structure
		Overhead sign with electrolier

SIGNAL EQUIPMENT

PROPOSED	EXISTING	
		Pedestrian signal face
		Pedestrian push button post
		Pedestrian barricade
		Vehicle signal face (with backplate, 3-Section: red, yellow and green)
		Vehicle signal face with angle visors
PV	PV	Modifications of basic symbols: "L" Indicates all non-arrow sections louvered "LG" Indicates louvered green section only "PV" indicates 12" programmed visibility sections "8" indicates all 8" sections (only when specified)
		Type 15TS and Vehicle signal face
		Vehicle signal face with red, yellow and green left arrow sections
		Vehicle signal face with red and yellow sections and up green arrow
		Vehicle signal face (5 Section) with red, yellow and green sections and yellow and green right arrows
		Type 1 Standard and attached vehicle signal faces
		Standard with signal mast arm only and attached vehicle signal faces and internally illuminated street name sign
		Type 33 Standard, Left-turn vehicle signal face and sign
		Standard with luminaire and signal mast arms and attached vehicle signal faces
		Cantilever flashing beacon Type 9 Frame, with a sign unless otherwise specified or indicated
		Type 15-FBS Standard with two vehicle signal face sections with lens, backplate and visor with a sign
R	Y	Flashing beacon. One vehicle signal face section with lens, backplate and visor. "R" indicates red indication, "Y" indicates yellow indication
		Controller assembly. Door indicates front of cabinet

SIGNAL EQUIPMENT Cont

PROPOSED	EXISTING	
		Guard post
		Type 1 Standard with "Meter On" sign
		Emergency Vehicle detector

NOTES:

1. All signal sections shall be 12" unless shown otherwise.
2. Signal heads shall be provided with backplates unless shown otherwise.
3. Signal indication shall be LED.

STATE OF CALIFORNIA
DEPARTMENT OF TRANSPORTATION

ELECTRICAL SYSTEMS (SYMBOLS AND ABBREVIATIONS)

NO SCALE

RSP ES-1B DATED OCTOBER 5, 2007 SUPERCEDES STANDARD PLAN ES-1B DATED MAY 1, 2006 - PAGE 401 OF THE STANDARD PLANS BOOK DATED MAY 2006.

REVISED STANDARD PLAN RSP ES-1B

2006 REVISED STANDARD PLAN RSP ES-1B

7-10-07

DIST	COUNTY	ROUTE	POST MILES TOTAL PROJECT	SHEET NO.	TOTAL SHEETS
11	SD	163	3.8/R11.1	41	49

Jeffery G. McRae
REGISTERED ELECTRICAL ENGINEER

October 5, 2007
PLANS APPROVAL DATE

REGISTERED PROFESSIONAL ENGINEER
Jeffery G. McRae
No. E14512
Exp. 6-30-08
ELECTRICAL
STATE OF CALIFORNIA

The State of California or its officers or agents shall not be responsible for the accuracy or completeness of electronic copies of this plan sheet.

To accompany plans dated 08-02-10

EQUIPMENT IDENTIFICATION

ILLUMINATED SIGN IDENTIFICATION NUMBER:

Sign No. 12345 — Sign number - Place on post or structure

10 ISL SCI 1.0
- 1.0 — Transformer rating (kVA)
- SCI — Lighting control type
- ISL — Number and type of fixtures

Do NOT place on standard or structure

ELECTROLIER OR EQUIPMENT IDENTIFICATION NUMBER:

12345 - 15'-0"
- 15'-0" — Mast arm length, if shown. Do not place on standard or structure.
- 12345 — Equipment number - Place on standard or structure. Existing equipment numbers are shown in parenthesis

CONDUIT AND CONDUCTOR IDENTIFICATION:

1½"C, 2#10, 15#14, 2 DLC
- 2#10, 15#14, 2 DLC — Number and size of conductors and cables
- 1½"C — Size of conduit in inches

Ø1, Ø2, Ø2P, etc.	Traffic phase identification for signal faces, detectors and phase diagrams
1 2 3	Project note numbers
A B C	Equipment description, installation or item numbers
1 2 3	Conduit run numbers

SIGNAL AND LIGHTING STANDARD (TYPICAL DESIGNATION):

19A - 3 - 100
- 100 — Wind velocity = 100 mph
- 3 — Case 3 arm loading
- 19A — Standard type
- Standard Plan sheet number
- Detail number or letter

MISCELLANEOUS EQUIPMENT

PROPOSED	EXISTING	
CMS	cms	Changeable message sign
		Closed circuit television camera
		Highway advisory radio pole and antenna
EMS	ems	Extinguishable message sign
M V	m v	Detection device M = Microwave sensor V = Video image sensor

WIRING DIAGRAM LEGEND

P	Pole
CB	Circuit breaker
A	Ampere
V	Volt
M	Metered
UM	Unmetered
NB	Neutral bus
GB	Ground bus
G	Equipment grounding conductor
N	Grounded conductor (Neutral)

- External conductor
- Conductor or bus
- Tie point
- Contactor coil
- Contactor, Contact NO
- Terminal blocks
- Contactor, Contact NC
- Enclosure bond
- Grounding electrode
- Circuit breaker
- Receptacle

PULL BOXES

PROPOSED EXISTING

Pull box-No. 5 unless otherwise indicated or noted.

3 — 9A(21)

Pull box-Additional designations or descriptions

3 = No. 3½ pull box
5 = No. 5 pull box
6 = No. 6 pull box
7 = No. 7 (Ceiling pull box)
8 = No. 8 (Pendant soffit pull box)
9 = No. 9 pull box
9A = No. 9A pull box

(C) = Communications pull box
(E) = Pull box with extension
(S) = Sprinkler control pull box
(21) = Anchor bolts and conduit for future installation of Type 21 Standard
(T) = Traffic pull box

VEHICLE DETECTORS

5 J 9 U
- U = Upper
- L = Lower
- Slot number in input file
- Input file (I or J)
- Phase

PROPOSED	EXISTING	
		Type A detector loop. Outline of sawcut shown.
		Type B detector loop. Outline of sawcut shown.
		Type C detector loop. Outline of sawcut shown.
		Type D detector loop. Outline of sawcut shown.
		Type E detector loop. Outline of sawcut shown.
		Type Q detector loop. Outline of sawcut shown.
		Magnetic detector
DH	dh	Detector handhole
		Microwave or video detection zone

STATE OF CALIFORNIA
DEPARTMENT OF TRANSPORTATION

ELECTRICAL SYSTEMS (SYMBOLS AND ABBREVIATIONS)

NO SCALE

RSP ES-1C DATED OCTOBER 5, 2007 SUPERCEDES STANDARD PLAN ES-1C DATED MAY 1, 2006 - PAGE 402 OF THE STANDARD PLANS BOOK DATED MAY 2006.

REVISED STANDARD PLAN RSP ES-1C

2006 REVISED STANDARD PLAN RSP ES-1C

7-10-07

DIST	COUNTY	ROUTE	POST MILES TOTAL PROJECT	SHEET NO.	TOTAL SHEETS
11	SD	163	3.8/R11.1	42	49

Jeffery G. McRae
REGISTERED ELECTRICAL ENGINEER

October 5, 2007
PLANS APPROVAL DATE

REGISTERED PROFESSIONAL ENGINEER Jeffery G. McRae No. E14512 Exp. 6-30-08 ELECTRICAL STATE OF CALIFORNIA

The State of California or its officers or agents shall not be responsible for the accuracy or completeness of electronic copies of this plan sheet.

To accompany plans dated 08-02-10

2006 REVISED STANDARD PLAN RSP ES-5A

LOOP INSTALLATION PROCEDURE

1. Loops shall be centered in lanes.
2. Saw slots in pavement for loop conductors as shown in details.
3. Distance between side of loop and a lead-in saw cut from adjacent detectors shall be 2'-0" minimum. Distance between lead-in saw cuts shall be 6" minimum.
4. Bottom of saw slot shall be smooth with no sharp edges.
5. Slots shall be washed until clean, blown out and thoroughly dried before installing loop conductors.
6. Adjacent loops on the same sensor unit channel shall be wound in opposite directions.
7. Identify and tag loop circuit pairs in the pull box with loop number, start (S) and finish (F) of conductor. Identify and tag lead-in-cable with sensor number and phase.
8. Install loop conductor in slot using a 3/16" to 1/4" thick wood paddle. Hold loop conductors with wood paddles (at the bottom of the sawed slot) during sealant placement.
9. No more than 2 twisted pairs shall be installed in one sawed slot.
10. Allow additional 5'-0" of slack length of conductor for the lead-in run to pull box.
11. The additional length of each conductor for each loop shall be twisted together into a pair (6 turns per 3'-4" minimum) before being placed in the slot and conduit leading to pull box.
12. Test each loop circuit for continuity, circuit resistance and insulation resistance at the pull box before filling slots.
13. Fill slots as shown in details.
14. Splice loop conductors to lead-in-cable. Splices shall be soldered.
15. End of lead-in-cable and Type 2 loop conductor shall be waterproofed prior to installing in conduit to prevent moisture from entering the cable.
16. Lead-in-cable shall not be spliced between the pull box and the controller cabinet terminals.
17. Test each loop circuit for continuity, circuit resistance and insulation resistance at the controller cabinet location.
18. Where loop conductors are not to be spliced to a lead-in-cable, the ends of the conductors shall be taped and waterproofed with electrical insulating coating.

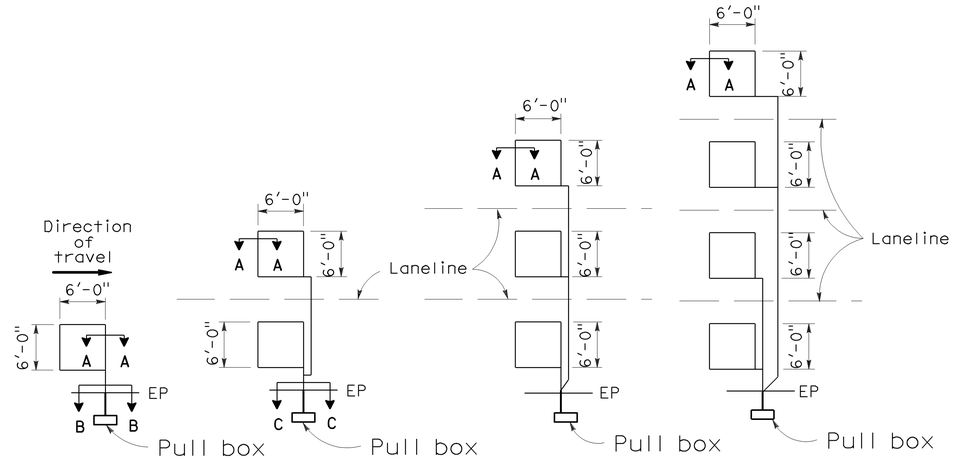

TYPE 1A INSTALLATION | TYPE 2A INSTALLATION | TYPE 3A INSTALLATION | TYPE 4A INSTALLATION

SAWCUT DETAILS

(Type A loop detector configurations illustrated)

1. 1A thru 4A = 1 Type A loop configuration in each lane.
2. 1B thru 4B = 1 Type B loop configuration in each lane.
3. 1C = 1 Type C loop configuration entering lanes as required.
4. 1D thru 4D = 1 Type D loop configuration in each lane.
5. 1E thru 4E = 1 Type E loop configuration in each lane.
6. 1Q thru 4Q = 1 Type Q loop configuration in each lane. (Use Type A, B, C, D, E or Q loop detector configurations only when specified or shown on plans)

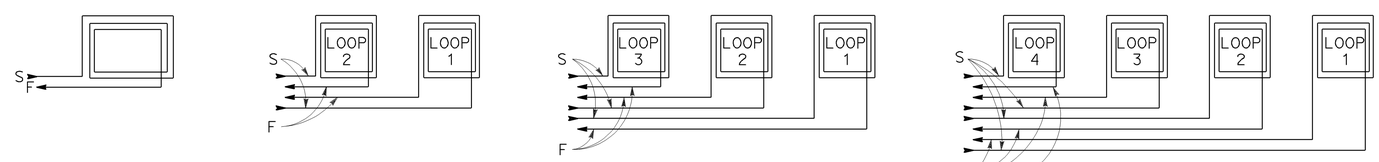

WINDING DETAILS

See Notes 6 and 7

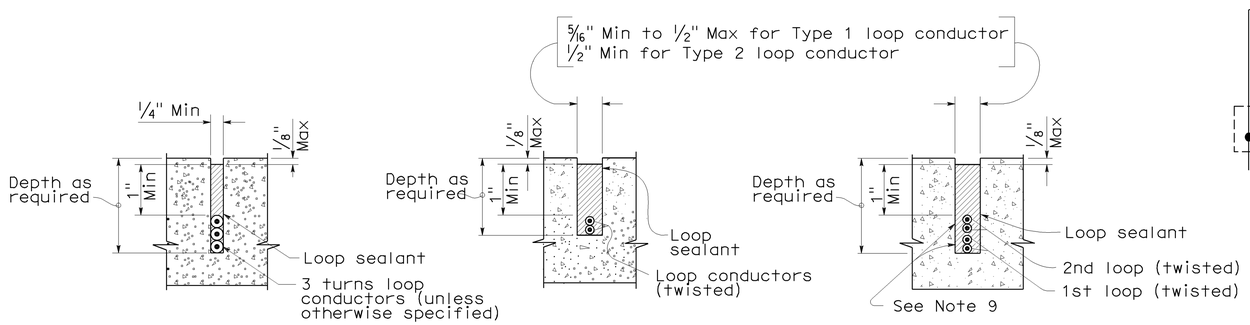

SECTION A-A | SECTION B-B | SECTION C-C

SLOT DETAILS - TYPE 1 AND TYPE 2 LOOP CONDUCTOR

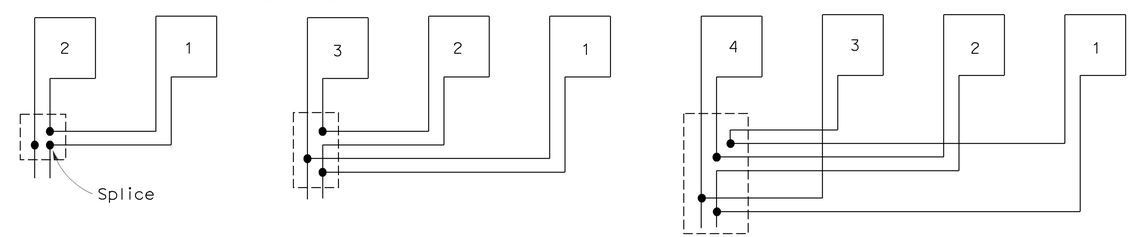

TYPICAL LOOP CONNECTIONS

(Dashed lines represent the pull box)

STATE OF CALIFORNIA
DEPARTMENT OF TRANSPORTATION

ELECTRICAL SYSTEMS (DETECTORS)

NO SCALE

RSP ES-5A DATED OCTOBER 5, 2007 SUPERCEDES STANDARD PLAN ES-5A DATED MAY 1, 2006 - PAGE 423 OF THE STANDARD PLANS BOOK DATED MAY 2006.

REVISED STANDARD PLAN RSP ES-5A

8-17-07

DIST	COUNTY	ROUTE	POST MILES TOTAL PROJECT	SHEET NO.	TOTAL SHEETS
11	SD	163	3.8/R11.1	43	49

William K. Farnbach
REGISTERED CIVIL ENGINEER

May 15, 2009
PLANS APPROVAL DATE

REGISTERED PROFESSIONAL ENGINEER William K. Farnbach No. C49042 Exp. 9-30-10 CIVIL STATE OF CALIFORNIA

The State of California or its officers or agents shall not be responsible for the accuracy or completeness of electronic copies of this plan sheet.

To accompany plans dated 08-02-10

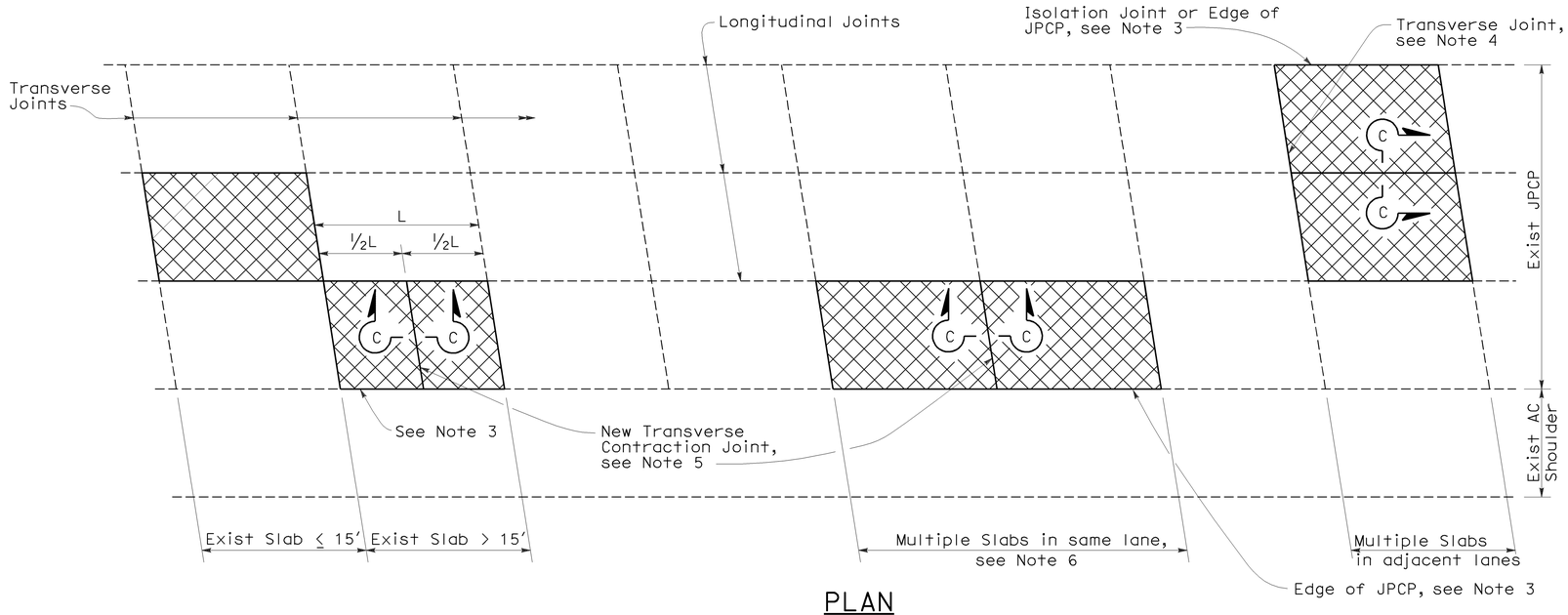

PLAN

NOTES:

1. For details not shown, see Revised Standard Plan RSP P10.
2. Where the existing outer shoulder pavement is asphalt concrete pavement, the "a" dimension shall be 1′-0" and the "b" dimension shall be 2′-0".
3. Side forms shall be used where edge of pavement is adjacent to asphalt concrete.
4. For detail, see Transverse Construction Joint for existing concrete pavement detail on Revised Standard Plan RSP P10.
5. Transverse joint to match skew of existing joint. Omit dowel bars.
6. This Standard Plan only applicable when replacing multiple slabs in the same lane is less than 100′.

LEGEND

Replace Concrete Pavement (See Slab Layout Detail)

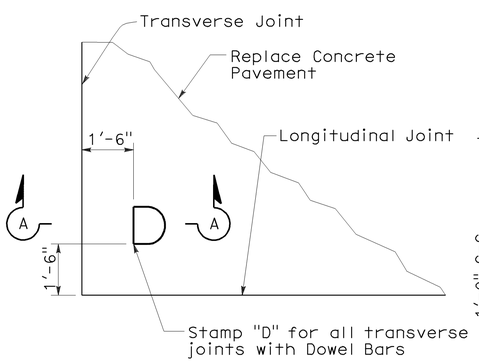

DOWEL STAMP DETAIL

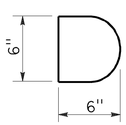

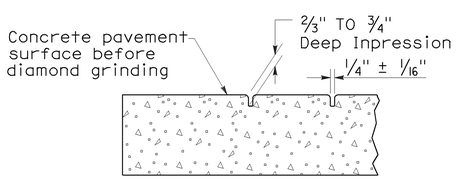

SECTION A-A

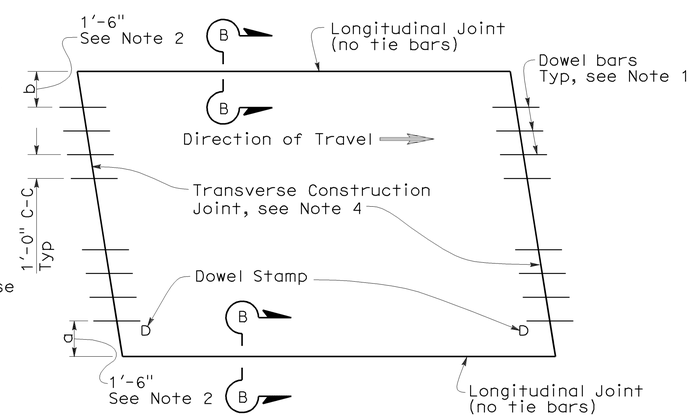

TYPE I
(traffic lane lines match longitudinal joints)

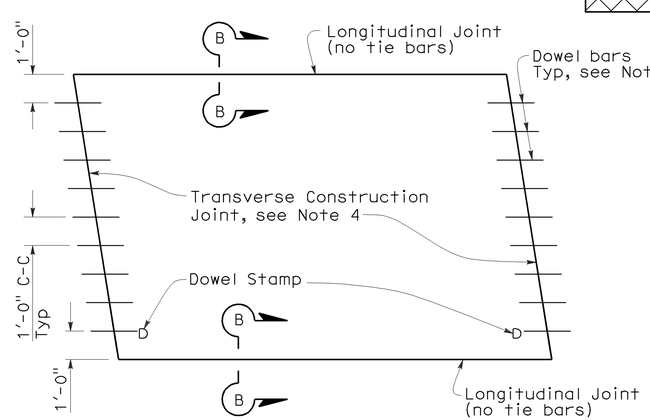

TYPE II
(traffic lane lines do not match longitudinal joints)

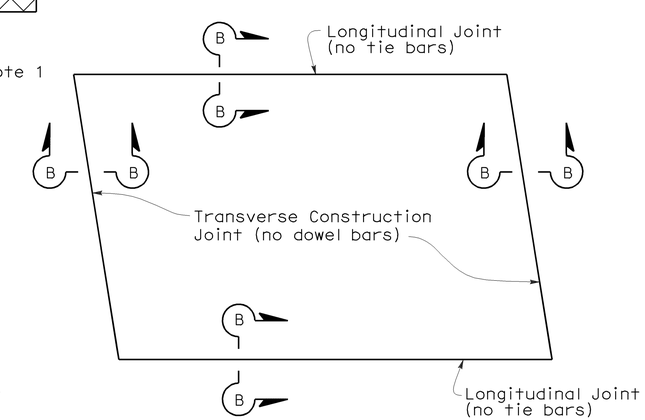

TYPE III
(for short term repairs < 5 yrs design life or for slab replacements with a cracking and seating operation)

SLAB LAYOUT

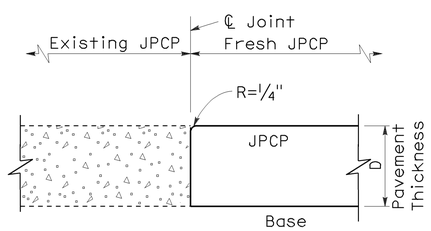

SECTION B-B

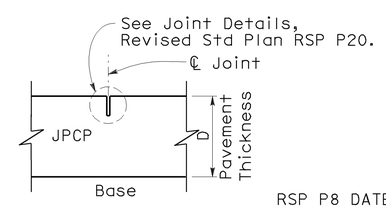

SECTION C-C

STATE OF CALIFORNIA
DEPARTMENT OF TRANSPORTATION

JOINTED PLAIN CONCRETE PAVEMENT-INDIVIDUAL SLAB REPLACEMENT

NO SCALE

RSP P8 DATED MAY 15, 2009 SUPERSEDES RSP P8 DATED SEPTEMBER 1, 2006 AND STANDARD PLAN P8 DATED MAY 1, 2006 - PAGE 123 OF THE STANDARD PLANS BOOK DATED MAY 2006.

REVISED STANDARD PLAN RSP P8

2006 REVISED STANDARD PLAN RSP P8

5-8-09

DIST	COUNTY	ROUTE	POST MILES TOTAL PROJECT	SHEET NO.	TOTAL SHEETS
11	SD	163	3.8/R11.1	44	49

William K. Farnbach
REGISTERED CIVIL ENGINEER

May 15, 2009
PLANS APPROVAL DATE

REGISTERED PROFESSIONAL ENGINEER William K. Farnbach No. C49042 Exp. 9-30-10 CIVIL STATE OF CALIFORNIA

The State of California or its officers or agents shall not be responsible for the accuracy or completeness of electronic copies of this plan sheet.

To accompany plans dated 08-02-10

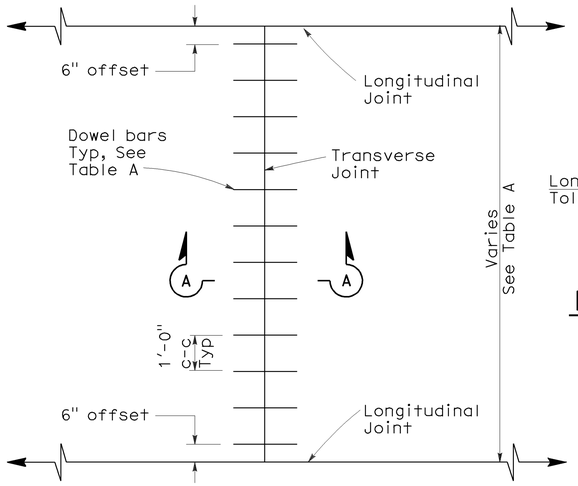

TRANSVERSE JOINT DOWEL BAR LAYOUT

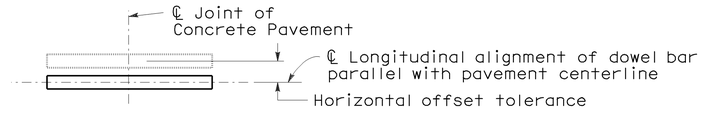

PLAN

HORIZONTAL OFFSET TOLERANCE

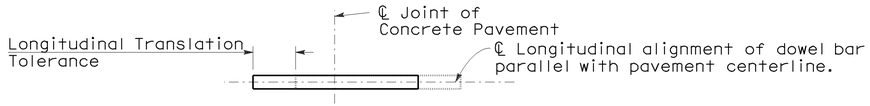

PLAN

LONGITUDINAL TRANSLATION TOLERANCE

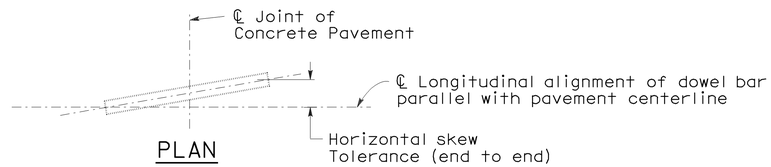

PLAN

HORIZONTAL SKEW TOLERANCE

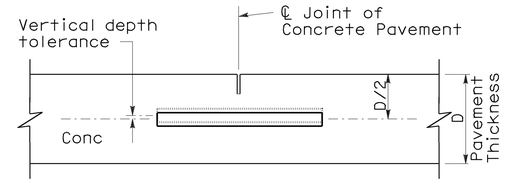

ELEVATION

VERTICAL DEPTH TOLERANCE

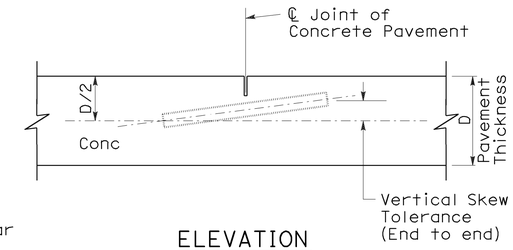

ELEVATION

VERTICAL SKEW TOLERANCE

NOTES:

1. See Revised Standard Plan RSP P1 for typical dowel bar placement and locations.
2. 1½" Dia smooth dowel bars are to be used with a pavement thickness, D, equal to or greater than 0.70 feet. For pavement thickness, D, less than 0.70 feet, use 1¼" Dia smooth dowel bars.
3. For widths not shown, see Project Plans.
4. If fresh concrete pavement is placed adjacent to existing concrete pavement, the top corner of the existing concrete pavement does not need to be rounded to the ¼" radius, as shown.

TABLE A (See Note 3)

Dowel Bar Transverse Spacing Table	
Width between Longitudinal Joints	Number of Dowels between Longitudinal Joints
14'-0"	14
13'-0"	13
12'-0"	12
11'-0"	11
10'-0"	10
8'-0"	8
5'-0"	5
4'-0"	4

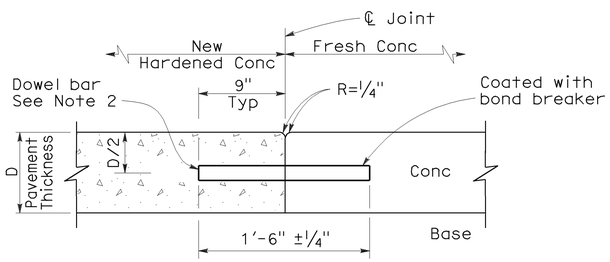

SECTION A-A

TRANSVERSE CONSTRUCTION JOINT DETAIL

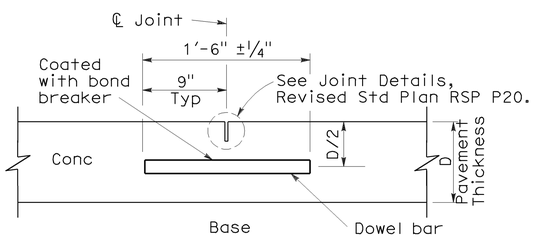

TRANSVERSE CONTRACTION JOINT

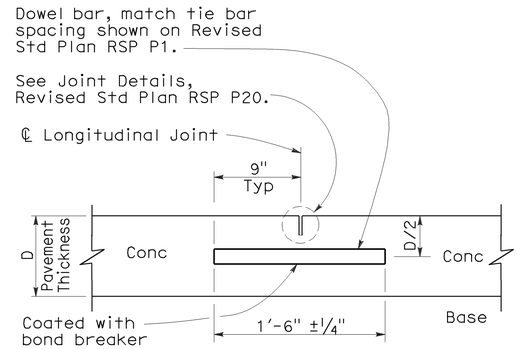

LONGITUDINAL CONTRACTION JOINT WITH DOWEL BARS

(See Revised Std Plan RSP P18)

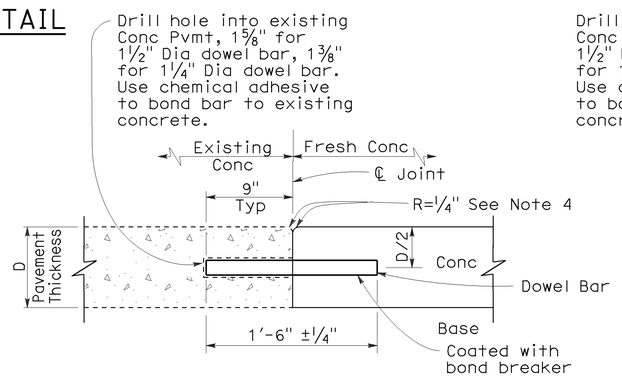

TRANSVERSE CONSTRUCTION JOINT FOR EXISTING CONCRETE PAVEMENT

(Drill and bond locations)

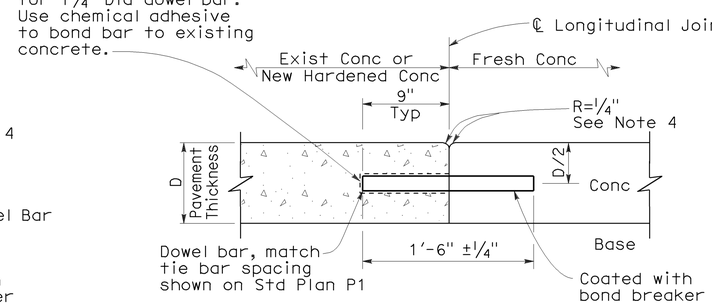

LONGITUDINAL CONSTRUCTION JOINT WITH DOWEL BARS

(See Revised Std Plan RSP P18)

STATE OF CALIFORNIA
DEPARTMENT OF TRANSPORTATION

CONCRETE PAVEMENT-DOWEL BAR DETAILS

NO SCALE

RSP P10 DATED MAY 15, 2009 SUPERSEDES STANDARD PLAN P10 DATED MAY 1, 2006 - PAGE 124 OF THE STANDARD PLANS BOOK DATED MAY 2006.

REVISED STANDARD PLAN RSP P10

2006 REVISED STANDARD PLAN RSP P10

5-8-09

DIST	COUNTY	ROUTE	POST MILES TOTAL PROJECT	SHEET NO.	TOTAL SHEETS
11	SD	163	3.8/R11.1	45	49

William K. Farnbach
REGISTERED CIVIL ENGINEER

May 15, 2009
PLANS APPROVAL DATE

REGISTERED PROFESSIONAL ENGINEER
William K. Farnbach
No. C49042
Exp. 9-30-10
CIVIL
STATE OF CALIFORNIA

The State of California or its officers or agents shall not be responsible for the accuracy or completeness of electronic copies of this plan sheet.

To accompany plans dated 08-02-10

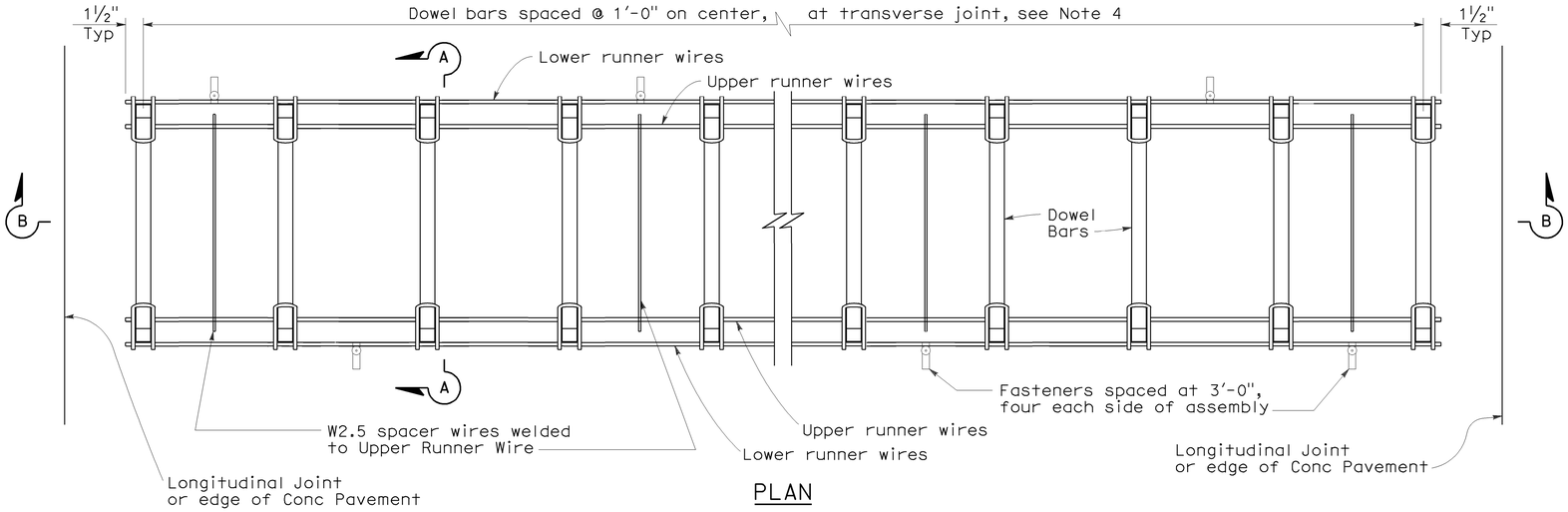

PLAN
DOWEL BAR BASKET (TRANSVERSE JOINT)
See Note 1

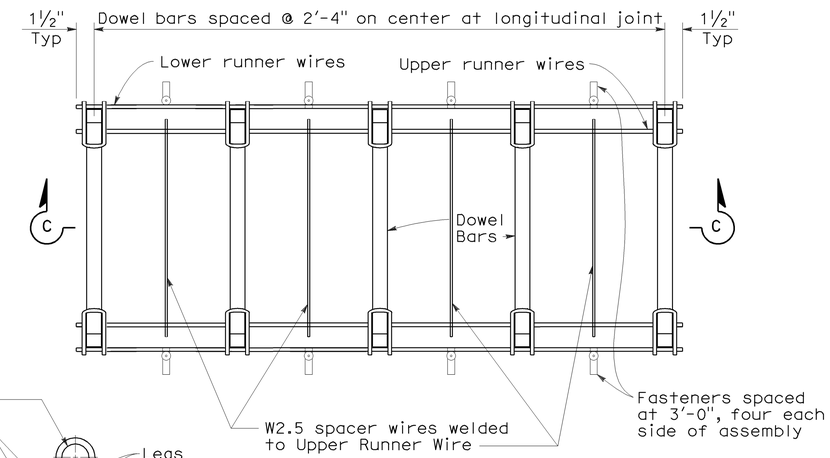

PLAN
DOWEL BAR BASKET (LONGITUDINAL JOINT)
See Note 1

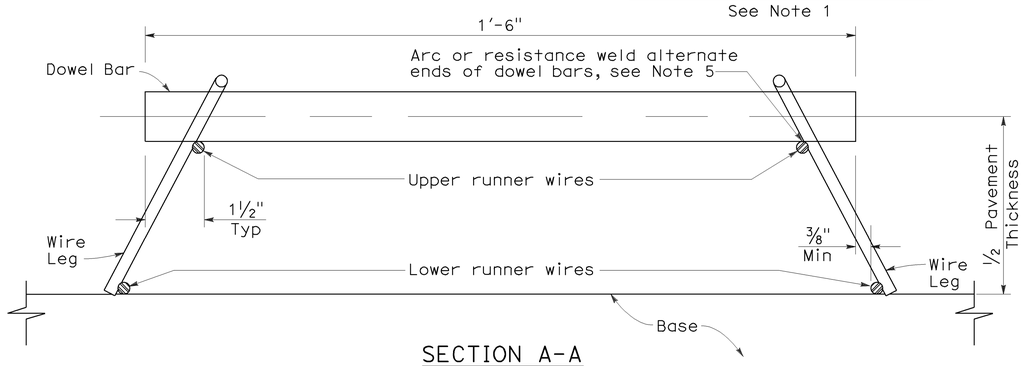

SECTION A-A

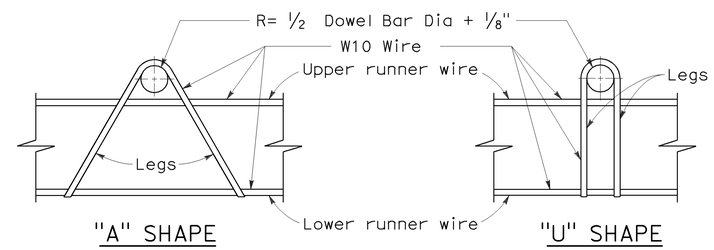

ASSEMBLY FRAME DETAILS

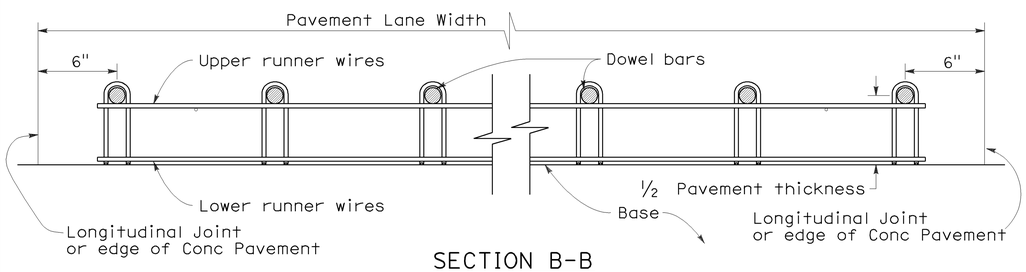

SECTION B-B
See Note 1

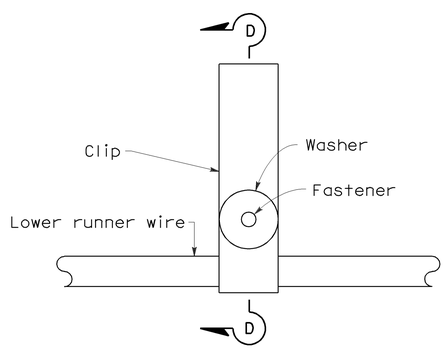

PLAN

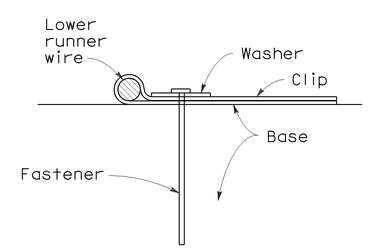

SECTION D-D

FASTENER DETAIL

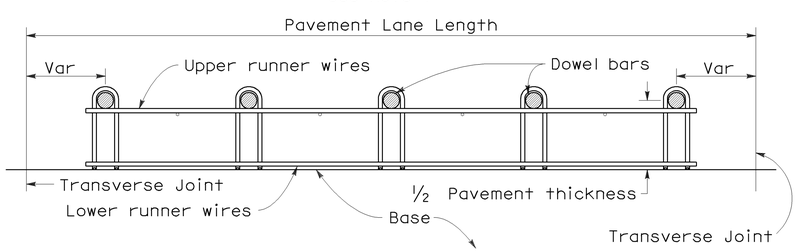

SECTION C-C
See Notes 1 and 4

NOTES:

1. "U" frame shape assembly shown. "U" frame shape or "A" frame shape are acceptable.
2. Wire sizes shown are minimum required.
3. All wire intersections are to be resistance welded.
4. Use tie bar spacing for longitudinal dowel bar locations. See Revised Std Plans RSPs P1, P2, and P3 for tie bar requirements.
5. Weld may be at top or bottom of dowel bar.

STATE OF CALIFORNIA
DEPARTMENT OF TRANSPORTATION

CONCRETE PAVEMENT-DOWEL BAR BASKET DETAILS

NO SCALE

RSP P12 DATED MAY 15, 2009 SUPERSEDES RSP P12 DATED NOVEMBER 17, 2006 AND STANDARD PLAN P12 DATED MAY 1, 2006 - PAGE 125 OF THE STANDARD PLANS BOOK DATED MAY 2006.

REVISED STANDARD PLAN RSP P12

2006 REVISED STANDARD PLAN RSP P12

5-8-09

NOTE:

1. Tie bars, dowel bars, and reinforcement are not shown in joint seal details, see Revised Standard Plans RSP P1, RSP P3, RSP P10, RSP P35, RSP P45, or RSP P46 as applicable.

DIST	COUNTY	ROUTE	POST MILES TOTAL PROJECT	SHEET NO.	TOTAL SHEETS
11	SD	163	3.8/R11.1	46	49

William K. Farnbach
REGISTERED CIVIL ENGINEER

May 15, 2009
PLANS APPROVAL DATE

REGISTERED PROFESSIONAL ENGINEER William K. Farnbach No. C49042 Exp. 9-30-10 CIVIL STATE OF CALIFORNIA

The State of California or its officers or agents shall not be responsible for the accuracy or completeness of electronic copies of this plan sheet.

To accompany plans dated 08-02-10

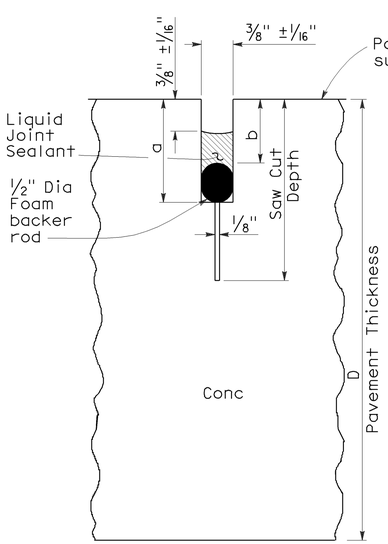

LIQUID SEALANT

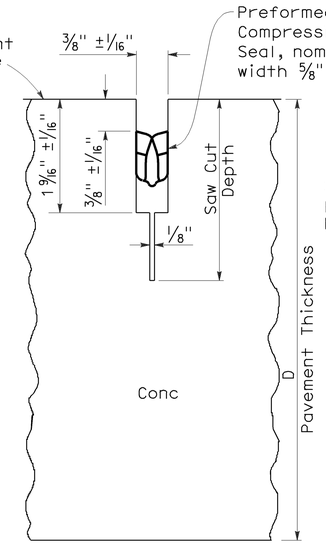

COMPRESSION SEAL

TYPE A1

Transverse Contraction Joints

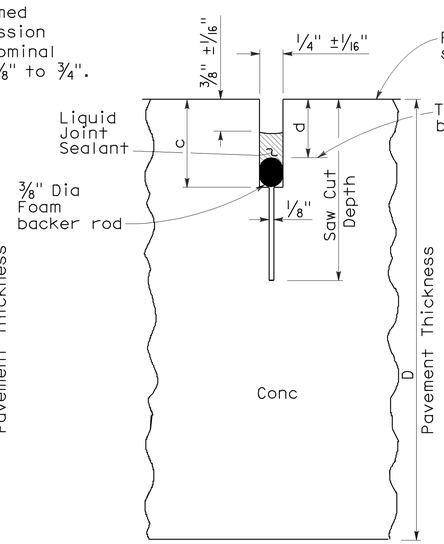

LIQUID SEALANT

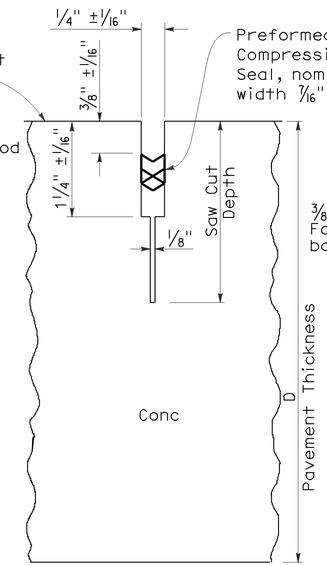

COMPRESSION SEAL

TYPE A2

Longitudinal Contraction Joints

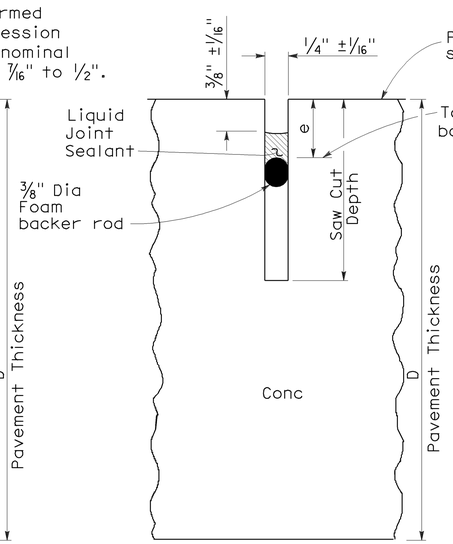

LIQUID SEALANT

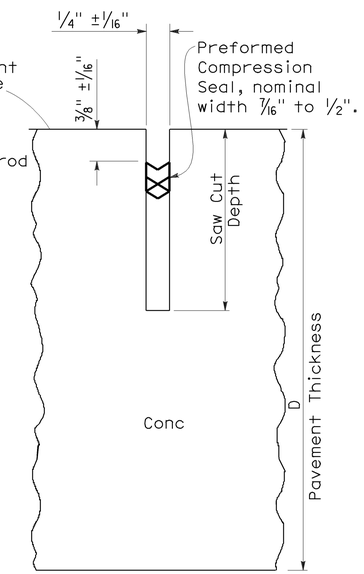

COMPRESSION SEAL

TYPE B

Longitudinal or Transverse Contraction Joint

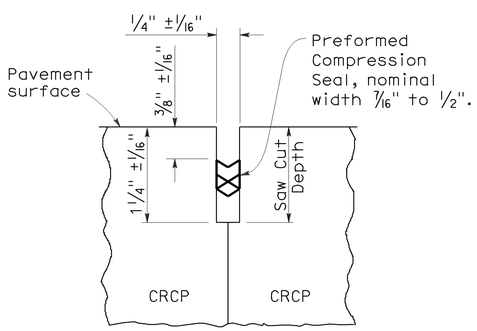

COMPRESSION SEAL

TYPE C

Transverse and Longitudinal Construction Joints (For CRCP)

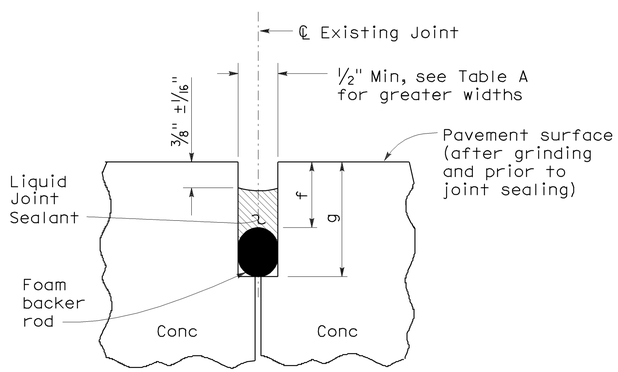

LIQUID SEALANT

TYPE R

Retrofit Transverse and Longitudinal Joints

LIQUID SEALANT RESERVOIR DEPTH

LIQUID SEALANT MATERIAL	3/8" Joint Width Type A1		1/4" Joint Width Type A2		1/4" Joint Width Type B
	DIMENSION		DIMENSION		DIMENSION
	a	b	c	d	e
SILCONE	1" ±1/16"	5/8" ±1/16"	15/16" ±1/16"	9/16" ±1/16"	9/16" ±1/16"
ASPHALT RUBBER	1 3/16" ±1/16"	3/4" ±1/16"	1 1/16" ±1/16"	11/16" ±1/16"	11/16" ±1/16"

TABLE A (TYPE R JOINT)

Sawn Joint Width	Backer Rod Diameter ± 1/16"	DIMENSION "f"	DIMENSION "g"
1"	1 5/16"	7/8"	2 1/4"
7/8"	1 3/16"	13/16"	2"
3/4"	1"	3/4"	1 3/4"
5/8"	7/8"	11/16"	1 1/2"
1/2"	11/16"	5/8"	1 1/4"

STATE OF CALIFORNIA
DEPARTMENT OF TRANSPORTATION

CONCRETE PAVEMENT-JOINT DETAILS

NO SCALE

RSP P20 DATED MAY 15, 2009 SUPERSEDES STANDARD PLAN P20
DATED MAY 1, 2006 - PAGE 128 OF THE STANDARD PLANS BOOK DATED MAY 2006.

REVISED STANDARD PLAN RSP P20

2006 REVISED STANDARD PLAN RSP P20

5-8-09

DIST	COUNTY	ROUTE	POST MILES TOTAL PROJECT	SHEET NO.	TOTAL SHEETS
11	SD	163	3.8/R11.1	47	49

Randell D. Hiatt
REGISTERED CIVIL ENGINEER

June 6, 2008
PLANS APPROVAL DATE

REGISTERED PROFESSIONAL ENGINEER
Randell D. Hiatt
No. C50200
Exp. 6-30-09
CIVIL
STATE OF CALIFORNIA

The State of California or its officers or agents shall not be responsible for the accuracy or completeness of electronic copies of this plan sheet.

To accompany plans dated 08-02-10

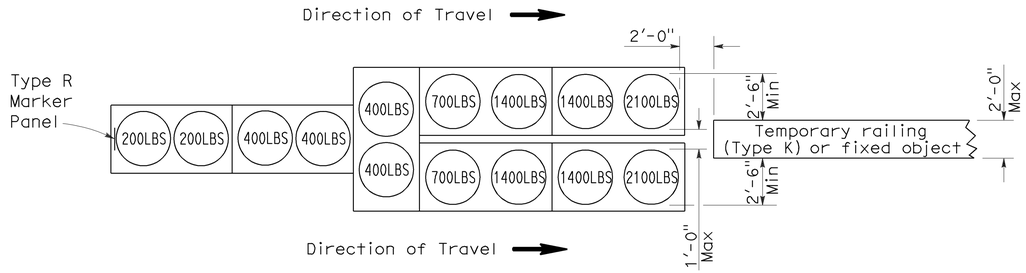

ARRAY 'TU14'

Approach speed 45 mph or more

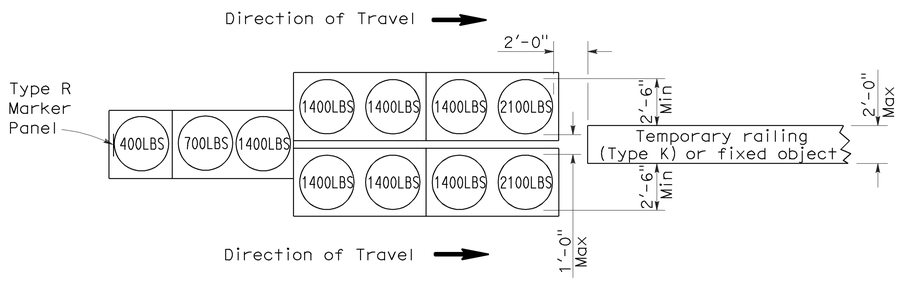

ARRAY 'TU11'

Approach speed less than 45 mph

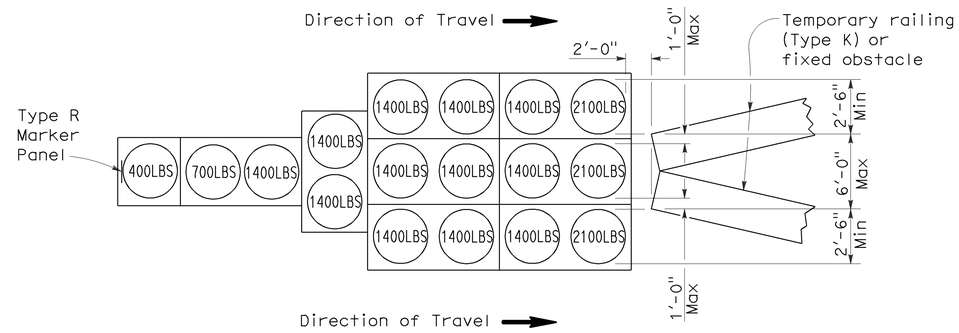

ARRAY 'TU17'

Approach speed less than 45 mph

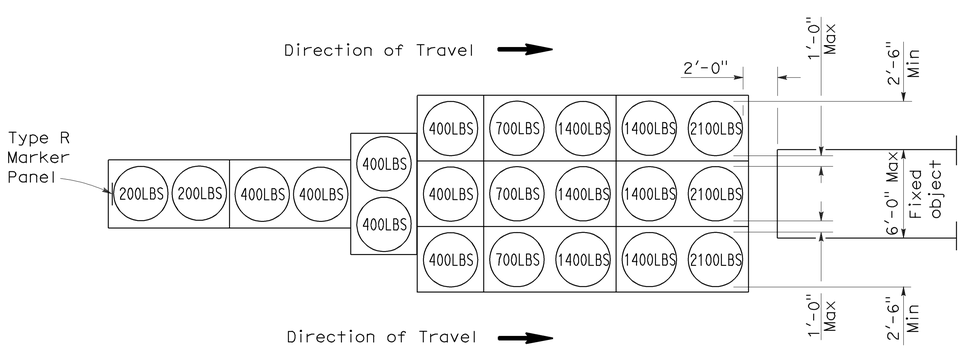

ARRAY 'TU21'

Approach speed 45 mph or more

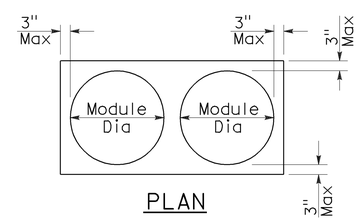

PLAN

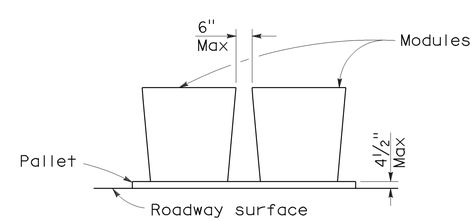

ELEVATION

CRASH CUSHION PALLET DETAIL

See Note 7

NOTES:

1. (XXX) Indicates sand filled module location and weight of sand in pounds for each module. Module spacing is based on the greater diameter of the module.
2. All sand weights are nominal.
3. Temporary crash cushion arrays shall not encroach on the traveled way.
4. Place the top of Type R marker panel 1" below the module lid.
5. Refer to Standard Plan A73B for marker details.
6. Approach speeds indicated conform to NCHRP 350 Report criteria.
7. Use of pallets is optional.

STATE OF CALIFORNIA
DEPARTMENT OF TRANSPORTATION

TEMPORARY CRASH CUSHION, SAND FILLED (UNIDIRECTIONAL)

NO SCALE

RSP T1A DATED JUNE 6, 2008 SUPERSEDES STANDARD PLAN T1A
DATED MAY 1, 2006 - PAGE 211 OF THE STANDARD PLANS BOOK DATED MAY 2006.

REVISED STANDARD PLAN RSP T1A

2006 REVISED STANDARD PLAN RSP T1A

DIST	COUNTY	ROUTE	POST MILES TOTAL PROJECT	SHEET NO.	TOTAL SHEETS
11	SD	163	3.8/R11.1	48	49

Randell D. Hiatt
REGISTERED CIVIL ENGINEER

June 6, 2008
PLANS APPROVAL DATE

REGISTERED PROFESSIONAL ENGINEER
Randell D. Hiatt
No. C50200
Exp. 6-30-09
CIVIL
STATE OF CALIFORNIA

The State of California or its officers or agents shall not be responsible for the accuracy or completeness of electronic copies of this plan sheet.

To accompany plans dated 08-02-10

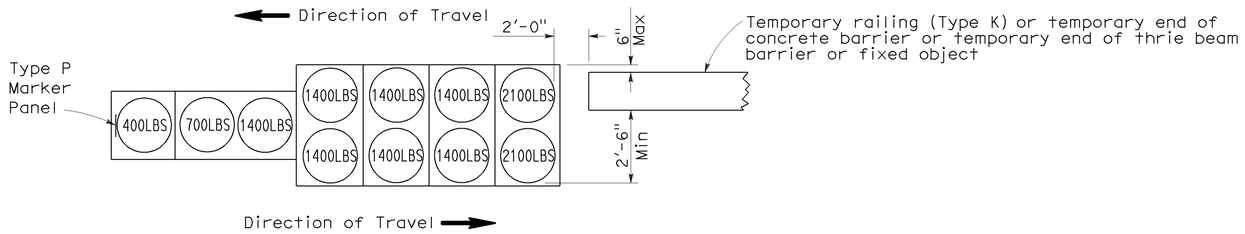

ARRAY 'TB11'

Approach speed less than 45 mph

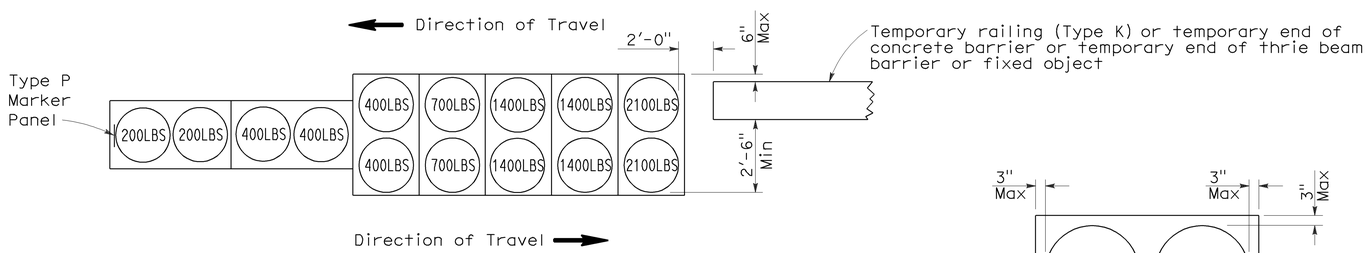

ARRAY 'TB14'

Approach speed 45 mph or more

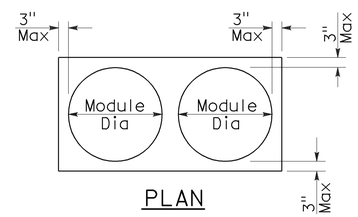

PLAN

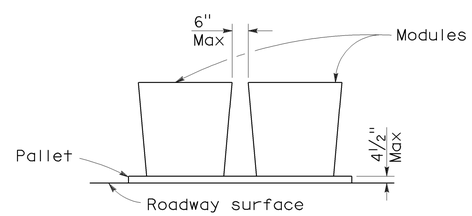

ELEVATION

CRASH CUSHION PALLET DETAIL

See Note 7

NOTES:

1. (XXX) Indicates sand filled module location and weight of sand in pounds for each module. Module spacing is based on the greater diameter of the module.
2. All sand weights are nominal.
3. Temporary crash cushion arrays shall not encroach on the traveled way.
4. Place the Type P marker panel so that the bottom of the panel rests upon the pallet.
5. Refer to Standard Plan A73B for marker details.
6. Approach speeds indicated conform to NCHRP 350 Report criteria.
7. Use of pallets is optional.

STATE OF CALIFORNIA
DEPARTMENT OF TRANSPORTATION

TEMPORARY CRASH CUSHION, SAND FILLED (BIDIRECTIONAL)

NO SCALE

RSP T1B DATED JUNE 6, 2008 SUPERSEDES STANDARD PLAN T1B
DATED MAY 1, 2006 - PAGE 212 OF THE STANDARD PLANS BOOK DATED MAY 2006.

REVISED STANDARD PLAN RSP T1B

2006 REVISED STANDARD PLAN RSP T1B

5-15-08

DIST	COUNTY	ROUTE	POST MILES TOTAL PROJECT	SHEET NO.	TOTAL SHEETS
11	SD	163	3.8/R11.1	49	49

Randell D. Hiatt
REGISTERED CIVIL ENGINEER

June 6, 2008
PLANS APPROVAL DATE

REGISTERED PROFESSIONAL ENGINEER
Randell D. Hiatt
No. C50200
Exp. 6-30-09
CIVIL
STATE OF CALIFORNIA

The State of California or its officers or agents shall not be responsible for the accuracy or completeness of electronic copies of this plan sheet.

To accompany plans dated 08-02-10

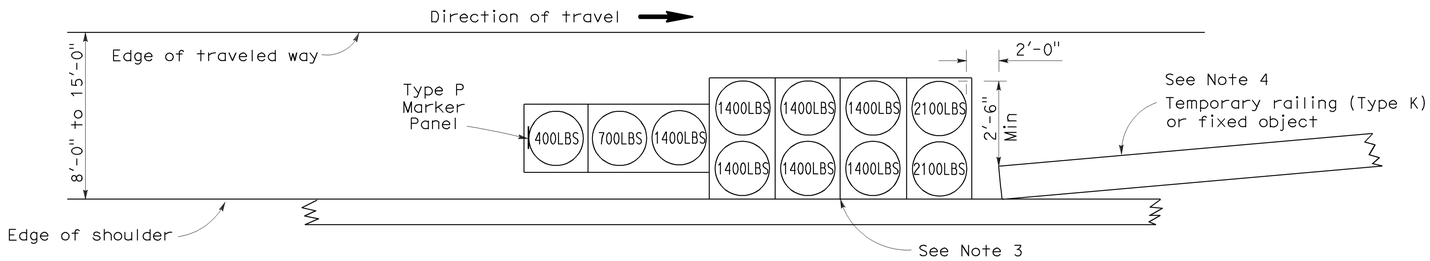

ARRAY 'TS11'

Approach speed less than 45 mph
See Note 9

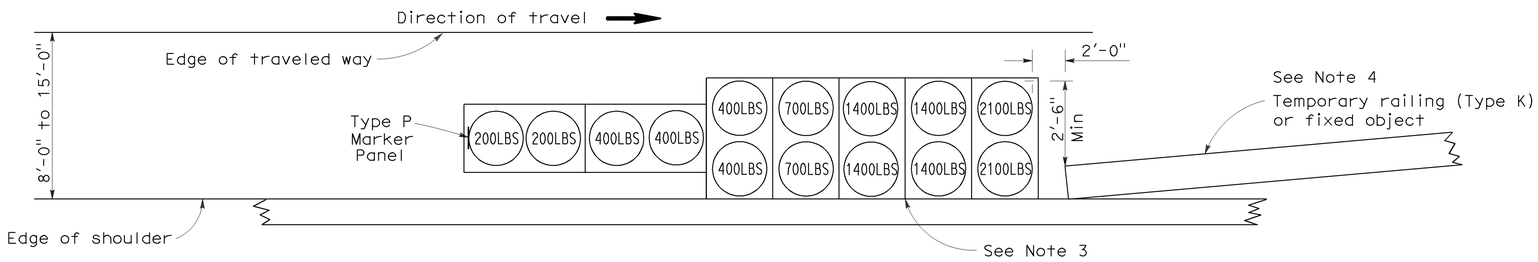

ARRAY 'TS14'

Approach speed 45 mph or more
See Note 9

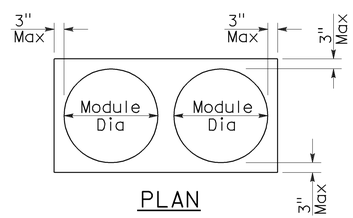

PLAN

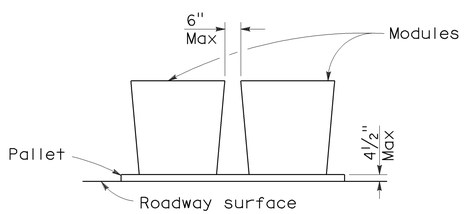

ELEVATION

CRASH CUSHION PALLET DETAIL

See Note 11

NOTES:

1. (XXX) Indicates sand filled module location and weight of sand in pounds for each module. Module spacing is based on the greater diameter of the module.
2. All sand weights are nominal.
3. The temporary crash cushion arrays shown on this plan shall be used only in locations where there will be traffic on one side of the temporary crash cushion array.
4. If the fixed object or approach end of the temporary railing is less than 15'-0" from the edge of traveled way, a temporary crash cushion is required in a construction or work zone.
5. Temporary crash cushion arrays shall not encroach on the traveled way.
6. Arrays for median shoulders shall conform to details shown on this plan for outside shoulders.
7. Place the Type P marker panel so that the bottom of the panel rests upon the pallet and faces traffic.
8. Refer to Standard Plan A73B for marker details.
9. For shoulder widths less than 8'-0", appropriate approved crash cushion protection, other than sand filled modules, shall be provided at fixed objects and at approach ends of temporary railing. The specific type of crash cushion shall be as shown on the project plans or as specified in the Special Provisions, or if not shown on the project plans or specified in the Special Provisions, shall be as approved by the Engineer.
10. Approach speeds indicated conform to NCHRP 350 Report criteria.
11. Use of pallets is optional.

STATE OF CALIFORNIA
DEPARTMENT OF TRANSPORTATION

TEMPORARY CRASH CUSHION, SAND FILLED (SHOULDER INSTALLATIONS)

NO SCALE

RSP T2 DATED JUNE 6, 2008 SUPERSEDES STANDARD PLAN T2
DATED MAY 1, 2006 - PAGE 213 OF THE STANDARD PLANS BOOK DATED MAY 2006.

REVISED STANDARD PLAN RSP T2

2006 REVISED STANDARD PLAN RSP T2

5-15-08