INFORMATION HANDOUT

For Contract No. 11-237964
At 11-SD-8-5.4/10.6, R20.0/R21.6

Identified by
Project ID 1114000046

MATERIALS INFORMATION

1. Water source information, City of San Diego, dated March 11, 2016
2. Structural Sections Recommendations-Revised, dated October 21, 2015
3. Site Investigation Report, dated March 26, 1999
4. Aerial Lead Investigation Report, dated February 22, 1999
5. Cable Lacing
6. Automatic Traffic Counter and Piezoelectric Sensor Connector
7. Cable Verification Worksheet
8. Link Loss Budget Worksheet
9. Fiber Optic Trench Location
10. Traffic Elements
11. Foundation Report for Three Proposed Changeable Message Signs at Eastbound Interstate 8, dated January 15, 2016

REPLACED PER ADDENDUM NO. 4 DATED AUGUST 17, 2016

State of California
DEPARTMENT OF TRANSPORTATION

Business, Transportation and Housing Agency

M e m o r a n d u m

Serious drought.
Help save water!

To: Mr. Duy Ton
Project Manager
Caltrans Corridor Design

Date: January 15, 2016

File: 11-SD-8-Various
EA: 11-23796
EFIS: 1114000046

From: ALI LARI
Transportation Engineer
Office of Geotechnical Design–South, Branch B

Subject: **Foundation Report for Three Proposed Changeable Message Signs at Eastbound Interstate 8.**

1.0 INTRODUCTION

Pursuant to your request, the Office of Geotechnical Design South (OGDS) Branch-B has prepared this Foundation Report (FR) to address the geotechnical design and construction considerations for three Changeable Message Signs (CMS) at two locations along eastbound Interstate 8 (I-8). On this project the CMS are also referred to as Advanced Variable Message Sign (AVMS). The proposed CMS locations are as follows:

Location 1: One CMS Model 710 Single Post Unbalanced Butterfly Structure at station 616+90 "SD-8" (88' Rt.).

Location 2: Two CMS Model 710 Single Post Balanced Butterfly Structure at Station 1237+37.5 "SD-8" (Center Line).

The project plans were provided by District 11 Design and are included in Appendix I.

The purpose of this FR is to document subsurface geotechnical conditions, provide engineering evaluation of site conditions, and provide recommendations relevant to the design and construction of the the signs. This report also establishes a geotechnical baseline to be used in assessing the existence and scope of changed site conditions. The geotechnical information, evaluations, recommendations, and advisories contained in this FR supersede any information that may have been previously conveyed through correspondences or documents concerning the project features addressed herein.

This FR was prepared in accordance with the guidelines set forth in the *Caltrans: Foundation Report Preparation for Standard Plan Overhead and Changeable Message Signs, October 2014.*

No Structure Preliminary Geotechnical Report (SPGR) and/or Preliminary Foundation Report (PFR) were prepared prior to the preparation of this FR.

All stations are referenced to the "SD-8" LINE and all elevations are referenced to mean sea level.

2.0 ARCHIVED DATA RESEARCH

A review of as-built plans provided LOTB of existing bridges in proximity to the project features. As-built LOTB for Lake Murray Boulevard Overcrossing (Bridge Number 57 0341) and Los Coches Road Undercrossing (Bridge Number 57 0474L) were utilized for the characterization of site conditions.

Archived as-built LOTB are presented in Appendix II.

3.0 FIELD INVESTIGATION

A subsurface investigation program was conducted by OGDS in December of 2015. Two exploratory hollow stem auger borings were conducted at the proposed locations of the two message signs. The borings A-15-001 and A-15-002 were developed in proximity to Location 1 and Location 2 respectively. The boring records are in Appendix III.

4.0 LABORATORY TESTING

Laboratory testing of collected soil samples included corrosion testing. Laboratory test results are included in Appendix IV and have been factored into soil descriptions and evaluations included in this report.

5.0 GEOLOGY

5.1: Location 1, Proposed CMS at Station 616+90

The site is underlain by engineered fill to a depth of approximately 8 feet, that in turn is underlain by Stadium Conglomerate. The fill consists of very dense silty sand with gravel. Stadium Conglomerate consists of very dense sand with gravel and cobbles.

5.2: Location 2, Proposed CMS at Station 1237+37.5

The site is underlain by engineered fill to a depth of approximately 17.5 feet, that in turn is underlain by decomposed granitic rock. The fill consists of very dense sand with gravel. Decomposed granitic rock has the characteristics of very dense sand.

5.3: Soil Strength

The very dense site soils readily satisfy minimum soil strength criteria utilized in pile design.

5.4: Ground Water

Groundwater was not encountered during the subsurface field investigation. Also groundwater was not encountered during the borings conducted for bridge foundation explorations at the Lake Murray Boulevard Overcrossing and at the Los Coches Road Undercrossing consequently groundwater is not anticipated to impact the project.

6.0: CORROSION

Caltrans currently considers a site to be corrosive to foundation elements if one or more of the following conditions exist: Chloride concentration is greater than or equal to 500-ppm, sulfate concentration is greater than or equal to 2,000 ppm, or the pH is 5.5 or less.

Corrosion test results were obtained for selected soil samples and are included in Appendix V. The test results indicate that the on-site subsurface materials are not potentially corrosive.

7.0: LIQUEFACTION

There is no potential for liquefaction considering the deep groundwater and dense materials at the project site.

8.0: FOUNDATION RECOMMENDATION

Based on the results of our study the sheet SDS-8 may be used for the Cast In Drilled Hole (CIDH) pile foundation for both locations. The sheet SDS-8 is in Appendix I.

9.0 CONSTRUCTION CONSIDERATION

- Standard pile shaft augering equipment may be used for drilling CIDH pile foundations.
- It is anticipated that abundant cobbles will be encountered during pile shaft drilling at Location 1.
- Ground water is not anticipated to affect pile construction.

10.0 DIFFERING SITE CONDITIONS

The recommendations contained in this report are based on specific project information regarding structure type and locations that have been provided to OGDS. If any conceptual changes are made during final project design, OGDS should review those changes to determine if these foundation recommendations are still applicable.

The information used to characterize the geotechnical conditions in this area was gathered from project plans, pertinent maps, geologic literature, archived reports, field reconnaissance, subsurface investigation, testing, and engineering analysis. Project design features may change, and localized soil conditions encountered during construction and excavation may vary from those described in this report. If suspected differing site conditions are encountered during construction, or if construction difficulties related to soil conditions are encountered, a representative of OGDS should be consulted to assist with the assessment of the prevailing geotechnical conditions and to assist in formulating appropriate strategies to facilitate project completion.

REGISTERED PROFESSIONAL ENGINEER
ALI LARI
No. C65846
Exp. 12-31-05
CIVIL
STATE OF CALIFORNIA

Ali Lari, P.E.
Transportation Engineer (Civil)
Office of Geotechnical Design-South
Branch B

Jeff Tesar, C.E.G.
Engineering Geologist
Office of Geotechnical Design-South
Branch B

REGISTERED GEOLOGIST
JEFF J. TESAR
No. 2137
CERTIFIED
ENGINEERING
GEOLOGIST
STATE OF CALIFORNIA

Attachments:

- Appendix I: Project Plans
- Appendix II: Archived Data
- Appendix III: Boring Records
- Appendix IV: Laboratory Test Results

CC:

- Al Ochoa — District Materials Engineer
- John Ehsan — Office Chief, OGDS
- Brian Hinman — Acting Branch Chief, OGDS Branch-B
- Cynthia Hoffman — Design Project Engineer
- Geotechnical Archive

Appendix I

Project Plans

INDEX OF PLANS

Dist	COUNTY	ROUTE	POST MILES TOTAL PROJECT	SHEET No.	TOTAL SHEETS
11	SD	8	5.4/10.6, R20.0/R21.6		

STATE OF CALIFORNIA

DEPARTMENT OF TRANSPORTATION

PROJECT PLANS FOR CONSTRUCTION ON

STATE HIGHWAY

IN SAN DIEGO COUNTY
IN SAN DIEGO, LA MESA, AND NEAR EL CAJON
AT VARIOUS LOCATIONS
FROM 0.2 MILE WEST OF ROUTE 15/8 SEPARATION TO FLETCHER PARKWAY OVERCROSSING AND FROM LOS COCHES ROAD UNDERCROSSING TO 0.2 MILE WEST OF LAKE JENNINGS PARK ROAD UNDERCROSSING

TO BE SUPPLEMENTED BY STANDARD PLANS DATED 2010

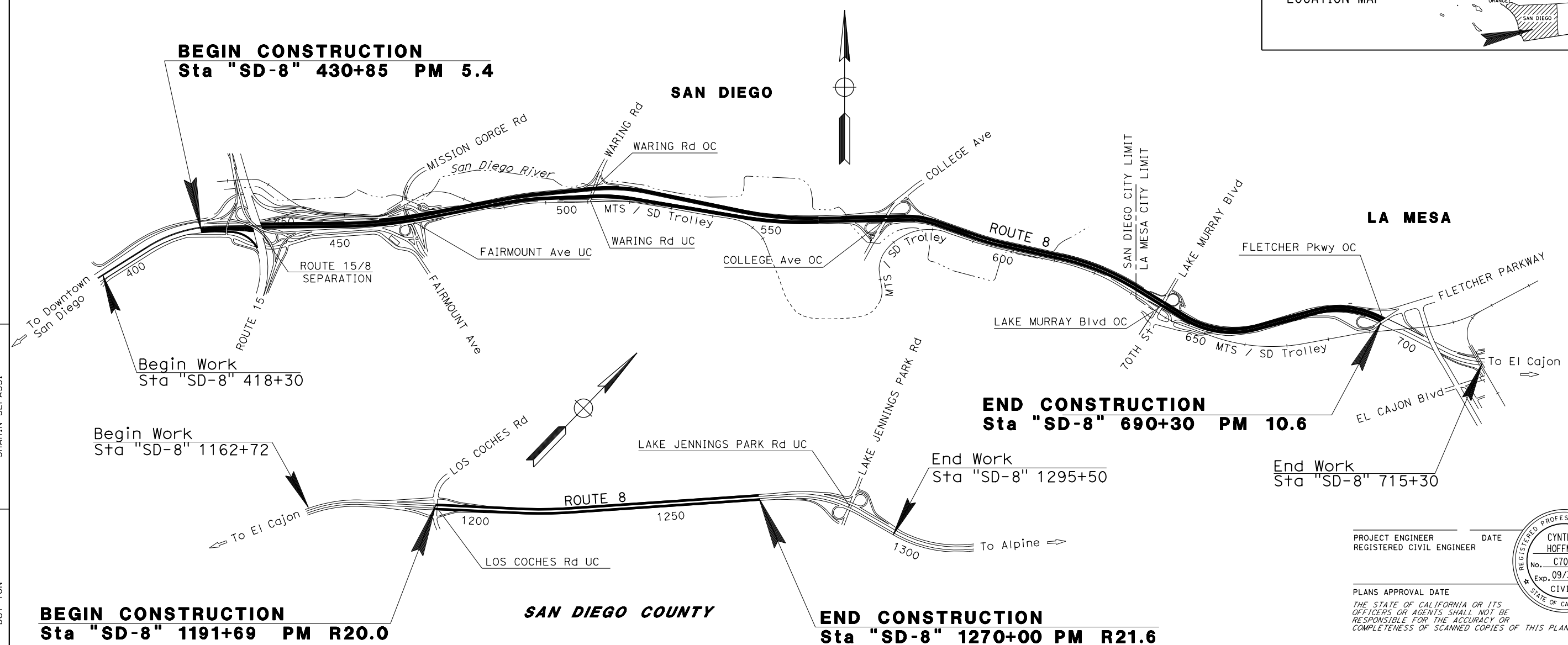

THE CONTRACTOR SHALL POSSESS THE CLASS (OR CLASSES) OF LICENSE AS SPECIFIED IN THE "NOTICE TO BIDDERS."

PROJECT ENGINEER DATE
REGISTERED CIVIL ENGINEER

REGISTERED PROFESSIONAL ENGINEER CYNTHIA HOFFMAN No. C70016 Exp. 09/30/16 CIVIL STATE OF CALIFORNIA

PLANS APPROVAL DATE

THE STATE OF CALIFORNIA OR ITS OFFICERS OR AGENTS SHALL NOT BE RESPONSIBLE FOR THE ACCURACY OR COMPLETENESS OF SCANNED COPIES OF THIS PLAN SHEET.

CONTRACT No.	11-237964
PROJECT ID	1114000046

PROJECT MANAGER SHAHIN SEPASSI
DESIGN MANAGER DUY TON

LAST REVISION 00-00-00
DATE PLOTTED => 15-DEC-2015
TIME PLOTTED => 09:57

Dist	COUNTY	ROUTE	POST MILES TOTAL PROJECT	SHEET No.	TOTAL SHEETS
11	SD	8	5.4/10.6, R20.0/R21.6		

REGISTERED CIVIL ENGINEER DATE

PLANS APPROVAL DATE

REGISTERED PROFESSIONAL ENGINEER CYNTHIA HOFFMAN No. C70016 Exp. 9-30-16 CIVIL STATE OF CALIFORNIA

THE STATE OF CALIFORNIA OR ITS OFFICERS OR AGENTS SHALL NOT BE RESPONSIBLE FOR THE ACCURACY OR COMPLETENESS OF SCANNED COPIES OF THIS PLAN SHEET.

NOTE:

FOR ACCURATE RIGHT OF WAY DATA, CONTACT RIGHT OF WAY ENGINEERING AT THE DISTRICT OFFICE.

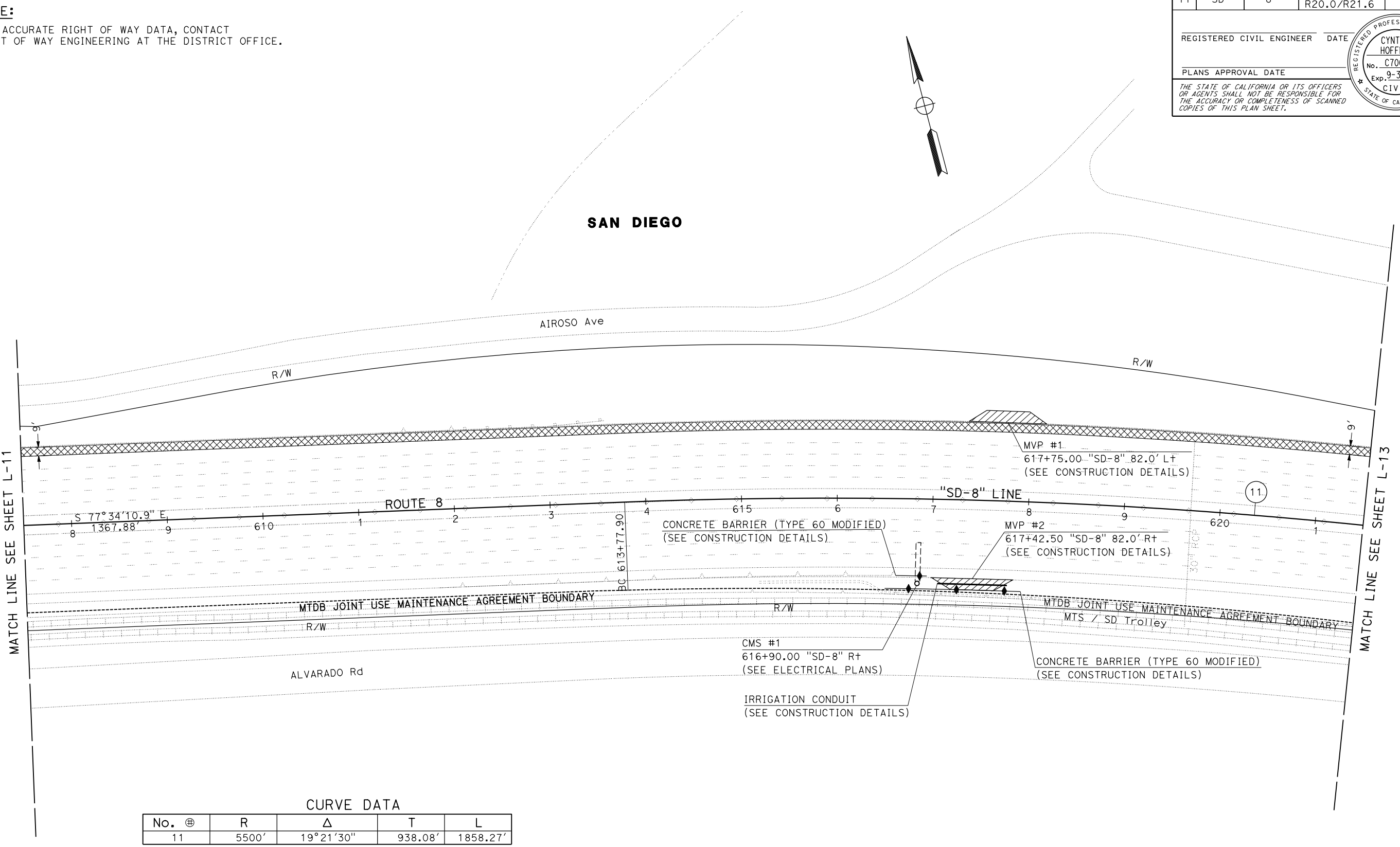

CURVE DATA

No. ⊕	R	Δ	T	L
11	5500'	19°21'30"	938.08'	1858.27'

LAYOUT

L-12

SCALE: 1" = 50'

REVISED BY	DATE REVISED
CYNTHIA HOFFMAN	DUY TON
CALCULATED-DESIGNED BY	CHECKED BY
FUNCTIONAL SUPERVISOR	DUY TON

STATE OF CALIFORNIA - DEPARTMENT OF TRANSPORTATION

Caltrans® **DESIGN**

LAST REVISION 00-00-00 DATE PLOTTED => 07-DEC-2015 TIME PLOTTED => 09:18

Dist	COUNTY	ROUTE	POST MILES TOTAL PROJECT	SHEET No.	TOTAL SHEETS
11	SD	8	5.4/10.6, R20.0/R21.6		

REGISTERED CIVIL ENGINEER DATE

PLANS APPROVAL DATE

REGISTERED PROFESSIONAL ENGINEER CYNTHIA HOFFMAN No. C70016 Exp. 9-30-16 CIVIL STATE OF CALIFORNIA

THE STATE OF CALIFORNIA OR ITS OFFICERS OR AGENTS SHALL NOT BE RESPONSIBLE FOR THE ACCURACY OR COMPLETENESS OF SCANNED COPIES OF THIS PLAN SHEET.

NOTE:

FOR ACCURATE RIGHT OF WAY DATA, CONTACT RIGHT OF WAY ENGINEERING AT THE DISTRICT OFFICE.

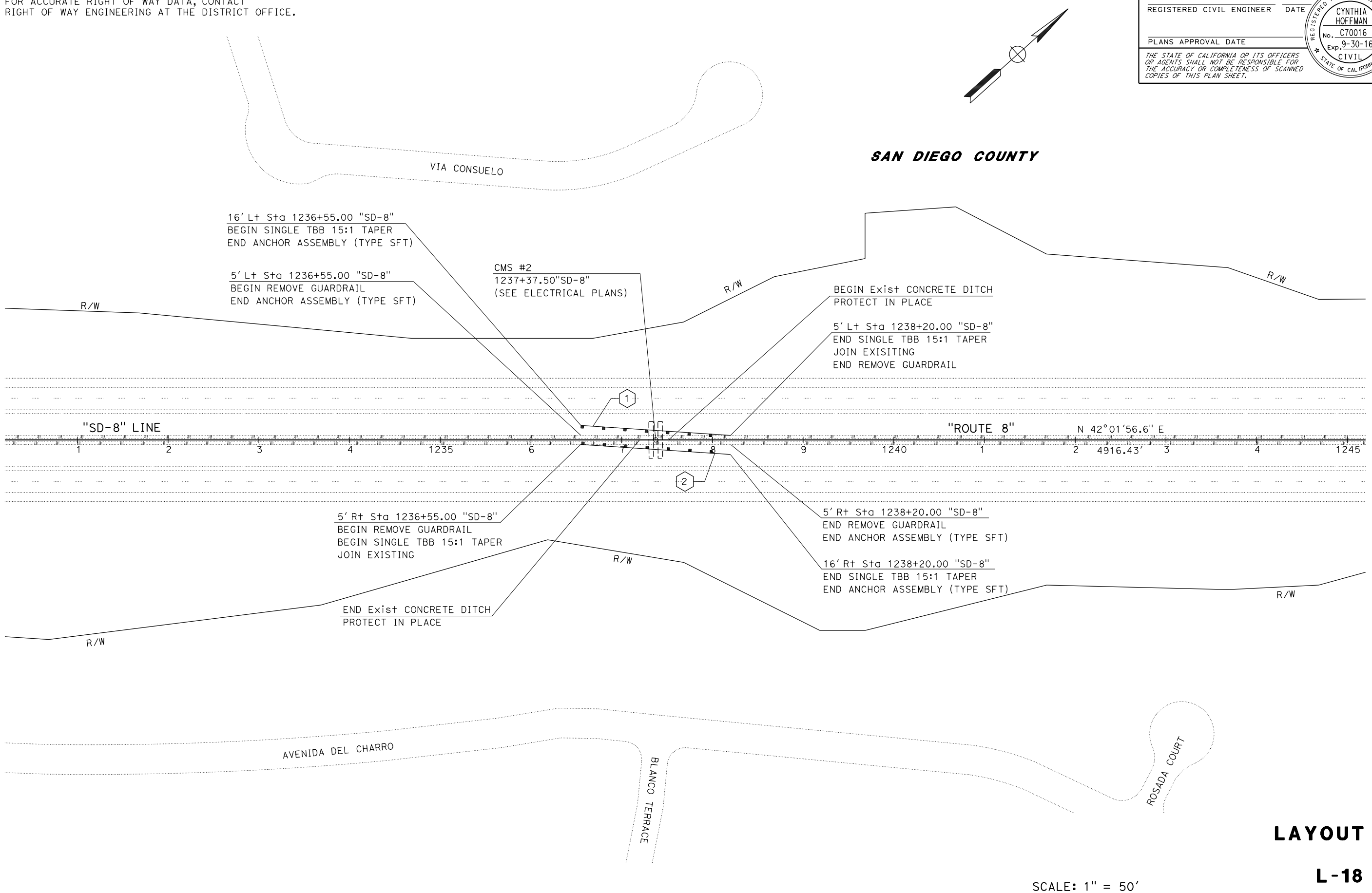

LAYOUT

L-18

SCALE: 1" = 50'

STATE OF CALIFORNIA - DEPARTMENT OF TRANSPORTATION

Caltrans® **DESIGN**

FUNCTIONAL SUPERVISOR: DUY TON

CALCULATED-DESIGNED BY: CYNTHIA HOFFMAN

CHECKED BY: DUY TON

REVISED BY | DATE REVISED

LAST REVISION 00-00-00

DATE PLOTTED => 03-DEC-2015
TIME PLOTTED => 08:38

BORDER LAST REVISED 7/2/2010

USERNAME => s131421
DGN FILE => 1114000046ea018.dgn

RELATIVE BORDER SCALE IS IN INCHES 0 1 2 3

UNIT 2782

PROJECT NUMBER & PHASE 11140000461

Dist	COUNTY	ROUTE	POST MILES TOTAL PROJECT	SHEET No.	TOTAL SHEETS
11	SD	8	5.4/10.6, R20.0/R21.6		

REGISTERED CIVIL ENGINEER DATE

PLANS APPROVAL DATE

REGISTERED PROFESSIONAL ENGINEER CYNTHIA HOFFMAN No. C70016 Exp. 9-30-16 CIVIL STATE OF CALIFORNIA

THE STATE OF CALIFORNIA OR ITS OFFICERS OR AGENTS SHALL NOT BE RESPONSIBLE FOR THE ACCURACY OR COMPLETENESS OF SCANNED COPIES OF THIS PLAN SHEET.

NOTE:

1. ALL DIMENSIONS OF THE PAVEMENT STRUCTURES (STRUCTURAL SECTION) ARE SUBJECT TO TOLERANCES SPECIFIED IN THE STANDARD SPECIFICATIONS.
2. SEE ELECTRICAL PLANS FOR OVERHEAD SIGN DETAILS, AND FIBER OPTIC WORK.
3. SEE CONSTRUCTION DETAILS AND QUANTITY SHEETS FOR STBB, CONDUIT TRENCH WORK, BARRIER AND MVP DETAILS.

ABBREVIATION:

CMS = CHANGEABLE MESSAGE SIGN
SDTI = SAN DIEGO TROLLEY, INC
MTS = METROPOLITAN TRANSIT SYSTEM
GW = GUIDEWAY

DESIGN DESIGNATION

ADT (2014)	96,280	D	52%
ADT (2035)	112,310	T	3.7%
DHV	17,950	V	65 mph

PAVEMENT CLIMATE REGION: SOUTH COAST

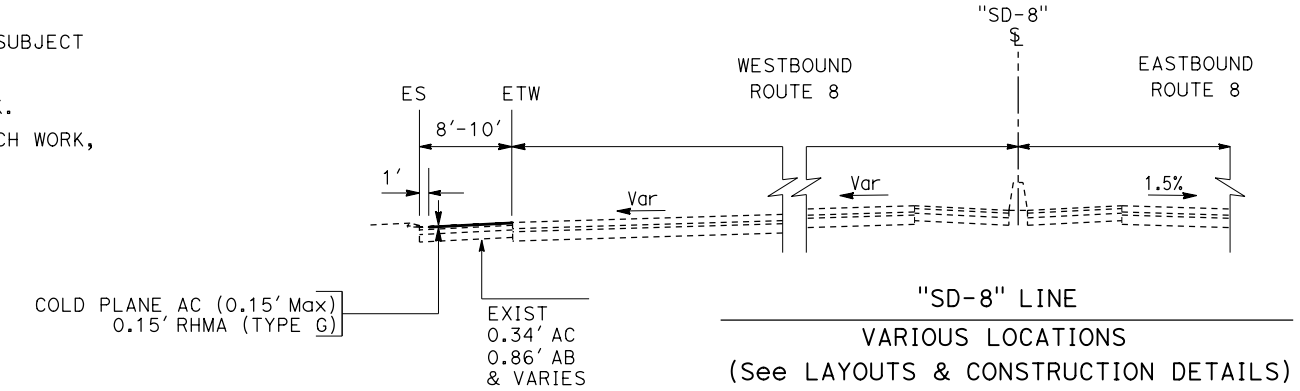

"SD-8" LINE
VARIOUS LOCATIONS
(See LAYOUTS & CONSTRUCTION DETAILS)

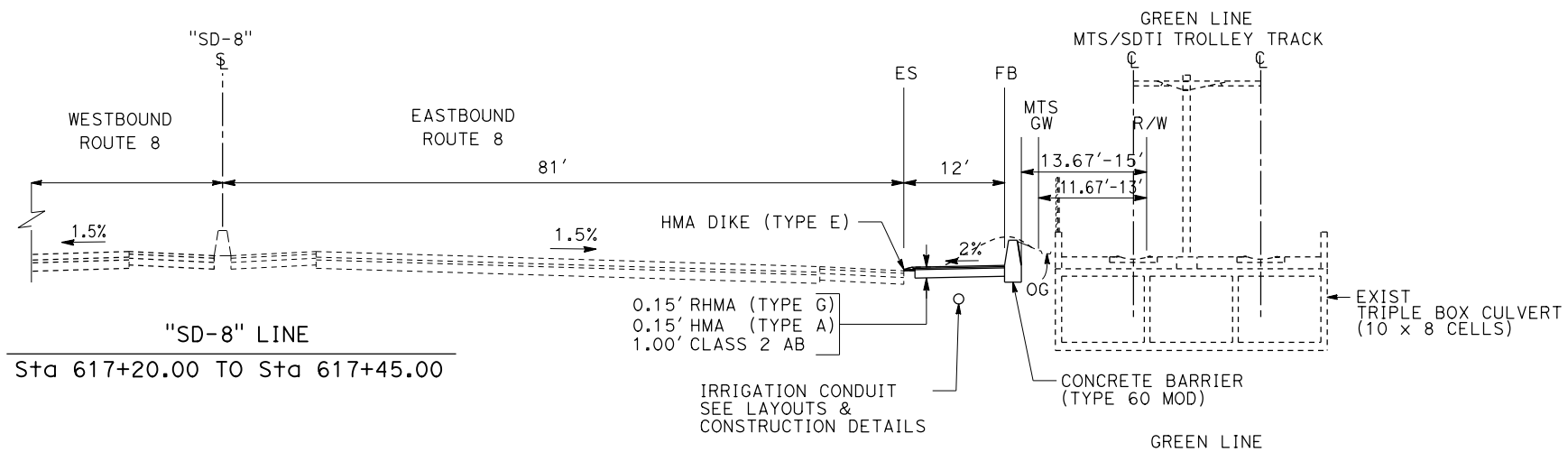

"SD-8" LINE
Sta 617+20.00 TO Sta 617+45.00

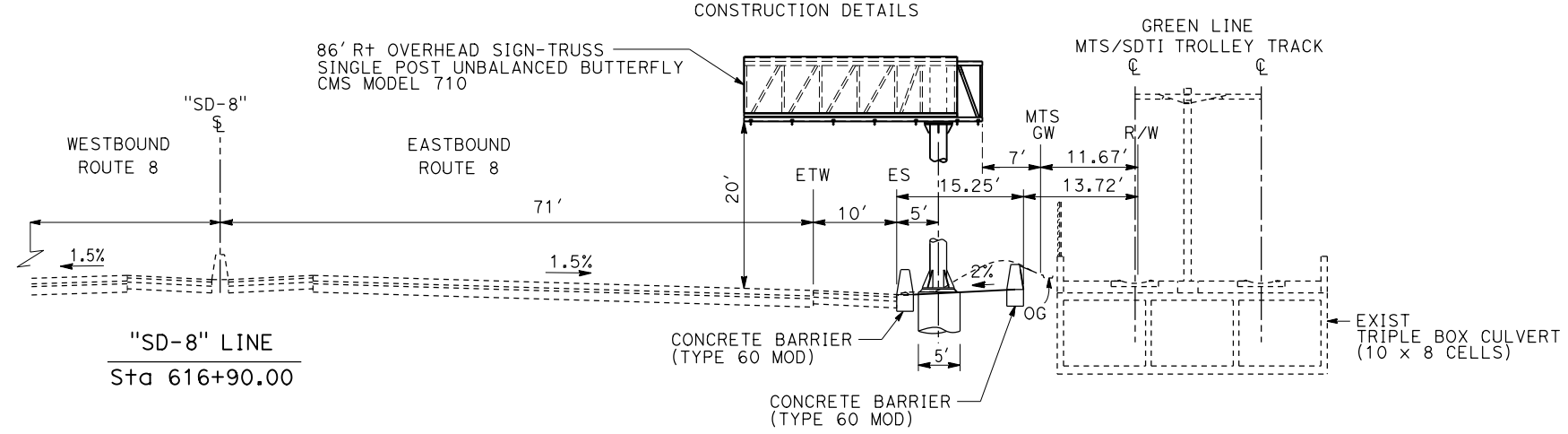

"SD-8" LINE
Sta 616+90.00

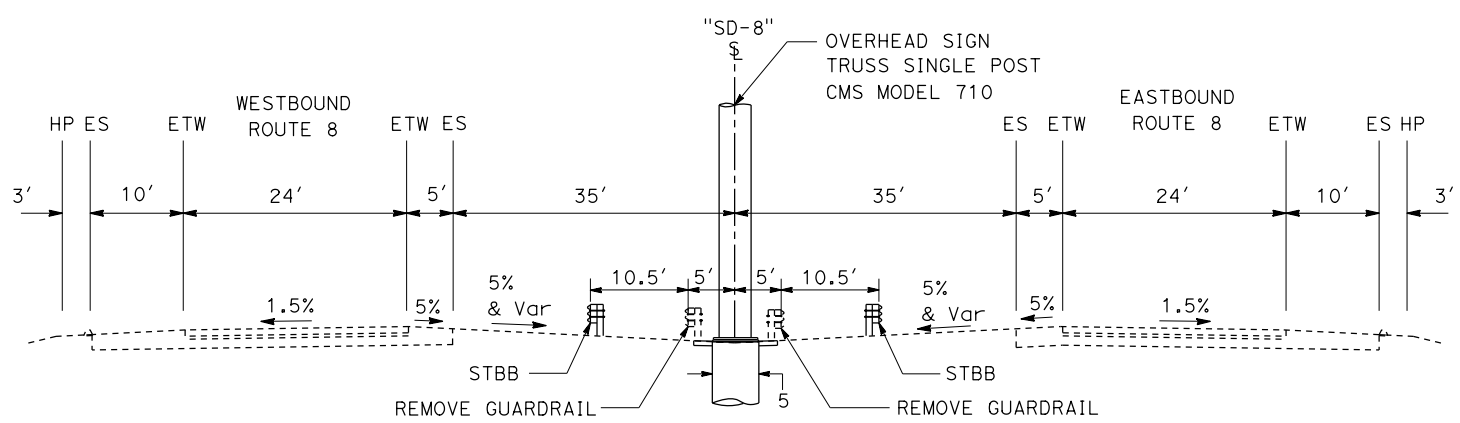

"SD-8" LINE
Sta 1237+37.50

TYPICAL CROSS SECTIONS

NO SCALE

X-1

STATE OF CALIFORNIA - DEPARTMENT OF TRANSPORTATION
DESIGN

FUNCTIONAL SUPERVISOR: DUY TON
CALCULATED-DESIGNED BY: CYNTHIA HOFFMAN
CHECKED BY: DUY TON
REVISED BY
DATE REVISED

LAST REVISION 00-00-00
DATE PLOTTED => 03-DEC-2015
TIME PLOTTED => 08:34

DIST	COUNTY	ROUTE	POST MILES TOTAL PROJECT	SHEET No	TOTAL SHEETS
11	SD	8			

REGISTERED CIVIL ENGINEER X DATE

PLANS APPROVAL DATE

REGISTERED PROFESSIONAL ENGINEER No. Exp. CIVIL STATE OF CALIFORNIA

The State of California or its officers or agents shall not be responsible for the accuracy or completeness of electronic copies of this plan sheet.

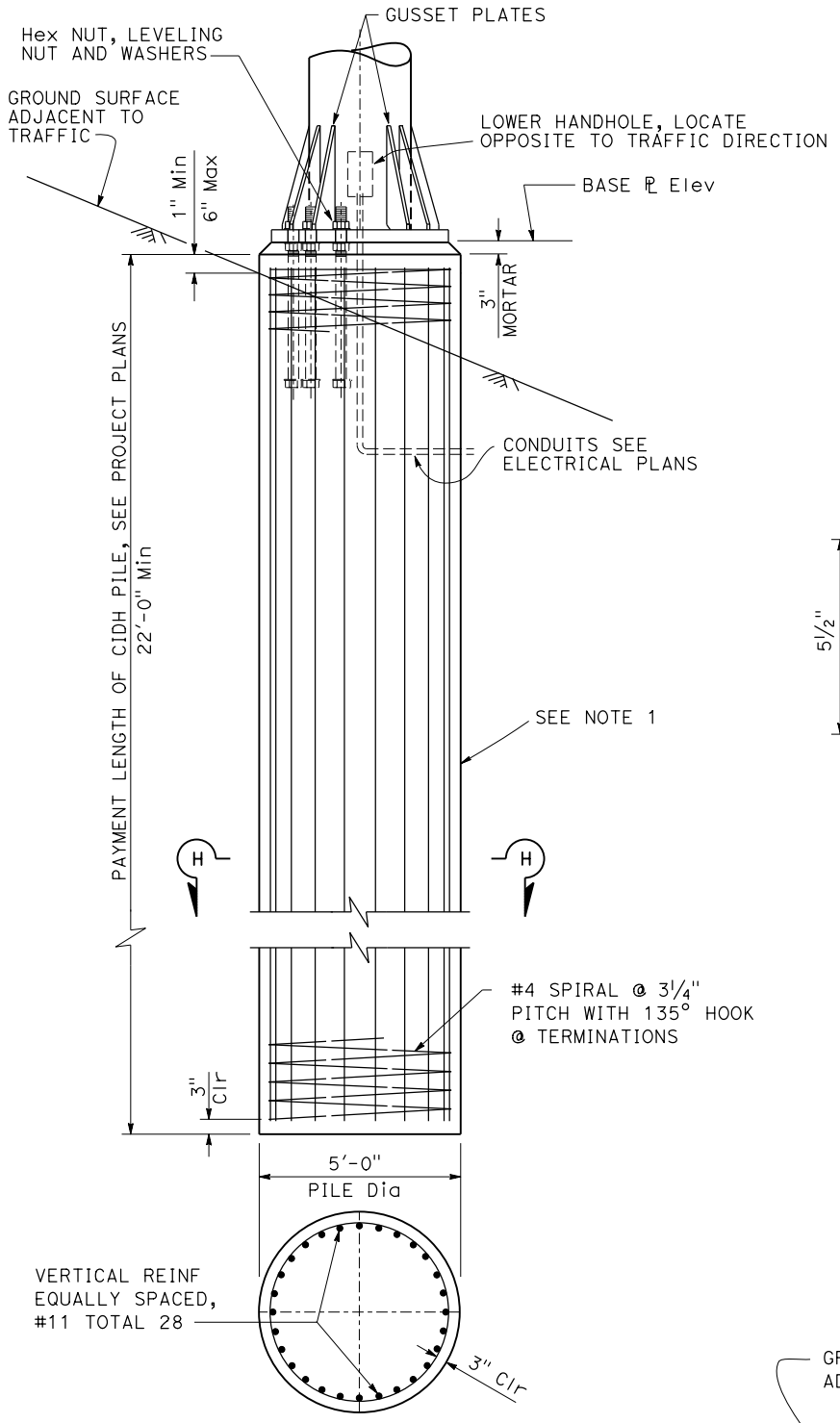

SECTION H-H

CIDH PILE FOUNDATION DETAILS

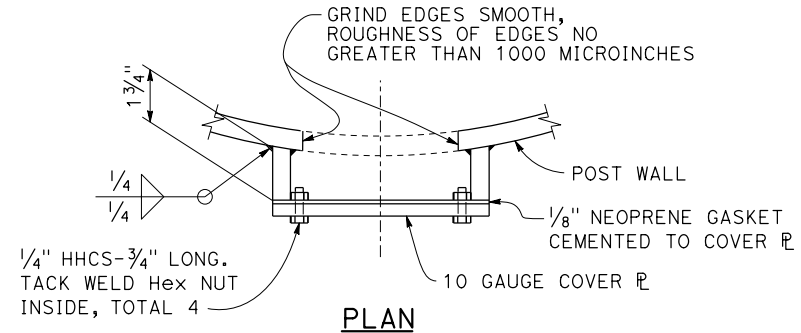

PLAN

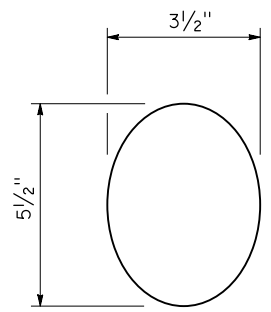

PATTERN OF ELLIPTICAL HANDHOLE CUT OUT

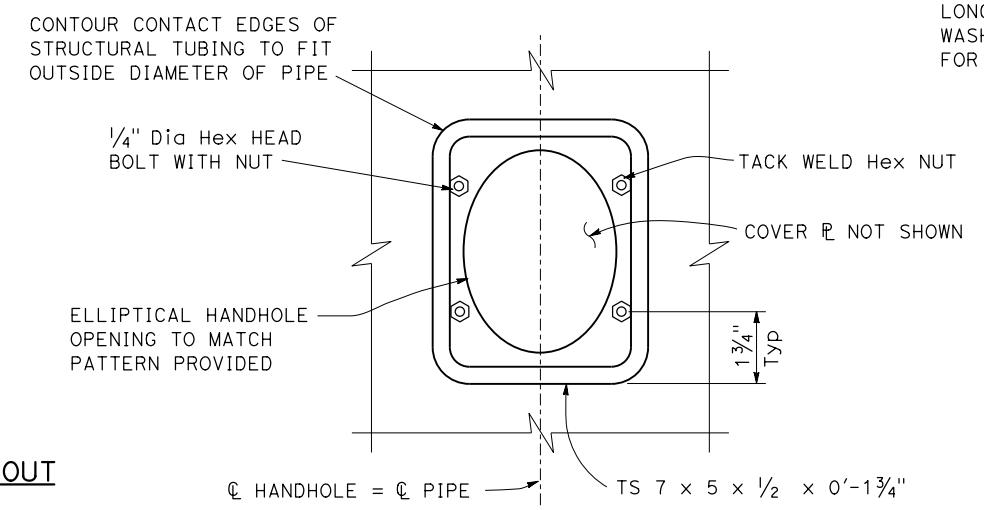

ELEVATION

LOWER HANDHOLE AND COVER DETAILS

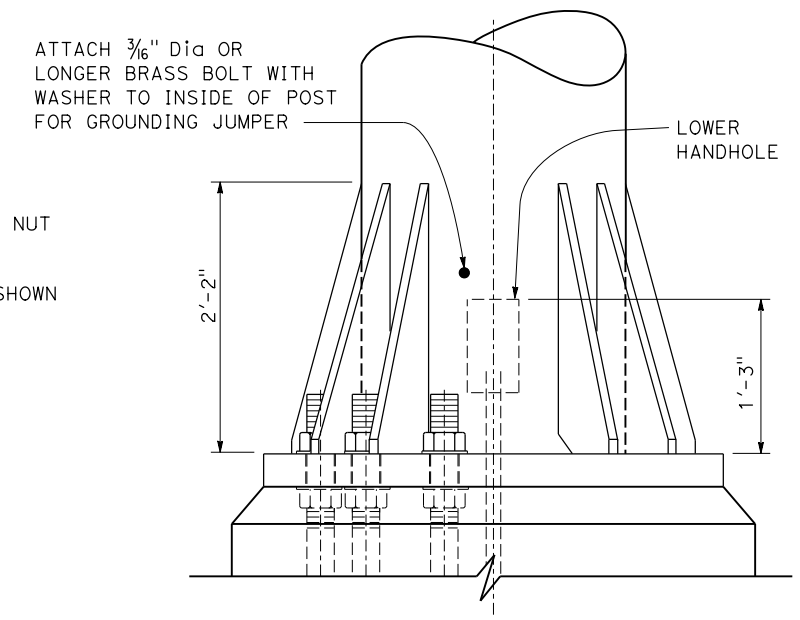

POST BASE ELEVATION

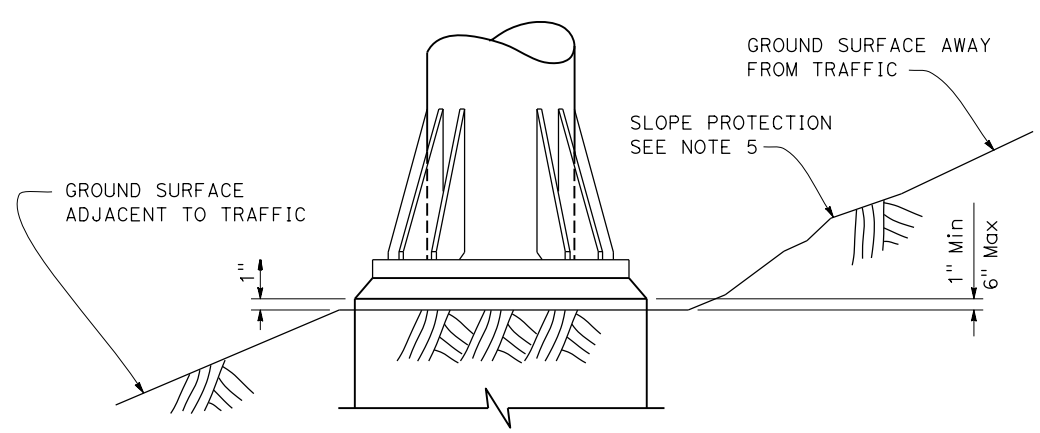

DETAIL C

NOTES:

1. Pile shall be placed against undisturbed material.
2. Primer and paint post interior from base plate to 6" above lower handhole-unless post is galvanized.
3. On single post sign structures, the post shall be raked out of plumb, with the use of leveling nuts to make the bottom of the sign frame level.
4. When foundation is located on a steep slope with exposed face of concrete adjacent to traffic, see "DETAIL C".
5. Slope protection required when indicated on Project Plans.

NOTE:
THE CONTRACTOR MUST VERIFY ALL CONTROLLING FIELD DIMENSIONS BEFORE ORDERING OR FABRICATING ANY MATERIAL.

DRAFT

NO SCALE

BRANCH CHIEF	JEFF WOODY	DESIGN	BY ANDY HOUGH	CHECKED JEFF WOODY
		DETAILS	BY M.CLEVERLEY	CHECKED ANDY HOUGH
		QUANTITIES	BY	CHECKED

STATE OF CALIFORNIA
DEPARTMENT OF TRANSPORTATION

DIVISION OF ENGINEERING SERVICES
DESIGN AND TECHNICAL SERVICES
SPECIAL DESIGNS BRANCH

A

BRIDGE NO. X-X
POST MILE X.X

AVMS MODEL 710 - BALANCED BUTTERFLY
FOUNDATION AND MISCELLANEOUS DETAILS

SDS-8

(ENGLISH) SPECIAL DESIGNS BRANCH BORDER SHEET (REV. 4-1-14)

ORIGINAL SCALE IN INCHES FOR REDUCED PLANS 0 1 2 3

UNIT: 3619
PROJECT NUMBER & PHASE: 1114000046-1
CONTRACT NO.: 11-237964

DISREGARD PRINTS BEARING EARLIER REVISION DATES

REVISION DATES

SHEET X OF X

FILE => /2015sd/XX-XXXXXX/misc

USERNAME => s114937 DATE PLOTTED => 10-SEP-2015 TIME PLOTTED => 13:24

Appendix II

Archived Data

I-172 (10)

FED. ROAD DIST. NO.	STATE	FED'L AID No.	FISCAL YR.	SHEET No.	TOTAL SHEETS
7	CAL.			75	75

DIST.	COUNTY	ROUTE	BRIDGE No.	SHEET No.	TOTAL SHEETS
XI	SD	12	57-341	12	12

JULY 16, 1956

SIGN 1

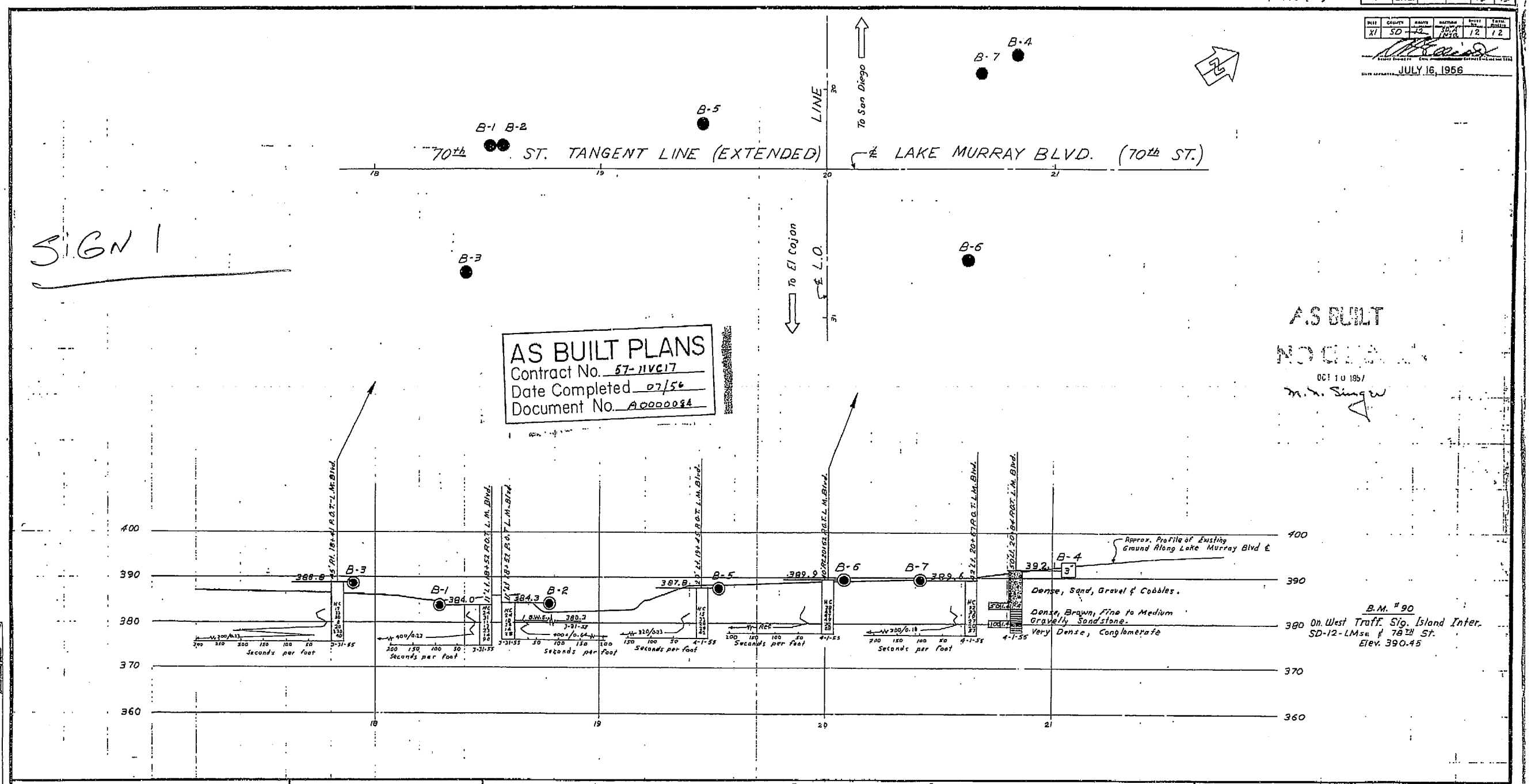

BRIDGE DEPARTMENT.

FIELD STUDY	M. Curry	4-1-55
DRAWN	K. Dreher	8-17-55
SUPERVISED	W.O. McKown	8-26-55
	E.L. Sorensen	

Formal Recommended By: [illegible]

CLASSIFICATION OF MATERIAL BASED ON STANDARD GRADE SIZE LIMITS

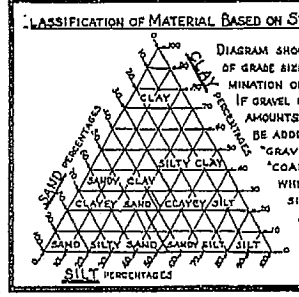

DIAGRAM SHOWING THE BASIS FOR ESTIMATES OF GRADE SIZE DISTRIBUTION USED IN DETERMINATION OF CLASS NAMES.

IF GRAVEL IS PRESENT IN APPRECIABLE AMOUNTS THE TERM "GRAVELLY" MAY BE ADDED TO THE CLASS NAME, VIZ. "GRAVELLY SAND." THE TERMS "COARSE," "MEDIUM" AND "FINE" WHEN USED TO DESCRIBE SAND, SILT AND GRAVEL REFER TO STANDARD GRADE SIZE LIMITS.

LEGEND OF EARTH MATERIALS

- GRAVEL
- SAND
- SILT
- CLAY
- SANDY CLAY OR CLAYEY SAND
- SANDY SILT OR SILTY SAND
- SILTY CLAY OR CLAYEY SILT
- PEAT AND/OR ORGANIC MATTER
- FILL MATERIAL
- IGNEOUS ROCK
- SEDIMENTARY ROCK
- METAMORPHIC ROCK

LEGEND OF BORING OPERATIONS

- PLAN OF ANY BORING
- PENETROMETER
- 2½" CONE PENETROMETER
- SAMPLER BORING (DRY)
- ROTARY BORING (WET)
- AUGER BORING (DRY)
- JET BORING
- CORE BORING
- TEST PIT

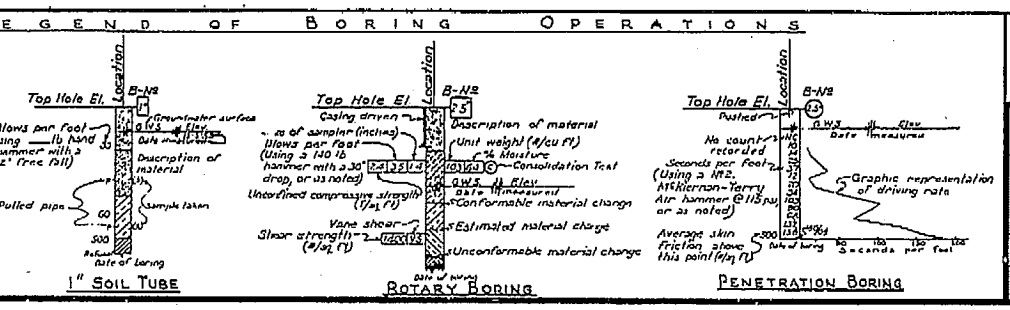

NOTES

The contractor's attention is directed to Section 2, Article (c) of the Standard Specifications and to the Special Provisions accompanying this set of plans.

Classification of earth material as shown on this sheet is based upon field inspection and is not to be construed to imply mechanical analysis.

STATE OF CALIFORNIA
DEPARTMENT OF PUBLIC WORKS
DIVISION OF HIGHWAYS

LAKE MURRAY BLVD. OVERCROSSING

LOG OF TEST BORINGS

SCALE Horiz. 1" = 20' Vert. 1" = 10' | BRIDGE 57-341 | FILE

FXEL DRAWING No. F- 4719

75

FED. ROAD DIV. NO.	STATE	PROJ. No.	FISCAL YEAR	SHEET NO.	TOTAL SHEETS
7	CAL.			125	125

DIST.	COUNTY	ROUTE	SECTION	SHEET NO.	TOTAL SHEETS
XI	SD	12	C	12	12

DIST. ENGINEER — CITY OF LOS ANGELES — LONG BEACH

DATE APPROVED September 10, 1963

BENCH MARK ▲ Mon. B-2
"T" Bar Flush, 290.885' left
Sta. 95+52.57 "C".
ELEV. 755.29

SIGN 2

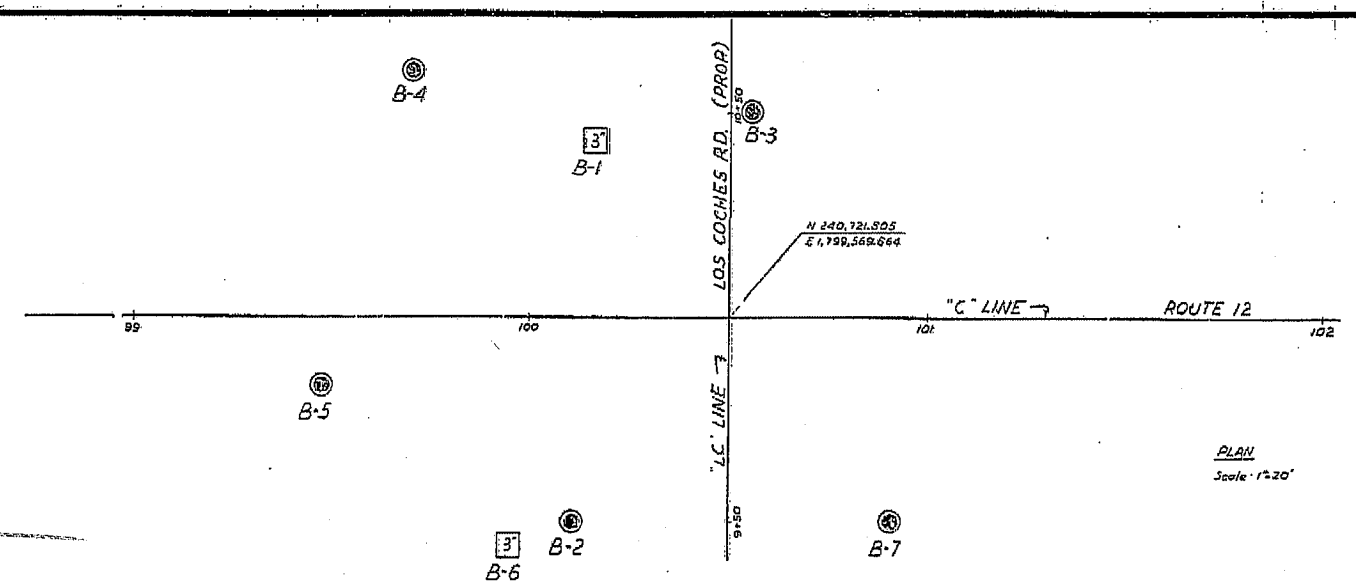

PLAN
Scale: 1"=20'

AS BUILT PLANS
Contract No. 11-037644
Date Completed 09/63
Document No. A0000068

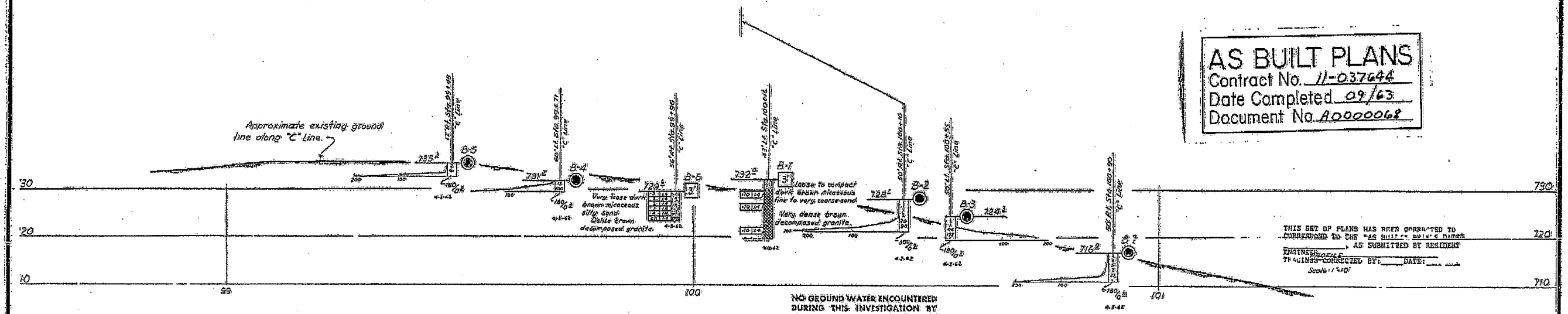

THIS SET OF PLANS HAS BEEN CORRECTED TO CORRESPOND TO THE "AS BUILT" PLANS AS SUBMITTED BY RESIDENT ENGINEER MOBILE.
TRACINGS CORRECTED BY: ____ DATE: ____
Scale: 1"=10'

NO GROUND WATER ENCOUNTERED DURING THIS INVESTIGATION BY BRIDGE DEPT. GEOLOGY SECTION
DATE Apr. 1962

BRIDGE DEPARTMENT

FIELD STUDY	J. K. Long	4-3-62
DRAWN	J. K. Long	4-23-62
CHECKED		
Approved & Recommended by		

30550

125

CLASSIFICATION OF MATERIAL BASED ON STANDARD GRADE SIZE LIMITS

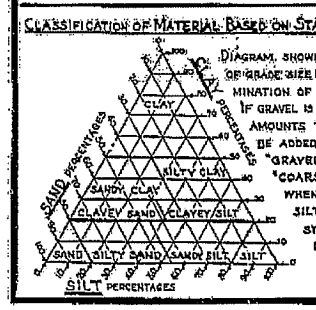

DIAGRAM, SHOWING THE BASIS FOR ESTIMATES OF GRADE SIZE DISTRIBUTION USED IN DETERMINATION OF CLASS NAMES.
IF GRAVEL IS PRESENT IN APPRECIABLE AMOUNTS THE TERM "GRAVELLY" MAY BE ADDED TO THE CLASS NAME, VIZ. "GRAVELLY SAND". THE TERMS "COARSE", "MEDIUM" AND "FINE" WHEN USED TO DESCRIBE SAND, SILT AND GRAVEL REFER TO STANDARD GRADE SIZE LIMITS.

LEGEND OF EARTH MATERIALS

- GRAVEL
- SAND
- SILT
- CLAY
- SANDY CLAY OR CLAYEY SAND
- SANDY SILT OR SILTY SAND
- SILTY CLAY OR CLAYEY SILT
- PEAT AND/OR ORGANIC MATTER
- FILL MATERIAL
- IGNEOUS ROCK
- SEDIMENTARY ROCK
- METAMORPHIC ROCK

LEGEND OF BORING OPERATIONS

- PEN. PENETROMETER
- 2½" CONE PENETROMETER
- SAMPLER BORING (DRY)
- ROTARY BORING (WET)
- AUGER BORING (DRY)
- JET BORING
- CORE BORING
- TEST PIT

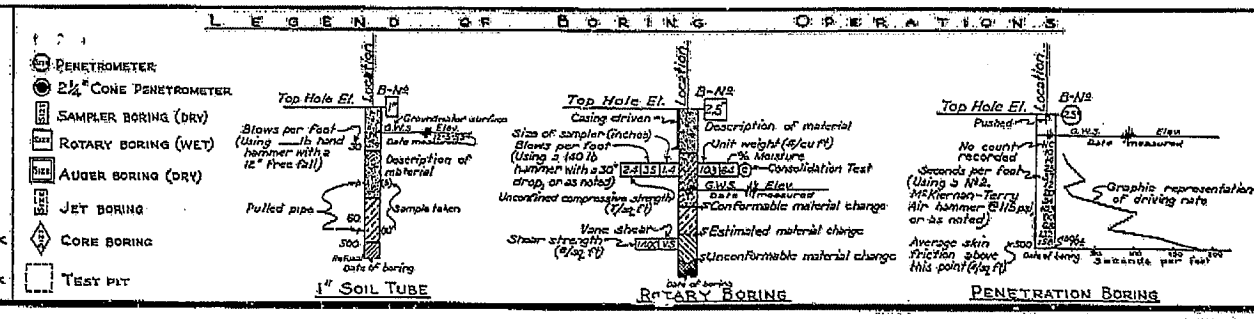

NOTE

Classification of earth material as shown on this sheet is based upon field inspection and is not to be construed to imply mechanical analysis.

STATE OF CALIFORNIA
DEPARTMENT OF PUBLIC WORKS
DIVISION OF HIGHWAYS

LOS COCHES ROAD UNDERCROSSING

LOG OF TEST BORINGS

SCALE As Noted	BRIDGE 57-474 R/L	FILE	DRAWING 57474-12

PREL. DRAWING NO. P-7037 Vol. 1

Appendix III

Boring Records

LOGGED BY	BEGIN DATE	COMPLETION DATE	BOREHOLE LOCATION (Lat/Long or North/East and Datum)	HOLE ID: A-15-001
E GALLETA	12/03/15	12/03/15	N32º46' 36.06", W117º 3' 9.56" (Google Earth Map)	
DRILLING CONTRACTOR			**BOREHOLE LOCATION (Station, Offset, and Line)**	**SURFACE ELEVATION**
CALTRANS			616+84, 77.7' Rt, "SD-8" Line	368.0 ft (Google Earth Map)
DRILLING METHOD			**DRILL RIG**	**BOREHOLE DAIMETER**
AUGER			CS 2000 C# 6832	6"
SAMPLER TYPE(S) AND SIZE(S) [ID]			**SPT HAMMER TYPE**	**HAMMER EFFICIENCY (ER_i)**
SPT (1.4)			AUTOMATIC	92 %
BOREHOLE BACKFILL AND COMPLETION			**GROUNDWATER READINGS** DURING DRILLING: NOT ENCOUNTERED; AFTER DRILLING (DATE): N/A	**TOTAL DEPTH OF BORING**
CEMENT GROUT				18.0 ft

ELEVATION (ft)	DEPTH (ft)	Depth (ft)	DESCRIPTION	Sample Location	Sample Number	Blows Per 6 in	Blows Per 1.0 ft	Recovery (%)	RQD (%)	Moisture Content (%)	Dry Unit Weight (pcf)	Shear Strength (tsf)	Drilling Method	Casing Depth	REMARKS
368.00			ASPHALT CONCRETE (4")												
367.17		0.83	AGREGATE BASE (6")												
	1		SILTY SAND with GRAVEL (SM); very dense; brown; moist; fine SAND with trace of CLAY; trace coarse SAND; little coarse subrounded and rounded GRAVEL; few COBBLES. (FILL)												
	2														
	3														
	4														
	5			X	S01	15	50/3" Ref.								Blow counts affected by gravel.
	6														
	7														
360.00	8	8.00	SEDIMENTARY ROCK (CONGLOMERATE); fine and coarse grained; yellowish brown; poorly cemented; weathered; [Poorly-graded SAND with GRAVEL (SP); very dense; dry; fine SAND with trace coarse SAND; little subrounded and rounded GRAVEL; few COBBLES]. (STADIUM CONGLOMERATE)												
	9														
	10			X	S02	50	Ref.								Blow counts affected by gravel.
	11				B01 (Corrosion Test Sample)										
	12														
	13														
	14														
	15			X	S03	20	50/6" Ref.								Blow counts affected by gravel.
	16														Difficult Drilling due to hard rock formation encountered. Auger bit broke and left at the bottom of the hole.
	17			X	S04	41	50/5" Ref.								Blow counts affected by gravel.
350.00	18	18.00	Bottom of borehole at 18.00 ft Boring terminated at 18.00 ft due to hard formation encountered. This Boring Record was prepared in accordance with the Caltrans Soil & Rock Logging, Classification, and Presentation Manual (2010).												
	19														
	20														

DEPARTMENT OF TRANSPORTATION	REPORT TITLE Foundation Report for Two Proposed CMS at E/B I-8			HOLE ID: A-15-001
DIVISION OF ENGINEERING SERVICES	DISTRICT 11	COUNTY SD	ROUTE 8	POSTMILE(KP) 6.1/21.8	EA 11-23796
GEOTECHNICAL SERVICES	PROJECT OR BRIDGE NAME EXPAND DISTRICT 11 FIBER OPTIC NETWORK ALONG I-8			
OFFICE OF GEOTECHNICAL DESIGN-SOUTH 2	BRIDGE NUMBER N/A	PREPARED BY EGALLETA	DATE 12/7/2015	SHEET 1 of 1

LOGGED BY	BEGIN DATE	COMPLETION DATE	BOREHOLE LOCATION (Lat/Long or North/East and Datum)	HOLE ID: A-15-002
A LARI	12/14/15	12/14/15	N 32° 50; 7.4"; W 116° 53' 33.98"	
DRILLING CONTRACTOR			**BOREHOLE LOCATION (Station, Offset, and Line)**	**SURFACE ELEVATION**
CALTRANS			1237+30.36, 10' Rt, "SD-8" Line	681.0 ft
DRILLING METHOD			**DRILL RIG**	**BOREHOLE DAIMETER**
AUGER			CS 200 C# 6832	6"
SAMPLER TYPE(S) AND SIZE(S) [ID]			**SPT HAMMER TYPE**	**HAMMER EFFICIENCY (ER_i)**
SPT (1.4")			AUTOMATIC	92 %
BOREHOLE BACKFILL AND COMPLETION			**GROUNDWATER READINGS** / **DURING DRILLING** / **AFTER DRILLING (DATE)**	**TOTAL DEPTH OF BORING**
CEMENT GROUT AND BENTONITE CHIPS (3')			NOT ENCOUNTERED / NA	35.0 ft

ELEVATION (ft)	DEPTH (ft)	Depth (ft)	DESCRIPTION	Sample Location	Sample Number	Blows Per 6 in	Blows Per 1.0 ft	Recovery (%)	RQD (%)	Moisture Content (%)	Dry Unit Weight (pcf)	Shear Strength (tsf)	Drilling Method	Casing Depth	REMARKS
681.0			Poorly-graded SAND with GRAVEL (SP); very dense, dark gray, fine SAND; little fine GRAVEL; trace of fines; (FILL).												
	1														
	2														
	3														
	4														
	5				S01	13									
	6					24	46								
						22									
	7														
	8														
	9		little coarse GRAVEL.												
	10				S02	12									
	11					20	34								
						14									
	12				B01 (Corrosion Test Sample)										
	13														
	14														
	15				S03	7									
	16					14	53								
						39									
	17														
663.5		17.5													
	18		GRANITIC ROCK; gray, decomposed;[well graded SAND (SW); very dense]												
	19														
	20														

(continued)

DEPARTMENT OF TRANSPORTATION

DIVISION OF ENGINEERING SERVICES

GEOTECHNICAL SERVICES

OFFICE OF GEOTECHNICAL DESIGN-SOUTH 2

REPORT TITLE
Foundation Report for Two Proposed CMS at E/B I-8

HOLE ID: A-15-002

DISTRICT	COUNTY	ROUTE	POSTMILE(KP)	EA
11	SD	8	5.4/10.6, R20.0/R21.6	11-23796

PROJECT OR BRIDGE NAME
EXPAND DISTRICT 11 FIBER OPTIC NETWORK ALONG I-8

BRIDGE NUMBER	PREPARED BY	DATE	SHEET
N/A	ALI LARI	12/21/15	1 of 2

ELEVATION (ft)	DEPTH (ft)	Depth (ft)	DESCRIPTION	Sample Location	Sample Number	Blows Per 6 in	Blows Per 1.0 ft	Recovery (%)	RQD (%)	Moisture Content (%)	Dry Unit Weight (pcf)	Shear Strength (tsf)	Drilling Method	Casing Depth	REMARKS
			GRANITIC ROCK; gray, decomposed; [well graded SAND (SW); very dense]		S04	Ref.									
	21														
	22														
	23														
	24														
	25				S05	Ref.									
	26														
	27														
	28														
	29														
	30				S06	Ref.									
	31														
	32														
	33														
	34														
646.0	35	35.0			S07	Ref.									
	36		Bottom of borehole at 35.00 ft Boring terminated at planned depth. This Boring Record was prepared in accordance with the Caltrans Soil & Rock Logging, Classification, and Presentation Manual (2010).												
	37														
	38														
	39														
	40														

DEPARTMENT OF TRANSPORTATION

DIVISION OF ENGINEERING SERVICES

GEOTECHNICAL SERVICES

OFFICE OF GEOTECHNICAL DESIGN-SOUTH 2

REPORT TITLE
Foundation Report for Two Proposed CMS at E/B I-8

HOLE ID: **A-15-002**

DISTRICT	COUNTY	ROUTE	POSTMILE(KP)	EA
11	SD	8	5.4/10.6, R20.0/R21.6	11-23796

PROJECT OR BRIDGE NAME
EXPAND DISTRICT 11 FIBER OPTIC NETWORK ALONG I-8

BRIDGE NUMBER	PREPARED BY	DATE	SHEET
N/A	ALI LARI	12/21/15	2 of 2

Appendix IV

Laboratory Test Results

Results sent to: ALI LARI

Division of Engineering Services
Materials Engineering and Testing Services
Corrosion and Structural Concrete Field Investigation Branch

Report Date: 1/5/2016
Reported by Michael Mifkovic

CORROSION TEST SUMMARY REPORT - SOIL

EA: **11-23796**

EFIS: **1114000046**

Dist/Co/Rte/PM: **11 / SD /008/ / 6.1-21.8 PM**

CORROSION LAB #	TL101 #	BORE #	DEPTH (FT) START	DEPTH (FT) END	MINIMUM RESISTIVITY[1] (ohm-cm)	pH[1]	CHLORIDE CONTENT[2] (ppm)	SULFATE CONTENT[3] (ppm)	IS SAMPLE CORROSIVE?
SOIL SAMPLE FROM: CHANGEABLE MESSAGE SIGN 1									
CR20160001	**C151215**	A-15-001	10	15	1949	7.09			NO
SOIL SAMPLE FROM: CHANGEABLE MESSAGE SIGN 2									
CR20160002	**C151216**	A-15-002	10	15	12703	7.68			NO

This site is not corrosive to foundation elements (see note below).

Note: For Structural Elements, the Department considers a site corrosive if one or more of the following conditions exist: pH is 5.5 or less, chloride concentration is 500 ppm or greater, sulfate concentration is 2000 ppm or greater. Resistivity is not considered for Structural Elements. MSE backfill shall conform to the requirements of section 47-2.02C Structure Backfill in the 2010 Standard Specifications.

[1]CT 643, [2]CT 422, [3]CT 417