Dist	COUNTY	ROUTE	POST MILES TOTAL PROJECT	SHEET No.	TOTAL SHEETS
11	SD	805	7.7/9.1	1	36

STATE OF CALIFORNIA

DEPARTMENT OF TRANSPORTATION

PROJECT PLANS FOR CONSTRUCTION ON

STATE HIGHWAY

IN SAN DIEGO COUNTY IN CHULA VISTA AND NATIONAL CITY FROM 0.1 MILE SOUTH OF BONITA ROAD UNDERCROSSING TO SWEETWATER ROAD UNDERCROSSING

TO BE SUPPLEMENTED BY STANDARD PLANS DATED MAY 2006

INDEX OF PLANS

SHEET NO.	DESCRIPTION
1	TITLE AND LOCATION MAP
2	KEY MAP
3-7	WATER POLLUTION CONTROL PLAN, DETAILS AND QUANTITIES
8	CONSTRUCTION AREA SIGNS
9	PLANT LIST
10-13	PLANTING PLANS
14	IRRIGATION REMOVAL PLAN
15-18	IRRIGATION PLANS
19-21	SPRINKLER SCHEDULE AND DETAILS
22-23	IRRIGATION QUANTITIES
24-36	REVISED AND NEW STANDARD PLANS

THE STANDARD PLANS LIST APPLICABLE TO THIS CONTRACT IS INCLUDED IN THE NOTICE TO BIDDERS AND SPECIAL PROVISION BOOK.

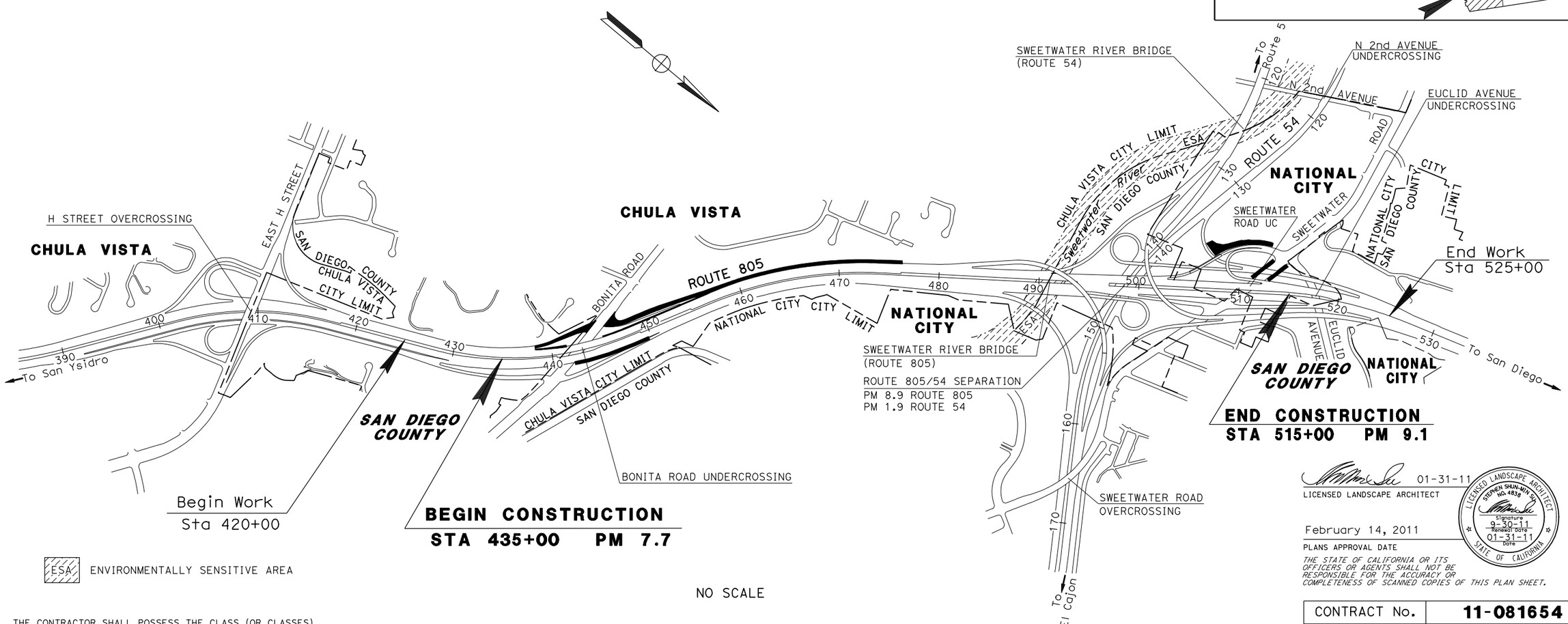

ESA ENVIRONMENTALLY SENSITIVE AREA

NO SCALE

THE CONTRACTOR SHALL POSSESS THE CLASS (OR CLASSES) OF LICENSE AS SPECIFIED IN THE "NOTICE TO BIDDERS."

PROJECT MANAGER: RAMON MARTINEZ

SENIOR LANDSCAPE ARCHITECT: ERIC DICKSON

01-31-11
LICENSED LANDSCAPE ARCHITECT

LICENSED LANDSCAPE ARCHITECT STEPHEN SHUN-MIN SU NO. 4838 Signature 9-30-11 Renewal Date 01-31-11 Date STATE OF CALIFORNIA

February 14, 2011
PLANS APPROVAL DATE

THE STATE OF CALIFORNIA OR ITS OFFICERS OR AGENTS SHALL NOT BE RESPONSIBLE FOR THE ACCURACY OR COMPLETENESS OF SCANNED COPIES OF THIS PLAN SHEET.

CONTRACT No.	11-081654
PROJECT ID	11000000631

LAST REVISION 01-18-11 | DATE PLOTTED => 03-FEB-2011 | TIME PLOTTED => 12:21

Dist	COUNTY	ROUTE	POST MILES TOTAL PROJECT	SHEET No.	TOTAL SHEETS
11	SD	805	7.7/9.1	2	36

01-31-11
LICENSED LANDSCAPE ARCHITECT

02-14-11
PLANS APPROVAL DATE

THE STATE OF CALIFORNIA OR ITS OFFICERS OR AGENTS SHALL NOT BE RESPONSIBLE FOR THE ACCURACY OR COMPLETENESS OF SCANNED COPIES OF THIS PLAN SHEET.

LICENSED LANDSCAPE ARCHITECT
STEPHEN SHUN-MIN SU
No. 4838
Signature
9-30-11
Renewal Date
01-31-11
Date
STATE OF CALIFORNIA

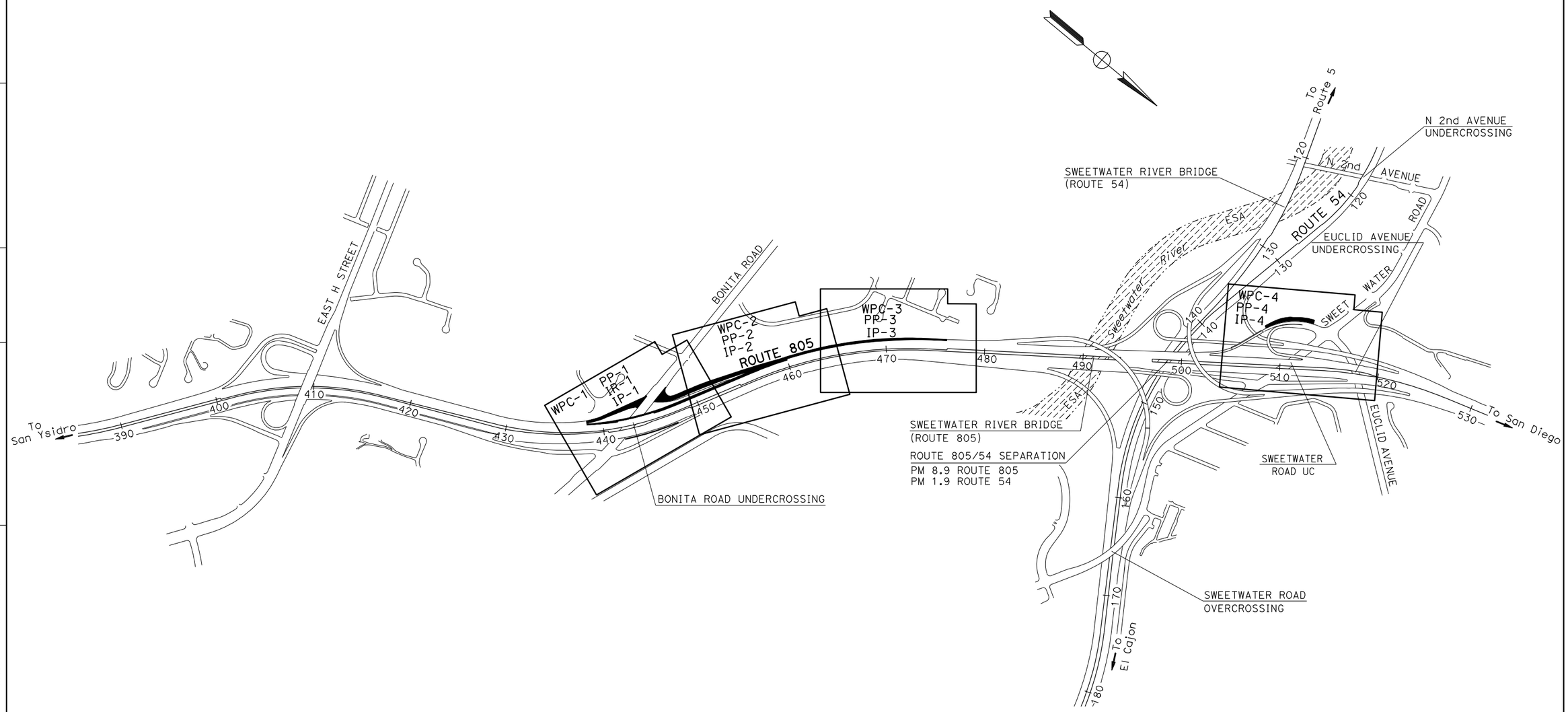

KEY MAP

NO SCALE

K-1

REVISED BY	DATE REVISED
FY	12-31-10

CALCULATED-DESIGNED BY	FATEMEH YOUSEFI
CHECKED BY	STEPHEN SU
SENIOR LANDSCAPE ARCHITECT	ERIC DICKSON

STATE OF CALIFORNIA - DEPARTMENT OF TRANSPORTATION
Caltrans
LANDSCAPE ARCHITECTURE

LAST REVISION 01-18-11
DATE PLOTTED => 03-FEB-2011
TIME PLOTTED => 12:21

Dist	COUNTY	ROUTE	POST MILES TOTAL PROJECT	SHEET No.	TOTAL SHEETS
11	SD	805	7.7/9.1	3	36

LICENSED LANDSCAPE ARCHITECT 01-31-11

02-14-11
PLANS APPROVAL DATE

LICENSED LANDSCAPE ARCHITECT STEPHEN SHUN-MIN SU No. 4838 Signature 9-30-11 Renewal Date 01-31-11 Date STATE OF CALIFORNIA

THE STATE OF CALIFORNIA OR ITS OFFICERS OR AGENTS SHALL NOT BE RESPONSIBLE FOR THE ACCURACY OR COMPLETENESS OF SCANNED COPIES OF THIS PLAN SHEET.

NOTE:

FOR COMPLETE RIGHT OF WAY DATA, SEE RIGHT OF WAY RECORD MAPS AT DISTRICT OFFICE.

LEGEND:

- FR EXISTING FIBER ROLLS TO BE MAINTAINED
- FIBER ROLLS
- DRAINAGE INLET PROTECTION (EROSION CONTROL) SEE DETAILS
- TEMPORARY DRAINAGE INLET PROTECTION (TYPE 5)
- SURFACE FLOW DIRECTION (2:1 SLOPE, UNLESS OTHERWISE SHOWN)
- EXISTING TEMPORARY CHECK DAM
- BIOFILTRATION SWALE FLOW LINE
- MULCH (SPREAD OUTSIDE PLANTING BASIN A UNIFORM THICKNESS OF 1½")

WATER POLLUTION CONTROL QUANTITIES

SHEET NUMBER	PERMANENT FIBER ROLLS (LF)	DRAINAGE INLET PROTECTION (EROSION CONTROL) (EA)	TEMPORARY DRAINAGE PROTECTION (TYPE 5) (EA)	MULCH (CY)
WPC-1	2320	2	2	230
WPC-2	1400	2	-	300
WPC-3	500	-	-	75
WPC-4	1550	-	-	265
TOTAL	5770	4	2	870

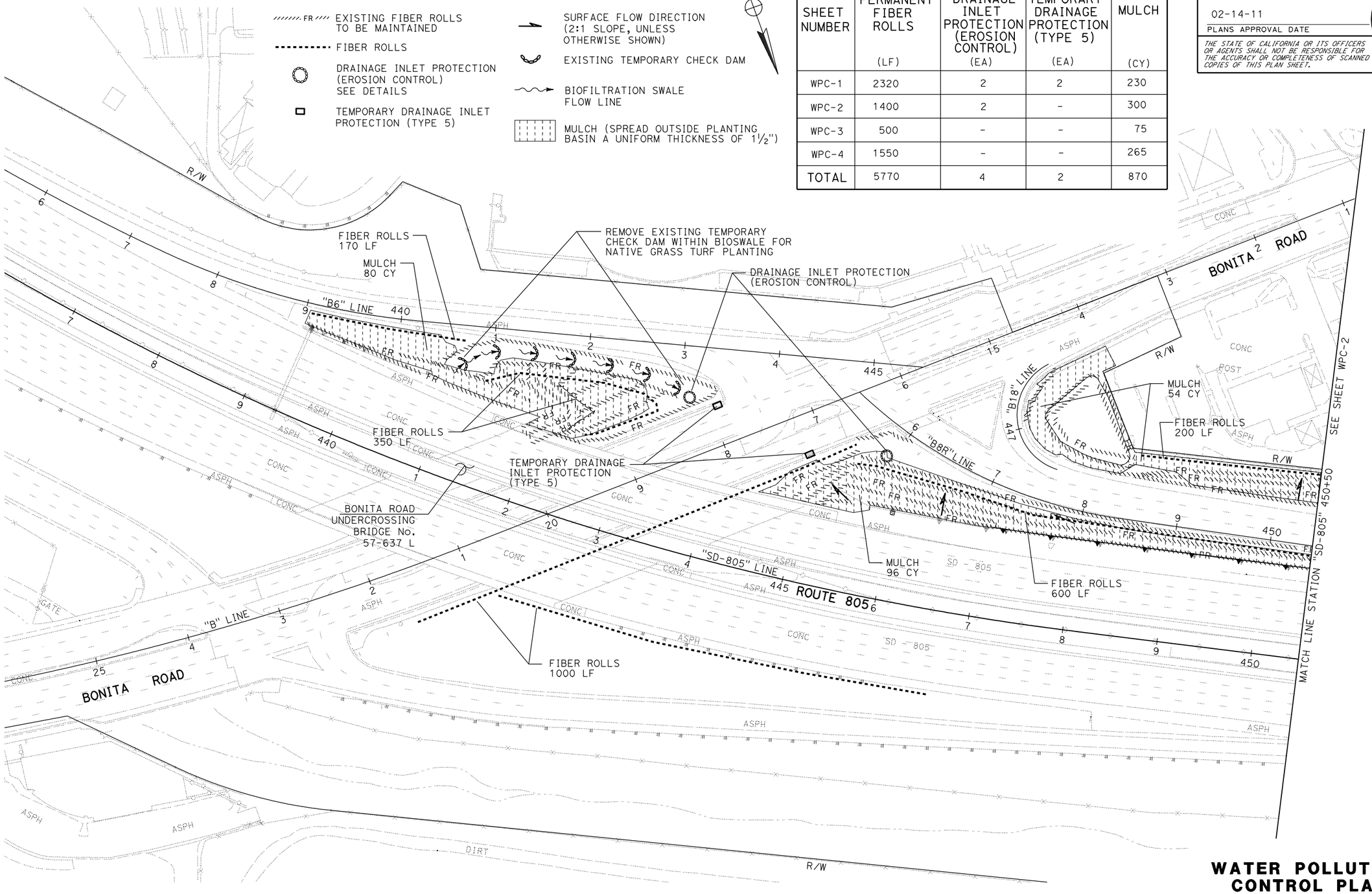

THIS PLAN ACCURATE FOR TEMPORARY WATER POLUTION CONTROL WORK ONLY

WATER POLLUTION CONTROL PLAN

SCALE: 1" = 50'

WPC-1

REVISED BY	DATE REVISED
FY	12-31-10

CALCULATED-DESIGNED BY: FATEMEH YOUSEFI
CHECKED BY: STEPHEN SU
SENIOR LANDSCAPE ARCHITECT: ERIC DICKSON

STATE OF CALIFORNIA - DEPARTMENT OF TRANSPORTATION
Caltrans
LANDSCAPE ARCHITECTURE

LAST REVISION 01-31-11
DATE PLOTTED => 03-FEB-2011
TIME PLOTTED => 12:21

Dist	COUNTY	ROUTE	POST MILES TOTAL PROJECT	SHEET No.	TOTAL SHEETS
11	SD	805	7.7/9.1	4	36

LICENSED LANDSCAPE ARCHITECT 01-31-11

PLANS APPROVAL DATE 02-14-11

LICENSED LANDSCAPE ARCHITECT STEPHEN SHUN-MIN SU NO. 4838 Signature 9-30-11 Renewal Date 01-31-11 Date STATE OF CALIFORNIA

THE STATE OF CALIFORNIA OR ITS OFFICERS OR AGENTS SHALL NOT BE RESPONSIBLE FOR THE ACCURACY OR COMPLETENESS OF SCANNED COPIES OF THIS PLAN SHEET.

NOTE:

FOR COMPLETE RIGHT OF WAY DATA, SEE RIGHT OF WAY RECORD MAPS AT DISTRICT OFFICE.

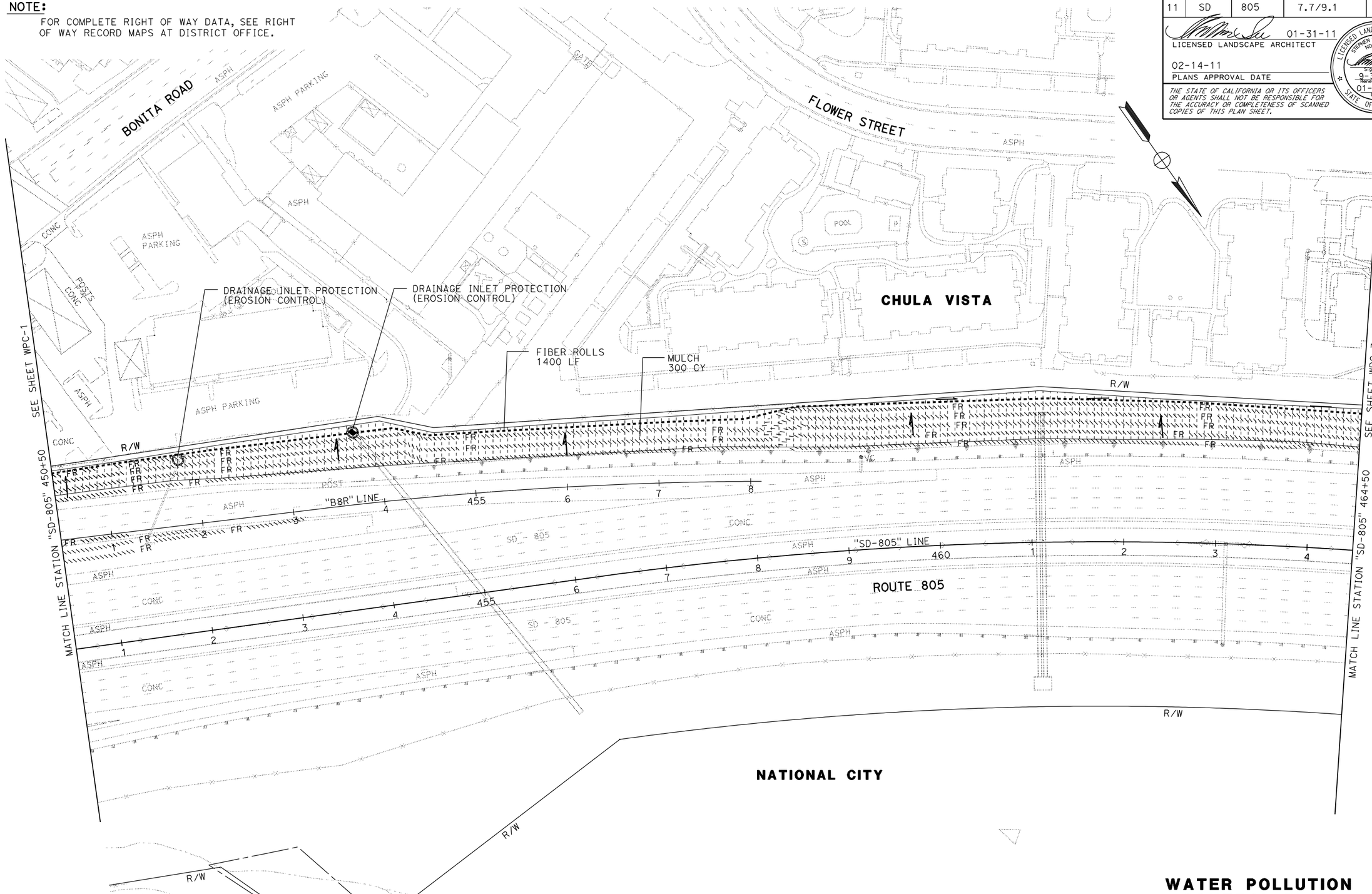

THIS PLAN ACCURATE FOR TEMPORARY WATER POLUTION CONTROL WORK ONLY

WATER POLLUTION CONTROL PLAN

SCALE: 1" = 50'

WPC-2

STATE OF CALIFORNIA - DEPARTMENT OF TRANSPORTATION

Caltrans® LANDSCAPE ARCHITECTURE

SENIOR LANDSCAPE ARCHITECT: ERIC DICKSON

CALCULATED-DESIGNED BY: FATEMEH YOUSEFI

CHECKED BY: STEPHEN SU

REVISED BY: FY

DATE REVISED: 12-31-10

LAST REVISION 01-18-11

DATE PLOTTED => 03-FEB-2011

TIME PLOTTED => 12:21

Dist	COUNTY	ROUTE	POST MILES TOTAL PROJECT	SHEET No.	TOTAL SHEETS
11	SD	805	7.7/9.1	5	36

LICENSED LANDSCAPE ARCHITECT 01-31-11

02-14-11
PLANS APPROVAL DATE

THE STATE OF CALIFORNIA OR ITS OFFICERS OR AGENTS SHALL NOT BE RESPONSIBLE FOR THE ACCURACY OR COMPLETENESS OF SCANNED COPIES OF THIS PLAN SHEET.

LICENSED LANDSCAPE ARCHITECT STEPHEN SHUN-MIN SU NO. 4838 Signature 9-30-11 Renewal Date 01-31-11 Date STATE OF CALIFORNIA

NOTE:
FOR COMPLETE RIGHT OF WAY DATA, SEE RIGHT OF WAY RECORD MAPS AT DISTRICT OFFICE.

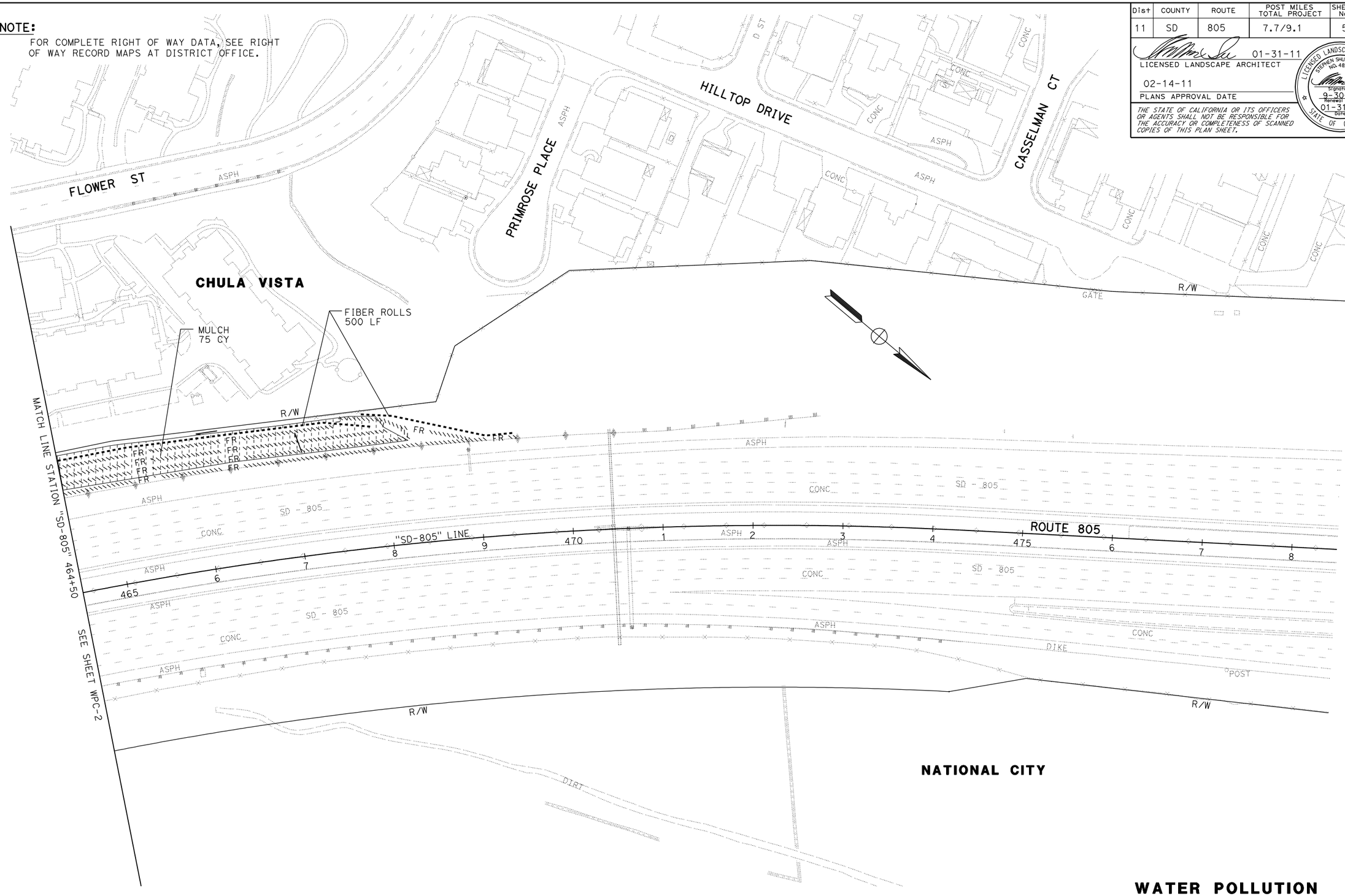

THIS PLAN ACCURATE FOR TEMPORARY WATER POLUTION CONTROL WORK ONLY

WATER POLLUTION CONTROL PLAN

SCALE: 1" = 50'

WPC-3

REVISED BY	DATE REVISED
FY	12-31-10

FATEMEH YOUSEFI — STEPHEN SU — CALCULATED-DESIGNED BY — CHECKED BY — SENIOR LANDSCAPE ARCHITECT — ERIC DICKSON

STATE OF CALIFORNIA - DEPARTMENT OF TRANSPORTATION
Caltrans
LANDSCAPE ARCHITECTURE

LAST REVISION 01-18-11 — DATE PLOTTED => 03-FEB-2011 — TIME PLOTTED => 12:21

Dist	COUNTY	ROUTE	POST MILES TOTAL PROJECT	SHEET No.	TOTAL SHEETS
11	SD	805	7.7/9.1	6	36

LICENSED LANDSCAPE ARCHITECT 01-31-11

02-14-11
PLANS APPROVAL DATE

THE STATE OF CALIFORNIA OR ITS OFFICERS OR AGENTS SHALL NOT BE RESPONSIBLE FOR THE ACCURACY OR COMPLETENESS OF SCANNED COPIES OF THIS PLAN SHEET.

LICENSED LANDSCAPE ARCHITECT STEPHEN SHUN-MIN SU NO. 4838 Signature 9-30-11 Renewal Date 01-31-11 Date STATE OF CALIFORNIA

NOTE:
FOR COMPLETE RIGHT OF WAY DATA, SEE RIGHT OF WAY RECORD MAPS AT DISTRICT OFFICE.

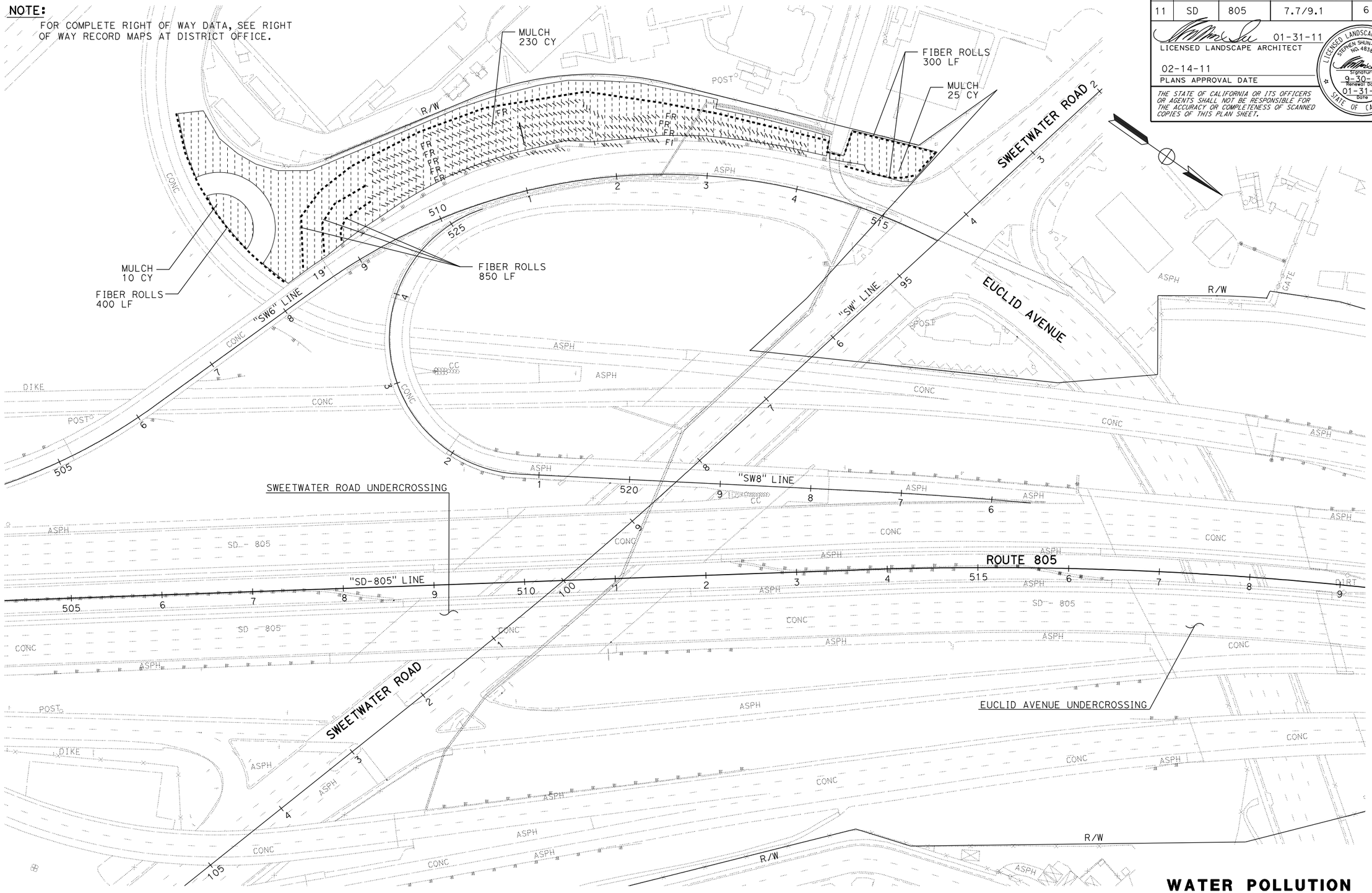

THIS PLAN ACCURATE FOR TEMPORARY WATER POLUTION CONTROL WORK ONLY

WATER POLLUTION CONTROL PLAN

SCALE: 1" = 50′ **WPC-4**

STATE OF CALIFORNIA - DEPARTMENT OF TRANSPORTATION
Caltrans® LANDSCAPE ARCHITECTURE

SENIOR LANDSCAPE ARCHITECT: ERIC DICKSON

CALCULATED-DESIGNED BY: FATEMEH YOUSEFI
CHECKED BY: STEPHEN SU

REVISED BY / DATE REVISED / FY: 12-31-10

LAST REVISION 01-18-11 | DATE PLOTTED => 03-FEB-2011 | TIME PLOTTED => 12:21

Dist	COUNTY	ROUTE	POST MILES TOTAL PROJECT	SHEET No.	TOTAL SHEETS
11	SD	805	7.7/9.1	7	36

01-31-11
LICENSED LANDSCAPE ARCHITECT

02-14-11
PLANS APPROVAL DATE

LICENSED LANDSCAPE ARCHITECT STEPHEN SHUN-MIN SU No. 4838 Signature 9-30-11 Renewal Date 01-31-11 Date STATE OF CALIFORNIA

THE STATE OF CALIFORNIA OR ITS OFFICERS OR AGENTS SHALL NOT BE RESPONSIBLE FOR THE ACCURACY OR COMPLETENESS OF SCANNED COPIES OF THIS PLAN SHEET.

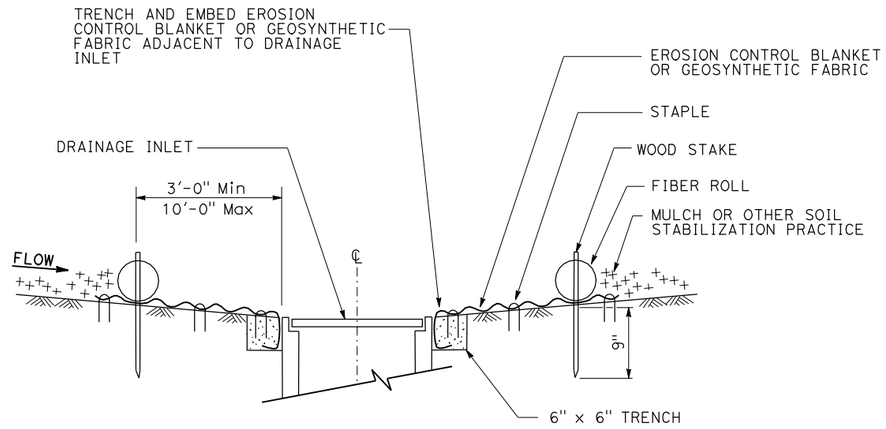

SECTION A-A

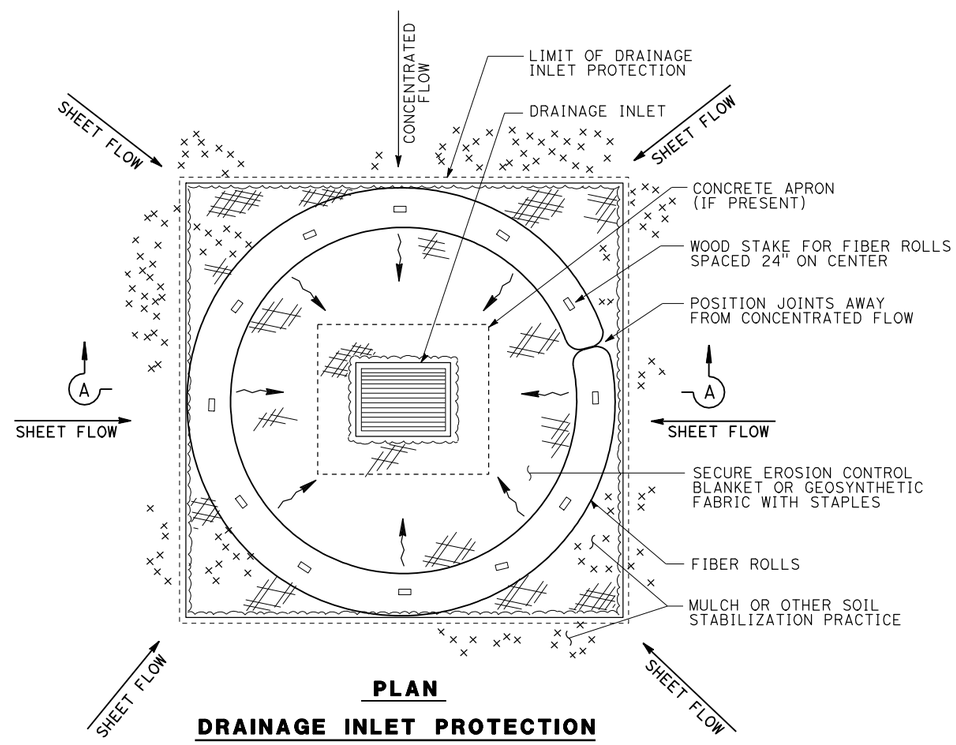

PLAN

DRAINAGE INLET PROTECTION (EROSION CONTROL)

WATER POLLUTION CONTROL DETAILS

NO SCALE

WPCD-1

REVISED BY	DATE REVISED	FY
FATEMEH YOUSEFI	STEPHEN SU	12-31-10

CALCULATED-DESIGNED BY / CHECKED BY

SENIOR LANDSCAPE ARCHITECT: ERIC DICKSON

STATE OF CALIFORNIA - DEPARTMENT OF TRANSPORTATION
Caltrans
LANDSCAPE ARCHITECTURE

LAST REVISION 01-24-11 | DATE PLOTTED => 03-FEB-2011 | TIME PLOTTED => 12:22

Dist	COUNTY	ROUTE	POST MILES TOTAL PROJECT	SHEET No.	TOTAL SHEETS
11	SD	805	7.7/9.1	8	36

Mostafa Aliakbarzadeh 01-30-11
REGISTERED CIVIL ENGINEER DATE

02-14-11
PLANS APPROVAL DATE

REGISTERED PROFESSIONAL ENGINEER MOSTAFA ALIAKBARZADEH No. C53003 Exp. 03-31-11 CIVIL STATE OF CALIFORNIA

THE STATE OF CALIFORNIA OR ITS OFFICERS OR AGENTS SHALL NOT BE RESPONSIBLE FOR THE ACCURACY OR COMPLETENESS OF SCANNED COPIES OF THIS PLAN SHEET.

NOTE:

FOR COMPLETE RIGHT OF WAY DATA, SEE RIGHT OF WAY RECORD MAPS AT DISTRICT OFFICE.

LEGEND:

- ONE (1) POST
- TWO (2) POSTS

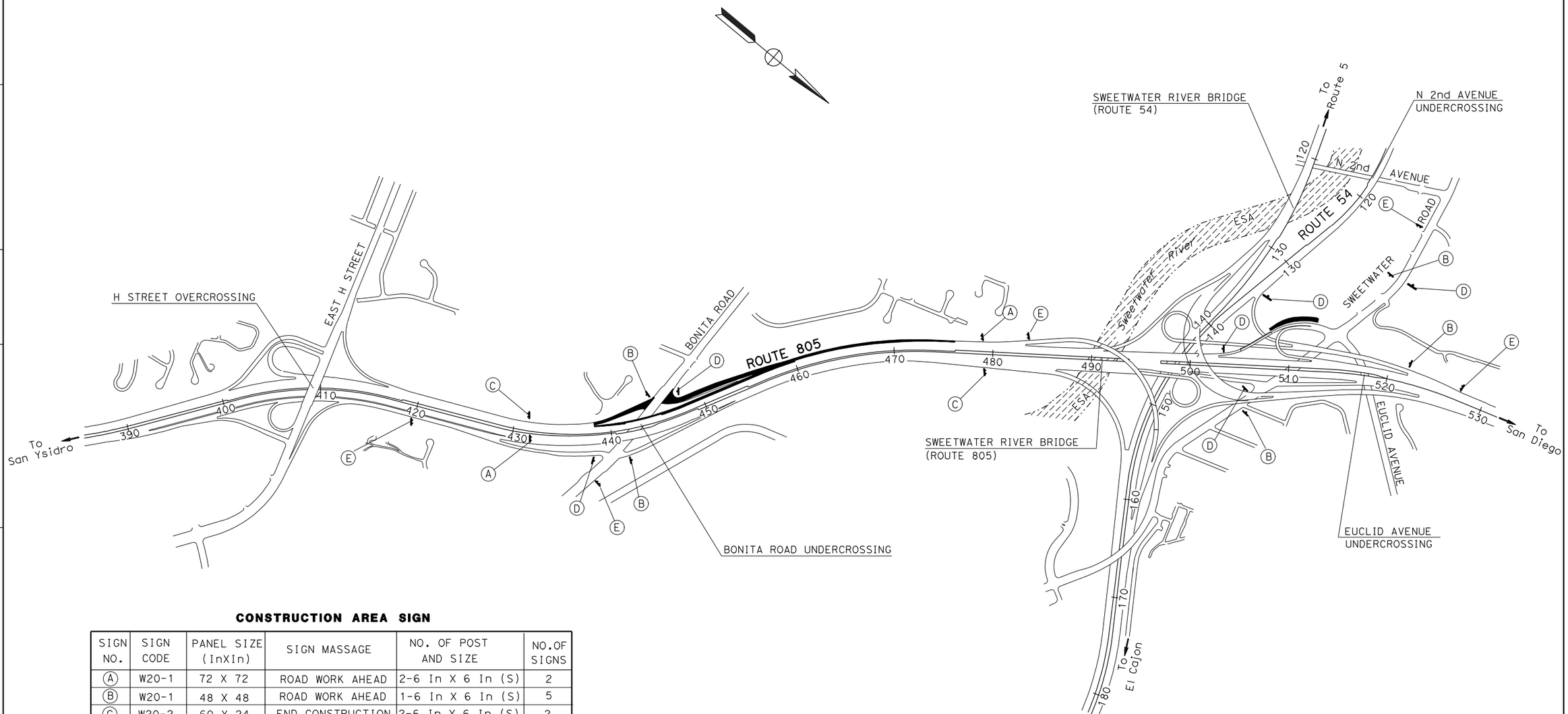

CONSTRUCTION AREA SIGN

SIGN NO.	SIGN CODE	PANEL SIZE (InXIn)	SIGN MASSAGE	NO. OF POST AND SIZE	NO.OF SIGNS
A	W20-1	72 X 72	ROAD WORK AHEAD	2-6 In X 6 In (S)	2
B	W20-1	48 X 48	ROAD WORK AHEAD	1-6 In X 6 In (S)	5
C	W20-2	60 X 24	END CONSTRUCTION	2-6 In X 6 In (S)	2
D	W20-2	42 X 24	END ROAD WORK	1-4 In X 4 In (S)	5
E	C40(CA)	72 X 72	TRAFFIC FINES DOUBLED IN CONSTRUCTION ZONES	2-6 In X 6 In (S)	5

NOTE:

1. SIGN LOCATIONS ARE APPROXIMATE. EXACT LOCATIONS TO BE DETERMINED BY THE ENGINNER.

THIS PLAN ACCURATE FOR CONSTRUCTION AREA SIGN WORK ONLY.

CONSTRUCTION AREA SIGN

NO SCALE

CS-1

CALCULATED-DESIGNED BY	M.ALIAKBARZADEH
CHECKED BY	M.ALIAKBARZADEH
REVISED BY	MK
DATE REVISED	12-31-10

SENIOR LANDSCAPE ARCHITECT ADEL MALEK

STATE OF CALIFORNIA - DEPARTMENT OF TRANSPORTATION

Caltrans® TRAFFIC DESIGN

LAST REVISION 01-18-11 | DATE PLOTTED => 03-FEB-2011 | TIME PLOTTED => 12:22

Dist	COUNTY	ROUTE	POST MILES TOTAL PROJECT	SHEET No.	TOTAL SHEETS
11	SD	805	7.7/9.1	9	36

LICENSED LANDSCAPE ARCHITECT 01-31-11

02-14-11
PLANS APPROVAL DATE

LICENSED LANDSCAPE ARCHITECT STEPHEN SHUN-MIN SU No. 4838 Signature 9-30-11 Renewal Date 01-31-11 Date STATE OF CALIFORNIA

THE STATE OF CALIFORNIA OR ITS OFFICERS OR AGENTS SHALL NOT BE RESPONSIBLE FOR THE ACCURACY OR COMPLETENESS OF SCANNED COPIES OF THIS PLAN SHEET.

ABBREVIATIONS

AMEND — amendment
B & B — balled and burlapped
Dia — diameter
EA — each
lb — pound
oz. — ounce
Ft — foot/feet
SQFT — square feet
CF — cubic feet
Max — maximum
Min — minimum
NCN — no common name
No. — number
Pkt — packet
PLT ESTB- plant establishment
Pvmt — pavement
R/W — right of way
SF — state furnished
TRVD — traveled

PLANT LIST AND PLANTING SPECIFICATIONS

PLANT GROUP	PLANT No.	SYMBOL	BOTANICAL NAME	COMMON NAME	SIZE	QUANTITY EACH (SQYD)	HOLE SIZE (INCH) Dia	HOLE SIZE (INCH) DEPTH	BASIN TYPE	IRON SULFATE ①	SOIL AMEND ①	COMMERCIAL FERTILIZER ① PLANTING	COMMERCIAL FERTILIZER ① PLT ESTB	BASIN MULCH	STAKING	PLANTING LIMITS MINIMUM DISTANCE (Ft) FROM TRVD WAY	PVMT	FENCE	WALL	PAVED DITCH	EARTH DITCH	ON CENTER (Ft)	REMARKS
A	1		DIETES BICOLOR	AFRICAN IRIS	No. 1	150	12	12	II	-	0.3 CF	2 Oz	2 Oz	0.40 CF	-	-	6	5	-	4	4	3	SHRUB ⑧
	2		PARTHENOCISSUS TRICUSPIDATA	BOSTON IVY	No. 1	77	12	12	II	-	0.3 CF	2 Oz	2 Oz	0.40 CF	-	-	-	-	-	-	-	10	VINE
	3		LONICERA JAPONICA 'HALLIANA'	HALL'S HONEYSUCKLE	No. 1	2790	12	12	II	-	0.3 CF	2 Oz	2 Oz	0.40 CF	-	-	4	4	4	4	6	6	GROUNDCOVER ⑧
	4		CEANOTHUS G. H. 'YANKEE POINT'	CARMEL CEANOTHUS	No. 1	1020	12	12	II	-	0.3 CF	-	-	0.40 CF	-	-	6	6	6	6	6	4	GROUNDCOVER ⑧
	5		BACCHARIS PILULARIS 'PIGEON POINT'	COYOTEBRUSH	No. 1	1235	12	12	II	-	0.3 CF	-	-	0.40 CF	-	-	4	4	4	4	4	4	SHRUB ⑧
H	6		CARPOBROTUS EDULIS	HOTTENTOT FIG	CUTTING	4800	-	-	-	-	-	5.0LB/ 100 SQYD	5.0LB/ 100 SQYD	-	-	-	4	4	4	4	4	2	GROUNDCOVER ⑧
F	7		MYOPORUM PARVIFOLIUM	PROSTRATE MYOPORUM	IN FLATS	275	②	②	-	-	-	5.0LB/ 100 SQYD	5.0LB/ 100 SQYD	-	-	-	4	4	4	4	4	5	GROUNDCOVER ⑧
	8		GAZANIA RIGENS 'LEUCOLAENA'	SUNRISE YELLOW GAZANIA	IN FLATS	6750	②	②	-	-	-	5.0LB/ 100 SQYD	5.0LB/ 100 SQYD	-	-	-	-	-	-	-	-	1	GROUNDCOVER ⑧
T	9		FESTUCA RUBRA 'MOLATE'	MOLATE RED FESCUE	TURF	(900)	-	-	-	-	-	-	-	-	-	-	-	-	-	-	-	-	TURF ⑦ ⑧
B	10		ALOE STRIATA HYBRID	CORAL ALOE	No. 5	6	18	18	II	-	0.7 CF	-	-	0.7 CF	-	-	6	5	4	6	8	④	SHRUB ⑧
	11		CEANOTHUS CYANEUS 'SIERRA BLUE'	SAN DIEGO MOUNTAIN LILAC	No. 5	28	18	18	II	-	0.7 CF	-	-	0.7 CF	-	15	6	5	6	4	4	④	SHRUB ⑧
	12		HETEROMELES ARBUTIFOLIA	TOYON	No. 5	14	18	18	II	-	0.7 CF	-	-	0.7 CF	-	15	6	5	6	4	4	④	MULTI-TRUNK SHRUB ⑧
	13		RHUS INTEGRIFOLIA	LEMONADE BERRY	No. 5	70	18	18	II	-	0.7 CF	-	-	0.7 CF	-	15	6	5	4	6	8	④	SHRUB ⑧
U	14		CERCIS OCCIDENTALIS	WESTERN REDBUD	No. 15	23	24	20	II	-	1.3 CF	-	-	2.7 CF	X	15	12	10	10	10	10	④	SHRUB ⑧
	15		ALOE ARBORESCENS	TREE ALOE	No. 15	10	24	20	II	-	1.3 CF	-	-	2.7 CF	-	-	15	10	10	10	④	④	SHRUB ⑧
	16		ACACIA FARNESIANA	SWEET ACACIA	No. 15	19	24	20	II	-	1.3 CF	-	-	2.7 CF	X	20	12	10	10	10	10	④	MULTI-TRUNK SHRUB
	17		SCHINUS MOLLE	PERUVIAN PEPPER TREE (CALIFORNIA PEPPER TREE)	No. 15	33	24	20	II	-	1.3 CF	4 Oz	4 Oz	2.7 CF	X	42	12	10	10	10	10	④	TREE
	18		PINUS TORREYANA	TORREY PINE	No. 15	52	24	20	II	-	1.3 CF	4 Oz	4 Oz	2.7 CF	X	42	12	10	10	10	10	④	TREE
	19		LAGERSTROEMIA INDICA	CRAPE MYRTLE (MULTI-TRUNK)	No. 15	14	24	20	II	-	1.3 CF	4 Oz	4 Oz	2.7 CF	X	20	12	10	10	10	10	④	MULTI-TRUNK SHRUB
	20		CUPRESUS FORBESII	TECATE CYPRESS	No. 15	55	24	20	II	-	1.3 CF	4 Oz	4 Oz	2.7 CF	X	30	12	10	10	10	10	10	TREE
K	21		TIPUANA TIPU	TIPU TREE	24" BOX	15	36	30	II	-	2.5 CF	4 Oz	4 Oz	3.5 CF	X	42	12	10	10	10	10	④	TREE
	22																						

APPLICABLE WHEN CIRCLED:

① - Quantities shown are "per plant" unless shown as SQFT or SQYD application rates.
② - Sufficient to receive root ball.
3 - Does not apply to mulch areas.
④ - As shown on plans.
5 - Unless otherwise shown on plans.
⑥ - See detail.
⑦ - See Special Provisions.
⑧ - apply Weed Germination within the area, see Special Provision for pesticide.

NOTE:

Underlined portions of botanical name indicate abbreviations used on Planting Plans.

CONSTRUCTION LEGEND

ROCK BLANKET 1240 SQYD ⑥

CLASS 2 AGGREGATE BASE ⑥ (MAINTENANCE VEHICLE ACCESS ROAD)

ROADSIDE PAVING (MISCELLANEOUS AREAS) ⑦

EXISTING TREE TO REMAIN

REMOVE EXISTING PLANTS

PLANT LIST

NO SCALE **PL-1**

REVISED BY	DATE REVISED
FY	12-31-10

FATEMEH YOUSEFI — STEPHEN SU — ERIC DICKSON

CALCULATED-DESIGNED BY — CHECKED BY — SENIOR LANDSCAPE ARCHITECT

STATE OF CALIFORNIA - DEPARTMENT OF TRANSPORTATION — Caltrans — LANDSCAPE ARCHITECTURE

LAST REVISION 01-18-11 — DATE PLOTTED => 03-FEB-2011 — TIME PLOTTED => 12:22

Dist	COUNTY	ROUTE	POST MILES TOTAL PROJECT	SHEET No.	TOTAL SHEETS
11	SD	805	7.7/9.1	10	36

01-31-11
LICENSED LANDSCAPE ARCHITECT

02-14-11
PLANS APPROVAL DATE

LICENSED LANDSCAPE ARCHITECT
STEPHEN SHUN-MIN SU
NO. 4838
Signature
9-30-11
Renewal Date
01-31-11
Date
STATE OF CALIFORNIA

THE STATE OF CALIFORNIA OR ITS OFFICERS OR AGENTS SHALL NOT BE RESPONSIBLE FOR THE ACCURACY OR COMPLETENESS OF SCANNED COPIES OF THIS PLAN SHEET.

NOTE:
FOR COMPLETE RIGHT OF WAY DATA, SEE RIGHT OF WAY RECORD MAPS AT DISTRICT OFFICE.

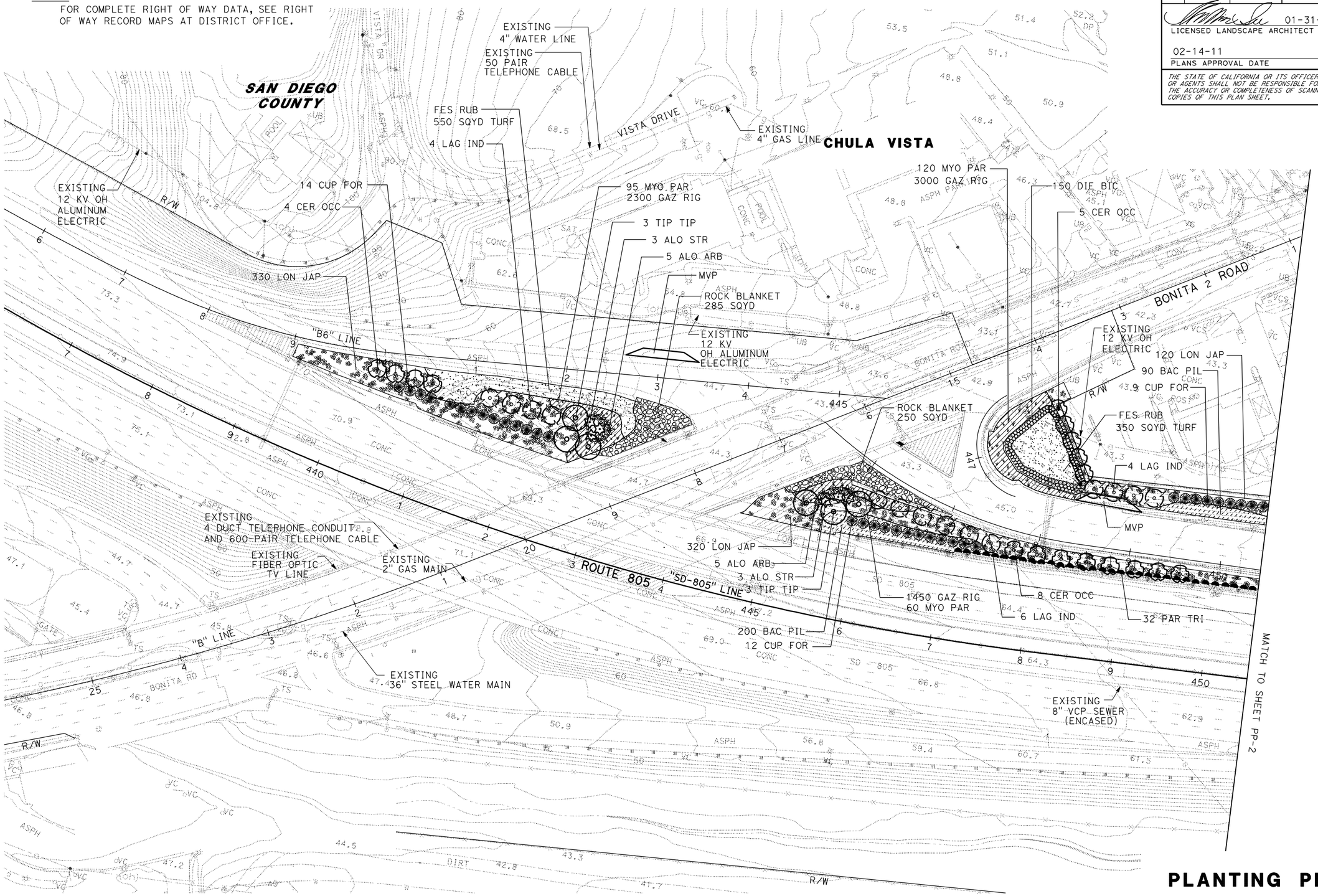

PLANTING PLAN

SCALE: 1" = 50'

PP-1

THIS PLAN ACCURATE FOR PLANTING WORK ONLY

STATE OF CALIFORNIA - DEPARTMENT OF TRANSPORTATION
Caltrans®
LANDSCAPE ARCHITECTURE

SENIOR LANDSCAPE ARCHITECT: ERIC DICKSON
CALCULATED-DESIGNED BY: FATEMEH YOUSEFI
CHECKED BY: STEPHEN SU
REVISED BY: FY
DATE REVISED: 12-31-10

LAST REVISION 01-18-11
DATE PLOTTED => 03-FEB-2011
TIME PLOTTED => 12:22

Dist	COUNTY	ROUTE	POST MILES TOTAL PROJECT	SHEET No.	TOTAL SHEETS
11	SD	805	7.7/9.1	11	36

01-31-11
LICENSED LANDSCAPE ARCHITECT

02-14-11
PLANS APPROVAL DATE

LICENSED LANDSCAPE ARCHITECT STEPHEN SHUN-MIN SU NO. 4838 — Signature — Renewal Date 9-30-11 — Date 01-31-11 — STATE OF CALIFORNIA

THE STATE OF CALIFORNIA OR ITS OFFICERS OR AGENTS SHALL NOT BE RESPONSIBLE FOR THE ACCURACY OR COMPLETENESS OF SCANNED COPIES OF THIS PLAN SHEET.

NOTE:

FOR COMPLETE RIGHT OF WAY DATA, SEE RIGHT OF WAY RECORD MAPS AT DISTRICT OFFICE.

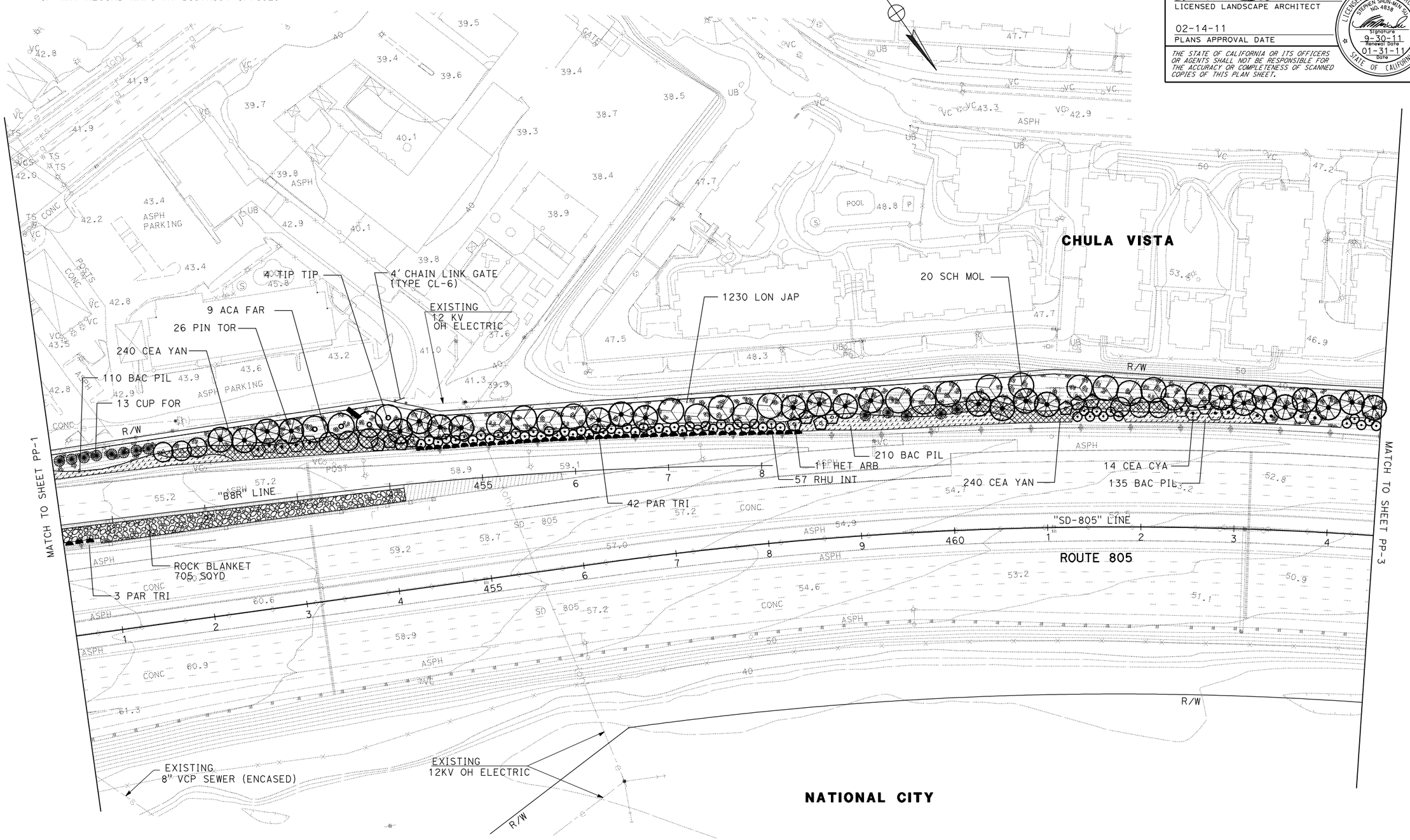

PLANTING PLAN

SCALE: 1" = 50'

PP-2

THIS PLAN ACCURATE FOR PLANTING WORK ONLY

STATE OF CALIFORNIA - DEPARTMENT OF TRANSPORTATION
Caltrans
LANDSCAPE ARCHITECTURE

SENIOR LANDSCAPE ARCHITECT: ERIC DICKSON
CALCULATED-DESIGNED BY: STEPHEN SU
CHECKED BY: FATEMEH YOUSEFI
REVISED BY / DATE REVISED / FY: 12-31-10

LAST REVISION 01-18-11
DATE PLOTTED => 03-FEB-2011
TIME PLOTTED => 12:22

BORDER LAST REVISED 7/2/2010
USERNAME => s111616
DGN FILE => b08165ti002.dgn
RELATIVE BORDER SCALE IS IN INCHES 0 1 2 3
UNIT 3014
PROJECT NUMBER & PHASE 11000000631

Dist	COUNTY	ROUTE	POST MILES TOTAL PROJECT	SHEET No.	TOTAL SHEETS
11	SD	805	7.7/9.1	12	36

01-31-11
LICENSED LANDSCAPE ARCHITECT

02-14-11
PLANS APPROVAL DATE

THE STATE OF CALIFORNIA OR ITS OFFICERS OR AGENTS SHALL NOT BE RESPONSIBLE FOR THE ACCURACY OR COMPLETENESS OF SCANNED COPIES OF THIS PLAN SHEET.

LICENSED LANDSCAPE ARCHITECT
STEPHEN SHUN-MIN SU
No. 4838
Signature
9-30-11
Renewal Date
01-31-11
Date
STATE OF CALIFORNIA

NOTE:
FOR COMPLETE RIGHT OF WAY DATA, SEE RIGHT OF WAY RECORD MAPS AT DISTRICT OFFICE.

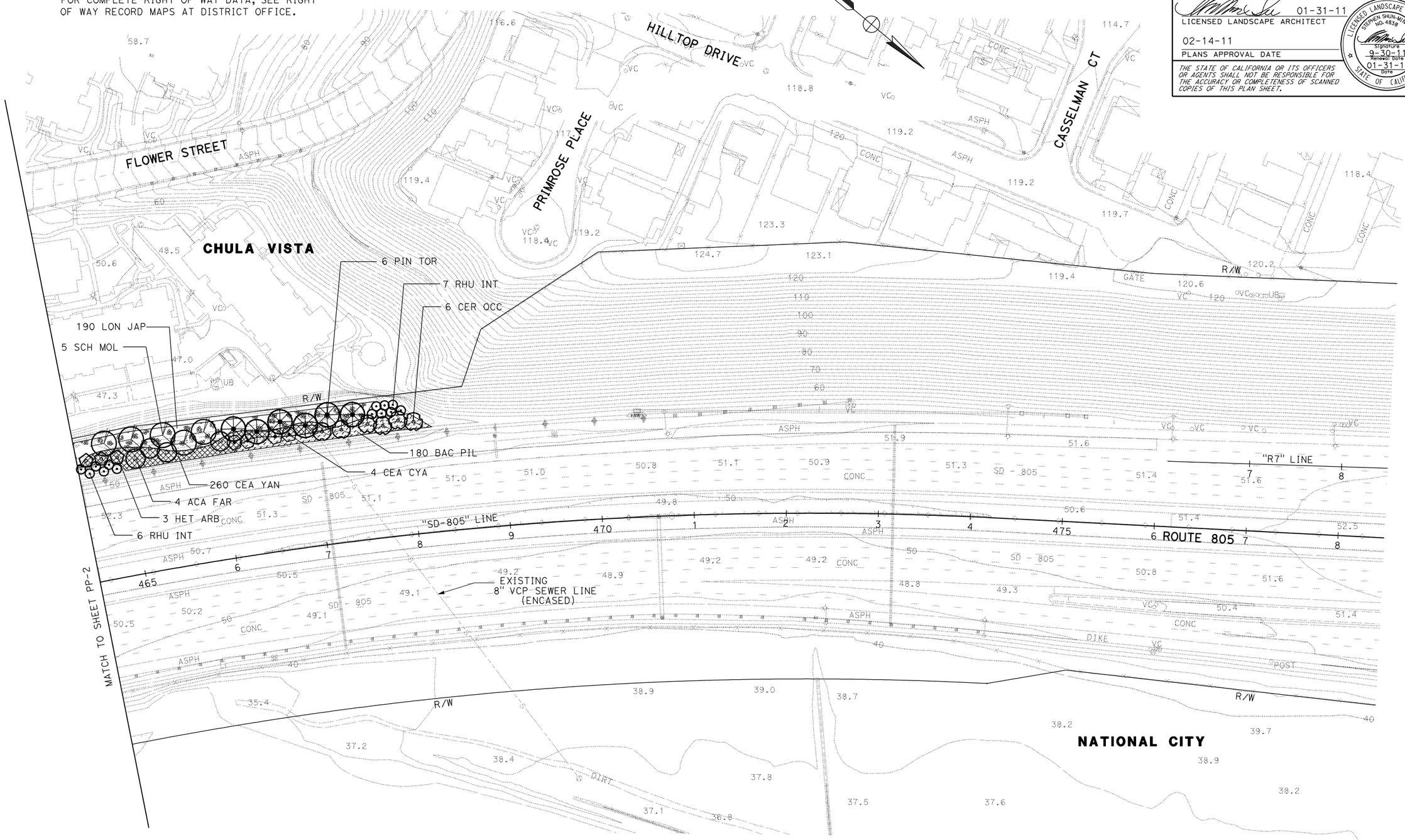

PLANTING PLAN

THIS PLAN ACCURATE FOR PLANTING WORK ONLY

SCALE: 1" = 50'

PP-3

STATE OF CALIFORNIA - DEPARTMENT OF TRANSPORTATION
Caltrans®
LANDSCAPE ARCHITECTURE

SENIOR LANDSCAPE ARCHITECT: ERIC DICKSON
CALCULATED-DESIGNED BY: FATEMEH YOUSEFI
CHECKED BY: STEPHEN SU
REVISED BY / DATE REVISED / FY: 12-31-10

LAST REVISION 01-18-11
DATE PLOTTED => 03-FEB-2011
TIME PLOTTED => 12:22

BORDER LAST REVISED 7/2/2010
USERNAME => s111616
DGN FILE => b08165t1003.dgn
RELATIVE BORDER SCALE IS IN INCHES 0 1 2 3
UNIT 3014
PROJECT NUMBER & PHASE 11000000631

Dist	COUNTY	ROUTE	POST MILES TOTAL PROJECT	SHEET No.	TOTAL SHEETS
11	SD	805	7.7/9.1	13	36

LICENSED LANDSCAPE ARCHITECT 01-31-11

02-14-11
PLANS APPROVAL DATE

THE STATE OF CALIFORNIA OR ITS OFFICERS OR AGENTS SHALL NOT BE RESPONSIBLE FOR THE ACCURACY OR COMPLETENESS OF SCANNED COPIES OF THIS PLAN SHEET.

LICENSED LANDSCAPE ARCHITECT STEPHEN SHUN-MIN SU No. 4838 Signature 9-30-11 Renewal Date 01-31-11 Date STATE OF CALIFORNIA

NOTE:
FOR COMPLETE RIGHT OF WAY DATA, SEE RIGHT OF WAY RECORD MAPS AT DISTRICT OFFICE.

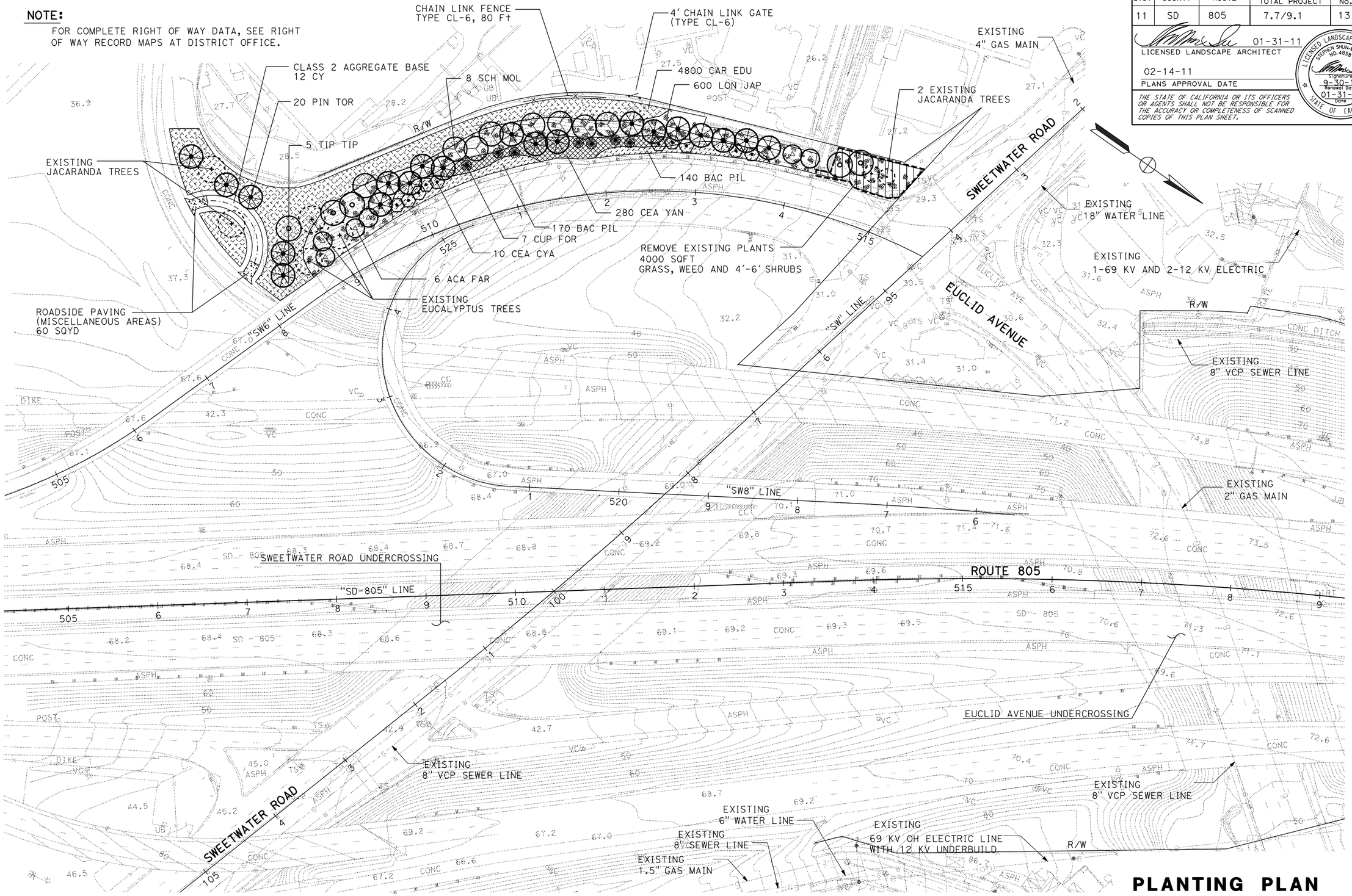

PLANTING PLAN

SCALE: 1" = 50'

PP-4

THIS PLAN ACCURATE FOR PLANTING WORK ONLY

CALCULATED-DESIGNED BY	FATEMEH YOUSEFI
CHECKED BY	STEPHEN SU
SENIOR LANDSCAPE ARCHITECT	ERIC DICKSON
REVISED BY	FY
DATE REVISED	12-31-10

STATE OF CALIFORNIA - DEPARTMENT OF TRANSPORTATION
Caltrans
LANDSCAPE ARCHITECTURE

LAST REVISION 01-18-11
DATE PLOTTED => 03-FEB-2011
TIME PLOTTED => 12:23

Dist	COUNTY	ROUTE	POST MILES TOTAL PROJECT	SHEET No.	TOTAL SHEETS
11	SD	805	7.7/9.1	14	36

01-31-11
LICENSED LANDSCAPE ARCHITECT

02-14-11
PLANS APPROVAL DATE

THE STATE OF CALIFORNIA OR ITS OFFICERS OR AGENTS SHALL NOT BE RESPONSIBLE FOR THE ACCURACY OR COMPLETENESS OF SCANNED COPIES OF THIS PLAN SHEET.

LICENSED LANDSCAPE ARCHITECT
STEPHEN SHUN-MIN SU
NO. 4838
Signature
9-30-11
Renewal Date
01-31-11
Date
STATE OF CALIFORNIA

NOTE:

FOR COMPLETE RIGHT OF WAY DATA, SEE RIGHT OF WAY RECORD MAPS AT DISTRICT OFFICE.

IRRIGATION REMOVAL LEGEND

1½"-K-10 — EXISTING IRRIGATION SYSTEM TO BE REMOVED

I-5--47 — EXISTING IRRIGATION SYSTEM TO REMAIN
EXISTING RCV TO BE MOVED AND REPLACED AS SHOWN IN IP SHEETS

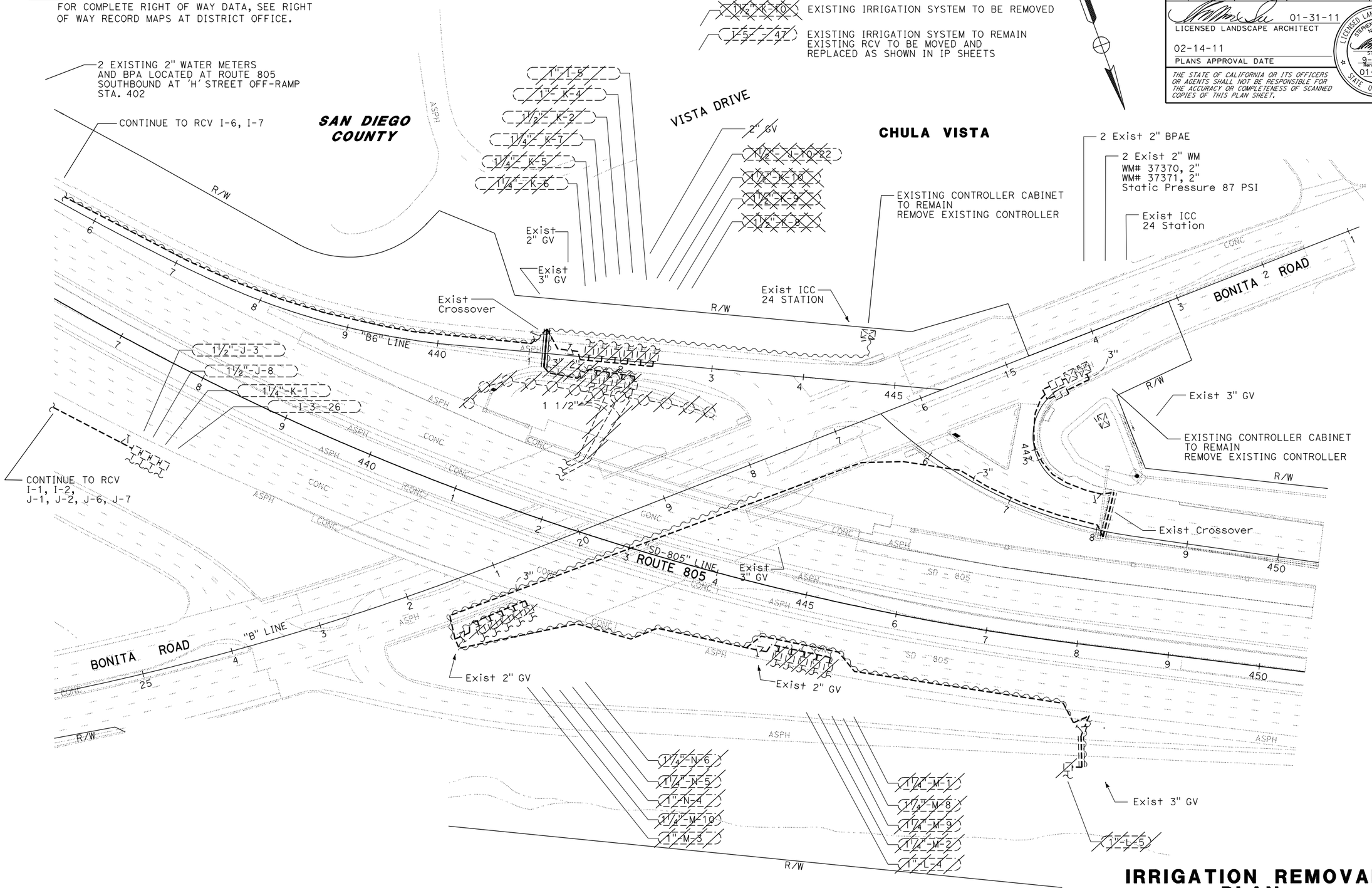

THIS PLAN ACCURATE FOR IRRIGATION WORK ONLY

IRRIGATION REMOVAL PLAN

SCALE: 1" = 50'

IR-1

FY	12-31-10
REVISED BY	DATE REVISED
FATEMEH YOUSEFI	STEPHEN SU
CALCULATED-DESIGNED BY	CHECKED BY
SENIOR LANDSCAPE ARCHITECT	ERIC DICKSON

STATE OF CALIFORNIA - DEPARTMENT OF TRANSPORTATION
Caltrans
LANDSCAPE ARCHITECTURE

LAST REVISION 01-18-11
DATE PLOTTED => 03-FEB-2011
TIME PLOTTED => 12:23

Dist	COUNTY	ROUTE	POST MILES TOTAL PROJECT	SHEET No.	TOTAL SHEETS
11	SD	805	7.7/9.1	15	36

01-31-11
LICENSED LANDSCAPE ARCHITECT

02-14-11
PLANS APPROVAL DATE

THE STATE OF CALIFORNIA OR ITS OFFICERS OR AGENTS SHALL NOT BE RESPONSIBLE FOR THE ACCURACY OR COMPLETENESS OF SCANNED COPIES OF THIS PLAN SHEET.

LICENSED LANDSCAPE ARCHITECT
STEPHEN SHUN-MIN SU
NO. 4838
Signature
9-30-11
Renewal Date
01-31-11
Date
STATE OF CALIFORNIA

NOTE:

FOR COMPLETE RIGHT OF WAY DATA, SEE RIGHT OF WAY RECORD MAPS AT DISTRICT OFFICE.

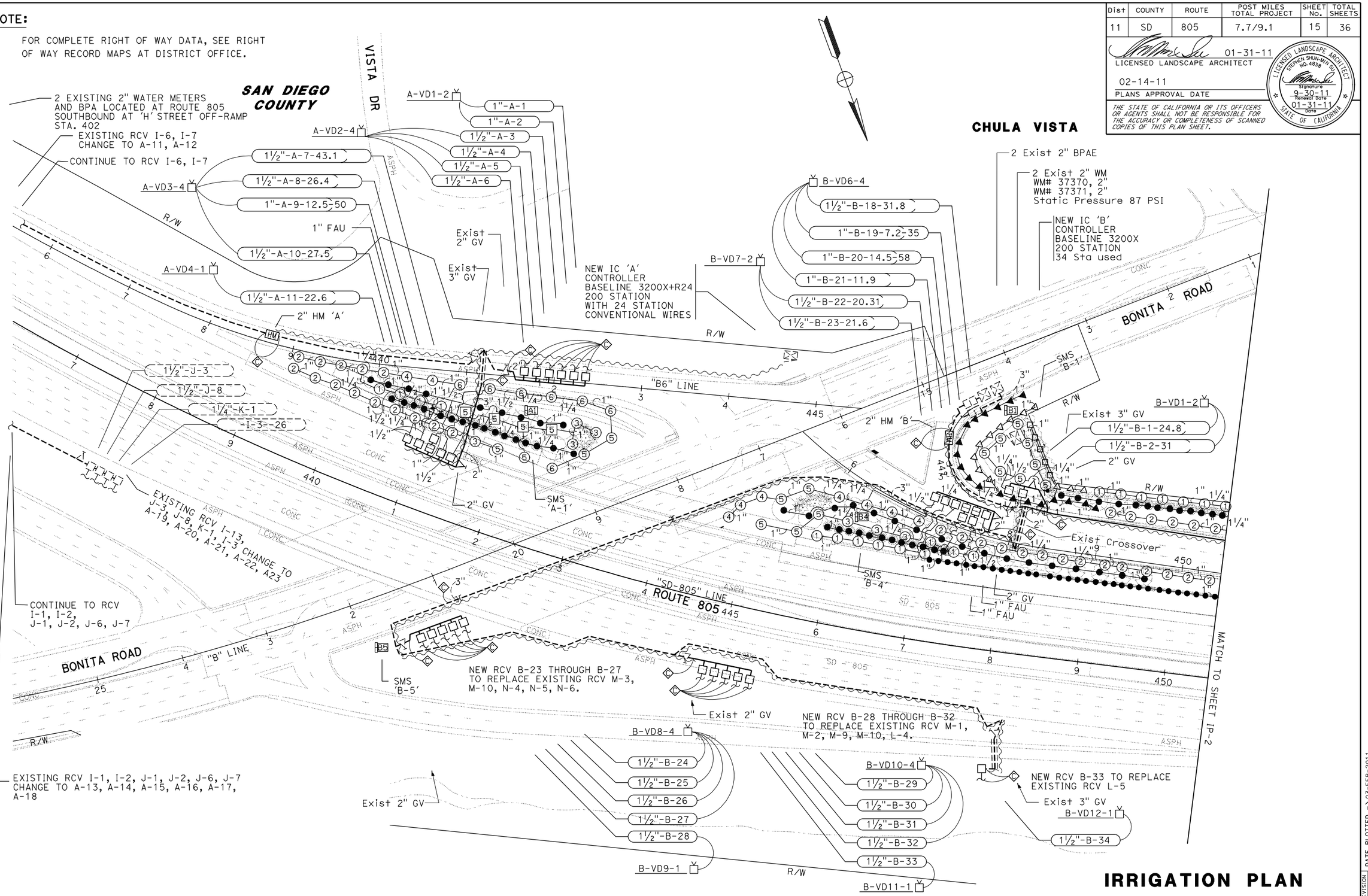

IRRIGATION PLAN

SCALE: 1" = 50'

IP-1

THIS PLAN ACCURATE FOR IRRIGATION WORK ONLY

FY	12-31-10	
REVISED BY	DATE REVISED	
FATEMEH YOUSEFI	STEPHEN SU	
CALCULATED-DESIGNED BY	CHECKED BY	
SENIOR LANDSCAPE ARCHITECT	ERIC DICKSON	

STATE OF CALIFORNIA - DEPARTMENT OF TRANSPORTATION
Caltrans®
LANDSCAPE ARCHITECTURE

LAST REVISION 01-24-11
DATE PLOTTED => 03-FEB-2011
TIME PLOTTED => 12:23

Dist	COUNTY	ROUTE	POST MILES TOTAL PROJECT	SHEET No.	TOTAL SHEETS
11	SD	805	7.7/9.1	16	36

01-31-11
LICENSED LANDSCAPE ARCHITECT

02-14-11
PLANS APPROVAL DATE

THE STATE OF CALIFORNIA OR ITS OFFICERS OR AGENTS SHALL NOT BE RESPONSIBLE FOR THE ACCURACY OR COMPLETENESS OF SCANNED COPIES OF THIS PLAN SHEET.

LICENSED LANDSCAPE ARCHITECT
STEPHEN SHUN-MIN SU
NO. 4838
Signature
9-30-11
Renewal Date
01-31-11
Date
STATE OF CALIFORNIA

NOTE:
FOR COMPLETE RIGHT OF WAY DATA, SEE RIGHT OF WAY RECORD MAPS AT DISTRICT OFFICE.

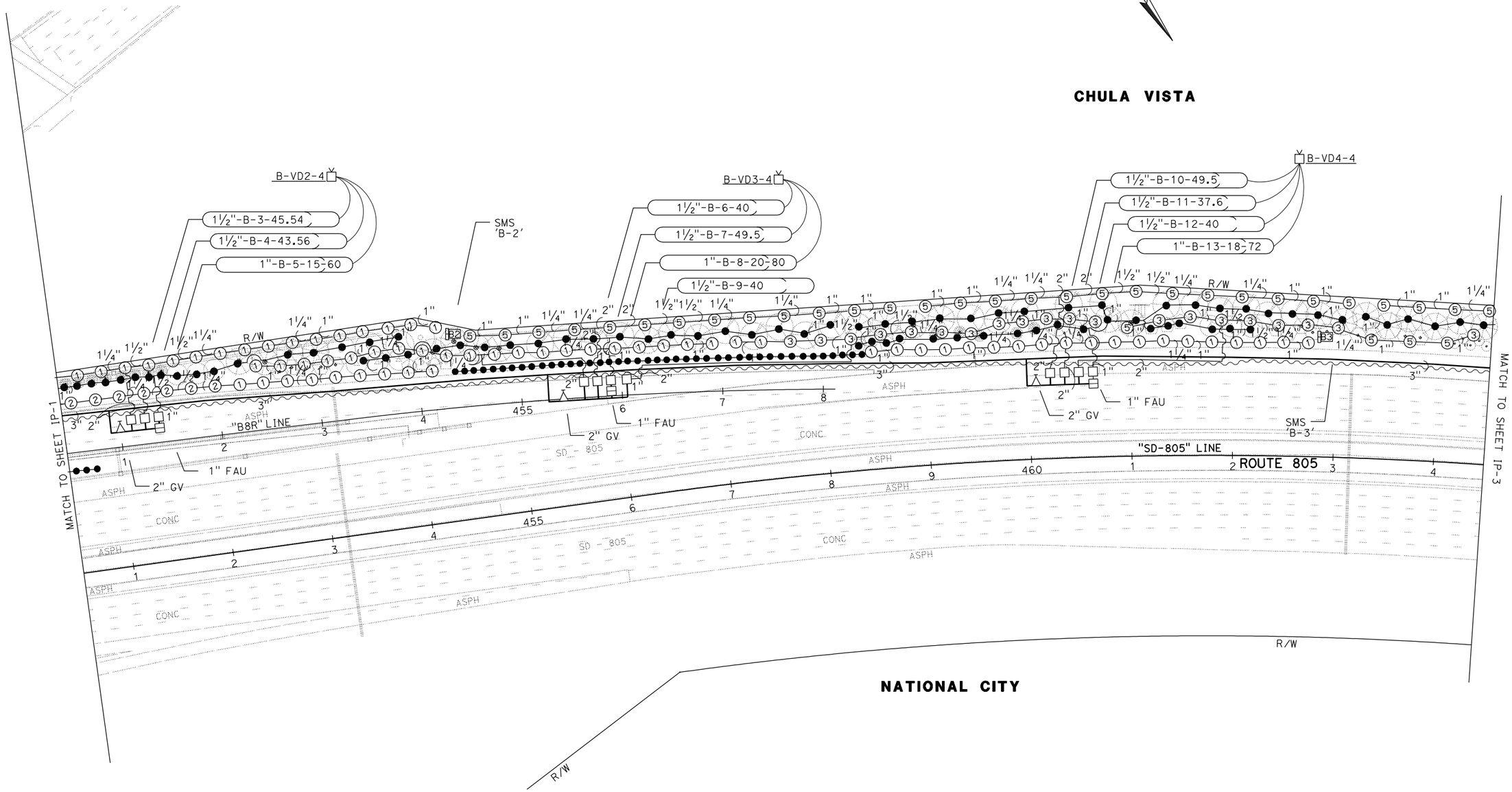

THIS PLAN ACCURATE FOR IRRIGATION WORK ONLY

IRRIGATION PLAN

SCALE: 1" = 50'

IP-2

LAST REVISION	01-18-11
DATE PLOTTED =>	03-FEB-2011
TIME PLOTTED =>	12:23

REVISED BY	FY
DATE REVISED	12-31-10
CALCULATED-DESIGNED BY	FATEMEH YOUSEFI
CHECKED BY	STEPHEN SU
SENIOR LANDSCAPE ARCHITECT	ERIC DICKSON

STATE OF CALIFORNIA - DEPARTMENT OF TRANSPORTATION
Caltrans
LANDSCAPE ARCHITECTURE

BORDER LAST REVISED 7/2/2010
USERNAME => s111616
DGN FILE => b08165t1002.dgn
RELATIVE BORDER SCALE IS IN INCHES 0 1 2 3
UNIT 3014
PROJECT NUMBER & PHASE 11000000631

Dist	COUNTY	ROUTE	POST MILES TOTAL PROJECT	SHEET No.	TOTAL SHEETS
11	SD	805	7.7/9.1	17	36

LICENSED LANDSCAPE ARCHITECT 01-31-11

02-14-11
PLANS APPROVAL DATE

THE STATE OF CALIFORNIA OR ITS OFFICERS OR AGENTS SHALL NOT BE RESPONSIBLE FOR THE ACCURACY OR COMPLETENESS OF SCANNED COPIES OF THIS PLAN SHEET.

LICENSED LANDSCAPE ARCHITECT STEPHEN SHUN-MIN SU No. 4838 Signature 9-30-11 Renewal Date 01-31-11 Date STATE OF CALIFORNIA

NOTE:
FOR COMPLETE RIGHT OF WAY DATA, SEE RIGHT OF WAY RECORD MAPS AT DISTRICT OFFICE.

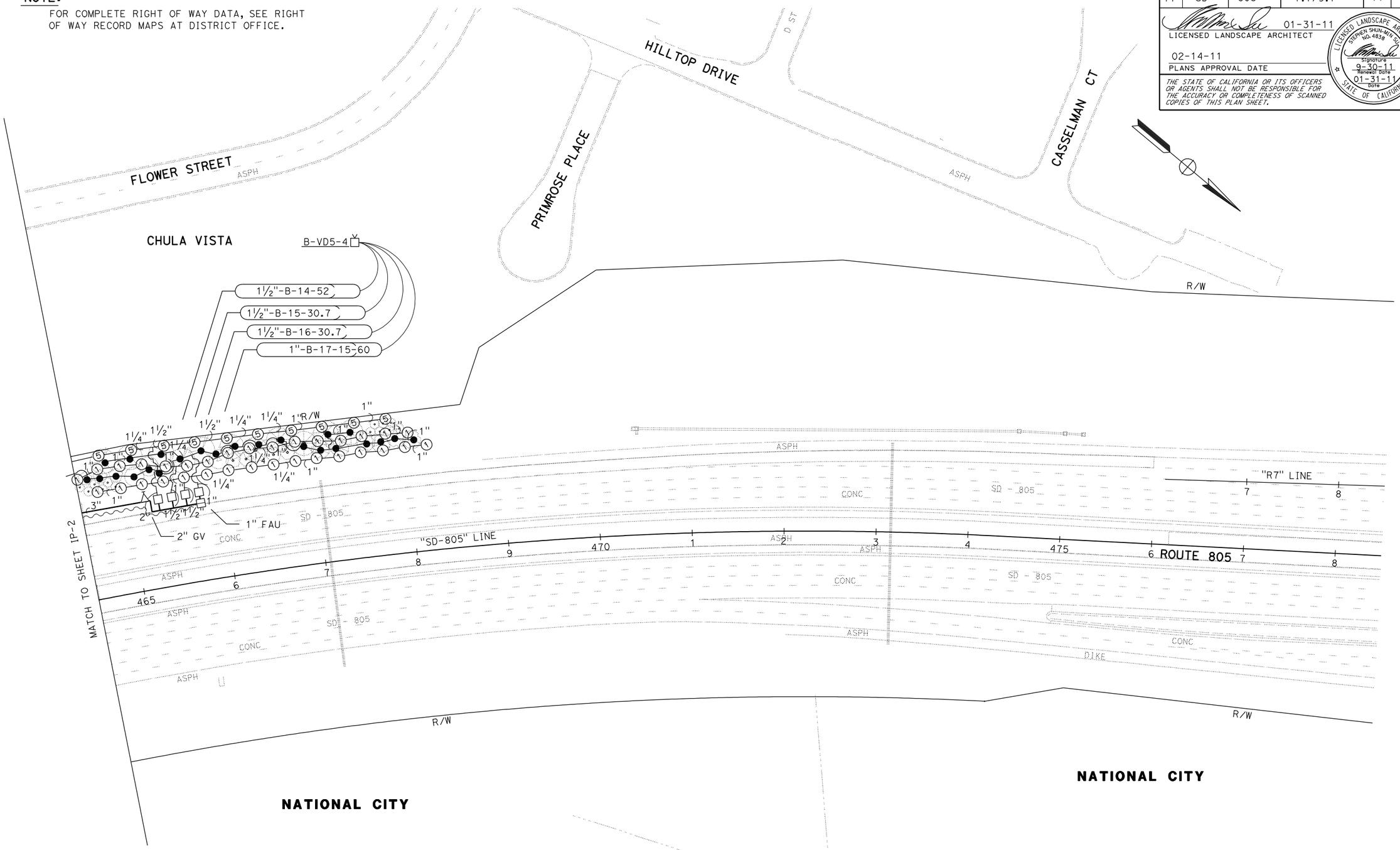

THIS PLAN ACCURATE FOR IRRIGATION WORK ONLY

IRRIGATION PLAN

SCALE: 1" = 50'

IP-3

STATE OF CALIFORNIA - DEPARTMENT OF TRANSPORTATION
Caltrans
LANDSCAPE ARCHITECTURE

SENIOR LANDSCAPE ARCHITECT: ERIC DICKSON

CALCULATED-DESIGNED BY: FATEMEH YOUSEFI
CHECKED BY: STEPHEN SU

REVISED BY: FY
DATE REVISED: 12-31-10

LAST REVISION 01-18-11
DATE PLOTTED => 03-FEB-2011
TIME PLOTTED => 12:23

Dist	COUNTY	ROUTE	POST MILES TOTAL PROJECT	SHEET No.	TOTAL SHEETS
11	SD	805	7.7/9.1	18	36

01-31-11
LICENSED LANDSCAPE ARCHITECT

02-14-11
PLANS APPROVAL DATE

THE STATE OF CALIFORNIA OR ITS OFFICERS OR AGENTS SHALL NOT BE RESPONSIBLE FOR THE ACCURACY OR COMPLETENESS OF SCANNED COPIES OF THIS PLAN SHEET.

LICENSED LANDSCAPE ARCHITECT
STEPHEN SHUN-MIN SU
NO. 4838
Signature
9-30-11
Renewal Date
01-31-11
Date
STATE OF CALIFORNIA

NOTE:
FOR COMPLETE RIGHT OF WAY DATA, SEE RIGHT OF WAY RECORD MAPS AT DISTRICT OFFICE.

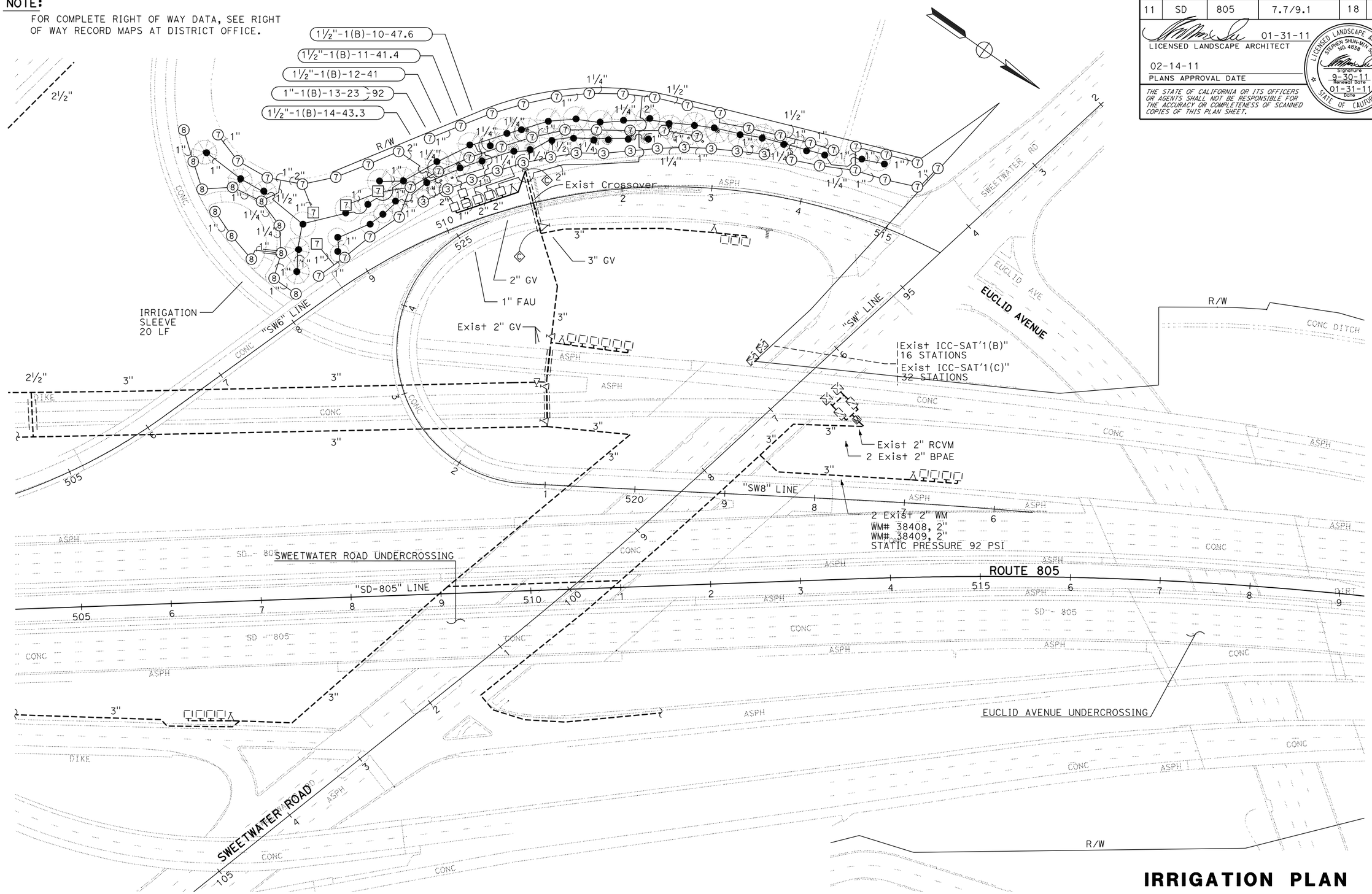

THIS PLAN ACCURATE FOR IRRIGATION WORK ONLY

IRRIGATION PLAN

SCALE: 1" = 50'

IP-4

FY	REVISED BY	DATE REVISED
12-31-10		

FATEMEH YOUSEFI
STEPHEN SU
CALCULATED-DESIGNED BY
CHECKED BY
SENIOR LANDSCAPE ARCHITECT
ERIC DICKSON

STATE OF CALIFORNIA - DEPARTMENT OF TRANSPORTATION
Caltrans
LANDSCAPE ARCHITECTURE

LAST REVISION 01-18-11
DATE PLOTTED => 03-FEB-2011
TIME PLOTTED => 12:23

Dist	COUNTY	ROUTE	POST MILES TOTAL PROJECT	SHEET No.	TOTAL SHEETS
11	SD	805	7.7/9.1	19	36

01-31-11
LICENSED LANDSCAPE ARCHITECT

02-14-11
PLANS APPROVAL DATE

THE STATE OF CALIFORNIA OR ITS OFFICERS OR AGENTS SHALL NOT BE RESPONSIBLE FOR THE ACCURACY OR COMPLETENESS OF SCANNED COPIES OF THIS PLAN SHEET.

LICENSED LANDSCAPE ARCHITECT STEPHEN SHUN-MIN SU NO. 4838 Signature 9-30-11 Renewal Date 01-31-11 Date STATE OF CALIFORNIA

SPRINKLER SCHEDULE

SYMBOL	TYPE	DESCRIPTION	SPRAY PATTERN	OPERATING PRESSURE (PSI)	PRESSURE COMPENSATING	PLUS/MINUS 5% ② DISCHARGE GALLONS PER MINUTE (GPM)	GALLONS PER HOUR (GPH)	RADIUS (Ft)	WIDTH x LENGTH (Ft)	MATERIAL	NOZZLE SIZE (INCH)	INLET CONNECTION (NPT INCH)	POSITIVE-LOCKING ADJ ARC STOP	BACKSPLASH PREVENTER	DIFFUSER PIN	DISTANCE CONTROL FLAP	ADJ DISCHARGE	RISER TYPE	RISER MATERIAL PLASTIC	RISER MATERIAL GALVANIZED	RISER SIZE (IPS INCH)	RISER HEIGHT (INCH)	RISER FLOW SHUTOFF DEVICE	⑤ SWING JOINT (TYPE)	RISER SUPPORT	SPRINKLER PROTECTOR (TYPE)	REMARKS
①	A-1	Gear driven	H/T/Q	45	X	1.98/1.38/1.00		25		PL		¾"						IV	X		¾"	16"		I		--	
②	A-2	Gear driven	H/T/Q	45	X	1.98/1.38/1.00		25		PL		¾"						--	X		¾"	16"		I		II	12" Pop-up
③	A-3	Gear driven	H/T/Q	45	X	2.96/1.85/1.40		30		PL		¾"						IV	X		¾"	16"		I		--	
④	A-4	Gear driven	H/T/Q	45	X	2.96/1.85/1.40		30		PL		¾"						--	--		--	--		I		II	12" Pop-up
⑤	A-5	Gear driven	H/T/Q	45	X	3.81/2.46/1.92		35		PL		¾"						IV	X		¾"	16"		I		--	
[5]	A-5	Gear driven	F	45	X	7.58		35		PL		¾"						IV	X		¾"	16"		I		--	
⑥	A-6	Gear driven	H/T/Q	45	X	3.81/2.46/1.92		35		PL		¾"						--	--		--	--		I		II	12" Pop-up
⑦	A-7	Gear driven	P	45	X	2.07		37		PL		¾"						IV	X		¾"	16"		I		--	
[7]	A-7	Gear driven	F	45	X	4.01		42		PL		¾"						IV	X		¾"	16"		I		--	
⑧	A-8	Gear driven	P	45	X	2.07		37		PL		¾"						--	--		--	--		I		II	12" Pop-up
○	C-1	Spray	Q	30	X	0.2		5		PL		¾"						IV	X		½"	6"		I		--	
●	C-2 MOD	Bubblers head	F	20	X	0.25		--		PL		¾"						IV	X		½"	6"		I		--	2 per tree
▲	B-2	Spray with Rotary Nozzle	TT/H/Q	30	X	1.07/0.80/0.40		16		PL		½"						--	--		--	--		I		II	12" Pop-up
△	B-3	Spray with Rotary Nozzle	TT/H/Q	30	X	1.07/0.80/0.40		16		PL		½"						II	X		½"	16"		I		--	
□	B-4	Strip spray	CST	30	X	1.21		4x30		PL		½"						II	X		½"	16"		I		--	
[V]		VD (BASELINE BICODER, BL-5201, BL-5202, BL-5204)																									
[HM]		HM (BASELINE BL-BHM200, 2")																									
[A1]		SMS (BASELINE BISENSOR, BL-5315B) The number shown in the symbol is the identification number of soil moisture sensor. The location of SMS to be directed by engineer.																									

ABBREVIATIONS

F — full circle
P — part circle
F/P — full/part circle
Q — quarter circle
T — third circle
H — half circle
TT — two third circle
TQ — three quarter circle
CST — center strip
SST — side strip
EST — end strip
Ft — feet/foot
GPM — gallons per minute
GPH — gallons per hour
Adj — adjustable
PL — plastic
B/B — brass/bronze
B/PL — brass/plastic
B/B/PL — brass/bronze/plastic
NPT — national pipe thread
IPS — iron pipe size
PSI — pounds per square inch
VD — Valve Decoder
SMS — Soil Moisture Sensor
HM — Hydrometer

X IN BOX DENOTES REQUIREMENT

APPLICABLE WHEN CIRCLED BELOW:

1 - See Special Provisions.
② - If a pressure compensating device is specified, the discharge and radii shown reflect its use.
3 - Arc Stop shall be fitted with a nut and bolt.
4 - Vinyl-coated cast iron housing.
⑤ - Swing Joints required adjacent to shoulders, curbs, sidewalks, and dikes.
⑥ - Unless otherwise shown on plans.

VALVE DECODER CALL OUT

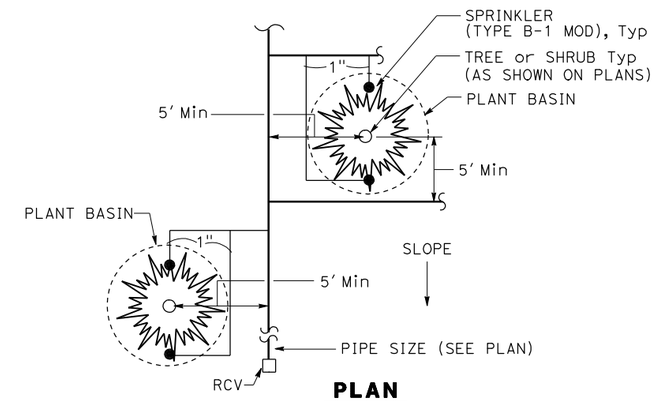

PLAN

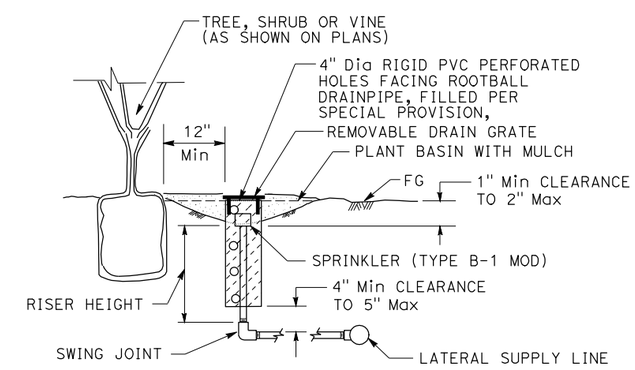

SECTION

SPRINKLER (TYPE C-2 MOD)

THIS PLAN ACCURATE FOR IRRIGATION WORK ONLY

SPRINKLER SCHEDULE AND DETAILS

LD-1

STATE OF CALIFORNIA - DEPARTMENT OF TRANSPORTATION
LANDSCAPE ARCHITECTURE
SENIOR LANDSCAPE ARCHITECT ERIC DICKSON
CALCULATED-DESIGNED BY FATEMEH YOUSEFI
CHECKED BY STEPHEN SU
REVISED BY FY
DATE REVISED 12-31-10

LAST REVISION 01-18-11
DATE PLOTTED => 03-FEB-2011
TIME PLOTTED => 12:23

Dist	COUNTY	ROUTE	POST MILES TOTAL PROJECT	SHEET No.	TOTAL SHEETS
11	SD	805	7.7/9.1	20	36

01-31-11
LICENSED LANDSCAPE ARCHITECT

02-14-11
PLANS APPROVAL DATE

LICENSED LANDSCAPE ARCHITECT
STEPHEN SHUN-MIN SU
NO. 4838
Signature
9-30-11
Renewal Date
01-31-11
Date
STATE OF CALIFORNIA

THE STATE OF CALIFORNIA OR ITS OFFICERS OR AGENTS SHALL NOT BE RESPONSIBLE FOR THE ACCURACY OR COMPLETENESS OF SCANNED COPIES OF THIS PLAN SHEET.

CONTROLLER 'A' SCHEDULE

HM No.	ADDRESS	IC-RCV No.	ADDRESS	VD No.	ADDRESS	SMS No.	ADDRESS
HM A		A-1		A-VD1		SMS-A1	
		A-2		A-VD1		SMS-A1	
		A-3		A-VD2		SMS-A1	
		A-4		A-VD2		SMS-A1	
		A-5		A-VD2		SMS-A1	
		A-6		A-VD2		SMS-A1	
		A-7		A-VD3		SMS-A1	
		A-8		A-VD3		SMS-A1	
		A-9		A-VD3		SMS-A1	
		A-10		A-VD3		SMS-A1	
		A-11		A-VD4		SMS-A1	

NOTE:
CONTRACTOR SHALL PROVIDE ENGINEER THE ADDRESSES OF HM, VD, AND SMS WITHIN 15 BUSINESS DAYS AFTER THE COMPLETETION OF FUNCTIONAL TEST OF IRRIGATION CONTROL SYSTEM

CONTROLLER 'B' SCHEDULE

HM No.	ADDRESS	IC-RCV No.	ADDRESS	VD No.	ADDRESS	SMS No.	ADDRESS
HM B		B-1		B-VD1		SMS-B-1	
		B-2		B-VD1		SMS-B-1	
		B-3		B-VD2		SMS-B-2	
		B-4		B-VD2		SMS-B-3	
		B-5		B-VD2		SMS-B-3	
		B-6		B-VD3		SMS-B-2	
		B-7		B-VD3		SMS-B-2	
		B-8		B-VD3		SMS-B-3	
		B-9		B-VD3		SMS-B-2	
		B-10		B-VD4		SMS-B-2	
		B-11		B-VD4		SMS-B-3	
		B-12		B-VD4		SMS-B-2	
		B-13		B-VD4		SMS-B-3	
		B-14		B-VD5		SMS-B-2	
		B-15		B-VD5		SMS-B-2	
		B-16		B-VD5		SMS-B-3	
		B-17		B-VD5		SMS-B-3	
		B-18		B-VD6		SMS-B-4	
		B-19		B-VD6		SMS-B-4	
		B-20		B-VD6		SMS-B-4	
		B-21		B-VD6		SMS-B-4	
		B-22		B-VD7		SMS-B-4	
		B-23		B-VD7		SMS-B-4	
		B-24		B-VD8		SMS-B-5	
		B-25		B-VD8		SMS-B-5	
		B-26		B-VD8		SMS-B-5	
		B-27		B-VD8		SMS-B-5	
		B-28		B-VD9		SMS-B-5	
		B-29		B-VD10		SMS-B-5	
		B-30		B-VD10		SMS-B-5	
		B-31		B-VD10		SMS-B-5	
		B-32		B-VD10		SMS-B-5	
		B-33		B-VD11		SMS-B-5	
		B-34		B-VD12		SMS-B-5	

SPRINKLER SCHEDULE AND DETAILS

NO SCALE

LD-2

THIS PLAN ACCURATE FOR IRRIGATION WORK ONLY

STATE OF CALIFORNIA - DEPARTMENT OF TRANSPORTATION
Caltrans®
LANDSCAPE ARCHITECTURE

SENIOR LANDSCAPE ARCHITECT: ERIC DICKSON
CALCULATED-DESIGNED BY: FATEMEH YOUSEFI
CHECKED BY: STEPHEN SU
REVISED BY: FY
DATE REVISED: 12-31-10

LAST REVISION 01-18-11
DATE PLOTTED => 03-FEB-2011
TIME PLOTTED => 12:23

Dist	COUNTY	ROUTE	POST MILES TOTAL PROJECT	SHEET No.	TOTAL SHEETS
11	SD	805	7.7/9.1	21	36

LICENSED LANDSCAPE ARCHITECT 01-31-11

02-14-11
PLANS APPROVAL DATE

THE STATE OF CALIFORNIA OR ITS OFFICERS OR AGENTS SHALL NOT BE RESPONSIBLE FOR THE ACCURACY OR COMPLETENESS OF SCANNED COPIES OF THIS PLAN SHEET.

LICENSED LANDSCAPE ARCHITECT STEPHEN SHUN-MIN SU NO. 4838 Signature 9-30-11 Renewal Date 01-31-11 Date STATE OF CALIFORNIA

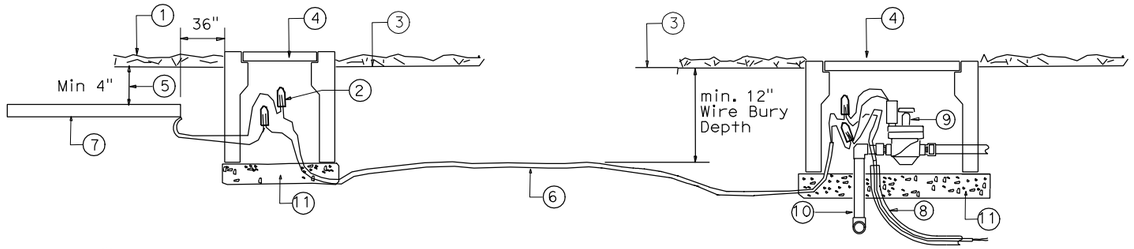

1. PLANTS
2. RED TO RED AND BLACK TO BLACK ENCAPSULATED IN WATER PROOF SPLICE CAP (3M DBR-6 OR EQUAL) IN POSITION AS SHOWN
3. FINISHED GRADE
4. VALVE BOX
5. SOIL MOISTURE SENSOR(SMS) BURY DEPTH
6. 2-WIRE CONDUCTOR
7. SMS-SET LENGTH HORIZONTALLY AND BLADE IN VERTICAL POSITION WITH WIRES LEADING OUT OF BOTTOM
8. 2-WIRE CONDUCTOR PATH WITH 1" MINIMUM SIZE CONDUIT
9. REMOTE CONTROL VALVE
10. PRESSURE LINE-SIZE PER PLAN
11. GRAVELS-6" MINIMUM DEPTH

SOIL MOISTURE SENSOR INSTALLATION DETAIL

NO SCALE

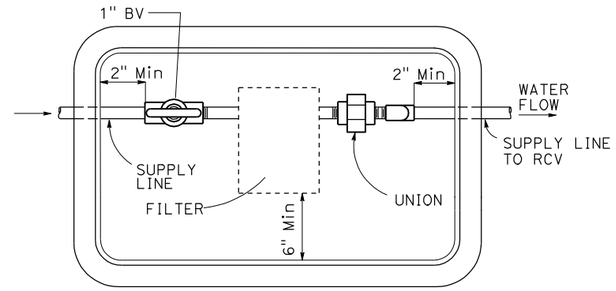

TOP OF FILTER SHALL BE 2" BELOW VALVE BOX COVER

PLAN VIEW

FILTER ASSEMBLY UNIT

NO SCALE

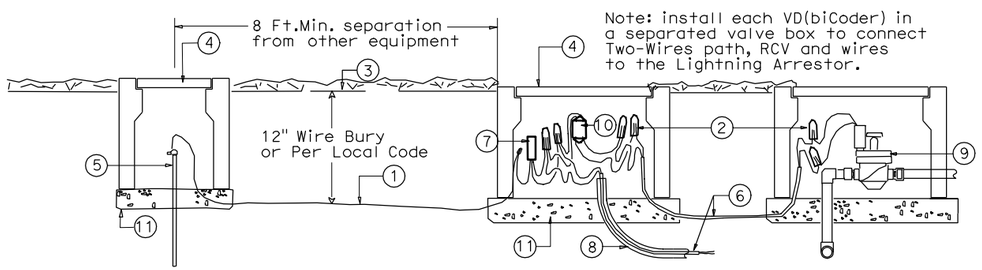

1. #6 AWG SOLD BARE COPPER WIRE
2. RED TO RED AND BLACK TO BLACK ENCAPSULATED IN WATER PROOF SPLICE CAP (3M DBR-6 OR EQUAL) IN POSITION AS SHOWN
3. FINISHED GRADE
4. VALVE BOX
5. 5/8" COPPER GROUNDING ROD 8' LONG
6. 2-WIRE CONDUCTOR
7. LIGHTNING ARRESTOR(BASELINE BL-LA01)
8. TWO-WIRES PATH WITH 1" MINIMUM SIZE CONDUIT
9. 24 VOLT RCV
10. VALVE DECODER
11. GRAVELS-6" MINIMUM DEPTH

VALVE DECODER AND LIGHTNING SURGE PROTECTION DETAIL

NO SCALE

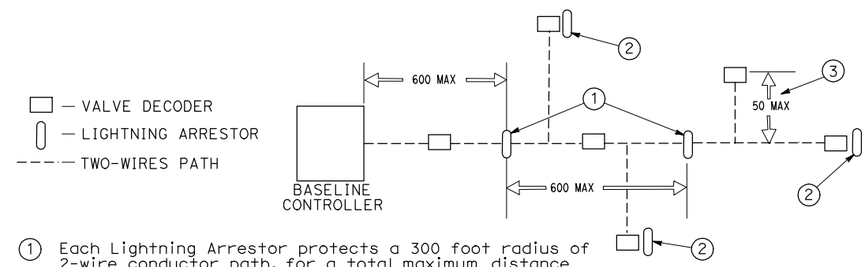

1. Each Lightning Arrestor protects a 300 foot radius of 2-wire conductor path, for a total maximum distance of 600' between lighting arrestors.
2. There shall be a Lightning Arrestor at the end of the 2-wire conductor that is the maximum distance from controller, or if looped at the point of maximum distance from the controller.
3. A stub lenth shall not exceed 50' without a Lightning Arrestor (must be within 300' of an existing Lightning Arrestor.

CONCEPTUAL LAYOUT FOR LIGHTNING ARRESTOR

NO SCALE

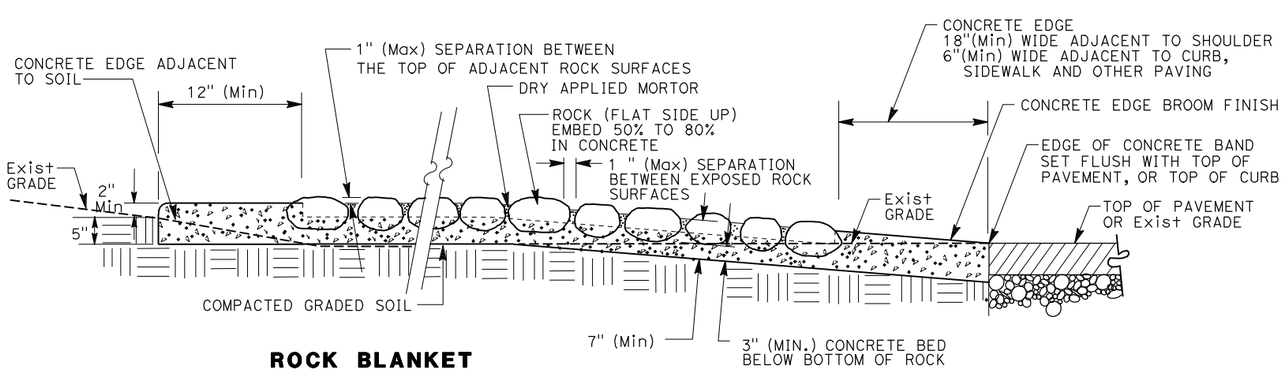

ROCK BLANKET

NO SCALE

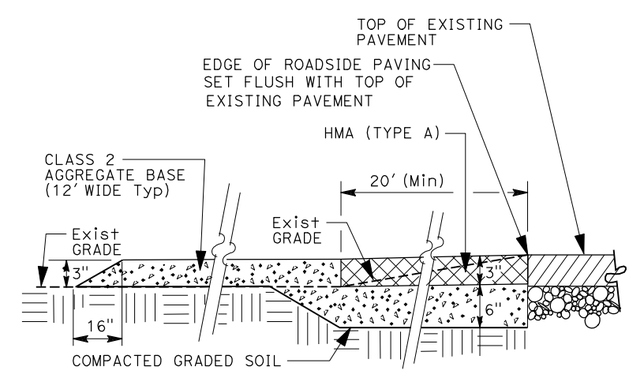

ROADSIDE PAVING AND CLASS 2 AGGREGATE BASE

SECTION NO SCALE

SPRINKLER SCHEDULE AND DETAILS

NO SCALE

LD-3

FY	12-31-10		
REVISED BY	DATE REVISED		
FATEMEH YOUSEFI	STEPHEN SU		
CALCULATED-DESIGNED BY	CHECKED BY		
SENIOR LANDSCAPE ARCHITECT	ERIC DICKSON		

STATE OF CALIFORNIA - DEPARTMENT OF TRANSPORTATION
Caltrans
LANDSCAPE ARCHITECTURE

LAST REVISION 01-18-11 | DATE PLOTTED => 03-FEB-2011 | TIME PLOTTED => 12:23

Dist	COUNTY	ROUTE	POST MILES TOTAL PROJECT	SHEET No.	TOTAL SHEETS
11	SD	805	7.7/9.1	22	36

01-31-11
LICENSED LANDSCAPE ARCHITECT

02-14-11
PLANS APPROVAL DATE

LICENSED LANDSCAPE ARCHITECT STEPHEN SHUN-MIN SU NO. 4838 Signature 9-30-11 Renewal Date 01-31-11 Date STATE OF CALIFORNIA

THE STATE OF CALIFORNIA OR ITS OFFICERS OR AGENTS SHALL NOT BE RESPONSIBLE FOR THE ACCURACY OR COMPLETENESS OF SCANNED COPIES OF THIS PLAN SHEET.

ABBREVIATIONS

EA — each
DIP — ductile iron pipe
GSP — galvanized steel pipe
Ft — foot/feet
PR — pressure rated

SUBTOTALS PER VALVE ON LATERAL SUPPLY SIDE OF CONTROL VALVE

DESCRIPTION			UNIT	VALVE OR ASSEMBLY NUMBER																							SUBTOTALS	UNIT	DESCRIPTION		
				B-1	B-2	B-3	B-4	B-5	B-6	B-7	B-8	B-9	B-10	B-11	B-12	B-13	B-14	B-15	B-16	B-17	B-18	B-19	B-20	B-21	B-22	B-23					
PLASTIC PIPE SUPPLY LINE	PR 315 SCHEDULE 40	1"	LF	140	490	250	250	350	250	140	940	200	140	250	200	880	180	260	250	510	250	220	630	200	70	190		7240	LF	1"	PR 315 SCHEDULE 40 PLASTIC PIPE SUPPLY LINE
		1 1/4"	LF	100	60	150	130		250	160		120	180	200	95		190	100	130		130			60	200	70		2325	LF	1 1/4"	
		1 1/2"	LF	50		80	50			70		60	70		60		90	30	40		25					90		715	LF	1 1/2"	
		2"	LF		30	20	30		80	90		80	100	50	60		20				30							590	LF	2"	
SPRINKLER TYPE		1				23	9		20			2		19				16	16		3			6				114		1	SPRINKLER TYPE
		2					13														14							27		2	
		3										12			8										3			23		3	
		4																								7		7		4	
		5		8						13			13		4		14								3	2		57		5	
		5																												5	
		6																												6	
		7																												7	
		7																												7	
		8																												8	
		○									42											35						77		○	
		●						60			38					72				60			58					288		●	
		▲			19																							19		▲	
		△			12																							12		△	
		□			5																							5		□	

DESCRIPTION			UNIT	VALVE OR ASSEMBLY NUMBER																							SUBTOTALS	UNIT	DESCRIPTION		
				1(B)-10	1(B)-11	1(B)-12	1(B)-13	1(B)-14				A-7	A-8	A-9	A-10	A-11															
PLASTIC PIPE SUPPLY LINE	PR 315 SCHEDULE 40	1"	FT	460	180	420	1100	470				100	140	520	200	240												3660	LF	1"	PR 315 SCHEDULE 40 PLASTIC PIPE SUPPLY LINE
		1 1/4"	FT	170	140	150		70				70	70		50	30												750	LF	1 1/4"	
		1 1/2"	FT	170	80			40				40	80		130	80												620	LF	1 1/2"	
		2"	FT	30	40	50		250				30																400	LF	2"	
SPRINKLER TYPE		1													4													4		1	SPRINKLER TYPE
		2													5	9												14		2	
		3			14							3				1												18		3	
		4													2													2		4	
		5										1	2			1												4		5	
		5										4																4		5	
		6											6		1													7		6	
		7		23		14		7																				44		7	
		7				3		1																				4		7	
		8						12																				12		8	
		○																												○	
		●					92							50														142		●	
		▲																												▲	
		△																												△	
		□																												□	

IRRIGATION QUANTITIES

IQ-1

STATE OF CALIFORNIA - DEPARTMENT OF TRANSPORTATION
Caltrans
LANDSCAPE ARCHITECTURE
SENIOR LANDSCAPE ARCHITECT ERIC DICKSON
CALCULATED-DESIGNED BY FATEMEH YOUSEFI
CHECKED BY STEPHEN SU
REVISED BY FY
DATE REVISED 12-31-10

LAST REVISION 01-18-11
DATE PLOTTED => 03-FEB-2011
TIME PLOTTED => 12:24

Dist	COUNTY	ROUTE	POST MILES TOTAL PROJECT	SHEET No.	TOTAL SHEETS
11	SD	805	7.7/9.1	23	36

LICENSED LANDSCAPE ARCHITECT 01-31-11

02-14-11
PLANS APPROVAL DATE

THE STATE OF CALIFORNIA OR ITS OFFICERS OR AGENTS SHALL NOT BE RESPONSIBLE FOR THE ACCURACY OR COMPLETENESS OF SCANNED COPIES OF THIS PLAN SHEET.

LICENSED LANDSCAPE ARCHITECT STEPHEN SHUN-MIN SU NO. 4838 Signature 9-30-11 Renewal Date 01-31-11 Date STATE OF CALIFORNIA

SUBTOTALS PER PLAN SHEET ON MAIN SUPPLY SIDE OF CONTROL VALVE

DESCRIPTION			UNIT	SHEET NUMBER IP-1	IP-2	IP-3	IP-4	SUBTOTALS
BPA		ENCLOSURE						
2-WIRE IRRIGATION CONTROLLER		200 STATION	EA	1				1
		200 STATION + 24 STATION CONVENTION	EA	1				1
		STATION						
	CEC	SINGLE						
		DOUBLE						
VALVES AND ASSEMBLIES	VD	1 ZONE	EA	4				4
		2 ZONE	EA	3				3
		4 ZONE	EA	5	3	1		9
	RCV	1"	EA	6	3	1	1	11
		1½"	EA	24	8	3	4	39
		2"	EA					
	GV	2"	EA	3	3	1	1	8
		3"	EA				1	1
	QCV							
	HM	2"	EA	2				2
	FAU	1"	EA	3	3	1	1	8
CONDUIT	CSP							
	WSP							
PLASTIC PIPE SUPPLY LINE	SCHEDULE40	2"	LF	50				50
	PR 315	3"	LF	350	1400	150	20	1920
SMS			EA	4	2			6
SLEEVE	PR 315	2"	LF				20	20

TOTAL QUANTITIES

TOTALS	UNIT	DESCRIPTION		
		ENCLOSURE		BPA
1	EA	200 STATION		2-WIRE IRRIGATION CONTROLLER
1	EA	200 STATION + 24 STATION CONVENTION		
		STATION		
		SINGLE	CEC	
		DOUBLE		
4	EA	1 ZONE	VD	VALVES AND ASSEMBLIES
3	EA	2 ZONE		
9	EA	4 ZONE		
11	EA	1"	RCV	
39	EA	1½"		
	EA	2"		
8	EA	2"	GV	
1	EA	3"		
			QCV	
			HM	
2	EA	2"		
8	EA	1"	FAU	
			CSP	CONDUIT
			WSP	
10900	LF	1"	SCHEDULE40	PLASTIC PIPE SUPPLY LINE
3075	LF	1¼"		
1335	LF	1½"		
1040	LF	2"		
1920	LF	3"	PR 315	
6	EA			SMS
20	LF	2"	PR 315	SLEEVE
118	EA	①		SPRINKLER TYPE
41	EA	②		
41	EA	③		
9	EA	④		
61	EA	⑤		
4	EA	5		
7	EA	⑥		
44	EA	⑦		
4	EA	7		
12	EA	⑧		
77	EA	○		
430	EA	●		
19	EA	▲		
12	EA	△		
5	EA	□		

ABBREVIATIONS

BPA — backflow preventer assembly
BV — ball valve
CV — check valve
CEC — controller enclosure cabinet
CSP — corrugated steel pipe
DIP — ductile iron pipe
EA — each
FAU — filter assembly unit
HM — hydrometer
FCV — flow control valve
FS — flow sensor
FV — flush valve
GSP — galvanized steel pipe
GV — gate valve
MCV — manual control valve
Ft — foot/feet
SMS — soil moisture sensor
VD — Valve decoder
PR — pressure rated
PRV — pressure reducing valve
PRLV - pressure relief valve
QCV — quick coupling valve
RCV — remote control valve
RCVM - remote control valve (master)
VAU — valve assembly unit
WSP — welded steel pipe
WS — wye strainer

IRRIGATION QUANTITIES

IQ-2

REVISED BY	DATE REVISED	FY
FATEMEH YOUSEFI	STEPHEN SU	12-31-10

CALCULATED-DESIGNED BY / CHECKED BY

SENIOR LANDSCAPE ARCHITECT: ERIC DICKSON

STATE OF CALIFORNIA - DEPARTMENT OF TRANSPORTATION
Caltrans
LANDSCAPE ARCHITECTURE

LAST REVISION 01-18-11 | DATE PLOTTED => 03-FEB-2011 | TIME PLOTTED => 12:24

DIST.	COUNTY	ROUTE	POST MILES TOTAL PROJECT	SHEET NO.	TOTAL SHEETS
11	SD	805	7.7/9.1	25	36

REGISTERED CIVIL ENGINEER

June 5, 2009
PLANS APPROVAL DATE

REGISTERED PROFESSIONAL ENGINEER Glenn DeCou No. C34547 Exp. 9-30-09 CIVIL STATE OF CALIFORNIA

The State of California or its officers or agents shall not be responsible for the accuracy or completeness of electronic copies of this plan sheet.

To accompany plans dated 02-14-11

NOTES:

1. H is 2'-6" for fabric less than 5'-0" high.
   H is 3'-0" for fabric 5'-0" and over.
2. T is not less than 3 times maximum cross section of post with minimum of 8".
3. Arms with barbed wire to be used where shown on plans.
4. See Revised Standard Plan RSP A85 for Chain Link Fencing dimensions.
5. Reinforcing must comply with ASTM A 706.
6. See Detail A on New Standard Plan NSP A86B for connection at headwall.

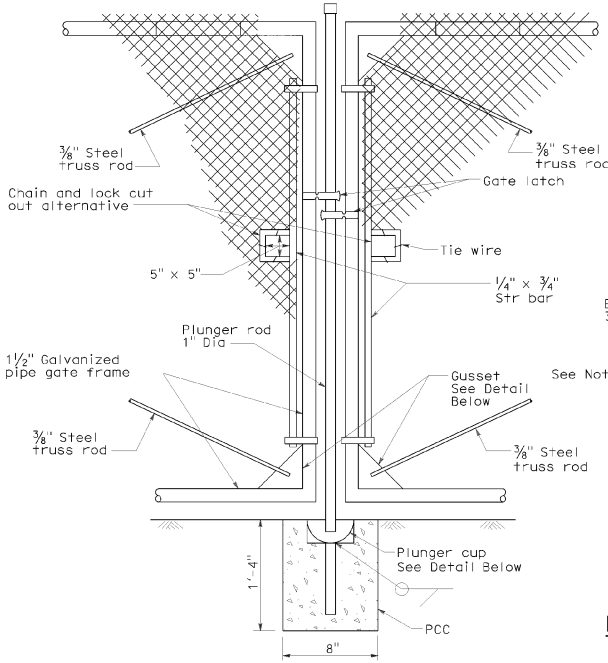

TYPICAL DOUBLE GATE
REMOVABLE CENTER POST

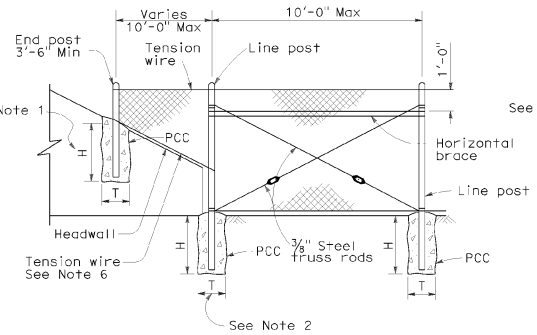

METHOD OF TYING FENCE TO HEADWALL

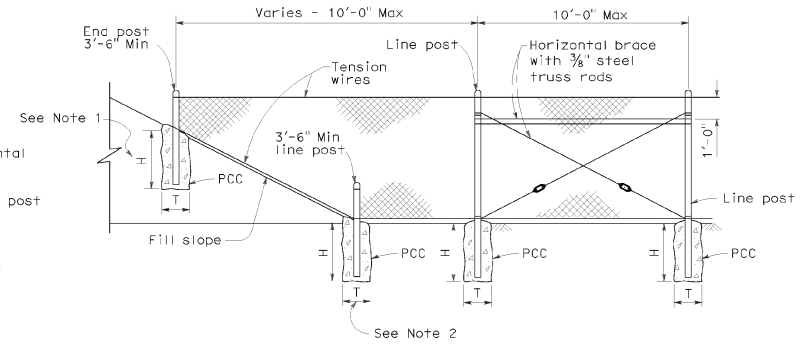

METHOD OF ERECTING FENCE FOR FILL SLOPE

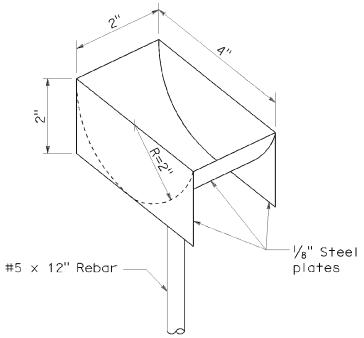

PLUNGER CUP DETAIL

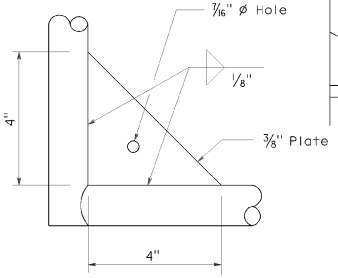

GUSSET DETAIL

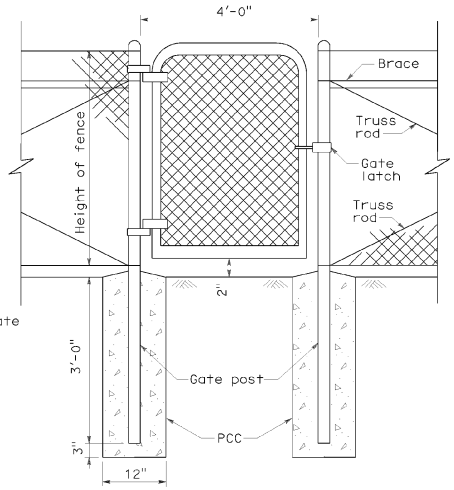

WALK GATE

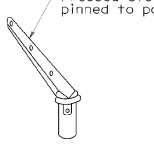

POST TOP END

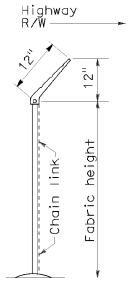

END ELEVATION

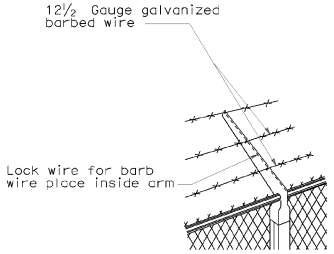

LINE POST TOP
Vertical arms when desired

BARBED WIRE POST TOP
See Note 3

STATE OF CALIFORNIA
DEPARTMENT OF TRANSPORTATION

CHAIN LINK FENCE DETAILS

NO SCALE

NSP A85A DATED JUNE 5, 2009 SUPPLEMENTS THE STANDARD PLANS BOOK DATED MAY 2006.

NEW STANDARD PLAN NSP A85A

2006 NEW STANDARD PLAN NSP A85A

5-7-09

DIST.	COUNTY	ROUTE	POST MILES TOTAL PROJECT	SHEET NO.	TOTAL SHEETS
11	SD	805	7.7/9.1	26	36

REGISTERED CIVIL ENGINEER

June 5, 2009
PLANS APPROVAL DATE

REGISTERED PROFESSIONAL ENGINEER Glenn DeCou No. C34547 Exp. 9-30-09 CIVIL STATE OF CALIFORNIA

The State of California or its officers or agents shall not be responsible for the accuracy or completeness of electronic copies of this plan sheet.

To accompany plans dated 02-14-11

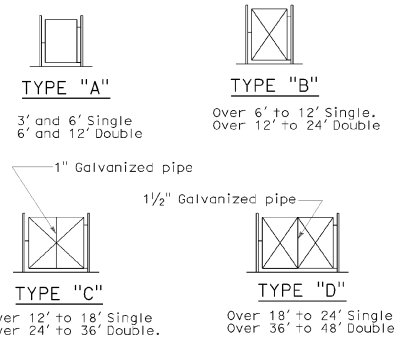

TYPICAL FRAMEWORK SHOWING NUMBER OF BAYS IN GATE

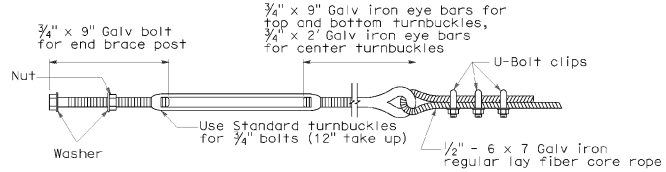

TURNBUCKLE A

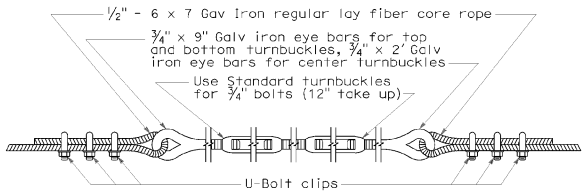

TURNBUCKLE B

NOTES:

1. All material for abutment connection to be galvanized.
2. The chain link fabric shall be replaced by barbed wire strands at 12" maximum centers between the double posts.
3. When the width of the culvert makes it necessary to anchor a post to the top of the culvert, a cast iron shoe or other device approved by the Engineer shall be used.
4. Fencing over stream and around headwall may also use Barbed Wire or Wire Mesh fencing with either wood post or steel post installation.
5. See Revised Standard Plan RSP A85 for Chain Link fence dimensions. See Standard Plan A86 for Barbed Wire and Wire Mesh fence dimensions and for wood post and steel post installation.

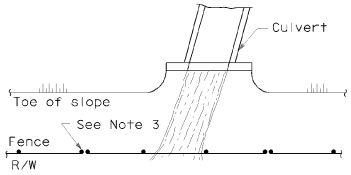

PLAN

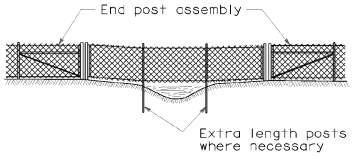

ELEVATION

INSTALLATION OVER STREAM

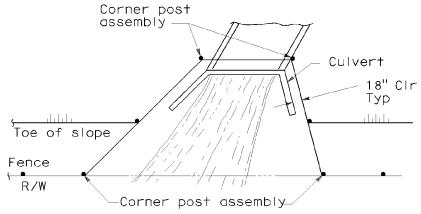

PLAN

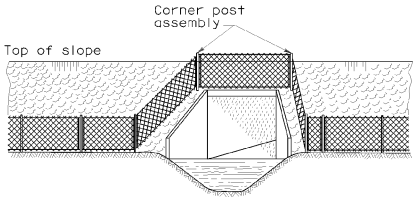

ELEVATION

INSTALLATION AROUND HEADWALL

See Note 4

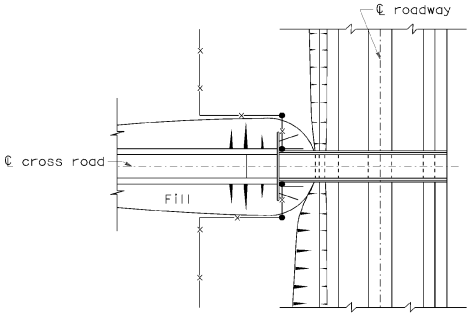

PLAN OF ROADWAY - UNDERPASS

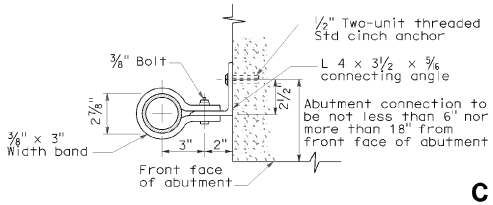

ABUTMENT CONNECTION

TYPICAL INSTALLATION AT BRIDGES

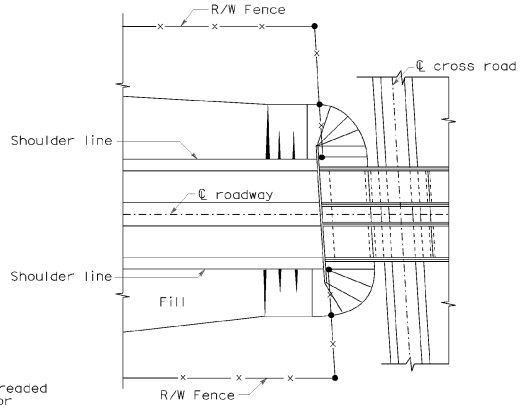

PLAN OF ROADWAY - OVERPASS

STATE OF CALIFORNIA
DEPARTMENT OF TRANSPORTATION

CHAIN LINK FENCE DETAILS

NO SCALE

NSP A85B DATED JUNE 5, 2009 SUPPLEMENTS THE STANDARD PLANS BOOK DATED MAY 2006.

NEW STANDARD PLAN NSP A85B

2006 NEW STANDARD PLAN NSP A85B

5-12-09

DIST	COUNTY	ROUTE	POST MILES TOTAL PROJECT	SHEET NO.	TOTAL SHEETS
11	SD	805	7.7/9.1	36	36

LICENSED LANDSCAPE ARCHITECT

August 15, 2008
PLANS APPROVAL DATE

The State of California or its officers or agents shall not be responsible for the accuracy or completeness of electronic copies of this plan sheet.

LICENSED LANDSCAPE ARCHITECT — Robert B. Schott — Signature — 11-04-08 — Registered 15 a — 08-11-08 — Date — STATE OF CALIFORNIA

To accompany plans dated 02-14-11

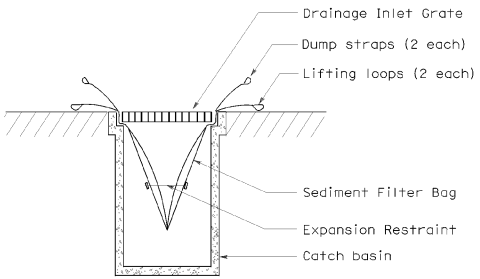

SECTION B-B

SEDIMENT FILTER BAG DETAIL

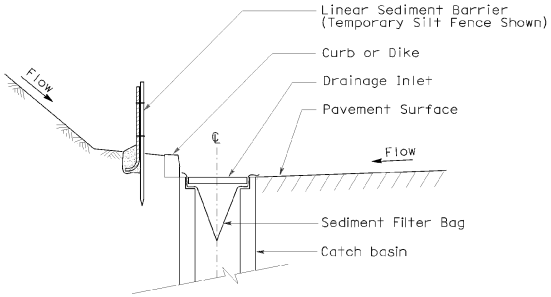

SECTION A-A

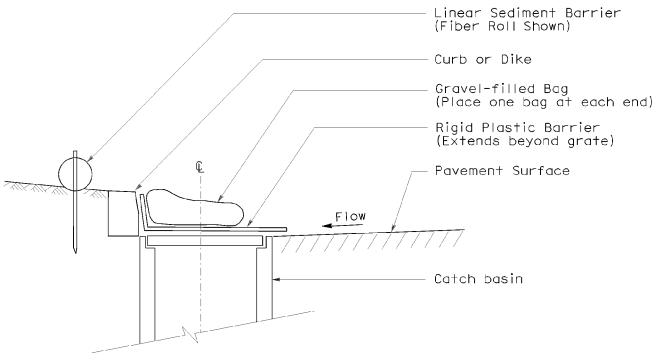

SECTION

TEMPORARY DRAINAGE
INLET PROTECTION (TYPE 6A)
(CATCH BASIN WITH GRATE)

NOTES:

1. See Standard Plan T51 for Temporary Silt Fence.
2. Dimensions may vary to fit field conditions.

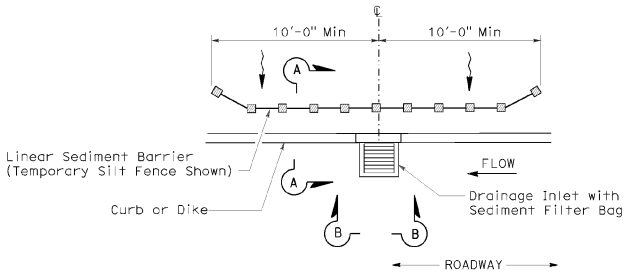

PLAN

TEMPORARY DRAINAGE
INLET PROTECTION (TYPE 5)
(SEDIMENT FILTER BAG)

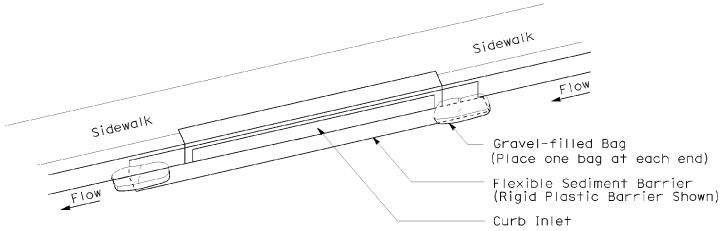

PERSPECTIVE

TEMPORARY DRAINAGE
INLET PROTECTION (TYPE 6B)
(CURB INLET WITHOUT GRATE)

STATE OF CALIFORNIA
DEPARTMENT OF TRANSPORTATION

TEMPORARY WATER POLLUTION CONTROL DETAILS (TEMPORARY DRAINAGE INLET PROTECTION)

NO SCALE

NSP T64 DATED AUGUST 15, 2008 SUPPLEMENTS
THE STANDARD PLANS BOOK DATED MAY 2006.

NEW STANDARD PLAN NSP T64

2006 NEW STANDARD PLAN NSP T64

7-11-08

DIST.	COUNTY	ROUTE	POST MILES TOTAL PROJECT	SHEET NO.	TOTAL SHEETS
11	SD	805	7.7/9.1	24	36

REGISTERED CIVIL ENGINEER

June 5, 2009
PLANS APPROVAL DATE

Glenn DeCou No. C34547 Exp. 9-30-09 CIVIL — REGISTERED PROFESSIONAL ENGINEER — STATE OF CALIFORNIA

The State of California or its officers or agents shall not be responsible for the accuracy or completeness of electronic copies of this plan sheet.

To accompany plans dated 02-14-11

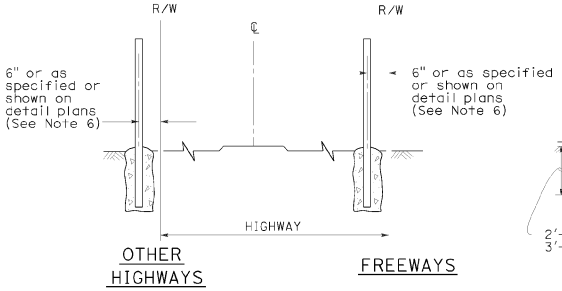

FENCE LOCATION

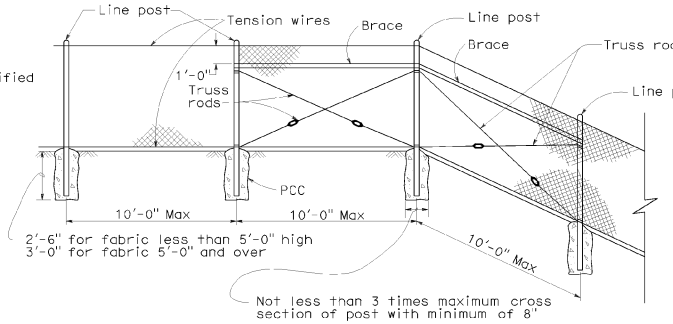

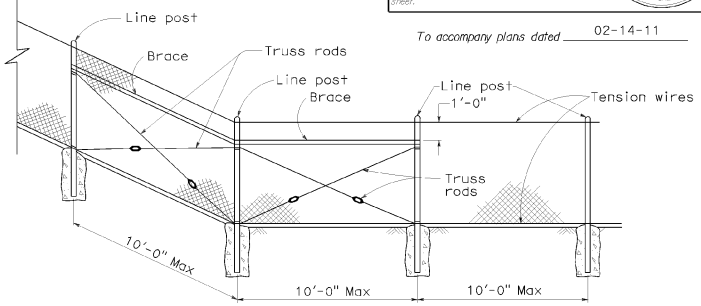

CHAIN LINK FENCE ON SHARP BREAK IN GRADE

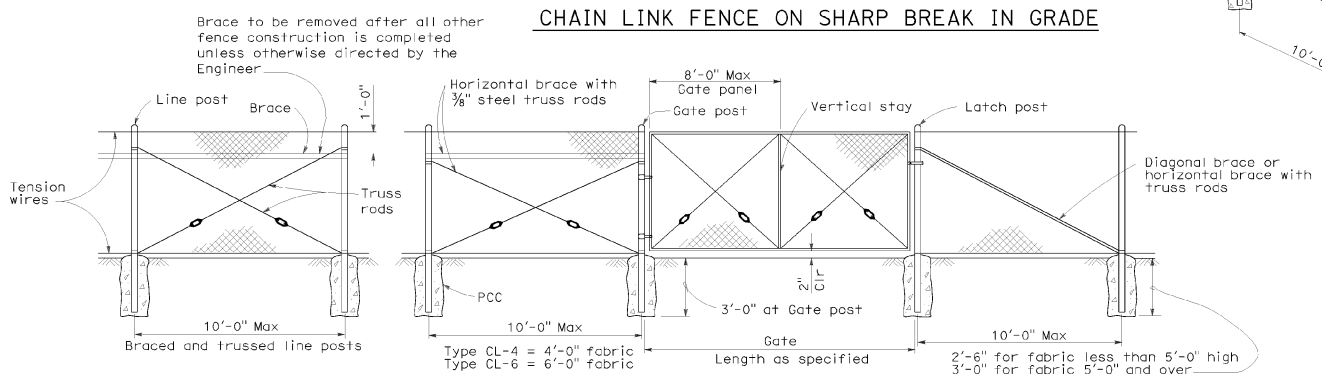

CHAIN LINK GATE INSTALLATION

GATE POST			
FENCE HEIGHT	GATE WIDTHS	NOMINAL ID	WEIGHT PER FOOT
6'-0" and Less	Up thru 6'-0"	2½"	4.95 LB
	Over 6'-0" thru 12'-0"	4"	10.79 LB
	Over 12'-0" thru 18'-0"	5"	14.62 LB
	Over 18'-0" to 24'-0" Max	6"	18.97 LB
Over 6'-0"	Up thru 6'-0"	3"	7.58 LB
	Over 6'-0" thru 12'-0"	5"	14.62 LB
	Over 12'-0" thru 18'-0"	6"	18.97 LB
	Over 18'-0" to 24'-0" Max	8"	28.55 LB

Above post dimensions and weights are minimums. Larger sizes may be used on approval of the Engineer.

NOTES:

1. The below table shows examples of post and brace sections which may comply with the Specifications.
2. Sections shown in the tables must also comply with the strength requirements and other provisions of the Specifications.
3. Other sections which comply with the strength requirements and other provisions of the Specifications may be used on approval of the Engineer.
4. Options exercised shall be uniform on any one project.
5. Dimensions shown are nominal.
6. Offset to be 2'-0" at monument locations, measured at right angles to R/W lines. Taper to achieve offset to be at least 20'-0" long.

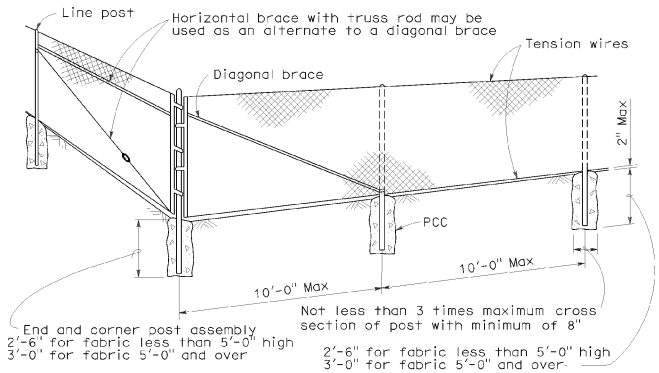

CORNER POST

TYPICAL MEMBER DIMENSIONS (See Notes)											
FENCE HEIGHT	LINE POSTS			END, LATCH & CORNER POSTS				BRACES			
	ROUND ID	H	ROLL FORMED	ROUND ID	ROLL FORMED			ROUND ID	H	ROLL FORMED	
6' & less	1½"	1⅞" × 1⅝"	1⅞" × 1⅝"	2"	3½" × 3½"	2" × 1¾"		1¼"	1½" × 1⅝"	1⅝" × 1¼"	1¾" × 1¼"
Over 6'	2"	2¼" × 2"	2" × 1¾"	2½"	3½" × 3½"	2½" × 2½"		1¼"	1½" × 1⅝"	1⅝" × 1¼"	1¾" × 1¼"

STATE OF CALIFORNIA
DEPARTMENT OF TRANSPORTATION

CHAIN LINK FENCE

NO SCALE

RSP A85 DATED JUNE 5, 2009 SUPERSEDES STANDARD PLAN A85
DATED MAY 1, 2006 - PAGE 111 OF THE STANDARD PLANS BOOK DATED MAY 2006.

REVISED STANDARD PLAN RSP A85

2006 REVISED STANDARD PLAN RSP A85

5-7-09

DIST.	COUNTY	ROUTE	POST MILES TOTAL PROJECT	SHEET NO.	TOTAL SHEETS
11	SD	805	7.7/9.1	27	36

Gregory A. Barber
LICENSED LANDSCAPE ARCHITECT

June 5, 2009
PLANS APPROVAL DATE

The State of California or its officers or agents shall not be responsible for the accuracy or completeness of electronic copies of this plan sheet.

LICENSED LANDSCAPE ARCHITECT
Gregory A. Barber 2519
09 Revision
2-28-11
Revised RSP H1
5-14-09
Date
STATE OF CALIFORNIA

To accompany plans dated 02-14-11

A

AB	aggregate base
ABS	acrylonitrile-butadiene-styrene
AC	asphalt concrete
Adj	adjacent/adjustable
AIC	auxiliary irrigation controller
Alt	alternative
AMEND	amendment
ARV	air release valve
AUTO	automatic
AUX	auxiliary
AVB	atmospheric vacuum breaker

B

B&B	balled and burlapped
B/B	brass/bronze
B/B/PL	brass/bronze/plastic
B/PL	brass/plastic
BFM	bonded fiber matrix
Bit Ctd	bituminous coated
BP	booster pump
BPA	backflow preventer assembly
BPAE	backflow preventer assembly in enclosure
BPE	backflow preventer enclosure
BV	ball valve

C

CAP	corrugated aluminum pipe
CARV	combination air release valve
CCA	cam coupler assembly
CEC	controller enclosure cabinet
CHDPE	corrugated high density polyethylene
CL	chain link
CNC	control and neutral conductors
Conc	concrete
Cond	conduit
CSP	corrugated steel pipe
CST	center strip
CV	check valve

D

Dia	diameter
DIP	ductile iron pipe
DN	diameter nominal

E

EA	each
Elect	electric/electrical
Elev	elevation
ENCL	enclosure
EP	edge of pavement
ES	edge of shoulder
EST	end strip
ESTB	establishment
ETW	edge of traveled way

F

F	full circle
F/P	full/part circle
FAU	filter assembly unit
FCV	flow control valve
FERT	fertilizer
FG	finished grade
FIPT	female iron pipe thread
FIS	fertilizer injector system
FL	flow line
FM	flow monitor
FS	flow sensor
Ft	foot/feet
FV	flush valve

G

GAL	Gallon(s)
Galv	galvanized
GARV	garden valve
GPH	gallons per hour
GPM	gallons per minute
GSP	galvanized steel pipe
GV	gate valve

H

H	half circle
HB	hose bib
HDPE	high density polyethylene
HP	horsepower/hinge point
HPL	high pressure line
Hwy	highway

I

IC	irrigation controller
ICC	irrigation controller(s) in controller enclosure cabinet
ID	inside diameter
In	inches
IFS	irrigation filtration system
IPS	iron pipe size
IPT	iron pipe thread
Irr	irrigation

L

L	length
LF	linear foot

M

Max	maximum
MBGR	metal beam guard railing
MCV	manual control valve
MIC	master irrigation controller
Min	minimum
MIPT	male iron pipe thread
Misc	miscellaneous
Mtl	material
MVP	maintenance vehicle pullout

N

NCN	no common name
NL	nozzle line
No.	number
NPT	national pipe thread

O

O/C	on center
OD	outside diameter
Oz	ounce

P

P	part circle
PB	pull box
PCC	portland cement concrete
PE	polyethylene
Pkt	packet
PL	plastic
PLT	plant/planting
PLT ESTB	plant establishment
PM	post mile
PR	pressure rated
PRLV	pressure relief valve
PSFM	polymer stabilized fiber matrix
PSI	pounds per square inch
PRV	pressure reducing valve
PVC	polyvinyl chloride
Pvmt	pavement

Q

Q	quarter circle
QCV	quick coupling valve

R

R	radius
RCP	reinforced concrete pipe
RCV	remote control valve
RCVM	remote control valve (master)
RCVMF	remote control valve (master) w/ flow meter
RCW	recycled/reclaimed water
RECP	rolled erosion control product
REQ	required
R/W	right of way

S

S	slip
SCC	sprinkler control conduit
SCH	schedule
SF	state-furnished
Shld	shoulder
SQFT	square foot/feet
SQYD	square yard(s)
SST	side strip
Sta	station
Std	standard
SW	sidewalk/sound wall

T

T	third circle/thread
TLS	truck loading standpipe
TQ	three quarter circle
TRM	turf reinforcement mat
TRVD	traveled
TT	two third circle
Typ	typical

U

UG	underground

V

VAU	valve assembly unit

W

W	width
W/	with
WM	water meter
WS	wye strainer
WSP	welded steel pipe
WWM	welded wire mesh

NOTE:

FOR ADDITIONAL ABBREVIATIONS, SEE STANDARD PLANS A10A AND A10B.

STATE OF CALIFORNIA
DEPARTMENT OF TRANSPORTATION

PLANTING AND IRRIGATION ABBREVIATIONS

NO SCALE

RSP H1 DATED JUNE 5, 2009 SUPERSEDES STANDARD PLAN H1 DATED MAY 1, 2006 - PAGE 201 OF THE STANDARD PLANS BOOK DATED MAY 2006.

REVISED STANDARD PLAN RSP H1

2006 REVISED STANDARD PLAN RSP H1

5-28-09

DIST.	COUNTY	ROUTE	POST MILES TOTAL PROJECT	SHEET NO.	TOTAL SHEETS
11	SD	805	7.7/9.1	28	36

LICENSED LANDSCAPE ARCHITECT

June 5, 2009
PLANS APPROVAL DATE

The State of California or its officers or agents shall not be responsible for the accuracy or completeness of electronic copies of this plan sheet.

LICENSED LANDSCAPE ARCHITECT — Gregory A. Bolger — 2-28-11 — Revised 10-4-10 — 5-14-09 — DATE — STATE OF CALIFORNIA

To accompany plans dated 02-14-11

EXISTING	PROPOSED	ITEM DESCRIPTION
		WATER METER (WM)
		BACKFLOW PREVENTER ASSEMBLY (BPA)
		BACKFLOW PREVENTER ASSEMBLY IN ENCLOSURE (BPAE)
		BACKFLOW PREVENTER ENCLOSURE (BPE)
		BOOSTER PUMP (BP)
		TRUCK LOADING STANDPIPE (TLS)
	FS	FLOW SENSOR (FS)
X	X	MASTER IRRIGATION CONTROLLER (MIC)
		AUXILIARY IRRIGATION CONTROLLER (AIC)
		IRRIGATION CONTROLLER (IC)/ IRRIGATION CONTROLLER (IC) (BATTERY) IRRIGATION CONTROLLER (IC) (SOLAR)
		IRRIGATION CONTROLLER(S) IN CONTROLLER ENCLOSURE CABINET (ICC)
		CONTROL AND NEUTRAL CONDUCTORS (CNC)
SCC	SCC	SPRINKLER CONTROL CONDUIT (SCC)
		IRRIGATION CROSSOVER
		EXTEND IRRIGATION CROSSOVER
		IRRIGATION SLEEVE
DIP	DIP	DUCTILE IRON PIPE (SUPPLY LINE) (MAIN) (DIP)
		GALVANIZED STEEL PIPE (SUPPLY LINE) (MAIN) (GSP)
		GALVANIZED STEEL PIPE (SUPPLY LINE) (LATERAL) (GSP)
		PLASTIC PIPE (PR 200) (SUPPLY LINE) (MAIN)
		PLASTIC PIPE (PR 200) (SUPPLY LINE) (LATERAL)
		PLASTIC PIPE (IRRIGATION LINE)
		REMOTE CONTROL VALVE (RCV) REMOTE CONTROL VALVE (MASTER) (RCVM) REMOTE CONTROL VALVE (MASTER) W/FLOW METER (RCVMF)
		MANUAL CONTROL VALVE (MCV)
		VALVE ASSEMBLY UNIT (VAU)
		WYE STRAINER (WS)
		FILTER ASSEMBLY UNIT (FAU)
		GATE VALVE (GV)
		BALL VALVE (BV)

EXISTING	PROPOSED	ITEM DESCRIPTION
		QUICK COUPLING VALVE (QCV)
		CAM COUPLER ASSEMBLY (CCA)
		PRESSURE REDUCING VALVE (PRV)
		PRESSURE RELIEF VALVE (PRLV)
		FLOW CONTROL VALVE (FCV)
		COMBINATION AIR RELEASE VALVE (CARV)
		CHECK VALVE (CV)
		FLUSH VALVE (FV)
		NOZZLE LINE W/TURNING UNION
		IRRIGATION SYSTEM
		IRRIGATION SYSTEM TO BE REMOVED
		CHAIN LINK GATE
		QUICK COUPLING VALVE W/SPRINKLER PROTECTOR
3	3	SPRINKLER W/SPRINKLER PROTECTOR
	C	CONNECT TO EXISTING SYSTEM
		CAP
		CAP EXISTING

VALVE CODE

RCV SIZE
IRRIGATION CONTROLLER
CONTROLLER STATION
VALVE IN PARALLEL (IF APPLICABLE)
GPM
QUANTITY OF SPRINKLERS (WHEN SHOWN)

* 2½"-A-2b-40 -60

MCV SIZE
VALVE NUMBER
GPM
QUANTITY OF TYPE SPRINKLERS (WHEN SHOWN)

* 2"-3-30 -50

* VALVE CODES FOR EXISTING VALVES ARE SHOWN IN A DASHED ENCLOSURE.

STATE OF CALIFORNIA
DEPARTMENT OF TRANSPORTATION

PLANTING AND IRRIGATION SYMBOLS

NO SCALE

RSP H2 DATED JUNE 5, 2009 SUPERSEDES RSP H2 DATED MARCH 7, 2008 AND STANDARD PLAN H2 DATED MAY 1, 2006 - PAGE 202 OF THE STANDARD PLANS BOOK DATED MAY 2006.

REVISED STANDARD PLAN RSP H2

2006 REVISED STANDARD PLAN RSP H2

5-11-09

DIST	COUNTY	ROUTE	POST MILES TOTAL PROJECT	SHEET NO.	TOTAL SHEETS
11	SD	805	7.7/9.1	29	36

Gregory A Balzer
LICENSED LANDSCAPE ARCHITECT

June 5, 2009
PLANS APPROVAL DATE

The State of California or its officers or agents shall not be responsible for the accuracy or completeness of electronic copies of this plan sheet.

LICENSED LANDSCAPE ARCHITECT
Gregory A. Balzer 2576
Registered Professional Engineer
2-28-11
Renewal Date
5-14-09
Date
STATE OF CALIFORNIA

To accompany plans dated 02-14-11

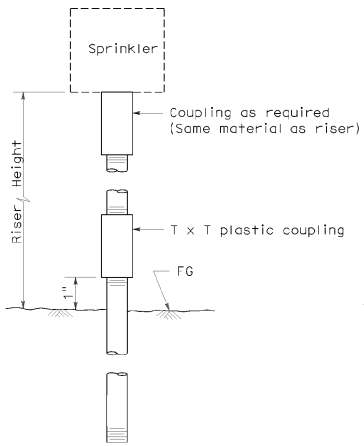

ELEVATION
RISER TYPE I

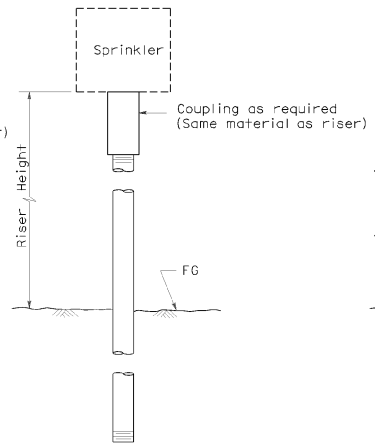

ELEVATION
RISER TYPE II

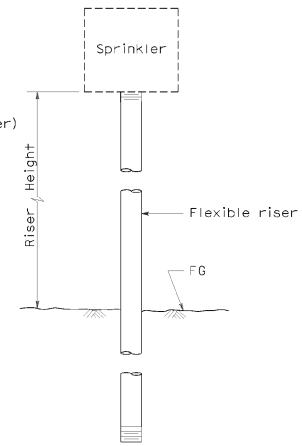

ELEVATION
RISER TYPE III

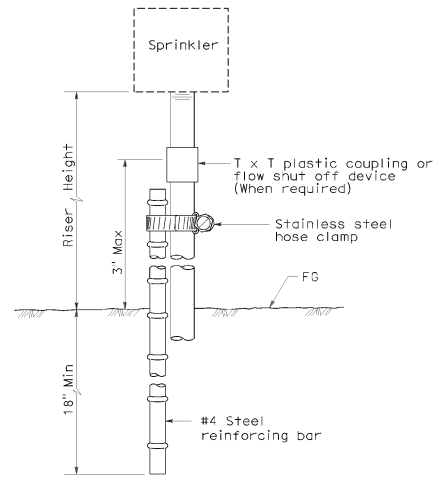

ELEVATION
RISER TYPE IV

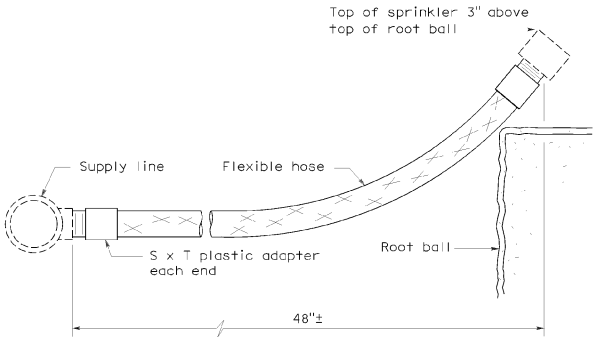

ELEVATION
RISER TYPE V

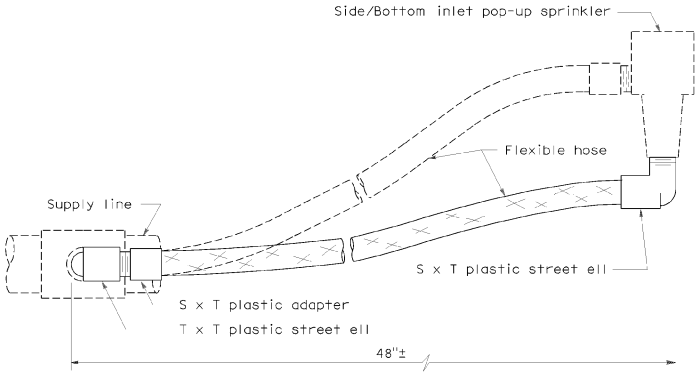

ELEVATION
RISER TYPE VI

STATE OF CALIFORNIA
DEPARTMENT OF TRANSPORTATION

PLANTING AND IRRIGATION DETAILS

NO SCALE

RSP H5 DATED JUNE 5, 2009 SUPERSEDES STANDARD PLAN H5
DATED MAY 1, 2006 - PAGE 205 OF THE STANDARD PLANS BOOK DATED MAY 2006.

REVISED STANDARD PLAN RSP H5

2006 REVISED STANDARD PLAN RSP H5

5-28-09

DIST	COUNTY	ROUTE	POST MILES TOTAL PROJECT	SHEET NO.	TOTAL SHEETS
11	SD	805	7.7/9.1	30	36

Gregory A. Balzer
LICENSED LANDSCAPE ARCHITECT

June 5, 2009
PLANS APPROVAL DATE

The State of California or its officers or agents shall not be responsible for the accuracy or completeness of electronic copies of this plan sheet.

LICENSED LANDSCAPE ARCHITECT
Gregory A. Balzer 2578
Registered Professional Engineer
2-28-11
Reviewed by
5-14-09
Date
STATE OF CALIFORNIA

To accompany plans dated 02-14-11

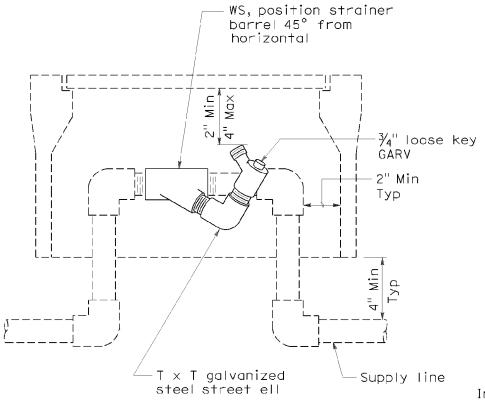

ELEVATION
WYE STRAINER

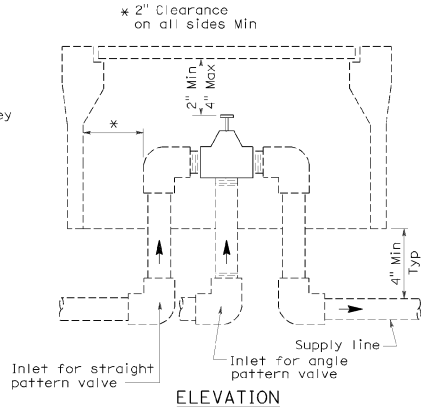

ELEVATION
VALVE

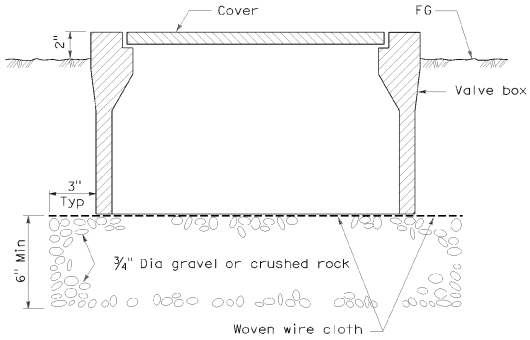

SECTION
VALVE BOX

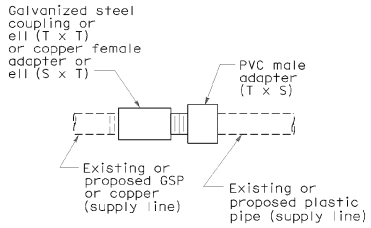

PLAN
GALVANIZED OR COPPER PIPE CONNECTION TO PLASTIC PIPE

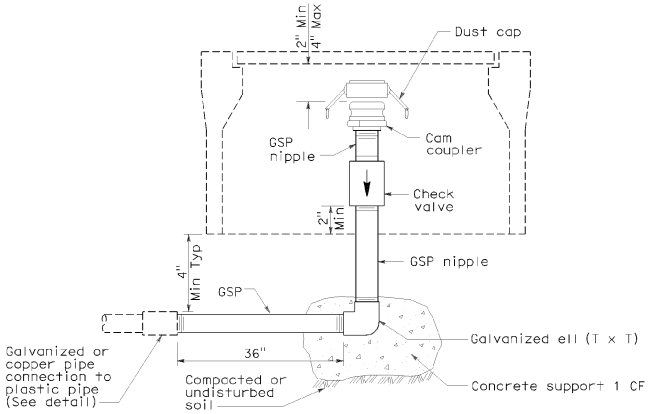

ELEVATION
CAM COUPLER ASSEMBLY

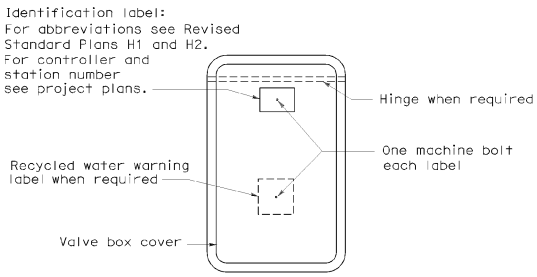

PLAN

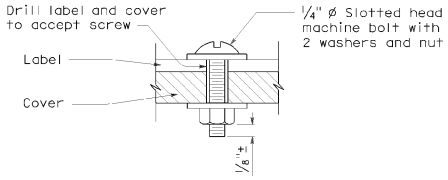

SECTION
VALVE BOX IDENTIFICATION

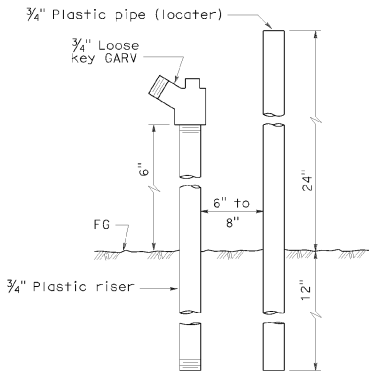

ELEVATION
FLUSH VALVE

STATE OF CALIFORNIA
DEPARTMENT OF TRANSPORTATION

PLANTING AND IRRIGATION DETAILS

NO SCALE

RSP H7 DATED JUNE 5, 2009 SUPERSEDES STANDARD PLAN H7
DATED MAY 1, 2006 - PAGE 207 OF THE STANDARD PLANS BOOK DATED MAY 2006.

REVISED STANDARD PLAN RSP H7

2006 REVISED STANDARD PLAN RSP H7

5-28-09

DIST	COUNTY	ROUTE	POST MILES TOTAL PROJECT	SHEET NO.	TOTAL SHEETS
11	SD	805	7.7/9.1	31	36

Gregory A Balzer
LICENSED LANDSCAPE ARCHITECT

June 5, 2009
PLANS APPROVAL DATE

The State of California or its officers or agents shall not be responsible for the accuracy or completeness of electronic copies of this plan sheet.

LICENSED LANDSCAPE ARCHITECT
Gregory A. Balzer 2576
Registered Professional Engineer
Gregory A Balzer
Date 2-28-11
Reviewed Date 5-14-09
STATE OF CALIFORNIA

To accompany plans dated 02-14-11

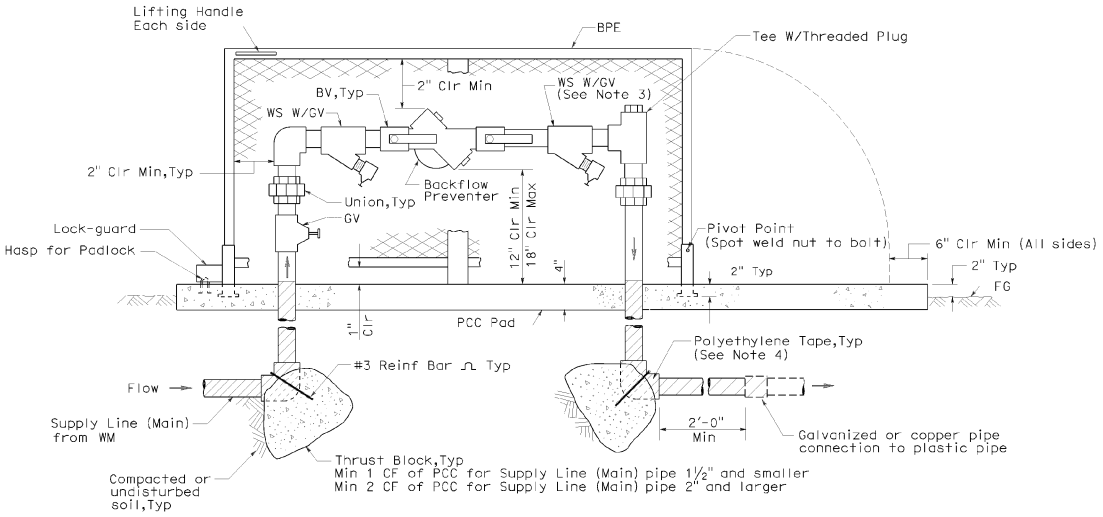

ELEVATION

BACKFLOW PREVENTER ASSEMBLY IN ENCLOSURE (ONE PIECE)

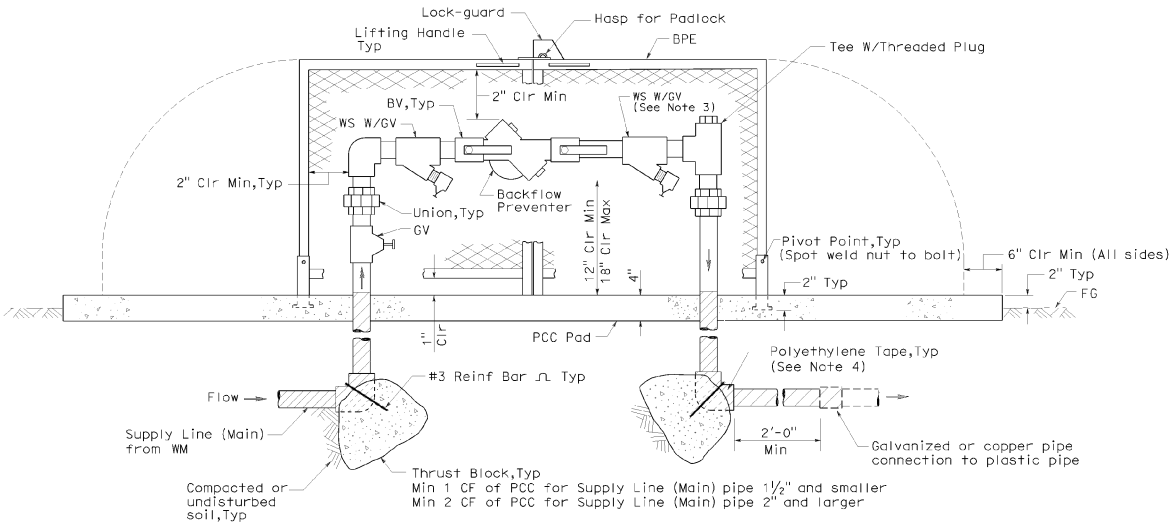

ELEVATION

BACKFLOW PREVENTER ASSEMBLY IN ENCLOSURE (TWO PIECE)

NOTES:

1. Wye strainer and fittings must be the same size as the backflow preventer shown on the plans.
2. Backflow preventer assembly manifold pipe must be the same pipe as the supply line (main) pipe to be installed from the water meter to the backflow preventer assembly.
3. Wye strainer location shown downstream of the backflow preventer is for District 11 projects only.
4. All metal in contact with soil and Portland Cement Concrete must be polyethylene wrapped using 2" wide plastic backed adhesive tape 20 mil thick with ½" overlap.

STATE OF CALIFORNIA
DEPARTMENT OF TRANSPORTATION

PLANTING AND IRRIGATION DETAILS

NO SCALE

RSP H8 DATED JUNE 5, 2009 SUPERSEDES STANDARD PLAN H8
DATED MAY 1, 2006 - PAGE 208 OF THE STANDARD PLANS BOOK DATED MAY 2006.

REVISED STANDARD PLAN RSP H8

2006 REVISED STANDARD PLAN RSP H8

5-28-09

DIST	COUNTY	ROUTE	POST MILES TOTAL PROJECT	SHEET NO.	TOTAL SHEETS
11	SD	805	7.7/9.1	32	36

Randell D. Hiatt
REGISTERED CIVIL ENGINEER

June 6, 2008
PLANS APPROVAL DATE

REGISTERED PROFESSIONAL ENGINEER Randell D. Hiatt No. C50200 Exp. 6-30-09 CIVIL STATE OF CALIFORNIA

The State of California or its officers or agents shall not be responsible for the accuracy or completeness of electronic copies of this plan sheet.

To accompany plans dated 02-14-11

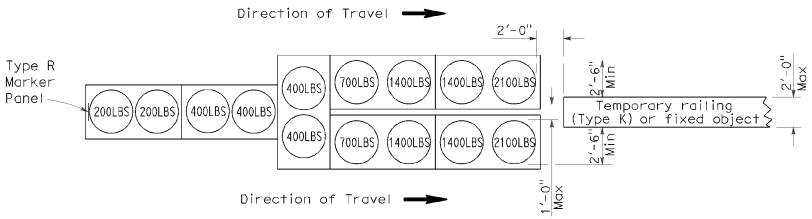

ARRAY 'TU14'

Approach speed 45 mph or more

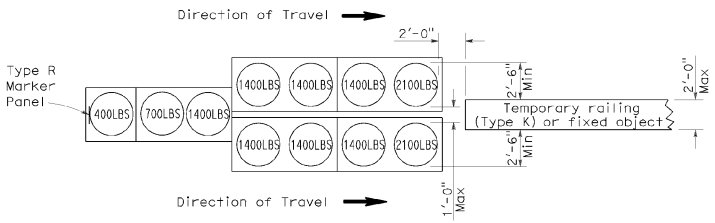

ARRAY 'TU11'

Approach speed less than 45 mph

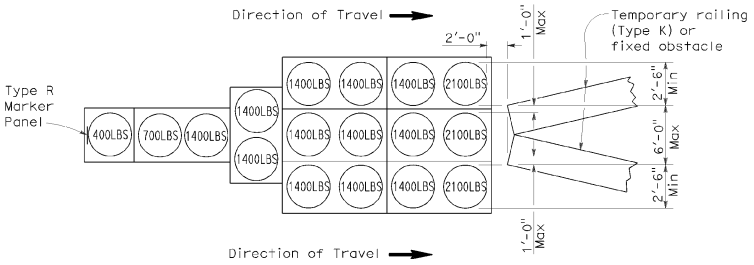

ARRAY 'TU17'

Approach speed less than 45 mph

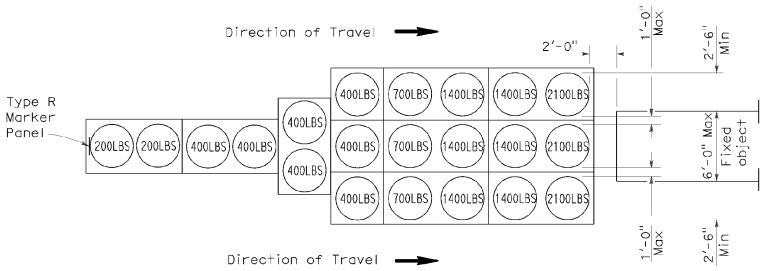

ARRAY 'TU21'

Approach speed 45 mph or more

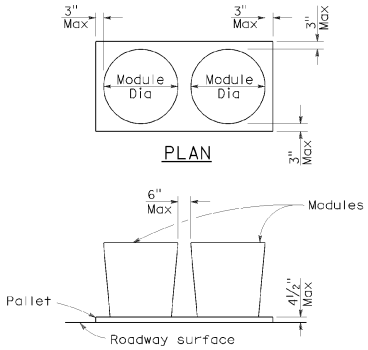

CRASH CUSHION PALLET DETAIL

See Note 7

NOTES:

1. (XXX) Indicates sand filled module location and weight of sand in pounds for each module. Module spacing is based on the greater diameter of the module.
2. All sand weights are nominal.
3. Temporary crash cushion arrays shall not encroach on the traveled way.
4. Place the top of Type R marker panel 1" below the module lid.
5. Refer to Standard Plan A73B for marker details.
6. Approach speeds indicated conform to NCHRP 350 Report criteria.
7. Use of pallets is optional.

STATE OF CALIFORNIA
DEPARTMENT OF TRANSPORTATION

TEMPORARY CRASH CUSHION, SAND FILLED (UNIDIRECTIONAL)

NO SCALE

RSP T1A DATED JUNE 6, 2008 SUPERSEDES STANDARD PLAN T1A
DATED MAY 1, 2006 - PAGE 211 OF THE STANDARD PLANS BOOK DATED MAY 2006.

REVISED STANDARD PLAN RSP T1A

2006 REVISED STANDARD PLAN RSP T1A

DIST	COUNTY	ROUTE	POST MILES TOTAL PROJECT	SHEET NO.	TOTAL SHEETS
11	SD	805	7.7/9.1	33	36

Randell D. Hiatt
REGISTERED CIVIL ENGINEER

June 6, 2008
PLANS APPROVAL DATE

REGISTERED PROFESSIONAL ENGINEER
Randell D. Hiatt
No. C50200
Exp. 6-30-09
CIVIL
STATE OF CALIFORNIA

The State of California or its officers or agents shall not be responsible for the accuracy or completeness of electronic copies of this plan sheet.

To accompany plans dated 02-14-11

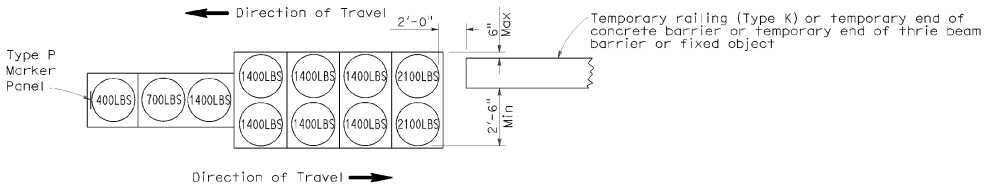

ARRAY 'TB11'

Approach speed less than 45 mph

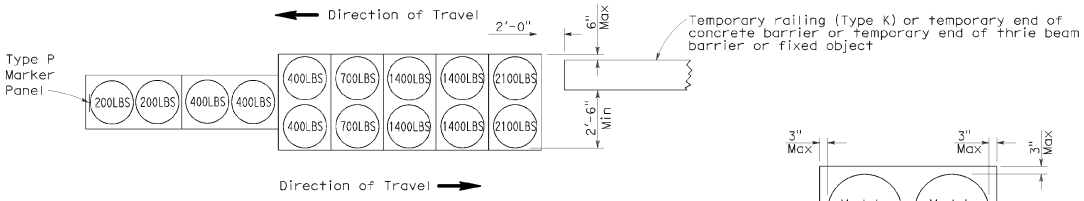

ARRAY 'TB14'

Approach speed 45 mph or more

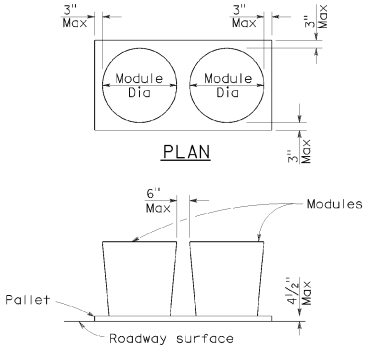

CRASH CUSHION PALLET DETAIL

See Note 7

NOTES:

1. (XXX) Indicates sand filled module location and weight of sand in pounds for each module. Module spacing is based on the greater diameter of the module.
2. All sand weights are nominal.
3. Temporary crash cushion arrays shall not encroach on the traveled way.
4. Place the Type P marker panel so that the bottom of the panel rests upon the pallet.
5. Refer to Standard Plan A73B for marker details.
6. Approach speeds indicated conform to NCHRP 350 Report criteria.
7. Use of pallets is optional.

STATE OF CALIFORNIA
DEPARTMENT OF TRANSPORTATION

TEMPORARY CRASH CUSHION, SAND FILLED (BIDIRECTIONAL)

NO SCALE

RSP T1B DATED JUNE 6, 2008 SUPERSEDES STANDARD PLAN T1B
DATED MAY 1, 2006 - PAGE 212 OF THE STANDARD PLANS BOOK DATED MAY 2006.

REVISED STANDARD PLAN RSP T1B

2006 REVISED STANDARD PLAN RSP T1B

DIST	COUNTY	ROUTE	POST MILES TOTAL PROJECT	SHEET NO.	TOTAL SHEETS
11	SD	805	7.7/9.1	34	36

Randell D. Hiatt
REGISTERED CIVIL ENGINEER

June 6, 2008
PLANS APPROVAL DATE

REGISTERED PROFESSIONAL ENGINEER
Randell D. Hiatt
No. C50200
Exp. 6-30-09
CIVIL
STATE OF CALIFORNIA

The State of California or its officers or agents shall not be responsible for the accuracy or completeness of electronic copies of this plan sheet.

To accompany plans dated 02-14-11

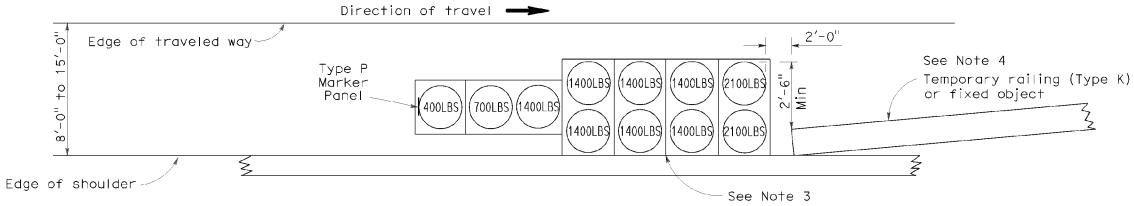

ARRAY 'TS11'

Approach speed less than 45 mph
See Note 9

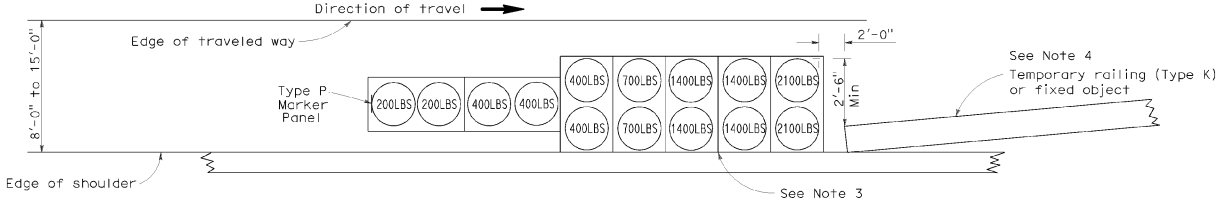

ARRAY 'TS14'

Approach speed 45 mph or more
See Note 9

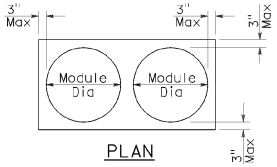

PLAN

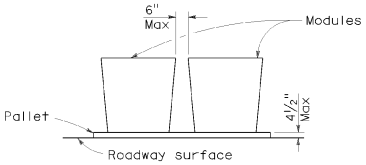

ELEVATION

CRASH CUSHION PALLET DETAIL

See Note 11

NOTES:

1. (XXX) Indicates sand filled module location and weight of sand in pounds for each module. Module spacing is based on the greater diameter of the module.
2. All sand weights are nominal.
3. The temporary crash cushion arrays shown on this plan shall be used only in locations where there will be traffic on one side of the temporary crash cushion array.
4. If the fixed object or approach end of the temporary railing is less than 15'-0" from the edge of traveled way, a temporary crash cushion is required in a construction or work zone.
5. Temporary crash cushion arrays shall not encroach on the traveled way.
6. Arrays for median shoulders shall conform to details shown on this plan for outside shoulders.
7. Place the Type P marker panel so that the bottom of the panel rests upon the pallet and faces traffic.
8. Refer to Standard Plan A73B for marker details.
9. For shoulder widths less than 8'-0", appropriate approved crash cushion protection, other than sand filled modules, shall be provided at fixed objects and at approach ends of temporary railing. The specific type of crash cushion shall be as shown on the project plans or as specified in the Special Provisions, or if not shown on the project plans or specified in the Special Provisions, shall be as approved by the Engineer.
10. Approach speeds indicated conform to NCHRP 350 Report criteria.
11. Use of pallets is optional.

STATE OF CALIFORNIA
DEPARTMENT OF TRANSPORTATION

TEMPORARY CRASH CUSHION, SAND FILLED (SHOULDER INSTALLATIONS)

NO SCALE

RSP T2 DATED JUNE 6, 2008 SUPERSEDES STANDARD PLAN T2
DATED MAY 1, 2006 - PAGE 213 OF THE STANDARD PLANS BOOK DATED MAY 2006.

REVISED STANDARD PLAN RSP T2

2006 REVISED STANDARD PLAN RSP T2

DIST	COUNTY	ROUTE	POST MILES TO AL PROJECT	SHEET NO.	TOTAL SHEETS
11	SD	805	7.7/9.1	35	36

REGISTERED CIVIL ENGINEER

November 17, 2006
PLANS APPROVAL DATE

REGISTERED PROFESSIONAL ENGINEER Greg W. Edwards No. C36386 Exp. 6-30-08 CIVIL STATE OF CALIFORNIA

The State of California or its officers or agents shall not be responsible for the accuracy or completeness of electronic copies of this plan sheet.

To accompany plans dated 02-14-11

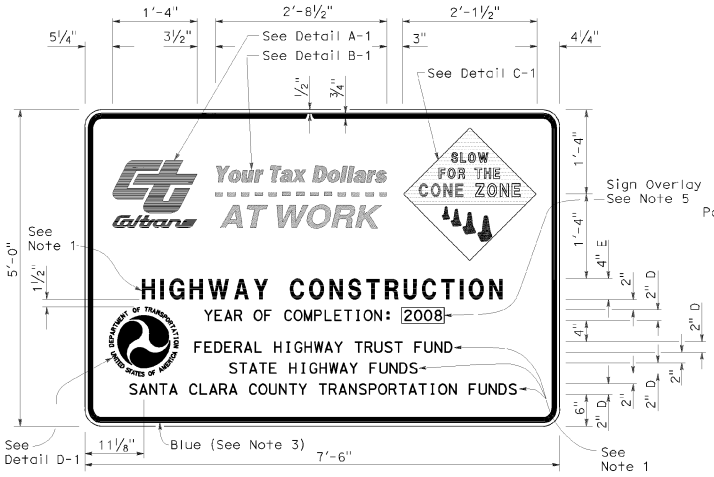

TYPE 1

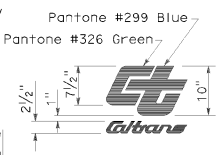

DETAIL A-1

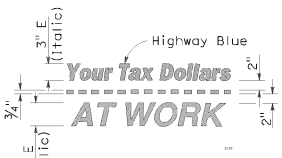

DETAIL B-1
(See Note 3)

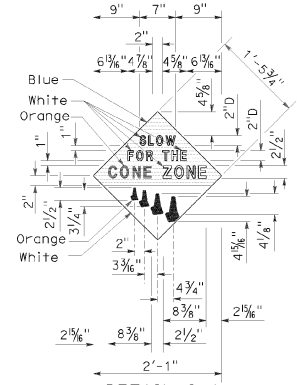

DETAIL C-1
(See Note 4)

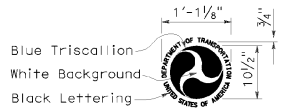

DETAIL D-1
(See Note 6)

NOTES:

1. The sign messages shown for type of project and fund types are examples only. See the Special Provisions for the applicable type of project and fund type messages to be used.
2. Except as otherwise shown, the legend of sign shall be black on a white background (non-reflective).
3. The border of the signs and details "B-1" and "B-2" shall be blue (non-reflective).
4. The diamond in details "C-1" and "C-2" shall be blue for the background of message, " SLOW FOR THE CONE ZONE", and white background for the orange cones. The color and font for the "SLOW FOR THE CONE ZONE" message shall be: "SLOW" white D; "FOR THE" white D; "CONE" orange Arial font; "ZONE" white Arial font.
5. Year of completion of project construction shown on the overlay is an example only. See the Special Provisions.
6. Use when the Project involves Federal Highway Trust Fund.

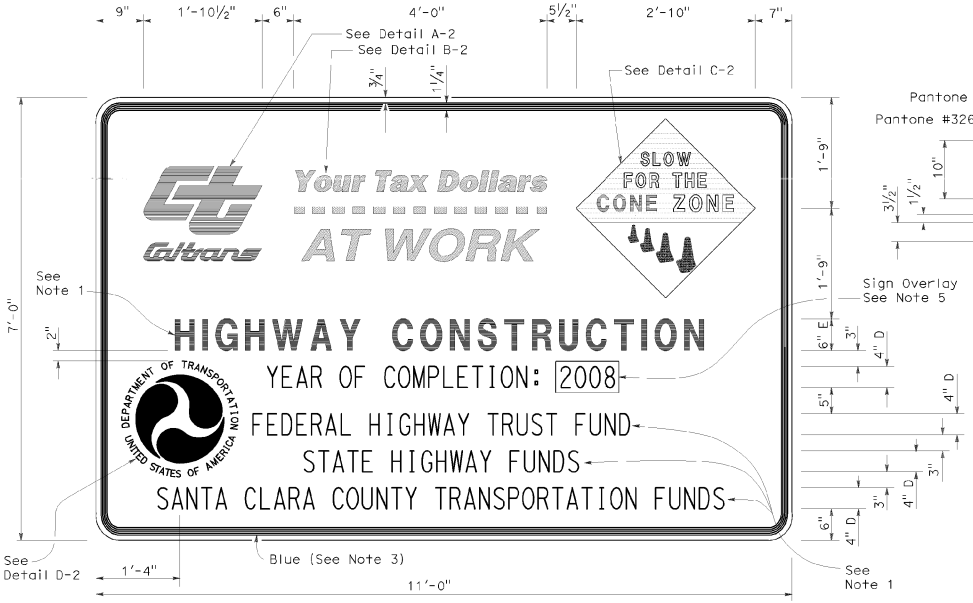

TYPE 2

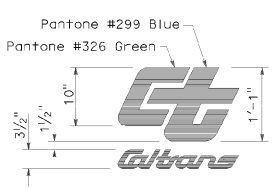

DETAIL A-2

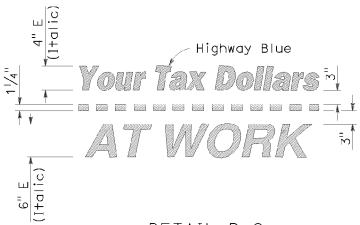

DETAIL B-2
(See Note 3)

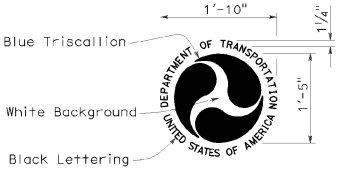

DETAIL D-2
(See Note 6)

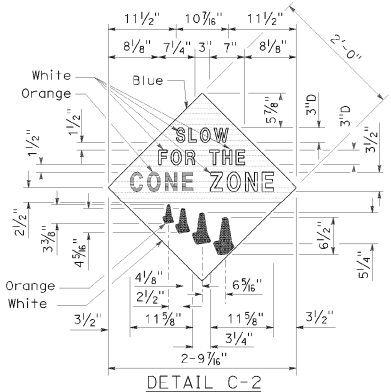

DETAIL C-2
(See Note 4)

STATE OF CALIFORNIA
DEPARTMENT OF TRANSPORTATION

CONSTRUCTION PROJECT FUNDING IDENTIFICATION SIGNS

NO SCALE

RSP T7 DATED NOVEMBER 17, 2006 SUPERSEDES STANDARD PLAN T7
DATED MAY 1, 2006 - PAGE 217 OF THE STANDARD PLANS BOOK DATED MAY 2006.

REVISED STANDARD PLAN RSP T7

2006 REVISED STANDARD PLAN RSP T7

9-7-06