Dist	COUNTY	ROUTE	POST MILES TOTAL PROJECT	SHEET No.	TOTAL SHEETS
11	Imp	98	31.6/32.1	48	167

REGISTERED CIVIL ENGINEER 10-30-15 DATE

08-08-16
PLANS APPROVAL DATE

REGISTERED PROFESSIONAL ENGINEER DIMITAR PEEV No. C63122 Exp. 06-30-18 CIVIL STATE OF CALIFORNIA

THE STATE OF CALIFORNIA OR ITS OFFICERS OR AGENTS SHALL NOT BE RESPONSIBLE FOR THE ACCURACY OR COMPLETENESS OF SCANNED COPIES OF THIS PLAN SHEET.

ABBREVIATION:

WT - WATER TIGHT

APC ALLOWABLE PIPE MATERIALS & PROTECTION

DESIGNATION	POLYETHYLENE TYPE S OR C	POLYETHYLENE RIBBED PIPE TYPE S OR C	PVC RIBBED/PROFILE WALL	Reinf Conc
24" APC	24"	24"	24"	24"
18" APC	18"	18"	18"	18"
AFES	24"		24"	24"

DRAINAGE QUANTITIES

DRAINAGE SHEET No.	DRAINAGE SYSTEM No. ⬡	DRAINAGE UNIT ◯	PIPE JOINT CLASSIFICATION (N)	MAXIMUM HEIGHT OF COVER (N) LF	MANHOLE FRAME AND COVER (N) EA	STRUCTURAL CONCRETE (JUNCTION STRUCTURE) CY	HEIGHT OF INLET (N) LF	18" APC LF	24" ACP LF	24" RCP LF	24" ALTERNATIVE FLARED END SECTION EA	ABANDON CULVERT EA	SAND BACKFILL CY	MISCELLANEOUS IRON AND STEEL LB	24-12X GRATE (N) EA	STRUCTURAL CONCRETE, DRAINAGE INLET (1) CY	ROCK SLOPE PROTECTION (FACING, METHOD B) CY	ROCK SLOPE PROTECTION FABRIC (CLASS 8) SQYD	CONCRETE (CONCRETE APRON) CY	DESCRIPTION	STATION	DRAINAGE SHEET No.	DRAINAGE SYSTEM No. ⬡	DRAINAGE UNIT ◯
G-1		a															5.1	18		RSP		G-1		a
		b									1									AI† FLARED END SECTION				b
		c	WT	4.69					41.5											24" x 41.5′ APC				c
		d			1	4.90								800						JS W/ 36" MANHOLE COVER	1700+30.00 "D98"			d
		e	Std	4.69					497.0											24" x 497.0′ APC				e
		f			1	4.52								800						JS W/ 36" MANHOLE COVER	1704+80.00 "D98"			f
G-2	1	g	Std	4.14					363.1											24" x 363.1′ APC		G-2	1	g
		h					4.73							242	1	1.74				G4 DI (H = 4.73′), 24 - 12X GRATE W/CHAIN	1708+90.02 "D98"			h
		i	Std	2.86					60.1											24" x 60.1′ APC				i
		j					4.86							242	1	1.79				G4 DI (H = 4.86′), 24 - 12X GRATE W/CHAIN	1709+50.00 "D98"			j
		k	Std	2.92					50.8											24" x 50.80′ APC				k
		l					4.92							242	1	1.79				G4 DI (H = 4.92′), 24 - 12X GRATE W/CHAIN	1710+00.00 "D98"			l
		m	Std	3.30					80.0											24" x 80.0′ APC				m
		n					5.30							242	1	1.86				G4 DI (H = 5.30′), 24 - 12X GRATE W/CHAIN	1710+80.00 "D98"			n
		o	Std	3.68					95.0											24"x 95.0′ APC				o
		p					5.68							242	1	1.96				G4 DI (H = 5.56′), 24 - 12X GRATE W/CHAIN	1711+74.93 "D98"			p
		q	Std	4.07					105.3											24"x 105.3′ APC				q
		r					6.06							242	1	2.08				G4 DI (H = 6.06′), 24 - 12X GRATE W/CHAIN	1712+80.00 "D98"			r
		s	Std	4.44					80.0											24" x 80.0′ APC				s
		†					6.43							242	1	2.17				G4 DI (H = 6.43′), 24 - 12X GRATE W/CHAIN	1713+60.00 "D98"			†
		u	Std	4.44					86.0											24" x 86.0′ APC				u
		v					5.82							242	1	2.11				G4 DI (H = 5.82′), 24 - 12X GRATE W/CHAIN	19+00.00 "CCB1"			v
		w	Std	3.82					51.1											24"x 51.1′ APC				w
		x					4.99							242	1	1.47				G3 DI (H = 4.99′), 24 - 12X GRATE W/CHAIN	18+48.95 "CCB1"			x
		y	Std	3.99					99.7											24" x 99.7′ APC				y
		z					3.00							242	1	1.03				G3 DI (H = 3.0′), 24 - 12X GRATE W/CHAIN	17+49.30 "CCB1"			z
		aa	Std	3.90						76.0										24" x 76′ RCP				aa
		ab					3.00							242	1	1.03				G3 DI (H = 3.0′), 24 - 12X GRATE W/CHAIN	17+49.30 "CCB1"			ab
G-2	2	a	Std	1.92						94.0										24" X 94.0′ RCP		G-2	2	a
		b					3.52							484	1	1.91				GT3 DI (H = 3.52′), 24 - 12X GRATE W/CHAIN	1708+90.02 "D98"			b
		c	Std	1.09					98.3											24" x 98.3′ APC				c
		d					3.10							242	1	1.05				G3 DI (H = 3.10′), 24 - 12X GRATE W/CHAIN	1710+00.00 "D98"			d
		e	Std	1.00					80.0											24" x 80.0′ APC				e
		f					3.03							242	1	1.30				G4 DI (H = 3.03′), 24 - 12X GRATE W/CHAIN	1710+80.00 "D98"			f
		g	Std	1.17					120.6											24" x 120.60′ APC				g
		h					3.15							242	1	1.33				G4 DI (H = 3.15′), 24 - 12X GRATE W/CHAIN	1712+00.00 "D98"			h
		i	Std	1.15					160.0											24"x 160.0′ APC				i
		j					3.00							242	1	1.03				G3 DI (H = 3.00′), 24 - 12X GRATE W/CHAIN	1713+60.00 "D98"			j
SUBTOTAL 1						9.12			2,068.5	170	1			5,714		25.65	5.1	18						

(N) NOT A SEPARATE PAY ITEM, FOR INFORMATION ONLY.

(1) REPLACED PER ADDENDUM No. 1 DATED OCTOBER 7, 2016

DRAINAGE QUANTITIES
DQ-1

STATE OF CALIFORNIA - DEPARTMENT OF TRANSPORTATION
Caltrans PROJECT DEVELOPMENT

FUNCTIONAL SUPERVISOR: KAZIM MAMDANI
CALCULATED-DESIGNED BY: DEVANGI DAVE
CHECKED BY: DIMITAR PEEV
REVISED BY
DATE REVISED

LAST REVISION 09-29-16
DATE PLOTTED => 04-OCT-2016
TIME PLOTTED => 15:12

Dist	COUNTY	ROUTE	POST MILES TOTAL PROJECT	SHEET No.	TOTAL SHEETS
11	Imp	98	31.6/32.1	49	167

REGISTERED CIVIL ENGINEER 10-30-15 DATE

08-08-16
PLANS APPROVAL DATE

REGISTERED PROFESSIONAL ENGINEER DIMITAR PEEV No. C63122 Exp. 06-30-18 CIVIL STATE OF CALIFORNIA

THE STATE OF CALIFORNIA OR ITS OFFICERS OR AGENTS SHALL NOT BE RESPONSIBLE FOR THE ACCURACY OR COMPLETENESS OF SCANNED COPIES OF THIS PLAN SHEET.

DRAINAGE QUANTITIES

DRAINAGE SHEET No.	DRAINAGE SYSTEM No. ⬡	DRAINAGE UNIT ◯	PIPE JOINT CLASSIFICATION (N)	MAXIMUM HEIGHT OF COVER (N)	MANHOLE FRAME AND COVER (N)	STRUCTURAL CONCRETE (JUNCTION STRUCTURE)	HEIGHT OF INLET (N)	18" APC	24" APC	24" RCP	24" ALTERNATIVE FLARED END SECTION	ABANDON CULVERT	SAND BACKFILL	MISCELLANEOUS IRON AND STEEL	24-12X GRATE (N)	STRUCTURAL CONCRETE, DRAINAGE INLET 1	ROCK SLOPE PROTECTION (FACING, METHOD B)	ROCK SLOPE PROTECTION FABRIC (CLASS 8)	CONCRETE (CONCRETE APRON)	DESCRIPTION	STATION	DRAINAGE SHEET No.	DRAINAGE SYSTEM No. ⬡	DRAINAGE UNIT ◯
				LF	EA	CY	LF	LF	LF	LF	EA	EA	CY	LB	EA	CY	CY	SQYD	CY					
G-2	3	a	Std	1.00						76.0										24" x 76.0' RCP		a	3	G-2
		b					4.62							242	1	1.39				G3 DI (H = 4.62') , 24 - 12X GRATE W/CHAIN	18+48.95 "CCB1"	b		
G-2	4	a	Std	6.39					85.0											24" x 85.0' APC		a	4	G-2
		b					8.36							242	1	3.61				G4 DI (H = 8.36') , 24 - 12X GRATE W/CHAIN	1716+50.00 "D98"	b		
		c	Std	6.06						98.0										24" x 98.0' RCP		c		
		d					8.04							242	1	3.49				G4 DI (H = 8.04') , 24 - 12X GRATE W/CHAIN	1716+50.00 "D98"	d		
		e	Std	3.61					150.3											24"x 150.3' APC		e		
		f					5.61							242	1	1.96				G4 DI (H = 5.61') , 24 - 12X GRATE W/CHAIN	1718+00.00 "D98"	f		
		g	Std	1.00					150.1											24"x 150.1' APC		g		
		h					3.00							242	1	1.29				G4 DI (H = 3.0') , 24 - 12X GRATE W/CHAIN	1719+50.00 "D98"	h		
G-2, G-3	5	a															5.1	18		RSP		a	5	G-2, G-3
		b									1									AI+ FLARED END SECTION		b		
		c	Std	6.36					43.7											24" x 43.7' APC		c		
		d					8.36							242	1	3.58				G4 DI (H = 8.36') , 24 - 12X GRATE W/CHAIN	1717+17.35 "D98"	d		
		e	Std	5.48					65.0											24" x 65.0' APC		e		
		f					7.43							242	1	2.43				G4 DI (H = 7.43') , 24 - 12X GRATE W/CHAIN	1718+00.00 "D98"	f		
		g	Std	3.29					150.0											24" x 150.0' APC		g		
		h					5.24							242	1	1.87				G4 DI (H = 5.24') , 24 - 12X GRATE W/CHAIN	1719+50.00 "D98"	h		
		i	Std	3.24					142.7											24" x142.7' APC		i		
		j					4.09							242	1	1.27				G3 DI (H = 4.09') , 24 - 12X GRATE W/CHAIN	1720+92.50 "D98"	j		
		k	Std	2.09					62.3											24" x 62.3' APC		k		
		l					3.32							242	1	1.10				G3 DI (H = 3.32') , 24 - 12X GRATE	1721+57.75 "D98"	l		
		m	Std	1.03					62.3											24" x 62.3' APC		m		
		n					3.00							242	1	1.03				G3 DI (H = 3.0') , 24 - 12X GRATE	1722+23.00 "D98"	n		
SUBTOTAL 2									911.4	174.0	1			2,662		23.02	5.1	18						

1 REPLACED PER ADDENDUM No. 1 DATED OCTOBER 7, 2016

(N) NOT A SEPARATE PAY ITEM, FOR INFORMATION ONLY.

DRAINAGE QUANTITIES
DQ-2

STATE OF CALIFORNIA - DEPARTMENT OF TRANSPORTATION
Caltrans PROJECT DEVELOPMENT

FUNCTIONAL SUPERVISOR: KAZIM MAMDANI
CALCULATED-DESIGNED BY: DEVANGI DAVE
CHECKED BY: DIMITAR PEEV
REVISED BY
DATE REVISED

LAST REVISION 09-29-16
DATE PLOTTED => 04-OCT-2016
TIME PLOTTED => 15:12

Dist	COUNTY	ROUTE	POST MILES TOTAL PROJECT	SHEET No.	TOTAL SHEETS
11	Imp	98	31.6/32.1	50	167

REGISTERED CIVIL ENGINEER 10-30-15 DATE

08-08-16
PLANS APPROVAL DATE

REGISTERED PROFESSIONAL ENGINEER DIMITAR PEEV No. C63122 Exp. 06-30-18 CIVIL STATE OF CALIFORNIA

THE STATE OF CALIFORNIA OR ITS OFFICERS OR AGENTS SHALL NOT BE RESPONSIBLE FOR THE ACCURACY OR COMPLETENESS OF SCANNED COPIES OF THIS PLAN SHEET.

DRAINAGE QUANTITIES

DRAINAGE SHEET No.	DRAINAGE SYSTEM No. ⬡	DRAINAGE UNIT ○	PIPE JOINT CLASSIFICATION (N)	MAXIMUM HEIGHT OF COVER (N) LF	MANHOLE FRAME & COVER (N) EA	STRUCTURAL CONCRETE (JUNCTION STRUCTURE) CY	HEIGHT OF INLET (N) LF	18" APC LF	24" APC LF	24" RCP LF	24" ALTERNATIVE FLARED END SECTION EA	ABANDON CULVERT EA	SAND BACKFILL CY	MISCELLANEOUS IRON AND STEEL LB	24-12X GRATE (N) EA	STRUCTURAL CONCRETE, DRAINAGE INLET (1) CY	ROCK SLOPE PROTECTION (FACING, METHOD B) CY	ROCK SLOPE PROTECTION FABRIC (CLASS 8) SQYD	CONCRETE (CONCRETE APRON) CY	DESCRIPTION	STATION	DRAINAGE SHEET No.	DRAINAGE SYSTEM No. ⬡	DRAINAGE UNIT ○
G-2, G-3	6	a	Std	1.42						90.5										24" X 90.5' RCP		G-2, G-3	6	a
		b					3.39							484	1	1.86				GT3 DI (H = 3.39') , 24 - 12X GRATE W/CHAIN	1720+92.50 "D98"			b
		c	Std	1.07					61.8											24"x 61.8' APC				c
		d					3.06							484	1	1.75				GT3 DI (H = 3.06') , 24 - 12X GRATE W/CHAIN	1721+57.75 "D98"			d
		e	Std	1.00					61.8											24"x 61.8' APC				e
		f					3.00							484	1	1.73				GT3 DI (H = 3.0') , 24 - 12X GRATE W/CHAIN	1722+23.00 "D98"			f
G-2	7																					G-2	7	
		a															5.1	18		RSP				a
		b									1									Alt FLARED END SECTION				b
		c	Std	1.00					36.7											24" x 36.7' APC				c
		d					3.00							242	1	1.03				G3 DI (H = 3.0') , 24 - 12X GRATE W/CHAIN	10+00.00 "EST1"			d
G-1	8																					G-1	8	
		a	Std					4.60												18"x 4.6' APC				a
		b					2.80							242	1	0.95				G1 DI (H = 2.8') , 24 - 12X GRATE W/CHAIN				b
		c																	0.95	Conc APRON				c
G-1	9	a										1	203.95							ABANDON 30" RCP CULVERT(L=1,121.8')- SAND BACKFILL		G-1	9	a
SUBTOTAL 3								4.60	160.3	90.5	1	1	203.95	1,936		7.32	5.1	18	0.95					
SUBTOTAL 1					9.12				2,068.5	170	1			5,714		25.65	5.1	18						
SUBTOTAL 2									911.4	174.0	1			2,662		23.02	5.1	18						
TOTAL					9.12			4.60	3,140.2	434.5	3	1	203.95	10,312		55.99	15.3	54	0.95					

(1) **REPLACED PER ADDENDUM No. 1 DATED OCTOBER 7, 2016**

(N) NOT A SEPARATE PAY ITEM, FOR INFORMATION ONLY.

DRAINAGE QUANTITIES
DQ-3

DEVANGI DAVE | DIMITAR PEEV | REVISED BY | DATE REVISED | CALCULATED-DESIGNED BY | CHECKED BY | FUNCTIONAL SUPERVISOR | KAZIM MAMDANI

STATE OF CALIFORNIA - DEPARTMENT OF TRANSPORTATION
Caltrans PROJECT DEVELOPMENT

LAST REVISION 09-29-16 | DATE PLOTTED => 04-OCT-2016 | TIME PLOTTED => 15:12

Dist	COUNTY	ROUTE	POST MILES TOTAL PROJECT	SHEET No.	TOTAL SHEETS
11	Imp	98	31.6/32.1	78	167

REGISTERED CIVIL ENGINEER 11-03-15 DATE

08-08-16
PLANS APPROVAL DATE

REGISTERED PROFESSIONAL ENGINEER SHAHIN ADIBI No. 54839 Exp 06-30-18 CIVIL STATE OF CALIFORNIA

THE STATE OF CALIFORNIA OR ITS OFFICERS OR AGENTS SHALL NOT BE RESPONSIBLE FOR THE ACCURACY OR COMPLETENESS OF SCANNED COPIES OF THIS PLAN SHEET.

PAVEMENT DELINEATION QUANTITIES

LOCATION							PAVEMENT MARKER				TRAFFIC STRIPE			REMARKS
							NON-REFLECTIVE (EA)	RETROREFLECTIVE (EA)			THERMOPLASTIC (ENHANCED WET NIGHT VISIBILITY) (LF)			
											4"		8"	
SHEET	ROUTE	DIRECTION	DESCRIPTION	FROM STATION	TO STATION	DETAIL No.	TYPE A WHITE	TYPE D YELLOW	TYPE G CLEAR	TYPE H YELLOW	SOLID	BROKEN 36'-12'	SOLID	
PD-3	98	WB	MAINLANE	1721+50	1723+31	25				5	181			
PD-3	98	WB	MAINLANE	1721+50	1723+31	27B					181			
PD-3	98	WB	MAINLANE	1721+50	1723+31	11/13	16		5			181		
PD-3	98	EB	MAINLANE	1721+50	1723+31	25				5	181			
PD-3	98	EB	MAINLANE	1721+50	1723+31	27B					181			
PD-3	98	EB	MAINLANE	1721+50	1723+31	38			9				181	
PD-3	98	EB	MAINLANE	1721+50	1723+31	11/13	16		5			362		2 LANE LINES
SUBTOTAL PDQ-2							32	0	19	10	724	543	181	
SUBTOTAL PDQ-1							211	53	148	51	8,413	2,465	1,596	
TOTAL							243	281			9,137	3,008	1,777	

THERMOPLASTIC PAVEMENT MARKING (ENHANCED WET NIGHT VISIBILITY)

ROUTE	LOCATION	TYPE II (R) SQFT	TYPE III (R) SQFT	TYPE III (L) SQFT	TYPE V SQFT	RAIL ROAD SQFT	12" LIMIT LINE SQFT	24" LIMIT LINE SQFT	12" CROSS-WALK SQFT	12" HATCHING SQFT	KEEP SQFT	CLEAR SQFT	STOP SQFT
98	MAINLANE	135	168	546	693	420	45	504	976	256	96	108	
98	CESAR CHAVEZ Blvd	-	84	84	-	140	65	96	-	-	-	-	
98	WILLIAMS Ave						26						22
98	GEORGE Ave						24						22
SUBTOTAL		135	252	630	693	560	160	600	976	256	96	108	44
TOTAL		4,510											

REMOVE THERMOPLASTIC PAVEMENT MARKING (1)

ROUTE	LOCATION	12" CROSS-WALK SQFT
98	MAINLANE	325
	FROM STAGE CONSTRUCTION	281
	TOTAL	606

(1) REPLACED PER ADDENDUM No. 1 DATED OCTOBER 7, 2016

PAVEMENT DELINEATION QUANTITIES
PDQ-2

REVISED BY | DATE REVISED
RYAN CHAO | SHAHIN ADIBI
CALCULATED-DESIGNED BY | CHECKED BY
FUNCTIONAL SUPERVISOR
CAMILLE ABOUFADEL

STATE OF CALIFORNIA - DEPARTMENT OF TRANSPORTATION
Caltrans TRAFFIC DESIGN

LAST REVISION 09-29-16 | DATE PLOTTED => 04-OCT-2016 | TIME PLOTTED => 15:12

Dist	COUNTY	ROUTE	POST MILES TOTAL PROJECT	SHEET No.	TOTAL SHEETS
11	Imp	98	31.6/32.1	120A	167

REGISTERED CIVIL ENGINEER

July 15, 2016
PLANS APPROVAL DATE

REGISTERED PROFESSIONAL ENGINEER Carl M. Duan No. C59976 Exp. 6-30-18 CIVIL STATE OF CALIFORNIA

THE STATE OF CALIFORNIA OR ITS OFFICERS OR AGENTS SHALL NOT BE RESPONSIBLE FOR THE ACCURACY OR COMPLETENESS OF SCANNED COPIES OF THIS PLAN SHEET.

TO ACCOMPANY PLANS DATED 08-08-16

NOTE:

1. For notes and Table 2, See Revised Standard Plan RSP D73C.

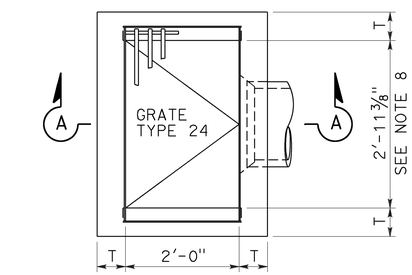

PLAN
TYPE G1

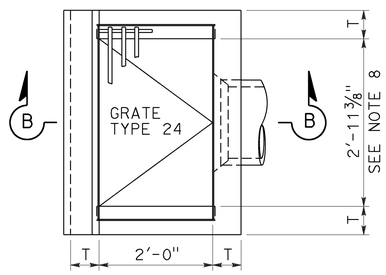

PLAN
TYPE G3

1 **ADDED PER ADDENDUM No. 1 DATED OCTOBER 7, 2016**

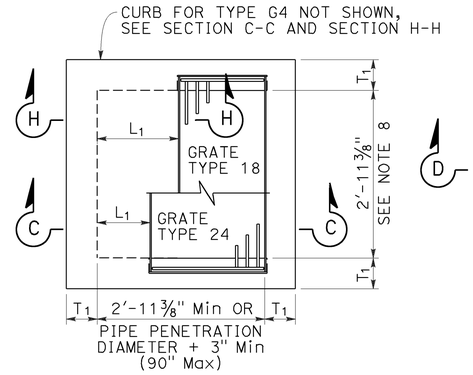

PLAN
STANDARD TYPE G2 OR G4
(INTEGRAL TOP ALTERNATIVE)
FOR "L" AND "T" VALUES, SEE TABLE 1

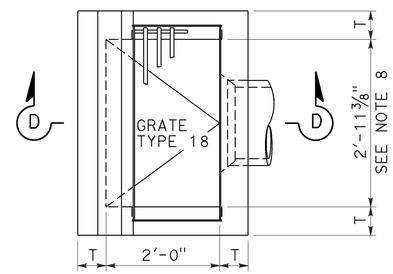

PLAN
TYPE G5

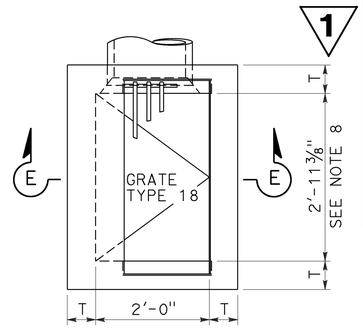

PLAN
TYPE G6

TABLE 1		
	T_1	Vert BARS
L_1 AND L_2 < 2'-10"	8"	#4 @ 12
L_1 OR L_2 > 2'-10"	12"	#5 @ 12

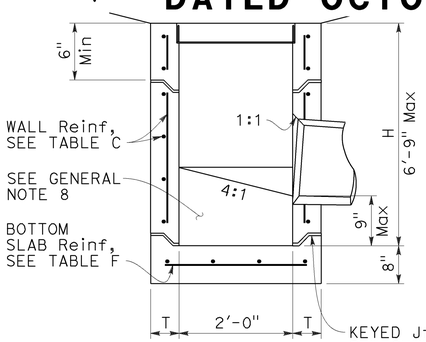

SECTION A-A

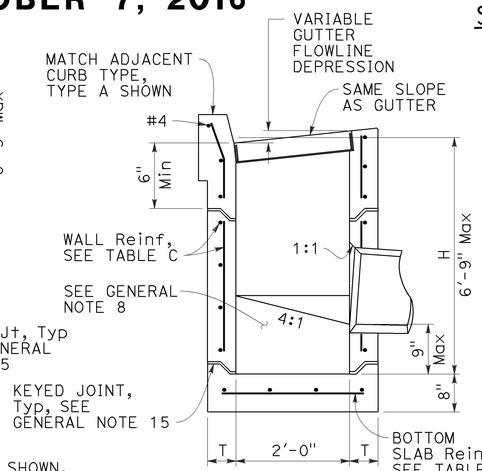

SECTION B-B

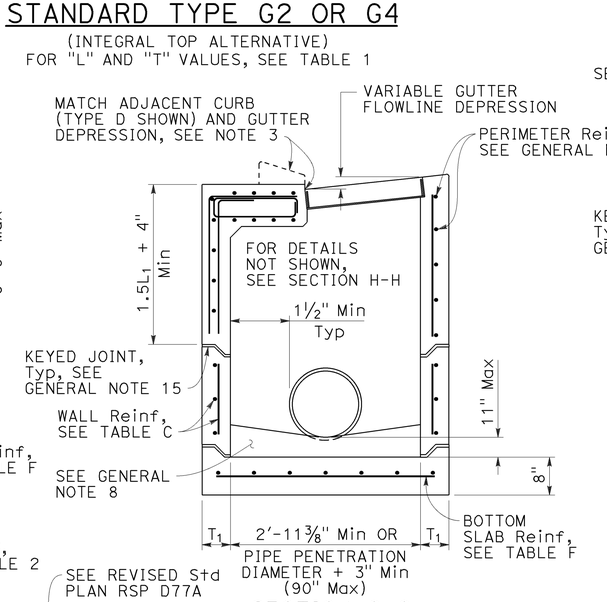

SECTION C-C
FOR "L1", "L2" AND "T1" VALUES, SEE "TABLE 1"

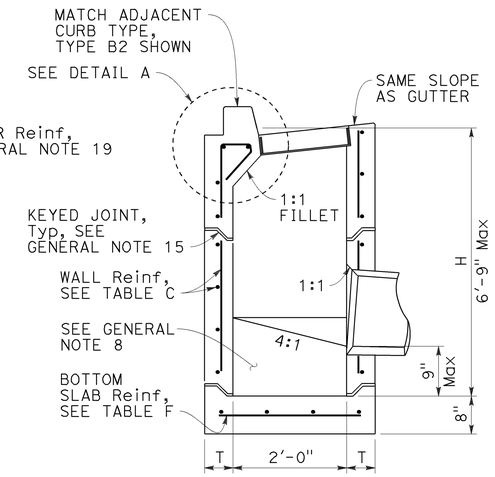

SECTION D-D

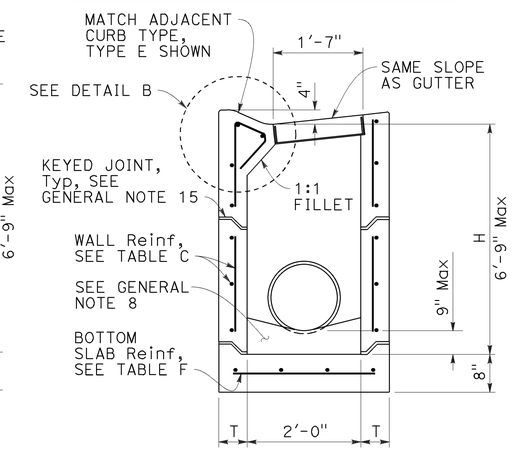

SECTION E-E

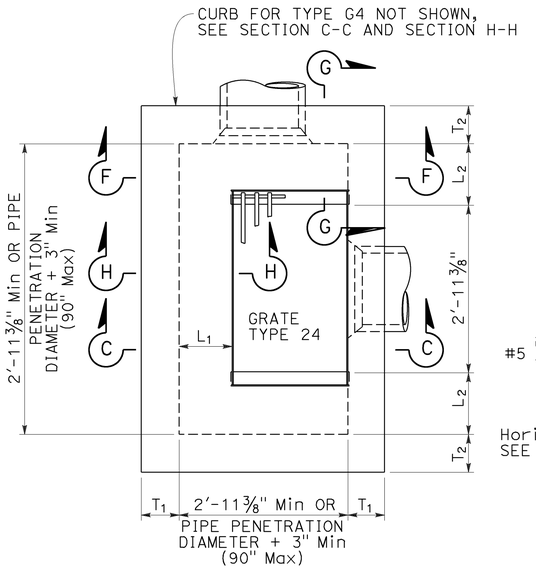

PLAN
EXPANDED
TYPE G2 OR G4
(INTEGRAL TOP ALTERNATIVE)
FOR "L1", "L2" AND "T1" VALUES, SEE "TABLE 1"

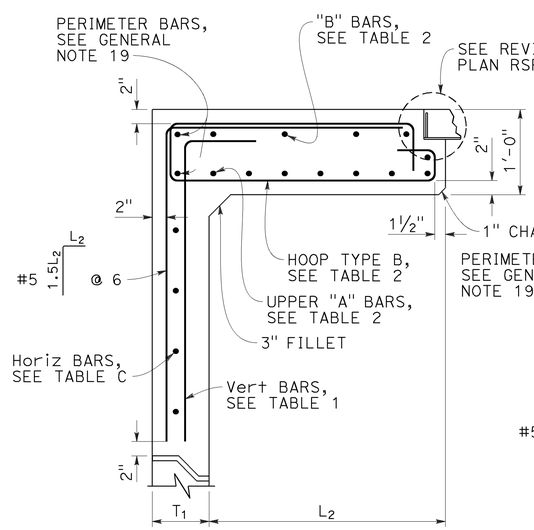

SECTION G-G
FOR "L1", "L2" AND "T1" VALUES, SEE "TABLE 1"

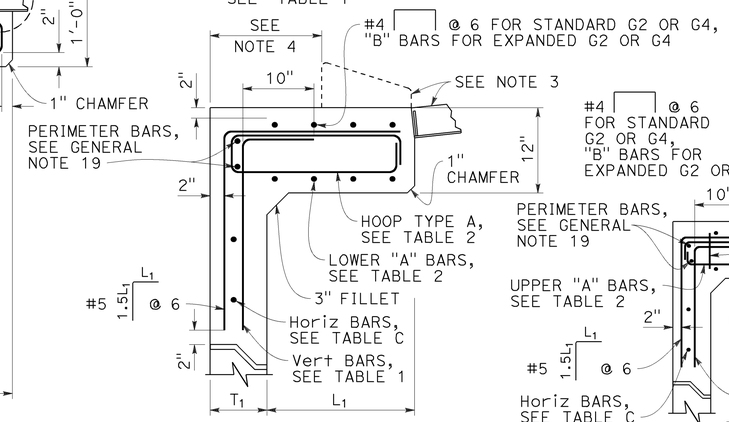

SECTION H-H
FOR "L1", "L2" AND "T1" VALUES, SEE "TABLE 1"

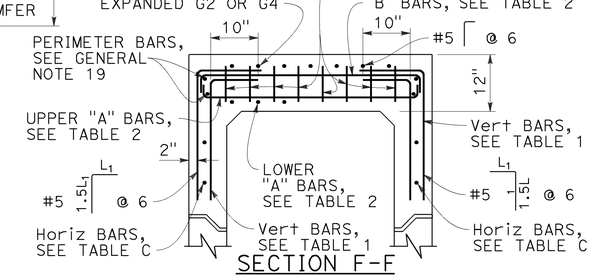

SECTION F-F
FOR "L1", "L2" AND "T1" VALUES, SEE "TABLE 1"

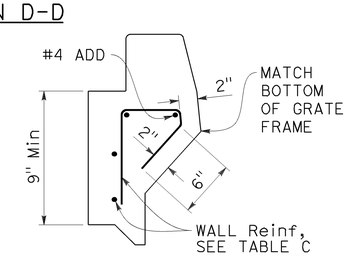

DETAIL A

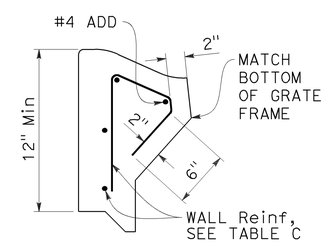

DETAIL B

STATE OF CALIFORNIA
DEPARTMENT OF TRANSPORTATION

PRECAST DRAINAGE INLETS TYPES G1, G2, G3, G4, G5 AND G6

NO SCALE

RSP D73B DATED JULY 15, 2016 SUPPLEMENTS THE STANDARD PLANS BOOK DATED 2010.

REVISED STANDARD PLAN RSP D73B

2010 REVISED STANDARD PLAN RSP D73B

6-29-16

Dist	COUNTY	ROUTE	POST MILES TOTAL PROJECT	SHEET No.	TOTAL SHEETS
11	Imp	98	31.6/32.1	120B	167

REGISTERED CIVIL ENGINEER

July 15, 2016
PLANS APPROVAL DATE

REGISTERED PROFESSIONAL ENGINEER Carl M. Duan No. C59976 Exp. 6-30-18 CIVIL STATE OF CALIFORNIA

THE STATE OF CALIFORNIA OR ITS OFFICERS OR AGENTS SHALL NOT BE RESPONSIBLE FOR THE ACCURACY OR COMPLETENESS OF SCANNED COPIES OF THIS PLAN SHEET.

TO ACCOMPANY PLANS DATED 08-08-16

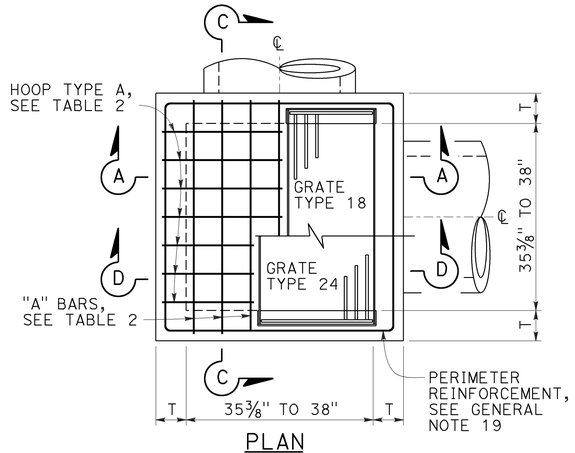

PLAN

STANDARD TYPE G2 OR G4

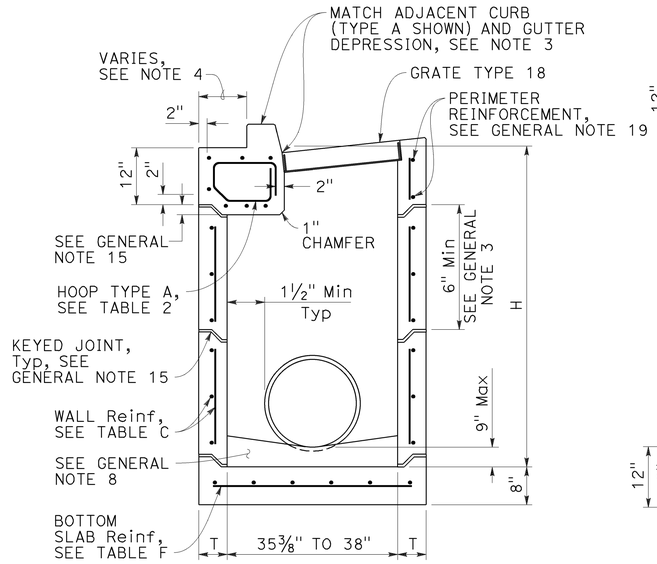

SECTION A-A

(WITH G4 TOP)

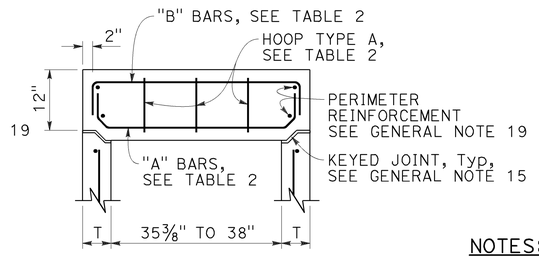

SECTION C-C

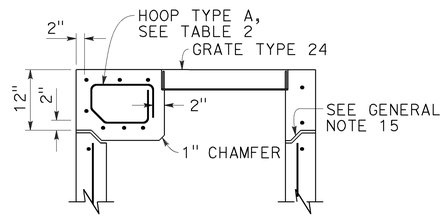

SECTION D-D

(WITH G2 TOP)

1 **ADDED PER ADDENDUM No. 1 DATED OCTOBER 7, 2016**

NOTES:

1. See Revised Standard Plan RSP D73F for General Notes and additional details. See Revised Standard Plan RSP D73G for additional tables, wall thickness "T" and quantities.
2. Type G4 inlet can use Grate Type 18 or 24. Type G2 inlet uses Grate Type 24.
3. G4 inlet details are the same as the G2 with the addition of a curb and sloped grate that matches the adjacent curb and gutter depression.
4. Dimension will vary with different grates, curb types, box width and wall thickness.
5. 2" unless inlet is expanded in the Span "A" direction, then clearance is 2" plus the diameter of the lower "A" bar.
6. See Revised Standard Plan RSP D73B for integral top slab alternative.
7. Interior dimension of lower sections of inlet may be 3'-0" provided top section conforms to the requirements for frame and grate types on Revised Standard Plan RSP D77A. The wall thickness of top sections may transition from "T" to "T"+5/16" to meet this requirement. Minimum height of thickened wall shall = "T".

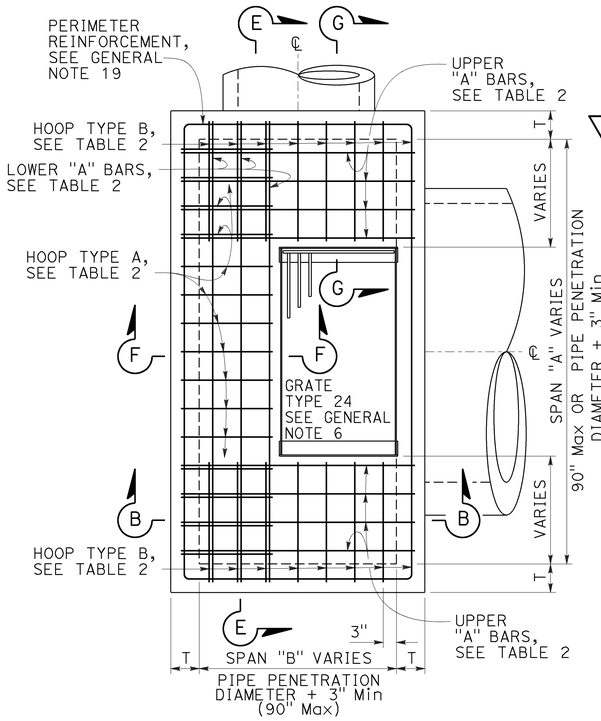

PLAN

EXPANDED

TYPE G2 OR G4

(TOP REBAR NOT SHOWN)

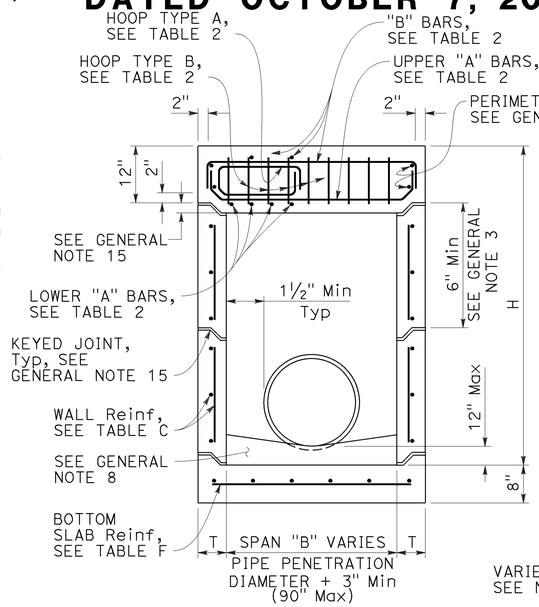

SECTION B-B

(WITH G2 TOP)

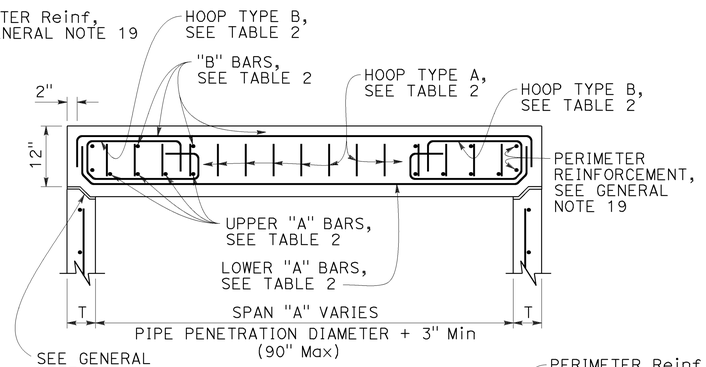

SECTION E-E

TABLE 2 - TOP SLAB REINFORCEMENT		
16 BAR DIAMETERS "A" & "B" BARS VARIES BEND TO AVOID KEYED JOINT WHERE SHOWN		
	W/ CURB	W/O CURB
"A" BARS	#4 @ 5 (2 BARS Min)	#5 @ 5 (3 BARS Min)
"B" BARS	#4 @ 10 (2 BARS Min)	#4 @ 10 (2 BARS Min)
HOOPS ("A" & "B")	#4 @ 5	#5 @ 5

ROTATE "A" AND "B" BARS SO HOOKED ENDS WILL MAINTAIN 2" CLEAR COVERAGE.

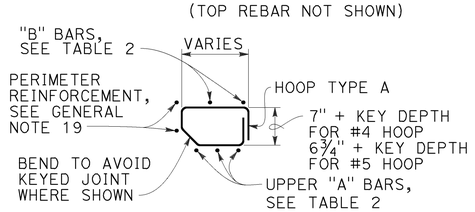

HOOP TYPE A

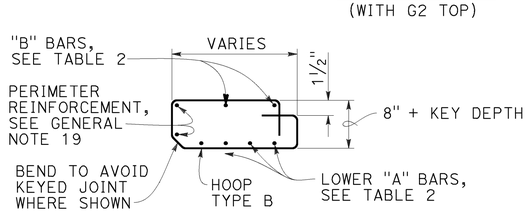

HOOP TYPE B

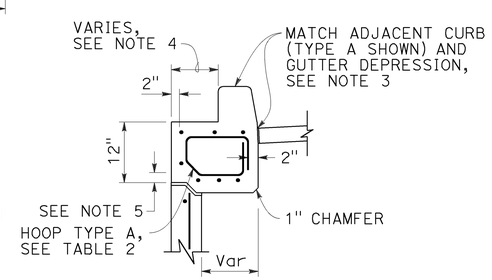

SECTION F-F

(WITH G4 TOP)

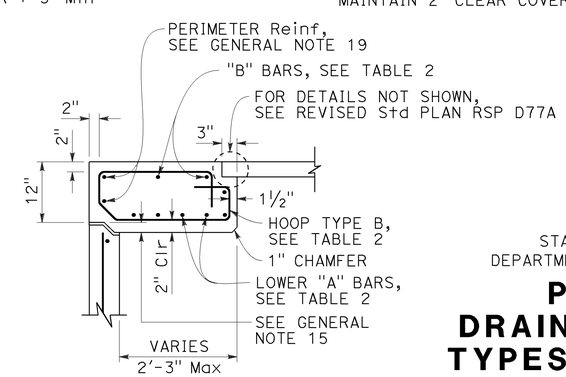

SECTION G-G

STATE OF CALIFORNIA
DEPARTMENT OF TRANSPORTATION

PRECAST DRAINAGE INLETS TYPES G2 AND G4

NO SCALE

RSP D73C DATED JULY 15, 2016 SUPPLEMENTS THE STANDARD PLANS BOOK DATED 2010.

REVISED STANDARD PLAN RSP D73C

2010 REVISED STANDARD PLAN RSP D73C

6-29-16

Dist	COUNTY	ROUTE	POST MILES TOTAL PROJECT	SHEET No.	TOTAL SHEETS
11	Imp	98	31.6/32.1	120C	167

REGISTERED CIVIL ENGINEER

July 15, 2016
PLANS APPROVAL DATE

REGISTERED PROFESSIONAL ENGINEER Carl M. Duan No. C59976 Exp. 6-30-18 CIVIL STATE OF CALIFORNIA

THE STATE OF CALIFORNIA OR ITS OFFICERS OR AGENTS SHALL NOT BE RESPONSIBLE FOR THE ACCURACY OR COMPLETENESS OF SCANNED COPIES OF THIS PLAN SHEET.

TO ACCOMPANY PLANS DATED 08-08-16

GENERAL NOTES:

1. "H" is measured from top of bottom slab to the normal gutter grade line undepressed at the curb face.
2. For "T" wall thickness and reinforcement, see Table C on Revised Standard Plan RSP D73G.
3. Wall reinforcement must be placed at the center of wall thickness with horizontal bars placed on the exterior face. Bottom slab concrete cover must be 3" clear on the interior side face unless otherwise noted. Top slab concrete cover must be 2" clear on the exterior face unless otherwise noted. Short independent wall sections or height adjustment rings 6" to 24" high must have a minimum of two #4 horizontal bars. Reinforcement spacing is in inches unless otherwise noted.
4. Steps - None required where "H" is less than 2'-6". Where "H" is 2'-6" or more, install steps with lowest rung 1'-0" above the floor and highest rung not more than 6" below bottom of lid. The distance between steps must not exceed 1'-0" and be uniform throughout the length of the wall. Place steps in the wall without an opening. Steps inserts may be substituted for the bar steps. Step inserts must comply with State Industrial Safety Requirements. See Revised Standard Plan RSP D74 for step details.
5. Pipe(s) can be placed in any wall. Adjacent to each side of the opening, place additional reinforcement equivalent to half the interupted main reinforcement. For larger pipes greater than or equal to 42" diameter, also add 4 diagonal bars, 1 bar each side. Bars must be the same size as the larger of the main vertical or horizontal bars. Extend bars one development length past the intersection with the adjacent diagonal bar, or where bars intersect mid thickness of adjacent wall bottom or top of non-continuous wall, bend ends as required into same plane.
6. Set inlet so that grate bars are parallel to direction of principal surface flow.
7. Curb section must match adjacent curb.
8. Except for inlets used as junction boxes, basin floors must have wood trowel finish and a minimum slope of 4:1, unless otherwise noted, from all directions toward outlet pipe by casting grout on top of the bottom slab. Grout must be placed prior to backfill.
9. See Revised Standard Plans RSP D77A and RSP D77B for grate and frame details and weights of miscellaneous iron and steel.
10. See Standard Plans D78A and D78B for gutter depression details.
11. See Revised Standard Plans RSP A87A and RSP A87B for curb and dike details.
12. Details shown apply to metal, concrete and plastic pipe(s).
13. The Contractor may use WWR instead of bar reinforcement. The ratio of bar reinforcement to WWR shall be based on the yield strength ratio.
14. Seal precast inlets connection openings between wall and pipe with non-shrink grout or resilient connectors as specified in the Special Provisions. Precast inlets shall have mortared connections conforming to details for Type GCP Inlet shown on Revised Standard Plan RSP D75B. See Standard Specifications for mortar composition.
15. Where shown, provide precast inlets with separate top sections for final grade adjustment. Provide keyed joints with butyl rubber sealant between the top section and wall, multiple wall sections, and wall and bottom slab. Joint design may vary but must be 1" to 3" in depth. For tongue type joints, tongue down orientation is not allowed. For keyed joints, keyway up, keyway down or tongue up configurations are allowed. Only one key type is allowed for each drainage inlet.
16. Non-shrink grout can be used for upper most joint to facilitate final top grade adjustment.
17. Provide a level and firm sand bedding on which to place precast inlets. Extend sand bedding under all structure backfill.
18. For Integral Base, see Detail "A".
19. Perimeter reinforcement must not be smaller than main bars and #4 and serves as a rigid frame to position and attach the required structural reinforcement and may be tack welded at outer corners when using ASTM A706 weldable bars.
20. Inlet extensions may be cast in place after placement of main box and placement and compaction of backfill. Concrete strength must be 3.6 ksi minimum. All slab and wall thicknesses must be per Revised Standard Plan RSP D72A. All reinforcement shall extend a minimum of 24" from precast main inlet box.

DESIGN NOTES:

1. Design Specifications: AASHTO LRFD Bridge Design Specifications, 6th edition with 2012 Interims and Errata and CA Amendments.
2. Live Load (AASHTO LRFD 3.6.1.2):
   HL-93, consists of design truck or tandem, and design lane load.
   Dynamic Load Allowance, IM = 33%
   Multiple Presence Factor, m = 1.0
   Design lane load was excluded in Top Slab design.
   A wheel load of 8 kips without impact factor was used for top slabs that are above a curb.
3. Earth Load:
   Vertical pressure = 140 pcf
   Lateral pressure:
   = 100 pcf for walls with flat embankment
   = 140 pcf For walls with slope embankment, 1.5:1 Max
4. Downdrag: ϕ = 34° and γ_E = 120 pcf.
5. Buoyancy: γ_W = 62.4 pcf to finished grade.
6. Reinforced Concrete: f'c = 5.0 ksi, fy = 60.0 ksi.
7. Tables are based on the worst case from the level ground and sloped ground.
8. Soil pressures shown are factored per AASHTO LRFD and include self-weight, live load and downdrag.

SPAN "A" OR "B" (IN)	L (IN)
<38	34
38 TO 50	40
51 TO 64	47
65 TO 76	53
77 TO 90	60

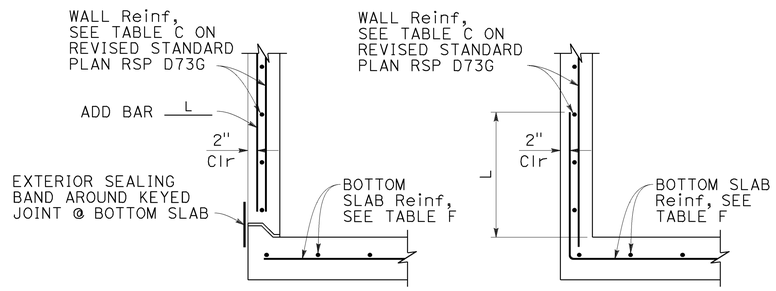

BASE WITH KEYED JOINT — INTEGRAL BASE

DETAIL "A"

FOR INTEGRAL BASE, CLEARANCE BETWEEN PIPE PENETRATION AND BASE SLAB MAY BE AS SHOWN IN CIP ALTERNATIVE STANDARD PLAN SHEET.

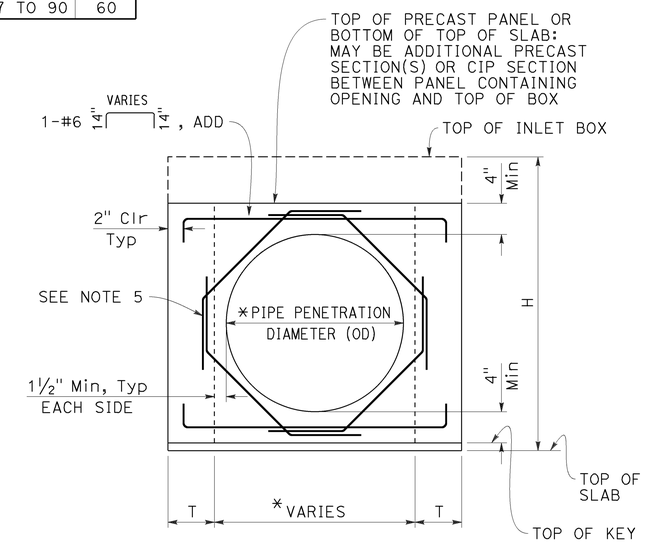

BASE WITH KEYED JOINT

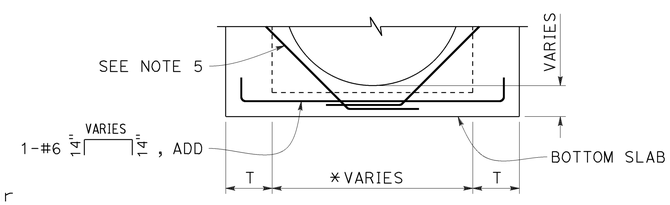

INTEGRAL BASE

FOR DETAILS NOT SHOWN, SEE "BASE WITH KEYED JOINT"

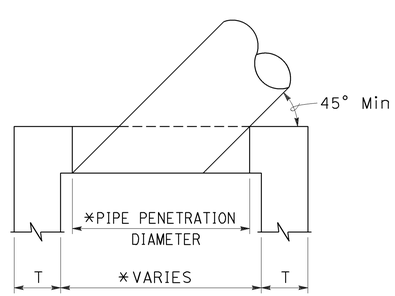

SKEWED PIPE PLAN

* ADJUST PIPE PENETRATION AND BOX WIDTH FOR SKEWED PIPES.

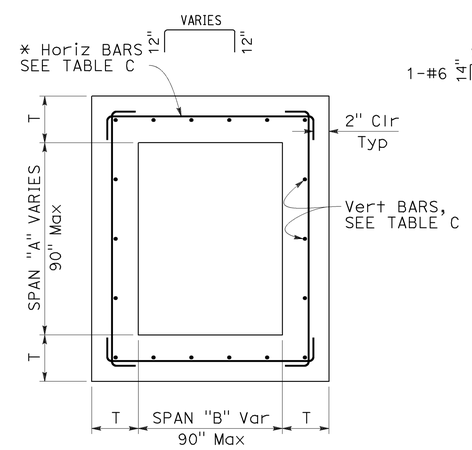

TYPICAL INLET PLAN

* ALTERNATIVE HORIZONTAL BARS

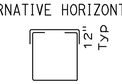

TYPICAL WALL W/ PIPE OPENING

* SEE "SKEWED PIPE PLAN"

STATE OF CALIFORNIA
DEPARTMENT OF TRANSPORTATION

PRECAST DRAINAGE INLET NOTES

NO SCALE

1 ADDED PER ADDENDUM No. 1 DATED OCTOBER 7, 2016

RSP D73F DATED JULY 15, 2016 SUPPLEMENTS THE STANDARD PLANS BOOK DATED 2010.

REVISED STANDARD PLAN RSP D73F

2010 REVISED STANDARD PLAN RSP D73F

6-20-16

1 ADDED PER ADDENDUM No. 1 DATED OCTOBER 7, 2016

1

Dist	COUNTY	ROUTE	POST MILES TOTAL PROJECT	SHEET No.	TOTAL SHEETS
11	Imp	98	31.6/32.1	120D	167

REGISTERED CIVIL ENGINEER

July 15, 2016
PLANS APPROVAL DATE

REGISTERED PROFESSIONAL ENGINEER Carl M. Duan No. C59976 Exp. 6-30-18 CIVIL STATE OF CALIFORNIA

THE STATE OF CALIFORNIA OR ITS OFFICERS OR AGENTS SHALL NOT BE RESPONSIBLE FOR THE ACCURACY OR COMPLETENESS OF SCANNED COPIES OF THIS PLAN SHEET.

TO ACCOMPANY PLANS DATED 08-08-16

2010 REVISED STANDARD PLAN RSP D73G

TABLE A - CONCRETE QUANTITIES

TYPE	H=3'-0" TO 8'-0"		H=8'-1" TO 20'-0"	
	H=3'-0" (CY)	ADDITIONAL CONCRETE PER FOOT (CY)	H=8'-1" (CY)	ADDITIONAL CONCRETE PER FOOT (CY)
G1	0.95	0.220	SEE NOTE 2	SEE NOTE 2
G2*	1.25	0.255	2.55	0.255
G3	1.06	0.220	SEE NOTE 2	SEE NOTE 2
G4 (TYPE 18)*	1.41	0.255	2.71	0.255
G4 (TYPE 24)*	1.36	0.255	2.65	0.255
G5	1.09	0.220	SEE NOTE 2	SEE NOTE 2
G6	1.14	0.220	SEE NOTE 2	SEE NOTE 2
OS	1.28	0.278	2.69	0.278
OL7	1.92	0.278	3.33	0.278
OL10	2.43	0.278	3.84	0.278
OL14	3.16	0.278	4.57	0.278
OL21	4.58	0.278	5.99	0.278
GOL7	2.36	0.313	4.04	0.434
GOL10	2.84	0.313	4.53	0.434
GT1	2.30	0.480	SEE NOTE 2	SEE NOTE 2
GT2	2.71	0.530	5.40	0.530
GT3	2.29	0.480	SEE NOTE 2	SEE NOTE 2
GT4	2.69	0.530	5.39	0.530
GO	1.25	0.245	2.37	0.245
GDO	1.64	0.322	3.37	0.446

* Quantities are based on the minimum interior dimensions.

TABLE B - REINFORCEMENT QUANTITIES

TYPE	H=3'-0" TO 8'-0"		H=8'-1" TO 20'-0"	
	H=3'-0" (LB)	ADDITIONAL REINFORCEMENT PER FOOT (LB)	H=8'-1" (LB)	ADDITIONAL REINFORCEMENT PER FOOT (LB)
G1	88.5	21.90	SEE NOTE 2	SEE NOTE 2
G2*	151.5	24.54	277.4	38.64
G3	92.9	21.90	SEE NOTE 2	SEE NOTE 2
G4 (TYPE 18)*	134.4	24.54	260.3	38.64
G4 (TYPE 24)*	125.1	24.54	251.0	38.64
G5	92.5	21.90	SEE NOTE 2	SEE NOTE 2
G6	92.5	21.90	SEE NOTE 2	SEE NOTE 2
OS	145.8	35.57	327.8	49.60
OL7	328.0	35.57	510.0	49.60
OL10	467.5	35.57	649.5	49.60
OL14	667.5	35.57	849.5	49.60
OL21	1056.1	35.57	1238.1	49.60
GOL7	474.7	45.17	706.8	74.02
GOL10	604.9	45.17	836.9	74.02
GT1	349.0	80.48	SEE NOTE 2	SEE NOTE 2
GT2	403.7	86.82	849.1	135.15
GT3	347.0	80.48	SEE NOTE 2	SEE NOTE 2
GT4	403.7	86.82	849.1	135.15
GO	99.8	23.75	221.7	37.46
GDO	208.8	46.22	446.2	75.61

* Quantities are based on the minimum interior dimensions.

TABLE D

INLET	CURB USED IN QUANTITIES
G1	-
G2	-
G3	A1-6
G4 (Type 18)	A1-6
G4 (Type 24)	A1-6
G5	B1-4
G6	½E
OS	-
OL7	-
OL10	-
OL14	-
OL21	-
GOL7	-
GOL10	-
GT1	D-6
GT2	E
GT3	A2-8
GT4	A2-8
GO	-
GDO	-

TABLE C - WALL REINFORCEMENT

TYPE	H ≤8'-0" (T=6", UON)			8'-0"< H ≤20'-0" (T=8", UON)		
	HORIZONTAL	VERTICAL	*ADD	HORIZONTAL	VERTICAL	*ADD
OS	#4@6	#3@8	#3@8	#4@4 (T=6")	#3@8	#3@8
OL	#4@6	#3@8	#3@8	#4@4 (T=6")	#3@8	#3@8
GOL	#4@5	#3@8	#3@8	#5@5	#3@6	#3@6
G1 (H ≤6'-9")	#4@9	#3@8	#3@8	-	-	-
G2 & G4 (a** ≤38")	#4@9	#3@8	#3@8	#4@5 (T=6")	#3@8	#3@8
G2 & G4 (38" < a** ≤50")	#4@6	#3@8	#3@8	#4@4 (T=6")	#3@8	#3@8
G2 & G4 (50" < a** ≤64")	#4@5	#3@8	#3@8	#5@5	#3@6	#3@6
G2 & G4 (64"< a** ≤76")	#5@7 (T=8")	#3@6	#3@6	#5@4	#3@6	#5@6
G2 & G4 (76" < a** ≤90")	#5@5 (T=8")	#3@6	#3@6	#5@3	#3@6	#5@6
G3 (H ≤6'-9")	#4@9	#3@8	#3@8	-	-	-
G5 (H ≤6'-9")	#4@9	#3@8	#3@8	-	-	-
G6 (H ≤6'-9")	#4@9	#3@8	#3@8	-	-	-
GT1 (H ≤6'-9")	#5@5 (T=8")	#3@6	#3@6	-	-	-
GT2	#5@5 (T=8")	#3@6	#3@6	#5@3	#3@6	#5@6
GT3 (H ≤6'-9")	#5@5 (T=8")	#3@6	#3@6	-	-	-
GT4	#5@5 (T=8")	#3@6	#3@6	#5@3	#3@6	#5@6
GO	#4@9	#3@8	#3@8	#4@5 (T=6")	#3@8	#3@8
GDO	#4@5	#3@8	#3@8	#5@5	#3@6	#3@6

* See Detail A on Revised Standard Plan RSP D73F for additional vertical bars at the base.
** a = Larger interior span

TABLE E

SOIL PRESSURE BELOW BASE SLAB (ksf)

TYPE	H ≤8'-0"	8'-0"< H ≤20'-0"
OS	2.89	5.68
OL*	2.89	5.68
GOL*	2.36	4.93
G1 (H ≤6'-9")	3.51	-
G2 & G4 (a** ≤38")	2.96	5.79
G2 & G4 (38" < a** ≤50")	2.21	4.51
G2 & G4 (50" < a** ≤64")	3.19	4.89
G2 & G4 (64"< a** ≤76")	2.50	4.23
G2 & G4 (76" < a** ≤90")	2.04	3.56
G3 (H ≤6'-9")	3.51	-
G5 (H ≤6'-9")	3.51	-
G6 (H ≤6'-9")	3.51	-
GT1 (H ≤6'-9")	3.41	-
GT2	3.60	6.42
GT3 (H ≤6'-9")	3.41	-
GT4	3.60	6.42
GO	3.37	6.46
GDO	2.48	7.30

* Main Box
** a = Larger interior span

TABLE F

BASE SLAB REINFORCEMENT (T=8", UON)

TYPE	H ≤8'-0"	8'-0"< H ≤20'-0"
OS	#4@8 (EW)	#4@5 (EW)
OL*	#4@8 (EW)	#4@5 (EW)
GOL*	#4@6 (EW)	#4@4 (EW)
G1 (H ≤6'-9")	#4@10 (EW)	-
G2 & G4 (a** ≤38")	#4@10 (EW)	#4@6 (EW)
G2 & G4 (38" < a** ≤50")	#4@8 (EW)	#4@5 (EW)
G2 & G4 (50" < a** ≤64")	#4@6 (EW)	#4@4 (EW)
G2 & G4 (64"< a** ≤76")	#4@5 (EW)	#4@3 (EW)
G2 & G4 (76" < a** ≤90")	#4@4 (EW)	#5@3 (EW)
G3 (H ≤6'-9")	#4@10 (EW)	-
G5 (H ≤6'-9")	#4@10 (EW)	-
G6 (H ≤6'-9")	#4@10 (EW)	-
GT1 (H ≤6'-9")	#4@4 (EW)	-
GT2	#4@4 (EW)	#5@3 (EW)
GT3 (H ≤6'-9")	#4@4 (EW)	-
GT4	#4@4 (EW)	#5@3 (EW)
GO	#4@10 (EW)	#4@6 (EW)
GDO	#4@6 (EW)	#4@4 (EW)

(EW) Each Way
* Main Box
** a = Larger interior span

NOTES:

1. No deduction or adjustment was made to the quantities of concrete and reinforcement for pipe openings, floor alternatives or curb type.
2. Maximum allowable height is 6'-9".
3. Quantities are approximate and for design purposes only.
4. Design is based on envelope of level and sloped ground.

STATE OF CALIFORNIA
DEPARTMENT OF TRANSPORTATION

PRECAST DRAINAGE INLET TABLES

NO SCALE

RSP D73G DATED JULY 15, 2016 SUPPLEMENTS THE STANDARD PLANS BOOK DATED 2010.

REVISED STANDARD PLAN RSP D73G

6-20-16