Dist	COUNTY	ROUTE	POST MILES TOTAL PROJECT	SHEET No.	TOTAL SHEETS
11	SD	11,905	0.0/1.6, R9.9/R10.7	401	622

REGISTERED ELECTRICAL ENGINEER DATE

04-22-13
PLANS APPROVAL DATE

REGISTERED PROFESSIONAL ENGINEER HECTOR A. SANTAMARIA No. 18207 Exp. 12-31-13 ELECTRICAL STATE OF CALIFORNIA

THE STATE OF CALIFORNIA OR ITS OFFICERS OR AGENTS SHALL NOT BE RESPONSIBLE FOR THE ACCURACY OR COMPLETENESS OF SCANNED COPIES OF THIS PLAN SHEET.

CONDUIT NOTES (TSO):

1. -3"C, 2#6 (CCTV), 2#6 (RM), 2#6 (TMS), 2#6 (LTG), 2#6(S)
   -2"C, 2#6 (CCTV-TOLL)
2. -2"C, 2#6 (LTG), 2#6(S)
3. -2"C, 2#6 (LTG)
4. -3"C, 2#6 (CCTV), 2#6 (TMS), 2#6 (LTG), 2#6(S)
5. -2"C, 2#6 (TMS), 2#6 (S), -2"C, 2#6 (CCTV-TOLL)
6. -2"C, 2#6 (CCTV)
7. -2"C, 2#6 (RM)

NOTES(TSO):

1. -FOR CONTINUITY SEE RAMP METERING SYSTEM. SEE SHEET E-36.
2. -FOR CONTINUITY SEE CLOSED CIRCUIT TELEVISION SYSTEM. SEE SHEET E-19
3. FOR ACCURATE RIGHT OF WAY DATA, CONTACT RIGHT OF WAY ENGINEERING AT THE DISTRICT OFFICE.

SAN DIEGO COUNTY

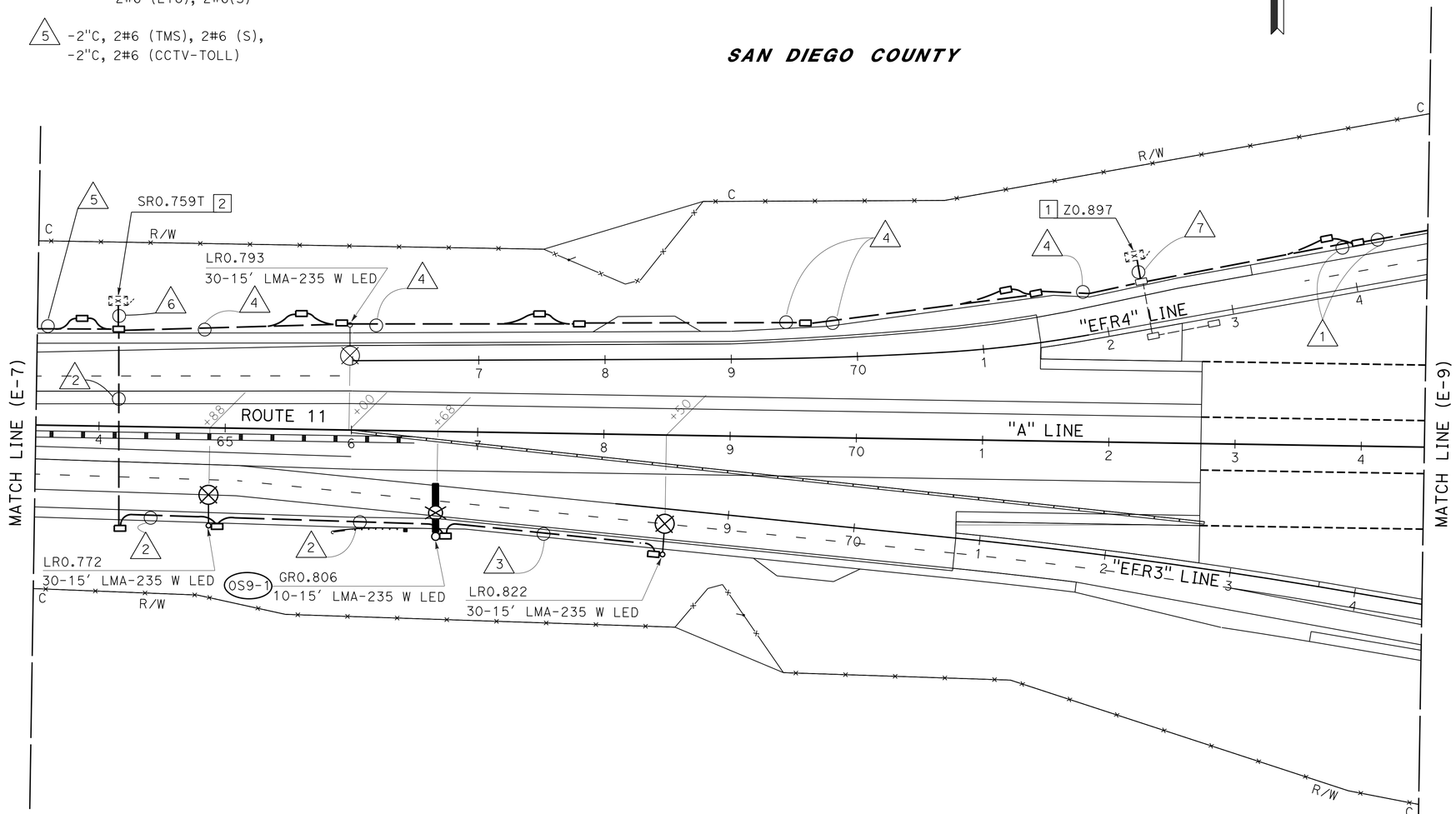

ILLUMINATED SIGNS AND APPURTENANCES				
SIGN No.	ISL FIXTURES	VOLTAGE (SERVICE)	LOAD	REMARKS
OS9-1	2	240 V	174 W	SC1A SIGN CONTROL, SEE Std PLANS ES-15C, ES-15D

LIGHTING AND SIGN ILLUMINATION

PRELIMINARY FOR BIDDING PURPOSES ONLY

APPROVED FOR ELECTRICAL WORK ONLY

SCALE: 1"= 50'

E-8

STATE OF CALIFORNIA - DEPARTMENT OF TRANSPORTATION
Caltrans® TRAFFIC ELECTRICAL

FUNCTIONAL SUPERVISOR: BRIAN PECUS
CALCULATED-DESIGNED BY: HECTOR SANTAMARIA
CHECKED BY: ENRIQUE BERNAL
REVISED BY / DATE REVISED

LAST REVISION 03-04-13 | DATE PLOTTED => 13-MAY-2013 | TIME PLOTTED => 21:24

Dist	COUNTY	ROUTE	POST MILES TOTAL PROJECT	SHEET No.	TOTAL SHEETS
11	SD	11,905	0.0/1.6, R9.9/R10.7	402	622

REGISTERED ELECTRICAL ENGINEER DATE

04-22-13
PLANS APPROVAL DATE

REGISTERED PROFESSIONAL ENGINEER HECTOR A. SANTAMARIA No. 18207 Exp. 12-31-13 ELECTRICAL STATE OF CALIFORNIA

THE STATE OF CALIFORNIA OR ITS OFFICERS OR AGENTS SHALL NOT BE RESPONSIBLE FOR THE ACCURACY OR COMPLETENESS OF SCANNED COPIES OF THIS PLAN SHEET.

PRELIMINARY FOR BIDDING PURPOSES ONLY

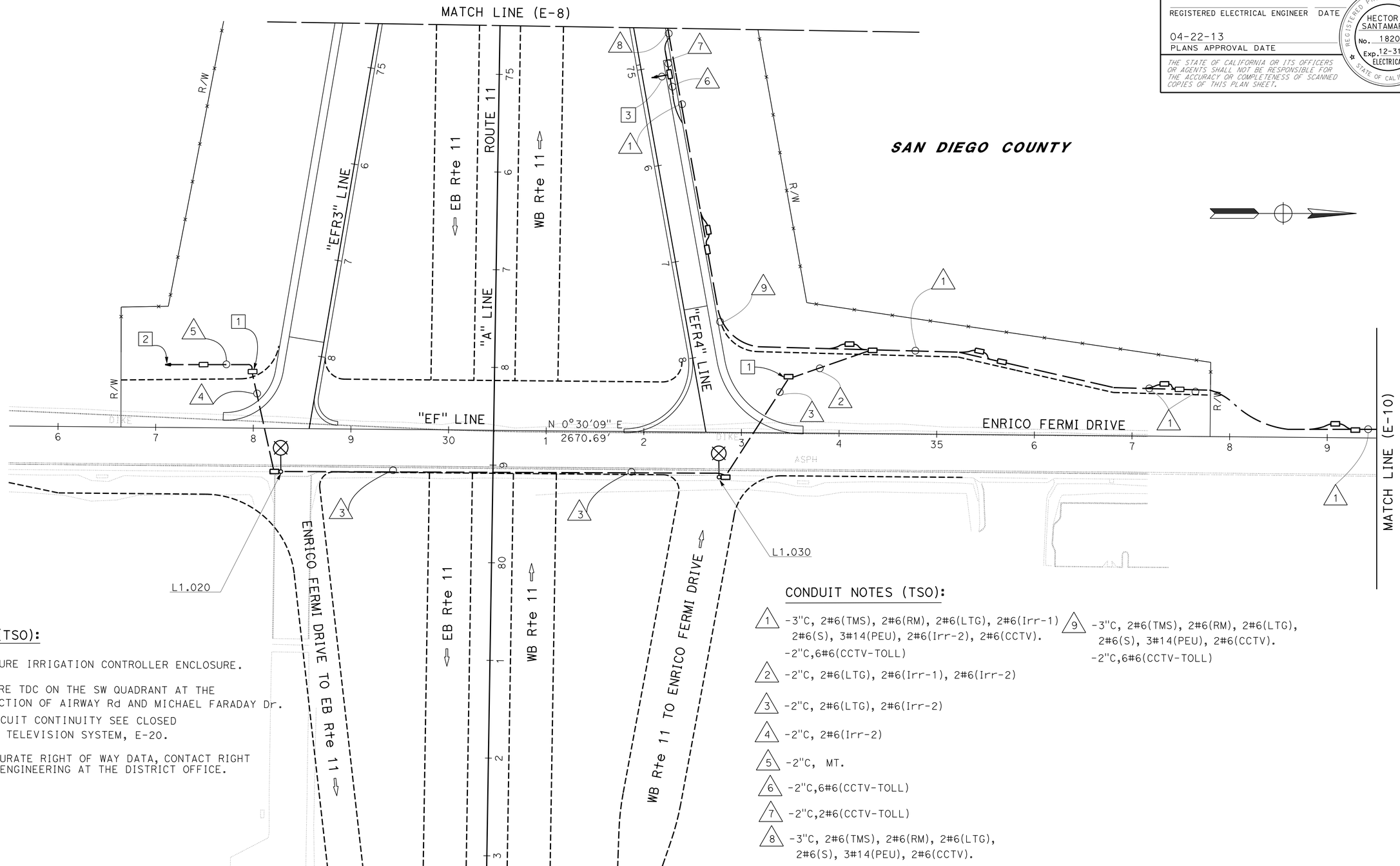

NOTES(TSO):

1 - FOR FUTURE IRRIGATION CONTROLLER ENCLOSURE.

2 - TO FUTURE TDC ON THE SW QUADRANT AT THE INTERSECTION OF AIRWAY Rd AND MICHAEL FARADAY Dr.

3 - FOR CIRCUIT CONTINUITY SEE CLOSED CIRCUIT TELEVISION SYSTEM, E-20.

4 - FOR ACCURATE RIGHT OF WAY DATA, CONTACT RIGHT OF WAY ENGINEERING AT THE DISTRICT OFFICE.

CONDUIT NOTES (TSO):

1 -3"C, 2#6(TMS), 2#6(RM), 2#6(LTG), 2#6(Irr-1) 2#6(S), 3#14(PEU), 2#6(Irr-2), 2#6(CCTV). -2"C,6#6(CCTV-TOLL)

2 -2"C, 2#6(LTG), 2#6(Irr-1), 2#6(Irr-2)

3 -2"C, 2#6(LTG), 2#6(Irr-2)

4 -2"C, 2#6(Irr-2)

5 -2"C, MT.

6 -2"C,6#6(CCTV-TOLL)

7 -2"C,2#6(CCTV-TOLL)

8 -3"C, 2#6(TMS), 2#6(RM), 2#6(LTG), 2#6(S), 3#14(PEU), 2#6(CCTV). -2"C,2#6(CCTV-TOLL)

9 -3"C, 2#6(TMS), 2#6(RM), 2#6(LTG), 2#6(S), 3#14(PEU), 2#6(CCTV). -2"C,6#6(CCTV-TOLL)

LIGHTING AND SIGN ILLUMINATION

APPROVED FOR ELECTRICAL WORK ONLY

SCALE: 1"= 50'

E-9

REVISED BY	DATE REVISED

CALCULATED-DESIGNED BY	CHECKED BY
HECTOR SANTAMARIA	ENRIQUE BERNAL

FUNCTIONAL SUPERVISOR: BRIAN PECUS

STATE OF CALIFORNIA - DEPARTMENT OF TRANSPORTATION

Caltrans® TRAFFIC ELECTRICAL

LAST REVISION 03-04-13 | DATE PLOTTED => 13-MAY-2013 | TIME PLOTTED => 21:24

Dist	COUNTY	ROUTE	POST MILES TOTAL PROJECT	SHEET No.	TOTAL SHEETS
11	SD	11,905	0.0/1.6 R9.9/R10.7	403	622

REGISTERED ELECTRICAL ENGINEER DATE

04-22-13
PLANS APPROVAL DATE

REGISTERED PROFESSIONAL ENGINEER HECTOR A. SANTAMARIA No. 18207 Exp. 12-31-13 ELECTRICAL STATE OF CALIFORNIA

THE STATE OF CALIFORNIA OR ITS OFFICERS OR AGENTS SHALL NOT BE RESPONSIBLE FOR THE ACCURACY OR COMPLETENESS OF SCANNED COPIES OF THIS PLAN SHEET.

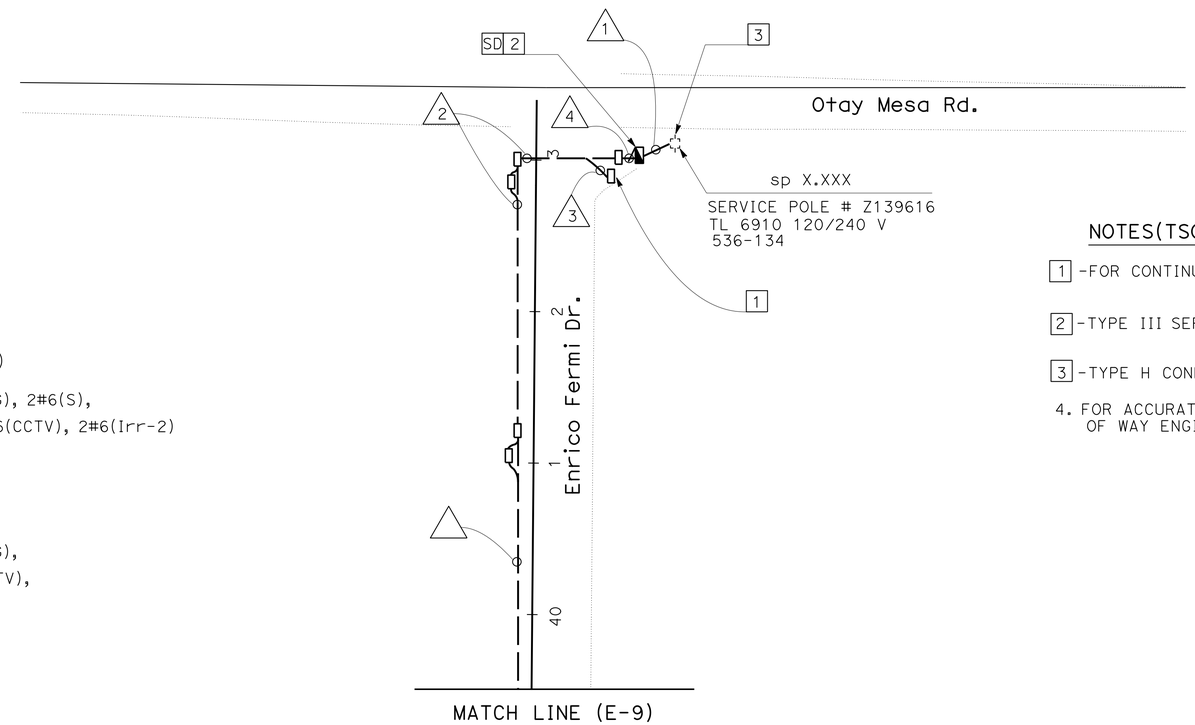

CONDUIT NOTES (TSO):

1. -2"C, MT. (CONDUCTORS BY SDG&E)
2. -3"C, 2#6(TMS), 2#6(RM), 2#6(LTG), 2#6(S), 2#6(Irr-1), 4#14(PEU), 2#6(CCTV), 2#6(Irr-2)
   -2"C, 6#6(CCTV-TOLL)
3. -2"C, 6#6(CCTV-TOLL)
4. -3"C, 2#6(TMS), 2#6(RM), 2#6(LTG), 2#6(S), 4#14(PEU), 2#6(CCTV), 2#6(Irr-1), 2#6(Irr-2)

NOTES(TSO):

1. -FOR CONTINUITY SEE CLOSED CIRCUIT TELEVISION SYSTEM PLANS.
2. -TYPE III SERVICE DISCONNECT. SEE WIRING DIAGRAM "OMR" ON SHEET E-68.
3. -TYPE H CONDUIT RISER PER SDG&E REQUIREMENTS.
4. FOR ACCURATE RIGHT OF WAY DATA, CONTACT RIGHT OF WAY ENGINEERING AT THE DISTRICT OFFICE.

PRELIMINARY FOR BIDDING PURPOSES ONLY

APPROVED FOR ELECTRICAL WORK ONLY

LIGHTING AND SIGN ILLUMINATION

SCALE: 1" = 50'

E-10

REVISED BY | DATE REVISED
HECTOR SANTAMARIA | ENRIQUE BERNAL
CALCULATED-DESIGNED BY | CHECKED BY
FUNCTIONAL SUPERVISOR | BRIAN PECUS
STATE OF CALIFORNIA - DEPARTMENT OF TRANSPORTATION
Caltrans TRAFFIC ELECTRICAL

LAST REVISION 07-14-12 | DATE PLOTTED => 13-MAY-2013 | TIME PLOTTED => 21:24

Dist	COUNTY	ROUTE	POST MILES TOTAL PROJECT	SHEET No.	TOTAL SHEETS
11	SD	11,905	0.0/1.6 R9.9/R10.7	404	622

REGISTERED ELECTRICAL ENGINEER DATE

04-22-13
PLANS APPROVAL DATE

REGISTERED PROFESSIONAL ENGINEER HECTOR A. SANTAMARIA No. 18207 Exp. 12-31-13 ELECTRICAL STATE OF CALIFORNIA

THE STATE OF CALIFORNIA OR ITS OFFICERS OR AGENTS SHALL NOT BE RESPONSIBLE FOR THE ACCURACY OR COMPLETENESS OF SCANNED COPIES OF THIS PLAN SHEET.

NOTES (TSO):

1 - Exist TYPE III-CF, SEE WIRING DIAGRAM "B" MAIN-2P-100 A: ON SHEET E-68

(1) - LIGHTING
(2) - SIGN
(3) - SOFFIT
(4) - CCTV
(5) - TMS
(6) - TMS
(7) - SPARE
(8) - PEU
(9) - FUTURE
(10) - FUTURE
(11) - FUTURE

USE Exist A 1P-15 A CB SPARE AND LABEL "CCTV#XX"

2 - FOR ACCURATE RIGHT OF WAY DATA, CONTACT RIGHT OF WAY ENGINEERING AT THE DISTRICT OFFICE.

ILLUMINATED SIGNS AND APPURTENANCES

SIGN No.	ISL FIXTURES	VOLTAGE (SERVICE)	LOAD	REMARKS
OS5-1	1	240 V	87 W	SC1A SIGN CONTROL, SEE STD PLANS ES-15C, ES-15D

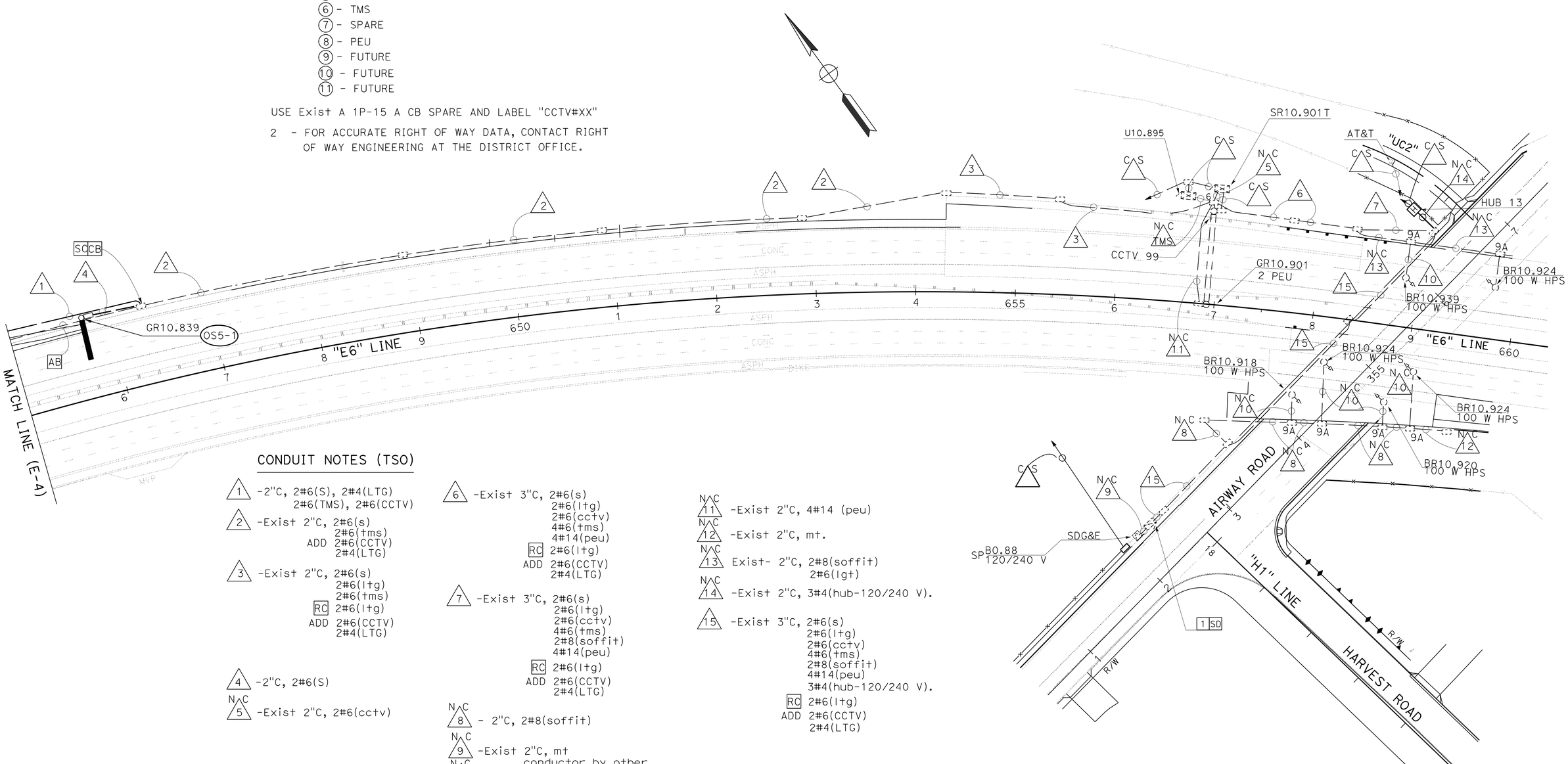

CONDUIT NOTES (TSO)

(1) -2"C, 2#6(S), 2#4(LTG)
2#6(TMS), 2#6(CCTV)

(2) -Exist 2"C, 2#6(s)
2#6(tms)
ADD 2#6(CCTV)
2#4(LTG)

(3) -Exist 2"C, 2#6(s)
2#6(ltg)
2#6(tms)
RC 2#6(ltg)
ADD 2#6(CCTV)
2#4(LTG)

(4) -2"C, 2#6(S)

N C (5) -Exist 2"C, 2#6(cctv)

(6) -Exist 3"C, 2#6(s)
2#6(ltg)
2#6(cctv)
4#6(tms)
4#14(peu)
RC 2#6(ltg)
ADD 2#6(CCTV)
2#4(LTG)

(7) -Exist 3"C, 2#6(s)
2#6(ltg)
2#6(cctv)
4#6(tms)
2#8(soffit)
4#14(peu)
RC 2#6(ltg)
ADD 2#6(CCTV)
2#4(LTG)

N C (8) - 2"C, 2#8(soffit)

N C (9) -Exist 2"C, mt
conductor by other

N C (10) -Exist 1"C, 2#8(soffit)

N C (11) -Exist 2"C, 4#14 (peu)

N C (12) -Exist 2"C, mt.

N C (13) Exist- 2"C, 2#8(soffit)
2#6(lgt)

N C (14) -Exist 2"C, 3#4(hub-120/240 V).

(15) -Exist 3"C, 2#6(s)
2#6(ltg)
2#6(cctv)
4#6(tms)
2#8(soffit)
4#14(peu)
3#4(hub-120/240 V).
RC 2#6(ltg)
ADD 2#6(CCTV)
2#4(LTG)

LIGHTING AND SIGN ILLUMINATION

PRELIMINARY FOR BIDDING PURPOSES ONLY

APPROVED FOR ELECTRICAL WORK ONLY

SCALE: 1"=50'

E-11

STATE OF CALIFORNIA - DEPARTMENT OF TRANSPORTATION
Caltrans TRAFFIC ELECTRICAL

FUNCTIONAL SUPERVISOR: BRIAN PECUS
CALCULATED-DESIGNED BY: ENRIQUE BERNAL
CHECKED BY: HECTOR SANTAMARIA
REVISED BY
DATE REVISED

LAST REVISION 07-14-12
DATE PLOTTED => 13-MAY-2013
TIME PLOTTED => 21:24

Dist	COUNTY	ROUTE	POST MILES TOTAL PROJECT	SHEET No.	TOTAL SHEETS
11	SD	11,905	0.0/1.6 R9.9/R10.7	405	622

REGISTERED ELECTRICAL ENGINEER DATE

04-22-13
PLANS APPROVAL DATE

REGISTERED PROFESSIONAL ENGINEER HECTOR A. SANTAMARIA No. 18207 Exp. 12-31-13 ELECTRICAL STATE OF CALIFORNIA

THE STATE OF CALIFORNIA OR ITS OFFICERS OR AGENTS SHALL NOT BE RESPONSIBLE FOR THE ACCURACY OR COMPLETENESS OF SCANNED COPIES OF THIS PLAN SHEET.

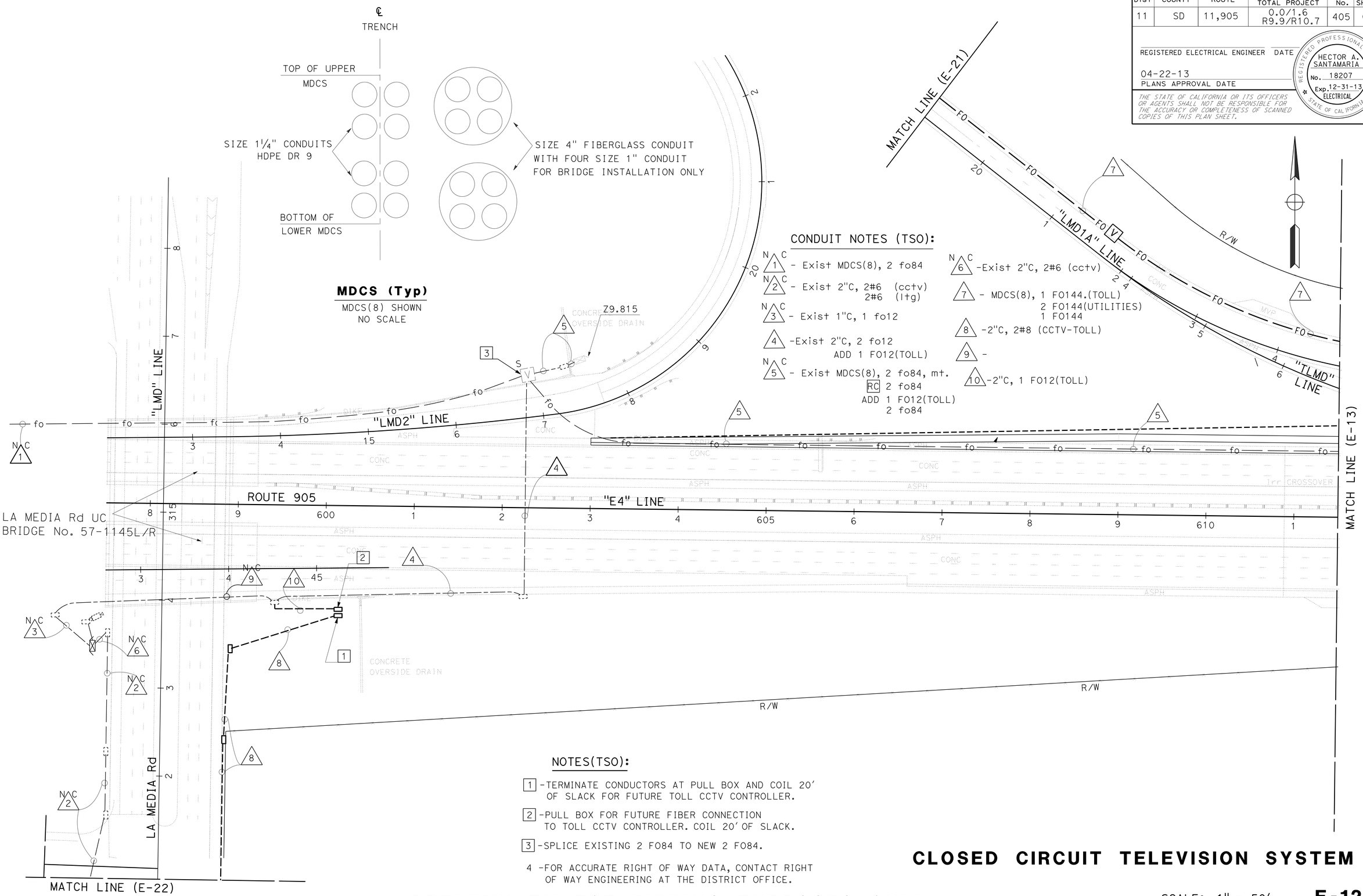

CONDUIT NOTES (TSO):

- N C 1 - Exist MDCS(8), 2 fo84
- N C 2 - Exist 2"C, 2#6 (cctv)
  2#6 (ltg)
- N C 3 - Exist 1"C, 1 fo12
- 4 -Exist 2"C, 2 fo12
  ADD 1 FO12(TOLL)
- N C 5 - Exist MDCS(8), 2 fo84, mt.
  RC 2 fo84
  ADD 1 FO12(TOLL)
  2 fo84
- N C 6 -Exist 2"C, 2#6 (cctv)
- 7 - MDCS(8), 1 FO144.(TOLL)
  2 FO144(UTILITIES)
  1 FO144
- 8 -2"C, 2#8 (CCTV-TOLL)
- 9 -
- 10 -2"C, 1 FO12(TOLL)

NOTES(TSO):

1. -TERMINATE CONDUCTORS AT PULL BOX AND COIL 20' OF SLACK FOR FUTURE TOLL CCTV CONTROLLER.
2. -PULL BOX FOR FUTURE FIBER CONNECTION TO TOLL CCTV CONTROLLER. COIL 20' OF SLACK.
3. -SPLICE EXISTING 2 FO84 TO NEW 2 FO84.
4. -FOR ACCURATE RIGHT OF WAY DATA, CONTACT RIGHT OF WAY ENGINEERING AT THE DISTRICT OFFICE.

CLOSED CIRCUIT TELEVISION SYSTEM

APPROVED FOR ELECTRICAL WORK ONLY

PRELIMINARY FOR BIDDING PURPOSES ONLY

SCALE: 1" = 50'

E-12

STATE OF CALIFORNIA - DEPARTMENT OF TRANSPORTATION
Caltrans® TRAFFIC ELECTRICAL

FUNCTIONAL SUPERVISOR: BRIAN PECUS
CALCULATED-DESIGNED BY: HECTOR SANTAMARIA
CHECKED BY: ENRIQUE BERNAL
REVISED BY / DATE REVISED

LAST REVISION 11-26-12
DATE PLOTTED => 13-MAY-2013
TIME PLOTTED => 21:24

Dist	COUNTY	ROUTE	POST MILES TOTAL PROJECT	SHEET No.	TOTAL SHEETS
11	SD	11,905	0.0/1.6 R9.9/R10.7	406	622

REGISTERED ELECTRICAL ENGINEER DATE

04-22-13
PLANS APPROVAL DATE

REGISTERED PROFESSIONAL ENGINEER HECTOR A. SANTAMARIA No. 18207 Exp. 12-31-13 ELECTRICAL STATE OF CALIFORNIA

THE STATE OF CALIFORNIA OR ITS OFFICERS OR AGENTS SHALL NOT BE RESPONSIBLE FOR THE ACCURACY OR COMPLETENESS OF SCANNED COPIES OF THIS PLAN SHEET.

NOTE:

FOR ACCURATE RIGHT OF WAY DATA, CONTACT RIGHT OF WAY ENGINEERING AT THE DISTRICT OFFICE.

CONDUIT NOTES (TSO):

1. -Exist MDCS(8), 2 fo84
   RC 2 fo84
   ADD 1 FO12
   2 fo84
2. -MDCS(8) 1 FO144.(TOLL)
   2 FO144(UTILITIES)
   1 FO144
3. -Exist MDCS(8), 2 fo84, mt.
4. -MDCS(2) 1 FO12, MT.
5. - MDCS(8), 2 fo84,
   1 FO12
   MT.
6. - MDCS(8), 2 fo84 (REUSED)
   MT.

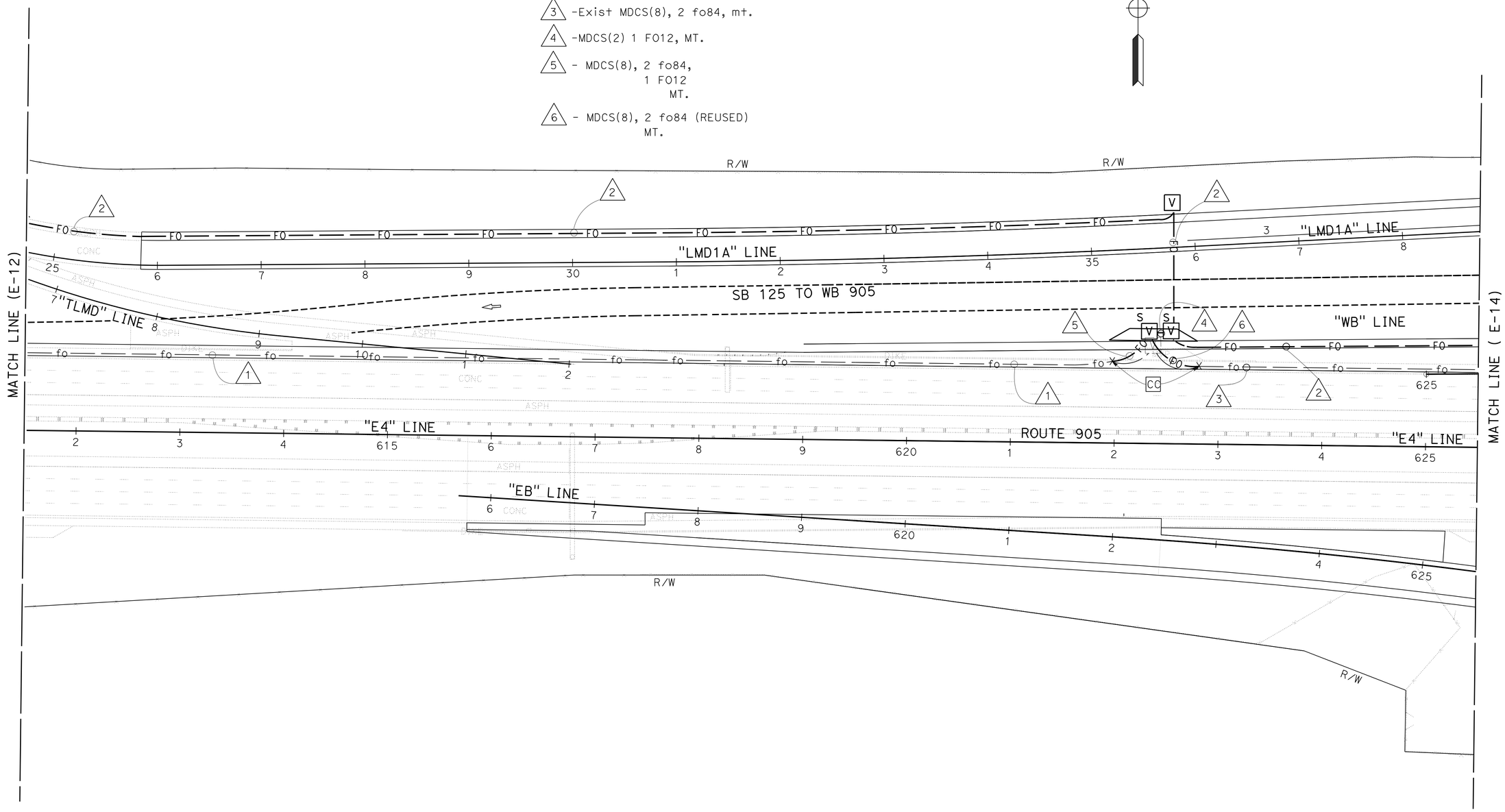

CLOSED CIRCUIT TELEVISION SYSTEM

PRELIMINARY FOR BIDDING PURPOSES ONLY

APPROVED FOR ELECTRICAL WORK ONLY

SCALE: 1" = 50'

E-13

STATE OF CALIFORNIA - DEPARTMENT OF TRANSPORTATION
Caltrans TRAFFIC ELECTRICAL

FUNCTIONAL SUPERVISOR: BRIAN PECUS
CALCULATED-DESIGNED BY: HECTOR SANTAMARIA
CHECKED BY: ENRIQUE BERNAL
REVISED BY
DATE REVISED

LAST REVISION 11-26-12
DATE PLOTTED => 13-MAY-2013
TIME PLOTTED => 21:24

Dist	COUNTY	ROUTE	POST MILES TOTAL PROJECT	SHEET No.	TOTAL SHEETS
11	SD	11,905	0.0/1.6, R9.9/R10.7	407	622

REGISTERED ELECTRICAL ENGINEER DATE

04-22-13
PLANS APPROVAL DATE

REGISTERED PROFESSIONAL ENGINEER HECTOR A. SANTAMARIA No. 18207 Exp. 12-31-13 ELECTRICAL STATE OF CALIFORNIA

THE STATE OF CALIFORNIA OR ITS OFFICERS OR AGENTS SHALL NOT BE RESPONSIBLE FOR THE ACCURACY OR COMPLETENESS OF SCANNED COPIES OF THIS PLAN SHEET.

CONDUIT NOTES (TSO):

N C 1 -Exist MDCS(8), 2 fo84

N C 2 -Exist 2"C, 1 fo12

3 -MDCS(4), 1 FO144(TOLL)

4 -MDCS(8), 1 FO144(TOLL)
2 FO144(UTILITIES)
1 FO144

5 -MDCS(8), 3 FO144

6 -MDCS(2), 1 FO12

7 -MDCS(8) 2 FO144
1 FO144(FED)
-MDCS(8) 1 FO144(TOLL)
2 FO144(UTILITIES)

8 -2"C, 2#6 (CCTV)

9 -3"C, 2 CAMERA CABLE

10 -MDCS(2), 1 FO12(TOLL) MT.

11 -2"C, 2#6 (CCTV-TOLL)

12 -Exist mdcs(8), 2 fo84
ADD 2 FO144
1 FO144 (125)
1 FO144 (FED)
1 FO144 (TOLL)

13 -2"C, 2 FO12(TOLL)

14 -2"C, 1 FO144(TOLL)

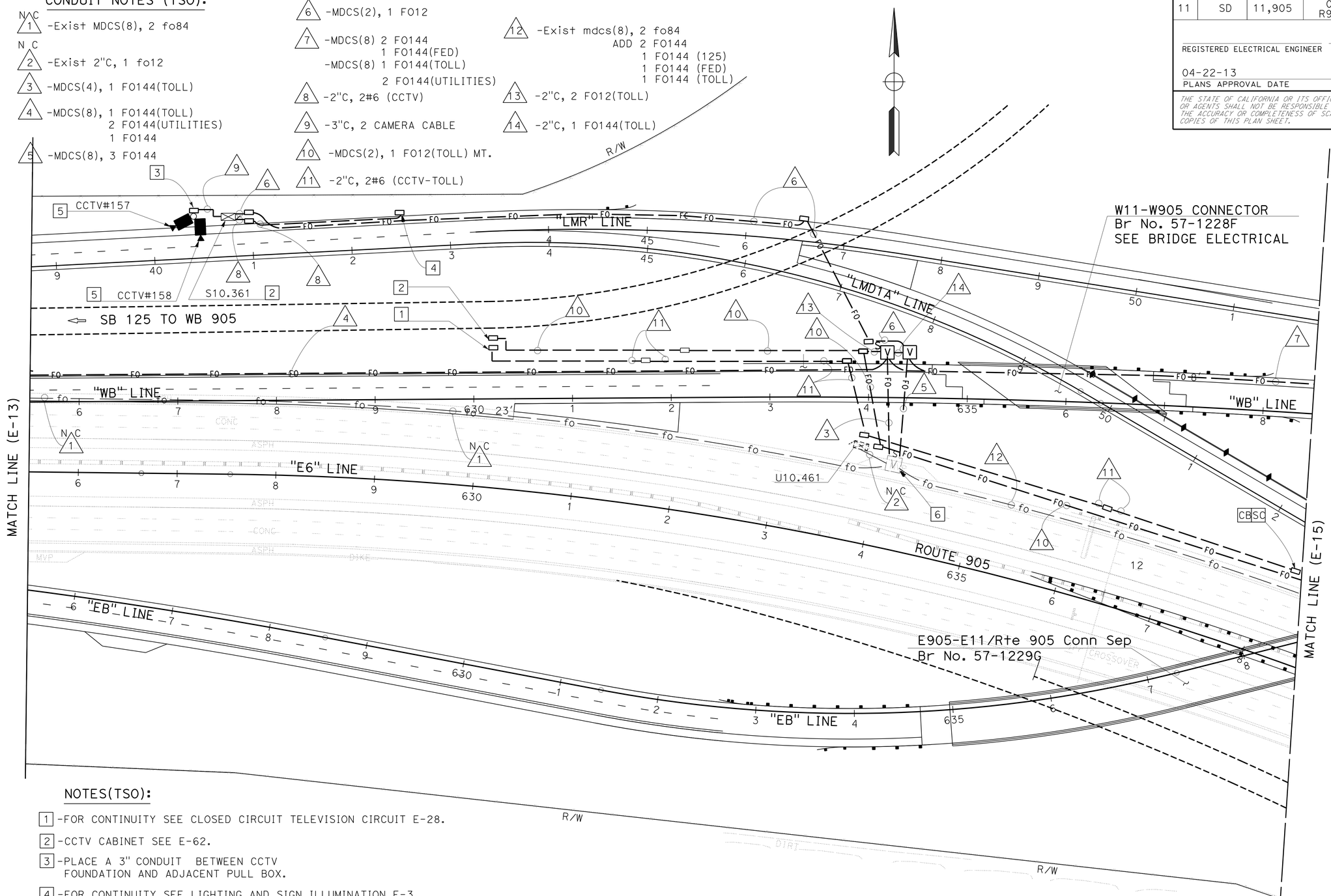

NOTES(TSO):

1 -FOR CONTINUITY SEE CLOSED CIRCUIT TELEVISION CIRCUIT E-28.

2 -CCTV CABINET SEE E-62.

3 -PLACE A 3" CONDUIT BETWEEN CCTV FOUNDATION AND ADJACENT PULL BOX.

4 -FOR CONTINUITY SEE LIGHTING AND SIGN ILLUMINATION E-3.

5 -TYPE CCTV 35 SEE SES-1.

6 -MDCS TO ENTER Exist VAULT.

7 -FOR ACCURATE RIGHT OF WAY DATA, CONTACT RIGHT OF WAY ENGINEERING AT THE DISTRICT OFFICE.

APPROVED FOR ELECTRICAL WORK ONLY

PRELIMINARY FOR BIDDING PURPOSES ONLY

CLOSED CIRCUIT TELEVISION SYSTEM

SCALE: 1" = 50'

E-14

STATE OF CALIFORNIA - DEPARTMENT OF TRANSPORTATION
Caltrans® **TRAFFIC ELECTRICAL**

FUNCTIONAL SUPERVISOR: BRIAN PECUS
CALCULATED-DESIGNED BY: HECTOR SANTAMARIA
CHECKED BY: ENRIQUE BERNAL
REVISED BY
DATE REVISED

LAST REVISION 11-26-18
DATE PLOTTED => 13-MAY-2013
TIME PLOTTED => 21:24

Dist	COUNTY	ROUTE	POST MILES TOTAL PROJECT	SHEET No.	TOTAL SHEETS
11	SD	11,905	0.0/1.6, R9.9/R10.7	408	622

REGISTERED ELECTRICAL ENGINEER DATE

04-22-13
PLANS APPROVAL DATE

REGISTERED PROFESSIONAL ENGINEER HECTOR A. SANTAMARIA No. 18207 Exp. 12-31-13 ELECTRICAL STATE OF CALIFORNIA

THE STATE OF CALIFORNIA OR ITS OFFICERS OR AGENTS SHALL NOT BE RESPONSIBLE FOR THE ACCURACY OR COMPLETENESS OF SCANNED COPIES OF THIS PLAN SHEET.

CONDUIT NOTES (TSO):

1. -Exist mdcs(8), 2 fo84
   ADD 2 FO144
   1 FO144(TOLL)
   1 FO144(FED)
2. -MDCS(8) 2 FO144
   1 FO144(FED)
   -MDCS(8) 1 FO144(TOLL)
   2 FO144(UTILITIES)
3. -2"C, 4#6 (CCTV-TOLL)
4. -MDCS(2), 1 FO12, MT.
5. -2"C, 2#6 (CCTV-TOLL)

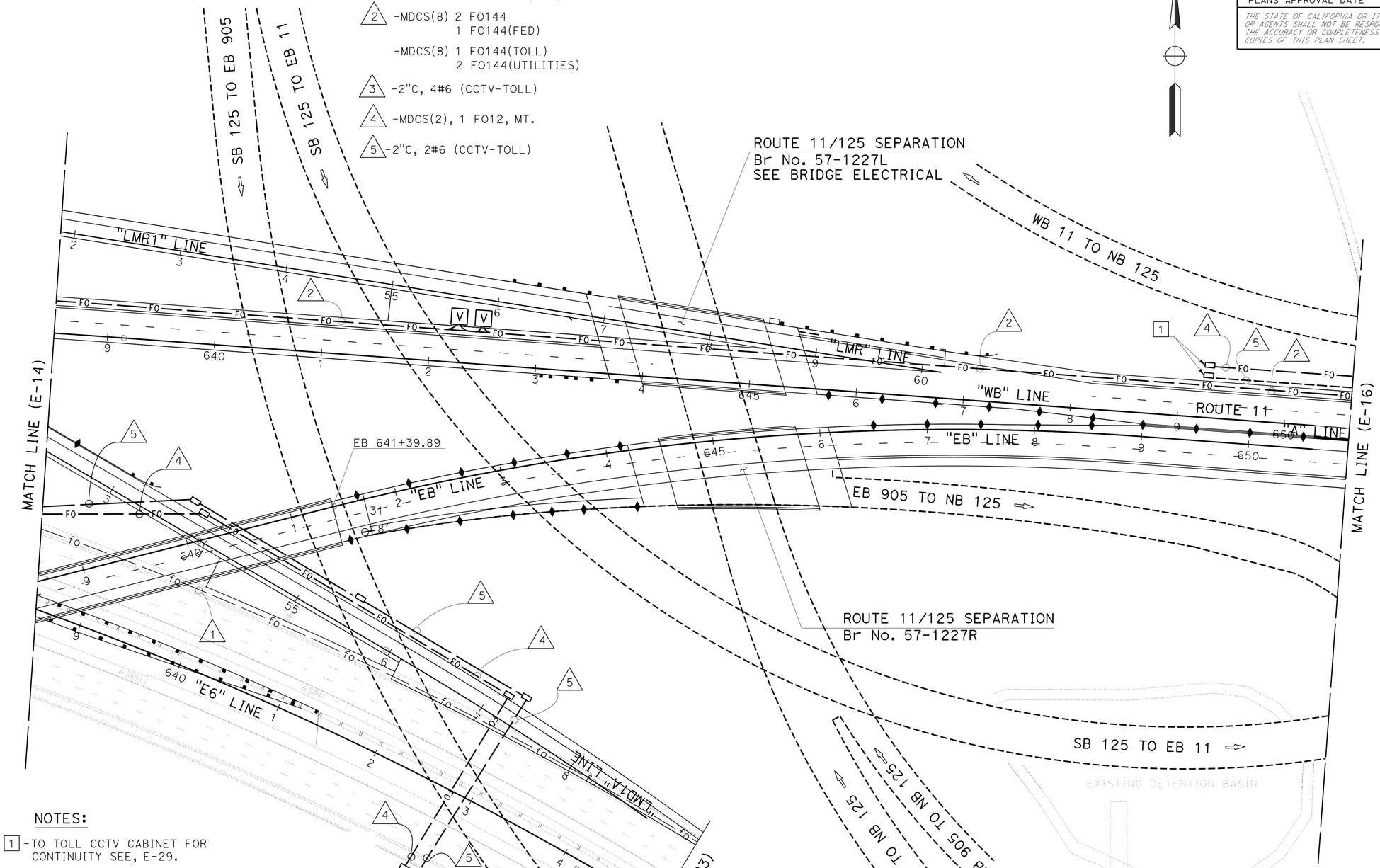

NOTES:

1 -TO TOLL CCTV CABINET FOR CONTINUITY SEE, E-29.

2 -FOR ACCURATE RIGHT OF WAY DATA, CONTACT RIGHT OF WAY ENGINEERING AT THE DISTRICT OFFICE.

PRELIMINARY FOR BIDDING PURPOSES ONLY

APPROVED FOR ELECTRICAL WORK ONLY

CLOSED CIRCUIT TELEVISION SYSTEM

SCALE: 1" = 50′ **E-15**

STATE OF CALIFORNIA - DEPARTMENT OF TRANSPORTATION
Caltrans® **TRAFFIC ELECTRICAL**

FUNCTIONAL SUPERVISOR: BRIAN PECUS
CALCULATED-DESIGNED BY: HECTOR SANTAMARIA
CHECKED BY: ENRIQUE BERNAL
REVISED BY
DATE REVISED

LAST REVISION 11-26-12 | DATE PLOTTED => 13-MAY-2013 | TIME PLOTTED => 21:24

PRELIMINARY FOR BIDDING PURPOSES ONLY

Dist	COUNTY	ROUTE	POST MILES TOTAL PROJECT	SHEET No.	TOTAL SHEETS
11	SD	11,905	0.0/1.6, R9.9/R10.7	409	622

REGISTERED ELECTRICAL ENGINEER DATE

04-22-13
PLANS APPROVAL DATE

REGISTERED PROFESSIONAL ENGINEER
HECTOR A. SANTAMARIA
No. 18207
Exp. 12-31-13
ELECTRICAL
STATE OF CALIFORNIA

THE STATE OF CALIFORNIA OR ITS OFFICERS OR AGENTS SHALL NOT BE RESPONSIBLE FOR THE ACCURACY OR COMPLETENESS OF SCANNED COPIES OF THIS PLAN SHEET.

NOTE:

FOR ACCURATE RIGHT OF WAY DATA, CONTACT RIGHT OF WAY ENGINEERING AT THE DISTRICT OFFICE.

CONDUIT NOTES (TSO):

1. -MDCS(8) 2 FO144
   ADD 1 FO144(FED)
   -MDCS(8) 1 FO144(TOLL)
   ADD 2 FO144(UTILITIES)
2. -2"C, 2#6 (CCTV-TOLL)
3. -2"C, 1 FO12 (CCTV, TMS)
4. -MDCS(2) 1 FO12(CCTV TOLL)

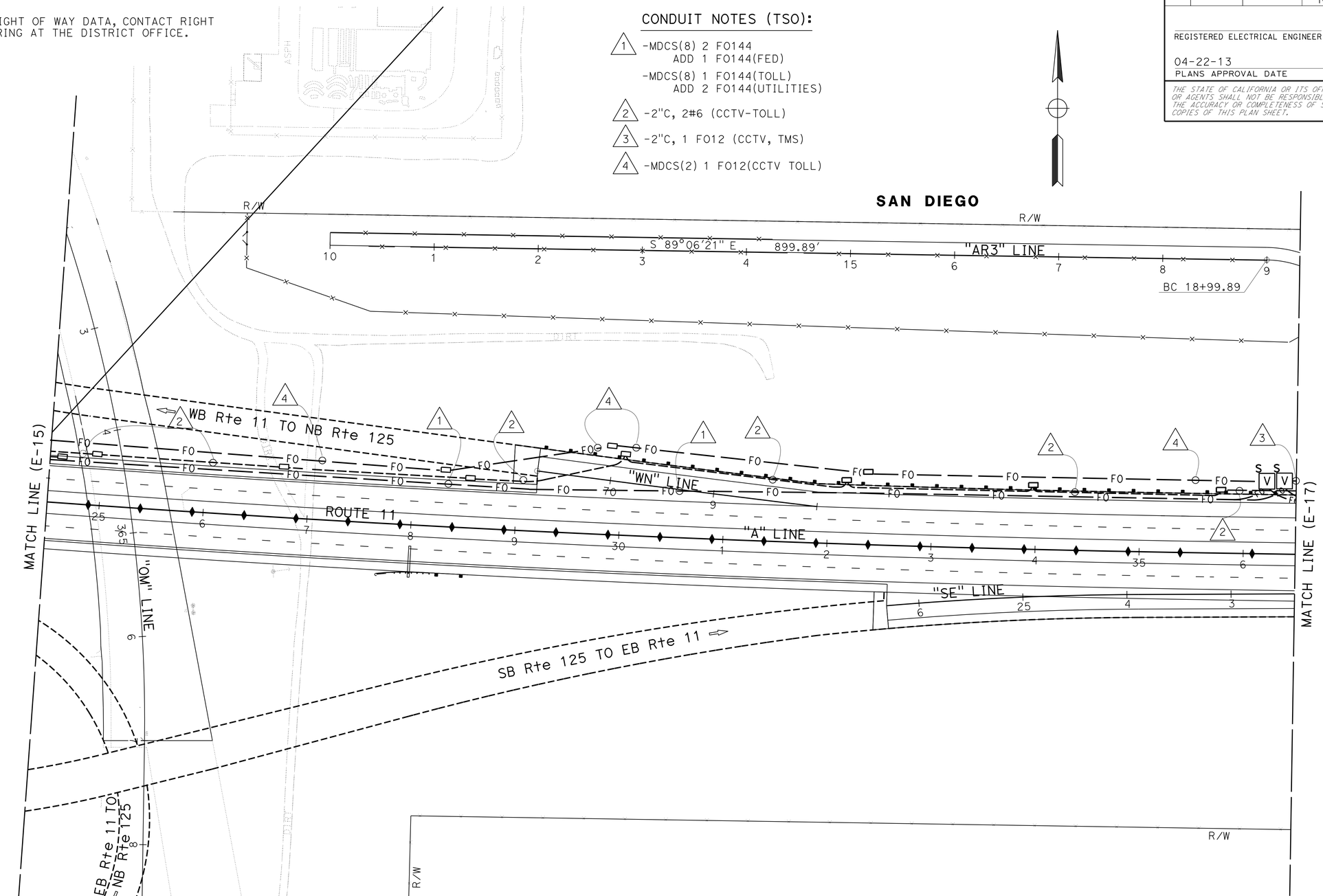

CLOSED CIRCUIT TELEVISION SYSTEM

SCALE: 1" = 50'

E-16

APPROVED FOR ELECTRICAL WORK ONLY

STATE OF CALIFORNIA - DEPARTMENT OF TRANSPORTATION
Caltrans® TRAFFIC ELECTRICAL

FUNCTIONAL SUPERVISOR: BRIAN PECUS
CALCULATED-DESIGNED BY: HECTOR SANTAMARIA
CHECKED BY: ENRIQUE BERNAL
REVISED BY
DATE REVISED

LAST REVISION 11-26-12
DATE PLOTTED => 13-MAY-2013
TIME PLOTTED => 21:25

PRELIMINARY FOR BIDDING PURPOSES ONLY

Dist	COUNTY	ROUTE	POST MILES TOTAL PROJECT	SHEET No.	TOTAL SHEETS
11	SD	11,905	0.0/1.6, R9.9/R10.7	410	622

REGISTERED ELECTRICAL ENGINEER DATE

04-22-13
PLANS APPROVAL DATE

REGISTERED PROFESSIONAL ENGINEER HECTOR A. SANTAMARIA No. 18207 Exp. 12-31-13 ELECTRICAL STATE OF CALIFORNIA

THE STATE OF CALIFORNIA OR ITS OFFICERS OR AGENTS SHALL NOT BE RESPONSIBLE FOR THE ACCURACY OR COMPLETENESS OF SCANNED COPIES OF THIS PLAN SHEET.

NOTE:

FOR ACCURATE RIGHT OF WAY DATA, CONTACT RIGHT OF WAY ENGINEERING AT THE DISTRICT OFFICE.

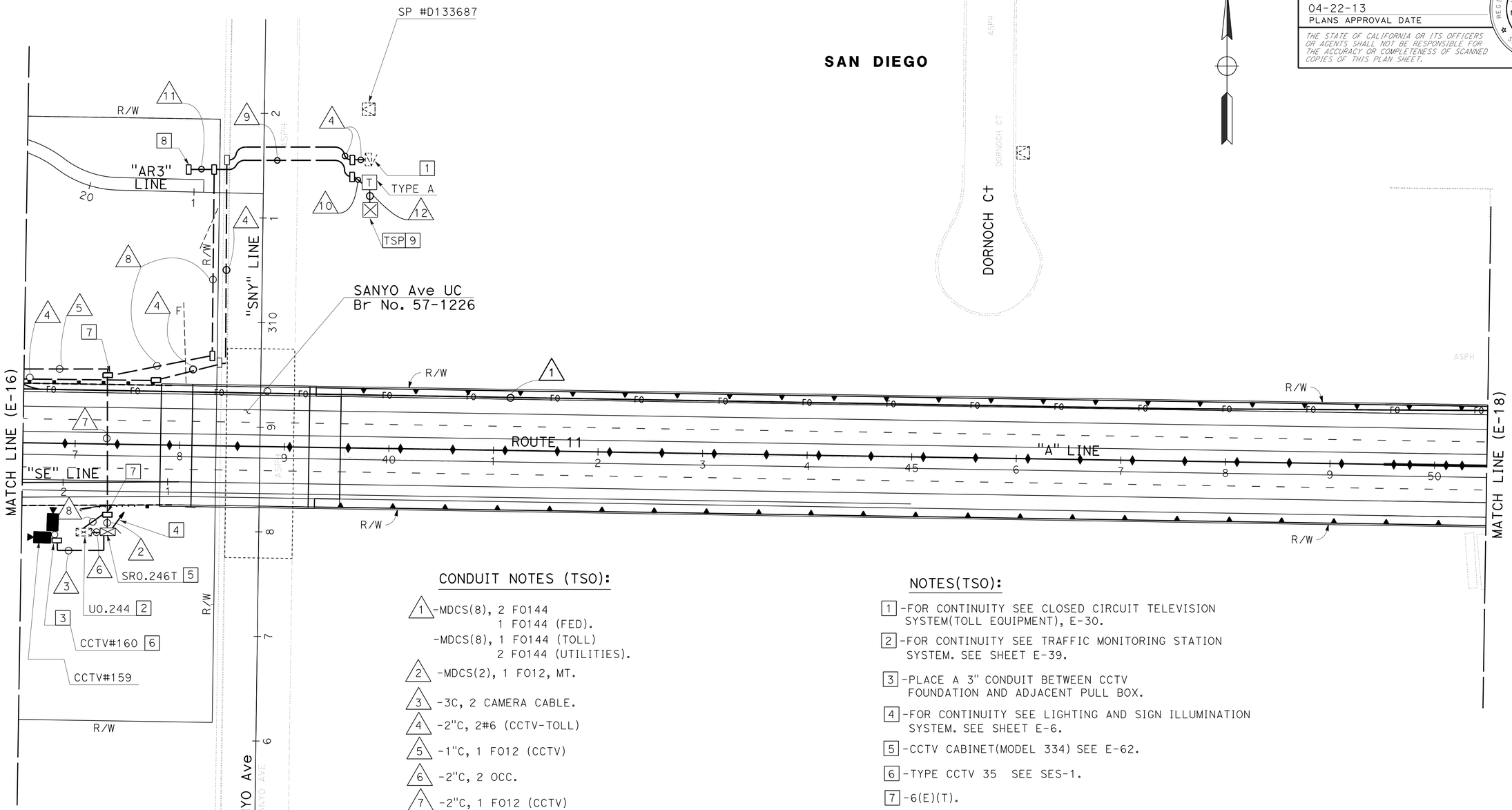

CONDUIT NOTES (TSO):

1. -MDCS(8), 2 FO144
   1 FO144 (FED).
   -MDCS(8), 1 FO144 (TOLL)
   2 FO144 (UTILITIES).
2. -MDCS(2), 1 FO12, MT.
3. -3C, 2 CAMERA CABLE.
4. -2"C, 2#6 (CCTV-TOLL)
5. -1"C, 1 FO12 (CCTV)
6. -2"C, 2 OCC.
7. -2"C, 1 FO12 (CCTV)
   1 SIC (TMS-TEL).
8. - 2"C, 1 SIC (TMS-TEL).
9. - 2"C, 1 SIC (TMS-IRR).
10. - 1½"C, 1 SIC (TMS-IRR).
11. - 2"C, 1 SIC (IRR-TEL).
12. - 2"C, MT.
    CABLES BY OTHERS.

NOTES(TSO):

1. -FOR CONTINUITY SEE CLOSED CIRCUIT TELEVISION SYSTEM(TOLL EQUIPMENT), E-30.
2. -FOR CONTINUITY SEE TRAFFIC MONITORING STATION SYSTEM. SEE SHEET E-39.
3. -PLACE A 3" CONDUIT BETWEEN CCTV FOUNDATION AND ADJACENT PULL BOX.
4. -FOR CONTINUITY SEE LIGHTING AND SIGN ILLUMINATION SYSTEM. SEE SHEET E-6.
5. -CCTV CABINET(MODEL 334) SEE E-62.
6. -TYPE CCTV 35 SEE SES-1.
7. -6(E)(T).
8. -PULL BOX FOR FUTURE IRRIGATION CONTROLLER.
9. -CONDUIT TO ENTER TELEPHONE PEDESTAL BY AT&T REQUIREMENTNS

CLOSED CIRCUIT TELEVISION SYSTEM

SCALE: 1"=50'

APPROVED FOR ELECTRICAL WORK ONLY

E-17

STATE OF CALIFORNIA - DEPARTMENT OF TRANSPORTATION
Caltrans® TRAFFIC ELECTRICAL

FUNCTIONAL SUPERVISOR: BRIAN PECUS
CALCULATED-DESIGNED BY: HECTOR SANTAMARIA
CHECKED BY: ENRIQUE BERNAL
REVISED BY / DATE REVISED

LAST REVISION 03-04-13 | DATE PLOTTED => 13-MAY-2013 TIME PLOTTED => 21:25

PRELIMINARY FOR BIDDING PURPOSES ONLY

Dist	COUNTY	ROUTE	POST MILES TOTAL PROJECT	SHEET No.	TOTAL SHEETS
11	SD	11,905	0.0/1.6, R9.9/R10.7	411	622

REGISTERED ELECTRICAL ENGINEER DATE

04-22-13
PLANS APPROVAL DATE

REGISTERED PROFESSIONAL ENGINEER
HECTOR A. SANTAMARIA
No. 18207
Exp. 12-31-13
ELECTRICAL
STATE OF CALIFORNIA

THE STATE OF CALIFORNIA OR ITS OFFICERS OR AGENTS SHALL NOT BE RESPONSIBLE FOR THE ACCURACY OR COMPLETENESS OF SCANNED COPIES OF THIS PLAN SHEET.

NOTES(TSO):

1 -FOR CONTINUITY SEE TRAFFIC MONITORING STATION SYSTEM. SEE SHEET E-38.

2 -FOR CONTINUITY SEE LIGHTING AND SIGN ILLUMINATION, E-7.

3 -FOR ACCURATE RIGHT OF WAY DATA, CONTACT RIGHT OF WAY ENGINEERING AT THE DISTRICT OFFICE.

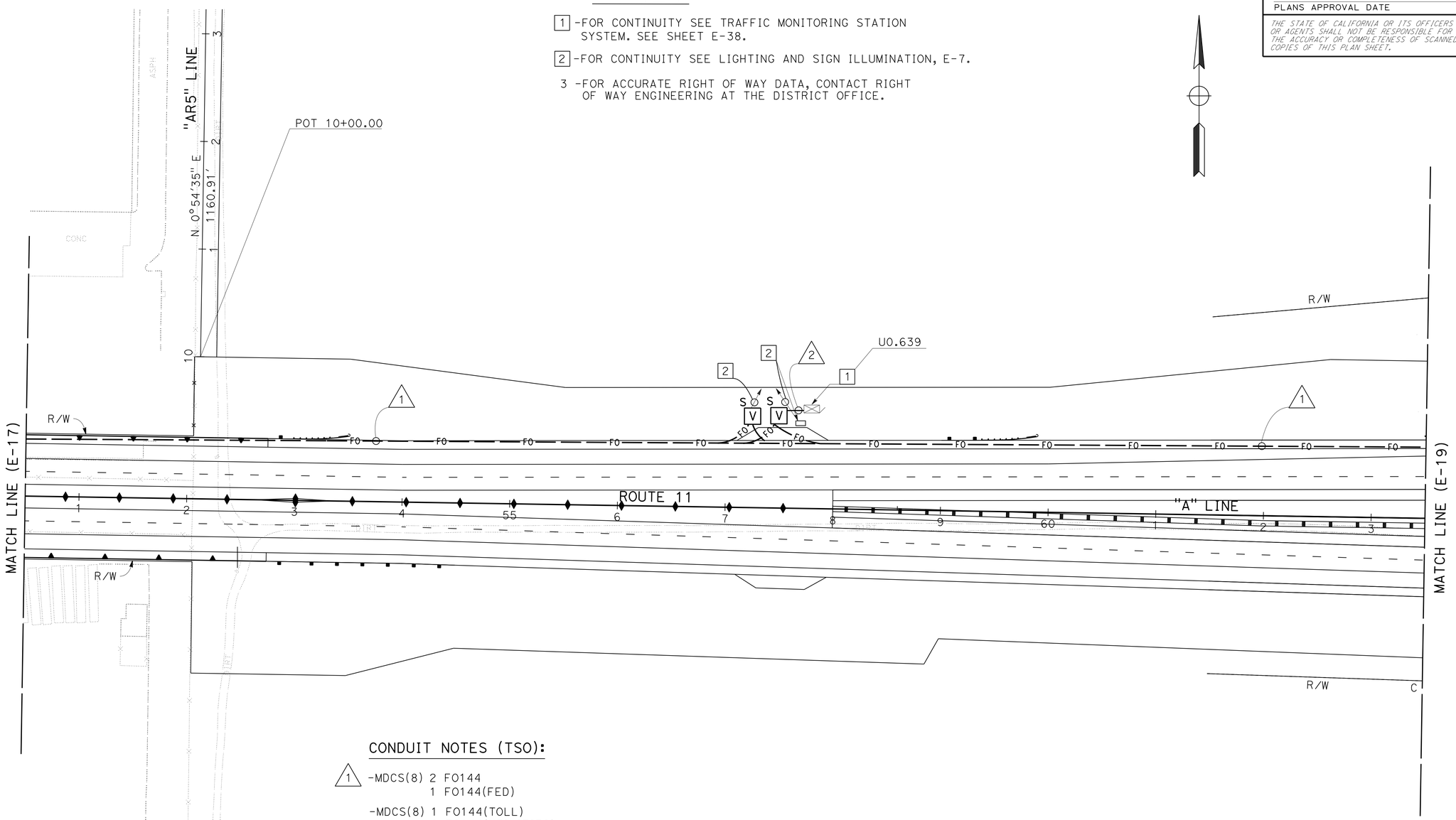

CONDUIT NOTES (TSO):

1 -MDCS(8) 2 FO144
1 FO144(FED)

-MDCS(8) 1 FO144(TOLL)
2 FO144(UTILITIES)

2 -2"C, 1 FO12(TMS)

CLOSED CIRCUIT TELEVISION SYSTEM

APPROVED FOR ELECTRICAL WORK ONLY

SCALE: 1"=50'

E-18

STATE OF CALIFORNIA - DEPARTMENT OF TRANSPORTATION
Caltrans
TRAFFIC ELECTRICAL

FUNCTIONAL SUPERVISOR: BRIAN PECUS
CALCULATED-DESIGNED BY: HECTOR SANTAMARIA
CHECKED BY: ENRIQUE BERNAL
REVISED BY
DATE REVISED

LAST REVISION 03-04-13
DATE PLOTTED => 13-MAY-2013
TIME PLOTTED => 21:25

Dist	COUNTY	ROUTE	POST MILES TOTAL PROJECT	SHEET No.	TOTAL SHEETS
11	SD	11,905	0.0/1.6, R9.9/R10.7	412	622

REGISTERED ELECTRICAL ENGINEER DATE

04-22-13
PLANS APPROVAL DATE

REGISTERED PROFESSIONAL ENGINEER
HECTOR A. SANTAMARIA
No. 18207
Exp. 12-31-13
ELECTRICAL
STATE OF CALIFORNIA

THE STATE OF CALIFORNIA OR ITS OFFICERS OR AGENTS SHALL NOT BE RESPONSIBLE FOR THE ACCURACY OR COMPLETENESS OF SCANNED COPIES OF THIS PLAN SHEET.

CONDUIT NOTES (TSO):

1. -MDCS(8) 2 FO144
   1 FO144(FED)
   -MDCS(8) 1 FO144(TOLL)
   2 FO144(UTILITIES)
2. -MDCS(2), 2 FO12(TOLL)
3. -3"C, 2 CAMERA CABLE
4. -MDCS(2), 1 FO12, MT.
5. -MDCS(2), 1 FO12, MT.
   MDCS(2), 2 FO12(TOLL)
6. -MDCS(8) MT.
   -MDCS(8) MT(TOLL)

NOTES(TSO):

1. -PLACE A 3"C BETWEEN CCTV POLE FOUNDATION AND ADJACENT PULL BOX.
2. -TYPE CCTV 35 SEE SES-1.
3. -CCTV CABINET SEE E-62.
4. -FOR CONTINUITY SEE LIGHTING AND SIGN ILLUMINATION, E-8.
5. -FOR CONTINUITY SEE RAMP METERING SYSTEM, E-36.
6. - BELOW BOTTOM OF CONDUIT. CONDUIT BENDS SHALL BE AT AN ANGLE OF 22.5°. PULL BOX COVER SHALL BE MARKED AS "FIBER OPTIC".
7. -FOR ACCURATE RIGHT OF WAY DATA, CONTACT RIGHT OF WAY ENGINEERING AT THE DISTRICT OFFICE.

SAN DIEGO COUNTY

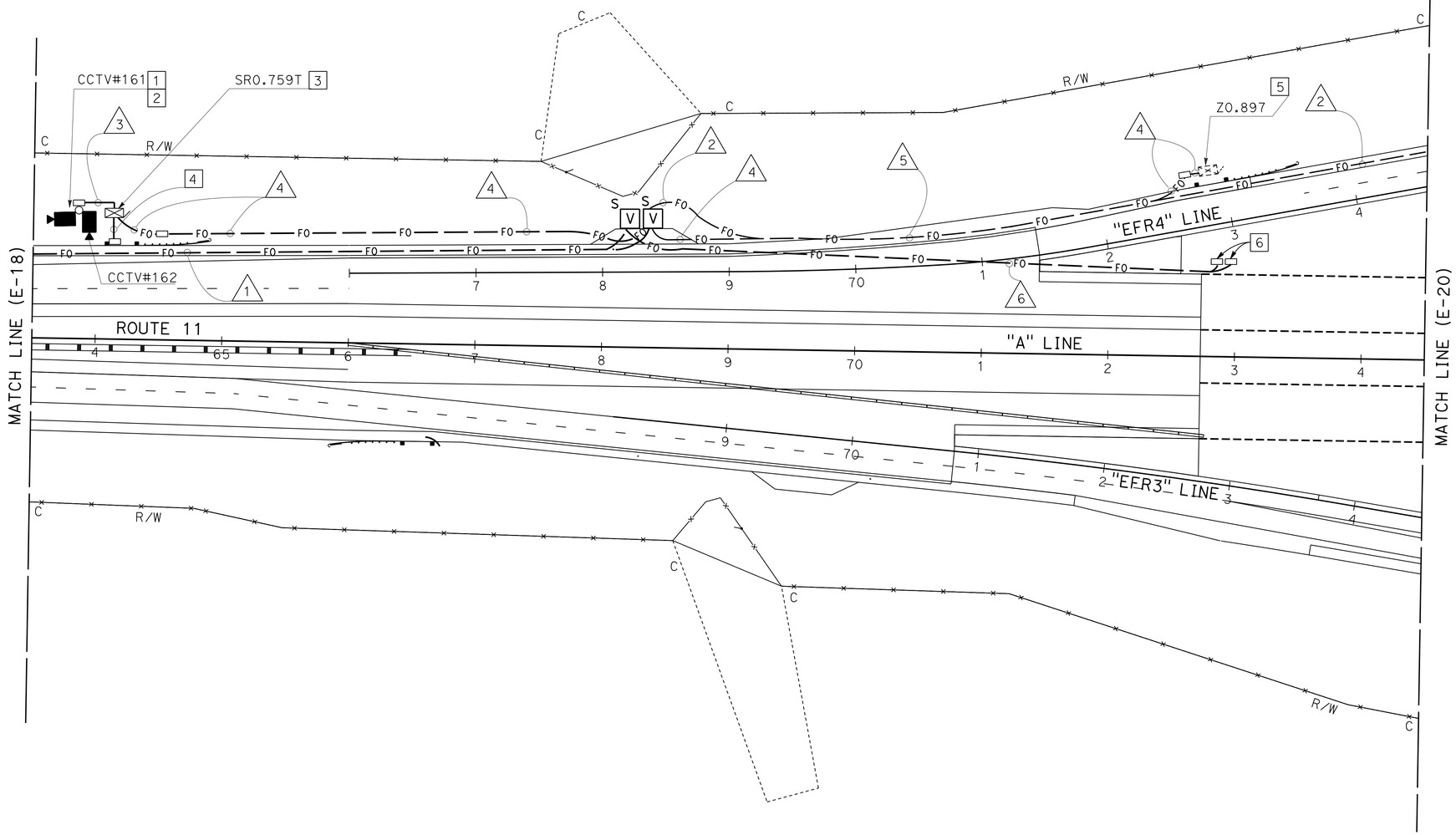

CLOSED CIRCUIT TELEVISION SYSTEM

SCALE: 1" = 50'

E-19

PRELIMINARY FOR BIDDING PURPOSES ONLY

APPROVED FOR ELECTRICAL WORK ONLY

STATE OF CALIFORNIA - DEPARTMENT OF TRANSPORTATION
Caltrans® **TRAFFIC ELECTRICAL**

FUNCTIONAL SUPERVISOR: BRIAN PECUS
CALCULATED-DESIGNED BY: HECTOR SANTAMARIA
CHECKED BY: ENRIQUE BERNAL
REVISED BY / DATE REVISED

LAST REVISION 03-04-13 | DATE PLOTTED => 13-MAY-2013 | TIME PLOTTED => 21:25

PRELIMINARY FOR BIDDING PURPOSES ONLY

Dist	COUNTY	ROUTE	POST MILES TOTAL PROJECT	SHEET No.	TOTAL SHEETS
11	SD	11,905	0.0/1.6, R9.9/R10.7	413	622

REGISTERED ELECTRICAL ENGINEER DATE

04-22-13
PLANS APPROVAL DATE

REGISTERED PROFESSIONAL ENGINEER
HECTOR A. SANTAMARIA
No. 18207
Exp. 12-31-13
ELECTRICAL
STATE OF CALIFORNIA

THE STATE OF CALIFORNIA OR ITS OFFICERS OR AGENTS SHALL NOT BE RESPONSIBLE FOR THE ACCURACY OR COMPLETENESS OF SCANNED COPIES OF THIS PLAN SHEET.

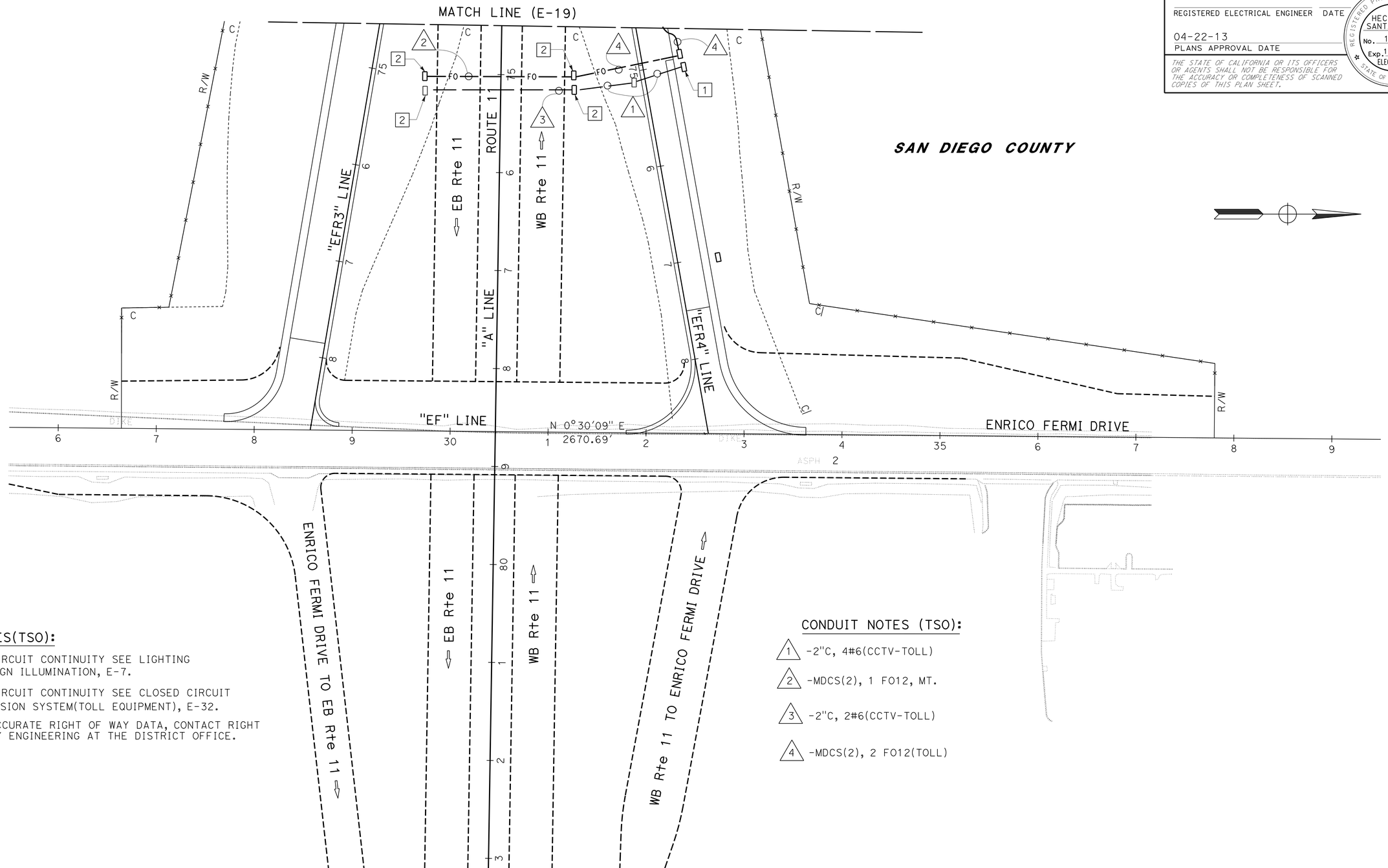

NOTES(TSO):

1 -FOR CIRCUIT CONTINUITY SEE LIGHTING AND SIGN ILLUMINATION, E-7.

2 -FOR CIRCUIT CONTINUITY SEE CLOSED CIRCUIT TELEVISION SYSTEM(TOLL EQUIPMENT), E-32.

3 -FOR ACCURATE RIGHT OF WAY DATA, CONTACT RIGHT OF WAY ENGINEERING AT THE DISTRICT OFFICE.

CONDUIT NOTES (TSO):

1 -2"C, 4#6(CCTV-TOLL)

2 -MDCS(2), 1 FO12, MT.

3 -2"C, 2#6(CCTV-TOLL)

4 -MDCS(2), 2 FO12(TOLL)

CLOSED CIRCUIT TELEVISION SYSTEM

SCALE: 1"=50'

E-20

APPROVED FOR ELECTRICAL WORK ONLY

STATE OF CALIFORNIA - DEPARTMENT OF TRANSPORTATION
Caltrans® TRAFFIC ELECTRICAL

FUNCTIONAL SUPERVISOR: BRIAN PECUS
CALCULATED-DESIGNED BY: HECTOR SANTAMARIA
CHECKED BY: ENRIQUE BERNAL
REVISED BY / DATE REVISED

LAST REVISION 03-04-13 | DATE PLOTTED => 13-MAY-2013 | TIME PLOTTED => 21:25

Dist	COUNTY	ROUTE	POST MILES TOTAL PROJECT	SHEET No.	TOTAL SHEETS
11	SD	11,905	0.0/1.6, R9.9/10.7	414	622

REGISTERED ELECTRICAL ENGINEER DATE

04-22-13
PLANS APPROVAL DATE

REGISTERED PROFESSIONAL ENGINEER HECTOR A. SANTAMARIA No. 18207 Exp. 12-31-13 ELECTRICAL STATE OF CALIFORNIA

THE STATE OF CALIFORNIA OR ITS OFFICERS OR AGENTS SHALL NOT BE RESPONSIBLE FOR THE ACCURACY OR COMPLETENESS OF SCANNED COPIES OF THIS PLAN SHEET.

NOTES (TSO):

1. -6(E)(T) PB. EXTEND PULL BOX 2" Min. BELOW BOTTOM OF CONDUIT. CONDUIT BENDS SHALL BE AT AN ANGLE OF 22.5°. PULL BOX COVER SHALL BE MARKED AS "FIBER OPTIC".

2. - PLACE MDCS BY JACK/DRILLING METHOD.

3 -FOR ACCURATE RIGHT OF WAY DATA, CONTACT RIGHT OF WAY ENGINEERING AT THE DISTRICT OFFICE.

CONDUIT NOTES (TSO):

N C 1 -Exist 2"C, 3 sic
1 sic (telephone)
1 occ
-Exist 1"C, 1 fo12

N C 2 -Exist 1"C, 1 fo12

3 - MDCS(8), 1 FO144(TOLL)
1 FO144
2 FO144(UTILITIES)

4 - MDCS(8), 1 FO144(TOLL)
1 FO144

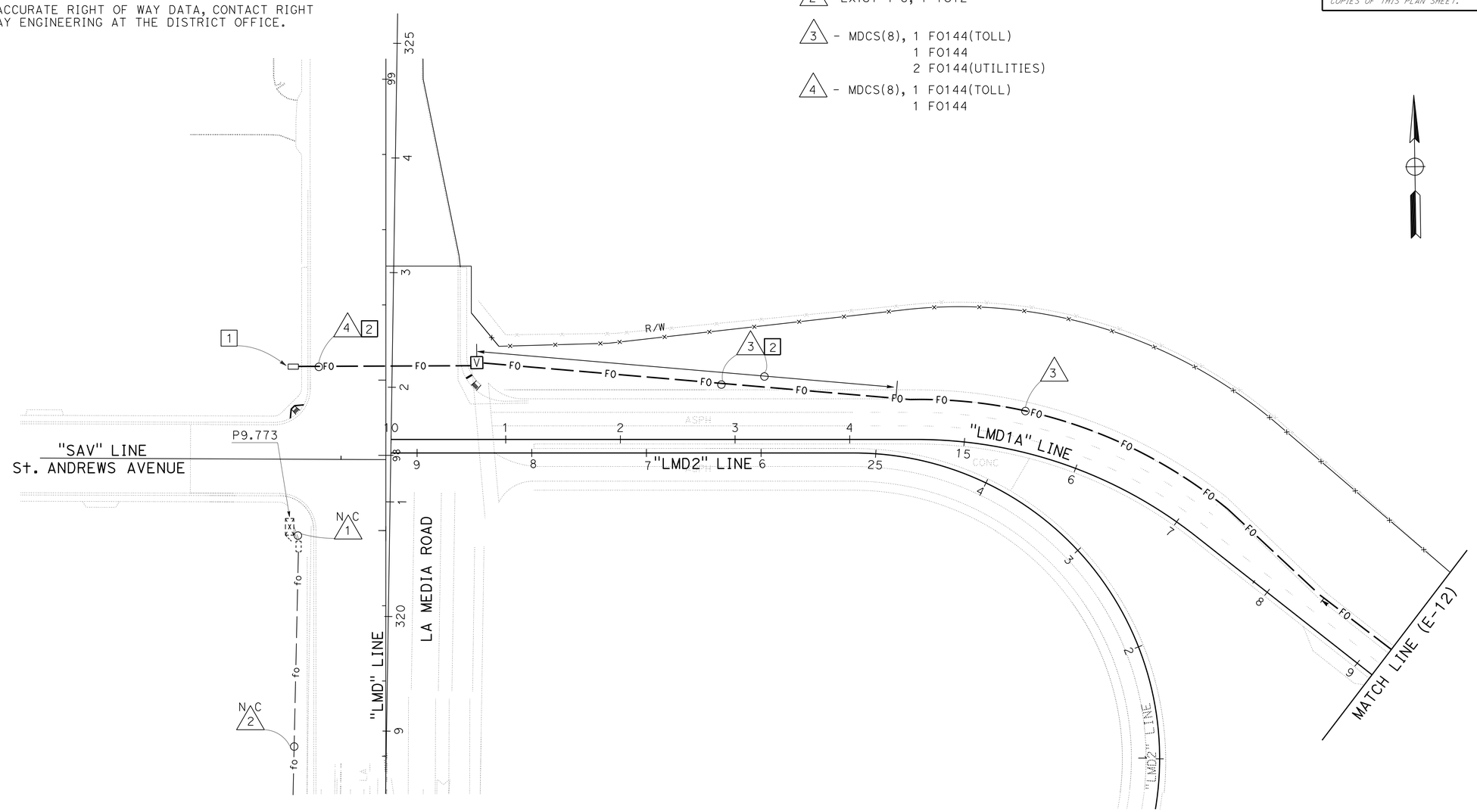

PRELIMINARY FOR BIDDING PURPOSES ONLY

APPROVED FOR ELECTRICAL WORK ONLY

CLOSED CIRCUIT TELEVISION SYSTEM

SCALE: 1" = 50'

E-21

STATE OF CALIFORNIA - DEPARTMENT OF TRANSPORTATION
Caltrans® TRAFFIC ELECTRICAL

FUNCTIONAL SUPERVISOR: BRIAN PECUS
CALCULATED-DESIGNED BY: HECTOR SANTAMARIA
CHECKED BY: ENRIQUE BERNAL
REVISED BY
DATE REVISED

LAST REVISION 03-04-13
DATE PLOTTED => 06-JUN-2013
TIME PLOTTED => 08:32

Dist	COUNTY	ROUTE	POST MILES TOTAL PROJECT	SHEET No.	TOTAL SHEETS
11	SD	11,905	0.0/1.6, R9.9/R10.7	415	622

REGISTERED ELECTRICAL ENGINEER DATE

04-22-13
PLANS APPROVAL DATE

REGISTERED PROFESSIONAL ENGINEER
HECTOR A. SANTAMARIA
No. 18207
Exp. 12-31-13
ELECTRICAL
STATE OF CALIFORNIA

THE STATE OF CALIFORNIA OR ITS OFFICERS OR AGENTS SHALL NOT BE RESPONSIBLE FOR THE ACCURACY OR COMPLETENESS OF SCANNED COPIES OF THIS PLAN SHEET.

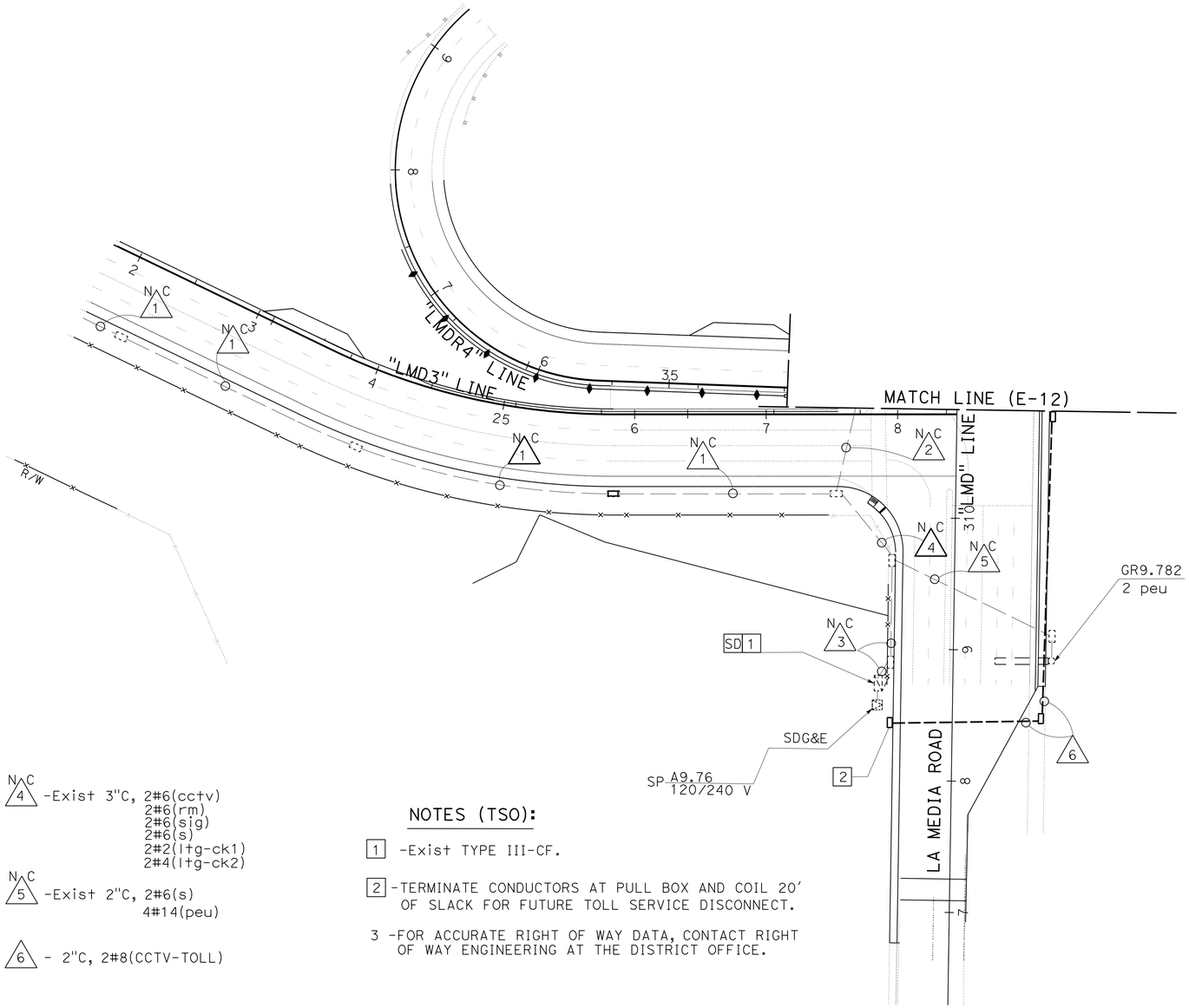

CONDUIT NOTES (TSO):

N C 1 -Exist 2"C, 2#6(ltg)
2#2(ltg-ck1)
2#4(ltg-ck2)

N C 2 -Exist 2"C, 2#6(CCTV)
2#6(rm)
2#6(sig)
2#6(ltg)
2#6(s)

N C 3 -Exist 3"C, 2#6(cctv6)
2#6(rm)
2#6(sig)
2#6(s)
4#14(peu)
2#2(ltg-ck1)
2#4(ltg-ck2)

N C 4 -Exist 3"C, 2#6(cctv)
2#6(rm)
2#6(sig)
2#6(s)
2#2(ltg-ck1)
2#4(ltg-ck2)

N C 5 -Exist 2"C, 2#6(s)
4#14(peu)

6 - 2"C, 2#8(CCTV-TOLL)

NOTES (TSO):

1 -Exist TYPE III-CF.

2 -TERMINATE CONDUCTORS AT PULL BOX AND COIL 20' OF SLACK FOR FUTURE TOLL SERVICE DISCONNECT.

3 -FOR ACCURATE RIGHT OF WAY DATA, CONTACT RIGHT OF WAY ENGINEERING AT THE DISTRICT OFFICE.

PRELIMINARY FOR BIDDING PURPOSES ONLY

APPROVED FOR ELECTRICAL WORK ONLY

CLOSED CIRCUIT TELEVISION SYSTEM

SCALE: 1" = 50'

E-22

REVISED BY | DATE REVISED
HECTOR SANTAMARIA
ENRIQUE BERNAL
CALCULATED-DESIGNED BY | CHECKED BY
FUNCTIONAL SUPERVISOR
BRIAN PECUS

STATE OF CALIFORNIA - DEPARTMENT OF TRANSPORTATION
Caltrans® TRAFFIC ELECTRICAL

LAST REVISION 03-04-13 | DATE PLOTTED => 13-MAY-2013 | TIME PLOTTED => 21:25

PRELIMINARY FOR BIDDING PURPOSES ONLY

Dist	COUNTY	ROUTE	POST MILES TOTAL PROJECT	SHEET No.	TOTAL SHEETS
11	SD	11,905	0.0/1.6, R9.9/R10.7	416	622

REGISTERED ELECTRICAL ENGINEER DATE

04-22-13
PLANS APPROVAL DATE

REGISTERED PROFESSIONAL ENGINEER
HECTOR A. SANTAMARIA
No. 18207
Exp. 12-31-13
ELECTRICAL
STATE OF CALIFORNIA

THE STATE OF CALIFORNIA OR ITS OFFICERS OR AGENTS SHALL NOT BE RESPONSIBLE FOR THE ACCURACY OR COMPLETENESS OF SCANNED COPIES OF THIS PLAN SHEET.

NOTES(TSO):

1 -TERMINATE CONDUCTORS AT PULL BOX AND COIL 20' OF SLACK FOR FUTURE SD TOLL.

2 -END THE TOLL FO144 AT Exist VAULT.

3 -FOR ACCURACY RIGHT OF WAY DATA, CONTACT RIGHT OF WAY ENGINEERING AT THE DISTRICT OFFICE.

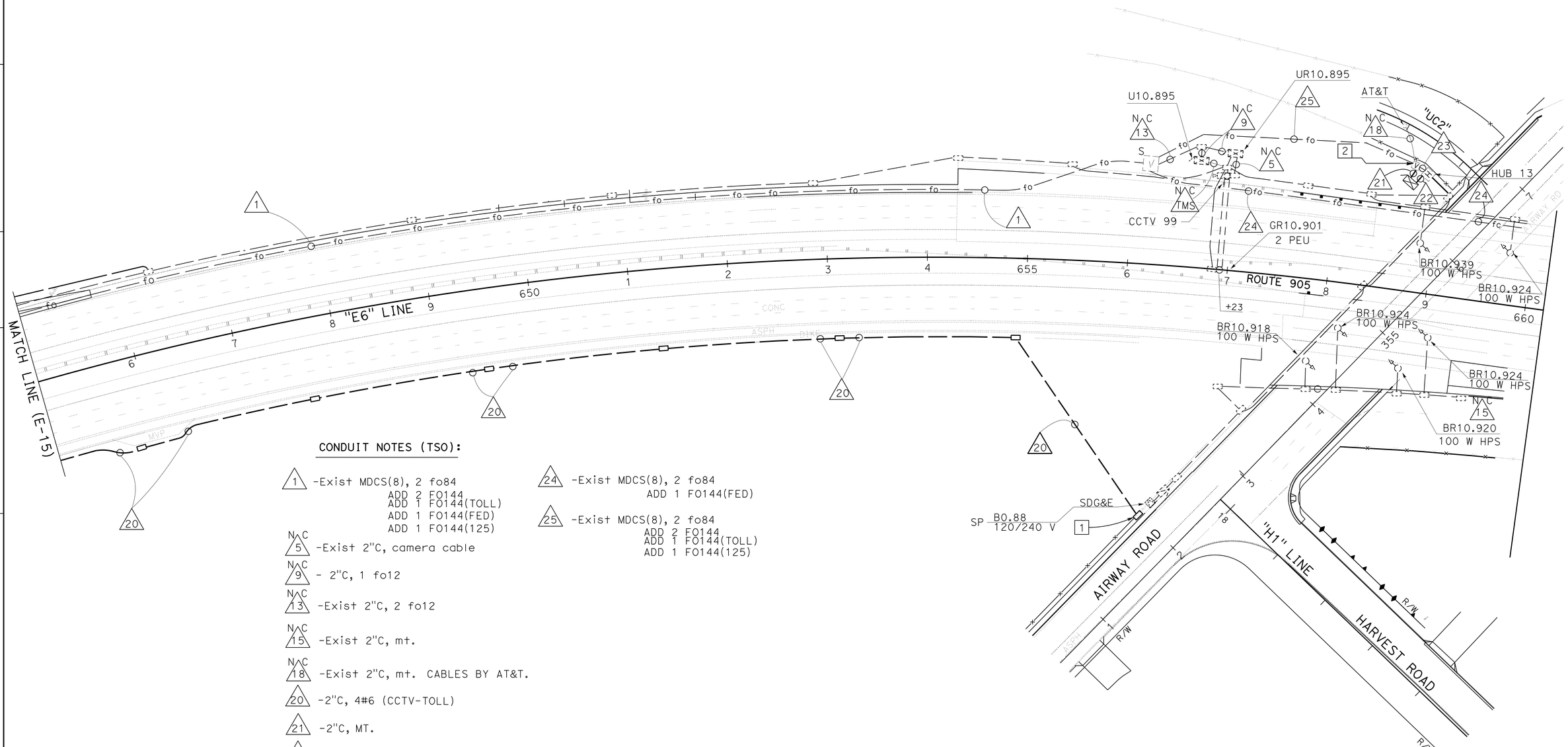

CONDUIT NOTES (TSO):

1 -Exist MDCS(8), 2 fo84
ADD 2 FO144
ADD 1 FO144(TOLL)
ADD 1 FO144(FED)
ADD 1 FO144(125)

NC 5 -Exist 2"C, camera cable

NC 9 - 2"C, 1 fo12

NC 13 -Exist 2"C, 2 fo12

NC 15 -Exist 2"C, mt.

NC 18 -Exist 2"C, mt. CABLES BY AT&T.

20 -2"C, 4#6 (CCTV-TOLL)

21 -2"C, MT.

22 -2"C, MT.

23 -Exist MDCS(8), 2 fo84
ADD 3 FO144

24 -Exist MDCS(8), 2 fo84
ADD 1 FO144(FED)

25 -Exist MDCS(8), 2 fo84
ADD 2 FO144
ADD 1 FO144(TOLL)
ADD 1 FO144(125)

APPROVED FOR ELECTRICAL WORK ONLY

CLOSED CIRCUIT TELEVISION SYSTEM

SCALE: 1"=50'

E-23

STATE OF CALIFORNIA - DEPARTMENT OF TRANSPORTATION
Caltrans TRAFFIC ELECTRICAL

FUNCTIONAL SUPERVISOR: BRIAN PECUS
CALCULATED-DESIGNED BY: HECTOR SANTAMARIA
CHECKED BY: ENRIQUE BERNAL
REVISED BY
DATE REVISED

LAST REVISION 03-04-13
DATE PLOTTED => 13-MAY-2013
TIME PLOTTED => 21:25

Dist	COUNTY	ROUTE	POST MILES TOTAL PROJECT	SHEET No.	TOTAL SHEETS
11	SD	11,905	0.0/1.6, R9.9/R10.7	417	622

REGISTERED ELECTRICAL ENGINEER DATE

04-22-13
PLANS APPROVAL DATE

REGISTERED PROFESSIONAL ENGINEER
HECTOR A. SANTAMARIA
No. 18207
Exp. 12-31-13
ELECTRICAL
STATE OF CALIFORNIA

THE STATE OF CALIFORNIA OR ITS OFFICERS OR AGENTS SHALL NOT BE RESPONSIBLE FOR THE ACCURACY OR COMPLETENESS OF SCANNED COPIES OF THIS PLAN SHEET.

CONDUIT NOTES (TSO):

1 - Exist MDCS(8), 2 FO84
ADD: 1 FO144(FED)

N 2 C - Exist 2"C, 2#8 (ltg)

N 3 C - Exist 2"C, 2#8 (s)
2#8 (ltg)

N 4 C - Exist 2"C, 2#8 (ltg)
2#8 (s)

N 5 C - Exist 2"c, 2#8 (ltg)

6 - Exist MDCS(8), 2 fo84
ADD: 1 FO144(FED)

N 12 C - Exist 2"C, 2#6

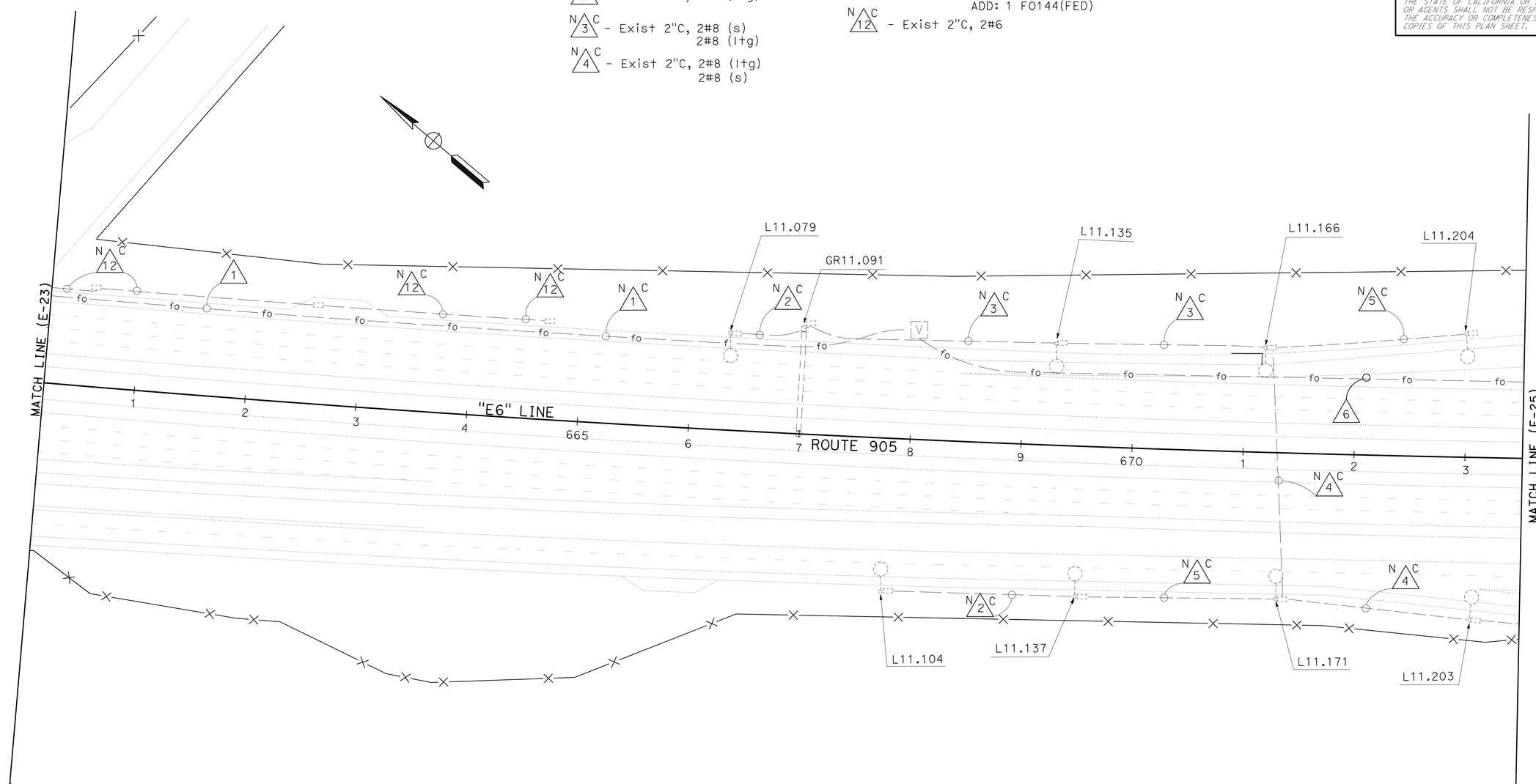

CLOSED CIRCUIT TELEVISION SYSTEM

PRELIMINARY FOR BIDDING PURPOSES ONLY

APPROVED FOR ELECTRICAL WORK ONLY

SCALE: 1"= 50'

E-24

STATE OF CALIFORNIA - DEPARTMENT OF TRANSPORTATION
Caltrans TRAFFIC ELECTRICAL

FUNCTIONAL SUPERVISOR: BRIAN PECUS
CALCULATED-DESIGNED BY: HECTOR SANTAMARIA
CHECKED BY: ENRIQUE BERNAL
REVISED BY
DATE REVISED

LAST REVISION 03-04-13
DATE PLOTTED => 13-MAY-2013
TIME PLOTTED => 21:25

Dist	COUNTY	ROUTE	POST MILES TOTAL PROJECT	SHEET No.	TOTAL SHEETS
11	SD	11,905	0.0/1.6, R9.9/R10.7	418	622

REGISTERED ELECTRICAL ENGINEER DATE

04-22-13
PLANS APPROVAL DATE

REGISTERED PROFESSIONAL ENGINEER
HECTOR A. SANTAMARIA
No. 18207
Exp. 12-31-13
ELECTRICAL
STATE OF CALIFORNIA

THE STATE OF CALIFORNIA OR ITS OFFICERS OR AGENTS SHALL NOT BE RESPONSIBLE FOR THE ACCURACY OR COMPLETENESS OF SCANNED COPIES OF THIS PLAN SHEET.

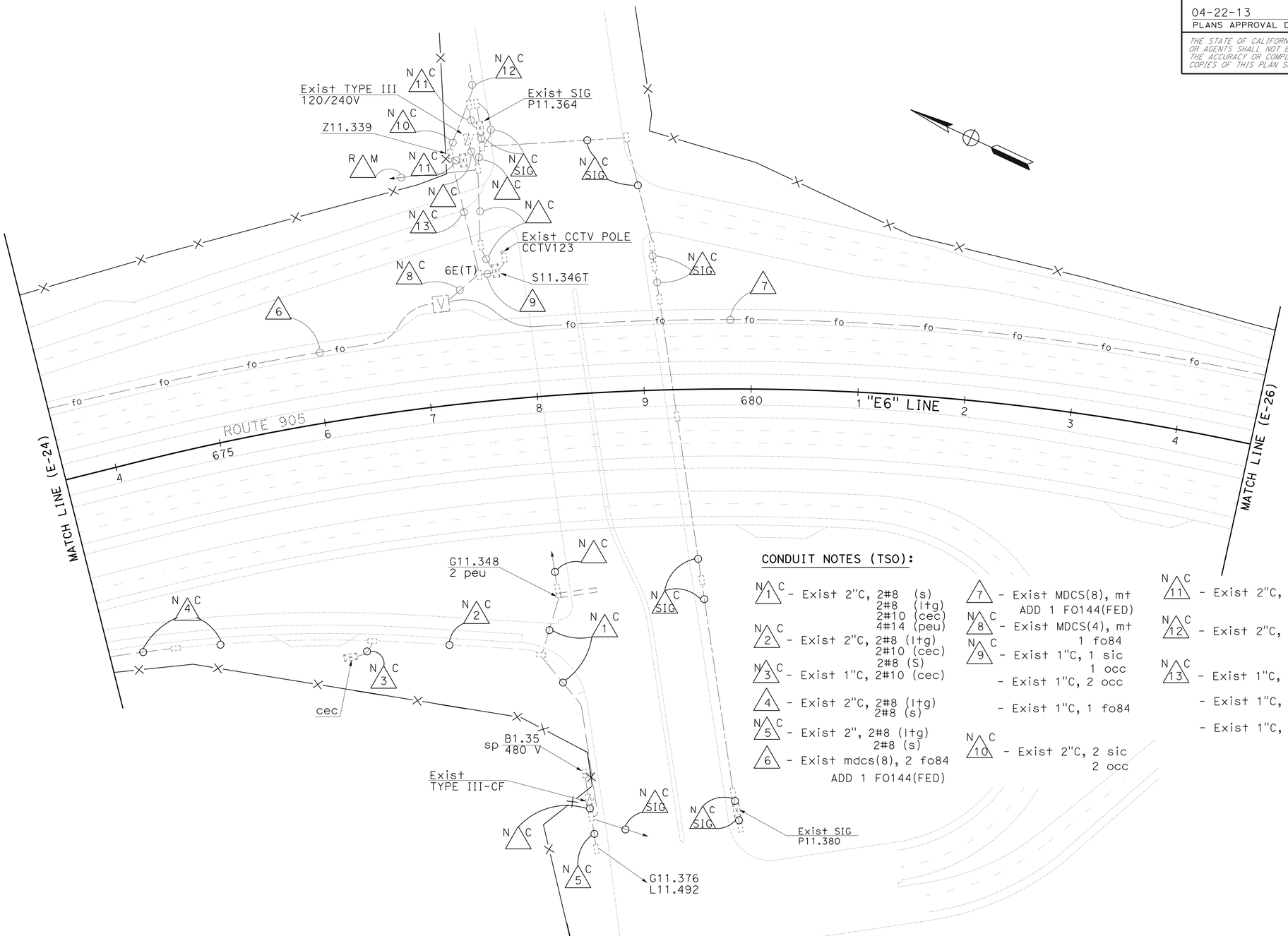

CONDUIT NOTES (TSO):

- N/1 C - Exist 2"C, 2#8 (s) 2#8 (ltg) 2#10 (cec) 4#14 (peu)
- N/2 C - Exist 2"C, 2#8 (ltg) 2#10 (cec) 2#8 (S)
- N/3 C - Exist 1"C, 2#10 (cec)
- 4 - Exist 2"C, 2#8 (ltg) 2#8 (s)
- N/5 C - Exist 2", 2#8 (ltg) 2#8 (s)
- 6 - Exist mdcs(8), 2 fo84 ADD 1 FO144(FED)
- 7 - Exist MDCS(8), mt ADD 1 FO144(FED)
- N/8 C - Exist MDCS(4), mt 1 fo84
- N/9 C - Exist 1"C, 1 sic 1 occ
  - Exist 1"C, 2 occ
  - Exist 1"C, 1 fo84
- N/10 C - Exist 2"C, 2 sic 2 occ
- N/11 C - Exist 2"C, 1 sic 2 occ
- N/12 C - Exist 2"C, 4 sic 1 occ
- N/13 C - Exist 1"C, 1 sic 1 occ
  - Exist 1"C, mt, 2 occ
  - Exist 1"C, mt

PRELIMINARY FOR BIDDING PURPOSES ONLY

APPROVED FOR ELECTRICAL WORK ONLY

CLOSED CIRCUIT TELEVISION SYSTEM

SCALE: 1"= 50'

E-25

STATE OF CALIFORNIA - DEPARTMENT OF TRANSPORTATION
Caltrans® TRAFFIC ELECTRICAL

FUNCTIONAL SUPERVISOR: BRIAN PECUS
CALCULATED-DESIGNED BY: HECTOR SANTAMARIA
CHECKED BY: ENRIQUE BERNAL
REVISED BY / DATE REVISED

LAST REVISION 03-04-13 | DATE PLOTTED => 13-MAY-2013 | TIME PLOTTED => 21:25

Dist	COUNTY	ROUTE	POST MILES TOTAL PROJECT	SHEET No.	TOTAL SHEETS
11	SD	11,905	0.0/1.6, R9.9/R10.7	419	622

REGISTERED ELECTRICAL ENGINEER DATE

04-22-13
PLANS APPROVAL DATE

REGISTERED PROFESSIONAL ENGINEER
HECTOR A. SANTAMARIA
No. 18207
Exp. 12-31-13
ELECTRICAL
STATE OF CALIFORNIA

THE STATE OF CALIFORNIA OR ITS OFFICERS OR AGENTS SHALL NOT BE RESPONSIBLE FOR THE ACCURACY OR COMPLETENESS OF SCANNED COPIES OF THIS PLAN SHEET.

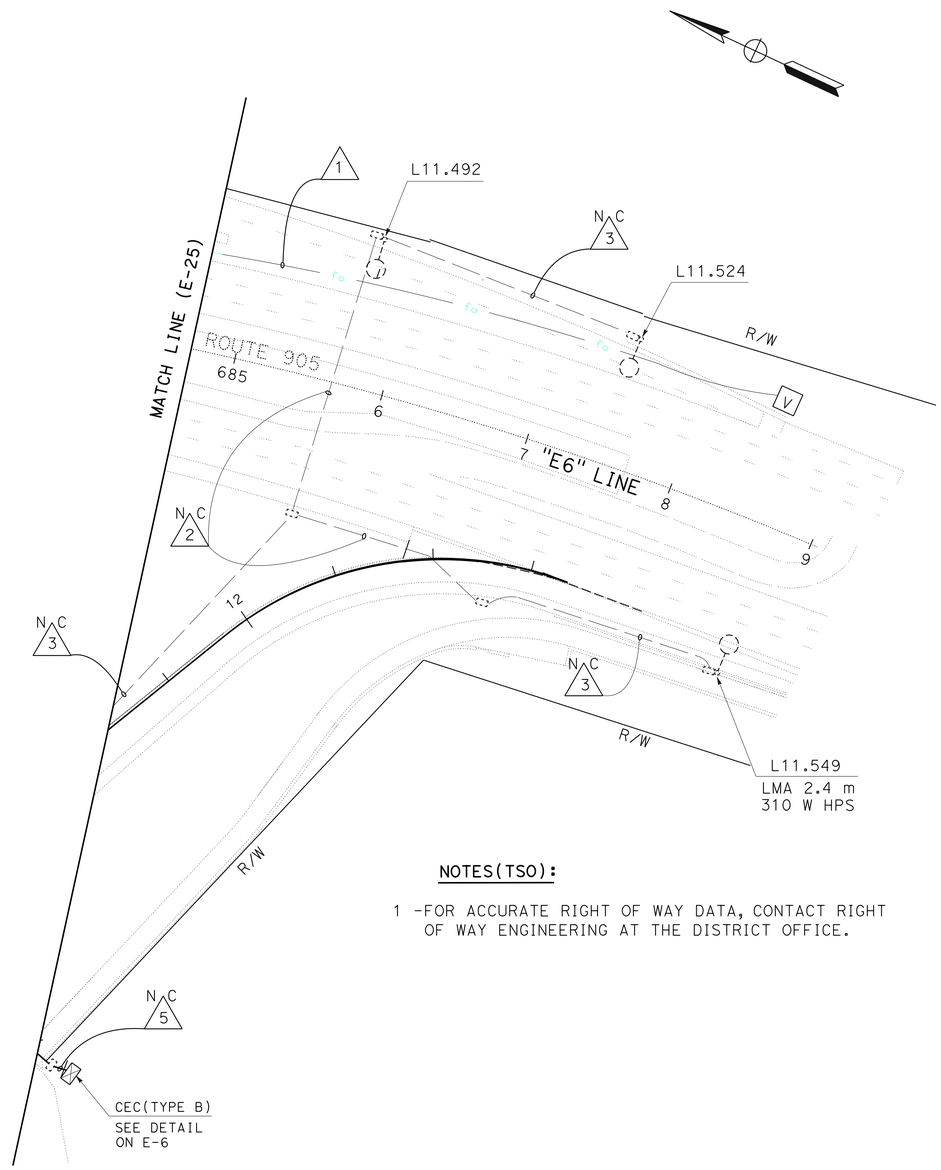

NOTES(TSO):

1 -FOR ACCURATE RIGHT OF WAY DATA, CONTACT RIGHT OF WAY ENGINEERING AT THE DISTRICT OFFICE.

CONDUIT NOTES(TSO):

1 - Exist MDCS(8), mt.
ADD 1 FO144(FED)

2 - Exist 2"C, 2#10(cec),
2#8 (ltg).

N C 3 - Exist 2"C, 2#8 (ltg).

N C 4 - Exist 2"C, 2#10 (cec).

N C 5 - Exist 1"C, 2#10 (cec).

PRELIMINARY FOR BIDDING PURPOSES ONLY

APPROVED FOR ELECTRICAL WORK ONLY

CLOSED CIRCUIT TELEVISION SYSTEM

SCALE: 1"= 50'

E-26

STATE OF CALIFORNIA - DEPARTMENT OF TRANSPORTATION
Caltrans® TRAFFIC ELECTRICAL

FUNCTIONAL SUPERVISOR: BRIAN PECUS
CALCULATED-DESIGNED BY: HECTOR SANTAMARIA
CHECKED BY: ENRIQUE BERNAL
REVISED BY
DATE REVISED

LAST REVISION 03-04-13
DATE PLOTTED => 13-MAY-2013
TIME PLOTTED => 21:26

PRELIMINARY FOR BIDDING PURPOSES ONLY

Dist	COUNTY	ROUTE	POST MILES TOTAL PROJECT	SHEET No.	TOTAL SHEETS
11	SD	11,905	0.0/1.6 R9.9/R10.7	420	622

REGISTERED ELECTRICAL ENGINEER DATE

04-22-13
PLANS APPROVAL DATE

REGISTERED PROFESSIONAL ENGINEER HECTOR A. SANTAMARIA No. 18207 Exp. 12-31-13 ELECTRICAL STATE OF CALIFORNIA

THE STATE OF CALIFORNIA OR ITS OFFICERS OR AGENTS SHALL NOT BE RESPONSIBLE FOR THE ACCURACY OR COMPLETENESS OF SCANNED COPIES OF THIS PLAN SHEET.

CONDUIT NOTES (TSO):

1. - 2"C, MT. 2#8 (CCTV-TOLL).
2. - 2"C, 1 F012 (TOLL).
3. - 3"C, 2 CAMARA CABLE.

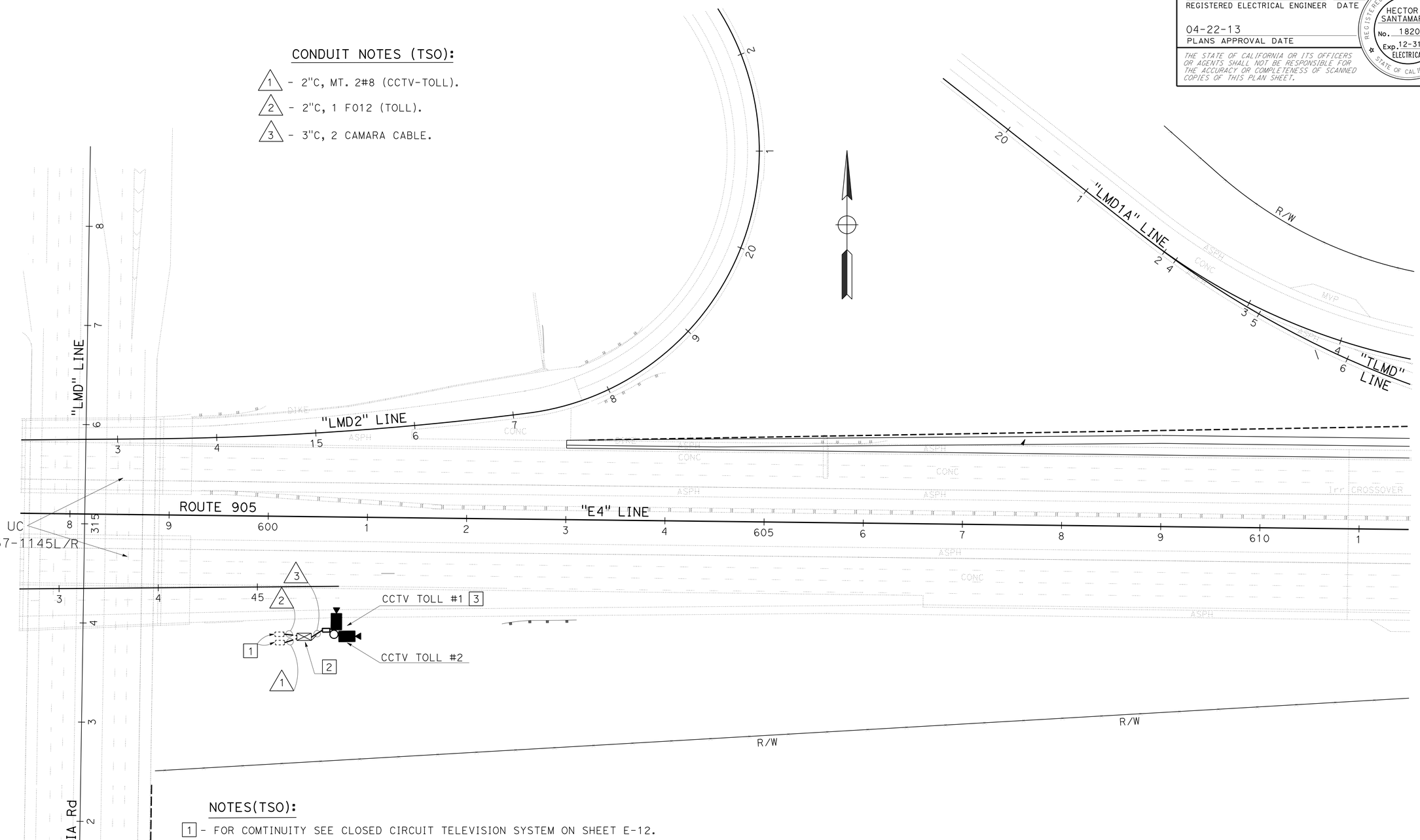

NOTES(TSO):

1. - FOR COMTINUITY SEE CLOSED CIRCUIT TELEVISION SYSTEM ON SHEET E-12.
2. - CCTV CABINET (TOLL) SEE SHEET E-63.
3. - TYPE CCTV 35 SEE SES-1 FOR DETAILS.

4 -FOR ACCURATE RIGHT OF WAY DATA, CONTACT RIGHT OF WAY ENGINEERING AT THE DISTRICT OFFICE.

TOLL EQUIPMENT

CLOSED CIRCUIT TELEVISION SYSTEM

SCALE: 1" = 50'

E-27

APPROVED FOR ELECTRICAL WORK ONLY

STATE OF CALIFORNIA - DEPARTMENT OF TRANSPORTATION
Caltrans® TRAFFIC ELECTRICAL

FUNCTIONAL SUPERVISOR: BRIAN PECUS
CALCULATED-DESIGNED BY: HECTOR SANTAMARIA
CHECKED BY: ENRIQUE BERNAL
REVISED BY
DATE REVISED

LAST REVISION 03-04-13 | DATE PLOTTED => 13-MAY-2013 | TIME PLOTTED => 21:26

Dist	COUNTY	ROUTE	POST MILES TOTAL PROJECT	SHEET No.	TOTAL SHEETS
11	SD	11,905	0.0/1.6, R9.9/R10.7	421	622

REGISTERED ELECTRICAL ENGINEER DATE

04-22-13
PLANS APPROVAL DATE

REGISTERED PROFESSIONAL ENGINEER HECTOR A. SANTAMARIA No. 18207 Exp. 12-31-13 ELECTRICAL STATE OF CALIFORNIA

THE STATE OF CALIFORNIA OR ITS OFFICERS OR AGENTS SHALL NOT BE RESPONSIBLE FOR THE ACCURACY OR COMPLETENESS OF SCANNED COPIES OF THIS PLAN SHEET.

PRELIMINARY FOR BIDDING PURPOSES ONLY

CONDUIT NOTES (TSO):

1 - 2"C, 2#8 (CCTV-TOLL).

2 - 2"C, 1 FO12 (TOLL).

3 - 3"C, 2 CAMERA CABLE.

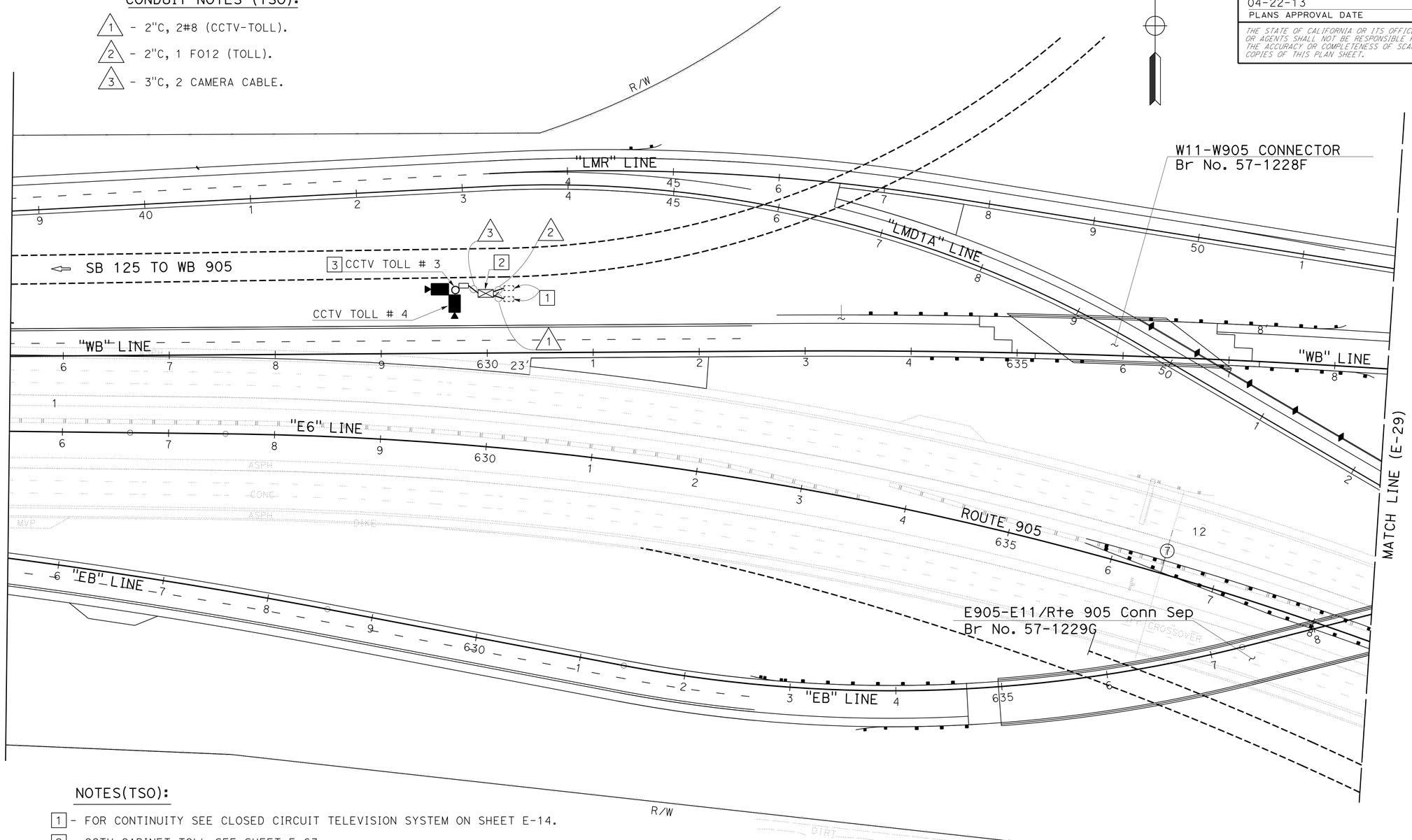

NOTES(TSO):

1 - FOR CONTINUITY SEE CLOSED CIRCUIT TELEVISION SYSTEM ON SHEET E-14.

2 - CCTV CABINET TOLL SEE SHEET E-63.

3 - TYPE CCTV 35 SEE SES-1 FOR DETAILS.

4 -FOR ACCURATE RIGHT OF WAY DATA, CONTACT RIGHT OF WAY ENGINEERING AT THE DISTRICT OFFICE.

TOLL EQUIPMENT

CLOSED CIRCUIT TELEVISION SYSTEM

SCALE: 1" = 50'

E-28

APPROVED FOR ELECTRICAL WORK ONLY

STATE OF CALIFORNIA - DEPARTMENT OF TRANSPORTATION
Caltrans® TRAFFIC ELECTRICAL

FUNCTIONAL SUPERVISOR: BRIAN PECUS
CALCULATED-DESIGNED BY: ENRIQUE BERNAL
CHECKED BY: HECTOR SANTAMARIA
REVISED BY / DATE REVISED

LAST REVISION 03-04-13
DATE PLOTTED => 13-MAY-2013
TIME PLOTTED => 21:26

PRELIMINARY FOR BIDDING PURPOSES ONLY

Dist	COUNTY	ROUTE	POST MILES TOTAL PROJECT	SHEET No.	TOTAL SHEETS
11	SD	11,905	0.0/1.6, R9.9/R10.7	422	622

REGISTERED ELECTRICAL ENGINEER DATE

04-22-13
PLANS APPROVAL DATE

REGISTERED PROFESSIONAL ENGINEER
HECTOR A. SANTAMARIA
No. 18207
Exp. 12-31-13
ELECTRICAL
STATE OF CALIFORNIA

THE STATE OF CALIFORNIA OR ITS OFFICERS OR AGENTS SHALL NOT BE RESPONSIBLE FOR THE ACCURACY OR COMPLETENESS OF SCANNED COPIES OF THIS PLAN SHEET.

CONDUIT NOTES (TSO):

1 - 2"C, 2#8 (CCTV-TOLL).

2 - 1 FO12 (TOLL).

3 - 3"C, 2 CAMARA CABLE.

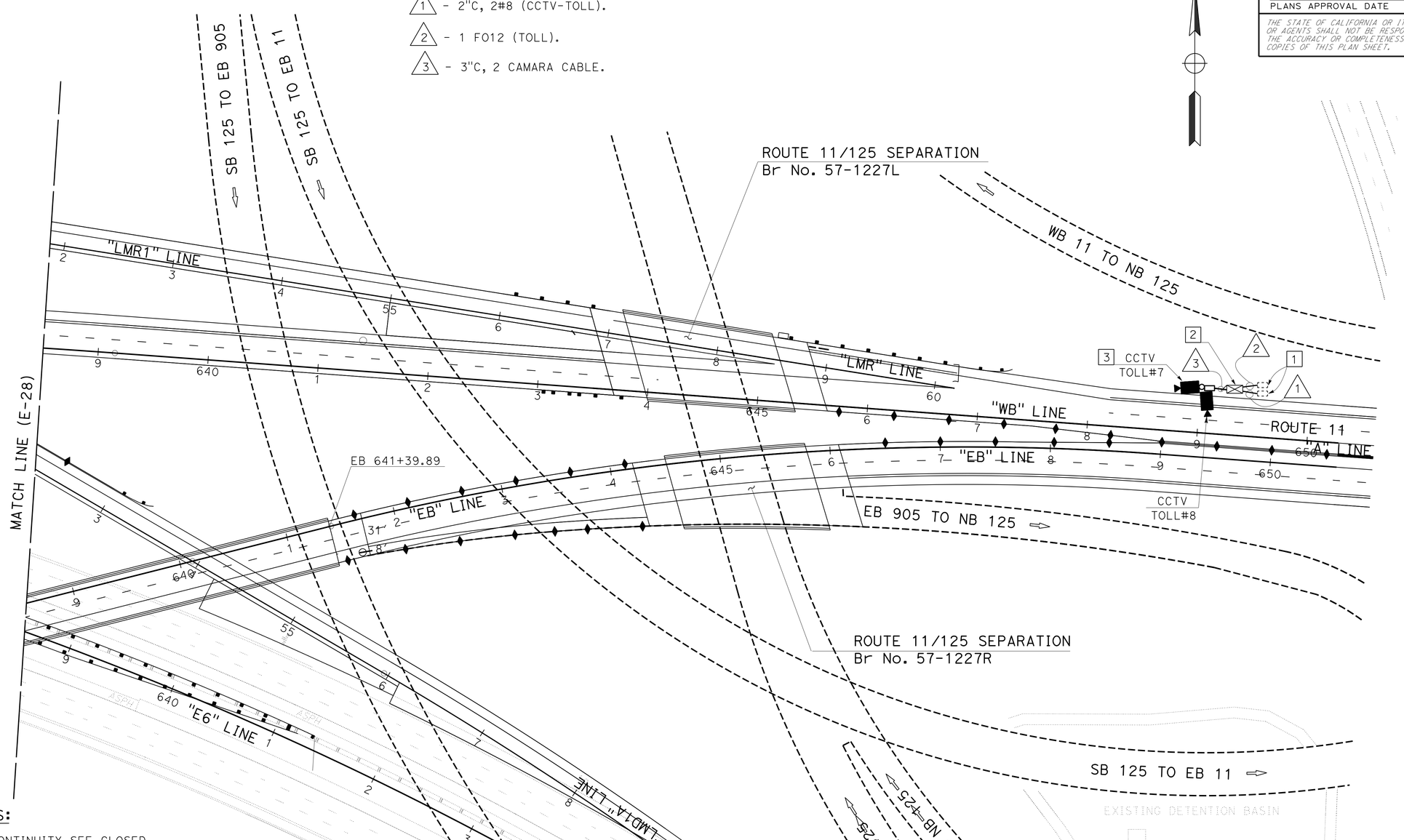

NOTES:

1 - FOR CONTINUITY SEE CLOSED CIRCUIT TELEVISION SYSTEM ON SHEET E-15.

2 - CCTV CABINET TOLL SEE SHEET E-63.

3 - TYPE CCTV 35 SEE SES-1 FOR DETAILS.

4 -FOR ACCURATE RIGHT OF WAY DATA, CONTACT RIGHT OF WAY ENGINEERING AT THE DISTRICT OFFICE.

TOLL EQUIPMENT

CLOSED CIRCUIT TELEVISION SYSTEM

SCALE: 1" = 50'

E-29

APPROVED FOR ELECTRICAL WORK ONLY

STATE OF CALIFORNIA - DEPARTMENT OF TRANSPORTATION
Caltrans® TRAFFIC ELECTRICAL

FUNCTIONAL SUPERVISOR: BRIAN PECUS
CALCULATED-DESIGNED BY: HECTOR SANTAMARIA
CHECKED BY: ENRIQUE BERNAL
REVISED BY
DATE REVISED

LAST REVISION 03-04-13
DATE PLOTTED => 13-MAY-2013
TIME PLOTTED => 21:26

PRELIMINARY FOR BIDDING PURPOSES ONLY

Dist	COUNTY	ROUTE	POST MILES TOTAL PROJECT	SHEET No.	TOTAL SHEETS
11	SD	11,905	0.0/1.6, R9.9/R10.7	423	622

REGISTERED ELECTRICAL ENGINEER DATE

04-22-13
PLANS APPROVAL DATE

REGISTERED PROFESSIONAL ENGINEER HECTOR A. SANTAMARIA No. 18207 Exp. 12-31-13 ELECTRICAL STATE OF CALIFORNIA

THE STATE OF CALIFORNIA OR ITS OFFICERS OR AGENTS SHALL NOT BE RESPONSIBLE FOR THE ACCURACY OR COMPLETENESS OF SCANNED COPIES OF THIS PLAN SHEET.

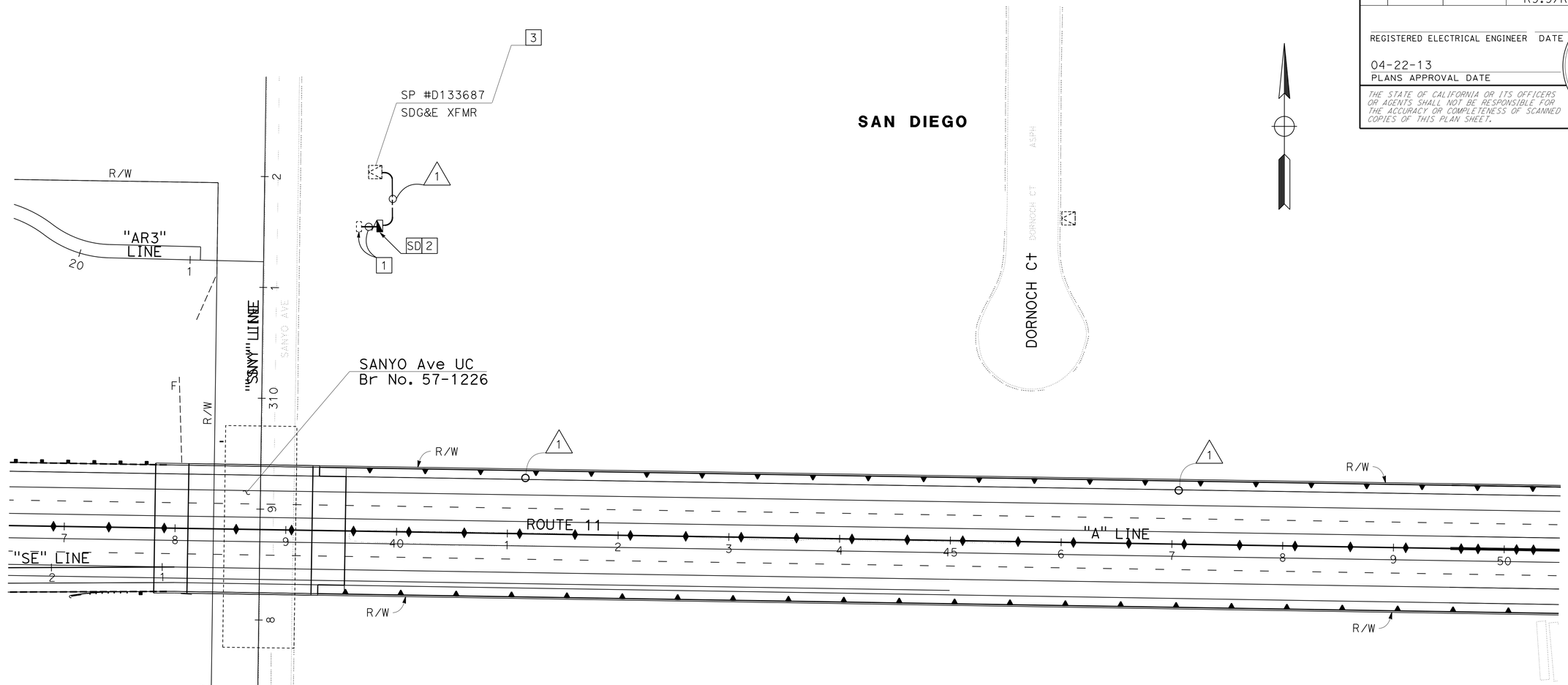

CONDUIT NOTE (TSO):

1 -3"C, (CONDUCTORS BY OTHERS)

NOTES(TSO):

1 - FOR CONTINUITY SEE CLOSED CIRCUIT TELEVISION SYSTEM ON SHEET E-17

2 - TYPE III-BF SERVICE EQUIPMENT ENCLOSURE CABINET PER ES-2C AND ES-2E.

3 - CONDUIT TO ENTER PER SDG&E REQUIREMENTS.

4 -FOR ACCURATE RIGHT OF WAY DATA, CONTACT RIGHT OF WAY ENGINEERING AT THE DISTRICT OFFICE.

TOLL EQUIPMENT

CLOSED CIRCUIT TELEVISION SYSTEM

SCALE: 1"=50'

E-30

APPROVED FOR ELECTRICAL WORK ONLY

STATE OF CALIFORNIA - DEPARTMENT OF TRANSPORTATION
Caltrans® TRAFFIC ELECTRICAL

FUNCTIONAL SUPERVISOR: BRIAN PECUS
CALCULATED-DESIGNED BY: HECTOR SANTAMARIA
CHECKED BY: ENRIQUE BERNAL
REVISED BY / DATE REVISED

LAST REVISION 03-04-13 | DATE PLOTTED => 13-MAY-2013 | TIME PLOTTED => 21:26

BORDER LAST REVISED 7/2/2010 | USERNAME => s127284 | DGN FILE => 1100020519ua030.dgn | RELATIVE BORDER SCALE IS IN INCHES 0 1 2 3 | UNIT 2833 | PROJECT NUMBER & PHASE 11000205191

PRELIMINARY FOR BIDDING PURPOSES ONLY

Dist	COUNTY	ROUTE	POST MILES TOTAL PROJECT	SHEET No.	TOTAL SHEETS
11	SD	11,905	0.0/1.6, R9.9/R10.7	424	622

REGISTERED ELECTRICAL ENGINEER DATE

04-22-13
PLANS APPROVAL DATE

REGISTERED PROFESSIONAL ENGINEER HECTOR A. SANTAMARIA No. 18207 Exp. 12-31-13 ELECTRICAL STATE OF CALIFORNIA

THE STATE OF CALIFORNIA OR ITS OFFICERS OR AGENTS SHALL NOT BE RESPONSIBLE FOR THE ACCURACY OR COMPLETENESS OF SCANNED COPIES OF THIS PLAN SHEET.

NOTES:

1 - CCTV CABINET (TOLL) SEE SHEET E-63.

2 -PLACE A 3" CONDUIT BETWEEN CCTV POLE FOUNDATION AND ADJACENT PULL BOX.

3 -FOR CONTINUITY SEE CLOSED CIRCUIT TELEVISION SYSTEM. SEE SHEET E-18.

4 - TYPE CCTV 40 SEE SES-1.

5 -FOR ACCURATE RIGHT OF WAY DATA, CONTACT RIGHT OF WAY ENGINEERING AT THE DISTRICT OFFICE.

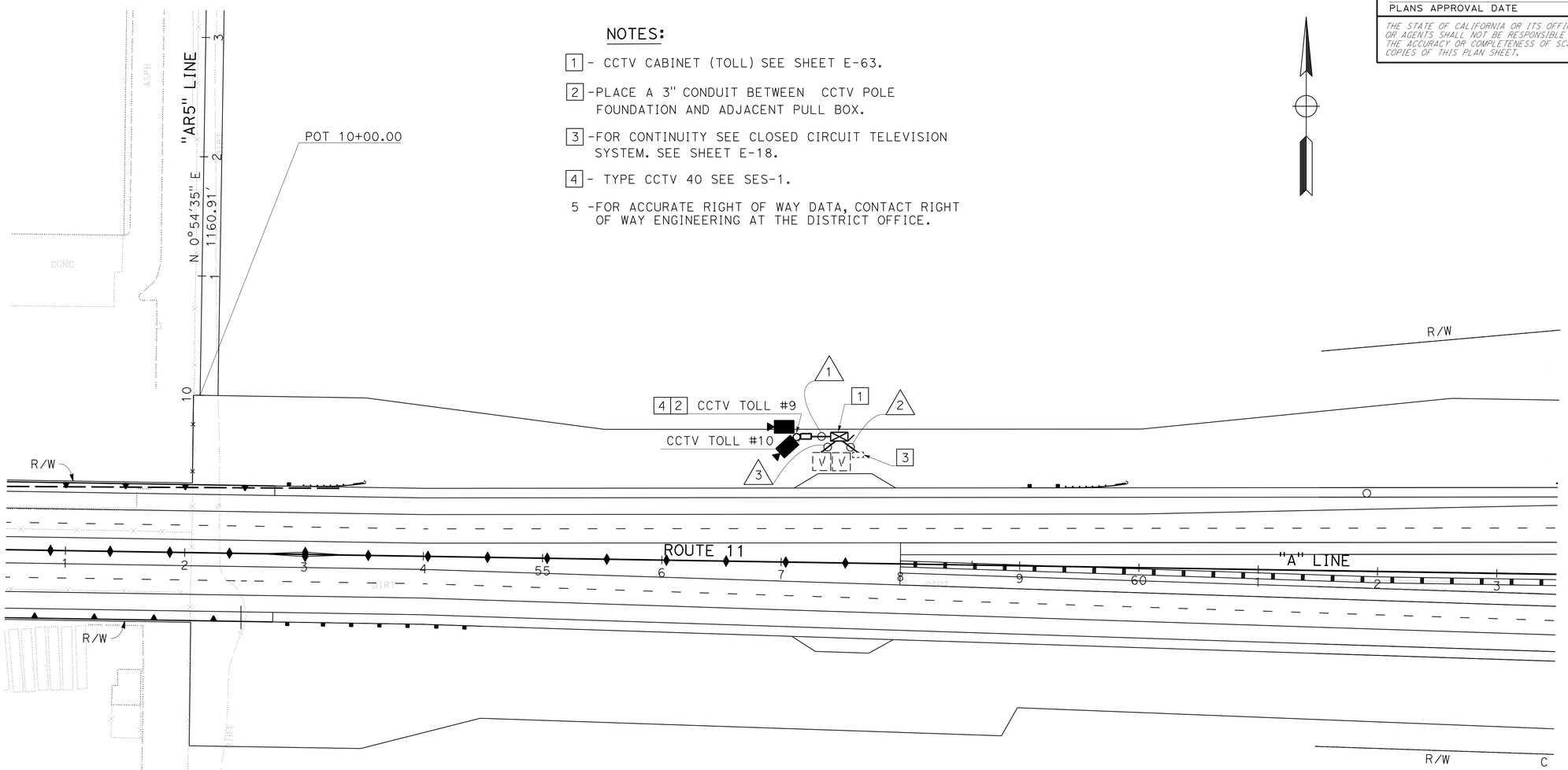

CONDUIT NOTES (TSO):

1 -3"C, 2 CAMERA CABLE.

2 -2"C, 2#6 (CCTV-TOLL).

3 -2"C, 1 FO12(TOLL).

TOLL EQUIPMENT

CLOSED CIRCUIT TELEVISION SYSTEM

SCALE: 1"=50'

E-31

APPROVED FOR ELECTRICAL WORK ONLY

STATE OF CALIFORNIA - DEPARTMENT OF TRANSPORTATION
Caltrans TRAFFIC ELECTRICAL

FUNCTIONAL SUPERVISOR: BRIAN PECUS
CALCULATED-DESIGNED BY: HECTOR SANTAMARIA
CHECKED BY: ENRIQUE BERNAL
REVISED BY / DATE REVISED

LAST REVISION 03-04-13 | DATE PLOTTED => 13-MAY-2013 | TIME PLOTTED => 21:26

Dist	COUNTY	ROUTE	POST MILES TOTAL PROJECT	SHEET No.	TOTAL SHEETS
11	SD	11,905	0.0/1.6, R9.9/R10.7	425	622

REGISTERED ELECTRICAL ENGINEER DATE

04-22-13
PLANS APPROVAL DATE

REGISTERED PROFESSIONAL ENGINEER
HECTOR A. SANTAMARIA
No. 18207
Exp. 12-31-13
ELECTRICAL
STATE OF CALIFORNIA

THE STATE OF CALIFORNIA OR ITS OFFICERS OR AGENTS SHALL NOT BE RESPONSIBLE FOR THE ACCURACY OR COMPLETENESS OF SCANNED COPIES OF THIS PLAN SHEET.

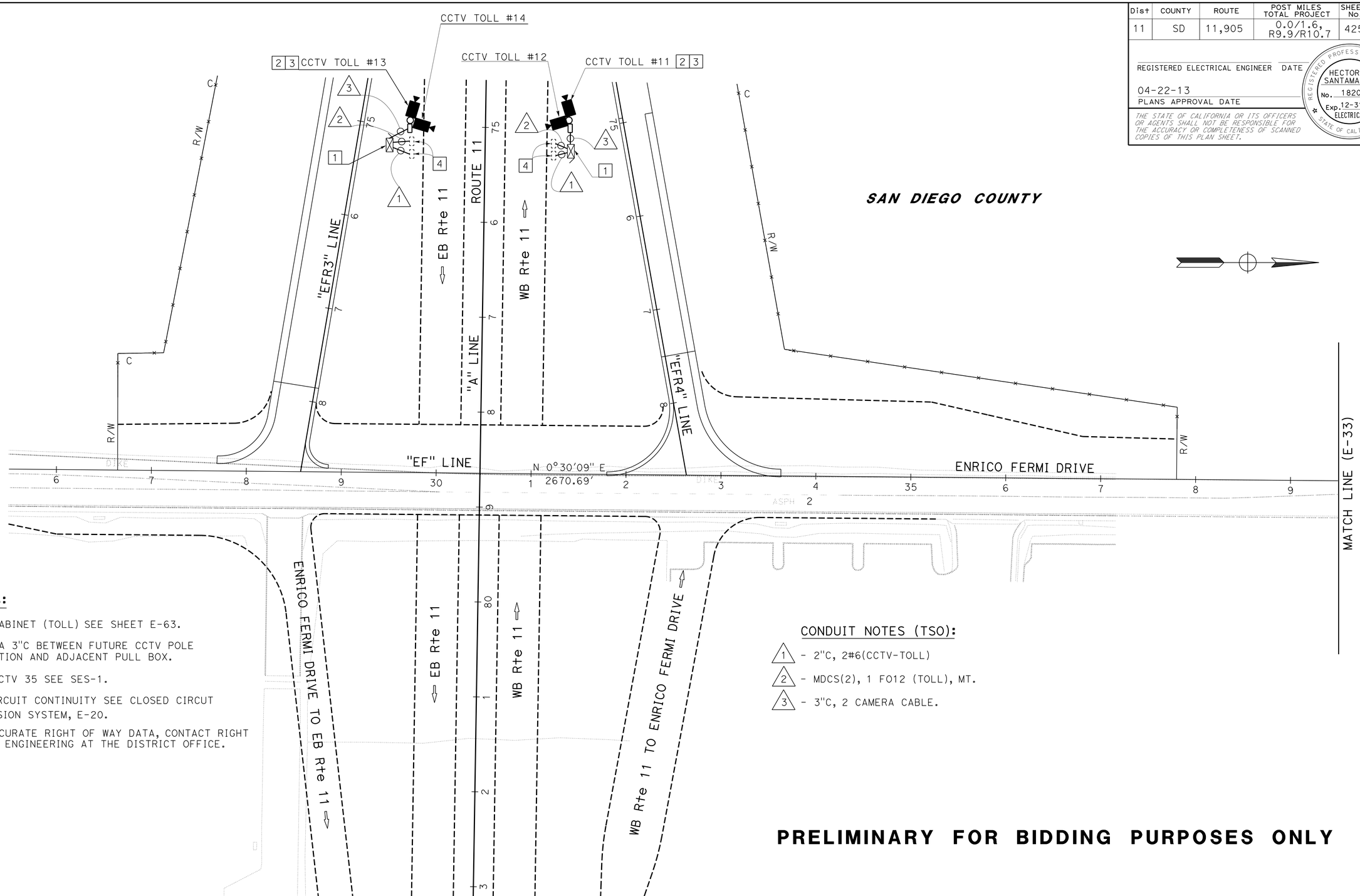

NOTES:

1 - CCTV CABINET (TOLL) SEE SHEET E-63.

2 - PLACE A 3"C BETWEEN FUTURE CCTV POLE FOUNDATION AND ADJACENT PULL BOX.

3 - TYPE CCTV 35 SEE SES-1.

4 - FOR CIRCUIT CONTINUITY SEE CLOSED CIRCUT TELEVISION SYSTEM, E-20.

5 - FOR ACCURATE RIGHT OF WAY DATA, CONTACT RIGHT OF WAY ENGINEERING AT THE DISTRICT OFFICE.

CONDUIT NOTES (TSO):

1 - 2"C, 2#6(CCTV-TOLL)

2 - MDCS(2), 1 FO12 (TOLL), MT.

3 - 3"C, 2 CAMERA CABLE.

PRELIMINARY FOR BIDDING PURPOSES ONLY

TOLL EQUIPMENT

CLOSED CIRCUIT TELEVISION SYSTEM

SCALE: 1"=50'

E-32

APPROVED FOR ELECTRICAL WORK ONLY

STATE OF CALIFORNIA - DEPARTMENT OF TRANSPORTATION
Caltrans® **TRAFFIC ELECTRICAL**

FUNCTIONAL SUPERVISOR: BRIAN PECUS
CALCULATED-DESIGNED BY: HECTOR SANTAMARIA
CHECKED BY: ENRIQUE BERNAL
REVISED BY / DATE REVISED

LAST REVISION 03-04-13 | DATE PLOTTED => 13-MAY-2013 | TIME PLOTTED => 21:26

Dist	COUNTY	ROUTE	POST MILES TOTAL PROJECT	SHEET No.	TOTAL SHEETS
11	SD	11,905	0.0/1.6, R9.9/R10.7	426	622

REGISTERED ELECTRICAL ENGINEER DATE

04-22-13
PLANS APPROVAL DATE

REGISTERED PROFESSIONAL ENGINEER
HECTOR A. SANTAMARIA
No. 18207
Exp. 12-31-13
ELECTRICAL
STATE OF CALIFORNIA

THE STATE OF CALIFORNIA OR ITS OFFICERS OR AGENTS SHALL NOT BE RESPONSIBLE FOR THE ACCURACY OR COMPLETENESS OF SCANNED COPIES OF THIS PLAN SHEET.

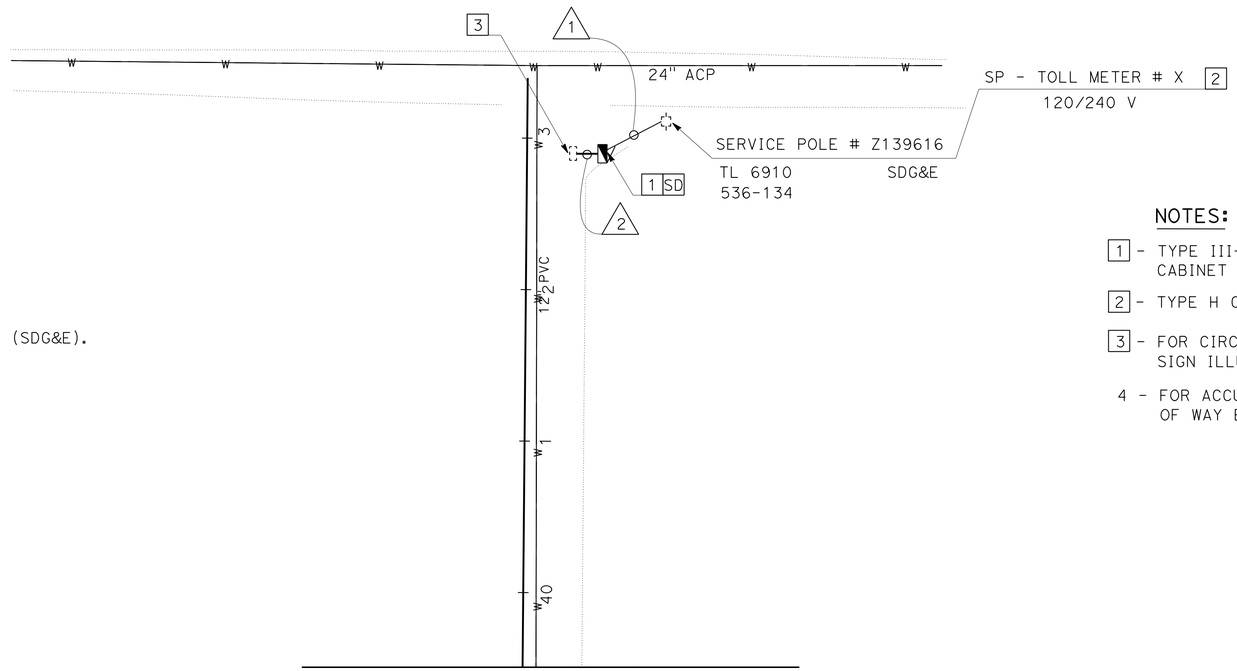

CONDUIT NOTES:

1 - 3"C, MT, CONDUCTORS BY OTHERS (SDG&E).

2 - 2"C, 6#6(CCTV-TOLL)

NOTES:

1 - TYPE III-BF SERVICE EQUIPMENT ENCLOSURE CABINET PER ES-2C AND ES-2E.

2 - TYPE H CONDUIT RISER PER SDG&E REQUIREMENTS.

3 - FOR CIRCUIT CONTINUITY SEE LIGHTING AND SIGN ILLUMINATION ON SHEET E-10.

4 - FOR ACCURATE RIGHT OF WAY DATA, CONTACT RIGHT OF WAY ENGINEERING AT THE DISTRICT OFFICE.

TOLL EQUIPMENT

CLOSED CIRCUIT TELEVISION SYSTEM

PRELIMINARY FOR BIDDING PURPOSES ONLY

APPROVED FOR ELECTRICAL WORK ONLY

SCALE: 1"=50'

E-33

REVISED BY | DATE REVISED
HECTOR SANTAMARIA | ENRIQUE BERNAL
CALCULATED-DESIGNED BY | CHECKED BY
FUNCTIONAL SUPERVISOR | BRIAN PECUS
STATE OF CALIFORNIA - DEPARTMENT OF TRANSPORTATION
Caltrans TRAFFIC ELECTRICAL

LAST REVISION 03-04-13 | DATE PLOTTED => 13-MAY-2013 | TIME PLOTTED => 21:26

Dist	COUNTY	ROUTE	POST MILES TOTAL PROJECT	SHEET No.	TOTAL SHEETS
11	SD	11,905	0.0/1.6, R9.9/R10.7	427	622

REGISTERED ELECTRICAL ENGINEER DATE

04-22-13
PLANS APPROVAL DATE

REGISTERED PROFESSIONAL ENGINEER
HECTOR A. SANTAMARIA
No. 18207
Exp. 12-31-13
ELECTRICAL
STATE OF CALIFORNIA

THE STATE OF CALIFORNIA OR ITS OFFICERS OR AGENTS SHALL NOT BE RESPONSIBLE FOR THE ACCURACY OR COMPLETENESS OF SCANNED COPIES OF THIS PLAN SHEET.

PRELIMINARY FOR BIDDING PURPOSES ONLY

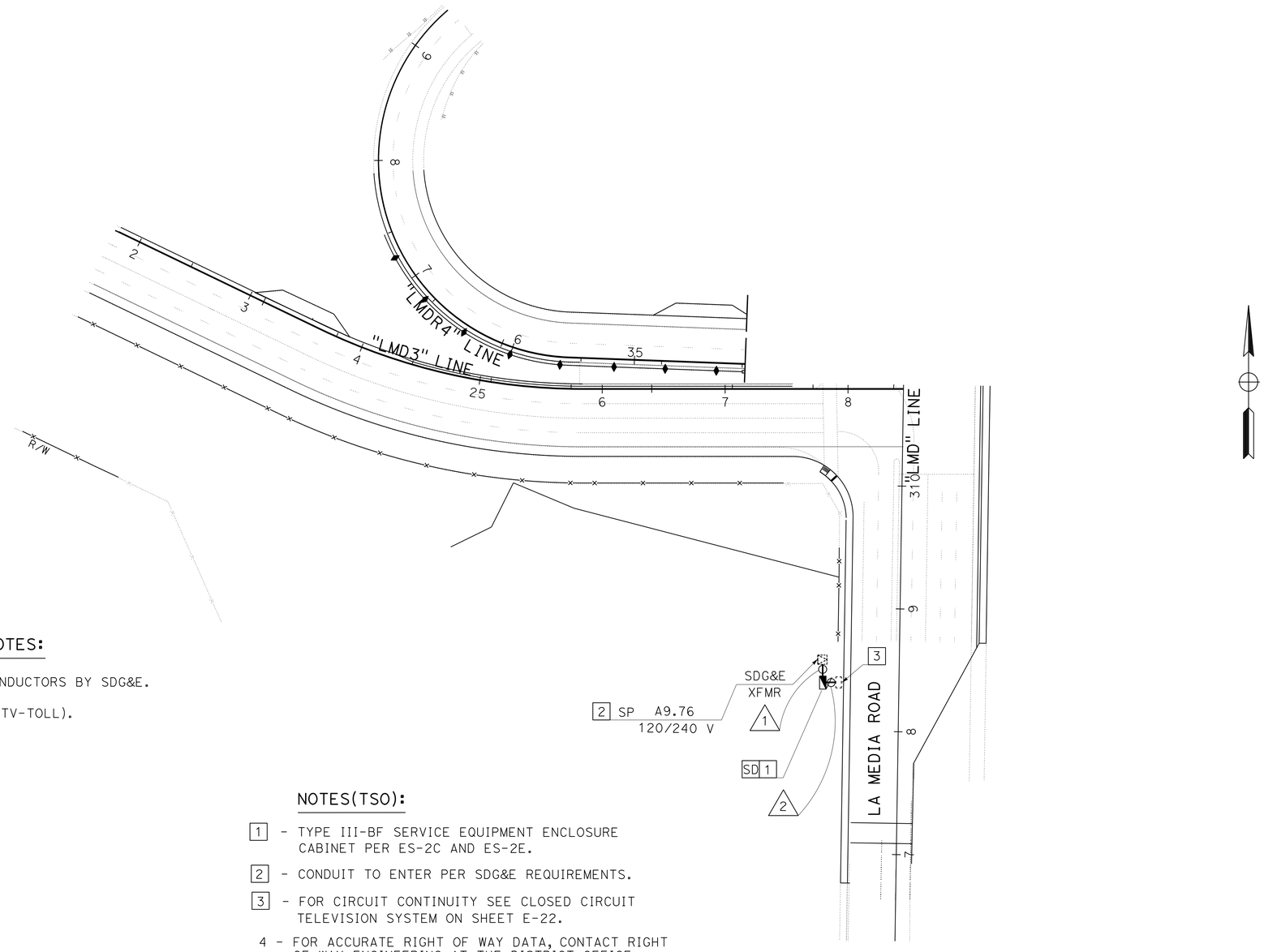

CONDUIT NOTES:

1 - 3"C, MT, CONDUCTORS BY SDG&E.

2 - 2"C, 2#6(CCTV-TOLL).

NOTES(TSO):

1 - TYPE III-BF SERVICE EQUIPMENT ENCLOSURE CABINET PER ES-2C AND ES-2E.

2 - CONDUIT TO ENTER PER SDG&E REQUIREMENTS.

3 - FOR CIRCUIT CONTINUITY SEE CLOSED CIRCUIT TELEVISION SYSTEM ON SHEET E-22.

4 - FOR ACCURATE RIGHT OF WAY DATA, CONTACT RIGHT OF WAY ENGINEERING AT THE DISTRICT OFFICE.

TOLL EQUIPMENT

CLOSED CIRCUIT TELEVISION SYSTEM

SCALE: 1" = 50'

E-34

APPROVED FOR ELECTRICAL WORK ONLY

STATE OF CALIFORNIA - DEPARTMENT OF TRANSPORTATION
Caltrans® TRAFFIC ELECTRICAL

FUNCTIONAL SUPERVISOR: BRIAN PECUS
CALCULATED-DESIGNED BY: HECTOR SANTAMARIA
CHECKED BY: ENRIQUE BERNAL
REVISED BY
DATE REVISED

LAST REVISION 03-04-13 | DATE PLOTTED => 13-MAY-2013 | TIME PLOTTED => 21:26

Dist	COUNTY	ROUTE	POST MILES TOTAL PROJECT	SHEET No.	TOTAL SHEETS
11	SD	11,905	0.0/1.6, R9.9/R10.7	428	622

REGISTERED ELECTRICAL ENGINEER DATE

04-22-13
PLANS APPROVAL DATE

REGISTERED PROFESSIONAL ENGINEER
HECTOR A. SANTAMARIA
No. 18207
Exp. 12-31-13
ELECTRICAL
STATE OF CALIFORNIA

THE STATE OF CALIFORNIA OR ITS OFFICERS OR AGENTS SHALL NOT BE RESPONSIBLE FOR THE ACCURACY OR COMPLETENESS OF SCANNED COPIES OF THIS PLAN SHEET.

PRELIMINARY FOR BIDDING PURPOSES ONLY

NOTES:

1 - CONDUIT TO ENTER PER SDG&E REQUIREMENTS.

2 - TYPE III-BF SERVICE EQUIPMENT ENCLOSURE CABINET PER ES-2C AND ES-2E.

3 - FOR CIRCUIT CONTINUITY SEE CLOSED CIRCUIT TELEVISION SYSTEM ON SHEET E-23.

4 - FOR ACCURATE RIGHT OF WAY DATA, CONTACT RIGHT OF WAY ENGINEERING AT THE DISTRICT OFFICE.

CONDUIT NOTES:

1 - 3"C, MT., CONDUCTORS BY SDG&E.

2 - 2"C, 4#6 (CCTV-TOLL).

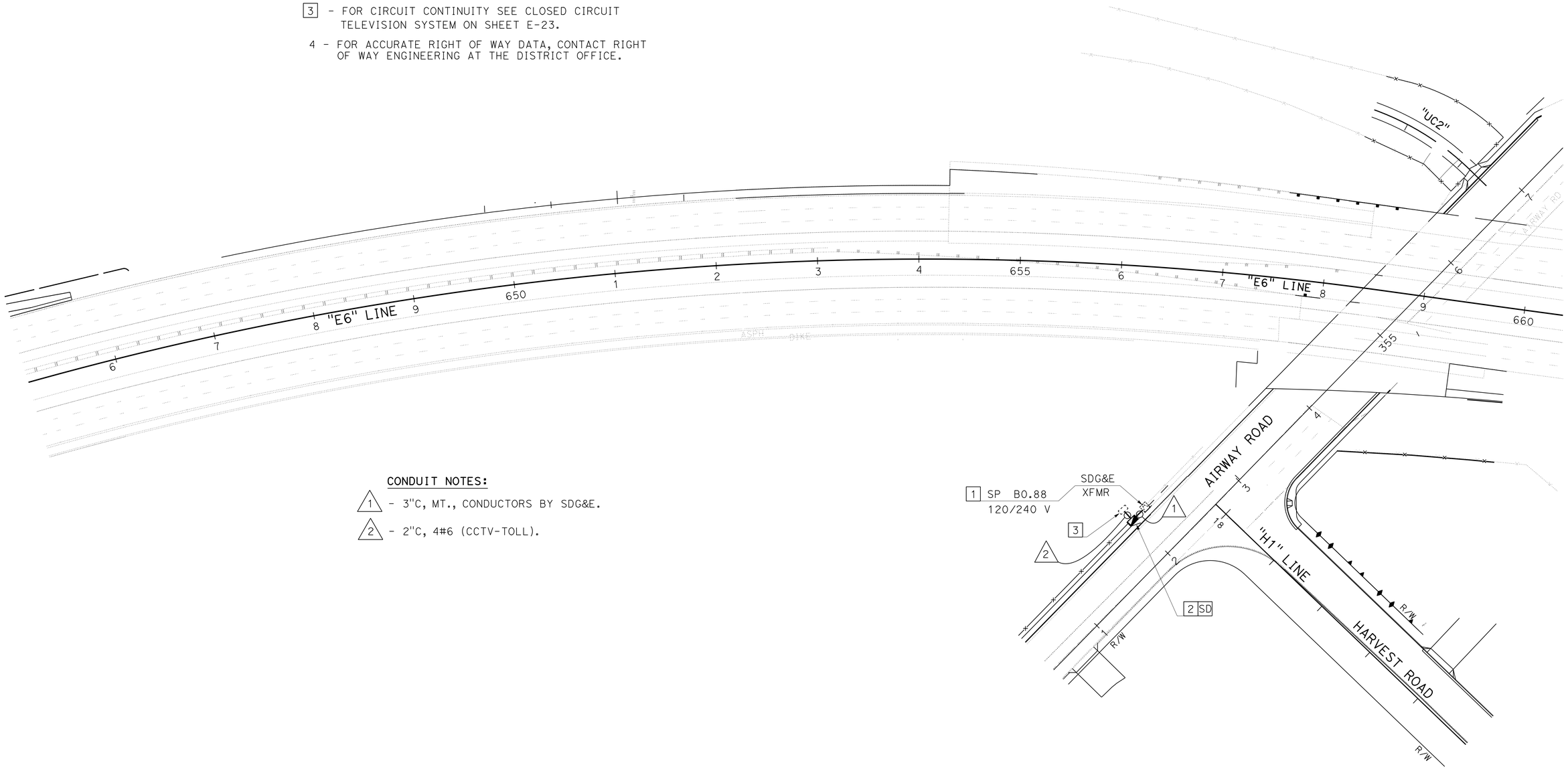

TOLL EQUIPMENT

CLOSED CIRCUIT TELEVISION SYSTEM

SCALE: 1"=50'

E-35

APPROVED FOR ELECTRICAL WORK ONLY

STATE OF CALIFORNIA - DEPARTMENT OF TRANSPORTATION
Caltrans TRAFFIC ELECTRICAL

FUNCTIONAL SUPERVISOR: BRIAN PECUS
CALCULATED-DESIGNED BY: HECTOR SANTAMARIA
CHECKED BY: ENRIQUE BERNAL
REVISED BY
DATE REVISED

LAST REVISION 03-04-13
DATE PLOTTED => 13-MAY-2013
TIME PLOTTED => 21:26

Dist	COUNTY	ROUTE	POST MILES TOTAL PROJECT	SHEET No.	TOTAL SHEETS
11	SD	11,905	0.0/1.6, R9.9/R10.7	429	622

REGISTERED ELECTRICAL ENGINEER DATE

04-22-13
PLANS APPROVAL DATE

REGISTERED PROFESSIONAL ENGINEER HECTOR A. SANTAMARIA No. 18207 Exp. 12-31-13 ELECTRICAL STATE OF CALIFORNIA

THE STATE OF CALIFORNIA OR ITS OFFICERS OR AGENTS SHALL NOT BE RESPONSIBLE FOR THE ACCURACY OR COMPLETENESS OF SCANNED COPIES OF THIS PLAN SHEET.

CONDUIT AND CONDUCTOR SCHEDULE

CABLE/ AWG SIZE	CIRCUIT ID	CONDUIT SIZE AND RUN No. 2" 1	2-3" 2	2" 3	2" 4	2" 5	2" 6	2" 7	2" 8	2" 9
8	LIGHTING									2
6	RM POWER									
	LIGHTING									
	TMS									
	S									
	CCTV									
14	FB									
9CSC	Std R									
	Std L									
12CSC	Std M									
DLC	DETECTORS ML	4	4			4				
	D	1	2	1				1		
	P	1	2							
	Q		2	2	2				1	
	OR									
	SIGNAL									
SIC	CONTROLLER									
TOTAL CONDUCTORS/ CABLES		6	10	3	2	4	MT	1	1	2

NOTES(TSO):

1 - STATE - FURNISHED MODEL 2070 CONTROLLER ASSEMBLY. CONSTRUCT FOUNDATION PER ES-3C.

2 - 6' DIAMETER TYPE E LOOP DETECTOR CENTER IN LANE.

3 - SEE DETAIL "RM" FOR FUTURE PLACEMENT ON SHEET E-37

4 - FOR CIRCUIT CONTINUITY SEE LIGHTING AND SIGN ILLUMINATION, E-8.

5 - PROVIDE 3' OF SLACK OF DLC AND COIL FOR FUTURE USE.

6 - FOR FUTURE MAIN LANE LOOPS.

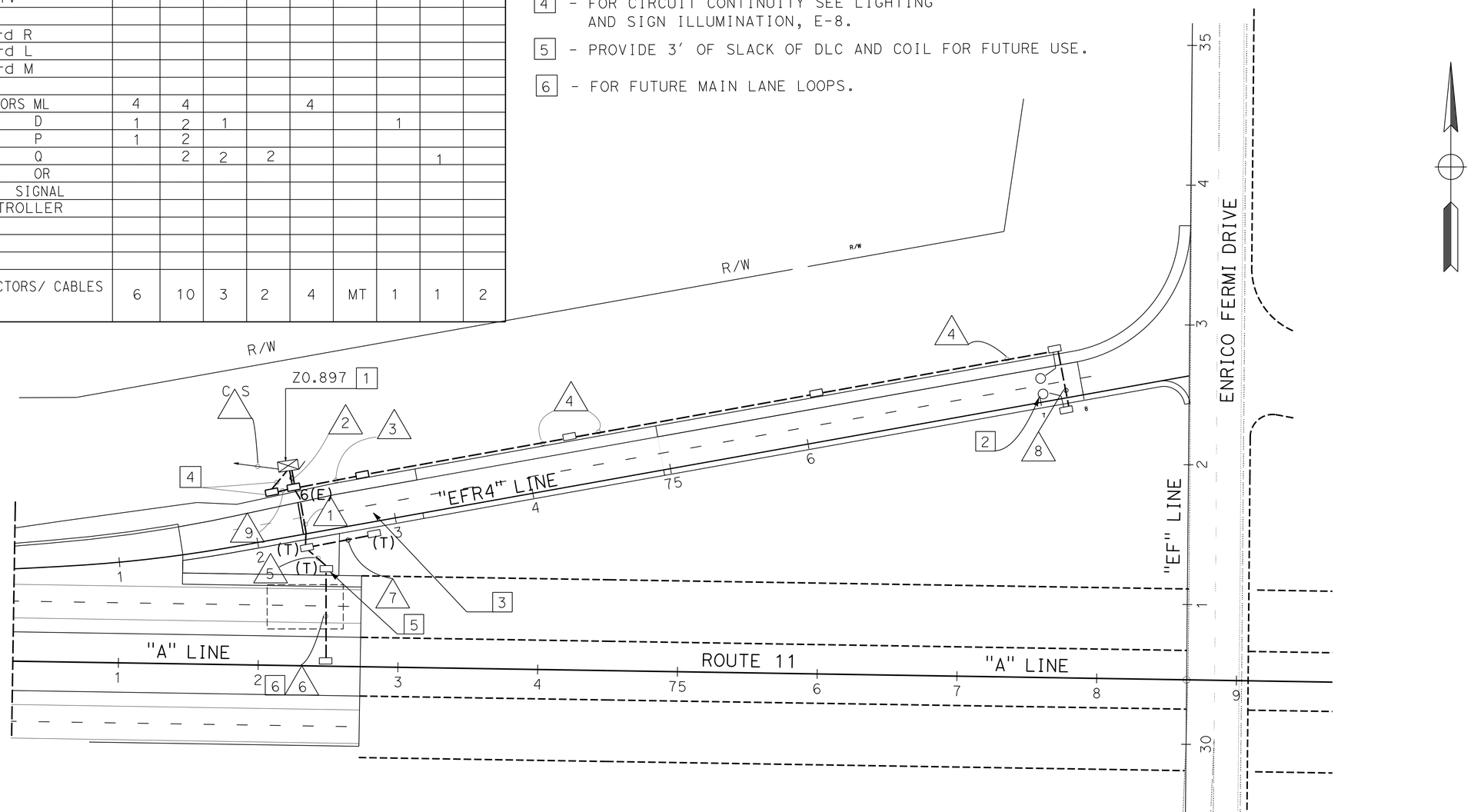

PRELIMINARY FOR BIDDING PURPOSES ONLY

APPROVED FOR ELECTRICAL WORK ONLY

SCALE: 1" = 50'

RAMP METERING SYSTEM

E-36

STATE OF CALIFORNIA - DEPARTMENT OF TRANSPORTATION
Caltrans® **TRAFFIC ELECTRICAL**

FUNCTIONAL SUPERVISOR: BRIAN PECUS
CALCULATED-DESIGNED BY: ENRIQUE BERNAL
CHECKED BY: HECTOR SANTAMARIA
REVISED BY / DATE REVISED

LAST REVISION 03-04-13 | DATE PLOTTED => 13-MAY-2013 | TIME PLOTTED => 21:27

Dist	COUNTY	ROUTE	POST MILES TOTAL PROJECT	SHEET No.	TOTAL SHEETS
11	SD	11,905	0.0/1.6, R9.9/R10.7	430	622

REGISTERED ELECTRICAL ENGINEER DATE

04-22-13
PLANS APPROVAL DATE

REGISTERED PROFESSIONAL ENGINEER
HECTOR A. SANTAMARIA
No. 18207
Exp. 12-31-13
ELECTRICAL
STATE OF CALIFORNIA

THE STATE OF CALIFORNIA OR ITS OFFICERS OR AGENTS SHALL NOT BE RESPONSIBLE FOR THE ACCURACY OR COMPLETENESS OF SCANNED COPIES OF THIS PLAN SHEET.

PRELIMINARY FOR BIDDING PURPOSES ONLY

NOTES(TSO):

1 - MODEL 334 CABINET.

2 - FUTURE LOOPS BY OTHERS.

3 - PROVIDE 3' OF SLACK OF DLC AND COIL FOR FUTURE USE.

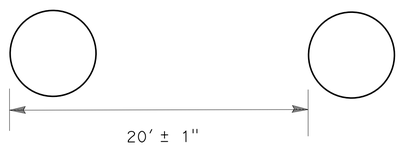

LOOP DETAIL

TYPICAL

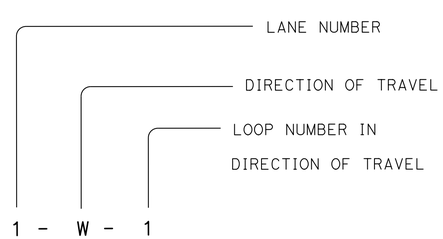

MAINLINE LOOP DETECTOR IDENTIFICATION

TYPICAL

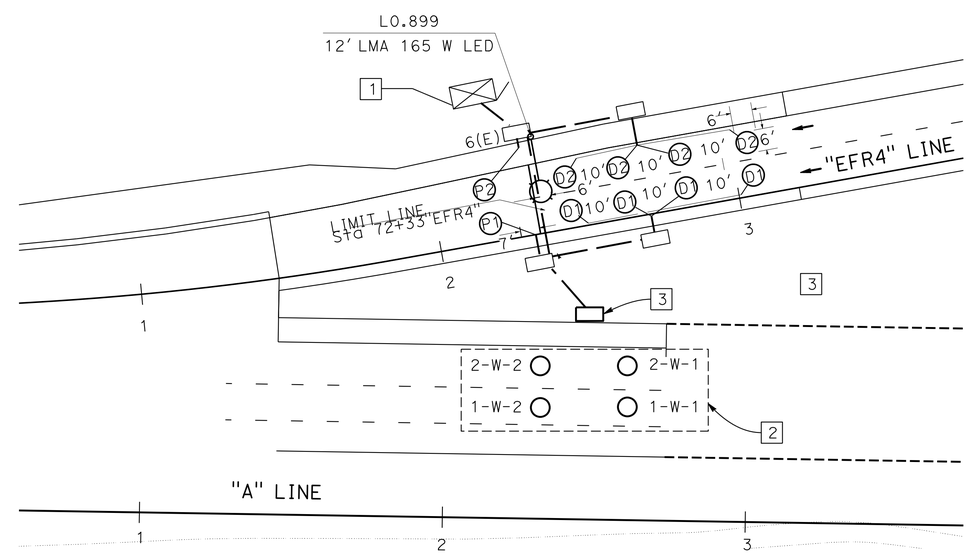

DETAIL "RM"

LOOP PLACEMENT

TYPICAL

RAMP METERING SYSTEM

E-37

APPROVED FOR ELECTRICAL WORK ONLY

SCALE: 1" = 50'

STATE OF CALIFORNIA - DEPARTMENT OF TRANSPORTATION
Caltrans® TRAFFIC ELECTRICAL

FUNCTIONAL SUPERVISOR: BRIAN PECUS
CALCULATED-DESIGNED BY: HECTOR SANTAMARIA
CHECKED BY: ENRIQUE BERNAL
REVISED BY
DATE REVISED

LAST REVISION 03-04-13
DATE PLOTTED => 13-MAY-2013
TIME PLOTTED => 21:27

Dist	COUNTY	ROUTE	POST MILES TOTAL PROJECT	SHEET No.	TOTAL SHEETS
11	SD	11,905	0.0/1.6, R9.9/R10.7	431	622

REGISTERED ELECTRICAL ENGINEER DATE

04-22-13
PLANS APPROVAL DATE

REGISTERED PROFESSIONAL ENGINEER
HECTOR A. SANTAMARIA
No. 18207
Exp. 12-31-13
ELECTRICAL
STATE OF CALIFORNIA

THE STATE OF CALIFORNIA OR ITS OFFICERS OR AGENTS SHALL NOT BE RESPONSIBLE FOR THE ACCURACY OR COMPLETENESS OF SCANNED COPIES OF THIS PLAN SHEET.

CONDUIT NOTES:

1. - 3"C, 8 DLC, 8 TRANSMISSION CABLE.
2. - 3"C, 6 DLC, 6 TRANSMISSION CABLE, 8 LOOP WIRES.
3. - 2"C, 4 DLC, 4 TRANSMISSION CABLE, 4 LOOP WIRES.
4. - 2"C, 2 DLC, 2 TRANSMISSION CABLE.

NOTES(TSO):

1. - MODEL 334 CABINET (TYPE 1 HOUSING). CONSTRUCT FOUNDATION PER ES-3C. INSTALL STATE FURNISHED 2070 CONTROLLER.
2. - INSTALL PIEZO ELECTRIC AXLE SENSOR UNIT. SEE INSTALLATION DETAILS ON SEET E-40.
3. - FOR CIRCUIT CONTINUITY SEE LIGHTING AND SIGN ILLUMINATION ON SHEET E-7.
4. - FOR CIRCUIT CONTINUITY SEE CLOSED CIRCUIT TELEVISION SYSTEM ON SHEET E-18.

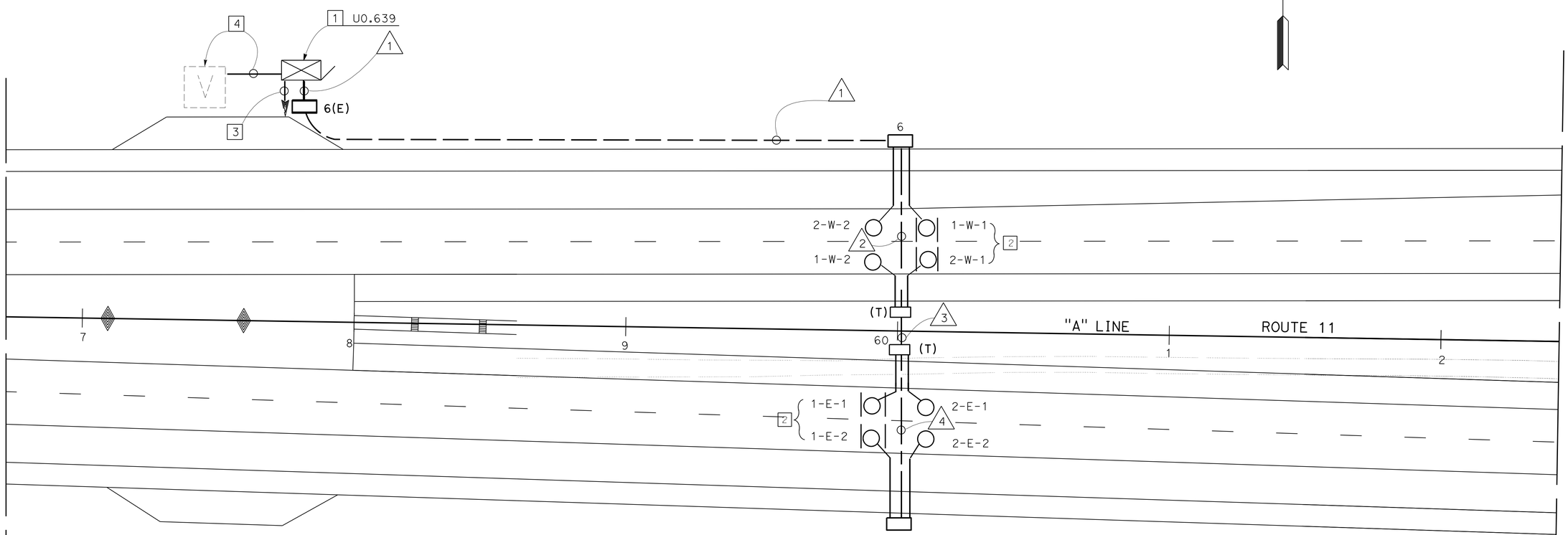

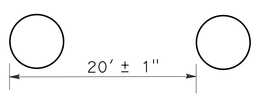

LOOP DETAIL
TYPICAL

LANE NUMBER
DIRECTION OF TRAVEL
LOOP NUMBER IN DIRECTION OF TRAVEL

1 - E - 1

MAINLINE LOOP DETECTOR IDENTIFICATION
TYPICAL

TRAFFIC MONITORING STATION (LOCATION 1)

PRELIMINARY FOR BIDDING PURPOSES ONLY

APPROVED FOR ELECTRICAL WORK ONLY

SCALE: 1"= 20'

E-38

STATE OF CALIFORNIA - DEPARTMENT OF TRANSPORTATION
Caltrans
TRAFFIC ELECTRICAL

FUNCTIONAL SUPERVISOR: BRIAN PECUS
CALCULATED-DESIGNED BY: HECTOR SANTAMARIA
CHECKED BY: ENRIQUE BERNAL
REVISED BY
DATE REVISED

LAST REVISION 03-04-13
DATE PLOTTED => 13-MAY-2013
TIME PLOTTED => 21:27

Dist	COUNTY	ROUTE	POST MILES TOTAL PROJECT	SHEET No.	TOTAL SHEETS
11	SD	11,905	0.0/1.6, R9.9/R10.7	432	622

REGISTERED ELECTRICAL ENGINEER DATE

04-22-13
PLANS APPROVAL DATE

REGISTERED PROFESSIONAL ENGINEER HECTOR A. SANTAMARIA No. 18207 Exp. 12-31-13 ELECTRICAL STATE OF CALIFORNIA

THE STATE OF CALIFORNIA OR ITS OFFICERS OR AGENTS SHALL NOT BE RESPONSIBLE FOR THE ACCURACY OR COMPLETENESS OF SCANNED COPIES OF THIS PLAN SHEET.

CONDUIT NOTES:

1. 2"C, 1 SIC (TMS).
2. 3"C, 8 DLC, 8 TRANSMISSION CABLE.
3. 3"C, 6 DLC, 6 TRANSMISSION CABLE, 8 LOOP WIRES, 1 SIC (TMS).
4. 2"C, 4 DLC, 4 TRANSMISSION CABLE, 1 SIC (TMS).
5. 2"C, 2 DLC, 2 TRANSMISSION CABLE, 8 LOOP WIRES, 1 SIC (TMS).

NOTES(TSO):

1. MODEL 334 CABINET (TYPE 1 HOUSING). CONSTRUCT FOUNDATION PER ES-3C. INSTALL STATE FURNISHED 2070 CONTROLLER.
2. INSTALL PIEZO ELECTRIC AXLE SENSOR UNIT. SEE INSTALLATION DETAILS ON SEET E-40.
3. FOR CIRCUIT CONTINUITY SEE LIGHTING AND SIGN ILLUMINATION ON SHEET E-6.
4. FOR CIRCUIT CONTINUITY SEE CLOSED CIRCUIT TELEVISION ON SHEET E-17.

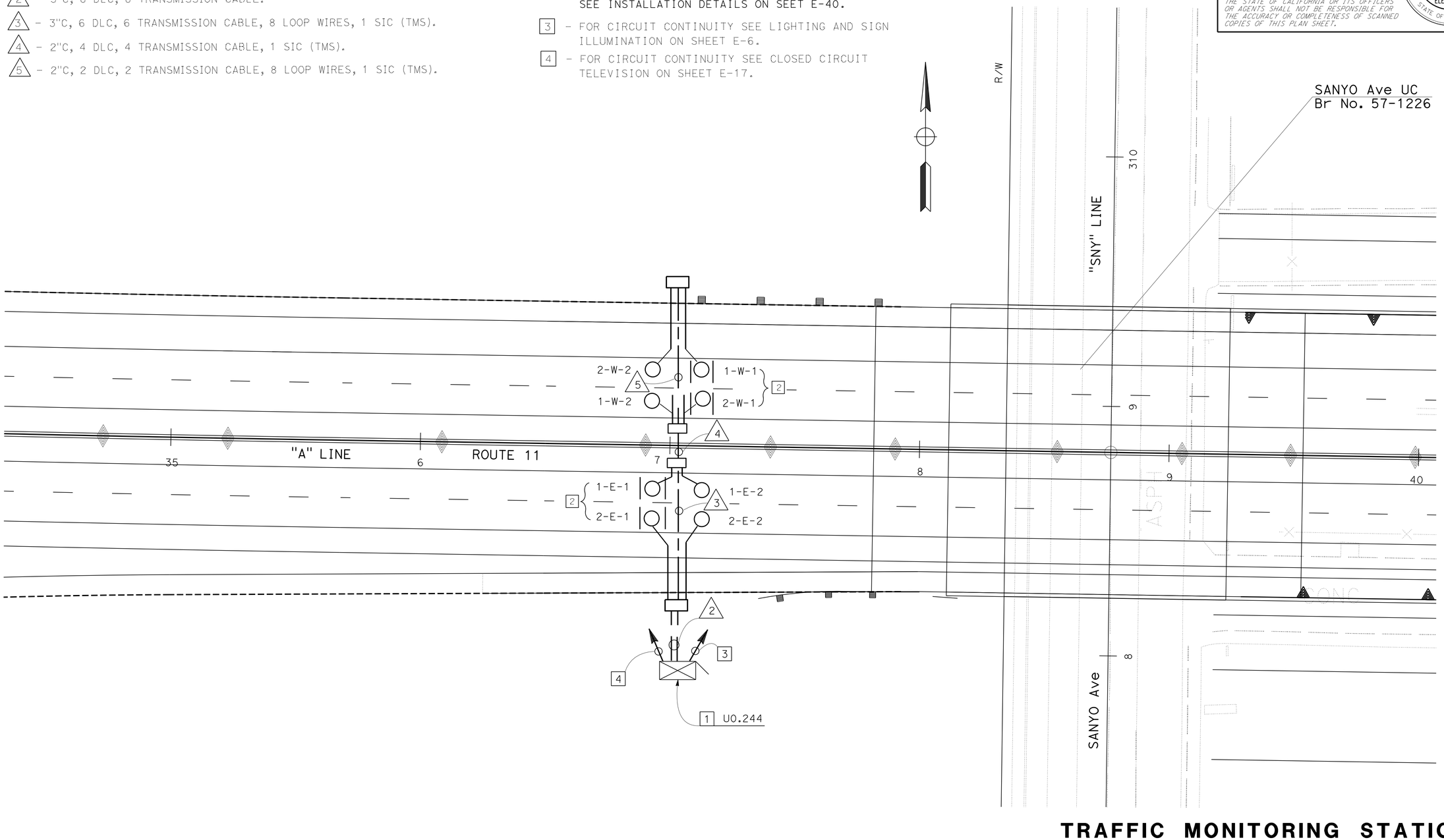

TRAFFIC MONITORING STATION
(LOCATION 2)

PRELIMINARY FOR BIDDING PURPOSES ONLY

APPROVED FOR ELECTRICAL WORK ONLY

SCALE: 1" = 20'

E-39

STATE OF CALIFORNIA - DEPARTMENT OF TRANSPORTATION
Caltrans® **TRAFFIC ELECTRICAL**

FUNCTIONAL SUPERVISOR: BRIAN PECUS
CALCULATED-DESIGNED BY: HECTOR SANTAMARIA
CHECKED BY: ENRIQUE BERNAL
REVISED BY / DATE REVISED

LAST REVISION 03-04-13 | DATE PLOTTED => 13-MAY-2013 | TIME PLOTTED => 21:27

Dist	COUNTY	ROUTE	POST MILES TOTAL PROJECT	SHEET No.	TOTAL SHEETS
11	SD	11,905	0.0/1.6, R9.9/R10.7	433	622

REGISTERED ELECTRICAL ENGINEER DATE

04-22-13
PLANS APPROVAL DATE

REGISTERED PROFESSIONAL ENGINEER HECTOR A. SANTAMARIA No. 18207 Exp. 12-31-13 ELECTRICAL STATE OF CALIFORNIA

THE STATE OF CALIFORNIA OR ITS OFFICERS OR AGENTS SHALL NOT BE RESPONSIBLE FOR THE ACCURACY OR COMPLETENESS OF SCANNED COPIES OF THIS PLAN SHEET.

NOTES:

1 - PLACE 2" DUCT TAPE ALONG THE EDGE OF SAW CUT BEFORE POURING EPOXY SEALANT. LEVEL EPOXY SEALANT TO FINISHED ROAD SURFACE AND REMOVE DUCT TAPE WHEN EPOXY IS CURED.

FIRST SENSOR TRANSMISSION CABLE	FIRST LOOP DLC	SECOND SENSOR TRANSMISSION CABLE	SECOND LOOP DLC
1-W-1S	1-W-1	1-W-2S	1-W-2

PIEZO SENSOR IDENTIFICATION

DIRECTION OF TRAVEL → (TYPICAL)

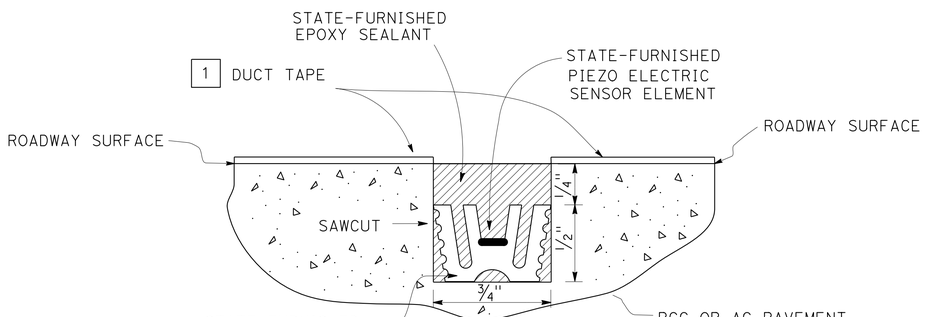

SECTION B-B

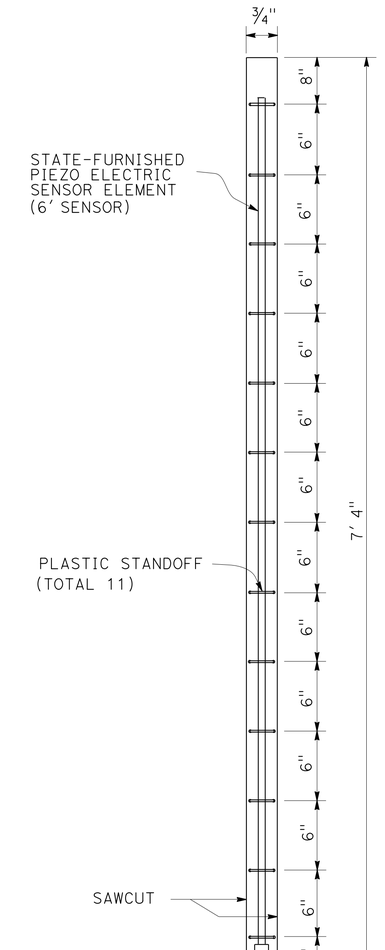

DETAIL "M"

SENSOR INSTALLATION

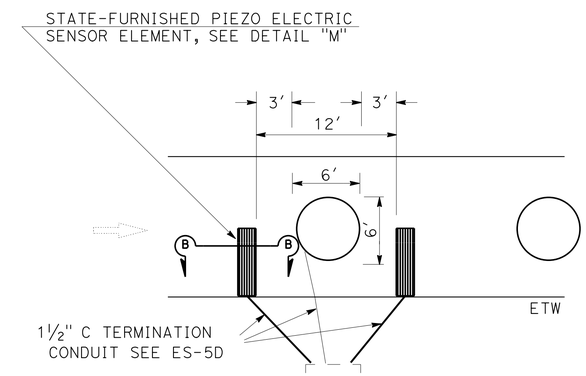

SENSOR PLACEMENT

TYPICAL

PIEZOELECTRIC SENSOR INSTALLATION DETAILS

PRELIMINARY FOR BIDDING PURPOSES ONLY

APPROVED FOR ELECTRICAL WORK ONLY

TRAFFIC MONITORING STATION (ELECTRICAL DETAIL)

NO SCALE

E-40

STATE OF CALIFORNIA - DEPARTMENT OF TRANSPORTATION
Caltrans® TRAFFIC ELECTRICAL

FUNCTIONAL SUPERVISOR: BRIAN PECUS
CALCULATED-DESIGNED BY: HECTOR SANTAMARIA
CHECKED BY: ENRIQUE BERNAL
REVISED BY
DATE REVISED

LAST REVISION 03-04-13 | DATE PLOTTED => 13-MAY-2013 | TIME PLOTTED => 21:27

Dist	COUNTY	ROUTE	POST MILES TOTAL PROJECT	SHEET No.	TOTAL SHEETS
11	SD	11,905	0.0/1.6, R9.9/R10.7	434	622

REGISTERED ELECTRICAL ENGINEER DATE

04-22-13
PLANS APPROVAL DATE

REGISTERED PROFESSIONAL ENGINEER
HECTOR A. SANTAMARIA
No. 18207
Exp. 12-31-13
ELECTRICAL
STATE OF CALIFORNIA

THE STATE OF CALIFORNIA OR ITS OFFICERS OR AGENTS SHALL NOT BE RESPONSIBLE FOR THE ACCURACY OR COMPLETENESS OF SCANNED COPIES OF THIS PLAN SHEET.

CONDUIT NOTES:

1. -2-MDCS(8), (SEE CLOSED CIRCUIT TELEVISION SYSTEM)
2. -2"C, (SEE LIGHTING AND SIGN ILLUMINATION)
3. -3"C, MT.(SPRINKLER CONTROL CONDUIT BRIDGE)

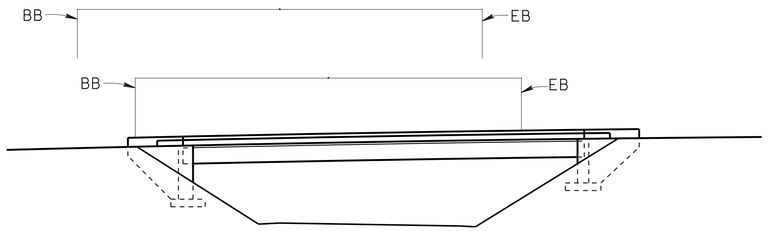

ELEVATION
NO SCALE

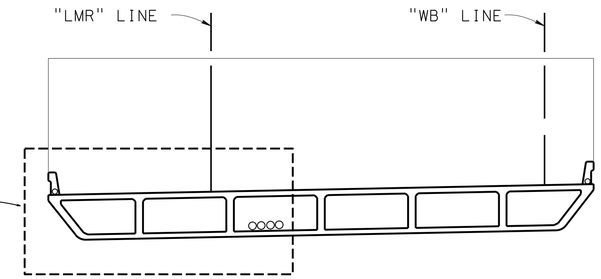

LEFT BRIDGE

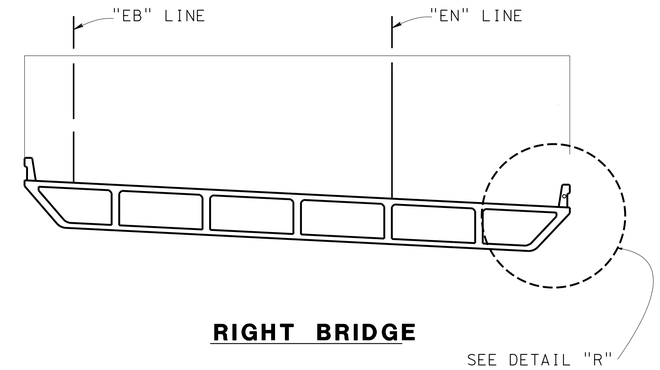

RIGHT BRIDGE

TYPICAL SECTION
NO SCALE

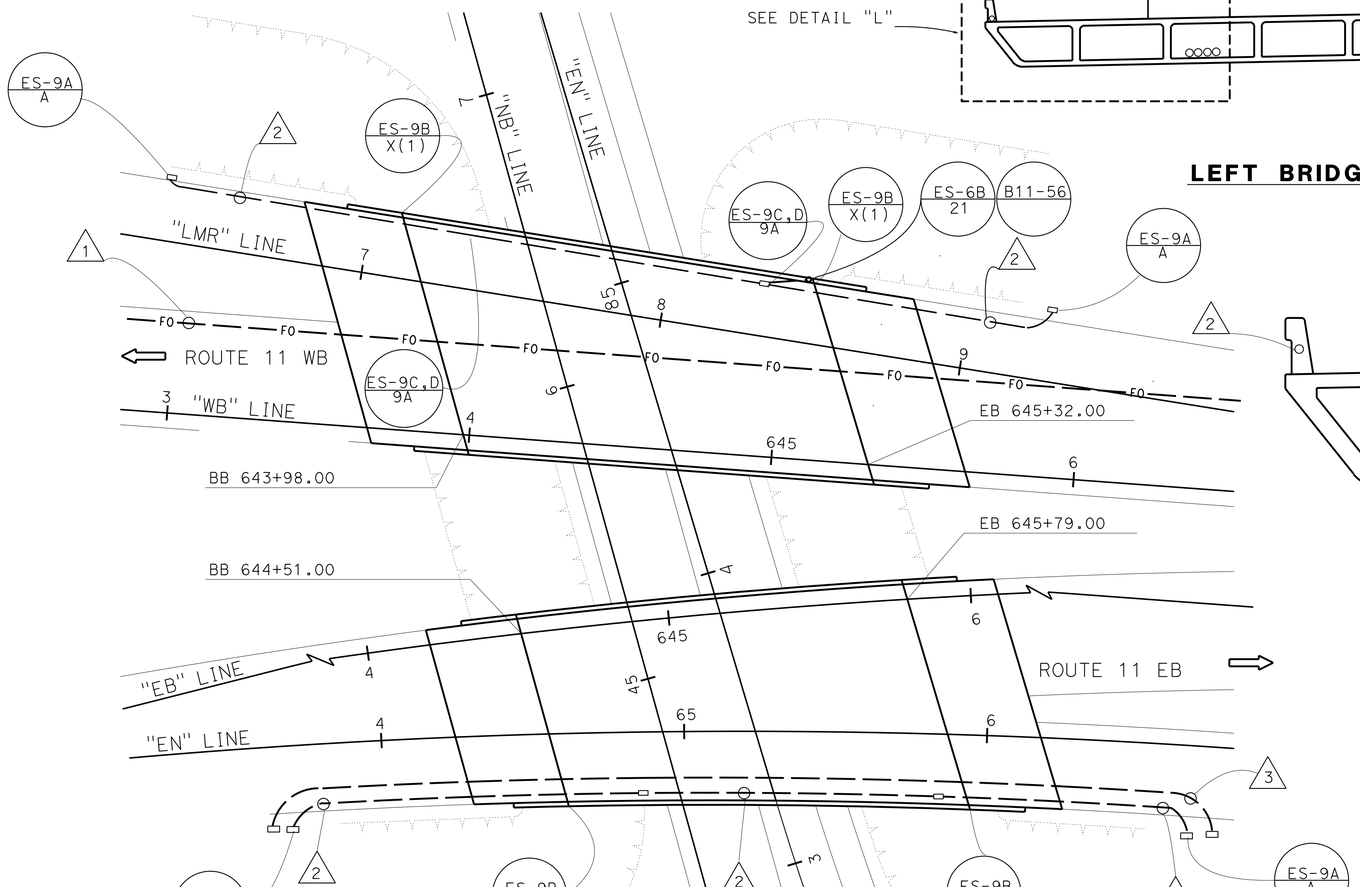

PLAN
NO SCALE

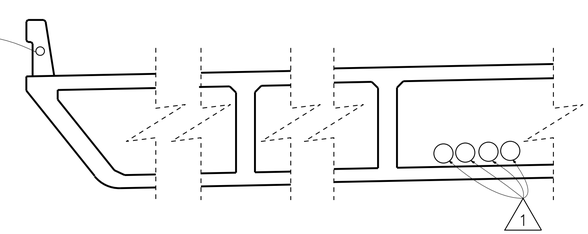

DETAIL "L"
(Typ)

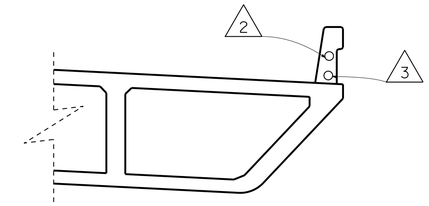

DETAIL "R"
(Typ)

ROUTE 11/125 SEPARATION
Br. No.57-1227R/L

SPRINKLER CONTROL CONDUIT (BRIDGE) BRIDGE ELECTRICAL

NO SCALE

E-41

PRELIMINARY FOR BIDDING PURPOSES ONLY

APPROVED FOR ELECTRICAL WORK ONLY

STATE OF CALIFORNIA - DEPARTMENT OF TRANSPORTATION
Caltrans® TRAFFIC ELECTRICAL

FUNCTIONAL SUPERVISOR: BRIAN PECUS
CALCULATED-DESIGNED BY: ENRIQUE BERNAL
CHECKED BY: HECTOR SANTAMARIA
REVISED BY / DATE REVISED

LAST REVISION 03-04-13 | DATE PLOTTED => 03-JUN-2013 | TIME PLOTTED => 13:36

Dist	COUNTY	ROUTE	POST MILES TOTAL PROJECT	SHEET No.	TOTAL SHEETS
11	SD	11,905	0.0/1.6, R9.9/R10.7	435	622

REGISTERED ELECTRICAL ENGINEER DATE

04-22-13
PLANS APPROVAL DATE

REGISTERED PROFESSIONAL ENGINEER
HECTOR A. SANTAMARIA
No. 18207
Exp. 12-31-13
ELECTRICAL
STATE OF CALIFORNIA

THE STATE OF CALIFORNIA OR ITS OFFICERS OR AGENTS SHALL NOT BE RESPONSIBLE FOR THE ACCURACY OR COMPLETENESS OF SCANNED COPIES OF THIS PLAN SHEET.

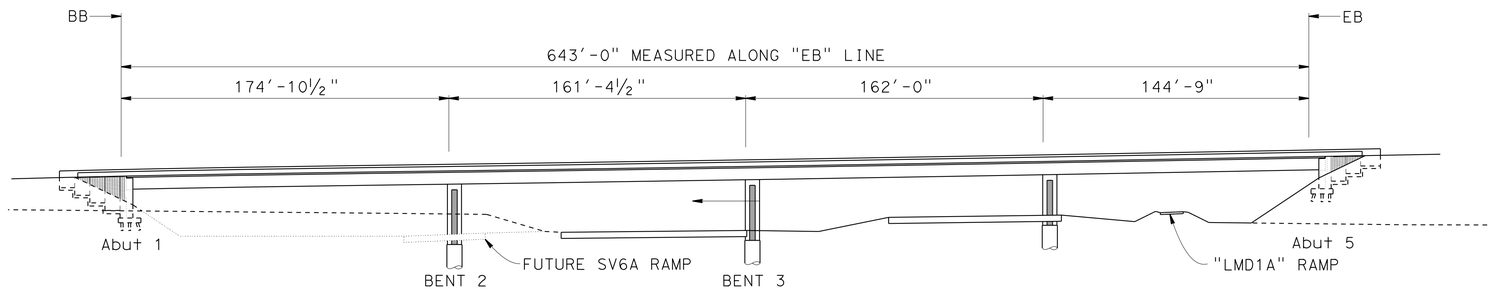

ELEVATION
NO SCALE

CONDUIT NOTES:

1 -2"C, (SEE LIGHTING AND SIGN ILLUMINATION)

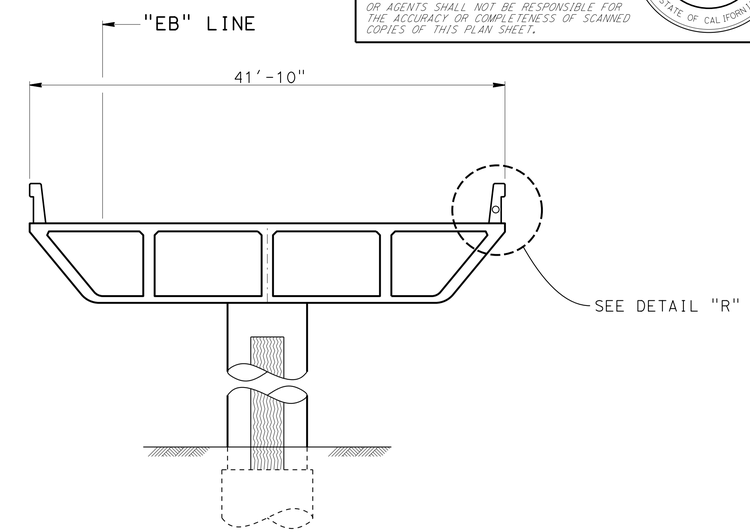

TYPICAL SECTION
NO SCALE

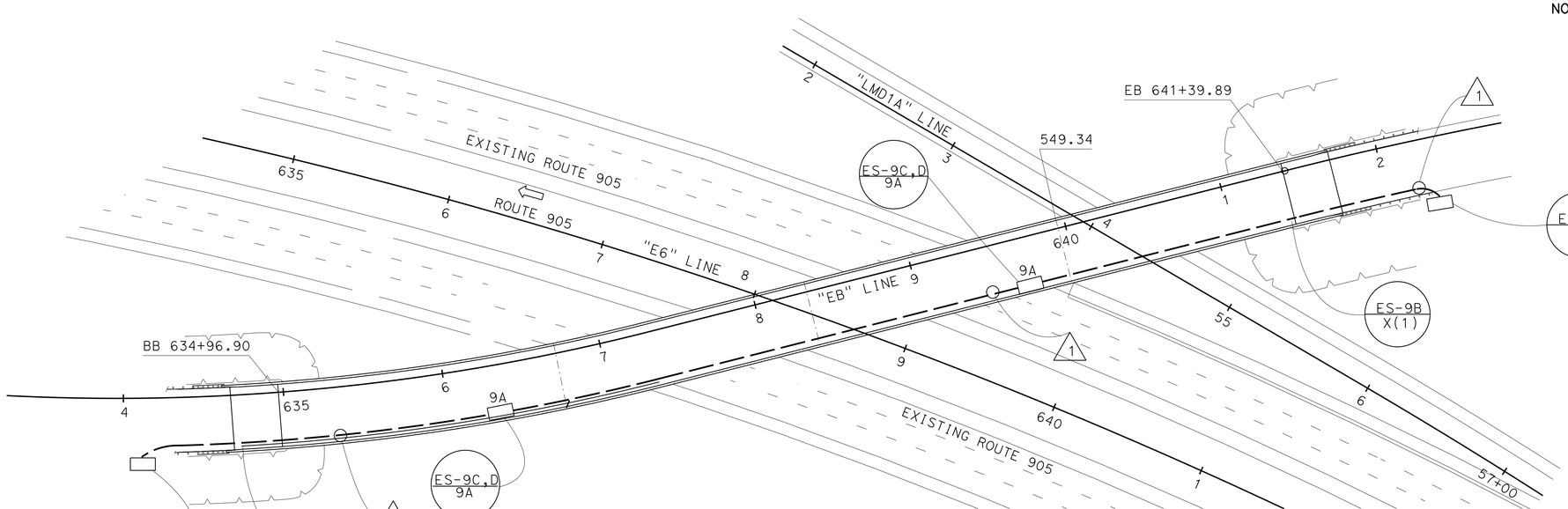

PLAN
NO SCALE

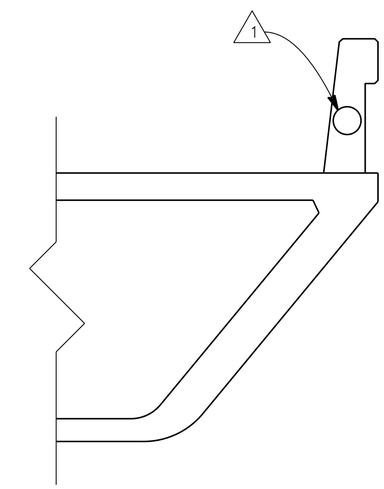

DETAIL "R"
(Typ)

RTE 905/RTE 11 CONNECTOR SEPARATION
Br. No. 57-1229G

BRIDGE ELECTRICAL

PRELIMINARY FOR BIDDING PURPOSES ONLY

APPROVED FOR ELECTRICAL WORK ONLY

NO SCALE

E-42

STATE OF CALIFORNIA - DEPARTMENT OF TRANSPORTATION
Caltrans® TRAFFIC ELECTRICAL

FUNCTIONAL SUPERVISOR: BRIAN PECUS
CALCULATED-DESIGNED BY: HECTOR SANTAMARIA
CHECKED BY: ENRIQUE BERNAL
REVISED BY / DATE REVISED

LAST REVISION 03-04-13 | DATE PLOTTED => 13-MAY-2013 | TIME PLOTTED => 21:27

Dist	COUNTY	ROUTE	POST MILES TOTAL PROJECT	SHEET No.	TOTAL SHEETS
11	SD	11,905	0.0/1.6, R9.9/R10.7	436	622

REGISTERED ELECTRICAL ENGINEER DATE

04-22-13
PLANS APPROVAL DATE

REGISTERED PROFESSIONAL ENGINEER
HECTOR A. SANTAMARIA
No. 18207
Exp. 12-31-13
ELECTRICAL
STATE OF CALIFORNIA

THE STATE OF CALIFORNIA OR ITS OFFICERS OR AGENTS SHALL NOT BE RESPONSIBLE FOR THE ACCURACY OR COMPLETENESS OF SCANNED COPIES OF THIS PLAN SHEET.

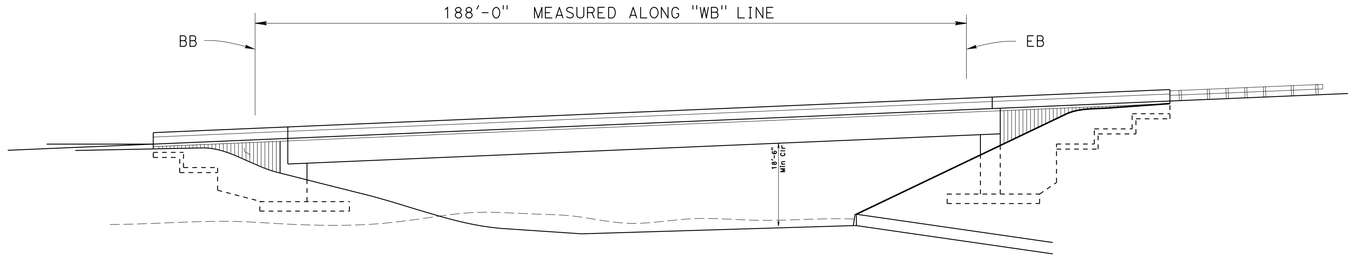

ELEVATION
NO SCALE

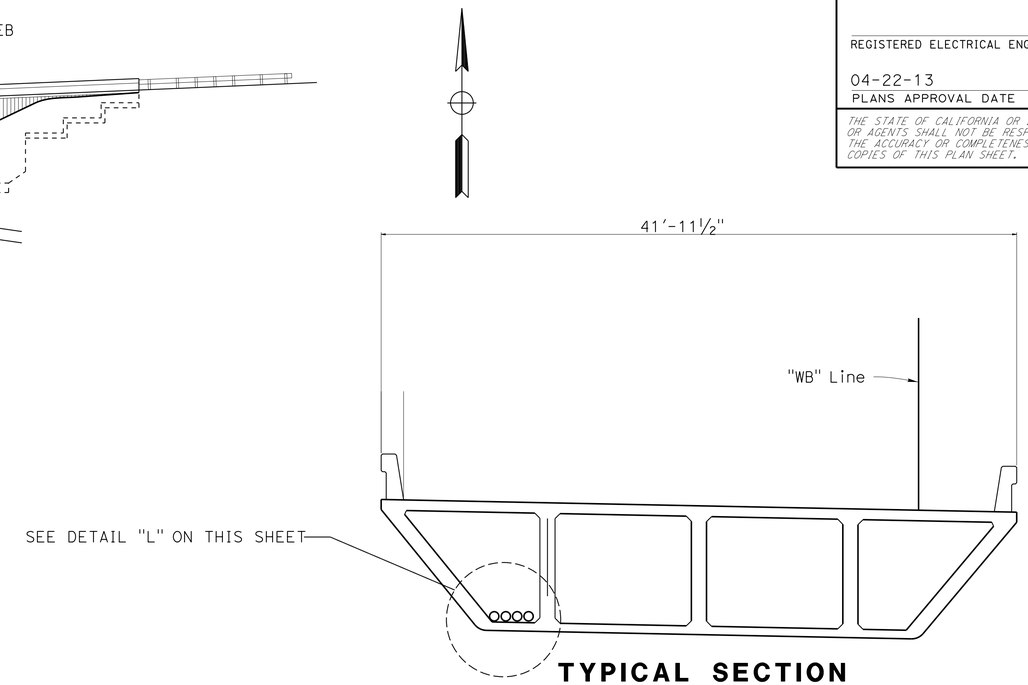

TYPICAL SECTION
NO SCALE

CONDUIT NOTES:

1 -2-MDCS(8), (SEE CLOSED CIRCUIT TELEVISION CIRCUIT)

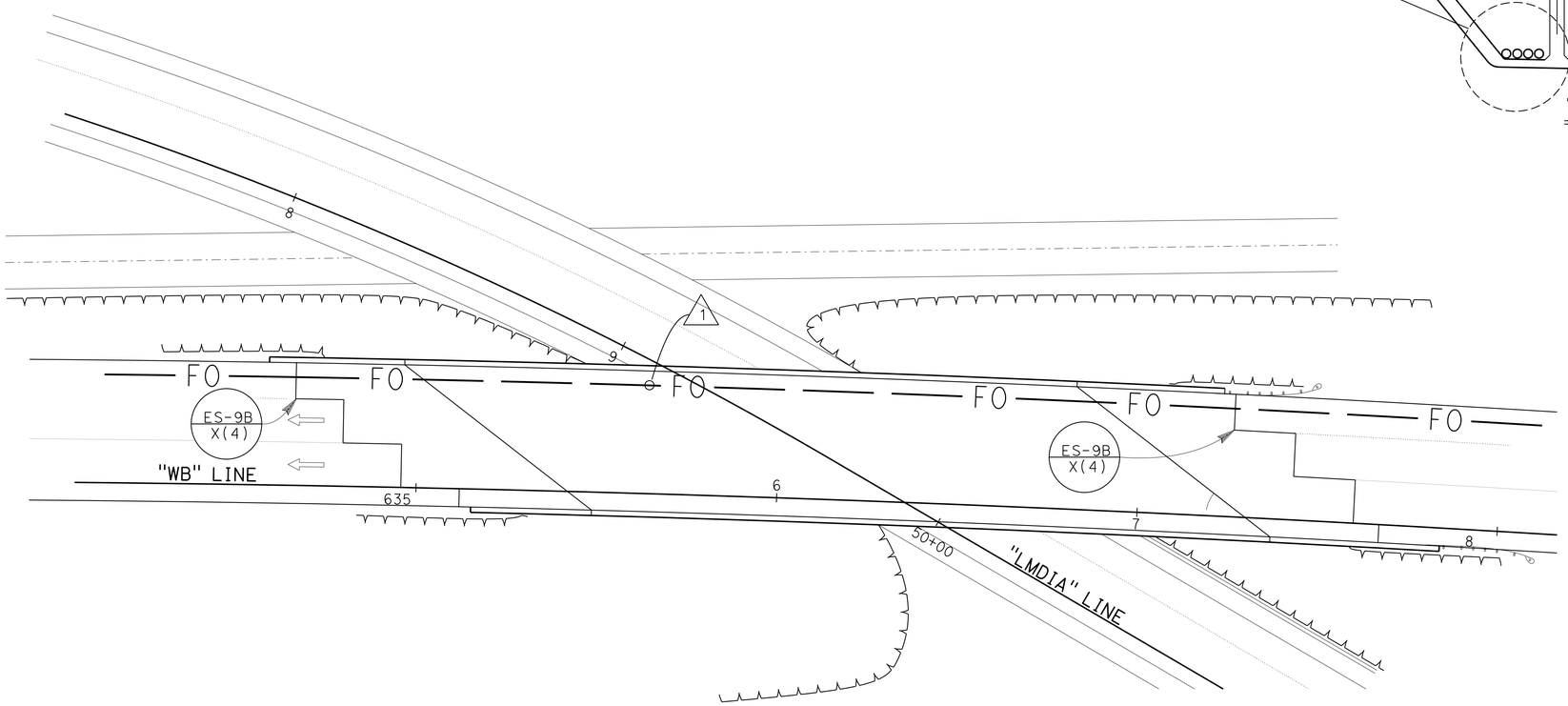

PLAN
NO SCALE

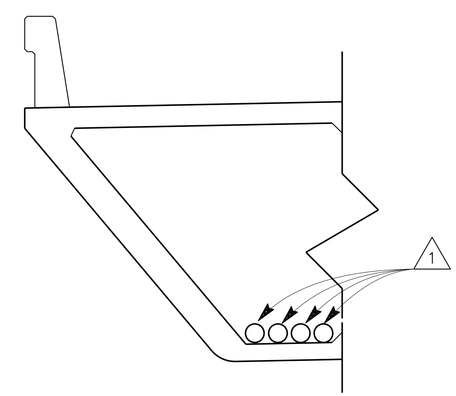

DETAIL "L"
(Typ)

W11-W905 CONNECTOR
Br No. 57-1228F

NO SCALE

BRIDGE ELECTRICAL

PRELIMINARY FOR BIDDING PURPOSES ONLY

APPROVED FOR ELECTRICAL WORK ONLY

E-43

STATE OF CALIFORNIA - DEPARTMENT OF TRANSPORTATION
Caltrans
TRAFFIC ELECTRICAL

FUNCTIONAL SUPERVISOR: BRIAN PECUS
CALCULATED-DESIGNED BY: HECTOR SANTAMARIA
CHECKED BY: ENRIQUE BERNAL
REVISED BY
DATE REVISED

LAST REVISION 03-04-13
DATE PLOTTED => 13-MAY-2013
TIME PLOTTED => 21:28

Dist	COUNTY	ROUTE	POST MILES TOTAL PROJECT	SHEET No.	TOTAL SHEETS
11	SD	11,905	0.0/1.6, R9.9/R10.7	437	622

REGISTERED ELECTRICAL ENGINEER DATE

04-22-13
PLANS APPROVAL DATE

REGISTERED PROFESSIONAL ENGINEER
HECTOR A. SANTAMARIA
No. 18207
Exp. 12-31-13
ELECTRICAL
STATE OF CALIFORNIA

THE STATE OF CALIFORNIA OR ITS OFFICERS OR AGENTS SHALL NOT BE RESPONSIBLE FOR THE ACCURACY OR COMPLETENESS OF SCANNED COPIES OF THIS PLAN SHEET.

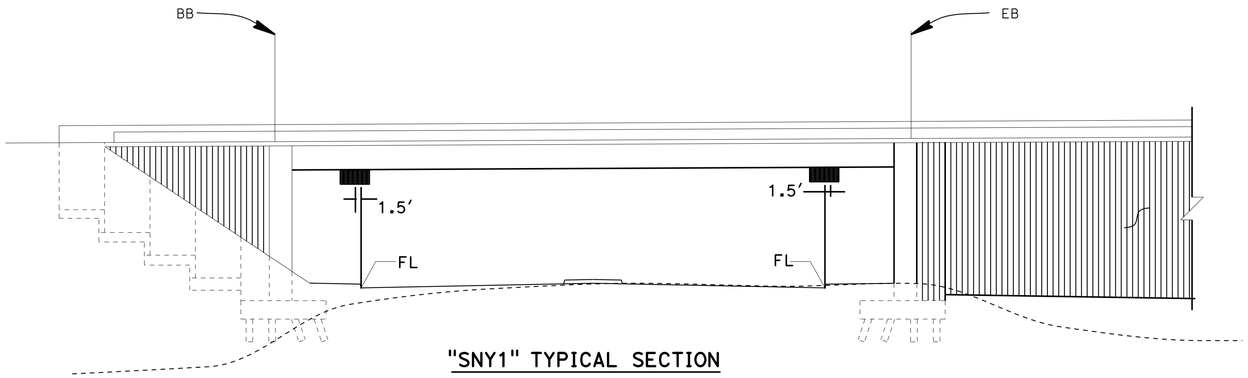

"SNY1" TYPICAL SECTION
NO SCALE

LEGEND

-100 W HPS SOFFIT FIXTURE WITH MOUNTING PLATES.
(J) -NEMA TYPE 4 JUNCTION BOX, ES-9E(DETAIL W)

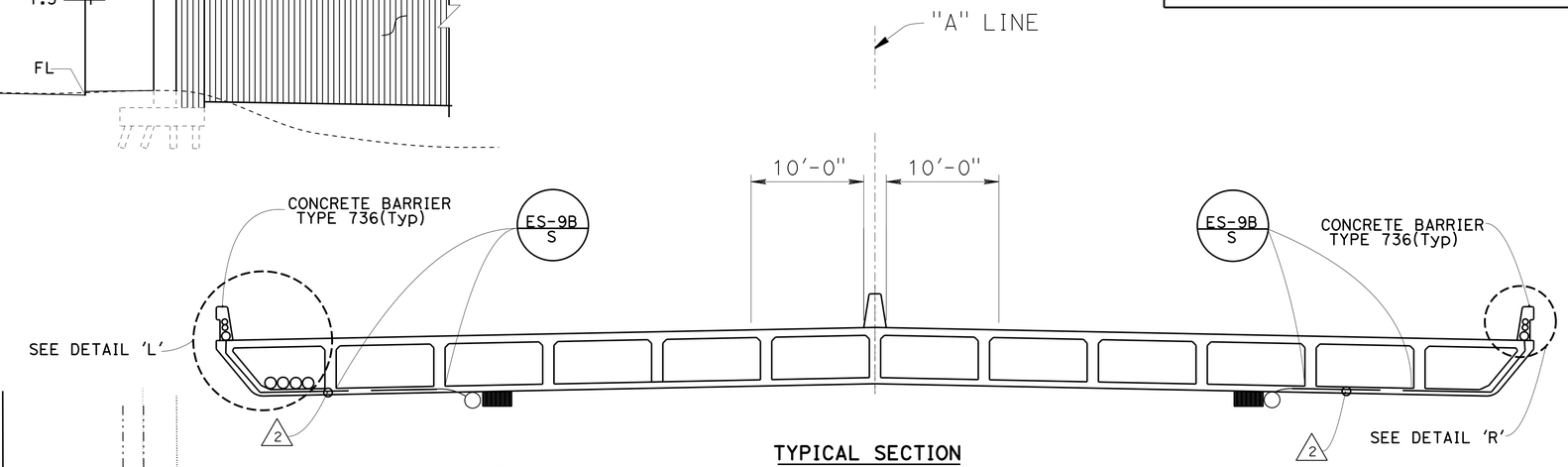

TYPICAL SECTION
NO SCALE

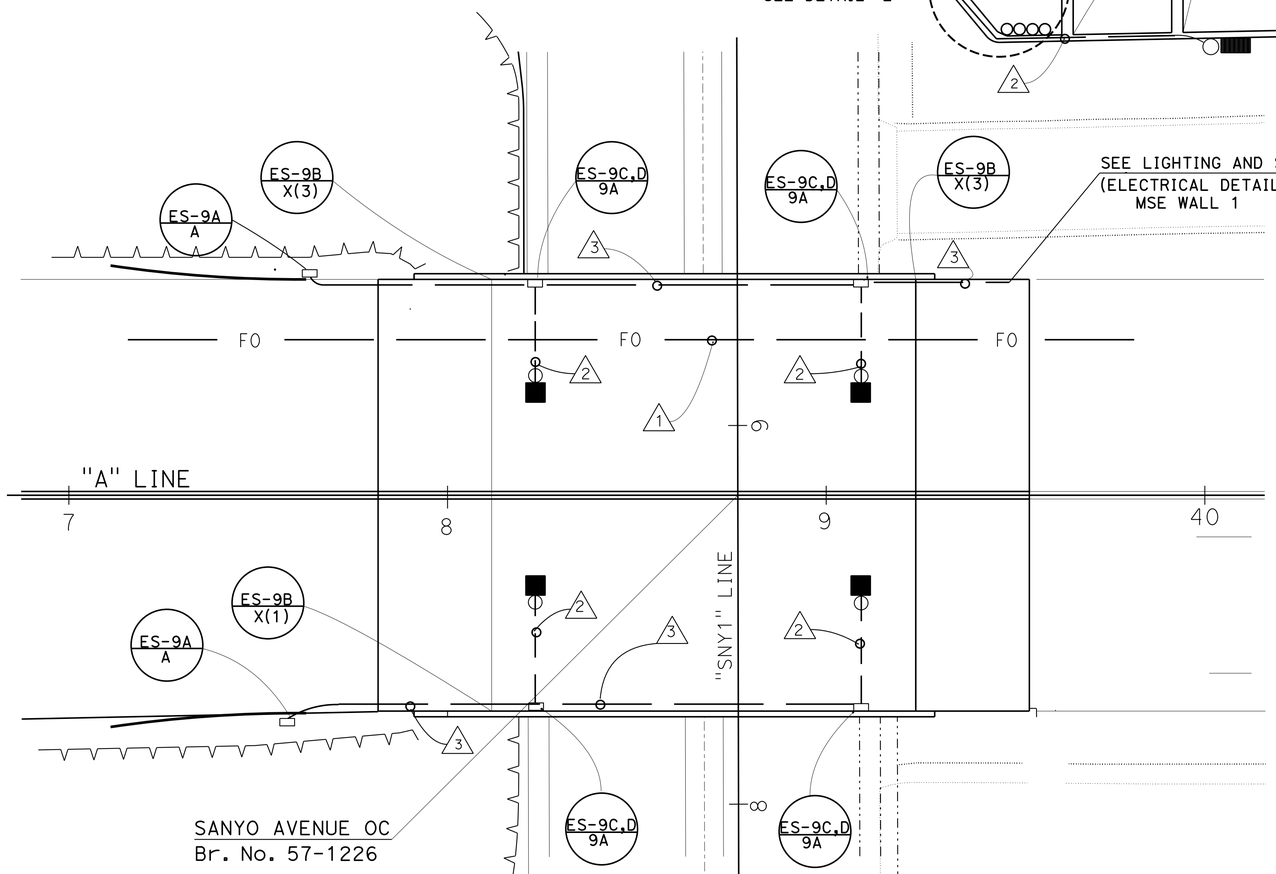

PLAN
NO SCALE

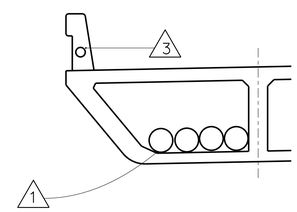

DETAIL 'L'
(Typ)
NO SCALE

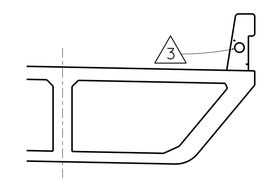

DETAIL 'R'
(Typ)
NO SCALE

CONDUIT NOTES:

1. -2-MDCS(8), (SEE CLOSED CIRCUIT TELEVISION SYSTEM)
2. -1"C, (SEE LIGHTING AND SIGN ILLUMINATION)
3. -1"C, (SEE LIGHTING AND SIGN ILLUMINATION)

SANYO AVENUE OC
Br. No. 57-1226

BRIDGE ELECTRICAL

APPROVED FOR ELECTRICAL WORK ONLY

PRELIMINARY FOR BIDDING PURPOSES ONLY

NO SCALE

E-44

STATE OF CALIFORNIA - DEPARTMENT OF TRANSPORTATION
Caltrans® TRAFFIC ELECTRICAL

FUNCTIONAL SUPERVISOR: BRIAN PECUS
CALCULATED-DESIGNED BY: HECTOR SANTAMARIA
CHECKED BY: ENRIQUE BERNAL
REVISED BY / DATE REVISED

LAST REVISION 03-04-13 | DATE PLOTTED => 13-MAY-2013 | TIME PLOTTED => 21:28

Dist	COUNTY	ROUTE	POST MILES TOTAL PROJECT	SHEET No.	TOTAL SHEETS
11	SD	11,905	0.0/1.6, R9.9/R10.7	438	622

REGISTERED ELECTRICAL ENGINEER DATE

04-22-13
PLANS APPROVAL DATE

REGISTERED PROFESSIONAL ENGINEER
HECTOR A. SANTAMARIA
No. 18207
Exp. 12-31-13
ELECTRICAL
STATE OF CALIFORNIA

THE STATE OF CALIFORNIA OR ITS OFFICERS OR AGENTS SHALL NOT BE RESPONSIBLE FOR THE ACCURACY OR COMPLETENESS OF SCANNED COPIES OF THIS PLAN SHEET.

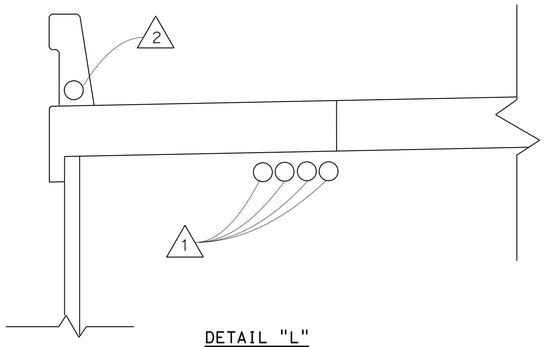

DETAIL "L"
(Typ)

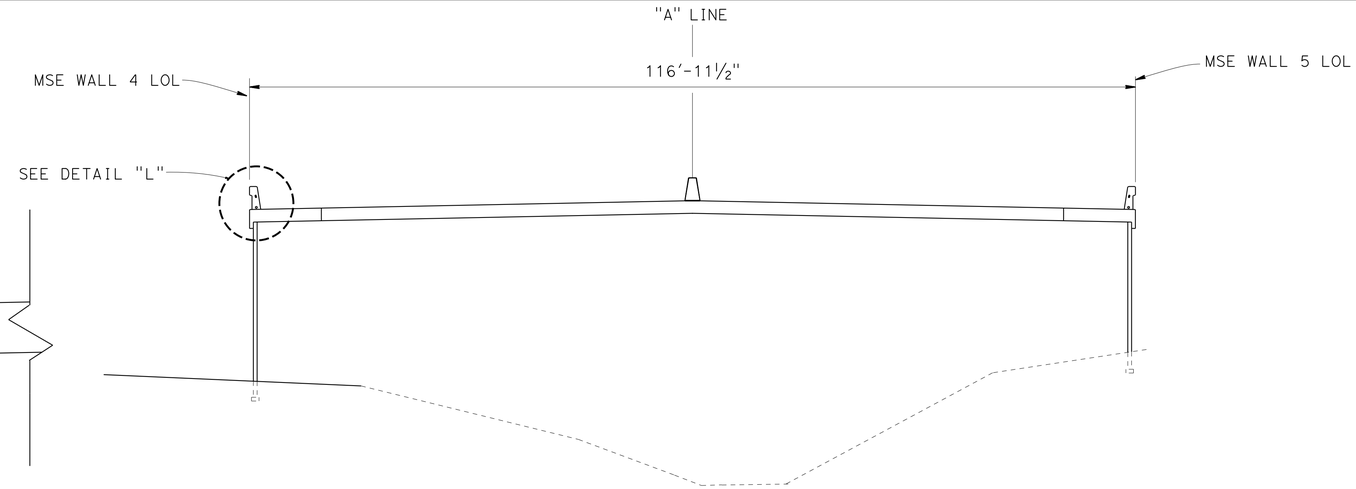

TYPICAL SECTION
NO SCALE

CONDUIT NOTES:

1. -2-MDCS(8), (SEE CLOSED CIRCUIT TELEVISION SYSTEM)
2. -2"C, (SEE LIGHTING AND SIGN ILLUMINATION)

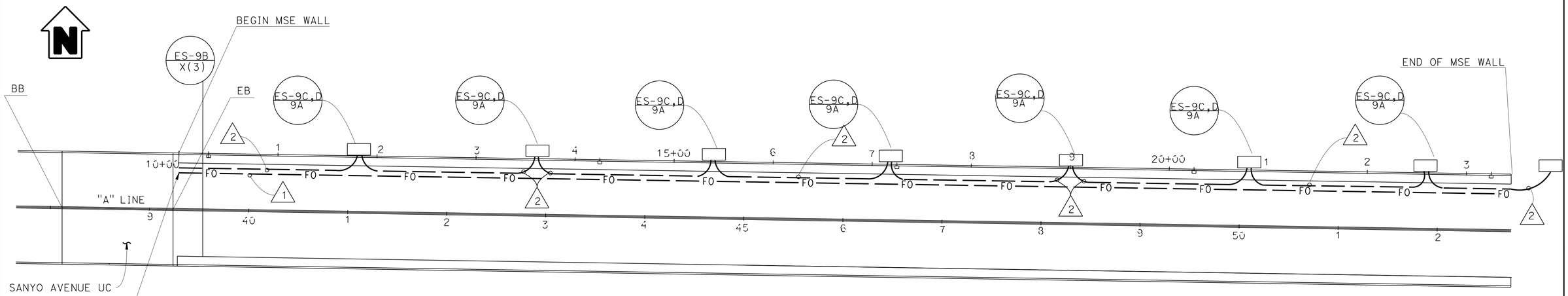

PLAN
NO SCALE

MSE WALL 1

NO SCALE

BRIDGE ELECTRICAL

E-45

PRELIMINARY FOR BIDDING PURPOSES ONLY

APPROVED FOR ELECTRICAL WORK ONLY

STATE OF CALIFORNIA - DEPARTMENT OF TRANSPORTATION
Caltrans® **TRAFFIC ELECTRICAL**

FUNCTIONAL SUPERVISOR: BRIAN PECUS
CALCULATED-DESIGNED BY: HECTOR SANTAMARIA
CHECKED BY: ENRIQUE BERNAL
REVISED BY / DATE REVISED

LAST REVISION 03-04-13 | DATE PLOTTED => 13-MAY-2013 | TIME PLOTTED => 21:28

Dist	COUNTY	ROUTE	POST MILES TOTAL PROJECT	SHEET No.	TOTAL SHEETS
11	SD	11,905	0.0/1.6, R9.9/R10.7	439	622

REGISTERED ELECTRICAL ENGINEER DATE

04-22-13
PLANS APPROVAL DATE

REGISTERED PROFESSIONAL ENGINEER
HECTOR A. SANTAMARIA
No. 18207
Exp. 12-31-13
ELECTRICAL
STATE OF CALIFORNIA

THE STATE OF CALIFORNIA OR ITS OFFICERS OR AGENTS SHALL NOT BE RESPONSIBLE FOR THE ACCURACY OR COMPLETENESS OF SCANNED COPIES OF THIS PLAN SHEET.

CONDUIT NOTES:

1 -2"C, 2#10(PRIVATE LIGHTING)

2 -Exist 1"C, 2#10(PRIVATE LIGHTING)

NOTES:

1 -SEE LIGHTING(PARKING LOT) FOR LIGHTING STANDARD. SEE SHEET SES-3.

2. FOR ACCURATE RIGHT OF WAY DATA, CONTACT RIGHT OF WAY ENGINEERING AT THE DISTRICT OFFICE.

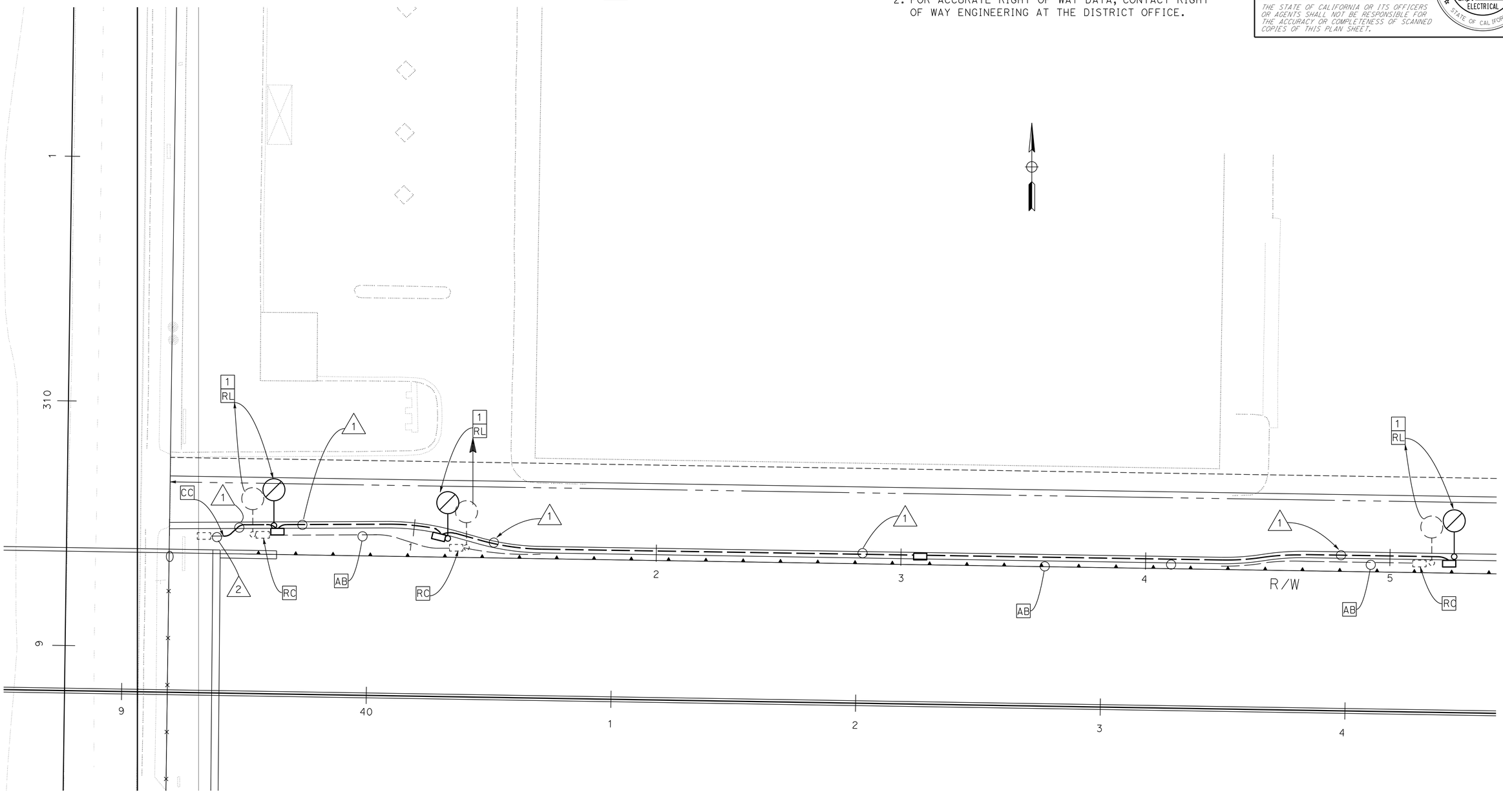

PRELIMINARY FOR BIDDING PURPOSES ONLY

APPROVED FOR ELECTRICAL WORK ONLY

SCALE:1"= 50'

LIGHTING (PARKING LOT)

E-46

STATE OF CALIFORNIA - DEPARTMENT OF TRANSPORTATION	Caltrans® TRAFFIC ELECTRICAL
FUNCTIONAL SUPERVISOR	BRIAN PECUS
CALCULATED-DESIGNED BY	HECTOR SANTAMARIA
CHECKED BY	ENRIQUE BERNAL
REVISED BY	
DATE REVISED	

LAST REVISION 03-04-13 | DATE PLOTTED => 13-MAY-2013 | TIME PLOTTED => 21:28

Dist	COUNTY	ROUTE	POST MILES TOTAL PROJECT	SHEET No.	TOTAL SHEETS
11	SD	11,905	0.0/1.6, R9.9/R10.7	440	622

REGISTERED ELECTRICAL ENGINEER DATE

04-22-13
PLANS APPROVAL DATE

REGISTERED PROFESSIONAL ENGINEER
HECTOR A. SANTAMARIA
No. 18207
Exp. 12-31-13
ELECTRICAL
STATE OF CALIFORNIA

THE STATE OF CALIFORNIA OR ITS OFFICERS OR AGENTS SHALL NOT BE RESPONSIBLE FOR THE ACCURACY OR COMPLETENESS OF SCANNED COPIES OF THIS PLAN SHEET.

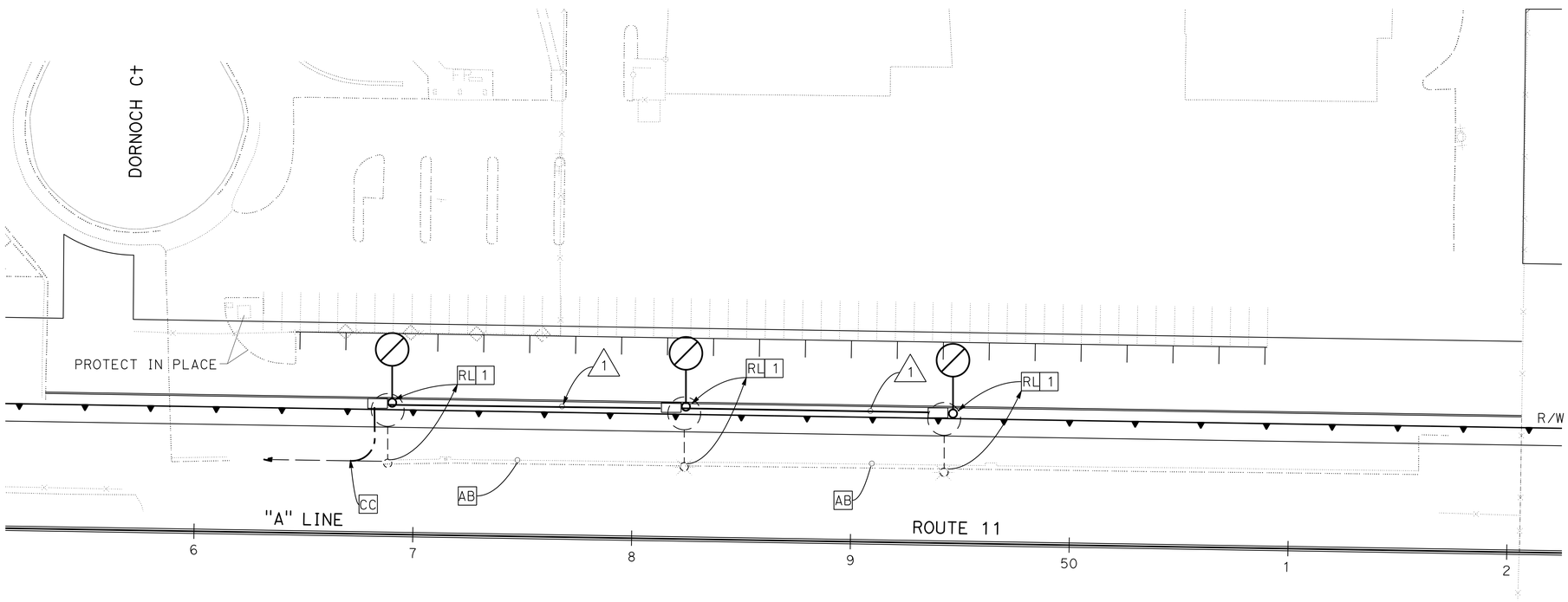

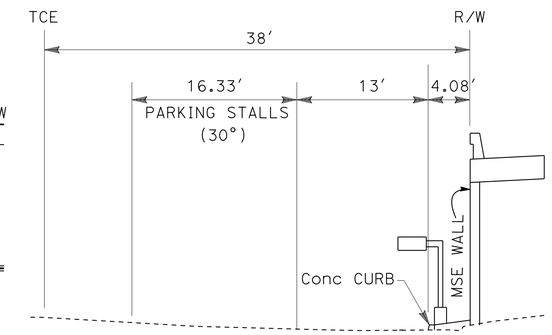

DETAIL "A"
(Typ)
NO SCALE

CONDUIT NOTES:

1 -2"C, 2#10(PRIVATE LIGHTING)

NOTES:

1 -SEE LIGHTING(PARKING LOT) FOR LIGHTING STANDARD. SEE SHEET SES-3.

2. FOR ACCURATE RIGHT OF WAY DATA, CONTACT RIGHT OF WAY ENGINEERING AT THE DISTRICT OFFICE.

PRELIMINARY FOR BIDDING PURPOSES ONLY

APPROVED FOR ELECTRICAL WORK ONLY

SCALE: 1"= 50'

LIGHTING (PARKING LOT)

E-47

STATE OF CALIFORNIA - DEPARTMENT OF TRANSPORTATION
Caltrans® TRAFFIC ELECTRICAL

FUNCTIONAL SUPERVISOR: BRIAN PECUS
CALCULATED-DESIGNED BY: ENRIQUE BERNAL
CHECKED BY: HECTOR SANTAMARIA
REVISED BY
DATE REVISED

LAST REVISION 03-04-13
DATE PLOTTED => 13-MAY-2013
TIME PLOTTED => 21:28

Dist	COUNTY	ROUTE	POST MILES TOTAL PROJECT	SHEET No.	TOTAL SHEETS
11	SD	11,905	0.0/1.6, R9.9/R10.7	441	622

REGISTERED ELECTRICAL ENGINEER DATE

04-22-13
PLANS APPROVAL DATE

REGISTERED PROFESSIONAL ENGINEER
HECTOR A. SANTAMARIA
No. 18207
Exp. 12-31-13
ELECTRICAL
STATE OF CALIFORNIA

THE STATE OF CALIFORNIA OR ITS OFFICERS OR AGENTS SHALL NOT BE RESPONSIBLE FOR THE ACCURACY OR COMPLETENESS OF SCANNED COPIES OF THIS PLAN SHEET.

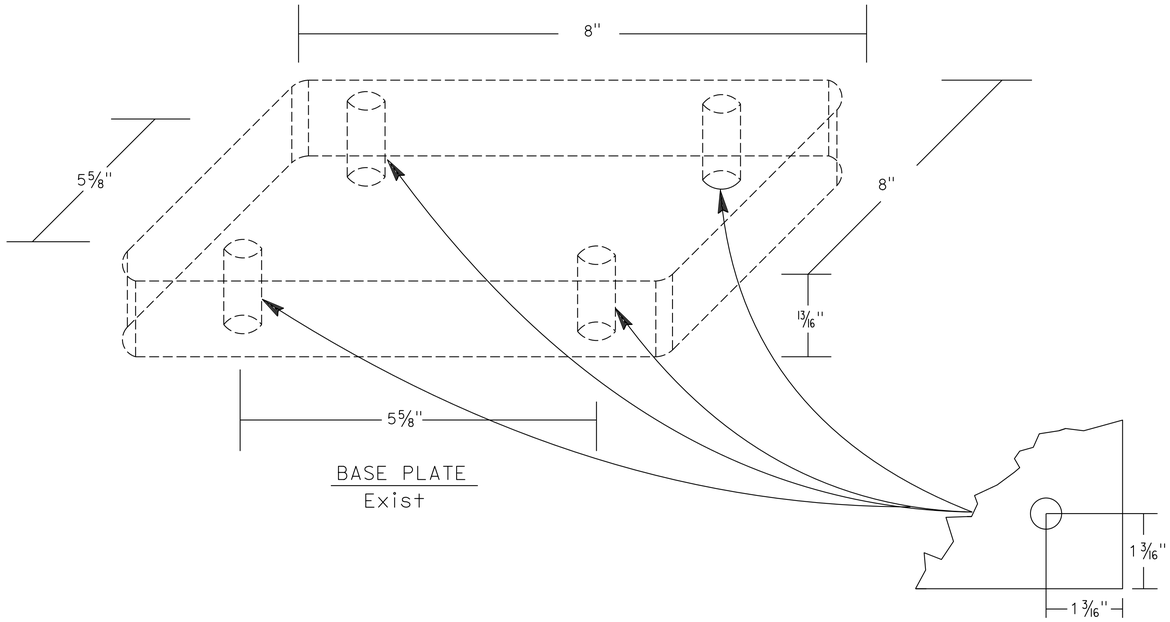

BASE PLATE
Exist

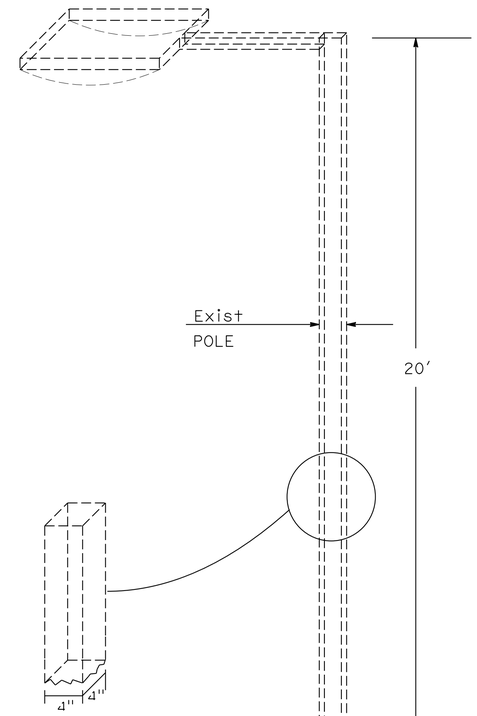

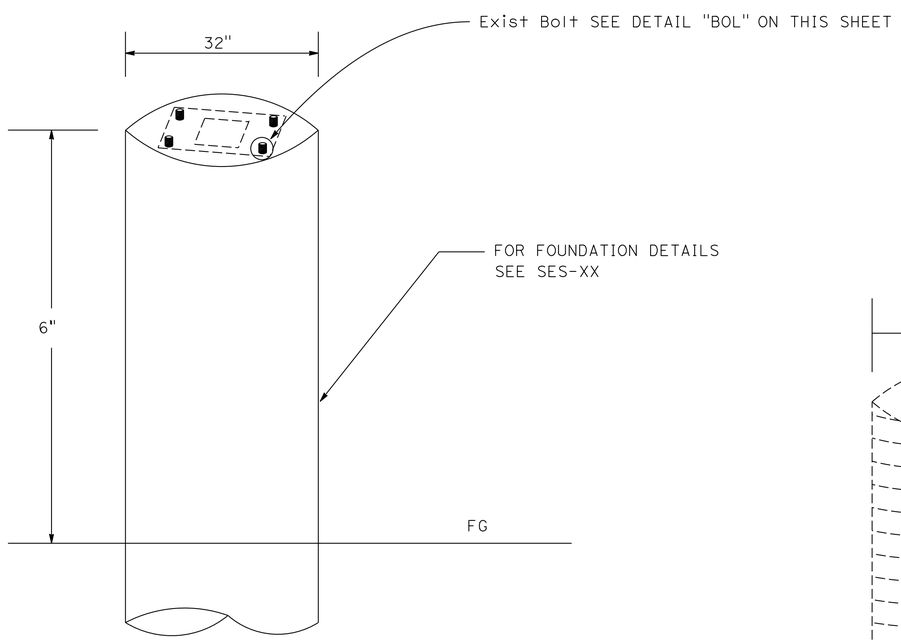

DETAIL "B"

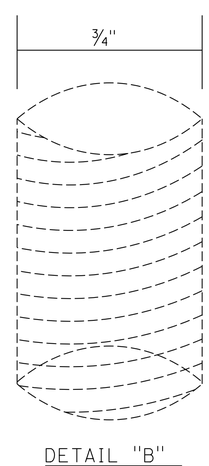

DETAIL "B"

LIGHT STANDARD

PRELIMINARY FOR BIDDING PURPOSES ONLY

APPROVED FOR ELECTRICAL WORK ONLY

SCALE 1" = 50'

LIGHTING (PARKING LOT) ELECTRICAL DETAILS

E-48

STATE OF CALIFORNIA - DEPARTMENT OF TRANSPORTATION
Caltrans® TRAFFIC ELECTRICAL

FUNCTIONAL SUPERVISOR: BRIAN PECUS
CALCULATED-DESIGNED BY: HECTOR SANTAMARIA
CHECKED BY: ENRIQUE BERNAL
REVISED BY
DATE REVISED

LAST REVISION 03-04-13
DATE PLOTTED => 13-MAY-2013
TIME PLOTTED => 21:28

Dist	COUNTY	ROUTE	POST MILES TOTAL PROJECT	SHEET No.	TOTAL SHEETS
11	SD	11,905	0.0/1.6, R9.9/R10.7	442	622

REGISTERED ELECTRICAL ENGINEER DATE

04-22-13
PLANS APPROVAL DATE

REGISTERED PROFESSIONAL ENGINEER HECTOR A. SANTAMARIA No. 18207 Exp. 12-31-13 ELECTRICAL STATE OF CALIFORNIA

THE STATE OF CALIFORNIA OR ITS OFFICERS OR AGENTS SHALL NOT BE RESPONSIBLE FOR THE ACCURACY OR COMPLETENESS OF SCANNED COPIES OF THIS PLAN SHEET.

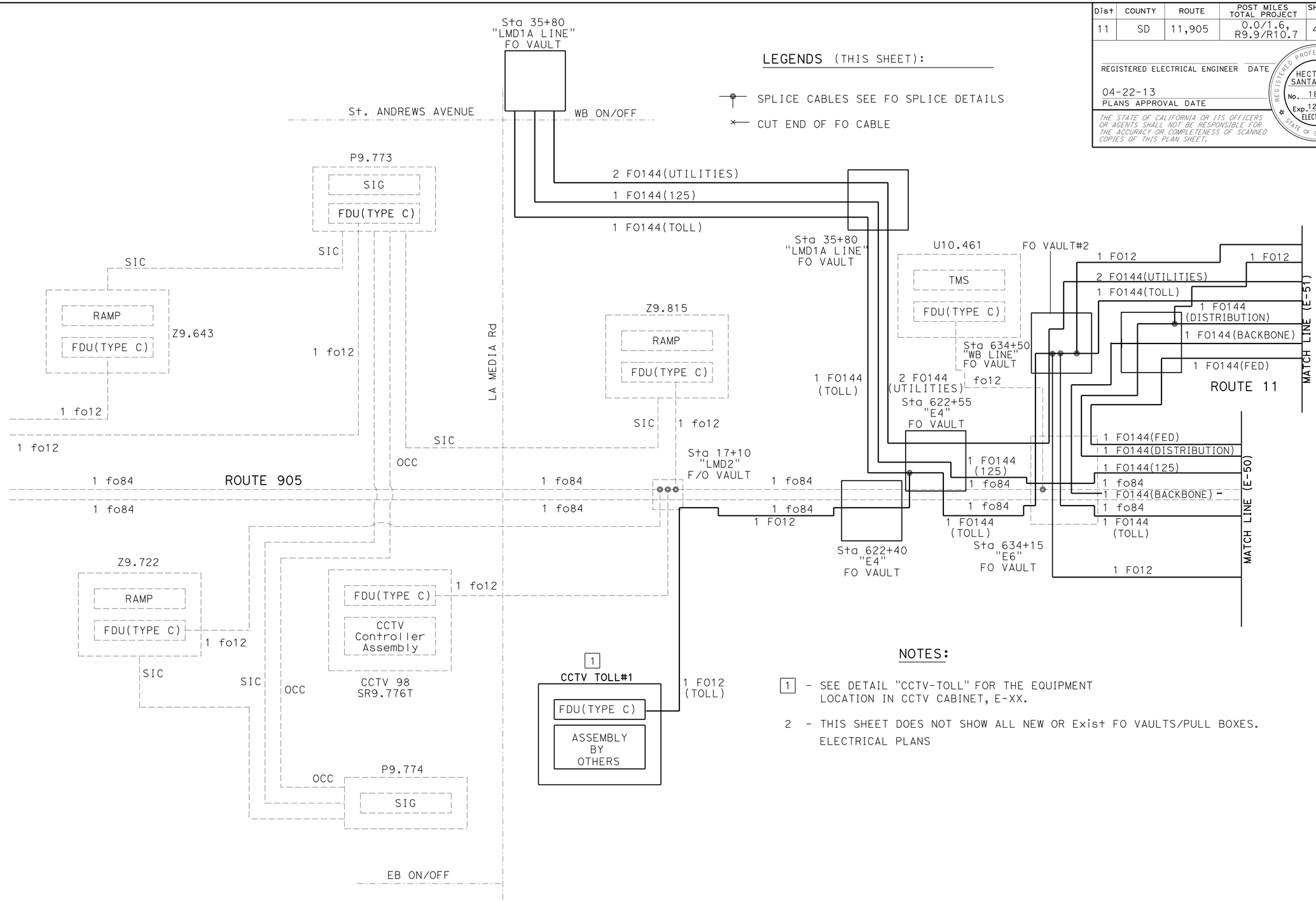

NOTES:

1 - SEE DETAIL "CCTV-TOLL" FOR THE EQUIPMENT LOCATION IN CCTV CABINET, E-XX.

2 - THIS SHEET DOES NOT SHOW ALL NEW OR Exist FO VAULTS/PULL BOXES. ELECTRICAL PLANS

COMMUNICATION DIAGRAM

PRELIMINARY FOR BIDDING PURPOSES ONLY

APPROVED FOR ELECTRICAL WORK ONLY

CLOSED CIRCUIT TELEVISION CIRCUIT (ELECTRICAL DETAILS)

NO SCALE

E-49

STATE OF CALIFORNIA - DEPARTMENT OF TRANSPORTATION
Caltrans TRAFFIC ELECTRICAL

FUNCTIONAL SUPERVISOR: BRIAN PECUS
CALCULATED-DESIGNED BY: HECTOR SANTAMARIA
CHECKED BY: ENRIQUE BERNAL
REVISED BY / DATE REVISED

LAST REVISION 03-04-13
DATE PLOTTED => 13-MAY-2013
TIME PLOTTED => 21:29

Dist	COUNTY	ROUTE	POST MILES TOTAL PROJECT	SHEET No.	TOTAL SHEETS
11	SD	11,905	0.0/1.6, R9.9/R10.7	443	622

REGISTERED ELECTRICAL ENGINEER DATE

04-22-13
PLANS APPROVAL DATE

REGISTERED PROFESSIONAL ENGINEER HECTOR A. SANTAMARIA No. 18207 Exp. 12-31-13 ELECTRICAL STATE OF CALIFORNIA

THE STATE OF CALIFORNIA OR ITS OFFICERS OR AGENTS SHALL NOT BE RESPONSIBLE FOR THE ACCURACY OR COMPLETENESS OF SCANNED COPIES OF THIS PLAN SHEET.

LEGEND (THIS SHEET):

SPLICE CABLES SEE FO SPLICE DETAILS

CUT END OF FO CABLE

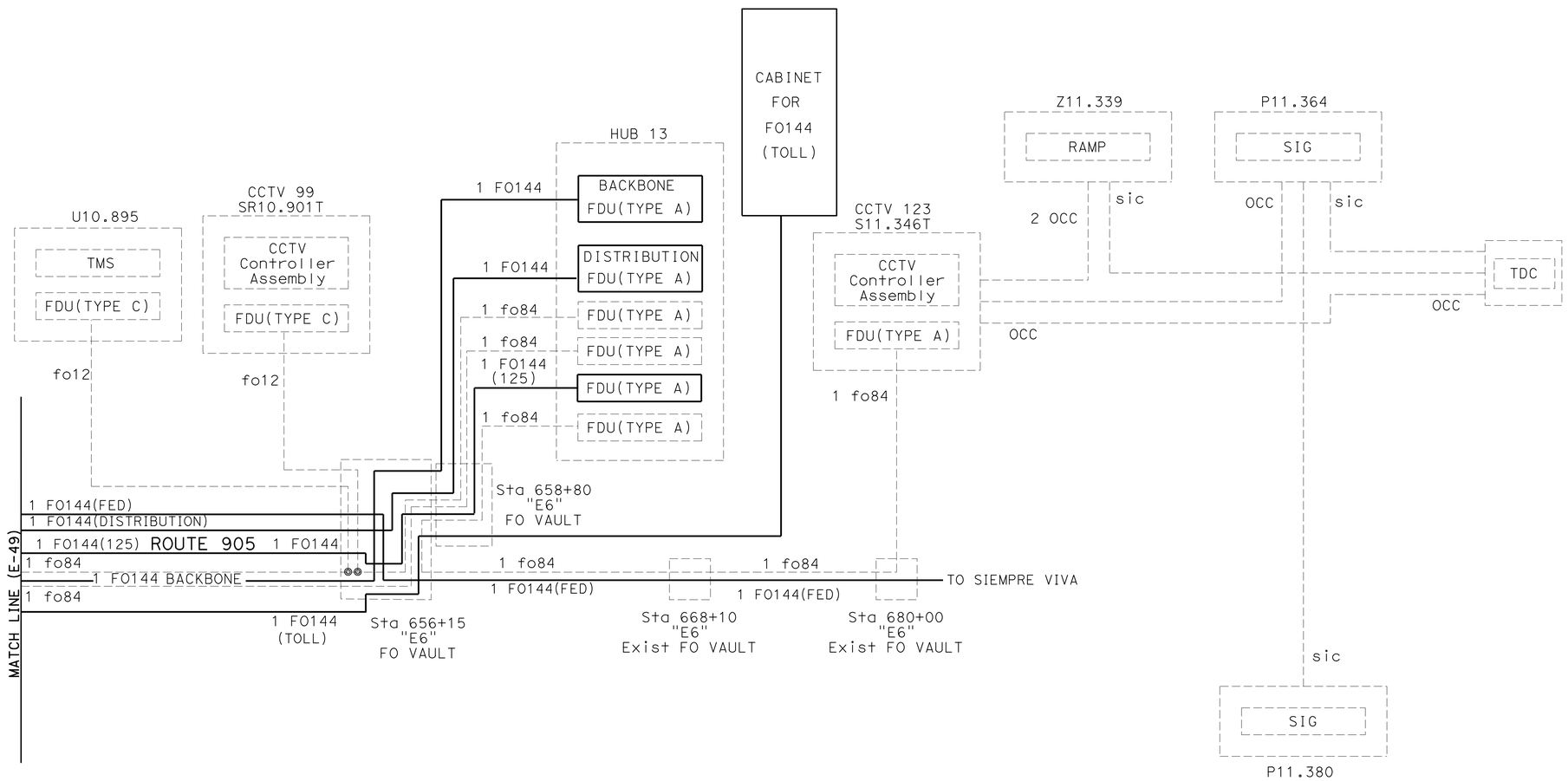

COMMUNICATION DIAGRAM

PRELIMINARY FOR BIDDING PURPOSES ONLY

APPROVED FOR ELECTRICAL WORK ONLY

CLOSED CIRCUIT TELEVISION CIRCUIT
(ELECTRICAL DETAILS)

NO SCALE

E-50

STATE OF CALIFORNIA - DEPARTMENT OF TRANSPORTATION
Caltrans TRAFFIC ELECTRICAL

FUNCTIONAL SUPERVISOR: BRIAN PECUS
CALCULATED-DESIGNED BY: HECTOR SANTAMARIA
CHECKED BY: ENRIQUE BERNAL
REVISED BY
DATE REVISED

LAST REVISION 03-04-13
DATE PLOTTED => 13-MAY-2013
TIME PLOTTED => 21:29

Dist	COUNTY	ROUTE	POST MILES TOTAL PROJECT	SHEET No.	TOTAL SHEETS
11	SD	11,905	0.0/1.6, R9.9/R10.7	444	622

REGISTERED ELECTRICAL ENGINEER DATE

04-22-13
PLANS APPROVAL DATE

REGISTERED PROFESSIONAL ENGINEER HECTOR A. SANTAMARIA No. 18207 Exp. 12-31-13 ELECTRICAL STATE OF CALIFORNIA

THE STATE OF CALIFORNIA OR ITS OFFICERS OR AGENTS SHALL NOT BE RESPONSIBLE FOR THE ACCURACY OR COMPLETENESS OF SCANNED COPIES OF THIS PLAN SHEET.

LEGENDS (THIS SHEET):

SPLICE CABLES SEE FO SPLICE DETAILS

CUT END OF FO CABLE

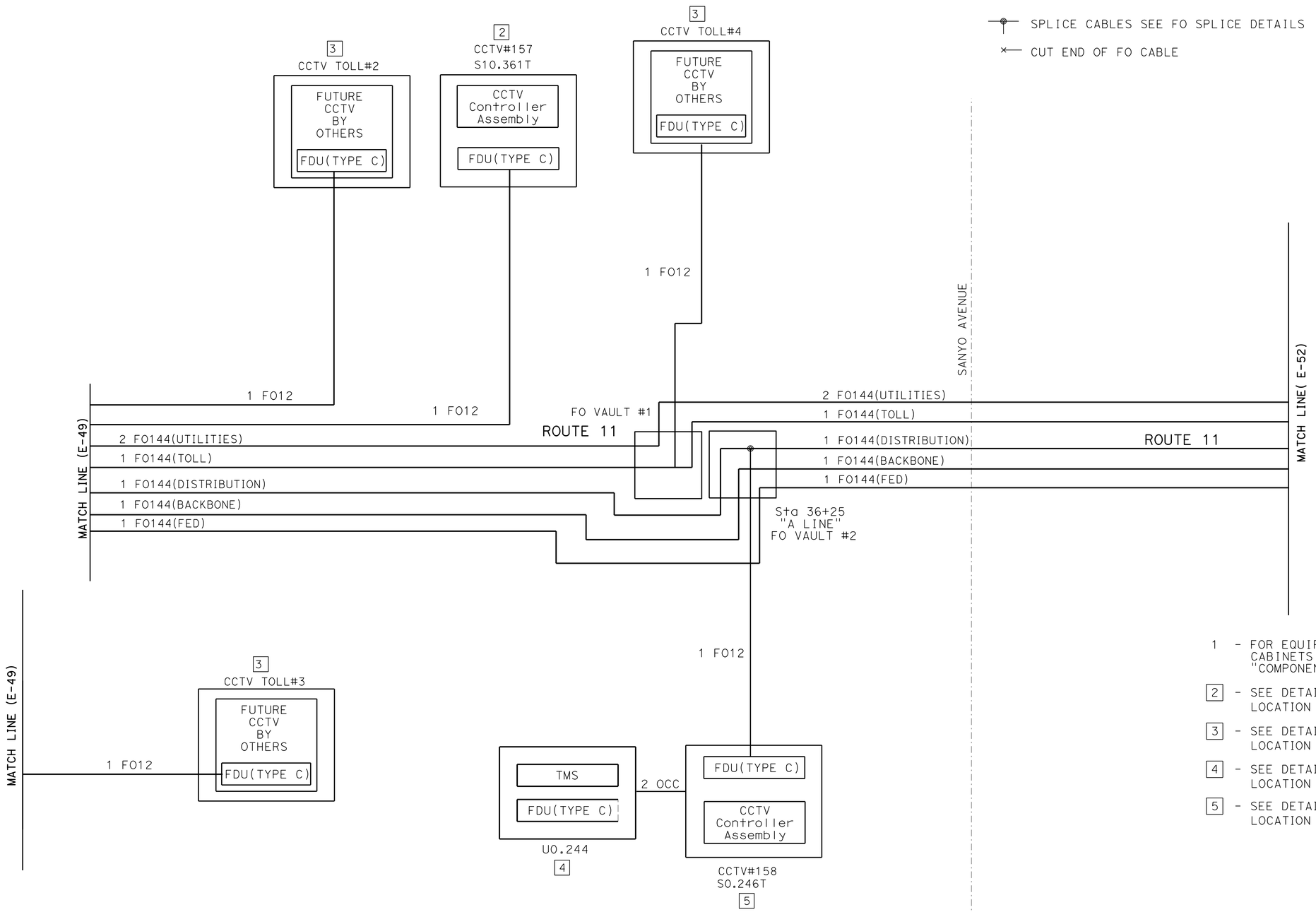

NOTES(TSO):

1 - FOR EQUIPMENT CONNECTIVITY IN MODEL 334 CABINETS SEE ELECTRICAL DETAILS "COMPONENT DIAGRAM".

2 - SEE DETAIL "CCTV" FOR THE EQUIPMENT LOCATION IN CCTV CABINET, E-62.

3 - SEE DETAIL "CCTV-TOLL" FOR THE EQUIPMENT LOCATION IN CCTV CABINET, E-63.

4 - SEE DETAIL "TMS-CCTV" FOR THE EQUIPMENT LOCATION IN TMS CABINET, E-64.

5 - SEE DETAIL "CCTV-TMS" FOR THE EQUIPMENT LOCATION IN CCTV CABINET, E-64.

COMMUNICATION DIAGRAM

PRELIMINARY FOR BIDDING PURPOSES ONLY

APPROVED FOR ELECTRICAL WORK ONLY

CLOSED CIRCUIT TELEVISION CIRCUIT
(ELECTRICAL DETAILS)

NO SCALE

E-51

STATE OF CALIFORNIA - DEPARTMENT OF TRANSPORTATION
Caltrans TRAFFIC ELECTRICAL

FUNCTIONAL SUPERVISOR: BRIAN PECUS
CALCULATED-DESIGNED BY: HECTOR SANTAMARIA
CHECKED BY: ENRIQUE BERNAL
REVISED BY
DATE REVISED

LAST REVISION DATE PLOTTED => 13-MAY-2013
03-04-13 TIME PLOTTED => 21:29

Dist	COUNTY	ROUTE	POST MILES TOTAL PROJECT	SHEET No.	TOTAL SHEETS
11	SD	11,905	0.0/1.6, R9.9/R10.7	445	622

REGISTERED ELECTRICAL ENGINEER DATE

04-22-13
PLANS APPROVAL DATE

REGISTERED PROFESSIONAL ENGINEER HECTOR A. SANTAMARIA No. 18207 Exp. 12-31-13 ELECTRICAL STATE OF CALIFORNIA

THE STATE OF CALIFORNIA OR ITS OFFICERS OR AGENTS SHALL NOT BE RESPONSIBLE FOR THE ACCURACY OR COMPLETENESS OF SCANNED COPIES OF THIS PLAN SHEET.

LEGENDS (THIS SHEET):

SPLICE CABLES SEE FO SPLICE DETAILS

CUT END OF FO CABLE

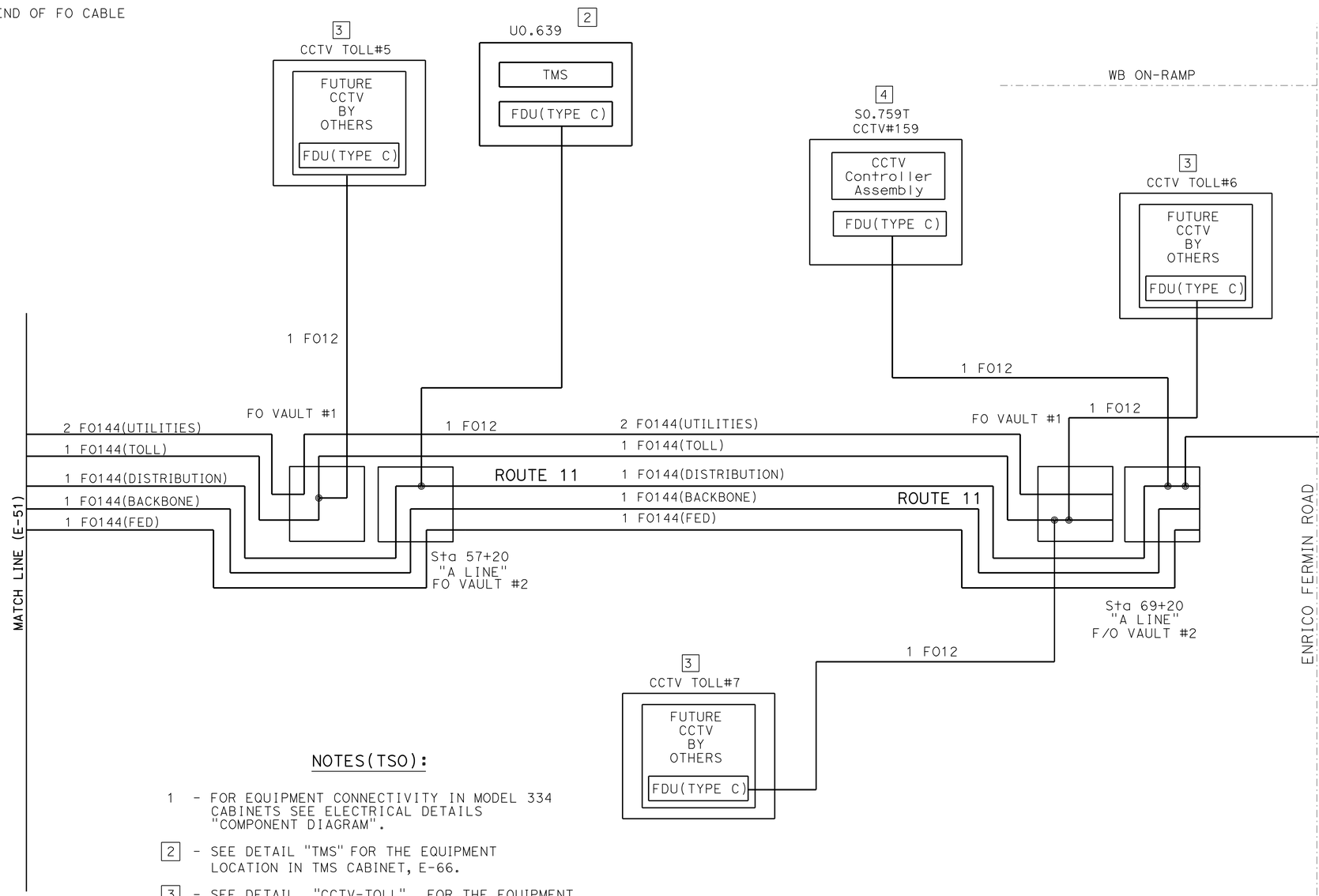

NOTES(TSO):

1 - FOR EQUIPMENT CONNECTIVITY IN MODEL 334 CABINETS SEE ELECTRICAL DETAILS "COMPONENT DIAGRAM".

2 - SEE DETAIL "TMS" FOR THE EQUIPMENT LOCATION IN TMS CABINET, E-66.

3 - SEE DETAIL "CCTV-TOLL" FOR THE EQUIPMENT LOCATION IN CCTV CABINET, E-63.

4 - SEE DETAIL "CCTV" FOR THE EQUIPMENT LOCATION IN CCTV CABINET, E-62.

5 - SEE DETAIL "RM" FOR THE EQUIPMENT LOCATION IN RM CABINET, E-65.

COMMUNICATION DIAGRAM

PRELIMINARY FOR BIDDING PURPOSES ONLY

APPROVED FOR ELECTRICAL WORK ONLY

CLOSED CIRCUIT TELEVISION CIRCUIT
(ELECTRICAL DETAILS)

E-52

REVISED BY | DATE REVISED
HECTOR SANTAMARIA | ENRIQUE BERNAL
CALCULATED-DESIGNED BY | CHECKED BY
FUNCTIONAL SUPERVISOR | BRIAN PECUS

STATE OF CALIFORNIA - DEPARTMENT OF TRANSPORTATION
Caltrans TRAFFIC ELECTRICAL

LAST REVISION 03-04-13 | DATE PLOTTED => 13-MAY-2013 | TIME PLOTTED => 21:29

Dist	COUNTY	ROUTE	POST MILES TOTAL PROJECT	SHEET No.	TOTAL SHEETS
11	SD	11,905	0.0/1.6, R9.9/R10.7	446	622

REGISTERED ELECTRICAL ENGINEER DATE

04-22-13
PLANS APPROVAL DATE

REGISTERED PROFESSIONAL ENGINEER HECTOR A. SANTAMARIA No. 18207 Exp. 12-31-13 ELECTRICAL STATE OF CALIFORNIA

THE STATE OF CALIFORNIA OR ITS OFFICERS OR AGENTS SHALL NOT BE RESPONSIBLE FOR THE ACCURACY OR COMPLETENESS OF SCANNED COPIES OF THIS PLAN SHEET.

COLOR CODES FOR BUFFER TUBES AND FIBERS:

1. BLUE (BL)
2. ORANGE (OR)
3. GREEN (GR)
4. BROWN (BR)
5. SLATE (SL)
6. WHITE (WT)
7. RED (RD)
8. BLACK (BK)
9. YELLOW (YL)
10. VIOLET (VL)
11. ROSE (RS)
12. AQUA (AQ)

NOTES (TSO):

1 - THIS SHEET DOES NOT SHOW ALL THE Exist AND NEW FO VAULT/PULL BOXES. SEE CIRCUIT DIAGRAMS AND ELECTRICAL PLANS.

2 - FO144 (DISTRIBUTION) SHOWN ONLY.

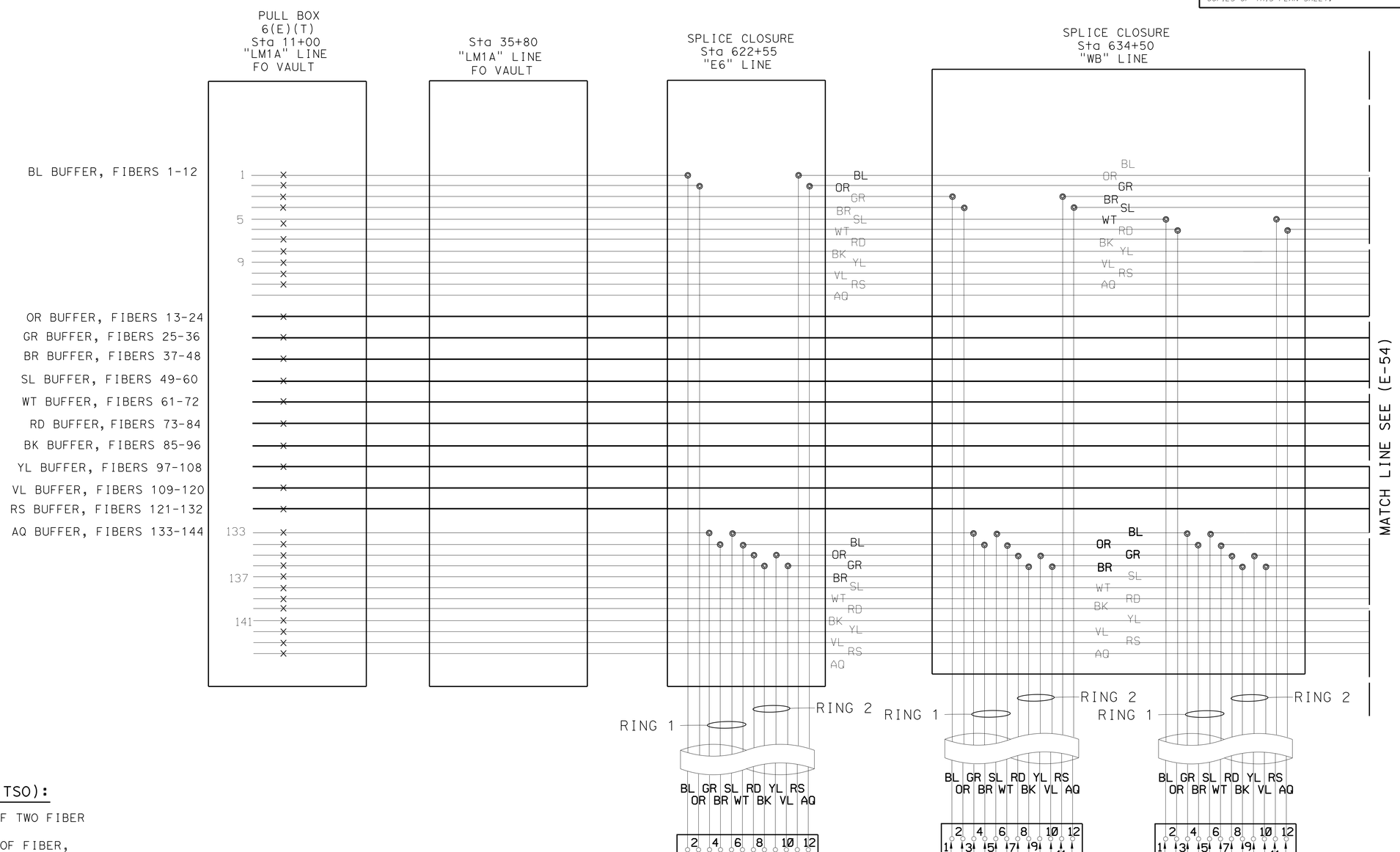

LEGEND(TSO):

- SPLICE OF TWO FIBER
- CUT END OF FIBER, NOT SPLICED
- SC FEMALE CONNECTOR ON AN FDU PANEL
- SC MALE CONNECTOR ON AN SMFO PATCHCORD

PRELIMINARY FOR BIDDING PURPOSES ONLY

APPROVED FOR ELECTRICAL WORK ONLY

NO SCALE

CLOSED CIRCUIT TELEVISION SYSTEM (ELECTRICAL DETAILS)

E-53

STATE OF CALIFORNIA - DEPARTMENT OF TRANSPORTATION
Caltrans® TRAFFIC ELECTRICAL

FUNCTIONAL SUPERVISOR: BRIAN PECUS
CALCULATED-DESIGNED BY: HECTOR SANTAMARIA
CHECKED BY: ENRIQUE BERNAL
REVISED BY / DATE REVISED

LAST REVISION 03-04-13 | DATE PLOTTED => 13-MAY-2013 | TIME PLOTTED => 21:29

Dist	COUNTY	ROUTE	POST MILES TOTAL PROJECT	SHEET No.	TOTAL SHEETS
11	SD	11,905	0.0/1.6, R9.9/R10.7	447	622

REGISTERED ELECTRICAL ENGINEER DATE

04-22-13
PLANS APPROVAL DATE

REGISTERED PROFESSIONAL ENGINEER HECTOR A. SANTAMARIA No. 18207 Exp. 12-31-13 ELECTRICAL STATE OF CALIFORNIA

THE STATE OF CALIFORNIA OR ITS OFFICERS OR AGENTS SHALL NOT BE RESPONSIBLE FOR THE ACCURACY OR COMPLETENESS OF SCANNED COPIES OF THIS PLAN SHEET.

COLOR CODES FOR BUFFER TUBES AND FIBERS:

1. BLUE (BL)
2. ORANGE (OR)
3. GREEN (GR)
4. BROWN (BR)
5. SLATE (SL)
6. WHITE (WT)
7. RED (RD)
8. BLACK (BK)
9. YELLOW (YL)
10. VIOLET (VL)
11. ROSE (RS)
12. AQUA (AQ)

NOTES (TSO):

1 - THIS SHEET DOES NOT SHOW ALL THE Exist AND NEW FO VAULT/PULL BOXES. SEE CIRCUIT DIAGRAMS AND ELECTRICAL PLANS.

2 - FO144 (DISTRIBUTION) SHOWN ONLY.

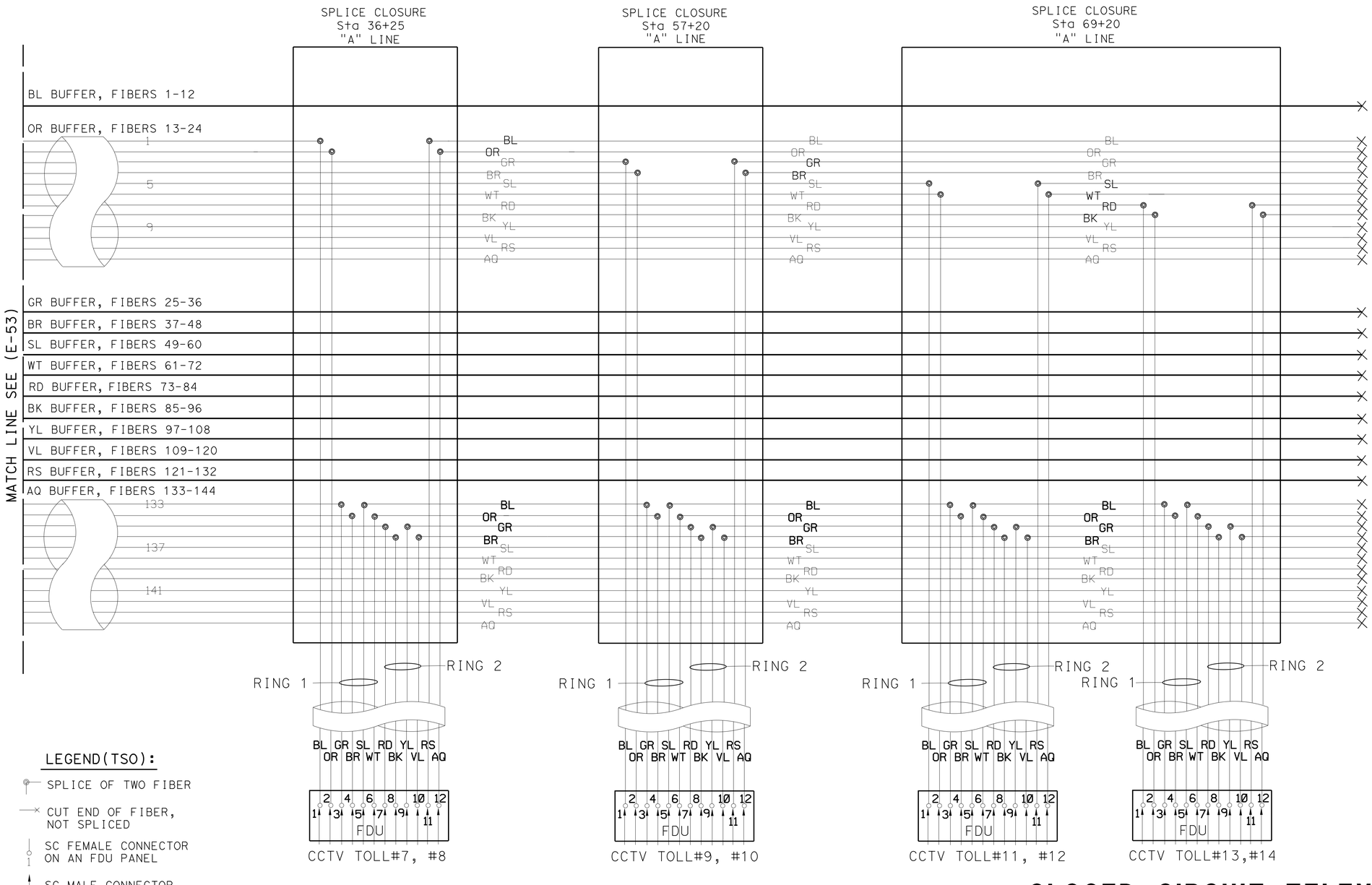

LEGEND(TSO):

- SPLICE OF TWO FIBER
- CUT END OF FIBER, NOT SPLICED
- SC FEMALE CONNECTOR ON AN FDU PANEL
- SC MALE CONNECTOR ON AN SMFO PATCHCORD

PRELIMINARY FOR BIDDING PURPOSES ONLY

APPROVED FOR ELECTRICAL WORK ONLY

CLOSED CIRCUIT TELEVISION SYSTEM (ELECTRICAL DETAILS)

NO SCALE

E-54

STATE OF CALIFORNIA - DEPARTMENT OF TRANSPORTATION
Caltrans TRAFFIC ELECTRICAL

FUNCTIONAL SUPERVISOR: BRIAN PECUS
CALCULATED-DESIGNED BY: HECTOR SANTAMARIA
CHECKED BY: ENRIQUE BERNAL
REVISED BY
DATE REVISED

LAST REVISION 03-04-13
DATE PLOTTED => 13-MAY-2013
TIME PLOTTED => 21:29

Dist	COUNTY	ROUTE	POST MILES TOTAL PROJECT	SHEET No.	TOTAL SHEETS
11	SD	11,905	0.0/1.6, R9.9/R10.7	448	622

REGISTERED ELECTRICAL ENGINEER DATE

04-22-13
PLANS APPROVAL DATE

REGISTERED PROFESSIONAL ENGINEER HECTOR A. SANTAMARIA No. 18207 Exp. 12-31-13 ELECTRICAL STATE OF CALIFORNIA

THE STATE OF CALIFORNIA OR ITS OFFICERS OR AGENTS SHALL NOT BE RESPONSIBLE FOR THE ACCURACY OR COMPLETENESS OF SCANNED COPIES OF THIS PLAN SHEET.

COLOR CODES FOR BUFFER TUBES AND FIBERS:

1. BLUE (BL)
2. ORANGE (OR)
3. GREEN (GR)
4. BROWN (BR)
5. SLATE (SL)
6. WHITE (WT)
7. RED (RD)
8. BLACK (BK)
9. YELLOW (YL)
10. VIOLET (VL)
11. ROSE (RS)
12. AQUA (AQ)

NOTES (TSO):

1 - THIS SHEET DOES NOT SHOW ALL THE Exist AND NEW FO VAULT/PULL BOXES. SEE CIRCUIT DIAGRAMS AND ELECTRICAL PLANS.

2 - FO144 (DISTRIBUTION) SHOWN ONLY. SAME DETAIL FOR FO144 (BACKBONE).

3 - TERMINATE FO144 ON FDU, SEE SHEET E-49 FOR FIBER TERMINATION LAYOUT.

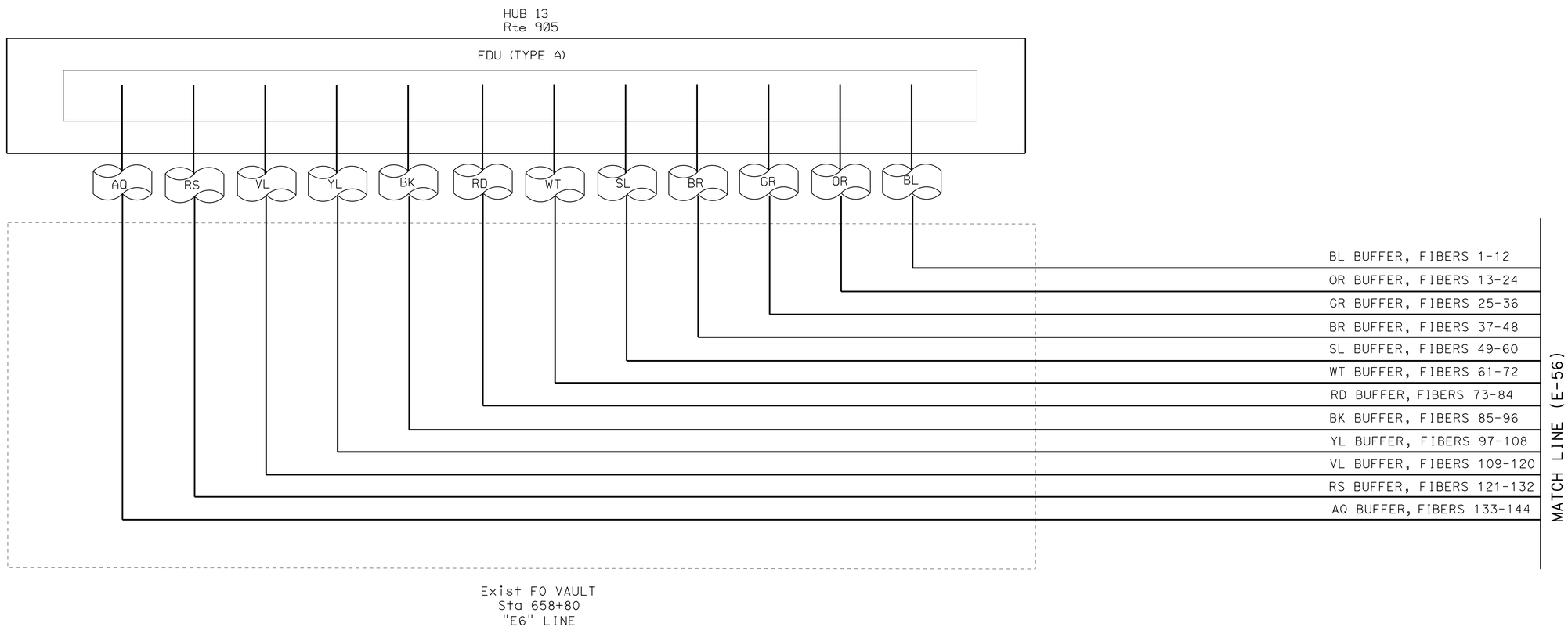

LEGEND

- SPLICE OF TWO FIBER
- CUT END OF FIBER, NOT SPLICED
- SC FEMALE CONNECTOR ON AN FDU PANEL
- SC MALE CONNECTOR ON AN SMFO PATCHCORD

PRELIMINARY FOR BIDDING PURPOSES ONLY

APPROVED FOR ELECTRICAL WORK ONLY

CLOSED CIRCUIT TELEVISION SYSTEM
(ELECTRICAL DETAILS)

NO SCALE

E-55

STATE OF CALIFORNIA - DEPARTMENT OF TRANSPORTATION
Caltrans® TRAFFIC ELECTRICAL

FUNCTIONAL SUPERVISOR: BRIAN PECUS
CALCULATED-DESIGNED BY: HECTOR SANTAMARIA
CHECKED BY: ENRIQUE BERNAL
REVISED BY
DATE REVISED

LAST REVISION 03-04-13
DATE PLOTTED => 13-MAY-2013
TIME PLOTTED => 21:29

Dist	COUNTY	ROUTE	POST MILES TOTAL PROJECT	SHEET No.	TOTAL SHEETS
11	SD	11,905	0.0/1.6, R9.9/R10.7	449	622

REGISTERED ELECTRICAL ENGINEER DATE

04-22-13
PLANS APPROVAL DATE

REGISTERED PROFESSIONAL ENGINEER HECTOR A. SANTAMARIA No. 18207 Exp. 12-31-13 ELECTRICAL STATE OF CALIFORNIA

THE STATE OF CALIFORNIA OR ITS OFFICERS OR AGENTS SHALL NOT BE RESPONSIBLE FOR THE ACCURACY OR COMPLETENESS OF SCANNED COPIES OF THIS PLAN SHEET.

COLOR CODES FOR BUFFER TUBES AND FIBERS:

1. BLUE (BL)
2. ORANGE (OR)
3. GREEN (GR)
4. BROWN (BR)
5. SLATE (SL)
6. WHITE (WT)
7. RED (RD)
8. BLACK (BK)
9. YELLOW (YL)
10. VIOLET (VL)
11. ROSE (RS)
12. AQUA (AQ)

NOTES (TSO):

1 - THIS SHEET DOES NOT SHOW ALL THE Exist AND NEW FO VAULT/PULL BOXES. SEE CIRCUIT DIAGRAMS AND ELECTRICAL PLANS.

2 - FO144 (DISTRIBUTION) SHOWN ONLY.

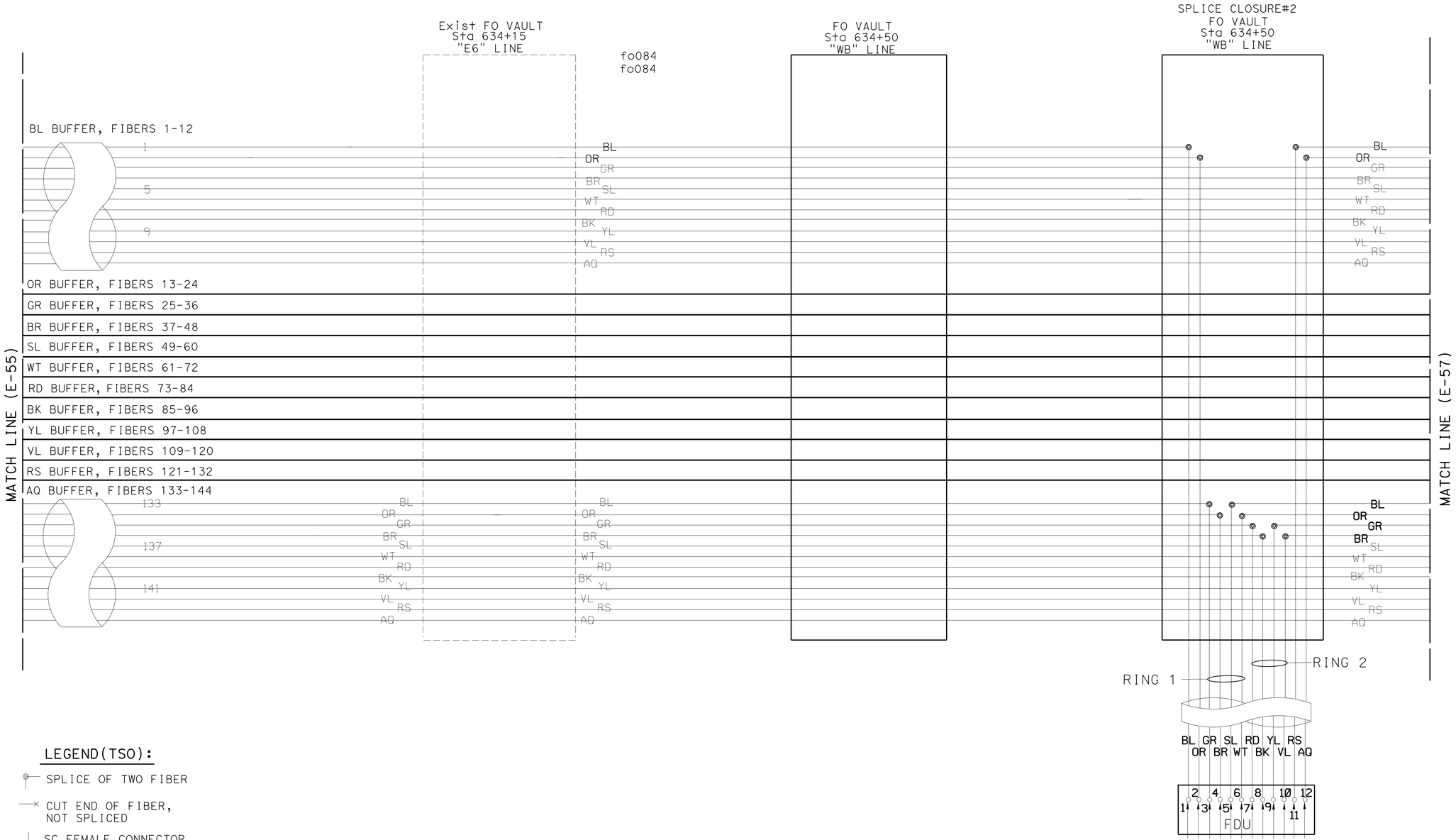

LEGEND(TSO):

- SPLICE OF TWO FIBER
- CUT END OF FIBER, NOT SPLICED
- SC FEMALE CONNECTOR ON AN FDU PANEL
- SC MALE CONNECTOR ON AN SMFO PATCHCORD

PRELIMINARY FOR BIDDING PURPOSES ONLY

APPROVED FOR ELECTRICAL WORK ONLY

CLOSED CIRCUIT TELEVISION SYSTEM
(ELECTRICAL DETAILS)

NO SCALE

E-56

STATE OF CALIFORNIA - DEPARTMENT OF TRANSPORTATION
Caltrans® TRAFFIC ELECTRICAL

FUNCTIONAL SUPERVISOR: BRIAN PECUS
CALCULATED-DESIGNED BY: HECTOR SANTAMARIA
CHECKED BY: ENRIQUE BERNAL
REVISED BY / DATE REVISED

LAST REVISION 03-04-13
DATE PLOTTED => 13-MAY-2013
TIME PLOTTED => 21:29

Dist	COUNTY	ROUTE	POST MILES TOTAL PROJECT	SHEET No.	TOTAL SHEETS
11	SD	11,905	0.0/1.6, R9.9/R10.7	450	622

REGISTERED ELECTRICAL ENGINEER DATE

04-22-13
PLANS APPROVAL DATE

REGISTERED PROFESSIONAL ENGINEER
HECTOR A. SANTAMARIA
No. 18207
Exp. 12-31-13
ELECTRICAL
STATE OF CALIFORNIA

THE STATE OF CALIFORNIA OR ITS OFFICERS OR AGENTS SHALL NOT BE RESPONSIBLE FOR THE ACCURACY OR COMPLETENESS OF SCANNED COPIES OF THIS PLAN SHEET.

COLOR CODES FOR BUFFER TUBES AND FIBERS:

1. BLUE (BL)
2. ORANGE (OR)
3. GREEN (GR)
4. BROWN (BR)
5. SLATE (SL)
6. WHITE (WT)
7. RED (RD)
8. BLACK (BK)
9. YELLOW (YL)
10. VIOLET (VL)
11. ROSE (RS)
12. AQUA (AQ)

NOTES (TSO):

1 - THIS SHEET DOES NOT SHOW ALL THE Exist AND NEW FO VAULT/PULL BOXES. SEE CIRCUIT DIAGRAMS AND ELECTRICAL PLANS.

2 - FO144 (DISTRIBUTION) SHOWN ONLY.

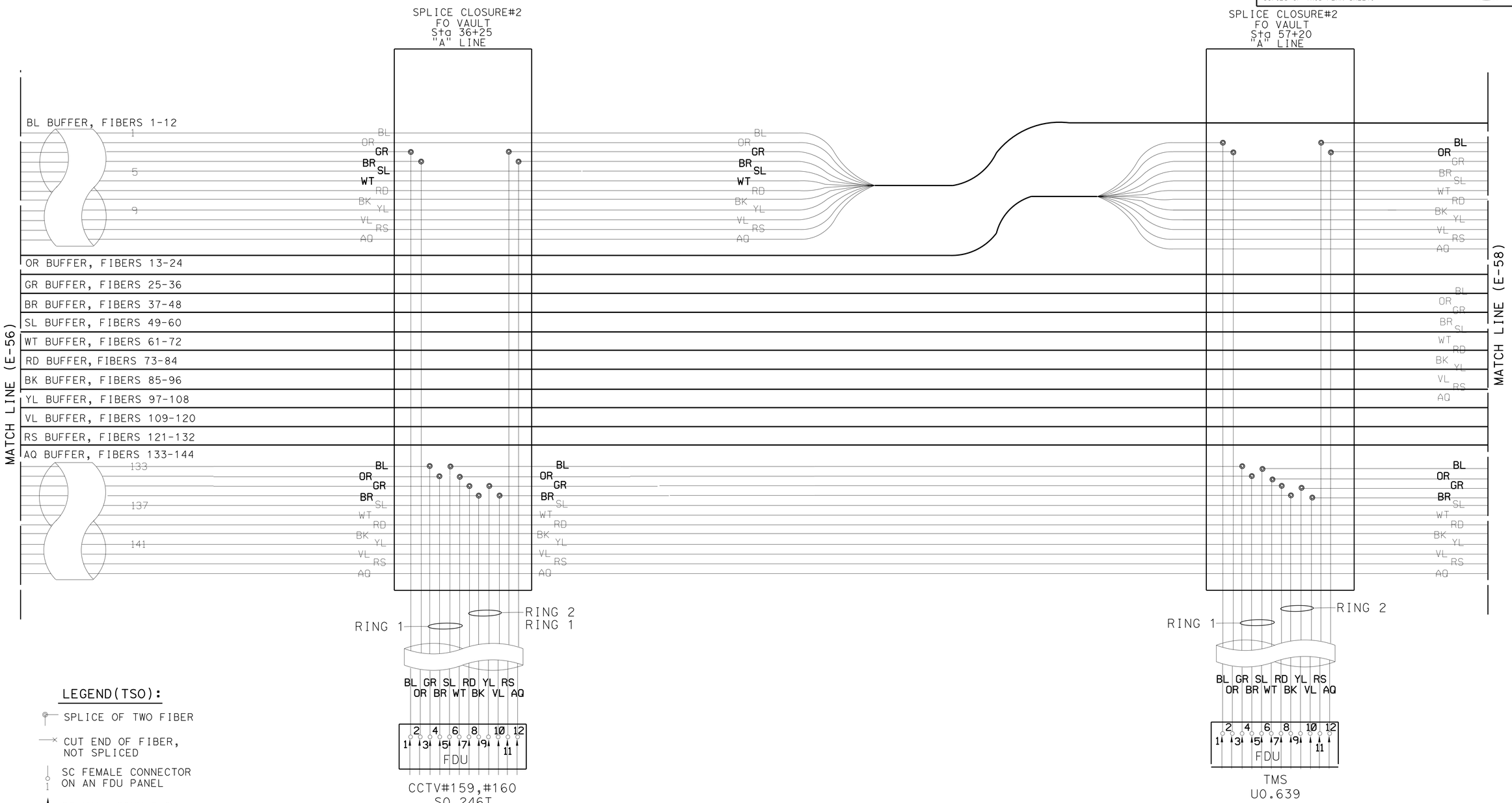

LEGEND(TSO):

- SPLICE OF TWO FIBER
- CUT END OF FIBER, NOT SPLICED
- SC FEMALE CONNECTOR ON AN FDU PANEL
- SC MALE CONNECTOR ON AN SMFO PATCHCORD

PRELIMINARY FOR BIDDING PURPOSES ONLY

APPROVED FOR ELECTRICAL WORK ONLY

CLOSED CIRCUIT TELEVISION SYSTEM (ELECTRICAL DETAILS)

NO SCALE

E-57

STATE OF CALIFORNIA - DEPARTMENT OF TRANSPORTATION
Caltrans® TRAFFIC ELECTRICAL

FUNCTIONAL SUPERVISOR: BRIAN PECUS
CALCULATED-DESIGNED BY: HECTOR SANTAMARIA
CHECKED BY: ENRIQUE BERNAL
REVISED BY
DATE REVISED

LAST REVISION 03-04-13
DATE PLOTTED => 13-MAY-2013
TIME PLOTTED => 21:29

Dist	COUNTY	ROUTE	POST MILES TOTAL PROJECT	SHEET No.	TOTAL SHEETS
11	SD	11,905	0.0/1.6, R9.9/R10.7	451	622

REGISTERED ELECTRICAL ENGINEER DATE

04-22-13
PLANS APPROVAL DATE

REGISTERED PROFESSIONAL ENGINEER HECTOR A. SANTAMARIA No. 18207 Exp. 12-31-13 ELECTRICAL STATE OF CALIFORNIA

THE STATE OF CALIFORNIA OR ITS OFFICERS OR AGENTS SHALL NOT BE RESPONSIBLE FOR THE ACCURACY OR COMPLETENESS OF SCANNED COPIES OF THIS PLAN SHEET.

COLOR CODES FOR BUFFER TUBES AND FIBERS:

1. BLUE (BL)
2. ORANGE (OR)
3. GREEN (GR)
4. BROWN (BR)
5. SLATE (SL)
6. WHITE (WT)
7. RED (RD)
8. BLACK (BK)
9. YELLOW (YL)
10. VIOLET (VL)
11. ROSE (RS)
12. AQUA (AQ)

NOTES (TSO):

1 - THIS SHEET DOES NOT SHOW ALL THE Exist AND NEW FO VAULT/PULL BOXES. SEE CIRCUIT DIAGRAMS AND ELECTRICAL PLANS.

2 - FO144 (DISTRIBUTION) SHOWN ONLY.

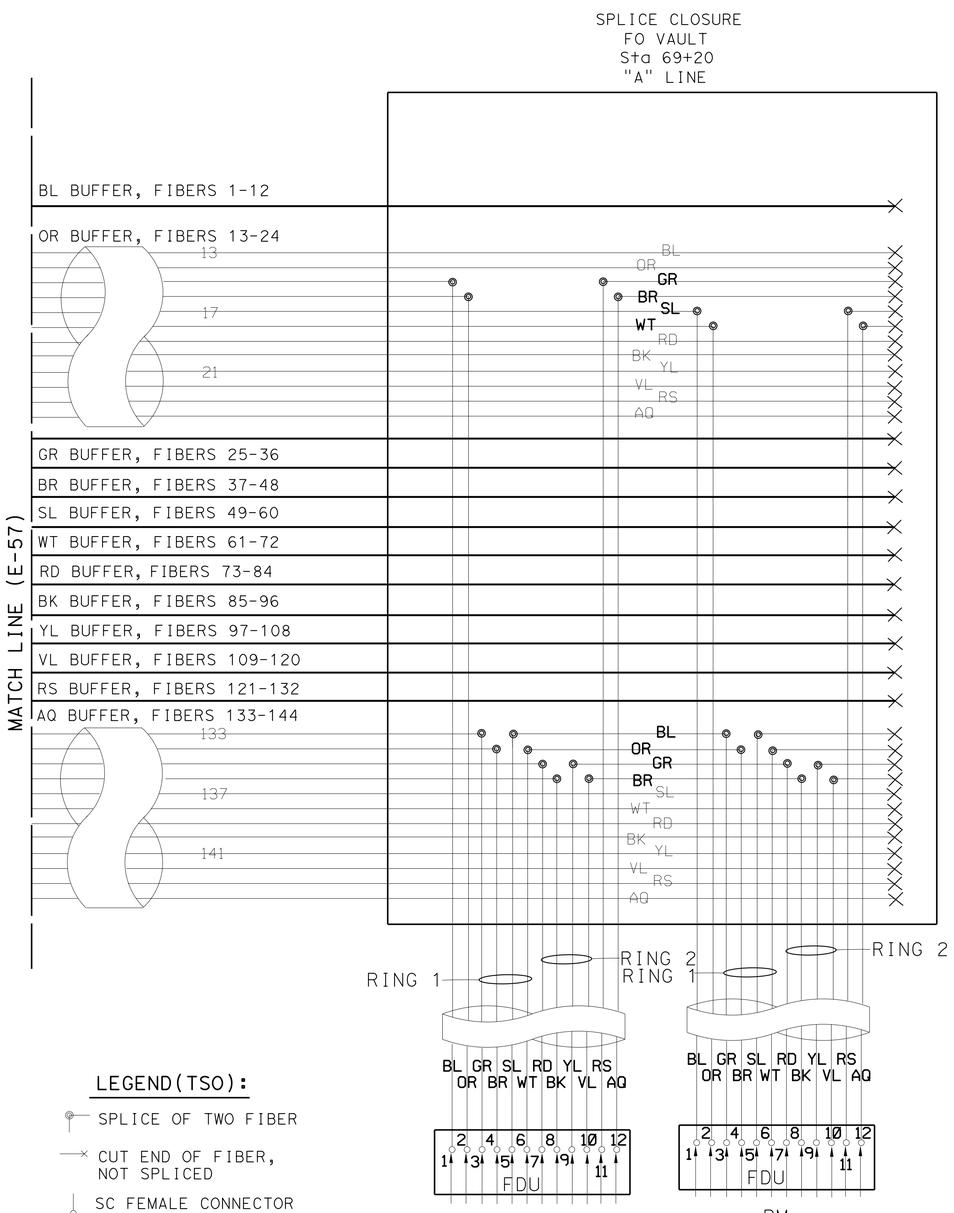

LEGEND(TSO):

- SPLICE OF TWO FIBER
- CUT END OF FIBER, NOT SPLICED
- SC FEMALE CONNECTOR ON AN FDU PANEL
- SC MALE CONNECTOR ON AN SMFO PATCHCORD

PRELIMINARY FOR BIDDING PURPOSES ONLY

APPROVED FOR ELECTRICAL WORK ONLY

CLOSED CIRCUIT TELEVISION SYSTEM
(ELECTRICAL DETAILS)

NO SCALE

E-58

STATE OF CALIFORNIA - DEPARTMENT OF TRANSPORTATION
Caltrans® TRAFFIC ELECTRICAL

FUNCTIONAL SUPERVISOR: BRIAN PECUS
CALCULATED-DESIGNED BY: ENRIQUE BERNAL
CHECKED BY
REVISED BY: HECTOR SANTAMARIA
DATE REVISED

LAST REVISION 03-04-13
DATE PLOTTED => 13-MAY-2013
TIME PLOTTED => 21:30

Dist	COUNTY	ROUTE	POST MILES TOTAL PROJECT	SHEET No.	TOTAL SHEETS
11	SD	11,905	0.0/1.6, R9.9/R10.7	452	622

REGISTERED ELECTRICAL ENGINEER DATE

04-22-13
PLANS APPROVAL DATE

REGISTERED PROFESSIONAL ENGINEER
HECTOR A. SANTAMARIA
No. 18207
Exp. 12-31-13
ELECTRICAL
STATE OF CALIFORNIA

THE STATE OF CALIFORNIA OR ITS OFFICERS OR AGENTS SHALL NOT BE RESPONSIBLE FOR THE ACCURACY OR COMPLETENESS OF SCANNED COPIES OF THIS PLAN SHEET.

COLOR CODES FOR BUFFER TUBES AND FIBERS:

1. BLUE (BL)
2. ORANGE (OR)
3. GREEN (GR)
4. BROWN (BR)
5. SLATE (SL)
6. WHITE (WT)
7. RED (RD)
8. BLACK (BK)
9. YELLOW (YL)
10. VIOLET (VL)
11. ROSE (RS)
12. AQUA (AQ)

TOLL CABINET BY HUB 13

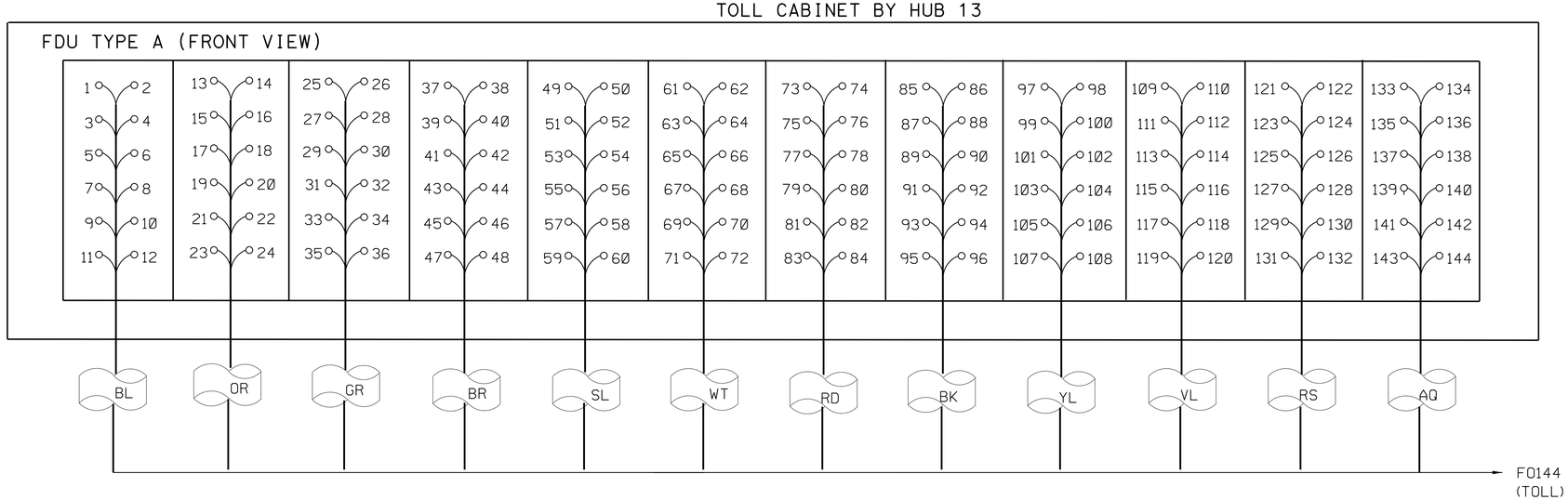

FDU TO FIBER CABLE TERMINATION DETAIL

LEGEND

- SPLICE OF TWO FIBER
- CUT END OF FIBER, NOT SPLICED
- SC FEMALE CONNECTOR ON AN FDU PANEL
- SC MALE CONNECTOR ON AN SMFO PATCHCORD

PRELIMINARY FOR BIDDING PURPOSES ONLY

APPROVED FOR ELECTRICAL WORK ONLY

CLOSED CIRCUIT TELEVISION SYSTEM
(ELECTRICAL DETAILS)

E-59

REVISED BY | DATE REVISED
HECTOR SANTAMARIA | ENRIQUE BERNAL
CALCULATED-DESIGNED BY | CHECKED BY
FUNCTIONAL SUPERVISOR
BRIAN PECUS

STATE OF CALIFORNIA - DEPARTMENT OF TRANSPORTATION
Caltrans TRAFFIC ELECTRICAL

LAST REVISION 03-04-13
DATE PLOTTED => 13-MAY-2013
TIME PLOTTED => 21:30

Dist	COUNTY	ROUTE	POST MILES TOTAL PROJECT	SHEET No.	TOTAL SHEETS
11	SD	11,905	0.0/1.6, R9.9/R10.7	453	622

REGISTERED ELECTRICAL ENGINEER DATE

04-22-13
PLANS APPROVAL DATE

REGISTERED PROFESSIONAL ENGINEER HECTOR A. SANTAMARIA No. 18207 Exp. 12-31-13 ELECTRICAL STATE OF CALIFORNIA

THE STATE OF CALIFORNIA OR ITS OFFICERS OR AGENTS SHALL NOT BE RESPONSIBLE FOR THE ACCURACY OR COMPLETENESS OF SCANNED COPIES OF THIS PLAN SHEET.

COLOR CODES FOR BUFFER TUBES AND FIBERS:

1. BLUE (BL)
2. ORANGE (OR)
3. GREEN (GR)
4. BROWN (BR)
5. SLATE (SL)
6. WHITE (WT)
7. RED (RD)
8. BLACK (BK)
9. YELLOW (YL)
10. VIOLET (VL)
11. ROSE (RS)
12. AQUA (AQ)

TOLL CABINET BY HUB 13

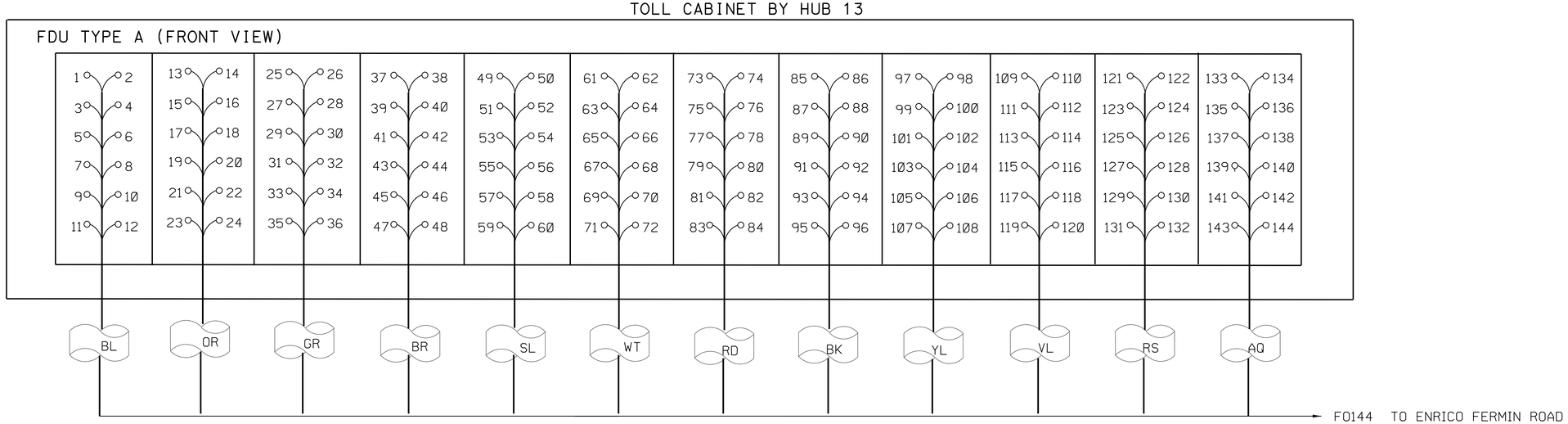

FDU TO FIBER CABLE TERMINATION DETAIL

SAME DETAIL FOR F0144 (BAKBONE)
SAME DETAIL FOR F0144(125)

LEGEND

- SPLICE OF TWO FIBER
- CUT END OF FIBER, NOT SPLICED
- SC FEMALE CONNECTOR ON AN FDU PANEL
- SC MALE CONNECTOR ON AN SMFO PATCHCORD

PRELIMINARY FOR BIDDING PURPOSES ONLY

APPROVED FOR ELECTRICAL WORK ONLY

CLOSED CIRCUIT TELEVISION SYSTEM
(ELECTRICAL DETAILS)

E-60

REVISED BY | DATE REVISED
HECTOR SANTAMARIA | ENRIQUE BERNAL
CALCULATED-DESIGNED BY | CHECKED BY
FUNCTIONAL SUPERVISOR | BRIAN PECUS

STATE OF CALIFORNIA - DEPARTMENT OF TRANSPORTATION
Caltrans TRAFFIC ELECTRICAL

LAST REVISION 03-04-13 | DATE PLOTTED => 13-MAY-2013 | TIME PLOTTED => 21:30

Dist	COUNTY	ROUTE	POST MILES TOTAL PROJECT	SHEET No.	TOTAL SHEETS
11	SD	11,905	0.0/1.6, R9.9/R10.7	454	622

REGISTERED ELECTRICAL ENGINEER DATE

04-22-13
PLANS APPROVAL DATE

REGISTERED PROFESSIONAL ENGINEER HECTOR A. SANTAMARIA No. 18207 Exp. 12-31-13 ELECTRICAL STATE OF CALIFORNIA

THE STATE OF CALIFORNIA OR ITS OFFICERS OR AGENTS SHALL NOT BE RESPONSIBLE FOR THE ACCURACY OR COMPLETENESS OF SCANNED COPIES OF THIS PLAN SHEET.

PRELIMINARY FOR BIDDING PURPOSES ONLY

NOTES:

1 - SEE CAMERA CABLE CROSS SECTION ON THIS SHEET.

2 - SEE TABLE "A" FOR CONNECTOR 1 ASSIGNMENT.

3 - SEE TABLE "B" FOR CONNECTOR 2 ASSIGNMENT.

4 - SEE TABLE "C" FOR CONNECTOR 3 ASSIGNMENT.

5 - MIn 40" OF SLACK IS REQUIRED FROM CAMERA CABLE TO THE CONNECTORS.

6 - SEE TABLE "D" FOR CONNECTOR ASSIGNMENT.

7 - THE CONTRACTOR SHALL VERIFY THE LENGTH OF CAMERA CABLE AT EACH LOCATION AS SHOWN IN ELECTRICAL PLANS. A SLACK OF 80" IS REQUIRED AT EACH LOCATION.

CIRCULAR PLASTIC CONNECTOR (CPC), FEMALE

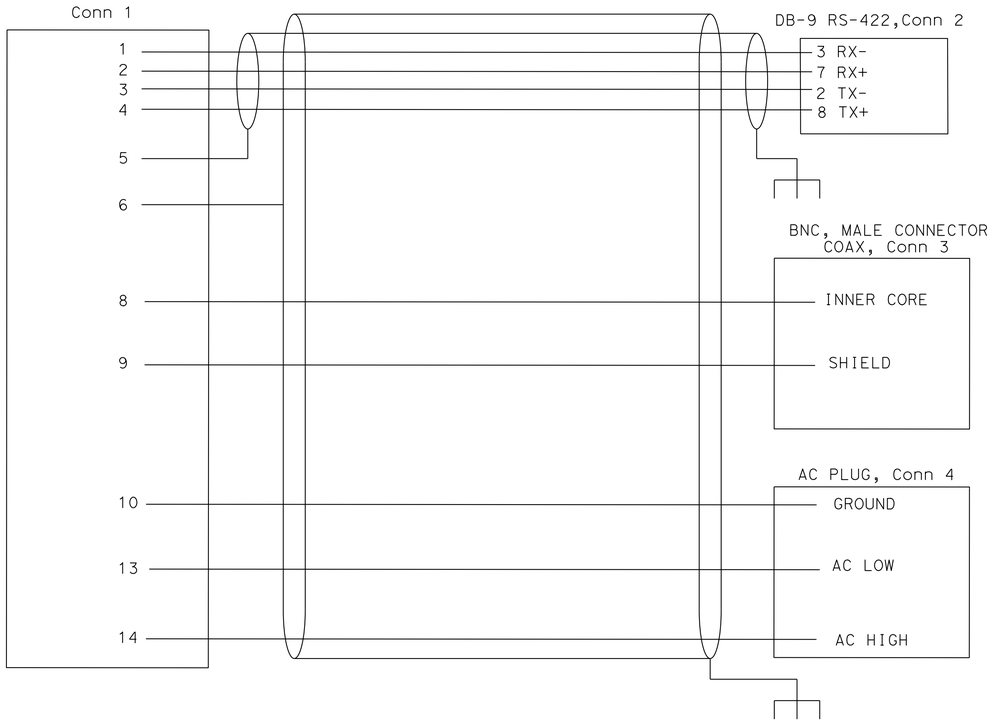

TABLE "D":

CPC PIN DESCRIPTION
PIN 1 - 22 AWG,RS-422
PIN 2 - 22 AWG,RS-422
PIN 3 - 22 AWG,RS-422
PIN 4 - 22 AWG,RS-422
PIN 5 - DATA GROUND
PIN 6 - OVERALL SHIELD
PIN 8 - RG-59,CORE WIRE
PIN 9 - RG-59,SHIELD
PIN 10 - 18 AWG,AC Gnd
PIN 13 - AC LOW
PIN 14 - AC HIGH

TABLE "A":

Conn 1 DESCRIPTION

PIN	FUNCTION	WIRE COLOR	WIRE GAUGE
1	CAMERA CONTROL RX-	BLACK	26 AWG
2	CAMERA CONTROL RX+	WHITE	26 AWG
3	CAMERA CONTROL TX-	GREEN	26 AWG
4	CAMERA CONTROL TX+	RED	26 AWG
8	VIDEO SIGNAL COAX INNER CORE	BARE	
9	VIDEO SIGNAL COAX SHIELD	WHITE/BLACK	22 AWG
10	CAMERA POWER,GROUND	YELLOW	18 AWG
13	CAMERA POWER,AC LOW	BLUE	18 AWG
14	CAMERA POWER,AC HIGH	BROWN	18 AWG

TABLE "B":

Conn 2 DESCRIPTION

DB-9 PIN	Conn 1 POSITION	FUNCTION	WIRE COLOR	WIRE GAUGE
3	1	CAMERA CONTROL RX-	BLACK	22 AWG
7	2	CAMERA CONTROL RX+	WHITE	22 AWG
2	3	CAMERA CONTROL TX-	GREEN	22 AWG
8	4	CAMERA CONTROL TX+	RED	22 AWG

TABLE "C":

Conn 3 DESCRIPTION

PIN	FUNCTION
CENTER	VIDEO SIGNAL INNER CORE,COAX
SHIELD	VIDEO SIGNAL SHIELD,COAX

CONNECTOR DESCRIPTIONS

CONNECTOR	TYPE	FUNCTION	LOCATION
Conn 1	CPC	CONTROL,VIDEO,POWER	POLE TOP 2
Conn 2	DB-9	CAMERA CONTROL	CCTV CABINET 3
Conn 3	BNC,MALE	VIDEO	CCTV CABINET 4
Conn 4	AC PLUG,3 PRONG	CAMERA POWER	CCTV CABINET

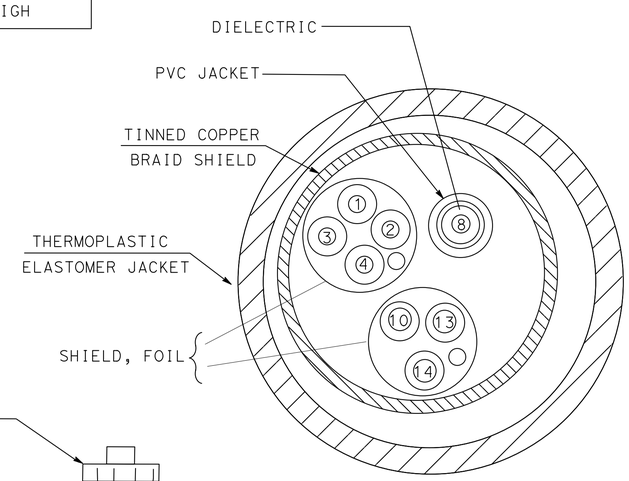

CAMERA CABLE CROSS SECTION 6

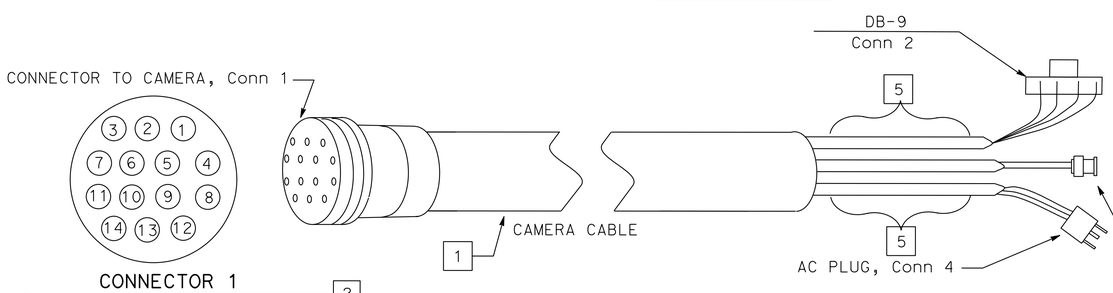

"CAMERA CABLE"

APPROVED FOR ELECTRICAL WORK ONLY

CLOSED CIRCUIT TELEVISION SYSTEM
(ELECTRICAL DETAILS)

NO SCALE

E-61

STATE OF CALIFORNIA - DEPARTMENT OF TRANSPORTATION
Caltrans TRAFFIC ELECTRICAL

FUNCTIONAL SUPERVISOR: BRIAN PECUS
CALCULATED-DESIGNED BY: HECTOR SANTAMARIA
CHECKED BY: ENRIQUE BERNAL
REVISED BY / DATE REVISED

LAST REVISION 03-04-13 | DATE PLOTTED => 13-MAY-2013 | TIME PLOTTED => 21:30

Dist	COUNTY	ROUTE	POST MILES TOTAL PROJECT	SHEET No.	TOTAL SHEETS
11	SD	11,905	0.0/1.6, R9.9/R10.7	455	622

REGISTERED ELECTRICAL ENGINEER DATE

04-22-13
PLANS APPROVAL DATE

REGISTERED PROFESSIONAL ENGINEER HECTOR A. SANTAMARIA No. 18207 Exp. 12-31-13 ELECTRICAL STATE OF CALIFORNIA

THE STATE OF CALIFORNIA OR ITS OFFICERS OR AGENTS SHALL NOT BE RESPONSIBLE FOR THE ACCURACY OR COMPLETENESS OF SCANNED COPIES OF THIS PLAN SHEET.

NOTES:

1 - THE CONTRACTOR SHALL VERIFY ALL CONTROLLING FIELD DIMENSIONS BEFORE ORDERING OR FABRICATING MATERIAL.

2 - GFCI RECEPTACLES ARE FOR MAINTENANCE EQUIPMENT ONLY.

3 - CONSTRUCT FOUNDATION PER Std PLAN ES-3C.

4 - SHELF REQUIRED FOR EQUIPMENT.

LEGEND:

- SURGE PROTECTOR
- CIRCUIT BREAKER
- HT — RELAY COIL - HIGH TEMPERATURE
- HT — RELAY CONTACT - NORMALLY CLOSED
- W\GFC1 — WITH GROUND FAULT CURRENT INTERRUPT
- 8 — WIRE SIZE, IF NOT INDICATED SHALL BE #12 AWG
- F — FAN
- L — INDICATOR LAMP
- R — DUPLEX RECEPTACLE (MODEL 334 CABINET)
- THERMOSTATIC CONTROL
- THERMO — ADJUSTABLE CALIBRATED THERMOSTAT
- TBO - TERMINAL BLOCK O
- NETWORK PORT
- FIBER OPTIC TRANSMITTER/RECEIVER

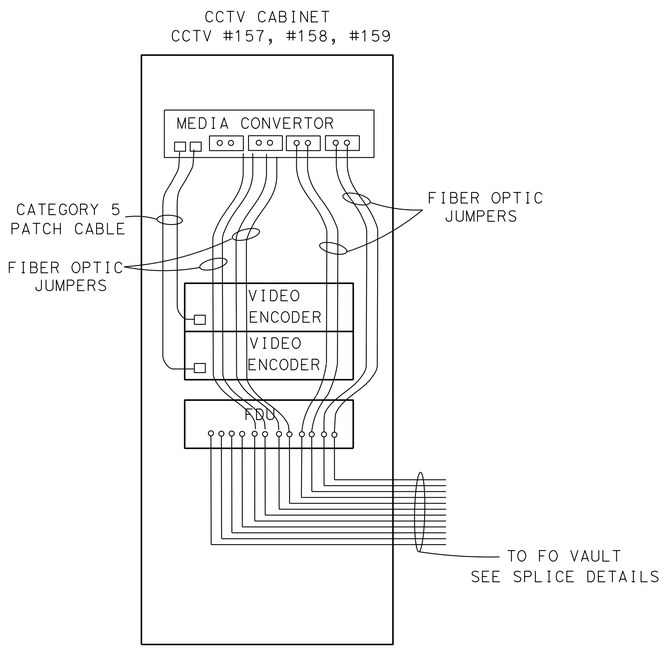

CCTV CABINET

COMPONENT DIAGRAM (TYPICAL)

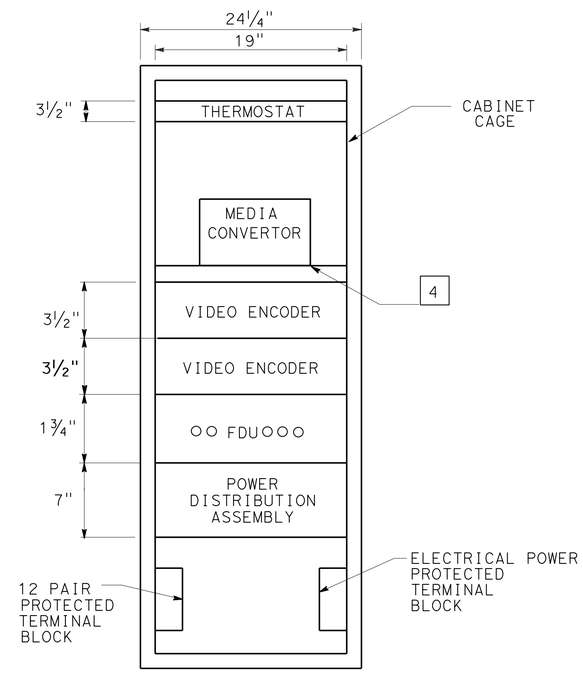

CCTV CABINET
DETAIL AND EQUIPMENT PLACEMENT

DETAIL "CCTV" (TYPICAL)

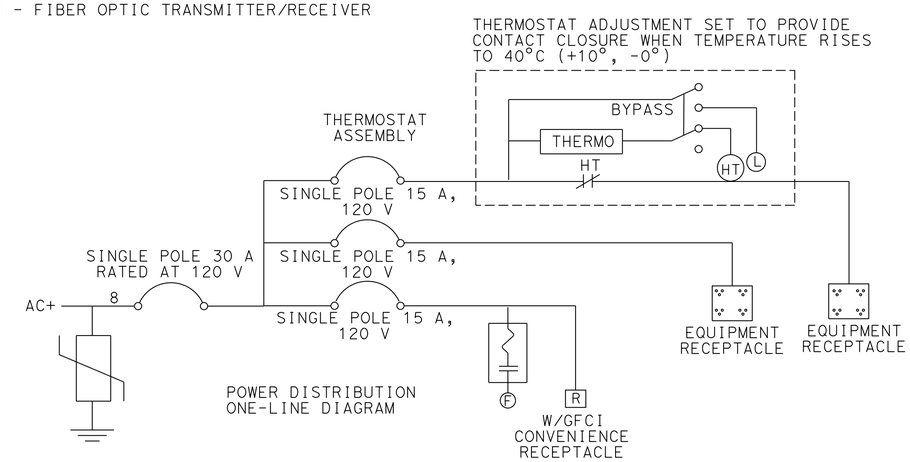

CCTV CABINET
POWER DISTRIBUTION ASSEMBLY

PRELIMINARY FOR BIDDING PURPOSES ONLY

APPROVED FOR ELECTRICAL WORK ONLY

CLOSED CIRCUIT TELEVISION SYSTEM
(ELECTRICAL DETAILS)

NO SCALE

E-62

STATE OF CALIFORNIA - DEPARTMENT OF TRANSPORTATION
Caltrans® TRAFFIC ELECTRICAL

FUNCTIONAL SUPERVISOR: BRIAN PECUS
CALCULATED-DESIGNED BY: ENRIQUE BERNAL
CHECKED BY: HECTOR SANTAMARIA
REVISED BY
DATE REVISED

LAST REVISION 03-04-12 | DATE PLOTTED => 13-MAY-2013 | TIME PLOTTED => 21:30

Dist	COUNTY	ROUTE	POST MILES TOTAL PROJECT	SHEET No.	TOTAL SHEETS
11	SD	11,905	0.0/1.6, R9.9/R10.7	456	622

REGISTERED ELECTRICAL ENGINEER DATE

04-22-13
PLANS APPROVAL DATE

REGISTERED PROFESSIONAL ENGINEER
HECTOR A. SANTAMARIA
No. 18207
Exp. 12-31-13
ELECTRICAL
STATE OF CALIFORNIA

THE STATE OF CALIFORNIA OR ITS OFFICERS OR AGENTS SHALL NOT BE RESPONSIBLE FOR THE ACCURACY OR COMPLETENESS OF SCANNED COPIES OF THIS PLAN SHEET.

NOTES:

1 - THE CONTRACTOR SHALL VERIFY ALL CONTROLLING FIELD DIMENSIONS BEFORE ORDERING OR FABRICATING MATERIAL.

2 - GFCI RECEPTACLES ARE FOR MAINTENANCE EQUIPMENT ONLY.

3 - CONSTRUCT FOUNDATION PER Std PLAN ES-3C.

LEGEND:

- SURGE PROTECTOR
- CIRCUIT BREAKER
- HT — RELAY COIL - HIGH TEMPERATURE
- HT — RELAY CONTACT - NORMALLY CLOSED
- W\GFC1 — WITH GROUND FAULT CURRENT INTERRUPT
- 8 — WIRE SIZE, IF NOT INDICATED SHALL BE #12 AWG
- F — FAN
- L — INDICATOR LAMP
- R — DUPLEX RECEPTACLE (MODEL 334 CABINET)
- THERMOSTATIC CONTROL
- THERMO — ADJUSTABLE CALIBRATED THERMOSTAT
- TBO - TERMINAL BLOCK O
- NETWORK PORT
- FIBER OPTIC TRANSMITTER/RECEIVER

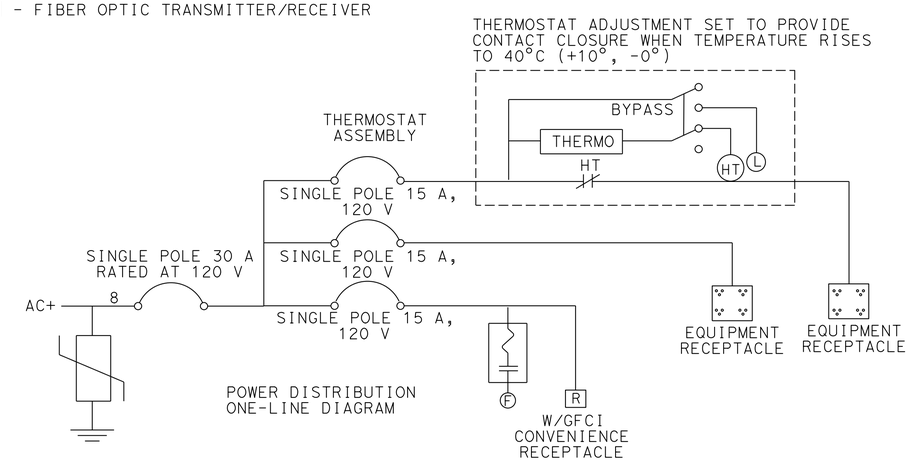

POWER DISTRIBUTION ONE-LINE DIAGRAM

CCTV CABINET
POWER DISTRIBUTION ASSEMBLY

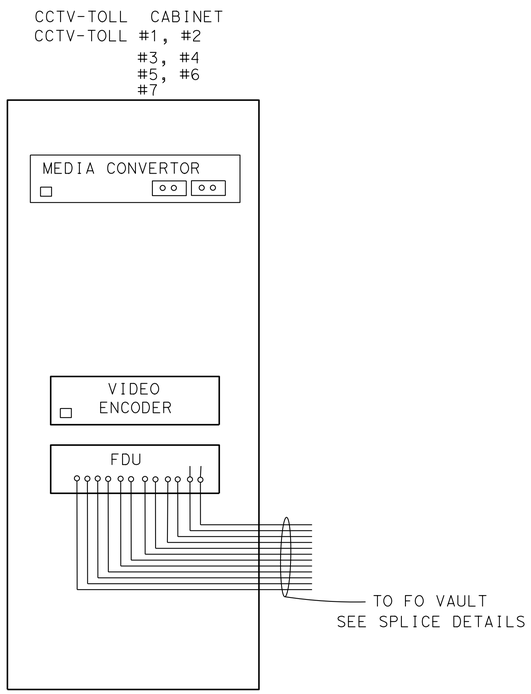

CCTV-TOLL CABINET
COMPONENT DIAGRAM
(TYPICAL)

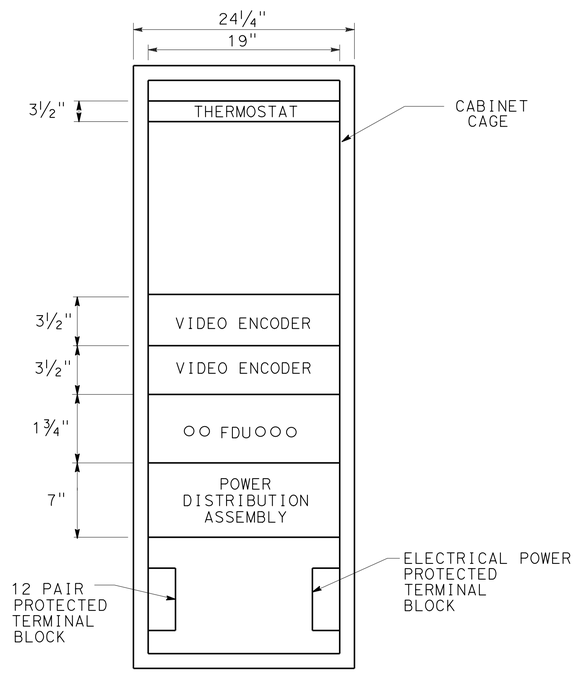

CCTV-TOLL CABINET
DETAIL AND EQUIPMENT PLACEMENT

DETAIL "CCTV-TOLL"
(TYPICAL)

PRELIMINARY FOR BIDDING PURPOSES ONLY

APPROVED FOR ELECTRICAL WORK ONLY

CLOSED CIRCUIT TELEVISION SYSTEM
(ELECTRICAL DETAILS)

NO SCALE

E-63

STATE OF CALIFORNIA - DEPARTMENT OF TRANSPORTATION
Caltrans TRAFFIC ELECTRICAL

FUNCTIONAL SUPERVISOR: BRIAN PECUS
CALCULATED-DESIGNED BY: HECTOR SANTAMARIA
CHECKED BY: ENRIQUE BERNAL
REVISED BY
DATE REVISED

LAST REVISION 03-04-13
DATE PLOTTED => 13-MAY-2013
TIME PLOTTED => 21:30

Dist	COUNTY	ROUTE	POST MILES TOTAL PROJECT	SHEET No.	TOTAL SHEETS
11	SD	11,905	0.0/1.6, R9.9/R10.7	457	622

REGISTERED ELECTRICAL ENGINEER DATE

04-22-13
PLANS APPROVAL DATE

REGISTERED PROFESSIONAL ENGINEER
HECTOR A. SANTAMARIA
No. 18207
Exp. 12-31-13
ELECTRICAL
STATE OF CALIFORNIA

THE STATE OF CALIFORNIA OR ITS OFFICERS OR AGENTS SHALL NOT BE RESPONSIBLE FOR THE ACCURACY OR COMPLETENESS OF SCANNED COPIES OF THIS PLAN SHEET.

NOTES:

1. SHELF REQUIRED FOR EQUIPMENT.
2. LABEL CABLE END IN EACH CABINET. THE LABEL NAME SHALL CORRESPOND TO THE TERMINATION IN THE SIGNAL CABINET.
3. 110 PUNCH BLOCK WITH MODULAR CONNECTION. TERMINATE OCC PER ANSI/TIA 568 DIAGRAM T568B. PLACE REAR OF CABINET.
4. THE CONTRACTOR SHALL VERIFY ALL CONTROLLLING FIELD DIMENSIONS BEFORE ORDERING AND INSTALLING EQUIPMENT.
5. 12 PAIR TERMINAL BLOCK, TBO(S/F).
6. THIS SHEET DEMONSTRATES TYPICAL EQUIPMENT CONECTIONS. REFER TO SHEETS E-1 TO E-47 FOR CONTRACT WORK REQUIRED.
7. INSTALL SECU IN MODEL 2070 CONTROLLER SLOT.
8. FOR CCTV CABINET POWER DISTRIBUTION ASSEMBLY SEE SHEET E-70.

LEGEND:

- FIBER OPTIC TRANSMITTER/RECEIVER
- NETWORK PORT
- SERIAL CONNECTION
- SECU — SERIAL ETHERNET CONVERSION UNIT
- MODULAR CONNECTION

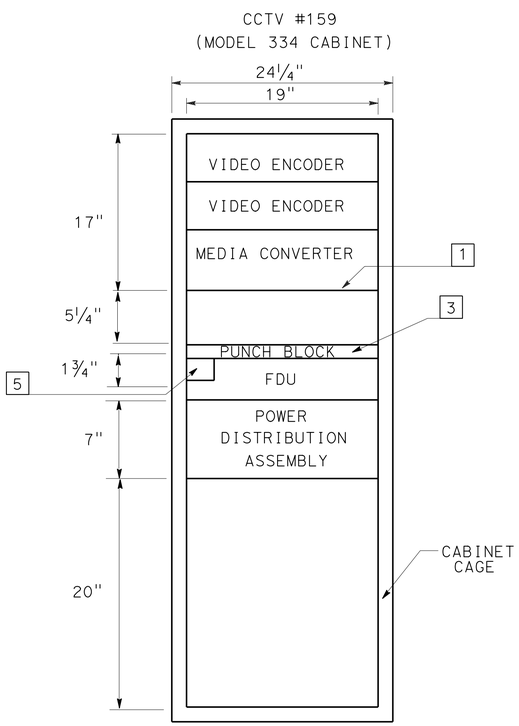

CCTV CABINET EQUIPMENT PLACEMENT

DETAIL "CCTV"

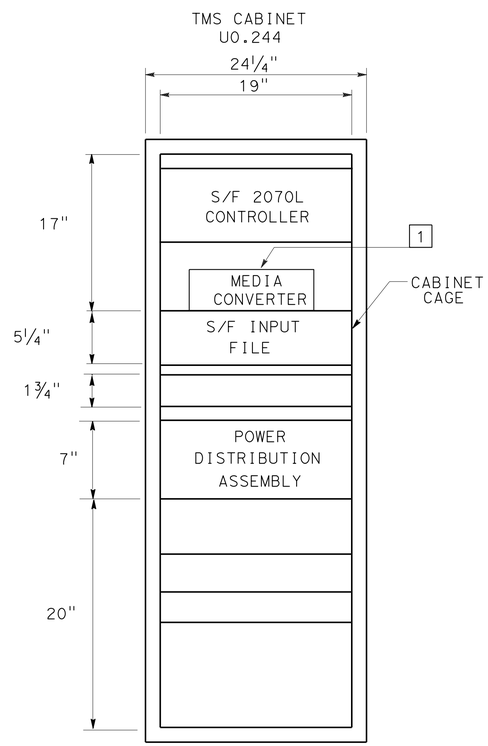

TMS CABINET EQUIPMENT PLACEMENT

DETAIL "TMS"
(TYPICAL)

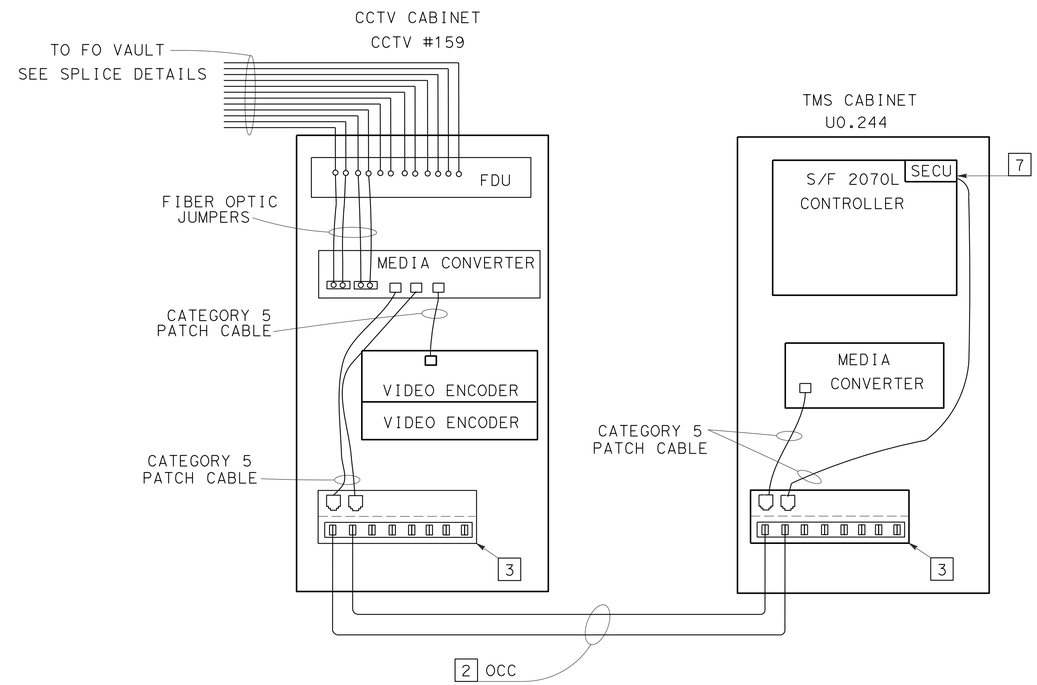

CCTV CABINET TO TMS CABINET

COMPONENT DIAGRAM

PRELIMINARY FOR BIDDING PURPOSES ONLY

APPROVED FOR ELECTRICAL WORK ONLY

CLOSED CIRCUIT TELEVISION SYSTEM
(ELECTRICAL DETAILS)

NO SCALE

E-64

STATE OF CALIFORNIA - DEPARTMENT OF TRANSPORTATION
Caltrans® TRAFFIC ELECTRICAL

FUNCTIONAL SUPERVISOR: BRIAN PECUS
CALCULATED-DESIGNED BY: HECTOR SANTAMARIA
CHECKED BY: ENRIQUE BERNAL
REVISED BY / DATE REVISED

LAST REVISION 03-04-13 | DATE PLOTTED => 13-MAY-2013 | TIME PLOTTED => 21:30

Dist	COUNTY	ROUTE	POST MILES TOTAL PROJECT	SHEET No.	TOTAL SHEETS
11	SD	11,905	0.0/1.6, R9.9/R10.7	458	622

REGISTERED ELECTRICAL ENGINEER DATE

04-22-13
PLANS APPROVAL DATE

REGISTERED PROFESSIONAL ENGINEER
HECTOR A. SANTAMARIA
No. 18207
Exp. 12-31-13
ELECTRICAL
STATE OF CALIFORNIA

THE STATE OF CALIFORNIA OR ITS OFFICERS OR AGENTS SHALL NOT BE RESPONSIBLE FOR THE ACCURACY OR COMPLETENESS OF SCANNED COPIES OF THIS PLAN SHEET.

NOTES:

1. -SHELF REQUIRED FOR EQUIPMENT.
2. -REMOVE BLANK PANEL AND REPLACE WITH FDU.
3. -THE CONTRACTOR SHALL VERIFY ALL CONTROLLING FIELD DIMENSIONS BEFORE ORDERING AND INSTALLING EQUIPMENT.

LEGEND:

- FIBER OPTIC TRANSMITTER/RECEIVER
- NETWORK PORT

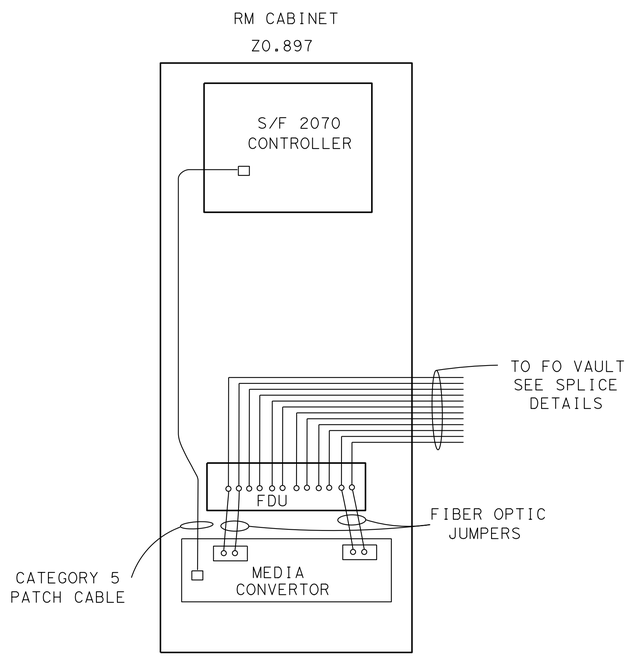

RM CABINET

COMPONENT DIAGRAM

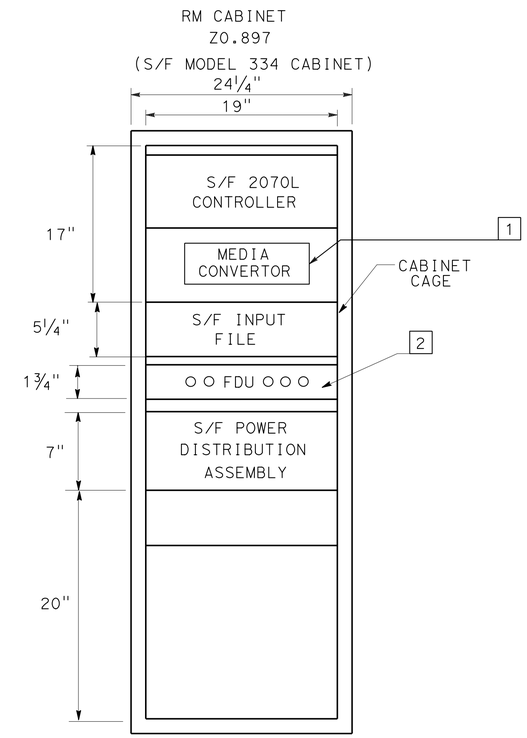

RM CABINET EQUIPMENT PLACEMENT

DETAIL "RM"
(TYPICAL)

PRELIMINARY FOR BIDDING PURPOSES ONLY

APPROVED FOR ELECTRICAL WORK ONLY

CLOSED CIRCUIT TELEVISION SYSTEM
(ELECTRICAL DETAILS)

NO SCALE

E-65

STATE OF CALIFORNIA - DEPARTMENT OF TRANSPORTATION
Caltrans® TRAFFIC ELECTRICAL

REVISED BY	DATE REVISED

HECTOR SANTAMARIA
ENRIQUE BERNAL
BRIAN PECUS

CALCULATED-DESIGNED BY
CHECKED BY
FUNCTIONAL SUPERVISOR

LAST REVISION 03-04-13
DATE PLOTTED => 13-MAY-2013
TIME PLOTTED => 21:30

Dist	COUNTY	ROUTE	POST MILES TOTAL PROJECT	SHEET No.	TOTAL SHEETS
11	SD	11,905	0.0/1.6, R9.9/R10.7	459	622

REGISTERED ELECTRICAL ENGINEER DATE

04-22-13
PLANS APPROVAL DATE

REGISTERED PROFESSIONAL ENGINEER
HECTOR A. SANTAMARIA
No. 18207
Exp. 12-31-13
ELECTRICAL
STATE OF CALIFORNIA

THE STATE OF CALIFORNIA OR ITS OFFICERS OR AGENTS SHALL NOT BE RESPONSIBLE FOR THE ACCURACY OR COMPLETENESS OF SCANNED COPIES OF THIS PLAN SHEET.

NOTES:

1 -SHELF REQUIRED FOR EQUIPMENT.

2 -REMOVE BLANK PANEL AND REPLACE WITH FDU.

3 -THE CONTRACTOR SHALL VERIFY ALL CONTROLLING FIELD DIMENSIONS BEFORE ORDERING AND INSTALLING EQUIPMENT.

LEGEND:

- FIBER OPTIC TRANSMITTER/RECEIVER
- NETWORK PORT

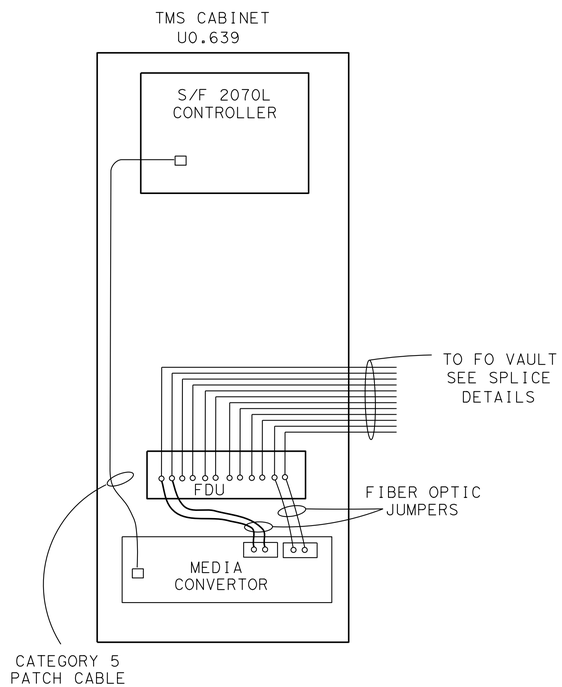

TMS CABINET

COMPONENT DIAGRAM

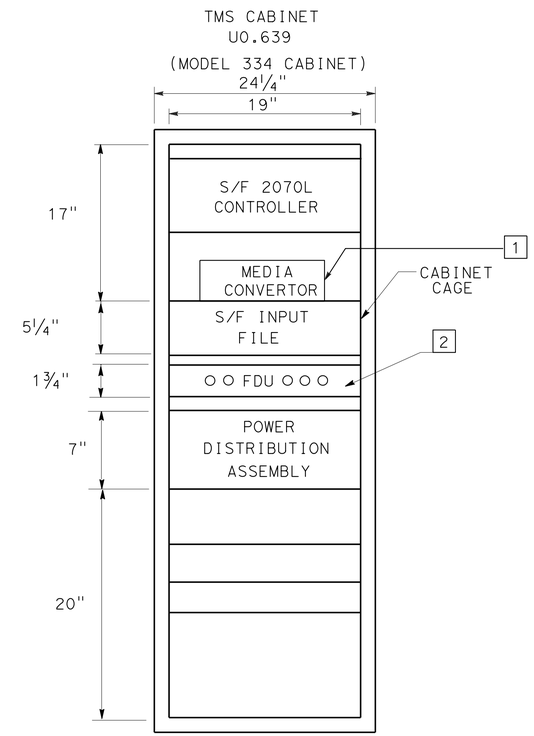

TMS CABINET EQUIPMENT PLACEMENT

DETAIL "TMS"
(TYPICAL)

PRELIMINARY FOR BIDDING PURPOSES ONLY

APPROVED FOR ELECTRICAL WORK ONLY

CLOSED CIRCUIT TELEVISION SYSTEM
(ELECTRICAL DETAILS)

NO SCALE

E-66

STATE OF CALIFORNIA - DEPARTMENT OF TRANSPORTATION
Caltrans® TRAFFIC ELECTRICAL

FUNCTIONAL SUPERVISOR: BRIAN PECUS
CALCULATED-DESIGNED BY: HECTOR SANTAMARIA
CHECKED BY: ENRIQUE BERNAL
REVISED BY
DATE REVISED

LAST REVISION 03-04-13
DATE PLOTTED => 13-MAY-2013
TIME PLOTTED => 21:30

Dist	COUNTY	ROUTE	POST MILES TOTAL PROJECT	SHEET No.	TOTAL SHEETS
11	SD	11,905	0.0/1.6, R9.9/R10.7	460	622

REGISTERED ELECTRICAL ENGINEER DATE

04-22-13
PLANS APPROVAL DATE

REGISTERED PROFESSIONAL ENGINEER
HECTOR A. SANTAMARIA
No. 18207
Exp. 12-31-13
ELECTRICAL
STATE OF CALIFORNIA

THE STATE OF CALIFORNIA OR ITS OFFICERS OR AGENTS SHALL NOT BE RESPONSIBLE FOR THE ACCURACY OR COMPLETENESS OF SCANNED COPIES OF THIS PLAN SHEET.

CABINET S10.361T
(CCTV#157)
FDU POSITION NUMBER

1	2	3	4	5	6	7	8	9	10	11	12
HUB 13		RING 1				RING 2				SPLICE ENCLOSURE FO VAULT Sta 69+20 "A" LINE	
		HUB 13		CCTV#158 S0.246T		HUB 13		CCTV#158 S0.246T			
1	2	133	134	3	4	135	136	7	8	1	2

CABINET S0.246T
(CCTV#158)
FDU POSITION NUMBER

1	2	3	4	5	6	7	8	9	10	11	12
HUB 13		RING 1				RING 2				SPLICE ENCLOSURE FO VAULT Sta 69+20 "A" LINE	
		CCTV#157 S10.361T		TMS U0.639		CCTV#157 S10.361T		TMS U0.639			
3	4	5	6	3	4	9	10	7	8	3	4

CABINET U0.639
TMS
FDU POSITION NUMBER

1	2	3	4	5	6	7	8	9	10	11	12
HUB 13		RING 1				RING 2				SPLICE ENCLOSURE FO VAULT Sta 69+20 "A" LINE	
		CCTV#158 S0.246T		CCTV#159 S0.759T		CCTV#158 S0.246T		CCTV#159 S0.759T			
13	14	5	6	3	4	9	10	7	8	13	14

CABINET U0.639 S0.759T
CCTV#159
FDU POSITION NUMBER

1	2	3	4	5	6	7	8	9	10	11	12
HUB 13		RING 1				RING 2				SPLICE ENCLOSURE FO VAULT Sta 69+20 "A" LINE	
		TMS U0.639		RM Z0.997		TMS U0.639		RM Z0.997			
15	16	5	6	3	4	9	10	7	8	15	16

CABINET Z0.897
(RM 1)
FDU POSITION NUMBER

1	2	3	4	5	6	7	8	9	10	11	12
HUB 13		RING 1				RING 2				SPLICE ENCLOSURE FO VAULT Sta 69+20 "A" LINE	
		CCTV#159 S0.759T				CCTV#159 S0.759T					
17	18	5	6	X	X	9	10	X	X	X	X

PRELIMINARY FOR BIDDING PURPOSES ONLY

APPROVED FOR ELECTRICAL WORK ONLY

CLOSED CIRCUIT TELEVISION SYSTEM
(ELECTRICAL DETAILS)

SCALE: 1"=50'

E-67

REVISED BY | DATE REVISED
HECTOR SANTAMARIA | ENRIQUE BERNAL
CALCULATED-DESIGNED BY | CHECKED BY
FUNCTIONAL SUPERVISOR | BRIAN PECUS

STATE OF CALIFORNIA - DEPARTMENT OF TRANSPORTATION
Caltrans® TRAFFIC ELECTRICAL

LAST REVISION 03-04-13 | DATE PLOTTED => 13-MAY-2013 TIME PLOTTED => 21:31

Dist	COUNTY	ROUTE	POST MILES TOTAL PROJECT	SHEET No.	TOTAL SHEETS
11	SD	11,905	0.0/1.6, R9.9/R10.7	461	622

REGISTERED ELECTRICAL ENGINEER DATE

04-22-13
PLANS APPROVAL DATE

REGISTERED PROFESSIONAL ENGINEER HECTOR A. SANTAMARIA No. 18207 Exp. 12-31-13 ELECTRICAL STATE OF CALIFORNIA

THE STATE OF CALIFORNIA OR ITS OFFICERS OR AGENTS SHALL NOT BE RESPONSIBLE FOR THE ACCURACY OR COMPLETENESS OF SCANNED COPIES OF THIS PLAN SHEET.

PRELIMINARY FOR BIDDING PURPOSES ONLY

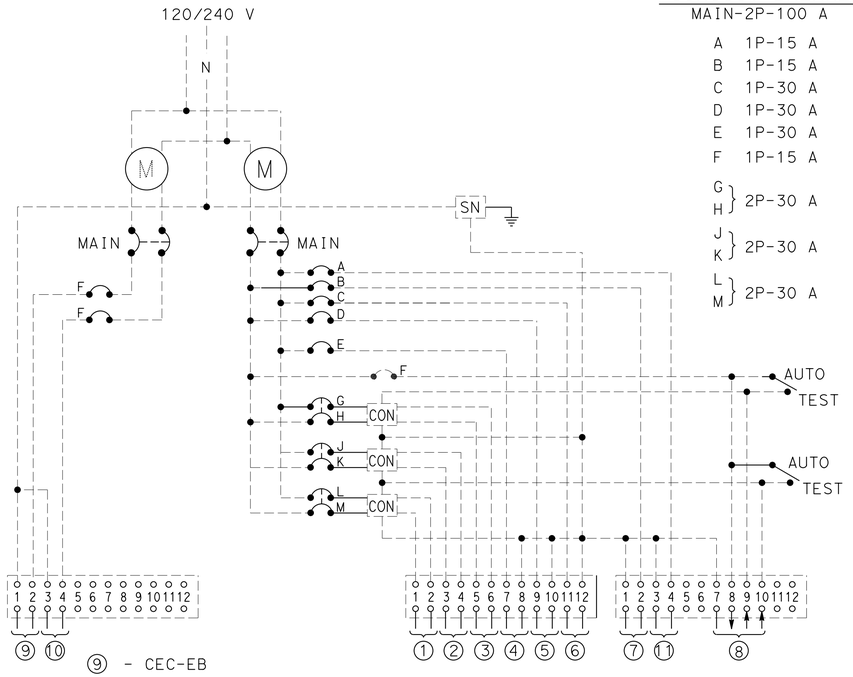

⑨ - CEC-EB
⑩ - CEC-WB

CIRCUIT BREAKERS
MAIN-2P-100 A

A	1P-15 A
B	1P-15 A
C	1P-30 A
D	1P-30 A
E	1P-30 A
F	1P-15 A
G, H	2P-30 A
J, K	2P-30 A
L, M	2P-30 A

① - LIGHTING
② - SIGN
③ - SOFFIT
④ - CCTV
⑤ - TMS
⑥ - TMS
⑦ - SPARE
⑧ - PEU
⑨ - FUTURE
⑩ - FUTURE
⑪ - FUTURE

WIRING DIAGRAM "B"

(TYPE III-CF SERVICE EQUIPMENT ENCLOSURE
SEE ES-2C & ES-2F)

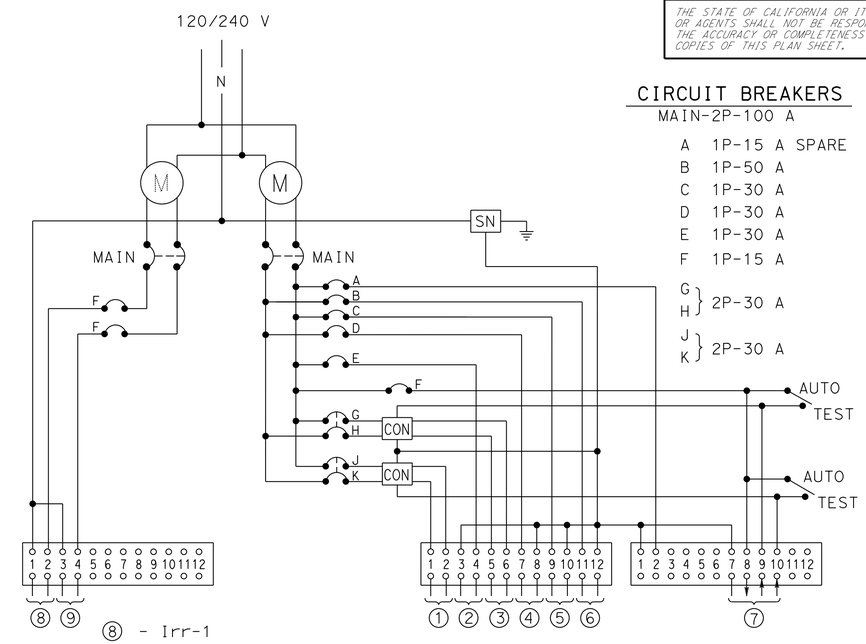

⑧ - Irr-1
⑨ - Irr-2

CIRCUIT BREAKERS
MAIN-2P-100 A

A	1P-15 A SPARE
B	1P-50 A
C	1P-30 A
D	1P-30 A
E	1P-30 A
F	1P-15 A
G, H	2P-30 A
J, K	2P-30 A

① - LIGHTING
② - CCTV
③ - SIGN
④ - RAMP
⑤ - TMS
⑥ - SPARE
⑦ - PEU

WIRING DIAGRAM "OTM"

(TYPE III-CF EQUIPMENT ENCLOSURE
SEE ES-2C & ES-2F)

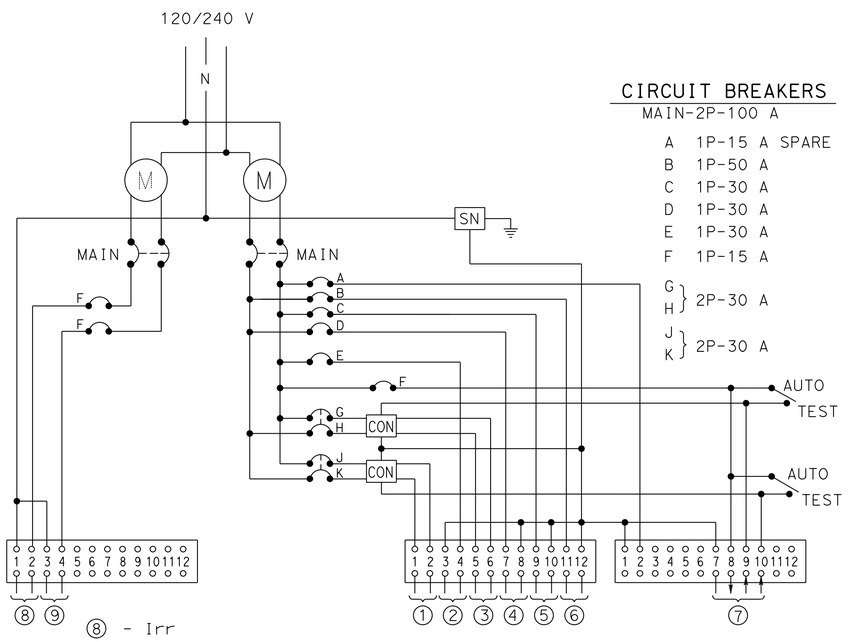

⑧ - Irr
⑨ - SPARE

CIRCUIT BREAKERS
MAIN-2P-100 A

A	1P-15 A SPARE
B	1P-50 A
C	1P-30 A
D	1P-30 A
E	1P-30 A
F	1P-15 A
G, H	2P-30 A
J, K	2P-30 A

① - LIGHTING
② - CCTV
③ - SIGN
④ - TDC
⑤ - TMS
⑥ - SPARE
⑦ - PEU

WIRING DIAGRAM "SANYO"

(TYPE III-CF EQUIPMENT ENCLOSURE
SEE ES-2C & ES-2F)

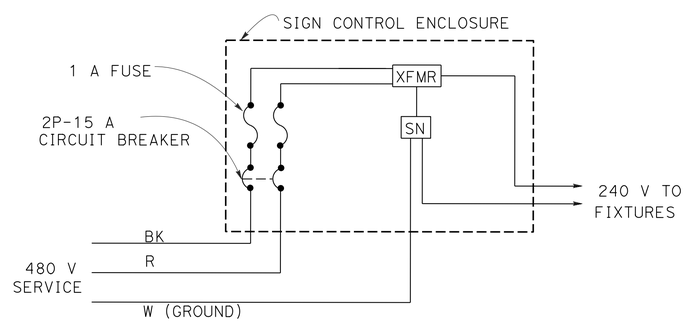

SIGN CONTROL

SEE Std PLANS ES-15D FOR DETAILS NOT SHOWN
XFMR = PRIMARY 480 V AND SECONDARY 240 V 0.5 KVA TRANSFORMER (5 FIXTURES OR LESS)

APPROVED FOR ELECTRICAL WORK ONLY

LIGHTING AND SIGN ILLUMINATION

SCALE: 1"= 50'

E-68

STATE OF CALIFORNIA - DEPARTMENT OF TRANSPORTATION
Caltrans® TRAFFIC ELECTRICAL

FUNCTIONAL SUPERVISOR: BRIAN PECUS
CALCULATED-DESIGNED BY: HECTOR SANTAMARIA
CHECKED BY: ENRIQUE BERNAL
REVISED BY / DATE REVISED

LAST REVISION 03-04-13
DATE PLOTTED => 13-MAY-2013
TIME PLOTTED => 21:31

DIST	COUNTY	ROUTE	POST MILES TOTAL PROJECT	SHEET No	TOTAL SHEETS
11	SD	11, 905	0.0/1.6 R9.9/R10.7	462	622

REGISTERED CIVIL ENGINEER — DATE 2-6-12

04-22-13
PLANS APPROVAL DATE

The State of California or its officers or agents shall not be responsible for the accuracy or completeness of scanned copies of this plan sheet.

REGISTERED PROFESSIONAL ENGINEER — JUAN J. JAUREGUI JR. — No. C63939 — Exp. 9/30/14 — CIVIL — STATE OF CALIFORNIA

NOTES:

1. During pole installation, the post shall be raked as necessary with the use of leveling nuts to provide a plumb pole axis.
2. Wind Loadings (3-second gust): 100 mph
3. Unit Stresses (Structural Steel):
   a. fy = 55,000 psi (tapered steel tube and anchor bolts)
   b. fy = 50,000 psi (unless otherwise noted)
4. Unit Stresses (Reinforced Concrete):
   a. f'c = 3,625 psi
   b. fy = 60,000 psi
5. Mounting arm to be perpendicular to traffic.
6. Mounting arm to be placed towards oncoming traffic and the box enclosure access plate away from traffic.
7. For details not shown, see 2010 Standard Plan ES-16B.

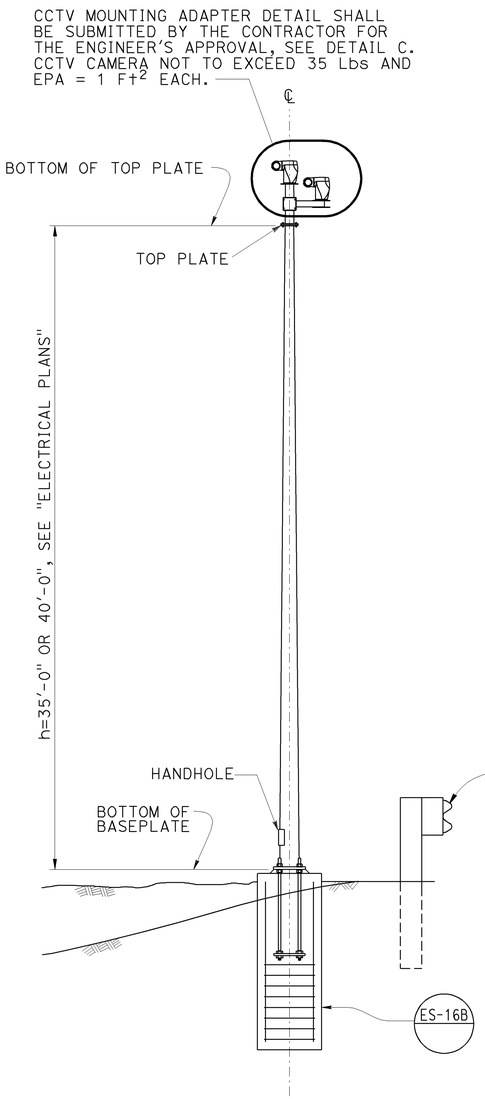

ELEVATION

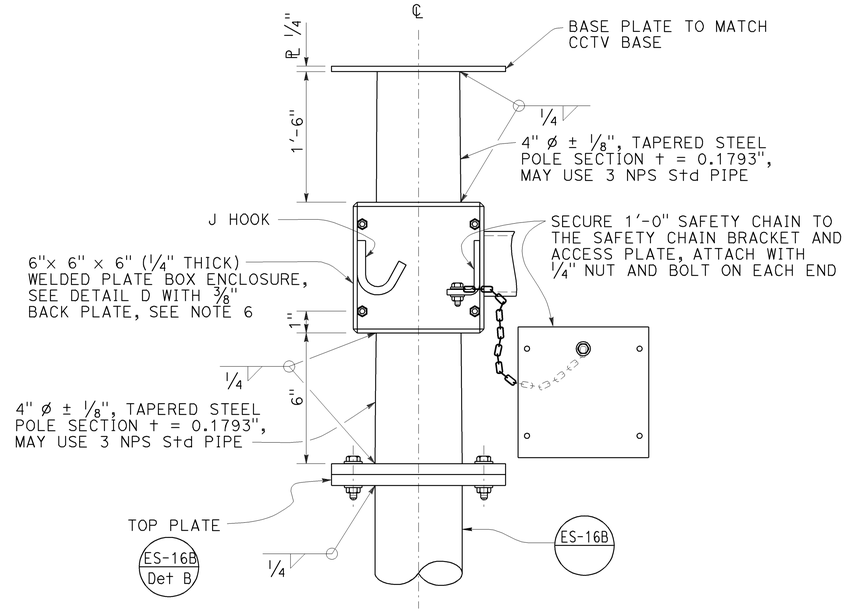

DETAIL C
CLOSED CIRCUIT TELEVISION MOUNTING ADAPTER

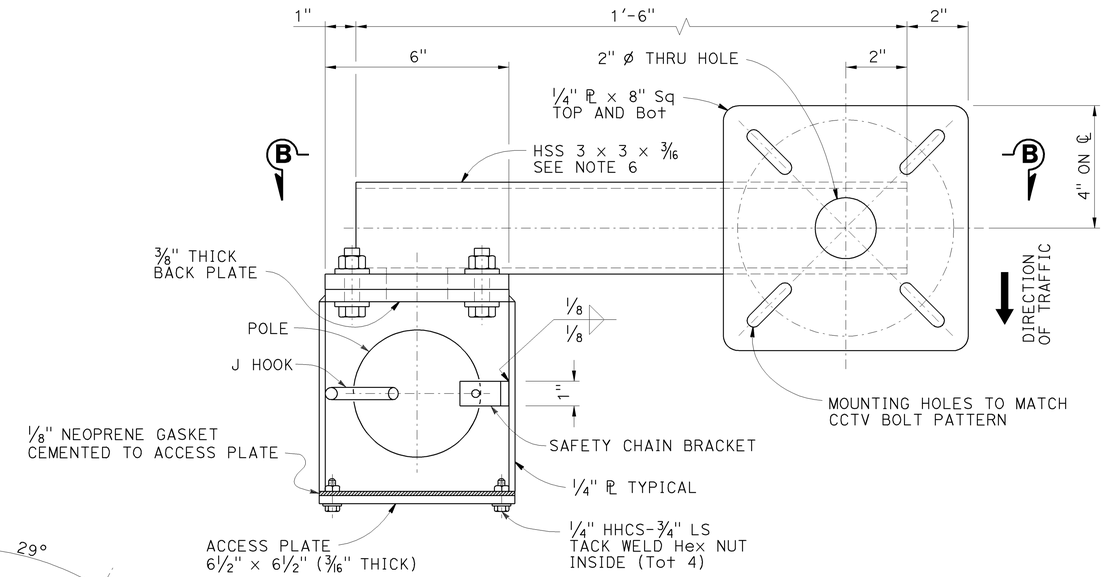

SECTION A-A

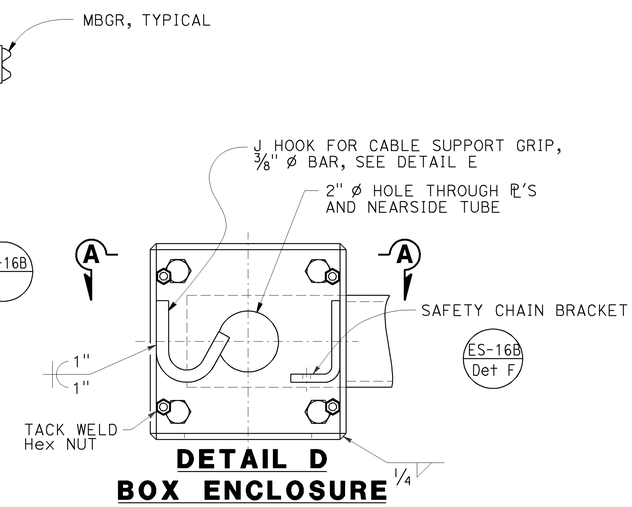

DETAIL D
BOX ENCLOSURE

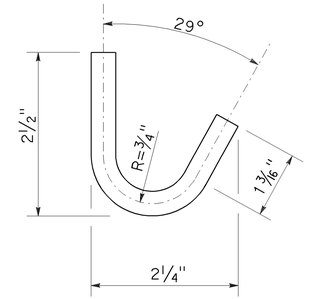

DETAIL E
J HOOK

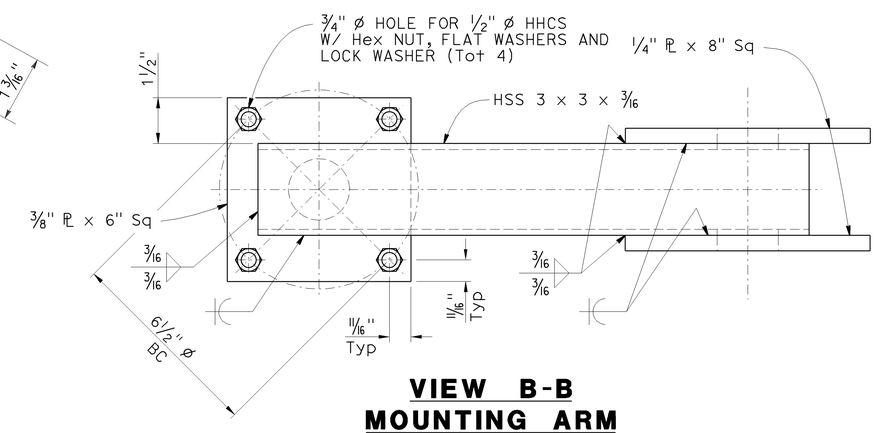

VIEW B-B
MOUNTING ARM

NOTE:
THE CONTRACTOR SHALL VERIFY ALL CONTROLLING FIELD DIMENSIONS BEFORE ORDERING OR FABRICATING ANY MATERIAL.

NO SCALE

BRANCH CHIEF	JEFF WOODY	DESIGN	BY J JAUREGUI / CHECKED J DATILES
		DETAILS	BY D W JUSTICE Jr / CHECKED J JAUREGUI
		QUANTITIES	BY / CHECKED

STATE OF CALIFORNIA
DEPARTMENT OF TRANSPORTATION

DIVISION OF ENGINEERING SERVICES
DESIGN AND TECHNICAL SERVICES
SPECIAL DESIGNS BRANCH — A

BRIDGE NO. N/A
POST MILE

CLOSED CIRCUIT TELEVISION SYSTEM
CANTILEVERED ARM DETAILS

SES-1

(ENGLISH) SPECIAL DESIGNS BRANCH BORDER SHEET (REV. 7-1-09)

ORIGINAL SCALE IN INCHES FOR REDUCED PLANS 0 1 2 3

UNIT: 3619
PROJECT NUMBER & PHASE: 1100020519-1
CONTRACT NO.: 11-056321

DISREGARD PRINTS BEARING EARLIER REVISION DATES

REVISION DATES: 4-30-13 1-11-13 1-28-13 2-6-13

SHEET 1 OF 2

FILE => spec_des_br_prj/2013sd/11-056321/11-056321_ses1.dgn

USERNAME => s133967 DATE PLOTTED => 01-MAY-2013 TIME PLOTTED => 14:27

DIST	COUNTY	ROUTE	POST MILES TOTAL PROJECT	SHEET No.	TOTAL SHEETS
11	SD	11,905	0.0/1.6 R9.9/R10.7	463	622

REGISTERED CIVIL ENGINEER 2-6-13 DATE

04-22-13
PLANS APPROVAL DATE

REGISTERED PROFESSIONAL ENGINEER JUAN J. JAUREGUI JR. No. C63939 Exp. 9/30/14 CIVIL STATE OF CALIFORNIA

The State of California or its officers or agents shall not be responsible for the accuracy or completeness of electronic copies of this plan sheet.

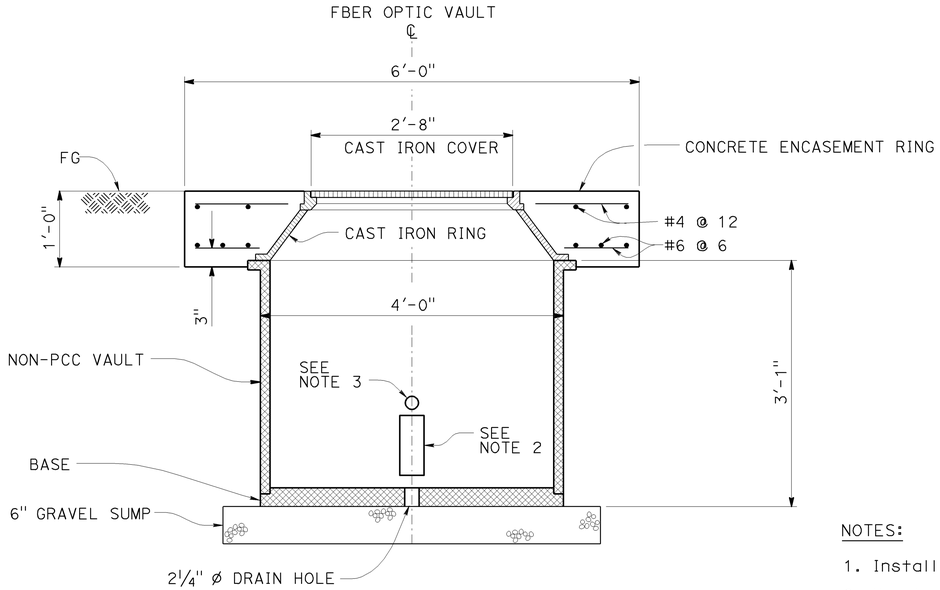

SECTION A-A

NO SCALE

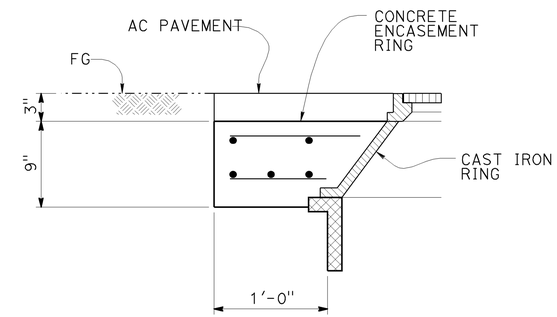

DETAIL A

NO SCALE
(VAULT INSIDE OF PULLOUT)

NOTES:

1. Install vault per manufacturer's recommendation.
2. Knockout for Multi-Duct Conduit System, MDCS (8), provide two equally spaced around vault.
3. 2" knockout (total 4) equally spaced around vault.

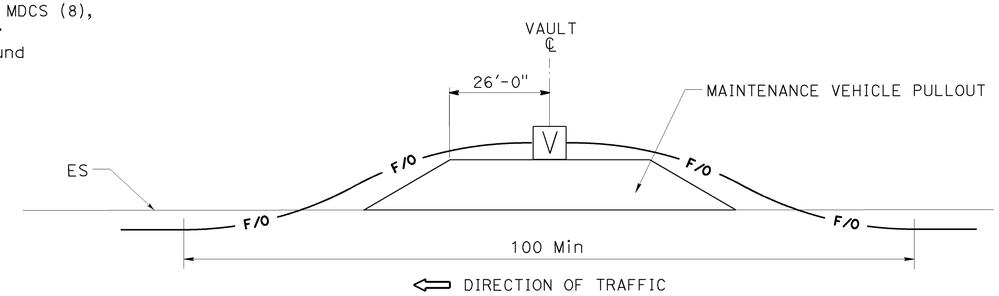

FIBER OPTIC VAULT INSTALLATION DETAIL (TYPICAL)

NO SCALE
(OUTSIDE OF PULLOUT)

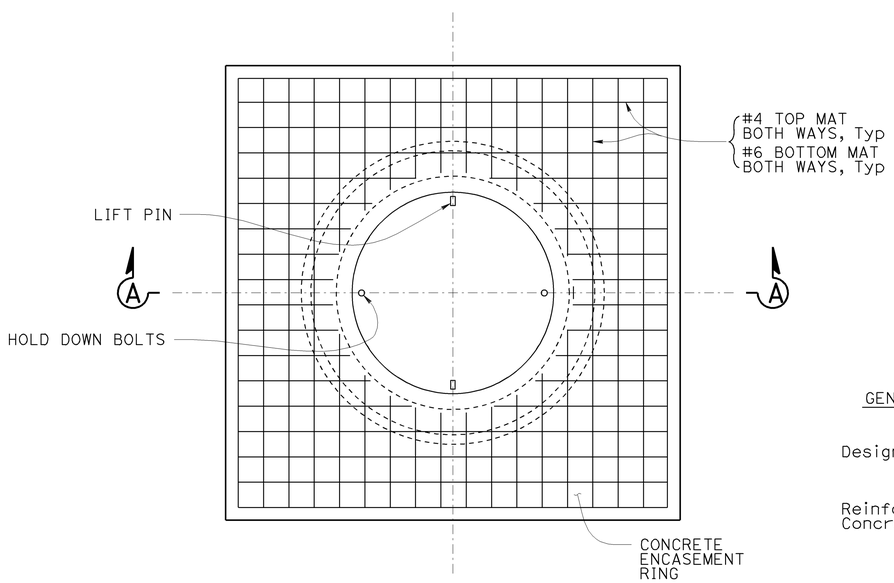

PLAN

NO SCALE

GENERAL NOTES:

Design : CALTRANS BRIDGE DESIGN SPECIFICATIONS APRIL 2000 (LFD)

Reinforced Concrete : fy = 60 ksi (Yield strength of reinforcement)
f'c = 36 ksi (Concrete compressive strength at 28 days)
n = 8

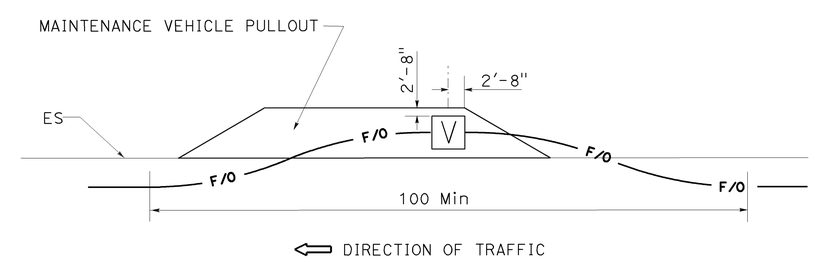

FIBER OPTIC VAULT INSTALLATION DETAIL (TYPICAL)

NO SCALE
(INSIDE OF PULLOUT)
NOTE: SEE DETAIL "A"

THE CONTRACTOR SHALL VERIFY ALL CONTROLLING FIELD DIMENSIONS BEFORE ORDERING OR FABRICATING ANY MATERIAL.

	BY	CHECKED
DESIGN	J JAUREGUI	J DATILES
DETAILS	D W JUSTICE Jr	J JAUREGUI
QUANTITIES		

STATE OF CALIFORNIA
DEPARTMENT OF TRANSPORTATION

DIVISION OF ENGINEERING SERVICES
STRUCTURE DESIGN
SPECIAL DESIGN BRANCH

BRIDGE NO. N/A
POST MILE

FIBER OPTIC COMMUNICATION SYSTEM
FIBER OPTIC VAULT DETAILS

SES-2

STRUCTURES DESIGN SPECIAL DESIGN SHEET (ENGLISH) (REV. 09-01-10)

ORIGINAL SCALE IN INCHES FOR REDUCED PLANS 0 1 2 3

UNIT: 3619
PROJECT NUMBER & PHASE: 1100020519-1
CONTRACT NO.: 11-056321

DISREGARD PRINTS BEARING EARLIER REVISION DATES

REVISION DATES 1-8-13 1-18-13 1-11-13 4-30-13

SHEET 2 OF 2

FILE => 11-056321_ses2.dgn

USERNAME => s133967 DATE PLOTTED => 30-APR-2013 TIME PLOTTED => 10:04

DIST	COUNTY	ROUTE	POST MILES TOTAL PROJECT	SHEET No.	TOTAL SHEETS
11	SD	11/905	0.0/1.6, R9.9/R10.7	464	622

REGISTERED CIVIL ENGINEER — DATE 1-22-13

04-22-13
PLANS APPROVAL DATE

REGISTERED PROFESSIONAL ENGINEER — AIMAN MALAK — No. C73369 — Exp. 12-31-2014 — CIVIL — STATE OF CALIFORNIA

The State of California or its officers or agents shall not be responsible for the accuracy or completeness of electronic copies of this plan sheet.

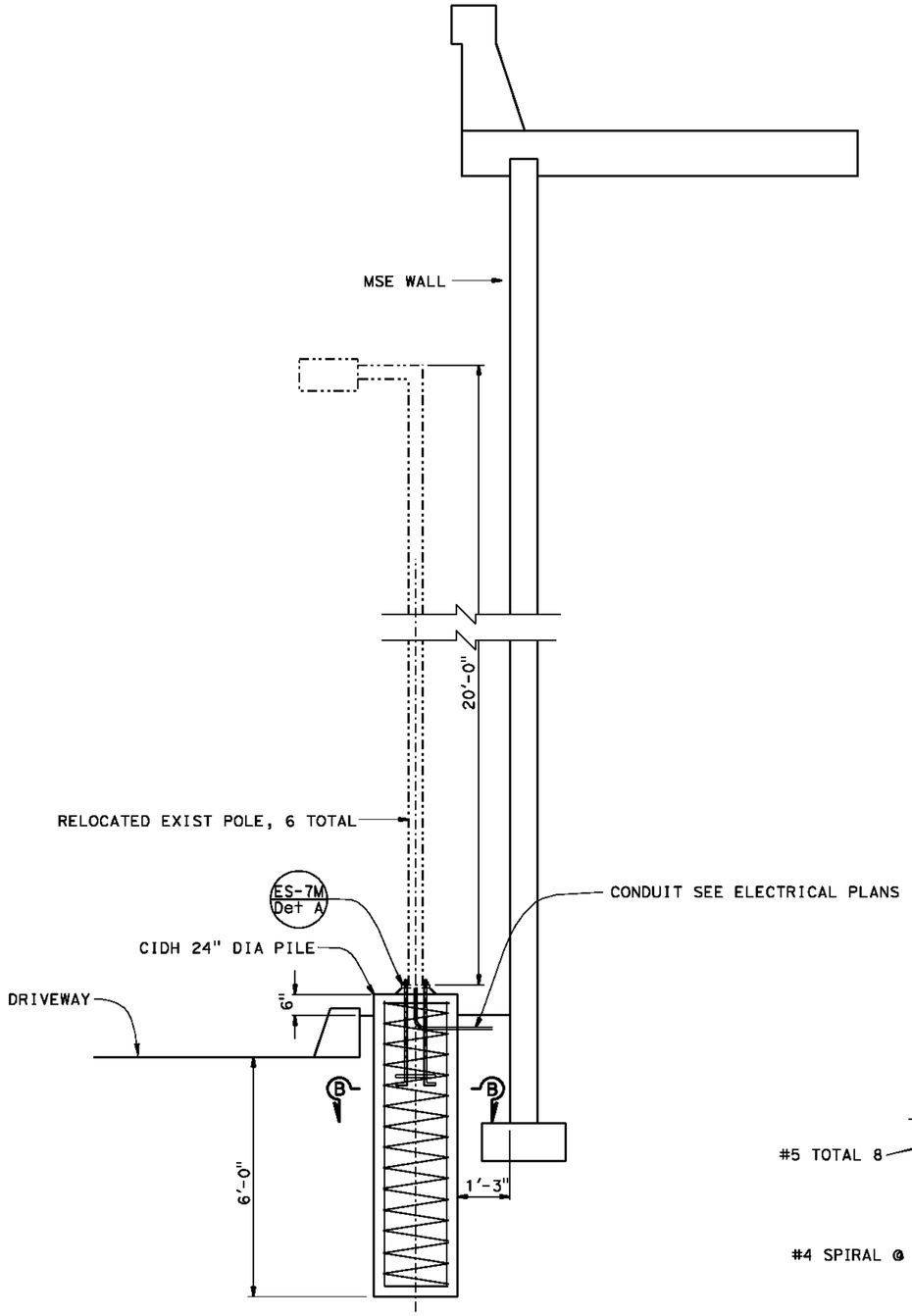

ELEVATION

NOTE:
THE CONTRACTOR SHALL VERIFY ALL CONTROLLING FIELD DIMENSIONS BEFORE ORDERING OR FABRICATING ANY MATERIAL.

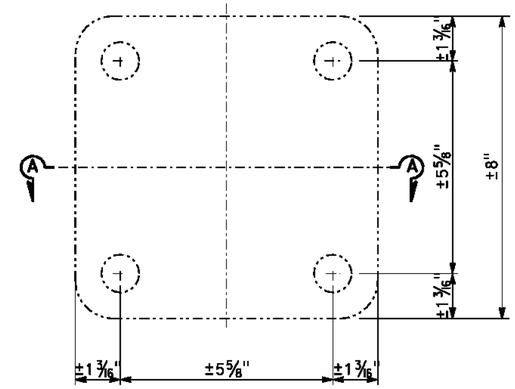

BASE PLATE

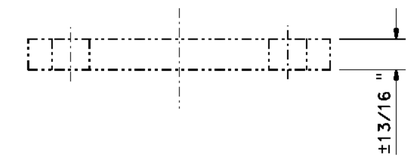

SECTION A-A

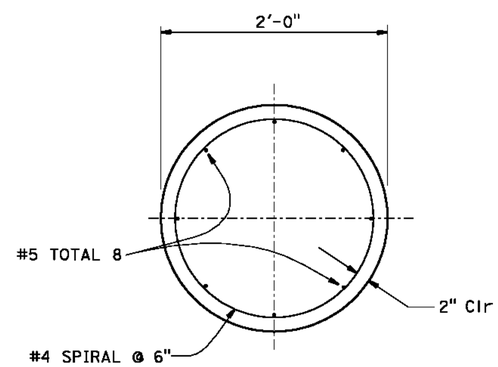

SECTION B-B

NOTES:

1. See "ELECTRICAL PLANS" for pole locations.
2. During pole erection the post shall be raked as necessary with the use of leveling nuts to provide a plumb pole axis.
3. The contractor shall verify existing anchor bolts size and bolt circle before constructing CIDH pile.
4. Foundation design is based on AASHTO Standard Specifications for Structural Supports for Highway Signs, Luminaires, and Traffic Signals,Fifth Edition (LTS-5) article 13.6 Broms' approximate procedure assuming a cohessionless material. The angle of Internal friction used is 30° and unit weight of soil used is 120 lb/ft³.
5. For details not shown, see "2010 STANDARD PLANS".
6. No additional devices shall be added.
7. Electroliers shall be checked by the Engineer for soundness before reinstallation.
8. Anchor bolts are ¾" x 2'-0".

STANDARD PLANS DATED MAY 2010

1. A10A ACRONYMS AND ABBREVIATIONS (A-L)
2. A10B ACRONYMS AND ABBREVIATIONS (M-Z)
3. ES-6B ELECTRICAL SYSTEMS (LIGHTING STANDARD TYPES 15 AND 21 BARRIER RAIL MOUNTED DETAILS)
4. ES-7M ELECTRICAL SYSTEMS (SIGNAL AND LINGTING STANDARDS DETAILS No. 1

BRANCH CHIEF JOEL MAGANA

	BY	CHECKED
DESIGN	A MALAK	T MARCHENKO
DETAILS	H NGUYEN	A MALAK
QUANTITIES		

STATE OF CALIFORNIA
DEPARTMENT OF TRANSPORTATION

DIVISION OF ENGINEERING SERVICES
STRUCTURE DESIGN
SPECIAL DESIGN BRANCH

BRIDGE NO. N/A
POST MILE 0.0/1.6 R9.9/R10.7

PARKING LOT LIGHTING
FOUNDATION AND ANCHORAGE DETAILS

SES-3

STRUCTURES DESIGN SPECIAL DESIGN SHEET (ENGLISH) (REV. 09-01-10)

ORIGINAL SCALE IN INCHES FOR REDUCED PLANS 0 1 2 3

UNIT: 3619
PROJECT NUMBER & PHASE: 1100020519
CONTRACT NO.: 11-056321

DISREGARD PRINTS BEARING EARLIER REVISION DATES

REVISION DATES 1-8-13

SHEET 1 OF 1

FILE => 11-056321.dgn

USERNAME => s128478 DATE PLOTTED => 22-JAN-2013 TIME PLOTTED => 14:29

DIST	COUNTY	ROUTE	POST MILES TOTAL PROJECT	SHEET No	TOTAL SHEETS
11	SD	11,905	0.0/1.6 R9.9/R10.7	465	622

GEOTECHNICAL PROFESSIONAL 12-7-12

04-22-13
PLANS APPROVAL DATE

REGISTERED PROFESSIONAL ENGINEER ZIA YAZDANI No. 2119 Exp. 3-31-15 GEOTECHNICAL STATE OF CALIFORNIA

The State of California or its officers or agents shall not be responsible for the accuracy or completeness of electronic copies of this plan sheet.

This LOTB sheet was prepared in accordance with the Caltrans Soil & Rock Logging, Classification, & Presentation Manual (2010 Edition), with the exception of the Boring designation numbers.

See 2010 Standard Plans A10F and A10G for Soil Legend, and A10H for Rock Legend.

BENCH MARKS

SANYO-N
Fnd 2¼" CADT Disk in SW
N 1 786 710.76
E 6 348 815.78
Elev = 553.62

ALTA
Fnd 2¼" CADT Disk in Boulder
N 1 785 489.17
E 6 360 188.82
Elev = 713.22
Vertical Datum: NAVD88

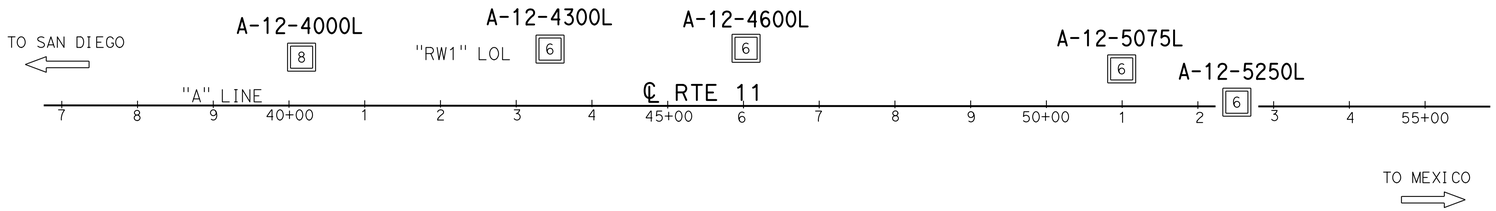

PLAN
1" = 100′

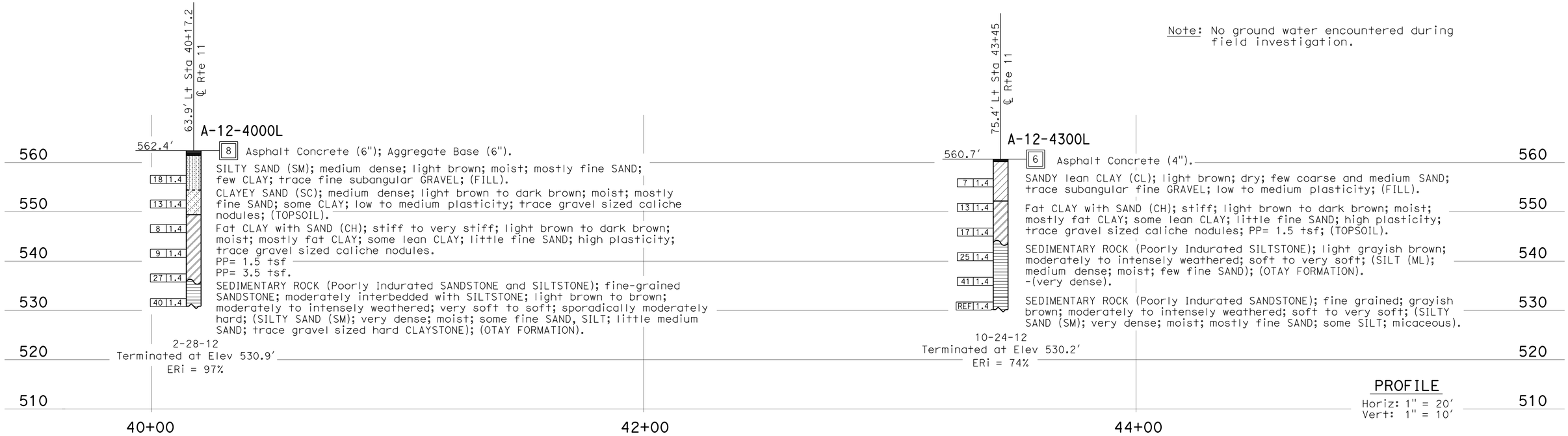

Note: No ground water encountered during field investigation.

PROFILE
Horiz: 1" = 20′
Vert: 1" = 10′

ENGINEERING SERVICES	MATERIALS AND GEOTECHNICAL SERVICES	STATE OF CALIFORNIA DEPARTMENT OF TRANSPORTATION	DIVISION OF ENGINEERING SERVICES STRUCTURE DESIGN DESIGN BRANCH X	BRIDGE NO. NA / POST MILE	SANITARY SEWER LINE LOG OF TEST BORINGS 1 OF 3
FUNCTIONAL SUPERVISOR NAME: B. Hinman	DRAWN BY: I.G-Remmen / CHECKED BY: M. Fordham	FIELD INVESTIGATION BY: J. Kermode, E. Galleta			

OGS CIVIL LOG OF TEST BORINGS SHEET

ORIGINAL SCALE IN INCHES FOR REDUCED PLANS 0 1 2 3

UNIT: 3643
PROJECT NUMBER & PHASE: 11000205191
CONTRACT NO.: 11-056321

DISREGARD PRINTS BEARING EARLIER REVISION DATES

REVISION DATES: 12-07-12 05-02-13 | SHEET 1 OF 3

FILE => 1100020519ul001.dgn

USERNAME => s127284 DATE PLOTTED => 13-MAY-2013 TIME PLOTTED => 21:38

DIST	COUNTY	ROUTE	POST MILES TOTAL PROJECT	SHEET No	TOTAL SHEETS
11	SD	11,905	0.0/1.6, R9.9/R10.7	466	622

GEOTECHNICAL PROFESSIONAL 12-7-12

04-22-13
PLANS APPROVAL DATE

REGISTERED PROFESSIONAL ENGINEER
ZIA YAZDANI
No. 2119
Exp. 3-31-15
GEOTECHNICAL
STATE OF CALIFORNIA

The State of California or its officers or agents shall not be responsible for the accuracy or completeness of electronic copies of this plan sheet.

This LOTB sheet was prepared in accordance with the Caltrans Soil & Rock Logging, Classification, & Presentation Manual (2010 Edition), with the exception of the Boring designation numbers.

See 2010 Standard Plans A10F and A10G for Soil Legend, and A10H for Rock Legend.

FOR PLAN VIEW, SEE
"LOG OF TEST BORINGS 1 OF 3"

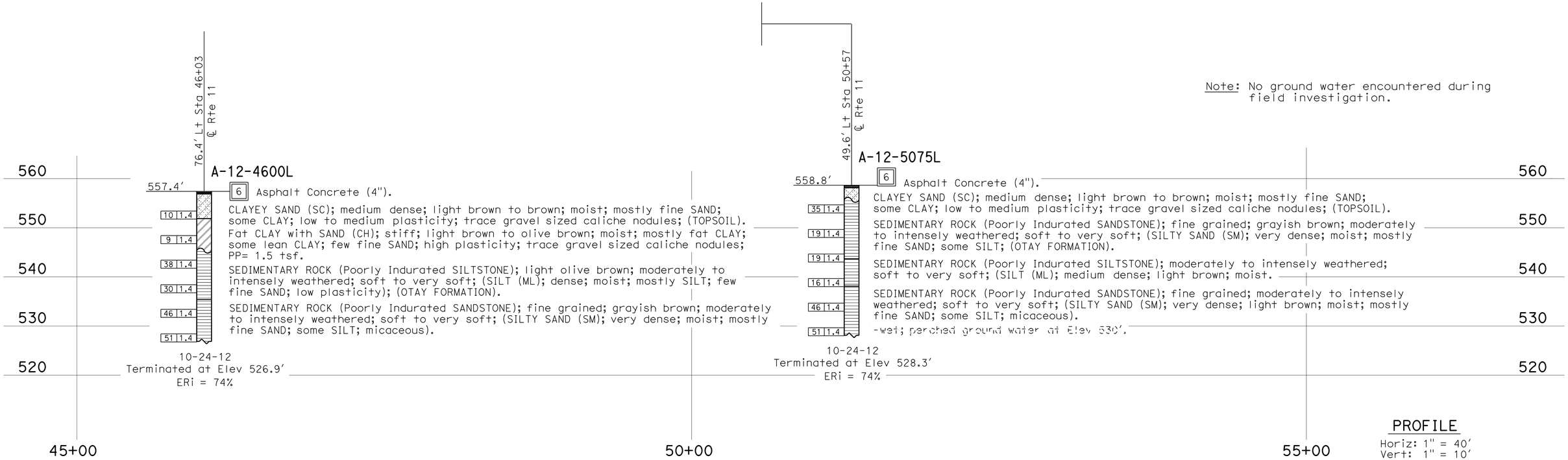

Note: No ground water encountered during field investigation.

PROFILE
Horiz: 1" = 40'
Vert: 1" = 10'

ENGINEERING SERVICES	MATERIALS AND GEOTECHNICAL SERVICES	STATE OF CALIFORNIA DEPARTMENT OF TRANSPORTATION	DIVISION OF ENGINEERING SERVICES STRUCTURE DESIGN	BRIDGE NO.	SANITARY SEWER LINE
FUNCTIONAL SUPERVISOR	DRAWN BY: I.G-Remmen	FIELD INVESTIGATION BY:	DESIGN BRANCH X	NA	LOG OF TEST BORINGS 2 OF 3
NAME: B. Hinman	CHECKED BY: M. Fordham	J. Kermode, E. Galleta		POST MILE	

OGS CIVIL LOG OF TEST BORINGS SHEET

ORIGINAL SCALE IN INCHES FOR REDUCED PLANS 0 1 2 3

UNIT: 3643
PROJECT NUMBER & PHASE: 11000205191
CONTRACT NO.: 11-056321

DISREGARD PRINTS BEARING EARLIER REVISION DATES

REVISION DATES: 12-07-12, 05-02-13

SHEET 2 OF 3

FILE => 1100020519ul002.dgn

USERNAME => s127284 DATE PLOTTED => 13-MAY-2013 TIME PLOTTED => 21:38

DIST	COUNTY	ROUTE	POST MILES TOTAL PROJECT	SHEET No	TOTAL SHEETS
11	SD	11,905	0.0/1.6 R9.9/R10.7	467	622

GEOTECHNICAL PROFESSIONAL 12-7-12

04-22-13
PLANS APPROVAL DATE

REGISTERED PROFESSIONAL ENGINEER
ZIA YAZDANI
No. 2119
Exp. 3-31-15
GEOTECHNICAL
STATE OF CALIFORNIA

The State of California or its officers or agents shall not be responsible for the accuracy or completeness of electronic copies of this plan sheet.

This LOTB sheet was prepared in accordance with the Caltrans Soil & Rock Logging, Classification, & Presentation Manual (2010 Edition), with the exception of the Boring designation numbers.

See 2010 Standard Plans A10F and A10G for Soil Legend, and A10H for Rock Legend.

FOR PLAN VIEW, SEE
"LOG OF TEST BORINGS 1 OF 3"

Note: No ground water encountered during field investigation.

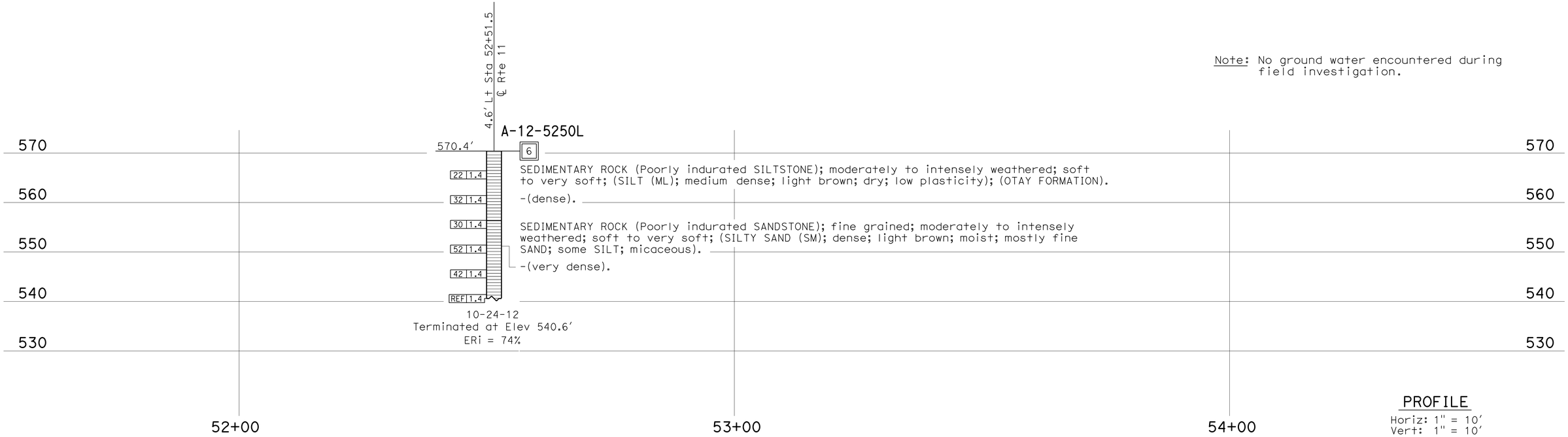

PROFILE
Horiz: 1" = 10'
Vert: 1" = 10'

ENGINEERING SERVICES	MATERIALS AND GEOTECHNICAL SERVICES	STATE OF CALIFORNIA DEPARTMENT OF TRANSPORTATION	DIVISION OF ENGINEERING SERVICES STRUCTURE DESIGN DESIGN BRANCH X	BRIDGE NO. NA / POST MILE	SANITARY SEWER LINE LOG OF TEST BORINGS 3 OF 3
FUNCTIONAL SUPERVISOR NAME: B. Hinman	DRAWN BY: I.G-Remmen / CHECKED BY: M. Fordham	FIELD INVESTIGATION BY: E. Galleta			

OGS CIVIL LOG OF TEST BORINGS SHEET

ORIGINAL SCALE IN INCHES FOR REDUCED PLANS 0 1 2 3

UNIT: 3643
PROJECT NUMBER & PHASE: 11000205191
CONTRACT NO.: 11-056321

DISREGARD PRINTS BEARING EARLIER REVISION DATES → 12-07-12 05-02-13

REVISION DATES			SHEET	OF
12-07-12	05-02-13		3	3

FILE => 1100020519ul003.dgn

USERNAME => s127284 DATE PLOTTED => 13-MAY-2013 TIME PLOTTED => 21:38

DIST	COUNTY	ROUTE	POST MILES TOTAL PROJECT	SHEET No.	TOTAL SHEETS
11	SD	11,905	0.0/1.6 R9.9/R10.7	468	622

GEOTECHNICAL PROFESSIONAL 05-02-13

04-22-13
PLANS APPROVAL DATE

REGISTERED PROFESSIONAL ENGINEER ZIA YAZDANI No. 2119 Exp. 3-31-15 GEOTECHNICAL STATE OF CALIFORNIA

The State of California or its officers or agents shall not be responsible for the accuracy or completeness of electronic copies of this plan sheet.

This LOTB sheet was prepared in accordance with the Caltrans Soil & Rock Logging, Classification, & Presentation Manual (2010 Edition), with the exception of the Boring designation numbers.

See 2010 Standard Plans A10F and A10G for Soil Legend, and A10H for Rock Legend.

BENCH MARKS

BM 905-10.6 Elev 525.96′
BRASS DISK ON SOUTH SIDE
OF ROUTE 905
N 1785344.09
E 6346287.24
VERTICAL DATUM: NAVD88

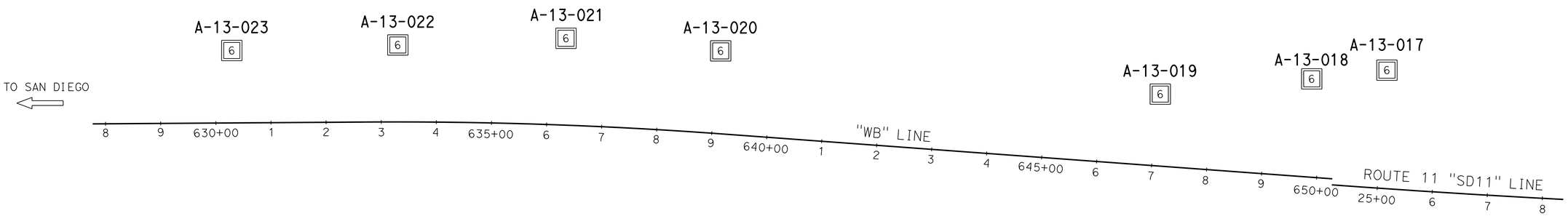

PLAN
1" = 100′

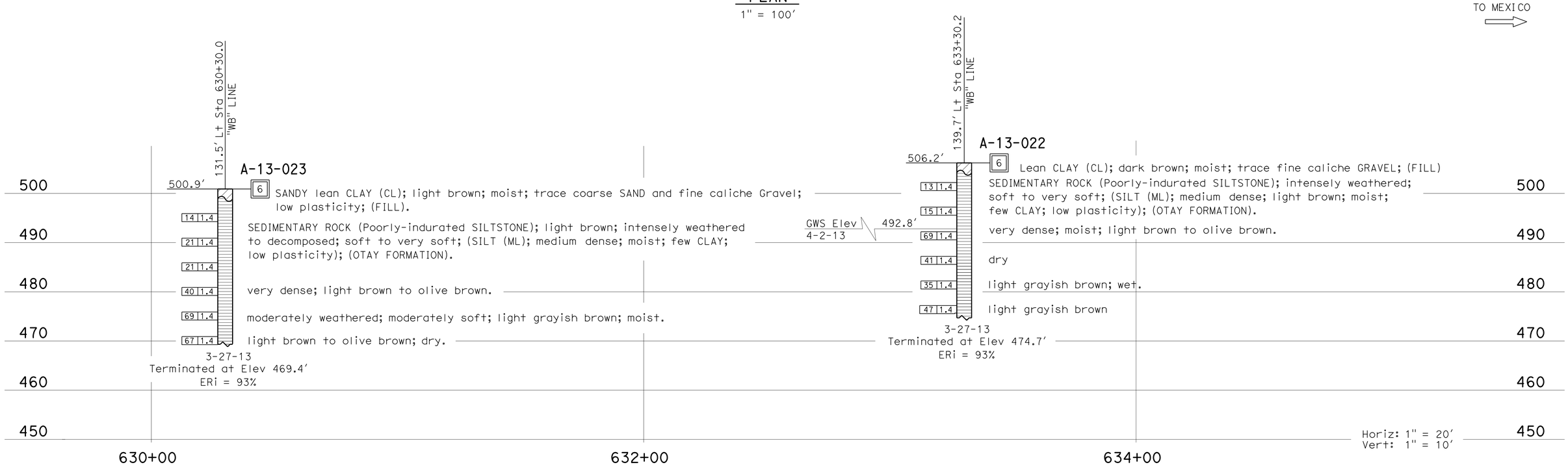

ENGINEERING SERVICES	MATERIALS AND GEOTECHNICAL SERVICES	STATE OF CALIFORNIA DEPARTMENT OF TRANSPORTATION	DIVISION OF ENGINEERING SERVICES STRUCTURE DESIGN DESIGN BRANCH X	BRIDGE NO. / POST MILE	DRAINAGE SYSTEM No. 5
FUNCTIONAL SUPERVISOR NAME: B. Hinman	DRAWN BY: S. Tran / CHECKED BY: C. Cortez	FIELD INVESTIGATION BY: Z. Yazdani, E. Galleta			LOG OF TEST BORINGS 1 OF 4

OGS CIVIL LOG OF TEST BORINGS SHEET

ORIGINAL SCALE IN INCHES FOR REDUCED PLANS 0 1 2 3

UNIT: 3643
PROJECT NUMBER & PHASE: 11000205191 CONTRACT NO.: 11-056321

DISREGARD PRINTS BEARING EARLIER REVISION DATES

REVISION DATES 05-02-13 SHEET 1 OF 4

FILE => 1100020519u1004.dgn

USERNAME => s127284 DATE PLOTTED => 13-MAY-2013 TIME PLOTTED => 21:38

DIST	COUNTY	ROUTE	POST MILES TOTAL PROJECT	SHEET No.	TOTAL SHEETS
11	SD	11,905	0.0/1.6 R9.9/R10.7	469	622

GEOTECHNICAL PROFESSIONAL 05-02-13

04-22-13
PLANS APPROVAL DATE

REGISTERED PROFESSIONAL ENGINEER
ZIA YAZDANI
No. 2119
Exp. 3-31-15
GEOTECHNICAL
STATE OF CALIFORNIA

The State of California or its officers or agents shall not be responsible for the accuracy or completeness of electronic copies of this plan sheet.

This LOTB sheet was prepared in accordance with the Caltrans Soil & Rock Logging, Classification, & Presentation Manual (2010 Edition), with the exception of the Boring designation numbers.

See 2010 Standard Plans A10F and A10G for Soil Legend, and A10H for Rock Legend.

FOR PLAN VIEW, SEE LOG OF TEST BORINGS 1 OF 4

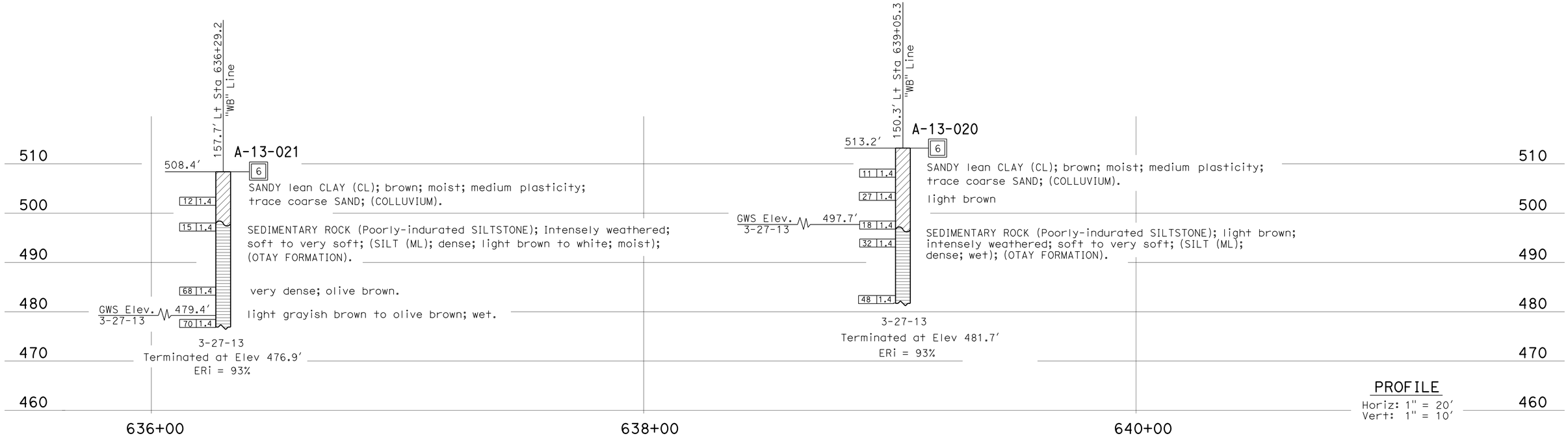

ENGINEERING SERVICES	MATERIALS AND GEOTECHNICAL SERVICES	STATE OF CALIFORNIA DEPARTMENT OF TRANSPORTATION	DIVISION OF ENGINEERING SERVICES STRUCTURE DESIGN DESIGN BRANCH X	BRIDGE NO. / POST MILE	DRAINAGE SYSTEM No. 5
FUNCTIONAL SUPERVISOR NAME: B. Hinman	DRAWN BY: C. Cortez / CHECKED BY: S. Tran	FIELD INVESTIGATION BY: Z. Yazdani, E. Galleta			LOG OF TEST BORINGS 2 OF 4

OGS CIVIL LOG OF TEST BORINGS SHEET

ORIGINAL SCALE IN INCHES FOR REDUCED PLANS 0 1 2 3

UNIT: 3643
PROJECT NUMBER & PHASE: 11000205191
CONTRACT NO.: 11-056321

DISREGARD PRINTS BEARING EARLIER REVISION DATES

REVISION DATES				SHEET	OF
05-02-13				2	4

FILE => 1100020519ul005.dgn

USERNAME => s127284 DATE PLOTTED => 13-MAY-2013 TIME PLOTTED => 21:38

DIST	COUNTY	ROUTE	POST MILES TOTAL PROJECT	SHEET No.	TOTAL SHEETS
11	SD	11,905	0.0/1.6 R9.9/R10.7	470	622

GEOTECHNICAL PROFESSIONAL 05-02-13

04-22-13
PLANS APPROVAL DATE

REGISTERED PROFESSIONAL ENGINEER
ZIA YAZDANI
No. 2119
Exp. 3-31-15
GEOTECHNICAL
STATE OF CALIFORNIA

The State of California or its officers or agents shall not be responsible for the accuracy or completeness of electronic copies of this plan sheet.

This LOTB sheet was prepared in accordance with the Caltrans Soil & Rock Logging, Classification, & Presentation Manual (2010 Edition), with the exception of the Boring designation numbers.

See 2010 Standard Plans A10F and A10G for Soil Legend, and A10H for Rock Legend.

FOR PLAN VIEW, SEE LOG OF TEST BORINGS 1 OF 4

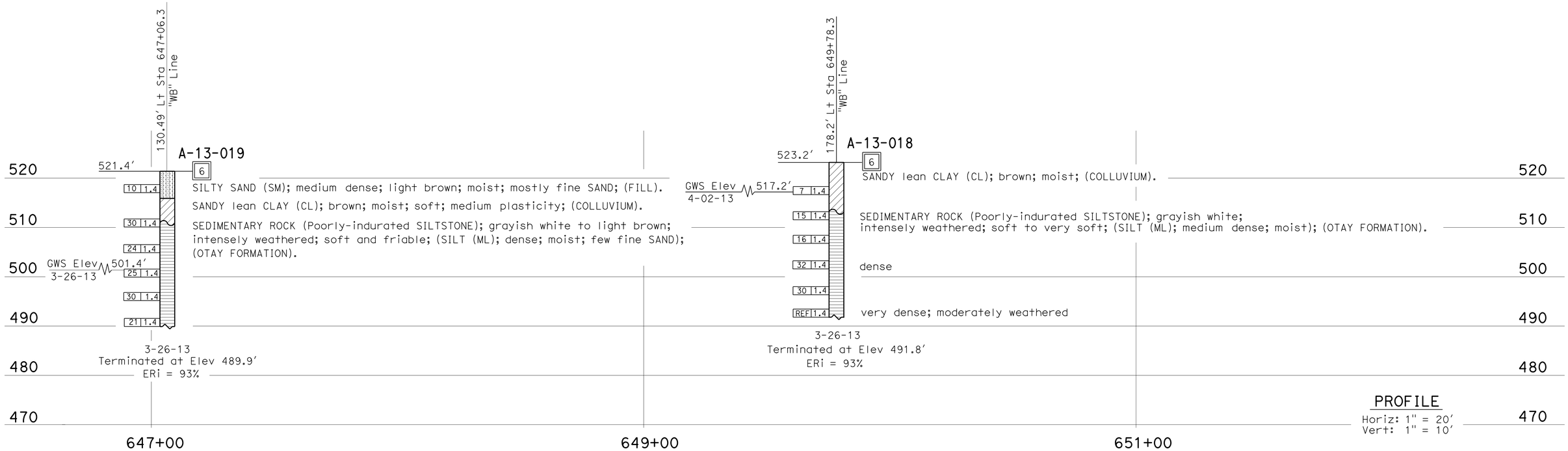

ENGINEERING SERVICES	MATERIALS AND GEOTECHNICAL SERVICES	STATE OF CALIFORNIA DEPARTMENT OF TRANSPORTATION	DIVISION OF ENGINEERING SERVICES STRUCTURE DESIGN DESIGN BRANCH X	BRIDGE NO. / POST MILE	DRAINAGE SYSTEM No. 5
FUNCTIONAL SUPERVISOR NAME: B. Hinman	DRAWN BY: C. Cortez / CHECKED BY: S. Tran	FIELD INVESTIGATION BY: Z. Yazdani, E. Galleta			LOG OF TEST BORINGS 3 OF 4

OGS CIVIL LOG OF TEST BORINGS SHEET

ORIGINAL SCALE IN INCHES FOR REDUCED PLANS 0 1 2 3

UNIT: 3643
PROJECT NUMBER & PHASE: 11000205191
CONTRACT NO.: 11-056321

DISREGARD PRINTS BEARING EARLIER REVISION DATES

REVISION DATES				SHEET	OF
05-02-13				3	4

FILE => 1100020519u1006.dgn

USERNAME => s127284 DATE PLOTTED => 13-MAY-2013 TIME PLOTTED => 21:38

DIST	COUNTY	ROUTE	POST MILES TOTAL PROJECT	SHEET No	TOTAL SHEETS
11	SD	11,905	0.0/1.6 R9.9/R10.7	471	622

12-7-12
GEOTECHNICAL PROFESSIONAL

04-22-13
PLANS APPROVAL DATE

REGISTERED PROFESSIONAL ENGINEER
ZIA YAZDANI
No. 2119
Exp. 3-31-15
GEOTECHNICAL
STATE OF CALIFORNIA

The State of California or its officers or agents shall not be responsible for the accuracy or completeness of electronic copies of this plan sheet.

This LOTB sheet was prepared in accordance with the Caltrans Soil & Rock Logging, Classification, & Presentation Manual (2010 Edition), with the exception of the Boring designation numbers.

See 2010 Standard Plans A10F and A10G for Soil Legend, and A10H for Rock Legend.

FOR PLAN VIEW, SEE LOG OF TEST BORINGS 1 OF 4

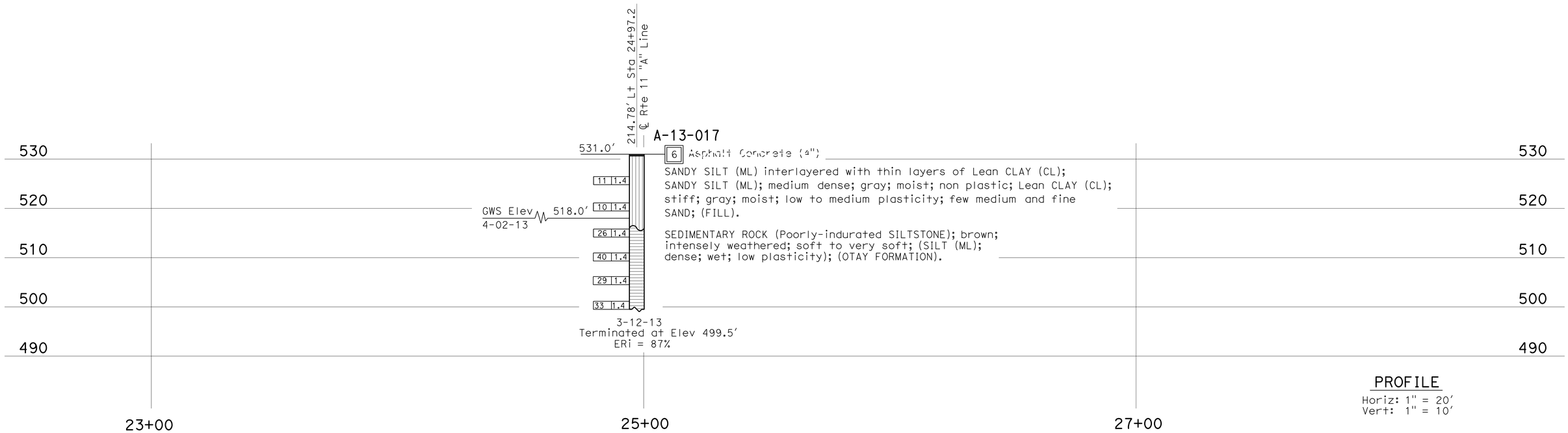

PROFILE
Horiz: 1" = 20'
Vert: 1" = 10'

ENGINEERING SERVICES	MATERIALS AND GEOTECHNICAL SERVICES	STATE OF CALIFORNIA DEPARTMENT OF TRANSPORTATION	DIVISION OF ENGINEERING SERVICES STRUCTURE DESIGN DESIGN BRANCH X	BRIDGE NO. / POST MILE	DRAINAGE SYSTEM No. 5
FUNCTIONAL SUPERVISOR NAME: B. Hinman	DRAWN BY: C. Cortez / CHECKED BY: S. Tran	FIELD INVESTIGATION BY: Z. Yazdani, E. Galleta			LOG OF TEST BORINGS 4 OF 4

OGS CIVIL LOG OF TEST BORINGS SHEET

ORIGINAL SCALE IN INCHES FOR REDUCED PLANS 0 1 2 3

UNIT: 3643
PROJECT NUMBER & PHASE: 11000205191
CONTRACT NO.: 11-056321

DISREGARD PRINTS BEARING EARLIER REVISION DATES

REVISION DATES				SHEET	OF
05-02-13				4	4

FILE => 1100020519u1007.dgn

USERNAME => s127284 DATE PLOTTED => 13-MAY-2013 TIME PLOTTED => 21:38

Dist	COUNTY	ROUTE	POST MILES TOTAL PROJECT	SHEET No.	TOTAL SHEETS
11	SD	11, 905	0.0/1.6 R9.9/R10.7	472	622

REGISTERED CIVIL ENGINEER

April 20, 2012
PLANS APPROVAL DATE

REGISTERED PROFESSIONAL ENGINEER
Roberta L. McLaughlin
No. C40375
Exp. 3-31-13
CIVIL
STATE OF CALIFORNIA

THE STATE OF CALIFORNIA OR ITS OFFICERS OR AGENTS SHALL NOT BE RESPONSIBLE FOR THE ACCURACY OR COMPLETENESS OF SCANNED COPIES OF THIS PLAN SHEET.

TO ACCOMPANY PLANS DATED 04-22-13

2010 REVISED STANDARD PLAN RSP A24A

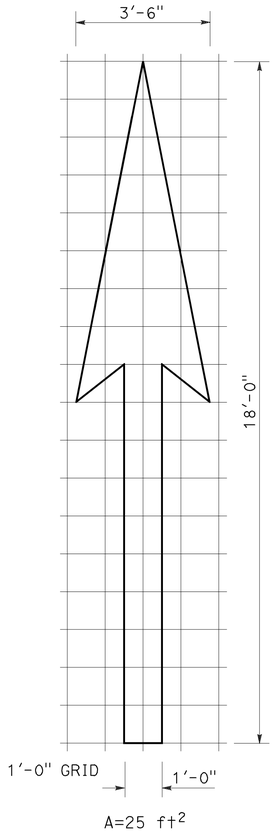

A=25 ft^2

TYPE I 18'-0" ARROW

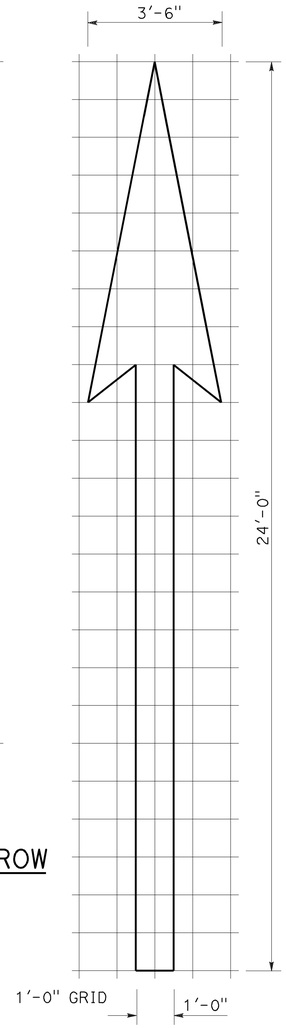

A=31 ft^2

TYPE I 24'-0" ARROW

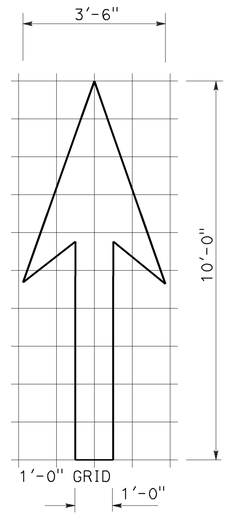

A=14 ft^2

TYPE I 10'-0" ARROW

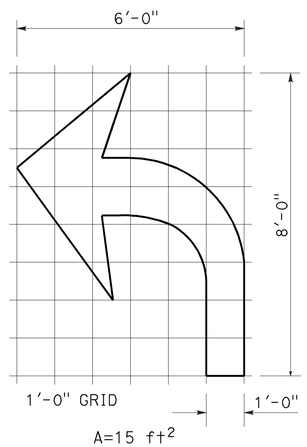

A=15 ft^2

TYPE IV (L) ARROW

(For Type IV (R) arrow, use mirror image)

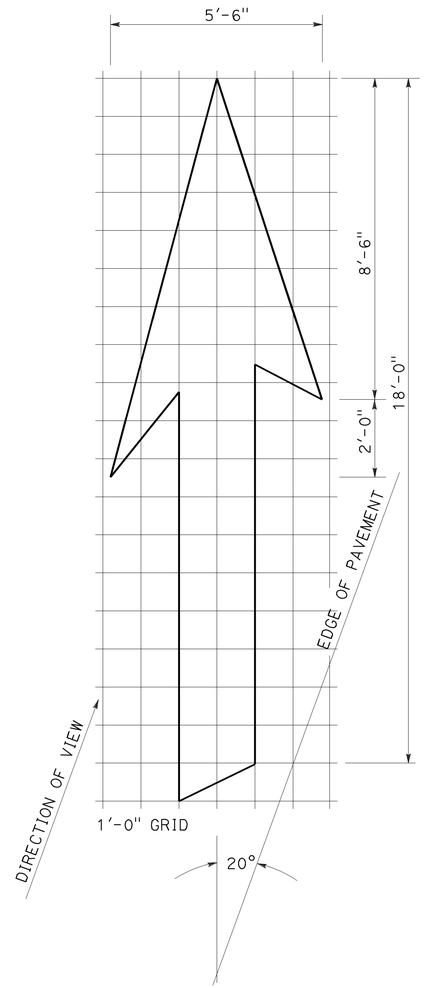

A=42 ft^2

TYPE VI ARROW

Right lane drop arrow
(For left lane, use mirror image)

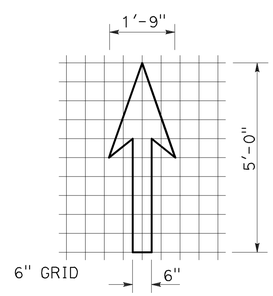

A=3.5 ft^2

BIKE LANE ARROW

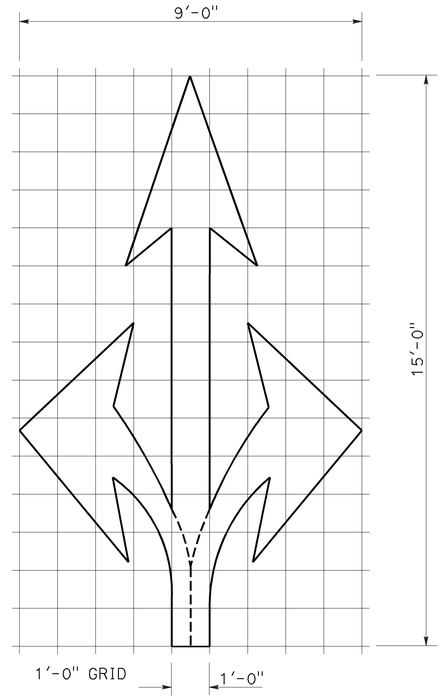

A=36 ft^2

TYPE VIII ARROW

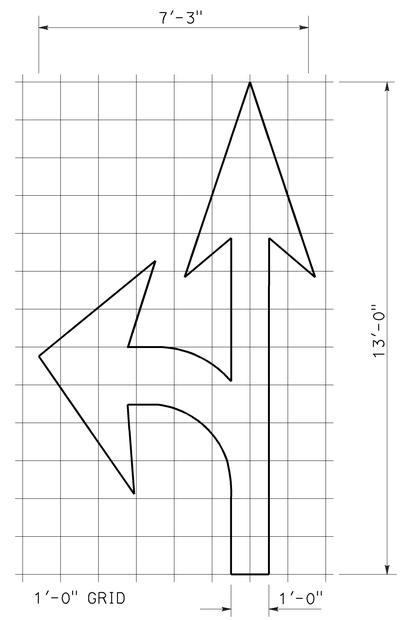

A=27 ft^2

TYPE VII (L) ARROW

(For Type VII (R) arrow, use mirror image)

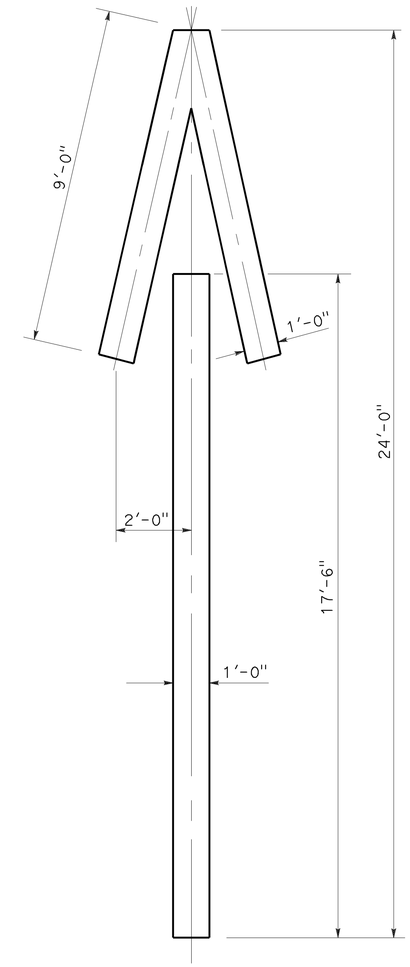

A=33 ft^2

TYPE V ARROW

NOTE:
Minor variations in dimensions may be accepted by the Engineer.

STATE OF CALIFORNIA
DEPARTMENT OF TRANSPORTATION

PAVEMENT MARKINGS ARROWS

NO SCALE

RSP A24A DATED APRIL 20, 2012 SUPERSEDES STANDARD PLAN A24A DATED MAY 20, 2011 - PAGE 13 OF THE STANDARD PLANS BOOK DATED 2010.

REVISED STANDARD PLAN RSP A24A

3-14-12

Dist	COUNTY	ROUTE	POST MILES TOTAL PROJECT	SHEET No.	TOTAL SHEETS
11	SD	11, 905	0.0/1.6 R9.9/R10.7	473	622

REGISTERED CIVIL ENGINEER

October 19, 2012
PLANS APPROVAL DATE

REGISTERED PROFESSIONAL ENGINEER Roberta L. McLaughlin No. C40375 Exp. 3-31-13 CIVIL STATE OF CALIFORNIA

THE STATE OF CALIFORNIA OR ITS OFFICERS OR AGENTS SHALL NOT BE RESPONSIBLE FOR THE ACCURACY OR COMPLETENESS OF SCANNED COPIES OF THIS PLAN SHEET.

NOTE: TO ACCOMPANY PLANS DATED 04-22-13

Minor variations in dimensions may be accepted by the Engineer.

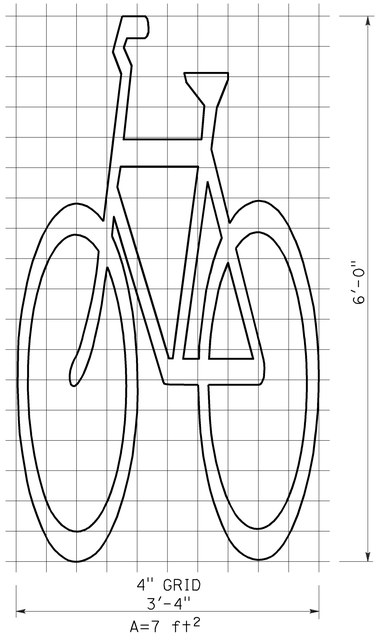

BIKE LANE SYMBOL WITHOUT PERSON

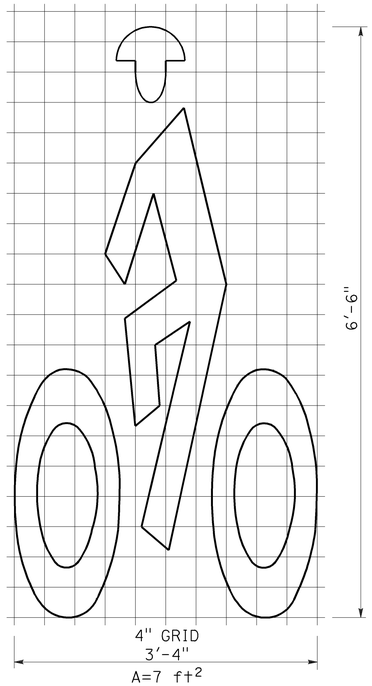

BIKE LANE SYMBOL WITH PERSON

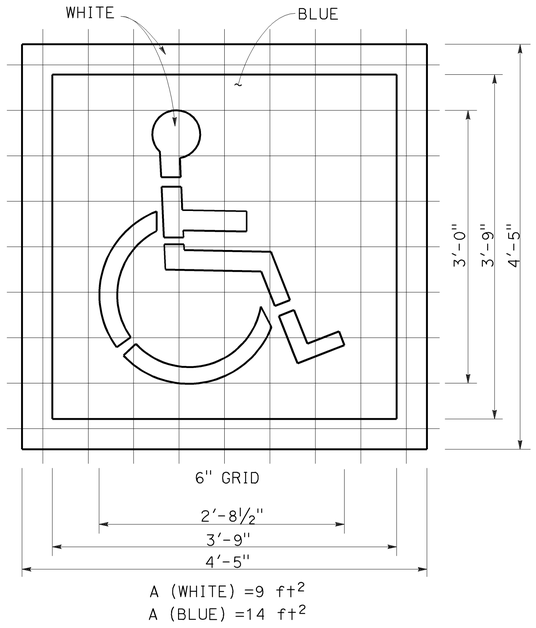

INTERNATIONAL SYMBOL OF ACCESSIBILITY (ISA) MARKING

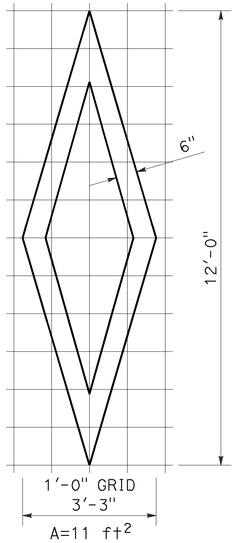

DIAMOND SYMBOL

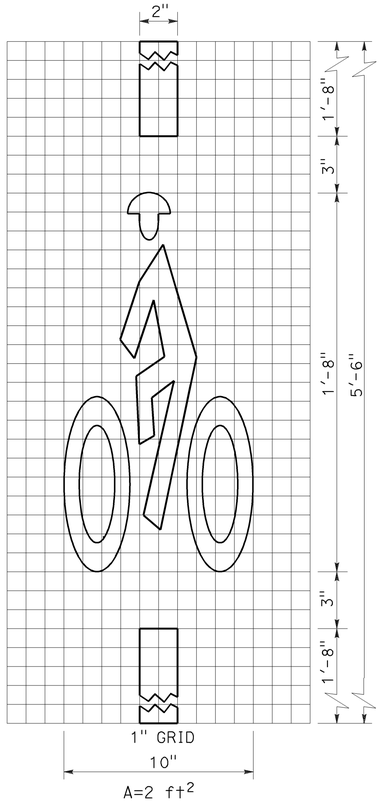

BICYCLE LOOP DETECTOR SYMBOL

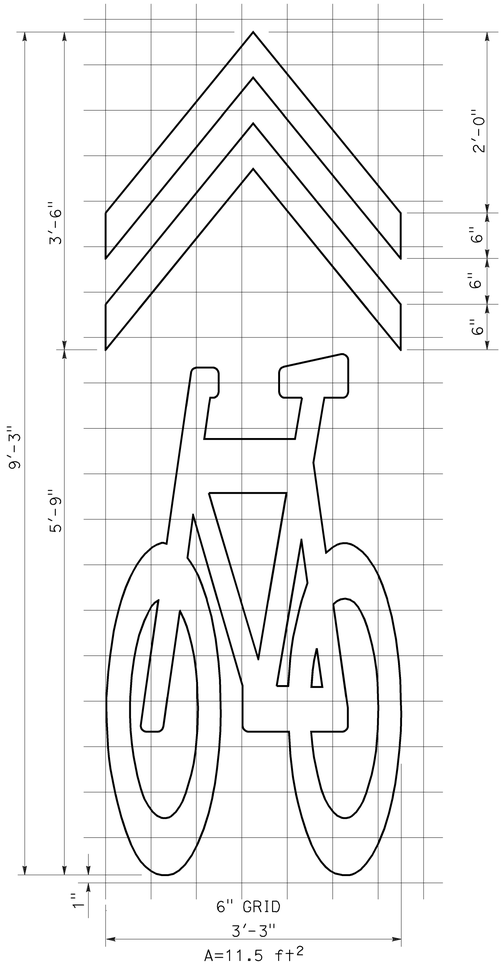

SHARED ROADWAY BICYCLE MARKING

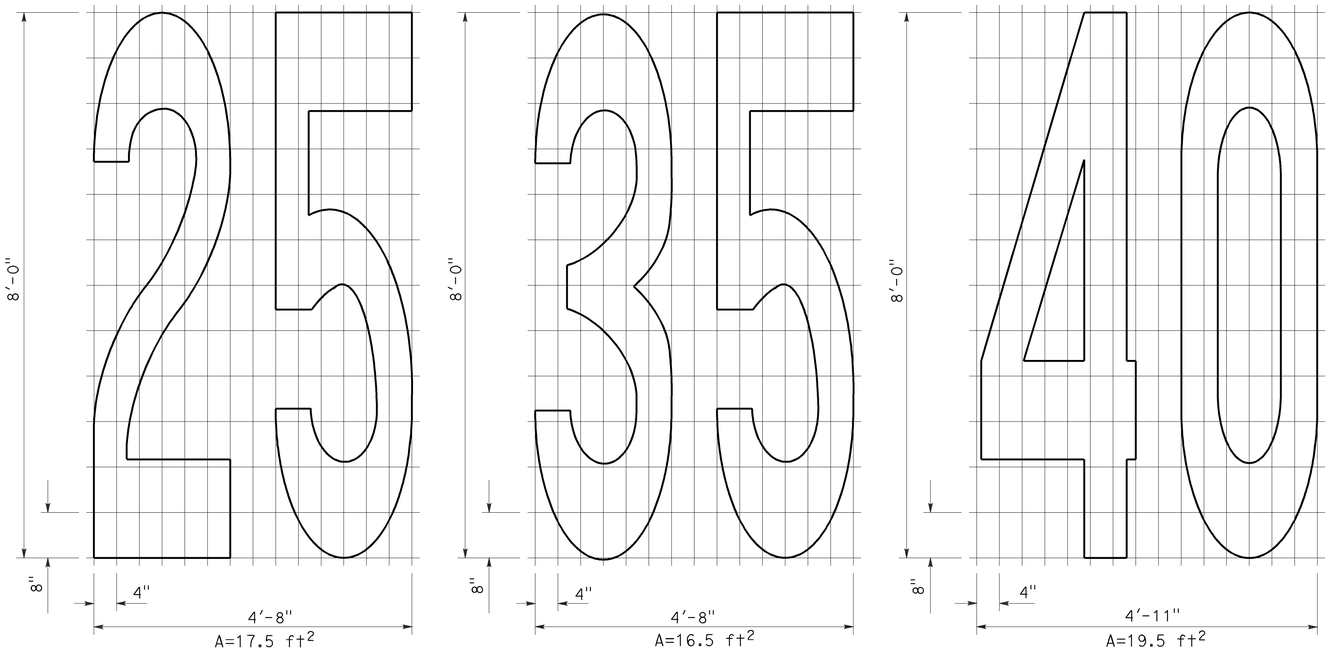

NUMERALS

STATE OF CALIFORNIA
DEPARTMENT OF TRANSPORTATION

PAVEMENT MARKINGS SYMBOLS AND NUMERALS

NO SCALE

RSP A24C DATED OCTOBER 19, 2012 SUPERSEDES STANDARD PLAN A24C DATED MAY 20, 2011 - PAGE 15 OF THE STANDARD PLANS BOOK DATED 2010.

REVISED STANDARD PLAN RSP A24C

2010 REVISED STANDARD PLAN RSP A24C

6-28-12

Dist	COUNTY	ROUTE	POST MILES TOTAL PROJECT	SHEET No.	TOTAL SHEETS
11	SD	11, 905	0.0/1.6 R9.9/R10.7	474	622

Roberta L. McLaughlin
REGISTERED CIVIL ENGINEER

July 20, 2012
PLANS APPROVAL DATE

REGISTERED PROFESSIONAL ENGINEER
Roberta L. McLaughlin
No. C40375
Exp. 3-31-13
CIVIL
STATE OF CALIFORNIA

THE STATE OF CALIFORNIA OR ITS OFFICERS OR AGENTS SHALL NOT BE RESPONSIBLE FOR THE ACCURACY OR COMPLETENESS OF SCANNED COPIES OF THIS PLAN SHEET.

TO ACCOMPANY PLANS DATED 04-22-13

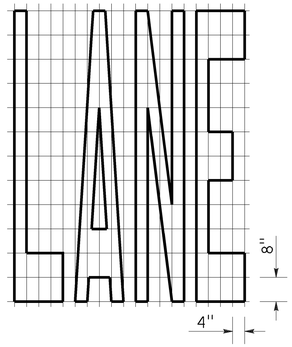

A=24 ft^2

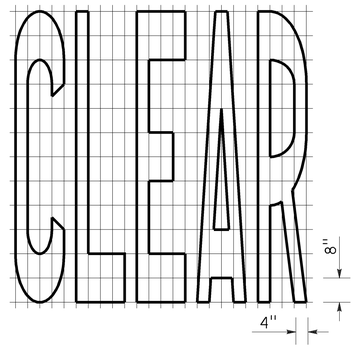

A=27 ft^2

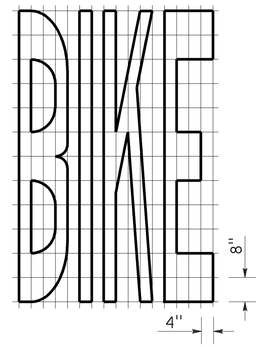

A=21 ft^2

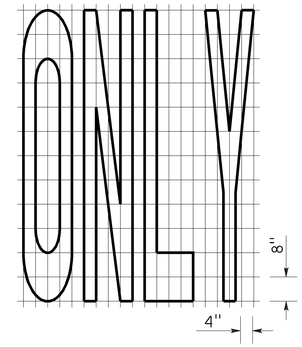

A=22 ft^2

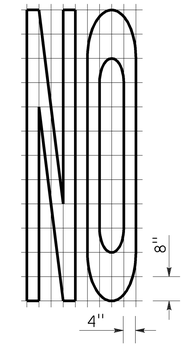

A=14 ft^2

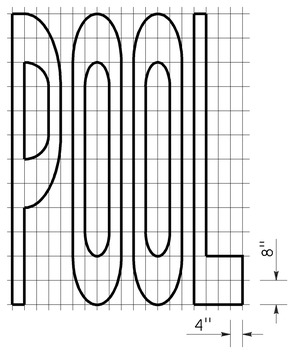

A=23 ft^2

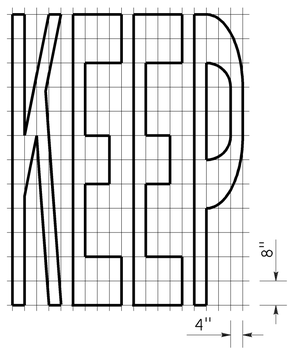

A=24 ft^2

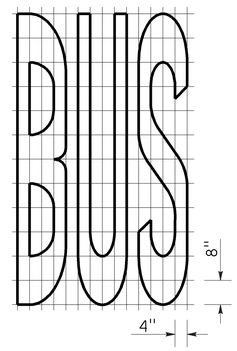

A=20 ft^2

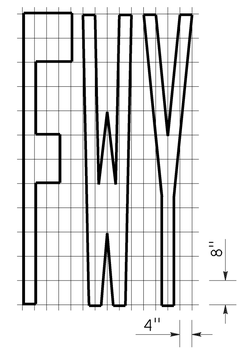

A=16 ft^2

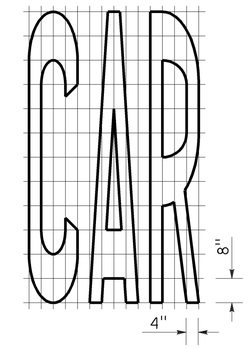

A=17 ft^2

WORD MARKINGS			
ITEM	ft^2	ITEM	ft^2
LANE	24	NO	14
POOL	23	BIKE	21
CAR	17	BUS	20
CLEAR	27	ONLY	22
KEEP	24	FWY	16

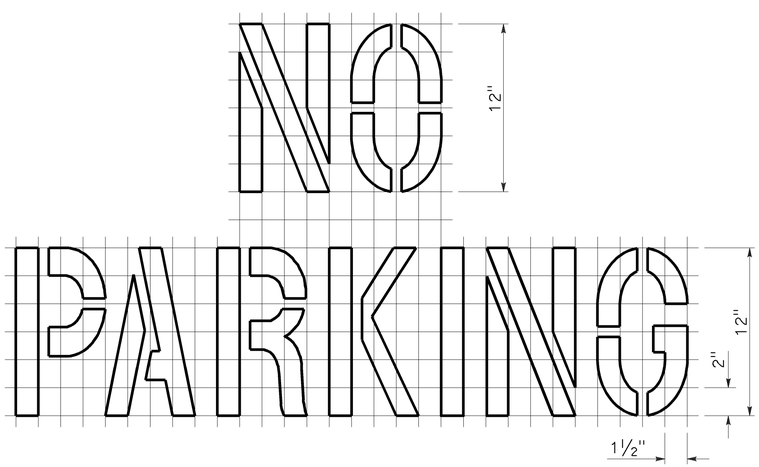

A=2 ft^2

See Notes 6 and 7

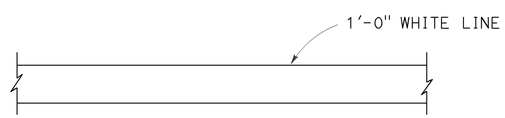

LIMIT LINE (STOP LINE)

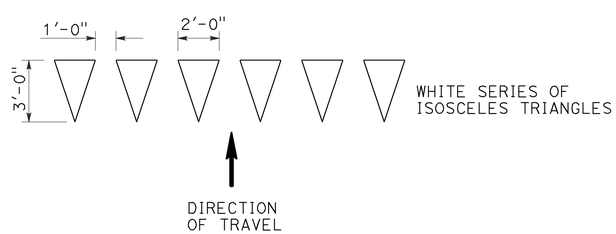

YIELD LINE

NOTES:

1. If a message consists of more than one word, it should read "UP", i.e., the first word should be nearest the driver.
2. The space between words should be at least four times the height of the characters for low speed roads, but not more than ten times the height of the characters. The space may be reduced appropriately where there is limited space because of local conditions.
3. Minor variations in dimensions may be accepted by the Engineer.
4. Portions of a letter, number or symbol may be separated by connecting segments not to exceed 2" in width.
5. The words "NO PARKING" pavement marking is to be used for parking facilities. For typical locations of markings, see Standard Plans A90A and A90B.
6. The words "NO PARKING", shall be painted in white letters no less than 1'-0" high on a contrasting background and located so that it is visible to traffic enforcement officials.

STATE OF CALIFORNIA
DEPARTMENT OF TRANSPORTATION

PAVEMENT MARKINGS WORDS, LIMIT AND YIELD LINES

NO SCALE

RSP A24E DATED JULY 20, 2012 SUPERSEDES STANDARD PLAN A24E
DATED MAY 20, 2011 - PAGE 17 OF THE STANDARD PLANS BOOK DATED 2010.

REVISED STANDARD PLAN RSP A24E

2010 REVISED STANDARD PLAN RSP A24E

6-12-12

Dist	COUNTY	ROUTE	POST MILES TOTAL PROJECT	SHEET No.	TOTAL SHEETS
11	SD	11, 905	0.0/1.6 R9.9/R10.7	475	622

Glenn DeCou
REGISTERED CIVIL ENGINEER

October 19, 2012
PLANS APPROVAL DATE

REGISTERED PROFESSIONAL ENGINEER
Glenn DeCou
No. C34547
Exp. 9-30-13
CIVIL
STATE OF CALIFORNIA

THE STATE OF CALIFORNIA OR ITS OFFICERS OR AGENTS SHALL NOT BE RESPONSIBLE FOR THE ACCURACY OR COMPLETENESS OF SCANNED COPIES OF THIS PLAN SHEET.

TO ACCOMPANY PLANS DATED 04-22-13

2010 REVISED STANDARD PLAN RSP A85B

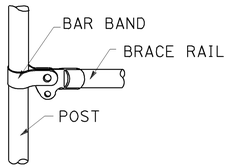

BRACE RAIL

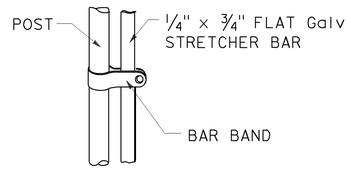

STRETCHER BAR

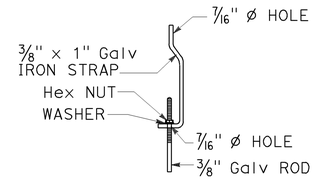

TRUSS TIGHTENER

NOTES:

1. All material for abutment connection to be galvanized.
2. The chain link fabric shall be replaced by barbed wire strands at 12" maximum centers between the double posts.
3. When the width of the culvert makes it necessary to anchor a post to the top of the culvert, a cast iron shoe or other device approved by the Engineer shall be used.
4. Fencing over stream and around headwall may also use Barbed Wire or Wire Mesh fencing with either wood post or steel post installation.
5. See Standard Plan A85 for Chain Link fence dimensions. See Standard Plan A86 for Barbed Wire and Wire Mesh fence dimensions and for wood post and steel post installation.

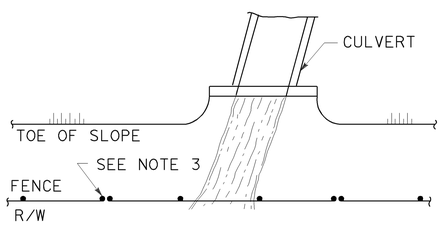

PLAN

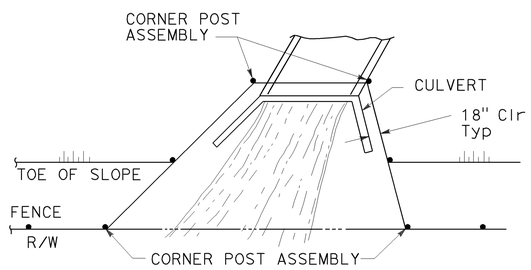

PLAN

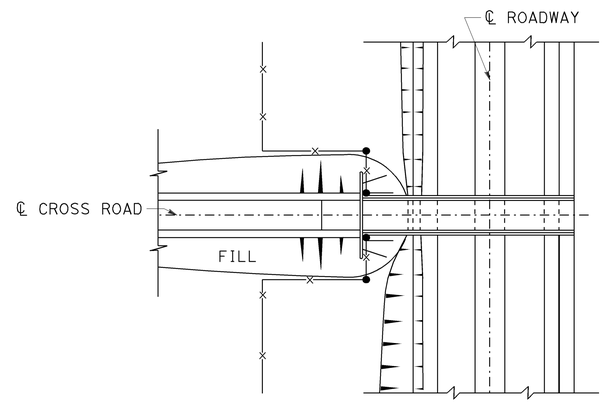

PLAN OF ROADWAY - OVERCROSSING

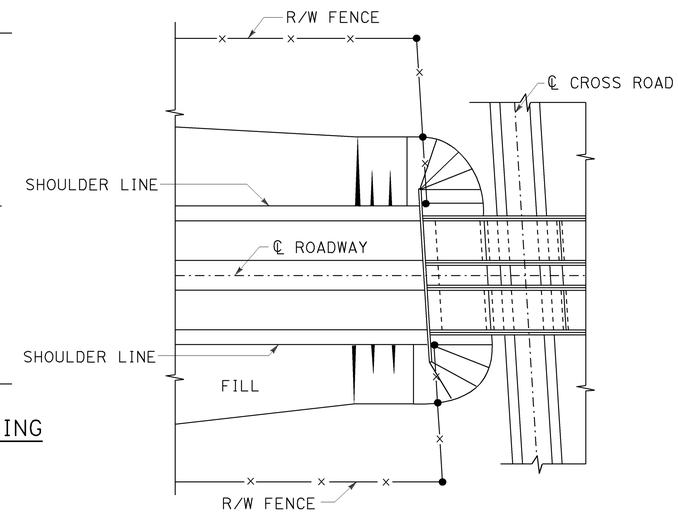

PLAN OF ROADWAY - UNDERCROSSING

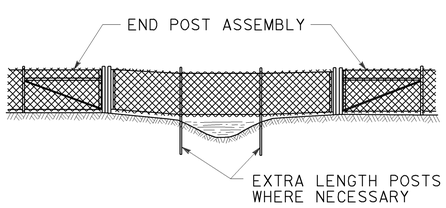

ELEVATION

INSTALLATION OVER STREAM

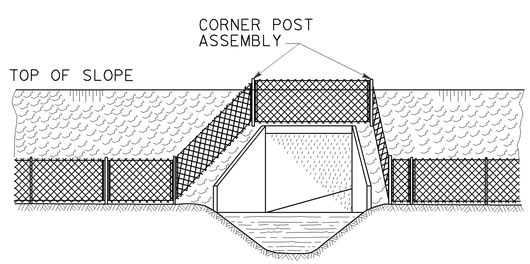

ELEVATION

INSTALLATION AROUND HEADWALL

See Note 4

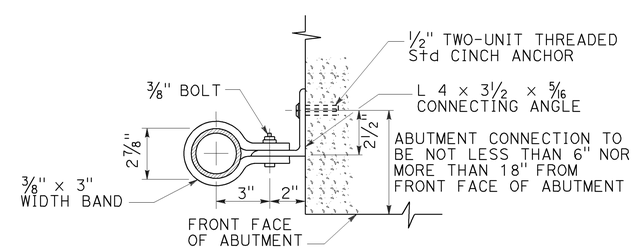

ABUTMENT CONNECTION

TYPICAL INSTALLATION AT BRIDGES

STATE OF CALIFORNIA
DEPARTMENT OF TRANSPORTATION

CHAIN LINK FENCE DETAILS

NO SCALE

RSP A85B DATED OCTOBER 19, 2012 SUPERSEDES STANDARD PLAN A85B DATED MAY 20, 2011 - PAGE 114 OF THE STANDARD PLANS BOOK DATED 2010.

REVISED STANDARD PLAN RSP A85B

7-19-12

Dist	COUNTY	ROUTE	POST MILES TOTAL PROJECT	SHEET No.	TOTAL SHEETS
11	SD	11, 905	0.0/1.6 R9.9/R10.7	476	622

William K. Farnbach
REGISTERED CIVIL ENGINEER

April 20, 2012
PLANS APPROVAL DATE

REGISTERED PROFESSIONAL ENGINEER William K. Farnbach No. C49042 Exp. 9-30-12 CIVIL STATE OF CALIFORNIA

THE STATE OF CALIFORNIA OR ITS OFFICERS OR AGENTS SHALL NOT BE RESPONSIBLE FOR THE ACCURACY OR COMPLETENESS OF SCANNED COPIES OF THIS PLAN SHEET.

TO ACCOMPANY PLANS DATED 04-22-13

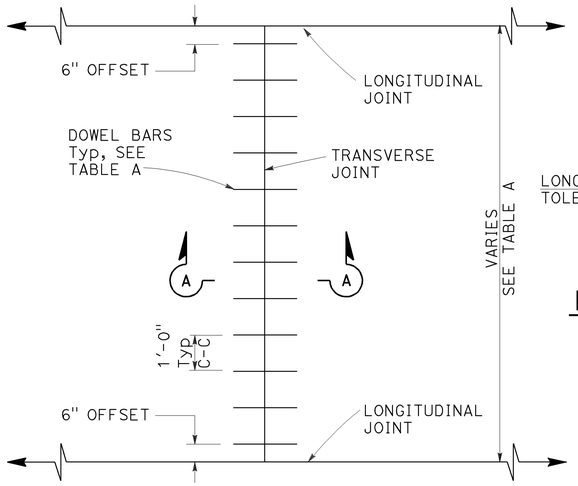

TRANSVERSE JOINT DOWEL BAR LAYOUT

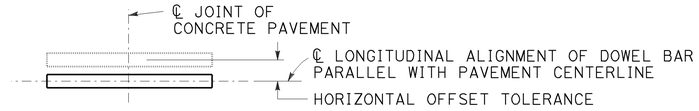

PLAN

HORIZONTAL OFFSET TOLERANCE

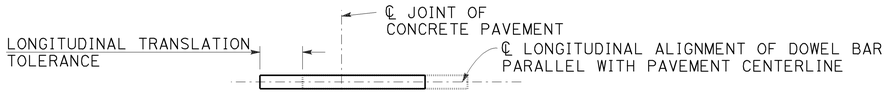

PLAN

LONGITUDINAL TRANSLATION TOLERANCE

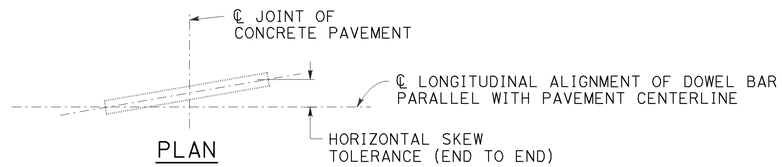

PLAN

HORIZONTAL SKEW TOLERANCE

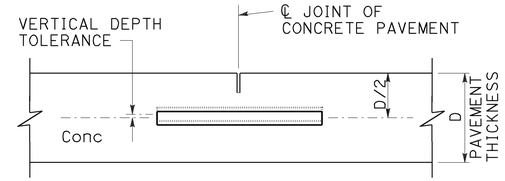

ELEVATION

VERTICAL DEPTH TOLERANCE

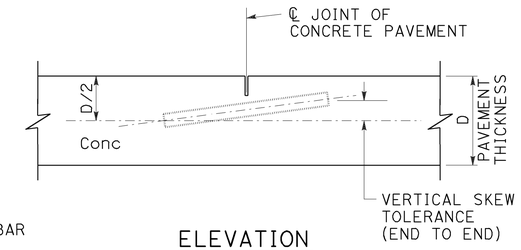

ELEVATION

VERTICAL SKEW TOLERANCE

NOTES:

1. See Standard Plan P1 for typical dowel bar placement and locations.
2. 1½" Dia dowel bars are to be used with a pavement thickness, D, equal to or greater than 0.70 feet. For pavement thickness, D, less than 0.70 feet, use 1¼" Dia dowel bars.
3. For widths not shown, see Project Plans.
4. If fresh concrete pavement is placed adjacent to existing concrete pavement, the top corner of the existing concrete pavement does not need to be rounded to the ¼" radius, as shown.
5. May also use ¾" Dia dowel bars 2'-4" ± ¼" in length. Center the length of dowel bars at the centerline of longitudinal joint.

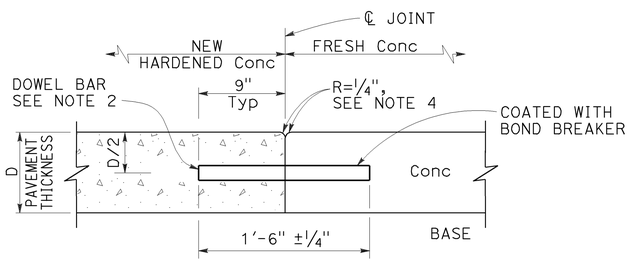

SECTION A-A

TRANSVERSE CONSTRUCTION JOINT DETAIL

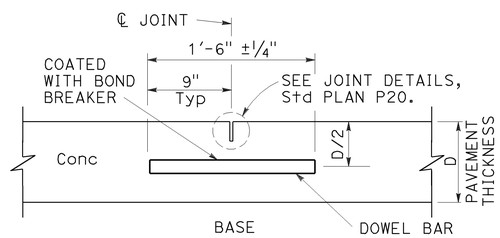

TRANSVERSE CONTRACTION JOINT

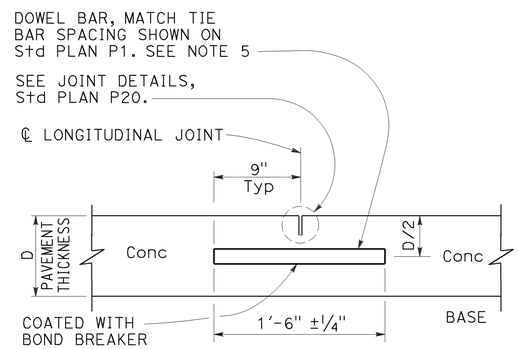

LONGITUDINAL CONTRACTION JOINT WITH DOWEL BARS

See Revised Std Plan RSP P18

TABLE A (See Note 3)

DOWEL BAR TRANSVERSE SPACING TABLE	
WIDTH BETWEEN LONGITUDINAL JOINTS	NUMBER OF DOWELS BETWEEN LONGITUDINAL JOINTS
14'-0"	14
13'-0"	13
12'-0"	12
11'-0"	11
10'-0"	10
8'-0"	8
5'-0"	5
4'-0"	4

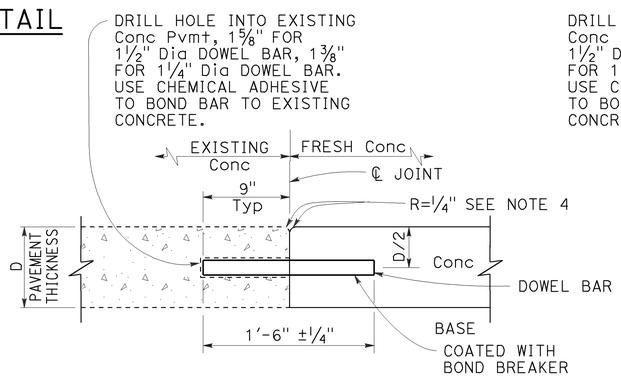

TRANSVERSE CONSTRUCTION JOINT FOR EXISTING CONCRETE PAVEMENT

Drill and bond locations

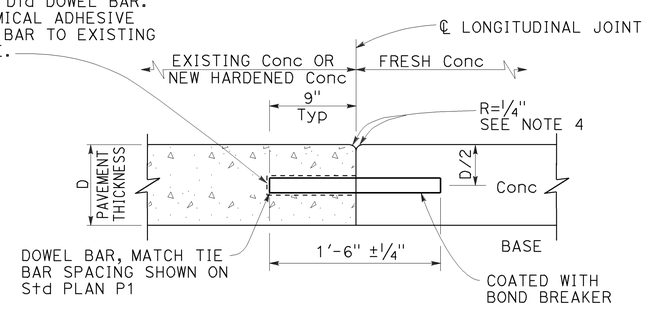

LONGITUDINAL CONSTRUCTION JOINT WITH DOWEL BARS

See Revised Std Plan RSP P18

STATE OF CALIFORNIA
DEPARTMENT OF TRANSPORTATION

CONCRETE PAVEMENT-DOWEL BAR DETAILS

NO SCALE

RSP P10 DATED APRIL 20, 2012 SUPERSEDES STANDARD PLAN P10 DATED MAY 20, 2011 - PAGE 131 OF THE STANDARD PLANS BOOK DATED 2010.

REVISED STANDARD PLAN RSP P10

2010 REVISED STANDARD PLAN RSP P10

2-22-12

Dist	COUNTY	ROUTE	POST MILES TOTAL PROJECT	SHEET No.	TOTAL SHEETS
11	SD	11, 905	0.0/1.6 R9.9/R10.7	477	622

William K. Farnbach
REGISTERED CIVIL ENGINEER

April 20, 2012
PLANS APPROVAL DATE

REGISTERED PROFESSIONAL ENGINEER William K. Farnbach No. C49042 Exp. 9-30-12 CIVIL STATE OF CALIFORNIA

THE STATE OF CALIFORNIA OR ITS OFFICERS OR AGENTS SHALL NOT BE RESPONSIBLE FOR THE ACCURACY OR COMPLETENESS OF SCANNED COPIES OF THIS PLAN SHEET.

TO ACCOMPANY PLANS DATED 04-22-13

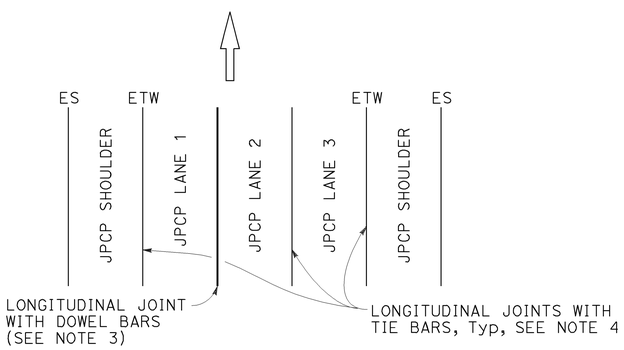

3 LANES WITH CONCRETE SHOULDERS
PLAN

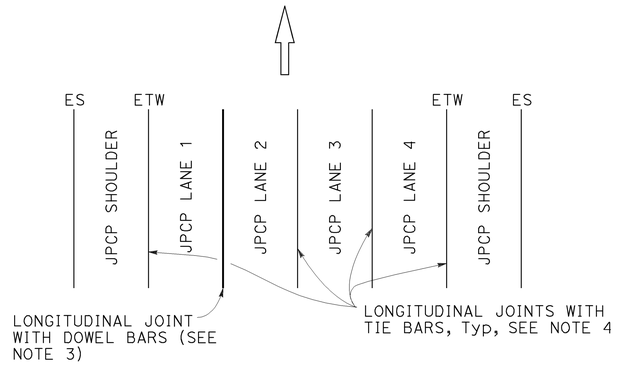

4 LANES WITH CONCRETE SHOULDERS
PLAN

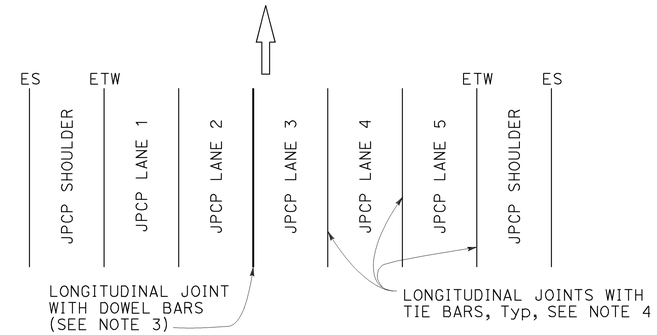

5 LANES WITH CONCRETE SHOULDERS
PLAN

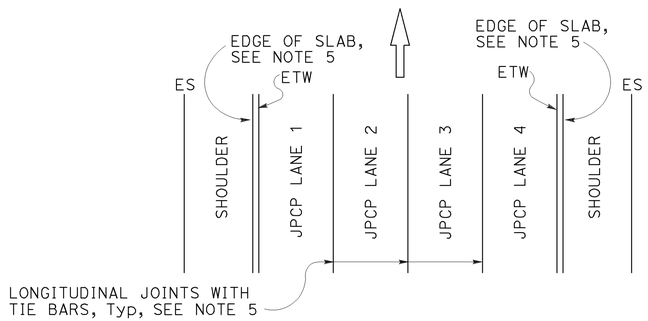

4 LANES OR LESS WITH AC SHOULDERS
PLAN

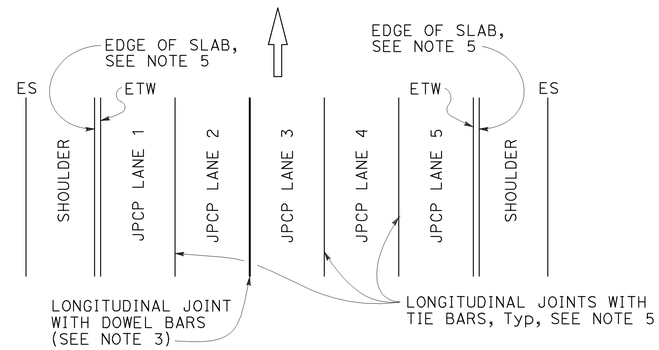

5 LANES WITH AC SHOULDERS
PLAN

NEW CONSTRUCTION

Location of Longitudinal Joints
For JPCP

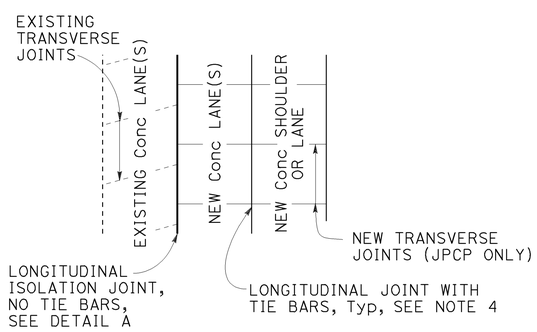

CASE 1
PLAN

Transverse Joints do not align between new and existing.

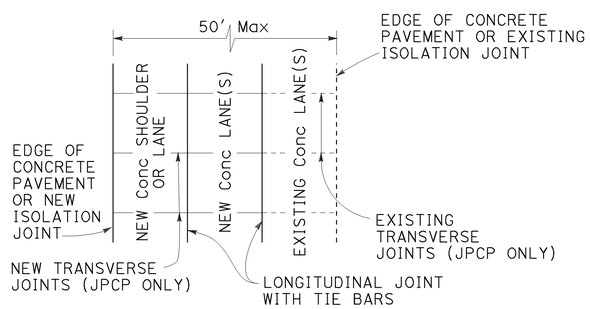

CASE 2
PLAN

Transverse Joints align between new and existing.

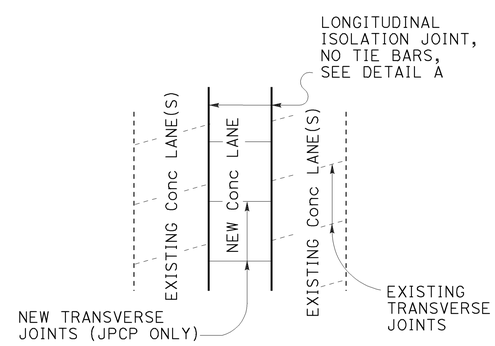

CASE 3 (INTERIOR LANE REPLACEMENT)
PLAN

Transverse Joints do not align between new and existing.

LANE/SHOULDER ADDITION OR RECONSTRUCTION

For JPCP and CRCP

NOTES:

1. Where Lean Concrete Base is not used as base material, the joint filler material used for the longitudinal isolation joint shall only extend to the bottom of the new concrete slab. See Detail A.
2. Use 5/8" ±1/16" dimension for silicone sealant.
3. See Revised Standard Plan RSP P10 for longitudinal joint with dowel bars.
4. See Standard Plan P1.
5. See Standard Plan P2.

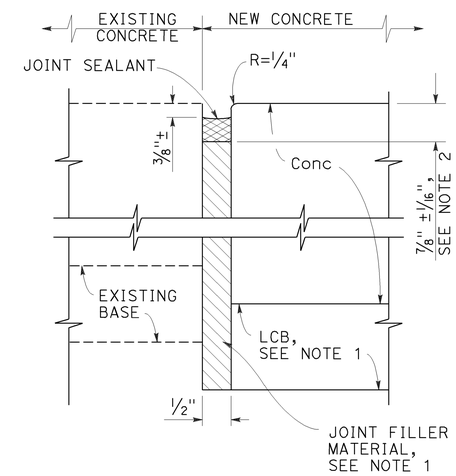

DETAIL "A"

ISOLATION JOINT

STATE OF CALIFORNIA
DEPARTMENT OF TRANSPORTATION

CONCRETE PAVEMENT-LANE SCHEMATICS AND ISOLATION JOINT DETAIL

NO SCALE

RSP P18 DATED APRIL 20, 2012 SUPERSEDES STANDARD PLAN P18
DATED MAY 20, 2011 - PAGE 135 OF THE STANDARD PLANS BOOK DATED 2010.

REVISED STANDARD PLAN RSP P18

2010 REVISED STANDARD PLAN RSP P18

2-22-12

Dist	COUNTY	ROUTE	POST MILES TOTAL PROJECT	SHEET No.	TOTAL SHEETS
11	SD	11, 905	0.0/1.6 R9.9/R10.7	478	622

William K. Farnbach
REGISTERED CIVIL ENGINEER

April 20, 2012
PLANS APPROVAL DATE

REGISTERED PROFESSIONAL ENGINEER William K. Farnbach No. C49042 Exp. 9-30-12 CIVIL STATE OF CALIFORNIA

THE STATE OF CALIFORNIA OR ITS OFFICERS OR AGENTS SHALL NOT BE RESPONSIBLE FOR THE ACCURACY OR COMPLETENESS OF SCANNED COPIES OF THIS PLAN SHEET.

TO ACCOMPANY PLANS DATED 04-22-13

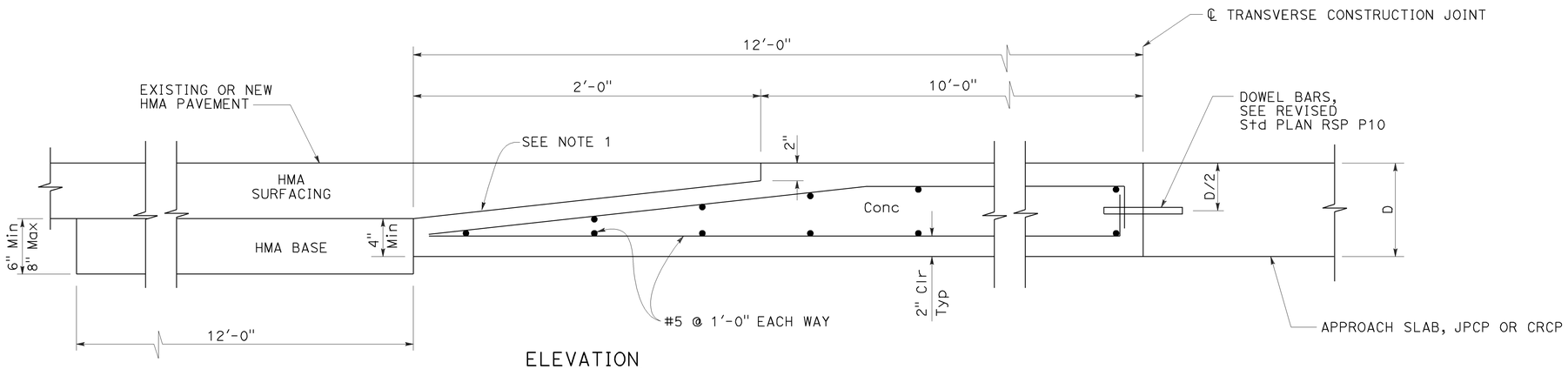

ELEVATION

CONCRETE PAVEMENT TRANSITION PANEL

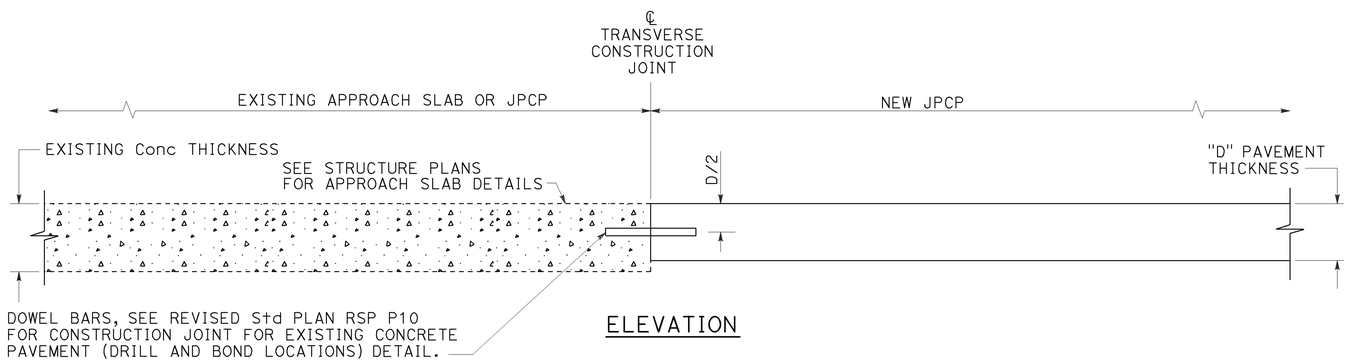

ELEVATION

TERMINAL JOINT TYPE 1

For Exist JPCP or Structure Approach Slab

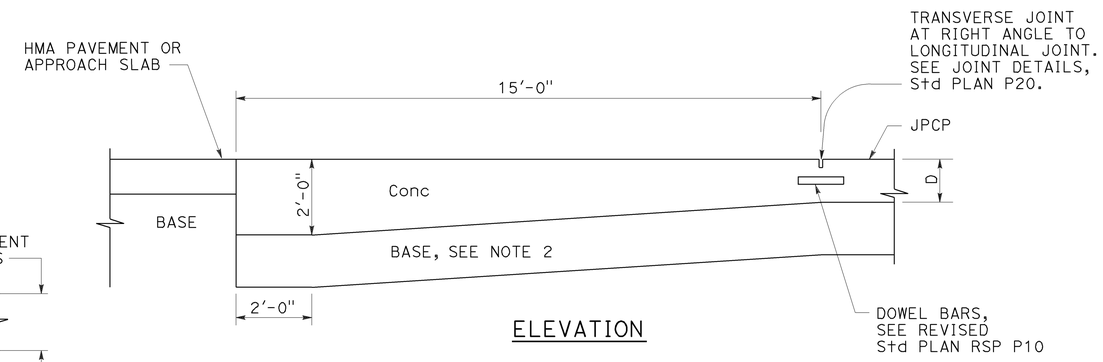

ELEVATION

PAVEMENT END ANCHOR

For HMA Pvmt or Structure Approach Slab

NOTES:

1. Heavy broom finish.
2. Maintain same base thickness as JPCP.

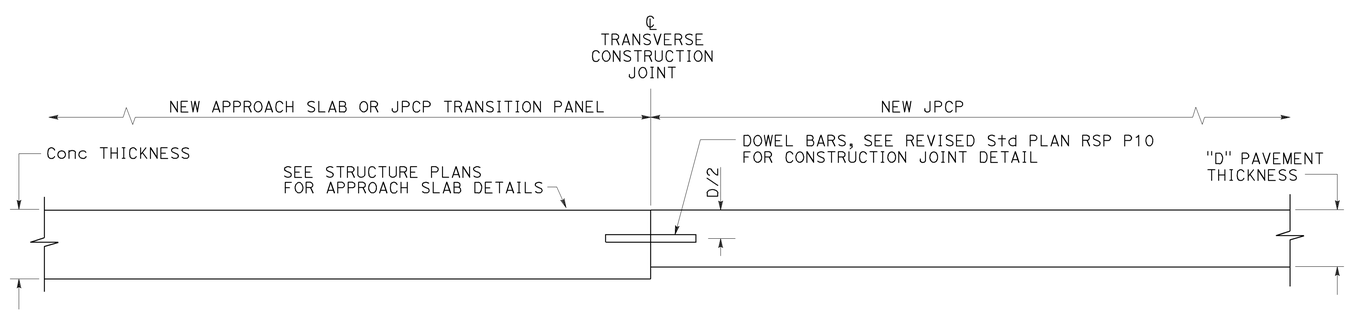

ELEVATION

TERMINAL JOINT TYPE 2

For JPCP Transition Panel or Structure Approach Slab

STATE OF CALIFORNIA
DEPARTMENT OF TRANSPORTATION

CONCRETE PAVEMENT-END PANEL PAVEMENT TRANSITIONS

NO SCALE

RSP P30 DATED APRIL 20, 2012 SUPERSEDES STANDARD PLAN P30
DATED MAY 20, 2011 - PAGE 137 OF THE STANDARD PLANS BOOK DATED 2010.

REVISED STANDARD PLAN RSP P30

2010 REVISED STANDARD PLAN RSP P30

2-22-12

DIST	COUNTY	ROUTE	POST MILES TOTAL PROJECT	SHEET No.	TOTAL SHEETS
11	SD	11, 905	0.0/1.6 R9.9/R10.7	479	622

REGISTERED CIVIL ENGINEER

January 20, 2012
PLANS APPROVAL DATE

REGISTERED PROFESSIONAL ENGINEER Cornelis M. Hakim No. C55610 Exp. 12-31-12 CIVIL STATE OF CALIFORNIA

THE STATE OF CALIFORNIA OR ITS OFFICERS OR AGENTS SHALL NOT BE RESPONSIBLE FOR THE ACCURACY OR COMPLETENESS OF SCANNED COPIES OF THIS PLAN SHEET.

TO ACCOMPANY PLANS DATED 04-22-13

LEGEND:

- HMA PAVEMENT
- HMA OR CONCRETE PAVEMENT
- CONCRETE PAVEMENT

ABBREVIATIONS:

SE SAFETY EDGE
TT TOTAL THICKNESS OF SE
HW HINGE WIDTH, DISTANCE FROM ES OR EP TO HP

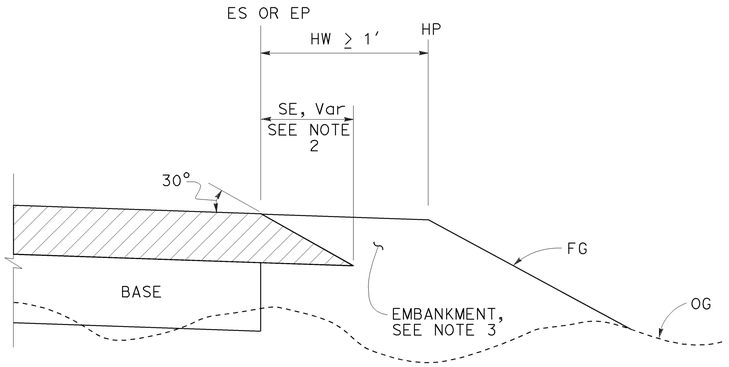

CASE K
Safety Edge - Fill Section, HW ≥ 1′

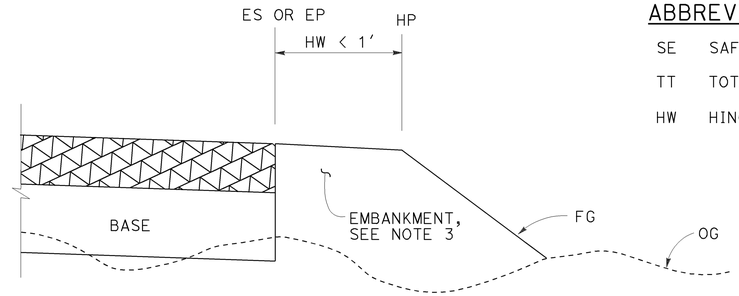

CASE L
Vertical Edge - Fill Section, HW < 1′

FILL SECTION

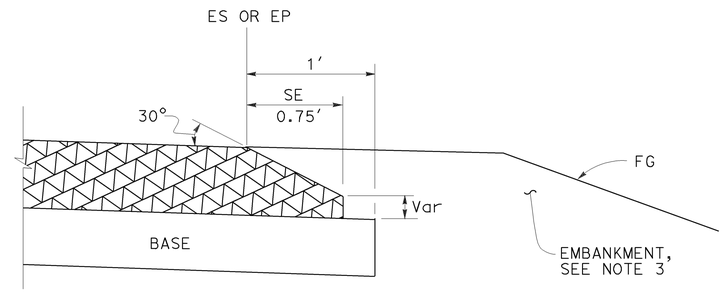

DETAIL "B"
For HMA pavement thickness more than 0.43′ or concrete pavement

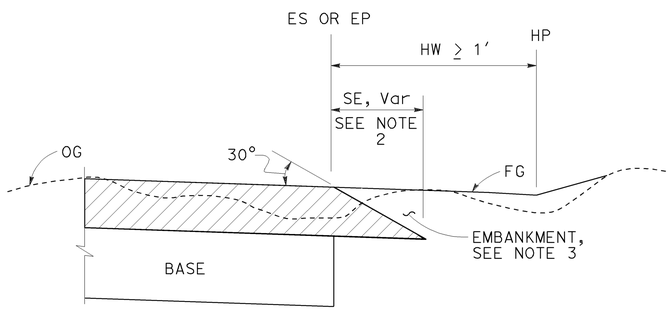

CASE M
Safety Edge - Cut Section, HW ≥ 1′

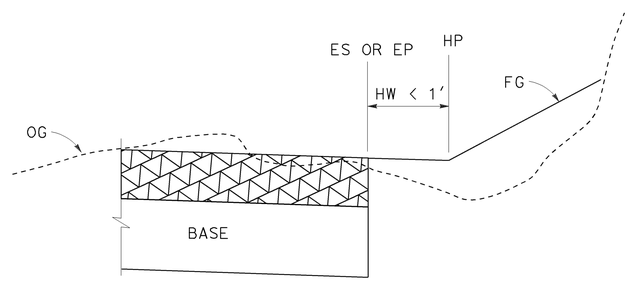

CASE N
Vertical Edge - Cut Section, HW < 1′

CUT SECTION

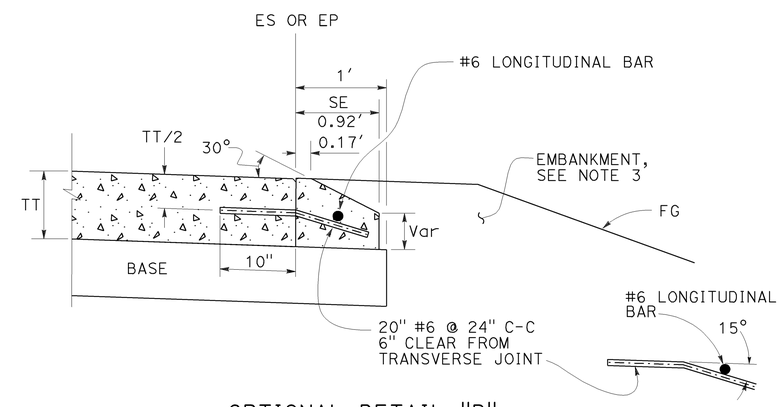

OPTIONAL DETAIL "B"
For concrete pavement
See Note 4

NOTES:

1. For limits of safety edge and vertical edge treatments, see Revised Standard Plan RSP P74
2. Details shown for HMA pavement thickness less than 0.43′. See Detail "B" for HMA pavement thickness more than 0.43′ or concrete pavement.
3. For locations and limits of embankment see project plans.
4. Safety edge transverse joint must match pavement transverse joint. End of #6 longitudinal bar must be 2" ±½" clear from transverse joint.
5. Safety edge is not needed in the area of MBGR, barrier, right turn lane and acceleration lane. See Revised Standard Plan RSP P74.

STATE OF CALIFORNIA
DEPARTMENT OF TRANSPORTATION

PAVEMENT EDGE TREATMENTS-NEW CONSTRUCTION

NO SCALE

RSP P76 DATED JANUARY 20, 2012 SUPPLEMENTS THE STANDARD PLANS BOOK DATED 2010.

REVISED STANDARD PLAN RSP P76

2010 REVISED STANDARD PLAN RSP P76

01-09-12

TO ACCOMPANY PLANS DATED 04-22-13

Dist	COUNTY	ROUTE	POST MILES TOTAL PROJECT	SHEET No.	TOTAL SHEETS
11	SD	11, 905	0.0/1.6 R9.9/R10.7	480	622

REGISTERED CIVIL ENGINEER

October 19, 2012
PLANS APPROVAL DATE

REGISTERED PROFESSIONAL ENGINEER Glenn DeCou No. C34547 Exp. 9-30-13 CIVIL STATE OF CALIFORNIA

THE STATE OF CALIFORNIA OR ITS OFFICERS OR AGENTS SHALL NOT BE RESPONSIBLE FOR THE ACCURACY OR COMPLETENESS OF SCANNED COPIES OF THIS PLAN SHEET.

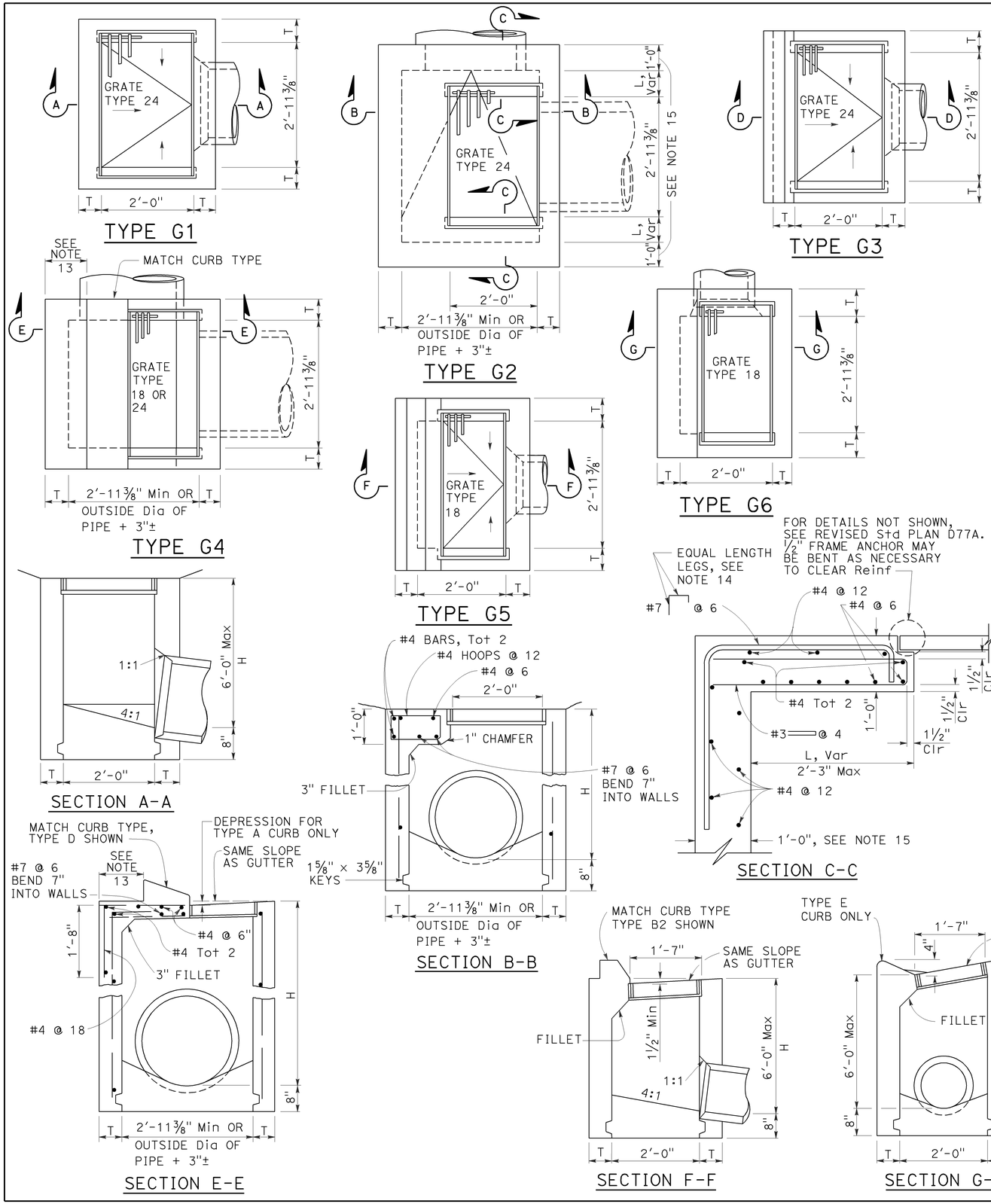

NOTES:

1. "H" is the difference in elevation between the outlet pipe flow line and the normal gutter grade line undepressed.
2. For "T" wall thickness, see Table A below.
3. Wall reinforcing not required when "H" is 8'-0" or less and the unsupported width or length is 7'-0" or less. Walls exceeding these limits shall be reinforced with #4 bars @ 1'-6" ± centers placed 1½" clear to inside of box unless otherwise shown.
4. Inlet bottom reinforcing not required. See Standard Plan D74C for alternative reinforced bottom and alternative half round bottom.
5. Steps-None required where "H" is less than 2'-6". Where "H" is 2'-6" or more, install steps with lowest rung 1'-0" above the floor and highest rung not more than 6" below top of inlet. The distance between steps shall not exceed 1'-0" and shall be uniform throughout the length of the wall. Place steps in the wall without an opening. Steps inserts may be substituted for the bar steps. Step inserts shall comply with State Industrial Safety requirements. See Standard Plan D74C for step details.
6. Details shown apply to both metal and concrete pipe.
7. Pipe(s) can be placed in any wall.
8. Curb section shall match adjacent curb.
9. Basin floors shall have wood trowel finish and a minimum slope of 12:3 from all directions toward outlet pipe.
10. Set inlet so that grate bars are parallel to direction of principal surface flow.
11. See Revised Standard Plans D77A and D77B for grate and frame details and weights of miscellaneous iron and steel.
12. See Standard Plan D78A for gutter depression details.
13. This dimenison will vary with different grates, curbs types, box width and wall thickness.
14. Bar may be rotated as necessary to clear opening. Where "L" is 6" or less, bar may be omitted.
15. Where "L" is 6" or less, wall thickness shall be as shown in Table A.
16. Cast-in-place inlets to be formed around all pipes/stubs intersecting the inlet, and concrete poured in one continuous operation. Precast inlets shall have mortared connections conforming to details for Type GCP Inlet shown on Standard Plan D75B. See Standard Specifications for mortar composition.

TABLE A

CONCRETE QUANTITIES				
TYPE	H=3'-0" TO 8'-0" (T=6")		H=8'-1" TO 20'-0" (T=8")	
	H=3'-0" (CY)	ADDITIONAL PCC PER FOOT (CY)	H=8'-1" (CY)	ADDITIONAL PCC PER FOOT (CY)
G-1	0.95	0.220	See Note A	SEE NOTE A
G-2*	1.31	0.255	3.50	0.357
G-3	1.03	0.220	See Note A	SEE NOTE A
G-4* (TYPE 24)	1.27	0.255	3.48	0.357
G-4* (TYPE 18)	1.30	0.255	3.50	0.357
G-5	1.02	0.220	SEE NOTE A	SEE NOTE A
G-6	1.04	0.220	SEE NOTE A	SEE NOTE A

TABLE BASED ON 8" FLOOR SLAB. NO DEDUCTIONS ARE TO BE MADE TO THESE QUANTITIES BECAUSE OF PIPE OPENINGS, DIFFERENT FLOOR ALTERNATIVES OR DIFFERENT CURB TYPES. * QUANTITIES FOR TYPE G-2 AND G-4 INLETS BASED ON THE MINIMUM INTERIOR DIMENSIONS.

NOTE A:

Maximum allowable height 6'-0".

STATE OF CALIFORNIA
DEPARTMENT OF TRANSPORTATION

DRAINAGE INLETS

NO SCALE

RSP D73 DATED OCTOBER 19, 2012 SUPERSEDES STANDARD PLAN D73 DATED MAY 20, 2011 - PAGE 156 OF THE STANDARD PLANS BOOK DATED 2010.

REVISED STANDARD PLAN RSP D73

2010 REVISED STANDARD PLAN RSP D73

7-19-12

Dist	COUNTY	ROUTE	POST MILES TOTAL PROJECT	SHEET No.	TOTAL SHEETS
11	SD	11, 905	0.0/1.6 R9.9/R10.7	481	622

Raymond Don Tsztoo
REGISTERED CIVIL ENGINEER

April 19, 2013
PLANS APPROVAL DATE

REGISTERED PROFESSIONAL ENGINEER Raymond Don Tsztoo No. C37332 Exp. 6-30-14 CIVIL STATE OF CALIFORNIA

THE STATE OF CALIFORNIA OR ITS OFFICERS OR AGENTS SHALL NOT BE RESPONSIBLE FOR THE ACCURACY OR COMPLETENESS OF SCANNED COPIES OF THIS PLAN SHEET.

TO ACCOMPANY PLANS DATED 04-22-13

2010 REVISED STANDARD PLAN RSP D77A

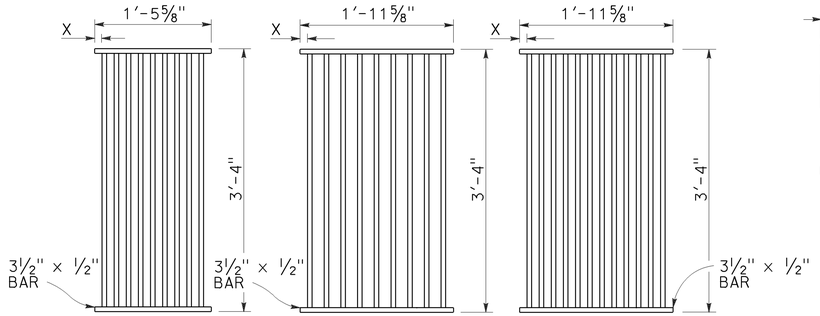

TYPE 18-9

1⅜" Clear spacing. Use within the roadbed on highways where bicycles and pedestrians are excluded.

TYPE 24-9

2" Clear spacing. Use in locations off the roadbed on all types of highways.

TYPE 24-12

1⅜" Clear spacing. Use within the roadbed on highways where bicycles and pedestrians are excluded.

RECTANGULAR GRATE DETAILS

(See table below)

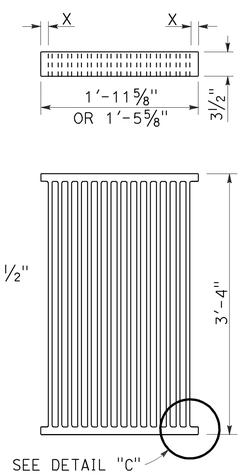

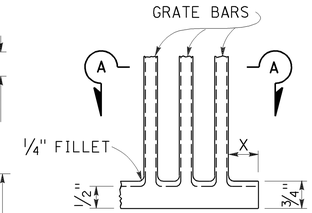

DETAIL "C"

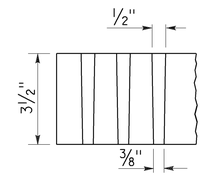

SECTION A-A

ALTERNATIVE CAST DUCTILE IRON GRATE OR CAST CARBON STEEL GRATE

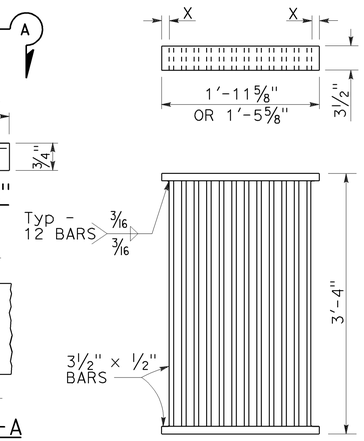

ALTERNATIVE WELDED GRATE

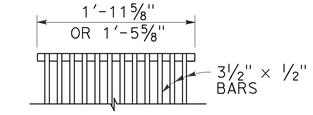

CAST END BLOCK

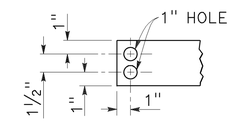

END OF BAR

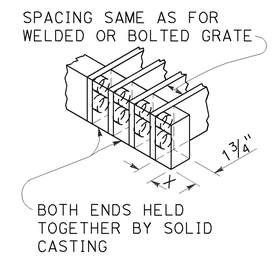

ALTERNATIVE CAST DUCTILE IRON OR CAST CARBON STEEL END BLOCK GRATE

NOTES:

1. Grate type numbers refer to approximate width of grate in inches and number of bars, respectively.
2. Contractor has the option of using cast ductile iron, cast carbon steel, welded, bolted, or cast end block grate.
3. Rounded top of bars optional on all grates.
4. Pipe inlets with a grate shall be placed so that bars parallel direction of principle surface flow.
5. Complete joint penetration butt welds may be substituted for the fillet welds on all anchors.
6. Standard square, hexagon, round or equivalent headed anchors may be substituted for the right angle hooks on the anchors shown on this plan.
7. Grate and frame weights are based on welded grates (weights of face angles, steps, protection bars, etc. are not included).
8. Connect chain to grate and frame only at locations shown on the plans. When chain is required, do not use cast ductile iron grates.

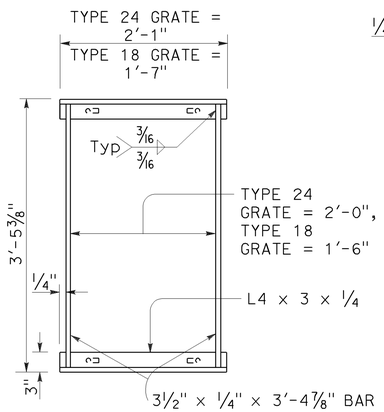

TYPICAL FRAME

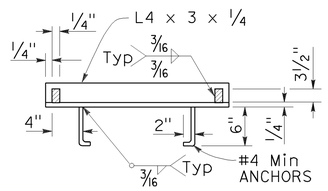

CROSS SECTION

(Thru frame)

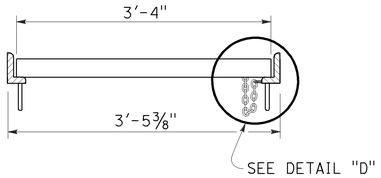

LONGITUDINAL SECTION

(Thru frame and grate)

RECTANGULAR FRAME DETAILS

(For all rectangular grates)

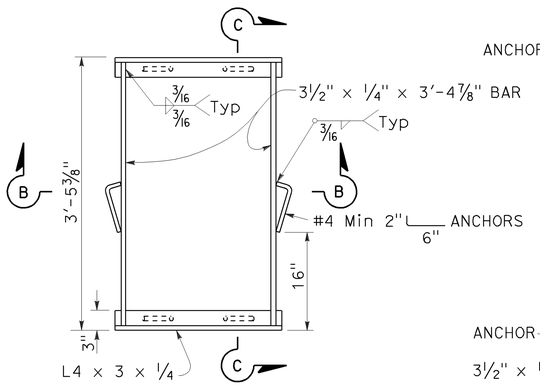

TYPICAL FRAME

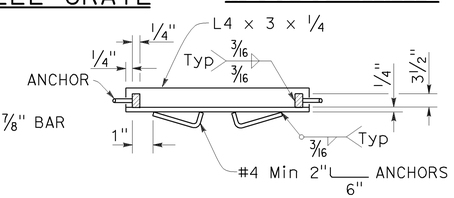

SECTION B-B

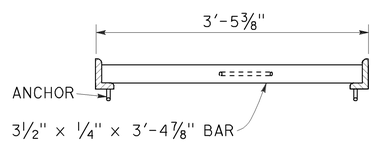

SECTION C-C

ALTERNATIVE ANCHOR FOR RECTANGULAR FRAME

(For details not shown, See Rectangular Frame Details)

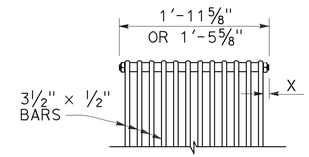

BOLTED END BLOCK

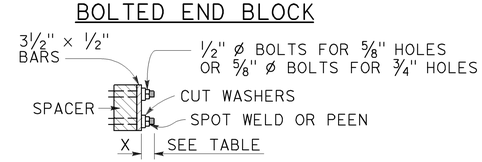

BOLTING DETAIL

ALTERNATIVE BOLTED GRATE

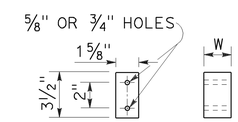

BAR SPACER

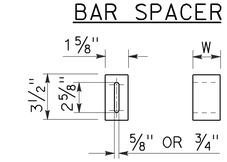

ALTERNATIVE SPACER

W = 1⅜" or 2"

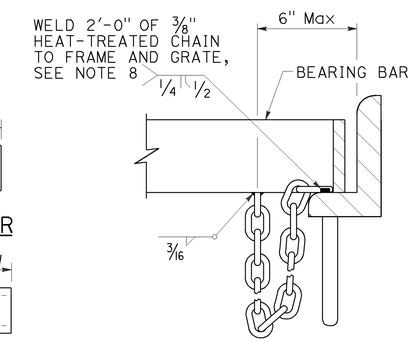

DETAIL "D"

(Steel grates only)

GRATE BAR SPACING TABLE

TYPE	No. OF BARS	CLEAR BAR SPACING	X
18-9	9	1⅜"	1 1/16"
24-9	9	2"	1 9/16"
24-12	12	1⅜"	1¼"

INLET TYPE	COVER TYPE	WEIGHT LB
OS	PLATE	174
OL-7	PLATE	170
OL-10	PLATE	170
OL-14	PLATE	170
OL-21	PLATE	170
OCP	PLATE	112
OCPI	PLATE	112
OCPI	REDWOOD	42
OMP	PLATE	177
OMPI	PLATE	177

INLET TYPE	GRATE TYPE	No. OF GRATES	WEIGHT LB
GDO	24-12	2	634
GOL-7	24-12	1	326
GOL-10	24-12	1	326
GO,G1,G2,G3,G4 (TYPE 24)	24-9	1	263
	24-12	1	326
G4 (TYPE 18),G5,G6	18-9	1	249
GT1	18-9	2	498
GT2	18-9	2	498
GT3	24-12	2	652
GT4	24-12	2	652
TRASH RACK			22
GRATE CHAIN			3

BASIS FOR Misc IRON & STEEL FINAL PAY WEIGHTS FOR DRAINAGE INLETS

(See Note 7)

STATE OF CALIFORNIA
DEPARTMENT OF TRANSPORTATION

GRATE DETAILS No. 1

NO SCALE

RSP D77A DATED APRIL 19, 2013 SUPERSEDES RSP D77A DATED JULY 20, 2012 AND STANDARD PLAN D77A DATED MAY 20, 2011 - PAGE 164 OF THE STANDARD PLANS BOOK DATED 2010.

REVISED STANDARD PLAN RSP D77A

4-4-13

Dist	COUNTY	ROUTE	POST MILES TOTAL PROJECT	SHEET No.	TOTAL SHEETS
11	SD	11, 905	0.0/1.6 R9.9/R10.7	482	622

REGISTERED CIVIL ENGINEER

April 19, 2013
PLANS APPROVAL DATE

REGISTERED PROFESSIONAL ENGINEER Gurinderpal Bhullar No. C48815 Exp. 9-30-14 CIVIL STATE OF CALIFORNIA

THE STATE OF CALIFORNIA OR ITS OFFICERS OR AGENTS SHALL NOT BE RESPONSIBLE FOR THE ACCURACY OR COMPLETENESS OF SCANNED COPIES OF THIS PLAN SHEET.

TO ACCOMPANY PLANS DATED 04-22-13

2010 REVISED STANDARD PLAN RSP T9

TABLE 1

TAPER LENGTH CRITERIA AND CHANNELIZING DEVICE SPACING

SPEED (S)	MINIMUM TAPER LENGTH * FOR WIDTH OF OFFSET 12 FEET (W)				MAXIMUM CHANNELIZING DEVICE SPACING		
					X	Y	Z **
	TANGENT 2L	MERGING L	SHIFTING L/2	SHOULDER L/3	TAPER	TANGENT	CONFLICT
mph	ft	ft	ft	ft	ft	ft	ft
20	160	80	40	27	20	40	10
25	250	125	63	42	25	50	12
30	360	180	90	60	30	60	15
35	490	245	123	82	35	70	17
40	640	320	160	107	40	80	20
45	1080	540	270	180	45	90	22
50	1200	600	300	200	50	100	25
55	1320	660	330	220	55	110	27
60	1440	720	360	240	60	120	30
65	1560	780	390	260	65	130	32
70	1680	840	420	280	70	140	35

* - For other offsets, use the following merging taper length formula for L:
For speed of 40 mph or less, $L = WS^2/60$
For speed of 45 mph or more, $L = WS$

Where: L = Taper length in feet
W = Width of offset in feet
S = Posted speed limit, off-peak 85th-percentile speed prior to work starting, or the anticipated operating speed in mph

** - Use for taper and tangent sections where there are no pavement markings or where there is a conflict between existing pavement markings and channelizers (CA).

TABLE 2

LONGITUDINAL BUFFER SPACE AND FLAGGER STATION SPACING

SPEED *	Min D **	DOWNGRADE Min D ***		
		-3%	-6%	-9%
mph	ft	ft	ft	ft
20	115	116	120	126
25	155	158	165	173
30	200	205	215	227
35	250	257	271	287
40	305	315	333	354
45	360	378	400	427
50	425	446	474	507
55	495	520	553	593
60	570	598	638	686
65	645	682	728	785
70	730	771	825	891

* - Speed is posted speed limit, off-peak 85th-percentile speed prior to work starting, or the anticipated operating speed in mph

** - Longitudinal buffer space or flagger station spacing

*** - Use on sustained downgrade steeper than -3 percent and longer than 1 mile.

TABLE 3

ADVANCE WARNING SIGN SPACING

ROAD TYPE	DISTANCE BETWEEN SIGNS *		
	A	B	C
	ft	ft	ft
URBAN - 25 mph OR LESS	100	100	100
URBAN - MORE THAN 25 mph TO 40 mph	250	250	250
URBAN - MORE THAN 40 mph	350	350	350
RURAL	500	500	500
EXPRESSWAY / FREEWAY	1000	1500	2640

* - The distances are approximate, are intended for guidance purposes only, and should be applied with engineering judgment. These distances should be adjusted by the Engineer for field conditions, if necessary, by increasing or decreasing the recommmended distances.

STATE OF CALIFORNIA
DEPARTMENT OF TRANSPORTATION

TRAFFIC CONTROL SYSTEM FOR LANE CLOSURE ON FREEWAYS AND EXPRESSWAYS

NO SCALE

RSP T9 DATED APRIL 19, 2013 SUPPLEMENTS THE STANDARD PLANS BOOK DATED 2010.

REVISED STANDARD PLAN RSP T9

1-23-13

Dist	COUNTY	ROUTE	POST MILES TOTAL PROJECT	SHEET No.	TOTAL SHEETS
11	SD	11, 905	0.0/1.6 R9.9/R10.7	483	622

REGISTERED CIVIL ENGINEER

April 19, 2013
PLANS APPROVAL DATE

REGISTERED PROFESSIONAL ENGINEER Gurinderpal Bhullar No. C48815 Exp. 9-30-14 CIVIL STATE OF CALIFORNIA

THE STATE OF CALIFORNIA OR ITS OFFICERS OR AGENTS SHALL NOT BE RESPONSIBLE FOR THE ACCURACY OR COMPLETENESS OF SCANNED COPIES OF THIS PLAN SHEET.

TO ACCOMPANY PLANS DATED 04-22-13

NOTES:

See Revised Standard Plan RSP T9 for tables.

Use cone spacing X for taper segment, Y for tangent segment or Z for conflict situations, as approriate, per Table 1, unless X, Y, or Z cone spacing is shown on this sheet.

Unless otherwise specified in the special provisions, all temporary warning signs shall have black legend on fluorescent orange background.

California codes are designated by (CA). Otherwise, Federal (MUTCD) codes are shown.

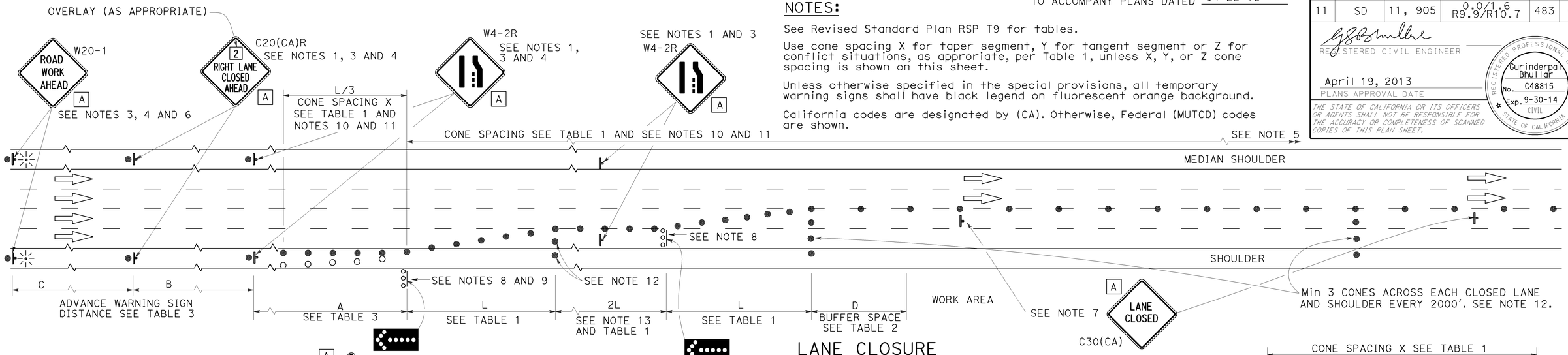

LANE CLOSURE

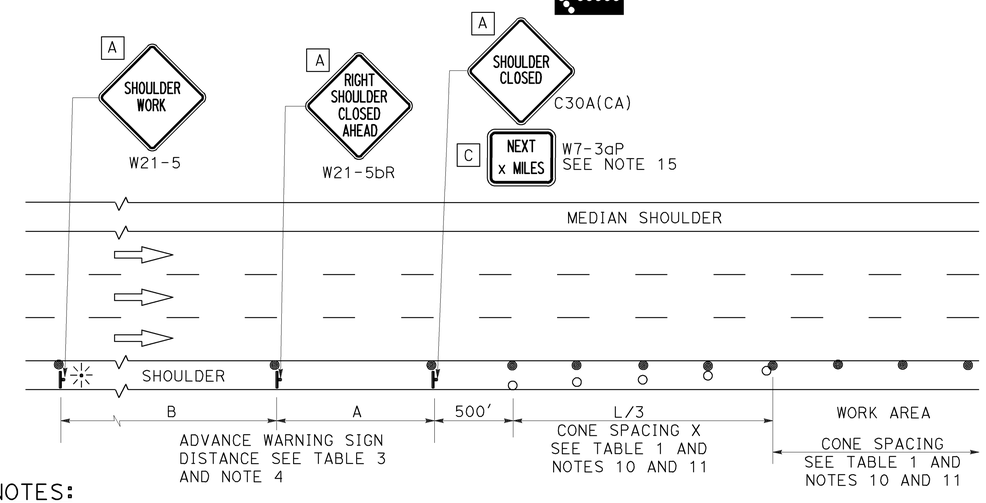

SHOULDER CLOSURE

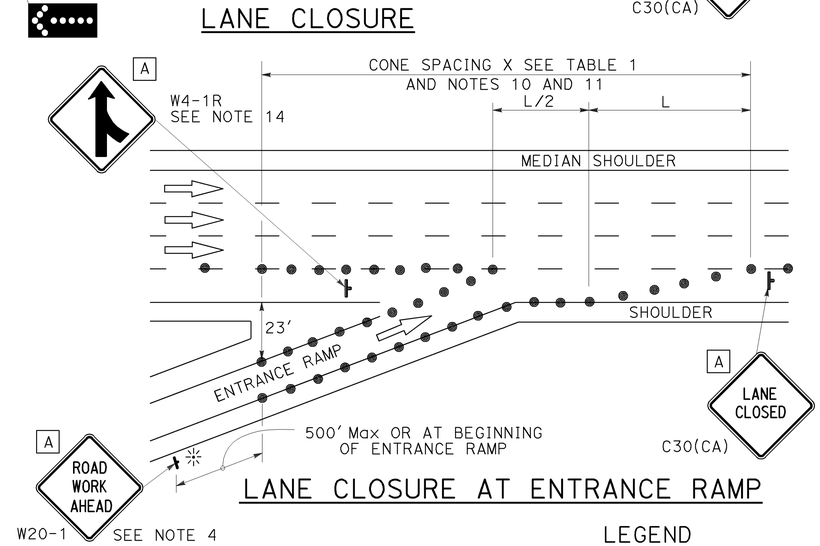

LANE CLOSURE AT ENTRANCE RAMP

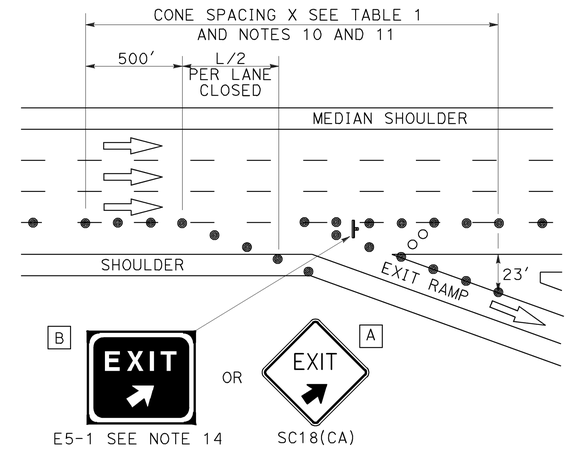

LANE CLOSURE AT EXIT RAMP

NOTES:

1. Median lane closures shall conform to the details as shown except that C20(CA)L and W4-2L signs shall be used.
2. At least one person shall be assigned to provide full time maintenance of traffic control devices for lane closures.
3. Duplicate sign installations are not required:
   a) On opposite shoulder if at least one-half of the available lanes remain open to traffic.
   b) In the median if the width of the median shoulder is less than 8' and the outside lanes are to be closed.
4. Each advance warning sign on each side of the roadway shall be equipped with at least two flags for daytime closure. Each flag shall be at least 16" x 16" in size and shall be orange or fluorescent red-orange in color. Flashing beacons shall be placed at the locations indicated for lane closure during hours of darkness.
5. A G20-2 "END ROAD WORK" sign, with minimum size of 48" x 24" as appropriate, shall be placed at the end of the lane closure unless the end of work area is obvious or ends within a larger project's limits.
6. If the W20-1 sign would follow within 2000' of a stationary W20-1 or G20-1 "ROAD WORK NEXT _____ MILES", use a C20(CA) sign for the first advance warning sign.
7. Place a C30(CA) sign every 2000' throughout length of lane closure.
8. One flashing arrow sign for each lane closed. The flashing arrow signs shall be Type I.
9. A minimum 1500' of sight distance shall be provided where possible for vehicles approaching the first flashing arrow sign. Lane closures shall not begin at top of crest vertical curve or on a horizontal curve.
10. All cones used for lane closures during the hours of darkness shall be fitted with retroreflective bands (or sleeves) as specified in the specifications.
11. Portable delineators, placed at one-half the spacing indicated for traffic cones may be used instead of cones for daytime closures only.
12. Unless otherwise specified in the special provisions, a minimum of 3 cones shall be placed transversely across each closed lane and shoulder at each location where a taper across a traffic lane ends and every 2000' as shown on the "Lane Closure" detail. Two Type II barricades may be used instead of the 3 cones. The transverse alignment of the cones or barricades on the closed shoulder may be shifted from the transverse alignment to provide access to the work.
13. Unless otherwise specified in the special provisions, the 2L tangent shown along lane lines shall be used between the L tapers required for each closed traffic lane.
14. Unless otherwise specified in the special provisions, the E5-1 or SC18(CA) and W4-1 signs shall be used as shown.
15. A W7-3aP "NEXT____ MILES" plaque must be used if theshoulder closure extends beyond the distance that can be perceived by road users.

LEGEND

- TRAFFIC CONE
- TRAFFIC CONE (OPTIONAL TAPER)
- TEMPORARY TRAFFIC CONTROL SIGN
- FLASHING ARROW SIGN (FAS)
- FAS SUPPORT OR TRAILER
- PORTABLE FLASHING BEACON

SIGN PANEL SIZE (Min)

A	48" x 48"
B	72" x 60"
C	36" x 30"

STATE OF CALIFORNIA
DEPARTMENT OF TRANSPORTATION

TRAFFIC CONTROL SYSTEM FOR LANE CLOSURE ON FREEWAYS AND EXPRESSWAYS

NO SCALE

RSP T10 DATED APRIL 19, 2013 SUPERSEDES STANDARD PLAN T10 DATED MAY 20, 2011 - PAGE 237 OF THE STANDARD PLANS BOOK DATED 2010.

REVISED STANDARD PLAN RSP T10

2010 REVISED STANDARD PLAN RSP T10

12-18-12

TO ACCOMPANY PLANS DATED 04-22-13

Dist	COUNTY	ROUTE	POST MILES TOTAL PROJECT	SHEET No.	TOTAL SHEETS
11	SD	11, 905	0.0/1.6 R9.9/R10.7	484	622

REGISTERED CIVIL ENGINEER

April 19, 2013
PLANS APPROVAL DATE

REGISTERED PROFESSIONAL ENGINEER Gurinderpal Bhullar No. C48815 Exp. 9-30-14 CIVIL STATE OF CALIFORNIA

THE STATE OF CALIFORNIA OR ITS OFFICERS OR AGENTS SHALL NOT BE RESPONSIBLE FOR THE ACCURACY OR COMPLETENESS OF SCANNED COPIES OF THIS PLAN SHEET.

NOTES: See Revised Standard Plan RSP T9 for tables.

Use cone spacing X for taper segment, Y for tangent segment or Z for conflict situations, as approriate, per Table 1, unless X, Y, or Z cone spacing is shown on this sheet.

Unless otherwise specified in the special provisions, all temporary warning signs shall have black legend on fluorescent orange background.

California codes are designated by (CA). Otherwise, Federal (MUTCD) codes are shown.

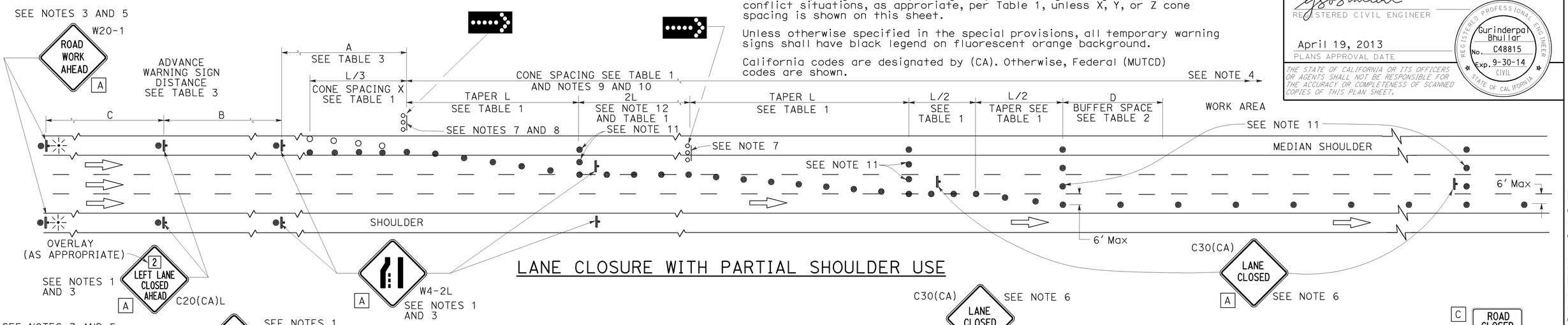

LANE CLOSURE WITH PARTIAL SHOULDER USE

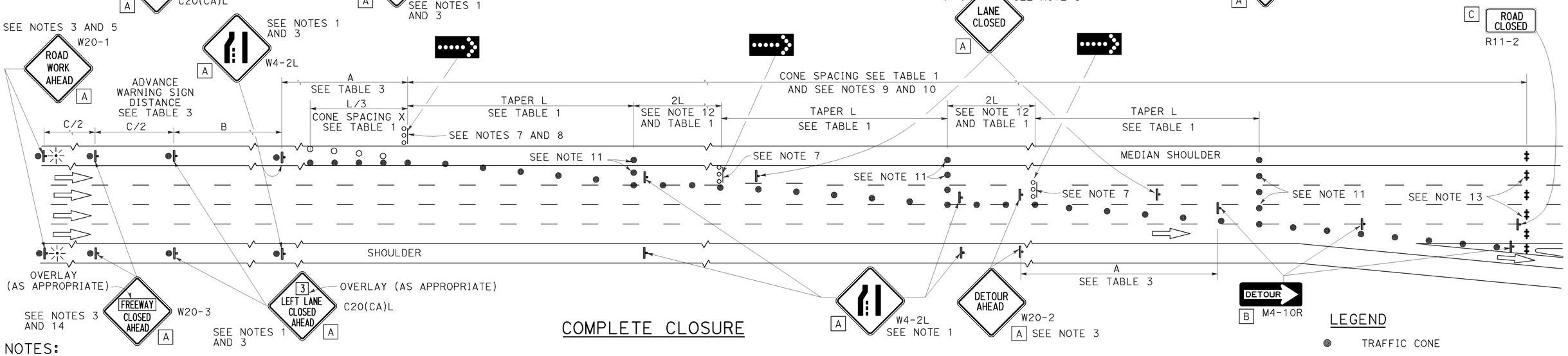

COMPLETE CLOSURE

NOTES:

1. Lane closures on the right side using partial median shoulder as a traffic lane shall conform to the details as shown except that C20(CA)R and W4-2R signs shall be used.
2. At least one person shall be assigned to provide full time maintenance of traffic control devices for lane closures.
3. Each advance warning sign on each side of the roadway shall be equipped with at least two flags for daytime closure. Each flag shall be at least 16" X 16" in size and shall be orange or fluorescent red-orange in color. Flashing beacons shall be placed at the locations indicated for lane closure during hours of darkness.
4. A G20-2 "END ROAD WORK" sign, with minimum size of 48" x 24" as appropriate, shall be placed at the end of the lane closure unless the end of work area is obvious or ends within a larger project's limits.
5. If the W20-1 sign would follow within 2000' of a stationary W20-1 or G20-1 "ROAD WORK NEXT ___ MILES", use a C20(CA) sign for the first advance warning sign.
6. Place a C30(CA) sign every 2000' throughout length of lane closure.
7. One flashing arrow sign for each lane closed. The flashing arrow signs shall be Type I.
8. A minimum 1500' of sight distance shall be provided where possible for vehicles approaching the first flashing arrow sign. Lane closures shall not begin at the top of crest vertical curve or on a horizontal curve.
9. All cones used for lane closures during the hours of darkness shall be fitted with retroreflective bands (or sleeves) as specified in the specifications.
10. Portable delineators, placed at one-half the spacing indicated for traffic cones, may be used instead of cones for daytime closures only.
11. Unless otherwise specified in the special provisions, a minimum of 3 cones shall be placed transversely across each closed lane and shoulder at each location where a taper across a traffic lane ends and every 2000' as shown on the "Lane Closure With Partial Shoulder Use" detail. Two Type II barricades may be used instead of the 3 cones. The transverse alignment of the cones or barricades on the closed shoulder may be shifted from the transverse alignment to provide access to the work.
12. Unless otherwise specified in the special provisions, the 2L tangent shown along lane lines shall be used between the L tapers required for each closed traffic lane.
13. A minimum of Two Type II or III barricades shall be placed across each closed lane and shoulder at the location shown and every 2000' within the complete closure area. Within the complete closure area, the transverse alignment of the barricades on the closed shoulder may be shifted from the transverse alignment to provide access to the work.
14. When specified in the special provisions, a W20-2 "DETOUR AHEAD" sign is to be used in place of the W20-3 "FREEWAY CLOSED AHEAD" sign.

SIGN PANEL SIZE (Min)

A	48" x 48"
B	48" x 18"
C	48" x 30"

LEGEND

- TRAFFIC CONE
- TRAFFIC CONE (OPTIONAL TAPER)
- TEMPORARY TRAFFIC CONTROL SIGN
- FLASHING ARROW SIGN (FAS)
- FAS SUPPORT OR TRAILER
- PORTABLE FLASHING BEACON

STATE OF CALIFORNIA
DEPARTMENT OF TRANSPORTATION

TRAFFIC CONTROL SYSTEM FOR LANE CLOSURES ON FREEWAYS AND EXPRESSWAYS

NO SCALE

RSP T10A DATED APRIL 19, 2013 SUPERSEDES STANDARD PLAN T10A DATED MAY 20, 2011 - PAGE 238 OF THE STANDARD PLANS BOOK DATED 2010.

REVISED STANDARD PLAN RSP T10A

2010 REVISED STANDARD PLAN RSP T10A

12-18-12

Dist	COUNTY	ROUTE	POST MILES TOTAL PROJECT	SHEET No.	TOTAL SHEETS
11	SD	11, 905	0.0/1.6 R9.9/R10.7	485	622

REGISTERED CIVIL ENGINEER

April 19, 2013
PLANS APPROVAL DATE

REGISTERED PROFESSIONAL ENGINEER
Gurinderpal Bhullar
No. C48815
Exp. 9-30-14
CIVIL
STATE OF CALIFORNIA

THE STATE OF CALIFORNIA OR ITS OFFICERS OR AGENTS SHALL NOT BE RESPONSIBLE FOR THE ACCURACY OR COMPLETENESS OF SCANNED COPIES OF THIS PLAN SHEET.

TO ACCOMPANY PLANS DATED 04-22-13

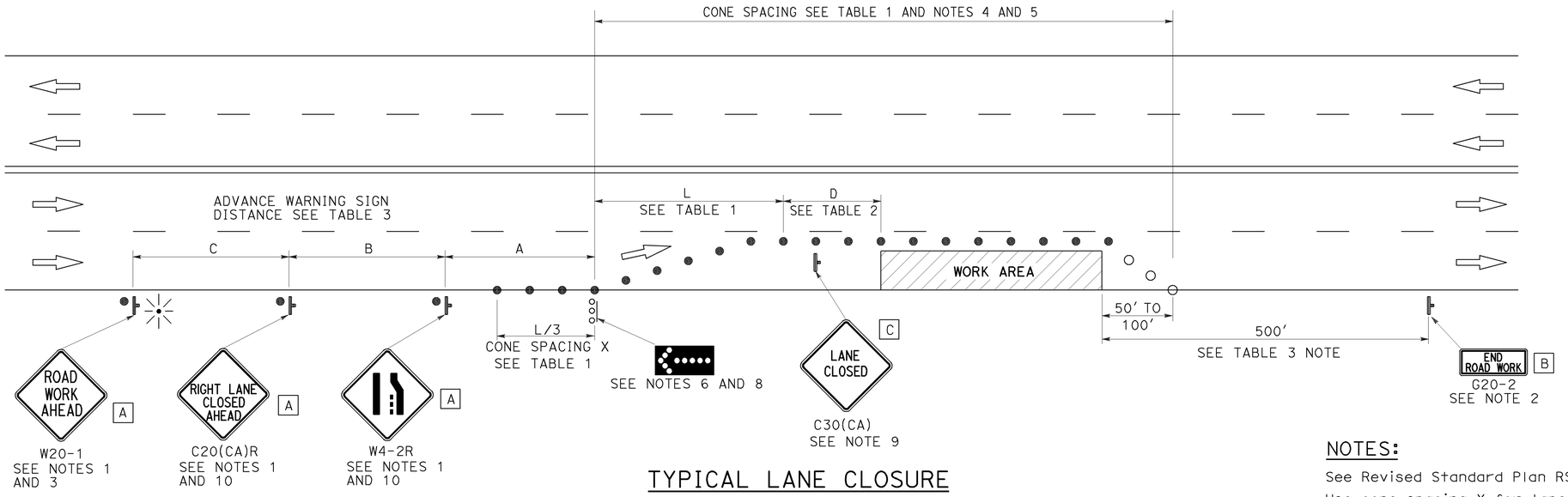

TYPICAL LANE CLOSURE

NOTES:

See Revised Standard Plan RSP T9 for tables.

Use cone spacing X for taper segment, Y for tangent segment or Z for conflict situations, as approriate, per Table 1, unless X, Y, or Z cone spacing is shown on this sheet.

Unless otherwise specified in the special provisions, all temporary warning signs shall have black legend on fluorescent orange background.

California codes are designated by (CA). Otherwise, Federal (MUTCD) codes are shown.

NOTES:

1. Each advance warning sign shall be equipped with at least two flags for daytime closure. Each flag shall be at least 16" x 16" in size and shall be orange or fluorescent red-orange in color. Flashing beacons shall be placed at the locations indicated for lane closure during hours of darkness.
2. A G20-2 "END ROAD WORK" sign, as appropriate, shall be placed at the end of the lane closure unless the end of work area is obvious, or ends within a larger project's limits.
3. If the W20-1 sign would follow within 2000' of a stationary W20-1 or G20-1 "ROAD WORK NEXT _____ MILES", use a C20(CA) sign for the first advance warning sign.
4. All cones used for lane closures during the hours of darkness shall be fitted with retroreflective bands (or sleeves) as specified in the specifications.
5. Portable delineators, placed at one-half the spacing indicated for traffic cones, may be used instead of cones for daytime closures only.
6. Flashing arrow sign shall be either Type I or Type II.
7. For approach speeds over 50 mph, use the "Traffic Control System for Lane Closure On Freeways And Expressways" plan for lane closure details and requirements.
8. A minimum 1500' of sight distance shall be provided where possible for vehicles approaching the first flashing arrow sign. Lane closures shall not begin at the top of crest vertical curve or on a horizontal curve.
9. Place a C30(CA) sign every 2000' throughout length of lane closure.
10. Median lane closures shall conform to the details as shown except that C20(CA)L and W4-2L signs shall be used.
11. At least one person shall be assigned to provide full time maintenance of traffic control devices for lane closure unless, otherwise directed by the Engineer.

LEGEND

- ● TRAFFIC CONE
- ○ TRAFFIC CONE (OPTIONAL TAPER)
- TEMPORARY TRAFFIC CONTROL SIGN
- FLASHING ARROW SIGN (FAS)
- FAS SUPPORT OR TRAILER
- PORTABLE FLASHING BEACON

SIGN PANEL SIZE (Min)

A	48" x 48"
B	36" x 18"
C	30" x 30"

STATE OF CALIFORNIA
DEPARTMENT OF TRANSPORTATION

TRAFFIC CONTROL SYSTEM FOR LANE CLOSURE ON MULTILANE CONVENTIONAL HIGHWAYS

NO SCALE

RSP T11 DATED APRIL 19, 2013 SUPERSEDES STANDARD PLAN T11 DATED MAY 20, 2011 - PAGE 239 OF THE STANDARD PLANS BOOK DATED 2010.

REVISED STANDARD PLAN RSP T11

2010 REVISED STANDARD PLAN RSP T11

4-2-13

Dist	COUNTY	ROUTE	POST MILES TOTAL PROJECT	SHEET No.	TOTAL SHEETS
11	SD	11, 905	0.0/1.6 R9.9/R10.7	486	622

REGISTERED CIVIL ENGINEER

April 19, 2013
PLANS APPROVAL DATE

REGISTERED PROFESSIONAL ENGINEER Gurinderpal Bhullar No. C48815 Exp. 9-30-14 CIVIL STATE OF CALIFORNIA

THE STATE OF CALIFORNIA OR ITS OFFICERS OR AGENTS SHALL NOT BE RESPONSIBLE FOR THE ACCURACY OR COMPLETENESS OF SCANNED COPIES OF THIS PLAN SHEET.

TO ACCOMPANY PLANS DATED 04-22-13

NOTES:

See Revised Standard Plan RSP T9 for tables.

Use cone spacing X for taper segment, Y for tangent segment or Z for conflict situations, as approriate, per Table 1, unless X, Y, or Z cone spacing is shown on this sheet.

Unless otherwise specified in the special provisions, all temporary warning signs shall have black legend on fluorescent orange background.

California codes are designated by (CA). Otherwise, Federal (MUTCD) codes are shown.

TYPICAL LANE CLOSURE WITH REVERSIBLE CONTROL

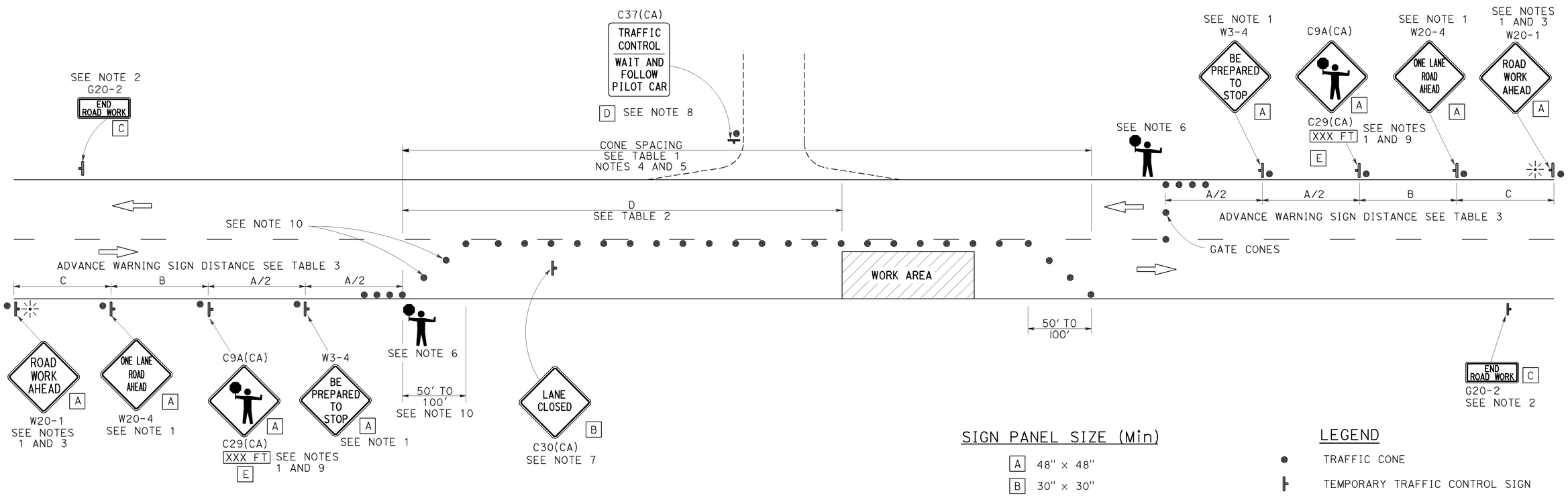

SIGN PANEL SIZE (Min)

A	48" × 48"
B	30" × 30"
C	36" × 18"
D	36" × 42"
E	20" × 7"

LEGEND

- TRAFFIC CONE
- TEMPORARY TRAFFIC CONTROL SIGN
- PORTABLE FLASHING BEACON
- FLAGGER

NOTES:

1. Each advance warning sign in each direction of travel shall be equipped with at least two flags for daytime closure. Each flag shall be at least 16" x 16" in size and shall be orange or fluorescent red-orange in color. Flashing beacons shall be placed at the locations indicated for lane closure during hours of darkness.
2. A G20-2 "END ROAD WORK" sign, as appropriate, shall be placed at the end of the lane control unless the end of work area is obvious, or ends within a larger project's limits.
3. If the W20-1 sign would follow within 2000' of a stationary W20-1 or G20-1 "ROAD WORK NEXT _____ MILES", use a W20-4 sign for the first advance warning sign.
4. All cones used for lane closures during the hours of darkness shall be fitted with retroreflective bands (or sleeves) as specified in the specifications.
5. Portable delineators, placed at one-half the spacing indicated for traffic cones, may be used instead of cones for daytime closures only.
6. Additional advance flaggers may be required. Flagger should stand in a conspicuous place, be visible to approaching traffic as well as approaching vehicles after the first vehicle has stopped. During the hours of darkness, the flagging-station and flagger shall be illuminated and clearly visible to approaching traffic. The illumination footprint of the lighting on the ground shall be at least 20' in diameter. Place a minimum of four cones at 50' intervals in advance of flagger station as shown.
7. Place C30(CA) "LANE CLOSED" sign at 500' to 1000' intervals throughout extended work areas. They are optional if the work area is visible from the flagger station.
8. When a pilot car is used, place a C37(CA) "TRAFFIC CONTROL-WAIT AND FOLLOW PILOT CAR" sign with black legend on white background at all intersections, driveways and alleys without a flagger within traffic control area. Signs shall be clean and visible at all times. Where traffic can not be effectively self-regulated, at least one flagger shall be used at each intersection within traffic control area.
9. An optional C29(CA) sign may be placed below the C9A(CA) sign.
10. Either traffic cones or barricades shall be placed on the taper. Barricades shall be Type I, II, or III.

STATE OF CALIFORNIA
DEPARTMENT OF TRANSPORTATION

TRAFFIC CONTROL SYSTEM FOR LANE CLOSURE ON TWO LANE CONVENTIONAL HIGHWAYS

NO SCALE

RSP T13 DATED APRIL 19, 2013 SUPERSEDES STANDARD PLAN T13 DATED MAY 20, 2011 - PAGE 241 OF THE STANDARD PLANS BOOK DATED 2010.

REVISED STANDARD PLAN RSP T13

2010 REVISED STANDARD PLAN RSP T13

4-2-13

Dist	COUNTY	ROUTE	POST MILES TOTAL PROJECT	SHEET No.	TOTAL SHEETS
11	SD	11, 905	0.0/1.6 R9.9/R10.7	487	622

REGISTERED CIVIL ENGINEER

April 19, 2013
PLANS APPROVAL DATE

REGISTERED PROFESSIONAL ENGINEER Gurinderpal Bhullar No. C48815 Exp. 9-30-14 CIVIL STATE OF CALIFORNIA

THE STATE OF CALIFORNIA OR ITS OFFICERS OR AGENTS SHALL NOT BE RESPONSIBLE FOR THE ACCURACY OR COMPLETENESS OF SCANNED COPIES OF THIS PLAN SHEET.

TO ACCOMPANY PLANS DATED 04-22-13

TYPICAL RAMP CLOSURES

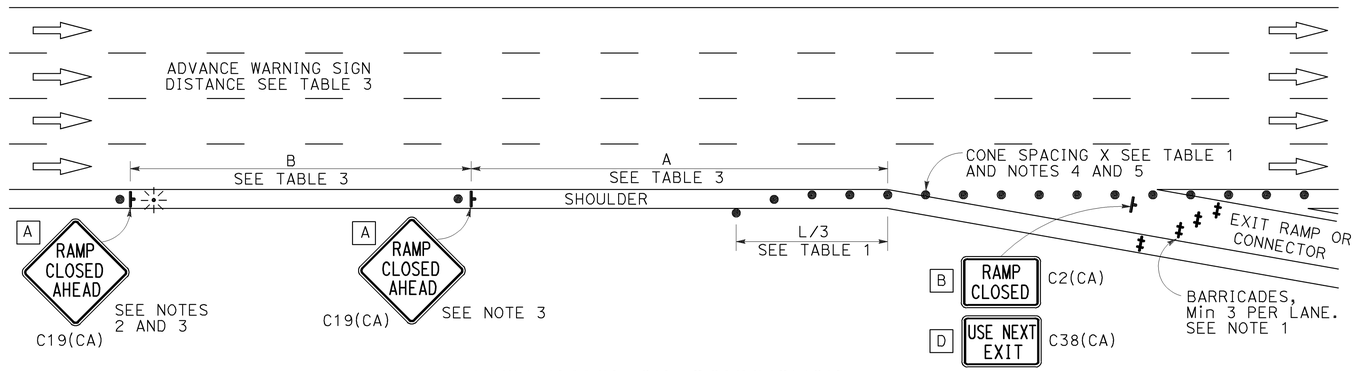

EXIT RAMP OR CONNECTOR

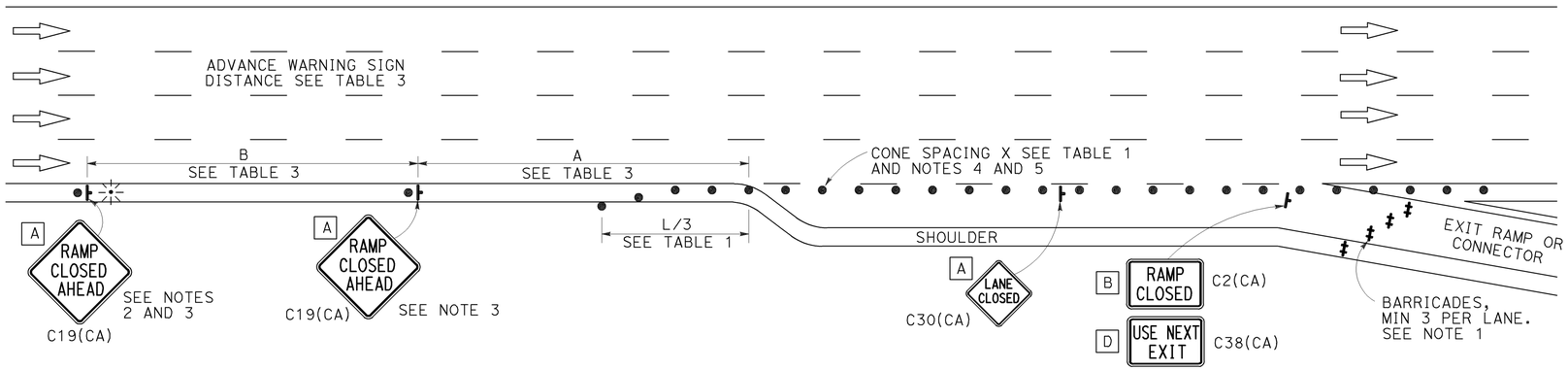

EXIT RAMP OR CONNECTOR WITH ADDITIONAL LANE

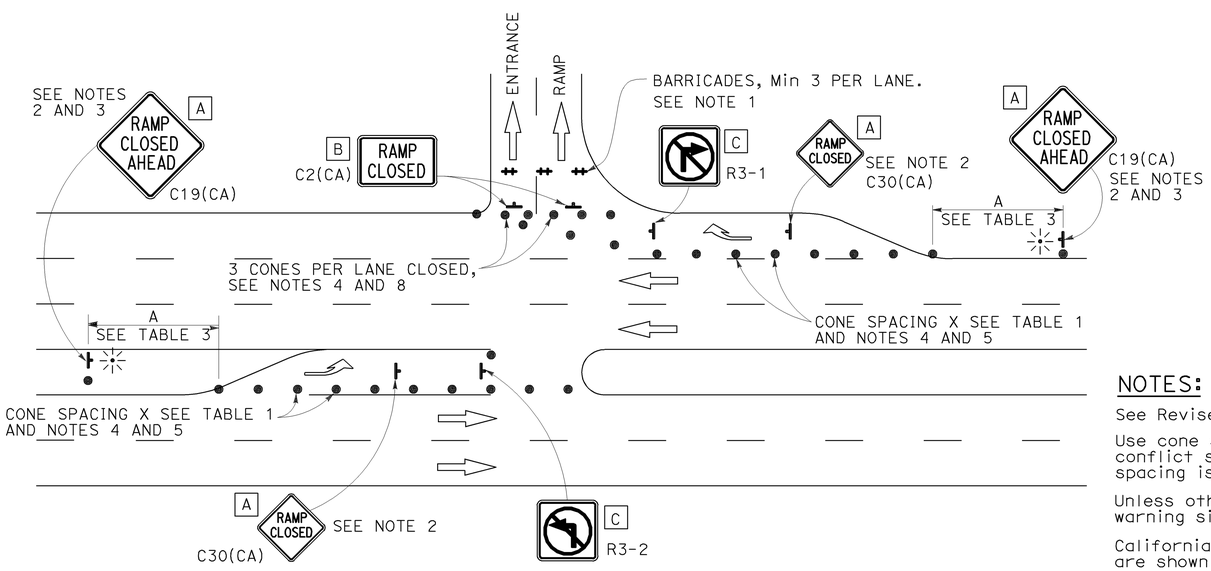

ENTRANCE RAMP WITH TURNING POCKETS

SIGN PANEL SIZE (Min)

- A 48" × 48"
- B 48" × 30"
- C 36" × 36"
- D 48" × 36"

LEGEND

- TRAFFIC CONE
- TEMPORARY TRAFFIC CONTROL SIGN
- BARRICADES
- PORTABLE FLASHING BEACON

NOTES:

1. Barricades shall be Type I, II, or III for closures lasting one week or less and Type III for closures lasting longer than one week.
2. In addition to placing the C19(CA) "RAMP CLOSED AHEAD" and C30(CA) "RAMP CLOSED" signs, black on orange overlay plates with the word "CLOSED" may be mounted, as directed by the Engineer, on all guide signs that refer to the closed ramp. The letter size on the overlay shall be the same as the guide sign.
3. Each advance C19(CA) "RAMP CLOSED AHEAD" sign shall be equipped with at least two flags for daytime closure. Each flag shall be at least 16" × 16" in size and shall be orange or fluorescent red-orange in color. A flashing beacon shall be placed on top of the first C19(CA) sign during hours of darkness.
4. All cones used for ramp closures during the hours of darkness shall be fitted with retroreflective bands (or sleeves) as specified in the specifications.
5. Portable delineators, placed at one-half the spacing indicated for traffic cones, may be used instead of cones for daytime ramp closures only.
6. At least one person shall be assigned to provide full time maintenance of traffic control devices, unless otherwise directed by the Engineer.
7. The existing "EXIT" signs shall be covered during ramp closures.
8. A minimum of 3 cones shall be placed transversely across each closed lane and shoulder.

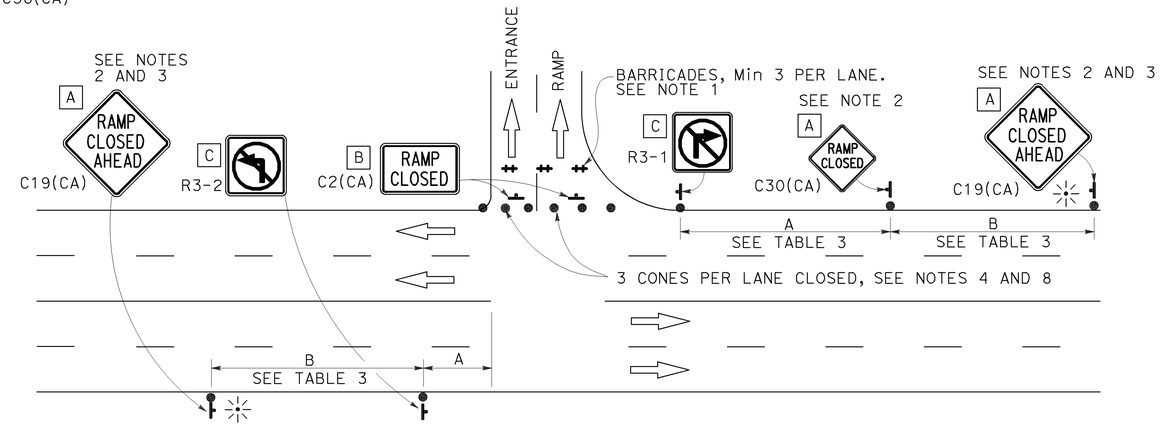

ENTRANCE RAMP WITHOUT TURNING POCKETS

NOTES:

See Revised Standard Plan RSP T9 for tables.

Use cone spacing X for taper segment, Y for tangent segment or Z for conflict situations, as approriate, per Table 1, unless X, Y, or Z cone spacing is shown on this sheet.

Unless otherwise specified in the special provisions, all temporary warning signs shall have black legend on fluorescent orange background.

California codes are designated by (CA). Otherwise, Federal (MUTCD) codes are shown.

STATE OF CALIFORNIA
DEPARTMENT OF TRANSPORTATION

TRAFFIC CONTROL SYSTEM FOR RAMP CLOSURE

NO SCALE

RSP T14 DATED APRIL 19, 2013 SUPERSEDES STANDARD PLAN T14 DATED MAY 20, 2011 - PAGE 242 OF THE STANDARD PLANS BOOK DATED 2010.

REVISED STANDARD PLAN RSP T14

2010 REVISED STANDARD PLAN RSP T14

12-18-12

Dist	COUNTY	ROUTE	POST MILES TOTAL PROJECT	SHEET No.	TOTAL SHEETS
11	SD	11, 905	0.0/1.6 R9.9/R10.7	488	622

Gary Wang
REGISTERED CIVIL ENGINEER

April 20, 2012
PLANS APPROVAL DATE

REGISTERED PROFESSIONAL ENGINEER Gary Wang No. C58298 Exp. 6-30-12 CIVIL STATE OF CALIFORNIA

THE STATE OF CALIFORNIA OR ITS OFFICERS OR AGENTS SHALL NOT BE RESPONSIBLE FOR THE ACCURACY OR COMPLETENESS OF SCANNED COPIES OF THIS PLAN SHEET.

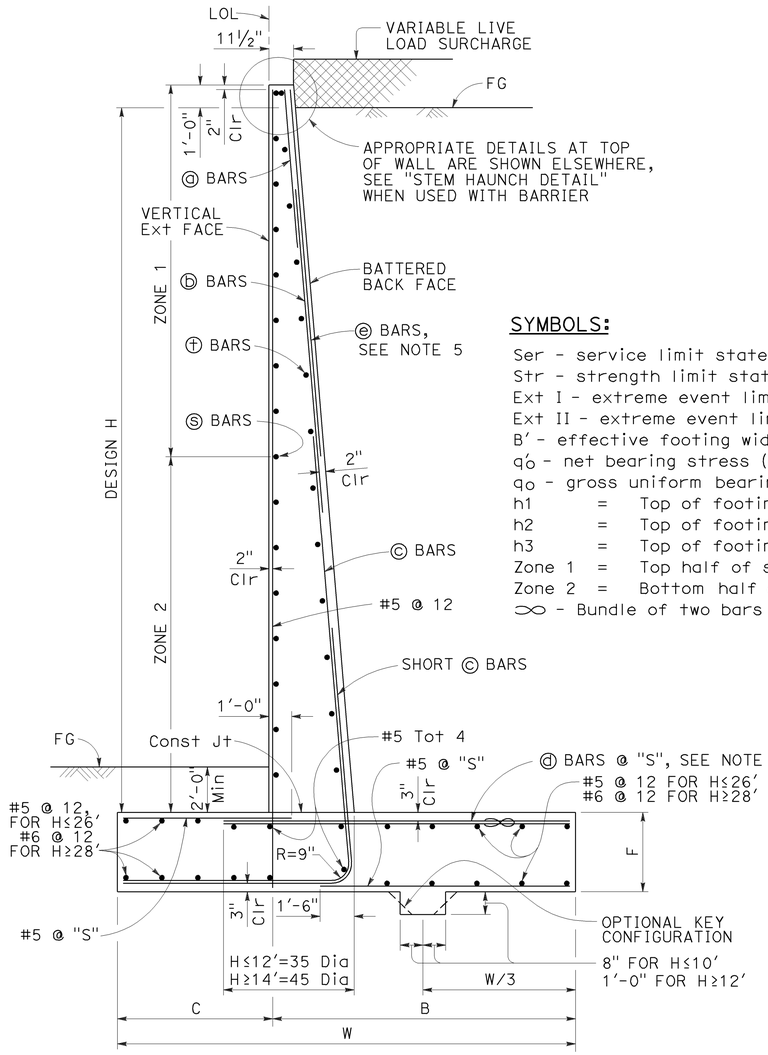

TYPICAL SECTION

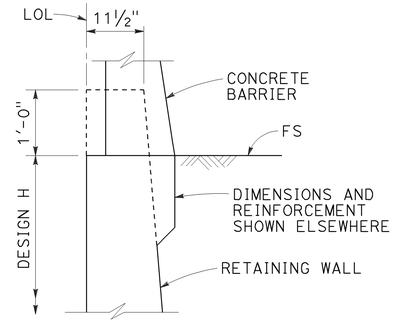

STEM HAUNCH DETAIL

SYMBOLS:

Ser - service limit state I
Str - strength limit state I
Ext I - extreme event limit state I
Ext II - extreme event limit state II
B' - effective footing width (ft)
q'o - net bearing stress (ksf), OG assumed to be FG at toe
qo - gross uniform bearing stress (ksf)
h1 = Top of footing to top of short ⓒ bar
h2 = Top of footing to top of ⓒ bar
h3 = Top of footing to top of ⓓ bar
Zone 1 = Top half of stem height
Zone 2 = Bottom half of stem height
∞ - Bundle of two bars

DESIGN CONDITIONS:

Design H may be exceeded by 6" before going to the next size. Special footing design is required where foundation material is incapable of supporting bearing stress listed in the table.

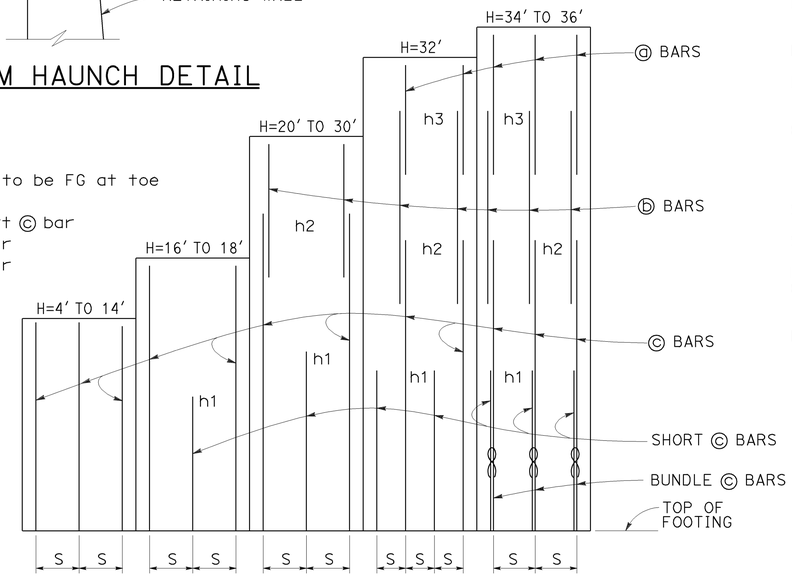

ELEVATION

DESIGN NOTES:

TO ACCOMPANY PLANS DATED 04-22-13

DESIGN: AASHTO LRFD Bridge Design Specifications, 4th Edition with California Amendments

LS: Varied surcharge on level ground surface

DC: Stem Architectural Treatment of thickness up to 6" of concrete (75 psf) considered

CT: 54 kip transverse force applied at He = 32", distributed over 10 feet at the top of wall and 1 : 1 distribution down and outward. Distribution below footing taken no less than 40'.

SEISMIC: $k_h = 0.2$, $k_v = 0.0$

SOIL: $\phi = 34°$, $\gamma = 120$ pcf

REINFORCED CONCRETE: f'c = 3,600 psi, fy = 60,000 psi

LOAD COMBINATIONS AND LIMIT STATES:

Service I	Q = 1.00DC+1.00EV+1.00EH+1.00LS
Strength I	Q = αDC+βEV+ηEH+1.75LS
Extreme I	Q = 1.00DC+1.00EV+1.00EH+1.00EQD+1.00EQE
Extreme II	Q = 1.00DC+1.00EV+1.00EH+1.00CT

Where:

Q:	Force Effects
α:	1.25 or 0.90, Whichever Controls Design
β:	1.35 or 1.00, Whichever Controls Design
η:	1.50 or 0.90, Whichever Controls Design
DC:	Dead Load of Structure Components
EH:	Horizontal Earth Fill Pressure
EV:	Vertical Earth Pressure from Earth Fill Weight
LS:	Live Load Surcharge
EQE:	Seismic Earth Pressure
EQD:	Soil and Structural and Nonstructural Components Inertia
CT:	Vehicular Collision Force

NOTES:

1. For details not shown and drainage notes see RSP B3-5
2. For wall stem joint details see B0-3 / 3-3 and B0-3 / 3-4
3. At ⓒ bars:
   H ≤ 6', no splices are allowed within 1'-8" above the top of footing.
   H > 6', no splices are allowed within H/4 above the top of footing.
4. Bundle ⓓ bars for H = 34' & 36'.
5. Provide #6 @ 10" x 15'-0" ⓔ bars over a distance of 8'-0" measured from all expansion joints, begin wall and end wall locations. For H ≤ 14', hook ⓔ bar into footing and reduce bar length as needed to maintain Min Clr cover.

TABLE OF REINFORCING STEEL, DIMENSIONS AND DATA

DESIGN H	4'	6'	8'	10'	12'	14'	16'	18'	20'	22'	24'	26'	28'	30'	32'	34'	36'
W	6'-10"	7'-0"	7'-3"	7'-7"	8'-4"	9'-7"	10'-9"	12'-0"	13'-3"	14'-6"	15'-9"	17'-1"	18'-5"	19'-10"	21'-2"	22'-7"	24'-0"
C	2'-2"	2'-3"	2'-3"	2'-4"	2'-6"	3'-0"	3'-6"	4'-0"	4'-6"	5'-0"	5'-5"	6'-0"	6'-6"	7'-2"	7'-8"	8'-2"	9'-0"
B	4'-8"	4'-9"	5'-0"	5'-3"	5'-10"	6'-7"	7'-3"	8'-0"	8'-9"	9'-6"	10'-4"	11'-1"	11'-11"	12'-8"	13'-6"	14'-5"	15'-0"
F	1'-4"	1'-4"	1'-4"	1'-4"	1'-6"	1'-8"	1'-8"	1'-9"	1'-9"	1'-11"	2'-2"	2'-5"	2'-10"	3'-3"	3'-6"	4'-0"	4'-3"
BATTER	½: 12	½: 12	½: 12	½: 12	½: 12	½: 12	½: 12	½: 12	½: 12	½: 12	⅝: 12	⅝: 12	¾: 12	⅞: 12	1 : 12	1 : 12	1 : 12
SPACING "S"	9"	9"	9"	9"	9"	7"	6"	5"	6"	6"	6"	6"	6"	6"	6"	10"	8"
ⓐ BARS	-	-	-	-	-	-	-	-	-	-	-	-	-	-	#7	#7	#6
ⓑ BARS	-	-	-	-	-	-	-	-	#7	#7	#7	#7	#7	#7	#9	#9	#8
ⓒ BARS	#6	#6	#6	#6	#6	#6	#7	#7	#8	#9	#9	#10	#10	#10	#11	#11	#11
ⓓ BARS	#5	#5	#6	#6	#6	#6	#9	#8	#8	#9	#9	#10	#10	#10	#11	#11	#11
h1	-	-	-	-	-	-	5'-9"	5'-10"	8'-0"	9'-0"	10'-1"	11'-0"	12'-1"	13'-0"	13'-0"	12'-7"	11'-6"
h2	-	-	-	-	-	-	-	-	10'-5"	13'-0"	14'-7"	17'-6"	19'-0"	20'-5"	19'-0"	18'-0"	20'-2"
h3	-	-	-	-	-	-	-	-	-	-	-	-	-	-	21'-2"	21'-10"	24'-0"
ZONE 1 ⓢ BARS	#5 @ 18	#5 @ 18	#5 @ 18	#5 @ 18	#5 @ 18	#5 @ 18	#5 @ 18	#5 @ 18	#5 @ 18	#5 @ 18	#5 @ 12	#5 @ 12	#5 @ 12	#5 @ 12	#5 @ 12	#5 @ 12	#5 @ 12
ZONE 2 ⓢ BARS	#5 @ 18	#5 @ 18	#5 @ 18	#5 @ 18	#5 @ 18	#5 @ 18	#5 @ 12	#5 @ 12	#5 @ 12	#5 @ 12	#5 @ 12	#5 @ 12	#6 @ 12	#6 @ 12	#6 @ 12	#7 @ 12	#7 @ 12
ZONE 1 ⓣ BARS	#4 @ 18	#4 @ 18	#4 @ 18	#4 @ 18	#4 @ 18	#4 @ 18	#4 @ 18	#4 @ 18	#4 @ 18	#4 @ 18	#4 @ 12	#4 @ 12	#4 @ 18	#4 @ 12	#4 @ 12	#4 @ 12	#4 @ 12
ZONE 2 ⓣ BARS	#4 @ 18	#4 @ 18	#4 @ 18	#4 @ 18	#4 @ 18	#4 @ 18	#4 @ 18	#4 @ 18	#4 @ 18	#4 @ 18	#4 @ 12	#4 @ 12	#4 @ 12	#4 @ 12	#5 @ 12	#5 @ 12	#5 @ 12
Ser: B', q'_o	6.8, 0.7	6.5, 1.0	6.2, 1.3	6.0, 1.6	6.3, 2.0	7.5, 2.1	8.6, 2.2	9.8, 2.3	11.0, 2.4	12.1, 2.5	13.2, 2.8	14.4, 2.9	15.5, 3.1	16.8, 3.3	18.0, 3.5	19.2, 3.7	20.6, 3.7
Str: B', q_o	6.6, 1.6	5.0, 1.8	3.6, 2.3	3.0, 3.3	3.2, 4.0	4.3, 3.8	5.3, 3.7	6.4, 3.7	7.4, 3.8	8.2, 4.1	9.0, 4.4	9.9, 4.6	10.7, 4.9	11.7, 5.2	12.6, 5.4	13.6, 5.8	14.6, 5.9
Ext I: B', q_o	5.2, 1.1	4.7, 1.5	3.9, 2.2	3.1, 3.4	2.8, 4.8	3.2, 5.3	3.6, 5.7	4.1, 6.1	4.6, 6.4	5.0, 6.9	5.3, 7.6	5.8, 8.1	6.1, 8.9	6.7, 9.4	7.1, 10.0	7.5, 10.7	8.2, 10.9
Ext II: B', q_o	2.6, 2.2	2.7, 2.6	2.8, 3.1	2.9, 3.6	3.7, 3.6	5.2, 3.3	6.7, 3.1	8.3, 3.0	9.8, 3.0	11.2, 3.1	12.5, 3.2	13.9, 3.4	15.2, 3.6	16.7, 3.8	18.0, 4.0	19.3, 4.2	20.8, 4.3

STATE OF CALIFORNIA
DEPARTMENT OF TRANSPORTATION

RETAINING WALL TYPE 1 (CASE 1)

NO SCALE

RSP B3-1A DATED APRIL 20, 2012 SUPPLEMENTS THE STANDARD PLANS BOOK DATED 2010.

REVISED STANDARD PLAN RSP B3-1A

2010 REVISED STANDARD PLAN RSP B3-1A

2-22-12

Dist	COUNTY	ROUTE	POST MILES TOTAL PROJECT	SHEET No.	TOTAL SHEETS
11	SD	11, 905	0.0/1.6 R9.9/R10.7	489	622

Gary Wang
REGISTERED CIVIL ENGINEER

April 20, 2012
PLANS APPROVAL DATE

REGISTERED PROFESSIONAL ENGINEER Gary Wang No. C58298 Exp. 6-30-12 CIVIL STATE OF CALIFORNIA

THE STATE OF CALIFORNIA OR ITS OFFICERS OR AGENTS SHALL NOT BE RESPONSIBLE FOR THE ACCURACY OR COMPLETENESS OF SCANNED COPIES OF THIS PLAN SHEET.

TO ACCOMPANY PLANS DATED 04-22-13

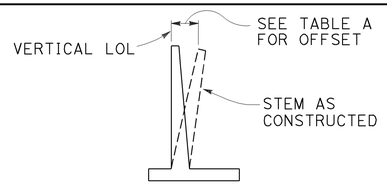

APPROXIMATE WALL OFFSET VALUES

Values for offseting forms to be determined by the Engineer.

TABLE A

H	OFFSET
4'-12'	H/200
14'-16'	H/160
18'-20'	H/140
22'-24'	H/130
26'-36'	2½"

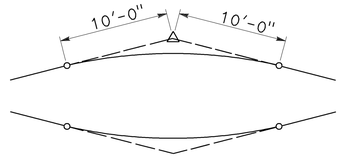

20'-0" VC AT TOP OF WALL SLOPE CHANGE

Where shown on the plans

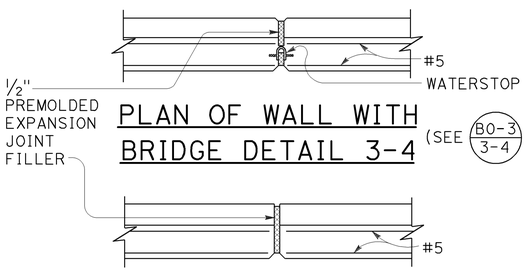

PLAN OF WALL WITH BRIDGE DETAIL 3-4

(SEE B0-3 / 3-4)

PLAN OF WALL WITH EXPANSION JOINT ONLY

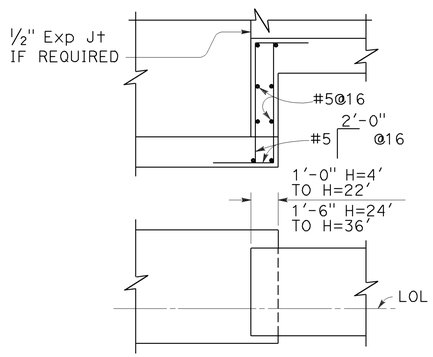

FOOTING STEP

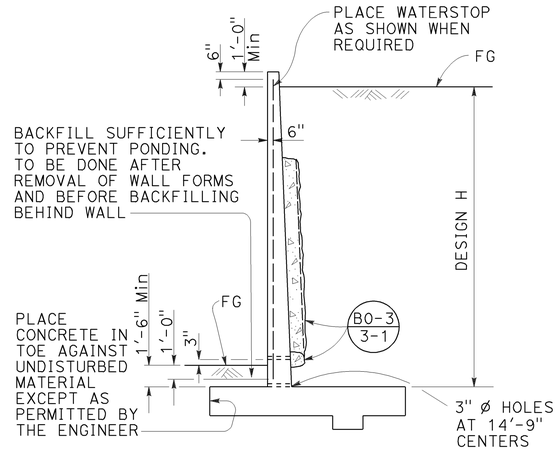

DESIGN AND DRAINAGE

DESIGN CONDITIONS:

Design "H" may be exceeded by 6" before going to the next size. Special footing design is required where foundation material is incapable of supporting bearing stress listed in table

Return wall not required unless shown elsewhere

DESIGN NOTES:

DESIGN: AASHTO LRFD Bridge Design Specifications, 4th edition with California Amendments

LIVE LOAD: Surcharge on level ground surface

SOIL: ϕ = 34°
γ = 120 pcf

REINFORCED CONCRETE: fy = 60,000 psi
fc' = 3,600 psi

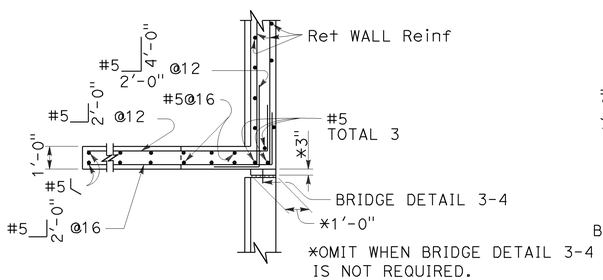

PLAN

(For return wall Type "A")

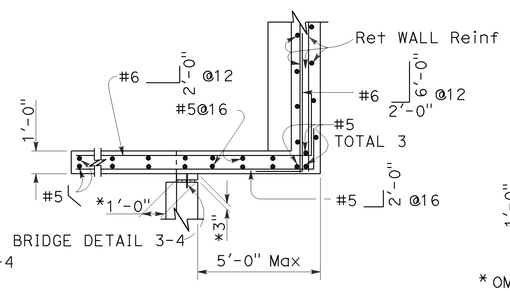

PLAN

(For return wall Type "B")

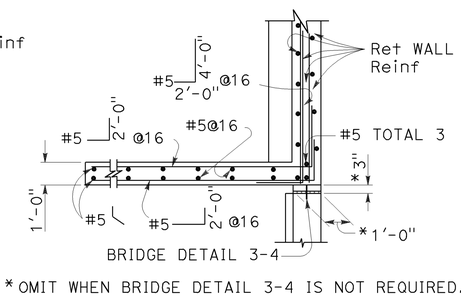

* OMIT WHEN BRIDGE DETAIL 3-4 IS NOT REQUIRED.

PLAN

(For return wall Type "C")

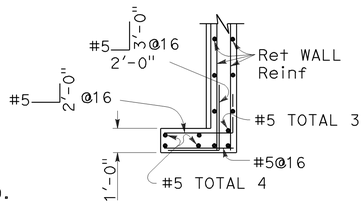

PLAN

(For return wall Type "D")

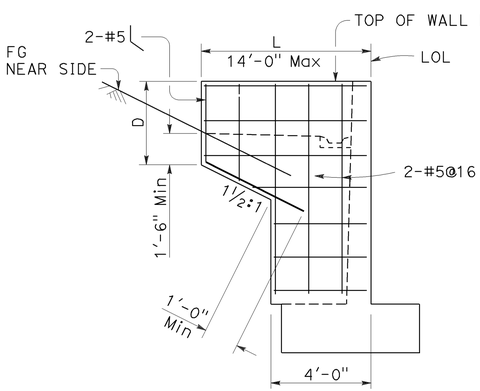

ELEVATION

RETURN WALL TYPE "A"

Use where H=8' or less

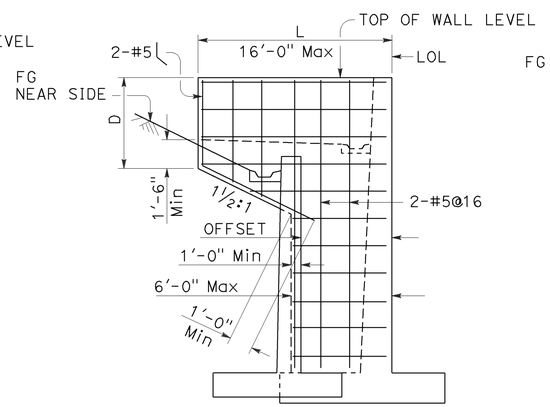

ELEVATION

RETURN WALL TYPE "B"

Use where H=10' or more on offset walls

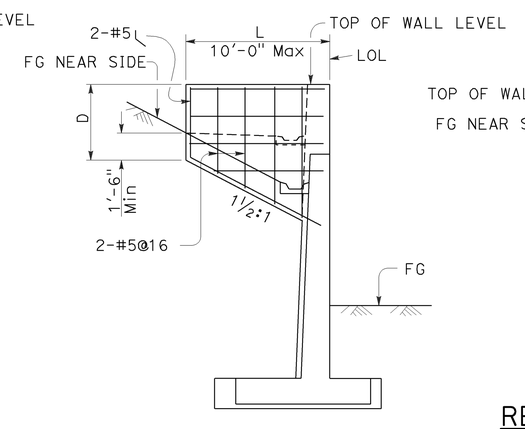

ELEVATION

RETURN WALL TYPE "C"

Use where H=10' or more on straight walls

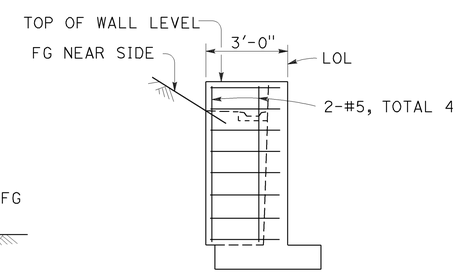

ELEVATION

RETURN WALL TYPE "D"

Use where H=6' or less

STATE OF CALIFORNIA
DEPARTMENT OF TRANSPORTATION

RETAINING WALL DETAILS No. 1

NO SCALE

RSP B3-5 DATED APRIL 20, 2012 SUPERSEDES STANDARD PLAN B3-5 DATED MAY 20, 2011 - PAGE 277 OF THE STANDARD PLANS BOOK DATED 2010.

REVISED STANDARD PLAN RSP B3-5

2010 REVISED STANDARD PLAN RSP B3-5

Dist	COUNTY	ROUTE	POST MILES TOTAL PROJECT	SHEET No.	TOTAL SHEETS
11	SD	11, 905	0.0/1.6 R9.9/R10.7	490	622

REGISTERED CIVIL ENGINEER

October 21, 2011
PLANS APPROVAL DATE

REGISTERED PROFESSIONAL ENGINEER Tillat Satter No. C42892 Exp. 3-31-12 CIVIL STATE OF CALIFORNIA

THE STATE OF CALIFORNIA OR ITS OFFICERS OR AGENTS SHALL NOT BE RESPONSIBLE FOR THE ACCURACY OR COMPLETENESS OF SCANNED COPIES OF THIS PLAN SHEET.

TO ACCOMPANY PLANS DATED 04-22-13

2010 REVISED STANDARD PLAN RSP B11-47

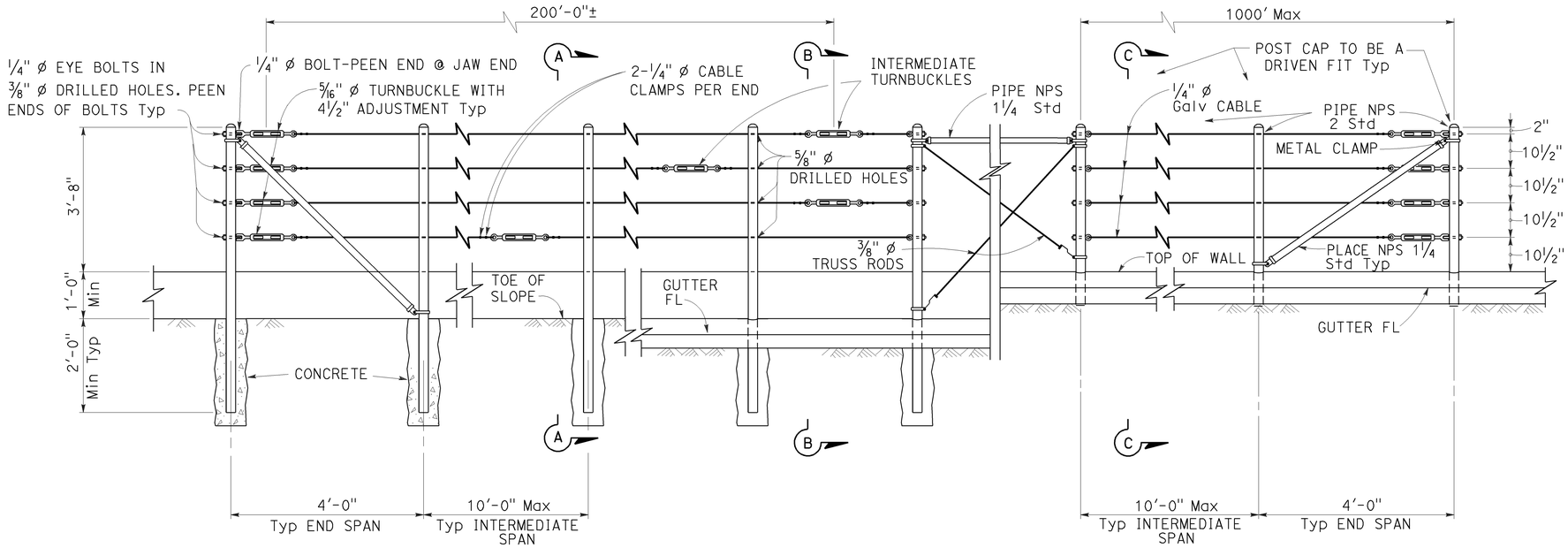

EXISTING WALL (WITHOUT GUTTER)
Existing

RETAINING WALL (WITH GUTTER)
Existing

RETAINING WALL (WITH GUTTER)
New construction

ELEVATION

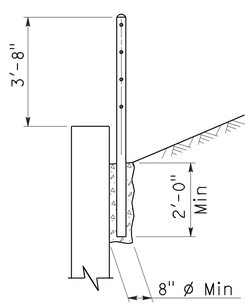

SECTION A-A
Existing

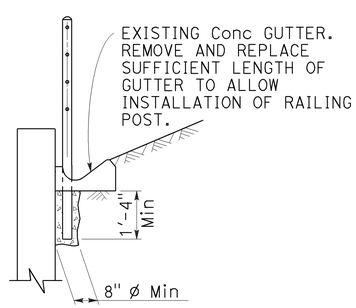

SECTION B-B
Existing

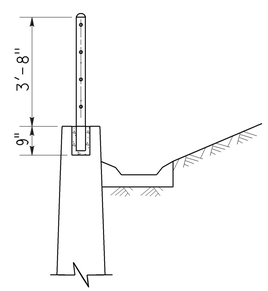

SECTION C-C
New construction

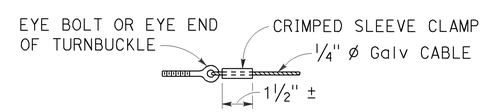

ALTERNATIVE CABLE CONNECTION

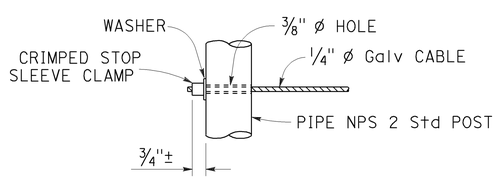

ALTERNATIVE DEAD END ANCHORAGE

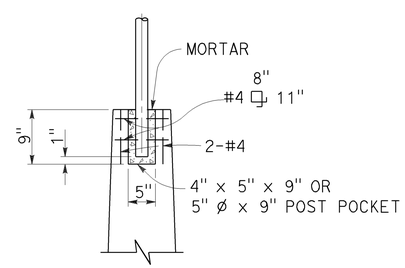

POST POCKET

NOTES:

1. Maximum distance between turnbuckles shall be 200'-0"±.
2. Intermediate turnbuckles to be placed in adjacent spans.
3. Cable shall not be spliced between intermediate turnbuckles and end posts.
4. Posts to be vertical.
5. Alignment of holes in posts may vary to conform to slope of top of retaining wall.
6. The Contractor shall verify all dependent dimensions in the field before ordering or fabricating any material.
7. Line posts shall be braced horizontally and trussed diagonally in both directions at intervals not to exceed 1000'.
8. Post pockets to be centered in top of wall.
9. Typical end spans, braced in both directions, shall be constructed at changes in line where the angle of deflection is 15° or more.
10. Provide thimbles at all cable loops.

STATE OF CALIFORNIA
DEPARTMENT OF TRANSPORTATION

CABLE RAILING

NO SCALE

RSP B11-47 DATED OCTOBER 21, 2011 SUPERSEDES STANDARD PLAN B11-47 DATED MAY 20, 2011 - PAGE 293 OF THE STANDARD PLANS BOOK DATED 2010.

REVISED STANDARD PLAN RSP B11-47

9-14-11

DIST	COUNTY	ROUTE	POST MILES TOTAL PROJECT	SHEET NO.	TOTAL SHEETS
11	SD	11, 905	0.0/1.6 R9.9/R10.7	491	622

Jeffrey G. McRae
REGISTERED ELECTRICAL ENGINEER

January 20, 2012
PLANS APPROVAL DATE

REGISTERED PROFESSIONAL ENGINEER Jeffery G. McRae No. E14512 Exp. 6-30-12 ELECTRICAL STATE OF CALIFORNIA

THE STATE OF CALIFORNIA OR ITS OFFICERS OR AGENTS SHALL NOT BE RESPONSIBLE FOR THE ACCURACY OR COMPLETENESS OF SCANNED COPIES OF THIS PLAN SHEET.

TO ACCOMPANY PLANS DATED 04-22-13

2010 REVISED STANDARD PLAN RSP ES-8A

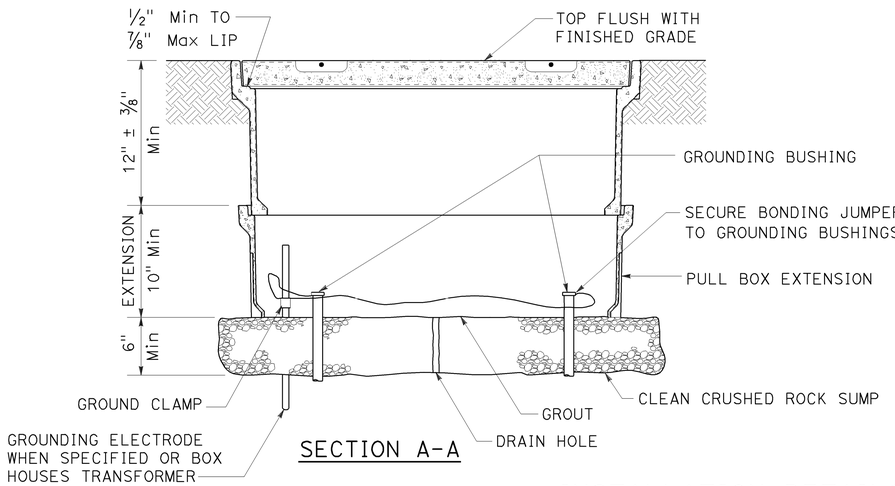

SECTION A-A

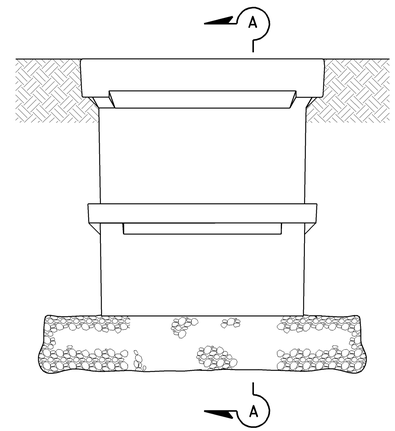

SIDE VIEW

INSTALLATION DETAILS

DETAIL A

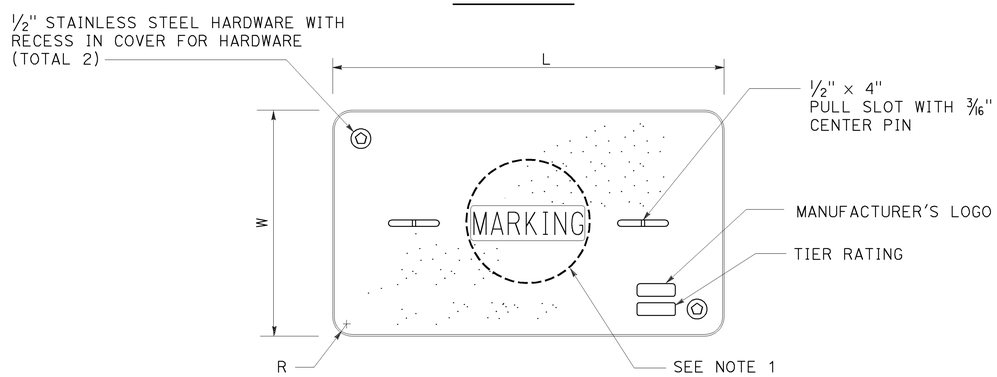

COVER TOP VIEW

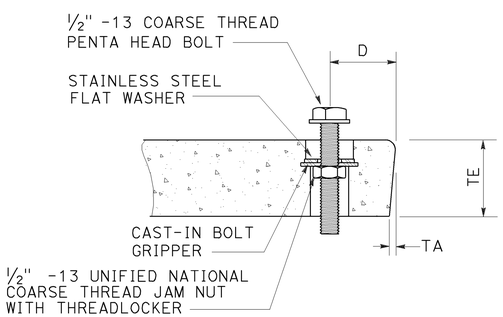

TYPICAL COVER CAPTIVE BOLT

OR SIMILAR

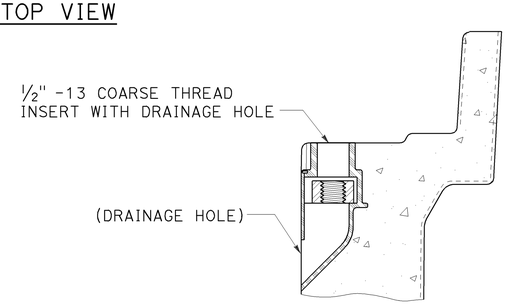

TYPICAL THREADED INSERT

OR SIMILAR

DIMENSION TABLE

PULL BOX	PULL BOX			COVER						
	MINIMUM DEPTH BOX	MINIMUM DEPTH EXTENSION	MAXIMUM WEIGHT	L	W	R	TE	TA	D	MAXIMUM WEIGHT
No. 3½	12"	N/A	40 lb	1′ - 3⅜"	10⅛"	1⅜"	2"	⅛"	1¾"	30 lb
No. 5	12"	10"	55 lb	1′ - 11¼"	1′ - 1¾"	1⅜"	2"	⅛"	1¾"	60 lb
No. 6	12"	10"	70 lb	2′ - 6½"	1′ - 5½"	1⅜"	2"	⅛"	2"	85 lb

NOTES ON PULL BOXES:

1. Pull box covers must be marked as follows: "SERVICE" Service circuits between service point and service disconnect; "SPRINKLER-CONTROL" sprinkler control circuits, 50 V or less; "CALTRANS" on all pull boxes, except pull boxes marked "SPRINKLER-CONTROL"; and "TELEPHONE" Telephone service;

   A) No. 3½ pull box.
      1) "SIGNAL" - Traffic signal circuits with or without street or sign lighting circuits.
      2) "ST LIGHTING" - Street or sign lighting circuits where voltage is under 600 V.

   B) No. 5, 6, 9 or 9A pull box.
      1) "TRAFFIC SIGNAL" - Traffic signal circuits with or without street or sign lighting circuits.
      2) "STREET LIGHTING" - Street or sign lighting circuits where voltage is under 600 V.
      3) "STREET LIGHTING-HIGH VOLTAGE" - Street or sign lighting circuits where voltage is above 600 V.
      4) "IRRIGATION" - Circuits to irrigation controller 120 V or more.
      5) "RAMP METER" - Ramp meter circuits.
      6) "COUNT STATION" - Count or speed monitor circuits.
      7) "COMMUNICATIONS" - Communication circuits.
      8) "TOS COMMUNICATIONS" - TOS communication line.
      9) "TOS POWER" - TOS power.
      10) "TDC POWER" - Telephone demarcation cabinet power.
      11) "CCTV" - Closed circuit television circuits.
      12) "TMS" - Traffic monitoring station circuits.
      13) "CMS" - Changeable message sign circuits.
      14) "HAR" - Highway advisory radio circuits.

2. The nominal dimensions of the opening in which the cover sets must be the same as the cover dimensions (L and W) plus ⅛" or greater.
3. Covers and boxes must be interchangeable with California Standard. When interchanged with a standard, the top surfaces must be flush within ⅛". Top outside radius of covers and pull boxes must have a ⅛" radius.
4. Pull box extension may be another pull box as long as the bottom edge of the pull box can fit into the cover opening.

STATE OF CALIFORNIA
DEPARTMENT OF TRANSPORTATION

ELECTRICAL SYSTEMS (PULL BOX)

NO SCALE

RSP ES-8A DATED JANUARY 20, 2012 SUPPLEMENTS THE STANDARD PLANS BOOK DATED 2010.

REVISED STANDARD PLAN RSP ES-8A

01-09-12

DIST	COUNTY	ROUTE	POST MILES TOTAL PROJECT	SHEET NO.	TOTAL SHEETS
11	SD	11, 905	0.0/1.6 R9.9/R10.7	492	622

REGISTERED ELECTRICAL ENGINEER

January 20, 2012
PLANS APPROVAL DATE

REGISTERED PROFESSIONAL ENGINEER
Jeffery G. McRae
No. E14512
Exp. 6-30-12
ELECTRICAL
STATE OF CALIFORNIA

THE STATE OF CALIFORNIA OR ITS OFFICERS OR AGENTS SHALL NOT BE RESPONSIBLE FOR THE ACCURACY OR COMPLETENESS OF SCANNED COPIES OF THIS PLAN SHEET.

TO ACCOMPANY PLANS DATED 04-22-13

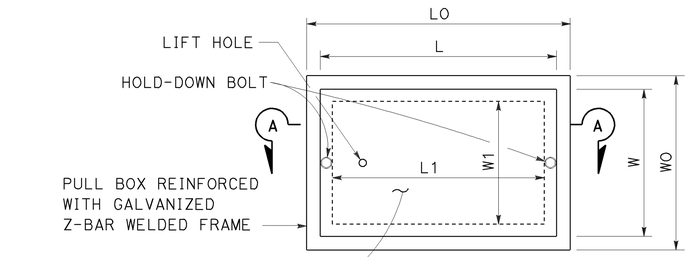

TOP VIEW

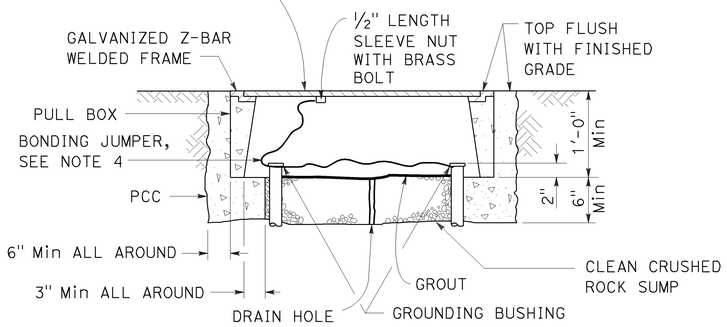

SECTION A-A

No. 3½(T), No. 5(T) AND No. 6(T) TRAFFIC PULL BOX

NOTES ON PULL BOXES:

1. Traffic pull box shall be provided with steel cover and special concrete footing. Steel cover shall have embossed non-skid pattern.
2. Steel reinforcing shall be as regularly used in the standard products of the respective manufacturer.
3. Pull box covers must be marked as follows: "SERVICE" Service circuits between service point and service disconnect; "SPRINKLER-CONTROL" Sprinkler control circuits, 50 V or less; "CALTRANS" On all pull boxes, except pull boxes marked "SPRINKLER-CONTROL"; and "TELEPHONE" Telephone service.
   A) No. 3½(T) pull box.
      1) "SIGNAL" - Traffic signal circuits with or without street or sign lighting circuits.
      2) "ST LIGHTING" - Street or sign lighting circuits where voltage is under 600 V.
   B) No. 5(T) or 6(T) pull box.
      1) "TRAFFIC SIGNAL" - Traffic signal circuits with or without street or sign lighting circuits.
      2) "STREET LIGHTING" - Street or sign lighting circuits where voltage is under 600 V.
      3) "STREET LIGHTING-HIGH VOLTAGE" - Street or sign lighting circuits where voltage is above 600 V.
      4) "IRRIGATION" - Circuits to irrigation controller 120 V or more.
      5) "RAMP METER" - Ramp meter circuits.
      6) "COUNT STATION" - Count or speed monitor circuits.
      7) "COMMUNICATION" - Communication circuits.
      8) "TOS COMMUNICATIONS" - TOS communications line.
      9) "TOS POWER" - TOS power.
      10) "TDC POWER" - Telephone demarcation cabinet power.
      11) "CCTV" - Closed circuit television circuits.
      12) "TMS" - Traffic monitoring station circuits.
      13) "CMS" - Changeable message sign circuits.
      14) "HAR" - Highway advisory radio circuits.
4. Bonding jumper for metal covers shall be 3' long, minimum.
5. The nominal dimensions of the opening in which the cover sets must be the same as the cover dimensions except the length and width dimensions shall be ⅛" greater.
6. Covers and boxes must be interchangeable with California standard male and female gages. When interchanged with a standard male or female gage, the top surfaces must be flush within ⅛".

DIMENSION TABLE

PULL BOX	BOX						COVER				
	MINIMUM * THICKNESS	MINIMUM DEPTH BOX AND EXTENSION	WO	LO	L1	W1	L **	W **	R	EDGE THICKNESS	EDGE TAPER
No. 3½(T)	1½"	1'-0"	1'-5"± 1"	1'-8⅞"±	1'-2½"±	10⅝"± 1"	1'-8"±	1'-1¾"±	0"	½"	NONE
No. 5(T)	1¾"	1'-0"	1'-11½"± 1"	2'-5½"±	1'-7"±	1'-1"± 1"	2'-3"±	1'-4"±	0"	½"	NONE
No. 6(T)	2"	1'-0"	2'-6"± 1"	2'-11½"±	1'-11½"±	1'-5"± 1"	2'-9"±	1'-8"±	0"	½"	NONE

* EXCLUDING CONDUIT WEB ** TOP DIMENSION

STATE OF CALIFORNIA
DEPARTMENT OF TRANSPORTATION

ELECTRICAL SYSTEMS (TRAFFIC RATED PULL BOX)

NO SCALE

RSP ES-8B DATED JANUARY 20, 2012 SUPPLEMENTS THE STANDARD PLANS BOOK DATED 2010.

REVISED STANDARD PLAN RSP ES-8B

2010 REVISED STANDARD PLAN RSP ES-8B

Dist	COUNTY	ROUTE	POST MILES TOTAL PROJECT	SHEET No.	TOTAL SHEETS
11	SD	11, 905	0.0/1.6 R9.9/R10.7	493	622

REGISTERED ELECTRICAL ENGINEER

July 20, 2012
PLANS APPROVAL DATE

REGISTERED PROFESSIONAL ENGINEER
Jeffery G. McRae
No. E14512
Exp. 6-30-14
ELECTRICAL
STATE OF CALIFORNIA

THE STATE OF CALIFORNIA OR ITS OFFICERS OR AGENTS SHALL NOT BE RESPONSIBLE FOR THE ACCURACY OR COMPLETENESS OF SCANNED COPIES OF THIS PLAN SHEET.

TO ACCOMPANY PLANS DATED 04-22-13

ISOFOOTCANDLE CURVE - MINIMUM

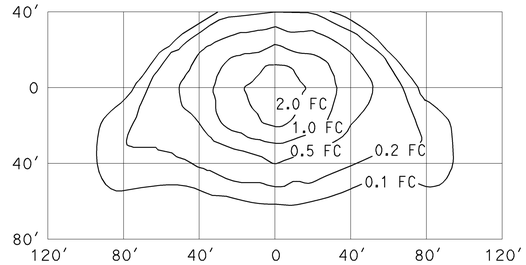

TYPE III MEDIUM CUTOFF

Cutoff Luminaire
34′ Mounting Height
Lamp operated at 22,000 lm
200-W high pressure sodium lamp
ANSI Designation S66

ISOFOOTCANDLE CURVE - MINIMUM

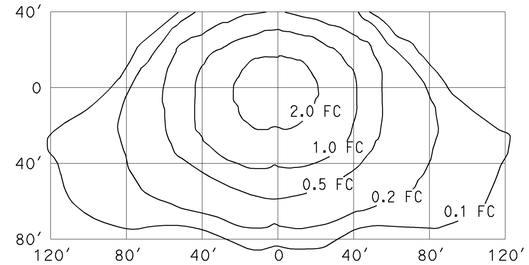

TYPE III MEDIUM CUTOFF

Cutoff Luminaire
40′ Mounting Height
Lamp operated at 37,000 lm
310-W high pressure sodium lamp
ANSI Designation S67

ISOFOOTCANDLE CURVE - MINIMUM

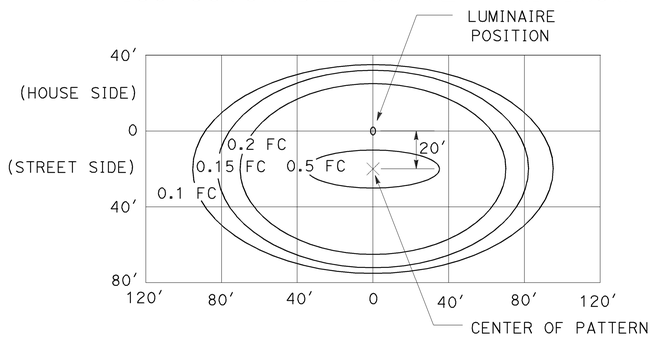

LED LUMINAIRE ROADWAY 1

200-W HPS Equivalent at 34′ Mounting Height

ISOFOOTCANDLE CURVE - MINIMUM

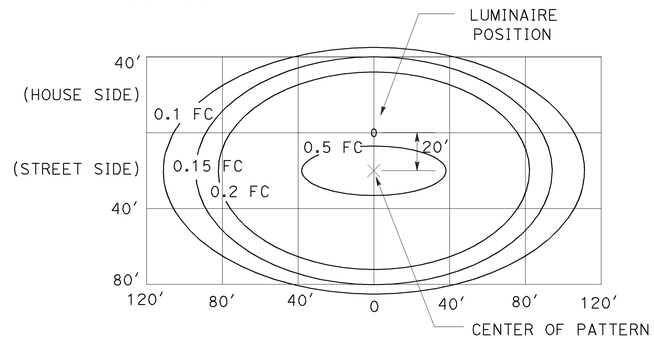

LED LUMINAIRE ROADWAY 2

310-W HPS Equivalent at 40′ Mounting Height

ISOFOOTCANDLE CURVE - MINIMUM

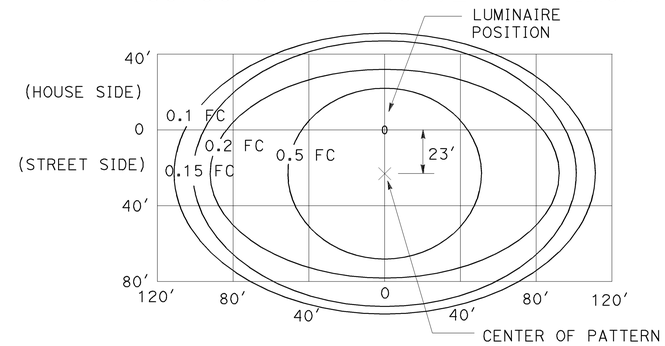

LED LUMINAIRE ROADWAY 4

400-W HPS Equivalent at 40′ Mounting Height

ISOFOOTCANDLE CURVE - MINIMUM

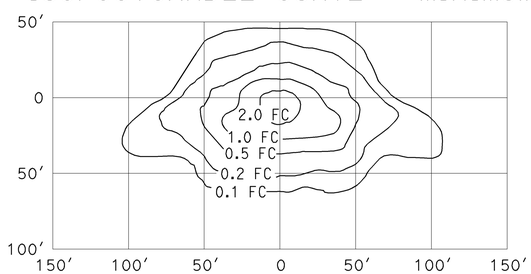

TYPE III MEDIUM CUTOFF

Cutoff Luminaire
30′ Mounting Height
Lamp operated at 16,000 lm
150-W high pressure sodium lamp
ANSI Designation S55

ISOFOOTCANDLE CURVE - MINIMUM

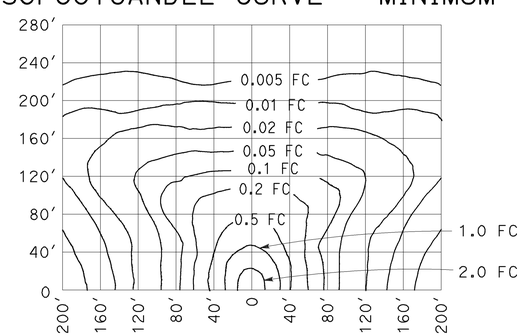

LOW PRESSURE SODIUM LUMINAIRE

40′ Mounting Height
Lamp operated at 33,000 lm
180-W low pressure sodium lamp

STATE OF CALIFORNIA
DEPARTMENT OF TRANSPORTATION

ELECTRICAL SYSTEMS (ISOFOOTCANDLE DIAGRAMS)

NO SCALE

RSP ES-10A DATED JULY 20, 2012 SUPPLEMENTS THE STANDARD PLANS BOOK DATED 2010.

REVISED STANDARD PLAN RSP ES-10A

2010 REVISED STANDARD PLAN RSP ES-10A

2-16-12

Dist	COUNTY	ROUTE	POST MILES TOTAL PROJECT	SHEET No.	TOTAL SHEETS
11	SD	11, 905	0.0/1.6 R9.9/R10.7	494	622

REGISTERED ELECTRICAL ENGINEER

July 20, 2012
PLANS APPROVAL DATE

REGISTERED PROFESSIONAL ENGINEER
Jeffery G. McRae
No. E14512
Exp. 6-30-14
ELECTRICAL
STATE OF CALIFORNIA

THE STATE OF CALIFORNIA OR ITS OFFICERS OR AGENTS SHALL NOT BE RESPONSIBLE FOR THE ACCURACY OR COMPLETENESS OF SCANNED COPIES OF THIS PLAN SHEET.

TO ACCOMPANY PLANS DATED 04-22-13

ISOFOOTCANDLE CURVE - MINIMUM

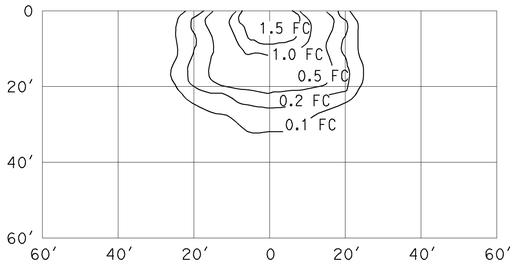

WALL LUMINAIRE
15′ Mounting Height
Lamp operated at 5,800 lm
70-W high pressure sodium lamp
ANSI Designation S62

ISOFOOTCANDLE CURVE - MINIMUM

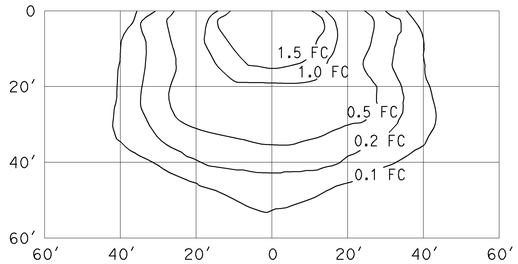

WALL LUMINAIRE
15′ Mounting Height
Lamp operated at 9,500 lm
100-W high pressure sodium lamp
ANSI Designation S54

ISOFOOTCANDLE CURVE - MINIMUM

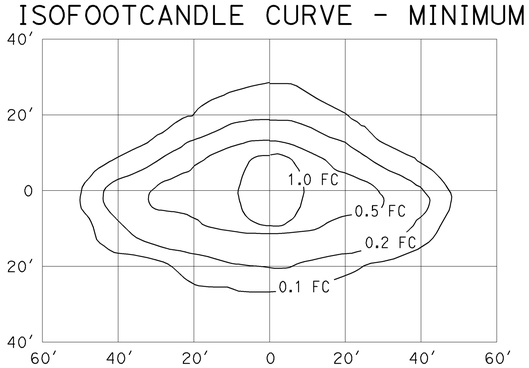

PENDANT SOFFIT LUMINAIRE
TYPE III SHORT
17′ Mounting Height
Lamp operated at 5,800 lm
70-W high pressure sodium lamp
ANSI Designation S62

ISOFOOTCANDLE CURVE - MINIMUM

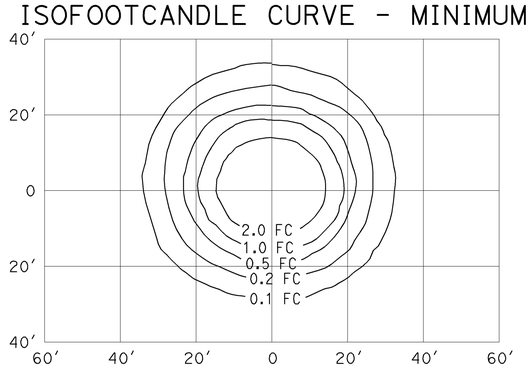

PENDANT SOFFIT LUMINAIRE
17′ Mounting Height
Lamp operated at 5,800 lm
70-W high pressure sodium lamp
ANSI Designation S62

ISOFOOTCANDLE CURVE - MINIMUM

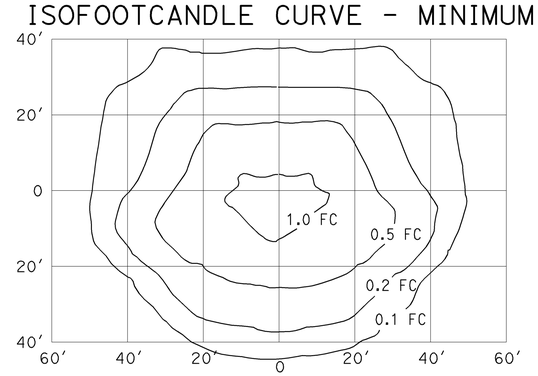

FLUSH SOFFIT LUMINAIRE
17′ Mounting Height
Lamp operated at 5,800 lm
70-W high pressure sodium lamp
ANSI Designation S62

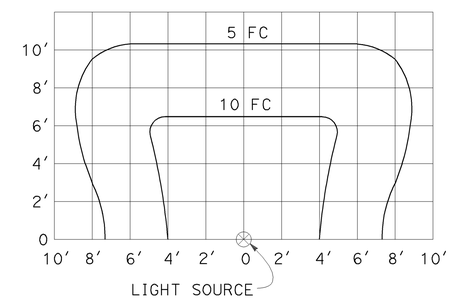

SIGN LIGHTING FIXTURE
ISOFOOTCANDLE DIAGRAM

NOTES:

1. Curves represent the minimum footcandle (FC) of initial illumination on a 10′-0" x 20′-0" panel.
2. The FC shown are with the fixture attached to the light fixture mounting channel which places the center of the source 4′-8" in front of panel and 1′-0" below the bottom edge.
3. Applicable lamp: 85-W fluorescent phosphor coated induction lamp.

STATE OF CALIFORNIA
DEPARTMENT OF TRANSPORTATION

ELECTRICAL SYSTEMS (ISOFOOTCANDLE DIAGRAMS)

NO SCALE

RSP ES-10B DATED JULY 20, 2012 SUPPLEMENTS THE STANDARD PLANS BOOK DATED 2010.

REVISED STANDARD PLAN RSP ES-10B

2010 REVISED STANDARD PLAN RSP ES-10B

DIST	COUNTY	ROUTE	POST MILES TOTAL PROJECT	SHEET No.	TOTAL SHEETS
11	SD	11,905	0.0/1.6, R9.9/R10.7	495	622

REGISTERED CIVIL ENGINEER — DATE 10-25-12

04-22-13
PLANS APPROVAL DATE

REGISTERED PROFESSIONAL ENGINEER — JOHN M. PETERSON No. C56837 Exp. 06-30-13 CIVIL — STATE OF CALIFORNIA

The State of California or its officers or agents shall not be responsible for the accuracy or completeness of electronic copies of this plan sheet.

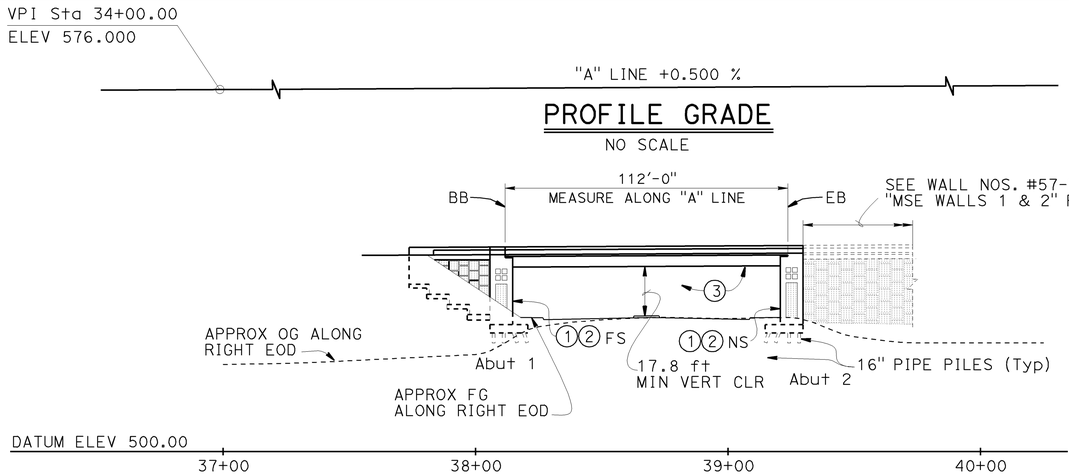

PROFILE GRADE

NO SCALE

ELEVATION

1" = 30'

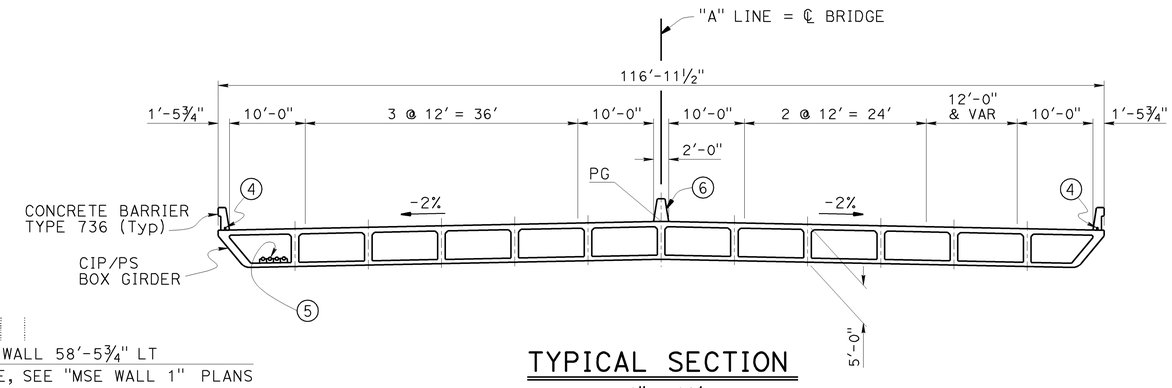

TYPICAL SECTION

1" = 10'

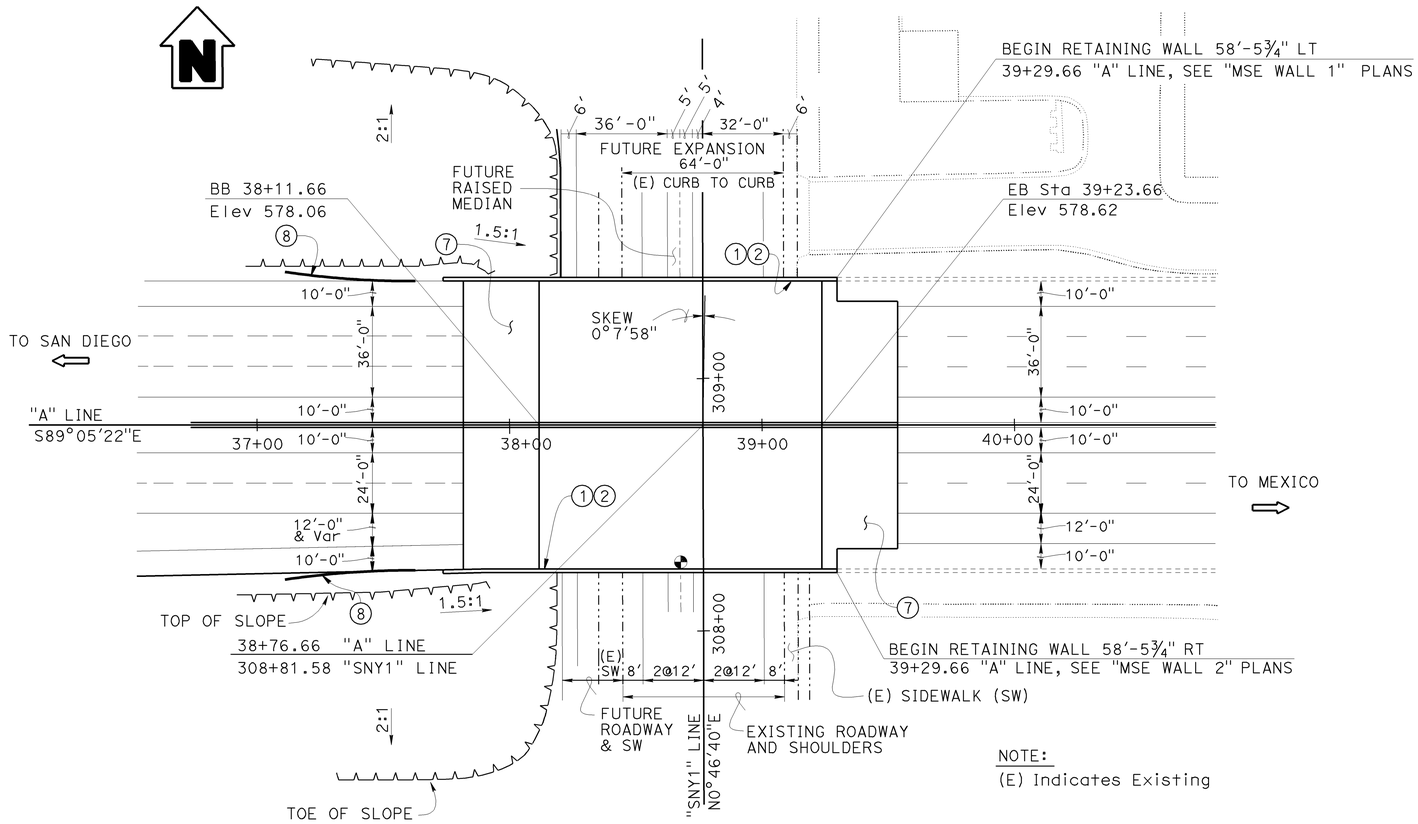

NOTE:
(E) Indicates Existing

PLAN

1" = 30'

QUANTITIES

STRUCTURE EXCAVATION (BRIDGE)	1,926	CY
STRUCTURE BACKFILL (BRIDGE)	2,184	CY
FURNISH PILING (CLASS 200)(ALTERNATIVE W)(MODIFIED)	3,473	LF
DRIVE PILE (CLASS 200)(ALTERNATIVE W)(MODIFIED)	100	EA
PRESTRESSING CAST-IN-PLACE CONCRETE	LUMP	SUM
STRUCTURAL CONCRETE, BRIDGE FOOTING	498	CY
STRUCTURAL CONCRETE, BRIDGE	1,627	CY
STRUCTURAL CONCRETE, APPROACH SLAB (TYPE N)	239	CY
FRACTURED RIB TEXTURE (MODIFIED)	2,177	SQFT
JOINT SEAL (MR 1")	230	LF
BAR REINFORCING STEEL (BRIDGE)	426,706	LB
MISCELLANEOUS IRON AND STEEL	1,384	LB
CONCRETE BARRIER (TYPE 60A)	172	LF
CONCRETE BARRIER (TYPE 736)	312	LF

NOTES:

1. Paint "Br. No. 57-1226"
2. Paint "Sanyo Avenue UC"
3. Soffit luminaire, total 2, see "Road Plans"
4. 2" ø Electrical Lighting Conduit 2 per side, see "Road Plans"
5. 5" ø Fiberglass Conduit for Fiber Optic lines, total 4, see "Road Plans"
6. Concrete Barrier Type 60A
7. Structure Approach Type N(30S)
8. MBGR see "Road Plans"

Indicates Point of Minimum Vertical Clearance
Indicates direction of traffic
Indicates existing
Indicates New Construction

DESIGN ENGINEER

	BY	CHECKED
DESIGN	J. M. Peterson	P. A. Peterson
DETAILS	JMP/ T. Nguyen	P. A. Peterson
QUANTITIES	P. A. Peterson	J. M. Peterson

LOAD & RESISTANCE FACTOR DESIGN — LIVE LOADING: HL93 W/"LOW-BOY"; PERMIT DESIGN VEHICLE
LAYOUT — BY J. M. Peterson — CHECKED P. A. Peterson
SPECIFICATIONS — BY T. Nedwick — PLANS AND SPECS COMPARED T. Nedwick

ORIGINAL SCALE IN INCHES FOR REDUCED PLANS 0 1 2 3

STATE OF CALIFORNIA
DEPARTMENT OF TRANSPORTATION

DIVISION OF ENGINEERING SERVICES
STRUCTURE DESIGN
DESIGN BRANCH 14

BRIDGE NO. 57-1226
POST MILE 0.80

SANYO AVENUE UNDERCROSSING
GENERAL PLAN

UNIT: 3613
PROJECT NUMBER & PHASE: 11000205191
CONTRACT NO.: 11-056321

DISREGARD PRINTS BEARING EARLIER REVISION DATES

REVISION DATES: 05-06-13 8-23-12 9-13-12 3-20-13

SHEET 1 OF 18

STRUCTURES DESIGN GENERAL PLAN SHEET (ENGLISH) (REV.09-01-10)

FILE => 57-1226-a-gp.dgn

USERNAME => s122751 DATE PLOTTED => 06-MAY-2013 TIME PLOTTED => 09:59

DIST	COUNTY	ROUTE	POST MILES TOTAL PROJECT	SHEET No.	TOTAL SHEETS
11	SD	11,905	0.0/1.6, R9.9/R10.7	496	622

REGISTERED CIVIL ENGINEER 10-25-12 DATE

04-22-13
PLANS APPROVAL DATE

REGISTERED PROFESSIONAL ENGINEER JOHN M. PETERSON No. C56837 Exp. 06-30-13 CIVIL STATE OF CALIFORNIA

The State of California or its officers or agents shall not be responsible for the accuracy or completeness of electronic copies of this plan sheet.

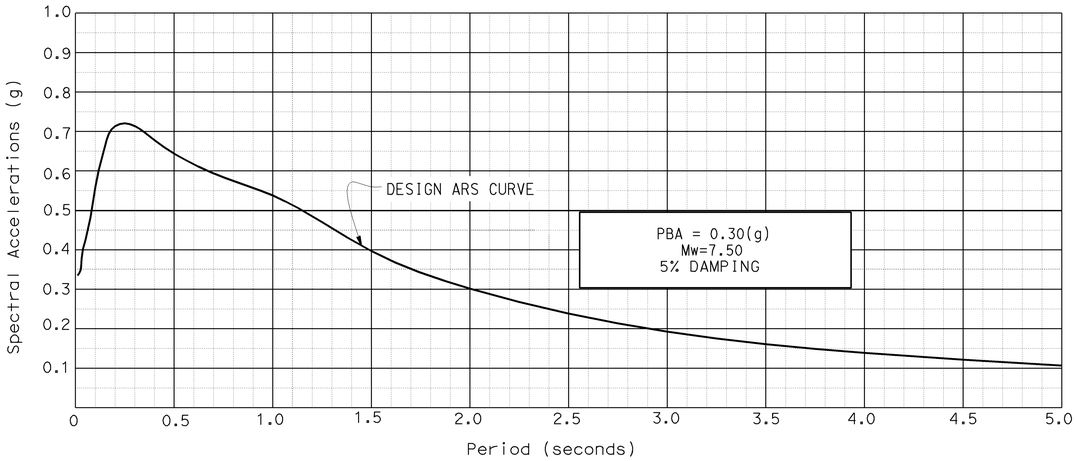

SITE SPECIFIC ACCELERATION RESPONSE SPECTRA

GENERAL NOTES
LOAD AND RESISTANCE FACTOR DESIGN

DESIGN: AASHTO LRFD BRIDGE DESIGN SPECIFICATIONS (4th edition 2007 and California Amendments dated December 2008 and September 2010).

SEISMIC DESIGN: CALTRANS SEISMIC DESIGN CRITERIA (SDC) Version 1.6 November 2010

DEAD LOAD: Includes 35 psf for future wearing surface.

LIVE LOADING: HL93 with "Low-Boy" and Permit Design Vehicle.

SEISMIC LOADING: See "Site Specific Acceleration Response Spectra"

REINFORCED CONCRETE: f_y = 60 Ksi
f'_c = See "Concrete Strength and Type Limits."

PRESTRESSED CONCRETE: See "Prestressing Notes" on "Girder Layout" sheet.

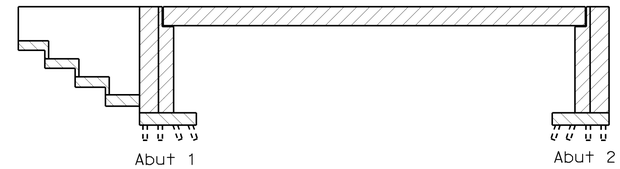

Legend:

- Structural Concrete, Bridge (3.6 Ksi at 28 days)
- Structural Concrete, Bridge (4.0 Ksi at 28 days)
- Structural Concrete, Bridge Footing (3.6 Ksi at 28 days)

CONCRETE STRENGTH AND TYPE LIMITS

No Scale

INDEX TO PLANS

SHEET NO.	TITLE
1	GENERAL PLAN
2	INDEX TO PLANS
3	DECK CONTOUR
4	FOUNDATION PLAN
5	ABUTMENT 1 LAYOUT
6	ABUTMENT 2 LAYOUT
7	ABUTMENT DETAILS NO. 1
8	ABUTMENT DETAILS NO. 2
9	ABUTMENT DETAILS NO. 3
10	TYPICAL SECTION
11	GIRDER LAYOUT
12	ADDITIONAL REINFORCEMENT
13	STRUCTURE APPROACH TYPE N(30S)
14	STRUCTURE APPROACH DRAINAGE DETAILS
15	RETAINING WALL TYPE 1
16	LOG OF TEST BORINGS 1 OF 3
17	LOG OF TEST BORINGS 2 OF 3
18	LOG OF TEST BORINGS 3 OF 3

STANDARD PLANS DATED MAY 2010

A10A	ABBREVIATIONS
A10B	ABBREVIATIONS
A10C	LINES AND SYMBOLS
A10D	LINES AND SYMBOLS
A10E	LINES AND SYMBOLS
A62C	LIMITS OF PAYMENT FOR EXCAVATION AND BACKFILL BRIDGE
A76A	CONCRETE BARRIER TYPE 60
BO-1	BRIDGE DETAILS
BO-3	BRIDGE DETAILS
BO-5	BRIDGE DETAILS
BO-13	BRIDGE DETAILS
B2-5	PILE DETAILS CLASS 90 AND CLASS 140
B2-8	PILE DETAILS CLASS 200
RSP B3-5	RETAINING WALL DETAILS No. 1
B6-21	JOINT SEALS (MAXIMUM MOVEMENT RATING = 2")
B7-1	BOX GIRDER DETAILS
B7-10	UTILITY OPENING BOX GIRDER
B8-5	CAST-IN-PLACE PRESTRESSED GIRDER DETAILS
B11-56	CONCRETE BARRIER TYPE 736
B14-3	COMMUNICATION AND SPRINKLER CONTROL CONDUITS (CONDUIT LESS THAN 4")

STANDARD PLAN SHEET NO.

DETAIL NO.

PILE DATA TABLE

LOCATION	PILE TYPE	NOMINAL RESISTANCE (Kips)		DESIGN TIP ELEVATION (Ft)	SPECIFIED TIP ELEVATION (Ft)	NOMINAL DRIVING RESISTANCE (Kips)
		Compression	Tension			
Abutment 1	PP 16" x 0.625" Class 200 (Alternative W - Modified)	400	0	514.0 (a)	514.0	400
Abutment 2	PP 16" x 0.625" Class 200 (Alternative W - Modified)	380	0	514.0 (a)	514.0	380

NOTES:

1. Design Tip controlled by (a) Compression
2. For details on the Class 200 (Alternative W - Modified) Piles see Standard Plans Sheet B2-8, Alternative "W"
3. Piles shall be closed-ended (Modified). For details see Standard Plans Sheet B2-5, Alternative "V" closed-ended detail. Utilize 1¼" ℄ Min with ¼" fillet weld

	BY	CHECKED
DESIGN	J. M. Peterson	P. A. Peterson
DETAILS	JMP/T. Nguyen	P. A. Peterson
QUANTITIES	P. A. Peterson	J. M. Peterson

STATE OF CALIFORNIA
DEPARTMENT OF TRANSPORTATION

DIVISION OF ENGINEERING SERVICES
STRUCTURE DESIGN
DESIGN BRANCH 14

BRIDGE NO. 57-1226
POST MILE 0.80

SANYO AVENUE UNDERCROSSING
INDEX TO PLANS

STRUCTURES DESIGN DETAIL SHEET (ENGLISH) (REV. 09-01-10)

ORIGINAL SCALE IN INCHES FOR REDUCED PLANS 0 1 2 3

UNIT: 3613
PROJECT NUMBER & PHASE: 11000205191
CONTRACT NO.: 11-056321

DISREGARD PRINTS BEARING EARLIER REVISION DATES

REVISION DATES: 12-13-12 3-20-13 05-06-13 08-02-13

SHEET 2 OF 18

FILE => 57-b-itp.dgn

USERNAME => s122751 DATE PLOTTED => 06-MAY-2013 TIME PLOTTED => 09:59

DIST	COUNTY	ROUTE	POST MILES TOTAL PROJECT	SHEET No.	TOTAL SHEETS
11	SD	11,905	0.0/1.6, R9.9/R10.7	497	622

REGISTERED CIVIL ENGINEER — DATE 10-25-12

04-22-13
PLANS APPROVAL DATE

REGISTERED PROFESSIONAL ENGINEER — JOHN M. PETERSON — No. C56837 — Exp. 06-30-13 — CIVIL — STATE OF CALIFORNIA

The State of California or its officers or agents shall not be responsible for the accuracy or completeness of electronic copies of this plan sheet.

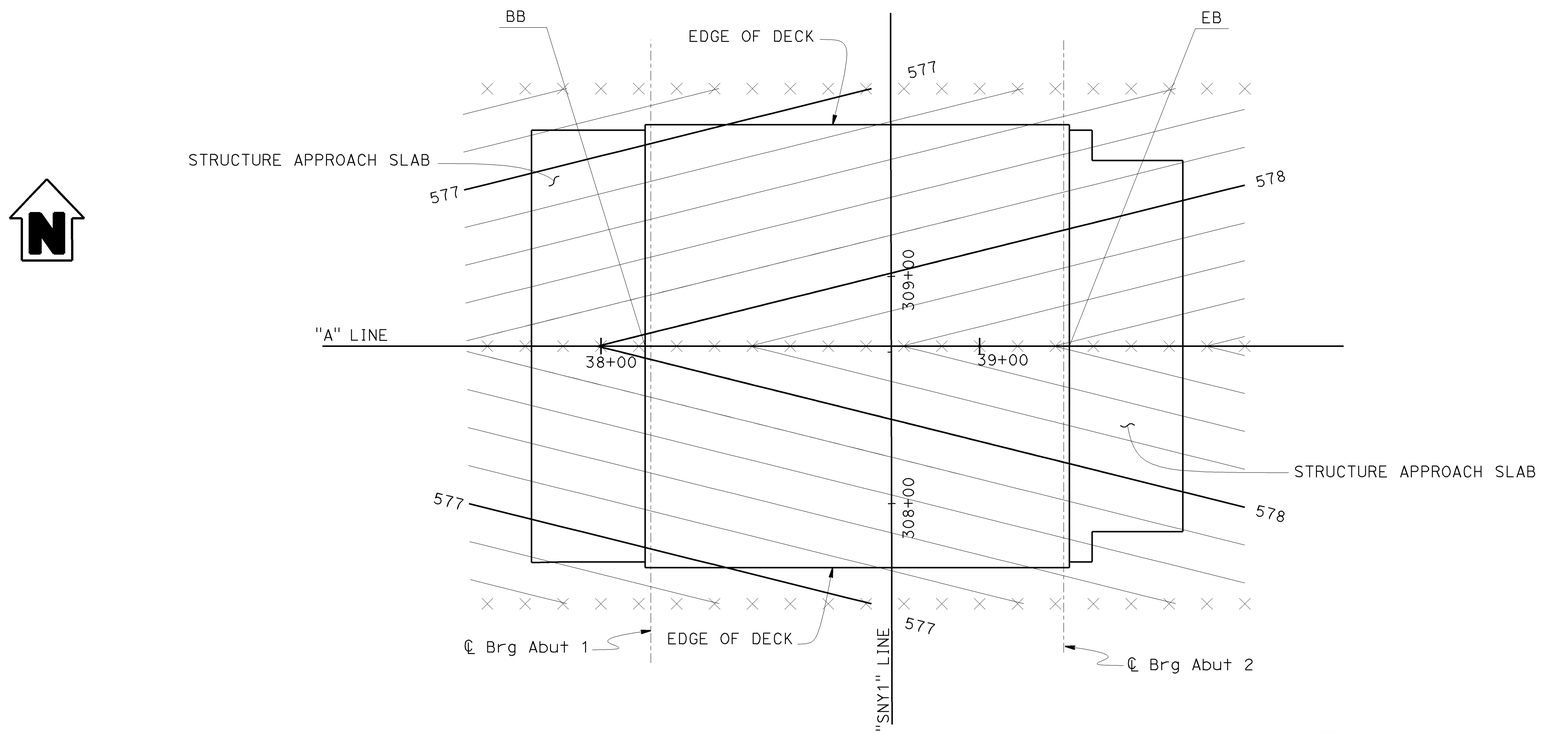

PLAN
1" = 20'-0"

NOTES:
1. X=10' Interval along Station Line
2. Contours do not include Camber
3. Contour Interval = 0.20'

DESIGN	BY J. M. Peterson	CHECKED P. A. Peterson	
DETAILS	BY T. Nguyen	CHECKED P. A. Peterson	
QUANTITIES	BY P. A. Peterson	CHECKED J. M. Peterson	

STATE OF CALIFORNIA
DEPARTMENT OF TRANSPORTATION

DIVISION OF ENGINEERING SERVICES
STRUCTURE DESIGN
DESIGN BRANCH 14

BRIDGE NO. 57-1226
POST MILE 0.80

SANYO AVENUE UNDERCROSSING
DECK CONTOUR

STRUCTURES DESIGN DETAIL SHEET (ENGLISH) (REV. 09-01-10)

ORIGINAL SCALE IN INCHES FOR REDUCED PLANS 0 1 2 3

UNIT: 3613
PROJECT NUMBER & PHASE: 11000205191
CONTRACT NO.: 11-056321

DISREGARD PRINTS BEARING EARLIER REVISION DATES

REVISION DATES: 5-18-12 9-13-12 05-06-13

SHEET 3 OF 18

FILE => 57-d-dc.dgn

USERNAME => s122751 DATE PLOTTED => 06-MAY-2013 TIME PLOTTED => 09:59

DIST	COUNTY	ROUTE	POST MILES TOTAL PROJECT	SHEET No.	TOTAL SHEETS
11	SD	11,905	0.0/1.6, R9.9/R10.7	498	622

REGISTERED CIVIL ENGINEER — DATE 10-25-12

04-22-13
PLANS APPROVAL DATE

REGISTERED PROFESSIONAL ENGINEER — JOHN M. PETERSON No. C56837 Exp. 06-30-13 CIVIL — STATE OF CALIFORNIA

The State of California or its officers or agents shall not be responsible for the accuracy or completeness of electronic copies of this plan sheet.

(1) Sta 38+76.67, "A1" Line =
Sta 308+81.58, "SNY1" Line

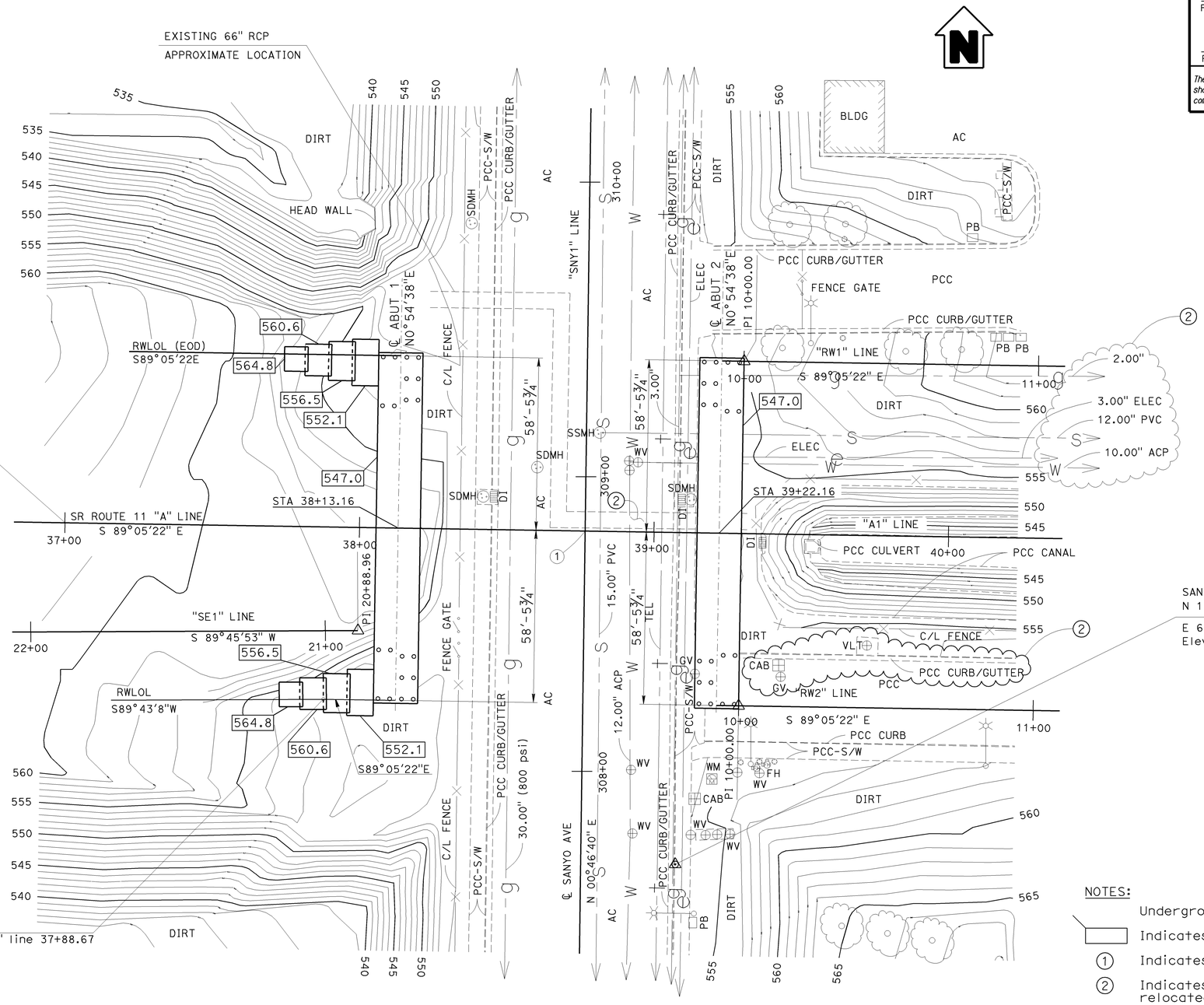

SURVEY CONTROL

SANYO1
Fnd 2¼" Brass Disk On Top Of Curb
112.64 Ft Rt "A1" LINE
Sta 39+08.98
N 1 785 570.73
E 6 348 864.52
Elev = 553.98

MON-9050400 (NOT SHOWN)
Fnd PK+Washer
675.78 Ft Rt "A1" LINE
Sta 39+13.01
N 1 785 007.60
E 6 348 859.60
Elev = 559.58

NOTES:

- Underground utilities as shown are approximate
- Indicates Bottom of Footing Elevation
- (1) Indicates Equation Station
- (2) Indicates to be removed, demolished or relocated by others

PRELIMINARY INVESTIGATION SECTION

SCALE	VERT.DATUM NAVD 88	PHOTOGRAMMETRY AS OF: X		
1"=20'	HORZ.DATUM NAD83 (1991.35)	SURVEYED BY DISTRICT 11	CHECKED	BY T.PHUNG 3/2012
ALIGNMENT TIES Dist. Traverse Sheet		DRAFTED BY V.PHAM 3/2012	CHECKED	BY S.ALIVIO 3/2012

	BY	CHECKED
DESIGN	J. M. Peterson	P. A. Peterson
DETAILS	J. M. Peterson	P. A. Peterson
QUANTITIES	P. A. Peterson	J. M. Peterson

STATE OF CALIFORNIA
DEPARTMENT OF TRANSPORTATION

DIVISION OF ENGINEERING SERVICES
STRUCTURE DESIGN
DESIGN BRANCH 14

BRIDGE NO. 57-1226
POST MILE 0.80

SANYO AVENUE UC
FOUNDATION PLAN

STRUCTURES FOUNDATION PLAN SHEET (ENGLISH) (REV. 09-01-10)

ORIGINAL SCALE IN INCHES FOR REDUCED PLANS 0 1 2 3

UNIT: 3647
PROJECT NUMBER & PHASE: 11000205191
CONTRACT NO.: 11-056321

DISREGARD PRINTS BEARING EARLIER REVISION DATES
REVISION DATES 03/23/12 05-06-13

SHEET 4 OF 18

FILE => 57-1226-e-fd.dgn

DIST	COUNTY	ROUTE	POST MILES TOTAL PROJECT	SHEET No.	TOTAL SHEETS
11	SD	11,905	0.0/1.6, R9.9/R10.7	499	622

REGISTERED CIVIL ENGINEER — DATE 10-25-12

04-22-13
PLANS APPROVAL DATE

REGISTERED PROFESSIONAL ENGINEER — JOHN M. PETERSON — No. C56837 — Exp. 06-30-13 — CIVIL — STATE OF CALIFORNIA

The State of California or its officers or agents shall not be responsible for the accuracy or completeness of electronic copies of this plan sheet.

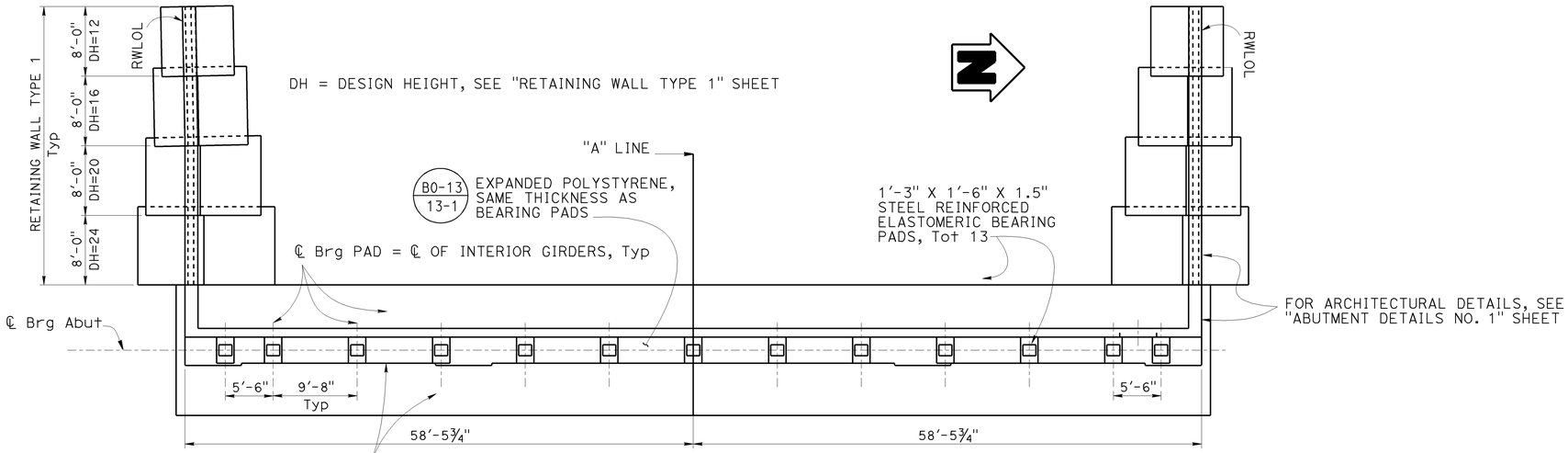

PLAN

1/8" = 1'-0"

B0-13 / 13-1

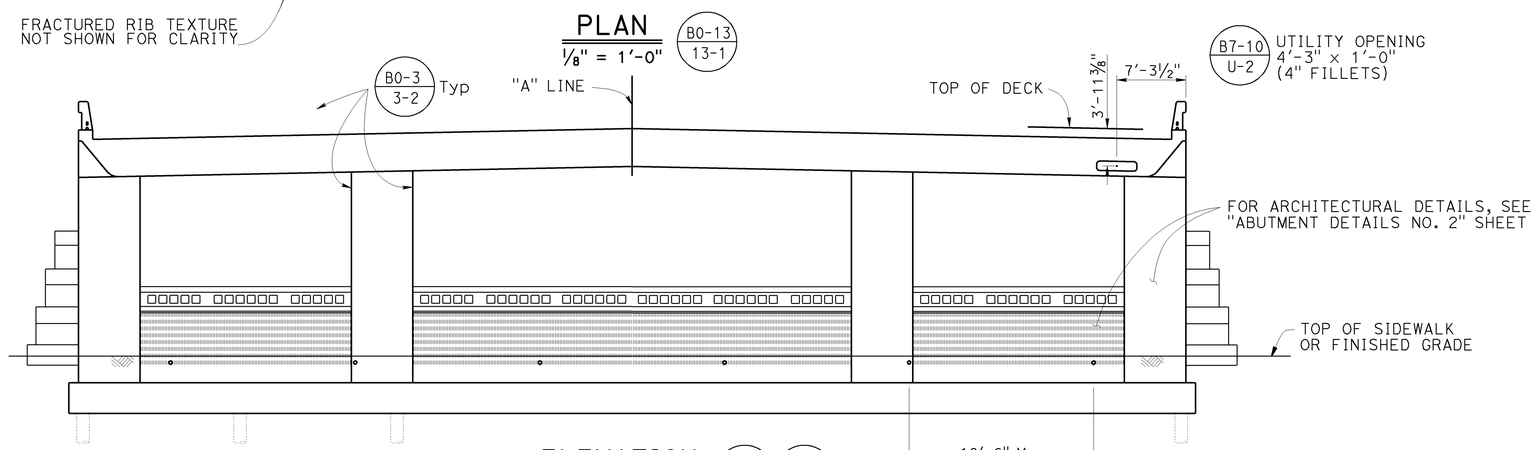

NOTE: Not all Piles shown

ELEVATION

1/8" = 1'-0"

B7-10 / U-2 B0-3 / 3-2

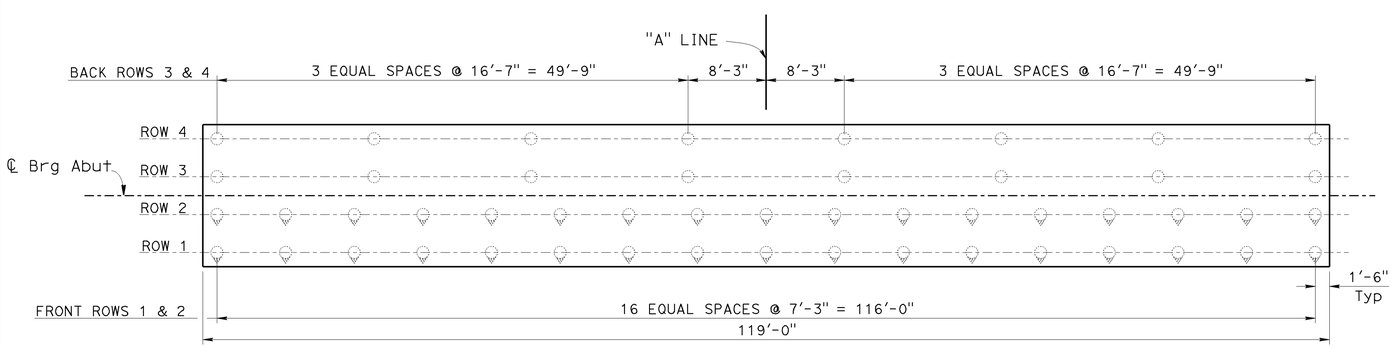

FOOTING PLAN

1/8" = 1'-0"

NOTES

1. For retaining wall details, see "RETAINING WALL TYPE 1" sheet
2. For return wall details, see "ABUTMENT DETAILS NO. 1" sheet
3. For abutment details, see "ABUTMENT NO. 2 LAYOUT" sheet, and "ABUTMENT DETAILS NO. 3" sheet
4. Extend front face abutment texture 1'-0" Min below finished grade, typical for Abutments 1 & 2
5. Install drain pipes 1'-0" beyond stem to allow for future connection, pipe inverts shall match Abutment 2 drain pipes, attach temporary piping to drain away from abutment to a location acceptable to the Field Engineer

NOTES:

Details symmetrical about "A" line

- Indicates battered piles

- Indicates vertical piles

	BY	CHECKED
DESIGN	J. M. Peterson	P. A. Peterson
DETAILS	J. M. Peterson	P. A. Peterson
QUANTITIES	P. A. Peterson	J. M. Peterson

STATE OF CALIFORNIA
DEPARTMENT OF TRANSPORTATION

DIVISION OF ENGINEERING SERVICES
STRUCTURE DESIGN
DESIGN BRANCH 14

BRIDGE NO. 57-1226
POST MILE 0.80

SANYO AVENUE UNDERCROSSING
ABUTMENT 1 LAYOUT

STRUCTURES DESIGN DETAIL SHEET (ENGLISH) (REV. 09-01-10)

ORIGINAL SCALE IN INCHES FOR REDUCED PLANS 0 1 2 3

UNIT: 3613
PROJECT NUMBER & PHASE: 11000205191
CONTRACT NO.: 11-056321

DISREGARD PRINTS BEARING EARLIER REVISION DATES

REVISION DATES: 6-12-12 9-13-12 05-06-13

SHEET 5 OF 18

FILE => 57-f-a01_1o.dgn

USERNAME => s122751 DATE PLOTTED => 06-MAY-2013 TIME PLOTTED => 09:59

DIST	COUNTY	ROUTE	POST MILES TOTAL PROJECT	SHEET No.	TOTAL SHEETS
11	SD	11,905	0.0/1.6, R9.9/R10.7	500	622

REGISTERED CIVIL ENGINEER — DATE 10-25-12

04-22-13
PLANS APPROVAL DATE

The State of California or its officers or agents shall not be responsible for the accuracy or completeness of electronic copies of this plan sheet.

REGISTERED PROFESSIONAL ENGINEER — JOHN M. PETERSON — No. C56837 — Exp. 06-30-13 — CIVIL — STATE OF CALIFORNIA

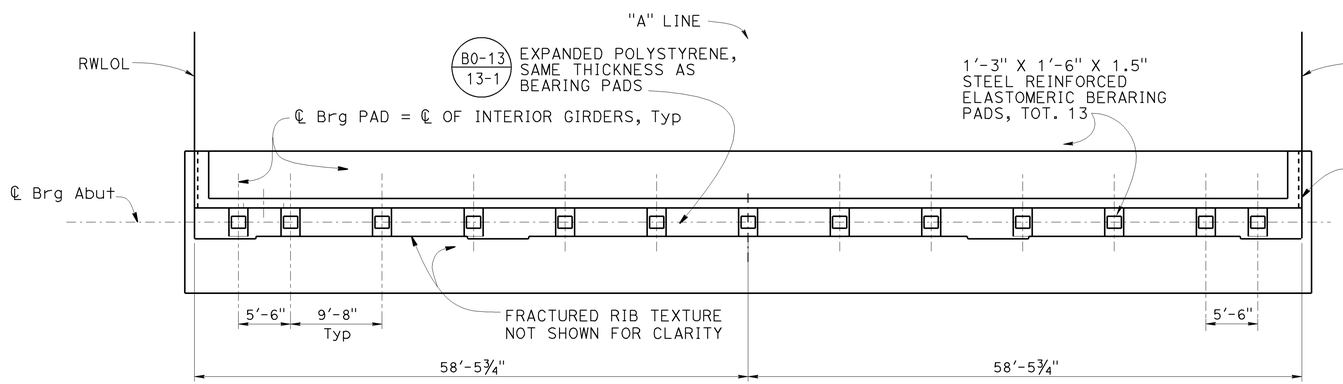

PLAN
1/8" = 1'-0"
B0-13 / 13-1

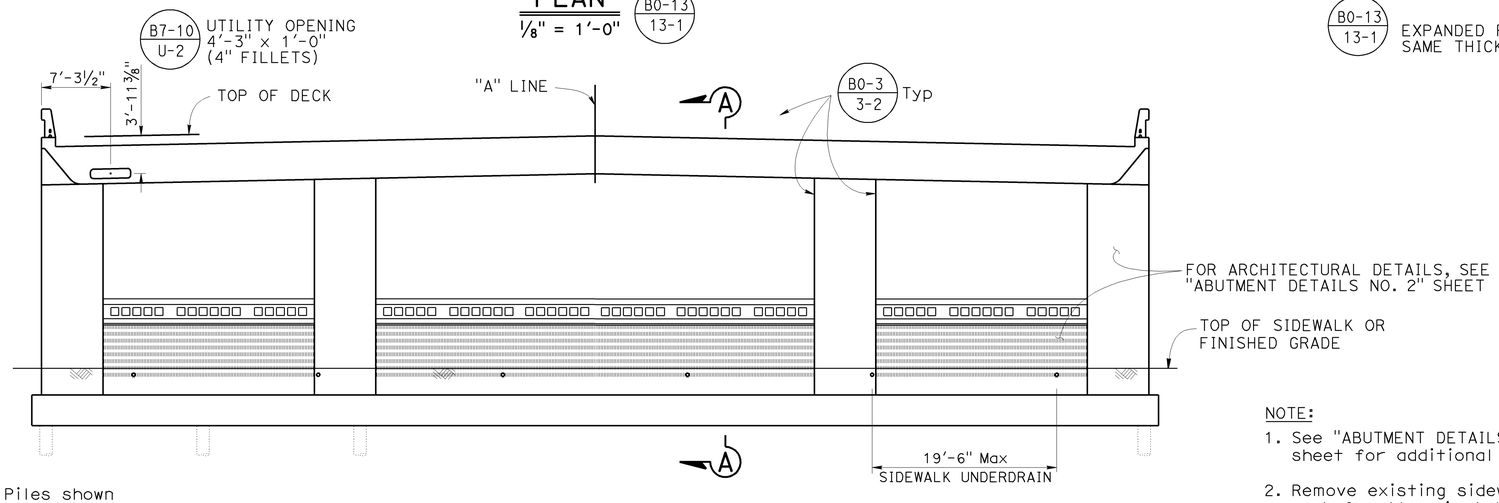

NOTE: Not all Piles shown

ELEVATION
1/8" = 1'-0"
B7-10 / U-2 B0-3 / 3-2

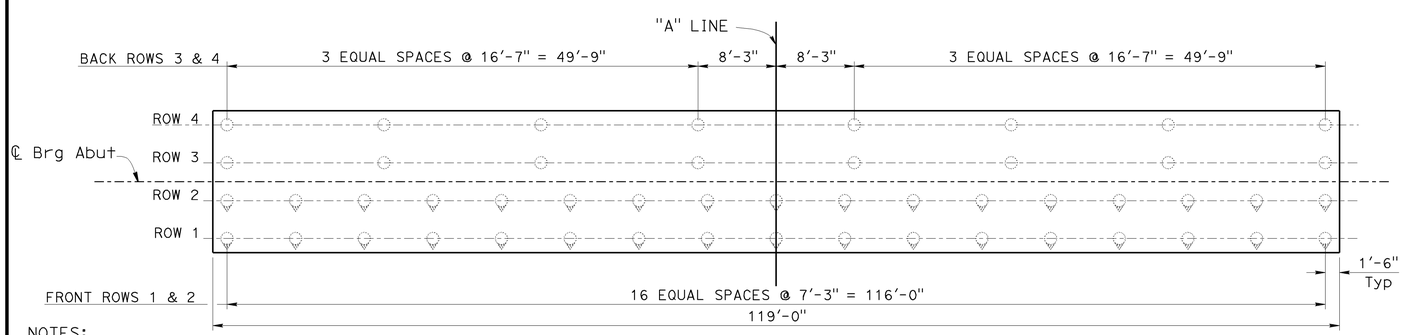

NOTES:
Details symmetrical about "A" line
- Indicates battered piles
- Indicates vertical piles

FOOTING PLAN
1/8" = 1'-0"

For 'UTILITY SUPPORT DETAIL', see "ABUTMENT DETAILS NO. 3" sheet.

NOTE:
1. See "ABUTMENT DETAILS NO. 3" sheet for additional details
2. Remove existing sidewalk, and curb & gutter, install drain pipes and replace to existing conditions see "Road Plans"

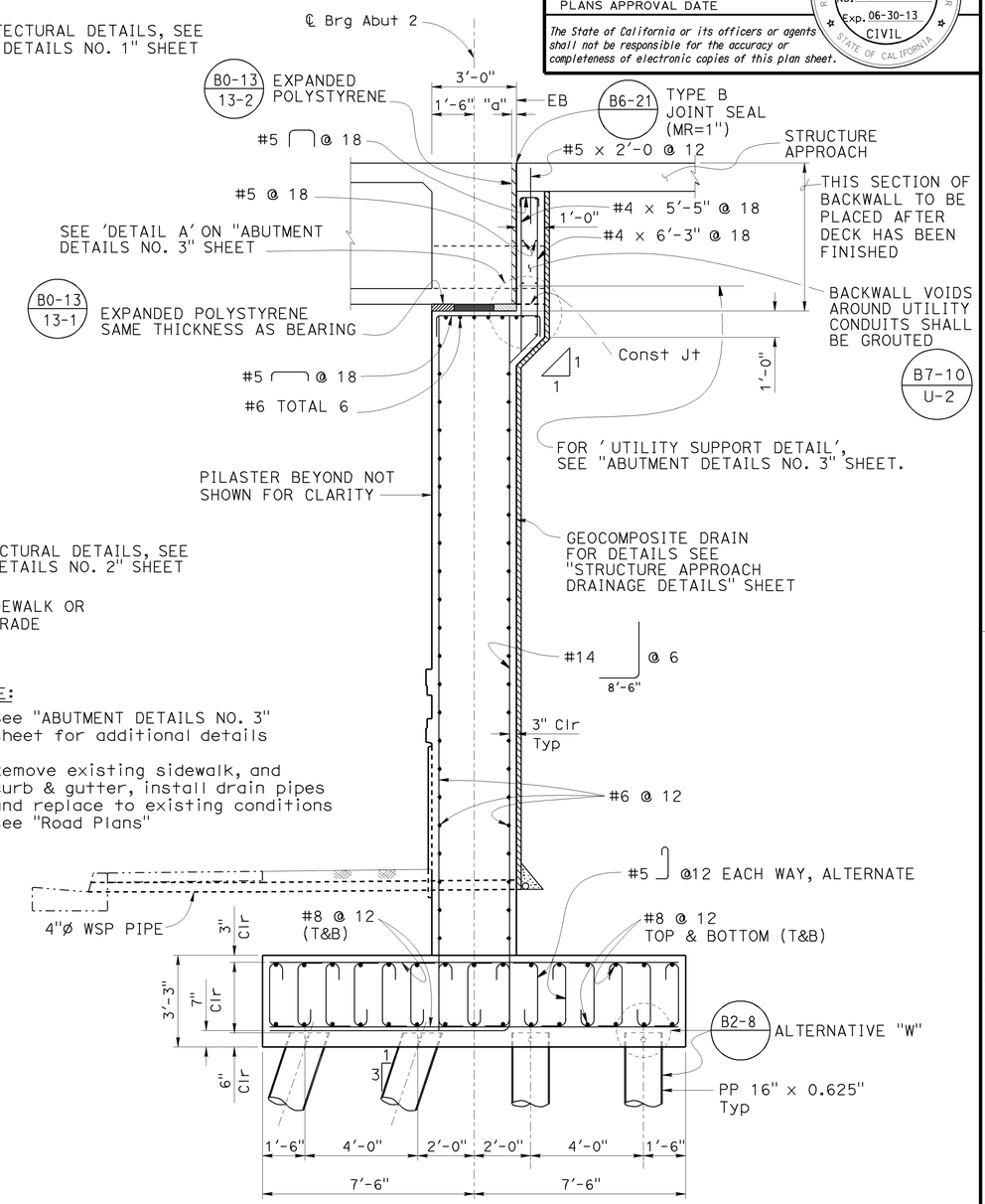

SECTION A-A
3/8" = 1'-0"

ABUTMENT 2 SHOWN, ABUTMENT 1 SIMILAR

DESIGN	BY J. M. Peterson	CHECKED P. A. Peterson	
DETAILS	BY J. M. Peterson	CHECKED P. A. Peterson	
QUANTITIES	BY P. A. Peterson	CHECKED J. M. Peterson	

STATE OF CALIFORNIA
DEPARTMENT OF TRANSPORTATION

DIVISION OF ENGINEERING SERVICES
STRUCTURE DESIGN
DESIGN BRANCH 14

BRIDGE NO. 57-1226
POST MILE 0.80

SANYO AVENUE UNDERCROSSING
ABUTMENT 2 LAYOUT

STRUCTURES DESIGN DETAIL SHEET (ENGLISH) (REV. 09-01-10)

ORIGINAL SCALE IN INCHES FOR REDUCED PLANS 0 1 2 3

UNIT: 3613
PROJECT NUMBER & PHASE: 11000205191
CONTRACT NO.: 11-056321

DISREGARD PRINTS BEARING EARLIER REVISION DATES

REVISION DATES: 3-15-12 3-15-12 05-06-13

SHEET 6 OF 18

FILE => 57-f-a02_10.dgn

USERNAME => s122751 DATE PLOTTED => 06-MAY-2013 TIME PLOTTED => 09:59