DIST	COUNTY	ROUTE	POST MILES TOTAL PROJECT	SHEET No	TOTAL SHEETS
10	Mer	99	13.8/14.4, 35.8	201	221

REGISTERED CIVIL ENGINEER 06-29-10 DATE

3-28-11
PLANS APPROVAL DATE

The State of California or its officers or agents shall not be responsible for the accuracy or completeness of scanned copies of this plan sheet.

REGISTERED PROFESSIONAL ENGINEER Keith Stillmunkes No. 68878 Exp. 9/30/11 CIVIL STATE OF CALIFORNIA

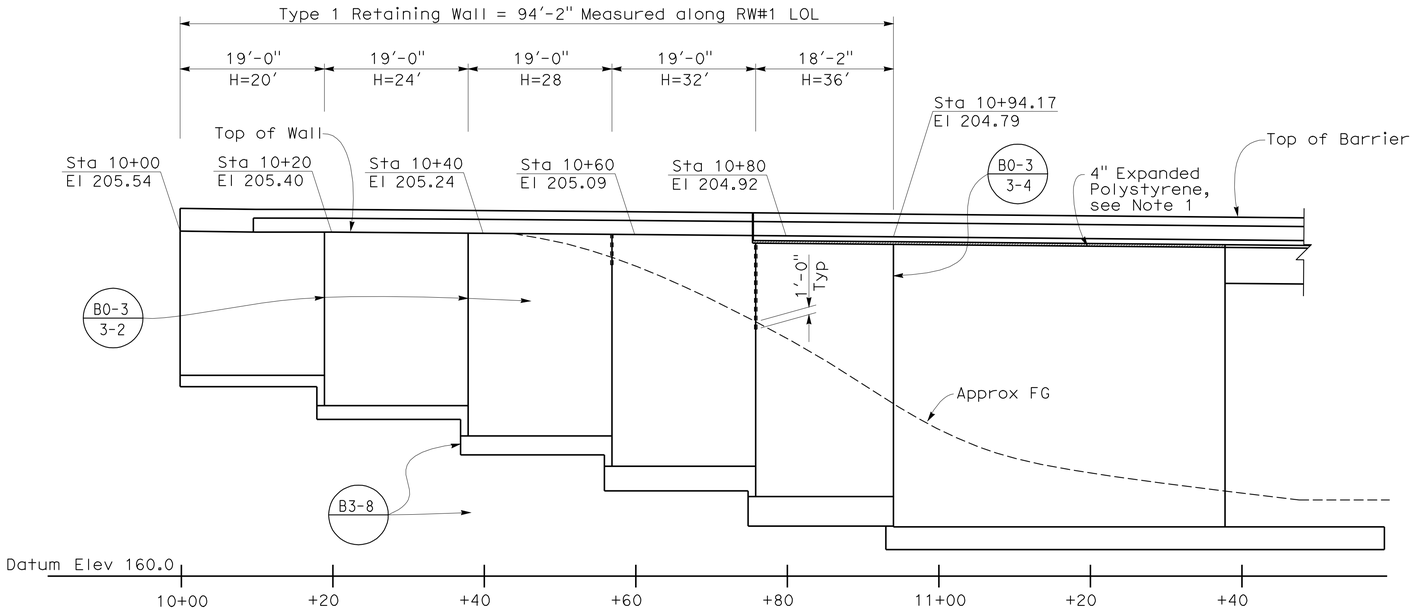

ELEVATION
1" = 10'-0"

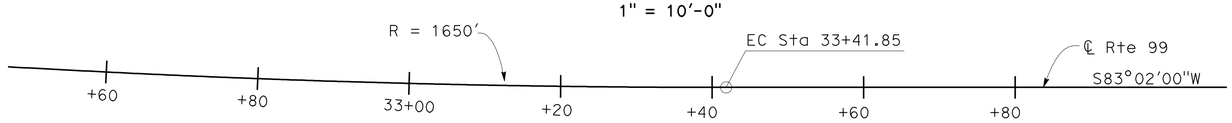

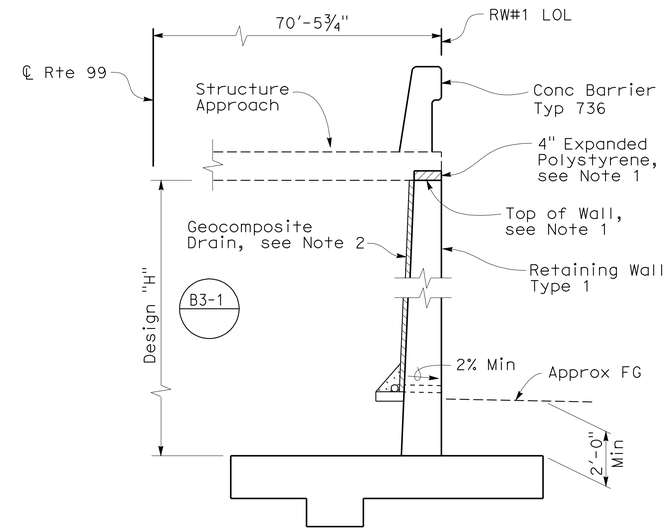

SECTION AT APPROACH SLAB
⅜" = 1'-0"

Notes:

1. For details not shown, see "STRUCTURE APPROACH TYPE N(30S)" sheet.
2. For drainage details under approach slab, see "STRUCTURE APPROACH DRAINAGE DETAILS" sheet.
3. For drainage details outside of approach slab, see "RETAINING WALL NO. 2 LAYOUT" sheet.

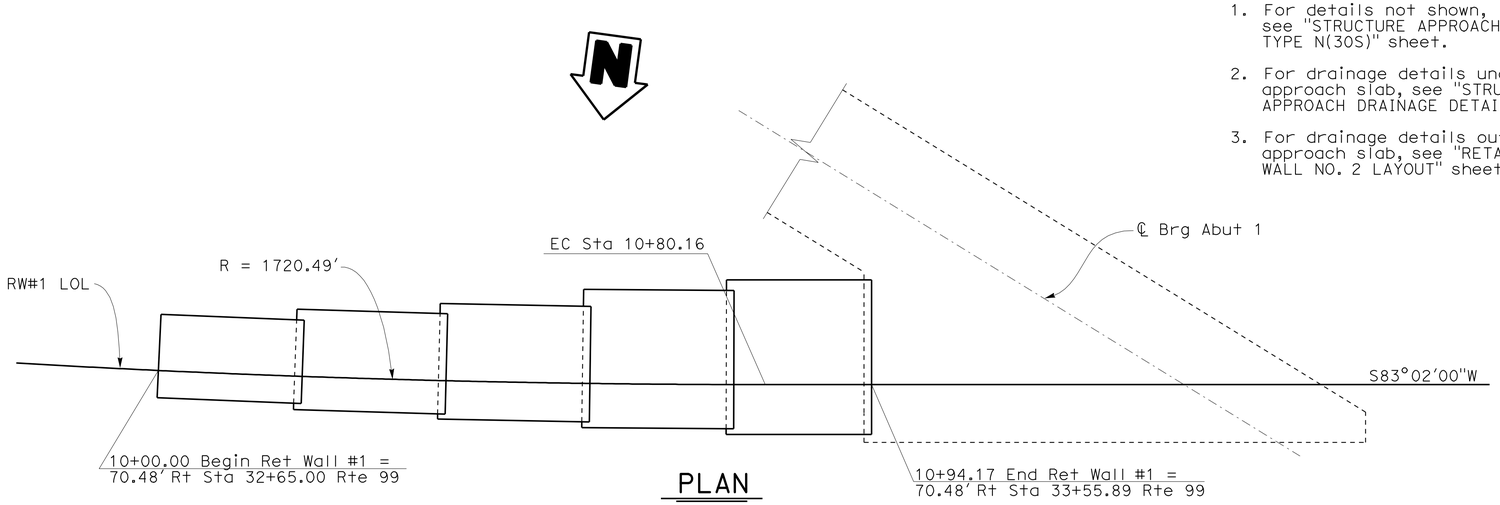

PLAN
1" = 10'-0"

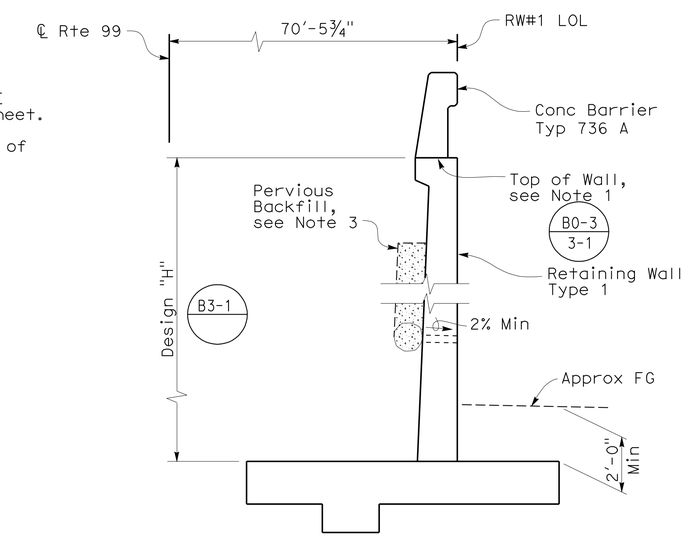

TYPICAL SECTION
⅜" = 1'-0"

DESIGN	BY JongKoo Jeon	CHECKED Keith Stillmunkes	
DETAILS	BY Gerald Dickerson	CHECKED Keith Stillmunkes	
QUANTITIES	BY JongKoo Jeon	CHECKED Buster Hansen	

STATE OF CALIFORNIA
DEPARTMENT OF TRANSPORTATION

DIVISION OF ENGINEERING SERVICES
STRUCTURE DESIGN
DESIGN BRANCH 7

BRIDGE NO. 39-0241
POST MILE 14.10

EAST MERCED OVERHEAD (REPLACE)
RETAINING WALL NO. 1 LAYOUT

STRUCTURES DESIGN DETAIL SHEET (ENGLISH) (REV. 10/25/05)

ORIGINAL SCALE IN INCHES FOR REDUCED PLANS 0 1 2 3

CU 10
EA 481001

DISREGARD PRINTS BEARING EARLIER REVISION DATES

REVISION DATES: 1-28-10 3-1-10 3-2-10 3-4-10 3-9-10 5-11-10 6-29-10

SHEET 15 OF 35

FILE => 39-0241-g-rw1-lo.dgn

USERNAME => trmikes1 DATE PLOTTED => 01-APR-2011 TIME PLOTTED => 07:05

DIST	COUNTY	ROUTE	POST MILES TOTAL PROJECT	SHEET No	TOTAL SHEETS
10	Mer	99	13.8/14.4, 35.8	202	221

REGISTERED CIVIL ENGINEER 06-29-10 DATE

3-28-11
PLANS APPROVAL DATE

The State of California or its officers or agents shall not be responsible for the accuracy or completeness of scanned copies of this plan sheet.

REGISTERED PROFESSIONAL ENGINEER Keith Stillmunkes No. 68878 Exp. 9/30/11 CIVIL STATE OF CALIFORNIA

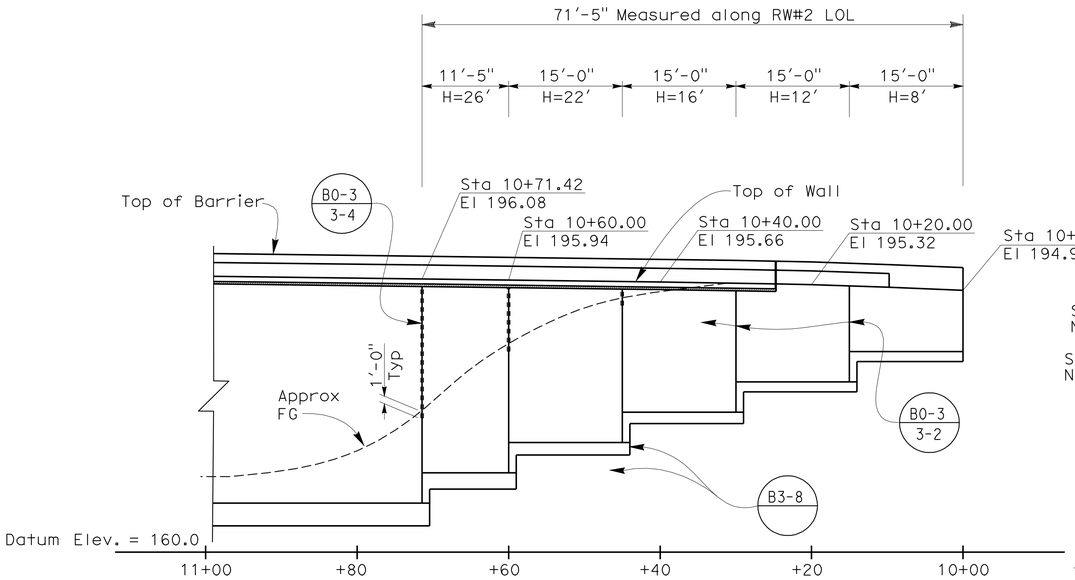

DEVELOPED ELEVATION

1" = 10'-0"

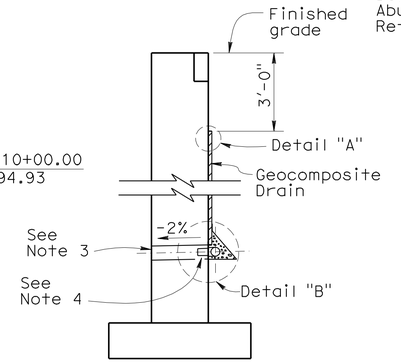

WALL SECTION

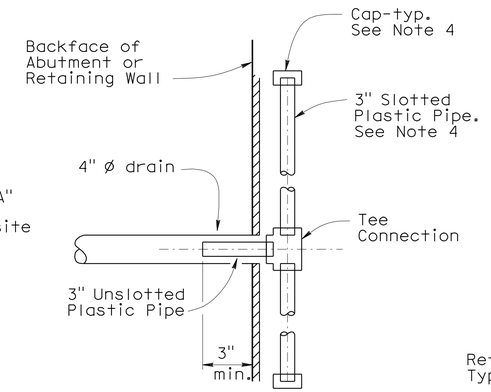

SECTION A-A

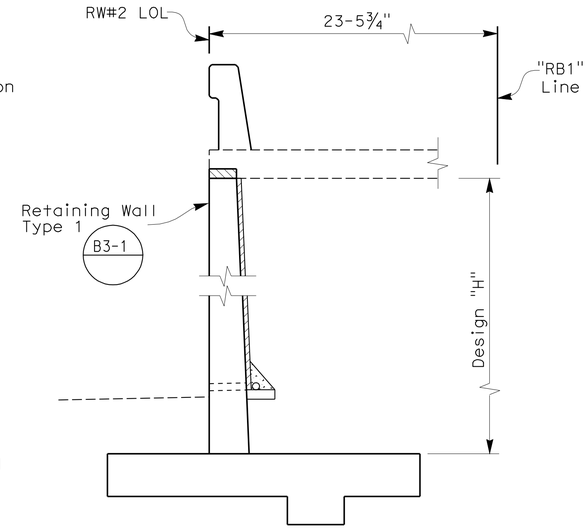

SECTION AT APPROACH SLAB

⅜" = 1'-0"

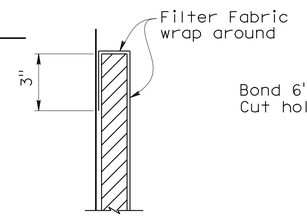

DETAIL "A"

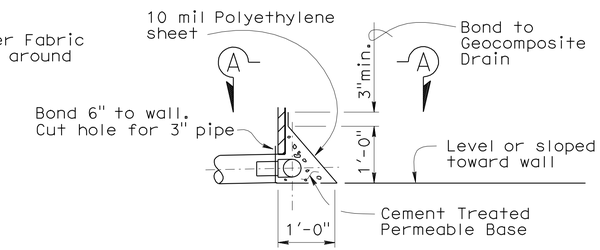

DETAIL "B"

WEEP HOLE AND GEOCOMPOSITE DRAIN

ALTERNATIVE TO BRIDGE DETAIL B0-3 / 3-1

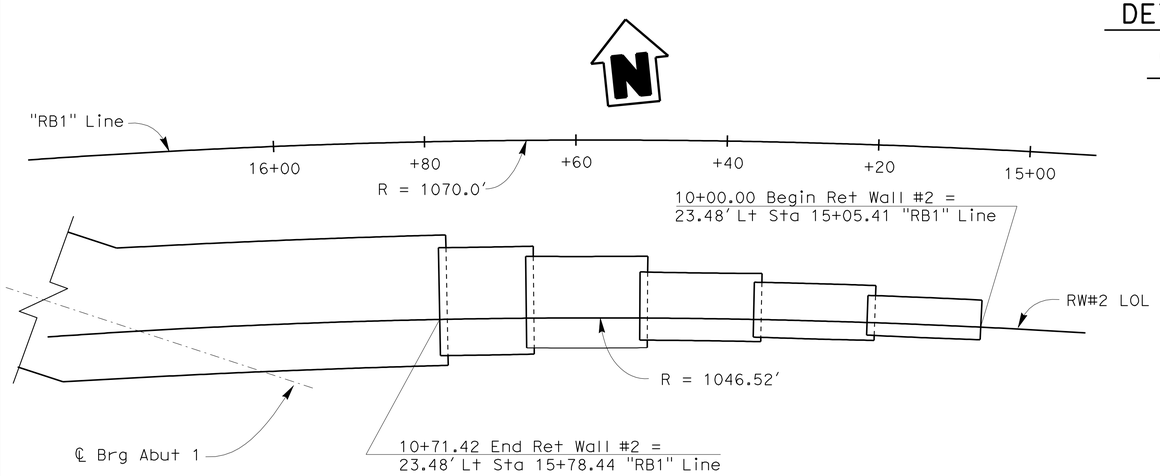

PLAN

1" = 10'-0"

Notes:

1. For details not shown, see "APPROACH TYPE N(30S)" sheet and "RETAINING WALL NO. 1 LAYOUT" sheet.
2. The WEEP HOLE AND GEOCOMPOSITE DRAIN detail may be used as an alternative drainage system.
3. 4"Ø drains at intermediate sag points and at 25' maximum center to center. For walls adjacent to sidewalks or curbs, provide 4" cast iron or asbestos cement pipe under the sidewalk to discharge through curb face. Exposed wall drains shall be located 3"± above finshed grade.
4. Geocomposite drain, cement treated permeable base, and 3"Ø slotted plastic pipe continuous behind retaining wall or abutment. Cap ends of pipe. Provide "Tee" connection at each 4"Ø drain.
5. Connect the low end of plastic pipe to the main outlet pipe as applicable.

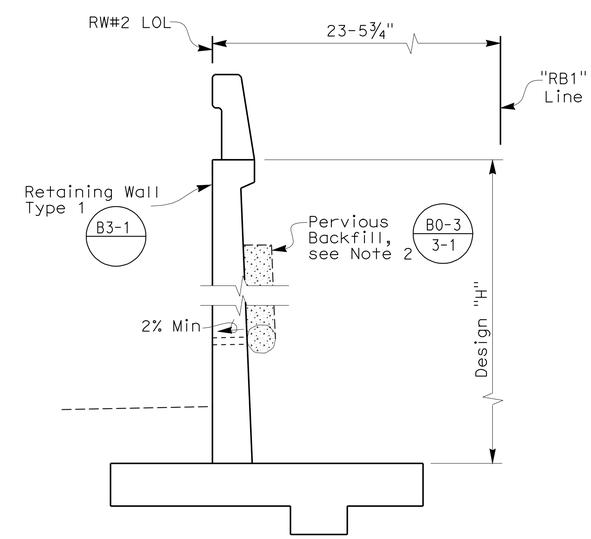

TYPICAL SECTION

⅜" = 1'-0"

DESIGN	BY JongKoo Jeon	CHECKED Keith Stillmunkes	STATE OF CALIFORNIA DEPARTMENT OF TRANSPORTATION
DETAILS	BY A. Valdez/G. Dickerson	CHECKED Keith Stillmunkes	
QUANTITIES	BY JongKoo Jeon	CHECKED Buster Hansen	

DIVISION OF ENGINEERING SERVICES STRUCTURE DESIGN
DESIGN BRANCH 7

BRIDGE NO. 39-0241
POST MILE 14.10

EAST MERCED OVERHEAD (REPLACE)
RETAINING WALL NO. 2 LAYOUT

STRUCTURES DESIGN DETAIL SHEET (ENGLISH) (REV. 10/25/05)

ORIGINAL SCALE IN INCHES FOR REDUCED PLANS 0 1 2 3

CU 10
EA 481001

DISREGARD PRINTS BEARING EARLIER REVISION DATES

REVISION DATES: 1-28-10 3-1-10 3-2-10 3-4-10 3-9-10 6-29-10

SHEET 16 OF 35

FILE => 39-0241-g-rw2-lo.dgn

USERNAME => trmikest DATE PLOTTED => 01-APR-2011 TIME PLOTTED => 07:05

DIST	COUNTY	ROUTE	POST MILES TOTAL PROJECT	SHEET No	TOTAL SHEETS
10	Mer	99	13.8/14.4, 35.8	203	221

REGISTERED CIVIL ENGINEER 06-22-10 DATE

3-28-11
APPROVAL DATE

REGISTERED PROFESSIONAL ENGINEER Keith Stillmunkes No. 68878 Exp. 9/30/11 CIVIL STATE OF CALIFORNIA

The State of California or its officers or agents shall not be responsible for the accuracy or completeness of scanned copies of this plan sheet.

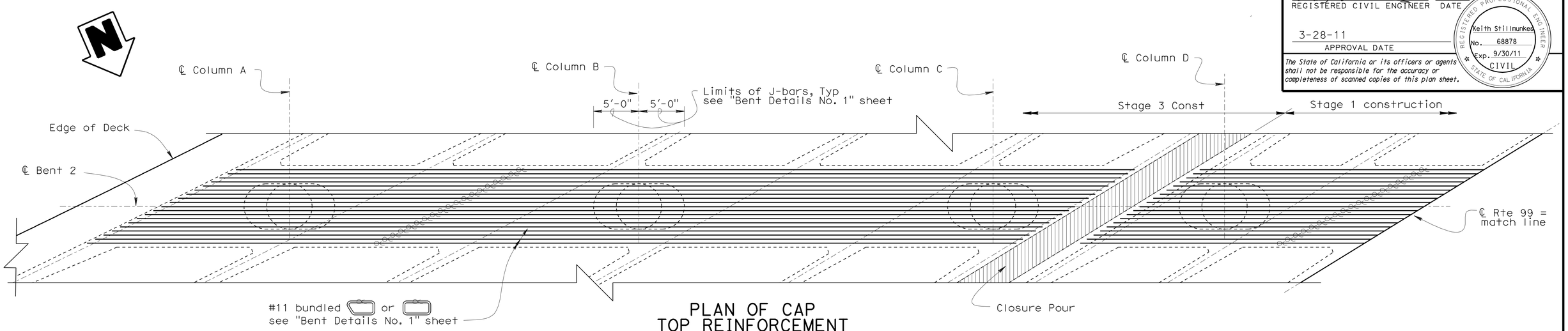

PLAN OF CAP TOP REINFORCEMENT

3/16" = 1'-0"

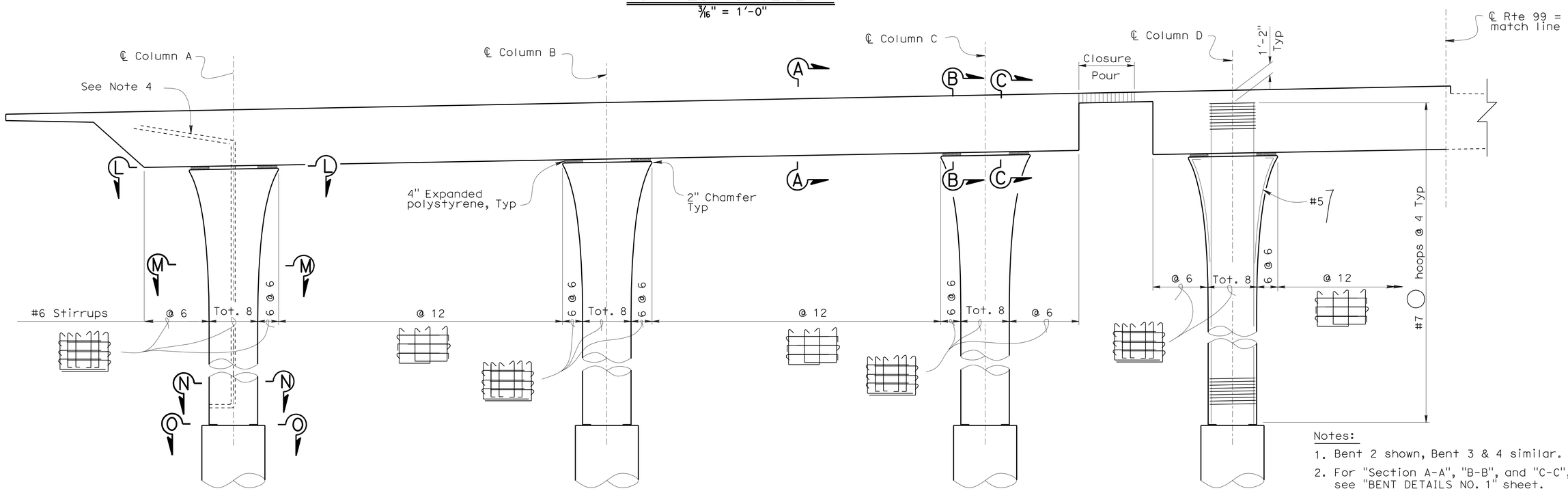

ELEVATION

3/16" = 1'-0"

Legend:

* No splices allowed in main column reinforcement.

Designates closure pour

Notes:

1. Bent 2 shown, Bent 3 & 4 similar.
2. For "Section A-A", "B-B", and "C-C", see "BENT DETAILS NO. 1" sheet.
3. For "Section L-L", "M-M", "N-N", and "O-O", see "BENT DETAILS NO.2" sheet.
4. For "Drain pipe Outlet" see "DECK DRAIN TYPE D-2 MODIFIED" sheet.
5. All hoops are "Ultimate" butt spliced continuous.

	BY	CHECKED
DESIGN	Erika Ward	Wendy Hou
DETAILS	B. Jenko / G. Dickerson	Wendy Hou
QUANTITIES	JongKoo Jeon	Buster Hansen

STATE OF CALIFORNIA
DEPARTMENT OF TRANSPORTATION

DIVISION OF ENGINEERING SERVICES
STRUCTURE DESIGN
DESIGN BRANCH 7

BRIDGE NO. 39-0241
POST MILE 14.10

EAST MERCED OVERHEAD (REPLACE)

BENT LAYOUT NO. 1

STRUCTURES DESIGN DETAIL SHEET (ENGLISH) (REV. 10/25/05)

ORIGINAL SCALE IN INCHES FOR REDUCED PLANS 0 1 2 3

CU 10
EA 481001

DISREGARD PRINTS BEARING EARLIER REVISION DATES

REVISION DATES: 1-3-10 2-18-10 2-23-10 2-24-10 3-1-10 3-4-10 5-11-10

SHEET 17 OF 35

FILE => 39-0241-h-bnt_lay1.dgn

USERNAME => trmikesl DATE PLOTTED => 01-APR-2011 TIME PLOTTED => 08:12

DIST	COUNTY	ROUTE	POST MILES TOTAL PROJECT	SHEET No	TOTAL SHEETS
10	Mer	99,140	13.8/14.4, 35.8	204	221

REGISTERED CIVIL ENGINEER 06-22-10 DATE

3-28-11
APPROVAL DATE

REGISTERED PROFESSIONAL ENGINEER Keith Stillmunkes No. 68878 Exp. 9/30/11 CIVIL STATE OF CALIFORNIA

The State of California or its officers or agents shall not be responsible for the accuracy or completeness of scanned copies of this plan sheet.

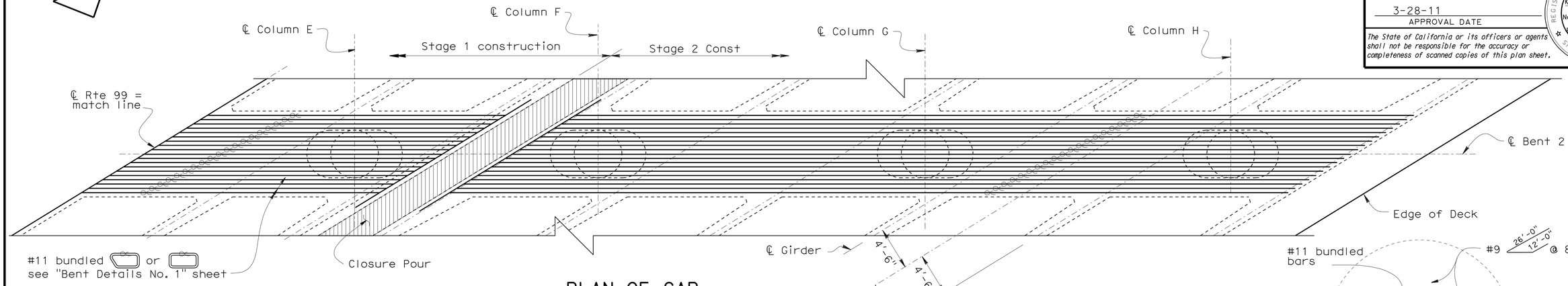

PLAN OF CAP
BOTTOM REINFORCEMENT
3/16" = 1'-0"

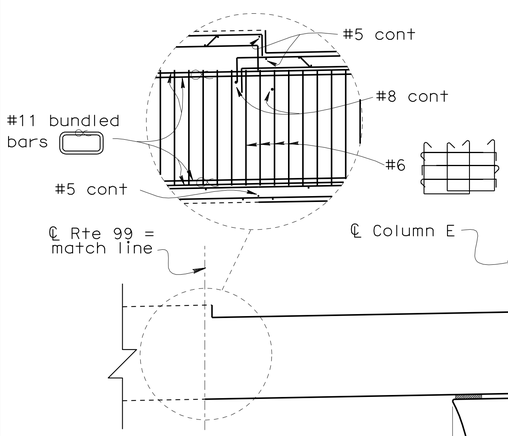

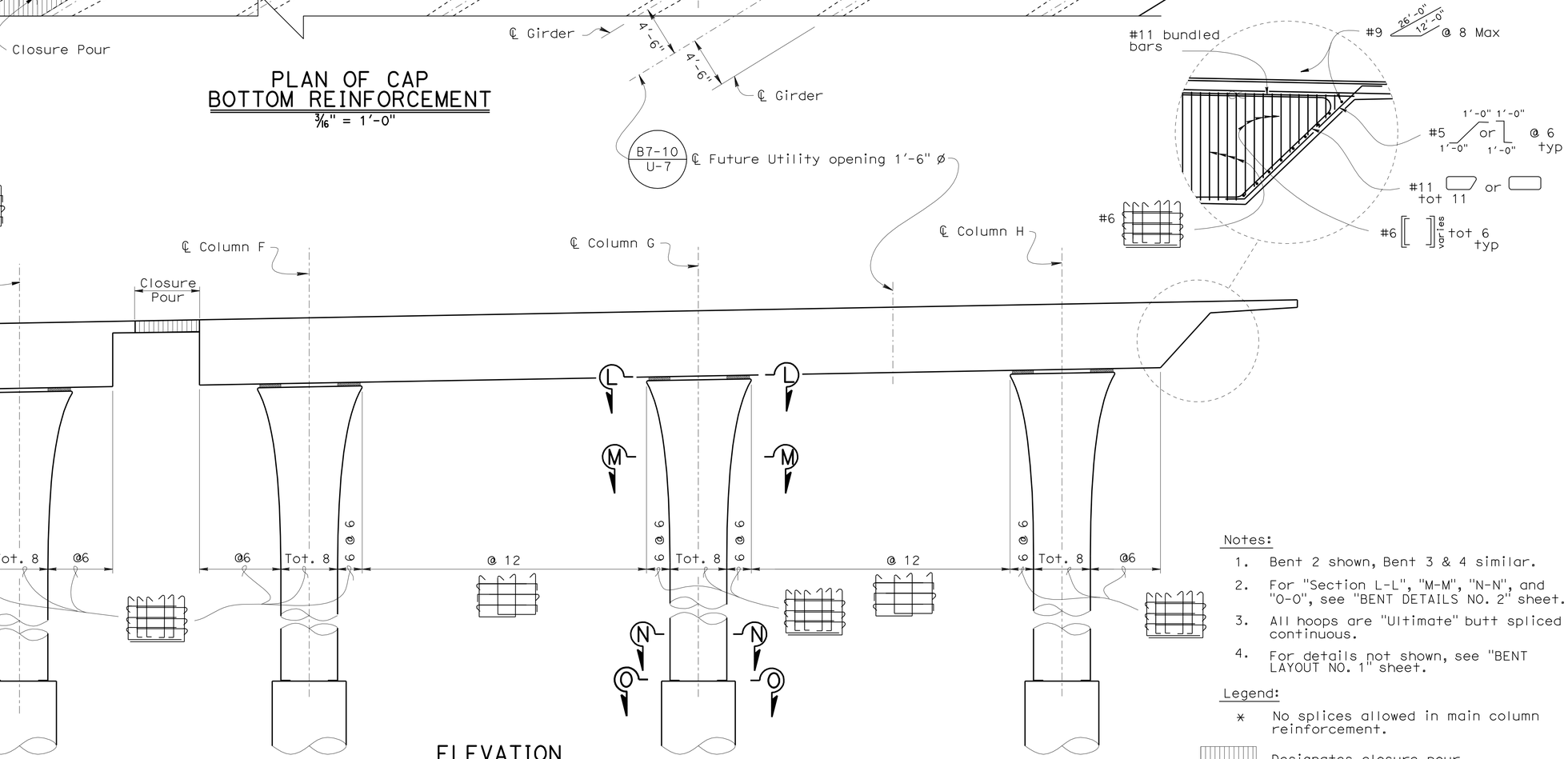

ELEVATION
3/16" = 1'-0"

Notes:

1. Bent 2 shown, Bent 3 & 4 similar.
2. For "Section L-L", "M-M", "N-N", and "O-O", see "BENT DETAILS NO. 2" sheet.
3. All hoops are "Ultimate" butt spliced continuous.
4. For details not shown, see "BENT LAYOUT NO. 1" sheet.

Legend:

* No splices allowed in main column reinforcement.

Designates closure pour

DESIGN	BY Erika Ward	CHECKED Wendy Hou	
DETAILS	BY B. Jenko / G. Dickerson	CHECKED Wendy Hou	
QUANTITIES	BY JongKoo Jeon	CHECKED Buster Hansen	

STATE OF CALIFORNIA
DEPARTMENT OF TRANSPORTATION

DIVISION OF ENGINEERING SERVICES
STRUCTURE DESIGN
DESIGN BRANCH 7

BRIDGE NO. 39-0241
POST MILE 14.10

EAST MERCED OVERHEAD (REPLACE)
BENT LAYOUT NO. 2

STRUCTURES DESIGN DETAIL SHEET (ENGLISH) (REV. 10/25/05)

ORIGINAL SCALE IN INCHES FOR REDUCED PLANS 0 1 2 3

CU 10
EA 481001

DISREGARD PRINTS BEARING EARLIER REVISION DATES

REVISION DATES: 1-28-10 2-18-10 2-23-10 2-24-10 3-4-10 5-3-10 5-11-10

SHEET 18 OF 35

FILE => 39-0241-h-bnt_lay2.dgn

USERNAME => trrichf DATE PLOTTED => 30-MAR-2011 TIME PLOTTED => 10:06

DIST	COUNTY	ROUTE	POST MILES TOTAL PROJECT	SHEET No	TOTAL SHEETS
10	Mer	99,140	13.8/14.4, 35.8	205	221

REGISTERED CIVIL ENGINEER 06-22-10 DATE

3-28-11
PLANS APPROVAL DATE

REGISTERED PROFESSIONAL ENGINEER Keith Stillmunkes No. 68878 Exp. 9/30/11 CIVIL STATE OF CALIFORNIA

The State of California or its officers or agents shall not be responsible for the accuracy or completeness of scanned copies of this plan sheet.

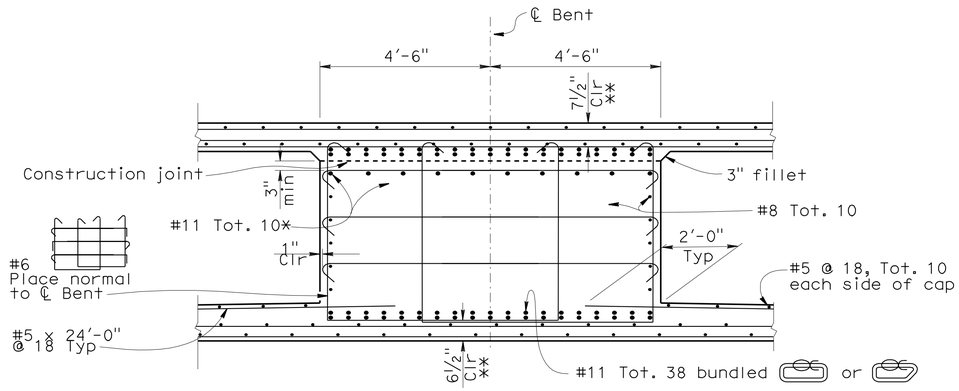

SECTION A-A
½" = 1'-0"

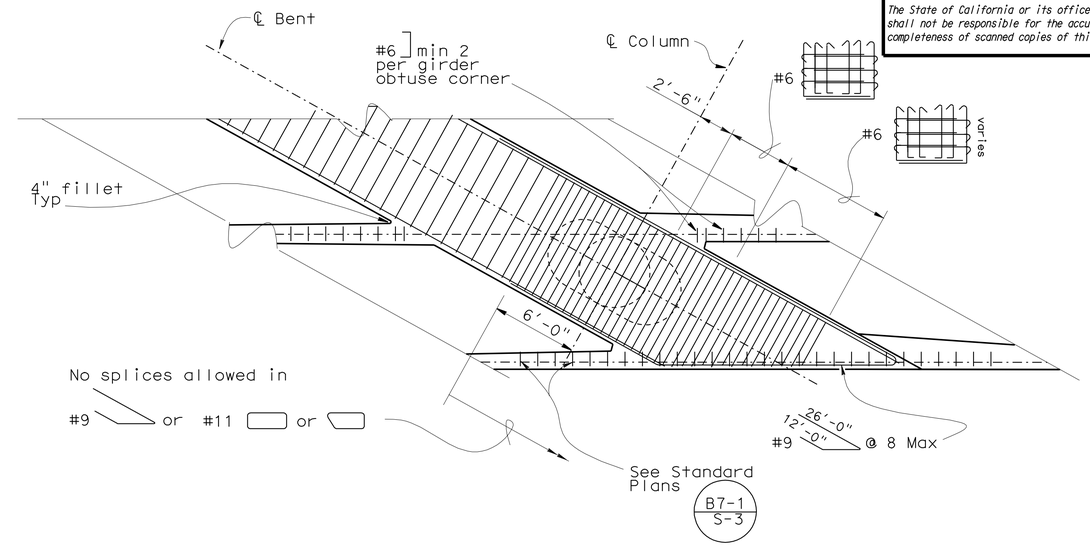

BENT CAP CORNER DETAIL EXTERIOR GIRDER
3/16" = 1'-0"

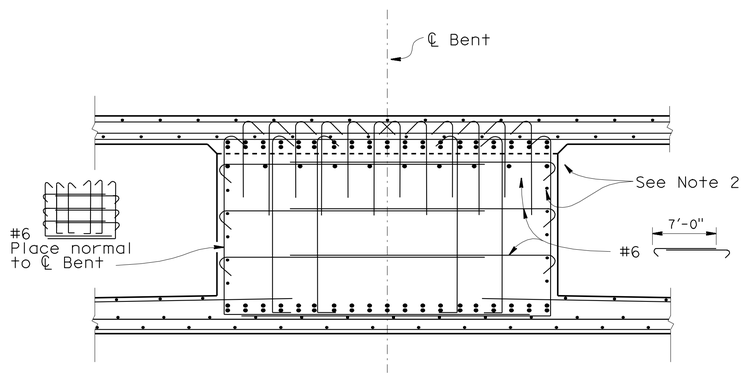

SECTION B-B
½" = 1'-0"

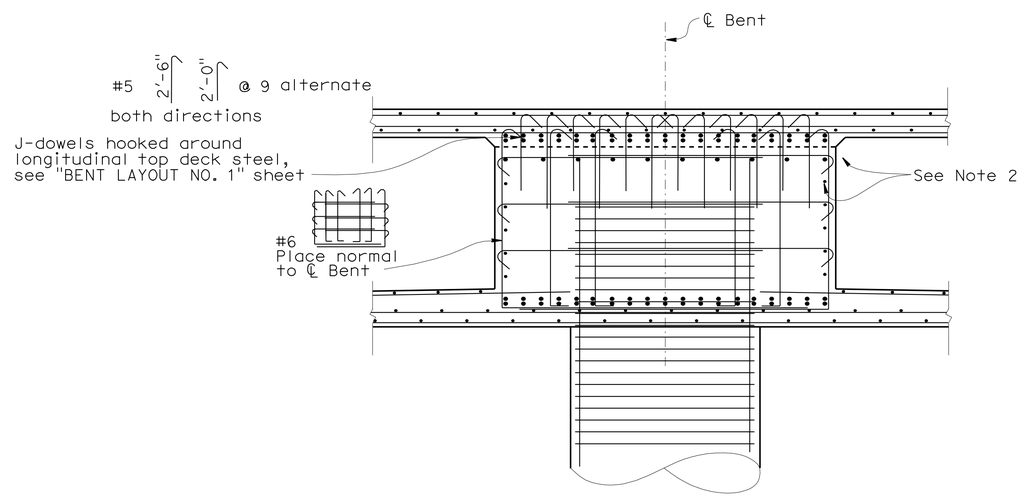

SECTION C-C
½" = 1'-0"

Notes:

1. Ultimate splice is required for #11 bent cap reinforcement.
2. For reinforcement and dimensions not shown, see Section A-A

Legend:

* Reinforcement may be bent or lowered to clear P/S ducts.

** Indicates clearance to main bent cap reinforcement.

	BY	CHECKED
DESIGN	Erika Ward	Wendy Hou
DETAILS	Y. Feng / G. Dickerson	Wendy Hou
QUANTITIES	JongKoo Jeon	Buster Hansen

STATE OF CALIFORNIA
DEPARTMENT OF TRANSPORTATION

DIVISION OF ENGINEERING SERVICES
STRUCTURE DESIGN
DESIGN BRANCH 7

BRIDGE NO. 39-0241
POST MILE 14.10

EAST MERCED OVERHEAD (REPLACE)
BENT DETAILS NO. 1

STRUCTURES DESIGN DETAIL SHEET (ENGLISH) (REV. 10/25/05)

ORIGINAL SCALE IN INCHES FOR REDUCED PLANS 0 1 2 3

CU 10
EA 481001

DISREGARD PRINTS BEARING EARLIER REVISION DATES

REVISION DATES: 11-18-09 2-11-10 2-12-10 2-23-10 2-24-10 5-11-10

SHEET 19 OF 35

FILE => 39-0241-h-bnt-det1.dgn

USERNAME => trrichf DATE PLOTTED => 30-MAR-2011 TIME PLOTTED => 10:06

DIST	COUNTY	ROUTE	POST MILES TOTAL PROJECT	SHEET No	TOTAL SHEETS
10	Mer	99,140	13.8/14.4, 35.8	206	221

REGISTERED CIVIL ENGINEER 06-22-10 DATE

3-28-11
PLANS APPROVAL DATE

REGISTERED PROFESSIONAL ENGINEER Keith Stillmunkes No. 68878 Exp. 9/30/11 CIVIL STATE OF CALIFORNIA

The State of California or its officers or agents shall not be responsible for the accuracy or completeness of scanned copies of this plan sheet.

Note A: Expanded polystyrene to be removed after superstructure is cast in place.

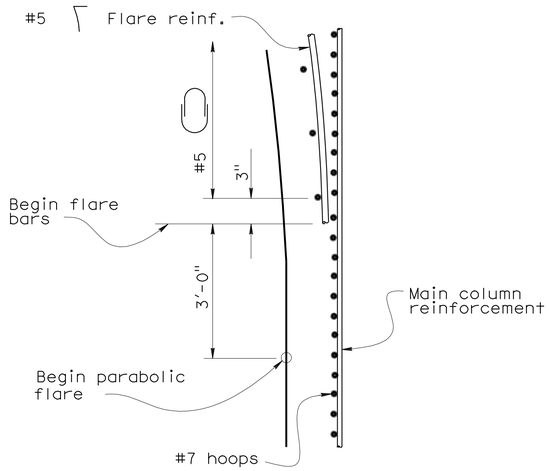

SPIRAL AND TIE DETAIL
No scale

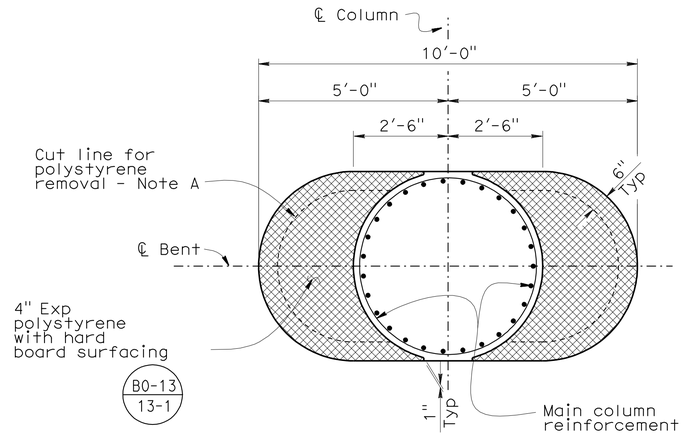

SECTION L-L
½" = 1'-0"

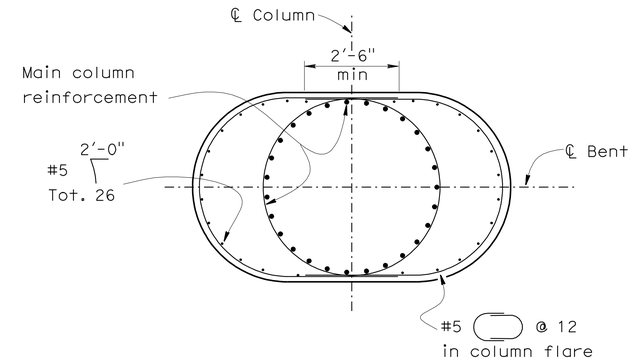

SECTION M-M
½" = 1'-0"

Note:
All hoops are "ultimate" butt spliced continuous.

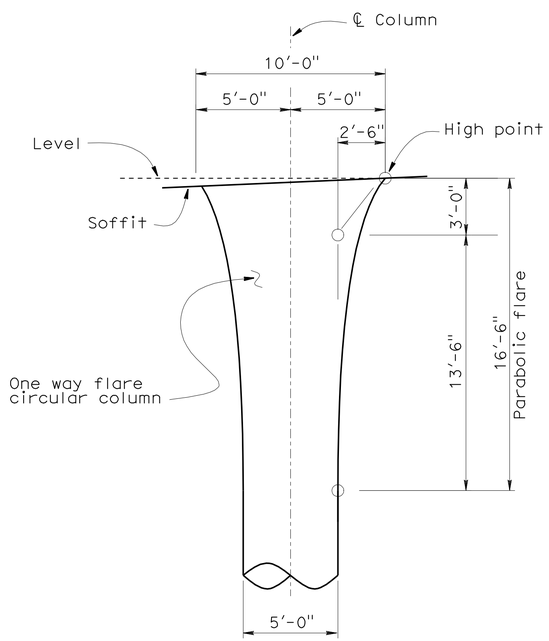

FLARE DETAIL
No scale

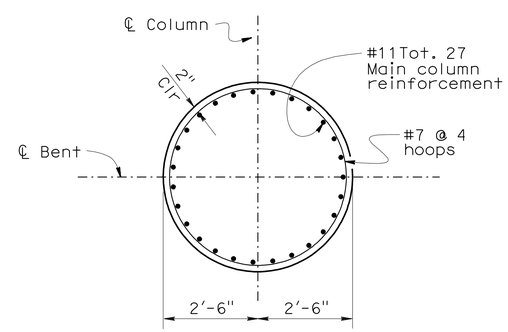

SECTION N-N
½" = 1'-0"

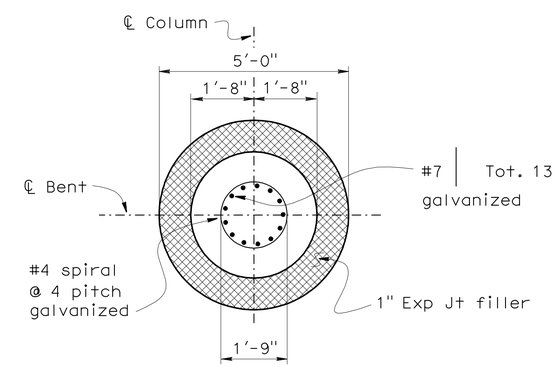

SECTION O-O
½" = 1'-0"

Note:
Footing not shown

DESIGN	BY Erika Ward	CHECKED Wendy Hou	
DETAILS	BY Yingjue Feng	CHECKED Wendy Hou	
QUANTITIES	BY JongKoo Jeon	CHECKED Buster Hansen	

STATE OF CALIFORNIA
DEPARTMENT OF TRANSPORTATION

DIVISION OF ENGINEERING SERVICES
STRUCTURE DESIGN
DESIGN BRANCH 7

BRIDGE NO. 39-0241
POST MILE 14.10

EAST MERCED OVERHEAD (REPLACE)
BENT DETAILS NO. 2

STRUCTURES DESIGN DETAIL SHEET (ENGLISH) (REV. 10/25/05)

ORIGINAL SCALE IN INCHES FOR REDUCED PLANS 0 1 2 3

CU 10
EA 481001

DISREGARD PRINTS BEARING EARLIER REVISION DATES 11-13-09 1-11-10 2-11-10 5-11-10

REVISION DATES

SHEET 20 OF 35

FILE => 39-0241-h-bnt-det2.dgn

USERNAME => trrichf DATE PLOTTED => 30-MAR-2011 TIME PLOTTED => 10:06

DIST	COUNTY	ROUTE	POST MILES TOTAL PROJECT	SHEET No	TOTAL SHEETS
10	Mer	99,140	13.8/14.4, 35.8	207	221

REGISTERED CIVIL ENGINEER 06-22-10 DATE

3-28-11
PLANS APPROVAL DATE

REGISTERED PROFESSIONAL ENGINEER Keith Stillmunkes No. 68878 Exp. 9/30/11 CIVIL STATE OF CALIFORNIA

The State of California or its officers or agents shall not be responsible for the accuracy or completeness of scanned copies of this plan sheet.

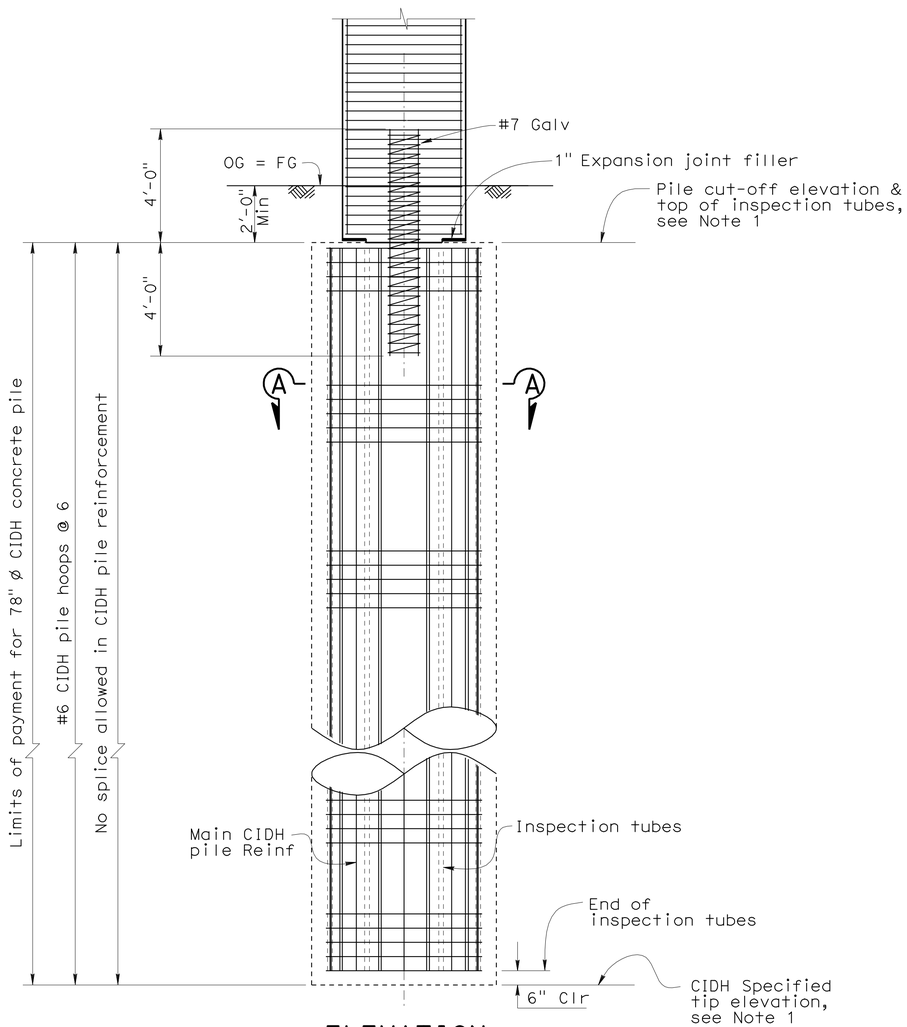

ELEVATION

3/8" = 1'-0"

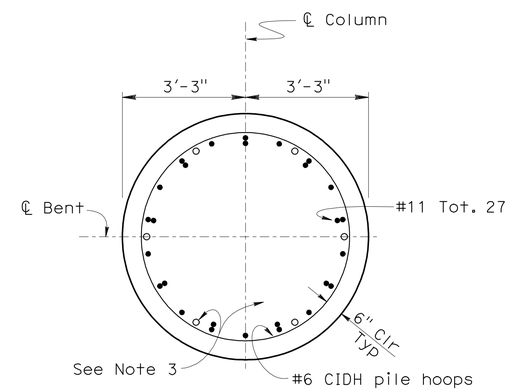

SECTION A-A

1/2" = 1'-0"

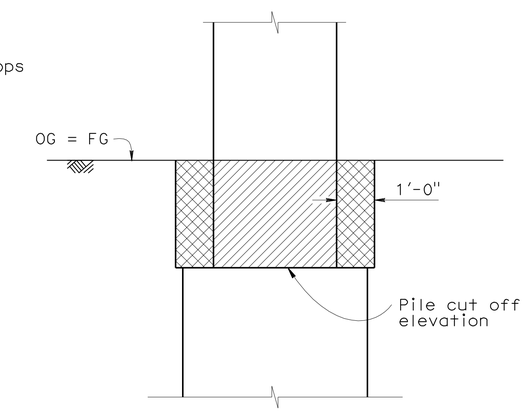

Structure Excavation, Type D

Structure Backfill, Bridge

STRUCTURE EXCAVATION AND BACKFILL DETAILS

No Scale

Notes:

1. See "Pile Data Table on "INDEX TO PLANS" sheet.
2. All hoops are ultimate butt spliced continuous. Only staggered ultimate butt splices are allowed.
3. 2" ø ID inspection tubes for CIDH pile, Tot. 6 equally spaced.

Legend:

Indicates inspection tubes.

DESIGN	BY Sebastian Barajas	CHECKED Wendy Hou	
DETAILS	BY Y. Feng / G. Dickerson	CHECKED Wendy Hou	
QUANTITIES	BY JongKoo Jeon	CHECKED Buster Hansen	

STATE OF CALIFORNIA
DEPARTMENT OF TRANSPORTATION

DIVISION OF ENGINEERING SERVICES
STRUCTURE DESIGN
DESIGN BRANCH 7

BRIDGE NO. 39-0241
POST MILE 14.10

EAST MERCED OVERHEAD (REPLACE)

BENT DETAILS NO. 3

STRUCTURES DESIGN DETAIL SHEET (ENGLISH) (REV. 10/25/05)

ORIGINAL SCALE IN INCHES FOR REDUCED PLANS 0 1 2 3

CU 10
EA 481001

DISREGARD PRINTS BEARING EARLIER REVISION DATES

REVISION DATES: 11-18-09, 12-8-09, 2-11-10, 2-24-10, 5-11-10, 6-02-10

SHEET 21 OF 35

FILE => 39-0241-h-bnt-det3.dgn

USERNAME => trrichf DATE PLOTTED => 30-MAR-2011 TIME PLOTTED => 10:06

DIST	COUNTY	ROUTE	POST MILES TOTAL PROJECT	SHEET No	TOTAL SHEETS
10	Mer	99,140	13.8/14.4, 35.8	208	221

REGISTERED CIVIL ENGINEER 2/4/11 DATE

3-28-11
PLANS APPROVAL DATE

REGISTERED PROFESSIONAL ENGINEER Keith Stillmunkes No. 68878 Exp. 9/30/11 CIVIL STATE OF CALIFORNIA

The State of California or its officers or agents shall not be responsible for the accuracy or completeness of scanned copies of this plan sheet.

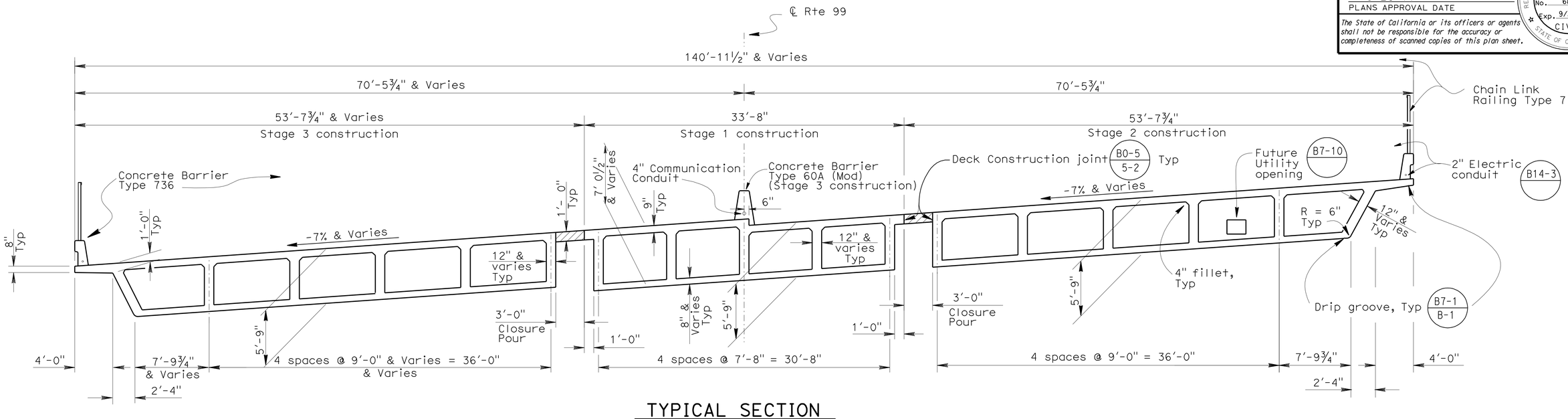

TYPICAL SECTION

3/16" = 1'-0"

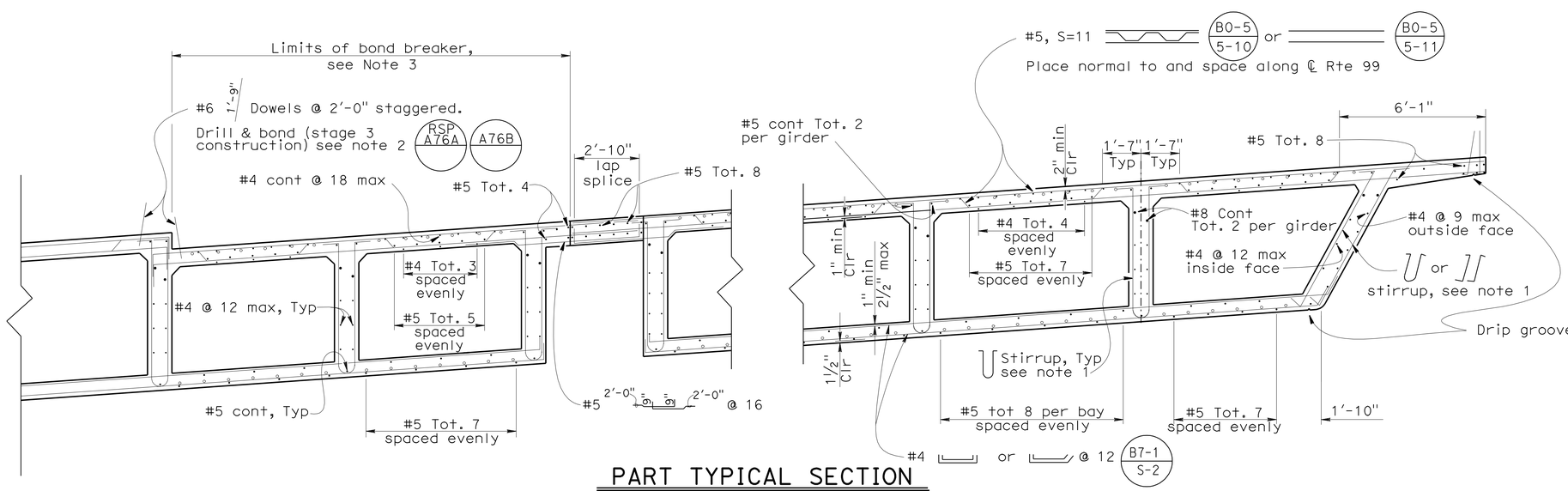

PART TYPICAL SECTION

3/8" = 1'-0"

Notes:

1. For stirrup size and spacing, see "GIRDER LAYOUT NO. 1", "GIRDER LAYOUT NO. 2" and "GIRDER DETAILS NO. 1" sheets.
2. Depth of drilled hole shall be 6" maximum. Minor adjustment may be made in dowel spacing to clear main reinforcement.
3. Bond breaker to be placed on deck surface and approach slab where PCC Overlay is required.

Legend:

Indicates closure pour

DESIGN	BY Erika Ward	CHECKED Sujan Talukder	
DETAILS	BY Yingjue Feng	CHECKED Sujan Talukder	
QUANTITIES	BY JongKoo Jeon	CHECKED Buster Hansen	

STATE OF CALIFORNIA
DEPARTMENT OF TRANSPORTATION

DIVISION OF ENGINEERING SERVICES
STRUCTURE DESIGN
DESIGN BRANCH 7

BRIDGE NO. 39-0241
POST MILE 14.10

EAST MERCED OVERHEAD (REPLACE)

TYPICAL SECTION

STRUCTURES DESIGN DETAIL SHEET (ENGLISH) (REV. 10/25/05)

ORIGINAL SCALE IN INCHES FOR REDUCED PLANS 0 1 2 3

CU 10
EA 481001

DISREGARD PRINTS BEARING EARLIER REVISION DATES

REVISION DATES: 1-28-10 2-11-10 2-23-10 3-4-10 5-3-10 5-11-10 6-24-10 7-01-10

SHEET 22 OF 35

FILE => 39-0241-k-ts.dgn

USERNAME => trrichf DATE PLOTTED => 30-MAR-2011 TIME PLOTTED => 10:06

DIST	COUNTY	ROUTE	POST MILES TOTAL PROJECT	SHEET No	TOTAL SHEETS
10	Mer	99,140	13.8/14.4, 35.8	209	221

REGISTERED CIVIL ENGINEER 06-22-10 DATE

3-28-11
PLANS APPROVAL DATE

REGISTERED PROFESSIONAL ENGINEER Keith Stillmunkes No. 68878 Exp. 9/30/11 CIVIL STATE OF CALIFORNIA

The State of California or its officers or agents shall not be responsible for the accuracy or completeness of scanned copies of this plan sheet.

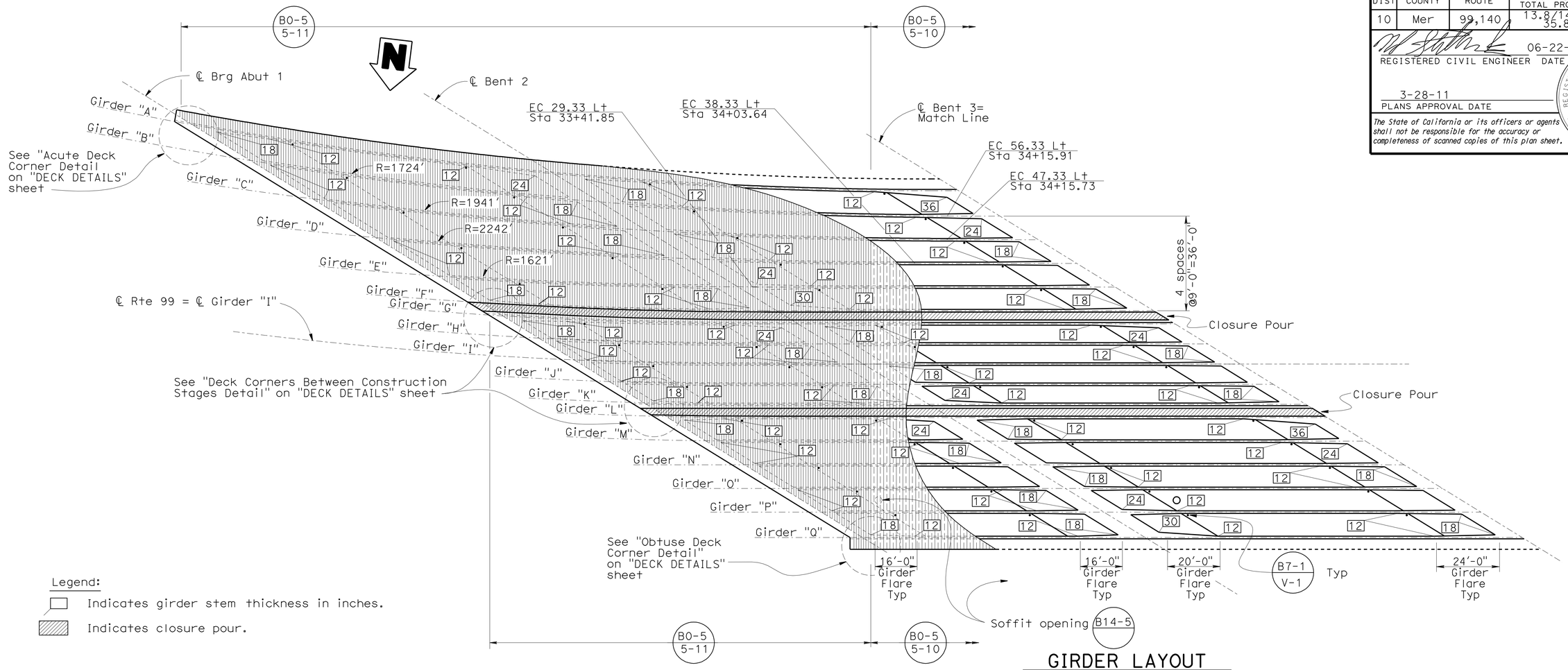

Legend:

Indicates girder stem thickness in inches.

Indicates closure pour.

GIRDER LAYOUT

1" = 20'-0"

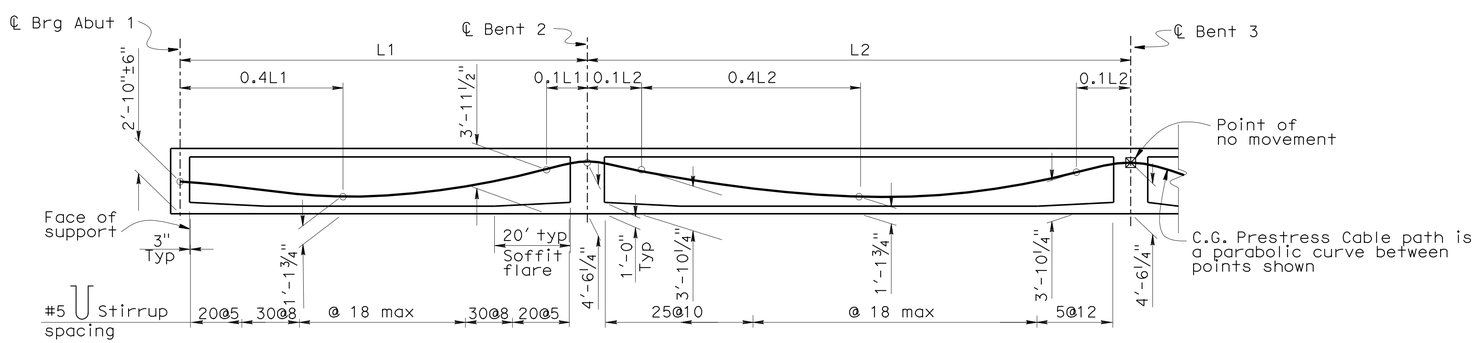

TYPICAL LONGITUDINAL SECTION & STIRRUP SPACING GIRDER C, D, I, N & O

No Scale

DESIGN	BY Erika Ward	CHECKED Sujan Talukder	
DETAILS	BY Y. Feng / G. Dickerson	CHECKED Sujan Talukder	
QUANTITIES	BY JongKoo Jeon	CHECKED Buster Hansen	

STATE OF CALIFORNIA DEPARTMENT OF TRANSPORTATION

DIVISION OF ENGINEERING SERVICES STRUCTURE DESIGN DESIGN BRANCH 7

BRIDGE NO. 39-0241 POST MILE 14.10

EAST MERCED OVERHEAD (REPLACE)

GIRDER LAYOUT NO. 1

STRUCTURES DESIGN DETAIL SHEET (ENGLISH) (REV. 10/25/05)

ORIGINAL SCALE IN INCHES FOR REDUCED PLANS 0 1 2 3

CU 10
EA 481001

DISREGARD PRINTS BEARING EARLIER REVISION DATES

REVISION DATES: 10-27-09, 2-16-10, 2-23-10, 2-26-10, 3-18-10, 5-11-10

SHEET 23 OF 35

FILE => 39-0241-1-g_lo1.dgn

USERNAME => trrright DATE PLOTTED => 30-MAR-2011 TIME PLOTTED => 10:06

DIST	COUNTY	ROUTE	POST MILES TOTAL PROJECT	SHEET No	TOTAL SHEETS
10	Mer	99,140	13.8/14.4, 35.8	210	221

REGISTERED CIVIL ENGINEER 06-22-10 DATE

3-28-11
PLANS APPROVAL DATE

REGISTERED PROFESSIONAL ENGINEER Keith Stillmunkes No. 68878 Exp. 9/30/11 CIVIL STATE OF CALIFORNIA

The State of California or its officers or agents shall not be responsible for the accuracy or completeness of scanned copies of this plan sheet.

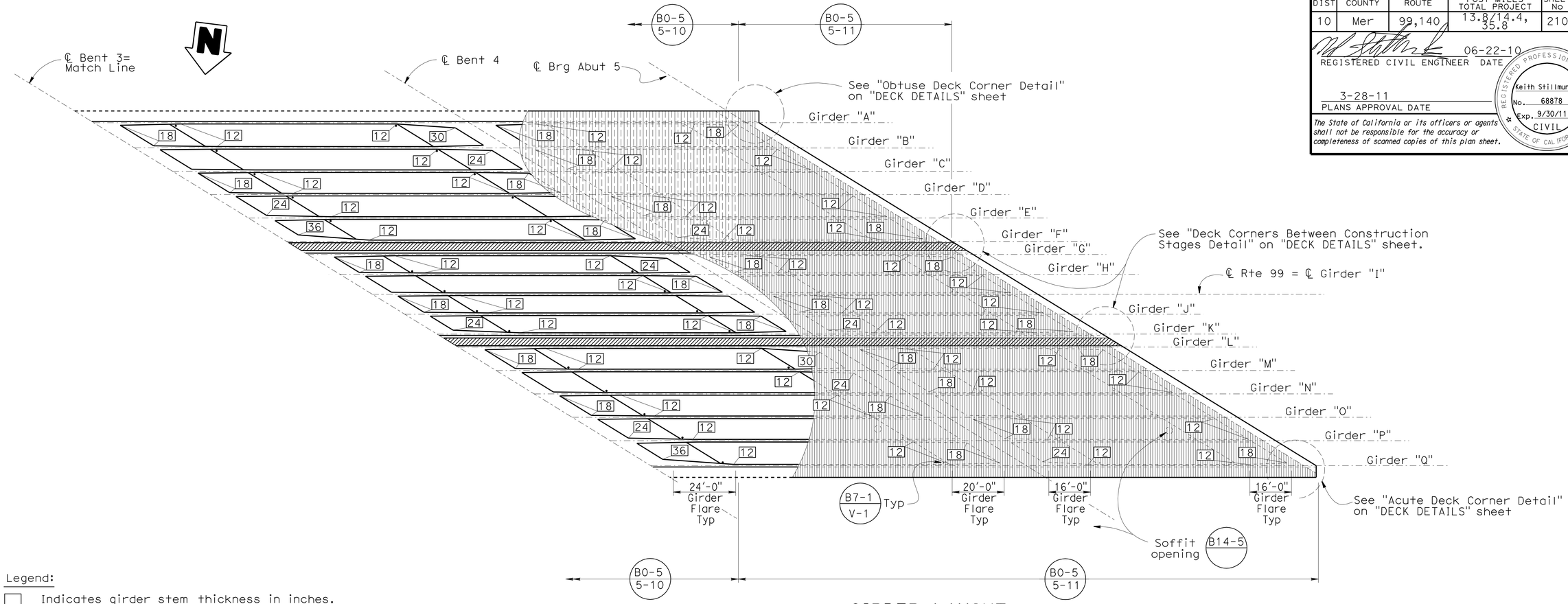

Legend:

Indicates girder stem thickness in inches.

Indicates closure pour.

GIRDER LAYOUT

1" = 20'-0"

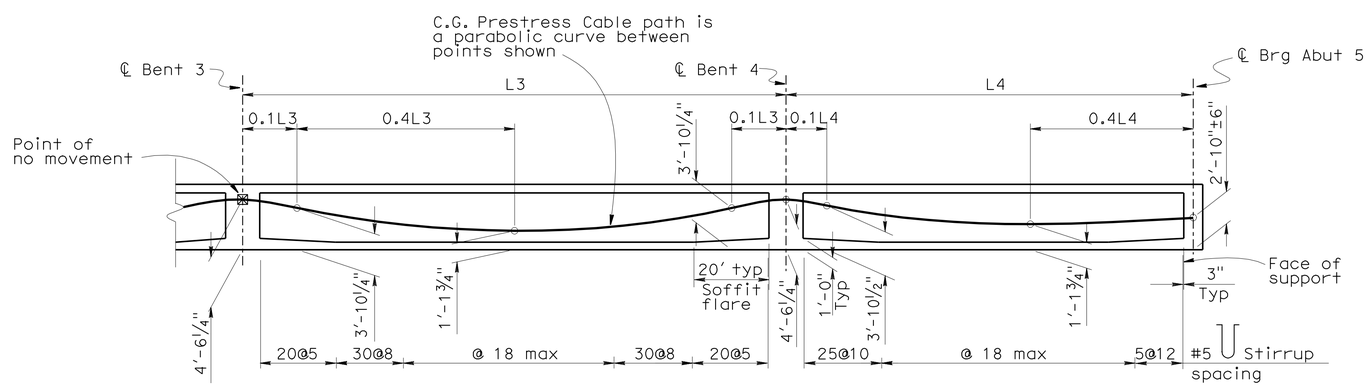

TYPICAL LONGITUDINAL SECTION & STIRRUP SPACING GIRDER C, D, I, N & O

No Scale

DESIGN	BY Erika Ward	CHECKED Sujan Talukder	
DETAILS	BY Y. Feng / G. Dickerson	CHECKED Sujan Talukder	
QUANTITIES	BY JongKoo Jeon	CHECKED Buster Hansen	

STATE OF CALIFORNIA DEPARTMENT OF TRANSPORTATION

DIVISION OF ENGINEERING SERVICES STRUCTURE DESIGN DESIGN BRANCH 7

BRIDGE NO. 39-0241
POST MILE 14.10

EAST MERCED OVERHEAD (REPLACE)

GIRDER LAYOUT NO. 2

STRUCTURES DESIGN DETAIL SHEET (ENGLISH) (REV. 10/25/05)

ORIGINAL SCALE IN INCHES FOR REDUCED PLANS 0 1 2 3

CU 10
EA 481001

DISREGARD PRINTS BEARING EARLIER REVISION DATES

REVISION DATES: 10-23-09 2-11-10 2-24-10 2-24-10 2-26-10 3-1-10 3-11-10

SHEET 24 OF 35

FILE => 39-0241-1-g_1o2.dgn

USERNAME => ttrrlchf DATE PLOTTED => 30-MAR-2011 TIME PLOTTED => 10:06

DIST	COUNTY	ROUTE	POST MILES TOTAL PROJECT	SHEET No	TOTAL SHEETS
10	Mer	99,140	13.8/14.4, 35.8	211	221

REGISTERED CIVIL ENGINEER 06-22-10 DATE

3-28-11
PLANS APPROVAL DATE

REGISTERED PROFESSIONAL ENGINEER
Keith Stillmunkes
No. 68878
Exp. 9/30/11
CIVIL
STATE OF CALIFORNIA

The State of California or its officers or agents shall not be responsible for the accuracy or completeness of scanned copies of this plan sheet.

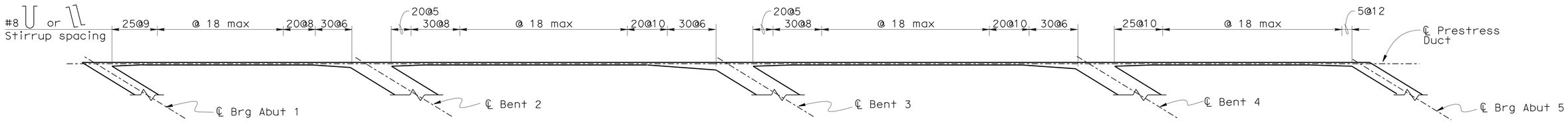

GIRDERS A, G & L

1" = 20'-0"

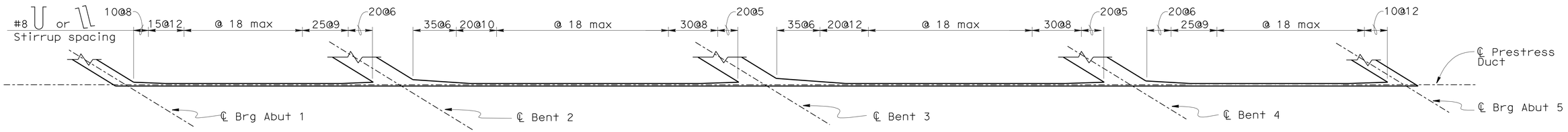

GIRDERS F, K & Q

1" = 20'-0"

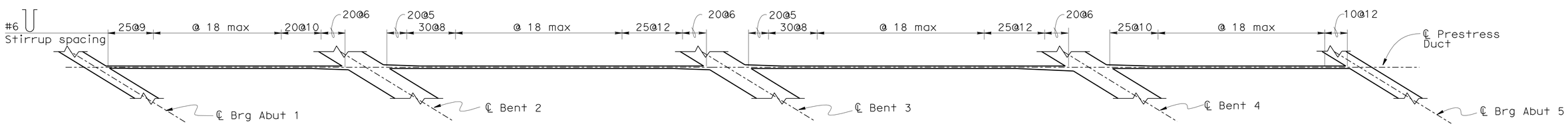

GIRDERS B, H & M

1" = 20'-0"

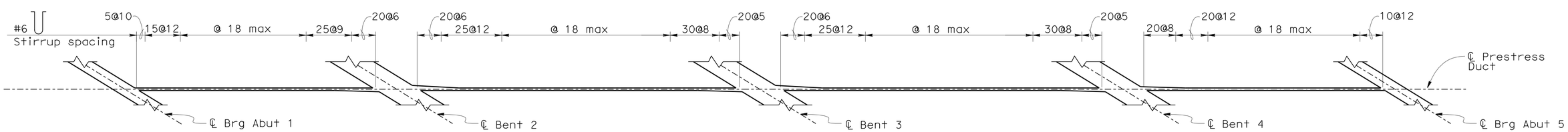

GIRDERS E, J & P

1" = 20'-0"

DESIGN	BY Erika Ward	CHECKED Sujan Talukder	
DETAILS	BY Y. Feng / G. Dickerson	CHECKED Sujan Talukder	
QUANTITIES	BY JongKoo Jeon	CHECKED Buster Hansen	

STATE OF CALIFORNIA
DEPARTMENT OF TRANSPORTATION

DIVISION OF ENGINEERING SERVICES
STRUCTURE DESIGN
DESIGN BRANCH 7

BRIDGE NO. 39-0241
POST MILE 14.10

EAST MERCED OVERHEAD (REPLACE)
GIRDER DETAILS NO. 1

STRUCTURES DESIGN DETAIL SHEET (ENGLISH) (REV. 10/25/05)

ORIGINAL SCALE IN INCHES FOR REDUCED PLANS 0 1 2 3

CU 10
EA 481001

DISREGARD PRINTS BEARING EARLIER REVISION DATES

REVISION DATES: 10-28-09 2-16-10 2-23-10 3-2-10

SHEET 25 OF 35

FILE => 39-0241-1-gdt1.dgn

USERNAME => trrichf DATE PLOTTED => 30-MAR-2011 TIME PLOTTED => 10:07

DIST	COUNTY	ROUTE	POST MILES TOTAL PROJECT	SHEET No	TOTAL SHEETS
10	Mer	99,140	13.8/14.4,35.8	212	221

REGISTERED CIVIL ENGINEER 06-22-10 DATE

3-28-11
PLANS APPROVAL DATE

REGISTERED PROFESSIONAL ENGINEER Keith Stillmunkes No. 68878 Exp. 9/30/11 CIVIL STATE OF CALIFORNIA

The State of California or its officers or agents shall not be responsible for the accuracy or completeness of scanned copies of this plan sheet.

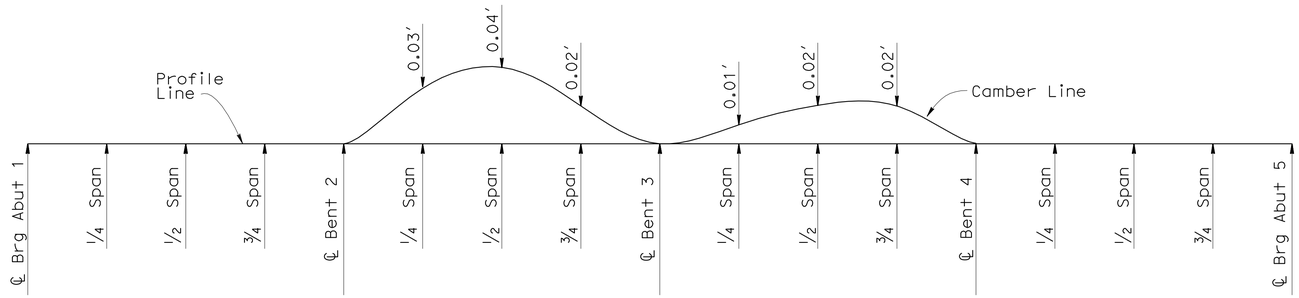

STAGE 1

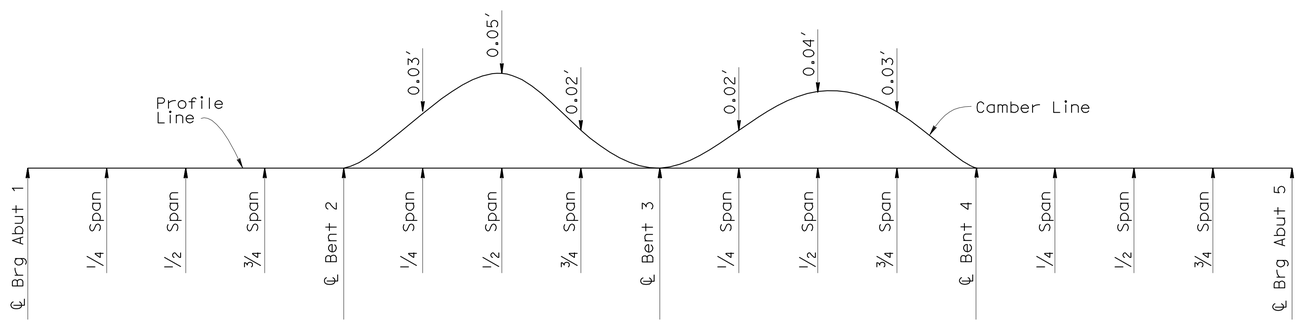

STAGE 2

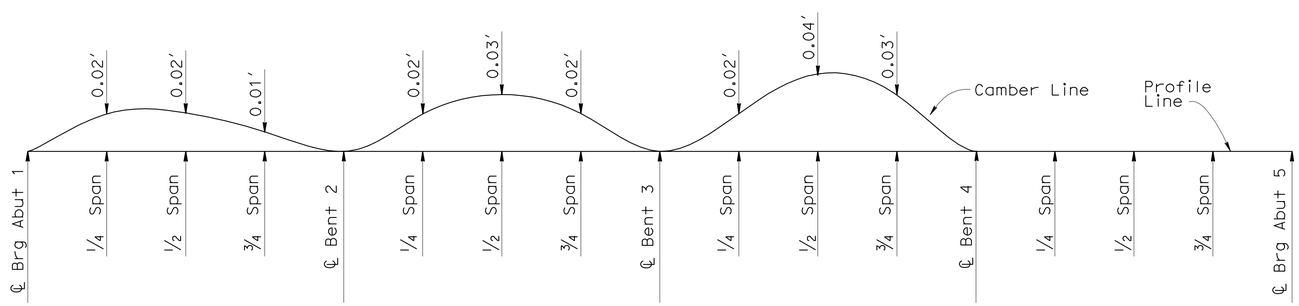

STAGE 3

CAMBER DIAGRAM

No Scale

Does not include allowance for falsework settlement

FALSEWORK RELEASE

Alternative 1:

Falsework shall be released as soon as permitted by the specifications. Closure pour shall not be placed sooner than 60 days after the falsework had been released.

Alternative 2:

Falsework shall not be released less than 28 days after the last concrete has been placed. Closure pour shall not be placed sooner than 14 days after the falsework has been released.

When Falsework Release Alternative 2 is used, camber values are 0.75 times those shown.

PRESTRESSING NOTES

270 KSI Low Relaxation Strand:

Anchor Set = 0.375 in

K = 0.0002 / ft μ = 0.15

Distribution of prestress force (Pjack) between girders shall not exceed the ratio of 3:2. Maximum final force variation between girders shall not exceed 725 kips.

Concrete: f'_c = 4 psi @ 28 days

f'_{ci} = 3.5 psi @ time of stressing

Contractor shall submit elongation calculations based on initial stress at

$\boxtimes$ = 0.880 times jacking stress.

One end stressing shall be performed from the long-span end only.

STAGE 1

Pjack = 7270 Kips

Total Number of Girders = 5

STAGE 2

Pjack = 9350 Kips

Total Number of Girders = 6

STAGE 3

Pjack = 9320 Kips

Total Number of Girders = 6

DESIGN	BY Erika Ward	CHECKED Sujan Talukder	
DETAILS	BY Gerald Dickerson	CHECKED Sujan Talukder	
QUANTITIES	BY JongKoo Jeon	CHECKED Buster Hansen	

STATE OF CALIFORNIA DEPARTMENT OF TRANSPORTATION

DIVISION OF ENGINEERING SERVICES STRUCTURE DESIGN DESIGN BRANCH 7

BRIDGE NO. 39-0241 POST MILE 14.10

EAST MERCED OVERHEAD (REPLACE)

GIRDER DETAILS NO. 2

STRUCTURES DESIGN DETAIL SHEET (ENGLISH) (REV. 10/25/05)

ORIGINAL SCALE IN INCHES FOR REDUCED PLANS 0 1 2 3

CU 10
EA 481001

DISREGARD PRINTS BEARING EARLIER REVISION DATES

REVISION DATES: ~~10-28-09~~ 2-11-10 2-16-10

SHEET 26 OF 35

FILE => 39-0241-1-gdt2.dgn

USERNAME => trphtis DATE PLOTTED => 30-MAR-2011 TIME PLOTTED => 11:17

DIST	COUNTY	ROUTE	POST MILES TOTAL PROJECT	SHEET No	TOTAL SHEETS
10	Mer	99,140	13.8/14.4,35.8	213	221

REGISTERED CIVIL ENGINEER 06-22-10 DATE

3-28-11
PLANS APPROVAL DATE

REGISTERED PROFESSIONAL ENGINEER
Keith Stillmunkes
No. 68878
Exp. 9/30/11
CIVIL
STATE OF CALIFORNIA

The State of California or its officers or agents shall not be responsible for the accuracy or completeness of scanned copies of this plan sheet.

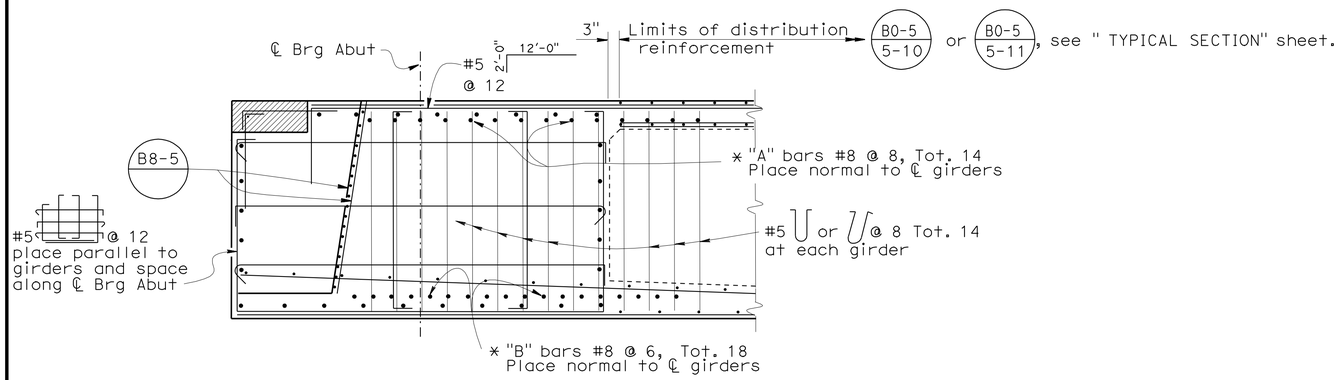

- Indicates blockout

SECTION N - N

½" = 1'-0"

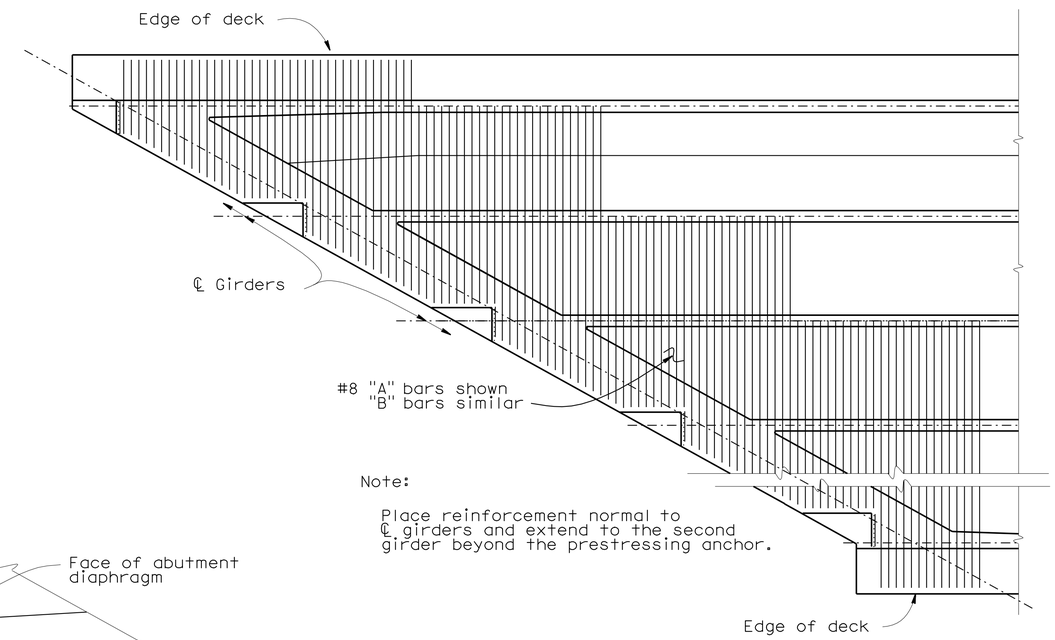

Note:

Place reinforcement normal to ℄ girders and extend to the second girder beyond the prestressing anchor.

ANCHORAGE REINFORCEMENT DETAIL

NO SCALE

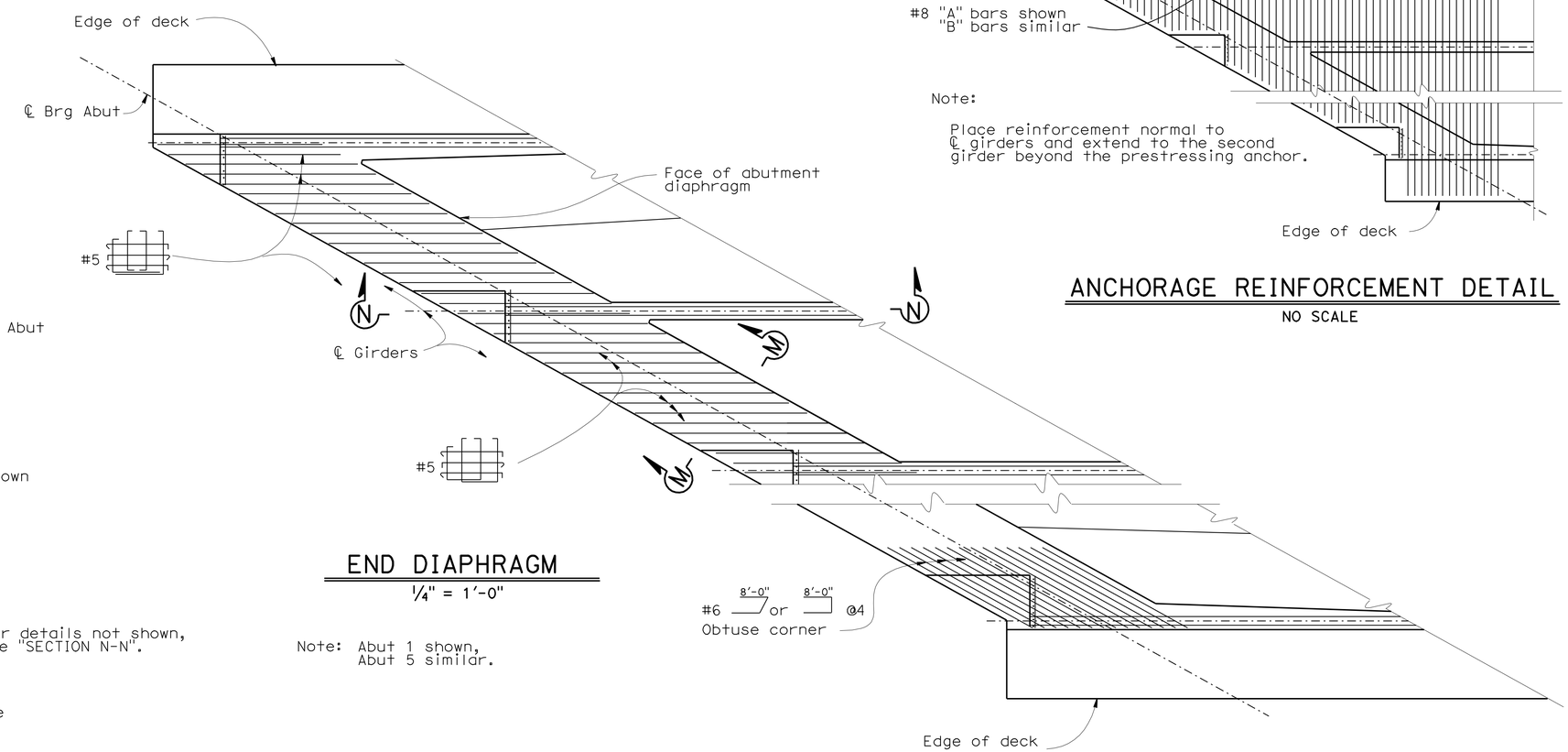

END DIAPHRAGM

¼" = 1'-0"

Note: Abut 1 shown, Abut 5 similar.

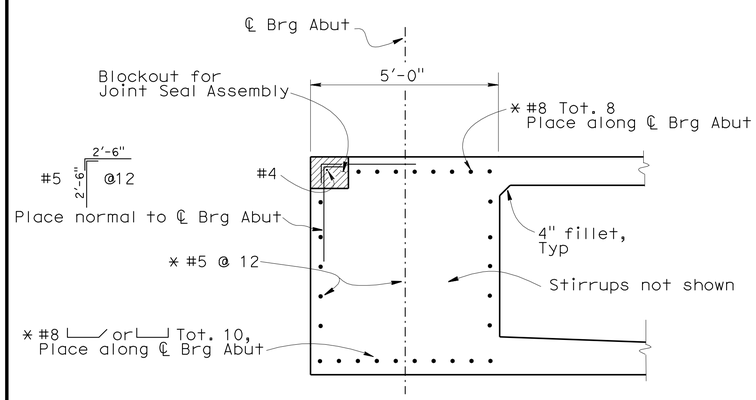

SECTION M - M

½" = 1'-0"

Note: For details not shown, see "SECTION N-N".

* Reinforcement to be service spliced in the closure pour. Splices staggered @ 1'-6"

DESIGN	BY Erika Ward / R. Deo	CHECKED Sujan Talukder	STATE OF CALIFORNIA DEPARTMENT OF TRANSPORTATION	DIVISION OF ENGINEERING SERVICES STRUCTURE DESIGN DESIGN BRANCH 7	BRIDGE NO. 39-0241	EAST MERCED OVERHEAD (REPLACE)
DETAILS	BY Yingjue Feng	CHECKED Sujan Talukder			POST MILE 14.10	GIRDER DETAILS NO. 3
QUANTITIES	BY JongKoo Jeon	CHECKED Buster Hansen				

STRUCTURES DESIGN DETAIL SHEET (ENGLISH) (REV. 10/25/05)

ORIGINAL SCALE IN INCHES FOR REDUCED PLANS 0 1 2 3

CU 10
EA 481001

DISREGARD PRINTS BEARING EARLIER REVISION DATES

REVISION DATES: 10-30-09, 2-11-10, 2-26-10, 3-2-10, 3-11-10, 3-16-10, 3-18-10, 5-11-10

SHEET 27 OF 35

FILE => 39-0241-I-gdt3.dgn

USERNAME => trphils DATE PLOTTED => 30-MAR-2011 TIME PLOTTED => 11:26

DIST	COUNTY	ROUTE	POST MILES TOTAL PROJECT	SHEET No	TOTAL SHEETS
10	Mer	99,140	13.8/14.4,35.8	214	221

REGISTERED CIVIL ENGINEER 06-22-10 DATE

3-28-11
PLANS APPROVAL DATE

REGISTERED PROFESSIONAL ENGINEER
Keith Stillmunkes
No. 68878
Exp. 9/30/11
CIVIL
STATE OF CALIFORNIA

The State of California or its officers or agents shall not be responsible for the accuracy or completeness of scanned copies of this plan sheet.

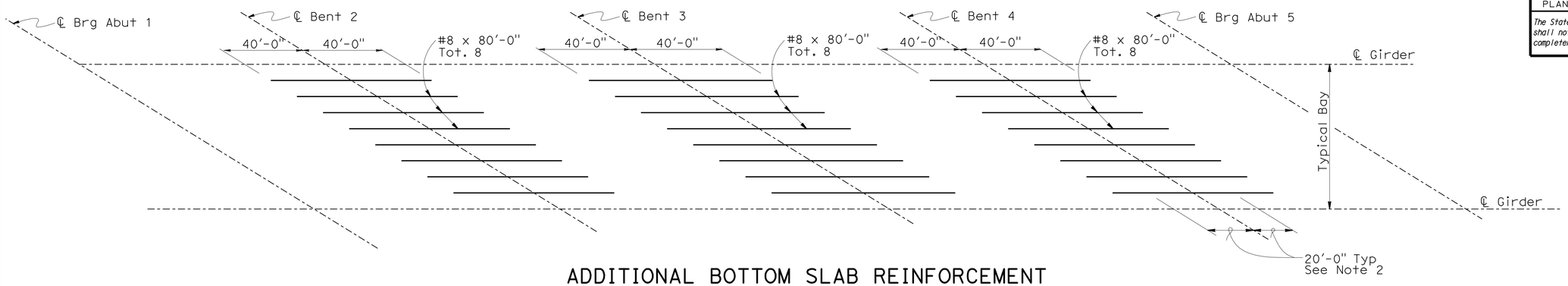

ADDITIONAL BOTTOM SLAB REINFORCEMENT INTERIOR BRIDGE

No Scale

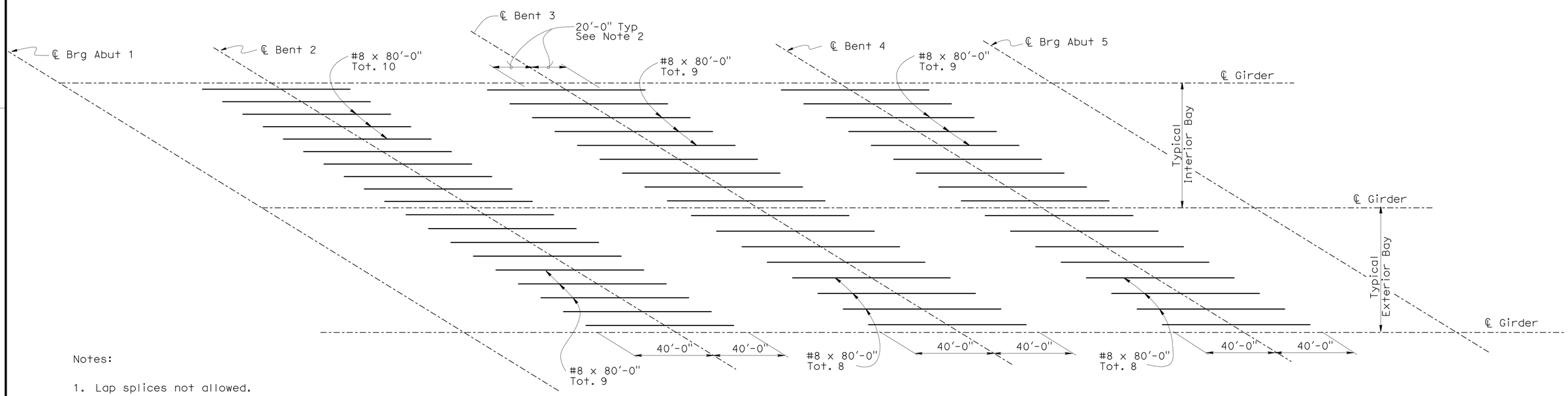

Notes:

1. Lap splices not allowed.
2. No splices allowed 20'-0" from ℄ Bent.

ADDITIONAL BOTTOM SLAB REINFORCEMENT EXTERIOR BRIDGE

No Scale

	BY	CHECKED
DESIGN	Erika Ward	Sujan Talukder
DETAILS	Yingjue Feng	Sujan Talukder
QUANTITIES	JongKoo Jeon	Buster Hansen

STATE OF CALIFORNIA
DEPARTMENT OF TRANSPORTATION

DIVISION OF ENGINEERING SERVICES
STRUCTURE DESIGN
DESIGN BRANCH 7

BRIDGE NO. 39-0241
POST MILE 14.10

EAST MERCED OVERHEAD (REPLACE)
ADDITIONAL BOTTOM SLAB REINFORCEMENT

STRUCTURES DESIGN DETAIL SHEET (ENGLISH) (REV. 10/25/05)

ORIGINAL SCALE IN INCHES FOR REDUCED PLANS 0 1 2 3

CU 10
EA 481001

DISREGARD PRINTS BEARING EARLIER REVISION DATES

REVISION DATES: ~~11-2-09~~ 5-11-10

SHEET 28 OF 35

FILE => 39-0241-o-gbot.dgn

USERNAME => trphtls DATE PLOTTED => 30-MAR-2011 TIME PLOTTED => 11:17

DIST	COUNTY	ROUTE	POST MILES TOTAL PROJECT	SHEET No	TOTAL SHEETS
10	Mer	99,140	13.8/14.4,35.8	215	221

REGISTERED CIVIL ENGINEER 06-22-10 DATE

3-28-11
PLANS APPROVAL DATE

REGISTERED PROFESSIONAL ENGINEER Keith Stillmunkes No. 68878 Exp. 9/30/11 CIVIL STATE OF CALIFORNIA

The State of California or its officers or agents shall not be responsible for the accuracy or completeness of scanned copies of this plan sheet.

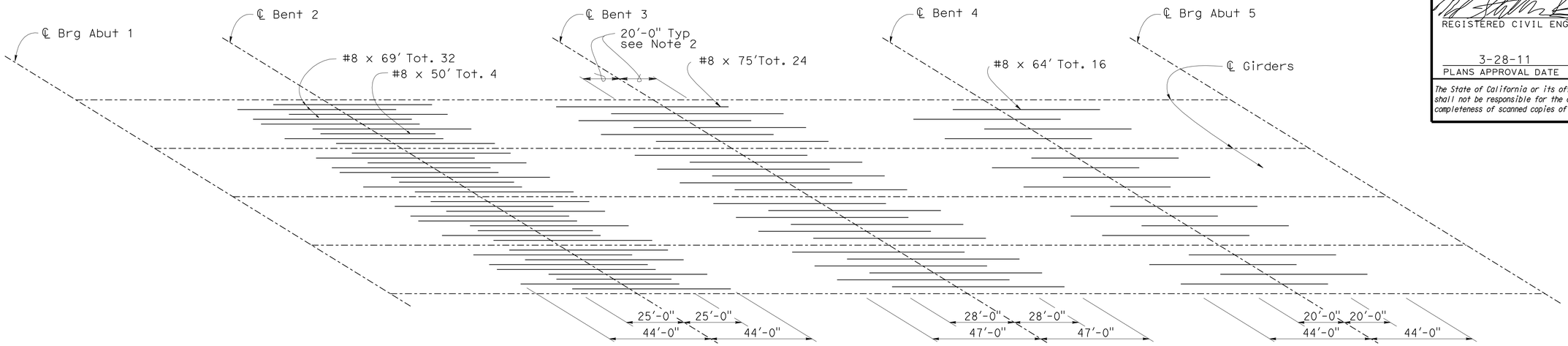

ADDITIONAL TOP SLAB REINFORCEMENT
INTERIOR BRIDGE

No Scale

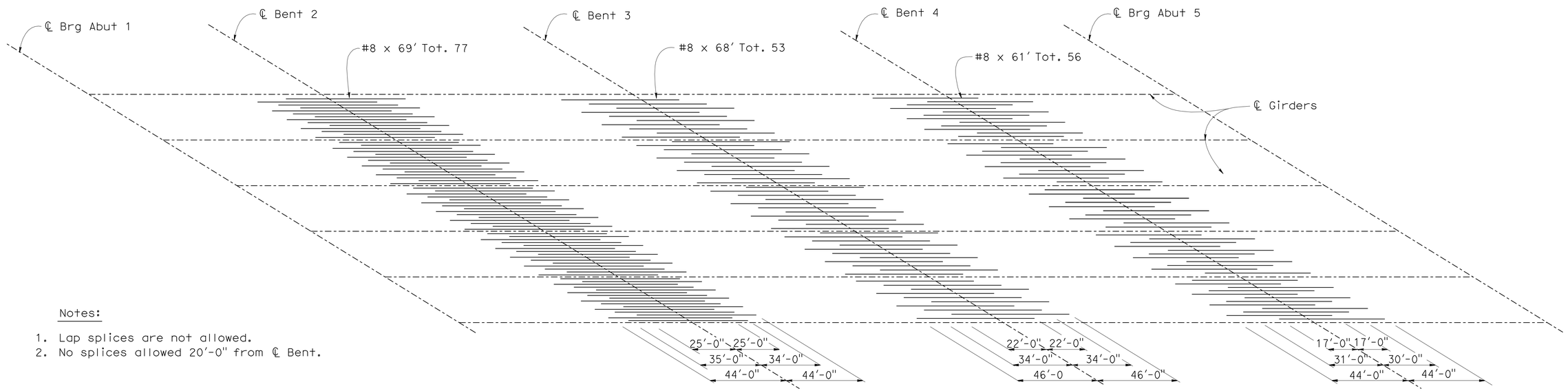

Notes:

1. Lap splices are not allowed.
2. No splices allowed 20'-0" from ℄ Bent.

ADDITIONAL TOP SLAB REINFORCEMENT
EXTERIOR BRIDGE

No Scale

DESIGN	BY Erika Ward	CHECKED Sujan Talukder	
DETAILS	BY Bruno Jenko	CHECKED Sujan Talukder	
QUANTITIES	BY JongKoo Jeon	CHECKED Buster Hansen	

STATE OF CALIFORNIA
DEPARTMENT OF TRANSPORTATION

DIVISION OF ENGINEERING SERVICES
STRUCTURE DESIGN
DESIGN BRANCH 7

BRIDGE NO. 39-0241
POST MILE 14.10

EAST MERCED OVERHEAD (REPLACE)
ADDITIONAL TOP SLAB REINFORCEMENT

STRUCTURES DESIGN DETAIL SHEET (ENGLISH) (REV. 10/25/05)

ORIGINAL SCALE IN INCHES FOR REDUCED PLANS 0 1 2 3

CU 10
EA 481001

DISREGARD PRINTS BEARING EARLIER REVISION DATES

REVISION DATES: 10-30-09 11-2-09 2-12-10 4-7-10 5-11-10

SHEET 29 OF 35

FILE => 39-0241-o-gtop.dgn

USERNAME => trphils DATE PLOTTED => 30-MAR-2011 TIME PLOTTED => 11:17

DIST	COUNTY	ROUTE	POST MILES TOTAL PROJECT	SHEET No	TOTAL SHEETS
10	Mer	99,140	13.8/14.4,35.8	216	221

REGISTERED CIVIL ENGINEER 06-22-10 DATE

3-28-11
PLANS APPROVAL DATE

REGISTERED PROFESSIONAL ENGINEER
Keith Stillmunkes
No. 68878
Exp. 9/30/11
CIVIL
STATE OF CALIFORNIA

The State of California or its officers or agents shall not be responsible for the accuracy or completeness of scanned copies of this plan sheet.

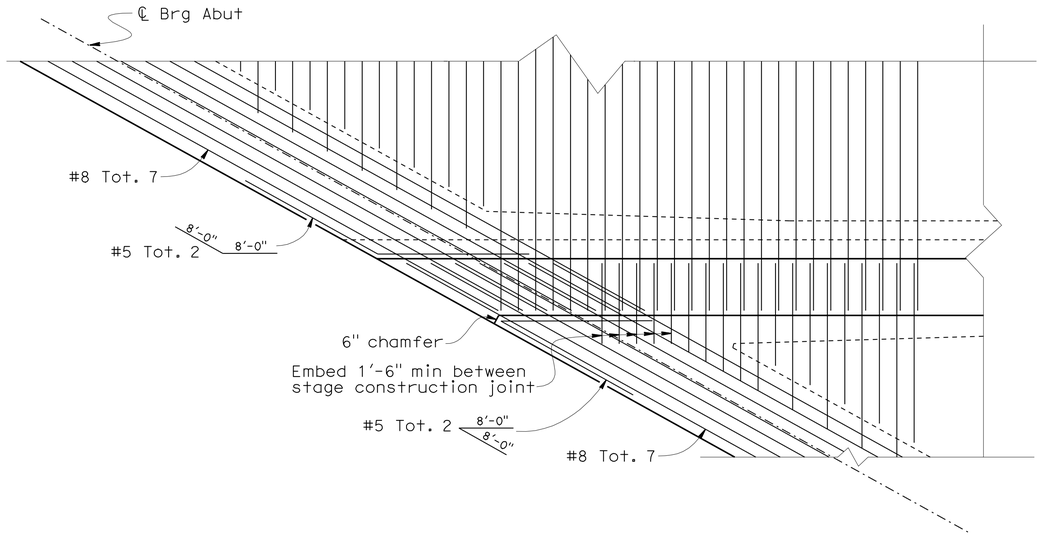

DECK CORNERS BETWEEN CONSTRUCTION STAGES DETAIL

1/4"= 1'-0"

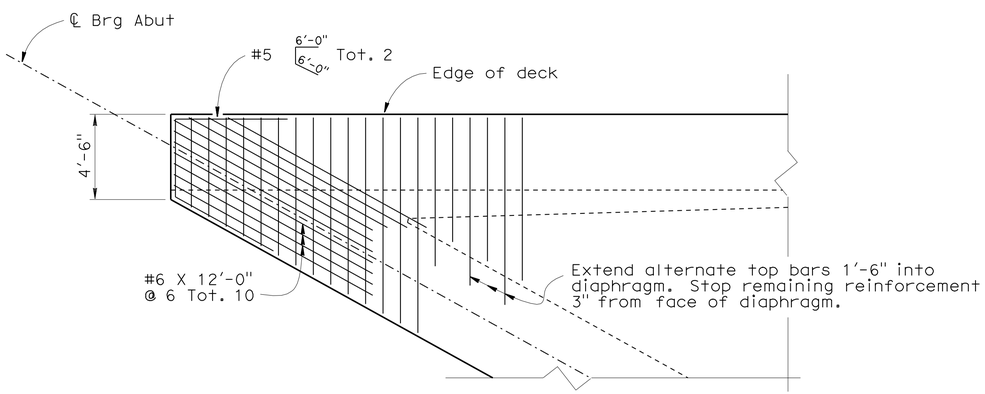

ACUTE DECK CORNER DETAIL

1/4"= 1'-0"

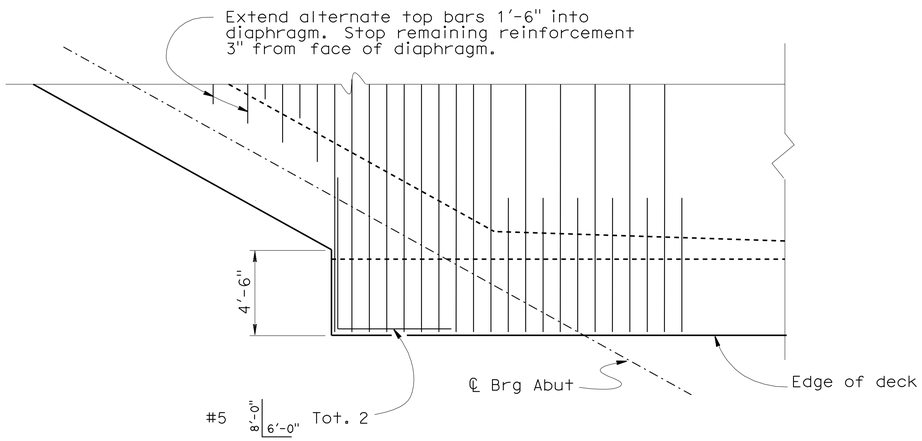

OBTUSE DECK CORNER DETAIL

1/4" = 1'-0"

DESIGN	BY Erika Ward	CHECKED Sujan Talukder	
DETAILS	BY Y. Feng / G. Dickerson	CHECKED Sujan Talukder	
QUANTITIES	BY JongKoo Jeon	CHECKED Buster Hansen	

STATE OF CALIFORNIA
DEPARTMENT OF TRANSPORTATION

DIVISION OF ENGINEERING SERVICES
STRUCTURE DESIGN
DESIGN BRANCH 7

BRIDGE NO. 39-0241
POST MILE 14.10

EAST MERCED OVERHEAD (REPLACE)
DECK DETAILS

STRUCTURES DESIGN DETAIL SHEET (ENGLISH) (REV. 10/25/05)

ORIGINAL SCALE IN INCHES FOR REDUCED PLANS 0 1 2 3

CU 10
EA 481001

DISREGARD PRINTS BEARING EARLIER REVISION DATES

REVISION DATES: 11-2-09, 2-12-10, 2-23-10, 5-3-10, 5-11-10

SHEET 30 OF 35

FILE => 39-0241-p-deck-det.dgn

USERNAME => trphillis DATE PLOTTED => 30-MAR-2011 TIME PLOTTED => 11:17

DIST.	COUNTY	ROUTE	POST MILES TOTAL PROJECT	SHEET NO.	TOTAL SHEETS
10	Mer	99,140	13.8/14.4,35.8	217	221

06-22-10
REGISTERED ENGINEER - CIVIL

3-28-11
PLANS APPROVAL DATE

REGISTERED PROFESSIONAL ENGINEER Keith Stillmunkes No. 68878 Exp. 9/30/11 CIVIL STATE OF CALIFORNIA

The State of California or its officers or agents shall not be responsible for the accuracy or completeness of scanned copies of this plan sheet.

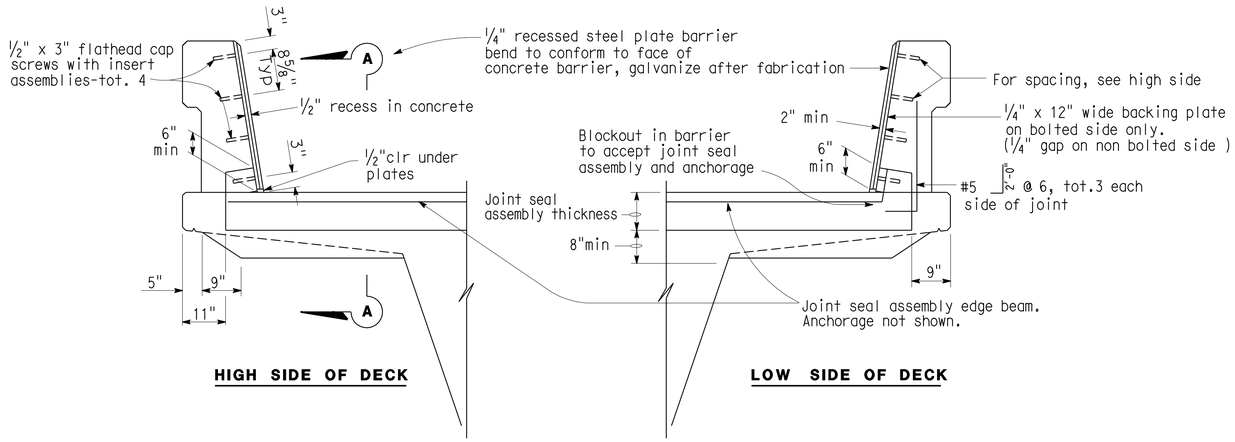

SEAL INSTALLATION

No Scale

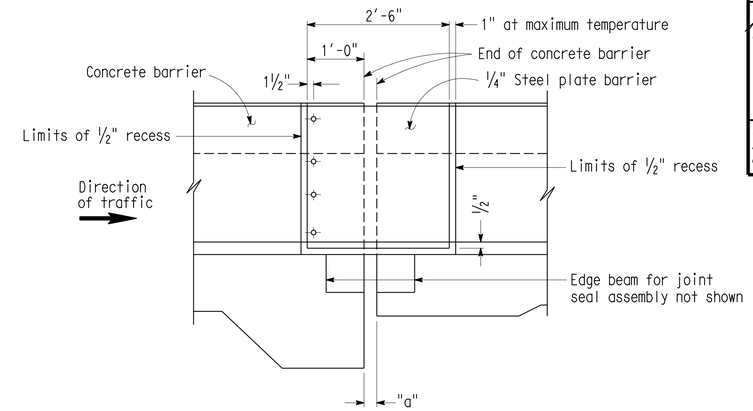

ELEVATION A-A

3/4" = 1'-0"

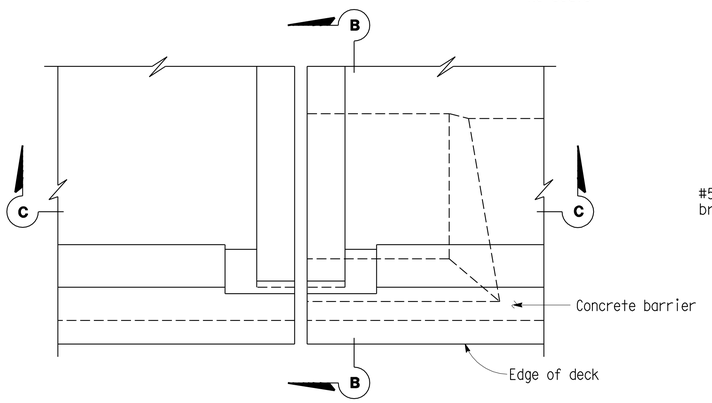

PLAN - DECK JOINT

3/4" = 1'-0"

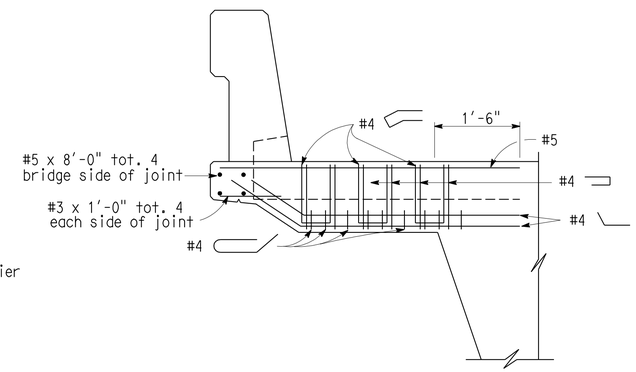

SECTION B-B

No Scale

Reinf. shown is in addition to slab reinf.

JOINT INFORMATION		"a" DIMENSIONS			
LOCATION	MOVEMENT RATING (M.R.)	SKEW	WINTER	SPRING & FALL	SUMMER
Abutment 1	8"	60°38'42"	2"	1 1/2"	1"
Abutment 5	8"	58°22'52"	2"	1 1/2"	1"

Notes:

1) For details not shown, see Bridge Plans
2) x is greater than or equal to y

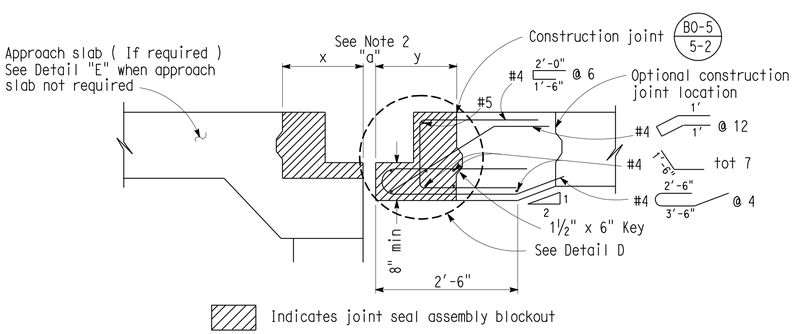

SECTION C-C

3/4" = 1'-0"

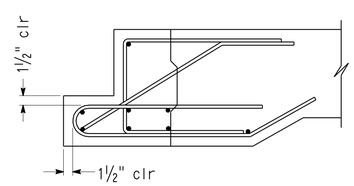

DETAIL D

1" = 1'-0"

1

1

STANDARD DRAWING		
FILE NO. xs8-030e	APPROVED BY T DELIS (RESPONSIBLE TECHNICAL SPECIALIST) APPROVAL DATE 5-8-08	RELEASED BY ROBERTO LACALLE (RESPONSIBLE OFFICE CHIEF) RELEASE DATE 5-8-08

1 Deleted detail

STATE OF CALIFORNIA DEPARTMENT OF TRANSPORTATION

DIVISION OF ENGINEERING SERVICES

BRIDGE NO. 39-0241
POST MILE 14.10

EAST MERCED OVERHEAD (REPLACE)
JOINT SEAL - ABUTMENT DETAILS
MOVEMENT RATING GREATER THAN 4"

DS OSD 2147A (ENGLISH STANDARD DRAWING "XS" BORDER REV. 01/11/08)

ORIGINAL SCALE IN INCHES FOR REDUCED PLANS 0 1 2 3

CU 10
EA 481001

DISREGARD PRINTS BEARING EARLIER REVISION DATES

REVISION DATES (PRELIMINARY STAGE ONLY) ~~5-3-10~~ 6-21-10

SHEET 31 OF 35

USERNAME => trphils

39-0241-r-jsa.dgn

DATE PLOTTED => 30-MAR-2011 TIME PLOTTED => 11:17

DIST.	COUNTY	ROUTE	POST MILES TOTAL PROJECT	SHEET NO.	TOTAL SHEETS
10	Mer	99,140	13.8/14.4,35.8	218	221

06-22-10
REGISTERED ENGINEER - CIVIL

3-28-11
PLANS APPROVAL DATE

REGISTERED PROFESSIONAL ENGINEER Keith Stillmunkes No. 68878 Exp. 9/30/11 CIVIL STATE OF CALIFORNIA

The State of California or its officers or agents shall not be responsible for the accuracy or completeness of scanned copies of this plan sheet.

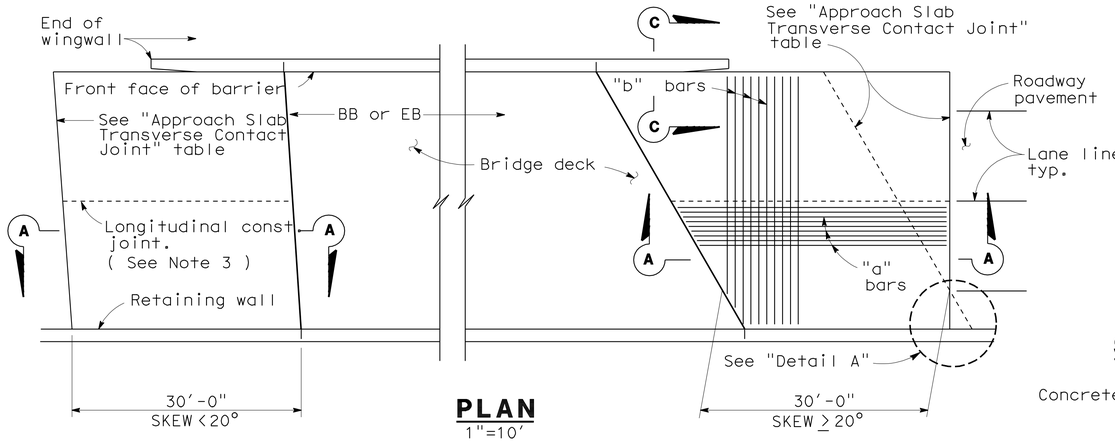

PLAN
1"=10'

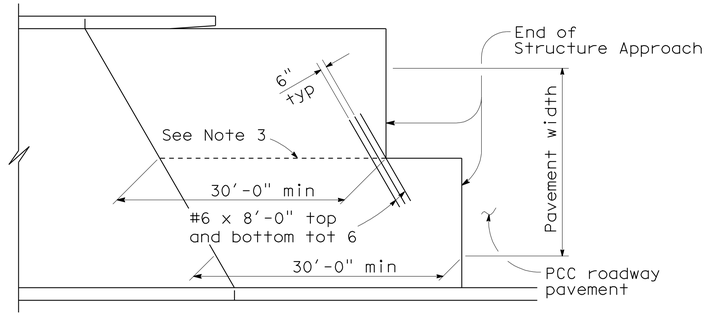

STRUCTURE APPROACH - END STAGGER DETAIL
No Scale

APPROACH SLAB TRANSVERSE CONTACT JOINT		
APPROACH SKEW	WITH AC ROADWAY PAVEMENT	WITH PCC ROADWAY PAVEMENT
< 20°	Parallel to face of paving notch	Parallel to face of paving notch
20° - 45°	Parallel to face of P N use (Detail A)	Stagger lines 24' to 36' apart.
> 45°	Parallel to face of P N use (Detail A)	Stagger at each lane line.

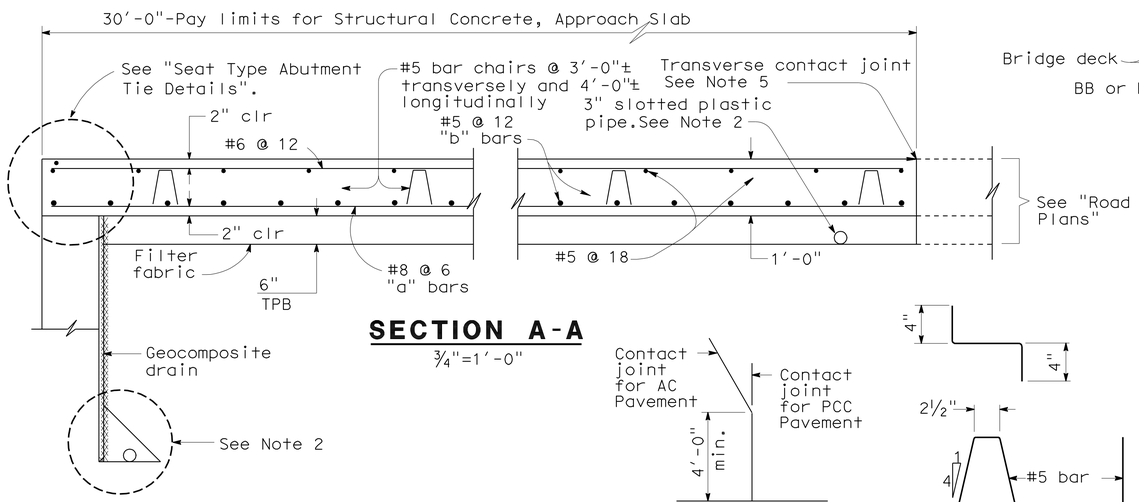

SECTION A-A
¾"=1'-0"

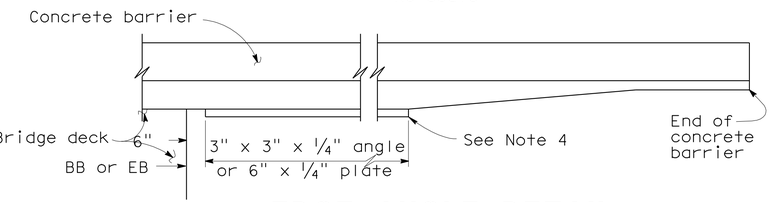

EDGE ANGLE DETAIL
½"=1'-0"

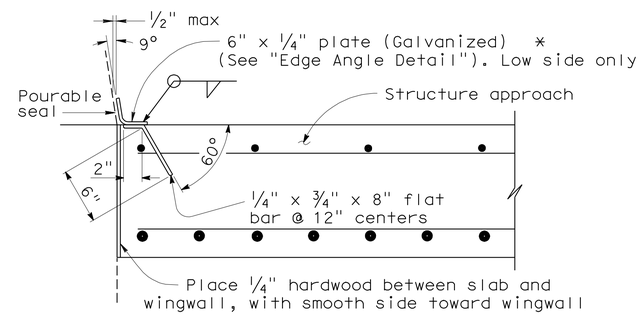

*(TO BE USED WITH TYPE 732 OR TYPE 736 CONCRETE BARRIER)

DETAIL A
No Scale

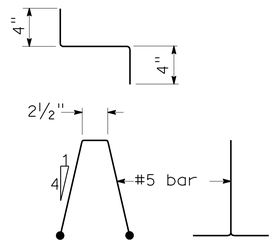

BAR CHAIR DETAIL
1½"=1'-0"

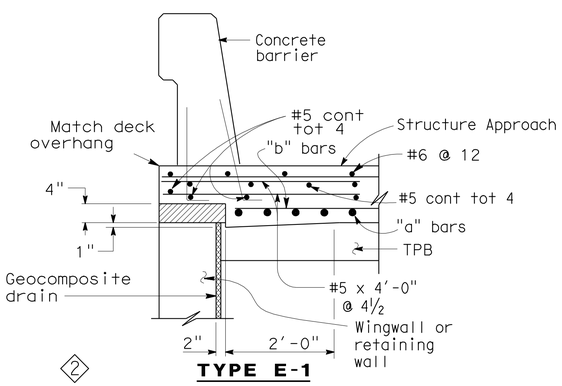

TYPE E-1

SECTION C-C
¾"=1'-0"

(Type E-1 to be used, unless otherwise shown on plans)

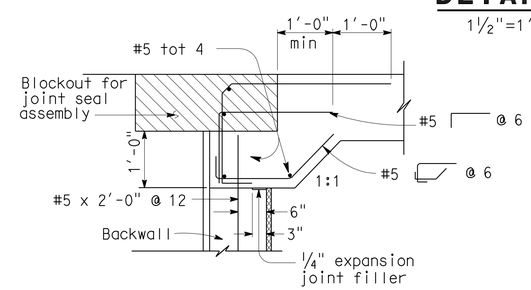

MR > 2"

DETAIL B
1½"=1'-0"

SEAT TYPE ABUTMENT TIE DETAILS (SEE NOTE 1)
¾"=1'-0"

NOTES:

1. For details not shown, see Structure Plans. For MR ≤ 2", adjust bar reinforcement to clear a sawcut for sealed joint, when required.
2. For drainage details, see "Structure Approach Drainage Details" sheet.
3. Longitudinal construction joints, when permitted by the Engineer, shall be located on lane lines.
4. End angle or plate at beginning of barrier transition, end of wingwall or end of structure approach as applicable.
5. For transverse contact joint with new PCC paving, refer to Standard Plan P10.
6. At the contractor's option, approach slab transverse reinforcement may be placed parallel to paving notch. Spacing of transverse reinforcement is measured along ℄ roadway.

Remove all polystyrene.

STANDARD DRAWING				
RELEASE DATE 3/14/05	DESIGN	BY M.TRAFFALIS	CHECKED E.THORKILDSEN	RELEASED BY
	DETAILS	BY R.YEE	CHECKED E.THORKILDSEN	
FILE NO. xs3-120e	SUBMITTED	BY M.HA	DRAWING DATE 4/98	OFFICE CHIEF

1 Deleted detail
2 Modified detail

STATE OF CALIFORNIA
DEPARTMENT OF TRANSPORTATION

DIVISION OF ENGINEERING SERVICES

BRIDGE NO. 39-0241
MILE POST 14.10

EAST MERCED OVERHEAD (REPLACE)
STRUCTURE APPROACH TYPE N(30S)

DS OSD 2147A (ENGLISH) (REV. X/XX/XX)

ORIGINAL SCALE IN INCHES FOR REDUCED PLANS 0 1 2 3

CU 10
EA 481001

DISREGARD PRINTS BEARING EARLIER REVISION DATES 11-30-09

REVISION DATES (PRELIMINARY STAGE ONLY)

SHEET 32 OF 35

USERNAME => trphils

39-0241-s_sat.dgn

DATE PLOTTED => 30-MAR-2011 TIME PLOTTED => 11:18

DIST.	COUNTY	ROUTE	POST MILES TOTAL PROJECT	SHEET NO.	TOTAL SHEETS
10	Mer	99,140	13.8/14.4,35.8	219	221

06-22-10
REGISTERED ENGINEER - CIVIL

3-28-11
PLANS APPROVAL DATE

REGISTERED PROFESSIONAL ENGINEER Keith Stillmunkes No. 68878 Exp. 9/30/11 CIVIL STATE OF CALIFORNIA

The State of California or its officers or agents shall not be responsible for the accuracy or completeness of scanned copies of this plan sheet.

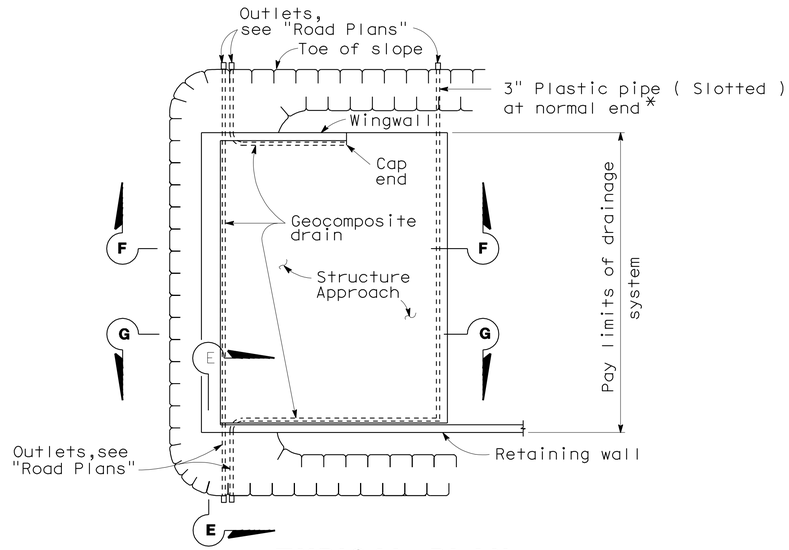

TYPICAL PLAN

No Scale

*For pipe layout at staggered end,see "Detail B".

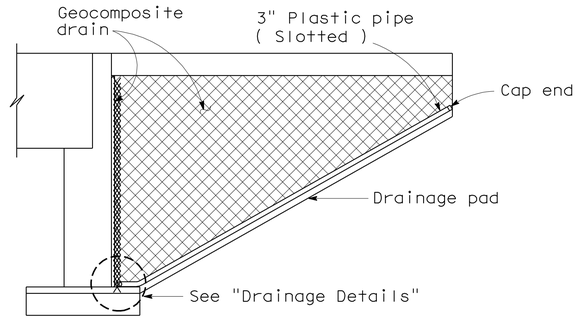

CANTILEVER WINGWALL SECTION F-F

No Scale

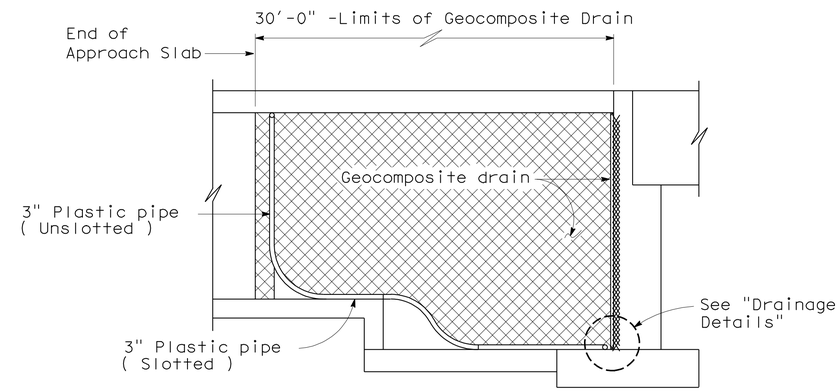

RETAINING WALL WINGWALL SECTION G-G

No Scale

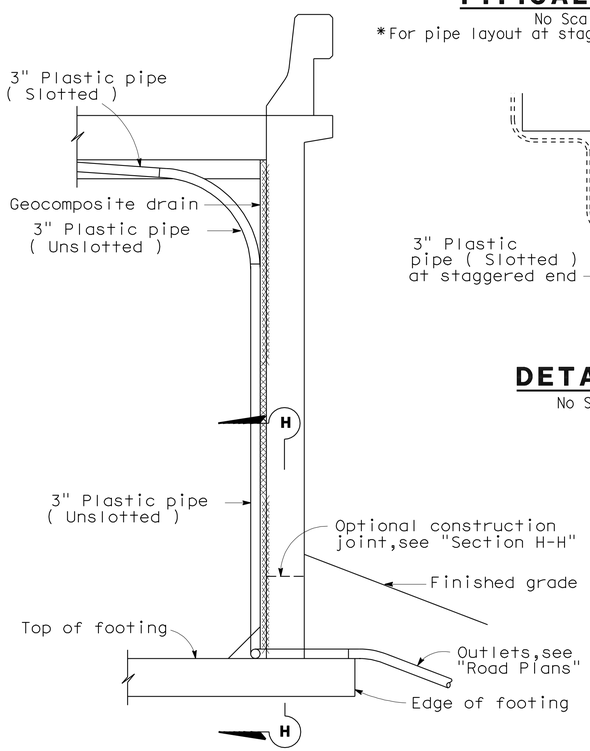

SECTION E-E

No Scale

NOTE: Bends and junctions in 3" plastic pipe are 30" radius min.

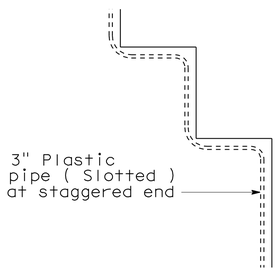

DETAIL B

No Scale

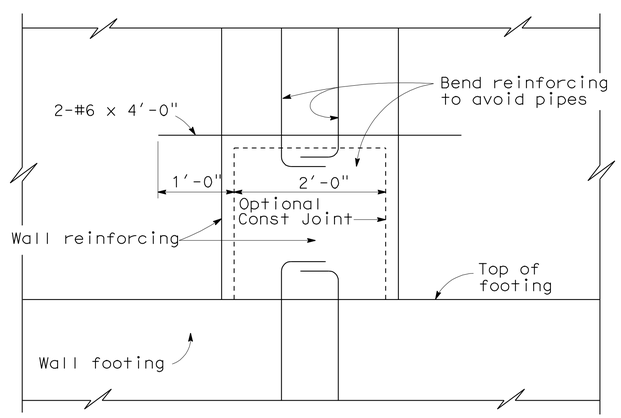

SECTION H-H

1"=1'-0"

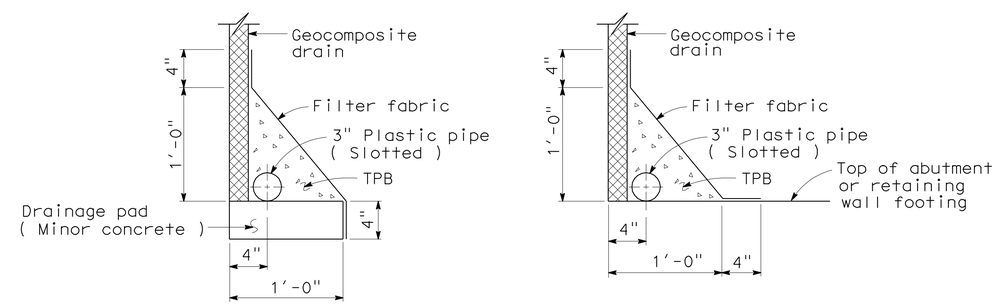

WITHOUT FOOTING **WITH FOOTING**

DRAINAGE DETAILS

1½"=1'-0"

STANDARD DRAWING				
RELEASE DATE 4/23/98	DESIGN BY M.TRAFFALIS	CHECKED E.THORKILDSEN	RELEASED BY	
FILE NO. xs3-110e	DETAILS BY R.YEE	CHECKED E.THORKILDSEN		
	SUBMITTED BY M.HA	DRAWING DATE 4/98	OFFICE CHIEF	

DS OSD 2147A (ENGLISH) (REV. X/XX/XX)

STATE OF CALIFORNIA DEPARTMENT OF TRANSPORTATION

DIVISION OF ENGINEERING SERVICES

CU 10
EA 481001

BRIDGE NO. 39-0241
MILE POST 14.10

EAST MERCED OVERHEAD (REPLACE)
STRUCTURE APPROACH DRAINAGE DETAILS

ORIGINAL SCALE IN INCHES FOR REDUCED PLANS 0 1 2 3

DISREGARD PRINTS BEARING EARLIER REVISION DATES 11-30-09 5-11-10

REVISION DATES (PRELIMINARY STAGE ONLY)

SHEET 33 OF 35

USERNAME => trphils

39-0241-s-sadd.dgn

DATE PLOTTED => 30-MAR-2011 TIME PLOTTED => 11:18

DIST.	COUNTY	ROUTE	POST MILES TOTAL PROJECT	SHEET NO.	TOTAL SHEETS
10	Mer	99,140	13.8/14.4,35.8	220	221

06-22-10
REGISTERED ENGINEER - CIVIL

3-28-11
PLANS APPROVAL DATE

REGISTERED PROFESSIONAL ENGINEER
Keith Stillmunkes
No. 68878
Exp. 9/30/11
CIVIL
STATE OF CALIFORNIA

The State of California or its officers or agents shall not be responsible for the accuracy or completeness of scanned copies of this plan sheet.

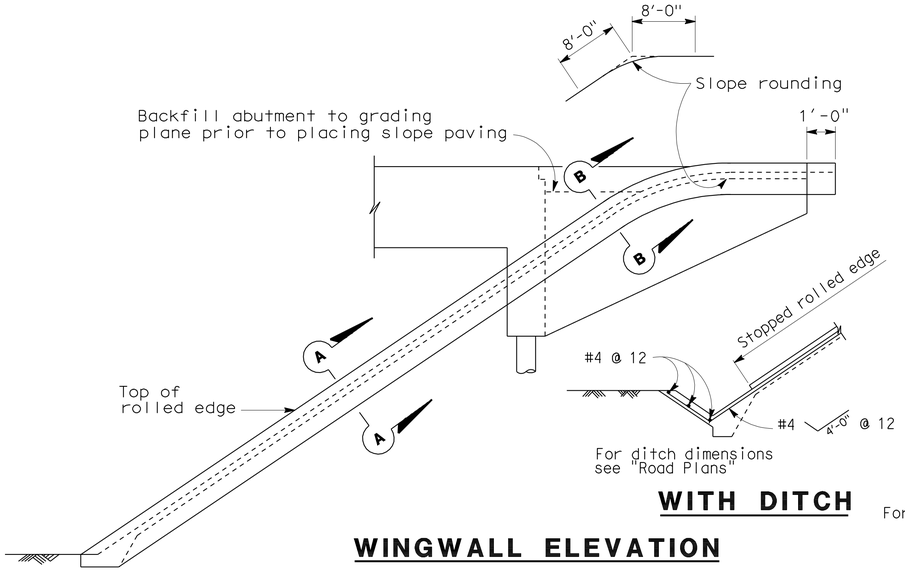

WITH DITCH

WINGWALL ELEVATION

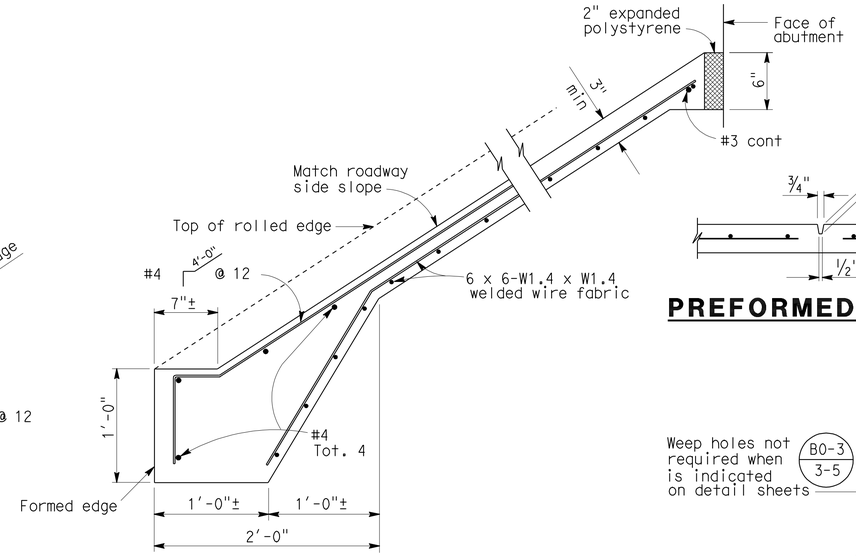

TYPICAL SECTION - CONCRETE PAVING

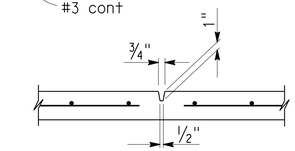

PREFORMED GROOVE

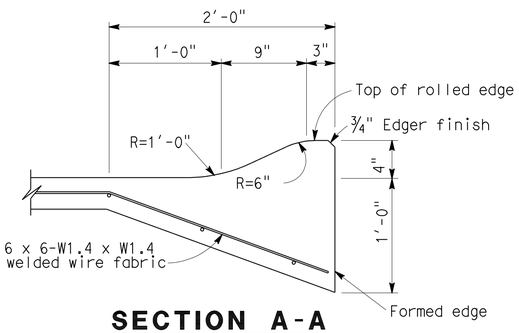

SECTION A-A

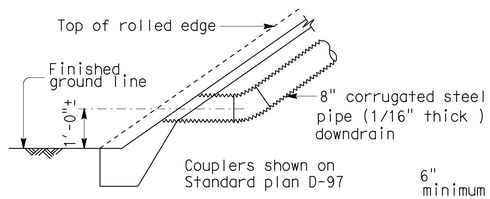

TYPICAL - NO CURB

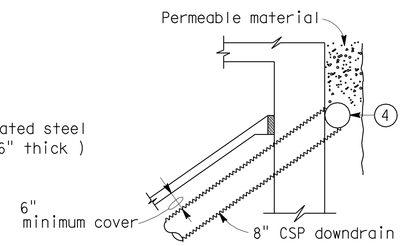

TYPICAL - DRAIN CONNECTION

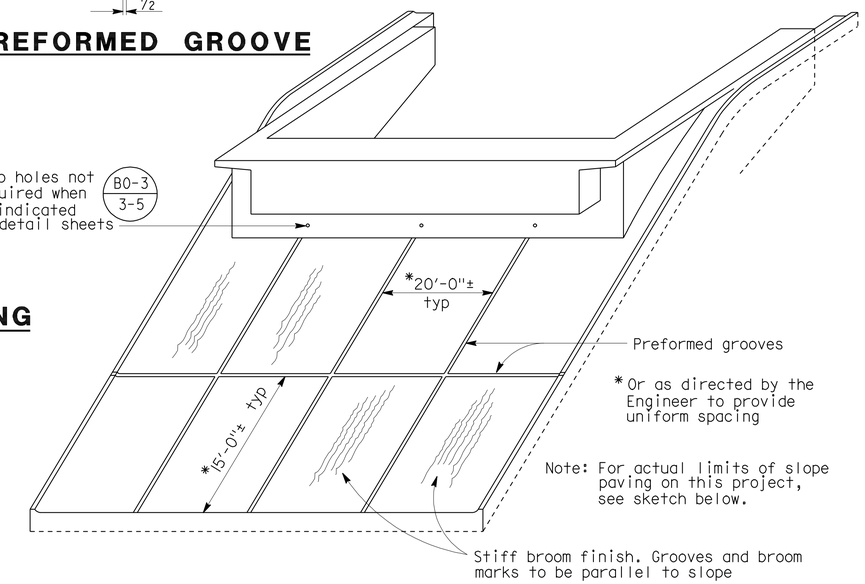

* Or as directed by the Engineer to provide uniform spacing

Note: For actual limits of slope paving on this project, see sketch below.

PICTORIAL VIEW OF TYPICAL INSTALLATION

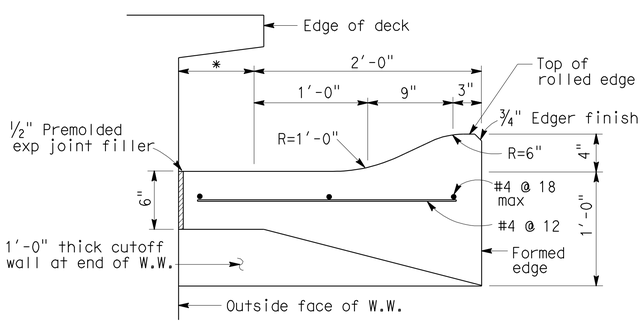

SECTION B-B

*This dimension becomes zero when edge of deck is at outside face of W.W.

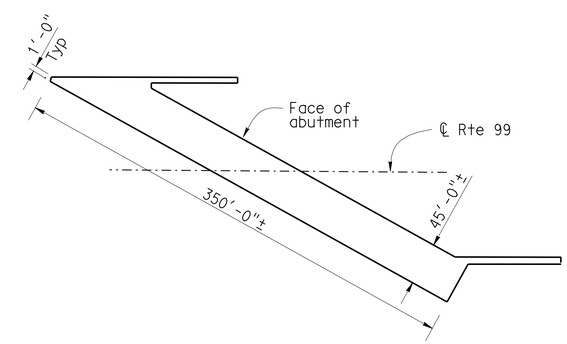

LIMITS OF SLOPE PAVING & DRAINAGE LAYOUT

NO SCALE

(1) (1)

(4) 8" perforated steel pipe (1/16" thick) underdrain behind abutment. Connect to downdrain as shown on limits of Slope Paving & Drainage layout.

STANDARD DRAWING				
RELEASE DATE 4/20/00	DESIGN	BY	CHECKED	RELEASED BY
	DETAILS	BY R. YEE	CHECKED	
FILE NO. xs4-210	SUBMITTED	BY C.W. PURKISS	DRAWING DATE 3/89	OFFICE CHIEF

(1) Deleted detail

STATE OF CALIFORNIA
DEPARTMENT OF TRANSPORTATION

DIVISION OF ENGINEERING SERVICES

BRIDGE NO. 39-0241
KILOMETER POST 14.10

EAST MERCED OVERHEAD (REPLACE)
SLOPE PAVING - FULL SLOPE

DS OSD 2147A (METRIC) (REV. 2/25/97)

ORIGINAL SCALE IN MILLIMETERS FOR REDUCED PLANS 0 10 20 30 40 50 60 70 80 90 100

CU 10
EA 481001

DISREGARD PRINTS BEARING EARLIER REVISION DATES

REVISION DATES (PRELIMINARY STAGE ONLY) 12-2-09 5-11-10

SHEET 34 OF 35

USERNAME => trphils

39-0241-s-sp.dgn

DATE PLOTTED => 30-MAR-2011 TIME PLOTTED => 11:18

FED. ROAD DIV. No.	STATE	PROJ. No.	FISCAL YEAR	SHEET No.	TOTAL SHEETS
7	CAL.			107	242

DIST.	COUNTY	ROUTE	SECTION	SHEET No.	TOTAL SHEETS
X	Mer	4	C	15	15

BRIDGE ENGINEER — CIVIL ENGINEER—LICENSE 5365

DATE APPROVED May 16, 1960

AS BUILT PLANS
Contract No. 61-10T13C9
Date Completed
Document No. 00001124

Design Pile Loading: 45T
Type Pile: Raymond step taper
Diameter: Tip 8" Butt 15½"
Total Number Piles: 290
Lineal ft. Piles "As Built": 11,032 l.f.
Lineal ft. Piles called for on Plans: 9,395 l.f.
Hammer: Raymond Vulcan No 1 (6500 ram)
Remarks: Piles driven below specified tip elev.

BM - Mon. #12 - CHC brass cap in gutter of most easterly traffic island at intersection of highway 99 & Yosemite Way Elev. 171.45

PENETRATION CHART

	Right Bridge 1	2	3	4	5	6	7	Left Bridge 1	2	3	4	5	6	7
Min.	140^{2}	139^{2}	135^{5}	134^{5}	137^{1}	139^{2}	136^{4}	138^{1}	142^{2}	136^{1}	135^{2}	129^{7}	137^{2}	135^{8}
Ave.	137^{2}	137^{8}	133^{4}	135^{0}	134^{4}	133^{8}	132^{1}	130^{2}	138^{3}	134^{8}	132^{4}	128^{2}	130^{4}	131^{2}
Max.	134^{8}	133^{1}	130^{0}	130^{2}	131^{8}	129^{2}	126^{3}	121^{2}	135^{6}	133^{3}	124^{8}	127^{0}	121^{5}	127^{1}
Spec. Tip	145^{0}	145^{0}	135^{0}	135^{0}	135^{0}	140^{0}	140^{0}	140^{0}	140^{0}	135^{0}	135^{0}	140^{0}	140^{0}	140^{0}

THIS SET OF PLANS HAS BEEN CORRECTED TO CORRESPOND TO THE "AS BUILT" [illegible] DATED 4/23/62 AS SUBMITTED BY RESIDENT ENGINEER K. HIRONAKA B.D.A.
TRACINGS CORRECTED BY: ESI DATE: 5/22/62

FIELD STUDY	By W.T. Nelson	4-25-58
DRAWN	By M. Heaney	4-25-58
CHECKED	By W.T. Nelson	4-30-58

Approval Recommended by [signatures]

BRIDGE DEPARTMENT

CLASSIFICATION OF MATERIAL BASED ON STANDARD GRADE SIZE LIMITS

DIAGRAM SHOWING THE BASIS FOR ESTIMATES OF GRADE SIZE DISTRIBUTION USED IN DETERMINATION OF CLASS NAMES.
IF GRAVEL IS PRESENT IN APPRECIABLE AMOUNTS THE TERM "GRAVELLY" MAY BE ADDED TO THE CLASS NAME, VIZ. "GRAVELLY SAND." THE TERMS "COARSE", "MEDIUM" AND "FINE" WHEN USED TO DESCRIBE SAND, SILT AND GRAVEL REFER TO STANDARD GRADE SIZE LIMITS.

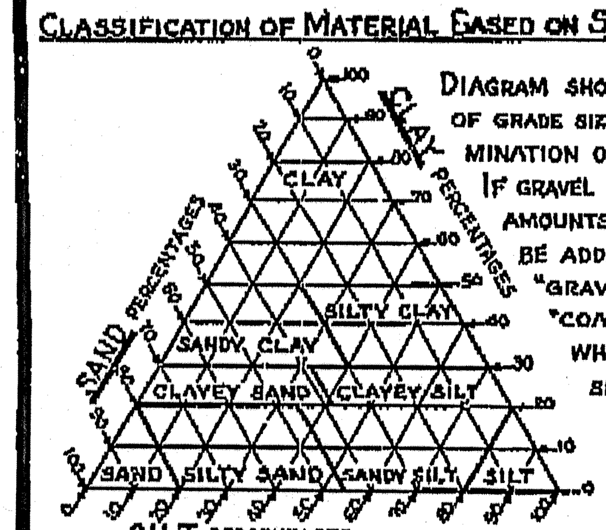

LEGEND OF EARTH MATERIALS

Gravel — Sand — Silt — Clay — Sandy Clay or Clayey Sand — Sandy Silt or Silty Sand — Silty Clay or Clayey Silt — Peat and/or Organic Matter — Fill Material — Igneous Rock — Sedimentary Rock — Metamorphic Rock

LEGEND OF [BORINGS]

Plan of any boring
Penetrometer
2¼" Cone Penetrometer
Sampler boring (dry)
Rotary boring (wet)
Auger boring (dry)
Jet boring
Core boring
Test pit

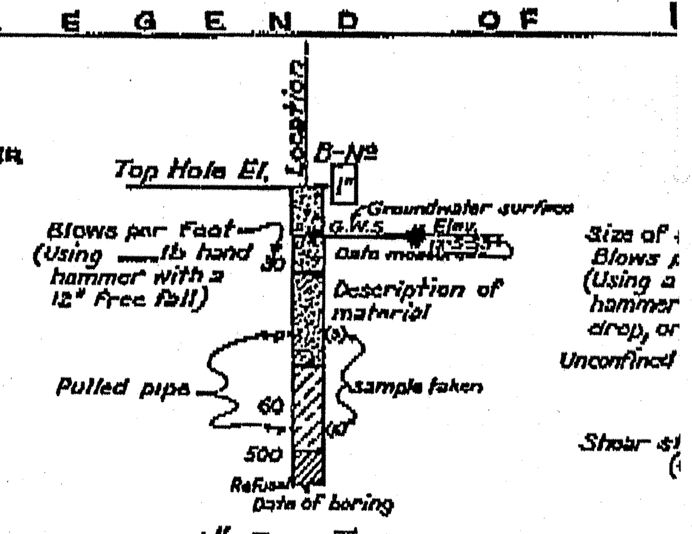

1" SOIL TUBE

DIVISION OF ENGINEERING SERVICES - GEOTECHNICAL SERVICES

As-Built Log of Test Borings sheet is considered an informational document only. As such, the State of California registration seal with signature, license number and registration certificate expiration date confirm that this is a true and accurate copy of the original document. This drawing is available and presented only for the convenience of any bidder, contractor or other interested party.

DIST.	COUNTY	ROUTE	POST MILE-TOTAL PROJECT	Sheet No.	Total Sheets
10	Mer	99,140	13.8/14.4,35.8	221	221

Chris Koepke 3/9/10
CERTIFIED ENGINEERING GEOLOGIST — DATE

PROFESSIONAL GEOLOGIST — Christopher W. Koepke — No. 2207 — Exp. 10-31-10 — CERTIFIED ENGINEERING GEOLOGIST — STATE OF CALIFORNIA

EAST MERCED OH (REPLACE)
LOG OF TEST BORINGS

NOTE: A COPY OF THIS LOG OF TEST BORINGS IS AVAILABLE AT OFFICE OF STRUCTURE MAINTENANCE AND INVESTIGATIONS, SACRAMENTO, CALIFORNIA

CU: 10
EA: 481001

BRIDGE No. 39-0241
Sheet 35 of 35

To Accompany Plans Dated 3-28-11

NOTES

[redacted]

Classification of earth material as shown on this sheet is based upon field inspection and is not to be construed to imply mechanical analysis.

STATE OF CALIFORNIA
DEPARTMENT OF PUBLIC WORKS
DIVISION OF HIGHWAYS

EAST MERCED OVERHEAD

LOG OF TEST BORINGS

SCALE As Noted — BRIDGE 39-130 R/L — FILE L-29 — DRAWING C-5838-15

PR-5838-4

PREL. DRAWING NO. P-5838 4

FILENAME => 39-0241-z-lotb.tif

107