Dist	COUNTY	ROUTE	POST MILES TOTAL PROJECT	SHEET No.	TOTAL SHEETS
10	Mer	99	0.0/4.6	398	607

Chris Gardner 4-26-10
REGISTERED CIVIL ENGINEER DATE

11-1-10
PLANS APPROVAL DATE

REGISTERED PROFESSIONAL ENGINEER CHRIS GARDNER No. C60348 Exp. 6-30-10 CIVIL STATE OF CALIFORNIA

THE STATE OF CALIFORNIA OR ITS OFFICERS OR AGENTS SHALL NOT BE RESPONSIBLE FOR THE ACCURACY OR COMPLETENESS OF SCANNED COPIES OF THIS PLAN SHEET.

SAW CUT TABLE

LOCATION		(N) SAW CUT
FROM	TO	LF
"NB" 99+88.8	"NB" 111+24.8	1,136
"SB" 99+97.3	"SB" 118+50.0	1,853
"T-2" 11+24.8	"T-2" 17+30.5	1,245
"T-1" 18+50.0	"T-1" 30+00.6	1,954
"WF-1" 70+50.0	"WF-1" 99+25.0	1,234
"F" 14+00.0		23
"SB" 238+43.2	"SB" 244+00.0	1,434
"WF-2" 57+00.0	"WF-2" 80+00.0	76
"SB" 355+00.0	"SB" 364+60.0	1,306
"B" 13+00.0	"B" 77+30.0	52
"C" 35+55.0	"C" 39+59.1	128
"P-2" 245+44.0	"P-2" 252+05.6	417
"P-3" 32+00.0	"P-3" 44+74.8	60
"V" 19+60.5	"V" 20+52.7	185
"AT" 5+10.0	"AT" 6+11.7	232
"HP-2" 93+26.7	"HP-2" 95+59.2	117
"SM-2" 10+78.1	"SM-2" 11+64.2	106
"SM-2" 17+00		18
"R-3" 40+17.8		38

(N) NOT A SEPERATE PAY ITEM, FOR INFORMATION ONLY

SEAL PAVEMENT JOINT

LOCATION	LONGITUDINAL	TRANSVERSE	LONGITUDIONAL ISOLATION
	LF	LF 5	LF
"A" LINE Rte 99 NB	43,939	~~73,378~~	
"A" LINE Rte 99 SB	46,338	~~79,202~~	
"R-3" RAMP GORE	1,471	~~4,539~~	628
"NB-1" RAMP GORE		423	473
"NB-2" RAMP GORE		659	1,019
"SB-1" RAMP GORE		423	473
"SB-1" RAMP GORE		659	1,019
SUBTOTAL	91,748	2,164~~159,363~~	3,612
TOTAL	93,912~~251,111~~		3,612

5

EROSION CONTROL 3

LOCATION	SEQUENCING				STRAW (N)	FIBER (N)	COMPOST BLANKET (N)	PURE LIVE SEED (N)	COMMERCIAL FERTILIZER (N)	TACKIFIER (N)
	TYPE 1	TYPE 2	TYPE 3							
	HYDROSEED (TYPE 1)	COMPOST BLANKET	DRILL SEED	HYDROSEED (TYPE 2)						
	ACRE	CY	ACRE	ACRE	TON	LB	ACRE	LB	LB	LB
"A"	93.87		29.34	29.34	246.4	132,070.4		1,687.8	34,003.2	1,232.0
"NR-1" AND BASIN	7.36	153.3			14.7	7,889.9	1.14	116.5	2,031.4	73.6
"NR-2" AND BASIN	7.83	228.6			15.7	8,393.8	1.70	130.6	2,161.1	78.3
"SR-1" AND BASIN	8.92	302.5			17.8	9,562.2	2.25	153.0	2,461.9	89.2
"SR-2" AND BASIN	9.13	338.8			18.3	9,787.4	2.52	159.6	2,519.9	91.3
"R-1" BASIN	3.06				6.1	3,280.3		41.9	844.6	30.6
"R-3" AND "R-4"	7.39				14.8	7,922.1		101.2	2,039.6	73.9
"T-1"			0.66	0.66	1.3	707.5		9.0	182.2	6.6
"T-2"	0.60				1.2	643.2		8.2	165.6	6.0
"SB"	15.62				31.2	16,744.6		214.0	4,311.1	156.2
"NB"	16.45				32.9	17,634.4		225.4	4,540.2	164.5
"B"	3.63	1,406.3			7.3	3,891.4	10.46	193.0	1001.9	36.3
"C"	1.97				3.9	2,111.8		27.0	543.7	19.7
"F"	14.43	252.8			28.9	15,469.0	1.88	223.4	3,982.7	144.3
"P-2"	0.56				1.1	600.3		7.7	154.6	5.6
"P-3"	1.14				2.3	1,222.1		15.6	314.6	11.4
"WF-1"	6.02				12.0	6,453.4		82.4	1,661.5	60.2
"WF-2"	3.34				6.7	3,580.5		45.8	921.8	33.4
"NBT"	1.53				3.1	1,640.2		21.0	422.3	15.3
"SM-1"	0.46				0.9	493.1		6.3	127.0	4.6
"SM-2"	0.12				0.2	128.6		1.6	33.1	1.2
"HP-2"	0.39				0.8	418.1		5.3	107.6	3.9
"AT"	0.14				0.3	150.1		1.9	38.6	1.4
S DUTCHMAN Cr OVERFLOW Chnl	0.29				0.6	310.9		4.0	80.0	2.9
LOCAL BORROW BASIN	42.4				84.8	45,452.8		580.9	11,702.4	424.0
SUBTOTAL	246.65	2,682.3	30.00	30.00	553.3	296,558.1	19.95	4,063.2	76,352.6	2,766.4
TOTAL	246.65	2,682.3	30.00	30.00						

(N) NOT A SEPARATE PAY ITEM, FOR INFORMATION ONLY.

5 REVISED PER ADDENDUM No. 5 DATED JUNE 15, 2012

3 REVISED PER ADDENDUM No. 3 DATED MAY 25, 2012

SUMMARY OF QUANTITIES
Q-8

STATE OF CALIFORNIA - DEPARTMENT OF TRANSPORTATION
Caltrans 06-DESIGN

FUNCTIONAL SUPERVISOR: BORIS AYAVIRI
CALCULATED-DESIGNED BY: CHRIS GARDNER
CHECKED BY: ANONH SENGMANY
REVISED BY
DATE REVISED

LAST REVISION 04-26-10 | DATE PLOTTED => 14-JUN-2012 | TIME PLOTTED => 10:20

DIST	COUNTY	ROUTE	POST MILES TOTAL PROJECT	SHEET No	TOTAL SHEETS
10	Mer	99	0.0/4.6	565	607

REGISTERED CIVIL ENGINEER 04-13-10 DATE

11-1-10
PLANS APPROVAL DATE

REGISTERED PROFESSIONAL ENGINEER Larry Wu No. C57035 Exp. 6-30-11 CIVIL STATE OF CALIFORNIA

The State of California or its officers or agents shall not be responsible for the accuracy or completeness of electronic copies of this plan sheet.

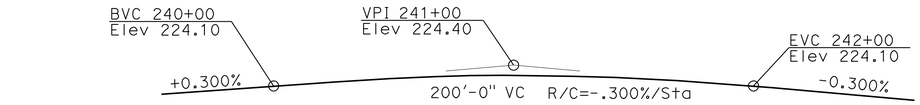

PROFILE GRADE

NO SCALE

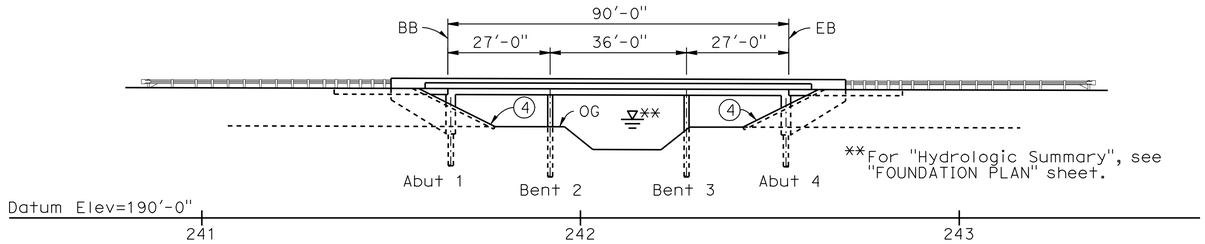

ELEVATION

1"=20'-0"

QUANTITIES

STRUCTURE EXCAVATION (BRIDGE)	220	CY
STRUCTURE BACKFILL (BRIDGE)	117	CY
FURNISH PILING (CLASS 90) (ALTERNATIVE X)	1,797	LF
DRIVE PILE (CLASS 90) (ALTERNATIVE X)	32	EA
FURNISH 16" CAST-IN-STEEL SHELL CONCRETE PILING	2,766	LF
DRIVE 16" CAST-IN-STEEL SHELL CONCRETE PILE	36	EA
STRUCTURAL CONCRETE, BRIDGE	800	CY
STRUCTURAL CONCRETE, APPROACH SLAB (TYPE N)	249	CY
JOINT SEAL (MR1/2")	236	LF
BAR REINFORCING STEEL (BRIDGE)	165,000	LB
CONCRETE BARRIER (TYPE 732)	466	LF

5

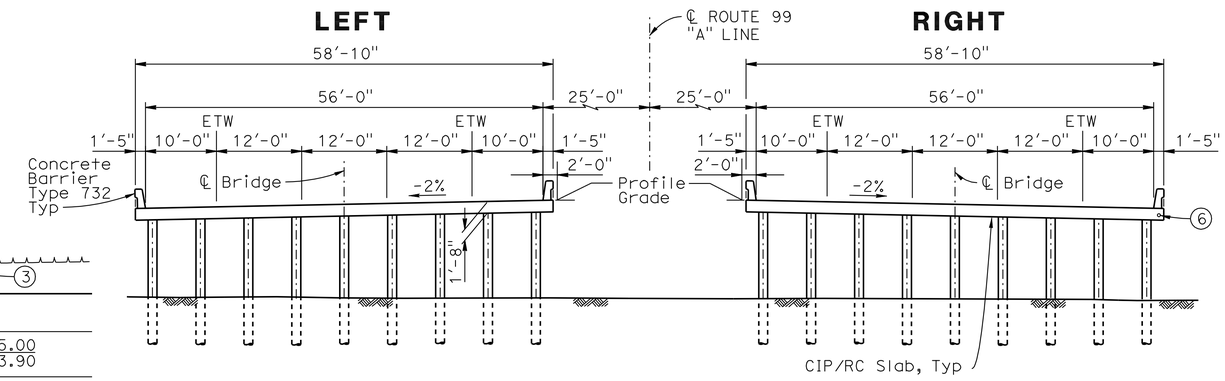

TYPICAL SECTION

3/32"=1'-0"

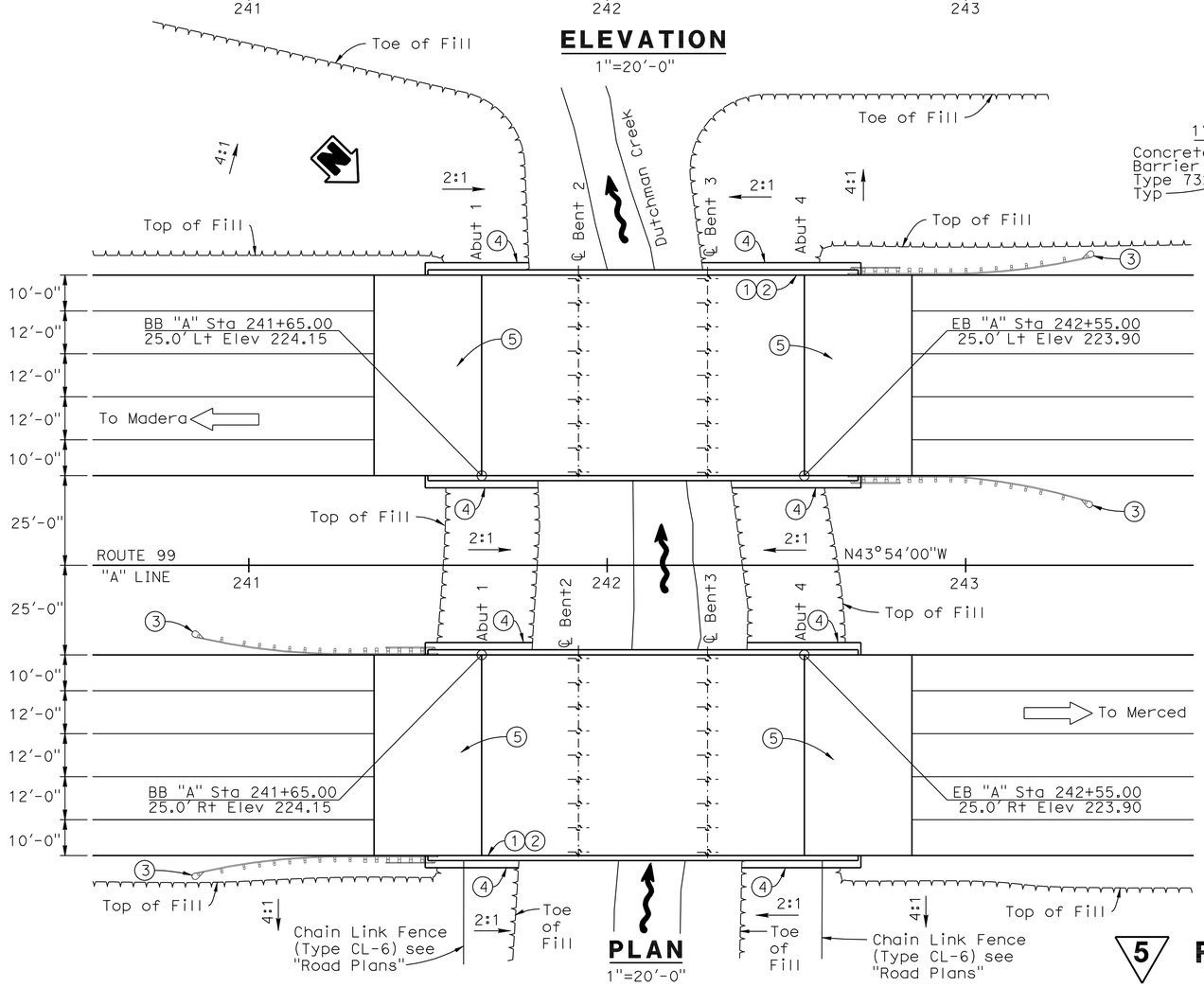

PLAN

1"=20'-0"

INDEX TO PLANS

Sheet No.	Title
1.	GENERAL PLAN
2.	GENERAL NOTES
3.	DECK CONTOURS
4.	FOUNDATION PLAN
5.	ABUTMENT DETAILS
6.	TYPICAL SECTION
7.	SLAB REINFORCEMENT
8.	SLAB REINFORCEMENT DETAILS
9.	SLAB BRIDGE PILE DETAILS
10.	STRUCTURE APPROACH TYPE N(30D)
11.	STRUCTURE APPROACH DRAINAGE DETAILS
12.	LOG OF TEST BORINGS, 1 OF 4
13.	LOG OF TEST BORINGS, 2 OF 4
14.	LOG OF TEST BORINGS, 3 OF 4
15.	LOG OF TEST BORINGS, 4 OF 4

NOTES:

1. Paint "DUTCHMAN CREEK BRIDGE L/R"
2. Paint "BR. NO. 39-0238L/R"
3. Metal Beam Guard Rail, see "Roadway Plans"
4. Rock Slope Protection, see "Roadway Plans"
5. Approach Slab TYPE N(30D)
6. 4" Communication Conduit, see "Roadway Plans"

For "General Notes", "Standard Plans", and "Pile Data", see "GENERAL NOTES" Sheet.

5 **REVISED PER ADDENDUM No. 5 DATED JUNE 15, 2012**

DANIEL T. ADAMS
DESIGN ENGINEER

	BY	CHECKED			
DESIGN	L. Wu	A. McPhee	LOAD & RESISTANCE FACTOR DESIGN	LIVE LOADING: HL93 AND PERMIT DESIGN VEHICLE	
DETAILS	G. Hallstrom	A. McPhee	LAYOUT	L. Wu	A. McPhee
QUANTITIES	J. Szabo	F. Chen	SPECIFICATIONS	M. Kopsa	PLANS AND SPECS COMPARED M. Kopsa

STATE OF CALIFORNIA
DEPARTMENT OF TRANSPORTATION

DIVISION OF ENGINEERING SERVICES
STRUCTURE DESIGN
DESIGN BRANCH 10

BRIDGE NO. 39-0238RL
POST MILE 2.7

DUTCHMAN CREEK BRIDGE
GENERAL PLAN

STRUCTURES DESIGN GENERAL PLAN SHEET (ENGLISH) (REV. 10/25/05)

ORIGINAL SCALE IN INCHES FOR REDUCED PLANS 0 1 2 3

CU 10
EA 415801

DISREGARD PRINTS BEARING EARLIER REVISION DATES

REVISION DATES: 06-19-07 11-14-07 06-04-08 3-23-09 7-15-09 3-03-10 4-13-10

SHEET 1 OF 15

FILE => 390238rlagp01.add

STRUCTURES DESIGN GENERAL PLAN SHEET (ENGLISH) (REV.07-24-06)

USERNAME => s121614 DATE PLOTTED => 14-JUN-2012 TIME PLOTTED => 10:20

DIST	COUNTY	ROUTE	POST MILES TOTAL PROJECT	SHEET No	TOTAL SHEETS
10	Mer	99	0.0/4.6	566	607

Larry Wu 04-13-10
REGISTERED CIVIL ENGINEER DATE

11-1-10
PLANS APPROVAL DATE

REGISTERED PROFESSIONAL ENGINEER Larry Wu No. C57035 Exp. 6-30-11 CIVIL STATE OF CALIFORNIA

The State of California or its officers or agents shall not be responsible for the accuracy or completeness of electronic copies of this plan sheet.

5

PILE DATA TABLE

B2-5

Location	Pile Type	Nominal Resistance		Design Tip Elevations (ft)	Specified Tip Elevations (ft)	Nominal Driving Resistance Req'd.
		Compression	Tension			
Abut 1	Class 90 Alternate X	180 kips	N/A	160.0	160.0	180 kips
Bent 2	CISS NPS * 16 x 0.500	250 kips	0	145.0 (a) 155.0 (b)	145.0	270 kips (2)
Bent 3	CISS NPS * 16 x 0.500	250 kips	0	145.0 (a) 155.0 (b)	145.0	270 kips (2)
Abut 4	Class 90 Alternate X	180 kips	N/A	160.0	160.0	180 kips

NOTE: 1. Design tip elevations are controlled by: (a) Compression (Strength Limit)
(b) Compression (Extreme Limit)

2. The Nominal Driving Resistance Required is the result of additional resistance from unsuitable soil layers. Unsuitable; scourable soil layers at Bent 2 and Bent 3 extend to Elevation 205.8 ft.

* See "SLAB BRIDGE PILE DETAILS" sheet.

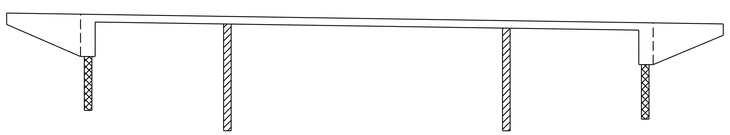

Structural Concrete, Bridge.
PC/PS Concrete Pile
Class 90 Concrete Pile

B2-5

CONCRETE STRENGTH AND TYPE LIMITS

No Scale

GENERAL NOTES
LOAD AND RESISTANCE FACTOR DESIGN

DESIGN: AASHTO LRFD BRIDGE DESIGN SPECIFICATIONS, 4th Edition and the CALTRANS Amendments, preface dated Dec. 2008.

SEISMIC DESIGN: Caltrans Seismic Design Criteria (SDC) Version 1.4, July, 2006

DEAD LOAD: Includes 35 Psf for future wearing surface.

LIVE LOADING: HL93 and permit design load.

SEISMIC LOADING: CALTRANS SDC ARS Curve for Soil Profile Type D (M = 6.5±0.25), (Peak Rock Acceleration = 0.2 g)

REINFORCED CONCRETE: f_y = 60 ksi
f'_c = 3600 psi, unless otherwise noted
n = 8

STANDARD PLANS DATED MAY 2006

	A10A	ACRONYMS AND ABBREVIATIONS (SHEET 1 OF 2)
	A10B	ACRONYMS AND ABBREVIATIONS (SHEET 2 OF 2)
	A10C	SYMBOLS (SHEET 1 OF 2)
	A10D	SYMBOLS (SHEET 2 OF 2)
	A62C	LIMITS OF PAYMENT FOR EXCAVATION AND BACKFILL-BRIDGE
	BO-1	BRIDGE DETAILS
	B2-5	PILE DETAILS CLASS 90 AND CLASS140
RSP	B6-21	JOINT SEALS (MAXIMUM MOVEMENT RATING = 2")
	B11-55	CONCRETE BARRIER TYPE 732

STANDARD PLAN SHEET NO.
DETAIL NO.

5 **REVISED PER ADDENDUM No. 5 DATED JUNE 15, 2012**

	BY	CHECKED
DESIGN	L. Wu	A. McPhee
DETAILS	G. Hallstrom	A. McPhee
QUANTITIES	J. Szabo	F. Chen

STATE OF CALIFORNIA
DEPARTMENT OF TRANSPORTATION

DIVISION OF ENGINEERING SERVICES
STRUCTURE DESIGN
DESIGN BRANCH 10

BRIDGE NO. 39-0238RL
POST MILE 2.7

DUTCHMAN CREEK BRIDGE
GENERAL NOTES

STRUCTURES DESIGN DETAIL SHEET (ENGLISH) (REV. 10/25/05)

ORIGINAL SCALE IN INCHES FOR REDUCED PLANS 0 1 2 3

CU 10
EA 415801

DISREGARD PRINTS BEARING EARLIER REVISION DATES

REVISION DATES: 11-14-07, 5-29-08, 3-23-09, 7-15-09, 3-03-10

SHEET 2 OF 15

FILE => 390238rlaitp02.add

USERNAME => s12614 DATE PLOTTED => 14-JUN-2012 TIME PLOTTED => 10:20

DIST	COUNTY	ROUTE	POST MILES TOTAL PROJECT	SHEET No	TOTAL SHEETS
10	Mer	99	0.0/4.6	570	607

REGISTERED CIVIL ENGINEER 04-13-10 DATE

11-1-10
PLANS APPROVAL DATE

REGISTERED PROFESSIONAL ENGINEER Larry Wu No. C57035 Exp. 6-30-11 CIVIL STATE OF CALIFORNIA

The State of California or its officers or agents shall not be responsible for the accuracy or completeness of electronic copies of this plan sheet.

5

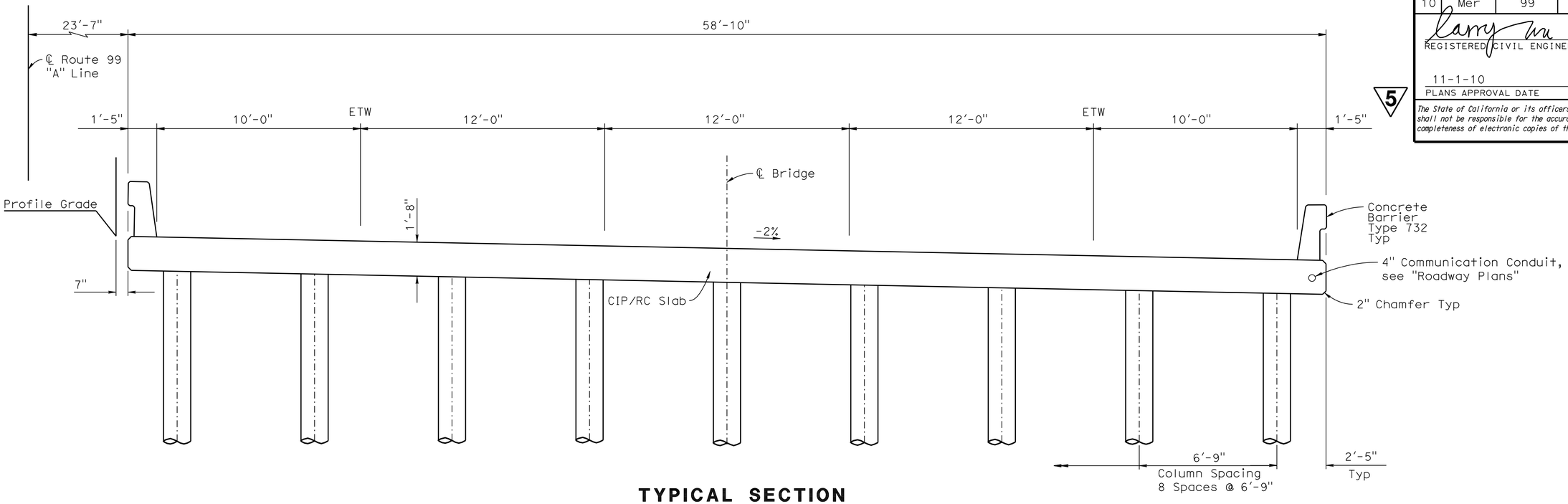

TYPICAL SECTION

3/8" = 1'-0"

NOTE: Right Bridge shown, Left Bridge similar.

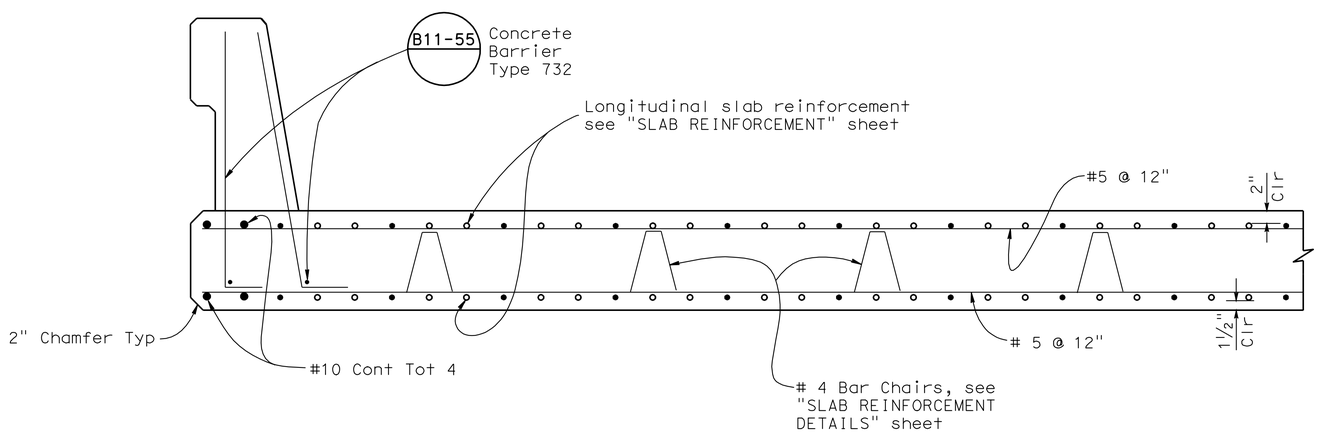

PART TYPICAL SECTION

1" = 1'-0"

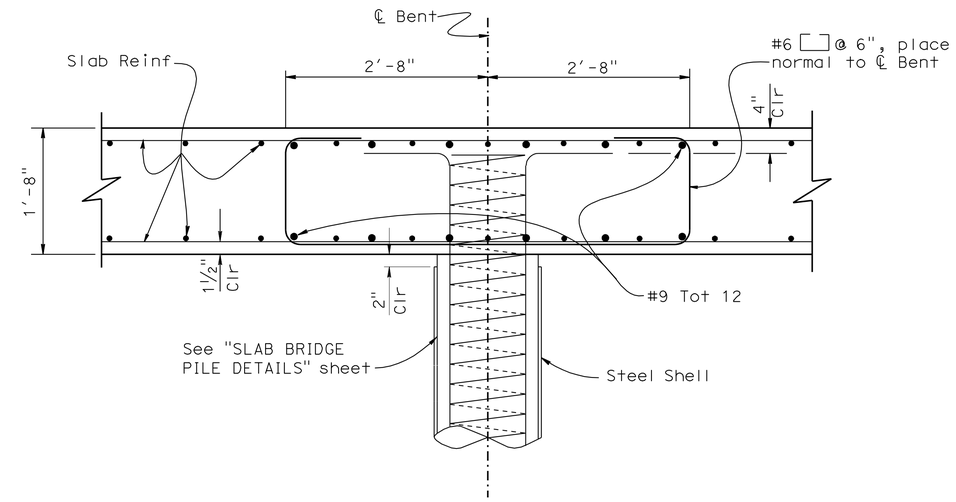

COLUMN ELEVATION

1" = 1'-0"

5 **REVISED PER ADDENDUM No. 5 DATED JUNE 15, 2012**

DESIGN	BY L. Wu	CHECKED A. McPhee	
DETAILS	BY G. Hallstrom	CHECKED A. McPhee	
QUANTITIES	BY J. Szabo	CHECKED F. Chen	

STATE OF CALIFORNIA
DEPARTMENT OF TRANSPORTATION

DIVISION OF ENGINEERING SERVICES
STRUCTURE DESIGN
DESIGN BRANCH 10

BRIDGE NO. 39-0238RL
POST MILE 2.7

DUTCHMAN CREEK BRIDGE
TYPICAL SECTION

STRUCTURES DESIGN DETAIL SHEET (ENGLISH) (REV. 10/25/05)

ORIGINAL SCALE IN INCHES FOR REDUCED PLANS 0 1 2 3

CU 10
EA 415801

DISREGARD PRINTS BEARING EARLIER REVISION DATES

REVISION DATES: 11-16-07 5-29-08 3-24-09 7-15-09

SHEET 6 OF 15

FILE => 390238rlkts06.add

USERNAME => s121614 DATE PLOTTED => 14-JUN-2012 TIME PLOTTED => 10:20

DIST	COUNTY	ROUTE	POST MILES TOTAL PROJECT	SHEET No	TOTAL SHEETS
10	Mer	99	0.0/4.6	573	607

REGISTERED CIVIL ENGINEER 04-13-10 DATE

11-1-10
PLANS APPROVAL DATE

REGISTERED PROFESSIONAL ENGINEER Larry Wu No. C57035 Exp. 6-30-11 CIVIL STATE OF CALIFORNIA

The State of California or its officers or agents shall not be responsible for the accuracy or completeness of electronic copies of this plan sheet.

5

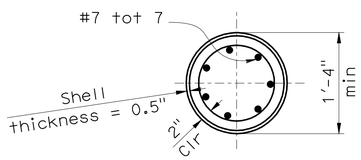

SECTION B-B
1" = 1'-0"

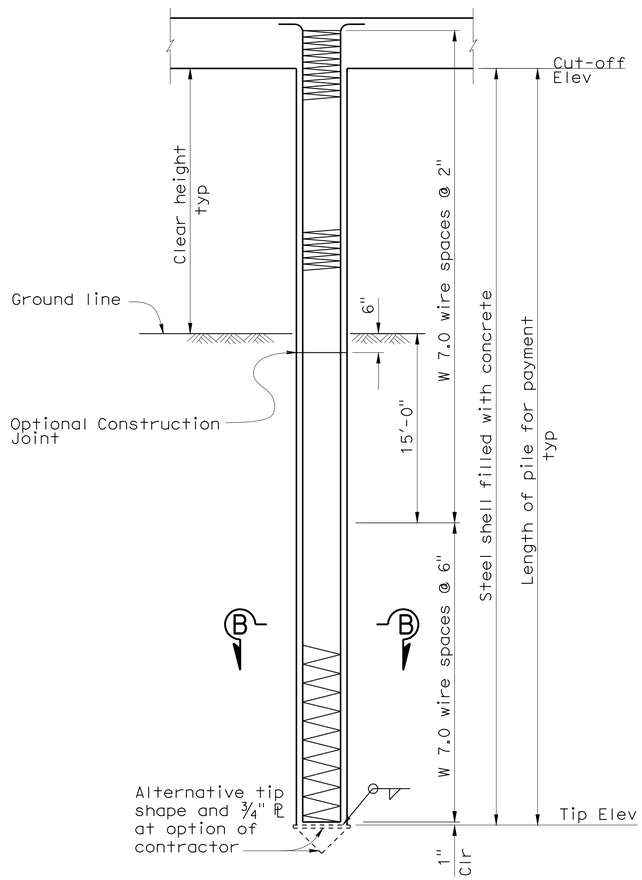

CAST-IN-STEEL SHELL
CONCRETE PILE

ELEVATION
½" = 1'-0"

5 **REVISED PER ADDENDUM No. 5 DATED JUNE 15, 2012**

	BY	CHECKED
DESIGN	L. Wu	A. McPhee
DETAILS	D. Wooten	A. McPhee
QUANTITIES	J. Szabo	F. Chen

STATE OF CALIFORNIA
DEPARTMENT OF TRANSPORTATION

DIVISION OF ENGINEERING SERVICES
STRUCTURE DESIGN
DESIGN BRANCH 10

BRIDGE NO. 39-0238RL
POST MILE 2.7

DUTCHMAN CREEK BRIDGE
SLAB BRIDGE PILE DETAILS

STRUCTURES DESIGN DETAIL SHEET (ENGLISH) (REV. 10/25/05)

ORIGINAL SCALE IN INCHES FOR REDUCED PLANS 0 1 2 3

CU 10
EA 415801

DISREGARD PRINTS BEARING EARLIER REVISION DATES

REVISION DATES: 11-19-07 3-24-09 5-31-12

SHEET 9 OF 15

FILE => 390238rlppdt09.add

USERNAME => s121614 DATE PLOTTED => 14-JUN-2012 TIME PLOTTED => 10:20

DIST	COUNTY	ROUTE	POST MILES TOTAL PROJECT	SHEET No	TOTAL SHEETS
10	Mer	99	0.0/4.6	581	607

REGISTERED CIVIL ENGINEER 04-13-10 DATE

11-1-10
PLANS APPROVAL DATE

The State of California or its officers or agents shall not be responsible for the accuracy or completeness of electronic copies of this plan sheet.

REGISTERED PROFESSIONAL ENGINEER Larry Wu No. C57035 Exp. 6-30-11 CIVIL STATE OF CALIFORNIA

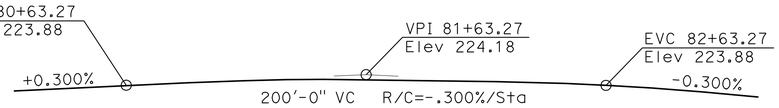

PROFILE GRADE

NO SCALE

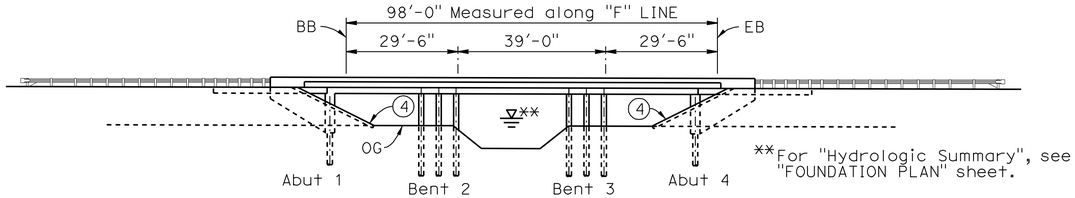

NOTE: Not all piles shown at Piers for clarity.

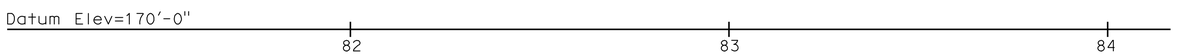

ELEVATION

1"=20'-0"

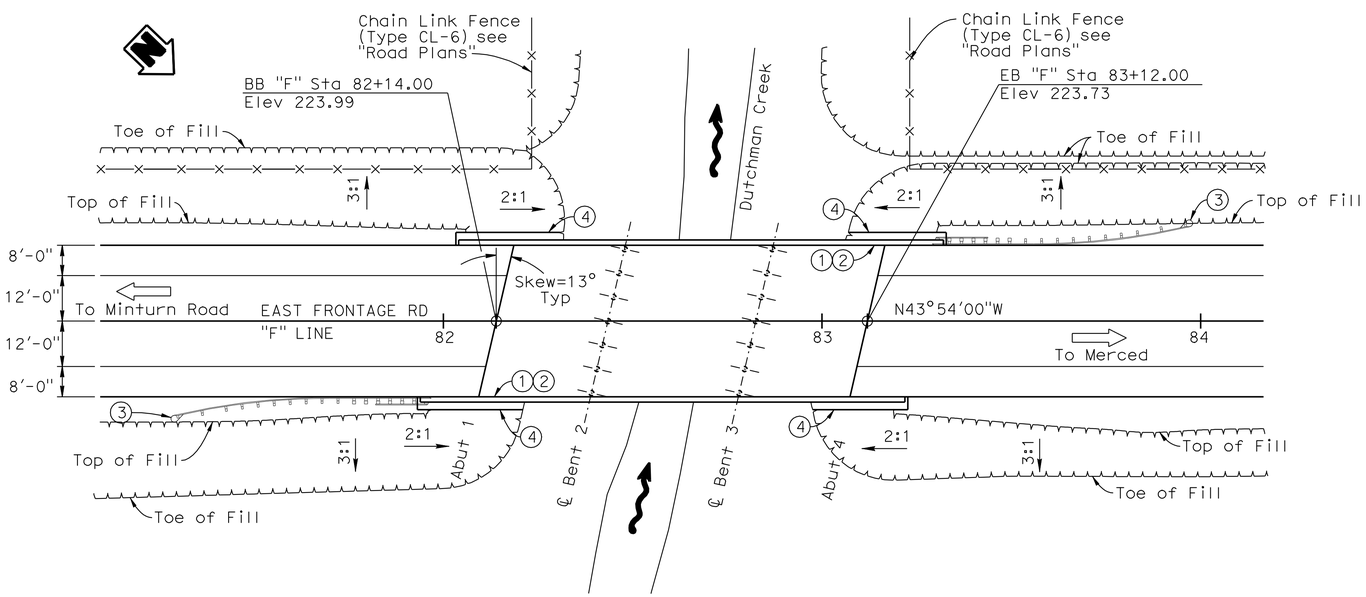

PLAN

1"=20'-0"

QUANTITIES

STRUCTURE EXCAVATION (BRIDGE)	94	CY
STRUCTURE BACKFILL (BRIDGE)	47	CY
FURNISH PILING (CLASS 90) (ALTERNATIVE X)	616	LF
DRIVE PILE (CLASS 90) (ALTERNATIVE X)	12	EA
FURNISH 16" CAST-IN-STEEL SHELL CONCRETE PILING	1,219	LF
DRIVE 16" CAST-IN-STEEL SHELL CONCRETE PILE	14	EA
STRUCTURAL CONCRETE, BRIDGE	316	CY
BAR REINFORCING STEEL (BRIDGE)	64,500	LB
CONCRETE BARRIER (TYPE 732)	249	LF

5

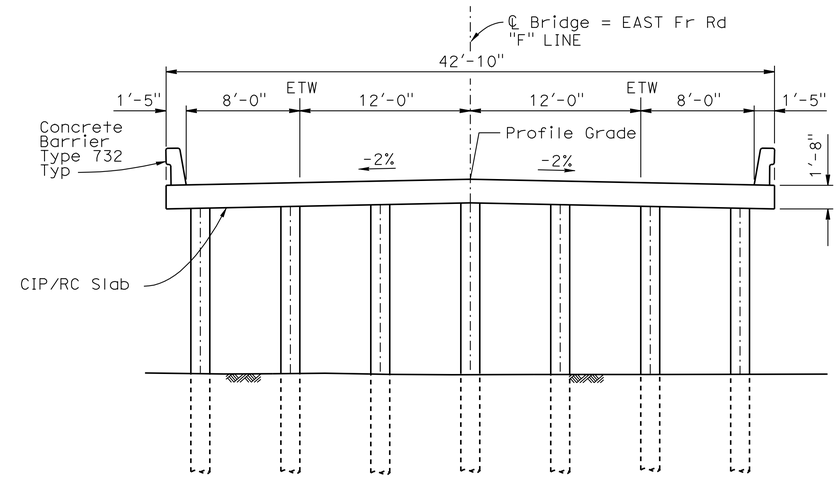

TYPICAL SECTION

3/16"=1'-0"

INDEX TO PLANS

Sheet No.	Title
1.	GENERAL PLAN
2.	DECK CONTOURS
3.	FOUNDATION PLAN
4.	ABUTMENT DETAILS
5.	GEOCOMPOSITE DRAIN DETAILS
6.	TYPICAL SECTION & BENT DETAILS
7.	SLAB REINFORCEMENT
8.	SLAB REINFORCEMENT DETAILS
9.	SLAB BRIDGE PILE DETAILS
10.	LOG OF TEST BORINGS, 1 OF 3
11.	LOG OF TEST BORINGS, 2 OF 3
12.	LOG OF TEST BORINGS, 3 OF 3

NOTES:

1. Paint "DUTCHMAN CREEK BRIDGE (EAST FRONTAGE ROAD)"
2. Paint "BR. NO. 39-0239"
3. Metal Beam Guard Rail, see "Roadway Plans"
4. Rock Slope Protection, see "Roadway Plans"

For "General Notes", "Standard Plans", and "Pile Data", see "DECK CONTOURS" Sheet.

5 **REVISED PER ADDENDUM No. 5 DATED JUNE 15, 2012**

DANIEL T. ADAMS, DESIGN ENGINEER	DESIGN	BY L. Wu	CHECKED A. McPhee	LOAD & RESISTANCE FACTOR DESIGN	LIVE LOADING: HL93 AND PERMIT DESIGN VEHICLE
	DETAILS	BY G. Hallstrom	CHECKED A. McPhee	LAYOUT BY L. Wu	CHECKED A. McPhee
	QUANTITIES	BY F. Chen	CHECKED M. Vo	SPECIFICATIONS BY M. Kopsa	PLANS AND SPECS COMPARED M. Kopsa

STATE OF CALIFORNIA
DEPARTMENT OF TRANSPORTATION

DIVISION OF ENGINEERING SERVICES
STRUCTURE DESIGN
DESIGN BRANCH 10

BRIDGE NO. 39-0239
POST MILE 2.7

DUTCHMAN CREEK BRIDGE (EAST FRONTAGE ROAD)
GENERAL PLAN

STRUCTURES DESIGN GENERAL PLAN SHEET (ENGLISH) (REV. 10/25/05)

ORIGINAL SCALE IN INCHES FOR REDUCED PLANS 0 1 2 3

CU 10
EA 415801

DISREGARD PRINTS BEARING EARLIER REVISION DATES

REVISION DATES: 06-21-07 09-05-07 3-24-09 7-16-09 3-03-10 4-13-10

SHEET 1 OF 12

FILE => 390239agp01.add

STRUCTURES DESIGN GENERAL PLAN SHEET (ENGLISH) (REV.07-24-06)

USERNAME => s1216l4 DATE PLOTTED => 14-JUN-2012 TIME PLOTTED => 10:21

DIST	COUNTY	ROUTE	POST MILES TOTAL PROJECT	SHEET No	TOTAL SHEETS
10	Mer	99	0.0/4.6	582	607

REGISTERED CIVIL ENGINEER 04-13-10 DATE

11-1-10
PLANS APPROVAL DATE

REGISTERED PROFESSIONAL ENGINEER Larry Wu No. C57035 Exp. 6-30-11 CIVIL STATE OF CALIFORNIA

The State of California or its officers or agents shall not be responsible for the accuracy or completeness of electronic copies of this plan sheet.

5

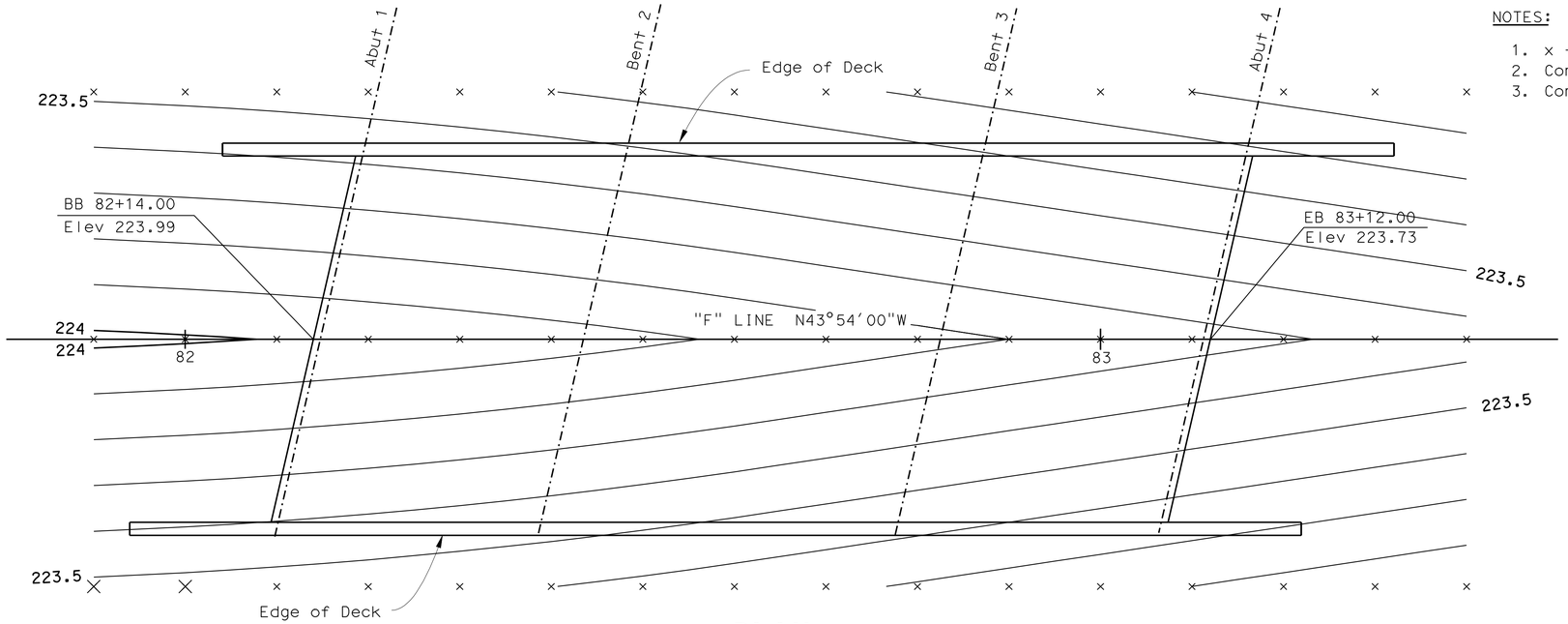

PLAN

1/8"=1'-0"

B2-5

NOTES:

1. x - 10' intervals along station line.
2. Contour intervals = 0.1'.
3. Contours do not include camber.

GENERAL NOTES
LOAD AND RESISTANCE FACTOR DESIGN

DESIGN: AASHTO LRFD BRIDGE DESIGN SPECIFICATIONS, 4th Edition and the CALTRANS Amendments, preface dated Dec. 2008.

SEISMIC DESIGN: Caltrans Seismic Design Criteria (SDC) Version 1.4, July, 2006

DEAD LOAD: Includes 35 Psf for future wearing surface.

LIVE LOADING: HL93 and permit design load.

SEISMIC LOADING: CALTRANS SDC ARS Curve for Soil Profile Type D (M = 6.5±0.25), (Peak Rock Acceleration = 0.2 g).

REINFORCED CONCRETE: f_y = 60 ksi
f'_c = 3600 psi, unless otherwise noted
n = 8

PILE DATA TABLE

B2-5

Location	Pile Type	Nominal Resistance		Design Tip Elevations (ft)	Specified Tip Elevations (ft)	Nominal Driving Resistance Req'd.
		Compression	Tension			
Abut 1	Class 90 Alternate X	180 kips	N/A	165.0	165.0	180 kips
Bent 2	CISS NPS * 16 x 0.500	250 kips	0	135.0 (a) 145.0 (b)	135.0	270 kips (2)
Bent 3	CISS NPS * 16 x 0.500	250 kips	0	135.0 (a) 145.0 (b)	135.0	270 kips (2)
Abut 4	Class 90 Alternate X	180 kips	N/A	165.0	165.0	180 kips

NOTE: 1. Design tip elevations are controlled by: (a) Compression (Strength Limit)
(b) Compression (Extreme Limit)

2. The Nominal Driving Resistance Required is the result of additional resistance from unsuitable soil layers. Unsuitable; scourable soil layers at Bent 2 and Bent 3 extend to Elevation 205.8 ft.

* See "SLAB BRIDGE PILE DETAILS" sheet.

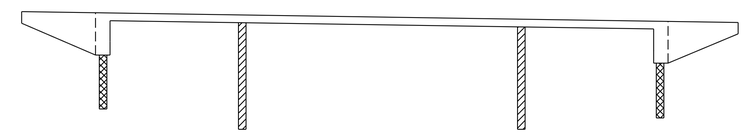

Structural Concrete, Bridge.
PC/PS Concrete Pile
Class 90 Concrete Pile

B2-5

CONCRETE STRENGTH AND TYPE LIMITS

No Scale

STANDARD PLANS DATED MAY 2006

A10A	ACRONYMS AND ABBREVIATIONS (SHEET 1 OF 2)
A10B	ACRONYMS AND ABBREVIATIONS (SHEET 2 OF 2)
A10C	SYMBOLS (SHEET 1 OF 2)
A10D	SYMBOLS (SHEET 2 OF 2)
A62C	LIMITS OF PAYMENT FOR EXCAVATION AND BACKFILL-BRIDGE
BO-1	BRIDGE DETAILS
B2-5	PILE DETAILS CLASS 90 AND CLASS 140
B11-55	CONCRETE BARRIER TYPE 732

STANDARD PLAN SHEET NO.
DETAIL NO.

5 **REVISED PER ADDENDUM No. 5 DATED JUNE 15, 2012**

	BY	CHECKED
DESIGN	L.Wu	A. McPhee
DETAILS	D.Wooten	A. McPhee
QUANTITIES	F. Chen	M. Vo

STATE OF CALIFORNIA
DEPARTMENT OF TRANSPORTATION

DIVISION OF ENGINEERING SERVICES
STRUCTURE DESIGN
DESIGN BRANCH 10

BRIDGE NO. 39-0239
POST MILE 2.7

DUTCHMAN CREEK BRIDGE (EAST FRONTAGE ROAD)
DECK CONTOURS

STRUCTURES DESIGN DETAIL SHEET (ENGLISH) (REV. 10/25/05)

ORIGINAL SCALE IN INCHES FOR REDUCED PLANS 0 1 2 3

CU 10
EA 415801

DISREGARD PRINTS BEARING EARLIER REVISION DATES

REVISION DATES: 2-21-08 6-06-08 3-24-09 3-05-10 4-07-10

SHEET 2 OF 12

FILE => 390239ddc02.dd

USERNAME => s12614 DATE PLOTTED => 14-JUN-2012 TIME PLOTTED => 10:21

DIST	COUNTY	ROUTE	POST MILES TOTAL PROJECT	SHEET No	TOTAL SHEETS
10	Mer	99	0.0/4.6	586	607

REGISTERED CIVIL ENGINEER — DATE 04-13-10

11-1-10
PLANS APPROVAL DATE

REGISTERED PROFESSIONAL ENGINEER — Larry Wu — No. C57035 — Exp. 6-30-11 — CIVIL — STATE OF CALIFORNIA

The State of California or its officers or agents shall not be responsible for the accuracy or completeness of electronic copies of this plan sheet.

5

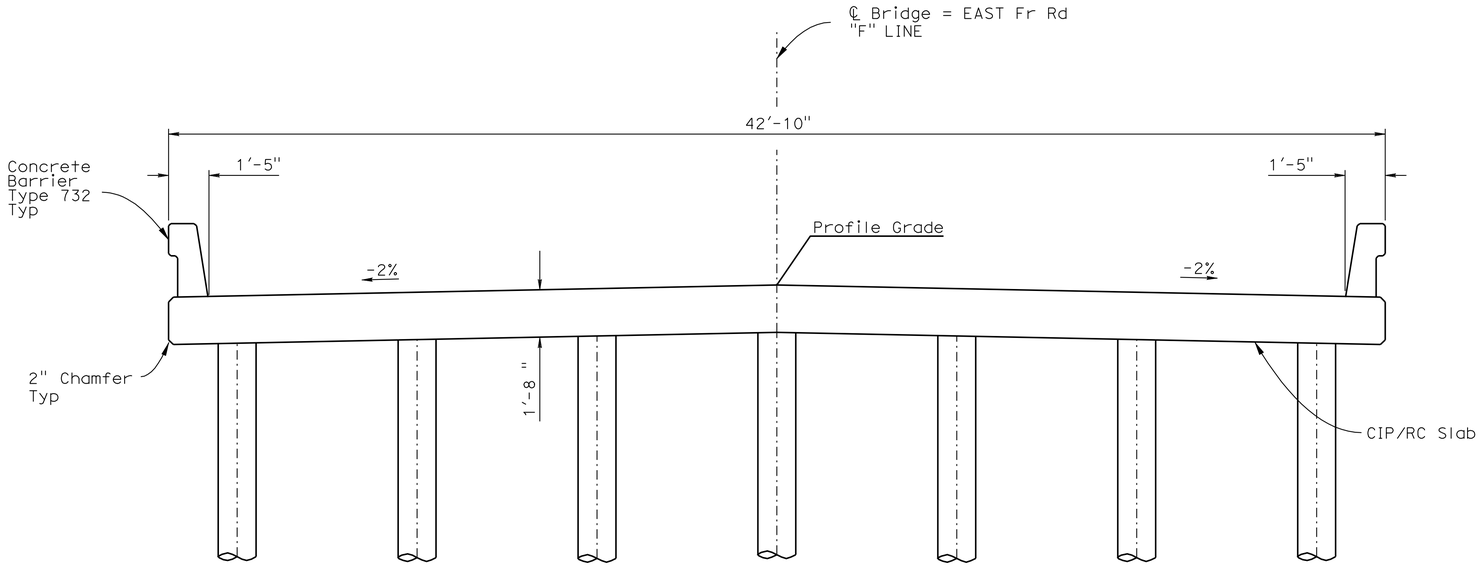

TYPICAL SECTION

3/8" = 1'-0"

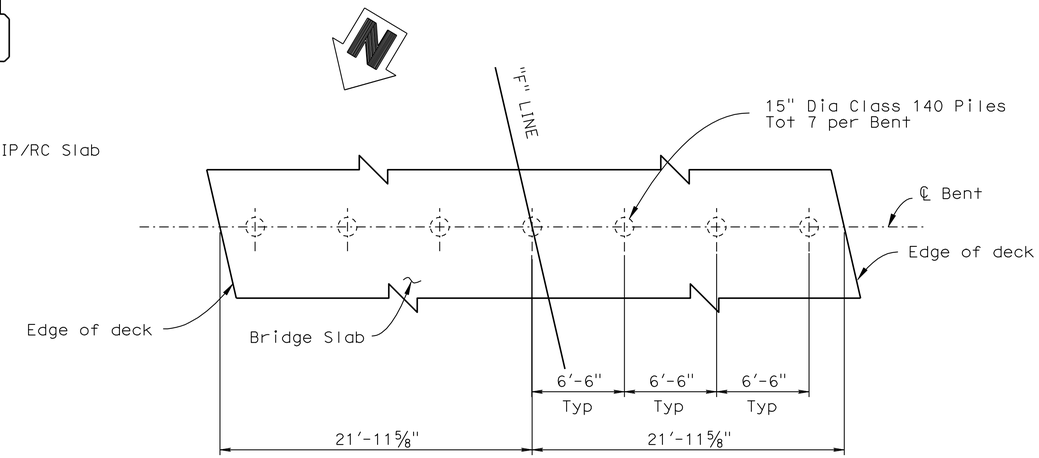

PLAN - BENT

3/16"=1'-0"

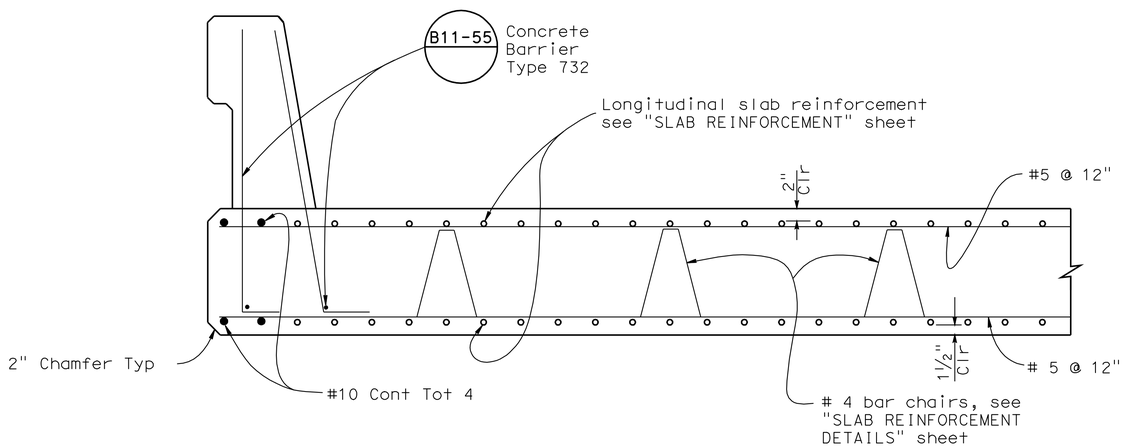

PART TYPICAL SECTION

1" = 1'-0"

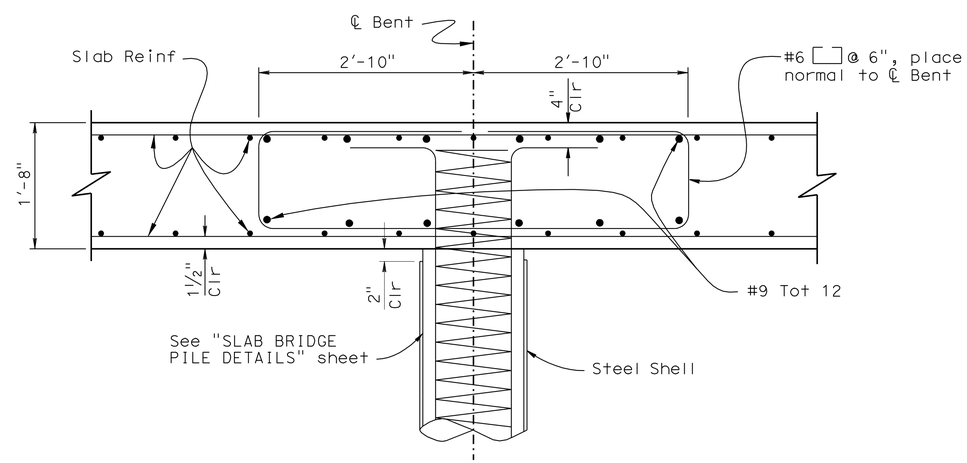

TYPICAL SECTION - BENT CAP

1" = 1'-0"

5 **REVISED PER ADDENDUM No. 5 DATED JUNE 15, 2012**

DESIGN	BY L.Wu	CHECKED A. McPhee	
DETAILS	BY D.Wooten	CHECKED A. McPhee	
QUANTITIES	BY F. Chen	CHECKED M. Vo	

STATE OF CALIFORNIA
DEPARTMENT OF TRANSPORTATION

DIVISION OF ENGINEERING SERVICES
STRUCTURE DESIGN
DESIGN BRANCH 10

BRIDGE NO. 39-0239
POST MILE 2.7

DUTCHMAN CREEK BRIDGE (EAST FRONTAGE ROAD)
TYPICAL SECTION & BENT DETAILS

STRUCTURES DESIGN DETAIL SHEET (ENGLISH) (REV. 10/25/05)

ORIGINAL SCALE IN INCHES FOR REDUCED PLANS 0 1 2 3

CU 10
EA 415801

DISREGARD PRINTS BEARING EARLIER REVISION DATES

REVISION DATES: 2-21-08 6-05-08 3-24-09

SHEET 6 OF 12

FILE => 390239kts06.dgn

USERNAME => s12614 DATE PLOTTED => 14-JUN-2012 TIME PLOTTED => 10:21

DIST	COUNTY	ROUTE	POST MILES TOTAL PROJECT	SHEET No	TOTAL SHEETS
10	Mer	99	0.0/4.6	589	607

REGISTERED CIVIL ENGINEER 04-13-10 DATE

11-1-10
PLANS APPROVAL DATE

REGISTERED PROFESSIONAL ENGINEER Larry Wu No. C57035 Exp. 6-30-11 CIVIL STATE OF CALIFORNIA

The State of California or its officers or agents shall not be responsible for the accuracy or completeness of electronic copies of this plan sheet.

5

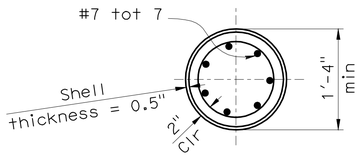

SECTION B-B
1" = 1'-0"

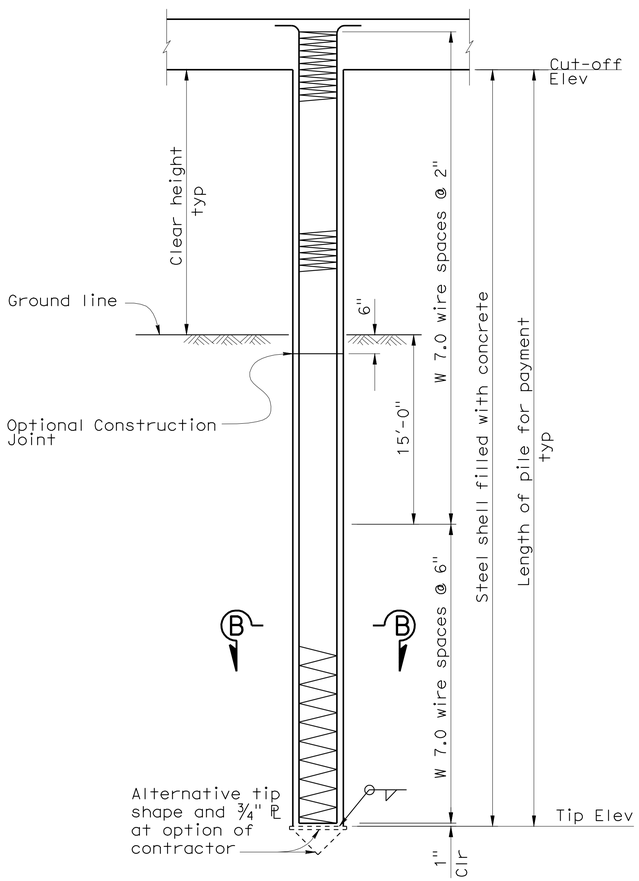

CAST-IN-STEEL SHELL CONCRETE PILE

ELEVATION
½" = 1'-0"

5 **REVISED PER ADDENDUM No. 5 DATED JUNE 15, 2012**

	BY	CHECKED
DESIGN	L.Wu	A. McPhee
DETAILS	D.Wooten	A. McPhee
QUANTITIES	F. Chen	M. Vo

STATE OF CALIFORNIA
DEPARTMENT OF TRANSPORTATION

DIVISION OF ENGINEERING SERVICES
STRUCTURE DESIGN
DESIGN BRANCH 10

BRIDGE NO. 39-0239
POST MILE 2.7

DUTCHMAN CREEK BRIDGE (EAST FRONTAGE ROAD)
SLAB BRIDGE PILE DETAILS

STRUCTURES DESIGN DETAIL SHEET (ENGLISH) (REV. 10/25/05)

ORIGINAL SCALE IN INCHES FOR REDUCED PLANS 0 1 2 3

CU 10
EA 415801

DISREGARD PRINTS BEARING EARLIER REVISION DATES 2-24-08 3-24-09

REVISION DATES

SHEET 9 OF 12

FILE => 390239ppdt09.add

USERNAME => s512614 DATE PLOTTED => 14-JUN-2012 TIME PLOTTED => 10:21