REFERENCE: CALTRANS SOIL & ROCK LOGGING, CLASSIFICATION, AND PRESENTATION MANUAL (2010)

DIST	COUNTY	ROUTE	POST MILES TOTAL PROJECT	SHEET No	TOTAL SHEETS
10	SJ	4,99	R19.5/R20.1, 15.0/18.6	1201	1414

PROFESSIONAL GEOLOGIST 9-9-11

3-26-12
PLANS APPROVAL DATE

PROFESSIONAL GEOLOGIST Joseph Kaump No. 7837 Exp. 01-31-13 STATE OF CALIFORNIA

The State of California or its officers or agents shall not be responsible for the accuracy or completeness of electronic copies of this plan sheet.

GROUP SYMBOLS AND NAMES

Graphic/Symbol	Group Names	Graphic/Symbol	Group Names
GW	Well-graded GRAVEL Well-graded GRAVEL with SAND	CL	Lean CLAY Lean CLAY with SAND Lean CLAY with GRAVEL SANDY lean CLAY SANDY lean CLAY with GRAVEL GRAVELLY lean CLAY GRAVELLY lean CLAY with SAND
GP	Poorly-graded GRAVEL Poorly-graded GRAVEL with SAND		
GW-GM	Well-graded GRAVEL with SILT Well-graded GRAVEL with SILT and SAND	CL-ML	SILTY CLAY SILTY CLAY with SAND SILTY CLAY with GRAVEL SANDY SILTY CLAY SANDY SILTY CLAY with GRAVEL GRAVELLY SILTY CLAY GRAVELLY SILTY CLAY with SAND
GW-GC	Well-graded GRAVEL with CLAY (or SILTY CLAY) Well-graded GRAVEL with CLAY and SAND (or SILTY CLAY and SAND)		
GP-GM	Poorly-graded GRAVEL with SILT Poorly-graded GRAVEL with SILT and SAND	ML	SILT SILT with SAND SILT with GRAVEL SANDY SILT SANDY SILT with GRAVEL GRAVELLY SILT GRAVELLY SILT with SAND
GP-GC	Poorly-graded GRAVEL with CLAY (or SILTY CLAY) Poorly-graded GRAVEL with CLAY and SAND (or SILTY CLAY and SAND)		
GM	SILTY GRAVEL SILTY GRAVEL with SAND	OL	ORGANIC lean CLAY ORGANIC lean CLAY with SAND ORGANIC lean CLAY with GRAVEL SANDY ORGANIC lean CLAY SANDY ORGANIC lean CLAY with GRAVEL GRAVELLY ORGANIC lean CLAY GRAVELLY ORGANIC lean CLAY with SAND
GC	CLAYEY GRAVEL CLAYEY GRAVEL with SAND		
GC-GM	SILTY, CLAYEY GRAVEL SILTY, CLAYEY GRAVEL with SAND	OL	ORGANIC SILT ORGANIC SILT with SAND ORGANIC SILT with GRAVEL SANDY ORGANIC SILT SANDY ORGANIC SILT with GRAVEL GRAVELLY ORGANIC SILT GRAVELLY ORGANIC SILT with SAND
SW	Well-graded SAND Well-graded SAND with GRAVEL		
SP	Poorly-graded SAND Poorly-graded SAND with GRAVEL	CH	Fat CLAY Fat CLAY with SAND Fat CLAY with GRAVEL SANDY fat CLAY SANDY fat CLAY with GRAVEL GRAVELLY fat CLAY GRAVELLY fat CLAY with SAND
SW-SM	Well-graded SAND with SILT Well-graded SAND with SILT and GRAVEL		
SW-SC	Well-graded SAND with CLAY (or SILTY CLAY) Well-graded SAND with CLAY and GRAVEL (or SILTY CLAY and GRAVEL)	MH	Elastic SILT Elastic SILT with SAND Elastic SILT with GRAVEL SANDY elastic SILT SANDY elastic SILT with GRAVEL GRAVELLY elastic SILT GRAVELLY elastic SILT with SAND
SP-SM	Poorly-graded SAND with SILT Poorly-graded SAND with SILT and GRAVEL		
SP-SC	Poorly-graded SAND with CLAY (or SILTY CLAY) Poorly-graded SAND with CLAY and GRAVEL (or SILTY CLAY and GRAVEL)	OH	ORGANIC fat CLAY ORGANIC fat CLAY with SAND ORGANIC fat CLAY with GRAVEL SANDY ORGANIC fat CLAY SANDY ORGANIC fat CLAY with GRAVEL GRAVELLY ORGANIC fat CLAY GRAVELLY ORGANIC fat CLAY with SAND
SM	SILTY SAND SILTY SAND with GRAVEL		
SC	CLAYEY SAND CLAYEY SAND with GRAVEL	OH	ORGANIC elastic SILT ORGANIC elastic SILT with SAND ORGANIC elastic SILT with GRAVEL SANDY ORGANIC elastic SILT SANDY ORGANIC elastic SILT with GRAVEL GRAVELLY ORGANIC elastic SILT GRAVELLY ORGANIC elastic SILT with SAND
SC-SM	SILTY, CLAYEY SAND SILTY, CLAYEY SAND with GRAVEL		
PT	PEAT	OL/OH	ORGANIC SOIL ORGANIC SOIL with SAND ORGANIC SOIL with GRAVEL SANDY ORGANIC SOIL SANDY ORGANIC SOIL with GRAVEL GRAVELLY ORGANIC SOIL GRAVELLY ORGANIC SOIL with SAND
	COBBLES COBBLES and BOULDERS BOULDERS		

FIELD AND LABORATORY TESTING

- (C) Consolidation (ASTM D 2435)
- (CL) Collapse Potential (ASTM D 5333)
- (CP) Compaction Curve (CTM 216)
- (CR) Corrosivity Testing (CTM 643, CTM 422, CTM 417)
- (CU) Consolidated Undrained Triaxial (ASTM D 4767)
- (DS) Direct Shear (ASTM D 3080)
- (EI) Expansion Index (ASTM D 4829)
- (M) Moisture Content (ASTM D 2216)
- (OC) Organic Content-% (ASTM D 2974)
- (P) Permeability (CTM 220)
- (PA) Particle Size Analysis (ASTM D 422)
- (PI) Plasticity Index (AASHTO T 90) Liquid Limit (AASHTO T 89)
- (PL) Point Load Index (ASTM D 5731)
- (PM) Pressure Meter
- (R) R-Value (CTM 301)
- (SE) Sand Equivalent (CTM 217)
- (SG) Specific Gravity (AASHTO T 100)
- (SL) Shrinkage Limit (ASTM D 427)
- (SW) Swell Potential (ASTM D 4546)
- (UC) Unconfined Compression-Soil (ASTM D 2166) Unconfined Compression-Rock (ASTM D 2938)
- (UU) Unconsolidated Undrained Triaxial (ASTM D 2850)
- (UW) Unit Weight (ASTM D 4767)

APPARENT DENSITY OF COHESIONLESS SOILS

Description	SPT N_{60} (Blows / 12 in.)
Very Loose	0 - 5
Loose	5 - 10
Medium Dense	10 - 30
Dense	30 - 50
Very Dense	Greater than 50

MOISTURE

Description	Criteria
Dry	No discernable moisture
Moist	Moisture present, but no free water
Wet	Visible free water

PERCENT OR PROPORTION OF SOILS

Description	Criteria
Trace	Particles are present but estimated to be less than 5%
Few	5% - 10%
Little	15% - 25%
Some	30% - 45%
Mostly	50% - 100%

PARTICLE SIZE

Description		Size (in.)
Boulder		Greater than 12
Cobble		3 - 12
Gravel	Coarse	3/4 - 3
	Fine	1/5 - 3/4
Sand	Coarse	1/16 - 1/5
	Medium	1/64 - 1/16
	Fine	1/300 - 1/64
Silt and Clay		Less than 1/300

ENGINEERING SERVICES

MATERIALS AND GEOTECHNICAL SERVICES

PREPARED BY: W. Tang 6/11

STATE OF CALIFORNIA DEPARTMENT OF TRANSPORTATION

DIVISION OF ENGINEERING SERVICES STRUCTURE DESIGN DESIGN BRANCH 17

BRIDGE NO. 29-0335
POST MILE 16.49

SOUTH STOCKTON WIDENING
DUCK CREEK BRIDGE
LOG OF TEST BORINGS 3 OF 3

GS LOTB SOIL LEGEND

ORIGINAL SCALE IN INCHES FOR REDUCED PLANS 0 1 2 3

UNIT: 3643
PROJECT NUMBER & PHASE: 10000004091
CONTRACT NO.: 10-3A1001

DISREGARD PRINTS BEARING EARLIER REVISION DATES

REVISION DATES

SHEET 14 OF 14

FILE => 29-0335-z-1tb3of3.dgn

USERNAME => s121614 DATE PLOTTED => 29-MAR-2012 TIME PLOTTED => 12:44

DIST	COUNTY	ROUTE	POST MILES TOTAL PROJECT	SHEET No.	TOTAL SHEETS
10	SJ	4,99	R19.5/R20.1, 15.0/18.6	1202	1414

REGISTERED CIVIL ENGINEER 11-04-11 DATE

3-26-12
PLANS APPROVAL DATE

REGISTERED PROFESSIONAL ENGINEER Chris Udarbe No. C62985 Exp. 6-30-12 CIVIL STATE OF CALIFORNIA

The State of California or its officers or agents shall not be responsible for the accuracy or completeness of electronic copies of this plan sheet.

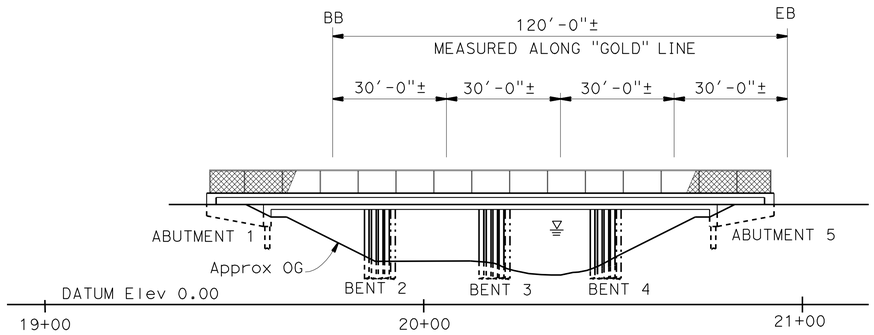

Note: Not all piles are shown.

ELEVATION

1" = 20'

Legend:

- Existing structure
- New structure
- Denotes limits of removal of existing barrier and sidewalk. Bridge removal (Portion), LOCATION L.
- Indicates 100 Yr HW Elev = 17.4 ft
- Indicates direction of flow

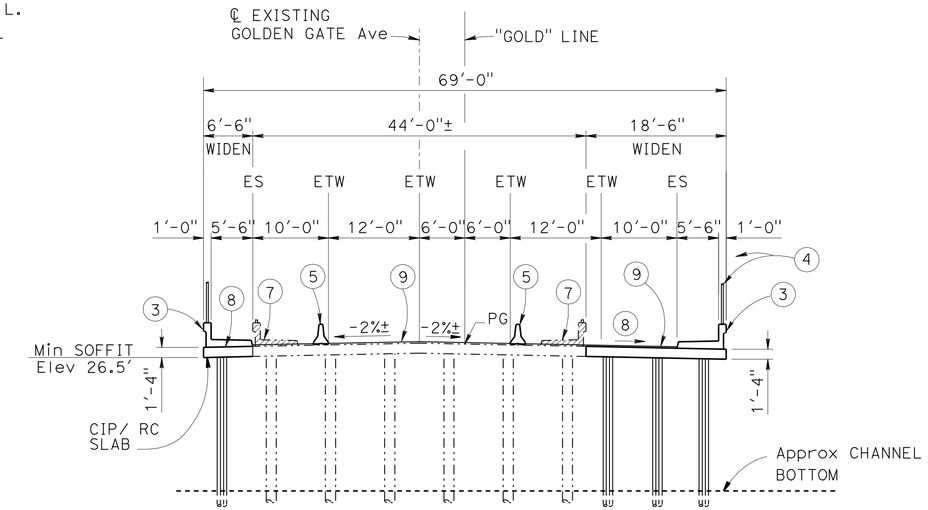

TYPICAL SECTION

1" = 10'

Notes:

1. For General Notes and Pile Data Table see "INDEX TO PLANS" sheet.
2. For "Hydrologic Summary", see "FOUNDATION PLAN" sheet.

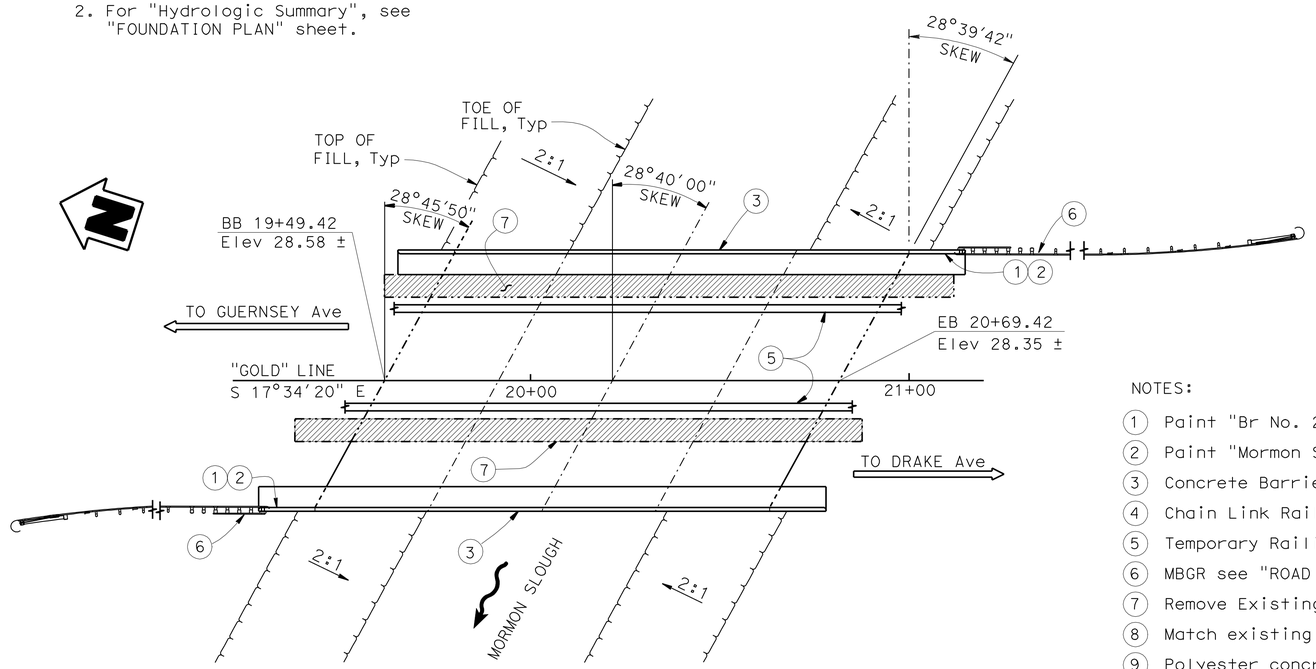

NOTE:
THE CONTRACTOR SHALL VERIFY ALL CONTROLLING FIELD DIMENSIONS BEFORE ORDERING OR FABRICATING ANY MATERIAL.

PLAN

1" = 20'

NOTES:

1. Paint "Br No. 29C-0087"
2. Paint "Mormon Slough Bridge"
3. Concrete Barrier, Type 26
4. Chain Link Railing, Type 7
5. Temporary Railing, Type K, see "ROAD PLANS"
6. MBGR see "ROAD PLANS"
7. Remove Existing Concrete Barrier, Type 5
8. Match existing grade and cross slope
9. Polyester concrete overlay

QUANTITIES

REMOVE UNSOUND CONCRETE	27	CF
PREPARE CONCRETE BRIDGE DECK SURFACE	6,720	SQFT
BRIDGE REMOVAL (PORTION), LOCATION L	LUMP	SUM
STRUCTURE EXCAVATION (BRIDGE)	49	CY
STRUCTURE BACKFILL (BRIDGE)	33	CY
FURNISH PILING (CLASS 90) (ALTERNATIVE Y)	480	LF
DRIVE PILE (CLASS 90) (ALTERNATIVE Y)	12	EA
FURNISH 15" PRECAST PRESTRESSED CONCRETE PILING	660	LF
DRIVE 15" PRECAST PRESTRESSED CONCRETE PILE	12	EA
STRUCTURAL CONCRETE, BRIDGE	182	CY
DRILL AND BOND DOWEL	215	LF
RAPID SETTING CONCRETE (PATCH)	27	CF
FURNISH POLYESTER CONCRETE OVERLAY	504	CF
PLACE POLYESTER CONCRETE OVERLAY	6,720	SQFT
BAR REINFORCING STEEL (BRIDGE)	50,689	LB
CHAIN LINK RAILING (TYPE 7)	304	LF
CONCRETE BARRIER (TYPE 26)	304	LF

SOUTH STOCKTON WIDENING
MORMON SLOUGH BRIDGE (WIDEN)
GENERAL PLAN

Gary Joe, DESIGN ENGINEER	DESIGN	BY M. Friedheim	CHECKED P. Vu	LOAD & RESISTANCE FACTOR DESIGN	LIVE LOADING: HL93 W/"LOW-BOY": PERMIT DESIGN VEHICLE
	DETAILS	BY M. Tran	CHECKED P. Vu	LAYOUT: BY M. Friedheim	CHECKED P. Vu
	QUANTITIES	BY S. Morimoto	CHECKED L. Warren	SPECIFICATIONS: BY V. Renganathan	PLANS AND SPECS COMPARED V. Renganathan

STATE OF CALIFORNIA
DEPARTMENT OF TRANSPORTATION

DIVISION OF ENGINEERING SERVICES
STRUCTURE DESIGN
DESIGN BRANCH 17

BRIDGE NO. 29C-0087
POST MILE 0.5 mi N/W of SR 99

ORIGINAL SCALE IN INCHES FOR REDUCED PLANS 0 1 2 3

UNIT: 3586
PROJECT NUMBER & PHASE: 10000004091
CONTRACT NO.: 10-3A1001

DISREGARD PRINTS BEARING EARLIER REVISION DATES

REVISION DATES: 09-06-11 11-04-11 01-25-11 01-18-12

SHEET 1 OF 15

STRUCTURES DESIGN GENERAL PLAN SHEET (ENGLISH) (REV.09-01-10)

FILE => 29c-0087-a-gp.dgn

USERNAME => s612614 DATE PLOTTED => 29-MAR-2012 TIME PLOTTED => 12:44

DIST	COUNTY	ROUTE	POST MILES TOTAL PROJECT	SHEET No.	TOTAL SHEETS
10	SJ	4,99	R19.5/R20.1, 15.0/18.6	1203	1414

REGISTERED CIVIL ENGINEER 11-04-11 DATE

3-26-12
PLANS APPROVAL DATE

REGISTERED PROFESSIONAL ENGINEER CHRIS UDARBE No. C62985 Exp. 6-30-12 CIVIL STATE OF CALIFORNIA

The State of California or its officers or agents shall not be responsible for the accuracy or completeness of electronic copies of this plan sheet.

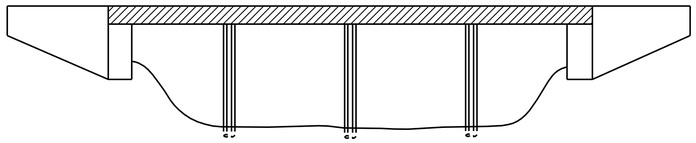

LEGEND

Structural Concrete, Bridge

Structural Concrete, Bridge (4,000 psi at 28 days)

GENERAL NOTES
LOAD AND RESISTANCE FACTOR DESIGN

DESIGN:
AASHTO LRFD Bridge Design Specifications, 4th edition with California Amendments, preface dated December 2008

SEISMIC DESIGN:
Caltrans Seismic Design Criteria (SDC), Version 1.5 dated January 2010

DEAD LOAD:
Includes 35 psf for future wearing surface.

LIVE LOADING:
HL93 and permit design load.

SEISMIC LOADING:
Soil profile type D
Magnitude group 6.7 ± 0.25
Peak Rock Acceleration 0.29 g
V_{s30} = 820 ft/sec

REINFORCED CONCRETE:
fy = 60 ksi
f'c = 3.6 ksi
n = 8

INDEX TO PLANS

1. GENERAL PLAN
2. INDEX TO PLANS
3. FOUNDATION PLAN
4. ABUTMENT 1 LAYOUT
5. ABUTMENT 5 LAYOUT
6. ABUTMENT DETAILS
7. BENT DETAILS
8. TYPICAL SECTION
9. GIRDER REINFORCEMENT - LEFT WIDEN
10. GIRDER REINFORCEMENT - RIGHT WIDEN
11. SLAB REINFORCEMENT DETAILS
12. LOG OF TEST BORINGS 1 OF 4
13. LOG OF TEST BORINGS 2 OF 4
14. LOG OF TEST BORINGS 3 OF 4
15. LOG OF TEST BORINGS 4 OF 4

CONCRETE STRENGTH AND TYPE LIMITS

No Scale

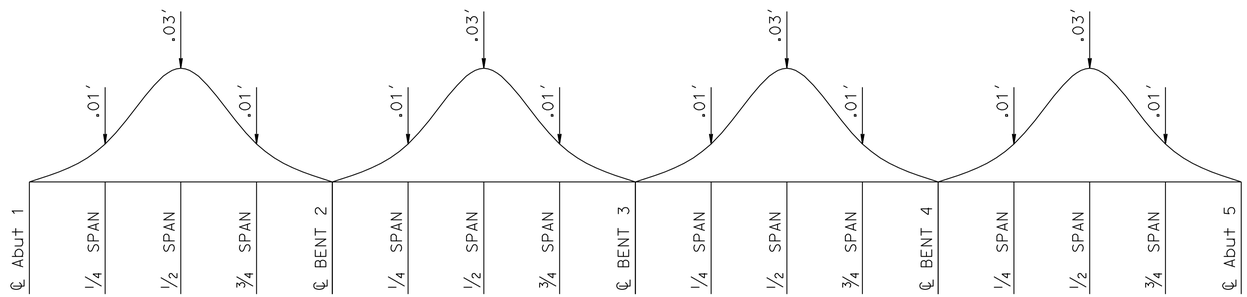

CAMBER DIAGRAM

No Scale

Note: Camber diagram does not include allowance for falsework settlement.

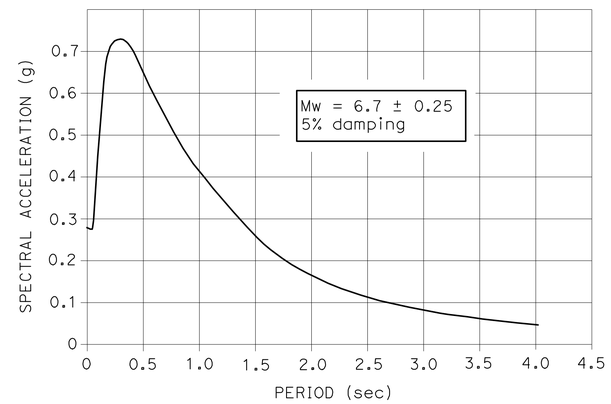

STANDARD PLANS DATED MAY 2006

A10A	ACRONYMS AND ABBREVIATIONS (1 of 2)
A10B	ACRONYMS AND ABBREVIATIONS (2 of 2)
A10C	SYMBOLS 1 OF 2
A10D	SYMBOLS 2 OF 2
A62C	LIMITS OF PAYMENT FOR EXCAVATION AND BACKFILL-BRIDGE
B0-1	BRIDGE DETAILS
B0-3	BRIDGE DETAILS
B2-5	PILE DETAILS CLASS 90 AND CLASS 140
B11-52	CHAIN LINK RAILING TYPE 7
B11-54	CONCRETE BARRIER TYPE 26

STANDARD PLAN SHEET NO.

DETAIL NO.

PILE DATA TABLE

SUPPORT LOCATION	PILE TYPE	NOMINAL RESISTANCE (kips)		DESIGN TIP ELEVATION (ft)	SPECIFIED TIP ELEVATION (ft)	NOMINAL DRIVING RESISTANCE REQUIRED (kips)
		COMPRESSION	TENSION			
ABUTMENT 1	CLASS 90 Alt. "Y"	180	0	-18 (a)	-18	180
BENT 2	PC/PS 15" Ø	200	0	-43 (a)	-43	295
BENT 3	PC/PS 15" Ø	200	0	-43 (a)	-43	295
BENT 4	PC/PS 15" Ø	200	0	-43 (a)	-43	295
ABUTMENT 5	CLASS 90 Alt. "Y"	180	0	-18 (a)	-18	180

NOTES:

(a) Design tip elevations are controlled by compression.

(b) Potential local pier scour to elevation 13.6 ft

	BY	CHECKED
DESIGN	M. FRIEDHEIM	P. VU
DETAILS	S. NG	P. VU
QUANTITIES	S. MORIMOTO	L. WARREN

STATE OF CALIFORNIA
DEPARTMENT OF TRANSPORTATION

DIVISION OF ENGINEERING SERVICES
STRUCTURE DESIGN
DESIGN BRANCH 17

BRIDGE NO. 29C-0087
POST MILE 0.5 mi N/W of SR 99

SOUTH STOCKTON WIDENING
MORMON SLOUGH BRIDGE (WIDEN)
INDEX TO PLANS

STRUCTURES DESIGN DETAIL SHEET (ENGLISH) (REV. 09-01-10)

ORIGINAL SCALE IN INCHES FOR REDUCED PLANS 0 1 2 3

UNIT: 3586
PROJECT NUMBER & PHASE: 10000004091
CONTRACT NO.: 10-3A1001

DISREGARD PRINTS BEARING EARLIER REVISION DATES

REVISION DATES 06-08-11 9-02-11 01-18-12

SHEET 2 OF 15

FILE => 29c-0087-b-itp.dgn

USERNAME => s121614 DATE PLOTTED => 29-MAR-2012 TIME PLOTTED => 12:44

DIST	COUNTY	ROUTE	POST MILES TOTAL PROJECT	SHEET No.	TOTAL SHEETS
10	SJ	4,99	R19.5/R20.1, 15.0/18.6	1204	1414

REGISTERED CIVIL ENGINEER 11-04-11 DATE

3-26-12
PLANS APPROVAL DATE

REGISTERED PROFESSIONAL ENGINEER Chris Udarbe No. C62985 Exp. 06-30-2012 CIVIL STATE OF CALIFORNIA

The State of California or its officers or agents shall not be responsible for the accuracy or completeness of electronic copies of this plan sheet.

CURVE DATA

No.	R	Δ	T	L
Ⓐ	700.00	36°37'00"	231.62	447.36

Note:
Elec Line, Tele Line, Tele Cable Line, TV Line, Per Dist. Map

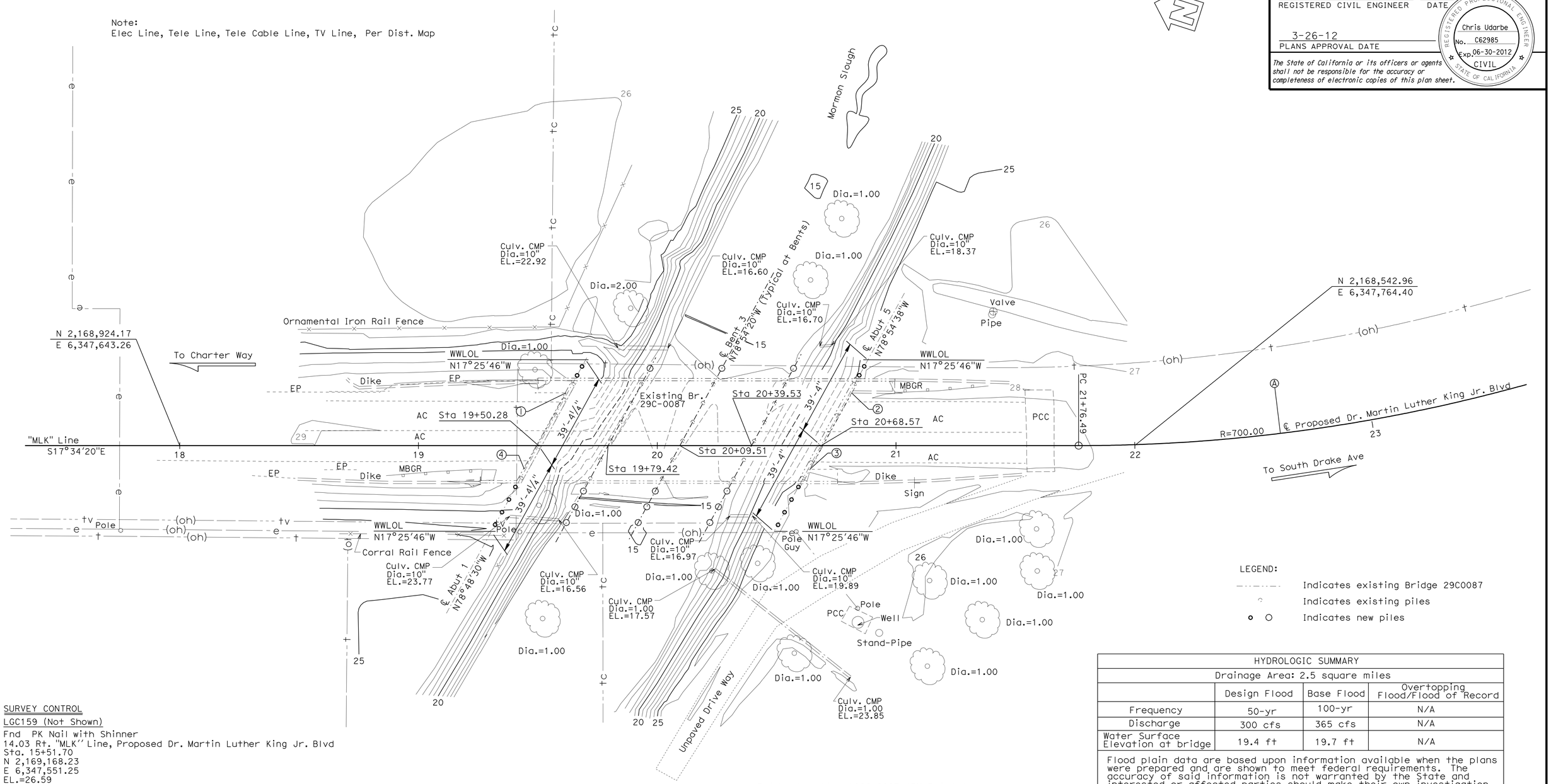

LEGEND:

- Indicates existing Bridge 29C0087
- Indicates existing piles
- Indicates new piles

HYDROLOGIC SUMMARY			
Drainage Area: 2.5 square miles			
	Design Flood	Base Flood	Overtopping Flood/Flood of Record
Frequency	50-yr	100-yr	N/A
Discharge	300 cfs	365 cfs	N/A
Water Surface Elevation at bridge	19.4 ft	19.7 ft	N/A

Flood plain data are based upon information available when the plans were prepared and are shown to meet federal requirements. The accuracy of said information is not warranted by the State and interested or affected parties should make their own investigation.

SURVEY CONTROL

LGC159 (Not Shown)
Fnd PK Nail with Shinner
14.03 Rt. "MLK" Line, Proposed Dr. Martin Luther King Jr. Blvd
Sta. 15+51.70
N 2,169,168.23
E 6,347,551.25
EL.=26.59

LGC160 (Not Shown)
Fnd PK Nail with Shinner
13.95 Lt. "MLK" Line, Proposed Dr. Martin Luther King Jr. Blvd
Sta. 27+96.71
N 2,168,126.19
E 6,348,153.17
EL.=25.82

Bridge Location #29C-0087 (PN Points)

① - 22.12 Lt. "MLK" Line, Sta.19+73.95, EL.=28.47±
② - 22.05 Lt. "MLK" Line, Sta.20+93.52, EL.=28.20±
③ - 09.94 Rt. "MLK" Line, Sta.20+76.03, EL.=28.18±
④ - 09.79 Rt. "MLK" Line, Sta.19+56.43, EL.=28.42±

PRELIMINARY INVESTIGATION SECTION

SCALE 1"=20'	VERT.DATUM NGVD29	PHOTOGRAMMETRY AS OF: X			
	HORZ.DATUM NAD83 (1991.35)	SURVEYED	BY District	CHECKED	BY L. Lew 9/2009
ALIGNMENT TIES Dist. Traverse Sheet		DRAFTED	BY S. Zheng 9/2009	CHECKED	BY T. Zolnikov 9/2009

DESIGN	BY M. Friedheim	CHECKED	P. Vu
DETAILS	BY S. Ng	CHECKED	P. Vu
QUANTITIES	BY S. Morimoto	CHECKED	L. Warren

STATE OF CALIFORNIA
DEPARTMENT OF TRANSPORTATION

DIVISION OF ENGINEERING SERVICES
STRUCTURE DESIGN
DESIGN BRANCH 17

BRIDGE NO. 29C0087
POST MILE 0.5 mi N/W of SR 99

SOUTH STOCKTON WIDENING
MORMON SLOUGH BRIDGE (WIDEN)
FOUNDATION PLAN

STRUCTURES FOUNDATION PLAN SHEET (ENGLISH) (REV. 09-01-10)

ORIGINAL SCALE IN INCHES FOR REDUCED PLANS 0 1 2 3

UNIT: 3586
PROJECT NUMBER & PHASE: 10000004091 CONTRACT NO.: 10-3A1001

DISREGARD PRINTS BEARING EARLIER REVISION DATES → 09/16/09 03/02/12 07/18/12

SHEET 3 OF 15

FILE => 29c-0087-e-fp.dgn

DIST	COUNTY	ROUTE	POST MILES TOTAL PROJECT	SHEET No.	TOTAL SHEETS
10	SJ	4,99	R19.5/R20.1, 15.0/18.6	1205	1414

REGISTERED CIVIL ENGINEER — DATE 11-04-11

PLANS APPROVAL DATE 3-26-12

REGISTERED PROFESSIONAL ENGINEER — CHRIS UDARBE — No. C62985 — Exp. 6-30-12 — CIVIL — STATE OF CALIFORNIA

The State of California or its officers or agents shall not be responsible for the accuracy or completeness of electronic copies of this plan sheet.

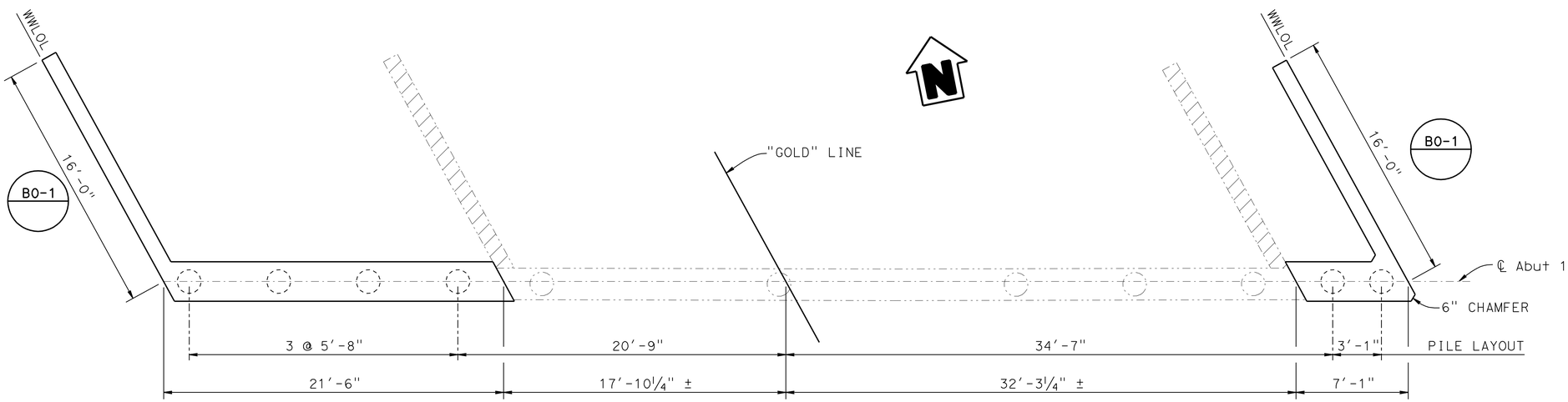

PLAN
¼" = 1'-0"

LEGEND

INDICATES REMOVAL OF EXISTING CONCRETE

INDICATES EXISTING STRUCTURE

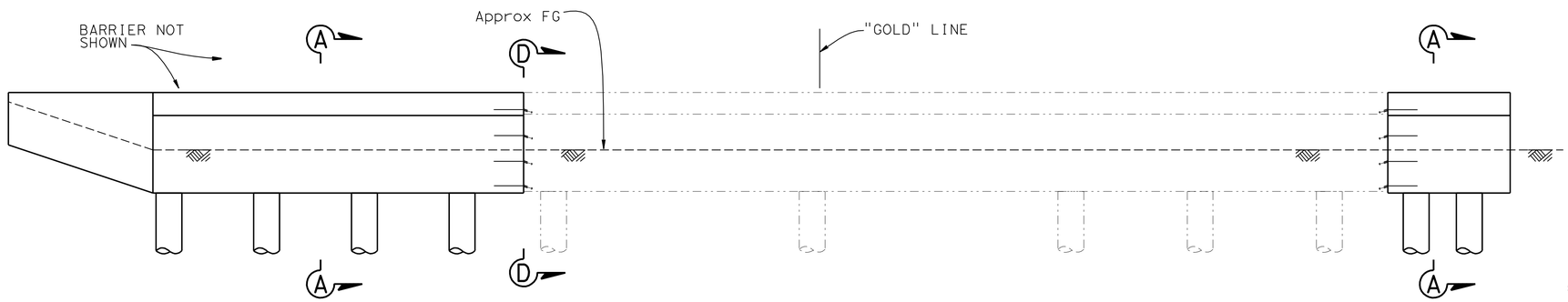

ELEVATION
¼" = 1'-0"

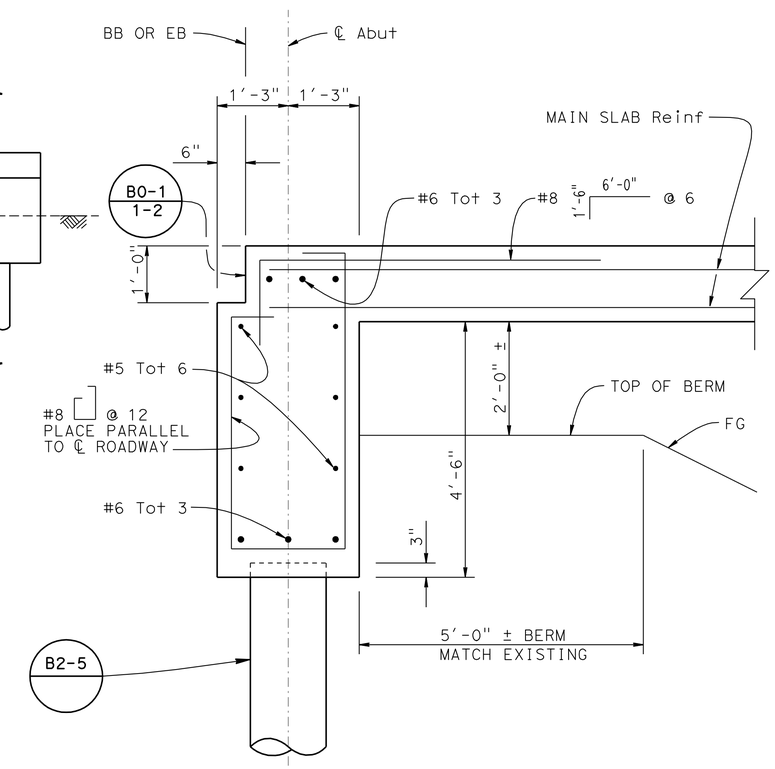

SECTION A-A
¾" = 1'-0"

Notes:
1. For Section D-D, see "ABUTMENT DETAILS" sheet.

NOTE:
THE CONTRACTOR SHALL VERIFY ALL CONTROLLING FIELD DIMENSIONS BEFORE ORDERING OR FABRICATING ANY MATERIAL.

	BY	CHECKED
DESIGN	M. FRIEDHEIM	P. VU
DETAILS	S. NG	P. VU
QUANTITIES	S. MORIMOTO	L. WARREN

STATE OF CALIFORNIA
DEPARTMENT OF TRANSPORTATION

DIVISION OF ENGINEERING SERVICES
STRUCTURE DESIGN
DESIGN BRANCH 17

BRIDGE NO. 29C-0087
POST MILE 0.5 mi N/W of SR 99

SOUTH STOCKTON WIDENING
MORMON SLOUGH BRIDGE (WIDEN)
ABUTMENT 1 LAYOUT

STRUCTURES DESIGN DETAIL SHEET (ENGLISH) (REV. 09-01-10)

ORIGINAL SCALE IN INCHES FOR REDUCED PLANS 0 1 2 3

UNIT: 3586
PROJECT NUMBER & PHASE: 10000004091
CONTRACT NO.: 10-3A1001

DISREGARD PRINTS BEARING EARLIER REVISION DATES

REVISION DATES: 06-08-11 01-18-12

SHEET 4 OF 15

FILE => 29c-0087-f-a01_1o1.dgn

USERNAME => s121614 DATE PLOTTED => 29-MAR-2012 TIME PLOTTED => 12:45

DIST	COUNTY	ROUTE	POST MILES TOTAL PROJECT	SHEET No.	TOTAL SHEETS
10	SJ	4,99	R19.5/R20.1, 15.0/18.6	1206	1414

REGISTERED CIVIL ENGINEER 11-04-11 DATE

3-26-12
PLANS APPROVAL DATE

REGISTERED PROFESSIONAL ENGINEER CHRIS UDARBE No. C62985 Exp. 6-30-12 CIVIL STATE OF CALIFORNIA

The State of California or its officers or agents shall not be responsible for the accuracy or completeness of electronic copies of this plan sheet.

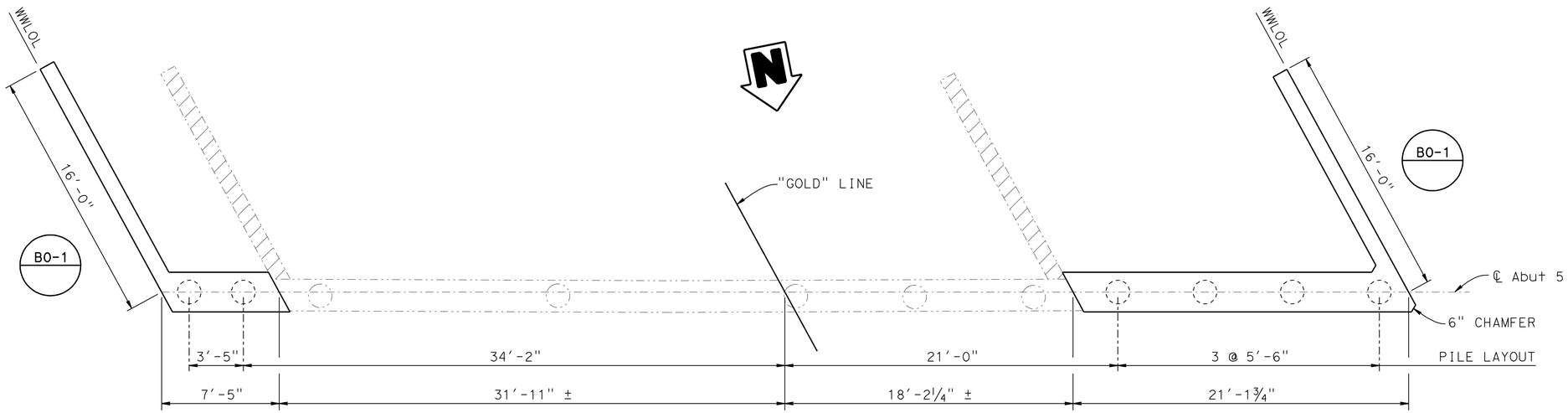

PLAN

¼" = 1'-0"

NOTE:

1. For Section AA see "Abutment 1 Layout" sheet.
2. For Section D-D, see "ABUTMENT DETAILS" sheet.

LEGEND

INDICATES REMOVAL OF EXISTING CONCRETE

INDICATES EXISTING STRUCTURE

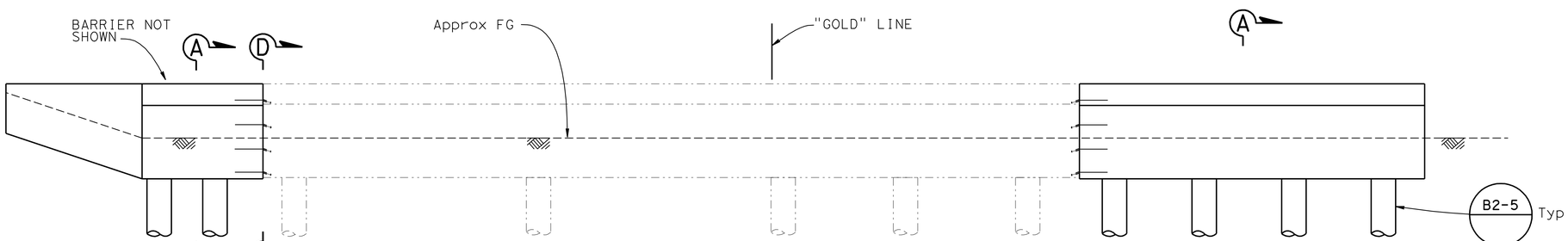

ELEVATION

¼" = 1'-0"

NOTE:
THE CONTRACTOR SHALL VERIFY ALL CONTROLLING FIELD DIMENSIONS BEFORE ORDERING OR FABRICATING ANY MATERIAL.

DESIGN	BY M. FRIEDHEIM	CHECKED P. VU
DETAILS	BY S. NG	CHECKED P. VU
QUANTITIES	BY S. MORIMOTO	CHECKED L. WARREN

STATE OF CALIFORNIA
DEPARTMENT OF TRANSPORTATION

DIVISION OF ENGINEERING SERVICES
STRUCTURE DESIGN
DESIGN BRANCH 17

BRIDGE NO. 29C-0087
POST MILE 0.5 mi N/W of SR 99

SOUTH STOCKTON WIDENING
MORMON SLOUGH BRIDGE (WIDEN)
ABUTMENT 5 LAYOUT

STRUCTURES DESIGN DETAIL SHEET (ENGLISH) (REV. 09-01-10)

ORIGINAL SCALE IN INCHES FOR REDUCED PLANS 0 1 2 3

UNIT: 3586
PROJECT NUMBER & PHASE: 10000004091
CONTRACT NO.: 10-3A1001

DISREGARD PRINTS BEARING EARLIER REVISION DATES

REVISION DATES 06-16-11 01-18-12

SHEET 5 OF 15

FILE => 29c-0087-f-a05_1o1.dgn

USERNAME => s127614 DATE PLOTTED => 29-MAR-2012 TIME PLOTTED => 12:45

DIST	COUNTY	ROUTE	POST MILES TOTAL PROJECT	SHEET No.	TOTAL SHEETS
10	SJ	4,99	R19.5/R20.1, 15.0/18.6	1207	1414

REGISTERED CIVIL ENGINEER 11-04-11 DATE

3-26-12
PLANS APPROVAL DATE

REGISTERED PROFESSIONAL ENGINEER
CHRIS UDARBE
No. C62985
Exp. 6-30-12
CIVIL
STATE OF CALIFORNIA

The State of California or its officers or agents shall not be responsible for the accuracy or completeness of electronic copies of this plan sheet.

Legend:

-·-·- Existing structure

Denotes limits of removal of existing wingwall

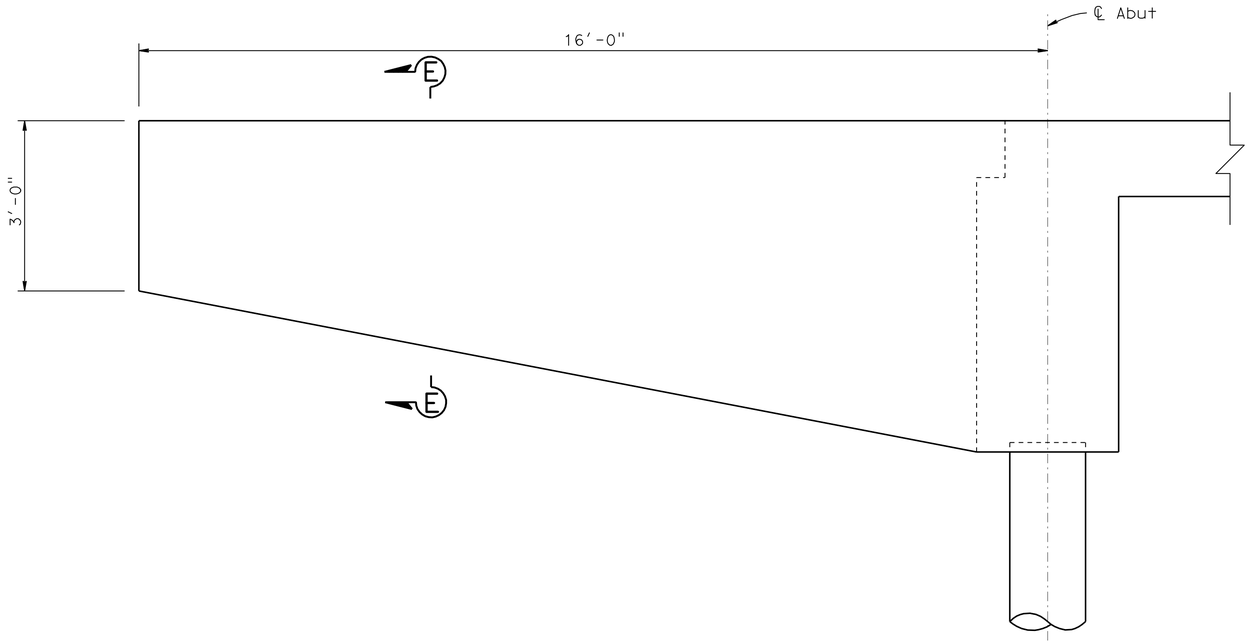

WINGWALL ELEVATION

B0-1

3/4" = 1'-0"

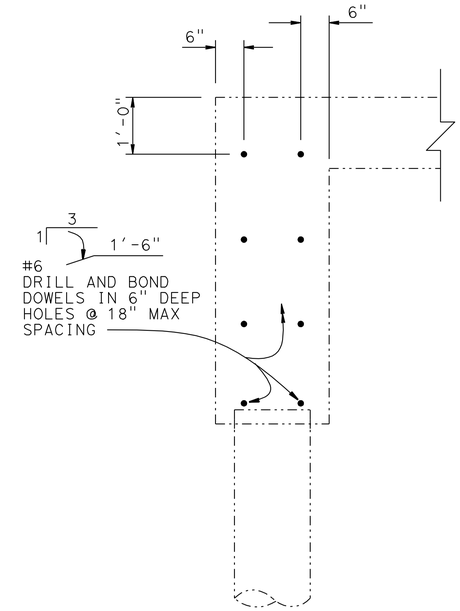

SECTION D-D

3/4" = 1'-0"

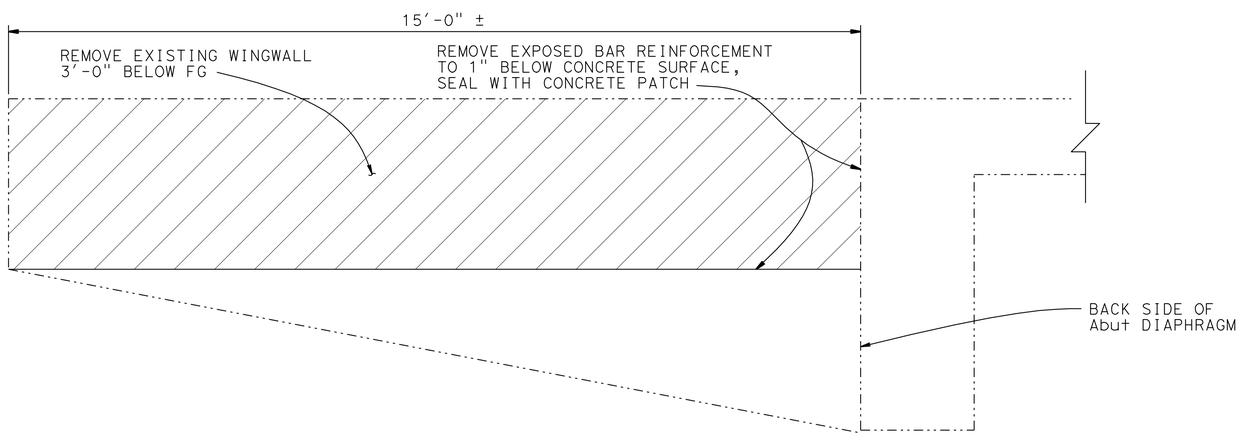

EXISTING WINGWALL REMOVAL

3/4" = 1'-0"

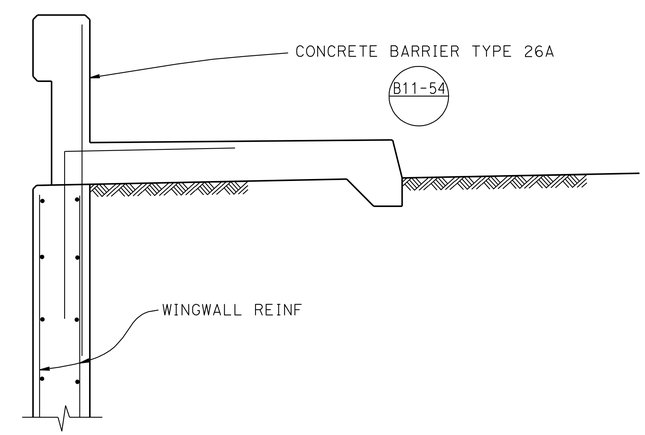

SECTION E-E

3/4" = 1'-0"

DESIGN	BY M. FRIEDHEIM	CHECKED P. VU
DETAILS	BY S. NG	CHECKED P. VU
QUANTITIES	BY S. MORIMOTO	CHECKED L. WARREN

STATE OF CALIFORNIA
DEPARTMENT OF TRANSPORTATION

DIVISION OF ENGINEERING SERVICES
STRUCTURE DESIGN
DESIGN BRANCH 17

BRIDGE NO. 29C-0087
POST MILE 0.5 mi N/W of SR 99

SOUTH STOCKTON WIDENING
MORMON SLOUGH BRIDGE (WIDEN)
ABUTMENT DETAILS

STRUCTURES DESIGN DETAIL SHEET (ENGLISH) (REV. 09-01-10)

ORIGINAL SCALE IN INCHES FOR REDUCED PLANS 0 1 2 3

UNIT: 3586
PROJECT NUMBER & PHASE: 10000004091
CONTRACT NO.: 10-3A1001

DISREGARD PRINTS BEARING EARLIER REVISION DATES

REVISION DATES: 05-06-10 08-05-10 10-21-11 01-18-12

SHEET 6 OF 15

FILE => 29c-0087-g-a01at01.dgn

USERNAME => s121614 DATE PLOTTED => 29-MAR-2012 TIME PLOTTED => 12:45

DIST	COUNTY	ROUTE	POST MILES TOTAL PROJECT	SHEET No.	TOTAL SHEETS
10	SJ	4,99	R19.5/R20.1, 15.0/18.6	1208	1414

REGISTERED CIVIL ENGINEER 11-04-11 DATE

3-26-12
PLANS APPROVAL DATE

REGISTERED PROFESSIONAL ENGINEER CHRIS UDARBE No. C62985 Exp. 6-30-12 CIVIL STATE OF CALIFORNIA

The State of California or its officers or agents shall not be responsible for the accuracy or completeness of electronic copies of this plan sheet.

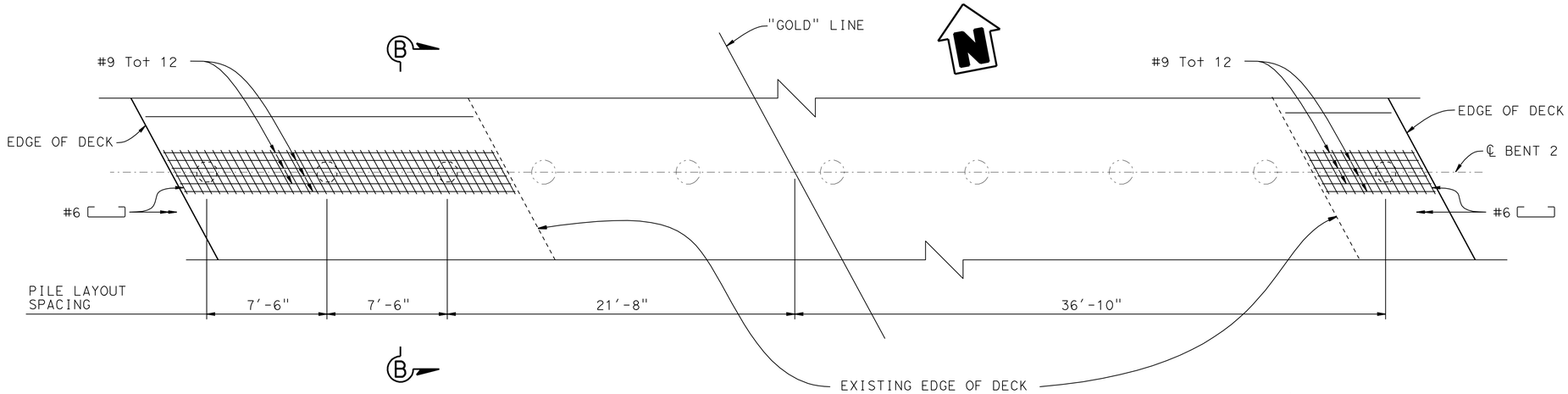

PLAN

1/4" = 1'-0"

NOTE: Bent 2 shown, bents 3 and 4 are similar except as noted.

NOTES:

1. Maximum size of aggregate is 1".
2. The prestress force after all losses shall provide 725 psi minimum stress and shall not be less than 130 kips.
3. The concrete strength shall not be less than 6000 psi at 28 days.
4. No splices allowed in the longitudinal reinforcement within the "clear height" or within 10 ft below the ground line.

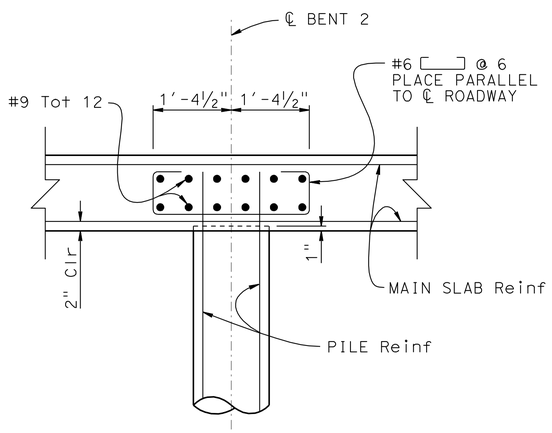

SECTION B-B

3/4" = 1'-0"

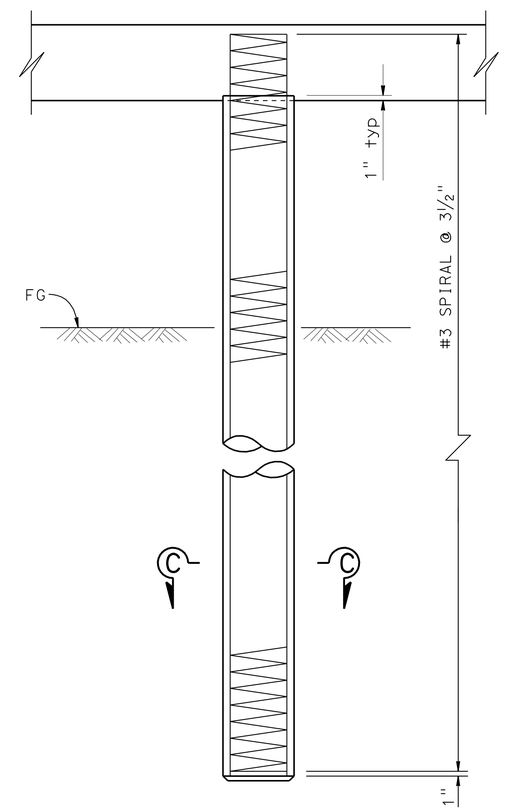

PRECAST PRESTRESSED CONCRETE PILE

3/4" = 1'-0"

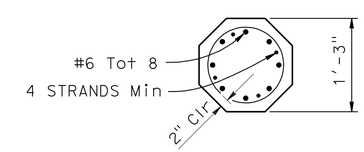

SECTION C-C

1" = 1'-0"

DESIGN	BY M. FRIEDHEIM	CHECKED P. VU	
DETAILS	BY S. NG	CHECKED P. VU	
QUANTITIES	BY S. MORIMOTO	CHECKED L. WARREN	

STATE OF CALIFORNIA
DEPARTMENT OF TRANSPORTATION

DIVISION OF ENGINEERING SERVICES
STRUCTURE DESIGN
DESIGN BRANCH 17

BRIDGE NO. 29C-0087
POST MILE 0.5 mi N/W of SR 99

SOUTH STOCKTON WIDENING
MORMON SLOUGH BRIDGE (WIDEN)
BENT DETAILS

STRUCTURES DESIGN DETAIL SHEET (ENGLISH) (REV. 09-01-10)

ORIGINAL SCALE IN INCHES FOR REDUCED PLANS 0 1 2 3

UNIT: 3586
PROJECT NUMBER & PHASE: 10000004091
CONTRACT NO.: 10-3A1001

DISREGARD PRINTS BEARING EARLIER REVISION DATES

REVISION DATES: 05-06-10 01-18-12 04-26-11 06-10-11

SHEET 7 OF 15

FILE => 29c-0087-h-b01_1a01.dgn

USERNAME => s127614 DATE PLOTTED => 29-MAR-2012 TIME PLOTTED => 12:45

DIST	COUNTY	ROUTE	POST MILES TOTAL PROJECT	SHEET No.	TOTAL SHEETS
10	SJ	4,99	R19.5/R20.1, 15.0/18.6	1209	1414

REGISTERED CIVIL ENGINEER 11-04-11 DATE

3-26-12
PLANS APPROVAL DATE

REGISTERED PROFESSIONAL ENGINEER CHRIS UDARBE No. C62985 Exp. 6-30-12 CIVIL STATE OF CALIFORNIA

The State of California or its officers or agents shall not be responsible for the accuracy or completeness of electronic copies of this plan sheet.

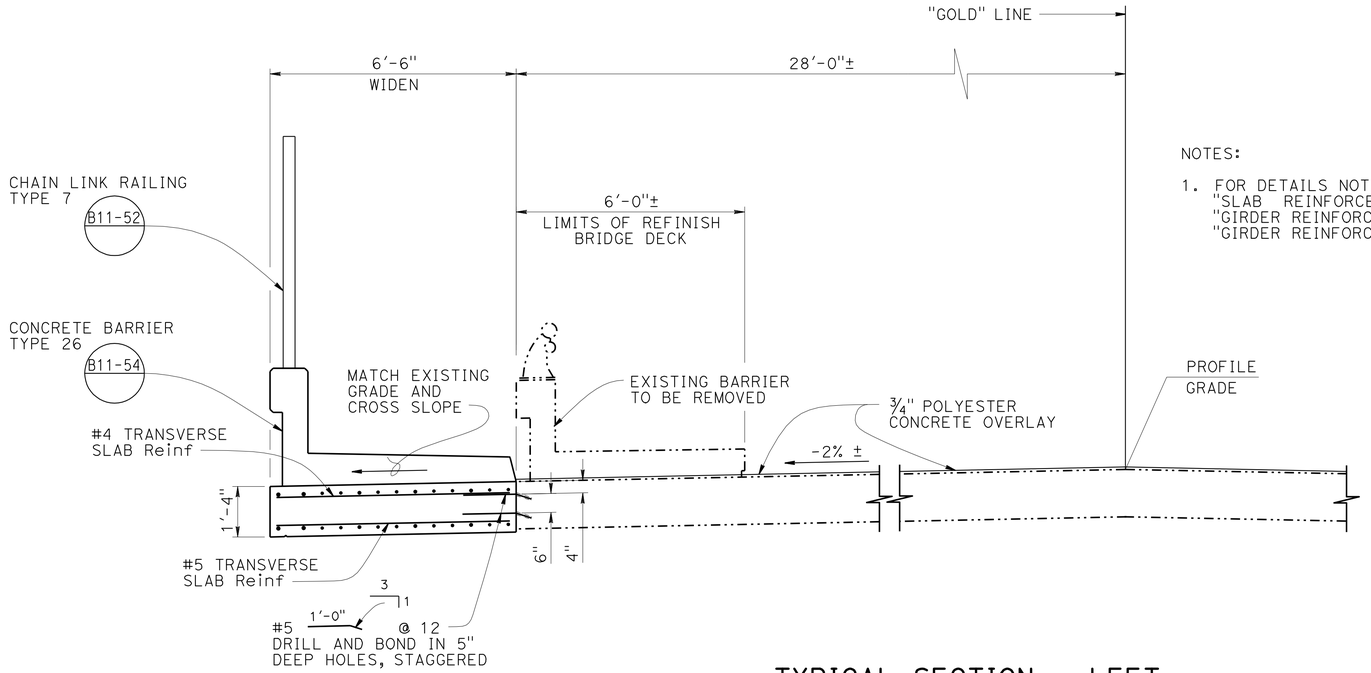

NOTES:

1. FOR DETAILS NOT SHOWN, SEE "SLAB REINFORCEMENT DETAILS", "GIRDER REINFORCEMENT-LEFT WIDEN" AND "GIRDER REINFORCEMENT-RIGHT WIDEN" SHEETS.

TYPICAL SECTION - LEFT

½" = 1'-0"

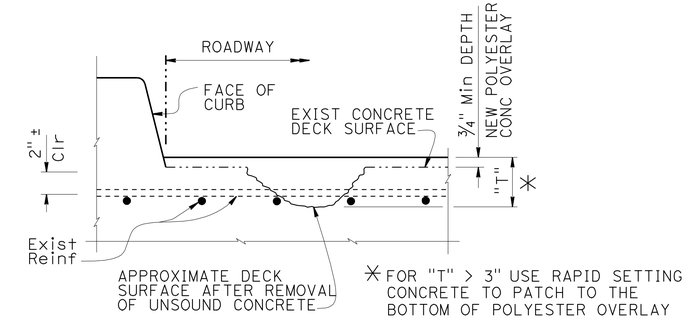

BRIDGE DECK TREATMENT

NO SCALE

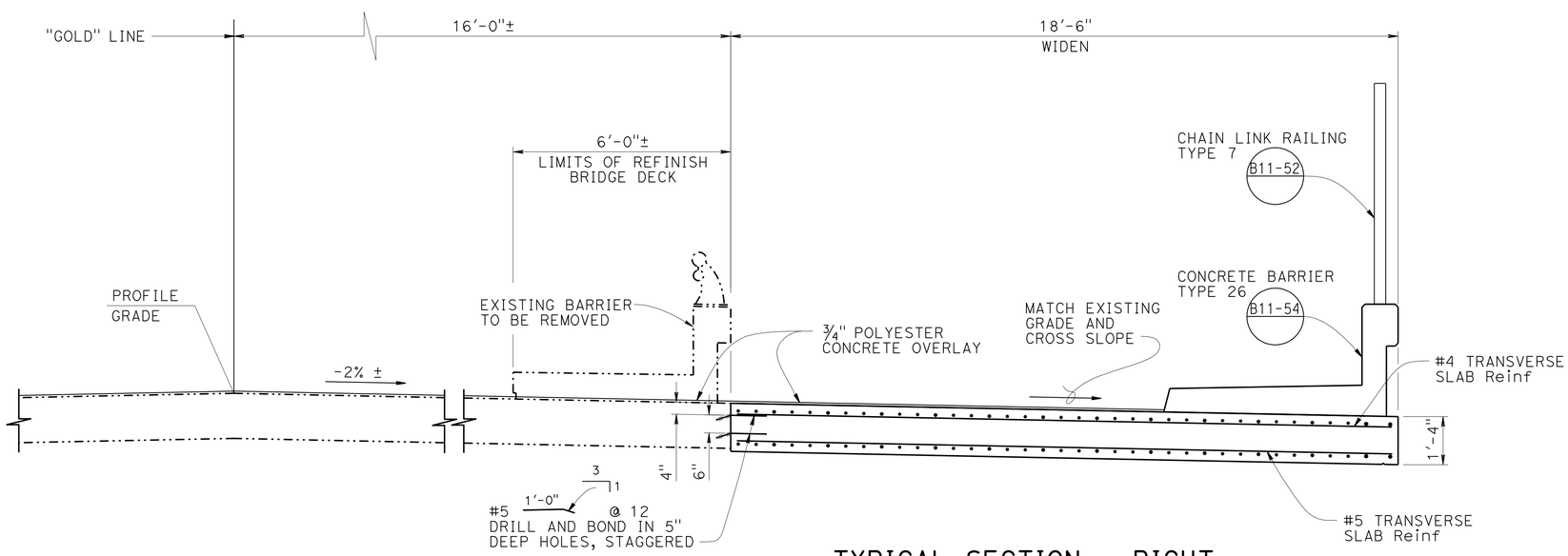

TYPICAL SECTION - RIGHT

½" = 1'-0"

NOTE:
THE CONTRACTOR SHALL VERIFY ALL CONTROLLING FIELD DIMENSIONS BEFORE ORDERING OR FABRICATING ANY MATERIAL.

	BY	CHECKED
DESIGN	M. FRIEDHEIM	P. VU
DETAILS	S. NG	P. VU
QUANTITIES	S. MORIMOTO	L. WARREN

STATE OF CALIFORNIA
DEPARTMENT OF TRANSPORTATION

DIVISION OF ENGINEERING SERVICES
STRUCTURE DESIGN
DESIGN BRANCH 17

BRIDGE NO. 29C-0087
POST MILE 0.5 mi N/W of SR 99

SOUTH STOCKTON WIDENING
MORMON SLOUGH BRIDGE (WIDEN)
TYPICAL SECTION

STRUCTURES DESIGN DETAIL SHEET (ENGLISH) (REV. 09-01-10)

ORIGINAL SCALE IN INCHES FOR REDUCED PLANS 0 1 2 3

UNIT: 3586
PROJECT NUMBER & PHASE: 10000004091
CONTRACT NO.: 10-3A1001

DISREGARD PRINTS BEARING EARLIER REVISION DATES

REVISION DATES 02-09-10 08-05-10 01-18-12

SHEET 8 OF 15

FILE => 29c-0087-k-ts.dgn

USERNAME => s121614 DATE PLOTTED => 29-MAR-2012 TIME PLOTTED => 12:45

DIST	COUNTY	ROUTE	POST MILES TOTAL PROJECT	SHEET No.	TOTAL SHEETS
10	SJ	4,99	R19.5/R20.1, 15.0/18.6	1210	1414

REGISTERED CIVIL ENGINEER 11-04-11 DATE

3-26-12
PLANS APPROVAL DATE

REGISTERED PROFESSIONAL ENGINEER CHRIS UDARBE No. C62985 Exp. 6-30-12 CIVIL STATE OF CALIFORNIA

The State of California or its officers or agents shall not be responsible for the accuracy or completeness of electronic copies of this plan sheet.

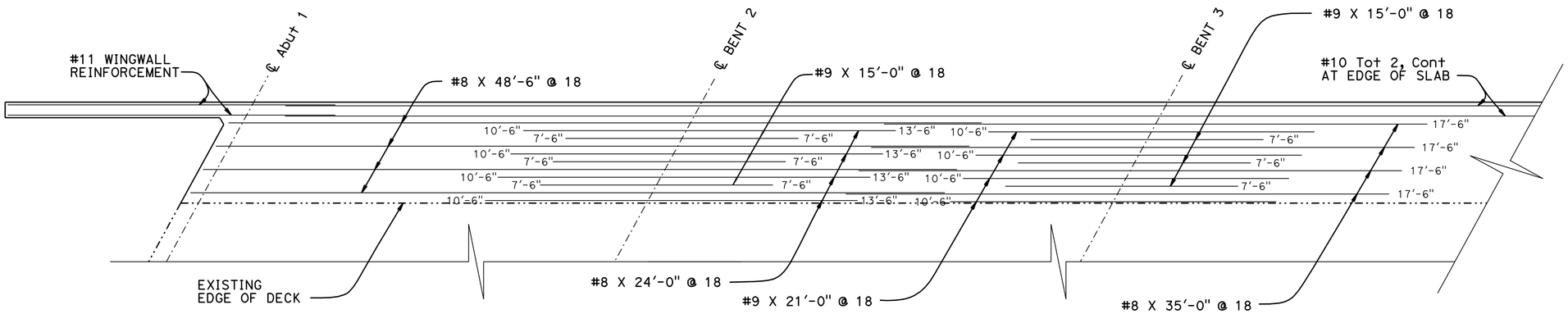

REINFORCEMENT-TOP OF SLAB

1/4" = 1'-0"

NOTES:

1. Numbers at ends of bars indicate distance from ℄ bent or ℄ span for top mat and bottom mat respectively.
2. Reinforcement layout is symmetrical about ℄ Bent 3.

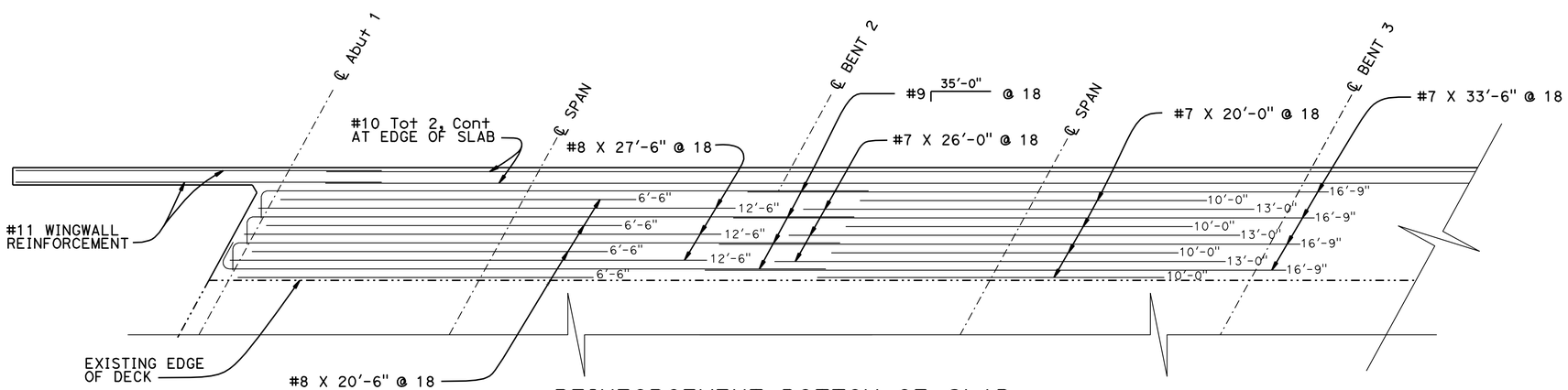

REINFORCEMENT-BOTTOM OF SLAB

1/4" = 1'-0"

	BY	CHECKED
DESIGN	M. FRIEDHEIM	P. VU
DETAILS	S. NG	P. VU
QUANTITIES	S. MORIMOTO	L. WARREN

STATE OF CALIFORNIA
DEPARTMENT OF TRANSPORTATION

DIVISION OF ENGINEERING SERVICES
STRUCTURE DESIGN
DESIGN BRANCH 17

BRIDGE NO. 29C-0087
POST MILE 0.5 mi N/W of SR 99

SOUTH STOCKTON WIDENING
MORMON SLOUGH BRIDGE (WIDEN)
GIRDER REINFORCEMENT-LEFT WIDEN

STRUCTURES DESIGN DETAIL SHEET (ENGLISH) (REV. 09-01-10)

ORIGINAL SCALE IN INCHES FOR REDUCED PLANS 0 1 2 3

UNIT: 3586
PROJECT NUMBER & PHASE: 10000004091
CONTRACT NO.: 10-3A1001

DISREGARD PRINTS BEARING EARLIER REVISION DATES

REVISION DATES: 12-28-09 01-18-12 02-28-10 08-05-10

SHEET 9 OF 15

FILE => 29c-0087-o-girder-left.dgn

USERNAME => s121614 DATE PLOTTED => 29-MAR-2012 TIME PLOTTED => 12:45

DIST	COUNTY	ROUTE	POST MILES TOTAL PROJECT	SHEET No.	TOTAL SHEETS
10	SJ	4,99	R19.5/R20.1, 15.0/18.6	1211	1414

REGISTERED CIVIL ENGINEER 11-04-11 DATE

3-26-12
PLANS APPROVAL DATE

REGISTERED PROFESSIONAL ENGINEER CHRIS UDARBE No. C62985 Exp. 6-30-12 CIVIL STATE OF CALIFORNIA

The State of California or its officers or agents shall not be responsible for the accuracy or completeness of electronic copies of this plan sheet.

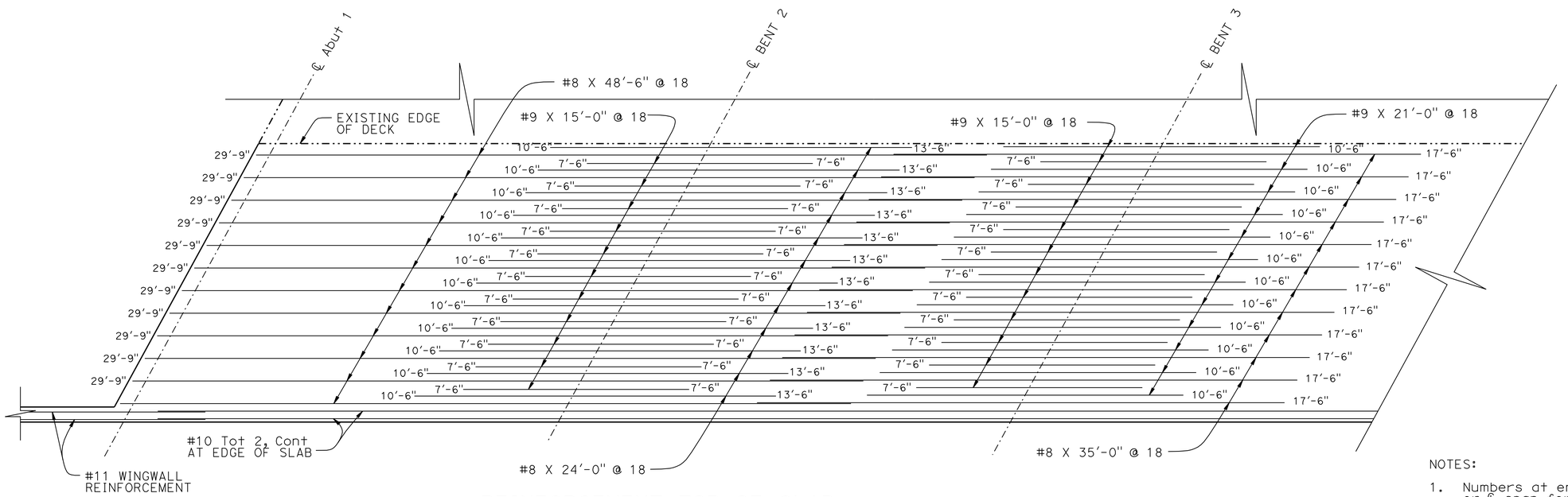

REINFORCEMENT-TOP OF SLAB

1/4" = 1'-0"

NOTES:

1. Numbers at ends of bars indicate distance from ℄ bent or ℄ span for top mat and bottom mat respectively.
2. Reinforcement layout is symmetrical about ℄ Bent 3.

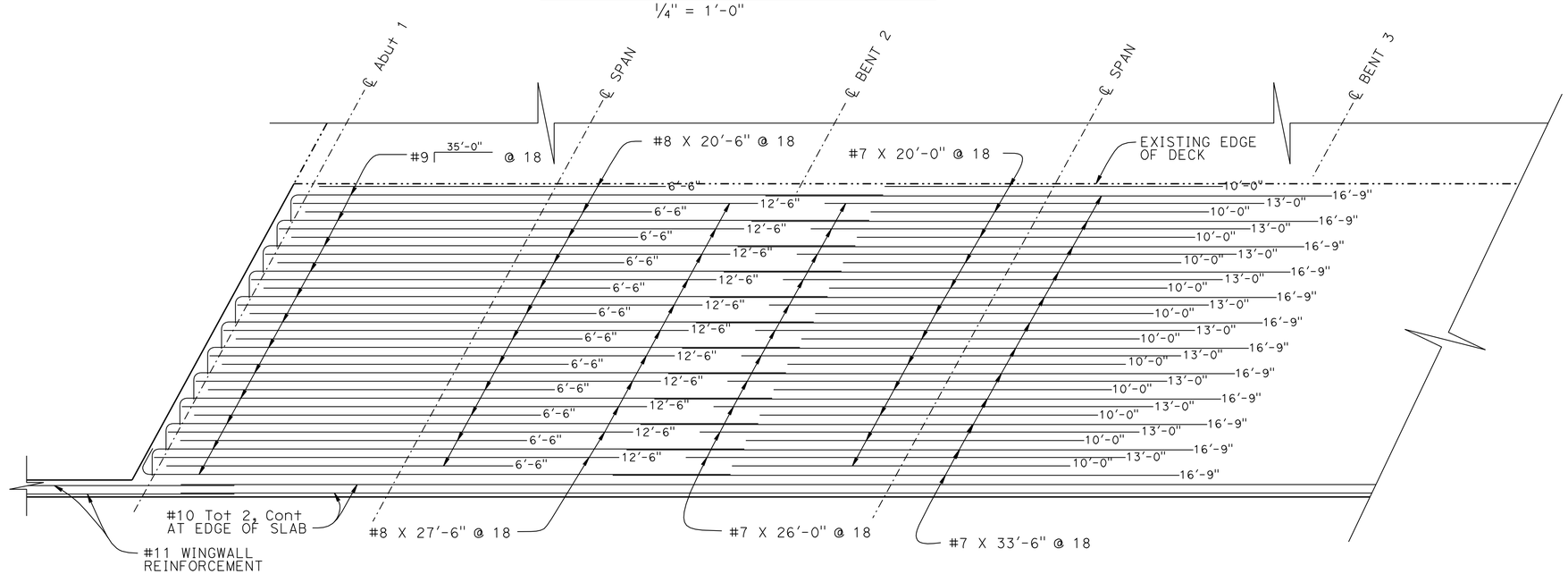

REINFORCEMENT-BOTTOM OF SLAB

1/4" = 1'-0"

	BY	CHECKED
DESIGN	M. FRIEDHEIM	P. VU
DETAILS	S. NG	P. VU
QUANTITIES	S. MORIMOTO	L. WARREN

STATE OF CALIFORNIA
DEPARTMENT OF TRANSPORTATION

DIVISION OF ENGINEERING SERVICES
STRUCTURE DESIGN
DESIGN BRANCH 17

BRIDGE NO. 29C-0087
POST MILE 0.5 mi N/W of SR 99

SOUTH STOCKTON WIDENING
MORMON SLOUGH BRIDGE (WIDEN)
GIRDER REINFORCEMENT-RIGHT WIDEN

STRUCTURES DESIGN DETAIL SHEET (ENGLISH) (REV. 09-01-10)

ORIGINAL SCALE IN INCHES FOR REDUCED PLANS 0 1 2 3

UNIT: 3586
PROJECT NUMBER & PHASE: 10000004091
CONTRACT NO.: 10-3A1001

DISREGARD PRINTS BEARING EARLIER REVISION DATES

REVISION DATES 12-28-09 01-18-12 02-28-10 08-05-10

SHEET 10 OF 15

FILE => 29c-0087-o-girder-right.dgn

USERNAME => s121614 DATE PLOTTED => 29-MAR-2012 TIME PLOTTED => 12:45

DIST	COUNTY	ROUTE	POST MILES TOTAL PROJECT	SHEET No.	TOTAL SHEETS
10	SJ	4,99	R19.5/R20.1, 15.0/18.6	1212	1414

REGISTERED CIVIL ENGINEER 11-04-11 DATE

3-26-12
PLANS APPROVAL DATE

REGISTERED PROFESSIONAL ENGINEER CHRIS UDARBE No. C62985 Exp. 6-30-12 CIVIL STATE OF CALIFORNIA

The State of California or its officers or agents shall not be responsible for the accuracy or completeness of electronic copies of this plan sheet.

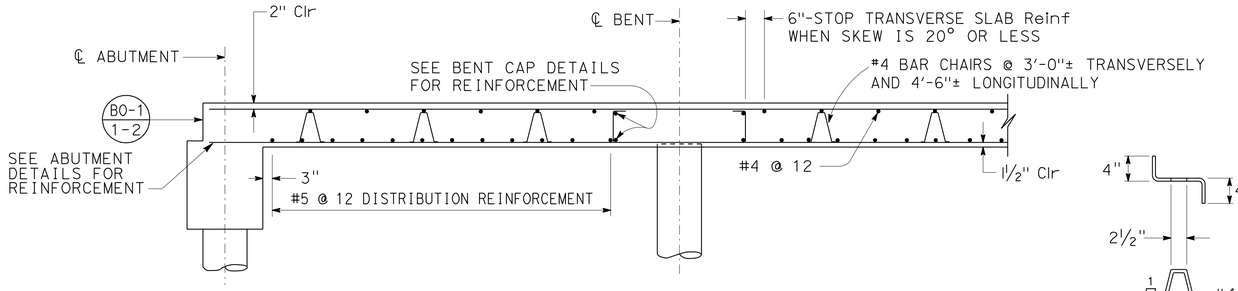

LONGITUDINAL SECTION

NO SCALE

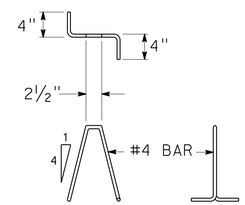

BAR CHAIR DETAIL

1" = 1'-0"

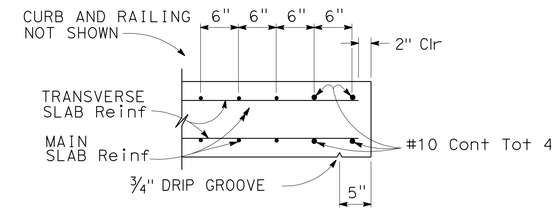

EDGE OF SLAB DETAILS

1" = 1'-0"

BAR SPLICE LENGTH								
BAR SIZE	#4	#5	#6	#7	#8	#9	#10	#11
ALL BARS, EXCEPT TOP BARS IN SPANS OVER 23 ft	23"	28"	34"	39"	45"	68"	76"	85"
TOP BARS IN SPANS OVER 23 ft	23"	28"	34"	53"	60"	77"	97"	120"

REINFORCEMENT NOTES:

Splices in top main bars to be located near center of span.
Splices in bottom main bars to be located near bent.
Spacing of all transverse bars is measured along ℄ roadway.
Skew 0° to 20°: Place all transverse bars parallel to bent.
Skew over 20°: Place transverse slab bars perpendicular to ℄ bridge. See details at right and below.

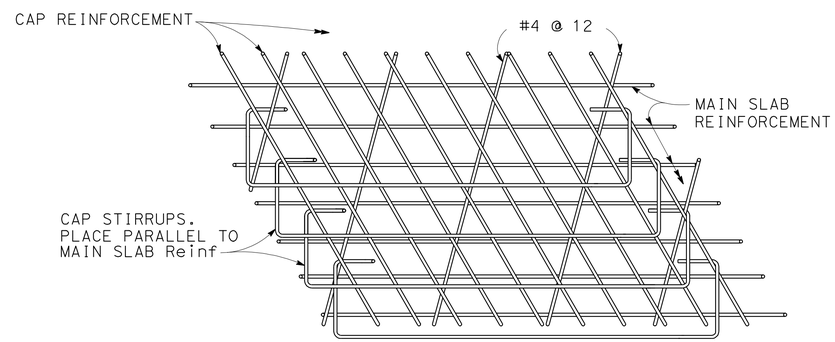

TOP SLAB REINFORCEMENT AT BENT

NO SCALE

Note: View for main span over 23 ft.
Bar placement similar for spans under 23 ft.

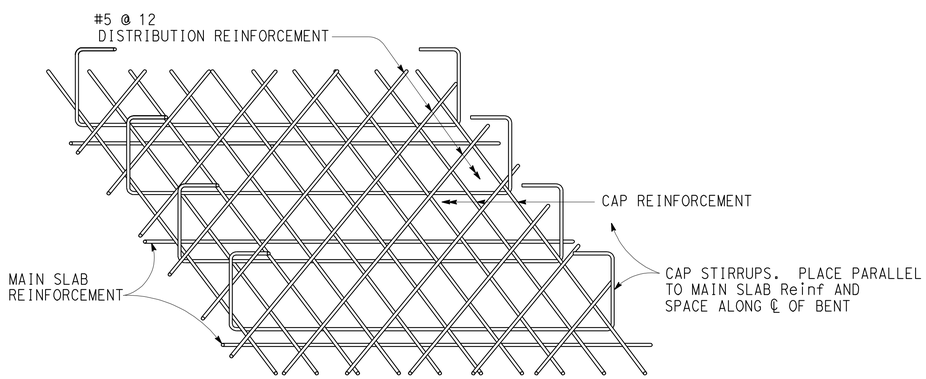

FLUSH CAP

BOTTOM SLAB REINFORCEMENT AT BENT

NO SCALE

	BY	CHECKED
DESIGN	M. FRIEDHEIM	P. VU
DETAILS	S. NG	P. VU
QUANTITIES	S. MORIMOTO	L. WARREN

STATE OF CALIFORNIA
DEPARTMENT OF TRANSPORTATION

DIVISION OF ENGINEERING SERVICES
STRUCTURE DESIGN
DESIGN BRANCH 17

BRIDGE NO. 29C-0087
POST MILE 0.5 mi N/W of SR 99

SOUTH STOCKTON WIDENING
MORMON SLOUGH BRIDGE (WIDEN)
SLAB REINFORCEMENT DETAILS

STRUCTURES DESIGN DETAIL SHEET (ENGLISH) (REV. 09-01-10)

ORIGINAL SCALE IN INCHES FOR REDUCED PLANS 0 1 2 3

UNIT: 3586
PROJECT NUMBER & PHASE: 10000004091
CONTRACT NO.: 10-3A1001

DISREGARD PRINTS BEARING EARLIER REVISION DATES

REVISION DATES 01-04-10 01-18-12 02-18-10 08-06-10

SHEET 11 OF 15

FILE => 29c-0087-w-aslab-reinf.dgn

USERNAME => s121614 DATE PLOTTED => 29-MAR-2012 TIME PLOTTED => 12:46

DIST	COUNTY	ROUTE	POST MILES TOTAL PROJECT	SHEET No	TOTAL SHEETS
10	SJ	4,99	R19.5/R20.1, 15.0/18.6	1213	1414

PROFESSIONAL GEOLOGIST

3-26-12
PLANS APPROVAL DATE

PROFESSIONAL GEOLOGIST Joseph Kaump No. 7837 Exp. 01-31-13 STATE OF CALIFORNIA

The State of California or its officers or agents shall not be responsible for the accuracy or completeness of electronic copies of this plan sheet.

This LOTB sheet was prepared in accordance with the Caltrans Soil & Rock Logging, Classification, & Presentation Manual (2010 Edition).

BENCH MARK

Bottom culvert CMP
40' Lt "GOLD" Line
Sta 20+15
Elev 16.60'
Vert Datum: NGVD29

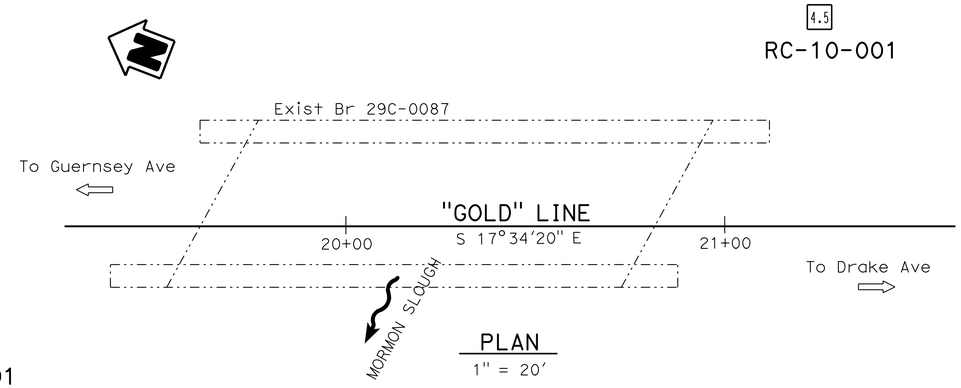

PLAN
1" = 20'

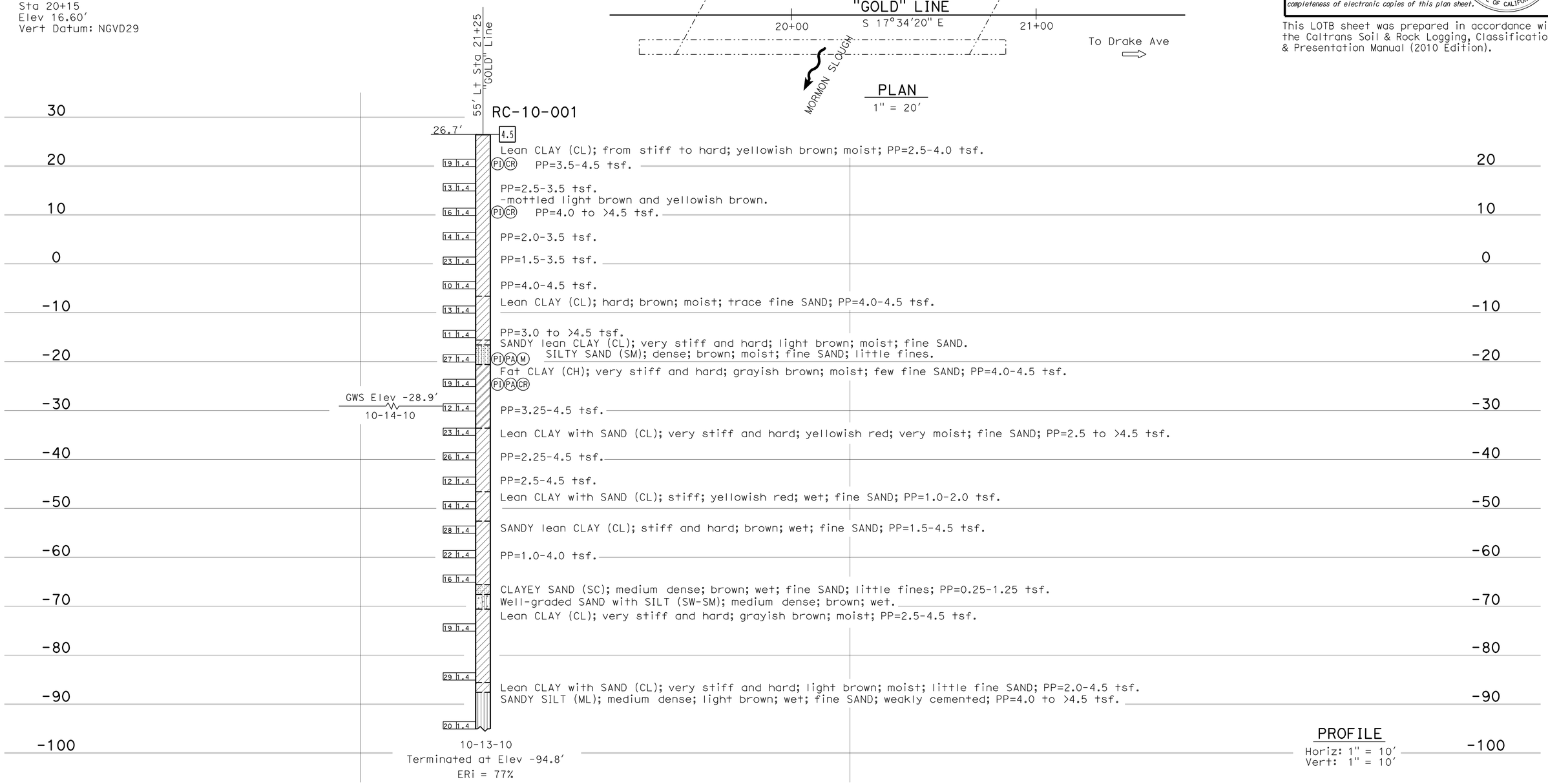

PROFILE
Horiz: 1" = 10'
Vert: 1" = 10'

ENGINEERING SERVICES	MATERIALS AND GEOTECHNICAL SERVICES	STATE OF CALIFORNIA DEPARTMENT OF TRANSPORTATION	DIVISION OF ENGINEERING SERVICES STRUCTURE DESIGN DESIGN BRANCH 17	BRIDGE NO. 29C-0087 POST MILE 0.5 mi N/W of SR 99	SOUTH STOCKTON WIDENING MORMON SLOUGH BRIDGE (WIDEN) LOG OF TEST BORINGS 1 OF 4
FUNCTIONAL SUPERVISOR NAME: R. Buell	DRAWN BY: W. Tang 07/11 CHECKED BY: A. Barrie	FIELD INVESTIGATION BY: T. Alderman			

OGS CIVIL LOG OF TEST BORINGS SHEET

ORIGINAL SCALE IN INCHES FOR REDUCED PLANS 0 1 2 3

UNIT: 3643
PROJECT NUMBER & PHASE: 1000000409 1 CONTRACT NO.: 10-3A1001

DISREGARD PRINTS BEARING EARLIER REVISION DATES

REVISION DATES: 08-17-11 01-18-12

SHEET 12 OF 15

FILE => 29c-0087-x-ltb1of4.dgn

USERNAME => s121614 DATE PLOTTED => 29-MAR-2012 TIME PLOTTED => 12:46

DIST	COUNTY	ROUTE	POST MILES TOTAL PROJECT	SHEET No	TOTAL SHEETS
10	SJ	4,99	R19.5/R20.1, 15.0/18.6	1214	1414

Joseph M Kaump 8/31/11
PROFESSIONAL GEOLOGIST

3-26-12
PLANS APPROVAL DATE

PROFESSIONAL GEOLOGIST Joseph Kaump No. 7837 Exp. 01-31-13 STATE OF CALIFORNIA

The State of California or its officers or agents shall not be responsible for the accuracy or completeness of electronic copies of this plan sheet.

REFERENCE: CALTRANS SOIL & ROCK LOGGING, CLASSIFICATION, AND PRESENTATION MANUAL (2010)

CEMENTATION

Description	Criteria
Weak	Crumbles or breaks with handling or little finger pressure.
Moderate	Crumbles or breaks with considerable finger pressure.
Strong	Will not crumble or break with finger pressure.

BOREHOLE IDENTIFICATION

Symbol	Hole Type	Description
Size	A	Auger Boring (hollow or solid stem bucket)
Size	R RW RC P	Rotary drilled boring (conventional) Rotary drilled with self-casing wire-line Rotary core with continuously-sampled, self-casing wire-line Rotary percussion boring (air)
Size	R	Rotary drilled diamond core
Size	HD HA	Hand driven (1-inch soil tube) Hand Auger
●	D	Dynamic Cone Penetration Boring
▲	CPT	Cone Penetration Test (ASTM D 5778)
⬚	O	Other (note on LOTB)

Note: Size in inches.

CONSISTENCY OF COHESIVE SOILS

Description	Shear Strength (tsf)	Pocket Penetrometer Measurement, PP, (tsf)	Torvane Measurement, TV, (tsf)	Vane Shear Measurement, VS, (tsf)
Very Soft	Less than 0.12	Less than 0.25	Less than 0.12	Less than 0.12
Soft	0.12 - 0.25	0.25 - 0.5	0.12 - 0.25	0.12 - 0.25
Medium Stiff	0.25 - 0.5	0.5 - 1	0.25 - 0.5	0.25 - 0.5
Stiff	0.5 - 1	1 - 2	0.5 - 1	0.5 - 1
Very Stiff	1 - 2	2 - 4	1 - 2	1 - 2
Hard	Greater than 2	Greater than 4	Greater than 2	Greater than 2

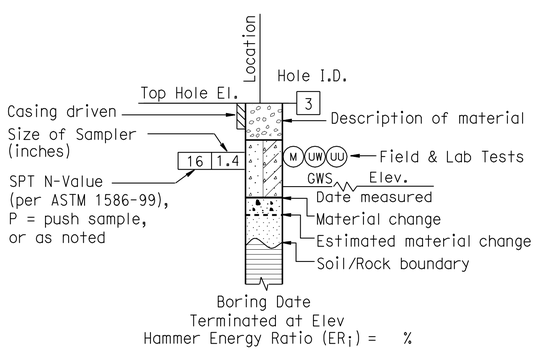

ROTARY BORING

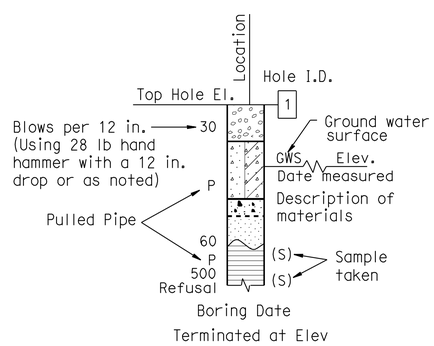

HAND BORING

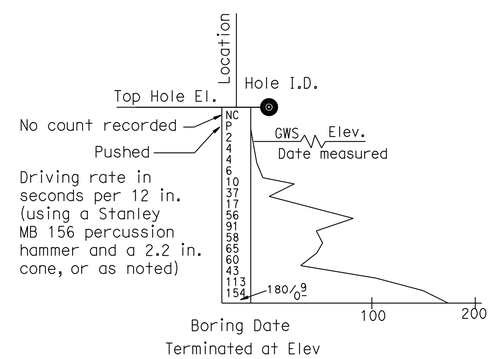

DYNAMIC CONE PENETRATION BORING

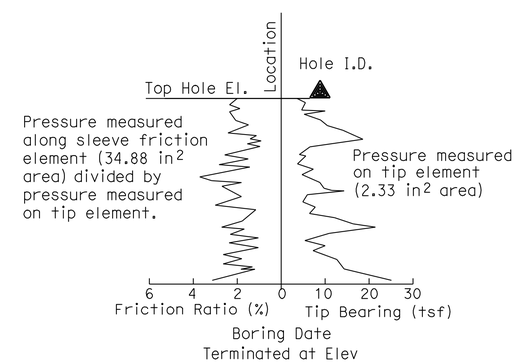

CONE PENETRATION TEST (CPT) BORING

ENGINEERING SERVICES	MATERIALS AND GEOTECHNICAL SERVICES	STATE OF CALIFORNIA DEPARTMENT OF TRANSPORTATION	DIVISION OF ENGINEERING SERVICES STRUCTURE DESIGN DESIGN BRANCH 17	BRIDGE NO. 29C-0087 POST MILE 0.5 mi N/W of SR 99	MORMON SLOUGH BRIDGE (WIDEN) LOG OF TEST BORINGS 2 OF 4
	PREPARED BY: W. Tang 6/11				

GS LOTB SOIL LEGEND

ORIGINAL SCALE IN INCHES FOR REDUCED PLANS 0 1 2 3

UNIT: 3643
PROJECT NUMBER & PHASE: 10000004091 CONTRACT NO.: 10-3A1001

DISREGARD PRINTS BEARING EARLIER REVISION DATES

REVISION DATES 8/31/11 1/18/12 SHEET 13 OF 15

FILE => 29c-0087-x-ltb2of4.dgn

USERNAME => s121614 DATE PLOTTED => 23-MAR-2012 TIME PLOTTED => 12:46

REFERENCE: CALTRANS SOIL & ROCK LOGGING, CLASSIFICATION, AND PRESENTATION MANUAL (2010)

DIST	COUNTY	ROUTE	POST MILES TOTAL PROJECT	SHEET No	TOTAL SHEETS
10	SJ	4,99	R19.5/R20.1, 15.0/18.6	1215	1414

Joseph M Kaump XX
PROFESSIONAL GEOLOGIST

3-26-12
PLANS APPROVAL DATE

PROFESSIONAL GEOLOGIST Joseph Kaump No. 7837 Exp. 01-31-13 STATE OF CALIFORNIA

The State of California or its officers or agents shall not be responsible for the accuracy or completeness of electronic copies of this plan sheet.

GROUP SYMBOLS AND NAMES

Graphic/Symbol	Group Names	Graphic/Symbol	Group Names
GW	Well-graded GRAVEL Well-graded GRAVEL with SAND	CL	Lean CLAY Lean CLAY with SAND Lean CLAY with GRAVEL SANDY lean CLAY SANDY lean CLAY with GRAVEL GRAVELLY lean CLAY GRAVELLY lean CLAY with SAND
GP	Poorly-graded GRAVEL Poorly-graded GRAVEL with SAND		
GW-GM	Well-graded GRAVEL with SILT Well-graded GRAVEL with SILT and SAND	CL-ML	SILTY CLAY SILTY CLAY with SAND SILTY CLAY with GRAVEL SANDY SILTY CLAY SANDY SILTY CLAY with GRAVEL GRAVELLY SILTY CLAY GRAVELLY SILTY CLAY with SAND
GW-GC	Well-graded GRAVEL with CLAY (or SILTY CLAY) Well-graded GRAVEL with CLAY and SAND (or SILTY CLAY and SAND)		
GP-GM	Poorly-graded GRAVEL with SILT Poorly-graded GRAVEL with SILT and SAND	ML	SILT SILT with SAND SILT with GRAVEL SANDY SILT SANDY SILT with GRAVEL GRAVELLY SILT GRAVELLY SILT with SAND
GP-GC	Poorly-graded GRAVEL with CLAY (or SILTY CLAY) Poorly-graded GRAVEL with CLAY and SAND (or SILTY CLAY and SAND)		
GM	SILTY GRAVEL SILTY GRAVEL with SAND	OL	ORGANIC lean CLAY ORGANIC lean CLAY with SAND ORGANIC lean CLAY with GRAVEL SANDY ORGANIC lean CLAY SANDY ORGANIC lean CLAY with GRAVEL GRAVELLY ORGANIC lean CLAY GRAVELLY ORGANIC lean CLAY with SAND
GC	CLAYEY GRAVEL CLAYEY GRAVEL with SAND		
GC-GM	SILTY, CLAYEY GRAVEL SILTY, CLAYEY GRAVEL with SAND	OL	ORGANIC SILT ORGANIC SILT with SAND ORGANIC SILT with GRAVEL SANDY ORGANIC SILT SANDY ORGANIC SILT with GRAVEL GRAVELLY ORGANIC SILT GRAVELLY ORGANIC SILT with SAND
SW	Well-graded SAND Well-graded SAND with GRAVEL		
SP	Poorly-graded SAND Poorly-graded SAND with GRAVEL	CH	Fat CLAY Fat CLAY with SAND Fat CLAY with GRAVEL SANDY fat CLAY SANDY fat CLAY with GRAVEL GRAVELLY fat CLAY GRAVELLY fat CLAY with SAND
SW-SM	Well-graded SAND with SILT Well-graded SAND with SILT and GRAVEL		
SW-SC	Well-graded SAND with CLAY (or SILTY CLAY) Well-graded SAND with CLAY and GRAVEL (or SILTY CLAY and GRAVEL)	MH	Elastic SILT Elastic SILT with SAND Elastic SILT with GRAVEL SANDY elastic SILT SANDY elastic SILT with GRAVEL GRAVELLY elastic SILT GRAVELLY elastic SILT with SAND
SP-SM	Poorly-graded SAND with SILT Poorly-graded SAND with SILT and GRAVEL		
SP-SC	Poorly-graded SAND with CLAY (or SILTY CLAY) Poorly-graded SAND with CLAY and GRAVEL (or SILTY CLAY and GRAVEL)	OH	ORGANIC fat CLAY ORGANIC fat CLAY with SAND ORGANIC fat CLAY with GRAVEL SANDY ORGANIC fat CLAY SANDY ORGANIC fat CLAY with GRAVEL GRAVELLY ORGANIC fat CLAY GRAVELLY ORGANIC fat CLAY with SAND
SM	SILTY SAND SILTY SAND with GRAVEL		
SC	CLAYEY SAND CLAYEY SAND with GRAVEL	OH	ORGANIC elastic SILT ORGANIC elastic SILT with SAND ORGANIC elastic SILT with GRAVEL SANDY ORGANIC elastic SILT SANDY ORGANIC elastic SILT with GRAVEL GRAVELLY ORGANIC elastic SILT GRAVELLY ORGANIC elastic SILT with SAND
SC-SM	SILTY, CLAYEY SAND SILTY, CLAYEY SAND with GRAVEL		
PT	PEAT	OL/OH	ORGANIC SOIL ORGANIC SOIL with SAND ORGANIC SOIL with GRAVEL SANDY ORGANIC SOIL SANDY ORGANIC SOIL with GRAVEL GRAVELLY ORGANIC SOIL GRAVELLY ORGANIC SOIL with SAND
	COBBLES COBBLES and BOULDERS BOULDERS		

FIELD AND LABORATORY TESTING

- (C) Consolidation (ASTM D 2435)
- (CL) Collapse Potential (ASTM D 5333)
- (CP) Compaction Curve (CTM 216)
- (CR) Corrosivity Testing (CTM 643, CTM 422, CTM 417)
- (CU) Consolidated Undrained Triaxial (ASTM D 4767)
- (DS) Direct Shear (ASTM D 3080)
- (EI) Expansion Index (ASTM D 4829)
- (M) Moisture Content (ASTM D 2216)
- (OC) Organic Content-% (ASTM D 2974)
- (P) Permeability (CTM 220)
- (PA) Particle Size Analysis (ASTM D 422)
- (PI) Plasticity Index (AASHTO T 90) Liquid Limit (AASHTO T 89)
- (PL) Point Load Index (ASTM D 5731)
- (PM) Pressure Meter
- (R) R-Value (CTM 301)
- (SE) Sand Equivalent (CTM 217)
- (SG) Specific Gravity (AASHTO T 100)
- (SL) Shrinkage Limit (ASTM D 427)
- (SW) Swell Potential (ASTM D 4546)
- (UC) Unconfined Compression-Soil (ASTM D 2166) Unconfined Compression-Rock (ASTM D 2938)
- (UU) Unconsolidated Undrained Triaxial (ASTM D 2850)
- (UW) Unit Weight (ASTM D 4767)

APPARENT DENSITY OF COHESIONLESS SOILS

Description	SPT N_{60} (Blows / 12 in.)
Very Loose	0 - 5
Loose	5 - 10
Medium Dense	10 - 30
Dense	30 - 50
Very Dense	Greater than 50

MOISTURE

Description	Criteria
Dry	No discernable moisture
Moist	Moisture present, but no free water
Wet	Visible free water

PERCENT OR PROPORTION OF SOILS

Description	Criteria
Trace	Particles are present but estimated to be less than 5%
Few	5% - 10%
Little	15% - 25%
Some	30% - 45%
Mostly	50% - 100%

PARTICLE SIZE

Description		Size (in.)
Boulder		Greater than 12
Cobble		3 - 12
Gravel	Coarse	3/4 - 3
	Fine	1/5 - 3/4
Sand	Coarse	1/16 - 1/5
	Medium	1/64 - 1/16
	Fine	1/300 - 1/64
Silt and Clay		Less than 1/300

ENGINEERING SERVICES

MATERIALS AND GEOTECHNICAL SERVICES
PREPARED BY: W. Tang 6/11

STATE OF CALIFORNIA
DEPARTMENT OF TRANSPORTATION

DIVISION OF ENGINEERING SERVICES
STRUCTURE DESIGN
DESIGN BRANCH 17

BRIDGE NO. 29C-0087
POST MILE 0.5 mi N/W of SR 99

MORMON SLOUGH BRIDGE (WIDEN)
LOG OF TEST BORINGS 3 OF 4

GS LOTB SOIL LEGEND

ORIGINAL SCALE IN INCHES FOR REDUCED PLANS 0 1 2 3

UNIT: 3643
PROJECT NUMBER & PHASE: 10000004091
CONTRACT NO.: 10-3A1001

DISREGARD PRINTS BEARING EARLIER REVISION DATES

REVISION DATES: 8/24/11 1/18/12

SHEET 14 OF 15

FILE => 29c-0087-x-lltb3of4.dgn

USERNAME => s121614 DATE PLOTTED => 29-MAR-2012 TIME PLOTTED => 12:46

FED. ROAD DIV. NO.	STATE	F.A. PROJECT NO.	SHEET NO.	TOTAL SHEETS
7	CALIF.			

DIST.	COUNTY	ROUTE	SECTION	SHEET NO.	TOTAL SHEETS
10	SJ	99	16/180	57	67

Date approved November 9, 1966

PROFESSIONAL GEOLOGIST
Joseph Kaump
No. 7837
Exp. 1-31-13
STATE OF CALIFORNIA

DIVISION OF ENGINEERING SERVICES - MATERIALS AND GEOTECHNICAL SERVICES

As-Built Log of Test Borings sheet is considered an informational document only. As such, the State of California registration seal with signature, license number and registration certificate expiration date confirm that this is a true and accurate copy of the original document. It does not attest to the accuracy or validity of the information contained in the original document. This drawing is available and presented only for the convenience of any bidder, contractor or other interested party.

DIST.	COUNTY	ROUTE	POST MILE-TOTAL PROJECT	Sheet No.	Total Sheets
10	SJ	4,99	R19.5/R20.1,15.0/18.6	1216	1414

Joseph M Kaump 8/31/11
PROFESSIONAL GEOLOGIST DATE

SOUTH STOCKTON WIDENING
MORMON SLOUGH BRIDGE (WIDEN)
LOG OF TEST BORINGS 4 OF 4

UNIT: 3643	CONTRACT No.	BRIDGE No.
PROJECT NUMBER & PHASE: 10000004091	10-3A1001	29C-0087

NOTE: A COPY OF THIS LOG OF TEST BORINGS IS AVAILABLE AT OFFICE OF STRUCTURE MAINTENANCE AND INVESTIGATIONS, SACRAMENTO, CALIFORNIA — Sheet 15 of 15

TO ACCOMPANY PLANS DATED 3-26-12

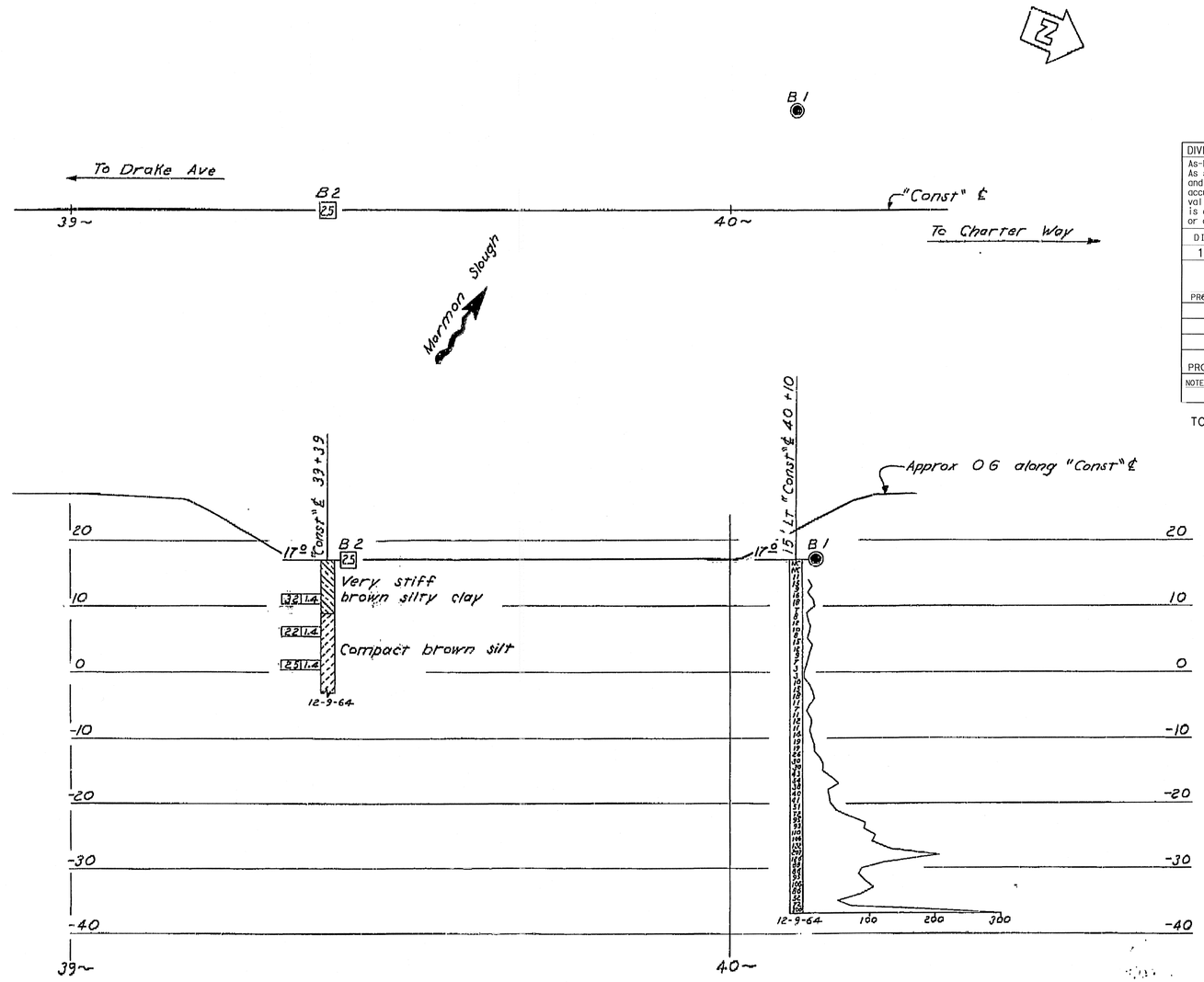

AS BUILT PLANS
Contract No. 14-058724
Date Completed 8---66
Document No. 00000018

INFORMATION ON ACTUAL FOUNDATION CONDITIONS ENCOUNTERED IS ON FILE IN BRIDGE GEOLOGY SECTION

NO GROUND WATER ENCOUNTERED DURING THIS INVESTIGATION BY BRIDGE DEPT. GEOLOGY SECTION
DATE 12-9-64

SHEET	OF
6	6

STATE OF CALIFORNIA
DEPARTMENT OF PUBLIC WORKS
DIVISION OF HIGHWAYS

MORMON SLOUGH BRIDGE

LOG OF TEST BORINGS

SCALE 1" = 10' | BRIDGE 29C-87 | FILE | DRAWING 29C87-6

CHG. 10203
WO 058721

Disregard prints bearing earlier numbers

PREL. DRAWING No. PR-

FILENAME => 29-0087-x-1tb4of4.tif

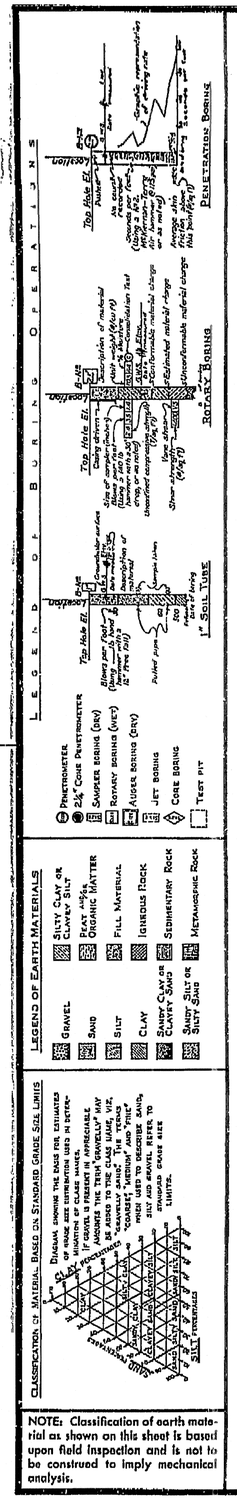

FIELD STUDY Br. R. HAFSTAD 12-9-64
DRAWN Br. R. HAFSTAD 12-9-64
CHECKED Br. A. COCHRAN 12-29-64

BRIDGE DEPARTMENT
ENGINEERING GEOLOGY SECTION

57

DIST	COUNTY	ROUTE	POST MILES TOTAL PROJECT	SHEET No.	TOTAL SHEETS
10	SJ	4,99	R19.5/R20.1, 15.0/18.6	1217	1414

REGISTERED CIVIL ENGINEER — DATE 11-04-11

3-26-12
PLANS APPROVAL DATE

REGISTERED PROFESSIONAL ENGINEER — Chris V. Udarbe — No. C62985 — Exp. 06-30-2012 — CIVIL — STATE OF CALIFORNIA

The State of California or its officers or agents shall not be responsible for the accuracy or completeness of electronic copies of this plan sheet.

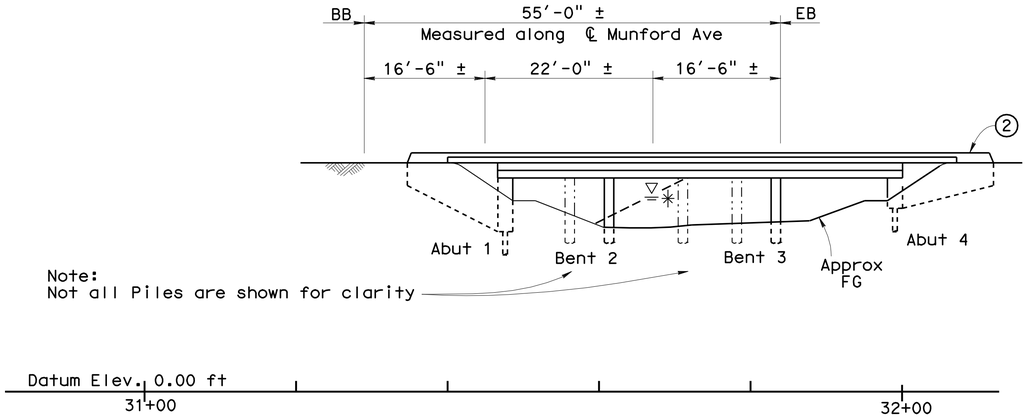

ELEVATION
1" = 10'

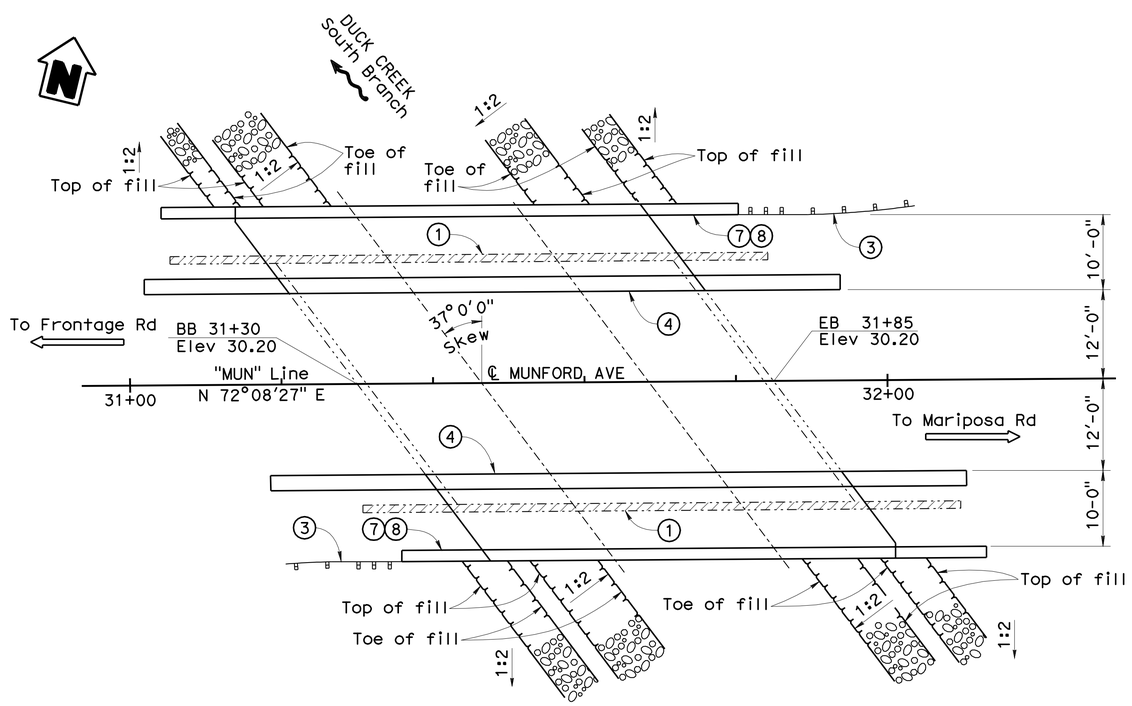

PLAN
1" = 10'

NOTE:
THE CONTRACTOR SHALL VERIFY ALL CONTROLLING FIELD DIMENSIONS BEFORE ORDERING OR FABRICATING ANY MATERIAL.

LEGEND

- Existing structure.
- New structure.
- Denotes limits of removal of existing barrier and upper 3' of wing wall. Bridge removal (Portion), LOCATION K.
- ✳ 100 Year HW Elev = 26.1 ft For Hydrologic summary, see "FOUNDATION PLAN" sheet.
- Indicates direction of flow.

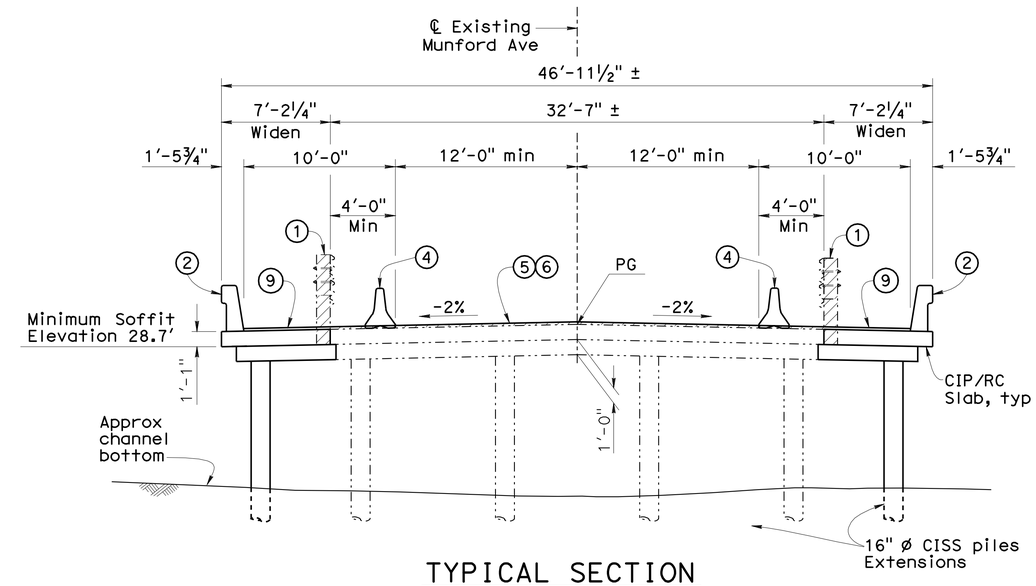

TYPICAL SECTION
1" = 5'

Notes:

1. Remove Existing Metal Beam Guard Rail
2. Concrete Barrier, Type 736
3. MBGR see "ROAD PLANS"
4. Temporary Railing, Type K.
5. Existing 2"± AC overlay to be removed.
6. ¾" polyester concrete overlay.
7. Paint "MUNFORD AVE BRIDGE".
8. Paint "Br No 29C-0377".
9. Match existing grade and cross slope.
10. For General Notes and Pile Data Table, see "GENERAL NOTES" sheet.
11. Construction specified between April 15 and October 1.

QUANTITIES

REMOVE ASPHALT CONCRETE SURFACING	1,792	SQFT
PREPARE CONCRETE BRIDGE DECK SURFACE	2,420	SQFT
BRIDGE REMOVAL (PORTION), LOCATION K	LUMP	SUM
STRUCTURE EXCAVATION (BRIDGE)	52	CY
STRUCTURE BACKFILL (BRIDGE)	29	CY
FURNISH 16" CAST-IN-STEEL SHELL CONCRETE PILING	330	LF
DRIVE 16" CAST-IN-STEEL SHELL CONCRETE PILE	8	EA
STRUCTURAL CONCRETE, BRIDGE	102	CY
DRILL AND BOND DOWEL	89	LF
FURNISH POLYESTER CONCRETE OVERLAY	162	CF
PLACE POLYESTER CONCRETE OVERLAY	2,420	SQFT
BAR REINFORCING STEEL (BRIDGE)	14,639	LB
CONCRETE BARRIER (TYPE 736)	169	LF

Gary Joe
DESIGN ENGINEER

	BY	CHECKED
DESIGN	R. Coria	Phuong M. Vu
DETAILS	L. Wang	R. Coria
QUANTITIES	R. Coria	Phuong M. Vu

LOAD & RESISTANCE FACTOR DESIGN — LIVE LOADING: HL93 W/"LOW-BOY"; PERMIT DESIGN VEHICLE

	BY	CHECKED
LAYOUT	R. Coria	C. Udarbe
SPECIFICATIONS	V. Renganathan	V. Renganathan

PLANS AND SPECS COMPARED

ORIGINAL SCALE IN INCHES FOR REDUCED PLANS 0 1 2 3

STATE OF CALIFORNIA
DEPARTMENT OF TRANSPORTATION

DIVISION OF ENGINEERING SERVICES
STRUCTURE DESIGN
DESIGN BRANCH 17

BRIDGE NO. 29C-0377
POST MILE 0.3 mi East of SR 99

SOUTH STOCKTON WIDENING
MUNFORD AVE BRIDGE (WIDEN)
GENERAL PLAN

UNIT: 3586
PROJECT NUMBER & PHASE: 10000004091
CONTRACT NO.: 10-3A1001

DISREGARD PRINTS BEARING EARLIER REVISION DATES

REVISION DATES: 09-01-09 — 08-05-11 — 2-15-12

SHEET 1 OF 13

DIST	COUNTY	ROUTE	POST MILES TOTAL PROJECT	SHEET No.	TOTAL SHEETS
10	SJ	4,99	R19.5/R20.1, 15.0/18.6	1218	1414

REGISTERED CIVIL ENGINEER — DATE 11-04-11

PLANS APPROVAL DATE 3-26-12

REGISTERED PROFESSIONAL ENGINEER — Chris V. Udarbe — No. C62985 — Exp. 06-30-2012 — CIVIL — STATE OF CALIFORNIA

The State of California or its officers or agents shall not be responsible for the accuracy or completeness of electronic copies of this plan sheet.

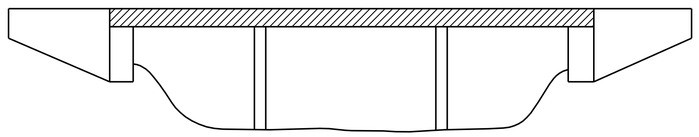

LEGEND

Structural Concrete, Bridge

Structural Concrete, Bridge (4,000 psi at 28 days)

CONCRETE STRENGTH AND TYPE LIMITS

No Scale

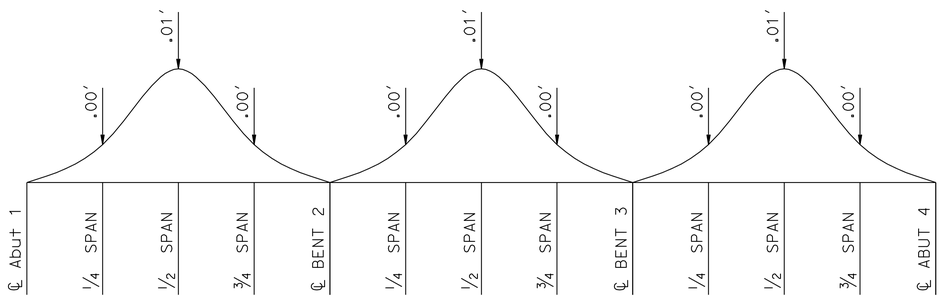

CAMBER DIAGRAM

No Scale

Note: Camber diagram does not include allowance for falsework settlement.

Index to Plans

1. GENERAL PLANS
2. GENERAL NOTES
3. FOUNDATION PLAN
4. ABUTMENT LAYOUT
5. ABUTMENT DETAILS
6. BENT DETAILS
7. TYPICAL SECTION-LEFT & RIGHT WIDEN
8. SLAB REINFORCEMENT
9. SLAB REINFORCEMENT DETAILS
10. LOG OF TEST BORINGS 1 OF 4
11. LOG OF TEST BORINGS 2 OF 4
12. LOG OF TEST BORINGS 3 OF 4
13. LOG OF TEST BORINGS 4 OF 4

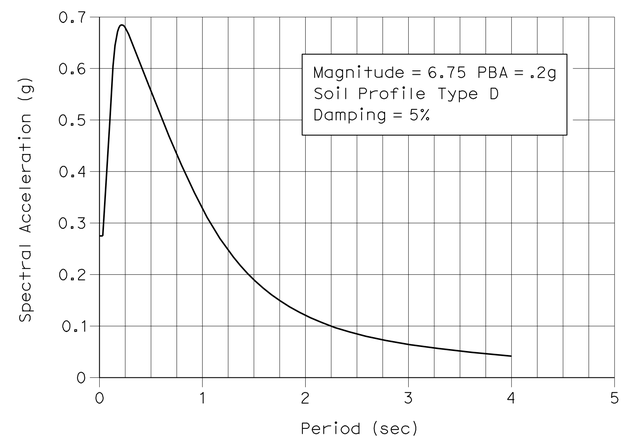

ARS CURVE

GENERAL NOTES
LOAD AND RESISTANCE FACTOR DESIGN

DESIGN:
AASHTO LRFD Bridge Design Specifications, 4th edition with California Amendments, preface dated December 2008.

SEISMIC DESIGN:
Caltrans Seismic Design Criteria (SDC), Version 1.5, dated January 2010.

DEAD LOAD:
Includes 35 psf for future wearing surface.

LIVE LOADING:
HL93 and permit design load.

SEISMIC LOADING:
Soil profile type D
Magnitude group 7.25 ± 0.25
Peak Rock Acceleration 0.2 g
V_{s30} = 920 ft/sec

CONCRETE:
fy = 60 ksi
f'c = 3.6 ksi
n = 8

STANDARD PLANS DATED MAY 2006

A10A	ACRONYMS AND ABBREVIATIONS (1 of 2)
A10B	ACRONYMS AND ABBREVIATIONS (2 of 2)
A10C	SYMBOLS 1 OF 2
A10D	SYMBOLS 2 OF 2
A62C	LIMITS OF PAYMENT FOR EXCAVATION AND BACKFILL-BRIDGE
B0-1	BRIDGE DETAILS
B0-3	BRIDGE DETAILS
B11-54	CONCRETE BARRIER TYPE 736

STANDARD PLAN SHEET NO.

DETAIL NO.

NOTE:
THE CONTRACTOR SHALL VERIFY ALL CONTROLLING FIELD DIMENSIONS BEFORE ORDERING OR FABRICATING ANY MATERIAL.

PILE DATA TABLE

SUPPORT LOCATION	PILE TYPE	NOMINAL RESISTANCE (kips)		DESIGN TIP ELEVATION (ft)	SPECIFIED TIP ELEVATION (ft)	NOMINAL DRIVING RESISTANCE REQUIRED (kips)
		COMPRESSION	TENSION			
ABUTMENT 1	CISS NPS 16 x 0.5	80	0	-3.0(a)	-3.0	80
BENT 2	CISS NPS 16 x 0.5	200	0	-26.0(a)	-26.0	195
BENT 3	CISS NPS 16 x 0.5	200	0	-27.0(a)	-27.0	205
ABUTMENT 4	CISS NPS 16 x 0.5	80	0	-3.0(a)	-3.0	80

NOTES:
(a) Design tip elevations are controlled by compression.
(b) Potential local pier scour to elevation 20.0 ft.

	BY	CHECKED
DESIGN	R. Coria	Phuong M. Vu
DETAILS	L. Wang	R. Coria
QUANTITIES	R. Coria	Phuong M. Vu

STATE OF CALIFORNIA
DEPARTMENT OF TRANSPORTATION

DIVISION OF ENGINEERING SERVICES
STRUCTURE DESIGN
DESIGN BRANCH 17

BRIDGE NO. 29C-0377
POST MILE 0.3 mi East of SR 99

SOUTH STOCKTON WIDENING
MUNFORD AVE BRIDGE (WIDEN)
GENERAL NOTES

STRUCTURES DESIGN DETAIL SHEET (ENGLISH) (REV. 09-01-10)

ORIGINAL SCALE IN INCHES FOR REDUCED PLANS 0 1 2 3

UNIT: 3586
PROJECT NUMBER & PHASE: 10000004091
CONTRACT NO.: 10-3A1001

DISREGARD PRINTS BEARING EARLIER REVISION DATES — REVISION DATES 9-6-11 1-18-12

SHEET 2 OF 13

FILE => 29c-0377-b-gnt.dgn

USERNAME => s121614 DATE PLOTTED => 29-MAR-2012 TIME PLOTTED => 12:47

DIST	COUNTY	ROUTE	POST MILES TOTAL PROJECT	SHEET No.	TOTAL SHEETS
10	SJ	4,99	R19.5/R20.1, 15.0/18.6	1219	1414

REGISTERED CIVIL ENGINEER — DATE 11-04-11

PLANS APPROVAL DATE 3-26-12

REGISTERED PROFESSIONAL ENGINEER — Chris Udarbe — No. C62985 — Exp. 06-30-11 — CIVIL — STATE OF CALIFORNIA

The State of California or its officers or agents shall not be responsible for the accuracy or completeness of electronic copies of this plan sheet.

HYDROLOGIC SUMMARY FOR BRANCH CREEK BRIDGE Br. No. 29-C0377 (Munford Ave)			
Drainage Area: .75 square miles			
	Design Flood	**Base Flood**	**Overtopping Flood/Flood of Record**
Frequency	50 year	100 year	N/A
Discharge	176.0 cfs	237 cfs	N/A
Water Surface Elevation at Bridge	26.0 ft	26.1 ft	N/A

Flood plain data are based upon information available when the plans were prepared and are shown to meet federal requirements. The accuracy of said information is not warranted by the State and interested or affected parties should make their own investigation.

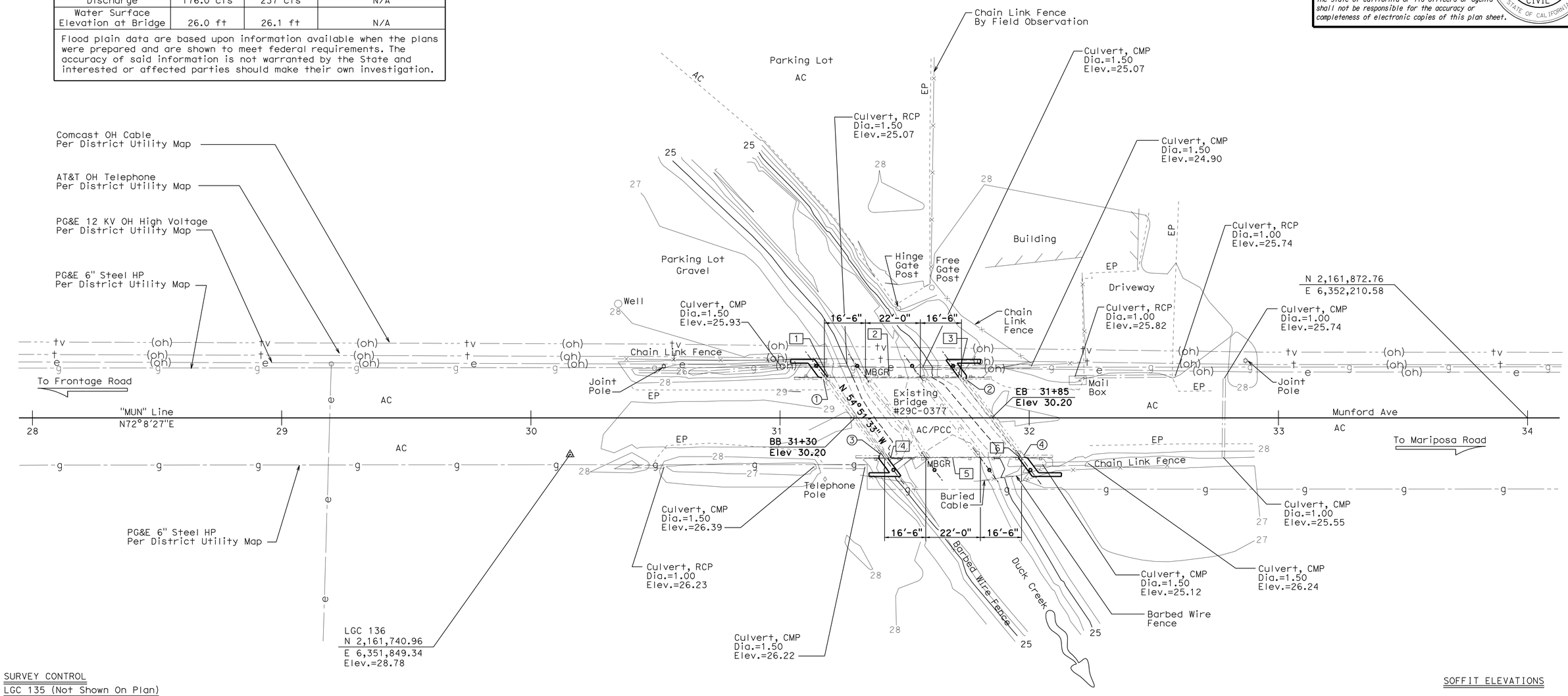

SURVEY CONTROL

LGC 135 (Not Shown On Plan)
PK Nail
17.91 FT Lt. Munford Ave
Sta. 24+96.44
N 2,161,612.71
E 6,351,345.07
Elev. = 27.93

LGC 136
PK Nail
14.66 FT Rt. Munford Ave
Sta. 30+15.751
N 2,161,740.96
E 6,351,849.34
Elev. = 28.78

Bridge Location
① - 15.57 Lt. "MUN" Line Sta.31+17.42, Elev.=28.74 ±
② - 15.11 Lt. "MUN" Line Sta.31+75.11, Elev.=28.70 ±
③ - 14.66 Rt. "MUN" Line Sta.31+40.41, Elev.=28.70 ±
④ - 15.09 Rt. "MUN" Line Sta.31+97.81, Elev.=28.69 ±

Note:
⊙ - Indicates CISS pile.

SOFFIT ELEVATIONS
1 - 27.72
2 - 27.67
3 - 27.68
4 - 26.62
5 - 26.57
6 - 26.61

PRELIMINARY INVESTIGATION SECTION

SCALE	VERT.DATUM NGVD29	PHOTOGRAMMETRY AS OF: X			
1"=20'	HORZ.DATUM NAD83 (1991.35)	SURVEYED	BY District/T.Gillett	CHECKED	BY T. Gillett 08/2009
ALIGNMENT TIES Dist. Traverse Sheet		DRAFTED	BY T. Zolnikov 08/2009	CHECKED	BY L.Lew 08/2009

DESIGN	BY R. Coria	CHECKED Phoung M. Vu
DETAILS	BY L. Wang	CHECKED R. Coria
QUANTITIES	BY R. Coria	CHECKED Phoung M. Vu

STATE OF CALIFORNIA
DEPARTMENT OF TRANSPORTATION

DIVISION OF ENGINEERING SERVICES
STRUCTURE DESIGN
DESIGN BRANCH 17

BRIDGE NO. 29C-0377
POST MILE 0.3 mi East of SR 99

SOUTH STOCKTON WIDENING
MUNFORD AVENUE BRIDGE (WIDEN)
FOUNDATION PLAN

STRUCTURES FOUNDATION PLAN SHEET (ENGLISH) (REV. 09-01-10)

ORIGINAL SCALE IN INCHES FOR REDUCED PLANS 0 1 2 3

UNIT: 3646
PROJECT NUMBER & PHASE: 1000000409 1
CONTRACT NO.: 10-3A1001

DISREGARD PRINTS BEARING EARLIER REVISION DATES → 08/26/09 12/29/11

SHEET 3 OF 13

FILE => 29c-0377-e-fp.dgn

18:16

DIST	COUNTY	ROUTE	POST MILES TOTAL PROJECT	SHEET No.	TOTAL SHEETS
10	SJ	4,99	R19.5/R20.1, 15.0/18.6	1220	1414

REGISTERED CIVIL ENGINEER 11-04-11 DATE

3-26-12
PLANS APPROVAL DATE

REGISTERED PROFESSIONAL ENGINEER Chris V. Udarbe No. C62985 Exp. 06-30-2012 CIVIL STATE OF CALIFORNIA

The State of California or its officers or agents shall not be responsible for the accuracy or completeness of electronic copies of this plan sheet.

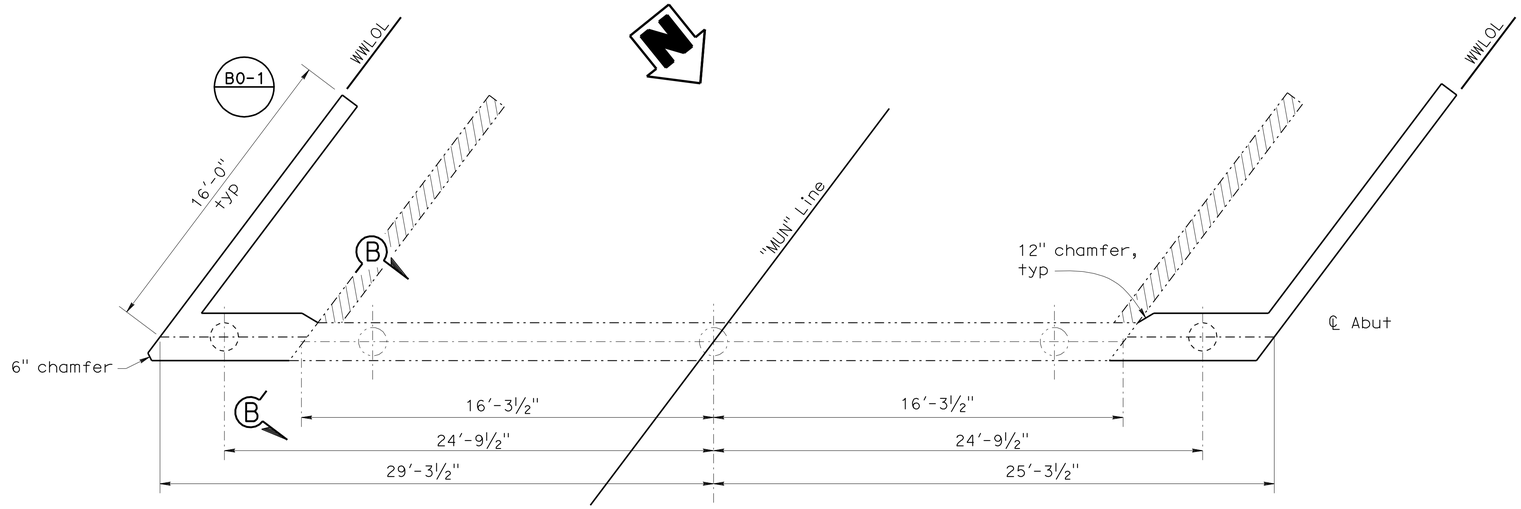

PLAN
¼" = 1'

NOTE:
Abut 1 shown, abut 4 similar.

Denotes removal of existing concrete

Denotes existing structure

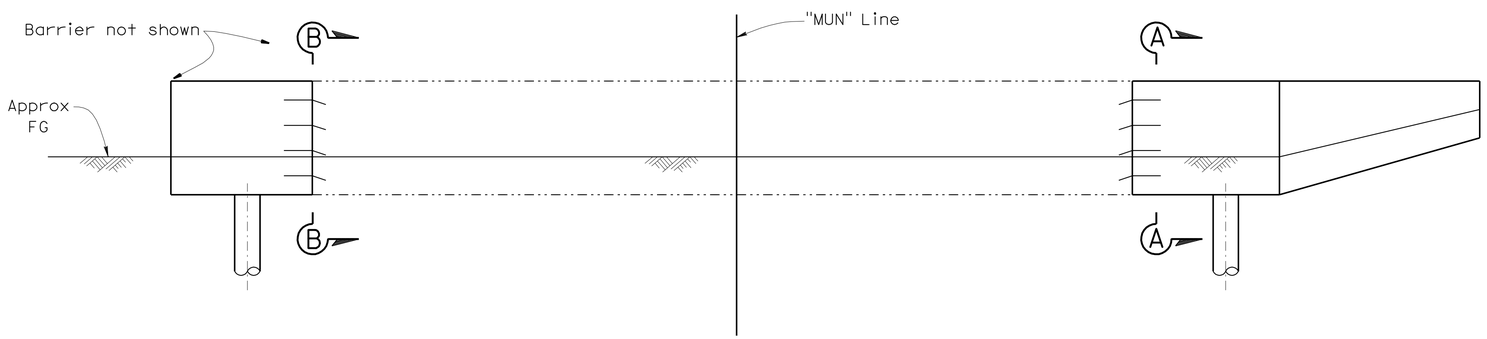

ELEVATION
¼" = 1'

NOTE:
Abut 1 shown, abut 4 similar.

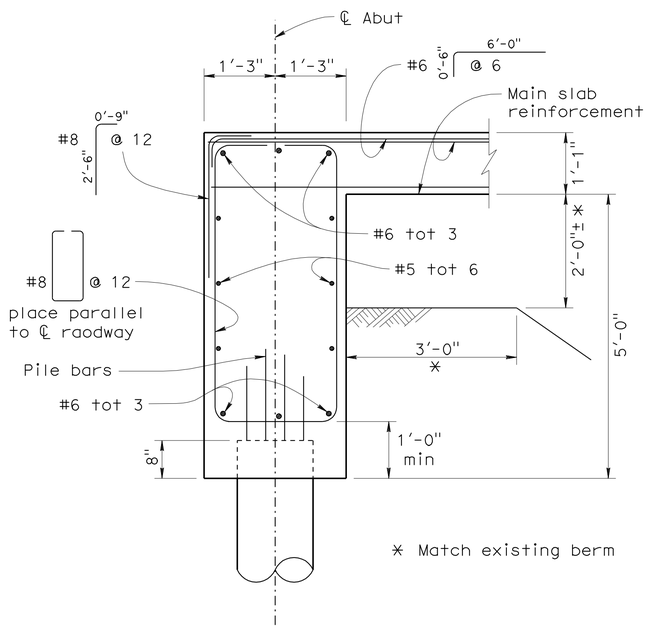

SECTION A-A
¾" = 1'

NOTE:
THE CONTRACTOR SHALL VERIFY ALL CONTROLLING FIELD DIMENSIONS BEFORE ORDERING OR FABRICATING ANY MATERIAL.

	BY	CHECKED
DESIGN	R. Coria	Phuong M. Vu
DETAILS	L. Wang	R. Coria
QUANTITIES	R. Coria	Phuong M. Vu

STATE OF CALIFORNIA
DEPARTMENT OF TRANSPORTATION

DIVISION OF ENGINEERING SERVICES
STRUCTURE DESIGN
DESIGN BRANCH 17

BRIDGE NO. 29C-0377
POST MILE 0.3 mi East of SR 99

SOUTH STOCKTON WIDENING
MUNFORD AVE BRIDGE (WIDEN)
ABUTMENT LAYOUT

STRUCTURES DESIGN DETAIL SHEET (ENGLISH) (REV. 09-01-10)

ORIGINAL SCALE IN INCHES FOR REDUCED PLANS 0 1 2 3

UNIT: 3586
PROJECT NUMBER & PHASE: 10000004091
CONTRACT NO.: 10-3A1001

DISREGARD PRINTS BEARING EARLIER REVISION DATES

REVISION DATES: 9-6-11

SHEET 4 OF 13

FILE => 29c-0377-f-abut_loi.dgn

USERNAME => s121614 DATE PLOTTED => 29-MAR-2012 TIME PLOTTED => 12:47

DIST	COUNTY	ROUTE	POST MILES TOTAL PROJECT	SHEET No.	TOTAL SHEETS
10	SJ	4,99	R19.5/R20.1, 15.0/18.6	1221	1414

REGISTERED CIVIL ENGINEER 11-04-11 DATE

3-26-12
PLANS APPROVAL DATE

REGISTERED PROFESSIONAL ENGINEER Chris V. Udarbe No. C62985 Exp. 06-30-2012 CIVIL STATE OF CALIFORNIA

The State of California or its officers or agents shall not be responsible for the accuracy or completeness of electronic copies of this plan sheet.

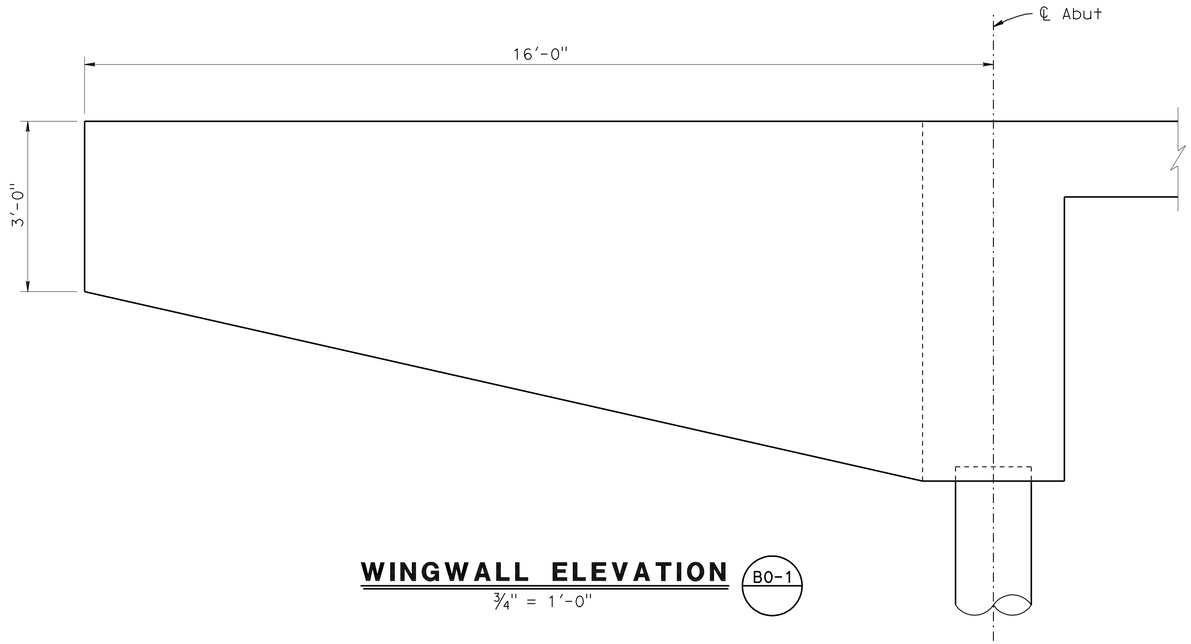

WINGWALL ELEVATION (B0-1)
3/4" = 1'-0"

LEGEND

Existing structure

Denotes limits of removal of existing wingwall

NOTE:
For Section A-A see "ABUTMENT DETAILS" sheet.

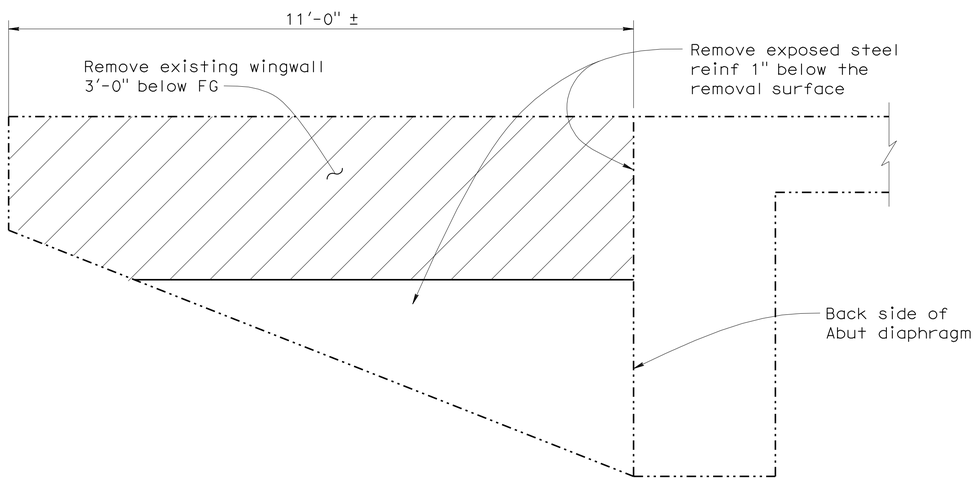

EXISTING WINGWALL REMOVAL
3/4" = 1'-0"

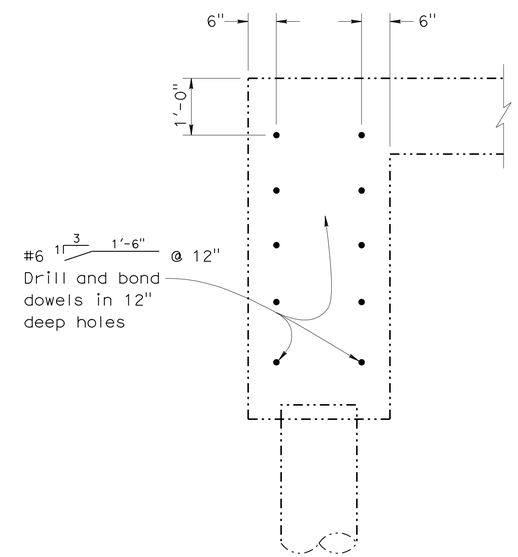

SECTION B-B
3/4" = 1'-0"

NOTE:
THE CONTRACTOR SHALL VERIFY ALL CONTROLLING FIELD DIMENSIONS BEFORE ORDERING OR FABRICATING ANY MATERIAL.

	BY	CHECKED
DESIGN	R. Coria	Phuong M. Vu
DETAILS	L. Wang	R. Coria
QUANTITIES	R. Coria	Phuong M. Vu

STATE OF CALIFORNIA
DEPARTMENT OF TRANSPORTATION

DIVISION OF ENGINEERING SERVICES
STRUCTURE DESIGN
DESIGN BRANCH 17

BRIDGE NO. 29C-0377
POST MILE 0.3 mi East of SR 99

SOUTH STOCKTON WIDENING
MUNFORD AVE BRIDGE (WIDEN)
ABUTMENT DETAILS

STRUCTURES DESIGN DETAIL SHEET (ENGLISH) (REV. 09-01-10)

ORIGINAL SCALE IN INCHES FOR REDUCED PLANS 0 1 2 3

UNIT: 3586
PROJECT NUMBER & PHASE: 10000004091
CONTRACT NO.: 10-3A1001

DISREGARD PRINTS BEARING EARLIER REVISION DATES

REVISION DATES: 9-6-11

SHEET 5 OF 13

FILE => 29c-0377-g-adt.dgn

USERNAME => s121614 DATE PLOTTED => 29-MAR-2012 TIME PLOTTED => 12:47

DIST	COUNTY	ROUTE	POST MILES TOTAL PROJECT	SHEET No.	TOTAL SHEETS
10	SJ	4,99	R19.5/R20.1, 15.0/18.6	1222	1414

REGISTERED CIVIL ENGINEER 11-04-11 DATE

3-26-12
PLANS APPROVAL DATE

REGISTERED PROFESSIONAL ENGINEER Chris V. Udarbe No. C62985 Exp. 06-30-2012 CIVIL STATE OF CALIFORNIA

The State of California or its officers or agents shall not be responsible for the accuracy or completeness of electronic copies of this plan sheet.

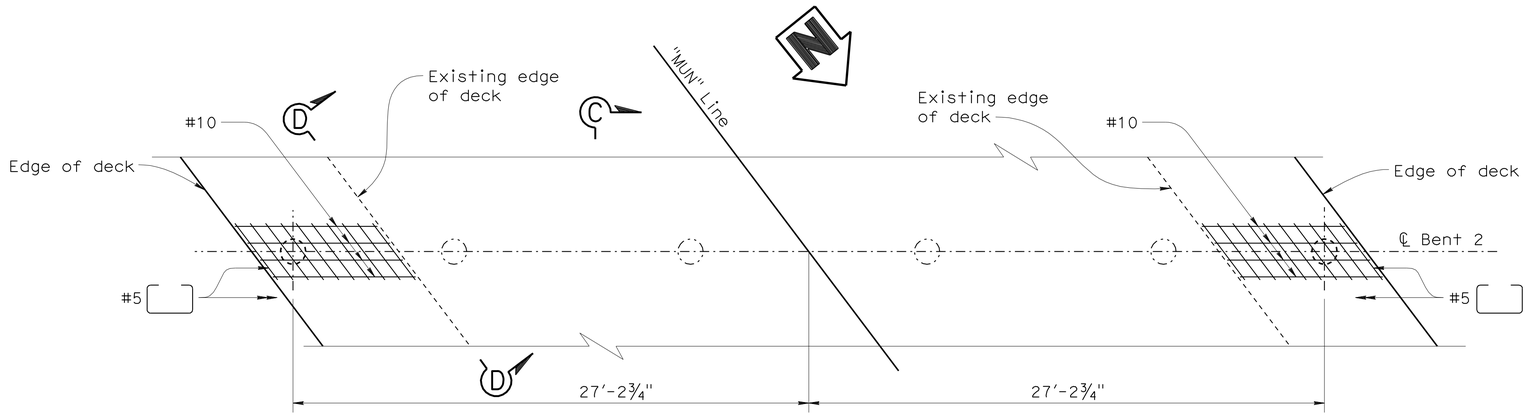

PLAN
¼" = 1'

Note: Bent 2 shown, bent 3 similar except as noted.

Notes:

1. Maximum size of aggregate is 1".
2. The concrete strength shall not be less than 6000 psi at 28 days.
3. No splices allowed in the longitudinal reinforcement within the "clear height" or within 10 ft below the ground line.

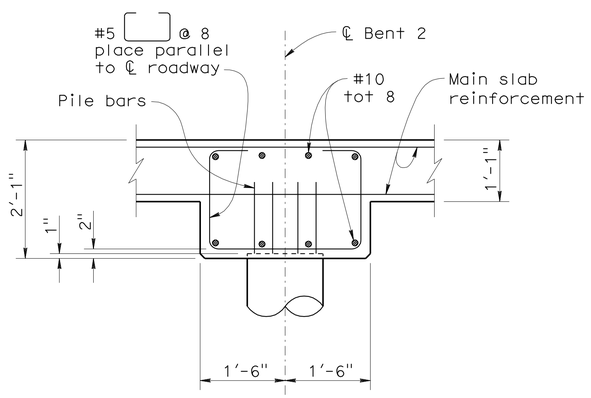

SECTION C-C
¾" = 1'

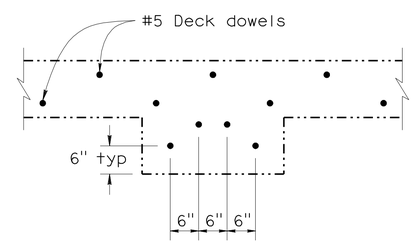

SECTION D-D
¾" = 1'

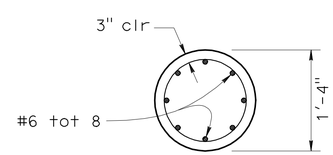

SECTION E-E
1" = 1'

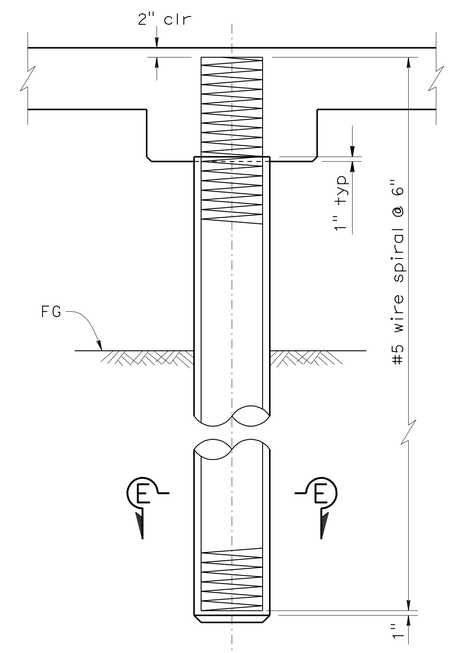

CAST-IN STEEL SHELL PILE
¾" = 1'

NOTE:
THE CONTRACTOR SHALL VERIFY ALL CONTROLLING FIELD DIMENSIONS BEFORE ORDERING OR FABRICATING ANY MATERIAL.

	BY	CHECKED
DESIGN	R. Coria	Phuong M. Vu
DETAILS	L. Wang	R. Coria
QUANTITIES	R. Coria	Phuong M. Vu

STATE OF CALIFORNIA
DEPARTMENT OF TRANSPORTATION

DIVISION OF ENGINEERING SERVICES
STRUCTURE DESIGN
DESIGN BRANCH 17

BRIDGE NO. 29C-0377
POST MILE 0.3 mi East of SR 99

SOUTH STOCKTON WIDENING
MUNFORD AVE BRIDGE (WIDEN)
BENT DETAILS

STRUCTURES DESIGN DETAIL SHEET (ENGLISH) (REV. 09-01-10)

ORIGINAL SCALE IN INCHES FOR REDUCED PLANS 0 1 2 3

UNIT: 3586
PROJECT NUMBER & PHASE: 10000004091
CONTRACT NO.: 10-3A1001

DISREGARD PRINTS BEARING EARLIER REVISION DATES

REVISION DATES 11-30-09 08-03-11 11-04-11

SHEET 6 OF 13

FILE => 29c-0377-n-bt-dt.dgn

USERNAME => s121614 DATE PLOTTED => 29-MAR-2012 TIME PLOTTED => 12:47

DIST	COUNTY	ROUTE	POST MILES TOTAL PROJECT	SHEET No.	TOTAL SHEETS
10	SJ	4,99	R19.5/R20.1, 15.0/18.6	1223	1414

REGISTERED CIVIL ENGINEER — DATE: 11-04-11

PLANS APPROVAL DATE: 3-26-12

REGISTERED PROFESSIONAL ENGINEER — Chris V. Udarbe — No. C62985 — Exp. 06-30-2012 — CIVIL — STATE OF CALIFORNIA

The State of California or its officers or agents shall not be responsible for the accuracy or completeness of electronic copies of this plan sheet.

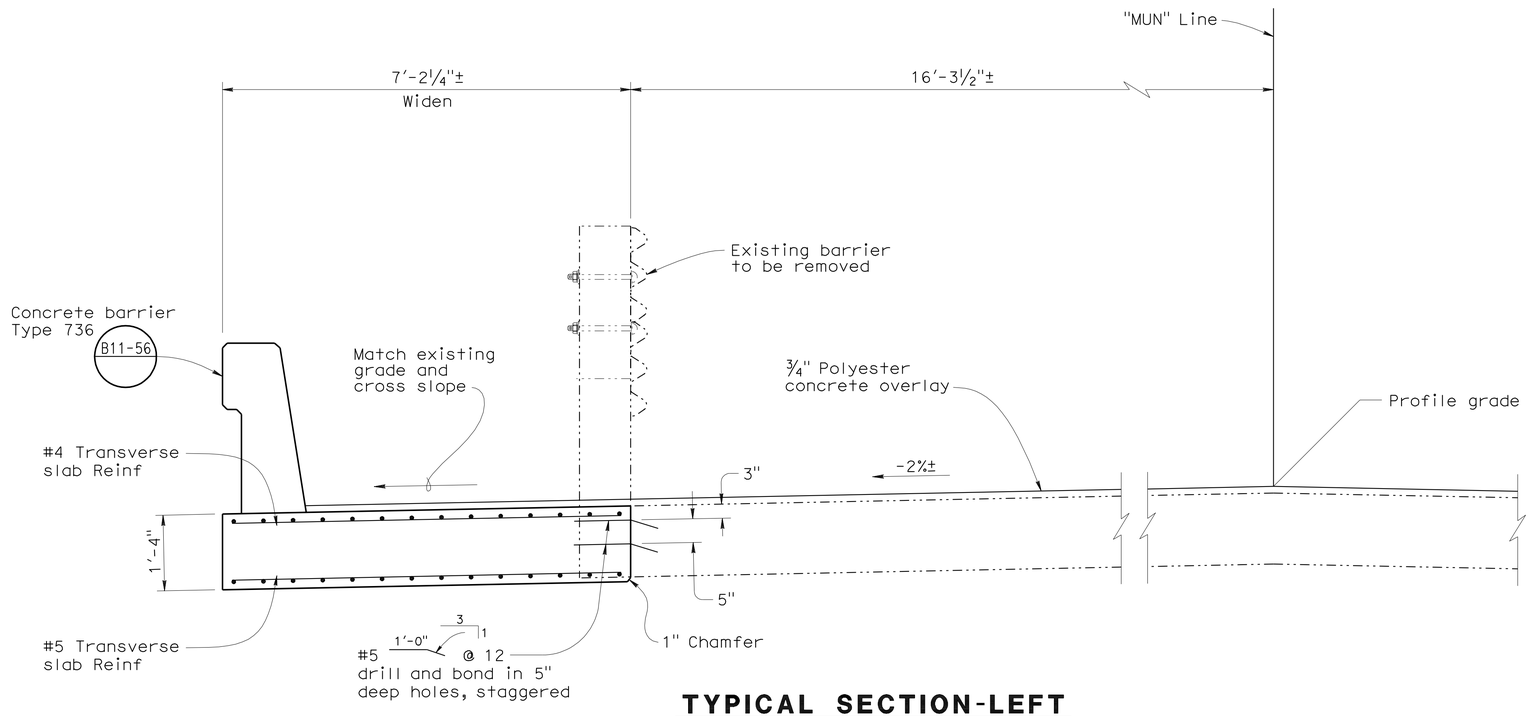

TYPICAL SECTION-LEFT

¾" = 1'

Note: Left widen shown, right widen similar except as noted.

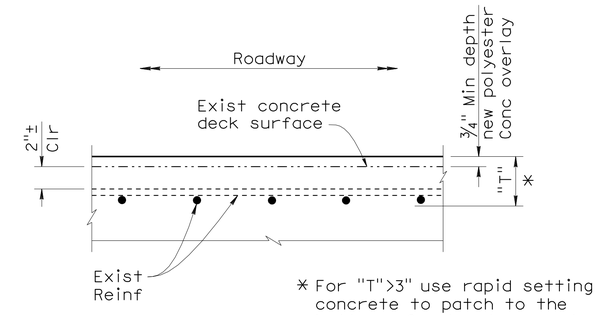

BRIDGE DECK TREATMENT

No Scale

Notes:

1. For details not shown, see "SLAB REINFORCEMENT DETAILS", "GIRDER REINFORCEMENT-LEFT WIDEN" and "GIRDER REINFRCEMENT-RIGHT WIDEN" sheets.

NOTE:
THE CONTRACTOR SHALL VERIFY ALL CONTROLLING FIELD DIMENSIONS BEFORE ORDERING OR FABRICATING ANY MATERIAL.

NOTE:
THE CONTRACTOR SHALL VERIFY ALL CONTROLLING FIELD DIMENSIONS BEFORE ORDERING OR FABRICATING ANY MATERIAL.

	BY	CHECKED
DESIGN	R. Coria	Phuong M. Vu
DETAILS	L. Wang	R. Coria
QUANTITIES	R. Coria	Phuong M. Vu

STATE OF CALIFORNIA
DEPARTMENT OF TRANSPORTATION

DIVISION OF ENGINEERING SERVICES
STRUCTURE DESIGN
DESIGN BRANCH 17

BRIDGE NO. 29C-0377
POST MILE 0.3 mi East of SR 99

SOUTH STOCKTON WIDENING
MUNFORD AVE BRIDGE (WIDEN)
TYPICAL SECTION-LEFT & RIGHT WIDEN

STRUCTURES DESIGN DETAIL SHEET (ENGLISH) (REV. 09-01-10)

ORIGINAL SCALE IN INCHES FOR REDUCED PLANS 0 1 2 3

UNIT: 3586
PROJECT NUMBER & PHASE: 10000004091
CONTRACT NO.: 10-3A1001

DISREGARD PRINTS BEARING EARLIER REVISION DATES

REVISION DATES: 11-16-09 08-03-11 11-16-10

SHEET 7 OF 13

FILE => 29c-0377-k-ts.dgn

USERNAME => DATE PLOTTED => 29-MAR-2012 TIME PLOTTED => 12:48

DIST	COUNTY	ROUTE	POST MILES TOTAL PROJECT	SHEET No.	TOTAL SHEETS
10	SJ	4,99	R19.5/R20.1, 15.0/18.6	1224	1414

REGISTERED CIVIL ENGINEER 11-04-11 DATE

3-26-12
PLANS APPROVAL DATE

REGISTERED PROFESSIONAL ENGINEER Chris V. Udarbe No. C62985 Exp. 06-30-2012 CIVIL STATE OF CALIFORNIA

The State of California or its officers or agents shall not be responsible for the accuracy or completeness of electronic copies of this plan sheet.

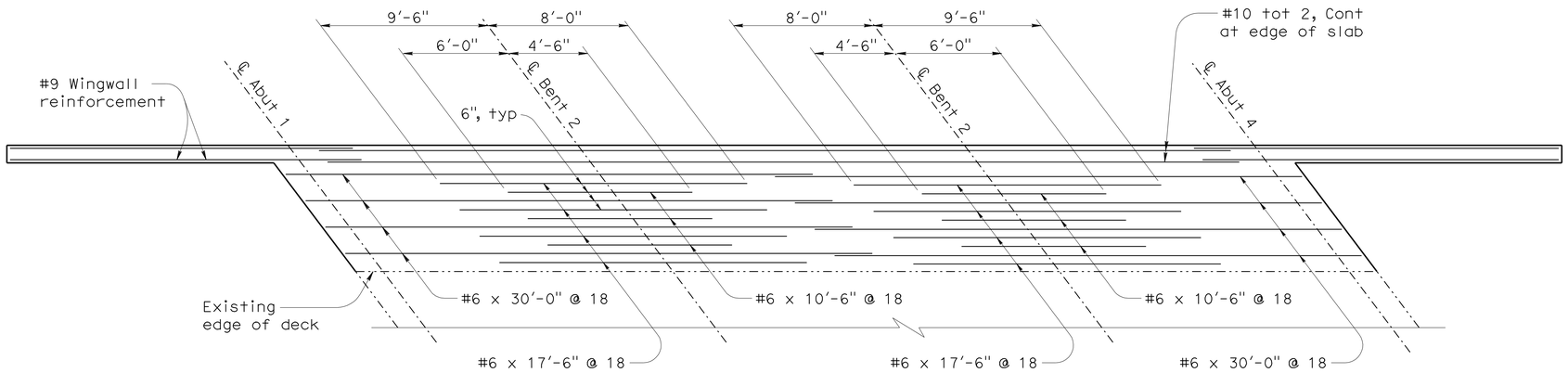

REINFORCEMENT-TOP OF SLAB

1/4" = 1'

Note: Left slab widen shown, right slab widen similar except as noted.

Notes:

1. To be placed symmetric about ℄ of span.

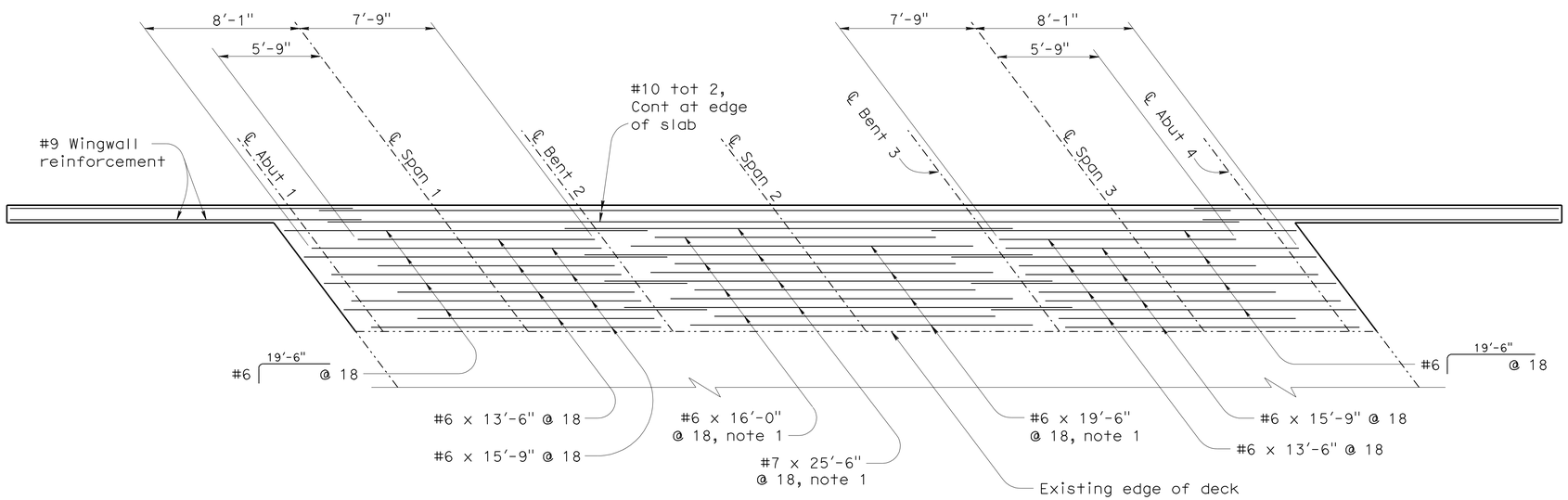

REINFORCEMENT-BOTTOM OF SLAB

1/4" = 1'

Note: Left slab widen shown, right slab widen similar except as noted.

NOTE:
THE CONTRACTOR SHALL VERIFY ALL CONTROLLING FIELD DIMENSIONS BEFORE ORDERING OR FABRICATING ANY MATERIAL.

	BY	CHECKED
DESIGN	R. Coria	Phuong M. Vu
DETAILS	L. Wang	R. Coria
QUANTITIES	R. Coria	Phuong M. Vu

STATE OF CALIFORNIA
DEPARTMENT OF TRANSPORTATION

DIVISION OF ENGINEERING SERVICES
STRUCTURE DESIGN
DESIGN BRANCH 17

BRIDGE NO. 29C-0377
POST MILE 0.3 mi East of SR 99

SOUTH STOCKTON WIDENING
MUNFORD AVE BRIDGE (WIDEN)
SLAB REINFORCEMENT

STRUCTURES DESIGN DETAIL SHEET (ENGLISH) (REV. 09-01-10)

ORIGINAL SCALE IN INCHES FOR REDUCED PLANS 0 1 2 3

UNIT: 3586
PROJECT NUMBER & PHASE: 10000004091
CONTRACT NO.: 10-3A1001

DISREGARD PRINTS BEARING EARLIER REVISION DATES → 9-6-11

REVISION DATES | SHEET 8 | OF 13

FILE => 29c-0377-o-girl-reinf.dgn

USERNAME => s121614 DATE PLOTTED => 29-MAR-2012 TIME PLOTTED => 12:48

DIST	COUNTY	ROUTE	POST MILES TOTAL PROJECT	SHEET No.	TOTAL SHEETS
10	SJ	4,99	R19.5/R20.1, 15.0/18.6	1225	1414

REGISTERED CIVIL ENGINEER 11-04-11 DATE

3-26-12
PLANS APPROVAL DATE

REGISTERED PROFESSIONAL ENGINEER Chris V. Udarbe No. C62985 Exp. 06-30-2012 CIVIL STATE OF CALIFORNIA

The State of California or its officers or agents shall not be responsible for the accuracy or completeness of electronic copies of this plan sheet.

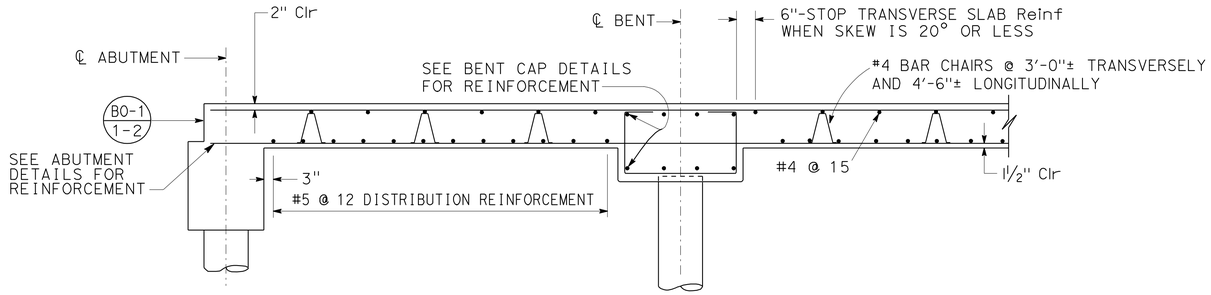

LONGITUDINAL SECTION

NO SCALE

BAR SPLICE LENGTH								
BAR SIZE	#4	#5	#6	#7	#8	#9	#10	#11
ALL BARS, EXCEPT TOP BARS IN SPANS OVER 23 ft	23"	28"	34"	39"	45"	68"	76"	85"
TOP BARS IN SPANS OVER 23 ft	23"	28"	34"	53"	60"	77"	97"	120"

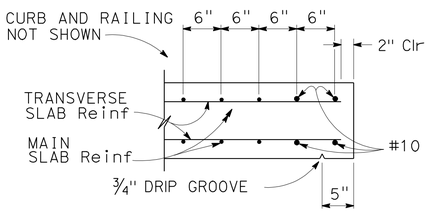

EDGE OF SLAB DETAILS

1" = 1'-0"

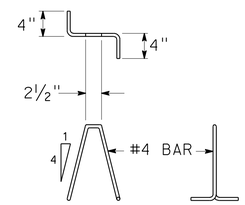

BAR CHAIR DETAIL

1" = 1'-0"

REINFORCEMENT NOTES:

Splices in top main bars to be located near center of span.
Splices in bottom main bars to be located near bent.
Spacing of all transverse bars is measured along ℄ roadway.
Skew 0° to 20°: Place all transverse bars parallel to bent.
Skew over 20°: Place transverse slab bars perpendicular to ℄ bridge. See details at right and below.

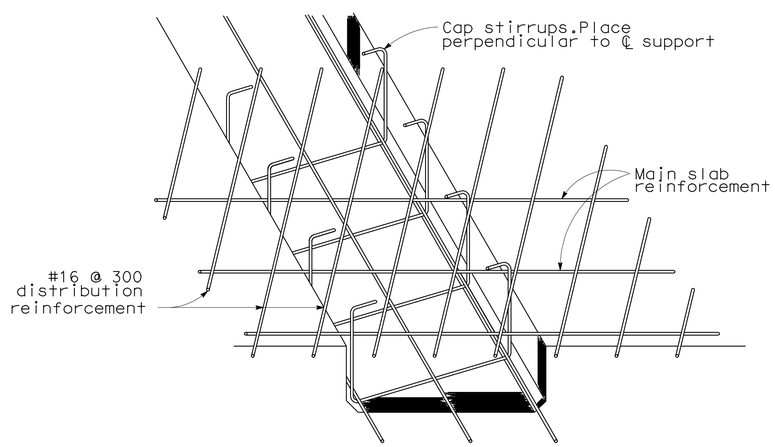

DROPPED CAP

BOTTOM SLAB REINFORCEMENT AT BENT

NO SCALE

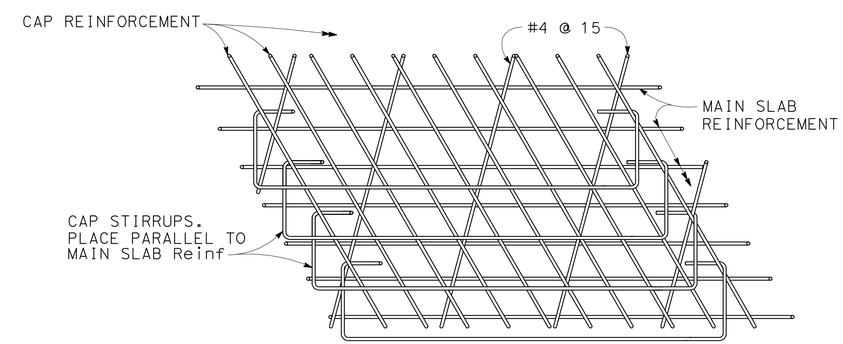

TOP SLAB REINFORCEMENT AT BENT

NO SCALE

Note: View for main span over 23 ft.
Bar placement similar for spans under 23 ft.

NOTE:
THE CONTRACTOR SHALL VERIFY ALL CONTROLLING FIELD DIMENSIONS BEFORE ORDERING OR FABRICATING ANY MATERIAL.

	BY	CHECKED
DESIGN	R. Coria	Phuong M. Vu
DETAILS	L. Wang	R. Coria
QUANTITIES	R. Coria	Phuong M. Vu

STATE OF CALIFORNIA
DEPARTMENT OF TRANSPORTATION

DIVISION OF ENGINEERING SERVICES
STRUCTURE DESIGN
DESIGN BRANCH 17

BRIDGE NO. 29C-0377
POST MILE 0.3 mi East of SR 99

SOUTH STOCKTON WIDENING
MUNFORD AVE BRIDGE (WIDEN)
SLAB REINFORCEMENT DETAILS

STRUCTURES DESIGN DETAIL SHEET (ENGLISH) (REV. 09-01-10)

ORIGINAL SCALE IN INCHES FOR REDUCED PLANS 0 1 2 3

UNIT: 3586
PROJECT NUMBER & PHASE: 10000004091
CONTRACT NO.: 10-3A1001

DISREGARD PRINTS BEARING EARLIER REVISION DATES

REVISION DATES: 09-01-10 9-6-11

SHEET 9 OF 13

FILE => 29c-0377-w-sl-reinf.dgn

USERNAME => s121614 DATE PLOTTED => 29-MAR-2012 TIME PLOTTED => 12:48

DIST	COUNTY	ROUTE	POST MILES TOTAL PROJECT	SHEET No	TOTAL SHEETS
10	SJ	4,99	R19.5/R20.1, 15.0/18.6	1226	1414

Joseph M Kaump 8-24-11
PROFESSIONAL GEOLOGIST

3-26-12
PLANS APPROVAL DATE

PROFESSIONAL GEOLOGIST Joseph Kaump No. 7837 Exp. 01-31-13 STATE OF CALIFORNIA

The State of California or its officers or agents shall not be responsible for the accuracy or completeness of electronic copies of this plan sheet.

This LOTB sheet was prepared in accordance with the Caltrans Soil & Rock Logging, Classification, & Presentation Manual (2010 Edition).

BENCH MARK

Fnd PK Nail Elev 28.78′
14.66 Ft Rt Munford Ave
Sta 30+15.751
NGVD29

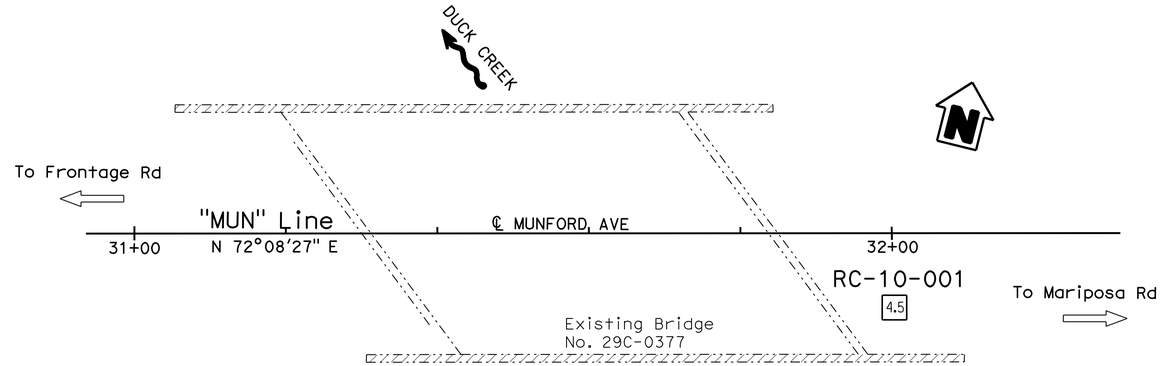

PLAN
1" = 10′

PROFILE
Horiz: 1" = 10′
Vert: 1" = 10′

SOUTH STOCKTON WIDENING
MUNFORD AVE BRIDGE (WIDEN)
LOG OF TEST BORINGS 1 OF 4

ENGINEERING SERVICES	MATERIALS AND GEOTECHNICAL SERVICES	STATE OF CALIFORNIA DEPARTMENT OF TRANSPORTATION	DIVISION OF ENGINEERING SERVICES STRUCTURE DESIGN DESIGN BRANCH 17	BRIDGE NO. 29C-0377 / POST MILE 15.0/18.6
FUNCTIONAL SUPERVISOR NAME: R. Buell	DRAWN BY: I. G-Remmen / CHECKED BY: C. Zhen-Ru	FIELD INVESTIGATION BY: T. Alderman		

OGS CIVIL LOG OF TEST BORINGS SHEET

ORIGINAL SCALE IN INCHES FOR REDUCED PLANS 0 1 2 3

UNIT: 3643
PROJECT NUMBER & PHASE: 10000004091 CONTRACT NO.: 10-3A1001

DISREGARD PRINTS BEARING EARLIER REVISION DATES → REVISION DATES ~~08-15-11~~ 08-23-11

SHEET 10 OF 13

FILE => 29c-0377-z-lt-b1of4.dgn

USERNAME => s12614 DATE PLOTTED => 29-MAR-2012 TIME PLOTTED => 12:48

DIST	COUNTY	ROUTE	POST MILES TOTAL PROJECT	SHEET No	TOTAL SHEETS
10	SJ	4,99	R19.5/R20.1, 15.0/18.6	1227	1414

Joseph M Kaump 8-24-11
PROFESSIONAL GEOLOGIST

3-26-12
PLANS APPROVAL DATE

PROFESSIONAL GEOLOGIST Joseph Kaump No. 7837 Exp. 01-31-13 STATE OF CALIFORNIA

The State of California or its officers or agents shall not be responsible for the accuracy or completeness of electronic copies of this plan sheet.

REFERENCE: CALTRANS SOIL & ROCK LOGGING, CLASSIFICATION, AND PRESENTATION MANUAL (2010)

CEMENTATION

Description	Criteria
Weak	Crumbles or breaks with handling or little finger pressure.
Moderate	Crumbles or breaks with considerable finger pressure.
Strong	Will not crumble or break with finger pressure.

BOREHOLE IDENTIFICATION

Symbol	Hole Type	Description
Size	A	Auger Boring (hollow or solid stem bucket)
Size	R RW RC P	Rotary drilled boring (conventional) Rotary drilled with self-casing wire-line Rotary core with continuously-sampled, self-casing wire-line Rotary percussion boring (air)
Size	R	Rotary drilled diamond core
Size	HD HA	Hand driven (1-inch soil tube) Hand Auger
●	D	Dynamic Cone Penetration Boring
▲	CPT	Cone Penetration Test (ASTM D 5778)
⬚	O	Other (note on LOTB)

Note: Size in inches.

CONSISTENCY OF COHESIVE SOILS

Description	Shear Strength (tsf)	Pocket Penetrometer Measurement, PP, (tsf)	Torvane Measurement, TV, (tsf)	Vane Shear Measurement, VS, (tsf)
Very Soft	Less than 0.12	Less than 0.25	Less than 0.12	Less than 0.12
Soft	0.12 - 0.25	0.25 - 0.5	0.12 - 0.25	0.12 - 0.25
Medium Stiff	0.25 - 0.5	0.5 - 1	0.25 - 0.5	0.25 - 0.5
Stiff	0.5 - 1	1 - 2	0.5 - 1	0.5 - 1
Very Stiff	1 - 2	2 - 4	1 - 2	1 - 2
Hard	Greater than 2	Greater than 4	Greater than 2	Greater than 2

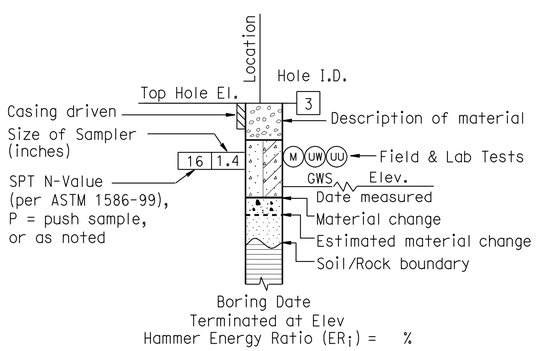

ROTARY BORING

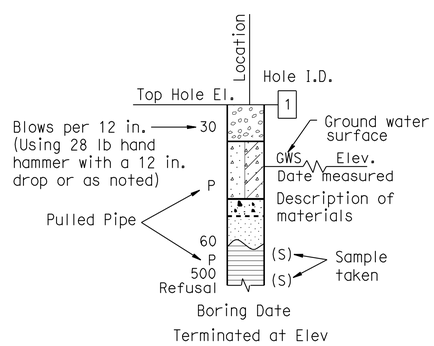

HAND BORING

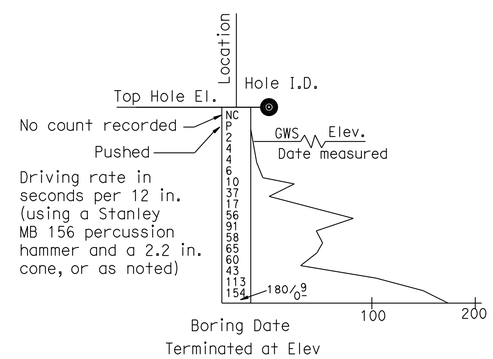

DYNAMIC CONE PENETRATION BORING

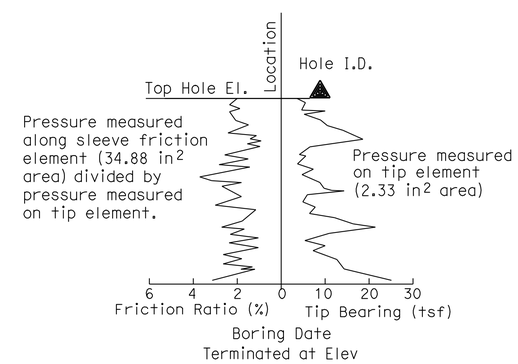

CONE PENETRATION TEST (CPT) BORING

ENGINEERING SERVICES	MATERIALS AND GEOTECHNICAL SERVICES	STATE OF CALIFORNIA DEPARTMENT OF TRANSPORTATION	DIVISION OF ENGINEERING SERVICES STRUCTURE DESIGN DESIGN BRANCH 17	BRIDGE NO. 29C-0377 POST MILE 15.0/18.6	SOUTH STOCKTON WIDENING MUNFORD AVE BRIDGE (WIDEN) LOG OF TEST BORINGS 2 OF 4
	PREPARED BY: I.G-Remmen				

GS LOTB SOIL LEGEND

ORIGINAL SCALE IN INCHES FOR REDUCED PLANS 0 1 2 3

UNIT: 3643
PROJECT NUMBER & PHASE: 10000004091 CONTRACT NO.: 10-3A1001

DISREGARD PRINTS BEARING EARLIER REVISION DATES

REVISION DATES

SHEET 11 OF 13

FILE => 29c-0377-z-ltb2of4.dgn

USERNAME => s121614 DATE PLOTTED => 23-MAR-2012 TIME PLOTTED => 12:48

REFERENCE: CALTRANS SOIL & ROCK LOGGING, CLASSIFICATION, AND PRESENTATION MANUAL (2010)

DIST	COUNTY	ROUTE	POST MILES TOTAL PROJECT	SHEET No	TOTAL SHEETS
10	SJ	4,99	R19.5/R20.1, 15.0/18.6	1228	1414

Joseph M Kaump 8-24-11
PROFESSIONAL GEOLOGIST

3-26-12
PLANS APPROVAL DATE

PROFESSIONAL GEOLOGIST Joseph Kaump No. 7837 Exp. 01-31-13 STATE OF CALIFORNIA

The State of California or its officers or agents shall not be responsible for the accuracy or completeness of electronic copies of this plan sheet.

GROUP SYMBOLS AND NAMES

Graphic/Symbol	Group Names	Graphic/Symbol	Group Names
GW	Well-graded GRAVEL Well-graded GRAVEL with SAND	CL	Lean CLAY Lean CLAY with SAND Lean CLAY with GRAVEL SANDY lean CLAY SANDY lean CLAY with GRAVEL GRAVELLY lean CLAY GRAVELLY lean CLAY with SAND
GP	Poorly-graded GRAVEL Poorly-graded GRAVEL with SAND		
GW-GM	Well-graded GRAVEL with SILT Well-graded GRAVEL with SILT and SAND	CL-ML	SILTY CLAY SILTY CLAY with SAND SILTY CLAY with GRAVEL SANDY SILTY CLAY SANDY SILTY CLAY with GRAVEL GRAVELLY SILTY CLAY GRAVELLY SILTY CLAY with SAND
GW-GC	Well-graded GRAVEL with CLAY (or SILTY CLAY) Well-graded GRAVEL with CLAY and SAND (or SILTY CLAY and SAND)		
GP-GM	Poorly-graded GRAVEL with SILT Poorly-graded GRAVEL with SILT and SAND	ML	SILT SILT with SAND SILT with GRAVEL SANDY SILT SANDY SILT with GRAVEL GRAVELLY SILT GRAVELLY SILT with SAND
GP-GC	Poorly-graded GRAVEL with CLAY (or SILTY CLAY) Poorly-graded GRAVEL with CLAY and SAND (or SILTY CLAY and SAND)		
GM	SILTY GRAVEL SILTY GRAVEL with SAND	OL	ORGANIC lean CLAY ORGANIC lean CLAY with SAND ORGANIC lean CLAY with GRAVEL SANDY ORGANIC lean CLAY SANDY ORGANIC lean CLAY with GRAVEL GRAVELLY ORGANIC lean CLAY GRAVELLY ORGANIC lean CLAY with SAND
GC	CLAYEY GRAVEL CLAYEY GRAVEL with SAND		
GC-GM	SILTY, CLAYEY GRAVEL SILTY, CLAYEY GRAVEL with SAND	OL	ORGANIC SILT ORGANIC SILT with SAND ORGANIC SILT with GRAVEL SANDY ORGANIC SILT SANDY ORGANIC SILT with GRAVEL GRAVELLY ORGANIC SILT GRAVELLY ORGANIC SILT with SAND
SW	Well-graded SAND Well-graded SAND with GRAVEL		
SP	Poorly-graded SAND Poorly-graded SAND with GRAVEL	CH	Fat CLAY Fat CLAY with SAND Fat CLAY with GRAVEL SANDY fat CLAY SANDY fat CLAY with GRAVEL GRAVELLY fat CLAY GRAVELLY fat CLAY with SAND
SW-SM	Well-graded SAND with SILT Well-graded SAND with SILT and GRAVEL		
SW-SC	Well-graded SAND with CLAY (or SILTY CLAY) Well-graded SAND with CLAY and GRAVEL (or SILTY CLAY and GRAVEL)	MH	Elastic SILT Elastic SILT with SAND Elastic SILT with GRAVEL SANDY elastic SILT SANDY elastic SILT with GRAVEL GRAVELLY elastic SILT GRAVELLY elastic SILT with SAND
SP-SM	Poorly-graded SAND with SILT Poorly-graded SAND with SILT and GRAVEL		
SP-SC	Poorly-graded SAND with CLAY (or SILTY CLAY) Poorly-graded SAND with CLAY and GRAVEL (or SILTY CLAY and GRAVEL)	OH	ORGANIC fat CLAY ORGANIC fat CLAY with SAND ORGANIC fat CLAY with GRAVEL SANDY ORGANIC fat CLAY SANDY ORGANIC fat CLAY with GRAVEL GRAVELLY ORGANIC fat CLAY GRAVELLY ORGANIC fat CLAY with SAND
SM	SILTY SAND SILTY SAND with GRAVEL		
SC	CLAYEY SAND CLAYEY SAND with GRAVEL	OH	ORGANIC elastic SILT ORGANIC elastic SILT with SAND ORGANIC elastic SILT with GRAVEL SANDY ORGANIC elastic SILT SANDY ORGANIC elastic SILT with GRAVEL GRAVELLY ORGANIC elastic SILT GRAVELLY ORGANIC elastic SILT with SAND
SC-SM	SILTY, CLAYEY SAND SILTY, CLAYEY SAND with GRAVEL		
PT	PEAT	OL/OH	ORGANIC SOIL ORGANIC SOIL with SAND ORGANIC SOIL with GRAVEL SANDY ORGANIC SOIL SANDY ORGANIC SOIL with GRAVEL GRAVELLY ORGANIC SOIL GRAVELLY ORGANIC SOIL with SAND
	COBBLES COBBLES and BOULDERS BOULDERS		

FIELD AND LABORATORY TESTING

- (C) Consolidation (ASTM D 2435)
- (CL) Collapse Potential (ASTM D 5333)
- (CP) Compaction Curve (CTM 216)
- (CR) Corrosivity Testing (CTM 643, CTM 422, CTM 417)
- (CU) Consolidated Undrained Triaxial (ASTM D 4767)
- (DS) Direct Shear (ASTM D 3080)
- (EI) Expansion Index (ASTM D 4829)
- (M) Moisture Content (ASTM D 2216)
- (OC) Organic Content-% (ASTM D 2974)
- (P) Permeability (CTM 220)
- (PA) Particle Size Analysis (ASTM D 422)
- (PI) Plasticity Index (AASHTO T 90) Liquid Limit (AASHTO T 89)
- (PL) Point Load Index (ASTM D 5731)
- (PM) Pressure Meter
- (R) R-Value (CTM 301)
- (SE) Sand Equivalent (CTM 217)
- (SG) Specific Gravity (AASHTO T 100)
- (SL) Shrinkage Limit (ASTM D 427)
- (SW) Swell Potential (ASTM D 4546)
- (UC) Unconfined Compression-Soil (ASTM D 2166) Unconfined Compression-Rock (ASTM D 2938)
- (UU) Unconsolidated Undrained Triaxial (ASTM D 2850)
- (UW) Unit Weight (ASTM D 4767)

APPARENT DENSITY OF COHESIONLESS SOILS

Description	SPT N_{60} (Blows / 12 in.)
Very Loose	0 - 5
Loose	5 - 10
Medium Dense	10 - 30
Dense	30 - 50
Very Dense	Greater than 50

MOISTURE

Description	Criteria
Dry	No discernable moisture
Moist	Moisture present, but no free water
Wet	Visible free water

PERCENT OR PROPORTION OF SOILS

Description	Criteria
Trace	Particles are present but estimated to be less than 5%
Few	5% - 10%
Little	15% - 25%
Some	30% - 45%
Mostly	50% - 100%

PARTICLE SIZE

Description		Size (in.)
Boulder		Greater than 12
Cobble		3 - 12
Gravel	Coarse	3/4 - 3
	Fine	1/5 - 3/4
Sand	Coarse	1/16 - 1/5
	Medium	1/64 - 1/16
	Fine	1/300 - 1/64
Silt and Clay		Less than 1/300

ENGINEERING SERVICES

MATERIALS AND GEOTECHNICAL SERVICES

PREPARED BY: I.G-Remmen

STATE OF CALIFORNIA DEPARTMENT OF TRANSPORTATION

DIVISION OF ENGINEERING SERVICES STRUCTURE DESIGN DESIGN BRANCH 17

BRIDGE NO. 29C-0377
POST MILE 15.0/18.6

SOUTH STOCKTON WIDENING
MUNFORD AVE BRIDGE (WIDEN)
LOG OF TEST BORINGS 3 OF 4

GS LOTB SOIL LEGEND

ORIGINAL SCALE IN INCHES FOR REDUCED PLANS 0 1 2 3

UNIT: 3643
PROJECT NUMBER & PHASE: 10000004091
CONTRACT NO.: 10-3A1001

DISREGARD PRINTS BEARING EARLIER REVISION DATES

REVISION DATES

SHEET 12 OF 13

FILE => 29c-0377-z-ltb3of4.dgn

USERNAME => s121614 DATE PLOTTED => 29-MAR-2012 TIME PLOTTED => 12:48

DUCK CREEK BRIDGES (2)					
ROAD NO.	INDEX	FILE NO.	YEAR	SHEET NO.	TOTAL SHEETS
			1964	25	26

AS BUILT
CORRECT AS BUILT
NO CHANGE D. Hicks
CHIEF

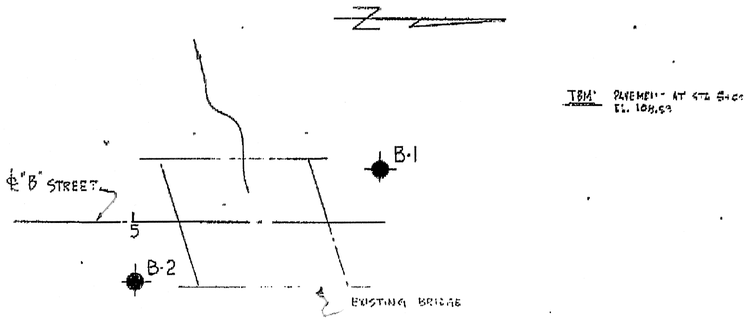

- PLAN -

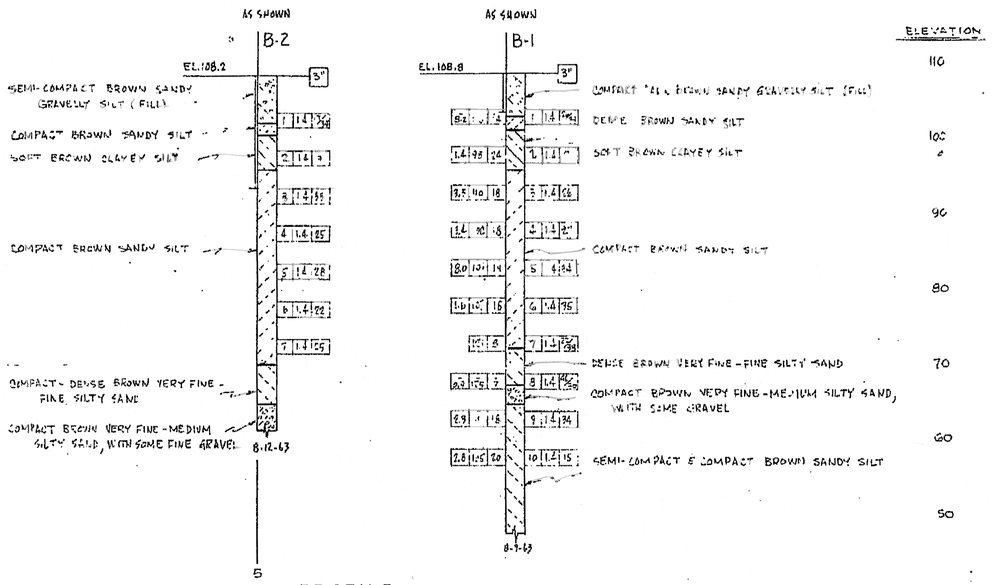

- PROFILE -

DUCK CREEK - "B" STREET

3350F-1

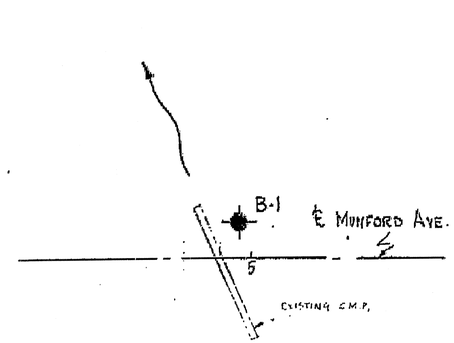

- PLAN -

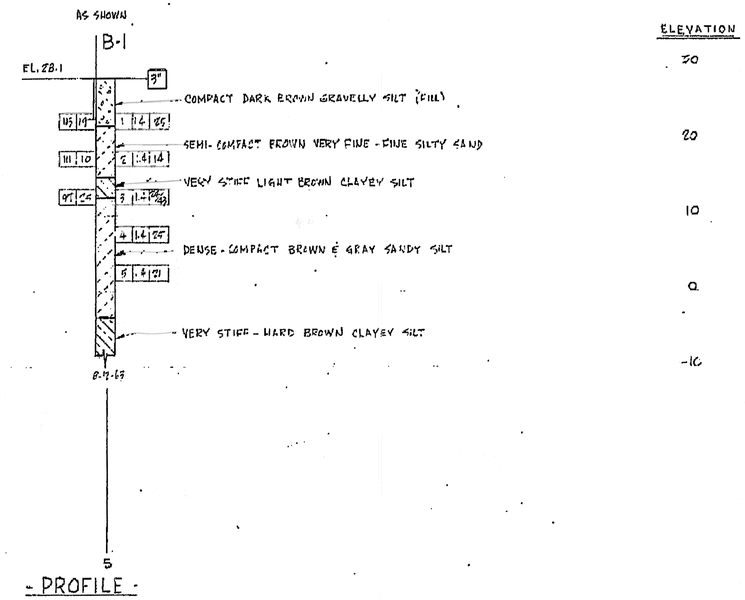

- PROFILE -

DUCK CREEK BRANCH - MUNFORD AVE.

TO ACCOMPANY PLANS DATED 3-26-12

29C-377 3350F-5

LEGEND OF EARTH MATERIALS

SIZE CLASSIFICATION

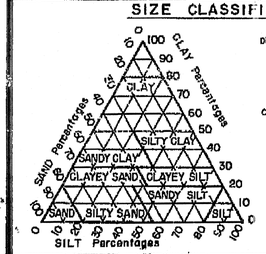

Diagram showing the basis of grainsize distribution used in determination of class names. Size classification is based on the M.I.T. grade scale in field and laboratory classification unless noted otherwise.

Classification of earth materials shown on this sheet is based on field inspection and should not be construed to imply mechanical analysis unless so stated.

MATERIAL SYMBOLS

- Gravel
- Sand
- Silt
- Clay
- Sandy clay or clayey sand
- Sandy silt or silty sand
- Silty clay or clayey silt
- Peat or organic matter
- Fill material.
- Shale
- Sandstone
- Limestone
- Metamorphic rock
- Ignaous rock

CONSISTENCY CLASSIFICATION

According to the Standard Penetration Test

No. of blows	Granular	Cohesive
0-5	Very loose	Very soft
6-10	Loose	Soft
11-20	Semicompact	Stiff
21-35	Compact	Very stiff
36-70	Dense	Hard
70+	Very dense	Very hard

LEGEND

- Plan of any boring
- Rotary boring
- Diamond core boring
- Auger boring
- Sample boring
- Jet boring
- Test pit
- 2¼" Cone penetrometer
- 2½" Cone penetrometer

Moisture (% dry wt
Dry density (lbs/c
Unconfined compre
strength (tons/s
Designates other s
C - Consolidation
S - Direct shear
E - Expansion
T - Triaxial compre

DIVISION OF ENGINEERING SERVICES - MATERIALS AND GEOTECHNICAL SERVICES

As-Built Log of Test Borings sheet is considered an informational document only. As such, the State of California registration seal with signature, license number and registration certificate expiration date confirm that this is a true and accurate copy of the original document. It does not attest to the accuracy or validity of the information contained in the original document. This drawing is available and presented only for the convenience of any bidder, contractor or other interested party.

DIST.	COUNTY	ROUTE	POST MILE-TOTAL PROJECT	Sheet No.	Total Sheets
10	SJ	4,99	R19.5/R20.1,15.0/18.6	1229	1414

PROFESSIONAL GEOLOGIST — DATE 8-22-11

PROFESSIONAL GEOLOGIST — Joseph Kaump — No. 7837 — Exp. 1-31-13 — STATE OF CALIFORNIA

SOUTH STOCKTON WIDEN
MUNFORD AVE BRIDGE WIDEN
LOG OF TEST BORINGS 4 OF 4

UNIT: 3643	CONTRACT No.	BRIDGE No.	
PROJECT NUMBER & PHASE: 10000004091	10-3A1001	29C-0377	
		Sheet	of
		13	13

NOTE: A COPY OF THIS LOG OF TEST BORINGS IS AVAILABLE AT OFFICE OF STRUCTURE MAINTENANCE AND INVESTIGATIONS, SACRAMENTO, CALIFORNIA

MOORE & TAGER · Engineers · Geologists

APPROVED H.R. Tabor Sept. 30, 1963 — REGISTERED CIVIL ENGINEER No. 21165 — JOB No. 3350F

SAN JOAQUIN COUNTY

DUCK CREEK BRIDGES

LOG OF TEST BORINGS

Scale HORIZ: 1"=20' VERT: 1"=10'	Date 9-30-63	By	Drawing
		Check by	

FILENAME => 29c-0377-z-1tb4of4.tif

DIST	COUNTY	ROUTE	POST MILES TOTAL PROJECT	SHEET No.	TOTAL SHEETS
10	SJ	4,99	R19.5/R20.1, 15.0/18.6	1230	1414

REGISTERED CIVIL ENGINEER — DATE 11-04-11

PLANS APPROVAL DATE 3-26-12

REGISTERED PROFESSIONAL ENGINEER — Chris Udarbe — No. C62985 — Exp. 06/30/12 — CIVIL — STATE OF CALIFORNIA

The State of California or its officers or agents shall not be responsible for the accuracy or completeness of electronic copies of this plan sheet.

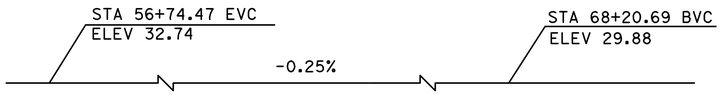

PROFILE GRADE

NO SCALE

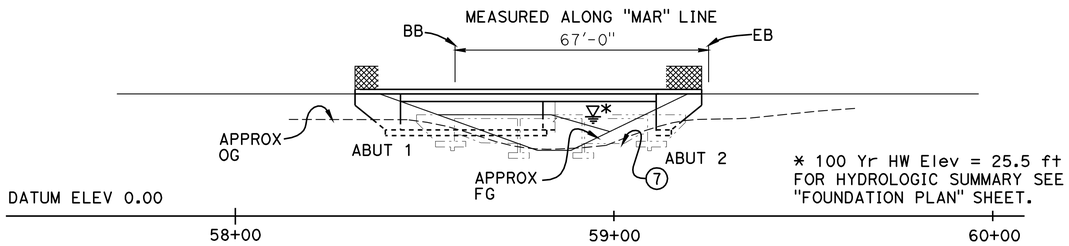

ELEVATION

1" = 20'

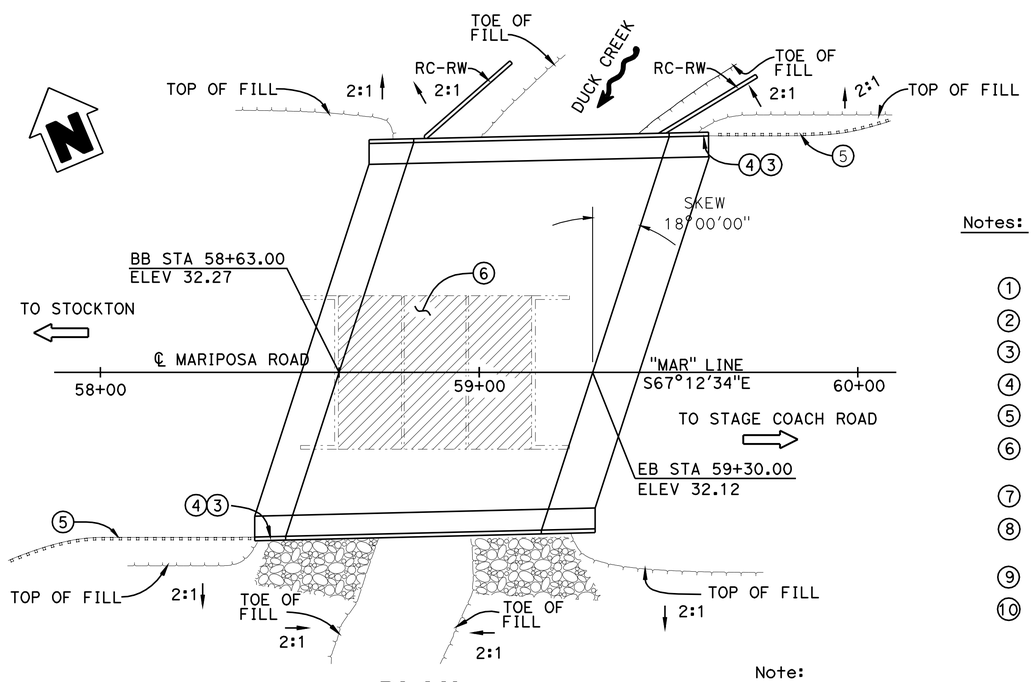

PLAN

1" = 20'

INDEX TO PLANS

1. GENERAL PLAN
2. DECK CONTOUR
3. FOUNDATION PLAN
4. ABUTMENT 1 LAYOUT
5. ABUTMENT 2 LAYOUT
6. ABUTMENT DETAILS NO. 1
7. ABUTMENT DETAILS NO. 2
8. RETAINING WALL LAYOUT
9. TYPICAL SECTION
10. P/S SLAB VOID LAYOUT
11. STRUCTURE APPROACH DRAINAGE DETAILS
12. LOG OF TEST BORING 1 OF 4
13. LOG OF TEST BORING 2 OF 4
14. LOG OF TEST BORING 3 OF 4
15. LOG OF TEST BORING 4 OF 4

Legend:

- Indicates new structure
- Indicates existing structure
- Structure Removal
- Indicates rock slope protection, see "ROAD PLANS"

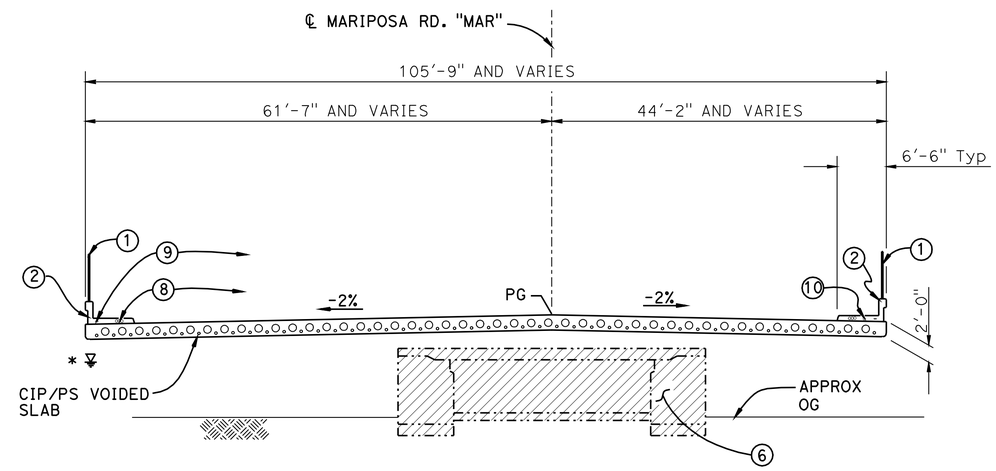

TYPICAL SECTION

1" = 10'

Notes:

1. Chain Link Railing Type 7 (Mod)
2. Concrete Barrier Type 26A
3. Paint "Duck Creek Bridge"
4. Paint "Br No. 29C0451"
5. MBGR see "ROAD PLANS"
6. Existing bridge to be removed (Br. No. 29C0194) Bridge removal, LOCATION C
7. Existing channel lining to be removed
8. City of Stockton Communication lines (3" ø conduit in 5" opening)
9. 2-2" conduit, see "ROAD PLANS"
10. 1-4" conduit, see "ROAD PLANS"

Note:
For GENERAL NOTES, STANDARD PLANS, AND PILE DATA TABLE, see "DECK CONTOURS" sheet.

QUANTITIES

BRIDGE REMOVAL, LOCATION C	LUMP	SUM
STRUCTURE EXCAVATION (TYPE D)	440	CY
STRUCTURE BACKFILL (BRIDGE)	273	CY
PERVIOUS BACKFILL MATERIAL	5	CY
LEAN CONCRETE BACKFILL	7	CY
FURNISH STEEL PILING (HP 10 X 42)	417	LF
DRIVE STEEL PILE (HP 10 X 42)	12	EA
FURNISH STEEL PILING (HP 10 X 57)	2,997	LF
DRIVE STEEL PILE (HP 10 X 57)	56	EA
PRESTRESSING CAST-IN-PLACE CONCRETE	LUMP	SUM
STRUCTURAL CONCRETE, BRIDGE FOOTING	92	CY
STRUCTURAL CONCRETE, BRIDGE	695	CY
JOINT SEAL (MR 1")	198	LF
BAR REINFORCING STEEL (BRIDGE)	147,488	LB
STRUCTURE APPROACH DRAINAGE SYSTEM	LUMP	SUM
CHAIN LINK RAILING (TYPE 7 MODIFIED)	189	LF
CONCRETE BARRIER (TYPE 26 MODIFIED)	189	LF

SOUTH STOCKTON WIDENING
DUCK CREEK BRIDGE (REPLACE)
GENERAL PLAN

Gary Joe
DESIGN ENGINEER

	BY	CHECKED			
DESIGN	N. Nguyen	H. Fang	LOAD & RESISTANCE FACTOR DESIGN	LIVE LOADING: HL93 and "Low Boy" PERMIT DESIGN VEHICLE	
DETAILS	J. Yang	N. Nguyen	LAYOUT	N. Nguyen	H. Fang
QUANTITIES	I. Chernioglo	T. Win	SPECIFICATIONS	V. Renganathan	PLANS AND SPECS COMPARED V. Renganathan

STATE OF CALIFORNIA
DEPARTMENT OF TRANSPORTATION

DIVISION OF ENGINEERING SERVICES
STRUCTURE DESIGN
DESIGN BRANCH 17

BRIDGE NO. 29C0451
POST MILE 0.25 mi S/E OF SH 99

ORIGINAL SCALE IN INCHES FOR REDUCED PLANS 0 1 2 3

UNIT: 3586
PROJECT NUMBER & PHASE: 10000004091
CONTRACT NO.: 10-3A1001

DISREGARD PRINTS BEARING EARLIER REVISION DATES

REVISION DATES: 7-28-11 9-29-11 3-1-12

SHEET 1 OF 15

STRUCTURES DESIGN GENERAL PLAN SHEET (ENGLISH) (REV.09-01-10)

FILE => 29c-0451-a-gp01.dgn

USERNAME => s121614 DATE PLOTTED => 24-APR-2012 TIME PLOTTED => 06:03

DIST	COUNTY	ROUTE	POST MILES TOTAL PROJECT	SHEET No.	TOTAL SHEETS
10	SJ	4,99	R19.5/R20.1, 15.0/18.6	1231	1414

REGISTERED CIVIL ENGINEER 11-04-11 DATE

3-26-12
PLANS APPROVAL DATE

REGISTERED PROFESSIONAL ENGINEER Chris Udorbe No. C62985 Exp. 6/30/12 CIVIL STATE OF CALIFORNIA

The State of California or its officers or agents shall not be responsible for the accuracy or completeness of electronic copies of this plan sheet.

NOTES:

1. x = 10' interval measured along station line
2. Contours do not include camber
3. Contour interval = 0.20

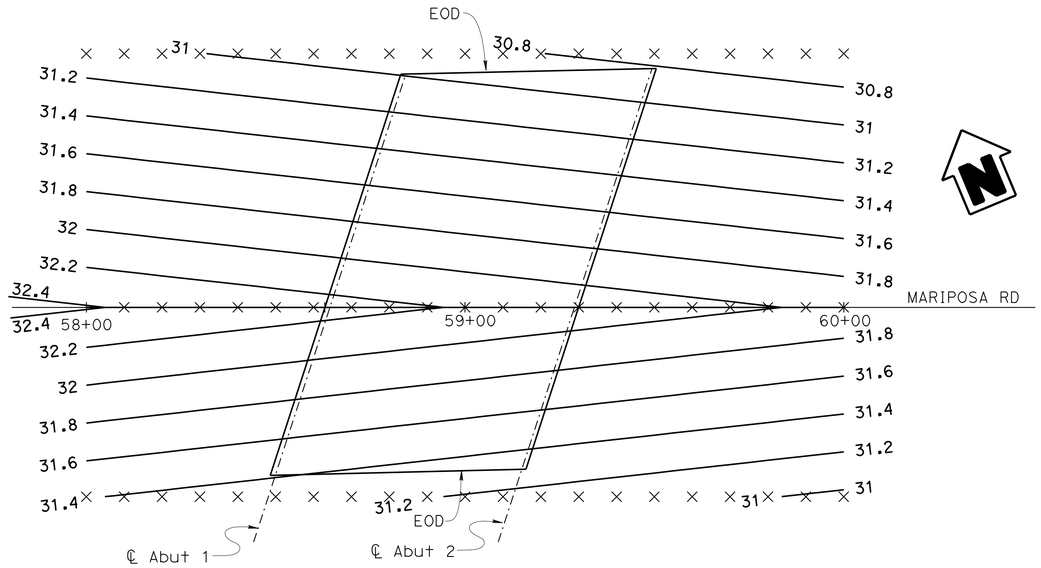

DECK CONTOURS

1" = 20'

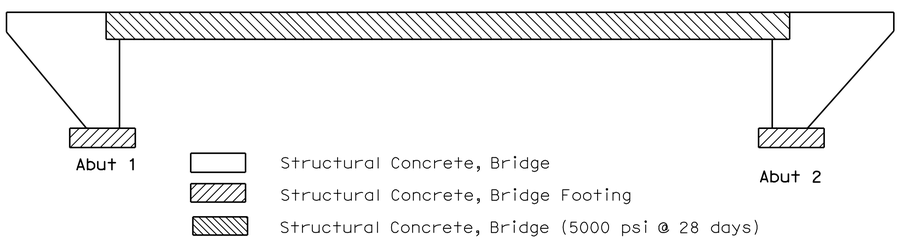

CONCRETE STRENGTH AND TYPE LIMITS

No Scale

PILE DATA TABLE

Support	Pile Type	Nominal Reistance (kips)		Design Tip Elevations (ft)	Specified Tip Elevation (ft)	Nominal Driving Resistance Required (kips)
		Compression	Tension			
Abut 1	HP 10x57	240	N/A	-30 (a)	-30	240
Abut 2	HP 10x57	240	N/A	-30 (a)	-30	240
RW @ Abut 1	HP 10x42	180	N/A	-13 (a)	-13	180
RW @ Abut 2	HP 10x42	180	N/A	-13 (a)	-13	180

Note: Design tip elevations are conrolled by:

1. (a) Compression
2. The specified tip elevation shall not be raised above the design tip elevations for lateral load.
3. Since there are no soft compressible soil layers below the design tip elevation there is no design tip elevation for settlement.
4. "H" piles to be driven within 10 feet horizontal distance of the existing CSMUD sewer line at Abutment 1. Abutment 2 shall be driven to specified tip elevation -40.0 feet.

STANDARD PLANS DATED MAY 2006

A10A	ACRONYMS AND ABBREVIATIONS (A-L)
A10B	ACRONYMS AND ABBREVIATIONS (M-Z)
A10C	SYMBOLS (SHEET 1 OF 2)
A10D	SYMBOLS (SHEET 2 OF 2)
A62C	LIMITS OF PAYMENT FOR EXCAVATION AND BACKFILL-BRIDGE
B0-1	BRIDGE DETAILS
B0-3	BRIDGE DETAILS
B0-5	BRIDGE DETAILS
B0-13	BRIDGE DETAILS
B3-1	RETAINING WALL TYPE 1
RSP B6-21	JOINT SEALS (MAXIMUM MOVEMENT RATING = 2")
B8-5	CAST-IN-PLACE PRESTRESSED GIRDER DETAILS
B11-52	CHAIN LINK TYPE 7
B11-54	CONCRETE BARRIER TYPE 26

Standard Plan sheet number

Detail number

GENERAL NOTES (LOAD RESISTANCE FACTOR DESIGN)

DESIGN: AASHTO LRFD Bridge Design Specifications, 4th edition and the Caltrans Amendments, preface dated Dec 2008; except that RW, barrier, and railing details taken from Standard Plans March 2006 and earlier versions are designed using Bridge Design Specifications. ('96 AASHTO w/ Revisions by Caltrans)

V_{530} = 890 ft/sec

SEISMIC DESIGN: Caltrans Seismic Design Criteria (SDC), Version 1.4 dated June 2006

DEAD LOAD: Includes 35 psf for future wearing surface.

LIVE LOAD: HL93 and P15 permit design load.

SEISMIC LOADING: Fault Name: Great Valley Fault 7
Moment Magnitude: Mmax = 6.7
Peak Ground Acceleration: 0.3g

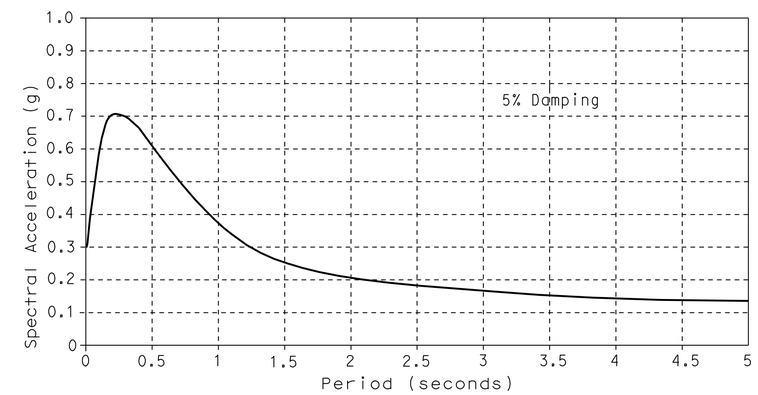

REINFORCED CONCRETE: fy = 60 ksi
f'c = 3.6 ksi and (see concrete strength and type limits for exceptions)

PRESTRESSED CONCRETE: See Pretressing Notes, see "P/S SLAB VOID LAYOUT" sheet

STRUCTURAL STEEL: fy = ASTM A709 Grade 50
Steel HP Piles: ASTM A572 Grade 50

	BY	CHECKED
DESIGN	N. Nguyen	H. Fang
DETAILS	J. Yang	N. Nguyen
QUANTITIES	I. Cherniogio	T. Win

STATE OF CALIFORNIA
DEPARTMENT OF TRANSPORTATION

DIVISION OF ENGINEERING SERVICES
STRUCTURE DESIGN
DESIGN BRANCH 17

BRIDGE NO. 29C0451
POST MILE 0.25 mi S/E OF SH 99

SOUTH STOCKTON WIDENING
DUCK CREEK BRIDGE (REPLACE)
DECK CONTOURS

STRUCTURES DESIGN DETAIL SHEET (ENGLISH) (REV. 09-01-10)

ORIGINAL SCALE IN INCHES FOR REDUCED PLANS 0 1 2 3

UNIT: 3586
PROJECT NUMBER & PHASE: 10000004091
CONTRACT NO.: 10-3A1001

DISREGARD PRINTS BEARING EARLIER REVISION DATES

REVISION DATES 06-27-11 09-08-11 09-09-11 3-1-12

SHEET 2 OF 15

FILE => 29c-0451-d-dc01.dgn

USERNAME => s174937 DATE PLOTTED => 29-MAR-2012 TIME PLOTTED => 12:48

DIST	COUNTY	ROUTE	POST MILES TOTAL PROJECT	SHEET No	TOTAL SHEETS
10	SJ	4,99	R19.5/R20.1, 15.0/18.6	1232	1414

REGISTERED CIVIL ENGINEER 11-04-11 DATE

3-26-12
PLANS APPROVAL DATE

The State of California or its officers or agents shall not be responsible for the accuracy or completeness of electronic copies of this plan sheet.

REGISTERED PROFESSIONAL ENGINEER Chris Udarbe No. C62985 Exp. 06/30/12 CIVIL STATE OF CALIFORNIA

HYDROLOGIC SUMMARY FOR DUCK CREEK			
DRAINAGE AREA: 50.1 SQUARE MILES			
	DESIGN FLOOD	BASE FLOOD	OVER TOPPING FLOOD/FLOOD OF RECORD
FREQUENCY	50 Yrs	100 Yrs	N/A
DISCHARGE	585 cfs	900 cfs	N/A
WATER SURFACE ELEVATION AT BRIDGE	24.3 ft	25.5 ft	N/A

Flood plain data are base upon information available when the plan were prepared and shown to meet federal requirements. The accuracy of said information is not warranted by state, interested and affected parties should make their own investigation.

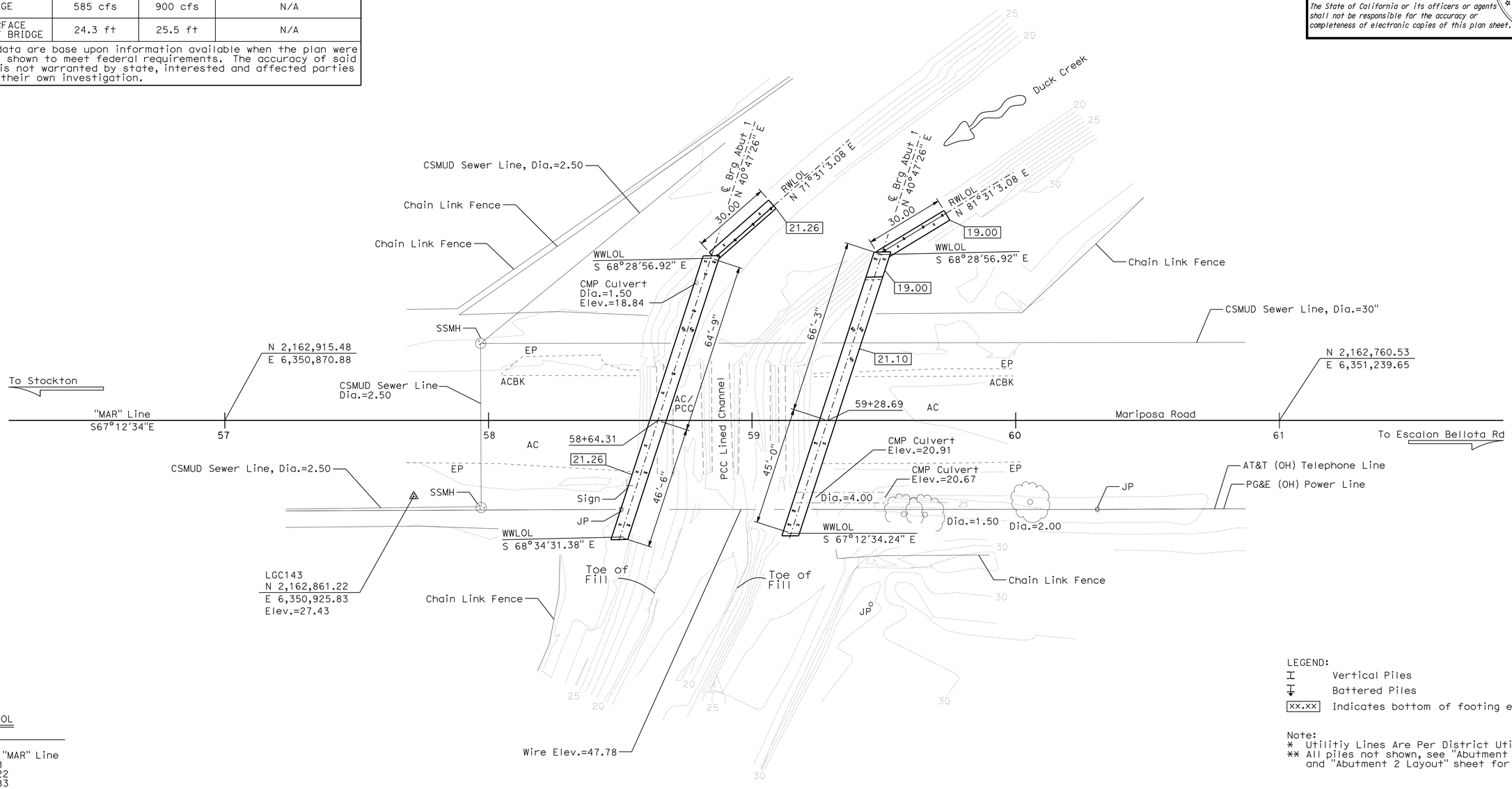

LEGEND:

- Vertical Piles
- Battered Piles
- [xx.xx] Indicates bottom of footing elevation

Note:
* Utilitiy Lines Are Per District Utility Plan
** All piles not shown, see "Abutment 1 Layout" and "Abutment 2 Layout" sheet for pile layout

SURVEY CONTROL

LGC143
Fnd Spike
28.74 FT Rt. "MAR" Line
Sta. 57+71.68
N 2,162,861.22
E 6,350,925.83
Elev. = 27.43

SC1 (Not Shown On Plan)
Fnd PK Nail w/ Shinner
21.02 FT Rt. "MAR" Line
Sta. 62+73.87
N 2,162,673.81
E 6,351,391.80
Elev. = 28.41

PRELIMINARY INVESTIGATION SECTION

SCALE	VERT.DATUM NGVD29	PHOTOGRAMMETRY AS OF: X			
1"=20'	HORZ.DATUM NAD198 (1991.35)	SURVEYED	BY District/T.Gillett	CHECKED	BY T.Gillett 09/2009
ALIGNMENT TIES Dist. Traverse Sheet		DRAFTED	BY J.Martinez 09/2009	CHECKED	BY L.Lew 09/2009

	BY	CHECKED
DESIGN	N. Nguyen	H. Fang
DETAILS	J. Yang	N. Nguyen
QUANTITIES	I. Cherniogio	T. Win

STATE OF CALIFORNIA
DEPARTMENT OF TRANSPORTATION

DIVISION OF ENGINEERING SERVICES
STRUCTURE DESIGN
DESIGN BRANCH 17

BRIDGE NO. 29C0451
POST MILE 0.25 mi S/E OF SH 99

SOUTH STOCKTON WIDEN
DUCK CREEK BRIDGE (REPLACE)
FOUNDATION PLAN

STRUCTURES DESIGN DETAIL SHEET (ENGLISH) (REV. 09-01-10)

ORIGINAL SCALE IN INCHES FOR REDUCED PLANS 0 1 2 3

UNIT: 3646
PROJECT NUMBER & PHASE: 10000004091
CONTRACT NO.: 10-3A1001

DISREGARD PRINTS BEARING EARLIER REVISION DATES

REVISION DATES 9-14-09 11-12-10 3-1-12

SHEET 3 OF 15

FILE => 29c-0451-e-fp.dgn

USERNAME => s128843 DATE PLOTTED => 23-APR-2012 TIME PLOTTED => 18:16

DIST	COUNTY	ROUTE	POST MILES TOTAL PROJECT	SHEET No.	TOTAL SHEETS
10	SJ	4,99	R19.5/R20.1, 15.0/18.6	1233	1414

REGISTERED CIVIL ENGINEER — DATE 11-04-11

PLANS APPROVAL DATE 3-26-12

REGISTERED PROFESSIONAL ENGINEER — Chris Udorbe — No. C62985 — Exp. 6/30/12 — CIVIL — STATE OF CALIFORNIA

The State of California or its officers or agents shall not be responsible for the accuracy or completeness of electronic copies of this plan sheet.

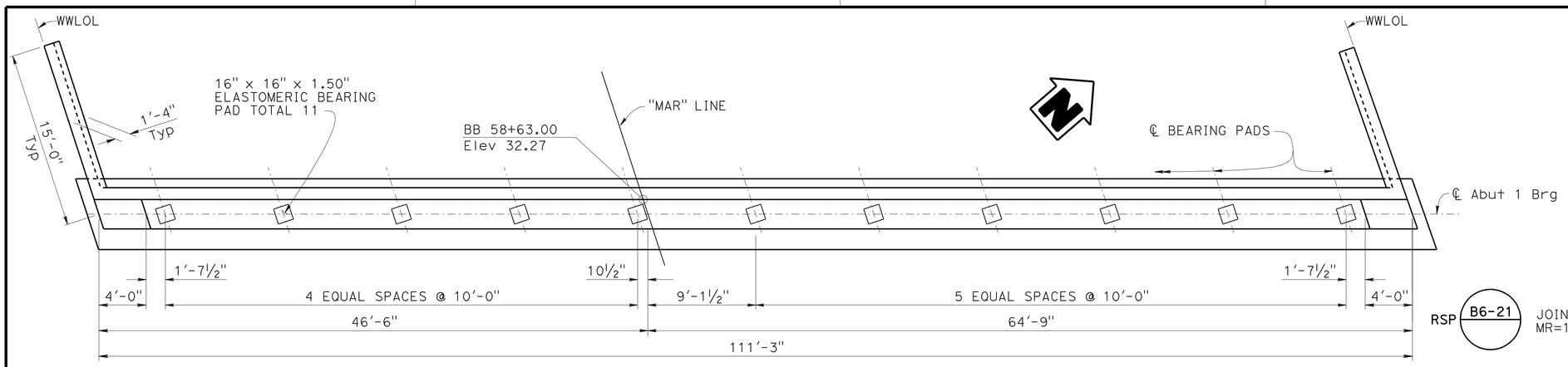

PLAN

3/16" = 1'-0"

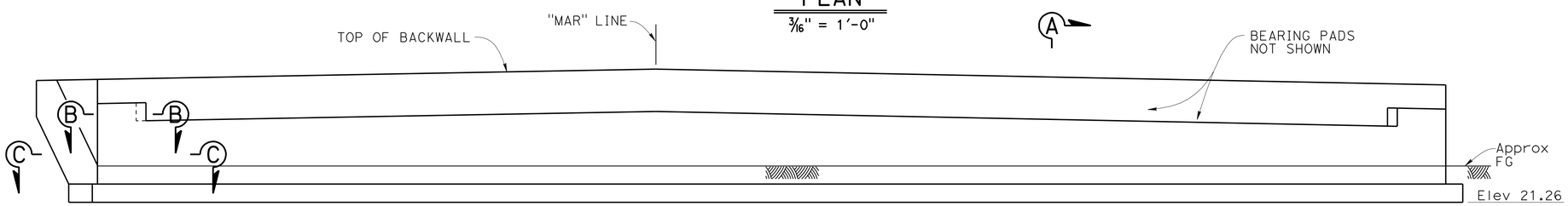

ELEVATION

3/16" = 1'-0"

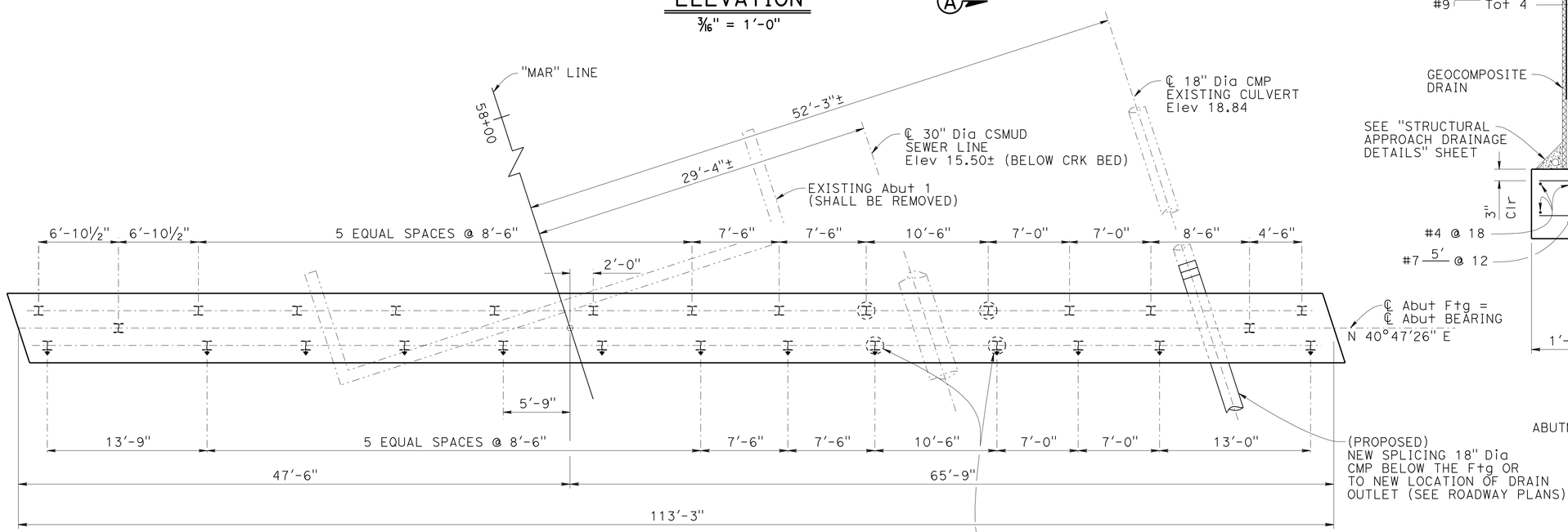

INDICATES 1'-6" Ø PRE-DRILLING HOLES TO ELEVATION 8.0 BEFORE DRIVING PILE. HOLE SHALL BE BACKFILLED WITH CLASS 3 CONCRETE

PILE LAYOUT

3/16" = 1'-0"

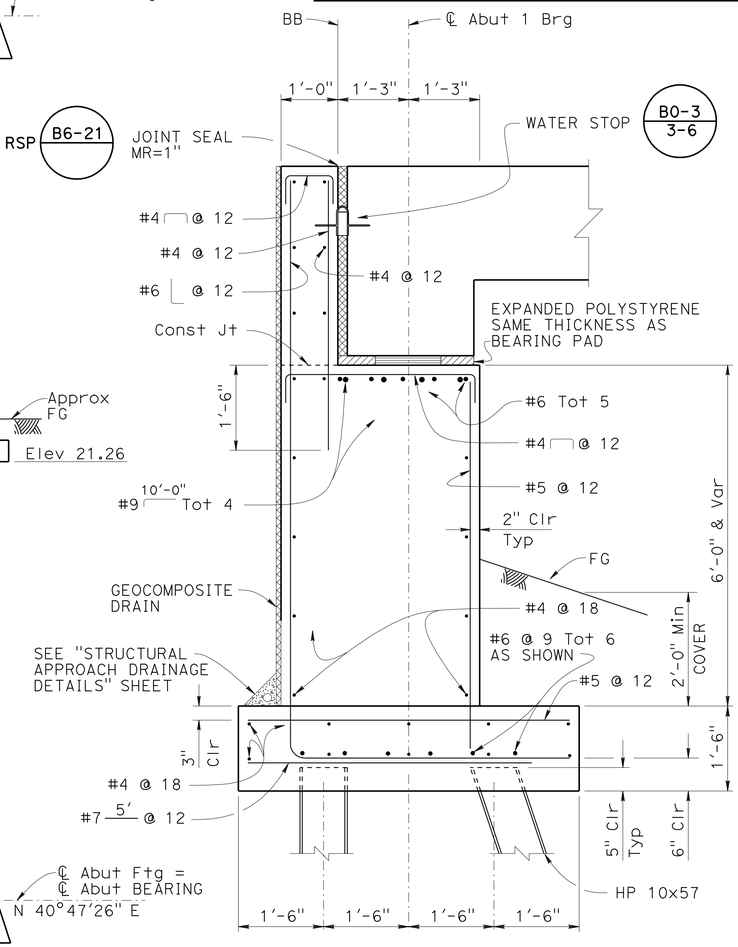

SECTION A-A

3/4" = 1'-0"

ABUTMENT 1 SHOWN ABUTMENT 2 SIMILAR

DESIGN	BY N. Nguyen	CHECKED H. Fang	
DETAILS	BY J. Yang	CHECKED N. Nguyen	
QUANTITIES	BY I. Chernioglo	CHECKED T. Win	

STATE OF CALIFORNIA
DEPARTMENT OF TRANSPORTATION

DIVISION OF ENGINEERING SERVICES
STRUCTURE DESIGN
DESIGN BRANCH 17

BRIDGE NO. 29C0451
POST MILE 0.25 mi S/E OF SH 99

SOUTH STOCKTON WIDENING
DUCK CREEK BRIDGE (REPLACE)
ABUTMENT 1 LAYOUT

STRUCTURES DESIGN DETAIL SHEET (ENGLISH) (REV. 09-01-10)

ORIGINAL SCALE IN INCHES FOR REDUCED PLANS 0 1 2 3

UNIT: 3586
PROJECT NUMBER & PHASE: 10000004091
CONTRACT NO.: 10-3A1001

DISREGARD PRINTS BEARING EARLIER REVISION DATES

REVISION DATES: 06-27-11 07-06-11 09-08-11 3-1-12

SHEET 4 OF 15

FILE => 29c-0451-f-a1o01.dgn

USERNAME => s174937 DATE PLOTTED => 29-MAR-2012 TIME PLOTTED => 12:49

DIST	COUNTY	ROUTE	POST MILES TOTAL PROJECT	SHEET No.	TOTAL SHEETS
10	SJ	4,99	R19.5/R20.1, 15.0/18.6	1234	1414

REGISTERED CIVIL ENGINEER — DATE 11-04-11

PLANS APPROVAL DATE 3-26-12

REGISTERED PROFESSIONAL ENGINEER — Chris Udorbe — No. C62985 — Exp. 6/30/12 — CIVIL — STATE OF CALIFORNIA

The State of California or its officers or agents shall not be responsible for the accuracy or completeness of electronic copies of this plan sheet.

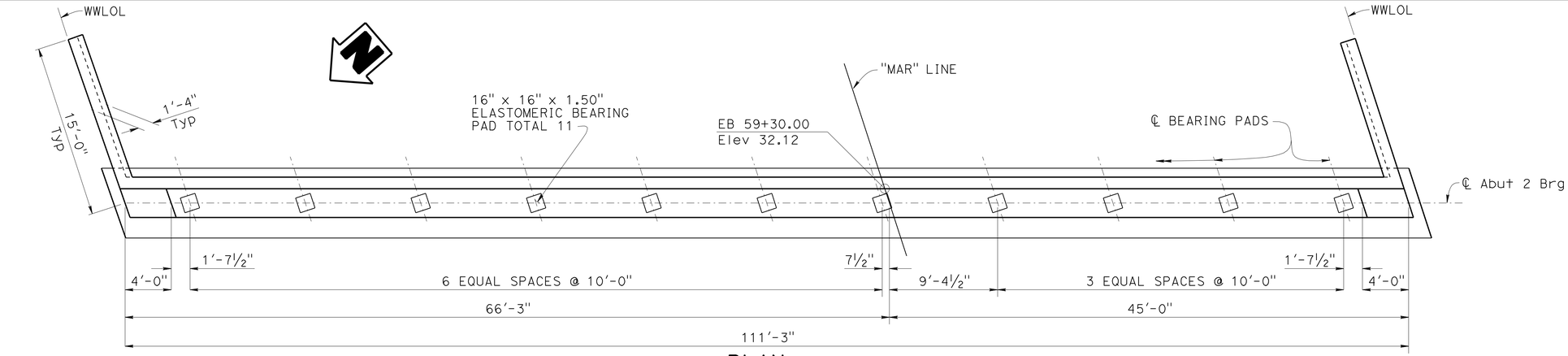

PLAN

3/16" = 1'-0"

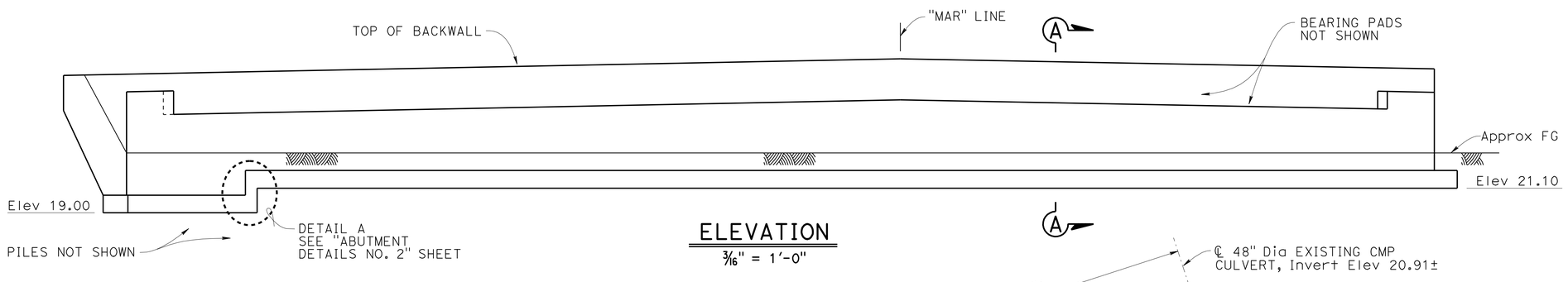

ELEVATION

3/16" = 1'-0"

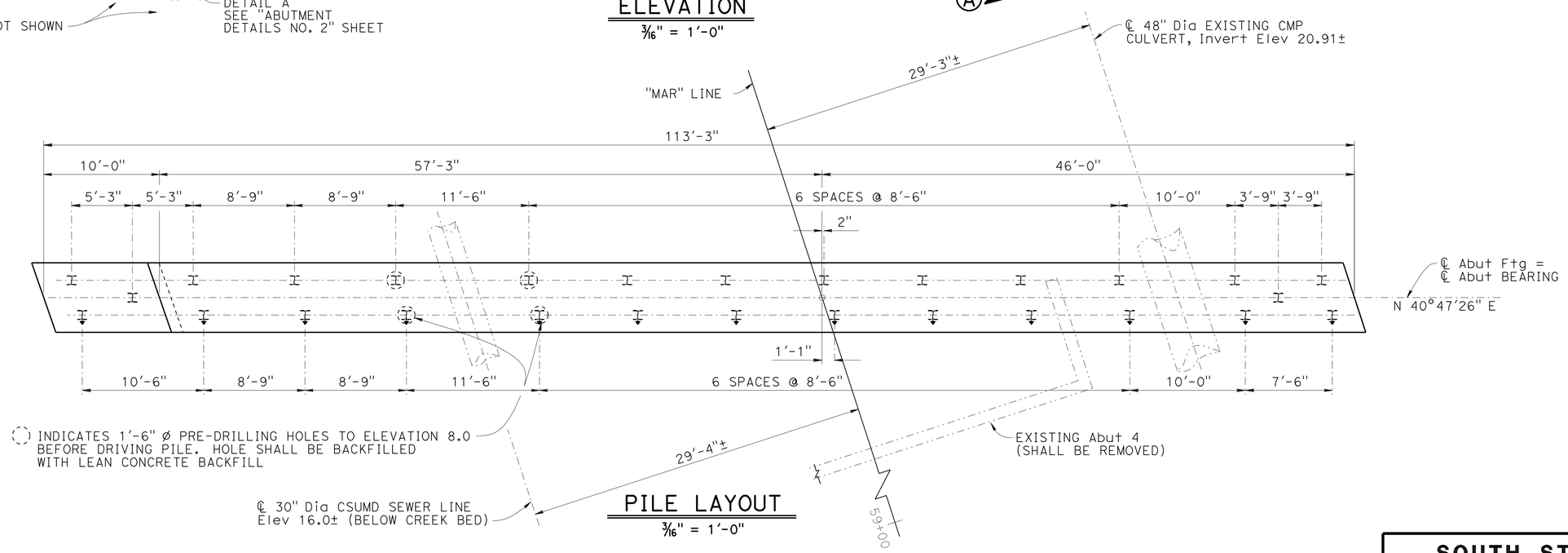

PILE LAYOUT

3/16" = 1'-0"

DESIGN	BY N. Nguyen	CHECKED H. Fang	
DETAILS	BY J. Yang	CHECKED N. Nguyen	
QUANTITIES	BY I. Cherniogio	CHECKED T. Win	

STATE OF CALIFORNIA
DEPARTMENT OF TRANSPORTATION

DIVISION OF ENGINEERING SERVICES
STRUCTURE DESIGN
DESIGN BRANCH 17

BRIDGE NO. 29C0451
POST MILE 0.25 mi S/E OF SH 99

SOUTH STOCKTON WIDENING
DUCK CREEK BRIDGE (REPLACE)
ABUTMENT 2 LAYOUT

STRUCTURES DESIGN DETAIL SHEET (ENGLISH) (REV. 09-01-10)

ORIGINAL SCALE IN INCHES FOR REDUCED PLANS 0 1 2 3

UNIT: 3586
PROJECT NUMBER & PHASE: 10000004091
CONTRACT NO.: 10-3A1001

DISREGARD PRINTS BEARING EARLIER REVISION DATES

REVISION DATES: 11-12-10 09-06-11 3-1-12 07-06-11

SHEET 5 OF 15

FILE => 29c-0451-f-a1a02.dgn

USERNAME => s114937 DATE PLOTTED => 29-MAR-2012 TIME PLOTTED => 12:49

DIST	COUNTY	ROUTE	POST MILES TOTAL PROJECT	SHEET No.	TOTAL SHEETS
10	SJ	4,99	R19.5/R20.1, 15.0/18.6	1235	1414

REGISTERED CIVIL ENGINEER 11-04-11 DATE

3-26-12
PLANS APPROVAL DATE

REGISTERED PROFESSIONAL ENGINEER Chris Udorbe No. C62985 Exp. 6/30/12 CIVIL STATE OF CALIFORNIA

The State of California or its officers or agents shall not be responsible for the accuracy or completeness of electronic copies of this plan sheet.

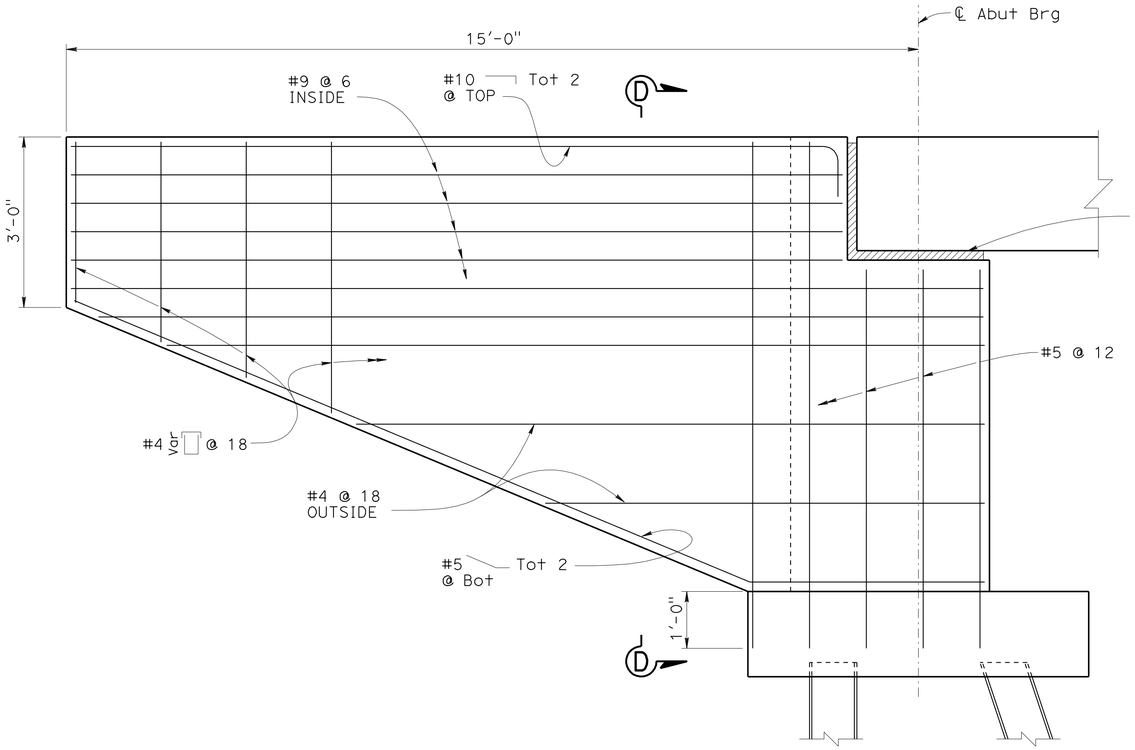

ABUTMENT WINGWALL ELEVATION

¾" = 1'-0"

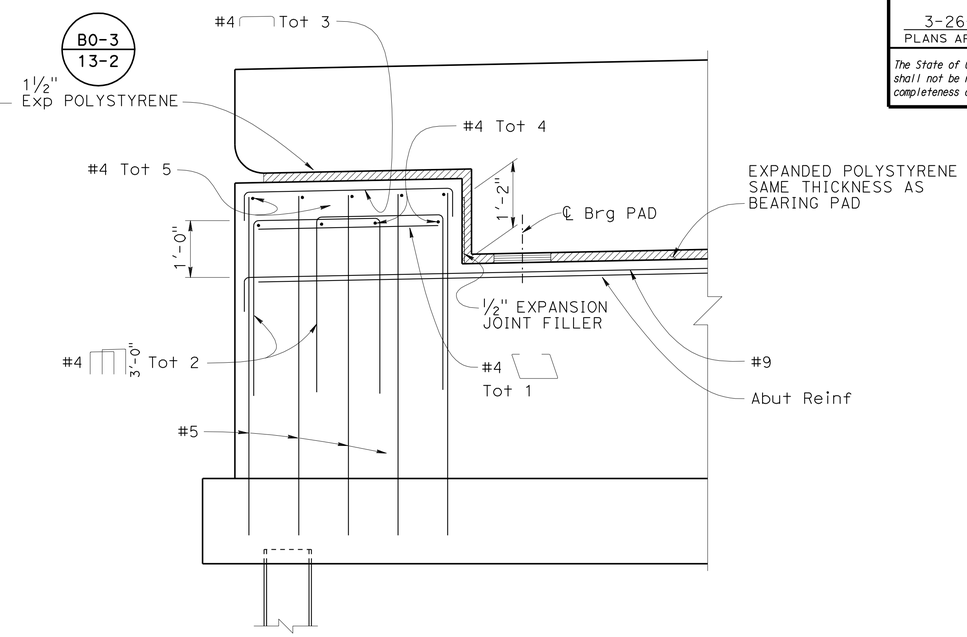

ABUTMENT EXTERIOR SHEAR KEY

¾" = 1'-0"

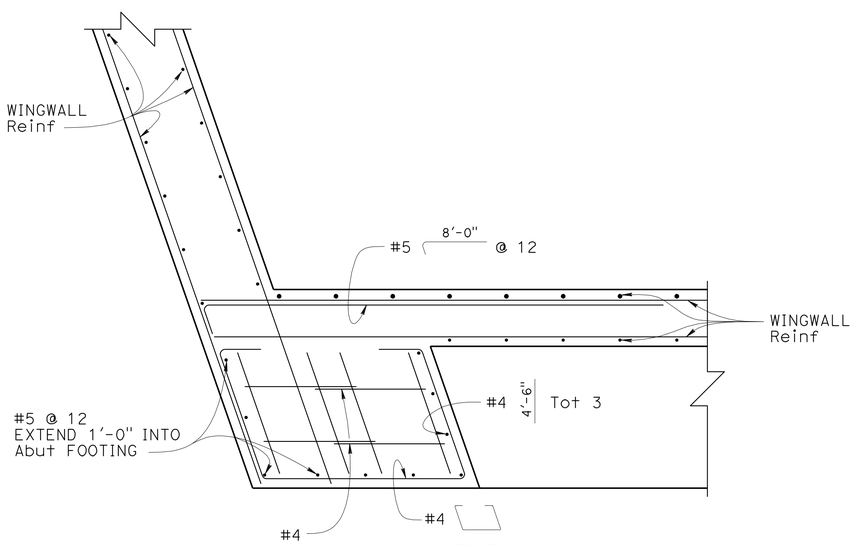

SECTION B-B

¾" = 1'-0"

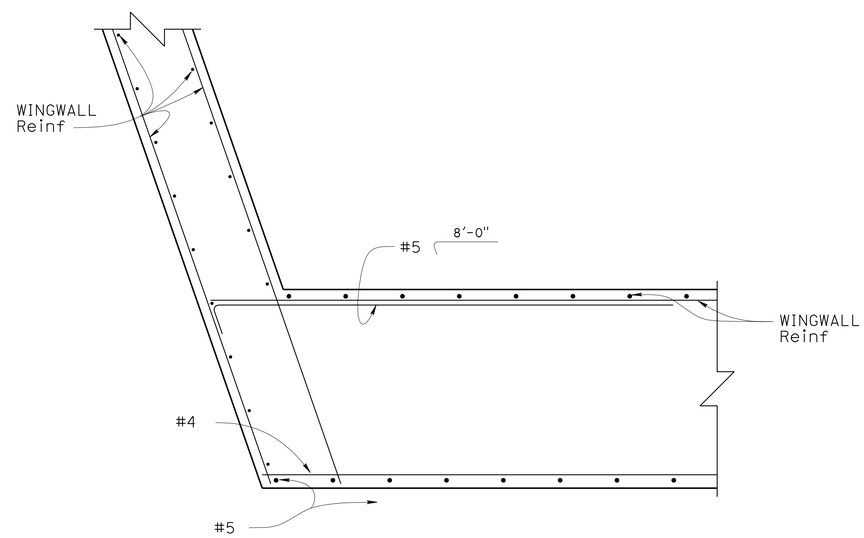

SECTION C-C

¾" = 1'-0"

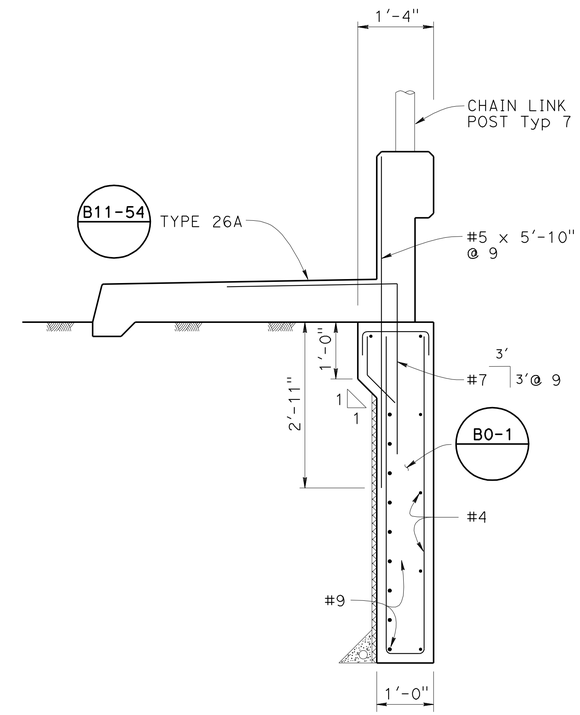

SECTION D-D

¾" = 1'-0"

DESIGN	BY N. Nguyen	CHECKED H. Fang	
DETAILS	BY J. Yang	CHECKED N. Nguyen	
QUANTITIES	BY I. Chernigolo	CHECKED T. Win	

STATE OF CALIFORNIA
DEPARTMENT OF TRANSPORTATION

DIVISION OF ENGINEERING SERVICES
STRUCTURE DESIGN
DESIGN BRANCH 17

BRIDGE NO. 29C0451
POST MILE 0.25 mi S/E OF SH 99

SOUTH STOCKTON WIDENING
DUCK CREEK BRIDGE (REPLACE)
ABUTMENT DETAILS NO. 1

STRUCTURES DESIGN DETAIL SHEET (ENGLISH) (REV. 09-01-10)

ORIGINAL SCALE IN INCHES FOR REDUCED PLANS 0 1 2 3

UNIT: 3586
PROJECT NUMBER & PHASE: 10000004091
CONTRACT NO.: 10-3A1001

DISREGARD PRINTS BEARING EARLIER REVISION DATES

REVISION DATES 11-16-10 11-16-10 12-02-10 3-1-12

SHEET 6 OF 15

FILE => 29c-0451-g-adt01.dgn

USERNAME => s114937 DATE PLOTTED => 29-MAR-2012 TIME PLOTTED => 12:49

DIST	COUNTY	ROUTE	POST MILES TOTAL PROJECT	SHEET No.	TOTAL SHEETS
10	SJ	4,99	R19.5/R20.1, 15.0/18.6	1236	1414

REGISTERED CIVIL ENGINEER 11-04-11 DATE

3-26-12
PLANS APPROVAL DATE

REGISTERED PROFESSIONAL ENGINEER Chris Udorbe No. C62985 Exp. 6/30/12 CIVIL STATE OF CALIFORNIA

The State of California or its officers or agents shall not be responsible for the accuracy or completeness of electronic copies of this plan sheet.

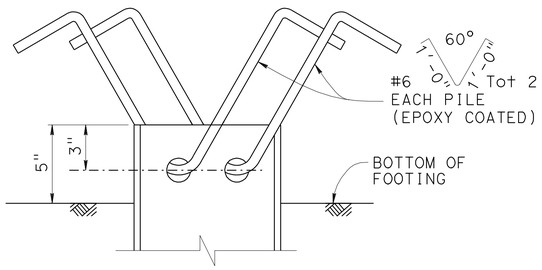

ELEVATION

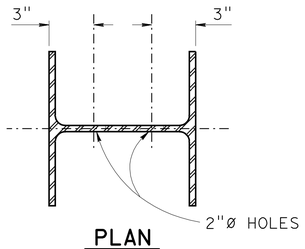

PLAN

STEEL PILE ANCHOR DETAIL

No Scale

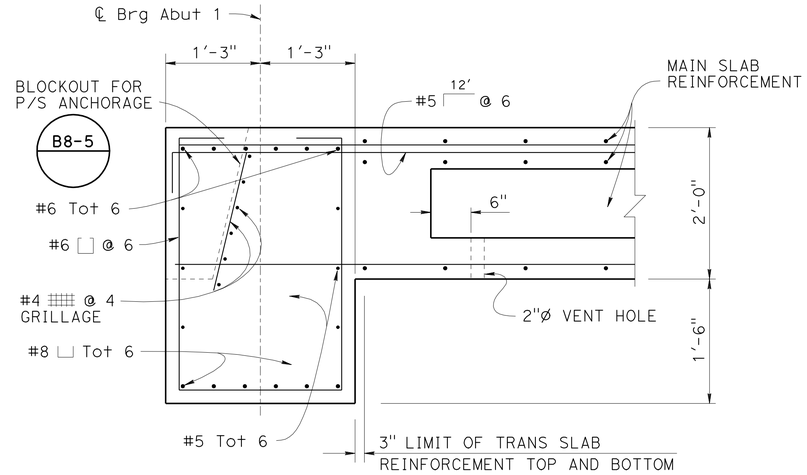

END DIAPHRAGM

1" = 1'-0"

B8-5

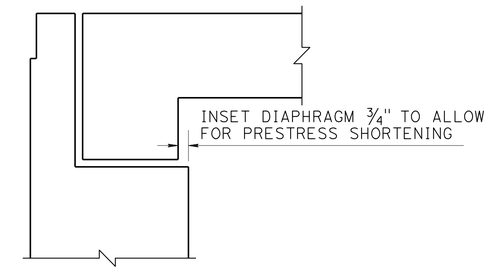

DIAPHRAGM OFFSET

No Scale

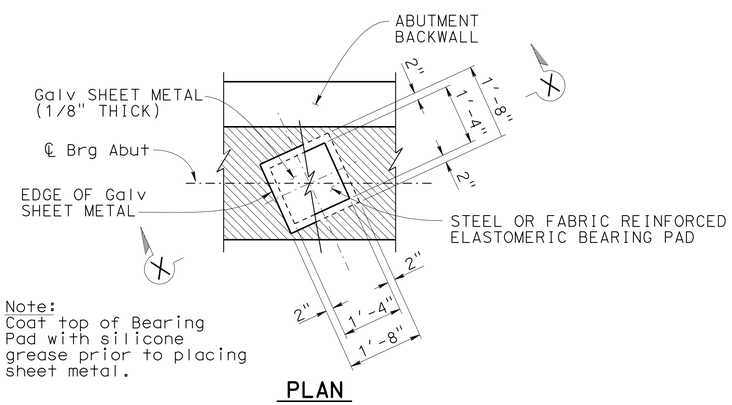

Note:
Coat top of Bearing Pad with silicone grease prior to placing sheet metal.

PLAN

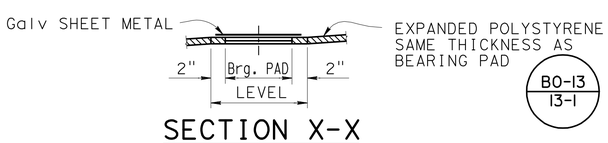

SECTION X-X

BEARING PAD DETAIL

No Scale

Details typical at all bearing pads

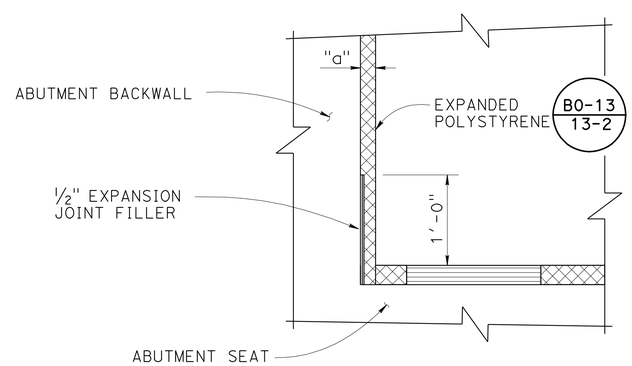

BACKWALL BASE DETAIL

NO SCALE

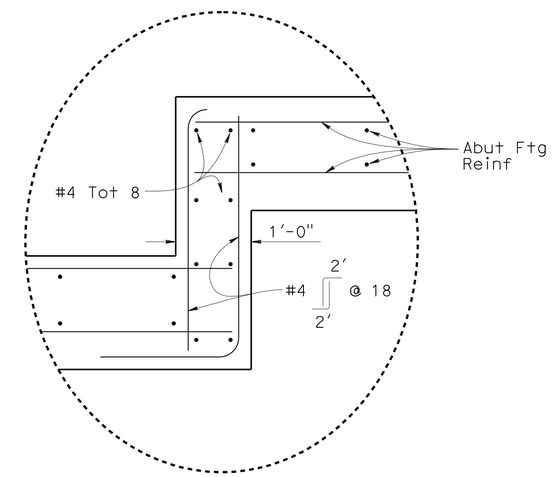

DETAIL A-A

1" = 1'-0"

DESIGN	BY N. Nguyen	CHECKED H. Fang	
DETAILS	BY J. Yang	CHECKED N. Nguyen	
QUANTITIES	BY I. Cherniogio	CHECKED T. Win	

STATE OF CALIFORNIA
DEPARTMENT OF TRANSPORTATION

DIVISION OF ENGINEERING SERVICES
STRUCTURE DESIGN
DESIGN BRANCH 17

BRIDGE NO. 29C0451
POST MILE 0.25 mi S/E OF SH 99

SOUTH STOCKTON WIDENING
DUCK CREEK BRIDGE (REPLACE)
ABUTMENT DETAILS NO. 2

STRUCTURES DESIGN DETAIL SHEET (ENGLISH) (REV. 09-01-10)

ORIGINAL SCALE IN INCHES FOR REDUCED PLANS 0 1 2 3

UNIT: 3586
PROJECT NUMBER & PHASE: 10000004091
CONTRACT NO.: 10-3A1001

DISREGARD PRINTS BEARING EARLIER REVISION DATES

REVISION DATES: 11-16-10 11-16-10 12-02-10 3-1-12

SHEET 7 OF 15

FILE => 29c-0451-g-adt02.dgn

USERNAME => s114937 DATE PLOTTED => 29-MAR-2012 TIME PLOTTED => 12:49

DIST	COUNTY	ROUTE	POST MILES TOTAL PROJECT	SHEET No.	TOTAL SHEETS
10	SJ	4,99	R19.5/R20.1, 15.0/18.6	1237	1414

REGISTERED CIVIL ENGINEER — DATE 11-04-11

PLANS APPROVAL DATE 3-26-12

REGISTERED PROFESSIONAL ENGINEER — Chris Udorbe — No. C62985 — Exp. 6/30/12 — CIVIL — STATE OF CALIFORNIA

The State of California or its officers or agents shall not be responsible for the accuracy or completeness of electronic copies of this plan sheet.

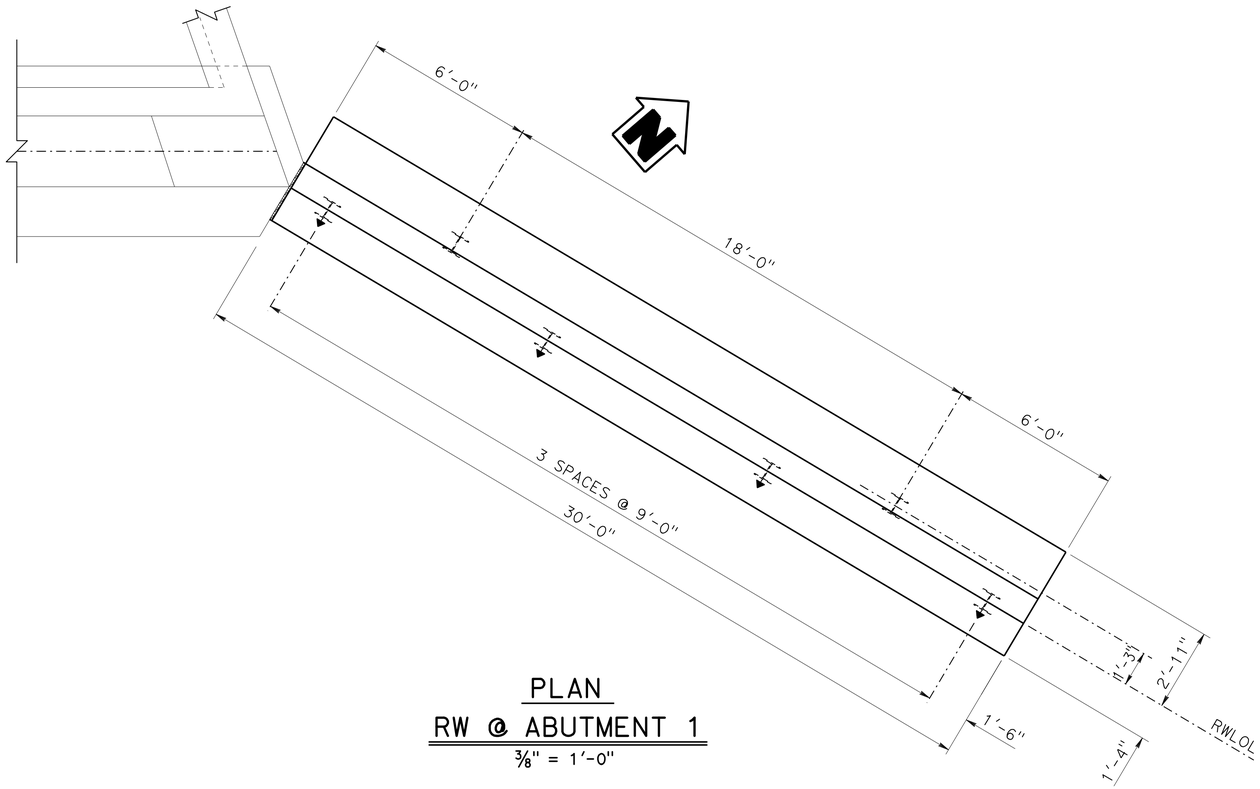

PLAN
RW @ ABUTMENT 1
3/8" = 1'-0"

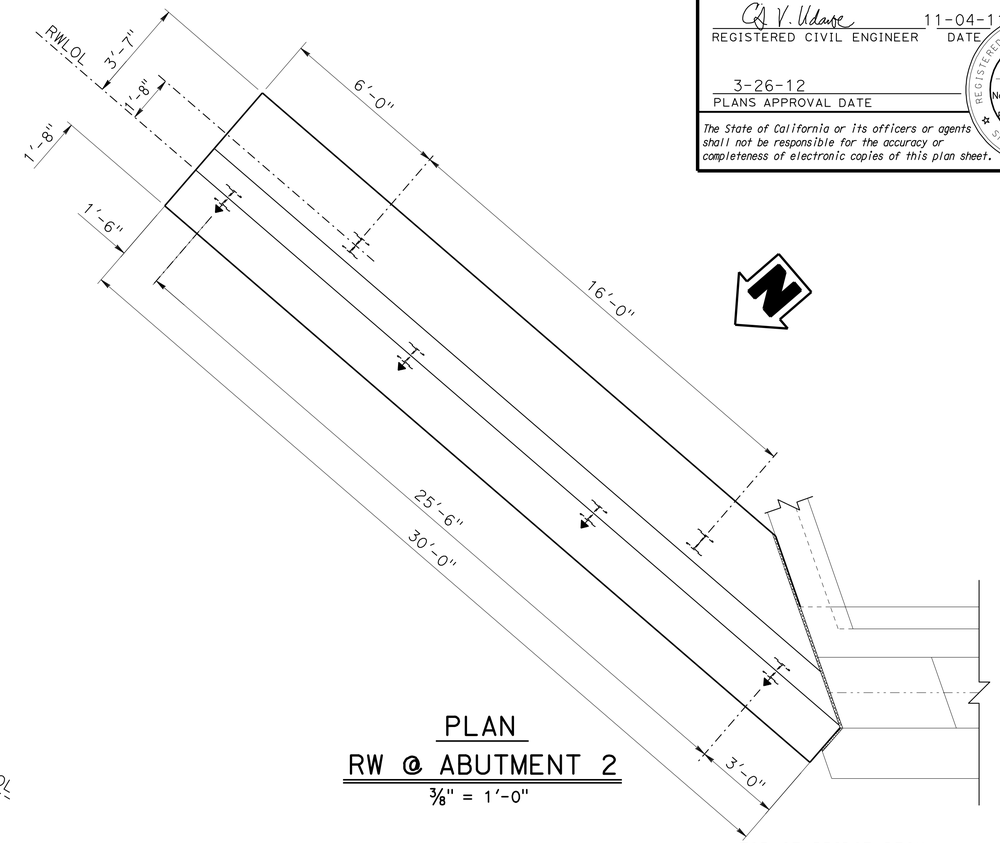

PLAN
RW @ ABUTMENT 2
3/8" = 1'-0"

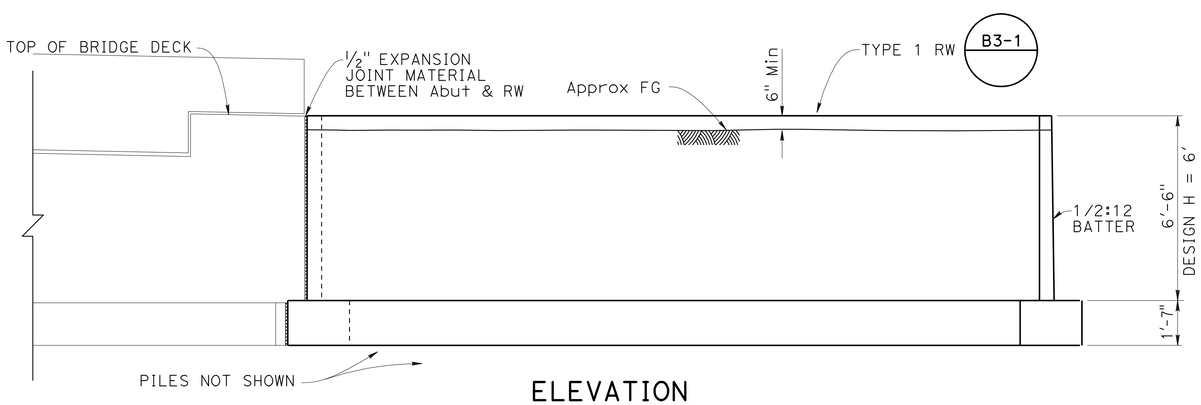

ELEVATION
RW @ ABUTMENT 1
3/8" = 1'-0"

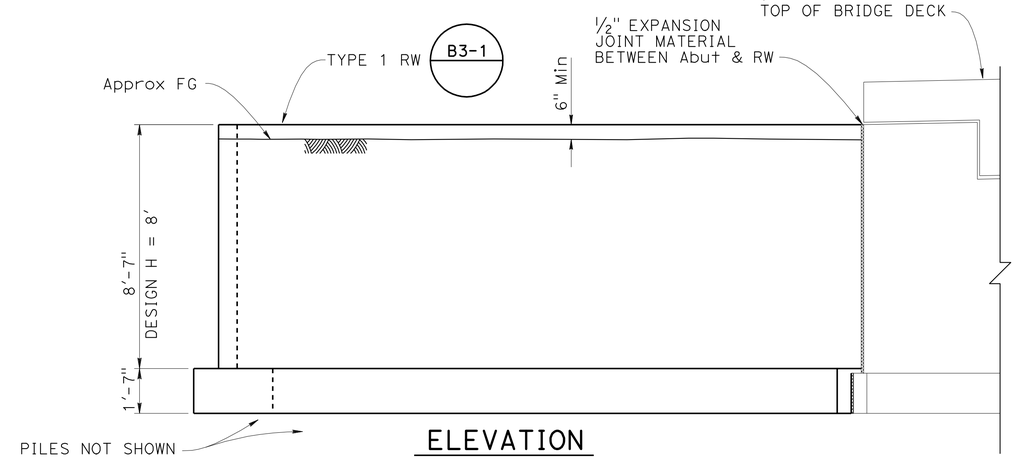

ELEVATION
RW @ ABUTMENT 2
3/8" = 1'-0"

DESIGN	BY N. Nguyen	CHECKED H. Fang	
DETAILS	BY J. Yang	CHECKED N. Nguyen	
QUANTITIES	BY I. Cherniogio	CHECKED T. Win	

STATE OF CALIFORNIA
DEPARTMENT OF TRANSPORTATION

DIVISION OF ENGINEERING SERVICES
STRUCTURE DESIGN
DESIGN BRANCH 17

BRIDGE NO. 29C0451
POST MILE 0.25 mi S/E OF SH 99

SOUTH STOCKTON WIDENING
DUCK CREEK BRIDGE (REPLACE)
RETAINING WALL LAYOUT

STRUCTURES DESIGN DETAIL SHEET (ENGLISH) (REV. 09-01-10)

ORIGINAL SCALE IN INCHES FOR REDUCED PLANS 0 1 2 3

UNIT: 3586
PROJECT NUMBER & PHASE: 10000004091
CONTRACT NO.: 10-3A1001

DISREGARD PRINTS BEARING EARLIER REVISION DATES

REVISION DATES: 10-14-10 11-12-10 3-1-12

SHEET 8 OF 15

FILE => 29c-0451-g-rwlo01.dgn

USERNAME => s114926 DATE PLOTTED => 29-MAR-2012 TIME PLOTTED => 13:04

DIST	COUNTY	ROUTE	POST MILES TOTAL PROJECT	SHEET No.	TOTAL SHEETS
10	SJ	4,99	R19.5/R20.1, 15.0/18.6	1238	1414

REGISTERED CIVIL ENGINEER — DATE 11-04-11

PLANS APPROVAL DATE 3-26-12

REGISTERED PROFESSIONAL ENGINEER — Chris Udorbe — No. C62985 — Exp. 6/30/12 — CIVIL — STATE OF CALIFORNIA

The State of California or its officers or agents shall not be responsible for the accuracy or completeness of electronic copies of this plan sheet.

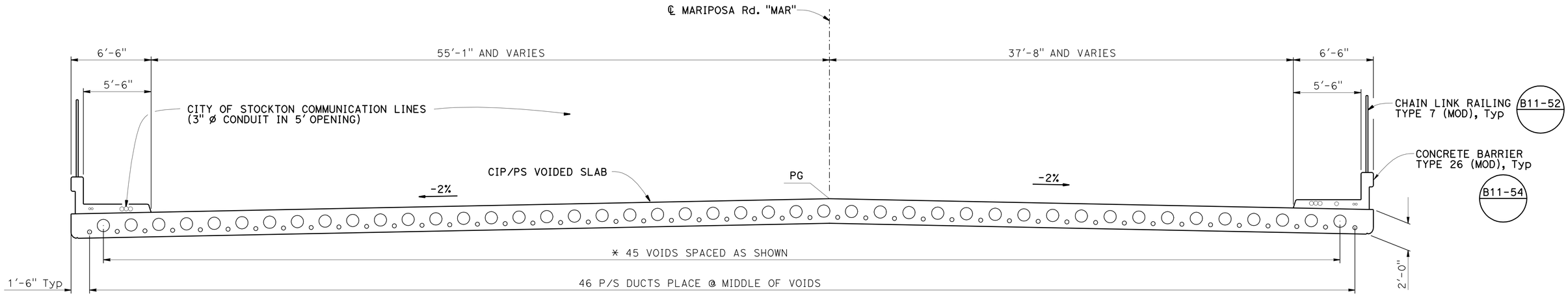

* See void layout in "P/S SLAB VOID LAYOUT" sheet.

TYPICAL SECTION

1/4" = 1'-0"

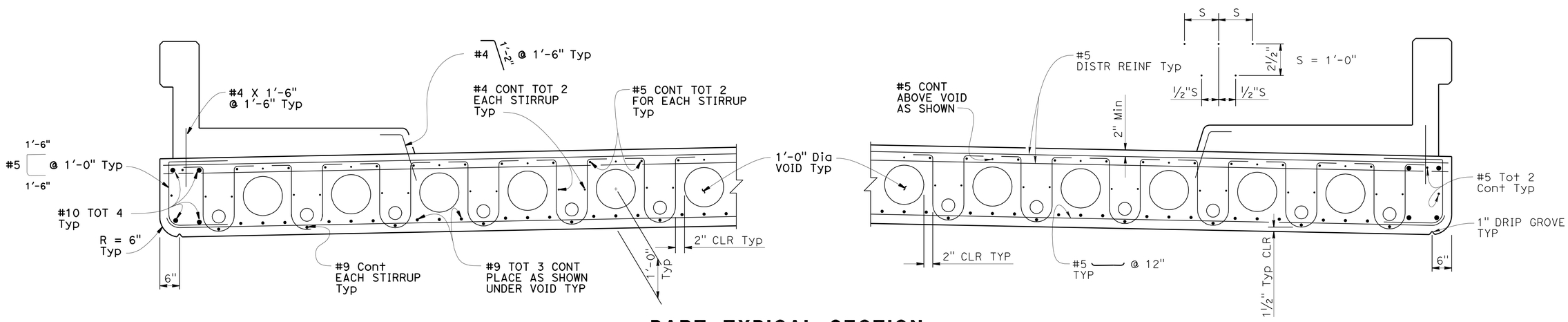

PART TYPICAL SECTION

3/4" = 1'-0"

NOTE:

Tranverse reinforcement place parallel to BB and EB.

DESIGN	BY N. Nguyen	CHECKED H. Fang	
DETAILS	BY J. Yang	CHECKED N. Nguyen	
QUANTITIES	BY I. Cherniogio	CHECKED T. Win	

STATE OF CALIFORNIA
DEPARTMENT OF TRANSPORTATION

DIVISION OF ENGINEERING SERVICES
STRUCTURE DESIGN
DESIGN BRANCH 17

BRIDGE NO. 29C-0451
POST MILE 0.25 mi S/E OF SH 99

SOUTH STOCKTON WIDENING
DUCK CREEK BRIDGE (REPLACE)
TYPICAL SECTION

STRUCTURES DESIGN DETAIL SHEET (ENGLISH) (REV. 09-01-10)

ORIGINAL SCALE IN INCHES FOR REDUCED PLANS 0 1 2 3

UNIT: 3586
PROJECT NUMBER & PHASE: 10000004091
CONTRACT NO.: 10-3A1001

DISREGARD PRINTS BEARING EARLIER REVISION DATES

REVISION DATES 12-02-10 06-07-11 7-21-11 09-20-11

SHEET 9 OF 15

FILE => 29c-0451-k-ts01.dgn

USERNAME => s114926 DATE PLOTTED => 29-MAR-2012 TIME PLOTTED => 13:04

DIST	COUNTY	ROUTE	POST MILES TOTAL PROJECT	SHEET No.	TOTAL SHEETS
10	SJ	4,99	R19.5/R20.1, 15.0/18.6	1239	1414

REGISTERED CIVIL ENGINEER 11-04-11 DATE

3-26-12
PLANS APPROVAL DATE

REGISTERED PROFESSIONAL ENGINEER Chris Udorbe No. C62985 Exp. 6/30/12 CIVIL STATE OF CALIFORNIA

The State of California or its officers or agents shall not be responsible for the accuracy or completeness of electronic copies of this plan sheet.

NOTES:

1. For slab girder reinforcement see "Typical Section" sheet.

⊠ Indicates point of no movement.

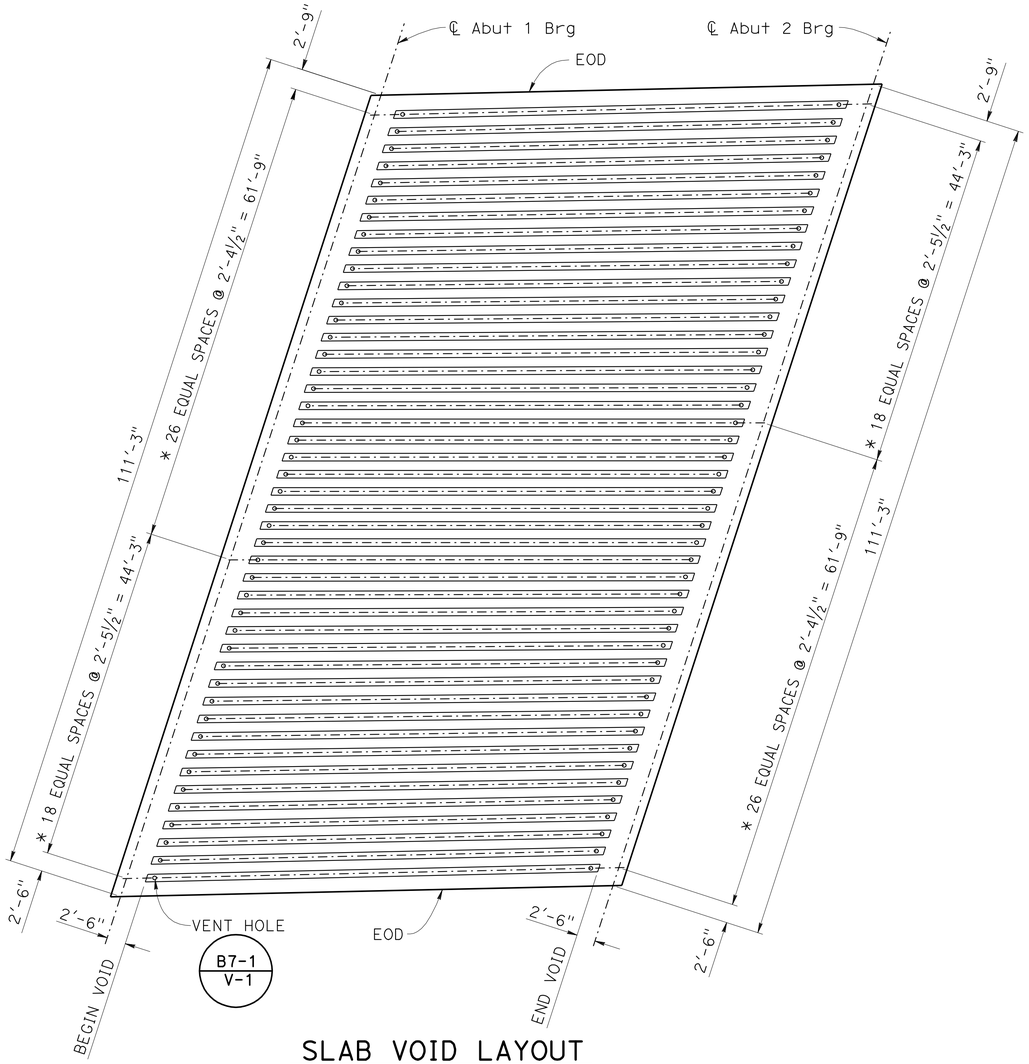

SLAB VOID LAYOUT

1" = 10'

* Slab void layout from left to right looking up station.

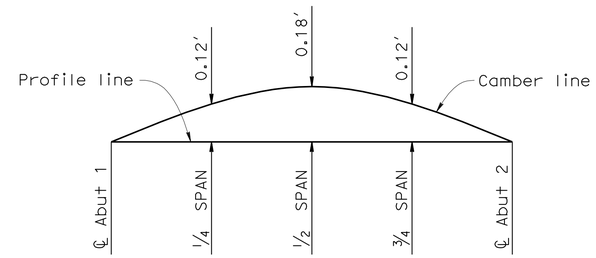

CAMBER DIAGRAM

NO SCALE

Camber values shown do not include allowance for false work settlement

PRESTRESSING NOTES:

Design based on 270 ksi low relaxation strand

P_{jack} = 22080 kips

Anchor Set = ⅜"

Total Number of Tendons = 46

μ = 0.15/Rad

K = 0.0002/ft

Assumed long term loss = 25 ksi

Distribution of prestress force between voids are equal

f'_c = 5000 psi @ 28 days

f'_{ci} = 3500 psi @ time of stressing

Contractor shall submit elongation calculations based on initial stress at

⊠ = 0.9340 times jacking stress

One end stressing shall be performed from either end.

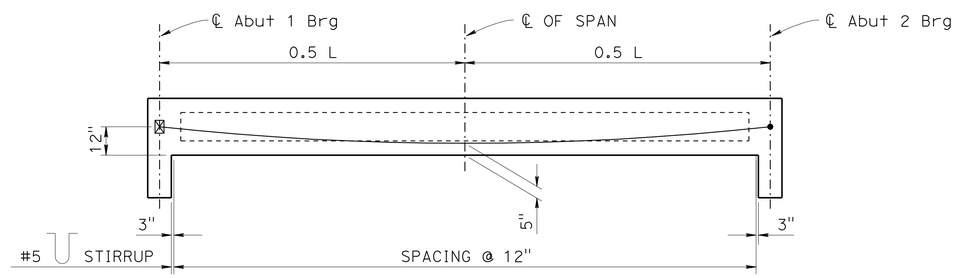

LONGITUDINAL SECTION

NO SCALE

DESIGN	BY N. Nguyen	CHECKED H. Fang	
DETAILS	BY J. Yang	CHECKED N. Nguyen	
QUANTITIES	BY I. Chernioglo	CHECKED T. Win	

STATE OF CALIFORNIA DEPARTMENT OF TRANSPORTATION

DIVISION OF ENGINEERING SERVICES STRUCTURE DESIGN DESIGN BRANCH 17

BRIDGE NO. 29C0451

POST MILE 0.25 mi S/E OF SH 99

SOUTH STOCKTON WIDENING
DUCK CREEK BRIDGE (REPLACE)
P/S SLAB VOID LAYOUT

STRUCTURES DESIGN DETAIL SHEET (ENGLISH) (REV. 09-01-10)

ORIGINAL SCALE IN INCHES FOR REDUCED PLANS 0 1 2 3

UNIT: 3586
PROJECT NUMBER & PHASE: 10000004091
CONTRACT NO.: 10-3A1001

DISREGARD PRINTS BEARING EARLIER REVISION DATES

REVISION DATES 12-07-10 06-22-11 09-06-11 01-10-12

SHEET 10 OF 15

FILE => 29c-0451-l-sv-.dgn

USERNAME => s114926 DATE PLOTTED => 29-MAR-2012 TIME PLOTTED => 13:05

DIST	COUNTY	ROUTE	POST MILES TOTAL PROJECT	SHEET No.	TOTAL SHEETS
10	SJ	4,99	R19.5/R20.1, 15.0/18.6	1240	1414

REGISTERED CIVIL ENGINEER 11-04-11 DATE

3-26-12
PLANS APPROVAL DATE

REGISTERED PROFESSIONAL ENGINEER Chris Udarbe No. C62985 Exp. 6/30/12 CIVIL STATE OF CALIFORNIA

The State of California or its officers or agents shall not be responsible for the accuracy or completeness of electronic copies of this plan sheet.

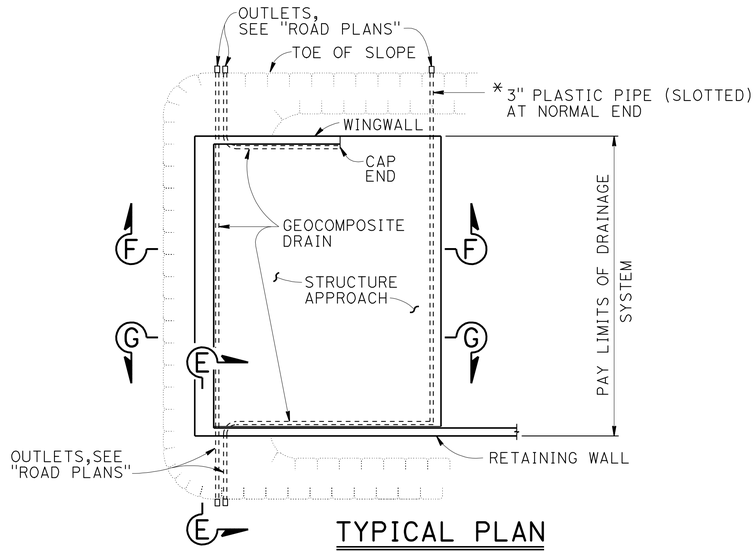

TYPICAL PLAN

1" = 10'

* FOR PIPE LAYOUT AT STAGGERED END, SEE "DETAIL B"

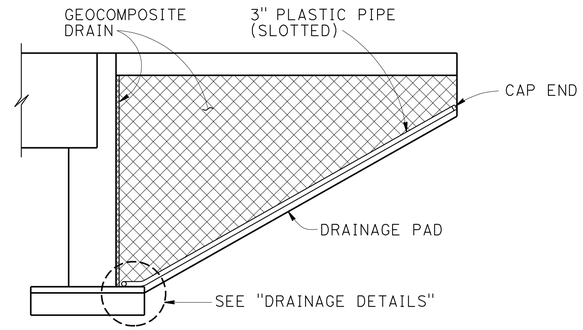

CANTILEVER WINGWALL

SECTION F-F

1/4" = 1'-0"

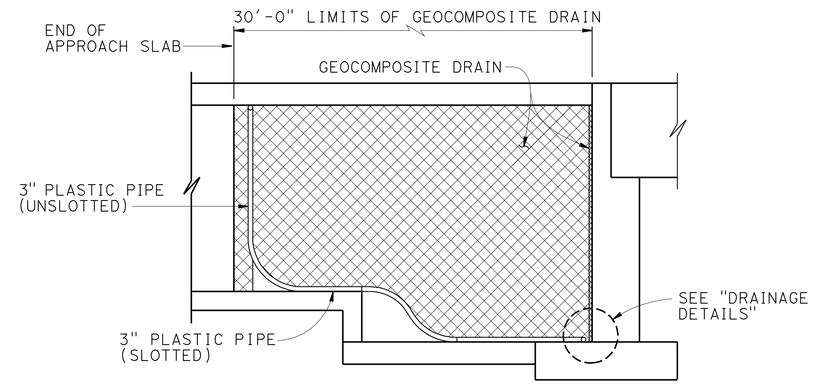

RETAINING WALL WINGWALL DRAINAGE DETAILS

SECTION G-G

1/4" = 1'-0"

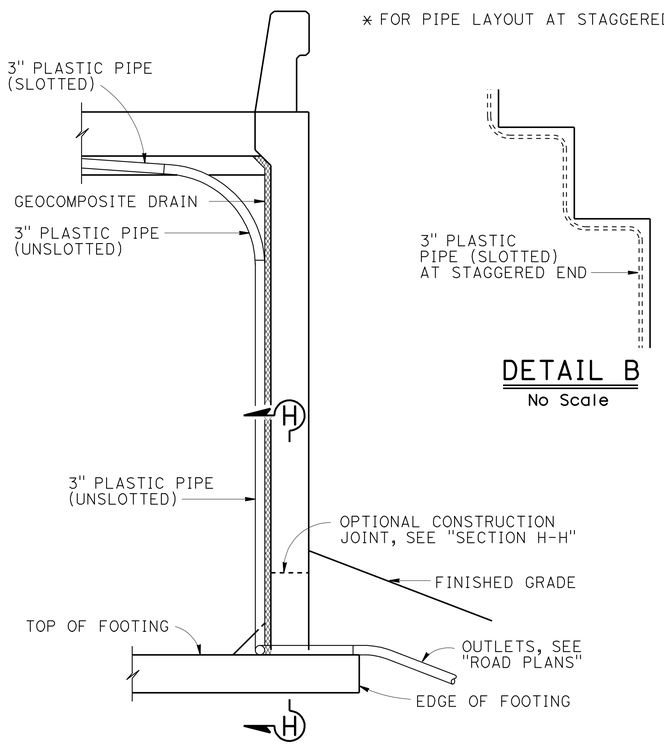

DETAIL B

No Scale

SECTION E-E

1/2" = 1'-0"

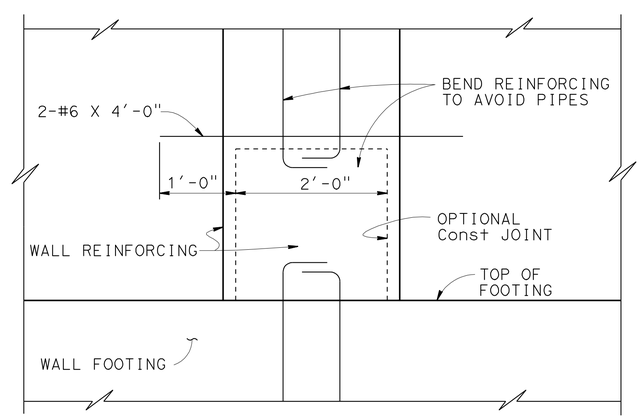

SECTION H-H

1" = 1'-0"

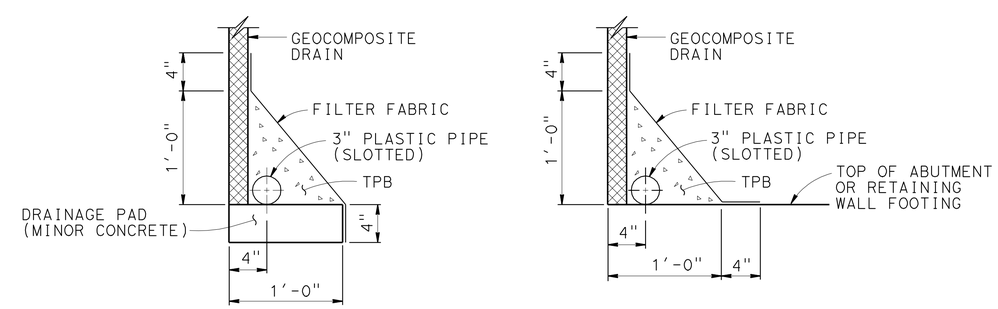

WITHOUT FOOTING

WITH FOOTING

DRAINAGE DETAILS

1 1/2" = 1'-0"

NOTE: Bends and junctions in 3" plastic pipe are 30" radius Min

STANDARD DRAWING

FILE NO. xs3-110

APPROVAL DATE July 2011

STATE OF CALIFORNIA DEPARTMENT OF TRANSPORTATION

DIVISION OF ENGINEERING SERVICES

BRIDGE NO. 29C0451

POST MILE 0.25 mi S/E OF SH 99

SOUTH STOCKTON WIDENING

DUCK CREEK BRIDGE (WIDEN)

STRUCTURE APPROACH DRAINAGE DETAILS

DS OSD 2147A (ENGLISH STANDARD DRAWING "XS" BORDER REV. (02-02-11)

ORIGINAL SCALE IN INCHES FOR REDUCED PLANS 0 1 2 3

UNIT: 3586
PROJECT NUMBER & PHASE: 10000004091
CONTRACT NO.: 10-3A1001

DISREGARD PRINTS BEARING EARLIER REVISION DATES

REVISION DATES 3-1-12

SHEET 11 OF 15

FILE => 29c-0451-s-sadd.dgn

USERNAME => s114926 DATE PLOTTED => 29-MAR-2012 TIME PLOTTED => 13:05

DIST	COUNTY	ROUTE	POST MILES TOTAL PROJECT	SHEET No	TOTAL SHEETS
10	SJ	4,99	R19.5/R20.1, 15.0/18.6	1241	1414

Joseph M Kaump 8-30-11
PROFESSIONAL GEOLOGIST

3-26-12
PLANS APPROVAL DATE

PROFESSIONAL GEOLOGIST Joseph Kaump No. 7837 Exp. 01-31-13 STATE OF CALIFORNIA

The State of California or its officers or agents shall not be responsible for the accuracy or completeness of electronic copies of this plan sheet.

This LOTB sheet was prepared in accordance with the Caltrans Soil & Rock Logging, Classification, & Presentation Manual (2010 Edition).

BENCH MARK

LGC 143
Fnd Spike
28.74′ Rt "MAR" Line
Sta 57+71.68
Elev 27.43′
Vert Datum: NGVD29

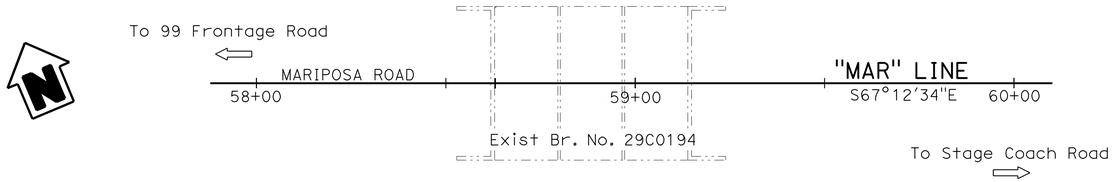

PLAN

1" = 20′

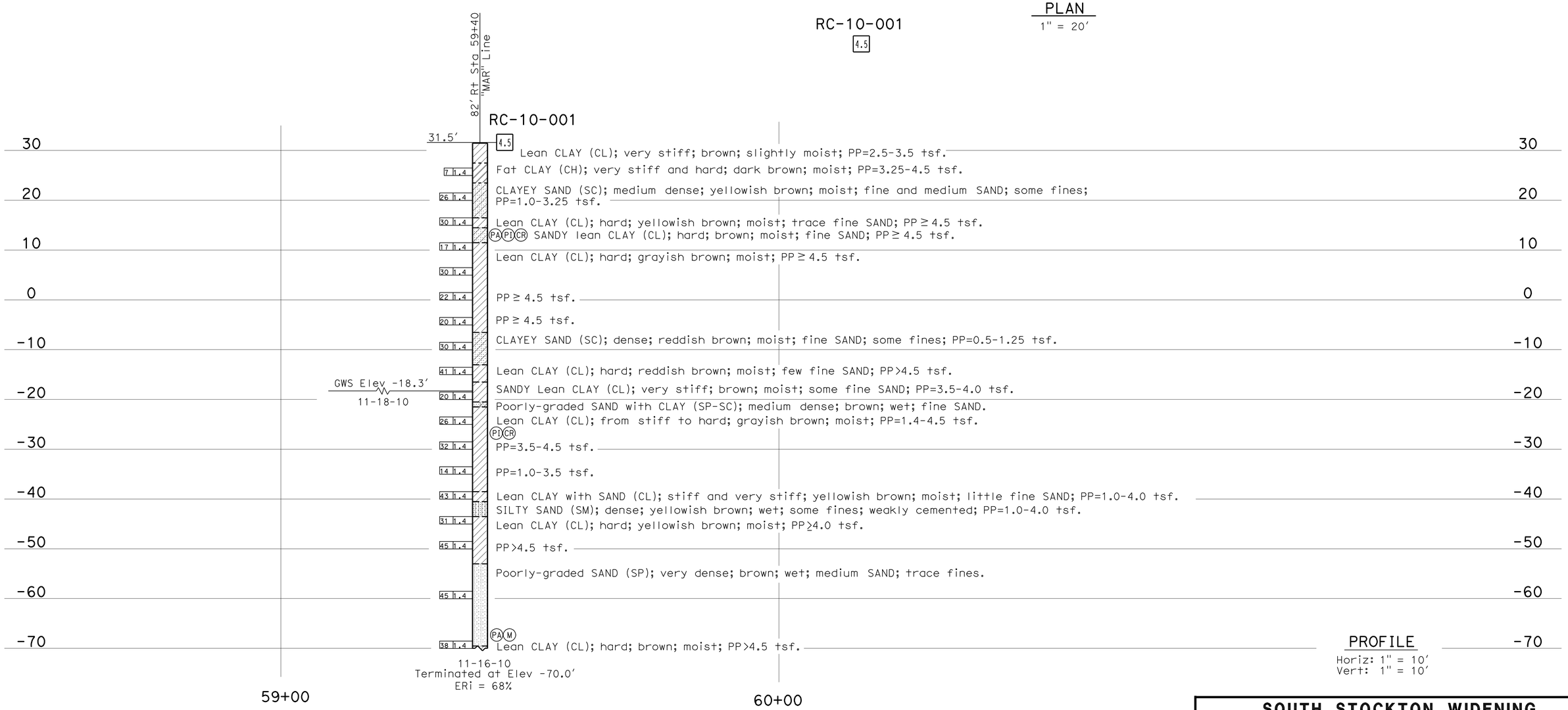

PROFILE

Horiz: 1" = 10′
Vert: 1" = 10′

ENGINEERING SERVICES	MATERIALS AND GEOTECHNICAL SERVICES	STATE OF CALIFORNIA DEPARTMENT OF TRANSPORTATION	DIVISION OF ENGINEERING SERVICES STRUCTURE DESIGN DESIGN BRANCH 17	BRIDGE NO. 29C0451 / POST MILE 0.25 mi S/E OF SH 99	SOUTH STOCKTON WIDENING DUCK CREEK BRIDGE (REPLACE) LOG OF TEST BORINGS 1 OF 4
FUNCTIONAL SUPERVISOR NAME: R. Buell	DRAWN BY: W. Tang 08/11 CHECKED BY: A. Barrie	FIELD INVESTIGATION BY: T. Alderman			

OGS CIVIL LOG OF TEST BORINGS SHEET

ORIGINAL SCALE IN INCHES FOR REDUCED PLANS 0 1 2 3

UNIT: 3643
PROJECT NUMBER & PHASE: 10000004091 CONTRACT NO.: 10-3A1001

DISREGARD PRINTS BEARING EARLIER REVISION DATES → 08-15-11 08-22-11

SHEET 12 OF 15

FILE => 29c-0451-z-ltb1of4.dgn

USERNAME => s114926 DATE PLOTTED => 29-MAR-2012 TIME PLOTTED => 13:05

DIST	COUNTY	ROUTE	POST MILES TOTAL PROJECT	SHEET No	TOTAL SHEETS
10	SJ	4,99	R19.5/R20.1, 15.0/18.6	1242	1414

Joseph M Kaump 8-30-11
PROFESSIONAL GEOLOGIST

3-26-12
PLANS APPROVAL DATE

PROFESSIONAL GEOLOGIST Joseph Kaump No. 7837 Exp. 01-31-13 STATE OF CALIFORNIA

The State of California or its officers or agents shall not be responsible for the accuracy or completeness of electronic copies of this plan sheet.

REFERENCE: CALTRANS SOIL & ROCK LOGGING, CLASSIFICATION, AND PRESENTATION MANUAL (2010)

CEMENTATION

Description	Criteria
Weak	Crumbles or breaks with handling or little finger pressure.
Moderate	Crumbles or breaks with considerable finger pressure.
Strong	Will not crumble or break with finger pressure.

BOREHOLE IDENTIFICATION

Symbol	Hole Type	Description
Size	A	Auger Boring (hollow or solid stem bucket)
Size	R RW RC P	Rotary drilled boring (conventional) Rotary drilled with self-casing wire-line Rotary core with continuously-sampled, self-casing wire-line Rotary percussion boring (air)
Size	R	Rotary drilled diamond core
Size	HD HA	Hand driven (1-inch soil tube) Hand Auger
●	D	Dynamic Cone Penetration Boring
▲	CPT	Cone Penetration Test (ASTM D 5778)
⬚	O	Other (note on LOTB)

Note: Size in inches.

CONSISTENCY OF COHESIVE SOILS

Description	Shear Strength (tsf)	Pocket Penetrometer Measurement, PP, (tsf)	Torvane Measurement, TV, (tsf)	Vane Shear Measurement, VS, (tsf)
Very Soft	Less than 0.12	Less than 0.25	Less than 0.12	Less than 0.12
Soft	0.12 - 0.25	0.25 - 0.5	0.12 - 0.25	0.12 - 0.25
Medium Stiff	0.25 - 0.5	0.5 - 1	0.25 - 0.5	0.25 - 0.5
Stiff	0.5 - 1	1 - 2	0.5 - 1	0.5 - 1
Very Stiff	1 - 2	2 - 4	1 - 2	1 - 2
Hard	Greater than 2	Greater than 4	Greater than 2	Greater than 2

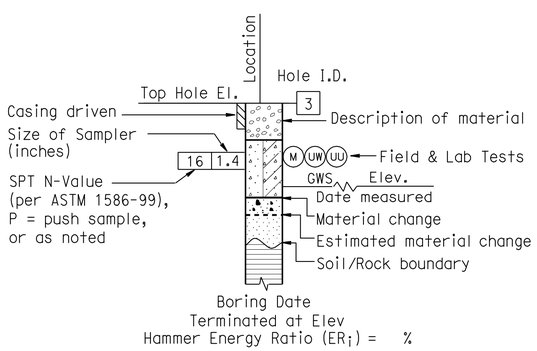

ROTARY BORING

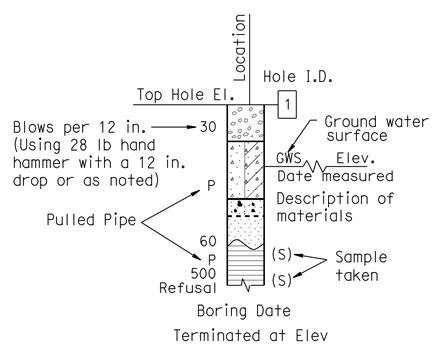

HAND BORING

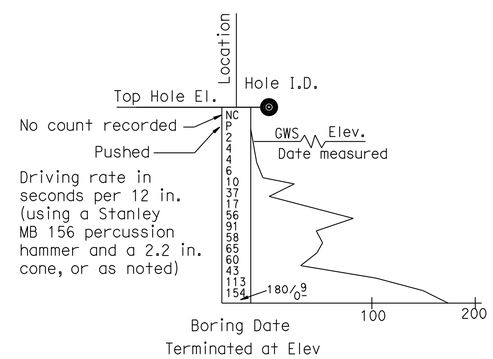

DYNAMIC CONE PENETRATION BORING

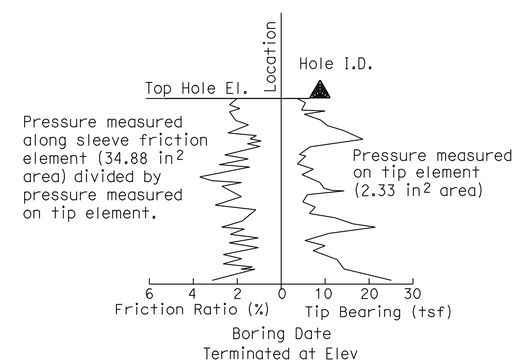

CONE PENETRATION TEST (CPT) BORING

ENGINEERING SERVICES	MATERIALS AND GEOTECHNICAL SERVICES	STATE OF CALIFORNIA DEPARTMENT OF TRANSPORTATION	DIVISION OF ENGINEERING SERVICES STRUCTURE DESIGN DESIGN BRANCH 17	BRIDGE NO. 29C0451 POST MILE 0.25 mi S/E OF SH 99	SOUTH STOCKTON WIDENING DUCK CREEK BRIDGE (REPLACE) LOG OF TEST BORINGS 2 OF 4
	PREPARED BY: I.G-Remmen				

GS LOTB SOIL LEGEND

ORIGINAL SCALE IN INCHES FOR REDUCED PLANS 0 1 2 3

UNIT: 3643
PROJECT NUMBER & PHASE: 10000004091 CONTRACT NO.: 10-3A1001

DISREGARD PRINTS BEARING EARLIER REVISION DATES

REVISION DATES

SHEET 13 OF 15

FILE => 29c-0451-z-ltb2of4.dgn

USERNAME => s114326 DATE PLOTTED => 23-MAR-2012 TIME PLOTTED => 13:05

REFERENCE: CALTRANS SOIL & ROCK LOGGING, CLASSIFICATION, AND PRESENTATION MANUAL (2010)

DIST	COUNTY	ROUTE	POST MILES TOTAL PROJECT	SHEET No	TOTAL SHEETS
10	SJ	4,99	R19.5/R20.1, 15.0/18.6	1243	1414

Joseph M Kaump 8-30-11
PROFESSIONAL GEOLOGIST

3-26-12
PLANS APPROVAL DATE

PROFESSIONAL GEOLOGIST Joseph Kaump No. 7837 Exp. 01-31-13 STATE OF CALIFORNIA

The State of California or its officers or agents shall not be responsible for the accuracy or completeness of electronic copies of this plan sheet.

GROUP SYMBOLS AND NAMES

Graphic/Symbol	Group Names	Graphic/Symbol	Group Names
GW	Well-graded GRAVEL Well-graded GRAVEL with SAND	CL	Lean CLAY Lean CLAY with SAND Lean CLAY with GRAVEL SANDY lean CLAY SANDY lean CLAY with GRAVEL GRAVELLY lean CLAY GRAVELLY lean CLAY with SAND
GP	Poorly-graded GRAVEL Poorly-graded GRAVEL with SAND		
GW-GM	Well-graded GRAVEL with SILT Well-graded GRAVEL with SILT and SAND	CL-ML	SILTY CLAY SILTY CLAY with SAND SILTY CLAY with GRAVEL SANDY SILTY CLAY SANDY SILTY CLAY with GRAVEL GRAVELLY SILTY CLAY GRAVELLY SILTY CLAY with SAND
GW-GC	Well-graded GRAVEL with CLAY (or SILTY CLAY) Well-graded GRAVEL with CLAY and SAND (or SILTY CLAY and SAND)		
GP-GM	Poorly-graded GRAVEL with SILT Poorly-graded GRAVEL with SILT and SAND	ML	SILT SILT with SAND SILT with GRAVEL SANDY SILT SANDY SILT with GRAVEL GRAVELLY SILT GRAVELLY SILT with SAND
GP-GC	Poorly-graded GRAVEL with CLAY (or SILTY CLAY) Poorly-graded GRAVEL with CLAY and SAND (or SILTY CLAY and SAND)		
GM	SILTY GRAVEL SILTY GRAVEL with SAND	OL	ORGANIC lean CLAY ORGANIC lean CLAY with SAND ORGANIC lean CLAY with GRAVEL SANDY ORGANIC lean CLAY SANDY ORGANIC lean CLAY with GRAVEL GRAVELLY ORGANIC lean CLAY GRAVELLY ORGANIC lean CLAY with SAND
GC	CLAYEY GRAVEL CLAYEY GRAVEL with SAND		
GC-GM	SILTY, CLAYEY GRAVEL SILTY, CLAYEY GRAVEL with SAND	OL	ORGANIC SILT ORGANIC SILT with SAND ORGANIC SILT with GRAVEL SANDY ORGANIC SILT SANDY ORGANIC SILT with GRAVEL GRAVELLY ORGANIC SILT GRAVELLY ORGANIC SILT with SAND
SW	Well-graded SAND Well-graded SAND with GRAVEL		
SP	Poorly-graded SAND Poorly-graded SAND with GRAVEL	CH	Fat CLAY Fat CLAY with SAND Fat CLAY with GRAVEL SANDY fat CLAY SANDY fat CLAY with GRAVEL GRAVELLY fat CLAY GRAVELLY fat CLAY with SAND
SW-SM	Well-graded SAND with SILT Well-graded SAND with SILT and GRAVEL		
SW-SC	Well-graded SAND with CLAY (or SILTY CLAY) Well-graded SAND with CLAY and GRAVEL (or SILTY CLAY and GRAVEL)	MH	Elastic SILT Elastic SILT with SAND Elastic SILT with GRAVEL SANDY elastic SILT SANDY elastic SILT with GRAVEL GRAVELLY elastic SILT GRAVELLY elastic SILT with SAND
SP-SM	Poorly-graded SAND with SILT Poorly-graded SAND with SILT and GRAVEL		
SP-SC	Poorly-graded SAND with CLAY (or SILTY CLAY) Poorly-graded SAND with CLAY and GRAVEL (or SILTY CLAY and GRAVEL)	OH	ORGANIC fat CLAY ORGANIC fat CLAY with SAND ORGANIC fat CLAY with GRAVEL SANDY ORGANIC fat CLAY SANDY ORGANIC fat CLAY with GRAVEL GRAVELLY ORGANIC fat CLAY GRAVELLY ORGANIC fat CLAY with SAND
SM	SILTY SAND SILTY SAND with GRAVEL		
SC	CLAYEY SAND CLAYEY SAND with GRAVEL	OH	ORGANIC elastic SILT ORGANIC elastic SILT with SAND ORGANIC elastic SILT with GRAVEL SANDY ORGANIC elastic SILT SANDY ORGANIC elastic SILT with GRAVEL GRAVELLY ORGANIC elastic SILT GRAVELLY ORGANIC elastic SILT with SAND
SC-SM	SILTY, CLAYEY SAND SILTY, CLAYEY SAND with GRAVEL		
PT	PEAT	OL/OH	ORGANIC SOIL ORGANIC SOIL with SAND ORGANIC SOIL with GRAVEL SANDY ORGANIC SOIL SANDY ORGANIC SOIL with GRAVEL GRAVELLY ORGANIC SOIL GRAVELLY ORGANIC SOIL with SAND
	COBBLES COBBLES and BOULDERS BOULDERS		

FIELD AND LABORATORY TESTING

- (C) Consolidation (ASTM D 2435)
- (CL) Collapse Potential (ASTM D 5333)
- (CP) Compaction Curve (CTM 216)
- (CR) Corrosivity Testing (CTM 643, CTM 422, CTM 417)
- (CU) Consolidated Undrained Triaxial (ASTM D 4767)
- (DS) Direct Shear (ASTM D 3080)
- (EI) Expansion Index (ASTM D 4829)
- (M) Moisture Content (ASTM D 2216)
- (OC) Organic Content-% (ASTM D 2974)
- (P) Permeability (CTM 220)
- (PA) Particle Size Analysis (ASTM D 422)
- (PI) Plasticity Index (AASHTO T 90) Liquid Limit (AASHTO T 89)
- (PL) Point Load Index (ASTM D 5731)
- (PM) Pressure Meter
- (R) R-Value (CTM 301)
- (SE) Sand Equivalent (CTM 217)
- (SG) Specific Gravity (AASHTO T 100)
- (SL) Shrinkage Limit (ASTM D 427)
- (SW) Swell Potential (ASTM D 4546)
- (UC) Unconfined Compression-Soil (ASTM D 2166) Unconfined Compression-Rock (ASTM D 2938)
- (UU) Unconsolidated Undrained Triaxial (ASTM D 2850)
- (UW) Unit Weight (ASTM D 4767)

APPARENT DENSITY OF COHESIONLESS SOILS

Description	SPT N_{60} (Blows / 12 in.)
Very Loose	0 - 5
Loose	5 - 10
Medium Dense	10 - 30
Dense	30 - 50
Very Dense	Greater than 50

MOISTURE

Description	Criteria
Dry	No discernable moisture
Moist	Moisture present, but no free water
Wet	Visible free water

PERCENT OR PROPORTION OF SOILS

Description	Criteria
Trace	Particles are present but estimated to be less than 5%
Few	5% - 10%
Little	15% - 25%
Some	30% - 45%
Mostly	50% - 100%

PARTICLE SIZE

Description		Size (in.)
Boulder		Greater than 12
Cobble		3 - 12
Gravel	Coarse	3/4 - 3
	Fine	1/5 - 3/4
Sand	Coarse	1/16 - 1/5
	Medium	1/64 - 1/16
	Fine	1/300 - 1/64
Silt and Clay		Less than 1/300

ENGINEERING SERVICES

MATERIALS AND GEOTECHNICAL SERVICES
PREPARED BY: I.G-Remmen

STATE OF CALIFORNIA DEPARTMENT OF TRANSPORTATION

DIVISION OF ENGINEERING SERVICES STRUCTURE DESIGN
DESIGN BRANCH 17

BRIDGE NO. 29C0451
POST MILE 0.25 mi S/E OF SH 99

SOUTH STOCKTON WIDENING
DUCK CREEK BRIDGE (REPLACE)
LOG OF TEST BORINGS 3 OF 4

GS LOTB SOIL LEGEND

ORIGINAL SCALE IN INCHES FOR REDUCED PLANS 0 1 2 3

UNIT: 3643
PROJECT NUMBER & PHASE: 10000004091
CONTRACT NO.: 10-3A1001

DISREGARD PRINTS BEARING EARLIER REVISION DATES

REVISION DATES | SHEET 14 OF 15

FILE => 29c-0451-z-ltb3of4.dgn

USERNAME => s114926 DATE PLOTTED => 29-MAR-2012 TIME PLOTTED => 13:05

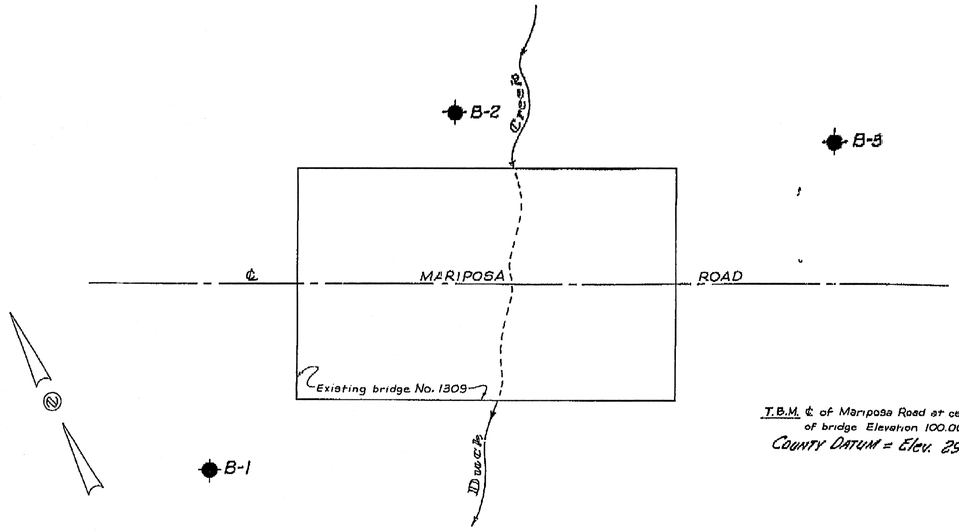

T.B.M. ℄ of Mariposa Road at center of bridge Elevation 100.00 assumed.
COUNTY DATUM = Elev. 29.43

PLAN
PROFILE

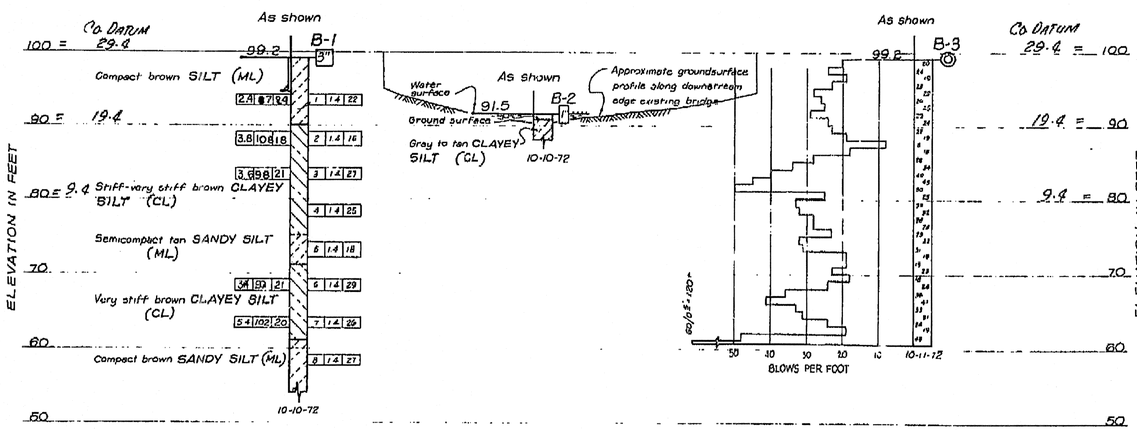

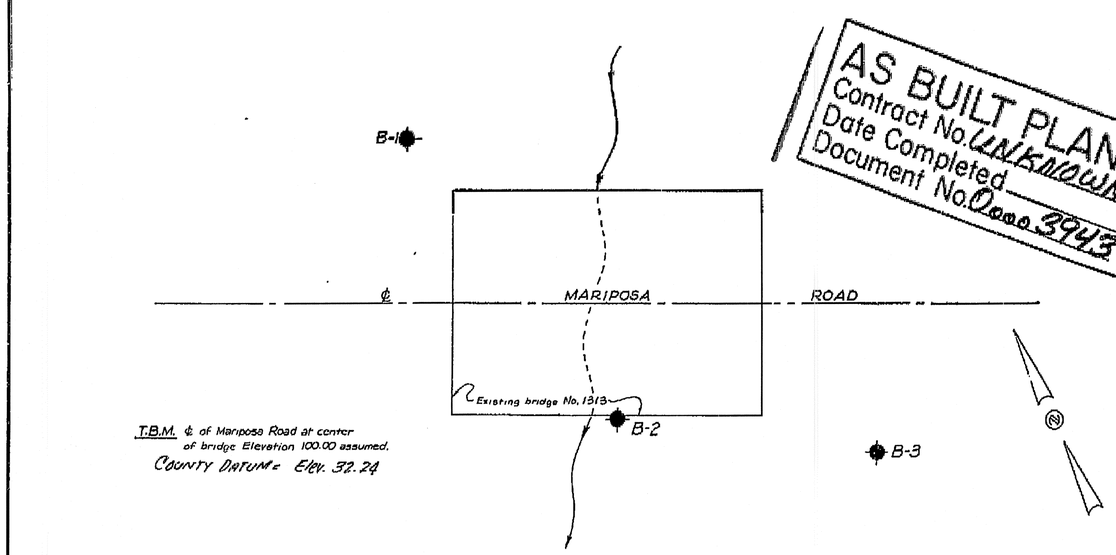

T.B.M. ℄ of Mariposa Road at center of bridge Elevation 100.00 assumed.
COUNTY DATUM = Elev. 32.24

PLAN
PROFILE

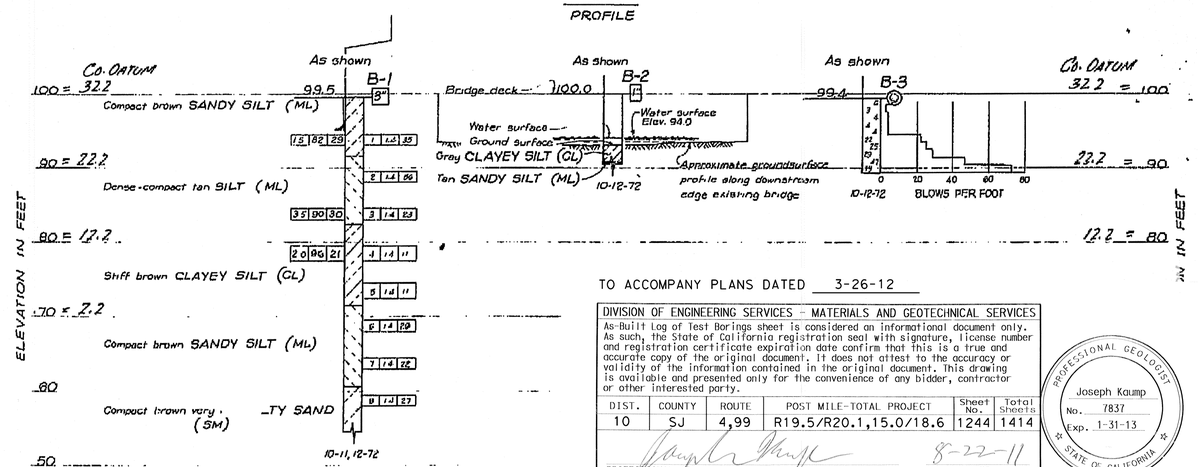

AS BUILT PLANS
Contract No. UNKNOWN
Date Completed
Document No. Doc. 3943

TO ACCOMPANY PLANS DATED 3-26-12

DIVISION OF ENGINEERING SERVICES - MATERIALS AND GEOTECHNICAL SERVICES

As-Built Log of Test Borings sheet is considered an informational document only. As such, the State of California registration seal with signature, license number and registration certificate expiration date confirm that this is a true and accurate copy of the original document. It does not attest to the accuracy or validity of the information contained in the original document. This drawing is available and presented only for the convenience of any bidder, contractor or other interested party.

DIST.	COUNTY	ROUTE	POST MILE-TOTAL PROJECT	Sheet No.	Total Sheets
10	SJ	4,99	R19.5/R20.1,15.0/18.6	1244	1414

PROFESSIONAL GEOLOGIST — DATE 8-22-11

PROFESSIONAL GEOLOGIST — Joseph Kaump — No. 7837 — Exp. 1-31-13 — STATE OF CALIFORNIA

SOUTH STOCKTON WIDENING
DUCK CREEK BRIDGE (REPLACE)
LOG OF TEST BORINGS 4 OF 4

UNIT: 3643	CONTRACT No.	BRIDGE No.
PROJECT NUMBER & PHASE: 10000004091	10-3A1001	29C-0451

NOTE: A COPY OF THIS LOG OF TEST BORINGS IS AVAILABLE AT OFFICE OF STRUCTURE MAINTENANCE AND INVESTIGATIONS, SACRAMENTO, CALIFORNIA — Sheet 15 of 15

BR. #1309
372/108F-1

LEGEND OF EARTH MATERIALS

UNIFIED SOIL CLASSIFICATION

Pt	OH	CH	MH	OL	CL	ML	SC	SM	SP	SW	GC	GM	GP	GW
Highly organic soils	Silts and clays Liquid limit greater than 50			Silts and clays Liquid limit less than 50			Sands with fines >12% fines		Clean sands <5% fines		Gravels with fines >12% fines		Clean gravels <5% fines	
							Sands - more than 50% of coarse fraction is smaller than No 4 sieve.				Gravels - more than 50% of coarse fraction is larger than No 4 sieve.			
Fine grained soils (More than 50% is smaller than No 200 sieve)							Coarse grained soils (More than 50% is larger than No 200 sieve)							

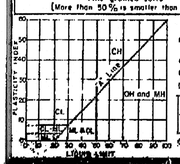

LABORATORY CLASSIFICATION CRITERIA

GW and SW - $C_u = \frac{D_{60}}{D_{10}}$ greater than 4 for GW & 6 for SW, $C_c = \frac{(D_{30})^2}{D_{10} \times D_{60}}$ between 1 & 3.

GP and SP - Clean gravel or sand not meeting requirements for GW and SW

GM and SM - Atterberg limits below "A" line or P.I. less than 4

GC and SC - Atterberg limits above "A" line with P.I. greater than 7

Fines (silt or clay)	Fine sand	Medium sand	Coarse sand	Fine gravel	Coarse gravel	Cobbles	Boulders
Sieve sizes	#200	#40	#10	#4	3"	12"	

Classification of earth materials shown on this sheet is based on field inspection and should not be construed to imply laboratory analysis unless so stated.

MATERIAL SYMBOLS

Gravel; Sand; Silt; Clay; Sandy clay or clayey sand; Sandy silt or silty sand; Silty clay or clayey silt; Peat or organic matter; Fill material; Shale; Sandstone; Limestone; Metamorphic rock; Igneous rock

CONSISTENCY CLASSIFICATION FOR SOILS

According to the Standard Penetration Test

Nº of blows	Granular	Cohesive
0-5	Very loose	Very soft
6-10	Loose	Soft
11-20	Semicompact	Stiff
21-35	Compact	Very stiff
36-70	Dense	Hard
>70	Very dense	Very hard

LEGEND OF BORING OPERATIONS

Plan of any boring; Rotary boring; Diamond core boring; Auger boring; Sample boring; Jet boring; Test pit; 2¼" Cone penetrometer; 2½" Cone penetrometer

ROTARY BORING

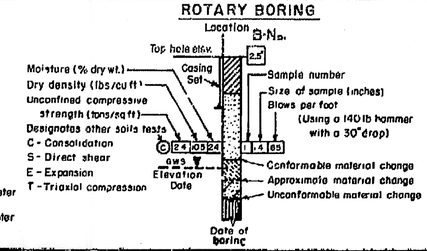

PENETRATION TEST

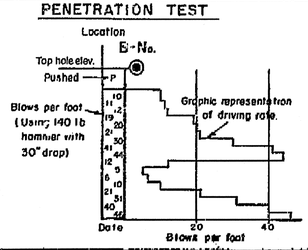

MOORE & TABER NORTHERN CALIFORNIA
CONSULTING ENGINEERS AND GEOLOGISTS

APPROVED — REGISTERED CIVIL ENGINEER No. 0165 — JOB No. 372/108F

COUNTY OF SAN JOAQUIN

MARIPOSA ROAD BRIDGES
NO. 1309 & NO. 1313

LOG OF TEST BORINGS

Scale 1" = 10' | Date Oct. 1972 | By R.F.E. | Check by R.D.M. | Drawing

PROJECT ENGINEER	DATE	CHECKED BY	DATE	SUBMITTED BY	DATE	APPROVAL RECOMMENDED BY	DATE
Robert E. Mullen	4-73	R.S. Baer	5-73	Henry Hirata	5/23	Tom [illegible]	5/23

COUNTY OF SAN JOAQUIN

PROJECT	MARIPOSA ROAD	SHEET NO.	TOTAL SHEETS
DRAWING NO		32	45

FILENAME => 29c-0451-z-1tb4of4.tif

DIST	COUNTY	ROUTE	POST MILES TOTAL PROJECT	SHEET No.	TOTAL SHEETS
10	SJ	4,99	R19.5/R20.1, 15.0/18.6	1245	1414

REGISTERED CIVIL ENGINEER 11-04-11 DATE

3-26-12
PLANS APPROVAL DATE

The State of California or its officers or agents shall not be responsible for the accuracy or completeness of electronic copies of this plan sheet.

REGISTERED PROFESSIONAL ENGINEER Chris Udarbe No. C62985 Exp. 06-30-2012 CIVIL STATE OF CALIFORNIA

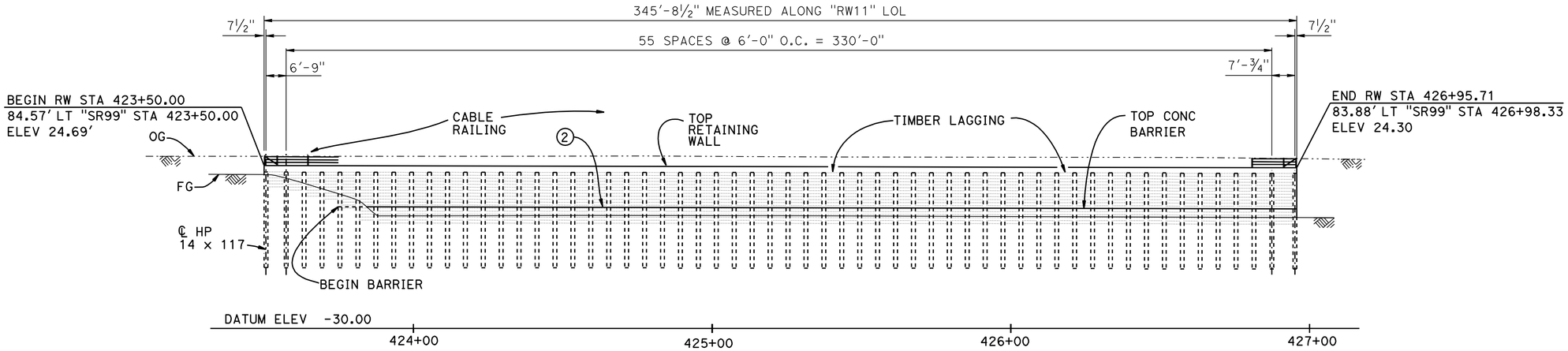

ELEVATION
1" = 20'

QUANTITIES

STRUCTURE EXCAVATION (SOLDIER PILE WALL)	137	CY
STRUCTURE BACKFILL (SOLDIER PILE WALL)	49	CY
CONCRETE BACKFILL (SOLDIER PILE WALL)	190	CY
LEAN CONCRETE BACKFILL	152	CY
STEEL SOLDIER PILE (HP 14 X 117)	1,856	LF
30" DRILLED HOLE	1,871	LF
STRUCTURAL CONCRETE, RETAINING WALL	209	CY
ARCHITECTURAL TEXTURE (SPLIT FACE)	3,670	SQFT
BAR REINFORCING STEEL (RETAINING WALL)	35,829	LB
TIMBER LAGGING	20	MFBM
CLEAN AND PAINT STEEL SOLDIER PILING	LUMP	SUM
MINOR CONCRETE (GUTTER)	346	LF
CABLE RAILING	346	LF
CONCRETE BARRIER (TYPE 60D)	320	LF

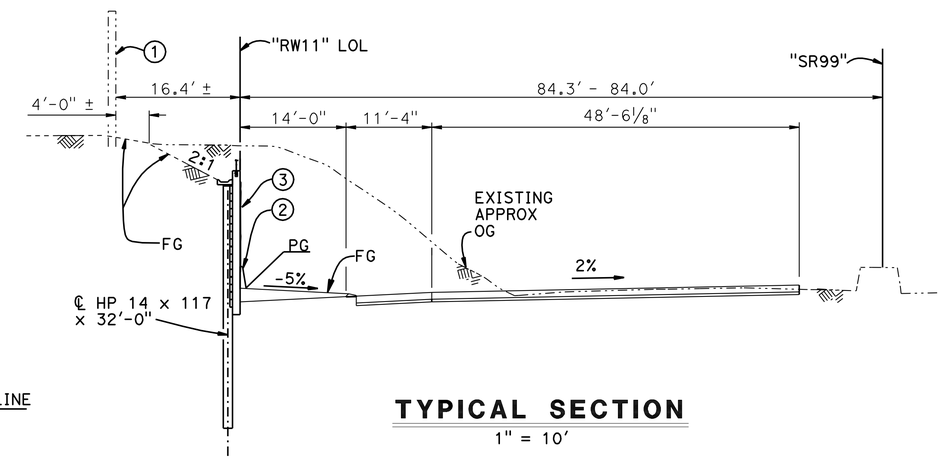

TYPICAL SECTION
1" = 10'

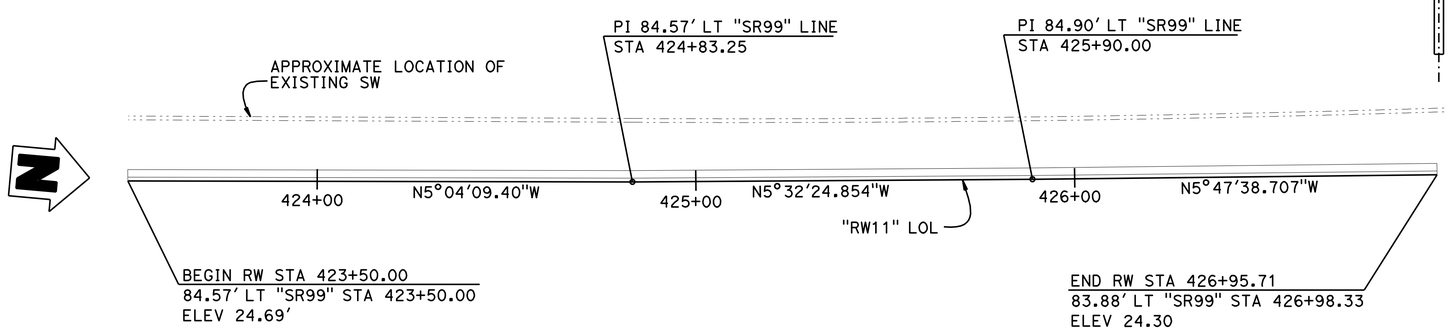

"SR99" CURVE DATA

ROUTE	R	Δ	T	L
"SR99"	6136.490'	1°48'36.15"	96.938'	193.859'

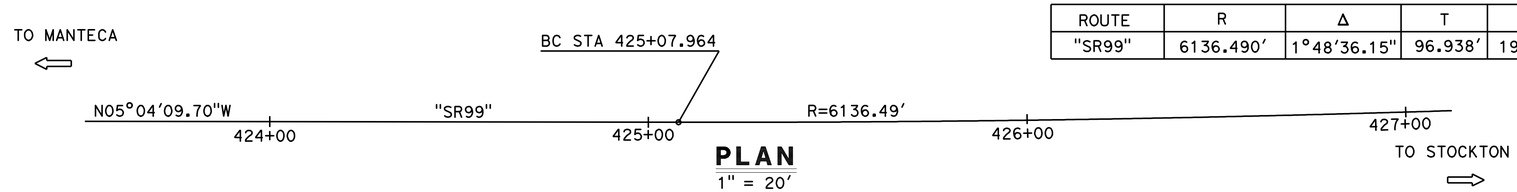

PLAN
1" = 20'

Legend:

1. Exist Sound Wall to Remain
2. Concrete Barrier TYPE 60D
3. Architectural Texture, see "TYPICAL SECTION" sheet

-·-·- Indicates Existing Sound Wall

Note: For index to plans see "INDEX TO PLANS" sheet.

SOUTH STOCKTON WIDENING
RETAINING WALL NO. 11
GENERAL PLAN

Gary Joe
DESIGN ENGINEER

	BY	CHECKED
DESIGN	C. UDARBE	R. CORIA
DETAILS	G. LEUNG	C. UDARBE
QUANTITIES	C. UDARBE	R. CORIA

LOAD & RESISTANCE FACTOR DESIGN — LIVE LOADING: HL93 W/"LOW-BOY"; PERMIT DESIGN VEHICLE

LAYOUT — BY C. UDARBE — CHECKED R. CORIA

SPECIFICATIONS — BY V. RENGANATHAN — PLANS AND SPECS COMPARED V. RENGANATHAN

ORIGINAL SCALE IN INCHES FOR REDUCED PLANS 0 1 2 3

STATE OF CALIFORNIA
DEPARTMENT OF TRANSPORTATION

DIVISION OF ENGINEERING SERVICES
STRUCTURE DESIGN
DESIGN BRANCH 17

BRIDGE NO. 29E0002
POST MILE 17.33

UNIT:3586
PROJECT NUMBER & PHASE:10000004091
CONTRACT NO.:10-3A1001

DISREGARD PRINTS BEARING EARLIER REVISION DATES → REVISION DATES 7-26-11 9-27-11 10-26-11 01-13-12

SHEET 1 OF 11

STRUCTURES DESIGN GENERAL PLAN SHEET (ENGLISH) (REV.09-01-10)

FILE => 29e0002-a-gp.dgn

USERNAME => s128843 DATE PLOTTED => 23-MAR-2012 TIME PLOTTED => 12:59

DIST	COUNTY	ROUTE	POST MILES TOTAL PROJECT	SHEET No.	TOTAL SHEETS
10	SJ	4,99	R19.5/R20.1, 15.0/18.6	1246	1414

REGISTERED CIVIL ENGINEER — DATE 11-04-11

3-26-12
PLANS APPROVAL DATE

REGISTERED PROFESSIONAL ENGINEER — Chris Udarbe — No. C62985 — Exp. 06-30-2012 — CIVIL — STATE OF CALIFORNIA

The State of California or its officers or agents shall not be responsible for the accuracy or completeness of electronic copies of this plan sheet.

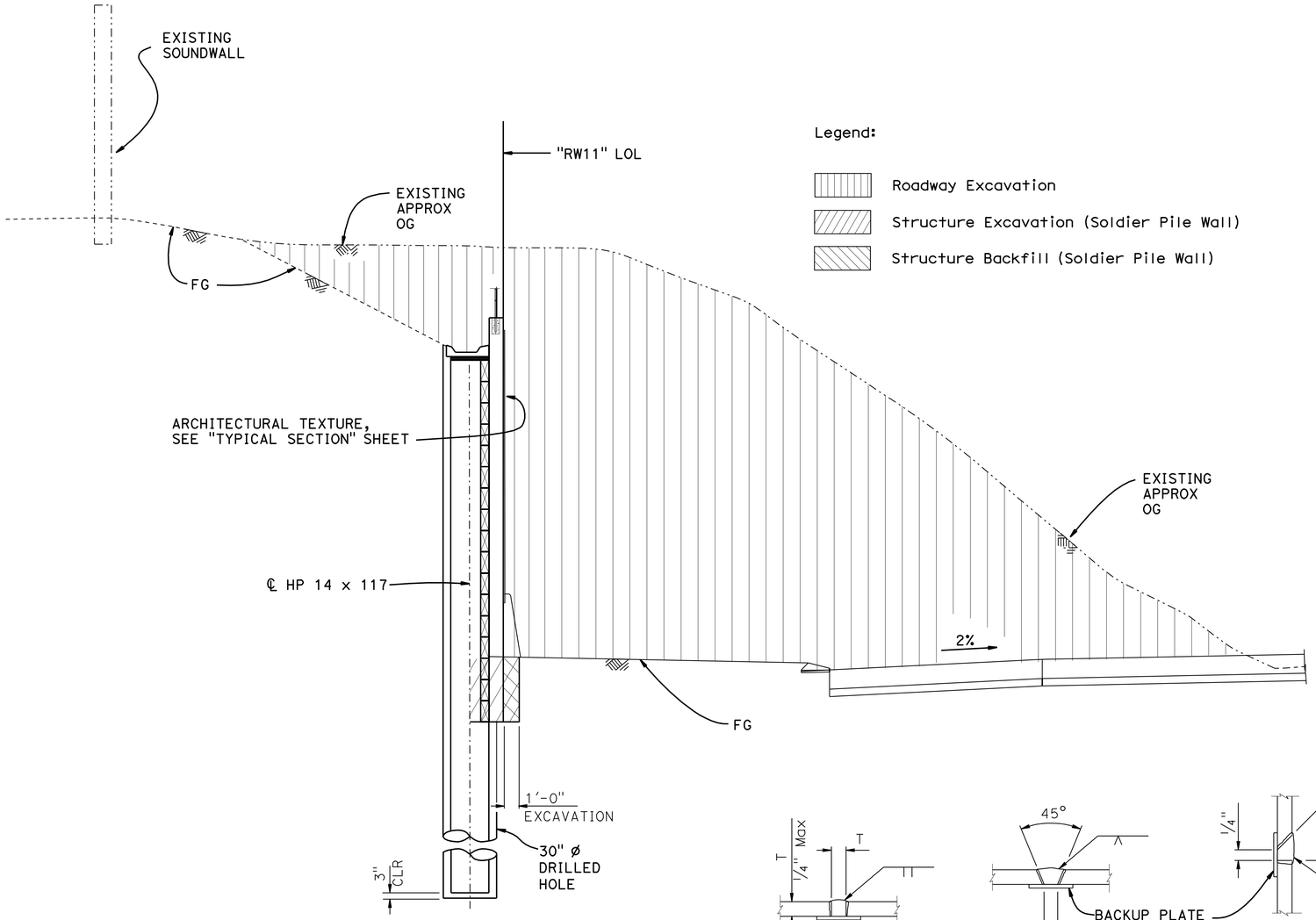

Legend:

- Roadway Excavation
- Structure Excavation (Soldier Pile Wall)
- Structure Backfill (Soldier Pile Wall)

EXCAVATION & BACKFILL

3/8" = 1'

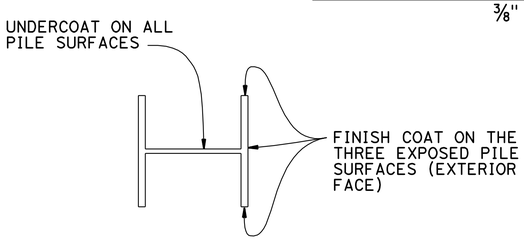

LIMITS OF CLEAN & PAINT STEEL SOLDIER PILE

NO SCALE

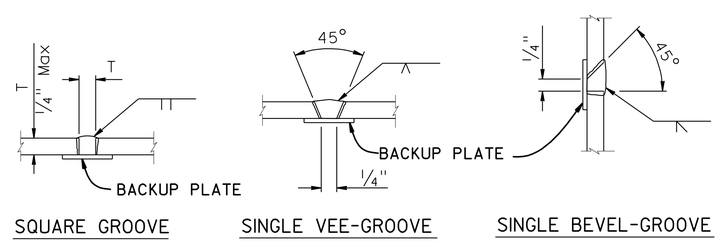

SQUARE GROOVE — SINGLE VEE-GROOVE — SINGLE BEVEL-GROOVE

PILE WELDING DETAIL-BUTT JOINTS

NO SCALE

Notes:

1. Single vee-groove and square groove permitted for all positions
2. Single bevel-groove permitted for horizonal joints only
3. For purposes of non-destructive testing, pile shall be considered a main tension member from top of pile to 5 feet below bottom of lagging. The remaining embedded portion of the pile shall be considered a main compression member.

GENERAL NOTES

DESIGN:

AASHTO LRFD Bridge Design Specifications 4th Edition with California Amendments, preface dated December 2008

LIVE LOAD:

240 psf equivalent to 2 feet soil weight

SOIL PARAMETERS:

(For determination of design lateral earth pressures)

$\phi = 28°$ $\gamma = 125$ pcf

$V_{s30} = 890$ ft/sec

REINFORCED CONCRETE:

f'c = 3.6 ksi (Concrete compressive strength at 28 days)

fy = 60 ksi (Yield strength of reinforcement)

STRUCTURAL STEEL:

fs = 50 ksi

STRUCTURAL TIMBER:

Treated Douglas Fir, Grade No. 1 or better.
Timber to be full sawn.

INDEX TO PLANS

1. GENERAL PLAN
2. INDEX TO PLANS
3. STRUCTURE PLAN
4. FOUNDATION PLAN
5. TYPICAL SECTION
6. PILE DETAILS
7. DRAINAGE DETAILS
8. SOLDIER PILE WALL LAGGING DETAILS
9. LOG OF TEST BORINGS 1 OF 3
10. LOG OF TEST BORINGS 2 OF 3
11. LOG OF TEST BORINGS 3 OF 3

STANDARD PLANS DATED MAY 2006

SHEET NO.	TITLE
A10A - A10B	ACRONYMS AND ABBREVIATIONS
A10C - A10D	SYMBOLS AND BACKFILL - BRIDGE SURCHARGE AND WALL
A76A	CONCRETE BARRIER TYPE 60D
B0-3	BRIDGE DETAILS
B0-13	BRIDGE DETAILS
B3-9	RETAINING WALL DETAILS NO.2
B11-7	RETAINING WALL DETAILS NO.2
B11-47	CABLE RAILING
A62B	LIMITS OF PAYMENT FOR EXCAVATION

STANDARD PLAN SHEET NO.

DETAIL NO.

	BY	CHECKED
DESIGN	C. UDARBE	R. CORIA
DETAILS	G. LEUNG	C. UDARBE
QUANTITIES	C. UDARBE	R. CORIA

STATE OF CALIFORNIA
DEPARTMENT OF TRANSPORTATION

DIVISION OF ENGINEERING SERVICES
STRUCTURE DESIGN
DESIGN BRANCH 17

BRIDGE NO. 29E0002
POST MILE 17.33

SOUTH STOCKTON WIDENING
RETAINING WALL NO. 11
INDEX TO PLANS

STRUCTURES DESIGN DETAIL SHEET (ENGLISH) (REV. 09-01-10)

ORIGINAL SCALE IN INCHES FOR REDUCED PLANS 0 1 2 3

UNIT: 3586
PROJECT NUMBER & PHASE: 10000004091
CONTRACT NO.: 10-3A1001

DISREGARD PRINTS BEARING EARLIER REVISION DATES

REVISION DATES: 8-3-11 2-29-12 1-13-12

SHEET 2 OF 11

FILE => 29e0002-a-ltp.dgn

USERNAME => s128843 DATE PLOTTED => 29-MAR-2012 TIME PLOTTED => 13:00

DIST	COUNTY	ROUTE	POST MILES TOTAL PROJECT	SHEET No.	TOTAL SHEETS
10	SJ	4,99	R19.5/R20.1, 15.0/18.6	1247	1414

REGISTERED CIVIL ENGINEER — DATE 11-04-11

3-26-12
PLANS APPROVAL DATE

REGISTERED PROFESSIONAL ENGINEER — Chris Udarbe — No. C62985 — Exp. 06-30-2012 — CIVIL — STATE OF CALIFORNIA

The State of California or its officers or agents shall not be responsible for the accuracy or completeness of electronic copies of this plan sheet.

Notes:

(1) Concrete Barrier Type 60D

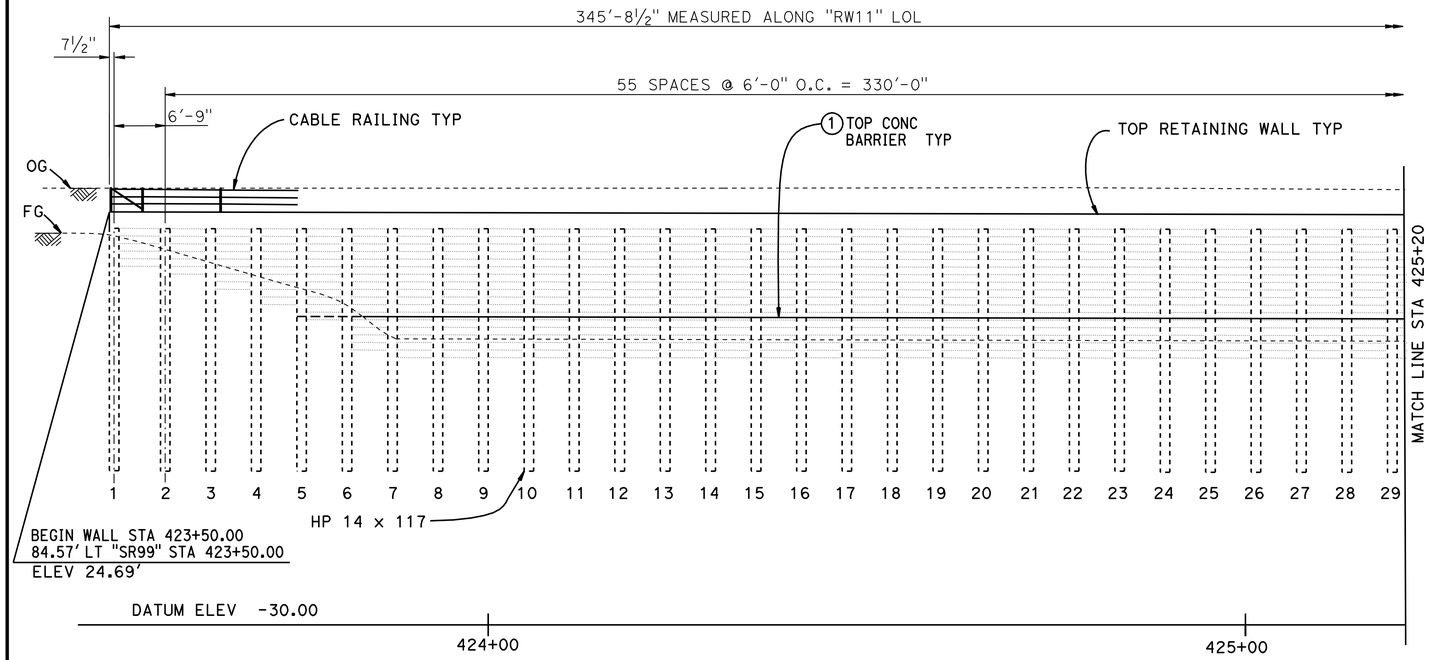

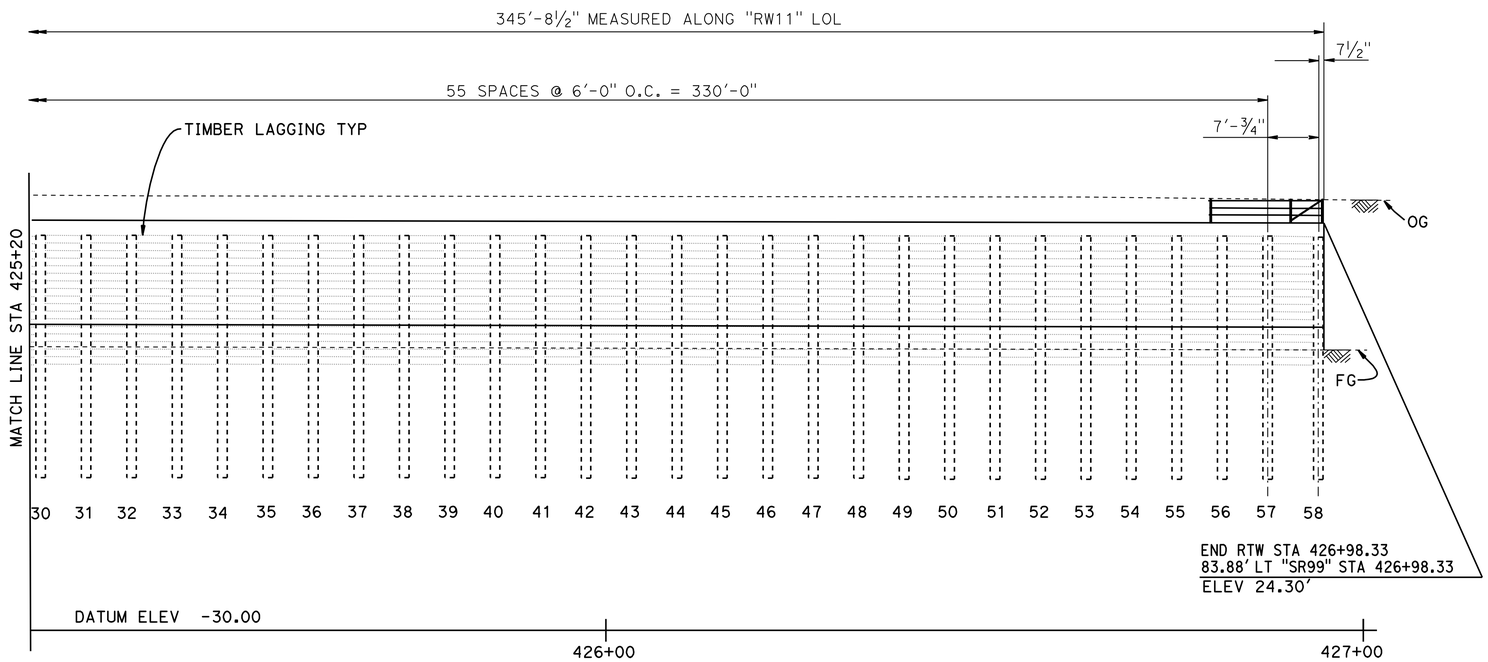

DEVELOPED ELEVATION

1" = 10'

PILE DATA TABLE

PILE NO.	LOCATION	TOP OF WALL ELEVATION	PILE LENGTH	NO. OF TIMBER LAGGING
BEG WALL	423+50.00	24.69		0
1	423+50.63	24.69	32'-0"	5
2	423+57.88	24.69	32'-0"	6
3	423+63.88	24.69	32'-0"	8
4	423+69.88	24.69	32'-0"	10
5	423+75.88	24.69	32'-0"	12
6	423+81.88	24.69	32'-0"	16
7	423+87.88	24.69	32'-0"	17
8	423+93.88	24.69	32'-0"	17
9	423+99.88	24.69	32'-0"	17
10	424+05.88	24.69	32'-0"	17
11	424+11.88	24.58	32'-0"	17
12	424+17.88	24.58	32'-0"	17
13	424+23.88	24.58	32'-0"	17
14	424+29.88	24.58	32'-0"	17
15	424+35.88	24.58	32'-0"	17
16	424+41.88	24.58	32'-0"	17
17	424+47.88	24.58	32'-0"	17
18	424+53.88	24.58	32'-0"	17
19	424+59.88	24.58	32'-0"	17
20	424+65.88	24.58	32'-0"	17
21	424+71.88	24.58	32'-0"	17
22	424+77.88	24.58	32'-0"	17
23	424+83.88	24.58	32'-0"	17
24	424+89.88	24.58	32'-0"	17
25	424+95.88	24.58	32'-0"	17
26	425+01.88	24.58	32'-0"	17
27	425+07.88	24.58	32'-0"	17
28	425+13.88	24.58	32'-0"	17
29	425+19.88	24.58	32'-0"	17
30	425+25.88	24.58	32'-0"	17
31	425+31.88	24.50	32'-0"	17
32	425+37.88	24.50	32'-0"	17
33	425+43.88	24.50	32'-0"	17
34	425+49.88	24.50	32'-0"	17
35	425+55.88	24.50	32'-0"	17
36	425+61.88	24.50	32'-0"	17
37	425+67.88	24.50	32'-0"	17
38	425+73.88	24.50	32'-0"	17
39	425+79.88	24.50	32'-0"	17
40	425+85.88	24.50	32'-0"	17
41	425+91.88	24.42	32'-0"	17
42	425+97.88	24.42	32'-0"	17
43	426+03.88	24.42	32'-0"	17
44	426+09.88	24.42	32'-0"	17
45	426+15.88	24.42	32'-0"	17
46	426+21.88	24.42	32'-0"	17
47	426+27.88	24.42	32'-0"	17
48	426+33.88	24.42	32'-0"	17
49	426+39.88	24.42	32'-0"	17
50	426+45.88	24.42	32'-0"	17
51	426+51.88	24.30	32'-0"	17
52	426+57.88	24.30	32'-0"	17
53	426+63.88	24.30	32'-0"	17
54	426+69.88	24.30	32'-0"	17
55	426+75.88	24.30	32'-0"	17
56	426+81.88	24.30	32'-0"	17
57	426+87.88	24.30	32'-0"	17
58	426+95.13	24.30	32'-0"	
END WALL	426+95.71	24.30		

	BY	CHECKED
DESIGN	C. UDARBE	R. CORIA
DETAILS	G. LEUNG	C. UDARBE
QUANTITIES	C. UDARBE	R. CORIA

STATE OF CALIFORNIA
DEPARTMENT OF TRANSPORTATION

DIVISION OF ENGINEERING SERVICES
STRUCTURE DESIGN
DESIGN BRANCH 17

BRIDGE NO. 29E0002
POST MILE 17.33

SOUTH STOCKTON WIDENING
RETAINING WALL NO. 11
STRUCTURE PLAN

STRUCTURES DESIGN DETAIL SHEET (ENGLISH) (REV. 09-01-10)

ORIGINAL SCALE IN INCHES FOR REDUCED PLANS 0 1 2 3

UNIT: 3586
PROJECT NUMBER & PHASE: 10000004091
CONTRACT NO.: 10-3A1001

DISREGARD PRINTS BEARING EARLIER REVISION DATES

REVISION DATES: 8-31-11 9-27-11 9-30-11 1-13-12

SHEET 3 OF 11

FILE => 29e0002-c-sp.dgn

USERNAME => s128843 DATE PLOTTED => 29-MAR-2012 TIME PLOTTED => 13:00

DIST	COUNTY	ROUTE	POST MILES TOTAL PROJECT	SHEET No.	TOTAL SHEETS
10	SJ	4,99	R19.5/R20.1, 15.0/18.6	1248	1414

REGISTERED CIVIL ENGINEER — DATE 11-04-11

3-26-12
PLANS APPROVAL DATE

REGISTERED PROFESSIONAL ENGINEER — CHRIS UDARBE — No. C62985 — Exp. 6-30-12 — CIVIL — STATE OF CALIFORNIA

The State of California or its officers or agents shall not be responsible for the accuracy or completeness of electronic copies of this plan sheet.

CURVE DATA

No.	R	Δ	T	L
A	6136.49	12°22'40"	665.44	1325.69

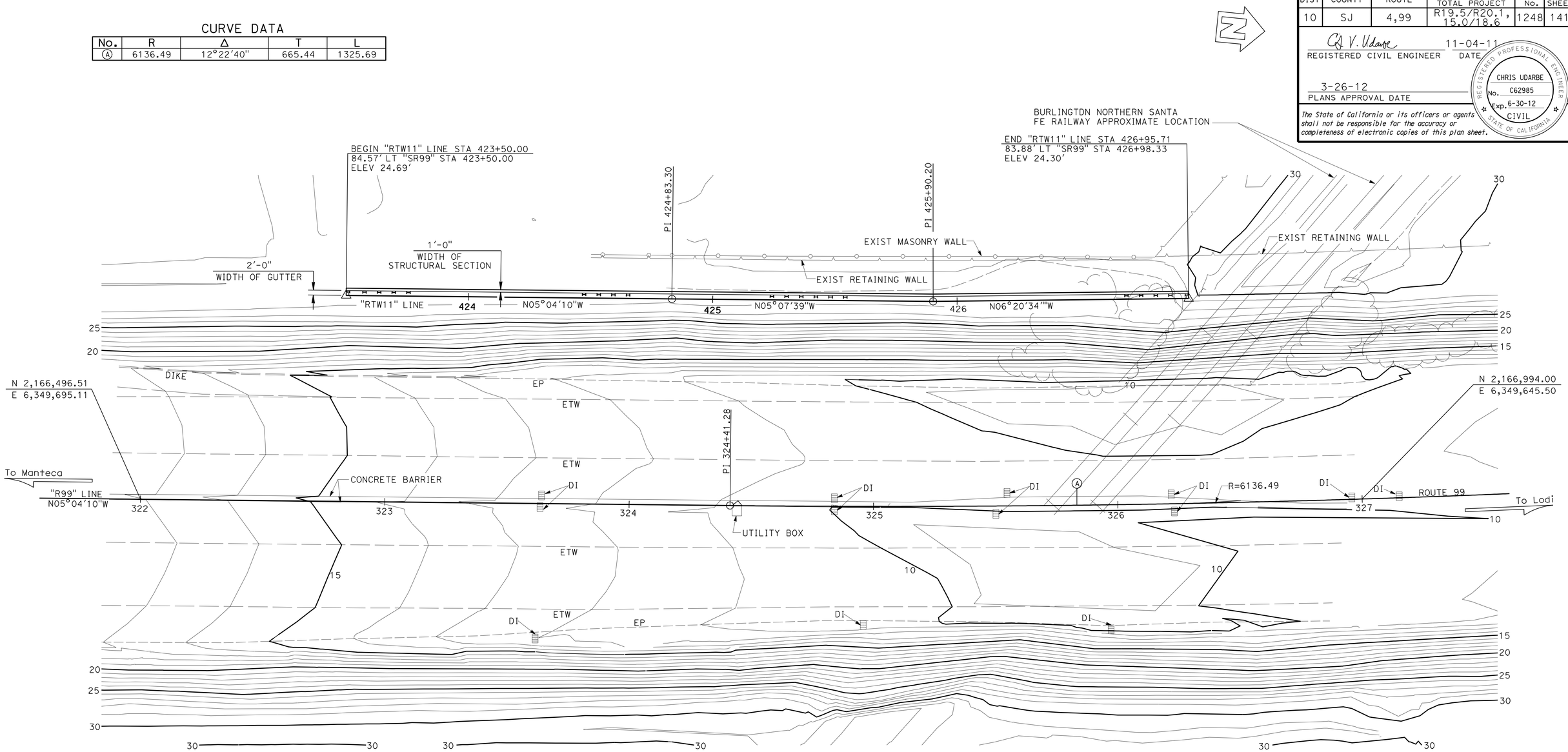

LEGEND:

⊢ Indicates HP piles

SURVEY CONTROL

LGC125 (NOT SHOWN ON THE PLAN)

Fnd PK W/CT TAG
61.65 Ft Rt "R99" LINE, ROUTE 99
Sta 363+93.47
N 2,170,558.65
E 6,348,686.79
Elev = 16.42

LGC127 (NOT SHOWN ON THE PLAN)

Fnd PK W/CT TAG
57.80 Ft Rt "R99", ROUTE 99
Sta 382+61.74
N 2,172,345.83
E 6,348,159.44
Elev = 27.32

SOUTH STOCKTON WIDENING
RETAINING WALL NO. 11
FOUNDATION PLAN

PRELIMINARY INVESTIGATION SECTION

SCALE 1"=20'	VERT.DATUM NGVD 29	PHOTOGRAMMETRY AS OF: X			
	HORZ.DATUM NAD83 (1991.35)	SURVEYED	BY District	CHECKED	BY T. Zoinikov 09/2011
ALIGNMENT TIES Dist. Traverse Sheet		DRAFTED	BY J. Zhou 08/2011	CHECKED	BY J. Pallares 09/2011

DESIGN	BY C. UDARBE	CHECKED	R. CORIA
DETAILS	BY G. LEUNG	CHECKED	C. UDARBE
QUANTITIES	BY R. CORIA	CHECKED	P. VU

STATE OF CALIFORNIA
DEPARTMENT OF TRANSPORTATION

DIVISION OF ENGINEERING SERVICES
STRUCTURE DESIGN
DESIGN BRANCH 17

BRIDGE NO. 29E0002
POST MILE 17.33

STRUCTURES FOUNDATION PLAN SHEET (ENGLISH) (REV. 09-01-10)

ORIGINAL SCALE IN INCHES FOR REDUCED PLANS 0 1 2 3

UNIT: 3586
PROJECT NUMBER & PHASE: 10000004091
CONTRACT NO.: 10-3A1001

DISREGARD PRINTS BEARING EARLIER REVISION DATES

REVISION DATES: 09-06-11 01-06-12 01-12-12

SHEET 4 OF 11

FILE => 29e0002-e-fpl01.dgn

DIST	COUNTY	ROUTE	POST MILES TOTAL PROJECT	SHEET No.	TOTAL SHEETS
10	SJ	4,99	R19.5/R20.1, 15.0/18.6	1249	1414

REGISTERED CIVIL ENGINEER 11-04-11 DATE

3-26-12
PLANS APPROVAL DATE

REGISTERED PROFESSIONAL ENGINEER Chris Udarbe No. C62985 Exp. 06-30-2012 CIVIL STATE OF CALIFORNIA

The State of California or its officers or agents shall not be responsible for the accuracy or completeness of electronic copies of this plan sheet.

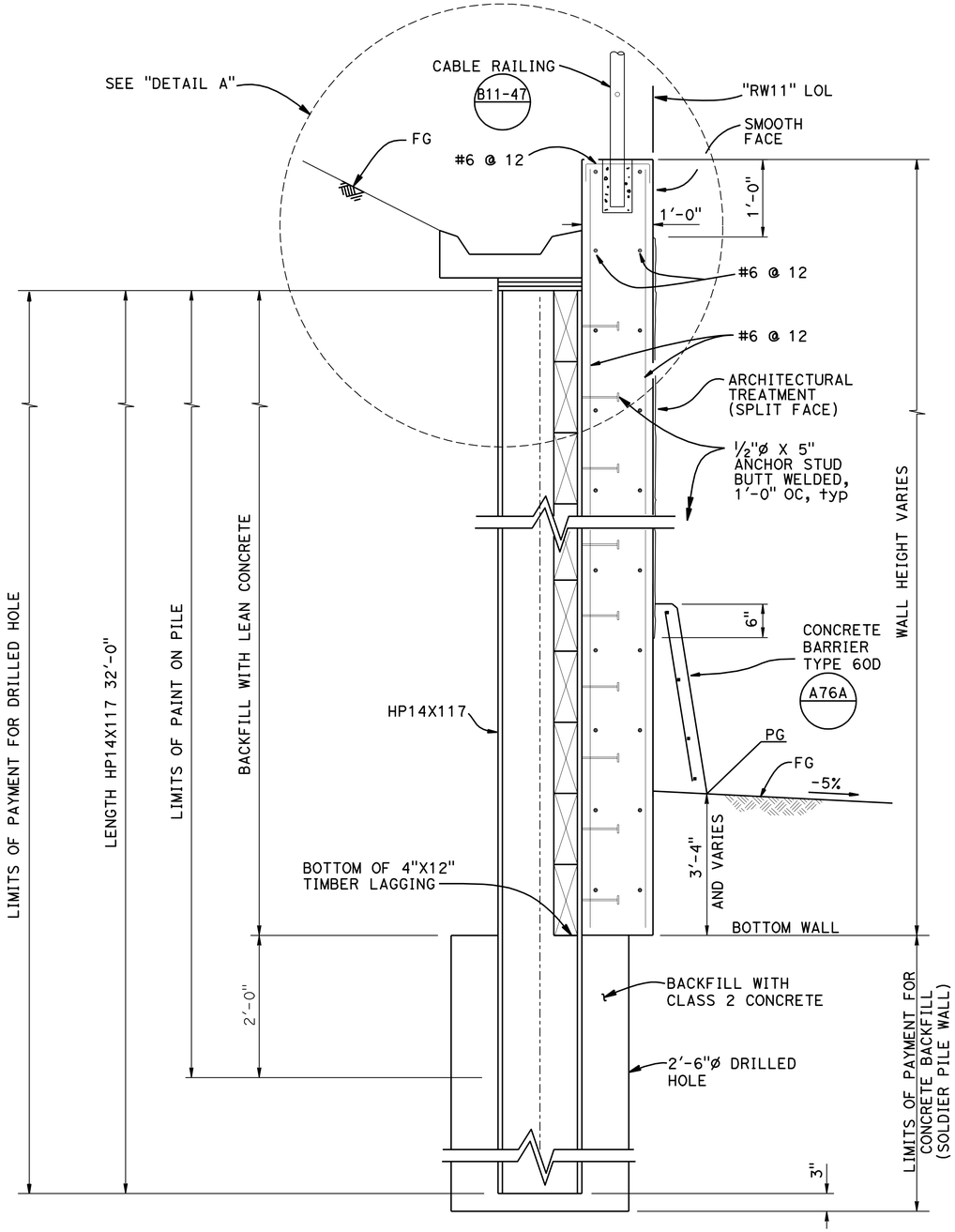

PART TYPICAL SECTION

1" = 1'

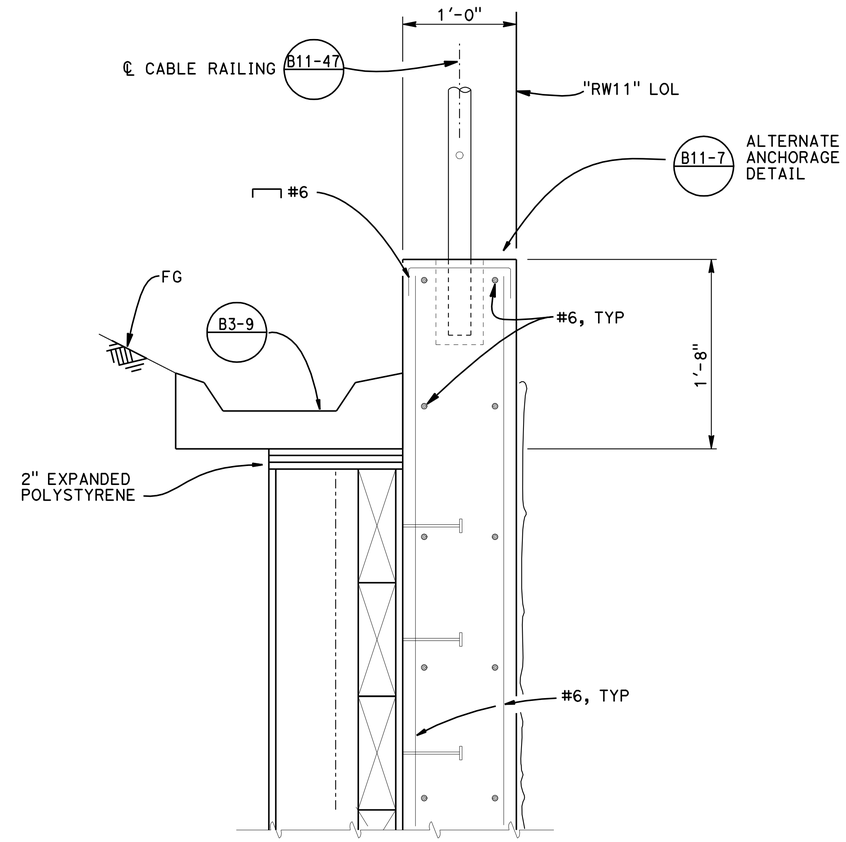

DETAIL A

1 1/2" = 1'

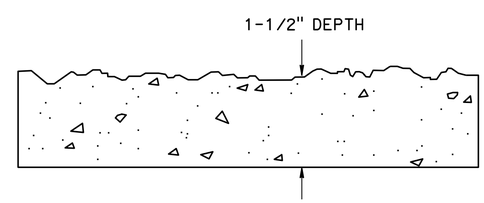

Note: ARCHITECTURAL TEXTURE (SPLIT FACE)

TYPICAL SPLIT FACE DETAIL

NO SCALE

DESIGN	BY C. UDARBE	CHECKED R. CORIA	
DETAILS	BY G. LEUNG/A. ONAODERA	CHECKED C. UDARBE	
QUANTITIES	BY C. UDARBE	CHECKED R. CORIA	

STATE OF CALIFORNIA DEPARTMENT OF TRANSPORTATION

DIVISION OF ENGINEERING SERVICES STRUCTURE DESIGN DESIGN BRANCH 17

BRIDGE NO. 29E0002
POST MILE 17.33

SOUTH STOCKTON WIDENING
RETAINING WALL NO. 11
TYPICAL SECTION

STRUCTURES DESIGN DETAIL SHEET (ENGLISH) (REV. 09-01-10)

ORIGINAL SCALE IN INCHES FOR REDUCED PLANS 0 1 2 3

UNIT: 3586
PROJECT NUMBER & PHASE: 10000004091
CONTRACT NO.: 10-3A1001

DISREGARD PRINTS BEARING EARLIER REVISION DATES

REVISION DATES: 8-3-11 2-29-12 9-30-11

SHEET 5 OF 11

FILE => 29e0002-f-typsec.dgn

USERNAME => s128843 DATE PLOTTED => 29-MAR-2012 TIME PLOTTED => 13:00

DIST	COUNTY	ROUTE	POST MILES TOTAL PROJECT	SHEET No.	TOTAL SHEETS
10	SJ	4,99	R19.5/R20.1, 15.0/18.6	1250	1414

REGISTERED CIVIL ENGINEER 11-04-11 DATE

3-26-12
PLANS APPROVAL DATE

REGISTERED PROFESSIONAL ENGINEER Chris Udarbe No. C62985 Exp. 06-30-2012 CIVIL STATE OF CALIFORNIA

The State of California or its officers or agents shall not be responsible for the accuracy or completeness of electronic copies of this plan sheet.

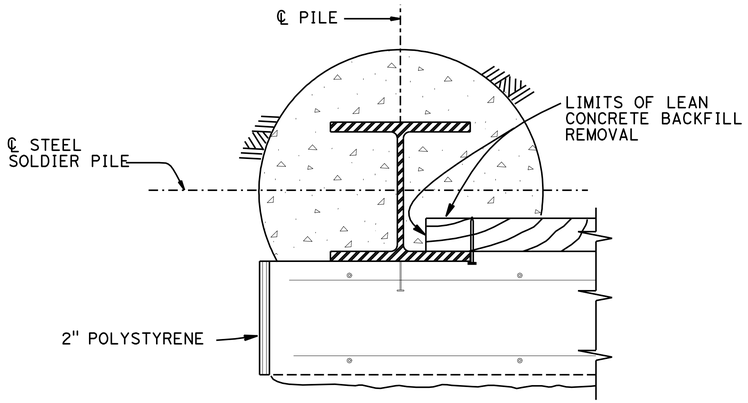

PILE WITH LAGGING AT BEGIN WALL

1½"= 1'

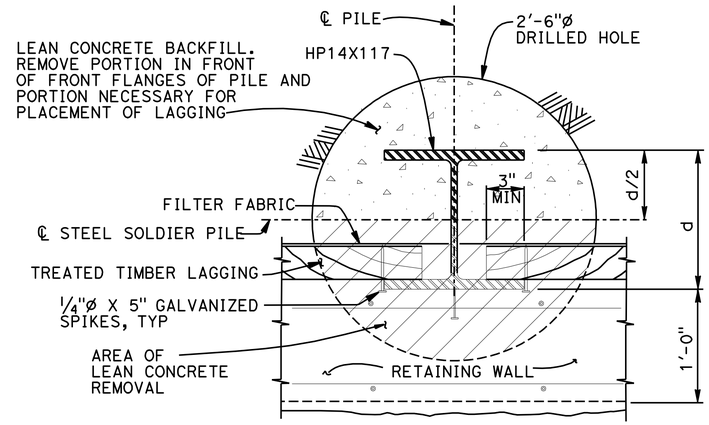

PILE SECTION WITH LAGGING

1½"= 1'

Notes:

1. For Limits of Lean Concrete Backfill, See "INDEX TO PLANS" sheet.
2. No clipping of timber lagging corner allowed.
3. Spikes shall not be bent.

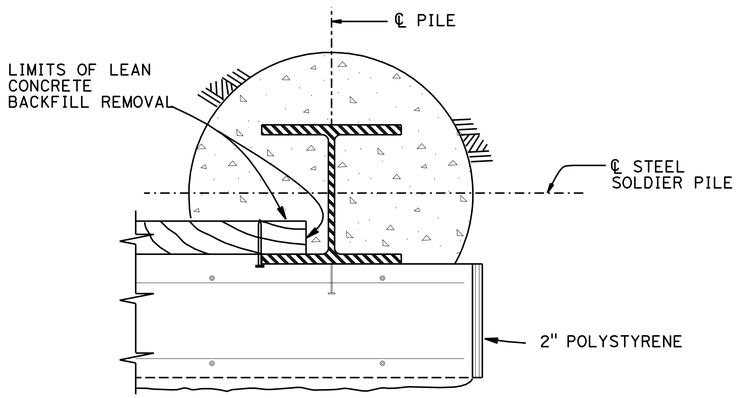

PILE WITH LAGGING AT END WALL

1½"= 1'

Note:

FOR DETAILS NOT SHOWN, SEE "PILE SECTION WITH LAGGING" DETAIL

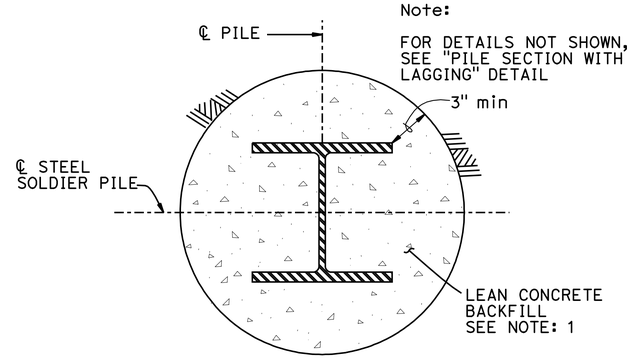

PILE SECTION BELOW LAGGING

1½"= 1'

DESIGN	BY C. UDARBE	CHECKED R. CORIA	
DETAILS	BY G. LEUNG	CHECKED C. UDARBE	
QUANTITIES	BY C. UDARBE	CHECKED R. CORIA	

STATE OF CALIFORNIA DEPARTMENT OF TRANSPORTATION

DIVISION OF ENGINEERING SERVICES STRUCTURE DESIGN DESIGN BRANCH 17

BRIDGE NO. 29E0002
POST MILE 17.33

SOUTH STOCKTON WIDENING
RETAINING WALL NO. 11
PILE DETAILS

STRUCTURES DESIGN DETAIL SHEET (ENGLISH) (REV. 09-01-10)

ORIGINAL SCALE IN INCHES FOR REDUCED PLANS 0 1 2 3

UNIT: 3586
PROJECT NUMBER & PHASE: 10000004091
CONTRACT NO.: 10-3A1001

DISREGARD PRINTS BEARING EARLIER REVISION DATES

REVISION DATES: 8-3-11 9-27-11 9-30-11 1-13-12

SHEET 6 OF 11

FILE => 29e0002-g-pdt2.dgn

USERNAME => s128843 DATE PLOTTED => 29-MAR-2012 TIME PLOTTED => 13:00

DIST	COUNTY	ROUTE	POST MILES TOTAL PROJECT	SHEET No.	TOTAL SHEETS
10	SJ	4,99	R19.5/R20.1, 15.0/18.6	1251	1414

REGISTERED CIVIL ENGINEER 11-04-11 DATE

3-26-12
PLANS APPROVAL DATE

REGISTERED PROFESSIONAL ENGINEER Chris Udarbe No. C62985 Exp. 06-30-2012 CIVIL STATE OF CALIFORNIA

The State of California or its officers or agents shall not be responsible for the accuracy or completeness of electronic copies of this plan sheet.

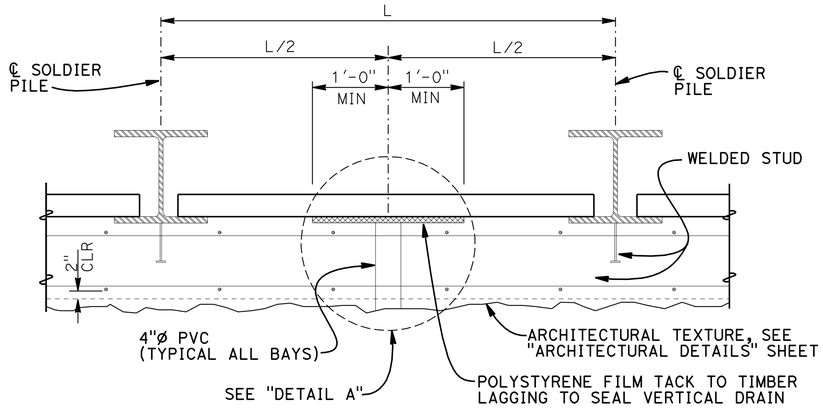

PART PLAN

1"=1'-0"

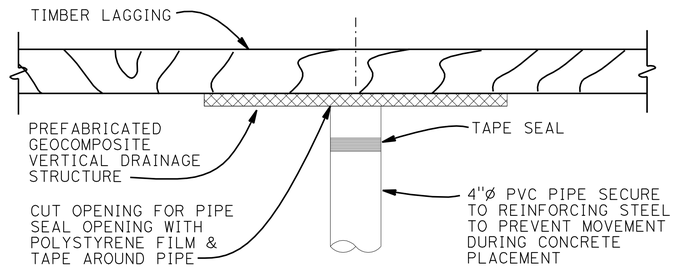

DETAIL A

2"=1'-0"

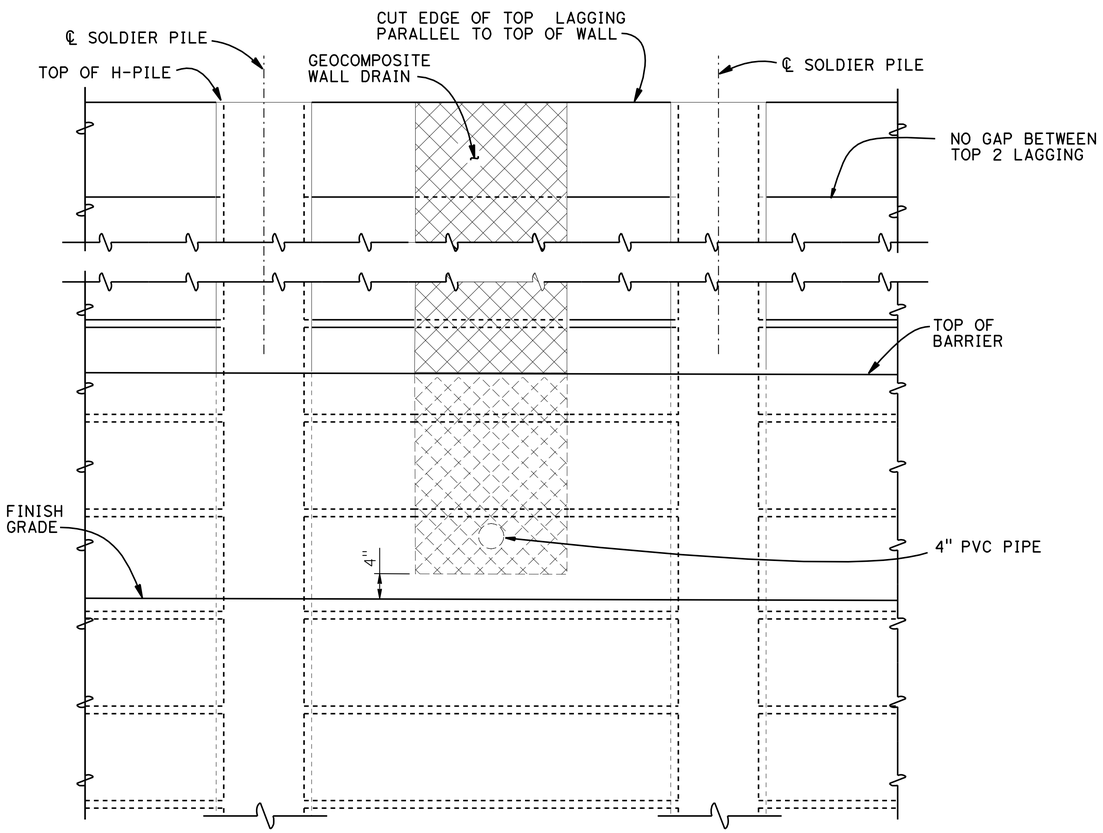

PART ELEVATION

1"=1'-0"

Note:

1. For begining and end wall details, see "DETAILS NO. 1" sheet

DESIGN	BY C. UDARBE	CHECKED R. CORIA	
DETAILS	BY G. LEUNG	CHECKED C. UDARBE	
QUANTITIES	BY C. UDARBE	CHECKED R. CORIA	

STATE OF CALIFORNIA
DEPARTMENT OF TRANSPORTATION

DIVISION OF ENGINEERING SERVICES
STRUCTURE DESIGN
DESIGN BRANCH 17

BRIDGE NO. 29E0002
POST MILE 17.33

SOUTH STOCKTON WIDENING
RETAINING WALL NO. 11
DRAINAGE DETAILS

STRUCTURES DESIGN DETAIL SHEET (ENGLISH) (REV. 09-01-10)

ORIGINAL SCALE IN INCHES FOR REDUCED PLANS 0 1 2 3

UNIT: 3586
PROJECT NUMBER & PHASE: 10000004091
CONTRACT NO.: 10-3A1001

DISREGARD PRINTS BEARING EARLIER REVISION DATES

REVISION DATES: 8-29-11 9-27-11 9-30-11 1-13-12

SHEET 7 OF 11

FILE => 29e0002-r-draindet.dgn

USERNAME => s128843 DATE PLOTTED => 29-MAR-2012 TIME PLOTTED => 13:00

DIST	COUNTY	ROUTE	POST MILES TOTAL PROJECT	SHEET No.	TOTAL SHEETS
10	SJ	4,99	R19.5/R20.1, 15.0/18.6	1252	1414

REGISTERED CIVIL ENGINEER 11-04-11 DATE

3-26-12
PLANS APPROVAL DATE

REGISTERED PROFESSIONAL ENGINEER Chris Udarbe No. C62985 Exp. 06-30-2012 CIVIL STATE OF CALIFORNIA

The State of California or its officers or agents shall not be responsible for the accuracy or completeness of electronic copies of this plan sheet.

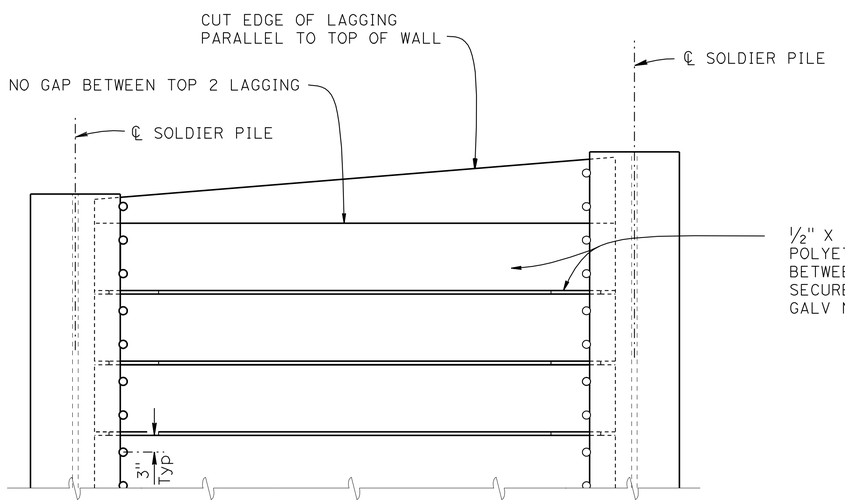

PART ELEVATION

LAGGING DETAILS (ALTERNATIVE 1)

NO SCALE

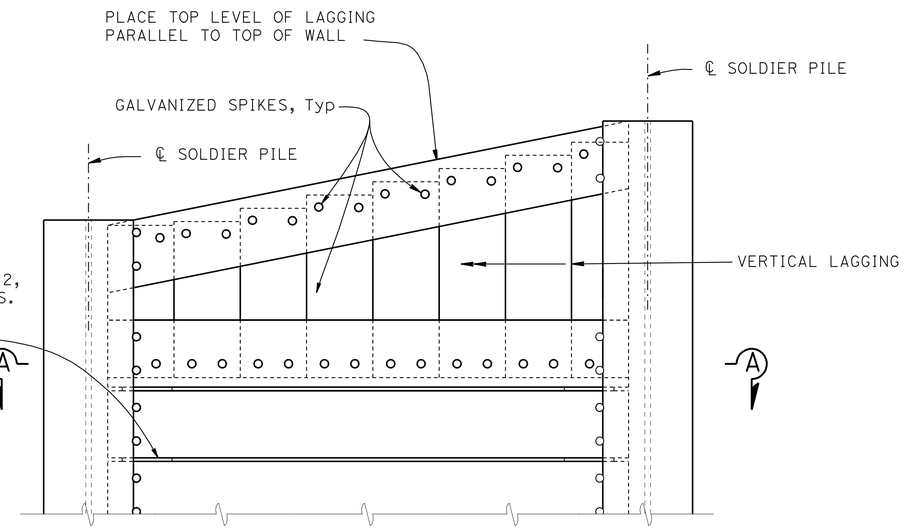

PART ELEVATION

LAGGING DETAILS (ALTERNATIVE 2)

NO SCALE

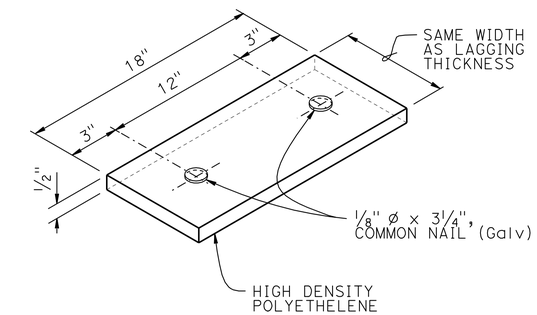

SHIM DETAIL

NO SCALE

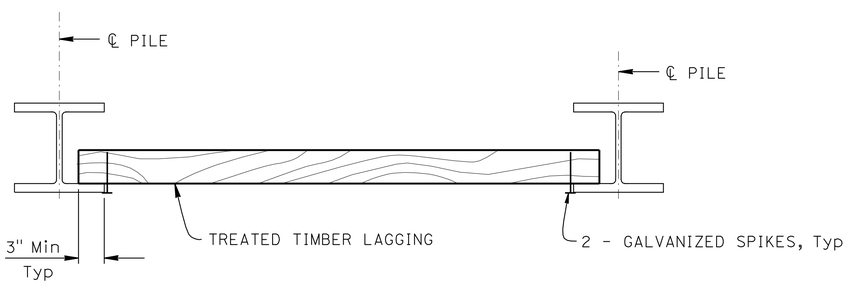

PART PLAN

NO SCALE

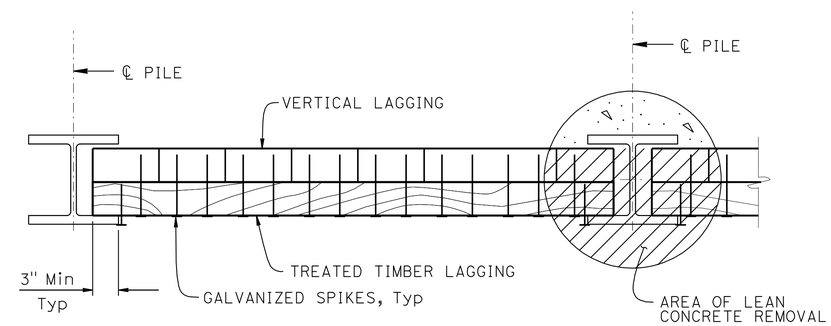

SECTION A-A

NO SCALE

NOTES:

1. No clipping of timber lagging corners allowed
2. Use 16d Galv wire spikes for 4 x 12 lagging, and 40d Galv wire spikes for 6 x 12 lagging
3. Spikes shall not be bent

STANDARD DRAWING

FILE NO. xs12-080

APPROVAL DATE July 2011

STATE OF CALIFORNIA DEPARTMENT OF TRANSPORTATION

DIVISION OF ENGINEERING SERVICES

BRIDGE NO. 29E0002

POST MILE 17.33

SOUTH STOCKTON WIDENING

RETAINING WALL NO. 11

SOLDIER PILE WALL LAGGING DETAILS

DS OSD 2147A (ENGLISH STANDARD DRAWING "XS" BORDER REV. (02-02-11)

ORIGINAL SCALE IN INCHES FOR REDUCED PLANS 0 1 2 3

UNIT: 3586
PROJECT NUMBER & PHASE: 10000004091
CONTRACT NO.: 10-3A1001

DISREGARD PRINTS BEARING EARLIER REVISION DATES

REVISION DATES: 9-30-11 1-13-12

SHEET 8 OF 11

FILE => 29e0002-xs12-080.dgn

USERNAME => s128843 DATE PLOTTED => 29-MAR-2012 TIME PLOTTED => 13:00

DIST	COUNTY	ROUTE	POST MILES TOTAL PROJECT	SHEET No	TOTAL SHEETS
10	SJ	4,99	R19.5/R20.1, 15.0/18.6	1253	1414

Joseph M Kaump 9-7-11
PROFESSIONAL GEOLOGIST

3-26-12
PLANS APPROVAL DATE

PROFESSIONAL GEOLOGIST Joseph Kaump No. 7837 Exp. 01-31-13 STATE OF CALIFORNIA

The State of California or its officers or agents shall not be responsible for the accuracy or completeness of electronic copies of this plan sheet.

This LOTB sheet was prepared in accordance with the Caltrans Soil & Rock Logging, Classification, & Presentation Manual (2010 Edition).

NOTE:

Boring No. RC-10-001 was drilled near Abutment 4 of the East Stockton Underpass (Br. No. 29-0326) and does not apply to Retaining Wall No. 11.

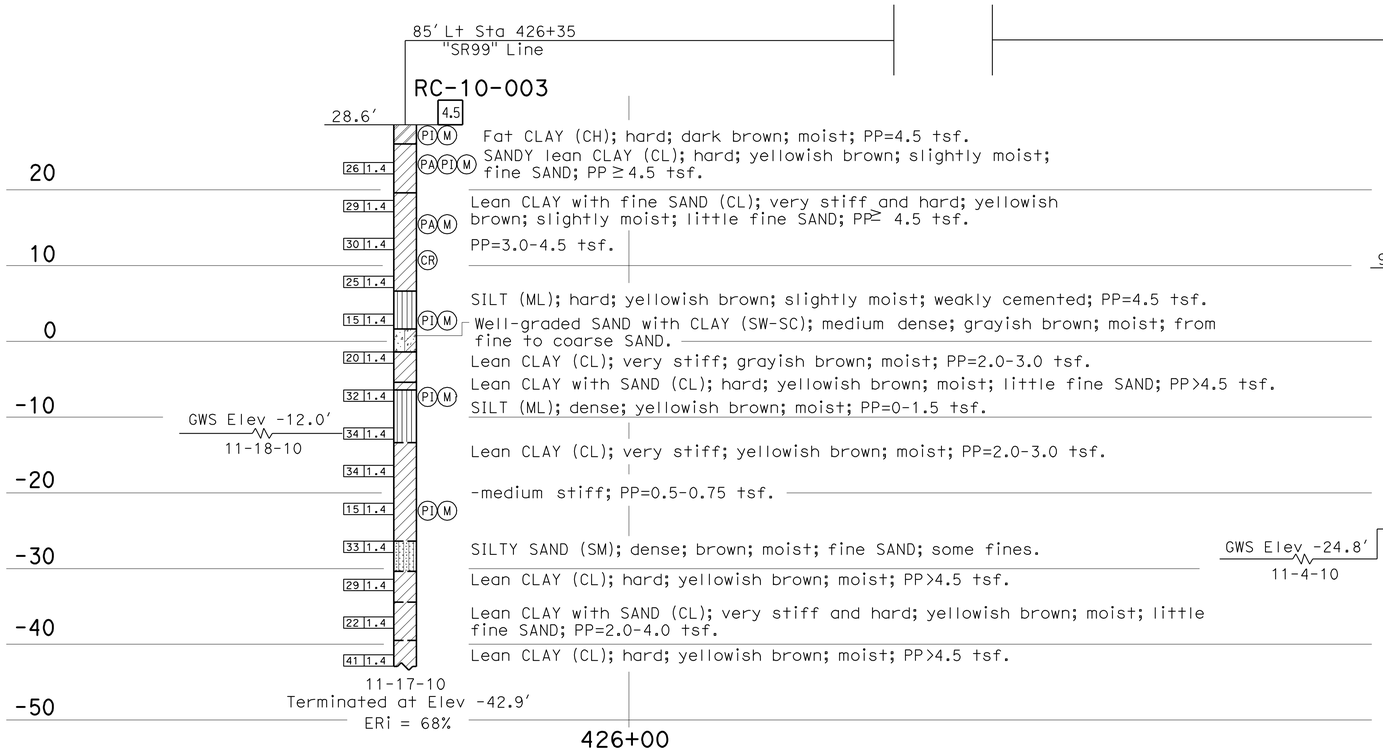

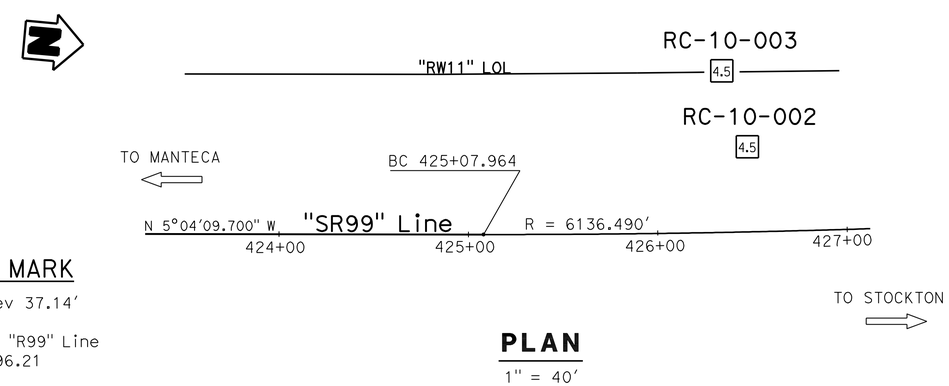

BENCH MARK

IGP102 Elev 37.14'
Fnd Spike
103.21' Rt "R99" Line
Sta. 429+96.21
NGVD29

PLAN

1" = 40'

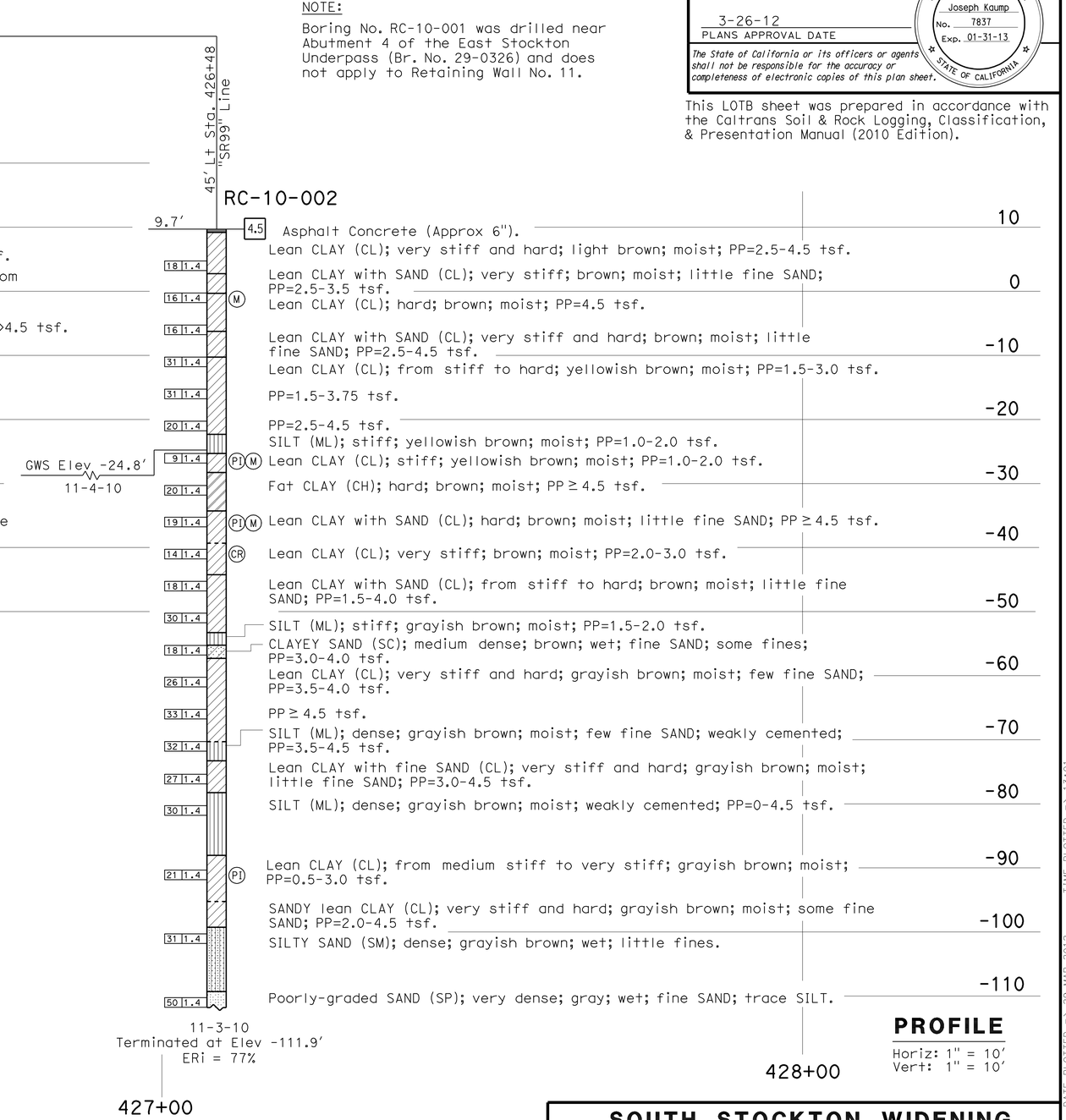

PROFILE

Horiz: 1" = 10'
Vert: 1" = 10'

ENGINEERING SERVICES	MATERIALS AND GEOTECHNICAL SERVICES	STATE OF CALIFORNIA DEPARTMENT OF TRANSPORTATION	DIVISION OF ENGINEERING SERVICES STRUCTURE DESIGN DESIGN BRANCH 17	BRIDGE NO. 29E0002 POST MILE 17.33	SOUTH STOCKTON WIDENING RETAINING WALL NO. 11 LOG OF TEST BORINGS 1 OF 3
FUNCTIONAL SUPERVISOR NAME: R. Buell	DRAWN BY: I. G-Remmen CHECKED BY: C. Zhen-Ru	FIELD INVESTIGATION BY: T. Alderman			

OGS CIVIL LOG OF TEST BORINGS SHEET

ORIGINAL SCALE IN INCHES FOR REDUCED PLANS 0 1 2 3

UNIT: 3586
PROJECT NUMBER & PHASE: 10000004091 CONTRACT NO.: 10-3A1001

DISREGARD PRINTS BEARING EARLIER REVISION DATES → REVISION DATES ~~09-07-11~~ 01-13-12 SHEET 9 OF 11

FILE => 29e0002-z-1tb01.dgn

USERNAME => s128843 DATE PLOTTED => 29-MAR-2012 TIME PLOTTED => 13:01

DIST	COUNTY	ROUTE	POST MILES TOTAL PROJECT	SHEET No	TOTAL SHEETS
10	SJ	4,99	R19.5/R20.1, 15.0/18.6	1254	1414

Joseph M Kaump 9-7-11
PROFESSIONAL GEOLOGIST

3-26-12
PLANS APPROVAL DATE

PROFESSIONAL GEOLOGIST Joseph Kaump No. 7837 Exp. 01-31-13 STATE OF CALIFORNIA

The State of California or its officers or agents shall not be responsible for the accuracy or completeness of electronic copies of this plan sheet.

REFERENCE: CALTRANS SOIL & ROCK LOGGING, CLASSIFICATION, AND PRESENTATION MANUAL (2010)

CEMENTATION

Description	Criteria
Weak	Crumbles or breaks with handling or little finger pressure.
Moderate	Crumbles or breaks with considerable finger pressure.
Strong	Will not crumble or break with finger pressure.

BOREHOLE IDENTIFICATION

Symbol	Hole Type	Description
Size	A	Auger Boring (hollow or solid stem bucket)
Size	R RW RC P	Rotary drilled boring (conventional) Rotary drilled with self-casing wire-line Rotary core with continuously-sampled, self-casing wire-line Rotary percussion boring (air)
Size	R	Rotary drilled diamond core
Size	HD HA	Hand driven (1-inch soil tube) Hand Auger
●	D	Dynamic Cone Penetration Boring
▲	CPT	Cone Penetration Test (ASTM D 5778)
⬚	O	Other (note on LOTB)

Note: Size in inches.

CONSISTENCY OF COHESIVE SOILS

Description	Shear Strength (tsf)	Pocket Penetrometer Measurement, PP, (tsf)	Torvane Measurement, TV, (tsf)	Vane Shear Measurement, VS, (tsf)
Very Soft	Less than 0.12	Less than 0.25	Less than 0.12	Less than 0.12
Soft	0.12 - 0.25	0.25 - 0.5	0.12 - 0.25	0.12 - 0.25
Medium Stiff	0.25 - 0.5	0.5 - 1	0.25 - 0.5	0.25 - 0.5
Stiff	0.5 - 1	1 - 2	0.5 - 1	0.5 - 1
Very Stiff	1 - 2	2 - 4	1 - 2	1 - 2
Hard	Greater than 2	Greater than 4	Greater than 2	Greater than 2

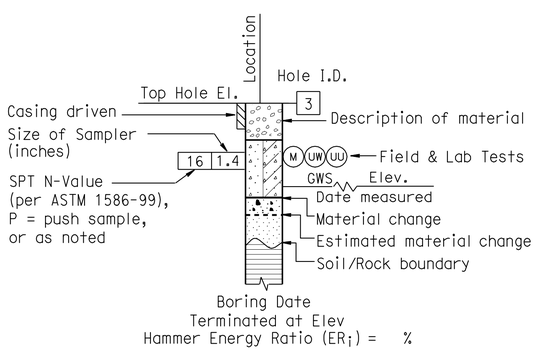

ROTARY BORING

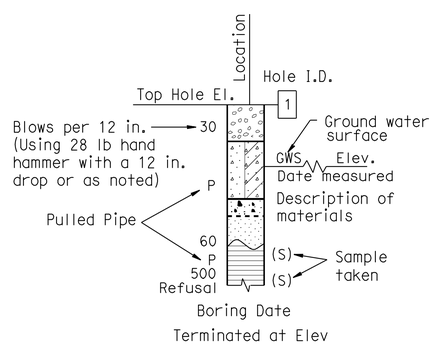

HAND BORING

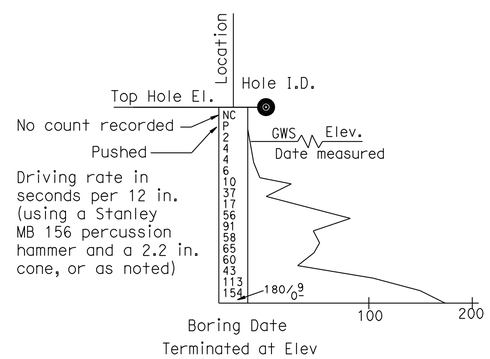

DYNAMIC CONE PENETRATION BORING

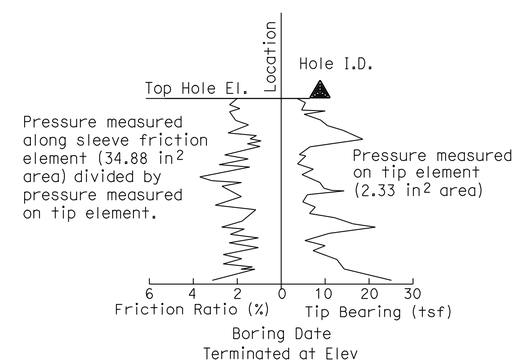

CONE PENETRATION TEST (CPT) BORING

ENGINEERING SERVICES	MATERIALS AND GEOTECHNICAL SERVICES	STATE OF CALIFORNIA DEPARTMENT OF TRANSPORTATION	DIVISION OF ENGINEERING SERVICES STRUCTURE DESIGN DESIGN BRANCH 17	BRIDGE NO. 29E0002 POST MILE 17.33	SOUTH STOCKTON WIDENING SOUND WALL NO. 11 LOG OF TEST BORINGS 2 OF 3
	PREPARED BY: I. G-Remmen				

GS LOTB SOIL LEGEND

ORIGINAL SCALE IN INCHES FOR REDUCED PLANS 0 1 2 3

UNIT: 3586
PROJECT NUMBER & PHASE: 10000004091 CONTRACT NO.: 10-3A1001

DISREGARD PRINTS BEARING EARLIER REVISION DATES

REVISION DATES: 9-28-11 1-13-12

SHEET 10 OF 11

FILE => 29e0002-z-ltb02.dgn

USERNAME => s128843 DATE PLOTTED => 23-MAR-2012 TIME PLOTTED => 13:01

REFERENCE: CALTRANS SOIL & ROCK LOGGING, CLASSIFICATION, AND PRESENTATION MANUAL (2010)

DIST	COUNTY	ROUTE	POST MILES TOTAL PROJECT	SHEET No	TOTAL SHEETS
10	SJ	4,99	R19.5/R20.1, 15.0/18.6	1255	1414

PROFESSIONAL GEOLOGIST 9-7-11

3-26-12
PLANS APPROVAL DATE

PROFESSIONAL GEOLOGIST Joseph Kaump No. 7837 Exp. 01-31-13 STATE OF CALIFORNIA

The State of California or its officers or agents shall not be responsible for the accuracy or completeness of electronic copies of this plan sheet.

GROUP SYMBOLS AND NAMES

Graphic/Symbol	Group Names	Graphic/Symbol	Group Names
GW	Well-graded GRAVEL Well-graded GRAVEL with SAND	CL	Lean CLAY Lean CLAY with SAND Lean CLAY with GRAVEL SANDY lean CLAY SANDY lean CLAY with GRAVEL GRAVELLY lean CLAY GRAVELLY lean CLAY with SAND
GP	Poorly-graded GRAVEL Poorly-graded GRAVEL with SAND		
GW-GM	Well-graded GRAVEL with SILT Well-graded GRAVEL with SILT and SAND	CL-ML	SILTY CLAY SILTY CLAY with SAND SILTY CLAY with GRAVEL SANDY SILTY CLAY SANDY SILTY CLAY with GRAVEL GRAVELLY SILTY CLAY GRAVELLY SILTY CLAY with SAND
GW-GC	Well-graded GRAVEL with CLAY (or SILTY CLAY) Well-graded GRAVEL with CLAY and SAND (or SILTY CLAY and SAND)		
GP-GM	Poorly-graded GRAVEL with SILT Poorly-graded GRAVEL with SILT and SAND	ML	SILT SILT with SAND SILT with GRAVEL SANDY SILT SANDY SILT with GRAVEL GRAVELLY SILT GRAVELLY SILT with SAND
GP-GC	Poorly-graded GRAVEL with CLAY (or SILTY CLAY) Poorly-graded GRAVEL with CLAY and SAND (or SILTY CLAY and SAND)		
GM	SILTY GRAVEL SILTY GRAVEL with SAND	OL	ORGANIC lean CLAY ORGANIC lean CLAY with SAND ORGANIC lean CLAY with GRAVEL SANDY ORGANIC lean CLAY SANDY ORGANIC lean CLAY with GRAVEL GRAVELLY ORGANIC lean CLAY GRAVELLY ORGANIC lean CLAY with SAND
GC	CLAYEY GRAVEL CLAYEY GRAVEL with SAND		
GC-GM	SILTY, CLAYEY GRAVEL SILTY, CLAYEY GRAVEL with SAND	OL	ORGANIC SILT ORGANIC SILT with SAND ORGANIC SILT with GRAVEL SANDY ORGANIC SILT SANDY ORGANIC SILT with GRAVEL GRAVELLY ORGANIC SILT GRAVELLY ORGANIC SILT with SAND
SW	Well-graded SAND Well-graded SAND with GRAVEL		
SP	Poorly-graded SAND Poorly-graded SAND with GRAVEL	CH	Fat CLAY Fat CLAY with SAND Fat CLAY with GRAVEL SANDY fat CLAY SANDY fat CLAY with GRAVEL GRAVELLY fat CLAY GRAVELLY fat CLAY with SAND
SW-SM	Well-graded SAND with SILT Well-graded SAND with SILT and GRAVEL		
SW-SC	Well-graded SAND with CLAY (or SILTY CLAY) Well-graded SAND with CLAY and GRAVEL (or SILTY CLAY and GRAVEL)	MH	Elastic SILT Elastic SILT with SAND Elastic SILT with GRAVEL SANDY elastic SILT SANDY elastic SILT with GRAVEL GRAVELLY elastic SILT GRAVELLY elastic SILT with SAND
SP-SM	Poorly-graded SAND with SILT Poorly-graded SAND with SILT and GRAVEL		
SP-SC	Poorly-graded SAND with CLAY (or SILTY CLAY) Poorly-graded SAND with CLAY and GRAVEL (or SILTY CLAY and GRAVEL)	OH	ORGANIC fat CLAY ORGANIC fat CLAY with SAND ORGANIC fat CLAY with GRAVEL SANDY ORGANIC fat CLAY SANDY ORGANIC fat CLAY with GRAVEL GRAVELLY ORGANIC fat CLAY GRAVELLY ORGANIC fat CLAY with SAND
SM	SILTY SAND SILTY SAND with GRAVEL		
SC	CLAYEY SAND CLAYEY SAND with GRAVEL	OH	ORGANIC elastic SILT ORGANIC elastic SILT with SAND ORGANIC elastic SILT with GRAVEL SANDY ORGANIC elastic SILT SANDY ORGANIC elastic SILT with GRAVEL GRAVELLY ORGANIC elastic SILT GRAVELLY ORGANIC elastic SILT with SAND
SC-SM	SILTY, CLAYEY SAND SILTY, CLAYEY SAND with GRAVEL		
PT	PEAT	OL/OH	ORGANIC SOIL ORGANIC SOIL with SAND ORGANIC SOIL with GRAVEL SANDY ORGANIC SOIL SANDY ORGANIC SOIL with GRAVEL GRAVELLY ORGANIC SOIL GRAVELLY ORGANIC SOIL with SAND
	COBBLES COBBLES and BOULDERS BOULDERS		

FIELD AND LABORATORY TESTING

- (C) Consolidation (ASTM D 2435)
- (CL) Collapse Potential (ASTM D 5333)
- (CP) Compaction Curve (CTM 216)
- (CR) Corrosivity Testing (CTM 643, CTM 422, CTM 417)
- (CU) Consolidated Undrained Triaxial (ASTM D 4767)
- (DS) Direct Shear (ASTM D 3080)
- (EI) Expansion Index (ASTM D 4829)
- (M) Moisture Content (ASTM D 2216)
- (OC) Organic Content-% (ASTM D 2974)
- (P) Permeability (CTM 220)
- (PA) Particle Size Analysis (ASTM D 422)
- (PI) Plasticity Index (AASHTO T 90) Liquid Limit (AASHTO T 89)
- (PL) Point Load Index (ASTM D 5731)
- (PM) Pressure Meter
- (R) R-Value (CTM 301)
- (SE) Sand Equivalent (CTM 217)
- (SG) Specific Gravity (AASHTO T 100)
- (SL) Shrinkage Limit (ASTM D 427)
- (SW) Swell Potential (ASTM D 4546)
- (UC) Unconfined Compression-Soil (ASTM D 2166) Unconfined Compression-Rock (ASTM D 2938)
- (UU) Unconsolidated Undrained Triaxial (ASTM D 2850)
- (UW) Unit Weight (ASTM D 4767)

APPARENT DENSITY OF COHESIONLESS SOILS

Description	SPT N_{60} (Blows / 12 in.)
Very Loose	0 - 5
Loose	5 - 10
Medium Dense	10 - 30
Dense	30 - 50
Very Dense	Greater than 50

MOISTURE

Description	Criteria
Dry	No discernable moisture
Moist	Moisture present, but no free water
Wet	Visible free water

PERCENT OR PROPORTION OF SOILS

Description	Criteria
Trace	Particles are present but estimated to be less than 5%
Few	5% - 10%
Little	15% - 25%
Some	30% - 45%
Mostly	50% - 100%

PARTICLE SIZE

Description		Size (in.)
Boulder		Greater than 12
Cobble		3 - 12
Gravel	Coarse	3/4 - 3
	Fine	1/5 - 3/4
Sand	Coarse	1/16 - 1/5
	Medium	1/64 - 1/16
	Fine	1/300 - 1/64
Silt and Clay		Less than 1/300

ENGINEERING SERVICES

MATERIALS AND GEOTECHNICAL SERVICES

PREPARED BY: I. G-Remmen

STATE OF CALIFORNIA DEPARTMENT OF TRANSPORTATION

DIVISION OF ENGINEERING SERVICES STRUCTURE DESIGN DESIGN BRANCH 17

BRIDGE NO. 29E0002

POST MILE 17.33

SOUTH STOCKTON WIDENING
SOUND WALL NO. 11
LOG OF TEST BORINGS 3 OF 3

GS LOTB SOIL LEGEND

ORIGINAL SCALE IN INCHES FOR REDUCED PLANS 0 1 2 3

UNIT: 3586
PROJECT NUMBER & PHASE: 10000004091
CONTRACT NO.: 10-3A1001

DISREGARD PRINTS BEARING EARLIER REVISION DATES

REVISION DATES: 9-28-11 1-13-11

SHEET 11 OF 11

FILE => 29e0002-z-ltb03.dgn

USERNAME => s128843 DATE PLOTTED => 29-MAR-2012 TIME PLOTTED => 13:01

DIST	COUNTY	ROUTE	POST MILES TOTAL PROJECT	SHEET No.	TOTAL SHEETS
10	SJ	4,99	R19.5/R20.1, 15.0/18.6	1256	1414

REGISTERED CIVIL ENGINEER 11-04-11 DATE

3-26-12
PLANS APPROVAL DATE

REGISTERED PROFESSIONAL ENGINEER CHRIS UDARBE No. C62985 Exp. 6-30-12 CIVIL STATE OF CALIFORNIA

The State of California or its officers or agents shall not be responsible for the accuracy or completeness of electronic copies of this plan sheet.

INDEX TO PLANS

Sheet No.	Title
1	GENERAL PLAN
2	FOUNDATION PLAN
3	WALL DETAILS
4	ARCHITECTURAL DETAILS NO. 1
5	ARCHITECTURAL DETAILS NO. 2

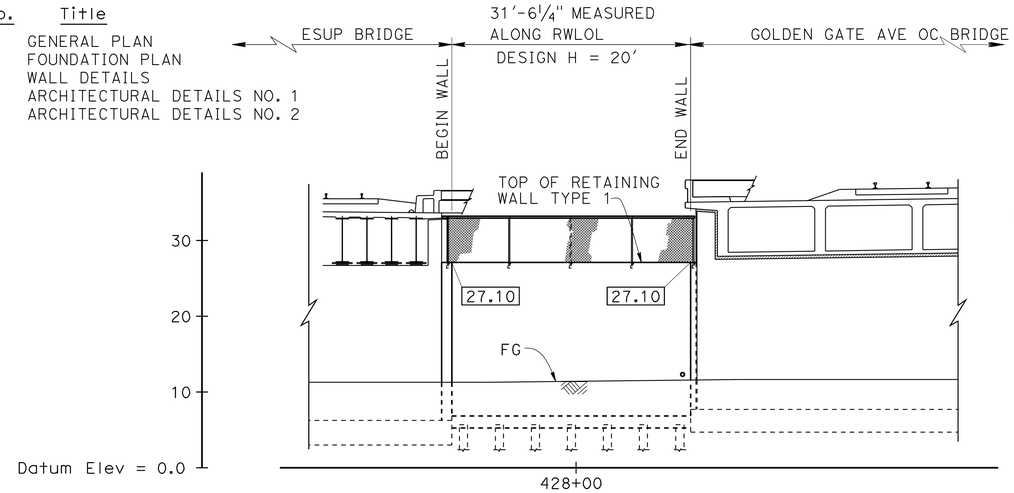

ELEVATION

1" = 10'

PILE DATA TABLE

Location	Pile Type	Nominal Resistance		Design Tip Elevation (ft)	Specified Tip Elevation (ft)	Nominal Driving Resistance (kips)
		Compression	Tension			
29E0003	HP 10 x 42	180 kips	0	-46	-46	180

Note: Design tip elevations for all support locations are controlled by Compression.
For log of test borings, see Br. No. 29-0330.

STANDARD PLANS DATED MAY 2006

A10A	ACRONYMS AND ABBREVIATIONS (SHEET 1 OF 2)
A10B	ACRONYMS AND ABBREVIATIONS (SHEET 2 OF 2)
A10C	SYMBOLS (SHEET 1 OF 2)
A10D	SYMBOLS (SHEET 2 OF 2)
A62B	LIMITS OF PAYMENT FOR EXCAVATION AND BACKFILL-BRIDGE SURCHARGE AND WALL
B0-3	BRIDGE DETAILS
B3-1	RETAINING WALL TYPE 1 H=4' THROUGH 30'
B3-8	RETAINING WALL DETAILS NO. 1
B3-9	RETAINING WALL DETAILS NO. 2
B11-52	CHAIN LINK RAILING TYPE 7

STANDARD PLAN SHEET NO.

DETAIL NO.

QUANTITIES

STRUCTURE EXCAVATION (RETAINING WALL)	201	CY
STRUCTURE BACKFILL (RETAINING WALL)	138	CY
PERVIOUS BACKFILL MATERIAL (RETAINING WALL)	15	CY
FURNISH STEEL PILING (HP 10 X 42)	711	LF
DRIVE STEEL PILE (HP 10 X 42)	15	EA
STRUCTURAL CONCRETE, BRIDGE FOOTING	21	CY
STRUCTURAL CONCRETE, RETAINING WALL	33	CY
ARCHITECTURAL TEXTURE (SPLIT FACE)	368	SQFT
ARCHITECTURAL TEXTURE (RIVER ROCK)	92	SQFT
BAR REINFORCING STEEL (RETAINING WALL)	8,267	LB
MINOR CONCRETE (GUTTER)	32	LF
CHAIN LINK RAILING (TYPE 7)	32	LF
CONCRETE BARRIER (TYPE 60D)	32	LF

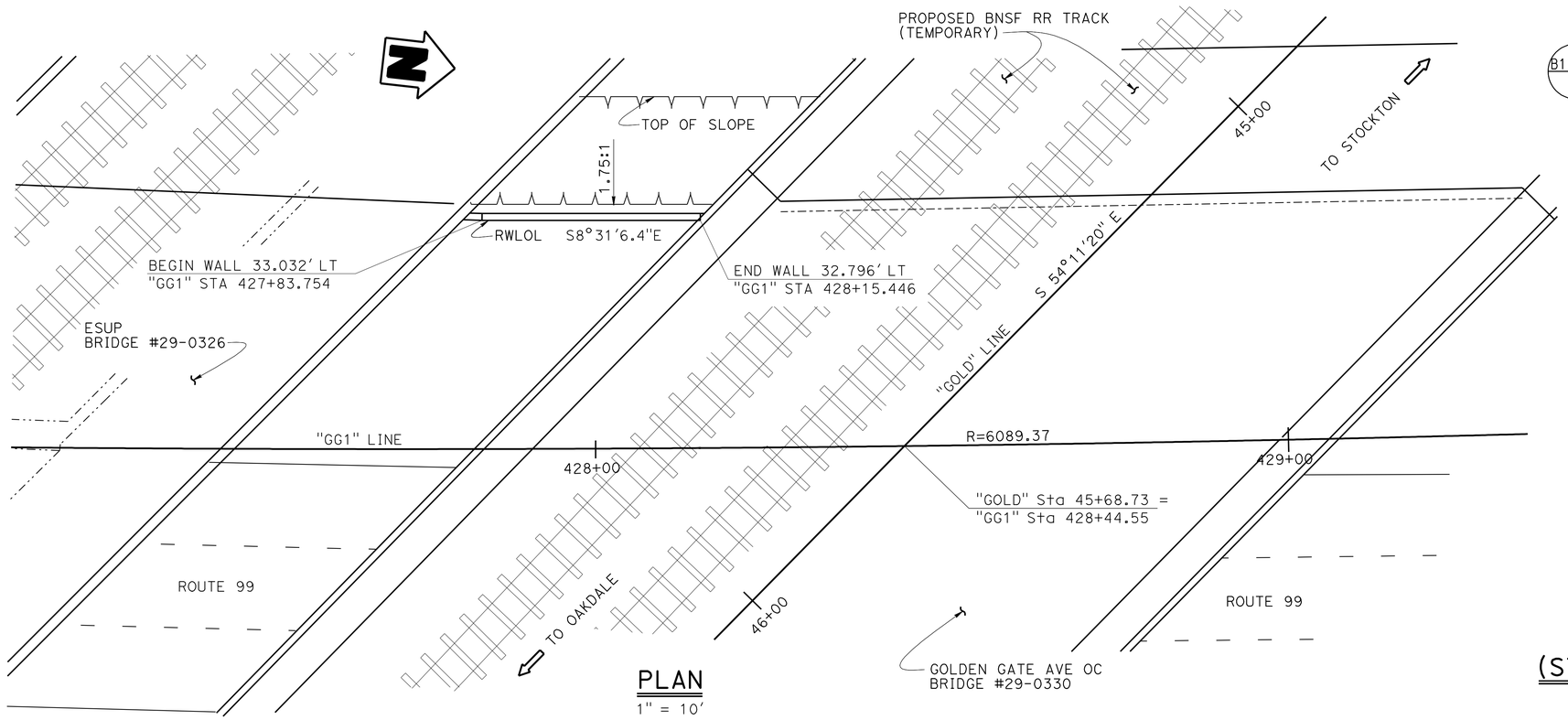

PLAN

1" = 10'

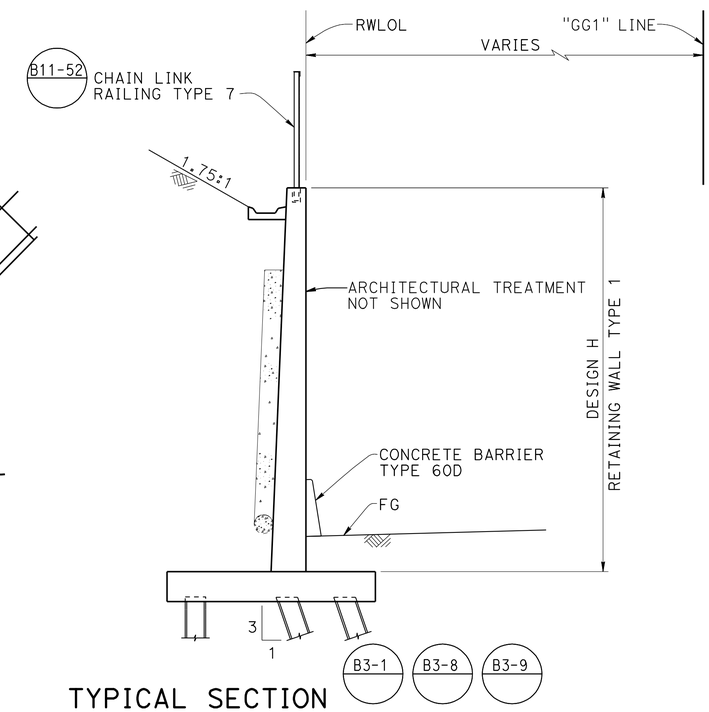

TYPICAL SECTION (STA 427+81.80 TO STA 428+15.03)

¼" = 1'-0"

Gary Joe
DESIGN ENGINEER

	BY	CHECKED			
DESIGN	M. FRIEDHEIM	I. CHERNIOGLO	LOAD & RESISTANCE FACTOR DESIGN	LIVE LOADING: HL93 W/"LOW-BOY"; PERMIT DESIGN VEHICLE	
DETAILS	C. FIGUERRES	I. CHERNIOGLO	LAYOUT	M. FRIEDHEIM	I. CHERNIOGLO
QUANTITIES	I. CHERNIOGLO	M. FRIEDHEIM	SPECIFICATIONS	V. RENGANATHAN	PLANS AND SPECS COMPARED V. RENGANATHAN

ORIGINAL SCALE IN INCHES FOR REDUCED PLANS 0 1 2 3

STATE OF CALIFORNIA
DEPARTMENT OF TRANSPORTATION

DIVISION OF ENGINEERING SERVICES
STRUCTURE DESIGN
DESIGN BRANCH 17

BRIDGE NO. 29E0003
POST MILE 17.41

SOUTH STOCKTON WIDENING
CONNECTING WALL
GENERAL PLAN

UNIT: 3586
PROJECT NUMBER & PHASE: 10000004091
CONTRACT NO.: 10-3A1001

DISREGARD PRINTS BEARING EARLIER REVISION DATES

REVISION DATES 06-13-11 02-22-12 05-02-11

SHEET 1 OF 5

USERNAME => s128843 DATE PLOTTED => 29-MAR-2012 TIME PLOTTED => 13:01

STRUCTURES DESIGN GENERAL PLAN SHEET (ENGLISH) (REV.09-01-10)

FILE => 29e0003-a-gp.dgn

DIST	COUNTY	ROUTE	POST MILES TOTAL PROJECT	SHEET No	TOTAL SHEETS
10	SJ	4,99	R19.5/R20.1, 15.0/18.6	1257	1414

REGISTERED CIVIL ENGINEER — DATE 11-04-11

PLANS APPROVAL DATE 3-26-12

REGISTERED PROFESSIONAL ENGINEER — CHRIS V. UDARBE — No. 62985 — Exp. 06-30-12 — CIVIL — STATE OF CALIFORNIA

The State of California or its officers or agents shall not be responsible for the accuracy or completeness of electronic copies of this plan sheet.

CURVE DATA

No.	R	Δ	T	L
(B)	6089.37	2°49'33"	150.20	300.33
(C)	2002.63	4°46'25"	83.47	166.84
(D)	6136.47	12°22'40"	665.44	1325.69
(E)	150.00	201°00'46"	808.83	526.25
(F)	3819.72	13°22'49"	448.05	892.02
(G)	3819.72	13°22'49"	448.05	892.02

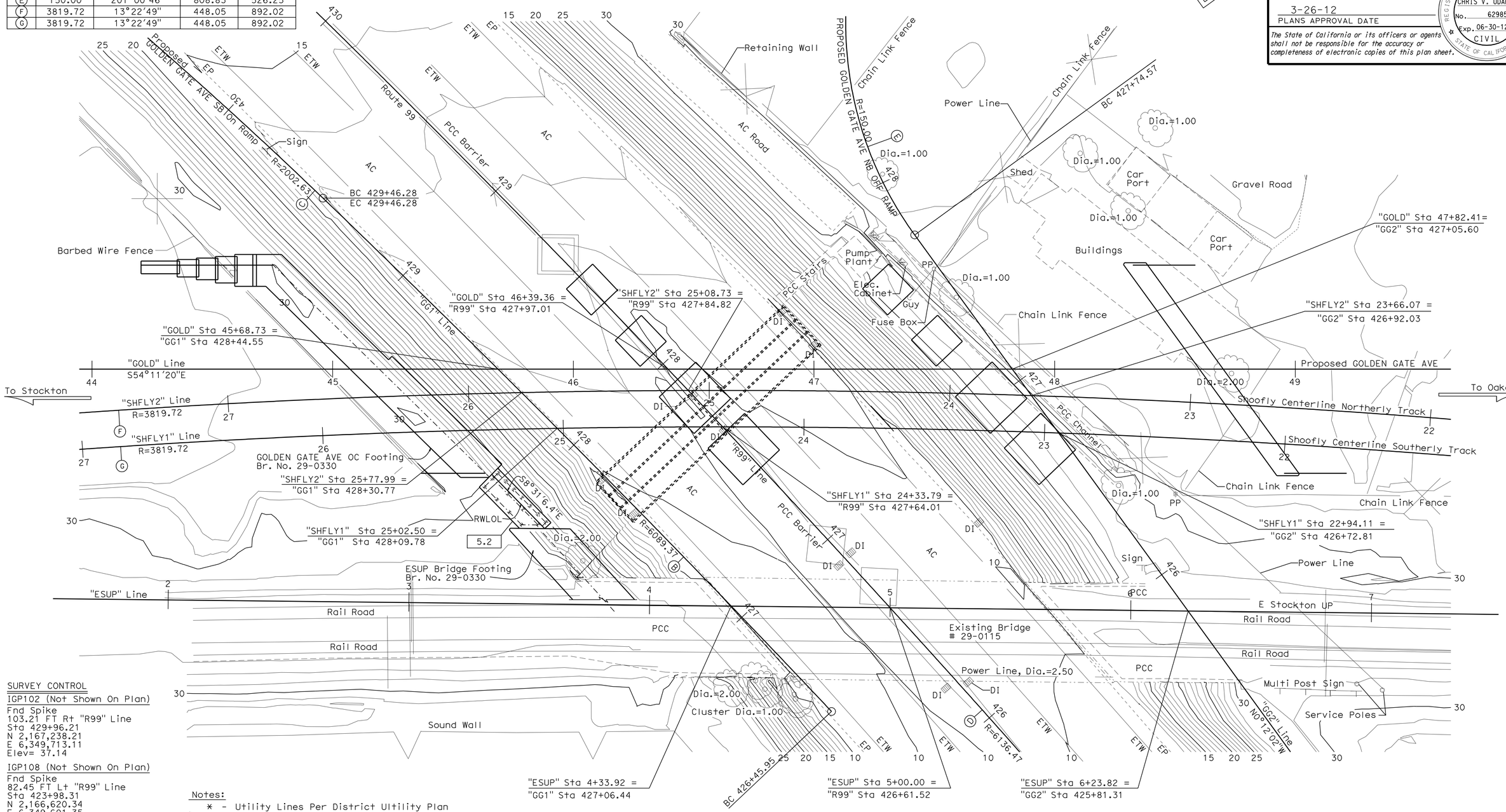

SURVEY CONTROL

IGP102 (Not Shown On Plan)
Fnd Spike
103.21 FT Rt "R99" Line
Sta 429+96.21
N 2,167,238.21
E 6,349,713.11
Elev= 37.14

IGP108 (Not Shown On Plan)
Fnd Spike
82.45 FT Lt "R99" Line
Sta 423+98.31
N 2,166,620.34
E 6,349,601.35
Elev= 28.53

Notes:
* - Utility Lines Per District Utility Plan
▭ - Indicates bottom of Ftg Elev.

SOUTH STOCKTON WIDENING
CONNECTING WALL
FOUNDATION PLAN

PRELIMINARY INVESTIGATION SECTION

SCALE	VERT.DATUM NGVD29	PHOTOGRAMMETRY AS OF: X			
1"=20'	HORZ.DATUM NAD198 (1991.35)	SURVEYED	BY District/T.Gillett	CHECKED	BY T.Gillett 09/2009
ALIGNMENT TIES Dist. Traverse Sheet		DRAFTED	BY J.Martinez 09/2009	CHECKED	BY L.Lew 09/2009

STRUCTURES FOUNDATION PLAN SHEET (ENGLISH) (REV. 10/25/05)

	BY	CHECKED
DESIGN	M. FRIEDHEIM	I. CHERNIOGLO
DETAILS	C. FIGUERRES	I. CHERNIOGLO
QUANTITIES	I. CHERNIOGLO	M. FRIEDHEIM

ORIGINAL SCALE IN INCHES FOR REDUCED PLANS 0 1 2 3

STATE OF CALIFORNIA
DEPARTMENT OF TRANSPORTATION

DIVISION OF ENGINEERING SERVICES
STRUCTURE DESIGN
DESIGN BRANCH 17

BRIDGE NO. 29E0003
POST MILE 17.41

UNIT: 3586
PROJECT NUMBER & PHASE: 10000004091
CONTRACT NO.: 10-3A1001

DISREGARD PRINTS BEARING EARLIER REVISION DATES

REVISION DATES: 04/26/11 06-13-11 06-14-11 1/29/11

SHEET 2 OF 5

FILE => 29e0003-e-fp.dgn

USERNAME => s128843 DATE PLOTTED => 29-MAR-2012 TIME PLOTTED => 13:01

DIST	COUNTY	ROUTE	POST MILES TOTAL PROJECT	SHEET No.	TOTAL SHEETS
10	SJ	4,99	R19.5/R20.1, 15.0/18.6	1258	1414

REGISTERED CIVIL ENGINEER — DATE: 11-04-11

PLANS APPROVAL DATE: 3-26-12

REGISTERED PROFESSIONAL ENGINEER — CHRIS V. UDARBE — No. 62985 — Exp. 06-30-12 — CIVIL — STATE OF CALIFORNIA

The State of California or its officers or agents shall not be responsible for the accuracy or completeness of electronic copies of this plan sheet.

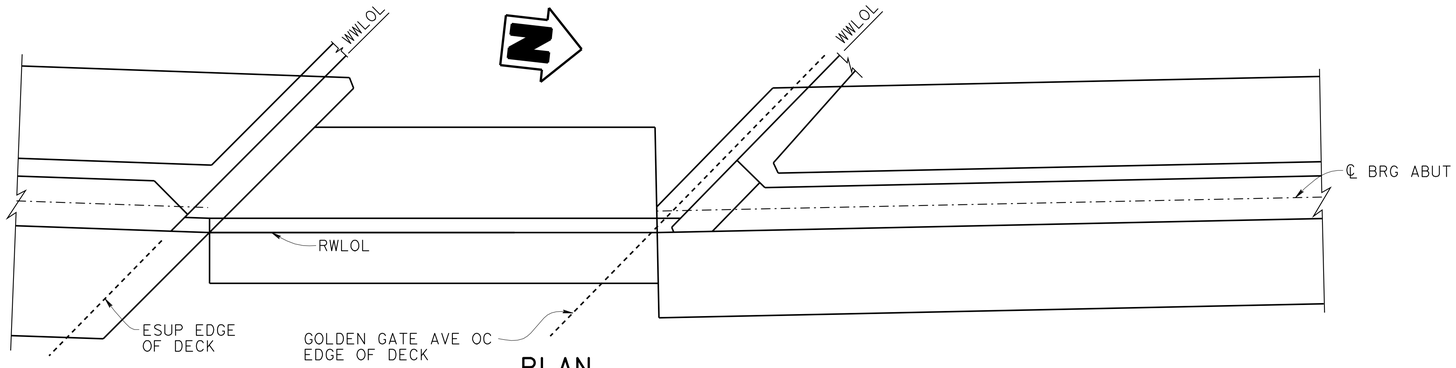

PLAN

3/16" = 1'-0"

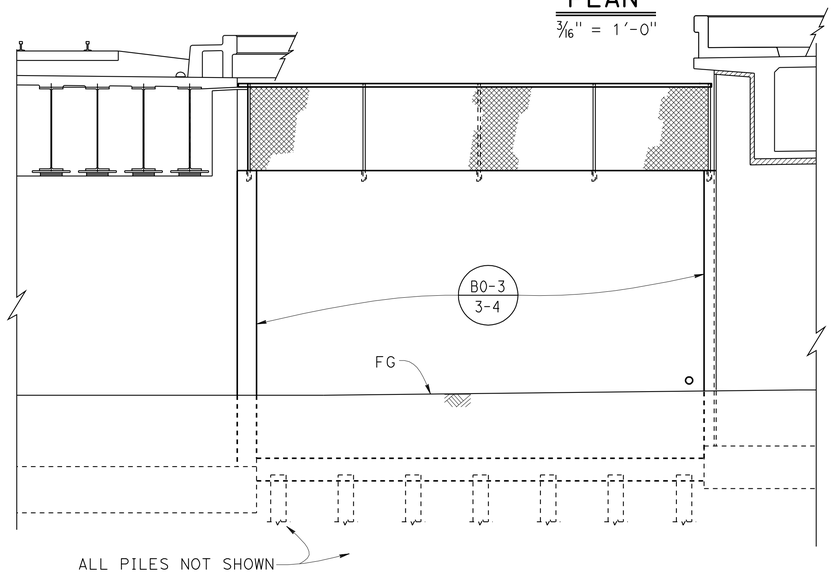

ELEVATION

3/16" = 1'-0"

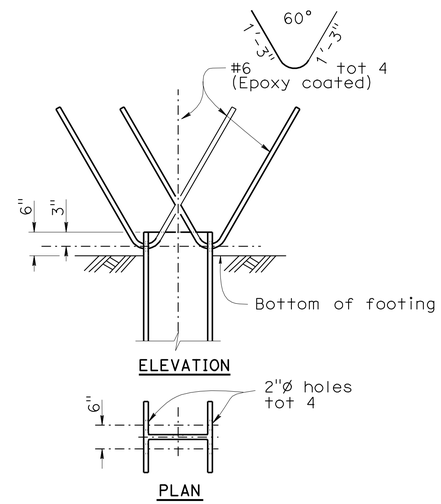

STEEL PILE ANCHOR

NO SCALE

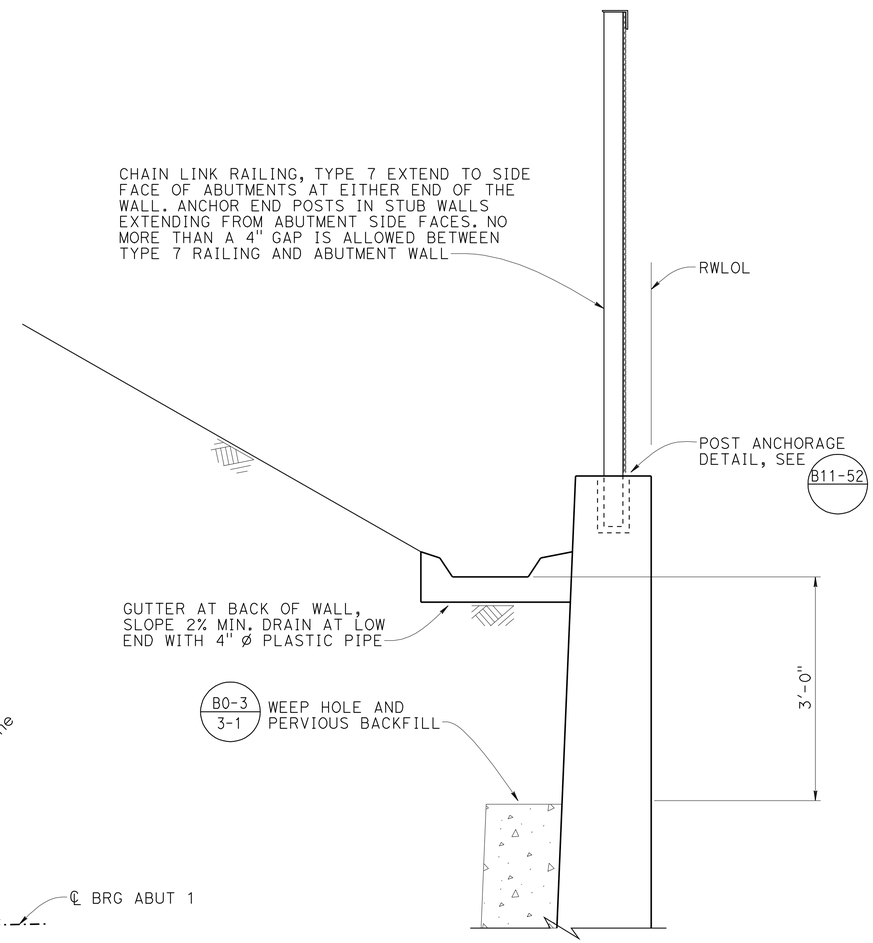

TOP OF WALL DETAIL

1" = 1'-0"

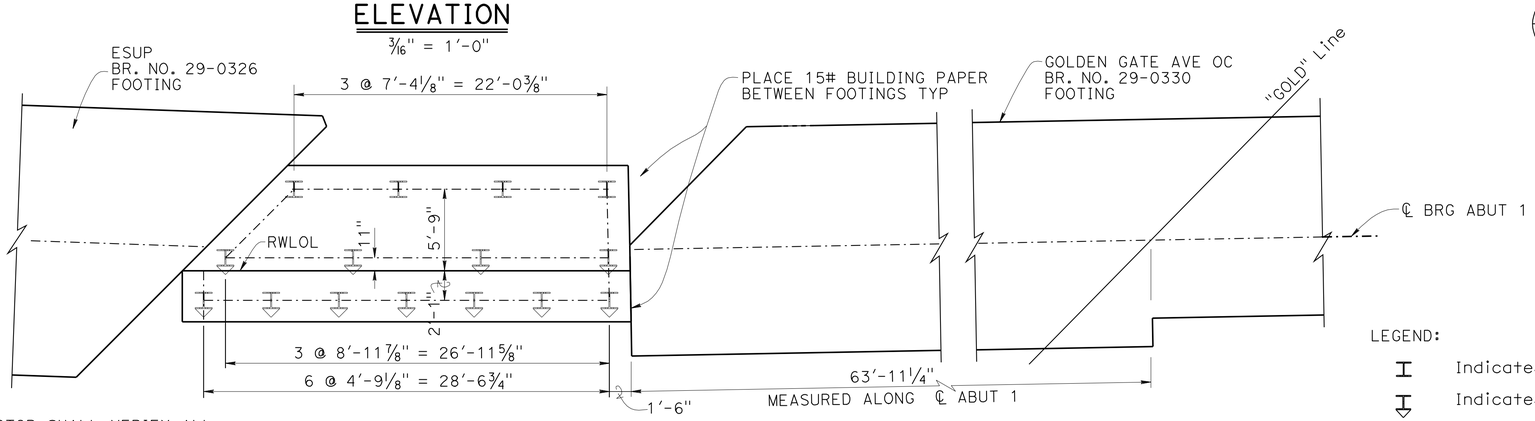

FOOTING PLAN

3/16" = 1'-0"

LEGEND:

I — Indicates vertical pile

I — Indicates battered pile (1:3)

NOTE:
THE CONTRACTOR SHALL VERIFY ALL CONTROLLING FIELD DIMENSIONS BEFORE ORDERING OR FABRICATING ANY MATERIAL.

	BY	CHECKED
DESIGN	M. FRIEDHEIM	I. CHERNIOGLO
DETAILS	C. FIGUERRES	I. CHERNIOGLO
QUANTITIES	I. CHERNIOGLO	M. FRIEDHEIM

STATE OF CALIFORNIA
DEPARTMENT OF TRANSPORTATION

DIVISION OF ENGINEERING SERVICES
STRUCTURE DESIGN
DESIGN BRANCH 17

BRIDGE NO. 29E0003
POST MILE 17.41

SOUTH STOCKTON WIDENING
CONNECTING WALL
WALL DETAILS

STRUCTURES DESIGN DETAIL SHEET (ENGLISH) (REV. 09-01-10)

ORIGINAL SCALE IN INCHES FOR REDUCED PLANS 0 1 2 3

UNIT: 3586
PROJECT NUMBER & PHASE: 10000004091
CONTRACT NO.: 10-3A1001

DISREGARD PRINTS BEARING EARLIER REVISION DATES

REVISION DATES: 06-13-11 7-28-11 4-27-11 5-09-11

SHEET 3 OF 5

FILE => 29e0003-h-conwalls.dgn

USERNAME => s128843 DATE PLOTTED => 29-MAR-2012 TIME PLOTTED => 13:02

DIST	COUNTY	ROUTE	POST MILES TOTAL PROJECT	SHEET No.	TOTAL SHEETS
10	SJ	4,99	R19.5/R20.1, 15.0/18.6	1259	1414

REGISTERED CIVIL ENGINEER 11-04-11 DATE

3-26-12
PLANS APPROVAL DATE

REGISTERED PROFESSIONAL ENGINEER Chris V. Udarbe No. C62985 Exp. 06-30-12 CIVIL STATE OF CALIFORNIA

The State of California or its officers or agents shall not be responsible for the accuracy or completeness of electronic copies of this plan sheet.

NOTES:

1. For the architectural insertion point, see Br. No. 29-0326. Band of local river rocks to be continuous between adjacent structures.

2. Rocks to be spaced at 1" to 3" apart the first and last 5'-0" of this motif. Additionally, space rocks 1" to 3" apart over a distance of 5'-0" on either side of an angle point in the wall. Elsewhere, space the rocks ½" to ¾" apart. Provide gradual transitions where spacings differ.

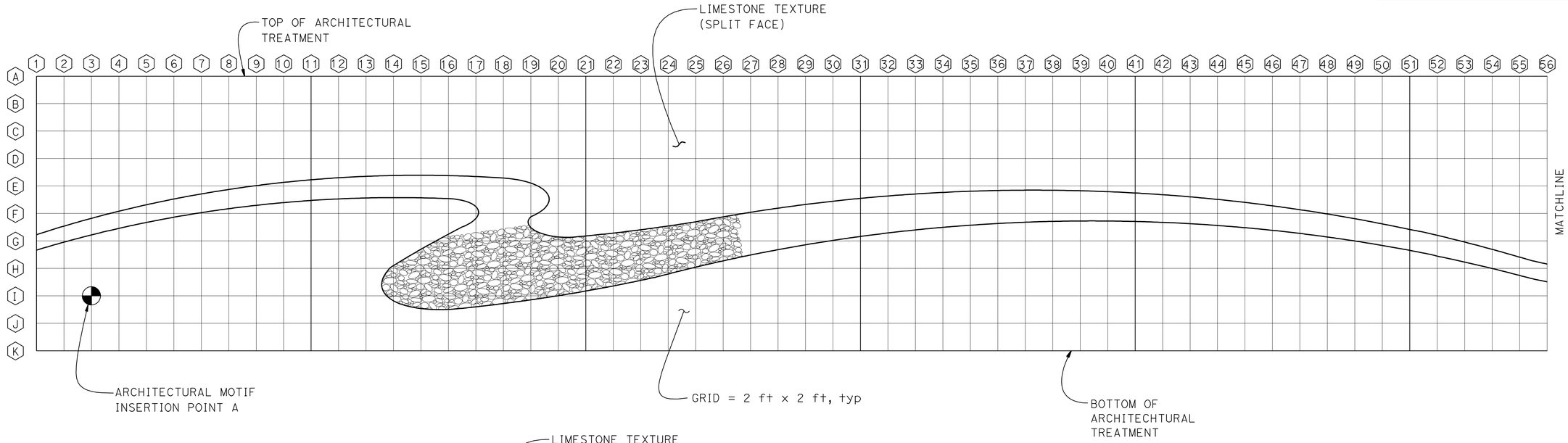

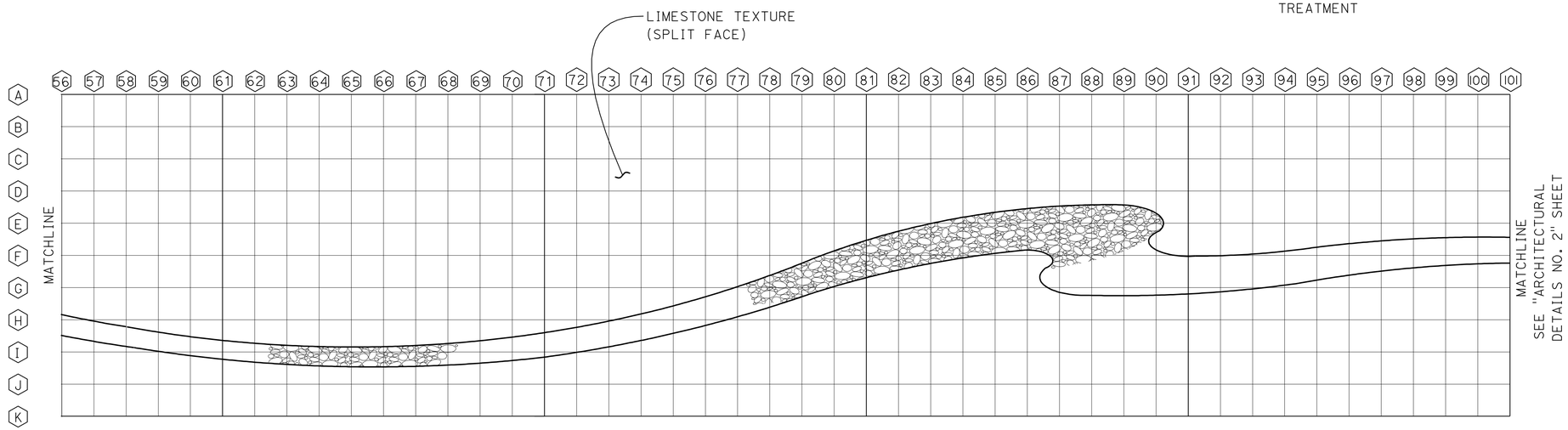

LEGEND

Local River Rocks, embedded on slope paving
OR
Stained River rock formliner on vertical concrete surfaces

(I) Grid reference

(A) Grid reference

ABUTMENT, RETAINING WALL AND SLOPE PAVING ARCHITECTURAL MOTIF

1/4" = 1'-0"

	BY	CHECKED
DESIGN	M. FRIEDHEIM	I. CHERNIOGLO
DETAILS	C. FIGUERRES	I. CHERNIOGLO
QUANTITIES	I. CHERNIOGLO	M. FRIEDHEIM

STATE OF CALIFORNIA
DEPARTMENT OF TRANSPORTATION

DIVISION OF ENGINEERING SERVICES
STRUCTURE DESIGN
DESIGN BRANCH 17

BRIDGE NO. 29E0003
POST MILE 17.41

SOUTH STOCKTON WIDENING
CONNECTING WALL
ARCHITECTURAL DETAILS NO. 1

STRUCTURES DESIGN DETAIL SHEET (ENGLISH) (REV. 09-01-10)

ORIGINAL SCALE IN INCHES FOR REDUCED PLANS 0 1 2 3

UNIT: 3586
PROJECT NUMBER & PHASE: 10000004091
CONTRACT NO.: 10-3A1001

DISREGARD PRINTS BEARING EARLIER REVISION DATES

REVISION DATES 07-02-11 09-21-11

SHEET 4 OF 5

FILE => 29e0003-1-archdt01.dgn

USERNAME => s128843 DATE PLOTTED => 29-MAR-2012 TIME PLOTTED => 13:02

DIST	COUNTY	ROUTE	POST MILES TOTAL PROJECT	SHEET No.	TOTAL SHEETS
10	SJ	4,99	R19.5/R20.1, 15.0/18.6	1260	1414

REGISTERED CIVIL ENGINEER 11-04-11 DATE

3-26-12
PLANS APPROVAL DATE

REGISTERED PROFESSIONAL ENGINEER Chris V. Udarbe No. C62985 Exp. 06-30-12 CIVIL STATE OF CALIFORNIA

The State of California or its officers or agents shall not be responsible for the accuracy or completeness of electronic copies of this plan sheet.

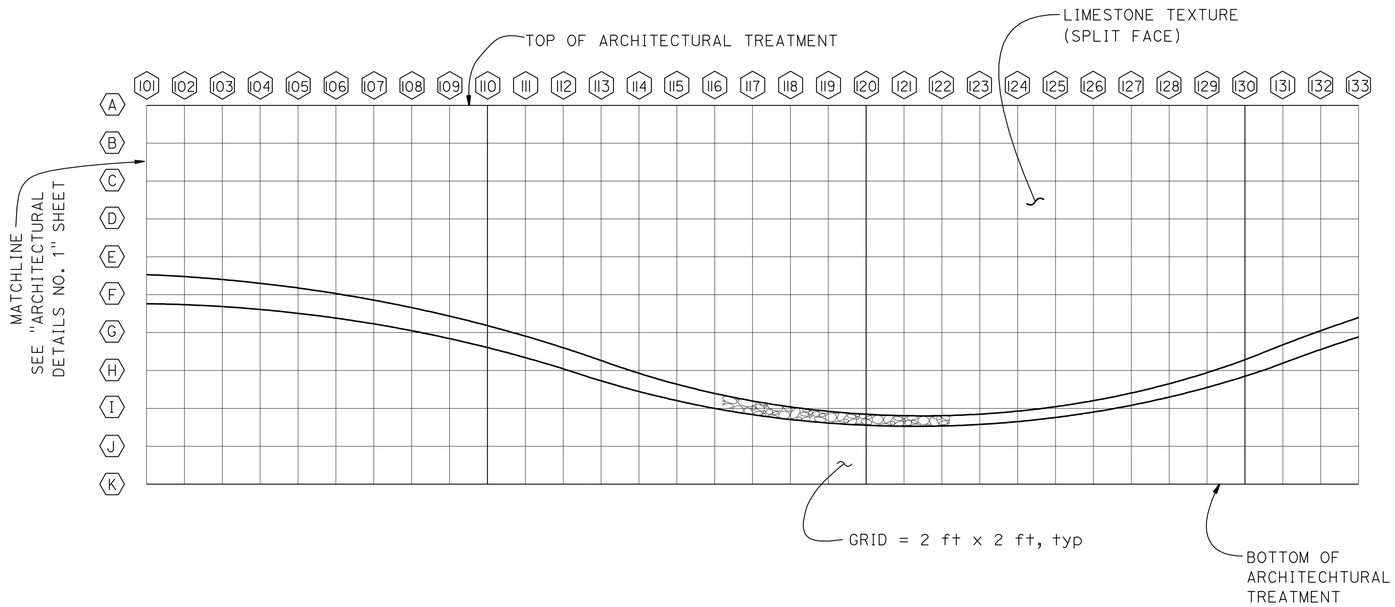

ABUTMENT, RETAINING WALL AND SLOPE PAVING ARCHITECTURAL MOTIF

1/4" = 1'-0"

LEGEND

Local River Rocks, embedded on slope paving

Stained River rock formliner on vertical concrete surfaces

I Grid reference

A Grid reference

DESIGN	BY M. FRIEDHEIM	CHECKED I. CHERNIOGLO	
DETAILS	BY C. FIGUERRES	CHECKED I. CHERNIOGLO	
QUANTITIES	BY I. CHERNIOGLO	CHECKED M. FRIEDHEIM	

STATE OF CALIFORNIA
DEPARTMENT OF TRANSPORTATION

DIVISION OF ENGINEERING SERVICES
STRUCTURE DESIGN
DESIGN BRANCH 17

BRIDGE NO. 29E0003
POST MILE 17.41

SOUTH STOCKTON WIDENING
CONNECTING WALL
ARCHITECTURAL DETAILS NO. 2

STRUCTURES DESIGN DETAIL SHEET (ENGLISH) (REV. 09-01-10)

ORIGINAL SCALE IN INCHES FOR REDUCED PLANS 0 1 2 3

UNIT: 3586
PROJECT NUMBER & PHASE: 10000004091
CONTRACT NO.: 10-3A1001

DISREGARD PRINTS BEARING EARLIER REVISION DATES

REVISION DATES: 07-12-11 09-21-11

SHEET 5 OF 5

FILE => 29e0003-j-archdt02.dgn

USERNAME => s128843 DATE PLOTTED => 29-MAR-2012 TIME PLOTTED => 13:02

DIST	COUNTY	ROUTE	POST MILES TOTAL PROJECT	SHEET No.	TOTAL SHEETS
10	SJ	4,99	R19.5/R20.1, 15.0/18.6	1261	1414

REGISTERED CIVIL ENGINEER 11-04-11 DATE

3-26-12
PLANS APPROVAL DATE

REGISTERED PROFESSIONAL ENGINEER CHRIS V. UDARBE No. C62985 Exp. 06-30-12 CIVIL STATE OF CALIFORNIA

The State of California or its officers or agents shall not be responsible for the accuracy or completeness of electronic copies of this plan sheet.

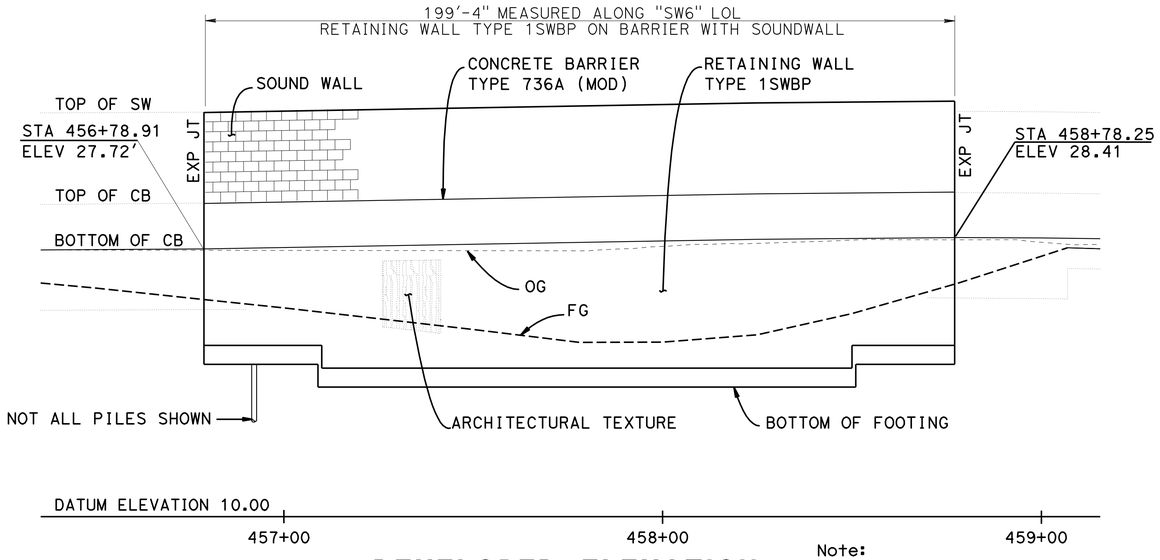

DEVELOPED ELEVATION

HOR 1" = 20"
VER 1" = 5'

Note:

For Pile Data, see "PILE LAYOUT" Sheet

INDEX TO PLANS

SHEET NO.	TITLE
1.	GENERAL PLAN
2.	STRUCTURE PLAN
3.	FOUNDATION PLAN
4.	PILE LAYOUT
5.	RETAINING WALL TYPE 1SWBP - DETAILS NO. 1
6.	RETAINING WALL TYPE 1SWBP - DETAILS NO. 2
7.	SOUNDWALL - MASONRY BLOCK WITH BARRIER ON RETAINING WALL DETAILS NO. 1
8.	SOUNDWALL - MASONRY BLOCK WITH BARRIER ON RETAINING WALL DETAILS NO. 2
9.	ARCHITECTURAL DETAILS
10.	LOG OF TEST BORINGS 1 OF 3
11.	LOG OF TEST BORINGS 2 OF 3
12.	LOG OF TEST BORINGS 3 OF 3

STANDARD PLANS DATED MAY 2006

SHEET NO.	TITLE
A10A - A10B	ACRONYMS AND ABBREVIATIONS
A10C - A10D	SYMBOLS
A62B	LIMITS OF PAYMENT FOR EXCAVATION AND BACKFILL - BRIDGE SURCHARGE AND WALL
A76C	CONCRETE BARRIER TYPE 60E
BO-3	BRIDGE DETAILS
B2-3	16" AND 24" CAST-IN-DRILLED-HOLE CONCRETE PILE
B3-8	RETAINING WALL DETAILS NO. 1
B11-56	CONCRETE BARRIER TYPE 736
B15-9	SOUND WALL MASONRY BLOCK MISCELLANEOUS DETAILS

STANDARD PLAN SHEET NO.

DETAIL NO.

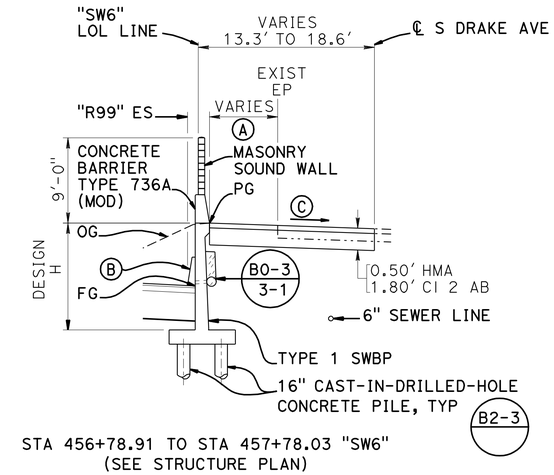

STA 456+78.91 TO STA 457+78.03 "SW6"
(SEE STRUCTURE PLAN)

CURVE DATA

No.	R	Δ	T	L
SW6	650.00'	25°23'11.2"	146.40'	288.00'

QUANTITIES

STRUCTURE EXCAVATION (RETAINING WALL)	579	CY
STRUCTURE BACKFILL (RETAINING WALL)	205	CY
PERVIOUS BACKFILL MATERIAL (RETAINING WALL)	13	CY
16" CAST-IN-DRILLED-HOLE CONCRETE PILING	1,085	LF
STRUCTURAL CONCRETE, RETAINING WALL	145	CY
ARCHITECTURAL TEXTURE (SPLIT FACE)	1,196	SQFT
SOUND WALL (MASONRY BLOCK)	1,196	SQFT
BAR REINFORCING STEEL (RETAINING WALL)	13,179	LB
CONCRETE BARRIER (TYPE 736A MODIFIED)	199	LF

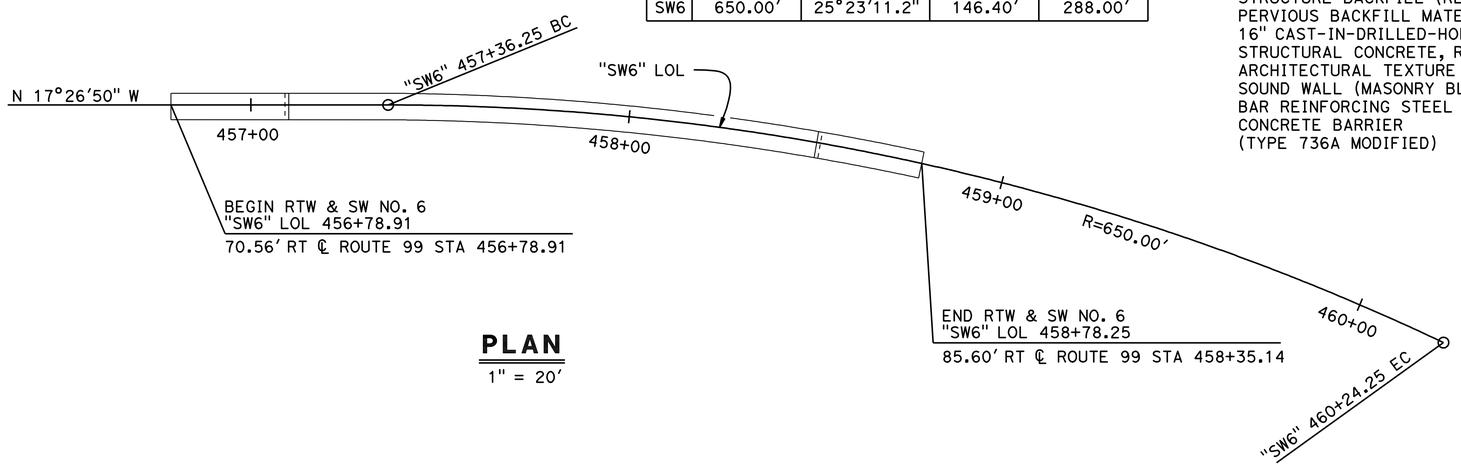

PLAN

1" = 20'

Notes:

(A) Varies from 0' to 5.8'
(B) Concrete Barrier Type 60E
(C) Match existing slope
(D) Varies from 5.8' to 7.2'

Legend:

Indicates new Structure
Indicates Existing Structure

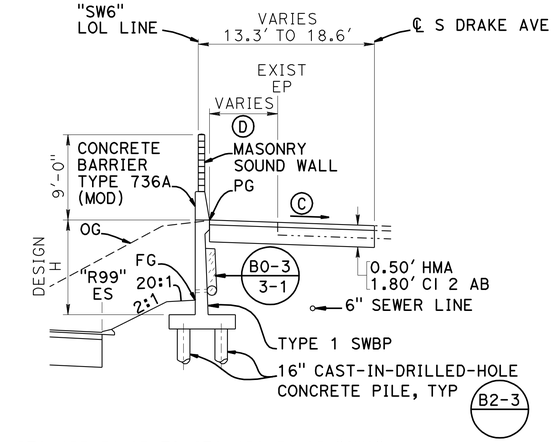

STA 457+78.03 TO STA 458+78.25 "SW6"
(SEE STRUCTURE PLAN)

TYPICAL SECTION

1/8" = 1'-0"

NOTE:
THE CONTRACTOR SHALL VERIFY ALL CONTROLLING FIELD DIMENSIONS BEFORE ORDERING OR FABRICATING ANY MATERIAL.

Gary Joe
DESIGN ENGINEER

	BY	CHECKED
DESIGN	C. UDARBE	R. CORIA
DETAILS	MINH TRAN	C. UDARBE
QUANTITIES	P. VU	R. CORIA

LOAD & RESISTANCE FACTOR DESIGN — LIVE LOADING: HL93 W/"LOW-BOY"; PERMIT DESIGN VEHICLE

	BY	CHECKED
LAYOUT	MINH TRAN	R. CORIA
SPECIFICATIONS	V. RANGANATHAN	PLANS AND SPECS COMPARED V. RANGANATHAN

ORIGINAL SCALE IN INCHES FOR REDUCED PLANS 0 1 2 3

STATE OF CALIFORNIA
DEPARTMENT OF TRANSPORTATION

DIVISION OF ENGINEERING SERVICES
STRUCTURE DESIGN
DESIGN BRANCH 17

BRIDGE NO. 29E0006
POST MILE 17.79

UNIT: 3586
PROJECT NUMBER & PHASE: 10000004091
CONTRACT NO.: 10-3A1001

DISREGARD PRINTS BEARING EARLIER REVISION DATES
REVISION DATES 01-04-11 2-15-12 08-03-11
SHEET 1 OF 12

SOUTH STOCKTON WIDENING
SOUND WALL NO. 06
GENERAL PLAN

FILE => 29e0006-sw-a-gp.dgn

STRUCTURES DESIGN GENERAL PLAN SHEET (ENGLISH) (REV.09-01-10)

USERNAME => s124496 DATE PLOTTED => 29-MAR-2012 TIME PLOTTED => 12:51

DIST	COUNTY	ROUTE	POST MILES TOTAL PROJECT	SHEET No.	TOTAL SHEETS
10	SJ	4,99	R19.5/R20.1, 15.0/18.6	1262	1414

REGISTERED CIVIL ENGINEER — DATE 11-04-11

3-26-12
PLANS APPROVAL DATE

REGISTERED PROFESSIONAL ENGINEER — CHRIS V. UDARBE — No. C62985 — Exp. 06-30-12 — CIVIL — STATE OF CALIFORNIA

The State of California or its officers or agents shall not be responsible for the accuracy or completeness of electronic copies of this plan sheet.

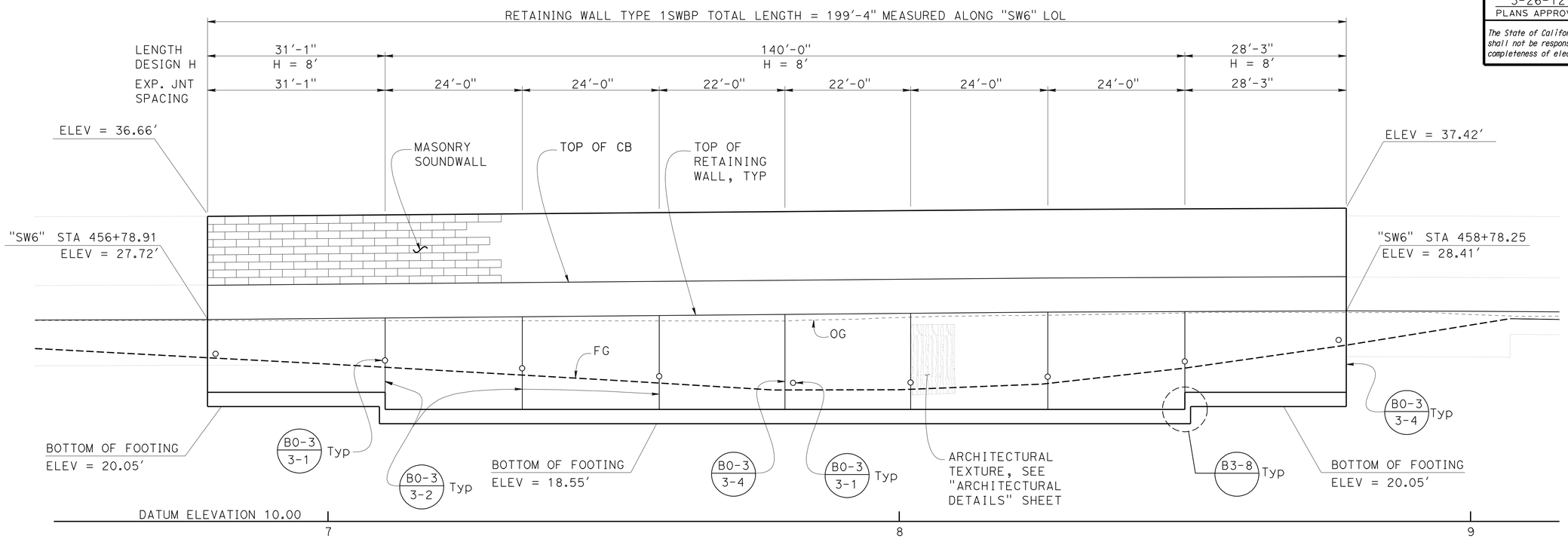

DEVELOPED ELEVATION

HOR 1" = 10"
VER 1" = 5'

NOTES:
Approximate location of wall opening shown, exact location to be determinded by the Engineer.

Piles not shown for clarity

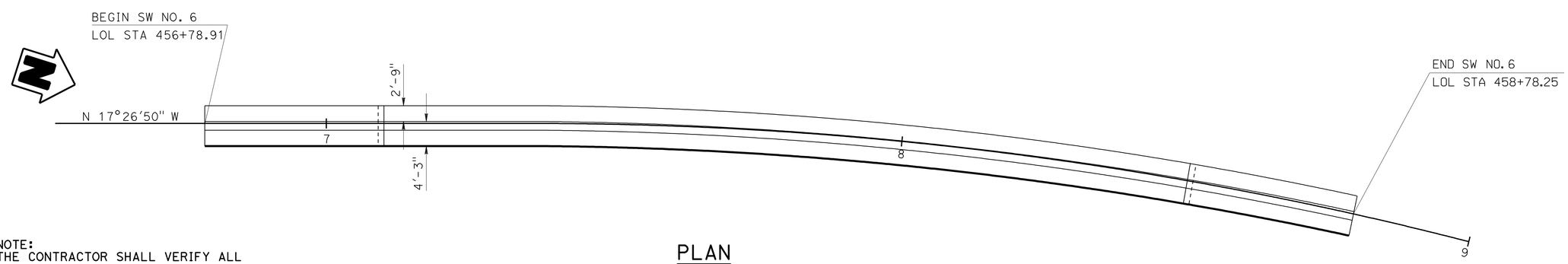

PLAN

1" = 10'

NOTE:
THE CONTRACTOR SHALL VERIFY ALL CONTROLLING FIELD DIMENSIONS BEFORE ORDERING OR FABRICATING ANY MATERIAL.

	BY	CHECKED
DESIGN	C. UDARBE	R. CORIA
DETAILS	MINH TRAN	C. UDARBE
QUANTITIES	P. VU	R. CORIA

STATE OF CALIFORNIA
DEPARTMENT OF TRANSPORTATION

DIVISION OF ENGINEERING SERVICES
STRUCTURE DESIGN
DESIGN BRANCH 17

BRIDGE NO. 29E0006
POST MILE 17.79

SOUTH STOCKTON WIDENING
SOUND WALL NO. 06
STRUCTURE PLAN

STRUCTURES DESIGN DETAIL SHEET (ENGLISH) (REV. 09-01-10)

ORIGINAL SCALE IN INCHES FOR REDUCED PLANS 0 1 2 3

UNIT: 3586
PROJECT NUMBER & PHASE: 10000004091
CONTRACT NO.: 10-3A1001

DISREGARD PRINTS BEARING EARLIER REVISION DATES

REVISION DATES: 1-14-11 7-22-11 9-29-11

SHEET 2 OF 12

FILE => 29e0006-sw-b-sp.dgn

USERNAME => s124936 DATE PLOTTED => 29-MAR-2012 TIME PLOTTED => 12:51

DIST	COUNTY	ROUTE	POST MILES TOTAL PROJECT	SHEET No.	TOTAL SHEETS
10	SJ	4,99	R19.5/R20.1, 15.0/18.6	1263	1414

REGISTERED CIVIL ENGINEER 11-04-11 DATE

3-26-12
PLANS APPROVAL DATE

REGISTERED PROFESSIONAL ENGINEER Chris Udarbe No. C62985 Exp. 6/30/12 CIVIL STATE OF CALIFORNIA

The State of California or its officers or agents shall not be responsible for the accuracy or completeness of electronic copies of this plan sheet.

CURVE DATA

No.	R	Δ	T	L
Ⓐ	650.00	25°23'09"	146.40	287.99
Ⓑ	550.00	66°58'40"	363.88	642.94

NOTES:

Underground Utilities as shown are approximate

All trees and buildings per Planimetric Map

New foundation shown for Sound Wall No. 6 only. See other plans for different structure.

20.05 Denote bottom of footing elevation

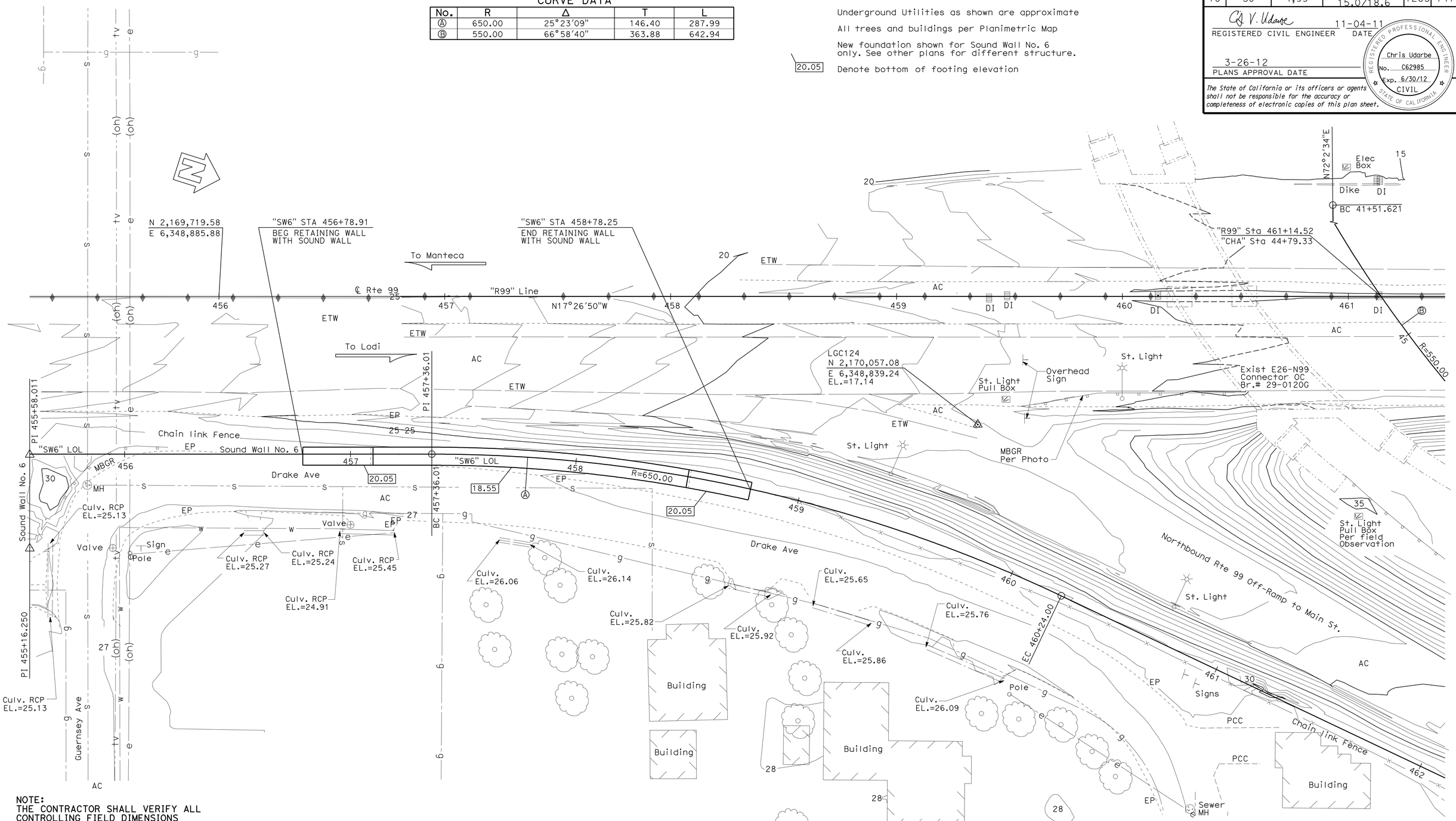

NOTE:
THE CONTRACTOR SHALL VERIFY ALL CONTROLLING FIELD DIMENSIONS BEFORE ORDERING OR FABRICATING ANY MATERIAL.

SOUTH STOCKTON WIDENING

FOUNDATION PLAN

PRELIMINARY INVESTIGATION SECTION

SCALE 1"=20'	VERT.DATUM NGVD29	PHOTOGRAMMETRY AS OF: X			
	HORZ.DATUM NAD83 (1991.35)	SURVEYED	BY	CHECKED	BY
ALIGNMENT TIES Dist. Traverse Sheet		DRAFTED	BY	CHECKED	BY

DESIGN	BY	CHECKED
DETAILS	BY	CHECKED
QUANTITIES	BY	CHECKED

STATE OF CALIFORNIA
DEPARTMENT OF TRANSPORTATION

DIVISION OF ENGINEERING SERVICES
STRUCTURE DESIGN
DESIGN BRANCH 17

BRIDGE NO.
POST MILE

STRUCTURES FOUNDATION PLAN SHEET (ENGLISH) (REV. 09-01-10)

ORIGINAL SCALE IN INCHES FOR REDUCED PLANS 0 1 2 3

UNIT: 3646
PROJECT NUMBER & PHASE: 10000004091
CONTRACT NO.: 10-3A1001

DISREGARD PRINTS BEARING EARLIER REVISION DATES

REVISION DATES 01-04-11 09-29-11 3-02-12

SHEET OF

FILE => 29e0006-sw-c-fp.dgn

DIST	COUNTY	ROUTE	POST MILES TOTAL PROJECT	SHEET No.	TOTAL SHEETS
10	SJ	4,99	R19.5/R20.1, 15.0/18.6	1264	1414

REGISTERED CIVIL ENGINEER 11-04-11 DATE

3-26-12
PLANS APPROVAL DATE

REGISTERED PROFESSIONAL ENGINEER CHRIS V. UDARBE No. C62985 Exp. 06-30-12 CIVIL STATE OF CALIFORNIA

The State of California or its officers or agents shall not be responsible for the accuracy or completeness of electronic copies of this plan sheet.

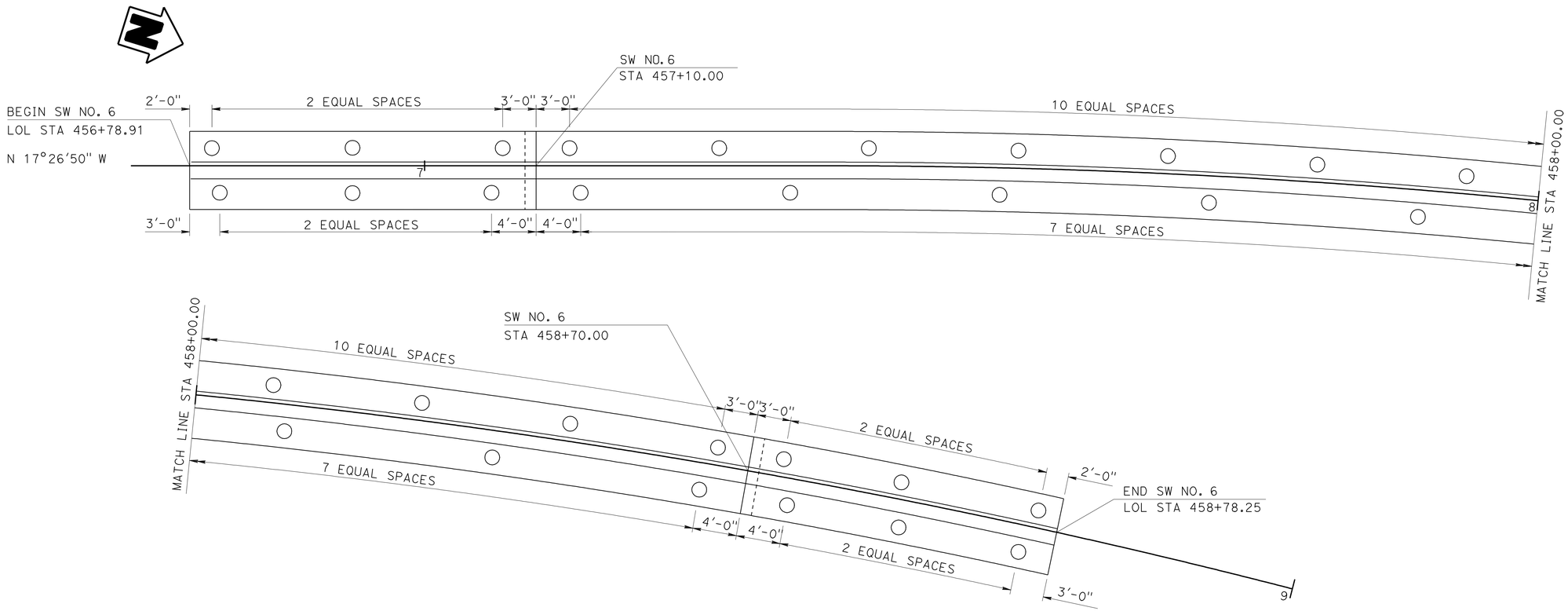

PLAN
3/16" = 1'

LEGEND

○ INDICATES VERTICAL CAST-IN-DRILLED-HOLE CONCRETE PILE

PILE DATA TABLE

SUPPORT LOCATION	PILE TYPE	NOMINAL RESISTANCE (kips)		DESIGN TIP ELEVATION (ft)	SPECIFIED TIP ELEVATION (ft)
		COMPRESSION	TENSION		
456+78.91 to 457+09.99	16" ø CIDH	180	0	-15.0 (a)	-15.0
457+09.99 to 458+49.99	16" ø CIDH	180	0	-16.5 (a)	-16.5
458+49.99 to 458+78.25	16" ø CIDH	180	0	-16.0 (a)	-16.0

Note:
1). Design tip elevations are controlled by (a) compression.
2). Since there are no soft compressible soil layers below the design tip elevation, there is no design tip elevation for settlement.
3). The specified tip elevation shall not be raised above the design tip elevations for Lateral Load.

NOTE:
THE CONTRACTOR SHALL VERIFY ALL CONTROLLING FIELD DIMENSIONS BEFORE ORDERING OR FABRICATING ANY MATERIAL.

	BY	CHECKED
DESIGN	C. UDARBE	R. CORIA
DETAILS	MINH TRAN	C. UDARBE
QUANTITIES	P. VU	R. CORIA

STATE OF CALIFORNIA
DEPARTMENT OF TRANSPORTATION

DIVISION OF ENGINEERING SERVICES
STRUCTURE DESIGN
DESIGN BRANCH 17

BRIDGE NO. 29E0006
POST MILE 17.79

SOUTH STOCKTON WIDENING
SOUND WALL NO. 06
PILE LAYOUT

STRUCTURES DESIGN DETAIL SHEET (ENGLISH) (REV. 09-01-10)

ORIGINAL SCALE IN INCHES FOR REDUCED PLANS 0 1 2 3

UNIT: 3586
PROJECT NUMBER & PHASE: 10000004091
CONTRACT NO.: 10-3A1001

DISREGARD PRINTS BEARING EARLIER REVISION DATES

REVISION DATES 1-14-11 7-22-11 9-29-11

SHEET 4 OF 12

FILE => 29e0006-sw-d-ftg.dgn

USERNAME => s124496 DATE PLOTTED => 29-MAR-2012 TIME PLOTTED => 12:51

DIST	COUNTY	ROUTE	POST MILES TOTAL PROJECT	SHEET No.	TOTAL SHEETS
10	SJ	4,99	R19.5/R20.1, 15.0/18.6	1265	1414

REGISTERED CIVIL ENGINEER 11-04-11 DATE

3-26-12
PLANS APPROVAL DATE

The State of California or its officers or agents shall not be responsible for the accuracy or completeness of electronic copies of this plan sheet.

REGISTERED PROFESSIONAL ENGINEER CHRIS V. UDARBE No. C62985 Exp. 06-30-12 CIVIL STATE OF CALIFORNIA

TABLE OF PILE SPACING: CLASS 90 - CONCRETE PILES

DESIGN H	6′	8′	10′	12′	14′	16′	18′	20′	22′	24′	26′	28′	30′	32′
W	6′-9"	7′-0"	7′-6"	8′-3"	9′-3"	10′-3"	11′-0"	12′-0"	13′-0"	14′-3"	16′-3"	16′-9"	18′-0"	20′-6"
C	2′-9"	2′-9"	3′-0"	3′-3"	3′-6"	4′-0"	4′-3"	4′-9"	5′-0"	5′-6"	6′-3"	6′-9"	7′-3"	7′-9"
B	4′-0"	4′-3"	4′-6"	5′-0"	5′-9"	6′-3"	6′-9"	7′-3"	8′-0"	8′-9"	10′-0"	10′-0"	10′-9"	12′-9"
F	1′-6"	1′-6"	1′-6"	1′-9"	1′-9"	2′-0"	2′-6"	2′-9"	3′-0"	3′-0"	3′-3"	3′-6"	3′-9"	4′-0"
M	1′-3"	1′-3"	1′-6"	1′-9"	2′-0"	2′-6"	2′-9"	3′-3"	3′-6"	4′-0"	4′-9"	5′-3"	5′-9"	6′-3"
N	2′-6"	2′-9"	3′-0"	3′-6"	4′-3"	4′-9"	5′-3"	5′-9"	6′-6"	7′-3"	8′-6"	8′-6"	9′-3"	11′-3"
ROW 1	16′-0"	14′-0"	12′-0"	10′-0"	8′-0"	6′-6"	5′-6"	4′-6"	4′-0"	4′-0"	4′-0"	4′-0"	4′-0"	4′-0"
ROW 2	24′-0"	21′-0"	18′-0"	15′-0"	14′-0"	13′-0"	11′-0"	9′-0"	8′-0"	12′-0"	10′-0"	6′-0"	4′-0"	4′-0"
ROW 3										8′-0"	5′-0"	4′-0"	4′-0"	6′-0"
ROW 4														6′-0"
CONFIGURATION	I	I	I	I	I	I	I	I	I	II	II	II	II	III

TABLE 1: TABLE OF REINFORCING STEEL DIMENSIONS AND DATA

	STEM WITH HAUNCH													
DESIGN H	6′	8′	10′	12′	14′	16′	18′	20′	22′	24′	26′	28′	30′	32′
STEM BATTER	0	½:12	½:12	½:12	½:12	½:12	½:12	½:12	½:12	⅝:12	¾:12	⅞:12	1:12	1:12
STEM THICKNESS @ TOP	1′-6¾"	1′-6¾"	1′-6¾"	1′-6¾"	1′-6¾"	1′-6¾"	1′-6¾"	1′-6¾"	1′-6¾"	1′-6¾"	1′-6¾"	1′-6¾"	1′-6¾"	1′-6¾"
STEM THICKNESS @ HAUNCH	1′-0"	1′-0"	1′-0"	1′-0"	1′-0"	1′-0"	1′-0"	1′-0"	1′-0"	1′-0"	1′-0"	1′-0"	1′-0"	1′-0"
ⓐ BARS				#6@18**	#7@18**	#8@18**	#9@18**	#10@18**	#8 @ 9*	#8 @ 9*	#7 @ 6*	#10@12**	#9 @ 9*	#11@12**
X				CONT	CONT	CONT	CONT	CONT	CONT	CONT	CONT	CONT	CONT	CONT
Y				8′-0"	6′-6"	7′-6"	8′-6"	9-6"	9′-6"	11′-0"	11′-6"	13′-0"	14′-0"	15′-6"
ⓑ BARS	#5 @ 12	#5 @ 12	#5 @ 9	#6@18**	#7@18**	#8@18**	#9@18**	#10@18**	#8 @ 9*	#8 @ 9*	#7 @ 6*	#10@12**	#9 @ 9*	#11@12**
X	CONT	CONT	CONT	CONT	CONT	CONT	CONT	CONT	CONT	CONT	CONT	CONT	CONT	CONT
Y	CONT	CONT	CONT	CONT	10′-6"	13′-0"	15′-0"	17′-6"	19′-6"	21′-0"	18′-6"	19′-0"	25′-6"	23′-6"
ⓒ BARS					#6 @ 18	#6 @ 18	#6 @ 18	#6 @ 18	#6 @ 18	#6 @ 18	#6 @ 12	#7 @ 12	#7 @ 18	#7 @ 12
ⓓ BARS	#5 @ 12	#5 @ 12	#5 @ 12	#5 @ 12	#5 @ 12	#5 @ 12	#5 @ 9	#5 @ 9	#6 @ 9	#5 @ 6	#7 @ 9	#7 @ 9	#6 @ 6	#7 @ 6
TOTAL ⓔ BARS	6 #5	6 #5	6 #5	6 #5	8 #5	8 #5	10 #5	10 #5	10 #5	10 #5	12 #5	12 #5	12 #5	14 #5
TOTAL ⓕ BARS	6 #5	6 #5	6 #5	6 #5	6 #5	8 #5	8 #5	8 #5	8 #5	10 #5	10 #5	10 #5	12 #5	12 #5

◇1 (entire row)

TABLE 2: TABLE OF REINFORCING STEEL DIMENSIONS AND DATA

	STEM WITH HAUNCH							STEM WITHOUT HAUNCH						
DESIGN H	6′	8′	10′	12′	14′	16′	18′	20′	22′	24′	26′	28′	30′	32′
BATTER	0	0	0	0	0	0	0	0	0	0	¼:12	½:12	½:12	½:12
STEM THICKNESS @ TOP	1′-6¾"	1′-6¾"	1′-6¾"	1′-6¾"	1′-6¾"	1′-6¾"	1′-6¾"	1′-6¾"	2′-0"	2′-0"	2′-0"	2′-0"	2′-0"	2′-0"
STEM THICKNESS @ HAUNCH	1′-0"	1′-0"	1′-0"	1′-0"	1′-0"	1′-3"	1′-3"							
ⓐ BARS				#6@12**	#5 @ 6*	#9@18**	#9@12**	#9@12**	#9@12**	#7 @ 6*	#7 @ 6*	#7 @ 6*	#9 @ 9*	#11@12**
X				CONT	CONT	CONT	CONT	CONT	CONT	CONT	CONT	CONT	CONT	CONT
Y				5′-6"	5′-6"	8′-6"	8′-6"	8′-6"	8′-6"	9′-6"	11′-0"	12′-6"	13′-6"	14′-6"
ⓑ BARS	#5 @ 12	#5 @ 9	#6 @ 9	#6@12**	#5 @ 6*	#9@18**	#9@12**	#9@12**	#9@12**	#7 @ 6*	#7 @ 6*	#7 @ 6*	#9 @ 9*	#11@12**
X	CONT	CONT	CONT	CONT	CONT	CONT	CONT	CONT	CONT	CONT	CONT	CONT	CONT	CONT
Y	CONT	CONT	CONT	CONT	CONT	11′-6"	11′-6"	12′-0"	12′-0"	17′-6"	20′-0"	21′-6"	24′-0"	24′-0"
ⓒ BARS						#7 @ 18	#7 @ 12	#7 @ 12	#7 @ 12	#6 @ 12	#6 @ 12	#6 @ 12	#7 @ 18	#7 @ 12
ⓓ BARS	#5 @ 12	#5 @ 12	#5 @ 12	#5 @ 12	#5 @ 12	#5 @ 12	#5 @ 9	#5 @ 9	#6 @ 9	#5 @ 6	#7 @ 9	#7 @ 9	#6 @ 6	#7 @ 6
TOTAL ⓔ BARS	6 #5	6 #5	6 #5	6 #5	8 #5	8 #5	10 #5	10 #5	10 #5	10 #5	12 #5	12 #5	12 #5	14 #5
TOTAL ⓕ BARS	6 #5	6 #5	6 #5	6 #5	6 #5	8 #5	8 #5	8 #5	8 #5	10 #5	10 #5	10 #5	12 #5	12 #5

◇1 (1′-6¾" only)

CONT = CONTINUOUS

* = ⓐ AND ⓑ BARS ARE BUNDLED TOGETHER.

** = ALTERNATE ⓐ AND ⓑ BARS AS SHOWN IN DETAIL A.

DESIGN DATA

DESIGN: LOAD FACTOR DESIGN (LFD)

CONCRETE: REINFORCED CONCRETE, f′c = 3600 psi
fy = 60000 psi

LOADING CASE:

LEVEL GROUND WITH 240 psf LIVE LOAD SURCHARGE AND 16′ SOUNDWALL.
SEISMIC LOAD = 0.3 DEAD LOAD
WIND LOAD = 30 psf
DEAD LOAD OF SOUNDWALL = 1414 lb/lf
DEAD LOAD OF BARRIER = 372 lb/lf

SEISMIC LOAD: SOIL

Kh = 0.3g
Kv = 0.0
Kae : MONONOBE-OKABE METHOD
Vs30 = 920 ft/sec

SOIL: Ø = 34° γ = 120 pcf

EQUIVALENT FLUID PRESSURE:
= 36 pcf FOR DETERMINATION OF TOE PRESSURE
= 27 pcf FOR DETERMINATION OF HEEL PRESSURE

LOAD COMBINATIONS:

GROUP A : βD+1.7E+1.7SC
GROUP B : βD+1.7E+1.7SC+W
GROUP C :
STEM : 1.0D+1.0E+1.0EQD+1.0EQE
FOOTING : D+PYM
WHERE : β = 1.0 OR 1.3 WHICHEVER CONTROLS DESIGN
D = DEAD LOAD
E = LATERAL EARTH PRESSURE
SC = SURCHARGE
W = WIND LOAD
EQD = SEISMIC DEAD LOAD
EQE = SEISMIC LATERAL EARTH PRESSURE
PYM = PROBABLE YIELD MOMENT (1.3* NOMINAL YIELD MOMENT OF STEM)

GENERAL NOTES

1. 16"ø CIDH-CONCRETE PILES WERE USED FOR THE DESIGN.
2. MINIMUM DISTANCE BETWEEN CENTER PILE AND EDGE OF FOOTING IS 1′-6".
3. REDUCTION FACTORS:
   GROUPS A & B : Ø = 0.75
   GROUP C : Ø = 1.0
4. LATERAL RESISTANCE OF EACH PILE:
   GROUPS A & B : = 30 kip
   GROUP C : = 40 kip
5. MAXIMUM SPACING BETWEEN PILES IS SHOWN IN THE TABLE. REDUCE TO SUIT THE LENGTH OF FOOTING.
6. MINIMUM DISTANCE BETWEEN ANY TWO PILES IS 3′-0".
7. LIMIT OF NO SPLICING FOR REBARS = 3 TIMES THE BOTTOM THICKNESS OF STEM.

REVISED STANDARD DRAWING
REVISED FILE NO. ~~xs14-320-1e~~
APPROVAL DATE ~~5-13-08~~ REVISED

◇1 Modified dimension

STATE OF CALIFORNIA DEPARTMENT OF TRANSPORTATION

DIVISION OF ENGINEERING SERVICES

BRIDGE NO. 29E0006
POST MILE 17.79

SOUTH STOCKTON WIDENING
SOUND WALL NO. 06
RETAINING WALL TYPE 1SWBP-DETAILS NO. 1

DS OSD 2147A (ENGLISH STANDARD DRAWING "XS" BORDER REV. (02-02-11)

ORIGINAL SCALE IN INCHES FOR REDUCED PLANS 0 1 2 3

UNIT: 3586
PROJECT NUMBER & PHASE: 10000004091
CONTRACT NO.: 10-3A1001

DISREGARD PRINTS BEARING EARLIER REVISION DATES

REVISION DATES 1-4-11 7-22-11 2-15-12 SHEET 5 OF 12

FILE => 29e0006-sw-e-redt01.dgn

USERNAME => s124496 DATE PLOTTED => 23-MAR-2012 TIME PLOTTED => 12:51

DIST	COUNTY	ROUTE	POST MILES TOTAL PROJECT	SHEET No.	TOTAL SHEETS
10	SJ	4,99	R19.5/R20.1, 15.0/18.6	1266	1414

REGISTERED CIVIL ENGINEER 11-04-11 DATE

3-26-12
PLANS APPROVAL DATE

REGISTERED PROFESSIONAL ENGINEER CHRIS V. UDARBE No. C62985 Exp. 06-30-12 CIVIL STATE OF CALIFORNIA

The State of California or its officers or agents shall not be responsible for the accuracy or completeness of electronic copies of this plan sheet.

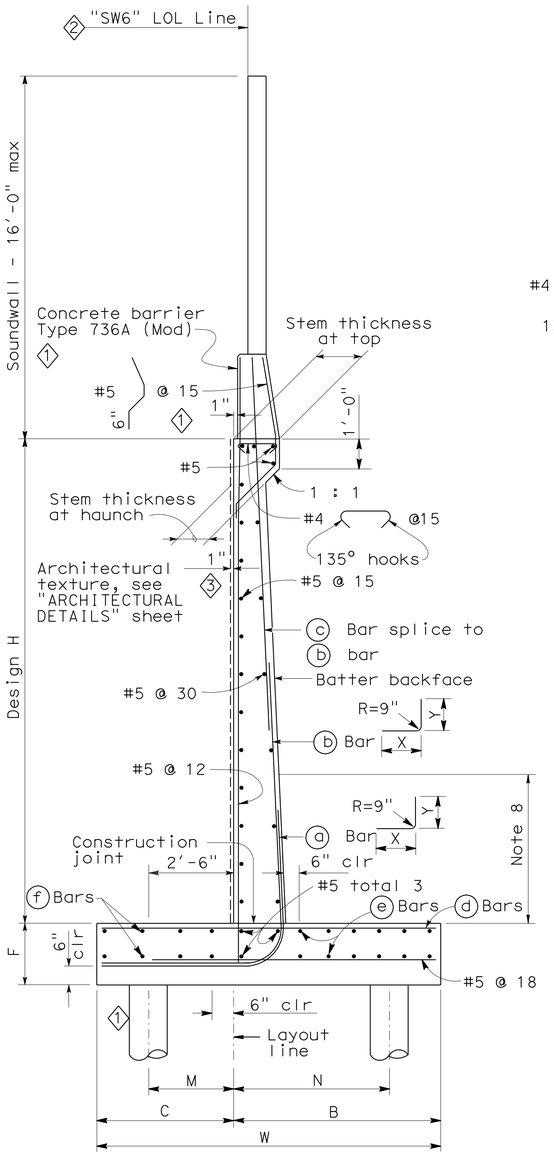

90 KIP PILE FOOTING SECTION

No Scale

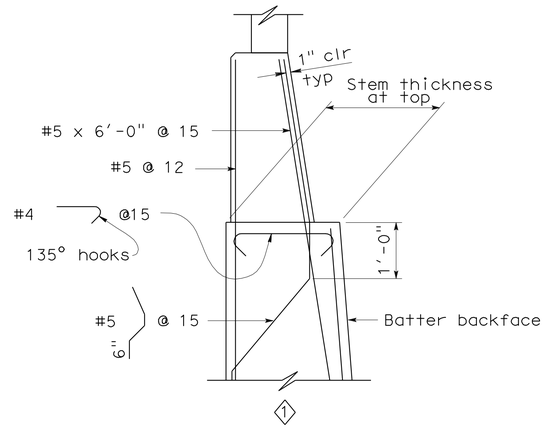

SECTION WITHOUT HAUNCH

No Scale

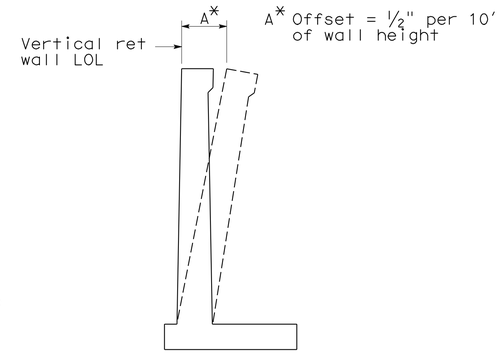

WALL OFFSET

No Scale

Values for offsetting forms to be determined by the engineer

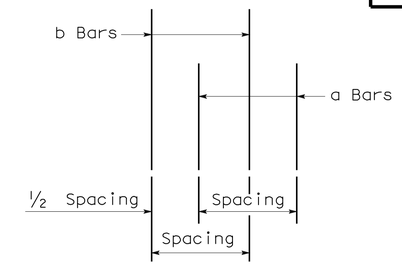

DETAIL A

No Scale

NOTES

1. For soundwall and retaining wall architectural finish or texture, see details elsewhere in project plans.
2. For details not shown and drainage notes, see B3-8
3. Footing cover, 1'-6" minimum.
4. For soundwall and barrier reinforcements, see "SOUNDWALL- MASONRY BLOCK WITH BARRIER ON RETAINING WALL DETAILS NO. 1& 2" sheets

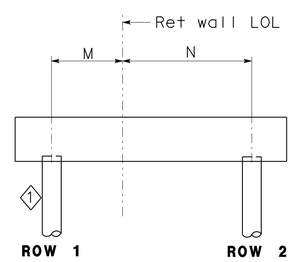

CONFIGURATION I

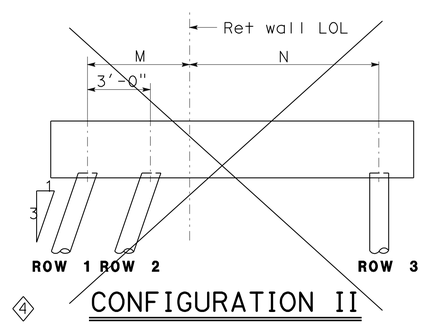

CONFIGURATION II

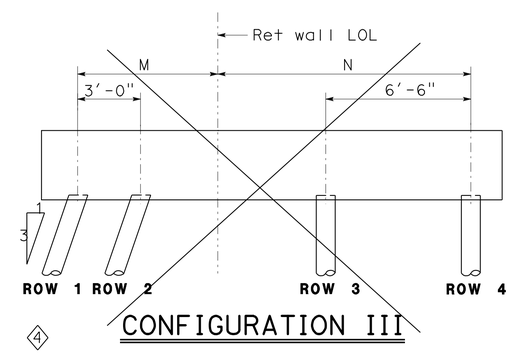

CONFIGURATION III

REVISED STANDARD DRAWING

FILE NO. REVISED xs14-320-2e

APPROVAL DATE ~~5-13-08~~ REVISED

1 Modified detail
2 Reference line added
3 Modified notes
4 Detail deleted

STATE OF CALIFORNIA DEPARTMENT OF TRANSPORTATION

DIVISION OF ENGINEERING SERVICES

BRIDGE NO. 29E0006
POST MILE 17.79

SOUTH STOCKTON WIDENING
SOUND WALL NO. 06
RETAINING WALL TYPE 1SWBP-DETAILS NO. 2

DS OSD 2147A (ENGLISH STANDARD DRAWING "XS" BORDER REV. (02-02-11)

ORIGINAL SCALE IN INCHES FOR REDUCED PLANS 0 1 2 3

UNIT: 3586
PROJECT NUMBER & PHASE: 10000004091
CONTRACT NO.: 10-3A1001

DISREGARD PRINTS BEARING EARLIER REVISION DATES

REVISION DATES 11-4-11 12-22-11 9-29-11

SHEET 6 OF 12

FILE => 29e0006-sw-e-redt02.dgn

USERNAME => s124196 DATE PLOTTED => 29-MAR-2012 TIME PLOTTED => 12:51

DIST	COUNTY	ROUTE	POST MILES TOTAL PROJECT	SHEET No.	TOTAL SHEETS
10	SJ	4,99	R19.5/R20.1, 15.0/18.6	1267	1414

REGISTERED CIVIL ENGINEER 11-04-11 DATE

3-26-12
PLANS APPROVAL DATE

REGISTERED PROFESSIONAL ENGINEER CHRIS V. UDARBE No. C62985 Exp. 06-30-12 CIVIL STATE OF CALIFORNIA

The State of California or its officers or agents shall not be responsible for the accuracy or completeness of electronic copies of this plan sheet.

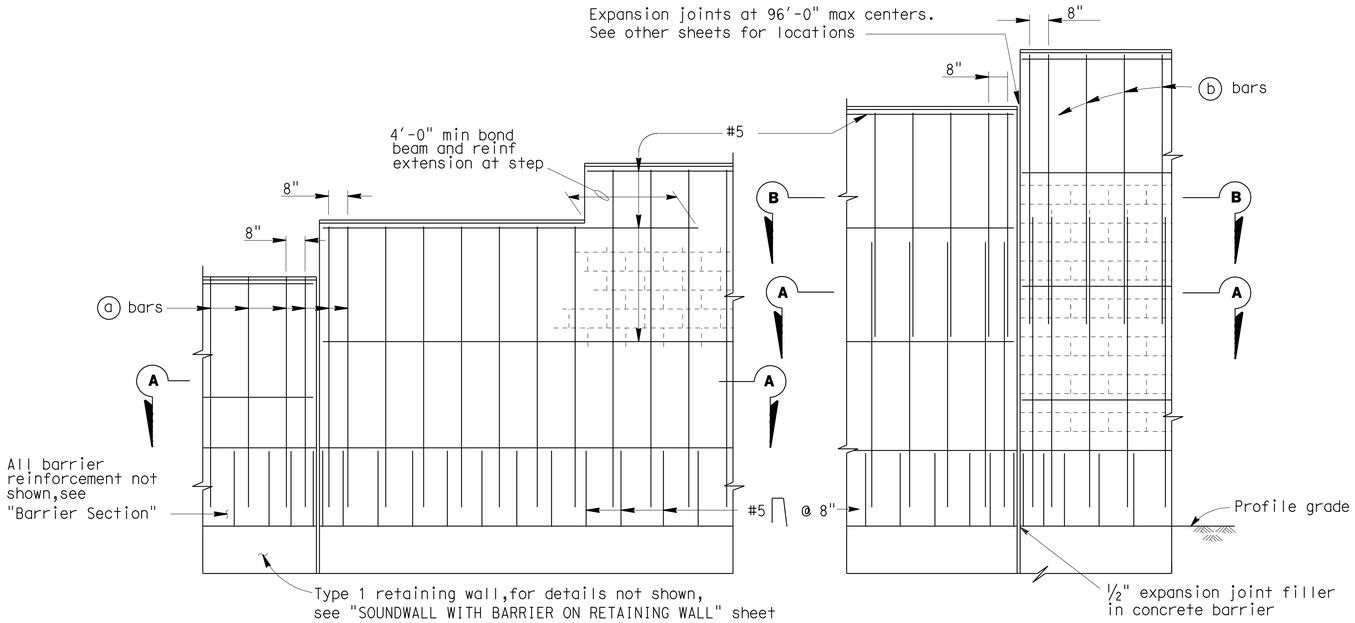

PART ELEVATIONS

SOUNDWALL REINFORCEMENT TABLE						
Maximum H	ⓐ bars @ 1'-4" max	ⓑ bars @ 1'-4" max	"y"	f'm (KSI)	Compressive Strength of CMU (KSI)	Maximum H
6'-4"	# 4	———	———	1.5	1.9	6'-4"
8'-4"	# 4	———	———	1.5	1.9	8'-4"
10'-4"	# 4	———	———	1.5	1.9	10'-4"
12'-4"	# 5	# 4	5'-0"	1.5	1.9	12'-4"
14'-4"	# 6	# 4	7'-0"	1.5	1.9	14'-4"
16'-4"	# 6	# 4	9'-0"	2.5	3.7	16'-4"

Note I : For details not shown,see "SOUNDWALL WITH BARRIER ON RETAINING WALL - MASONRY BLOCK -- DETAILS NO.2" sheet.

Note II : Slope ground at traffic side of barrier to drain. Maximum slope ±10%.

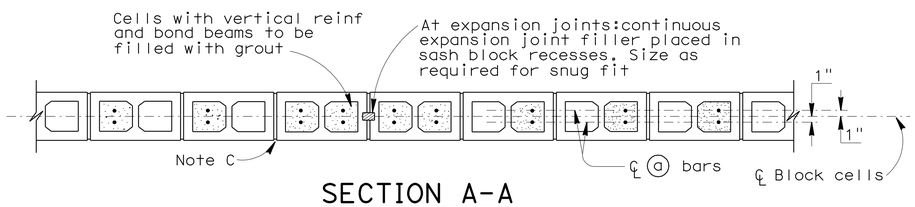

SECTION A-A

For details not shown, see other details

H=6'-4" THRU H=10'-4"

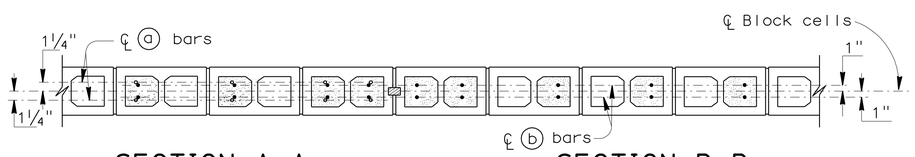

SECTION A-A

SECTION B-B

For details not shown, see other details

H=12'-4" THRU H=16'-4"

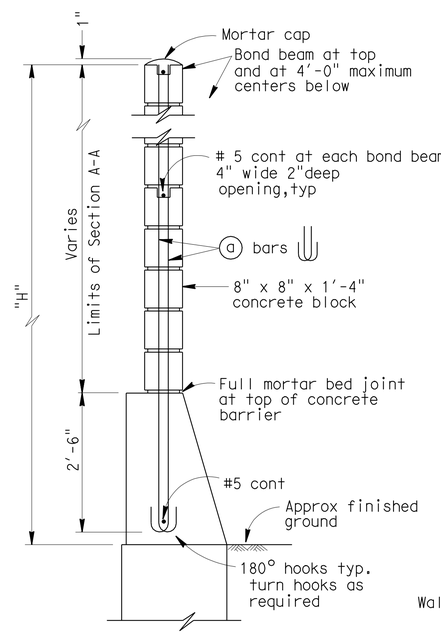

H=6'-4" THRU H=10'-4"

For details not shown,see H=12'-4" thru H=16'-4"

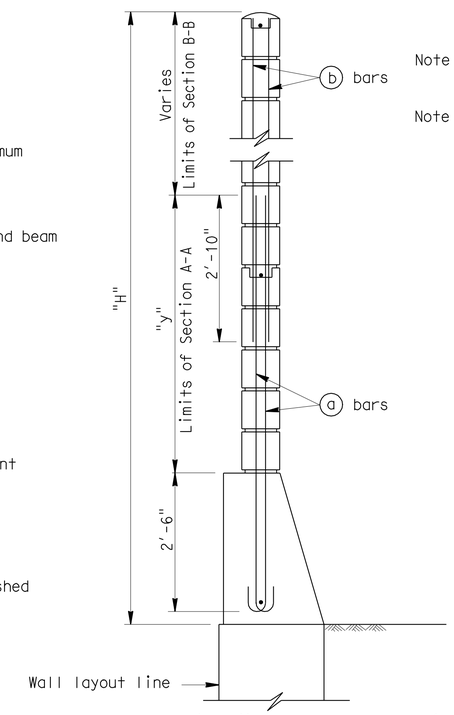

H=12'-4" THRU H=16'-4"

For details not shown,see H=6'-4" thru H=10'-4"

TYPICAL SECTIONS

GENERAL NOTES:

Note A: For type of block and joint finish, see other sheets.

Note B: When blocks are laid in stacked bond, ladder type, galvanized joint reinforcement shall be provided. A minimum of 0.07"-0.14" wire continuous at 4'-0" maximum to be used. Locate reinforcement in joints that are at the approximate midpoint between bond beams.

Note C: Horizontal joints shall be tooled concave or may be weathered.
Vertical joints shall be tooled concave or may be raked.

Note D: For intermediate wall heights that are between the "H's" given. Use the tabular information for the next higher "H".

Note E: Masonry strengths are listed in "SOUNDWALL REINFORCEMENT TABLE".

Note F: Class 2 concrete to be used for the barrier.

REVISED STANDARD DRAWING

FILE NO. xs15-130-1e

APPROVAL DATE 9-2-08

STATE OF CALIFORNIA DEPARTMENT OF TRANSPORTATION

DIVISION OF ENGINEERING SERVICES

BRIDGE NO. 29E0006

POST MILE 17.79

SOUTH STOCKTON WIDENING

SOUND WALL NO. 06

SOUNDWALL - MASONRY BLOCK WITH BARRIER ON RETAINING WALL - DETAILS NO. 1

DS OSD 2147A (ENGLISH STANDARD DRAWING "XS" BORDER REV. (02-02-11)

ORIGINAL SCALE IN INCHES FOR REDUCED PLANS 0 1 2 3

UNIT: 3586
PROJECT NUMBER & PHASE: 10000004091
CONTRACT NO.: 10-3A1001

DISREGARD PRINTS BEARING EARLIER REVISION DATES

REVISION DATES 1-4-11 7-22-11 9-29-11

SHEET 7 OF 12

FILE => 29e0006-sw-f-dt01.dgn

USERNAME => s124496 DATE PLOTTED => 29-MAR-2012 TIME PLOTTED => 12:51

DIST	COUNTY	ROUTE	POST MILES TOTAL PROJECT	SHEET No.	TOTAL SHEETS
10	SJ	4,99	R19.5/R20.1, 15.0/18.6	1268	1414

REGISTERED CIVIL ENGINEER 11-04-11 DATE

3-26-12
PLANS APPROVAL DATE

REGISTERED PROFESSIONAL ENGINEER CHRIS V. UDARBE No. C62985 Exp. 06-30-12 CIVIL STATE OF CALIFORNIA

The State of California or its officers or agents shall not be responsible for the accuracy or completeness of electronic copies of this plan sheet.

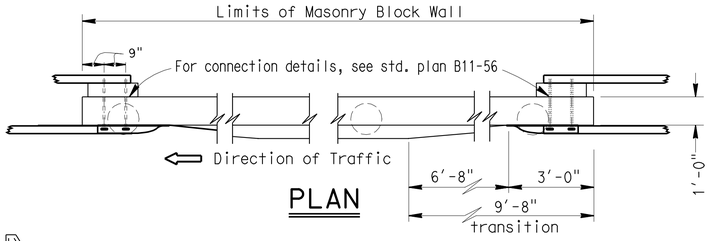

PLAN

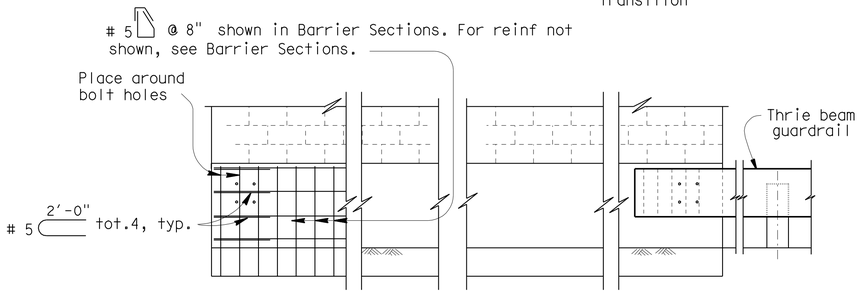

ELEVATION

METAL BEAM GUARDRAIL ANCHORAGE

For details not shown, see std. plan B11-56.

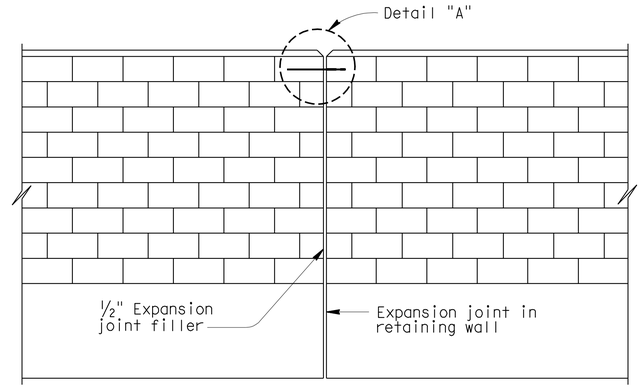

ALIGNMENT KEY DETAIL

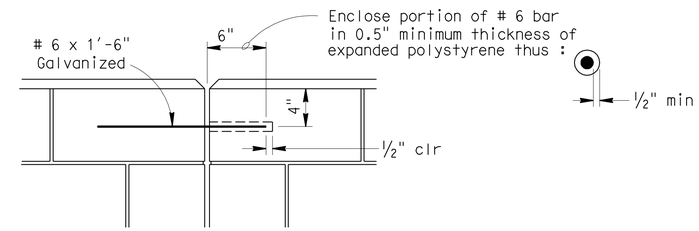

DETAIL A

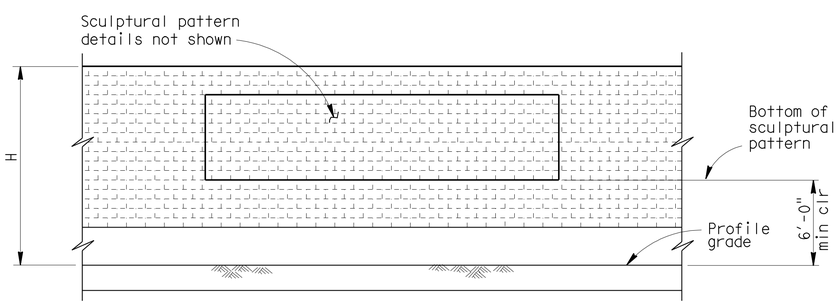

CLEARANCE DETAIL

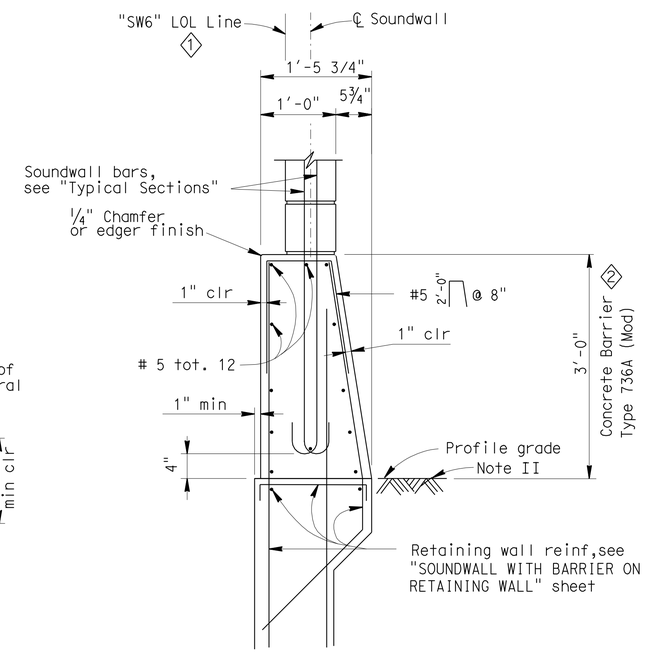

CONCRETE BARRIER TYPE 736A (MOD) SECTION

NOTES:

I : For details not shown,see "RETAINING WALL WITH SOUNDWALL" sheets.

II : Slope ground at traffic side of barrier to drain. Maximum slope ±10%. See Standard Plan B11-56, Note D.

DESIGN NOTES

DESIGN

Uniform Building Code,1997 Edition and the Bridge Design Specifications.

DESIGN WIND LOAD

33 PSF

DESIGN SEISMIC LOAD

0.57 Dead load

REINFORCED CONCRETE

f'c = 3250 PSI
fy = 60 KSI

CONCRETE MASONRY

REGULAR STRENGTH	HIGH STRENGTH	
f'm = 1500 PSI	f'm = 2000 PSI	f'm = 2500 PSI
f_b = 1500 PSI	f_b = 660 PSI	f_b = 830 PSI
fs = 24.0 KSI	fs = 24.0 KSI	fs = 24000 PSI
n = 25.8	n = 19.3	n = 15.5

LOAD FACTORS AND LOAD COMBINATIONS

Working Stress Design (WSD) Percentage of unit stress

Group 1: D + E + SC 100%
Group 2: D + W + SC + E 100%
Group 3: D + 0.71 EQD + E 100%

Where:

D = Dead load
E = Lateral earth pressure
SC = Live load surcharge
W = Wind load
EQD = Seismic dead load

Load Factor Design (LFD)

Group A: βD +1.7 E + 1.7 SC
Group B: βD +1.7 E + 1.3 W
Group C: βD +1.3 E + 1.0 EQE
Group D: βD +1.3 E + 1.0 EQD
Group E: βD +1.1 E + 0.85 (EQE + EQD)

Where : β = 0.9 or 1.2, whichever controls in design
D = Dead load
E = Lateral earth pressure
SC = Live load surcharge
W = Wind load
EQD = Seismic dead load
EQE = Seismic earth load

STRENGTH REDUCTION FACTORS, Ø

Reinforced concrete:
For flexure ---------- Ø=0.90
For shear ---------- Ø=0.85

Concrete masonry:
For flexure ---------- Ø=0.80
For shear ---------- Ø=0.60

Foundations :

See "RETAINING WALL WITH SOUNDWALL" sheets.

REVISED STANDARD DRAWING

FILE NO. REVISED ~~xs15-130-2e~~

APPROVAL DATE ~~4-15-08~~ REVISED

1 Reference line added
2 Barrier Type modified

STATE OF CALIFORNIA DEPARTMENT OF TRANSPORTATION

DIVISION OF ENGINEERING SERVICES

BRIDGE NO. 29E0006
POST MILE 17.79

SOUTH STOCKTON WIDENING

SOUND WALL NO. 06

SOUNDWALL - MASONRY BLOCK WITH BARRIER ON RETAINING WALL - DETAILS NO. 2

DS OSD 2147A (ENGLISH STANDARD DRAWING "XS" BORDER REV. (02-02-11)

ORIGINAL SCALE IN INCHES FOR REDUCED PLANS 0 1 2 3

UNIT: 3586
PROJECT NUMBER & PHASE: 10000004091 CONTRACT NO.: 10-3A1001

DISREGARD PRINTS BEARING EARLIER REVISION DATES

REVISION DATES 1-14-11 7-28-11 9-29-11

SHEET 8 OF 12

FILE => 29e0006-sw-f-dt02.dgn

USERNAME => s124496 DATE PLOTTED => 29-MAR-2012 TIME PLOTTED => 12:51

DIST	COUNTY	ROUTE	POST MILES TOTAL PROJECT	SHEET No.	TOTAL SHEETS
10	SJ	4,99	R19.5/R20.1, 15.0/18.6	1269	1414

REGISTERED CIVIL ENGINEER 11-04-11 DATE

3-26-12
PLANS APPROVAL DATE

REGISTERED PROFESSIONAL ENGINEER CHRIS V. UDARBE No. C62985 Exp. 06-30-12 CIVIL STATE OF CALIFORNIA

The State of California or its officers or agents shall not be responsible for the accuracy or completeness of electronic copies of this plan sheet.

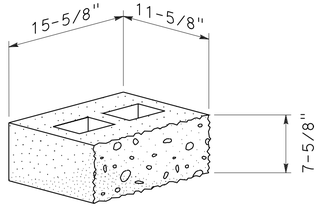

'A' BLOCK
SPLIT FACE ON SIDE
12 X 8 X 16 NOMINAL

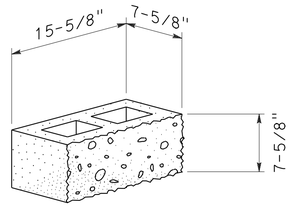

'B' BLOCK
SPLIT FACE ON SIDE
8 X 8 X 16 NOMINAL

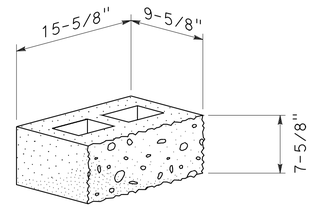

'C' BLOCK
SPLIT FACE ON SIDE
10 X 8 X 16 NOMINAL

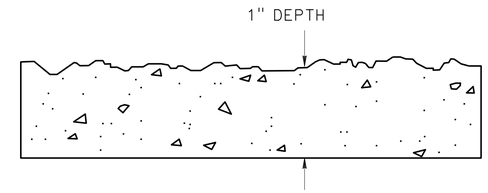

NOTES: - TEXTURE #T323 LIMESTONE1
- MEASUREMENTS ARE APPROXIMATE

TYPICAL SPLIT FACE DETAIL

NO SCALE

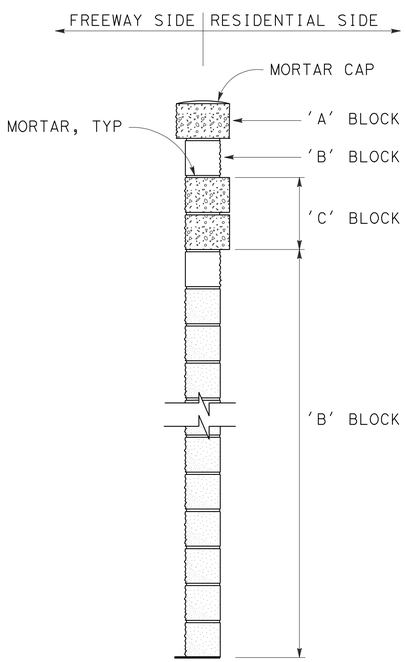

TYPICAL SECTION

NO SCALE

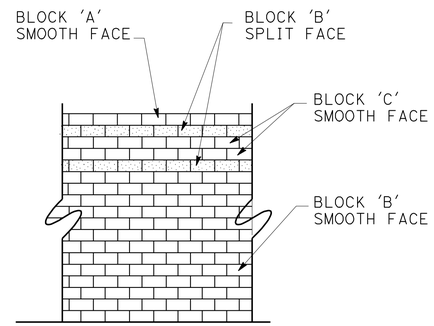

RESIDENTIAL SIDE

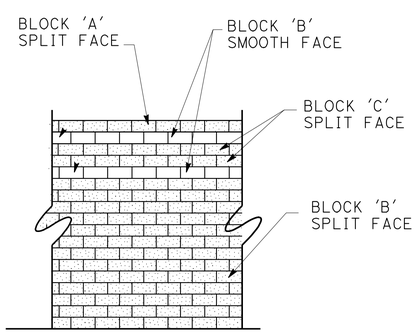

FREEWAY SIDE

ELEVATION
TYPICAL TREATMENT

NO SCALE

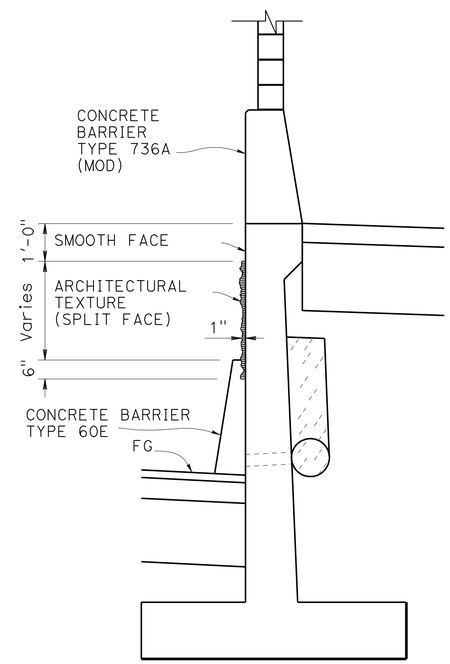

"SW6" STA 456+90.00 TO 457+78.03

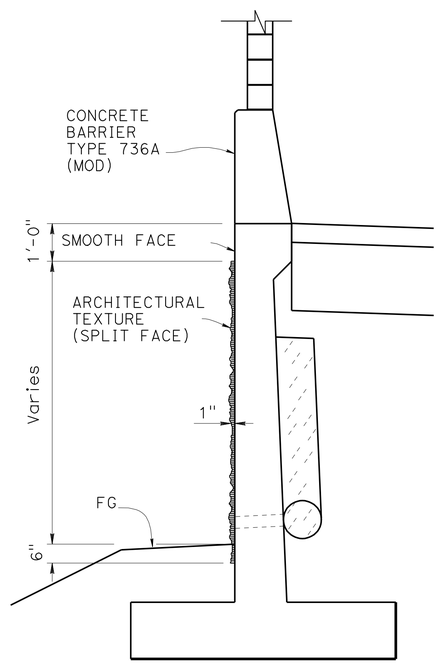

"SW6" STA 457+78.03 TO 458+70.00

TYPICAL SECTION

½" = 1'

NOTE:
THE CONTRACTOR SHALL VERIFY ALL CONTROLLING FIELD DIMENSIONS BEFORE ORDERING OR FABRICATING ANY MATERIAL.

	BY	CHECKED
DESIGN	C. UDARBE	R. CORIA
DETAILS	MINH TRAN	C. UDARBE
QUANTITIES	P. VU	R. CORIA

STATE OF CALIFORNIA
DEPARTMENT OF TRANSPORTATION

DIVISION OF ENGINEERING SERVICES
STRUCTURE DESIGN
DESIGN BRANCH 17

BRIDGE NO. 29E0006
POST MILE 17.79

SOUTH STOCKTON WIDENING
SOUND WALL NO. 06
ARCHITECTURAL DETAILS

STRUCTURES DESIGN DETAIL SHEET (ENGLISH) (REV. 09-01-10)

ORIGINAL SCALE IN INCHES FOR REDUCED PLANS 0 1 2 3

UNIT: 3586
PROJECT NUMBER & PHASE: 10000004091
CONTRACT NO.: 10-3A1001

DISREGARD PRINTS BEARING EARLIER REVISION DATES

REVISION DATES 11-4-11 7-22-11 9-29-11

SHEET 9 OF 12

FILE => 29e0006-sw-g-archdt.dgn

USERNAME => s124496 DATE PLOTTED => 29-MAR-2012 TIME PLOTTED => 12:52

DIST	COUNTY	ROUTE	POST MILES TOTAL PROJECT	SHEET No	TOTAL SHEETS
10	SJ	4,99	R19.5/R20.1, 15.0/18.6	1270	1414

PROFESSIONAL GEOLOGIST 9-7-11

3-26-12
PLANS APPROVAL DATE

PROFESSIONAL GEOLOGIST Joseph Kaump No. 7837 Exp. 01-31-13 STATE OF CALIFORNIA

The State of California or its officers or agents shall not be responsible for the accuracy or completeness of electronic copies of this plan sheet.

This LOTB sheet was prepared in accordance with the Caltrans Soil & Rock Logging, Classification, & Presentation Manual (2010 Edition).

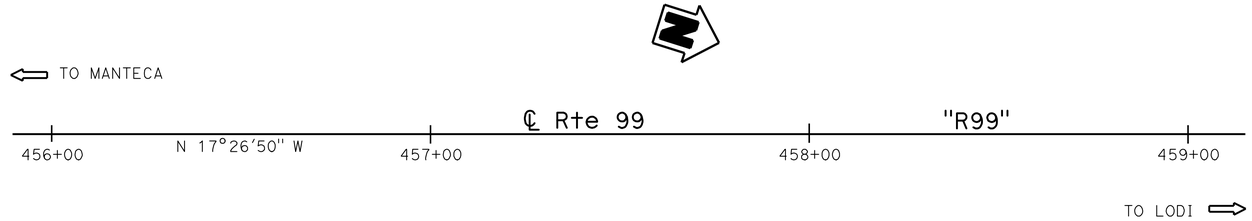

BENCH MARK

LGC 124
Fnd PK Nail w/ CT Tag
61.65' Rt Sta 464+60.16 ℄ Rte 99
Elev 16.42'
Vert Datum NGVD29

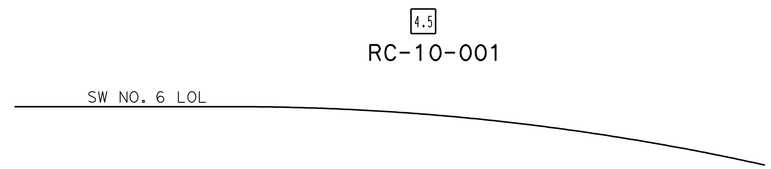

PLAN

1" = 20'

Note:

1. Groundwater present but not measured during field investigation for Sound Wall No. 6.
2. Refer to RC-10-001 and RC-10-002 for Dr. Martin Luther King Jr. OC (Br. No. 29-0329) for groundwater data.
   Groundwater was measured in Boring RC-10-001 at Elev -22.9' on 9-16-10.
   Groundwater was measured in Boring RC-10-002 at Elev -27.5' on 9-30-10.

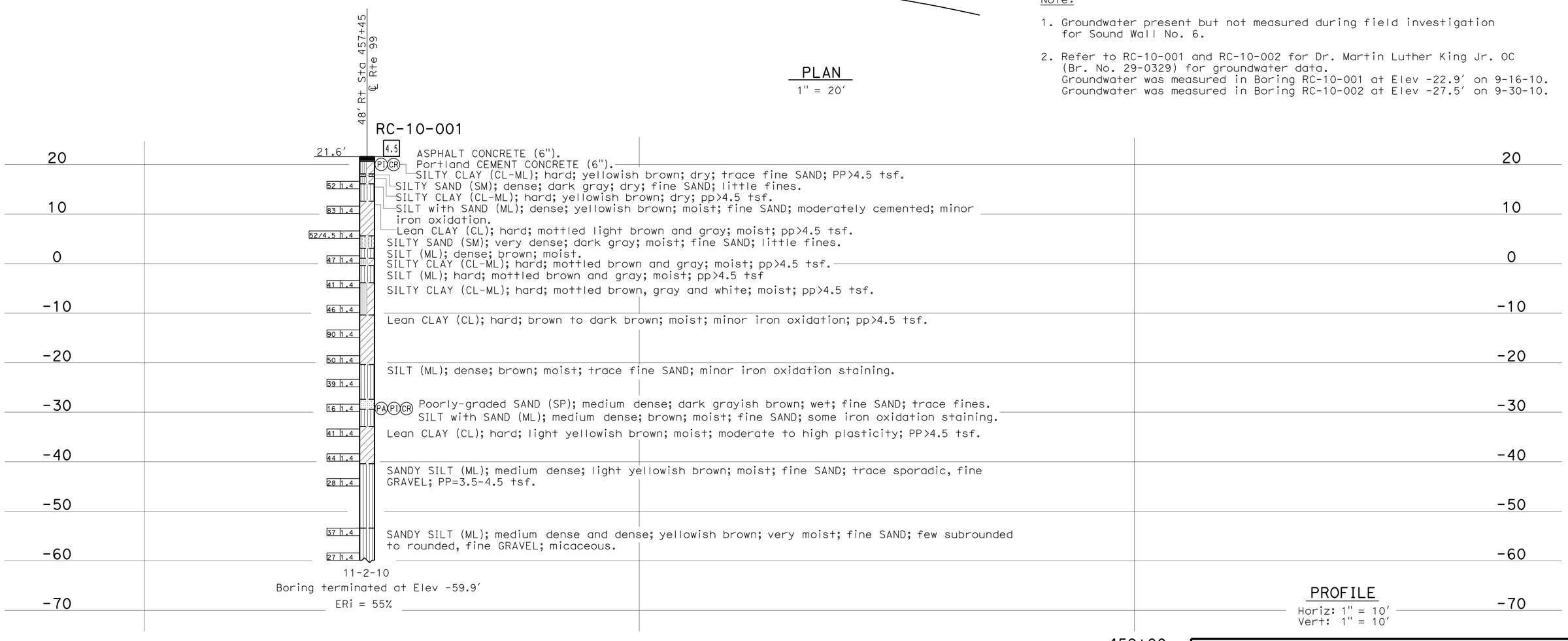

PROFILE

Horiz: 1" = 10'
Vert: 1" = 10'

ENGINEERING SERVICES	MATERIALS AND GEOTECHNICAL SERVICES	STATE OF CALIFORNIA DEPARTMENT OF TRANSPORTATION	DIVISION OF ENGINEERING SERVICES STRUCTURE DESIGN DESIGN BRANCH 17	BRIDGE NO. 29E0006 POST MILE 17.79	SOUTH STOCKTON WIDENING SOUND WALL NO. 6 LOG OF TEST BORINGS 1 OF 3
FUNCTIONAL SUPERVISOR NAME: R. Buell	DRAWN BY: W. Tang 07/11 CHECKED BY: C. Zhen-Ru	FIELD INVESTIGATION BY: A. Barrie			

OGS CIVIL LOG OF TEST BORINGS SHEET

ORIGINAL SCALE IN INCHES FOR REDUCED PLANS 0 1 2 3

UNIT: 3586
PROJECT NUMBER & PHASE: 10000004091 CONTRACT NO.: 10-3A1001

DISREGARD PRINTS BEARING EARLIER REVISION DATES

REVISION DATES 08-11-11 09-07-11 SHEET 10 OF 12

FILE => 29e0006-sw-g-ltb 1 of 3.dgn

USERNAME => s124496 DATE PLOTTED => 29-MAR-2012 TIME PLOTTED => 12:52

DIST	COUNTY	ROUTE	POST MILES TOTAL PROJECT	SHEET No	TOTAL SHEETS
10	SJ	4,99	R19.5/R20.1, 15.0/18.6	1271	1414

Joseph M Kaump 9-7-11
PROFESSIONAL GEOLOGIST

3-26-12
PLANS APPROVAL DATE

PROFESSIONAL GEOLOGIST Joseph Kaump No. 7837 Exp. 01-31-13 STATE OF CALIFORNIA

The State of California or its officers or agents shall not be responsible for the accuracy or completeness of electronic copies of this plan sheet.

REFERENCE: CALTRANS SOIL & ROCK LOGGING, CLASSIFICATION, AND PRESENTATION MANUAL (2010)

CEMENTATION

Description	Criteria
Weak	Crumbles or breaks with handling or little finger pressure.
Moderate	Crumbles or breaks with considerable finger pressure.
Strong	Will not crumble or break with finger pressure.

BOREHOLE IDENTIFICATION

Symbol	Hole Type	Description
Size	A	Auger Boring (hollow or solid stem bucket)
Size	R RW RC P	Rotary drilled boring (conventional) Rotary drilled with self-casing wire-line Rotary core with continuously-sampled, self-casing wire-line Rotary percussion boring (air)
Size	R	Rotary drilled diamond core
Size	HD HA	Hand driven (1-inch soil tube) Hand Auger
●	D	Dynamic Cone Penetration Boring
▲	CPT	Cone Penetration Test (ASTM D 5778)
⬚	O	Other (note on LOTB)

Note: Size in inches.

CONSISTENCY OF COHESIVE SOILS

Description	Shear Strength (tsf)	Pocket Penetrometer Measurement, PP, (tsf)	Torvane Measurement, TV, (tsf)	Vane Shear Measurement, VS, (tsf)
Very Soft	Less than 0.12	Less than 0.25	Less than 0.12	Less than 0.12
Soft	0.12 - 0.25	0.25 - 0.5	0.12 - 0.25	0.12 - 0.25
Medium Stiff	0.25 - 0.5	0.5 - 1	0.25 - 0.5	0.25 - 0.5
Stiff	0.5 - 1	1 - 2	0.5 - 1	0.5 - 1
Very Stiff	1 - 2	2 - 4	1 - 2	1 - 2
Hard	Greater than 2	Greater than 4	Greater than 2	Greater than 2

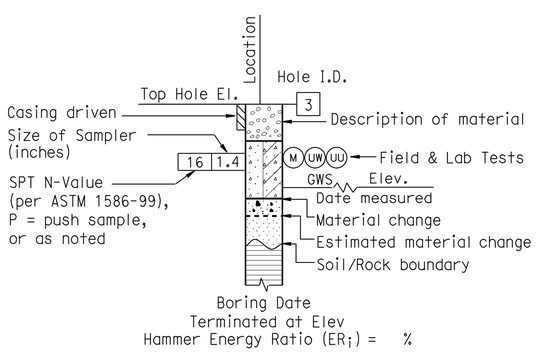

ROTARY BORING

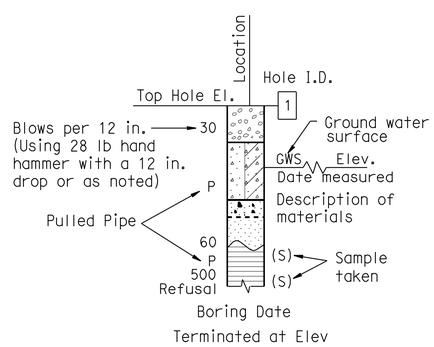

HAND BORING

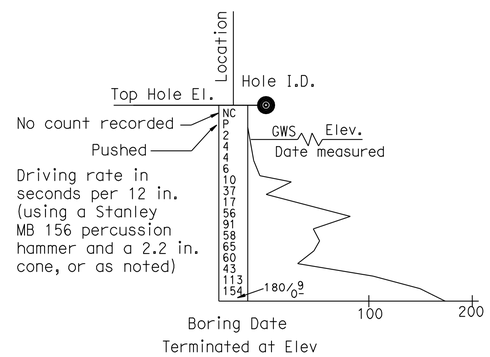

DYNAMIC CONE PENETRATION BORING

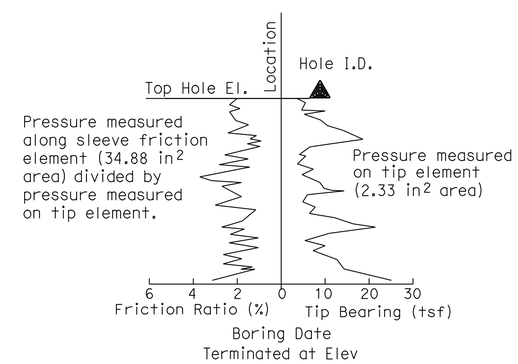

CONE PENETRATION TEST (CPT) BORING

ENGINEERING SERVICES	MATERIALS AND GEOTECHNICAL SERVICES	STATE OF CALIFORNIA DEPARTMENT OF TRANSPORTATION	DIVISION OF ENGINEERING SERVICES STRUCTURE DESIGN DESIGN BRANCH 17	BRIDGE NO. 29E0006 POST MILE 17.79	SOUTH STOCKTON WIDENING SOUND WALL NO. 6 LOG OF TEST BORINGS 2 OF 3
	PREPARED BY: W. Tang 7/11				

GS LOTB SOIL LEGEND

ORIGINAL SCALE IN INCHES FOR REDUCED PLANS 0 1 2 3

UNIT: 3586
PROJECT NUMBER & PHASE: 10000004091 CONTRACT NO.: 10-3A1001

DISREGARD PRINTS BEARING EARLIER REVISION DATES

REVISION DATES

SHEET 11 OF 12

FILE => 29e0006-sw-g-ltb 2 of 3.dgn

USERNAME => s119571 DATE PLOTTED => 23-MAR-2012 TIME PLOTTED => 13:41

REFERENCE: CALTRANS SOIL & ROCK LOGGING, CLASSIFICATION, AND PRESENTATION MANUAL (2010)

DIST	COUNTY	ROUTE	POST MILES TOTAL PROJECT	SHEET No	TOTAL SHEETS
10	SJ	4,99	R19.5/R20.1, 15.0/18.6	1272	1414

Joseph M Kaump 9-7-11
PROFESSIONAL GEOLOGIST

3-26-12
PLANS APPROVAL DATE

PROFESSIONAL GEOLOGIST Joseph Kaump No. 7837 Exp. 01-31-13 STATE OF CALIFORNIA

The State of California or its officers or agents shall not be responsible for the accuracy or completeness of electronic copies of this plan sheet.

GROUP SYMBOLS AND NAMES

Graphic/Symbol	Group Names	Graphic/Symbol	Group Names
GW	Well-graded GRAVEL Well-graded GRAVEL with SAND	CL	Lean CLAY Lean CLAY with SAND Lean CLAY with GRAVEL SANDY lean CLAY SANDY lean CLAY with GRAVEL GRAVELLY lean CLAY GRAVELLY lean CLAY with SAND
GP	Poorly-graded GRAVEL Poorly-graded GRAVEL with SAND		
GW-GM	Well-graded GRAVEL with SILT Well-graded GRAVEL with SILT and SAND	CL-ML	SILTY CLAY SILTY CLAY with SAND SILTY CLAY with GRAVEL SANDY SILTY CLAY SANDY SILTY CLAY with GRAVEL GRAVELLY SILTY CLAY GRAVELLY SILTY CLAY with SAND
GW-GC	Well-graded GRAVEL with CLAY (or SILTY CLAY) Well-graded GRAVEL with CLAY and SAND (or SILTY CLAY and SAND)		
GP-GM	Poorly-graded GRAVEL with SILT Poorly-graded GRAVEL with SILT and SAND	ML	SILT SILT with SAND SILT with GRAVEL SANDY SILT SANDY SILT with GRAVEL GRAVELLY SILT GRAVELLY SILT with SAND
GP-GC	Poorly-graded GRAVEL with CLAY (or SILTY CLAY) Poorly-graded GRAVEL with CLAY and SAND (or SILTY CLAY and SAND)		
GM	SILTY GRAVEL SILTY GRAVEL with SAND	OL	ORGANIC lean CLAY ORGANIC lean CLAY with SAND ORGANIC lean CLAY with GRAVEL SANDY ORGANIC lean CLAY SANDY ORGANIC lean CLAY with GRAVEL GRAVELLY ORGANIC lean CLAY GRAVELLY ORGANIC lean CLAY with SAND
GC	CLAYEY GRAVEL CLAYEY GRAVEL with SAND		
GC-GM	SILTY, CLAYEY GRAVEL SILTY, CLAYEY GRAVEL with SAND	OL	ORGANIC SILT ORGANIC SILT with SAND ORGANIC SILT with GRAVEL SANDY ORGANIC SILT SANDY ORGANIC SILT with GRAVEL GRAVELLY ORGANIC SILT GRAVELLY ORGANIC SILT with SAND
SW	Well-graded SAND Well-graded SAND with GRAVEL		
SP	Poorly-graded SAND Poorly-graded SAND with GRAVEL	CH	Fat CLAY Fat CLAY with SAND Fat CLAY with GRAVEL SANDY fat CLAY SANDY fat CLAY with GRAVEL GRAVELLY fat CLAY GRAVELLY fat CLAY with SAND
SW-SM	Well-graded SAND with SILT Well-graded SAND with SILT and GRAVEL		
SW-SC	Well-graded SAND with CLAY (or SILTY CLAY) Well-graded SAND with CLAY and GRAVEL (or SILTY CLAY and GRAVEL)	MH	Elastic SILT Elastic SILT with SAND Elastic SILT with GRAVEL SANDY elastic SILT SANDY elastic SILT with GRAVEL GRAVELLY elastic SILT GRAVELLY elastic SILT with SAND
SP-SM	Poorly-graded SAND with SILT Poorly-graded SAND with SILT and GRAVEL		
SP-SC	Poorly-graded SAND with CLAY (or SILTY CLAY) Poorly-graded SAND with CLAY and GRAVEL (or SILTY CLAY and GRAVEL)	OH	ORGANIC fat CLAY ORGANIC fat CLAY with SAND ORGANIC fat CLAY with GRAVEL SANDY ORGANIC fat CLAY SANDY ORGANIC fat CLAY with GRAVEL GRAVELLY ORGANIC fat CLAY GRAVELLY ORGANIC fat CLAY with SAND
SM	SILTY SAND SILTY SAND with GRAVEL		
SC	CLAYEY SAND CLAYEY SAND with GRAVEL	OH	ORGANIC elastic SILT ORGANIC elastic SILT with SAND ORGANIC elastic SILT with GRAVEL SANDY ORGANIC elastic SILT SANDY ORGANIC elastic SILT with GRAVEL GRAVELLY ORGANIC elastic SILT GRAVELLY ORGANIC elastic SILT with SAND
SC-SM	SILTY, CLAYEY SAND SILTY, CLAYEY SAND with GRAVEL		
PT	PEAT	OL/OH	ORGANIC SOIL ORGANIC SOIL with SAND ORGANIC SOIL with GRAVEL SANDY ORGANIC SOIL SANDY ORGANIC SOIL with GRAVEL GRAVELLY ORGANIC SOIL GRAVELLY ORGANIC SOIL with SAND
	COBBLES COBBLES and BOULDERS BOULDERS		

FIELD AND LABORATORY TESTING

- (C) Consolidation (ASTM D 2435)
- (CL) Collapse Potential (ASTM D 5333)
- (CP) Compaction Curve (CTM 216)
- (CR) Corrosivity Testing (CTM 643, CTM 422, CTM 417)
- (CU) Consolidated Undrained Triaxial (ASTM D 4767)
- (DS) Direct Shear (ASTM D 3080)
- (EI) Expansion Index (ASTM D 4829)
- (M) Moisture Content (ASTM D 2216)
- (OC) Organic Content-% (ASTM D 2974)
- (P) Permeability (CTM 220)
- (PA) Particle Size Analysis (ASTM D 422)
- (PI) Plasticity Index (AASHTO T 90) Liquid Limit (AASHTO T 89)
- (PL) Point Load Index (ASTM D 5731)
- (PM) Pressure Meter
- (R) R-Value (CTM 301)
- (SE) Sand Equivalent (CTM 217)
- (SG) Specific Gravity (AASHTO T 100)
- (SL) Shrinkage Limit (ASTM D 427)
- (SW) Swell Potential (ASTM D 4546)
- (UC) Unconfined Compression-Soil (ASTM D 2166) Unconfined Compression-Rock (ASTM D 2938)
- (UU) Unconsolidated Undrained Triaxial (ASTM D 2850)
- (UW) Unit Weight (ASTM D 4767)

APPARENT DENSITY OF COHESIONLESS SOILS

Description	SPT N_{60} (Blows / 12 in.)
Very Loose	0 - 5
Loose	5 - 10
Medium Dense	10 - 30
Dense	30 - 50
Very Dense	Greater than 50

MOISTURE

Description	Criteria
Dry	No discernable moisture
Moist	Moisture present, but no free water
Wet	Visible free water

PERCENT OR PROPORTION OF SOILS

Description	Criteria
Trace	Particles are present but estimated to be less than 5%
Few	5% - 10%
Little	15% - 25%
Some	30% - 45%
Mostly	50% - 100%

PARTICLE SIZE

Description		Size (in.)
Boulder		Greater than 12
Cobble		3 - 12
Gravel	Coarse	3/4 - 3
	Fine	1/5 - 3/4
Sand	Coarse	1/16 - 1/5
	Medium	1/64 - 1/16
	Fine	1/300 - 1/64
Silt and Clay		Less than 1/300

ENGINEERING SERVICES

MATERIALS AND GEOTECHNICAL SERVICES
PREPARED BY: W. Tang 7/11

STATE OF CALIFORNIA
DEPARTMENT OF TRANSPORTATION

DIVISION OF ENGINEERING SERVICES
STRUCTURE DESIGN
DESIGN BRANCH 17

BRIDGE NO. 29E0006
POST MILE 17.79

SOUTH STOCKTON WIDENING
SOUND WALL NO. 6
LOG OF TEST BORINGS 3 OF 3

GS LOTB SOIL LEGEND

ORIGINAL SCALE IN INCHES FOR REDUCED PLANS 0 1 2 3

UNIT: 3586
PROJECT NUMBER & PHASE: 10000004091
CONTRACT NO.: 10-3A1001

DISREGARD PRINTS BEARING EARLIER REVISION DATES

REVISION DATES | SHEET 12 | OF 12

FILE => 29e0006-sw-g-ltb 3 of 3.dgn

USERNAME => s119571 DATE PLOTTED => 29-MAR-2012 TIME PLOTTED => 13:41

DIST	COUNTY	ROUTE	POST MILES TOTAL PROJECT	SHEET No.	TOTAL SHEETS
10	SJ	4,99	R19.5/R20.1, 15.0/18.6	1273	1414

REGISTERED CIVIL ENGINEER 11-04-11 DATE

3-26-12
PLANS APPROVAL DATE

REGISTERED PROFESSIONAL ENGINEER Chris Udarbe No. C62985 Exp. 06-30-2012 CIVIL STATE OF CALIFORNIA

The State of California or its officers or agents shall not be responsible for the accuracy or completeness of electronic copies of this plan sheet.

INDEX TO PLANS

SHEET NO.	TITLE
1.	GENERAL PLAN
2.	STRUCTURE PLAN NO. 1
3.	STRUCTURE PLAN NO. 2
4.	STRUCTURE PLAN NO. 3
5.	FOUNDATION PLAN
6.	PILE LAYOUT
7.	RETAINING WALL TYPE 1SWP-DETAIL NO. 1
8.	RETAINING WALL TYPE 1SWP-DETAIL NO. 2
9.	SOUNDWALL ON RETAINING WALL-MASONRY BLOCK-DETAILS NO. 1
10.	SOUNDWALL ON RETAINING WALL-MASONRY BLOCK-DETAILS NO. 2
11.	ARCHITECTURAL DETAILS NO. 1
12.	ARCHITECTURAL DETAILS NO. 2
13.	LOG OF TEST BORING 1 OF 3
14.	LOG OF TEST BORING 2 OF 3
15.	LOG OF TEST BORING 3 OF 3

STANDARD PLANS DATED MAY 2006

SHEET NO.	TITLE
A10A - A10B	ACRONYMS AND ABBREVIATIONS
A10C - A10D	SYMBOLS
A62B	LIMITS OF PAYMENT FOR EXCAVATION AND BACKFILL - BRIDGE SURCHARGE AND WALL
B0-3	BRIDGE DETAILS
B2-3	16" AND 24" CAST-IN-DRILLED -HOLE CONCRETE PILE
B3-8	RETAINING WALL DETAILS NO. 1
B3-9	RETAINING WALL DETAILS NO. 2
B15-9	SOUND WALL MASONRY BLOCK MISCELLANEOUS DETAILS

STANDARD PLAN SHEET NO.

DETAIL NO.

QUANTITIES

STRUCTURE EXCAVATION (RETAINING WALL)	1,801	CY
STRUCTURE BACKFILL (RETAINING WALL)	1,061	CY
PERVIOUS BACKFILL MATERIAL (RETAINING WALL)	87	CY
16" CAST-IN-DRILLED-HOLE CONCRETE PILING	2,730	LF
STRUCTURAL CONCRETE, RETAINING WALL	495	CY
ARCHITECTURAL TEXTURE (SPLIT FACE)	4,396	SQFT
SOUND WALL (MASONRY BLOCK)	5,013	SQFT
BAR REINFORCING STEEL (RETAINING WALL)	48,802	LB
MINOR CONCRETE (GUTTER)	482	LF

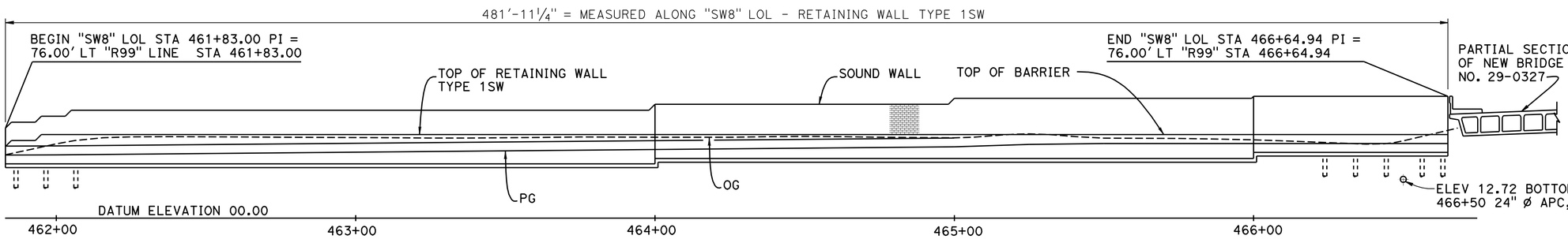

B3-8 B0-3 3-4

DEVELOPED ELEVATION

1" = 20'-0"

Notes:
1. For more details see "STRUCTURAL PLAN NO. 1 & 2" sheets
2. For architectural treatment see "ARCHITECTURAL DETAILS NO. 1 & 2" sheets
3. Not all piles shown, see "PILE LAYOUT" sheet

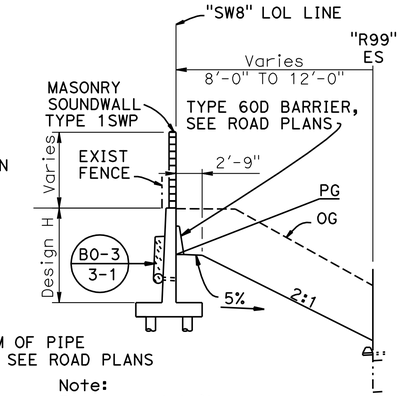

Note:
For more details see "RETAINIG WALL TYPE 1SWP" and "SOUNDWALL ON RETAINING WALL-MASONRY BLOCK - DETAILS NO. 1 & 2" sheets

TYPICAL SECTION

⅛" = 1'-0"

Legend:

Indicates new structure

Indicates existing structure

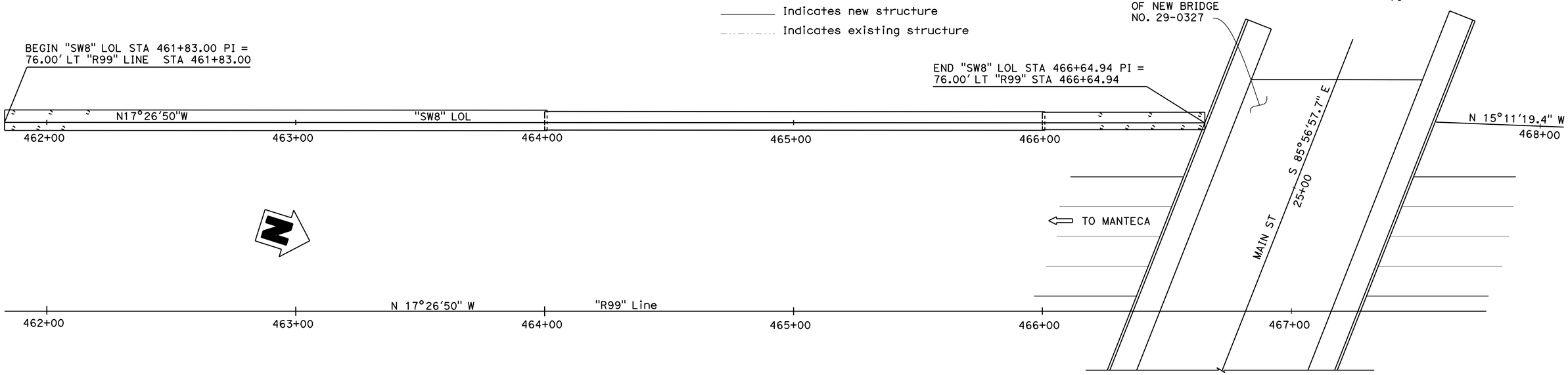

NOTE:
THE CONTRACTOR SHALL VERIFY ALL CONTROLLING FIELD DIMENSIONS BEFORE ORDERING OR FABRICATING ANY MATERIAL.

PLAN

1" = 20'-0"

	BY	CHECKED				
DESIGN	R. CORIA	C. UDARBE	LOAD & RESISTANCE FACTOR DESIGN	LIVE LOADING: HL93 W/"LOW-BOY": PERMIT DESIGN VEHICLE		
DETAILS	M. TRAN	C. UDARBE	LAYOUT	M. TRAN	R. CORIA	
QUANTITIES	R. CORIA	P. VU	SPECIFICATIONS	V. RENGANATHAN	X	PLANS AND SPECS COMPARED

Gary Joe
DESIGN ENGINEER

ORIGINAL SCALE IN INCHES FOR REDUCED PLANS 0 1 2 3

STATE OF CALIFORNIA
DEPARTMENT OF TRANSPORTATION

DIVISION OF ENGINEERING SERVICES
STRUCTURE DESIGN
DESIGN BRANCH 17

BRIDGE NO. 29E0008
POST MILE 18.03

UNIT: 3586
PROJECT NUMBER & PHASE: 10000004091
CONTRACT NO.: 10-3A1001

DISREGARD PRINTS BEARING EARLIER REVISION DATES

REVISION DATES 1-25-11 03-06-11 01-10-12

SHEET 1 OF 15

SOUTH STOCKTON WIDENING
SOUND WALL NO. 8
GENERAL PLAN

USERNAME => s119571 DATE PLOTTED => 29-MAR-2012 TIME PLOTTED => 13:42

FILE => 29e0008-a-gp.dgn

DIST	COUNTY	ROUTE	POST MILES TOTAL PROJECT	SHEET No.	TOTAL SHEETS
10	SJ	4,99	R19.5/R20.1, 15.0/18.6	1274	1414

REGISTERED CIVIL ENGINEER 11-04-11 DATE

3-26-12
PLANS APPROVAL DATE

REGISTERED PROFESSIONAL ENGINEER CHRIS UDARBE No. C62985 Exp. 12-30-12 CIVIL STATE OF CALIFORNIA

The State of California or its officers or agents shall not be responsible for the accuracy or completeness of electronic copies of this plan sheet.

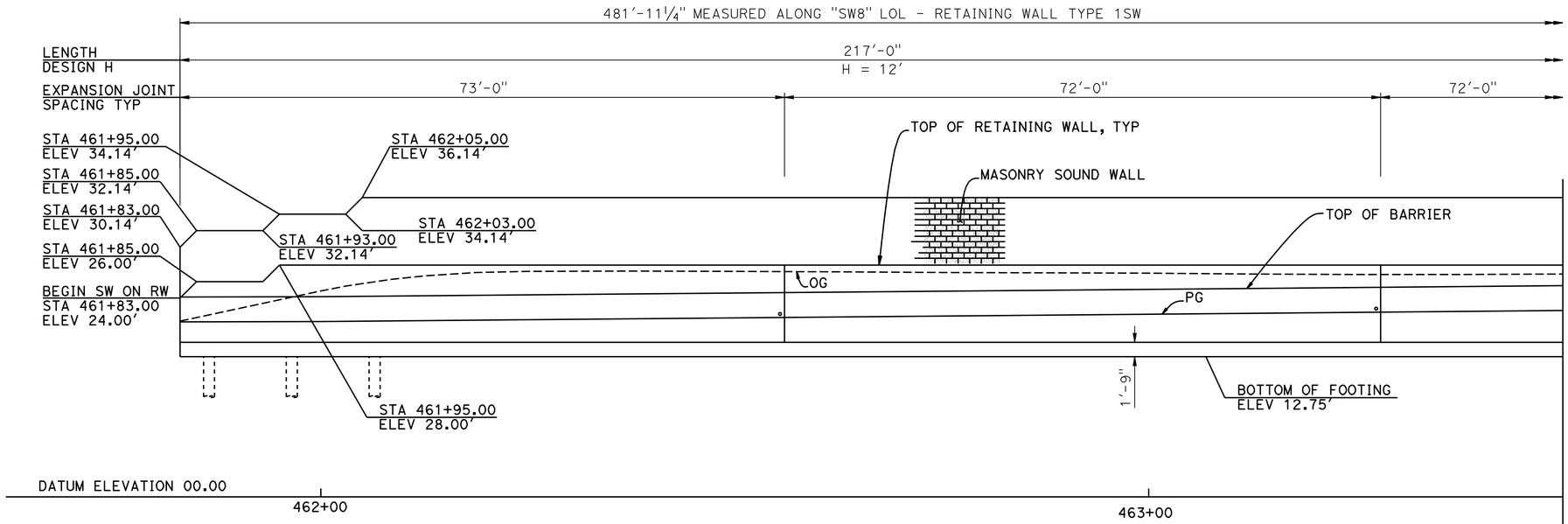

DEVELOPED ELEVATION

1/8" = 1'-0"

MATCH LINE STA = 463+50.00

Notes:

1. For more details see "RETAINING WALL TYPE 1SW" sheet and "SOUNDWALL ON RETAINING WALL - MASONRY BLOCK - DETAILS NO. 1 & 2" sheets
2. For Architectural treatment see "ARCHITECTURAL DETAILS NO. 1 & 2" sheets
3. Not all piles shown, see "PILE LAYOUT" sheet

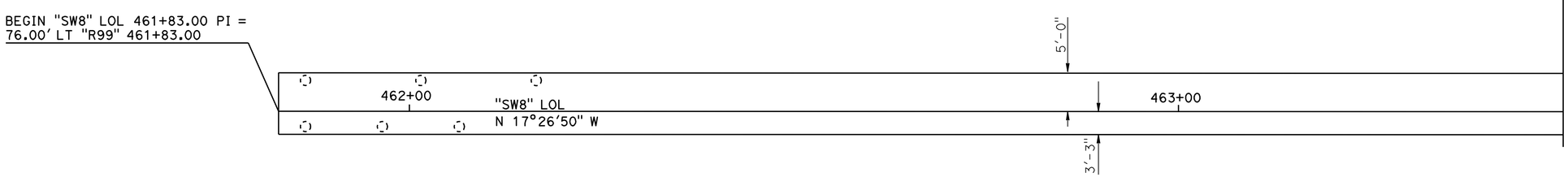

PLAN

1/8" = 1'-0"

NOTE:
THE CONTRACTOR SHALL VERIFY ALL CONTROLLING FIELD DIMENSIONS BEFORE ORDERING OR FABRICATING ANY MATERIAL.

	BY	CHECKED
DESIGN	R. Coria	C. Udarbe
DETAILS	G. Leung	C. Udarbe
QUANTITIES	R. Coria	P. Vu

STATE OF CALIFORNIA
DEPARTMENT OF TRANSPORTATION

DIVISION OF ENGINEERING SERVICES
STRUCTURE DESIGN
DESIGN BRANCH 17

BRIDGE NO. 29E0008
POST MILE 18.03

SOUTH STOCKTON WIDENING
SOUNDWALL NO. 8
STRUCTURE PLAN NO. 1

STRUCTURES DESIGN DETAIL SHEET (ENGLISH) (REV. 09-01-10)

ORIGINAL SCALE IN INCHES FOR REDUCED PLANS 0 1 2 3

UNIT: 3586
PROJECT NUMBER & PHASE: 10000004091
CONTRACT NO.: 10-3A1001

DISREGARD PRINTS BEARING EARLIER REVISION DATES

REVISION DATES: 7-14-11 09-15-11 01-10-12

SHEET 2 OF 15

FILE => 29e0008-c-sp01.dgn

USERNAME => s119571 DATE PLOTTED => 29-MAR-2012 TIME PLOTTED => 13:42

DIST	COUNTY	ROUTE	POST MILES TOTAL PROJECT	SHEET No.	TOTAL SHEETS
10	SJ	4,99	R19.5/R20.1, 15.0/18.6	1275	1414

REGISTERED CIVIL ENGINEER 11-04-11 DATE

3-26-12
PLANS APPROVAL DATE

REGISTERED PROFESSIONAL ENGINEER Chris Udarbe No. C62985 Exp. 06-30-2012 CIVIL STATE OF CALIFORNIA

The State of California or its officers or agents shall not be responsible for the accuracy or completeness of electronic copies of this plan sheet.

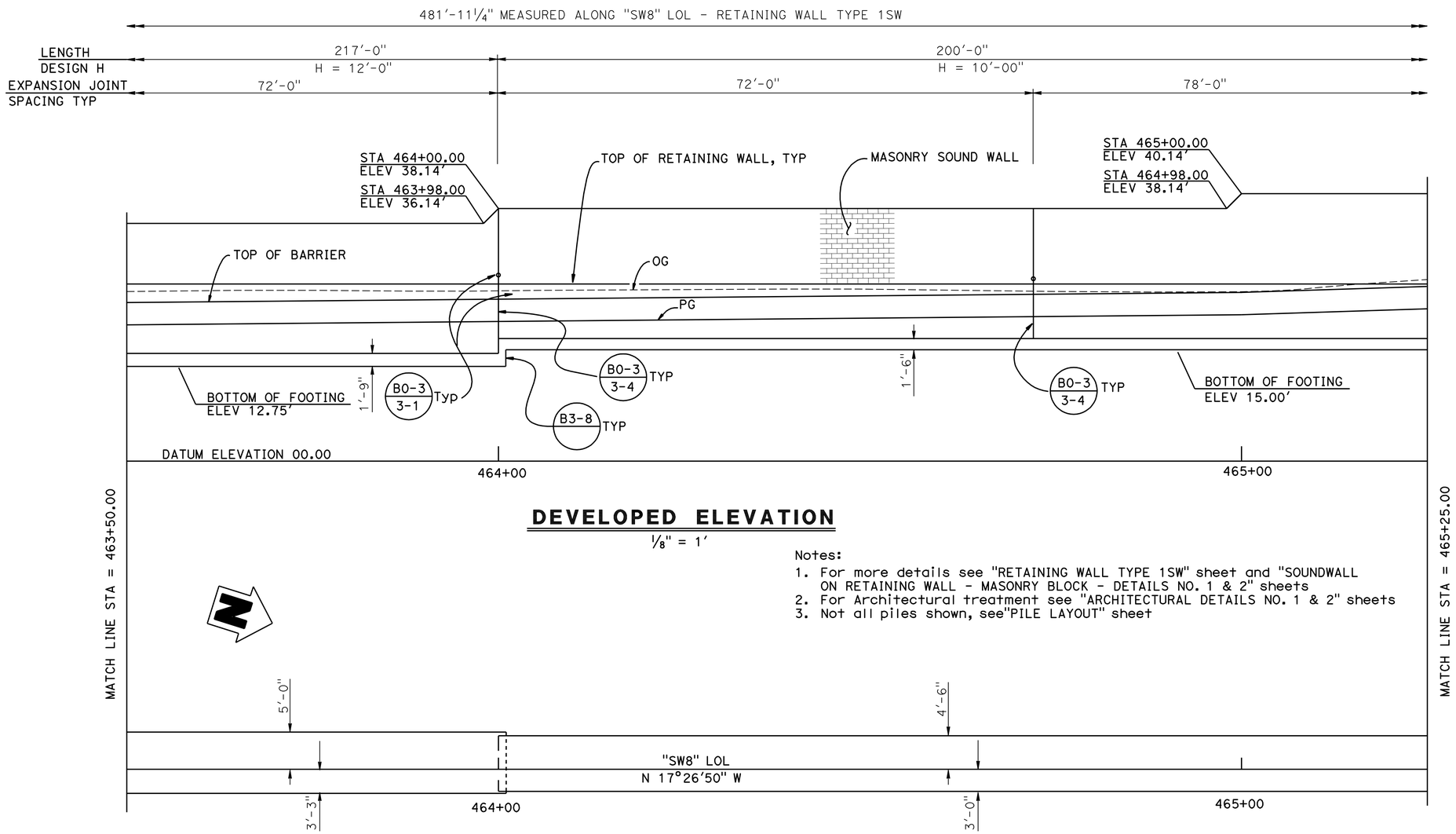

DEVELOPED ELEVATION

⅛" = 1'

Notes:

1. For more details see "RETAINING WALL TYPE 1SW" sheet and "SOUNDWALL ON RETAINING WALL - MASONRY BLOCK - DETAILS NO. 1 & 2" sheets
2. For Architectural treatment see "ARCHITECTURAL DETAILS NO. 1 & 2" sheets
3. Not all piles shown, see"PILE LAYOUT" sheet

PLAN

⅛" = 1'

NOTE:
THE CONTRACTOR SHALL VERIFY ALL CONTROLLING FIELD DIMENSIONS BEFORE ORDERING OR FABRICATING ANY MATERIAL.

	BY	CHECKED
DESIGN	R. CORIA	C. UDARBE
DETAILS	M. TRAN	C. UDARBE
QUANTITIES	R. CORIA	P. VU

STATE OF CALIFORNIA
DEPARTMENT OF TRANSPORTATION

DIVISION OF ENGINEERING SERVICES
STRUCTURE DESIGN
DESIGN BRANCH 17

BRIDGE NO. 29E0008
POST MILE 18.03

SOUTH STOCKTON WIDENING
SOUND WALL NO. 8
STRUCTURE PLAN NO. 2

STRUCTURES DESIGN DETAIL SHEET (ENGLISH) (REV. 09-01-10)

ORIGINAL SCALE IN INCHES FOR REDUCED PLANS 0 1 2 3

UNIT: 3586
PROJECT NUMBER & PHASE: 10000004091
CONTRACT NO.: 10-3A1001

DISREGARD PRINTS BEARING EARLIER REVISION DATES

REVISION DATES 7-14-11 09-15-11 01-10-12

SHEET 3 OF 15

FILE => 29e0008-c-sp02.dgn

USERNAME => s119571 DATE PLOTTED => 29-MAR-2012 TIME PLOTTED => 13:22

DIST	COUNTY	ROUTE	POST MILES TOTAL PROJECT	SHEET No.	TOTAL SHEETS
10	SJ	4,99	R19.5/R20.1, 15.0/18.6	1276	1414

REGISTERED CIVIL ENGINEER 11-04-11 DATE

3-26-12
PLANS APPROVAL DATE

REGISTERED PROFESSIONAL ENGINEER Chris Udarbe No. C62985 Exp. 06-30-2012 CIVIL STATE OF CALIFORNIA

The State of California or its officers or agents shall not be responsible for the accuracy or completeness of electronic copies of this plan sheet.

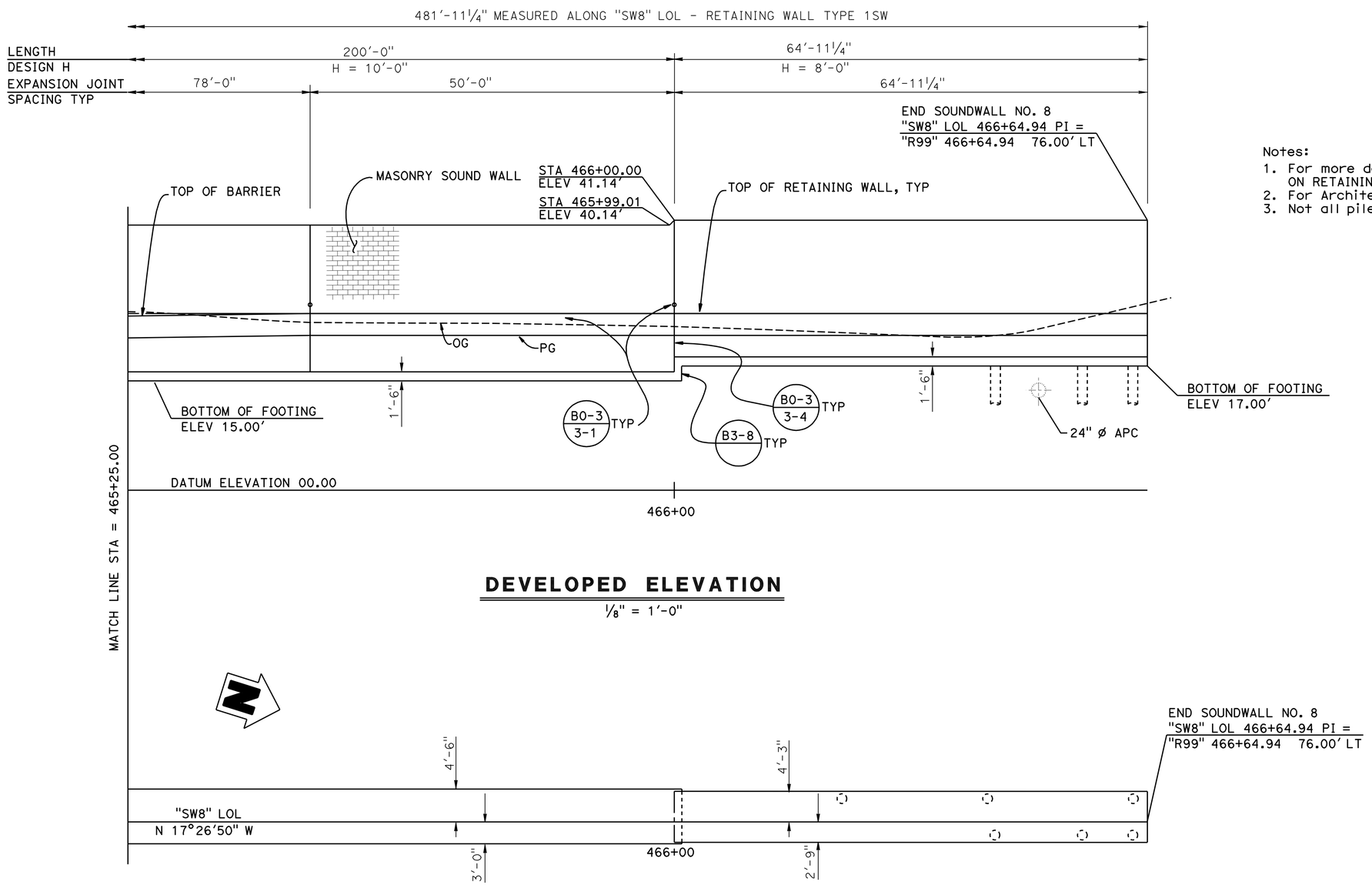

DEVELOPED ELEVATION

1/8" = 1'-0"

Notes:

1. For more details see "RETAINING WALL TYPE 1SW" sheet and "SOUNDWALL ON RETAINING WALL - MASONRY BLOCK - DETAILS NO. 1 & 2" sheets
2. For Architectural treatment see "ARCHITECTURAL DETAILS NO. 1 & 2" sheets
3. Not all piles shown, see"PILE LAYOUT" sheet

PLAN

1/8 "= 1'-0"

NOTE:
THE CONTRACTOR SHALL VERIFY ALL CONTROLLING FIELD DIMENSIONS BEFORE ORDERING OR FABRICATING ANY MATERIAL.

DESIGN	BY R. CORIA	CHECKED C. UDARBE	
DETAILS	BY M. TRAN	CHECKED C. UDARBE	
QUANTITIES	BY R. CORIA	CHECKED P. VU	

STATE OF CALIFORNIA
DEPARTMENT OF TRANSPORTATION

DIVISION OF ENGINEERING SERVICES
STRUCTURE DESIGN
DESIGN BRANCH 17

BRIDGE NO. 29E0008
POST MILE 18.03

SOUTH STOCKTON WIDENING
SOUND WALL NO. 8
STRUCTURE PLAN NO. 3

STRUCTURES DESIGN DETAIL SHEET (ENGLISH) (REV. 09-01-10)

ORIGINAL SCALE IN INCHES FOR REDUCED PLANS 0 1 2 3

UNIT: 3586
PROJECT NUMBER & PHASE: 10000004091
CONTRACT NO.: 10-3A1001

DISREGARD PRINTS BEARING EARLIER REVISION DATES

REVISION DATES 7-29-11 09-15-11 01-10-12

SHEET 4 OF 15

FILE => 29e0008-c-sp03.dgn

USERNAME => s119571 DATE PLOTTED => 29-MAR-2012 TIME PLOTTED => 13:42

DIST	COUNTY	ROUTE	POST MILES TOTAL PROJECT	SHEET No.	TOTAL SHEETS
10	SJ	4,99	R19.5/R20.1, 15.0/18.6	1277	1414

REGISTERED CIVIL ENGINEER — DATE 11-04-11

PLANS APPROVAL DATE 3-26-12

REGISTERED PROFESSIONAL ENGINEER — Chris Udarbe — No. C62985 — Exp. 6-31-12 — CIVIL — STATE OF CALIFORNIA

The State of California or its officers or agents shall not be responsible for the accuracy or completeness of electronic copies of this plan sheet.

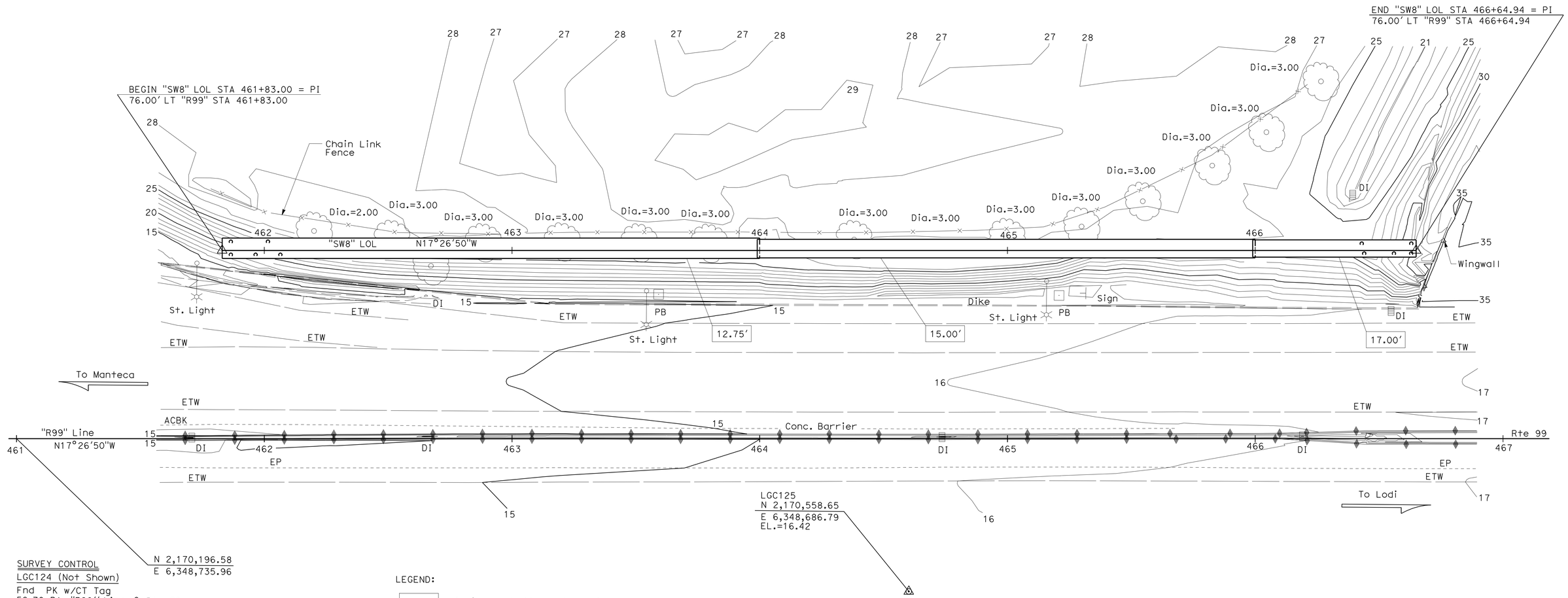

SURVEY CONTROL

LGC124 (Not Shown)

Fnd PK w/CT Tag
56.70 Rt. "R99" Line, ℄ Rte 99
Sta. 459+35.96
N 2,170,057.08
E 6,348,839.24
EL.=17.14

LGC125

Fnd PK w/CT Tag
61.65 Rt. "R99" Line, ℄ Rte 99
Sta. 464+60.16
N 2,170,558.65
E 6,348,686.79
EL.=16.42

LEGEND:

Indicates bottom of footing

Indicates 16"ø piles, all piles not shown

Note:
PB: St. Light Pull Box

SOUTH STOCKTON WIDENING
SOUND WALL NO. 8
FOUNDATION PLAN

PRELIMINARY INVESTIGATION SECTION

SCALE	VERT.DATUM NGVD 29	PHOTOGRAMMETRY AS OF: X			
1"=20'	HORZ.DATUM NAD 83 (91.35)	SURVEYED	BY District	CHECKED	BY Lawrence Lew 9/2009
ALIGNMENT TIES Dist. Traverse Sheet		DRAFTED	BY Sharon Zheng	CHECKED	BY T. Zolnikov 9/2009

	BY	CHECKED
DESIGN	R. Coria	C. Udarbe
DETAILS	G. Zweier	C. Udarbe
QUANTITIES	R. Coria	P. Vu

STATE OF CALIFORNIA
DEPARTMENT OF TRANSPORTATION

DIVISION OF ENGINEERING SERVICES
STRUCTURE DESIGN
DESIGN BRANCH 17

BRIDGE NO. 29E0008
POST MILE 18.03

STRUCTURES FOUNDATION PLAN SHEET (ENGLISH) (REV. 09-01-10)

ORIGINAL SCALE IN INCHES FOR REDUCED PLANS 0 1 2 3

UNIT: 3646
PROJECT NUMBER & PHASE: 1000000409-1
CONTRACT NO.: 10-3A1001

DISREGARD PRINTS BEARING EARLIER REVISION DATES

REVISION DATES: 10/02/09 01/19/11 1/6/2012 01/10/12

SHEET 5 OF 15

FILE => 29e00008-e-fp.dgn

DIST	COUNTY	ROUTE	POST MILES TOTAL PROJECT	SHEET No.	TOTAL SHEETS
10	SJ	4,99	R19.5/R20.1, 15.0/18.6	1278	1414

REGISTERED CIVIL ENGINEER 11-04-11 DATE

3-26-12
PLANS APPROVAL DATE

REGISTERED PROFESSIONAL ENGINEER Chris Udarbe No. C62985 Exp. 06-30-2012 CIVIL STATE OF CALIFORNIA

The State of California or its officers or agents shall not be responsible for the accuracy or completeness of electronic copies of this plan sheet.

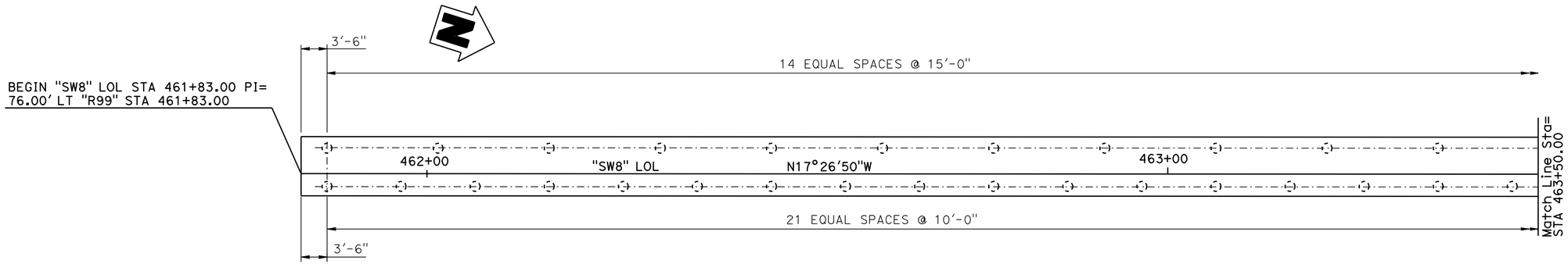

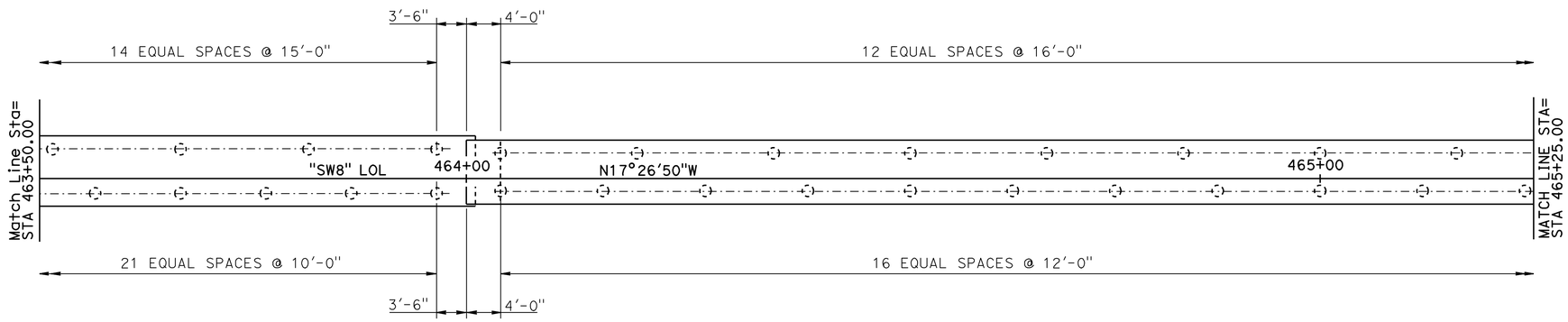

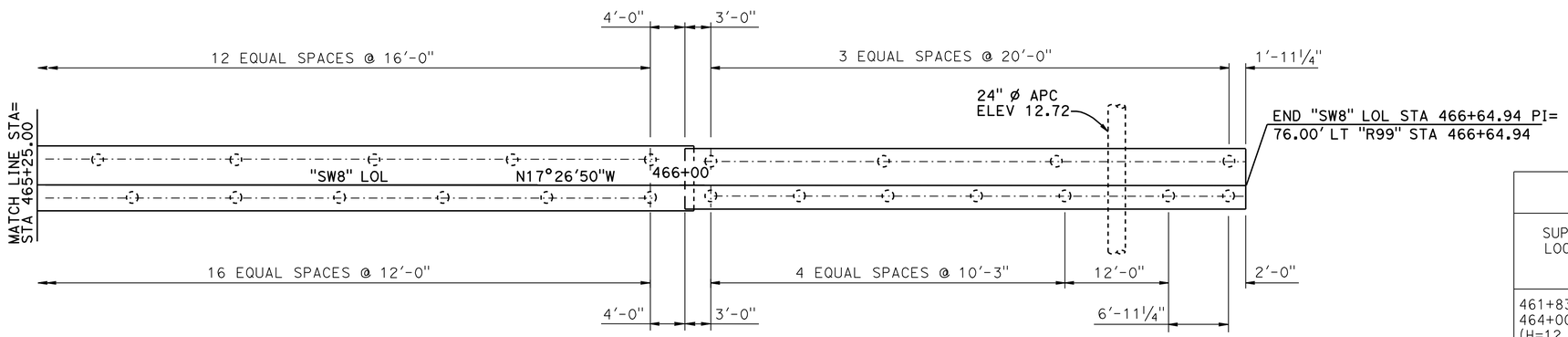

PLAN
⅛"=1'-0"

PILE DATA TABLE

SUPPORT LOCATION	PILE TYPE	NOMINAL RESISTANCE (kips)		DESIGN TIP ELEVATION (ft)	SPECIFIED TIP ELEVATION (ft)
		COMPRESSION	TENSION		
461+83.00 to 464+00.00 (H=12 ft)	16" ø CIDH	180	0	-22.25 (a)	-22.25
464+00.00 to 466+00.00 (H=10 ft)	16" ø CIDH	180	0	-20.0 (a)	-20.0
466+00.00 to 466+64.94 (H=8 ft)	16" ø CIDH	180	0	-19.0 (a)	-19.0

Note:
1). Design tip elevations are controlled by (a) compression.
2). Since there are no soft compressible soil layers below the design tip elevation, there is no design tip elevation for settlement.
3). The specified tip elevation shall not be raised above the design tip elevations for Lateral Load.

NOTE:
THE CONTRACTOR SHALL VERIFY ALL CONTROLLING FIELD DIMENSIONS BEFORE ORDERING OR FABRICATING ANY MATERIAL.

	BY	CHECKED
DESIGN	R. CORIA	C. UDARBE
DETAILS	M. TRAN	C. UDARBE
QUANTITIES	R. CORIA	P. VU

STATE OF CALIFORNIA
DEPARTMENT OF TRANSPORTATION

DIVISION OF ENGINEERING SERVICES
STRUCTURE DESIGN
DESIGN BRANCH 17

BRIDGE NO. 29E0008
POST MILE 18.03

SOUTH STOCKTON WIDENING
SOUND WALL NO. 8
PILE LAYOUT

STRUCTURES DESIGN DETAIL SHEET (ENGLISH) (REV. 09-01-10)

ORIGINAL SCALE IN INCHES FOR REDUCED PLANS 0 1 2 3

UNIT: 3586
PROJECT NUMBER & PHASE: 10000004091
CONTRACT NO.: 10-3A1001

DISREGARD PRINTS BEARING EARLIER REVISION DATES

REVISION DATES 8-26-10 7-26-11 09-06-11 09-28-11

SHEET 6 OF 15

FILE => 29e0008-e-pl.dgn

USERNAME => s119571 DATE PLOTTED => 29-MAR-2012 TIME PLOTTED => 13:42

DIST	COUNTY	ROUTE	POST MILES TOTAL PROJECT	SHEET No.	TOTAL SHEETS
10	SJ	4,99	R19.5/R20.1, 15.0/18.6	1279	1414

REGISTERED CIVIL ENGINEER 11-04-11 DATE

3-26-12
PLANS APPROVAL DATE

REGISTERED PROFESSIONAL ENGINEER Chris Udarbe No. C62985 Exp. 06-30-12 CIVIL STATE OF CALIFORNIA

The State of California or its officers or agents shall not be responsible for the accuracy or completeness of electronic copies of this plan sheet.

TABLE OF PILE SPACING: CLASS 90 - CONCRETE PILES

DESIGN H	6′	8′	10′	12′	14′	16′	18′	20′	22′	24′	26′	28′	30′	32′
W	6′-9"	7′-0"	7′-6"	8′-3"	9′-3"	10′-3"	11′-0"	12′-0"	13′-0"	14′-3"	16′-3"	16′-9"	18′-0"	20′-6"
C	2′-9"	2′-9"	3′-0"	3′-3"	3′-6"	4′-0"	4′-3"	4′-9"	5′-0"	5′-6"	6′-3"	6′-9"	7′-3"	7′-9"
B	4′-0"	4′-3"	4′-6"	5′-0"	5′-9"	6′-3"	6′-9"	7′-3"	8′-0"	8′-9"	10′-0"	10′-0"	10′-9"	12′-9"
F	1′-6"	1′-6"	1′-6"	1′-9"	1′-9"	2′-0"	2′-6"	2′-9"	3′-0"	3′-0"	3′-3"	3′-6"	3′-9"	4′-0"
M	1′-3"	1′-3"	1′-6"	1′-9"	2′-0"	2′-6"	2′-9"	3′-3"	3′-6"	4′-0"	4′-9"	5′-3"	5′-9"	6′-3"
N	2′-6"	2′-9"	3′-0"	3′-6"	4′-3"	4′-9"	5′-3"	5′-9"	6′-6"	7′-3"	8′-6"	8′-6"	9′-3"	11′-3"
ROW 1	16′-0"	14′-0"	12′-0"	10′-0"	8′-0"	6′-6"	5′-6"	4′-6"	4′-0′	4′-0"	4′-0"	4′-0"	4′-0"	4′-0"
ROW 2	24′-0"	21′-0"	18′-0"	15′-0"	14′-0"	13′-0"	11′-0"	9′-0"	8′-0"	12′-0"	10′-0"	6′-0"	4′-0"	4′-0"
ROW 3										8′-0"	5′-0"	4′-0"	4′-0"	6′-0"
ROW 4														6′-0"
CONFIGURATION	I	I	I	I	I	I	I	I	I	II	II	II	II	III

ALTERNATIVE A: TABLE OF REINFORCING STEEL DIMENSIONS AND DATA

DESIGN H	6′	8′	10′	12′	14′	16′	18′	20′	22′	24′	26′	28′	30′	32′
STEM BATTER	0	½:12	½:12	½:12	½:12	½:12	½:12	½:12	½:12	⅝:12	¾:12	⅞:12	1 : 12	1 : 12
STEM THICKNESS @ TOP	1′-0"	1′-0"	1′-0"	1′-0"	1′-0"	1′-0"	1′-0"	1′-0"	1′-0"	1′-0"	1′-0"	1′-0"	1′-0"	1′-0"
ⓐ BARS				#6@18 **	#7@18 **	#8@18 **	#9@18 **	#10@18 **	#8 @ 9 *	#8 @ 9 *	#7 @ 6 *	#10@12 **	#9 @ 9 *	#11@12 **
X				CONT	CONT	CONT	CONT	CONT	CONT	CONT	CONT	CONT	CONT	CONT
Y				8′-0"	6′-6"	7′-6"	8′-6"	9′-6"	9′-6"	11′-0"	11′-6"	13′-0"	14′-0"	15′-6"
ⓑ BARS	#5 @ 12	#5 @ 12	#5 @ 9	#6@18 **	#7@18 **	#8@18 **	#9@18 **	#10@18 **	#8 @ 9 *	#8 @ 9 *	#7 @ 6 *	#10@12 **	#9 @ 9 *	#11@12 **
X	CONT	CONT	CONT	CONT	CONT	CONT	CONT	CONT	CONT	CONT	CONT	CONT	CONT	CONT
Y	CONT	CONT	CONT	CONT	10′-6"	13′-0"	15′-0"	17′-6"	19′-6"	21′-0"	18′-6"	19′-0"	25′-6"	23′-6"
ⓒ BARS					#6 @ 18	#6 @ 18	#6 @ 18	#6 @ 18	#6 @ 18	#6 @ 18	#6 @ 12	#7 @ 12	#7 @ 18	#7 @ 12
ⓓ BARS	#5 @ 12	#5 @ 12	#5 @ 12	#5 @ 12	#5 @ 12	#5 @ 12	#5 @ 9	#5 @ 9	#6 @ 9	#5 @ 6	#7 @ 9	#7 @ 9	#6 @ 6	#7 @ 6
TOTAL ⓔ BARS	6 #5	6 #5	6 #5	6 #5	8 #5	8 #5	10 #5	10 #5	10 #5	10 #5	12 #5	12 #5	12 #5	14 #5
TOTAL ⓕ BARS	6 #5	6 #5	6 #5	6 #5	6 #5	8 #5	8 #5	8 #5	8 #5	10 #5	10 #5	10 #5	12 #5	12 #5

CONT = CONTINUOUS

* = ⓐ AND ⓑ BARS ARE BUNDLED TOGETHER.

** = ALTERNATE ⓐ AND ⓑ BARS AS SHOWN IN DETAIL A.

ALTERNATIVE B: TABLE OF REINFORCING STEEL DIMENSIONS AND DATA

DESIGN H	6′	8′	10′	12′	14′	16′	18′	20′	22′	24′	26′	28′	30′	32′
BATTER	0	0	0	0	0	0	0	0	0	0	¼:12	½:12	½:12	½:12
STEM THICKNESS @ TOP	1′-0"	1′-0"	1′-0"	1′-0"	1′-0"	1′-3"	1′-3"	1′-6"	2′-0"	2′-0"	2′-0"	2′-0"	2′-0"	2′-0"
ⓐ BARS				#6@12 **	#5 @ 6 *	#9@18 **	#9@12 **	#9@12 **	#9@12 **	#7 @ 6 *	#7 @ 6 *	#7 @ 6 *	#9 @ 9 *	#11@12
X				CONT	CONT	CONT	CONT	CONT	CONT	CONT	CONT	CONT	CONT	CONT
Y				5′-6"	5′-6"	8′-6"	8′-6"	8′-6"	8′-6"	9′-6"	11′-0"	12′-6"	13′-6"	14′-6"
ⓑ BARS	#5 @ 12	#5 @ 9	#6 @ 9	#6@12 **	#5 @ 6 *	#9@18 **	#9@12 **	#9@12 **	#9@12 **	#7 @ 6 *	#7 @ 6 *	#7 @ 6 *	#9 @ 9 *	#11@12 **
X	CONT	CONT	CONT	CONT	CONT	CONT	CONT	CONT	CONT	CONT	CONT	CONT	CONT	CONT
Y	CONT	CONT	CONT	CONT	CONT	11′-6"	11′-6"	12′-0"	12′-0"	17′-6"	20′-0"	21′-6"	24′-0"	24′-0"
ⓒ BARS						#7 @ 18	#7 @ 12	#7 @ 12	#7 @ 12	#6 @ 12	#6 @ 12	#6 @ 12	#7 @ 18	#7 @ 12
ⓓ BARS	#5 @ 12	#5 @ 12	#5 @ 12	#5 @ 12	#5 @ 12	#5 @ 12	#5 @ 9	#5 @ 9	#6 @ 9	#5 @ 6	#7 @ 9	#7 @ 9	#6 @ 6	#7 @ 6
TOTAL ⓔ BARS	6 #5	6 #5	6 #5	6 #5	8 #5	8 #5	10 #5	10 #5	10 #5	10 #5	12 #5	12 #5	12 #5	14 #5
TOTAL ⓕ BARS	6 #5	6 #5	6 #5	6 #5	6 #5	8 #5	8 #5	8 #5	8 #5	10 #5	10 #5	10 #5	12 #5	12 #5

DESIGN DATA

DESIGN: LOAD FACTOR DESIGN (LFD)

CONCRETE: REINFORCED CONCRETE, f′c = 3,600 psi
fy = 60,000 psi

LOADING CASE:
LEVEL GROUND WITH 240 psf LIVE LOAD SURCHARGE AND 16′ SOUNDWALL.
SEISMIC LOAD DEAD LOAD = 0.3 DEAD LOAD
WIND LOAD = 30 psf
DEAD LOAD OF SOUNDWALL = 1414 lb/lf

SEISMIC LOAD: SOIL
Kh = 0.3g
Kv = 0.0
Kae : MONONOBE-OKABE METHOD

SOIL: Ø = 34° γ = 120 pcf
EQUIVALENT FLUID PRESSURE:
= 36 pcf FOR DETERMINATION OF TOE PRESSURE
= 27 pcf FOR DETERMINATION OF HEEL PRESSURE

LOAD COMBINATIONS:
GROUP A : ßD+1.7 E+1.7 SC
GROUP B : ßD+1.7 E+1.3 W
GROUP C :
STEM : 1.0 D + 1.0 E +1.0 EQD +1.0 EQE
FOOTING : D+PYM

WHERE : ß = 1.0 OR 1.3 WHICHEVER CONTROLS DESIGN
D = DEAD LOAD
E = LATERAL EARTH PRESSURE
SC = LIVE LOAD SURCHARGE
W = WIND LOAD
EQD = SEISMIC DEAD LOAD
EQE = SEISMIC LATERAL EARTH PRESSURE
PYM = PROBABLE YIELD MOMENT (1.3 X NOMINAL YIELD MOMENT OF STEM)

GENERAL NOTES

1. 16" CIDH CLASS 90-CONCRETE PILES WERE USED FOR THE DESIGN.
2. MINIMUM DISTANCE BETWEEN CENTER PILE AND EDGE OF FOOTING IS 1′-6".
3. REDUCTION FACTORS:
   GROUPS A & B : Ø = 0.75
   GROUP C : Ø = 1.0
4. LATERAL RESISTANCE OF EACH PILE:
   GROUPS A & B : = 30 kip
   GROUP C : = 40 kip
5. MAXIMUM SPACING BETWEEN PILES IS SHOWN IN THE TABLE. REDUCE TO SUIT THE LENGTH OF FOOTING.
6. MINIMUM DISTANCE BETWEEN ANY TWO PILES IS 3′-0".

STANDARD DRAWING
FILE NO. xs14-310-1e
APPROVAL DATE X-X-X

STATE OF CALIFORNIA
DEPARTMENT OF TRANSPORTATION

DIVISION OF ENGINEERING SERVICES

BRIDGE NO. 29E0008
POST MILE 18.03

SOUTH STOCKTON WIDENING
SOUND WALL NO. 8
RETAINING WALL TYPE 1SWP-DETAIL NO. 1

DS OSD 2147A (ENGLISH STANDARD DRAWING "XS" BORDER REV. (02-02-11)

ORIGINAL SCALE IN INCHES FOR REDUCED PLANS 0 1 2 3

UNIT: 3586
PROJECT NUMBER & PHASE: 10000004091
CONTRACT NO.: 10-3A1001

DISREGARD PRINTS BEARING EARLIER REVISION DATES
REVISION DATES 09-07-10 07-19-11 09-09-11
SHEET 7 OF 15

FILE => 29e0008-f-xs14-310-1e.dgn

USERNAME => s113571 DATE PLOTTED => 29-MAR-2012 TIME PLOTTED => 13:42

DIST	COUNTY	ROUTE	POST MILES TOTAL PROJECT	SHEET No.	TOTAL SHEETS
10	SJ	4,99	R19.5/R20.1, 15.0/18.6	1280	1414

REGISTERED CIVIL ENGINEER 11-04-11 DATE

3-26-12
PLANS APPROVAL DATE

REGISTERED PROFESSIONAL ENGINEER Chris Udarbe No. C62985 Exp. 06-30-12 CIVIL STATE OF CALIFORNIA

The State of California or its officers or agents shall not be responsible for the accuracy or completeness of electronic copies of this plan sheet.

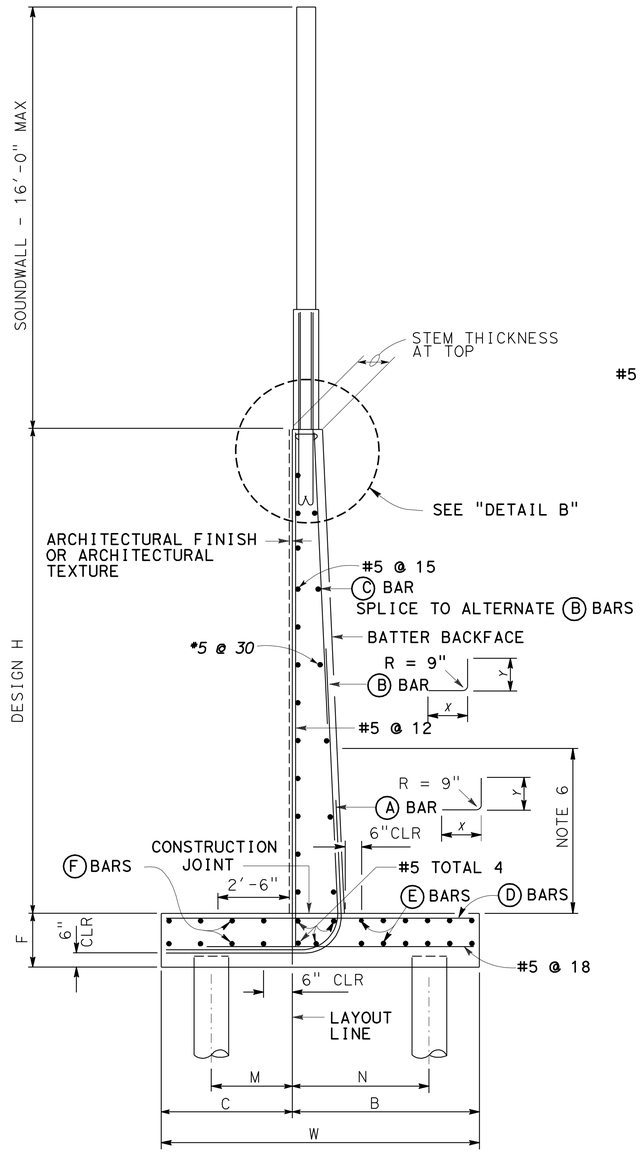

16" CIDH PILE FOOTING SECTION

NO SCALE

1

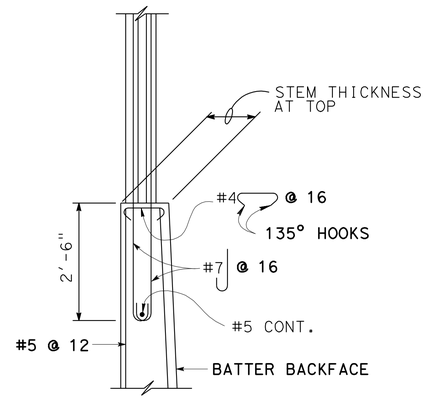

DETAIL B

NO SCALE

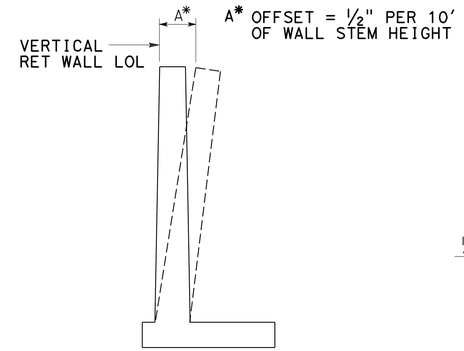

WALL OFFSET

NO SCALE
VALUES FOR OFFSETTING FORMS TO BE DETERMINED BY THE ENGINEER

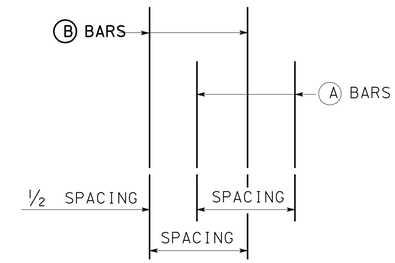

DETAIL A

NO SCALE

GENERAL NOTES

1. For soundwall and retaining wall architectural finish or texture, see details elsewhere in project plans.
2. For details not shown and drainage notes, see B3-8
3. Footing cover, 1'-6" minimum
4. Increasing stem thickness not permitted.
5. For soundwall details, see "Soundwall Masonry Block" sheets in Standard Plans.
6. Limit of no splicing for rebars = 3 times the bottom thickness of the stem

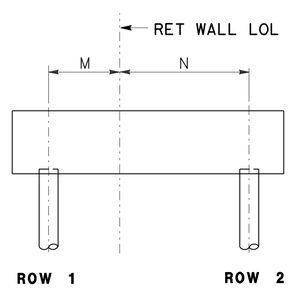

CONFIGURATION I

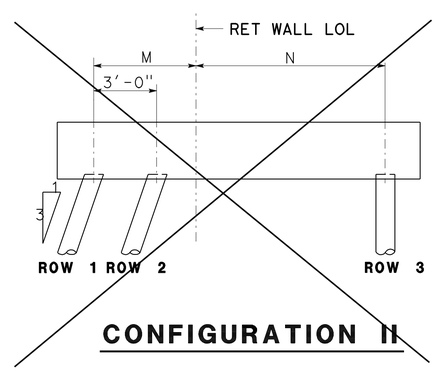

CONFIGURATION II

2

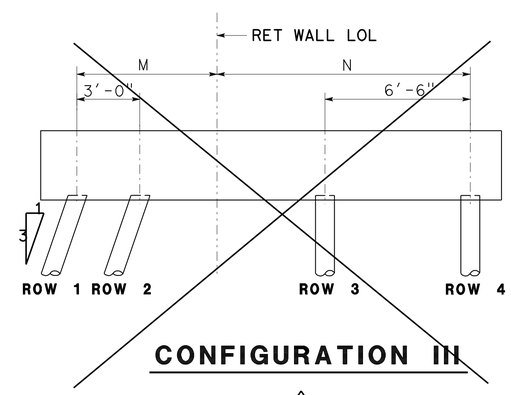

CONFIGURATION III

2

REVISED STANDARD DRAWING

FILE NO. xs14-310-2e

APPROVAL DATE X-X-X

1 Title text edit

2 Detail not applicable

STATE OF CALIFORNIA DEPARTMENT OF TRANSPORTATION

DIVISION OF ENGINEERING SERVICES

BRIDGE NO. 29E0008

POST MILE 18.03

SOUTH STOCKTON WIDENING

SOUND WALL NO. 8

RETAINING WALL TYPE 1SWP-DETAIL NO. 1

DS OSD 2147A (ENGLISH STANDARD DRAWING "XS" BORDER REV. (02-02-11)

ORIGINAL SCALE IN INCHES FOR REDUCED PLANS 0 1 2 3

UNIT: 3586
PROJECT NUMBER & PHASE: 10000004091
CONTRACT NO.: 10-3A1001

DISREGARD PRINTS BEARING EARLIER REVISION DATES

REVISION DATES 08-07-10 07-15-11 09-08-11

SHEET 8 OF 15

FILE => 29e0008-f-xs14-310-2e.dgn

USERNAME => s119571

DIST	COUNTY	ROUTE	POST MILES TOTAL PROJECT	SHEET No.	TOTAL SHEETS
10	SJ	4,99	R19.5/R20.1, 15.0/18.6	1281	1414

REGISTERED CIVIL ENGINEER 11-04-11 DATE

3-26-12
PLANS APPROVAL DATE

REGISTERED PROFESSIONAL ENGINEER Chris Udarbe No. C62985 Exp. 06-30-2012 CIVIL STATE OF CALIFORNIA

The State of California or its officers or agents shall not be responsible for the accuracy or completeness of electronic copies of this plan sheet.

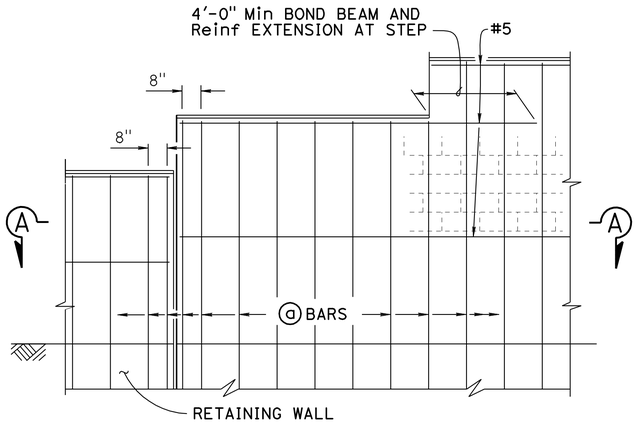

H=6'-0" THRU H=10'-0"

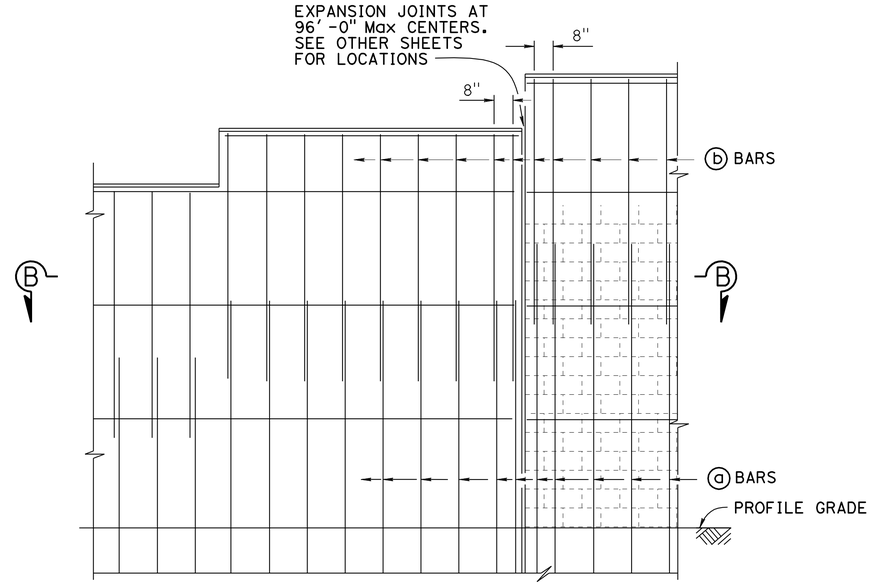

H=12'-0" THRU H=16'-0"

PART ELEVATION

SOUND WALL REINFORCEMENT TABLE						
MAXIMUM "H"	ⓐ BARS @ 1'-4" Max	ⓑ BARS @ 1'-4" Max	"Y"	f'm (psi)	COMPRESSIVE STRENGTH OF CMU (psi)	MAXIMUM "H"
6'-0"	#4	——	——	1500	1900	6'-0"
8'-0"	#4	——	——	1500	1900	8'-0"
10'-0"	#4	——	——	1500	1900	10'-0"
12'-0"	#5	#4	6'-0"	2000	2800	12'-0"
14'-0"	#6	#4	8'-0"	2500	3750	14'-0"
16'-0"	#6	#4	10'-0"	2500	3750	16'-0"

DESIGN NOTES

DESIGN
Uniform Building Code, 1997 Edition and the Bridge Design Specifications

DESIGN WIND LOAD
33 psf

DESIGN SEISMIC LOAD
0.57 Dead load

REINFORCED CONCRETE
f'c = 3600 ksi
fy = 60 ksi

CONCRETE MASONRY

REGULAR STRENGTH	HIGH STRENGTH	
f'm = 1500 psi	f'm = 2000 psi	f'm = 2500 psi
fb = 495 psi	fb = 660 psi	fb = 830 psi
fs = 24,000 psi	fs = 24,000 psi	fs = 24,000 psi
n = 25.8	n = 19.3	n = 15.5

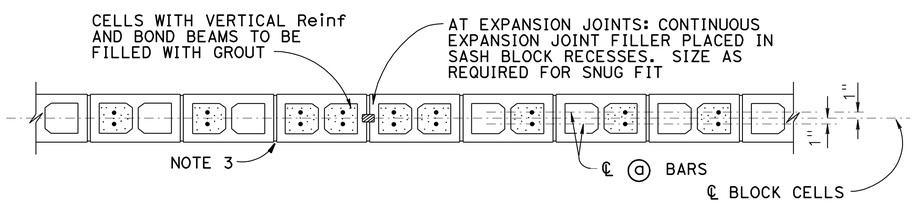

SECTION A-A

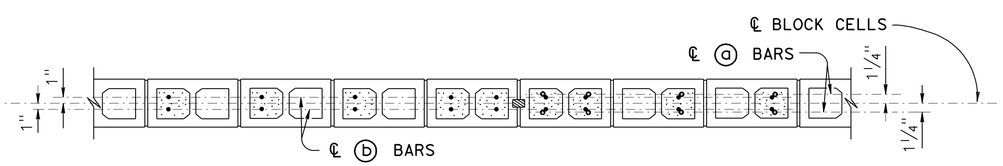

SECTION B-B

NOTES:

1. For type of block and joint finish, see other sheets
2. When blocks are laid in stacked bond, ladder type, galvanized joint reinforcement shall be provided. A minimum of 2 - 9 gauge wires continuous at 4'-0" maximum to be used. Locate reinforcement in joints that are at the approximate midpoint between bond beams
3. Horizontal joints shall be tooled concave or may be weathered
   Vertical joints shall be tooled concave or may be raked
4. For intermediate wall heights that are between the "H's" given, use the tabular information for the next higher "H"
5. See STANDARD PLANS B15-9 for other details

NO SCALE

STANDARD DRAWING
FILE NO. xs15-120-1
APPROVAL DATE July 2011

STATE OF CALIFORNIA
DEPARTMENT OF TRANSPORTATION

DIVISION OF ENGINEERING SERVICES

BRIDGE NO. 29E0008
POST MILE 18.03

SOUTH STOCKTON WIDENING
MASONRY BLOCK SOUND WALL ON RETAINING WALL
DETAILS NO. 1

DS OSD 2147A (ENGLISH STANDARD DRAWING "XS" BORDER REV. (02-02-11)

ORIGINAL SCALE IN INCHES FOR REDUCED PLANS 0 1 2 3

UNIT: 3586
PROJECT NUMBER & PHASE: 10000004091
CONTRACT NO.: 10-3A1001

DISREGARD PRINTS BEARING EARLIER REVISION DATES
REVISION DATES 09-09-11
SHEET 9 OF 15

FILE => 29e0008-f-xs15-120-1.dgn

USERNAME => s119571 DATE PLOTTED => 29-MAR-2012 TIME PLOTTED => 13:43

DIST	COUNTY	ROUTE	POST MILES TOTAL PROJECT	SHEET No.	TOTAL SHEETS
10	SJ	4,99	R19.5/R20.1, 15.0/18.6	1282	1414

REGISTERED CIVIL ENGINEER 11-04-11 DATE

3-26-12
PLANS APPROVAL DATE

REGISTERED PROFESSIONAL ENGINEER Chris Udarbe No. C62985 Exp. 06-31-2012 CIVIL STATE OF CALIFORNIA

The State of California or its officers or agents shall not be responsible for the accuracy or completeness of electronic copies of this plan sheet.

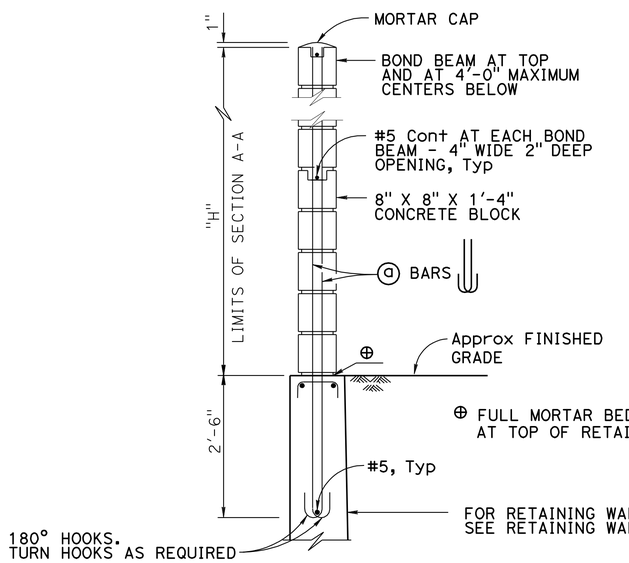

NOTE:
For details not shown, see H=12'-0" thru H=16'-0"

H=6'-0" THRU H=10'-0"

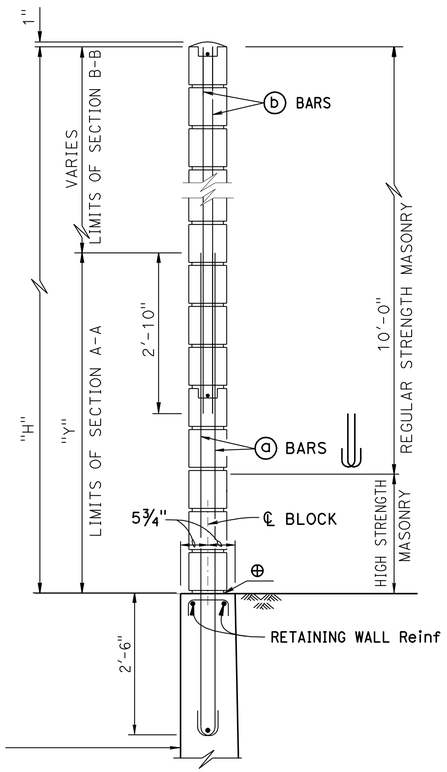

NOTE:
For details not shown, see H=6'-0" thru H=10'-0"

H=12'-0" THRU H=16'-0"

TYPICAL SECTIONS

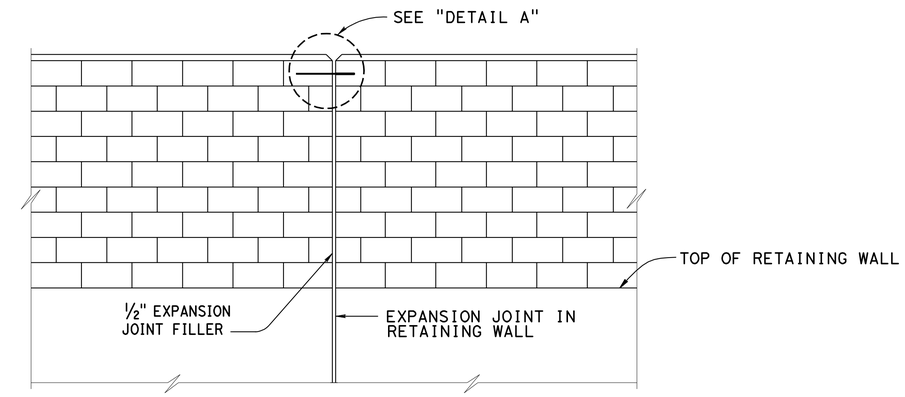

ALIGNMENT KEY DETAIL

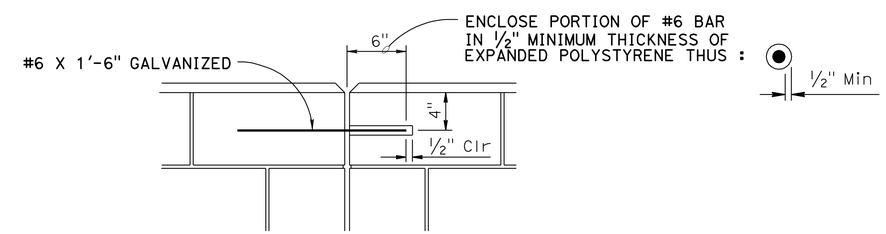

DETAIL A

NO SCALE

STANDARD DRAWING
FILE NO. xs15-120-2
APPROVAL DATE July 2011

STATE OF CALIFORNIA DEPARTMENT OF TRANSPORTATION

DIVISION OF ENGINEERING SERVICES

BRIDGE NO. 29E0008
POST MILE 18.03

SOUTH STOCKTON WIDENING
MASONRY BLOCK SOUND WALL ON RETAINING WALL
DETAILS NO. 2

DS OSD 2147A (ENGLISH STANDARD DRAWING "XS" BORDER REV. (02-02-11)

ORIGINAL SCALE IN INCHES FOR REDUCED PLANS 0 1 2 3

UNIT: 3586
PROJECT NUMBER & PHASE: 10000004091
CONTRACT NO.: 10-3A1001

DISREGARD PRINTS BEARING EARLIER REVISION DATES

REVISION DATES 09-09-12

SHEET 10 OF 15

FILE => 29e0008-f-xs15-120-2.dgn

USERNAME => s119571 DATE PLOTTED => 29-MAR-2012 TIME PLOTTED => 13:43

DIST	COUNTY	ROUTE	POST MILES TOTAL PROJECT	SHEET No.	TOTAL SHEETS
10	SJ	4,99	R19.5/R20.1, 15.0/18.6	1283	1414

REGISTERED CIVIL ENGINEER — DATE 11-04-11

3-26-12
PLANS APPROVAL DATE

REGISTERED PROFESSIONAL ENGINEER — CHRIS UDARBE — No. C62985 — Exp. 12-30-12 — CIVIL — STATE OF CALIFORNIA

The State of California or its officers or agents shall not be responsible for the accuracy or completeness of electronic copies of this plan sheet.

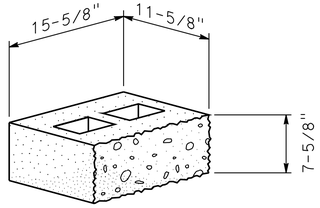

SPLIT FACE ON SIDE
12 X 8 X 16 NOMINAL

"A" BLOCK

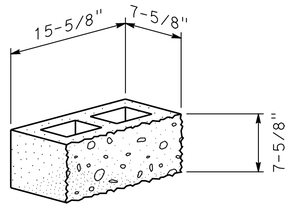

SPLIT FACE ON SIDE
8 X 8 X 16 NOMINAL

"B" BLOCK

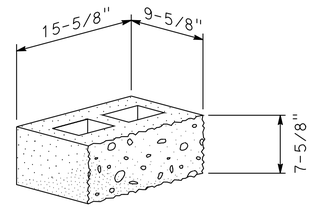

SPLIT FACE ON SIDE
10 X 8 X 16 NOMINAL

"C" BLOCK

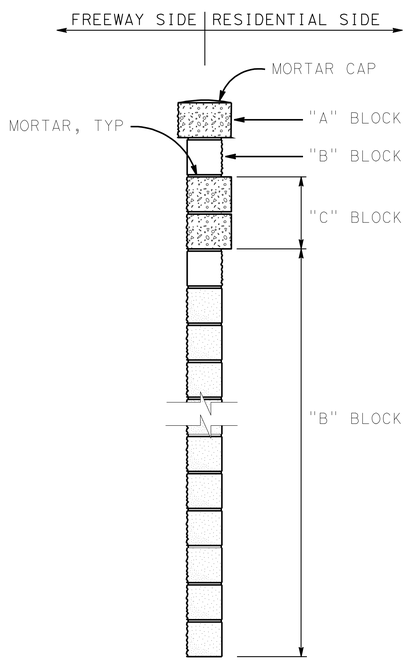

TYPICAL SECTION

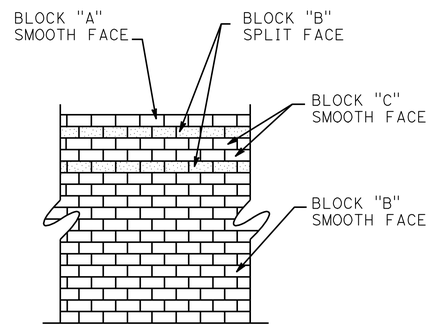

RESIDENTIAL SIDE

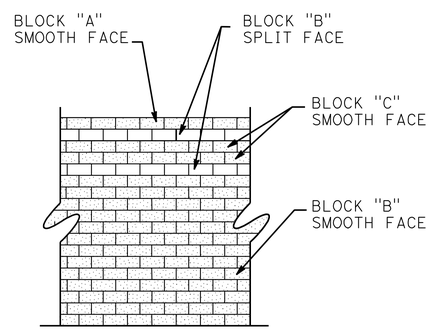

FREEWAY SIDE

ELEVATION
TYPICAL TREATMENT

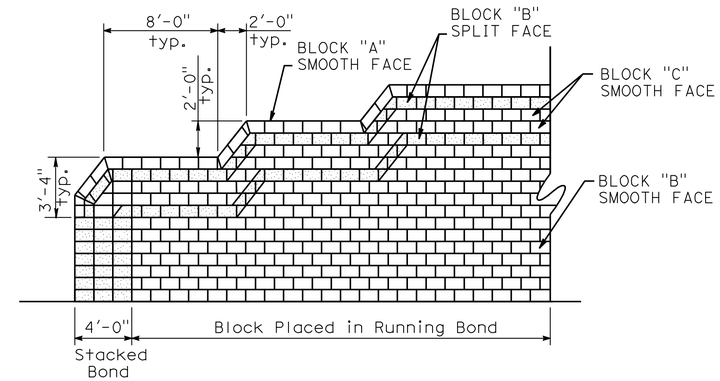

ELEVATION- TYPICAL SOUNDWALL END TREATMENT
CITY & RESIDENTIAL SIDE

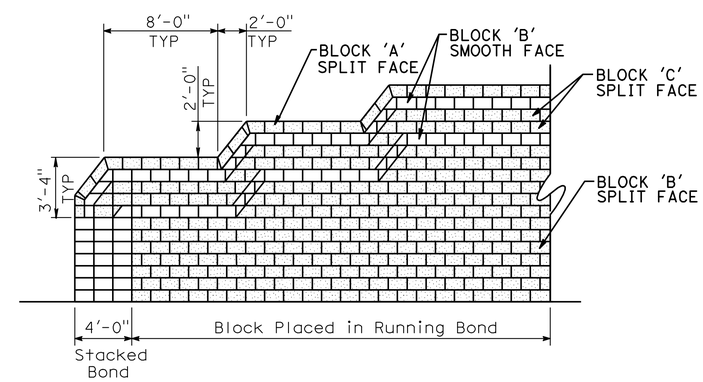

ELEVATION- TYPICAL SOUNDWALL END TREATMENT
FREEWAY SIDE

SOUND WALL DETAILS

NOTE:
THE CONTRACTOR SHALL VERIFY ALL CONTROLLING FIELD DIMENSIONS BEFORE ORDERING OR FABRICATING ANY MATERIAL.

NO SCALE

	BY	CHECKED
DESIGN	R. Coria	C. Udarbe
DETAILS	G. Leung	C. Udarbe
QUANTITIES	R. Coria	P. Vu

STATE OF CALIFORNIA
DEPARTMENT OF TRANSPORTATION

DIVISION OF ENGINEERING SERVICES
STRUCTURE DESIGN
DESIGN BRANCH 17

BRIDGE NO. 29E0008
POST MILE 18.03

SOUTH STOCKTON WIDENING
SOUNDWALL NO. 8
ARCHITECTURAL DETAILS NO. 1

STRUCTURES DESIGN DETAIL SHEET (ENGLISH) (REV. 09-01-10)

ORIGINAL SCALE IN INCHES FOR REDUCED PLANS 0 1 2 3

UNIT: 3586
PROJECT NUMBER & PHASE: 10000004091
CONTRACT NO.: 10-3A1001

DISREGARD PRINTS BEARING EARLIER REVISION DATES

REVISION DATES: 7-19-11 09-09-11

SHEET 11 OF 15

FILE => 29e0008-g-archdt.dgn

USERNAME => s119571 DATE PLOTTED => 29-MAR-2012 TIME PLOTTED => 13:43

DIST	COUNTY	ROUTE	POST MILES TOTAL PROJECT	SHEET No.	TOTAL SHEETS
10	SJ	4,99	R19.5/R20.1, 15.0/18.6	1284	1414

REGISTERED CIVIL ENGINEER — DATE 11-04-11

3-26-12
PLANS APPROVAL DATE

REGISTERED PROFESSIONAL ENGINEER — Chris Udarbe — No. C62985 — Exp. 06-30-2012 — CIVIL — STATE OF CALIFORNIA

The State of California or its officers or agents shall not be responsible for the accuracy or completeness of electronic copies of this plan sheet.

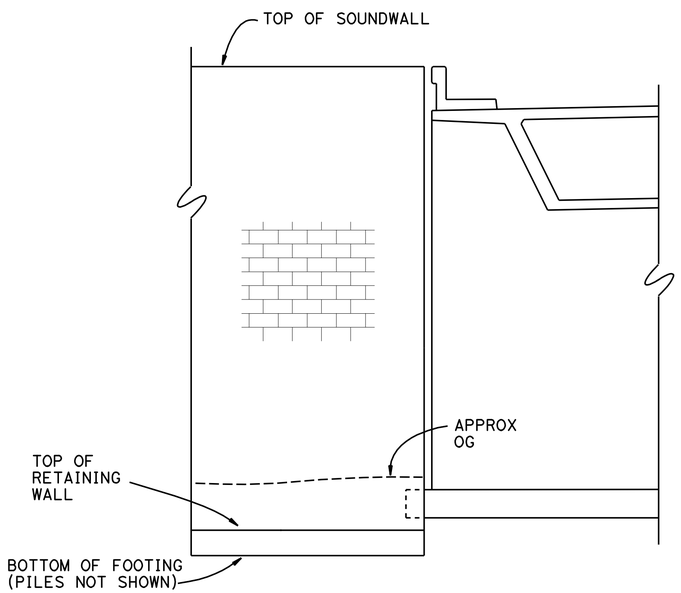

END OF SOUNDWALL & BRIDGE GAP DETAIL

NO SCALE

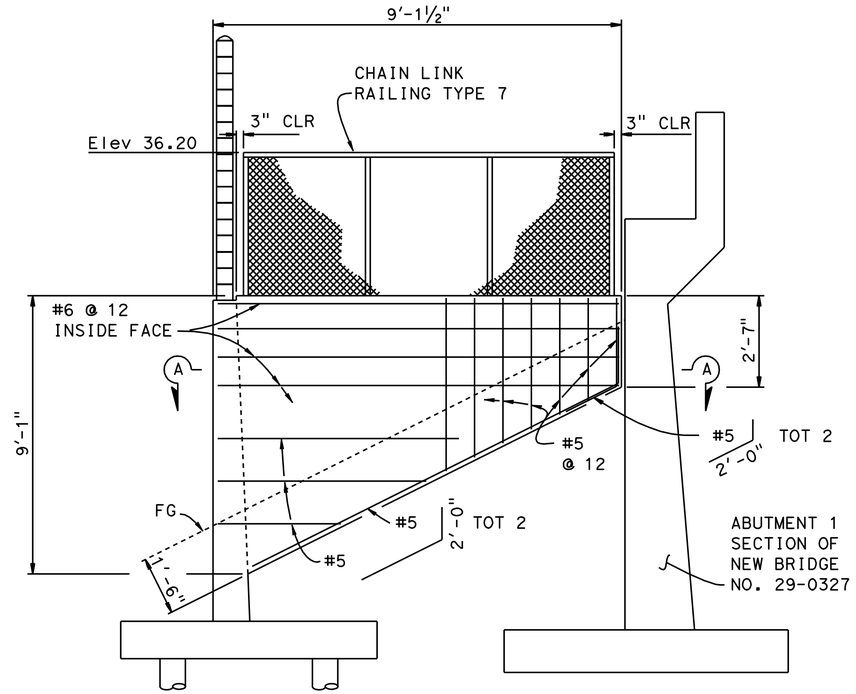

RETURN WALL ELEVATION

NO SCALE

PILE DATA TABLE

SUPPORT LOCATION	PILE TYPE	NOMINAL RESISTANCE		DESIGN TIP ELEVATION	SPECIFIED TIP ELEVATION	NOMINAL DRIVING RESISTANCE REQUIRED
		COMP	TENSION			
STA	CLASS	KIPS	KIPS	FT	F†	KIPS
461+83.00 TO 464+00.00	90	180	0	-22.25	-22.25	180
464+00.00 TO 466+00.00	90	180	0	-20.00	-20.00	180
466+00.00 TO 466+64.94	90	180	0	-19.00	-19.00	180

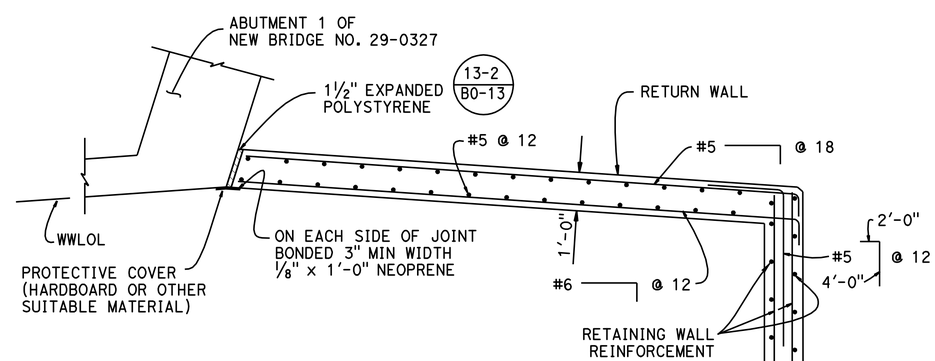

SECTION A-A

NO SCALE

NOTE:
THE CONTRACTOR SHALL VERIFY ALL CONTROLLING FIELD DIMENSIONS BEFORE ORDERING OR FABRICATING ANY MATERIAL.

	BY	CHECKED
DESIGN	R. CORIA	C. UDARBE
DETAILS	M. TRAN	C. UDARBE
QUANTITIES	R. CORIA	P. VU

STATE OF CALIFORNIA
DEPARTMENT OF TRANSPORTATION

DIVISION OF ENGINEERING SERVICES
STRUCTURE DESIGN
DESIGN BRANCH 17

BRIDGE NO. 29E0008
POST MILE 18.03

SOUTH STOCKTON WIDENING
SOUND WALL NO. 8
ARCHITECTURAL DETAILS NO. 2

STRUCTURES DESIGN DETAIL SHEET (ENGLISH) (REV. 09-01-10)

ORIGINAL SCALE IN INCHES FOR REDUCED PLANS 0 1 2 3

UNIT: 3586
PROJECT NUMBER & PHASE: 10000004091
CONTRACT NO.: 10-3A1001

DISREGARD PRINTS BEARING EARLIER REVISION DATES

REVISION DATES: 7-19-11 7-25-11 09-09-11

SHEET 12 OF 15

FILE => 29e0008-g-archdt2.dgn

USERNAME => s119571 DATE PLOTTED => 29-MAR-2012 TIME PLOTTED => 13:44

DIST	COUNTY	ROUTE	POST MILES TOTAL PROJECT	SHEET No	TOTAL SHEETS
10	SJ	4,99	R19.5/R20.1, 15.0/18.6	1285	1414

Joseph M Kaump 9-7-11
PROFESSIONAL GEOLOGIST

3-26-12
PLANS APPROVAL DATE

PROFESSIONAL GEOLOGIST Joseph Kaump No. 7837 Exp. 01-31-13 STATE OF CALIFORNIA

The State of California or its officers or agents shall not be responsible for the accuracy or completeness of electronic copies of this plan sheet.

This LOTB sheet was prepared in accordance with the Caltrans Soil & Rock Logging, Classification, & Presentation Manual (2010 Edition).

BENCH MARK

NW corner of existing Main St. OC
(BR.No. 29-0121), 55.72′ Lt ℄ Rte 99
Sta 467+37.67
Elev 35.08′
Vert Datum NGVD29

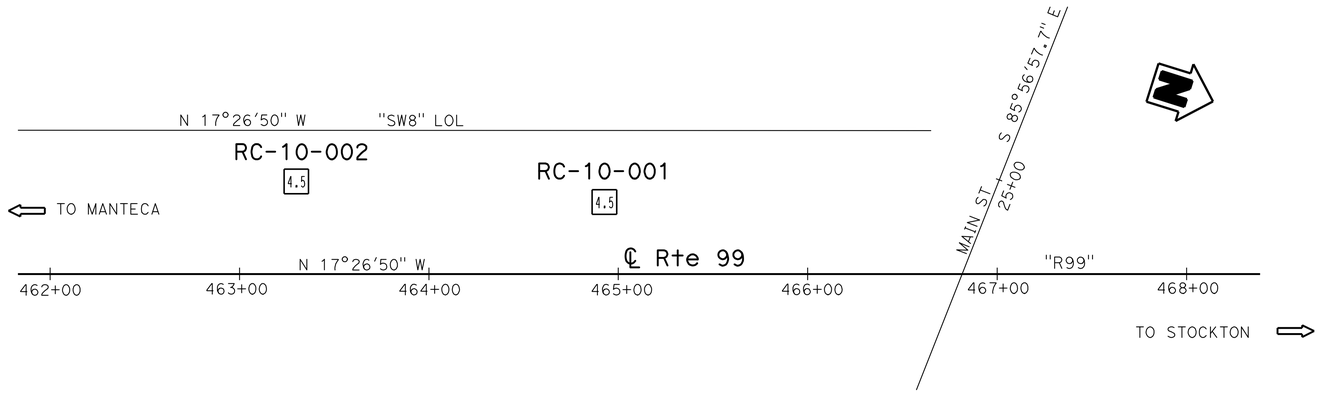

PLAN

1″ = 40′

Notes:

1. Groundwater was present but not measured in Borings RC-10-001 and RC-10-002 during field investigation for Sound Wall No. 8.
2. Refer to Boring RC-10-002 for Main Street OC (Br. No. 29-0327) for groundwater data. Groundwater was measured in Boring RC-10-002 at Elev -29.0′ on 9-29-10.

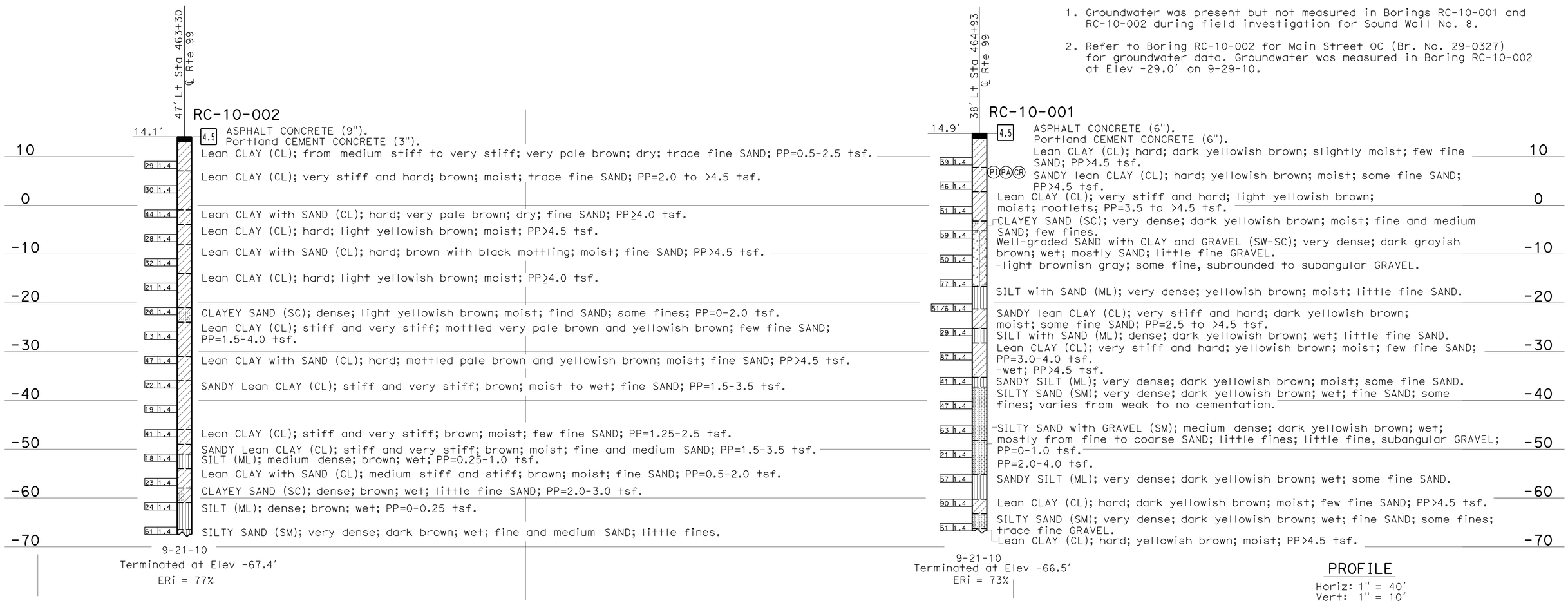

PROFILE

Horiz: 1″ = 40′
Vert: 1″ = 10′

ENGINEERING SERVICES	MATERIALS AND GEOTECHNICAL SERVICES	STATE OF CALIFORNIA DEPARTMENT OF TRANSPORTATION	DIVISION OF ENGINEERING SERVICES STRUCTURE DESIGN DESIGN BRANCH 17	BRIDGE NO. 29E0008 POST MILE 18.03	SOUTH STOCKTON WIDENING SOUND WALL NO. 8 LOG OF TEST BORINGS 1 OF 3
FUNCTIONAL SUPERVISOR NAME: R. Buell	DRAWN BY: W. Tang 07/11 CHECKED BY: C. Zhen-Ru	FIELD INVESTIGATION BY: J. Kaump / T. Alderman			

OGS CIVIL LOG OF TEST BORINGS SHEET

ORIGINAL SCALE IN INCHES FOR REDUCED PLANS 0 1 2 3

UNIT: 3586
PROJECT NUMBER & PHASE: 10000004091 CONTRACT NO.: 10-3A1001

DISREGARD PRINTS BEARING EARLIER REVISION DATES → REVISION DATES 08-16-11 08-31-11 09-07-11 SHEET 13 OF 15

FILE => 29e0008-g-ltb-1 of 3.dgn

USERNAME => s119571 DATE PLOTTED => 29-MAR-2012 TIME PLOTTED => 13:44

DIST	COUNTY	ROUTE	POST MILES TOTAL PROJECT	SHEET No	TOTAL SHEETS
10	SJ	4,99	R19.5/R20.1, 15.0/18.6	1286	1414

Joseph M Kaump 9-7-11
PROFESSIONAL GEOLOGIST

3-26-12
PLANS APPROVAL DATE

PROFESSIONAL GEOLOGIST Joseph Kaump No. 7837 Exp. 01-31-13 STATE OF CALIFORNIA

The State of California or its officers or agents shall not be responsible for the accuracy or completeness of electronic copies of this plan sheet.

REFERENCE: CALTRANS SOIL & ROCK LOGGING, CLASSIFICATION, AND PRESENTATION MANUAL (2010)

CEMENTATION

Description	Criteria
Weak	Crumbles or breaks with handling or little finger pressure.
Moderate	Crumbles or breaks with considerable finger pressure.
Strong	Will not crumble or break with finger pressure.

BOREHOLE IDENTIFICATION

Symbol	Hole Type	Description
Size	A	Auger Boring (hollow or solid stem bucket)
Size	R RW RC P	Rotary drilled boring (conventional) Rotary drilled with self-casing wire-line Rotary core with continuously-sampled, self-casing wire-line Rotary percussion boring (air)
Size	R	Rotary drilled diamond core
Size	HD HA	Hand driven (1-inch soil tube) Hand Auger
●	D	Dynamic Cone Penetration Boring
▲	CPT	Cone Penetration Test (ASTM D 5778)
⬚	O	Other (note on LOTB)

Note: Size in inches.

CONSISTENCY OF COHESIVE SOILS

Description	Shear Strength (tsf)	Pocket Penetrometer Measurement, PP, (tsf)	Torvane Measurement, TV, (tsf)	Vane Shear Measurement, VS, (tsf)
Very Soft	Less than 0.12	Less than 0.25	Less than 0.12	Less than 0.12
Soft	0.12 - 0.25	0.25 - 0.5	0.12 - 0.25	0.12 - 0.25
Medium Stiff	0.25 - 0.5	0.5 - 1	0.25 - 0.5	0.25 - 0.5
Stiff	0.5 - 1	1 - 2	0.5 - 1	0.5 - 1
Very Stiff	1 - 2	2 - 4	1 - 2	1 - 2
Hard	Greater than 2	Greater than 4	Greater than 2	Greater than 2

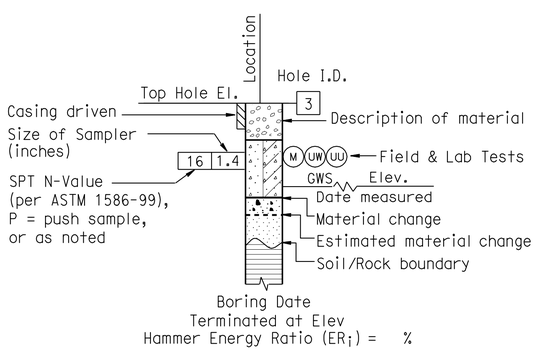

ROTARY BORING

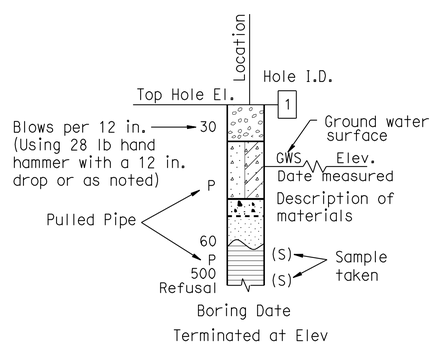

HAND BORING

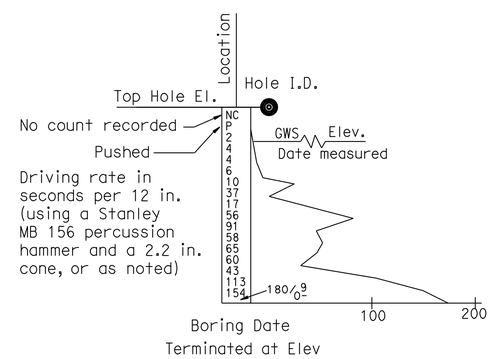

DYNAMIC CONE PENETRATION BORING

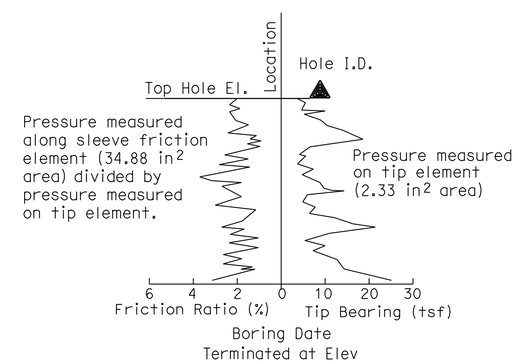

CONE PENETRATION TEST (CPT) BORING

ENGINEERING SERVICES	MATERIALS AND GEOTECHNICAL SERVICES	STATE OF CALIFORNIA DEPARTMENT OF TRANSPORTATION	DIVISION OF ENGINEERING SERVICES STRUCTURE DESIGN DESIGN BRANCH 17	BRIDGE NO. 29E0008 POST MILE 18.03	SOUTH STOCKTON WIDENING SOUND WALL NO. 8 LOG OF TEST BORINGS 2 OF 3
	PREPARED BY: W. Tang 7/11				

GS LOTB SOIL LEGEND

ORIGINAL SCALE IN INCHES FOR REDUCED PLANS 0 1 2 3

UNIT: 3586
PROJECT NUMBER & PHASE: 10000004091 CONTRACT NO.: 10-3A1001

DISREGARD PRINTS BEARING EARLIER REVISION DATES

REVISION DATES

SHEET 14 OF 15

FILE => 29e0008-g-ltb-2 of 3.dgn

USERNAME => s119571 DATE PLOTTED => 23-MAR-2012 TIME PLOTTED => 13:44

REFERENCE: CALTRANS SOIL & ROCK LOGGING, CLASSIFICATION, AND PRESENTATION MANUAL (2010)

DIST	COUNTY	ROUTE	POST MILES TOTAL PROJECT	SHEET No	TOTAL SHEETS
10	SJ	4,99	R19.5/R20.1, 15.0/18.6	1287	1414

Joseph M Kaump 9-7-11
PROFESSIONAL GEOLOGIST

3-26-12
PLANS APPROVAL DATE

PROFESSIONAL GEOLOGIST Joseph Kaump No. 7837 Exp. 01-31-13 STATE OF CALIFORNIA

The State of California or its officers or agents shall not be responsible for the accuracy or completeness of electronic copies of this plan sheet.

GROUP SYMBOLS AND NAMES

Graphic/Symbol	Group Names	Graphic/Symbol	Group Names
GW	Well-graded GRAVEL Well-graded GRAVEL with SAND	CL	Lean CLAY Lean CLAY with SAND Lean CLAY with GRAVEL SANDY lean CLAY SANDY lean CLAY with GRAVEL GRAVELLY lean CLAY GRAVELLY lean CLAY with SAND
GP	Poorly-graded GRAVEL Poorly-graded GRAVEL with SAND		
GW-GM	Well-graded GRAVEL with SILT Well-graded GRAVEL with SILT and SAND	CL-ML	SILTY CLAY SILTY CLAY with SAND SILTY CLAY with GRAVEL SANDY SILTY CLAY SANDY SILTY CLAY with GRAVEL GRAVELLY SILTY CLAY GRAVELLY SILTY CLAY with SAND
GW-GC	Well-graded GRAVEL with CLAY (or SILTY CLAY) Well-graded GRAVEL with CLAY and SAND (or SILTY CLAY and SAND)		
GP-GM	Poorly-graded GRAVEL with SILT Poorly-graded GRAVEL with SILT and SAND	ML	SILT SILT with SAND SILT with GRAVEL SANDY SILT SANDY SILT with GRAVEL GRAVELLY SILT GRAVELLY SILT with SAND
GP-GC	Poorly-graded GRAVEL with CLAY (or SILTY CLAY) Poorly-graded GRAVEL with CLAY and SAND (or SILTY CLAY and SAND)		
GM	SILTY GRAVEL SILTY GRAVEL with SAND	OL	ORGANIC lean CLAY ORGANIC lean CLAY with SAND ORGANIC lean CLAY with GRAVEL SANDY ORGANIC lean CLAY SANDY ORGANIC lean CLAY with GRAVEL GRAVELLY ORGANIC lean CLAY GRAVELLY ORGANIC lean CLAY with SAND
GC	CLAYEY GRAVEL CLAYEY GRAVEL with SAND		
GC-GM	SILTY, CLAYEY GRAVEL SILTY, CLAYEY GRAVEL with SAND	OL	ORGANIC SILT ORGANIC SILT with SAND ORGANIC SILT with GRAVEL SANDY ORGANIC SILT SANDY ORGANIC SILT with GRAVEL GRAVELLY ORGANIC SILT GRAVELLY ORGANIC SILT with SAND
SW	Well-graded SAND Well-graded SAND with GRAVEL		
SP	Poorly-graded SAND Poorly-graded SAND with GRAVEL	CH	Fat CLAY Fat CLAY with SAND Fat CLAY with GRAVEL SANDY fat CLAY SANDY fat CLAY with GRAVEL GRAVELLY fat CLAY GRAVELLY fat CLAY with SAND
SW-SM	Well-graded SAND with SILT Well-graded SAND with SILT and GRAVEL		
SW-SC	Well-graded SAND with CLAY (or SILTY CLAY) Well-graded SAND with CLAY and GRAVEL (or SILTY CLAY and GRAVEL)	MH	Elastic SILT Elastic SILT with SAND Elastic SILT with GRAVEL SANDY elastic SILT SANDY elastic SILT with GRAVEL GRAVELLY elastic SILT GRAVELLY elastic SILT with SAND
SP-SM	Poorly-graded SAND with SILT Poorly-graded SAND with SILT and GRAVEL		
SP-SC	Poorly-graded SAND with CLAY (or SILTY CLAY) Poorly-graded SAND with CLAY and GRAVEL (or SILTY CLAY and GRAVEL)	OH	ORGANIC fat CLAY ORGANIC fat CLAY with SAND ORGANIC fat CLAY with GRAVEL SANDY ORGANIC fat CLAY SANDY ORGANIC fat CLAY with GRAVEL GRAVELLY ORGANIC fat CLAY GRAVELLY ORGANIC fat CLAY with SAND
SM	SILTY SAND SILTY SAND with GRAVEL		
SC	CLAYEY SAND CLAYEY SAND with GRAVEL	OH	ORGANIC elastic SILT ORGANIC elastic SILT with SAND ORGANIC elastic SILT with GRAVEL SANDY ORGANIC elastic SILT SANDY ORGANIC elastic SILT with GRAVEL GRAVELLY ORGANIC elastic SILT GRAVELLY ORGANIC elastic SILT with SAND
SC-SM	SILTY, CLAYEY SAND SILTY, CLAYEY SAND with GRAVEL		
PT	PEAT	OL/OH	ORGANIC SOIL ORGANIC SOIL with SAND ORGANIC SOIL with GRAVEL SANDY ORGANIC SOIL SANDY ORGANIC SOIL with GRAVEL GRAVELLY ORGANIC SOIL GRAVELLY ORGANIC SOIL with SAND
	COBBLES COBBLES and BOULDERS BOULDERS		

FIELD AND LABORATORY TESTING

- (C) Consolidation (ASTM D 2435)
- (CL) Collapse Potential (ASTM D 5333)
- (CP) Compaction Curve (CTM 216)
- (CR) Corrosivity Testing (CTM 643, CTM 422, CTM 417)
- (CU) Consolidated Undrained Triaxial (ASTM D 4767)
- (DS) Direct Shear (ASTM D 3080)
- (EI) Expansion Index (ASTM D 4829)
- (M) Moisture Content (ASTM D 2216)
- (OC) Organic Content-% (ASTM D 2974)
- (P) Permeability (CTM 220)
- (PA) Particle Size Analysis (ASTM D 422)
- (PI) Plasticity Index (AASHTO T 90) Liquid Limit (AASHTO T 89)
- (PL) Point Load Index (ASTM D 5731)
- (PM) Pressure Meter
- (R) R-Value (CTM 301)
- (SE) Sand Equivalent (CTM 217)
- (SG) Specific Gravity (AASHTO T 100)
- (SL) Shrinkage Limit (ASTM D 427)
- (SW) Swell Potential (ASTM D 4546)
- (UC) Unconfined Compression-Soil (ASTM D 2166) Unconfined Compression-Rock (ASTM D 2938)
- (UU) Unconsolidated Undrained Triaxial (ASTM D 2850)
- (UW) Unit Weight (ASTM D 4767)

APPARENT DENSITY OF COHESIONLESS SOILS

Description	SPT N_{60} (Blows / 12 in.)
Very Loose	0 - 5
Loose	5 - 10
Medium Dense	10 - 30
Dense	30 - 50
Very Dense	Greater than 50

MOISTURE

Description	Criteria
Dry	No discernable moisture
Moist	Moisture present, but no free water
Wet	Visible free water

PERCENT OR PROPORTION OF SOILS

Description	Criteria
Trace	Particles are present but estimated to be less than 5%
Few	5% - 10%
Little	15% - 25%
Some	30% - 45%
Mostly	50% - 100%

PARTICLE SIZE

Description		Size (in.)
Boulder		Greater than 12
Cobble		3 - 12
Gravel	Coarse	3/4 - 3
	Fine	1/5 - 3/4
Sand	Coarse	1/16 - 1/5
	Medium	1/64 - 1/16
	Fine	1/300 - 1/64
Silt and Clay		Less than 1/300

ENGINEERING SERVICES

MATERIALS AND GEOTECHNICAL SERVICES
PREPARED BY: W. Tang 7/11

STATE OF CALIFORNIA
DEPARTMENT OF TRANSPORTATION

DIVISION OF ENGINEERING SERVICES
STRUCTURE DESIGN
DESIGN BRANCH 17

BRIDGE NO. 29E0008
POST MILE 18.03

SOUTH STOCKTON WIDENING
SOUND WALL NO. 8
LOG OF TEST BORINGS 3 OF 3

GS LOTB SOIL LEGEND

ORIGINAL SCALE IN INCHES FOR REDUCED PLANS 0 1 2 3

UNIT: 3586
PROJECT NUMBER & PHASE: 10000004091
CONTRACT NO.: 10-3A1001

DISREGARD PRINTS BEARING EARLIER REVISION DATES

REVISION DATES

SHEET 15 OF 15

FILE => 29e0008-g-ltb-3 of 3.dgn

USERNAME => s113571 DATE PLOTTED => 29-MAR-2012 TIME PLOTTED => 13:44

DIST	COUNTY	ROUTE	POST MILES TOTAL PROJECT	SHEET No.	TOTAL SHEETS
10	SJ	4,99	R19.5/R20.1, 15.0/18.6	1288	1414

REGISTERED CIVIL ENGINEER 11-04-11 DATE

3-26-12
PLANS APPROVAL DATE

REGISTERED PROFESSIONAL ENGINEER CHRIS UDARBE No. C62985 Exp. 6-30-12 CIVIL STATE OF CALIFORNIA

The State of California or its officers or agents shall not be responsible for the accuracy or completeness of electronic copies of this plan sheet.

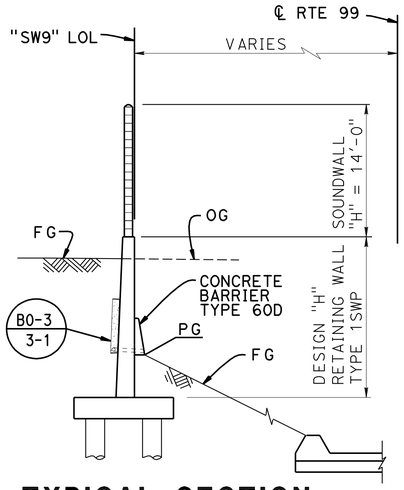

TYPICAL SECTION

3/16" = 1'-0"

QUANTITIES

BRIDGE REMOVAL (PORTION), LOCATION H	LUMP	SUM
STRUCTURE EXCAVATION (RETAINING WALL)	718	CY
STRUCTURE BACKFILL (RETAINING WALL)	433	CY
PERVIOUS BACKFILL MATERIAL (RETAINING WALL)	10	CY
16" CAST-IN-DRILLED-HOLE CONCRETE PILING	2,275	LF
STRUCTURAL CONCRETE, RETAINING WALL	290	CY
ARCHITECTURAL TEXTURE (SPLIT FACE)	552	SQFT
SOUND WALL (MASONRY BLOCK)	6,401	SQFT
BAR REINFORCING STEEL (RETAINING WALL)	26,430	LB
CONCRETE BARRIER (TYPE 60D)	467	LF

INDEX TO PLANS

1. GENERAL PLAN
2. FOUNDATION PLAN
3. MISCELLANEOUS DETAILS NO. 1
4. MISCELLANEOUS DETAILS NO. 2
5. PILE LAYOUT
6. RETAINING WALL TYPE 1SWP - DETAILS NO. 1
7. RETAINING WALL TYPE 1SWP - DETAILS NO. 2
8. MASONRY BLOCK SOUNDWALL ON RETAINING WALL - DETAILS NO. 1
9. MASONRY BLOCK SOUND WALL ON RETAINING WALL - DETAILS NO. 2
10. LOG OF TEST BORINGS 1 OF 3
11. LOG OF TEST BORINGS 2 OF 3
12. LOG OF TEST BORINGS 3 OF 3

STANDARD PLANS DATED MAY 2006

SHEET NO.	TITLE
A10A - A10B	ACRONYMS AND ABBREVIATIONS
A10C - A10D	SYMBOLS
A62B	LIMITS OF PAYMENT FOR EXCAVATION AND BACKFILL BRIDGE SURCHARGE AND WALL
A76A	CONCRETE BARRIER TYPE 60
B0-3	BRIDGE DETAILS
B0-13	BRIDGE DETAILS
B2-3	16" AND 24" CAST-IN-DRILLED-HOLE CONCRETE PILE
B3-8	RETAINING WALL DETAILS NO.1
B3-9	RETAINING WALL DETAILS NO.2
B11-52	CHAIN LINK RAILING TYPE 7

STANDARD PLAN SHEET NO.
DETAIL NO.

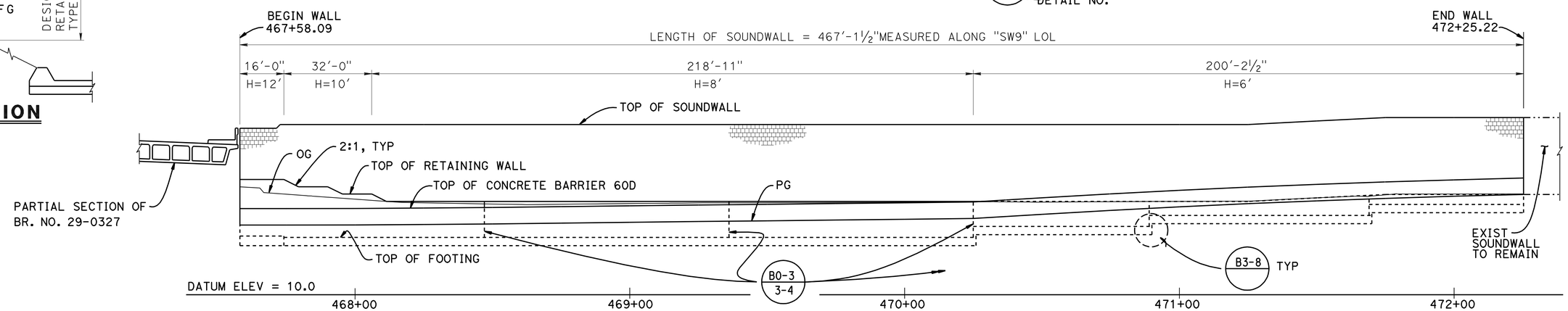

DEVELOPED ELEVATION

VERT: 1" = 10'
HORIZ: 1" = 20'

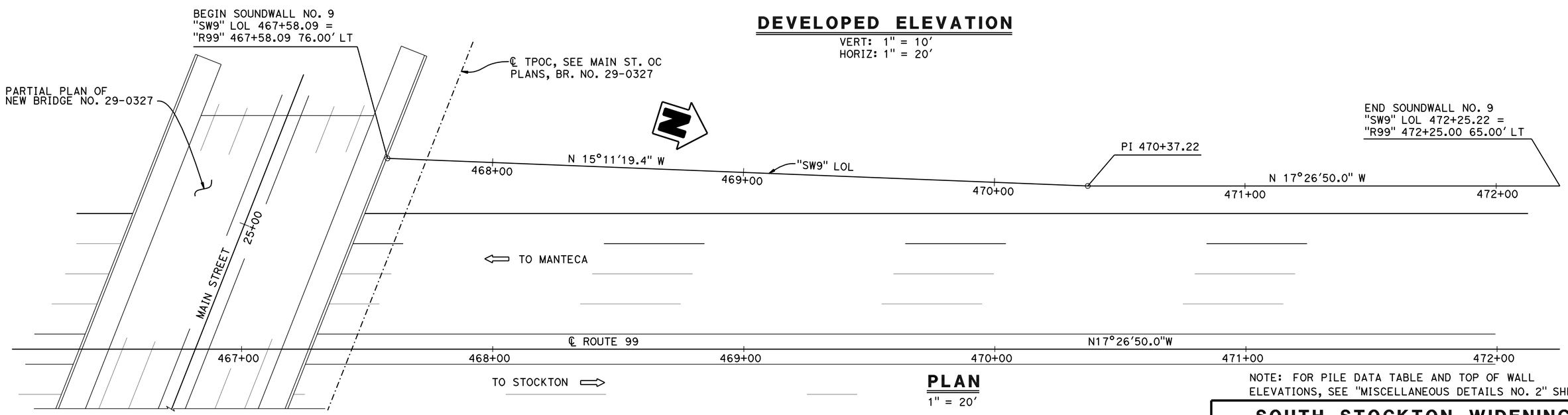

PLAN

1" = 20'

NOTE: FOR PILE DATA TABLE AND TOP OF WALL ELEVATIONS, SEE "MISCELLANEOUS DETAILS NO. 2" SHEET.

SOUTH STOCKTON WIDENING

SOUNDWALL NO. 9

GENERAL PLAN

Gary Joe
DESIGN ENGINEER

	BY	CHECKED
DESIGN	M. FRIEDHEIM	R. CORIA
DETAILS	C. FIGUERRES	R. CORIA
QUANTITIES	P. VU	R. CORIA

LOAD & RESISTANCE FACTOR DESIGN — LIVE LOADING: HL93 W/"LOW-BOY"; PERMIT DESIGN VEHICLE

	BY	CHECKED
LAYOUT	M. FRIEDHEIM	R. CORIA
SPECIFICATIONS	V. RENGANATHAN	PLANS AND SPECS COMPARED V. RENGANATHAN

STATE OF CALIFORNIA
DEPARTMENT OF TRANSPORTATION

DIVISION OF ENGINEERING SERVICES
STRUCTURE DESIGN
DESIGN BRANCH 17

BRIDGE NO. 29E0009
POST MILE 18.15

ORIGINAL SCALE IN INCHES FOR REDUCED PLANS 0 1 2 3

UNIT: 3586
PROJECT NUMBER & PHASE: 10000004091
CONTRACT NO.: 10-3A1001

DISREGARD PRINTS BEARING EARLIER REVISION DATES

REVISION DATES 08-25-11 10-13-11 10-20-11

SHEET 1 OF 12

STRUCTURES DESIGN GENERAL PLAN SHEET (ENGLISH) (REV.09-01-10)

FILE => 29e-0009-agp.dgn

USERNAME => s119571 DATE PLOTTED => 29-MAR-2012 TIME PLOTTED => 13:44

DIST	COUNTY	ROUTE	POST MILES TOTAL PROJECT	SHEET No.	TOTAL SHEETS
10	SJ	4,99	R19.5/R20.1, 15.0/18.6	1289	1414

REGISTERED CIVIL ENGINEER 11-04-11 DATE

3-26-12
PLANS APPROVAL DATE

REGISTERED PROFESSIONAL ENGINEER CHRIS V. UDARBE No. 62985 Exp. 6-30-12 CIVIL STATE OF CALIFORNIA

The State of California or its officers or agents shall not be responsible for the accuracy or completeness of electronic copies of this plan sheet.

Legend:

Indicates bottom of footing elevation

Indicates existing soundwall

Indicates vertical piles

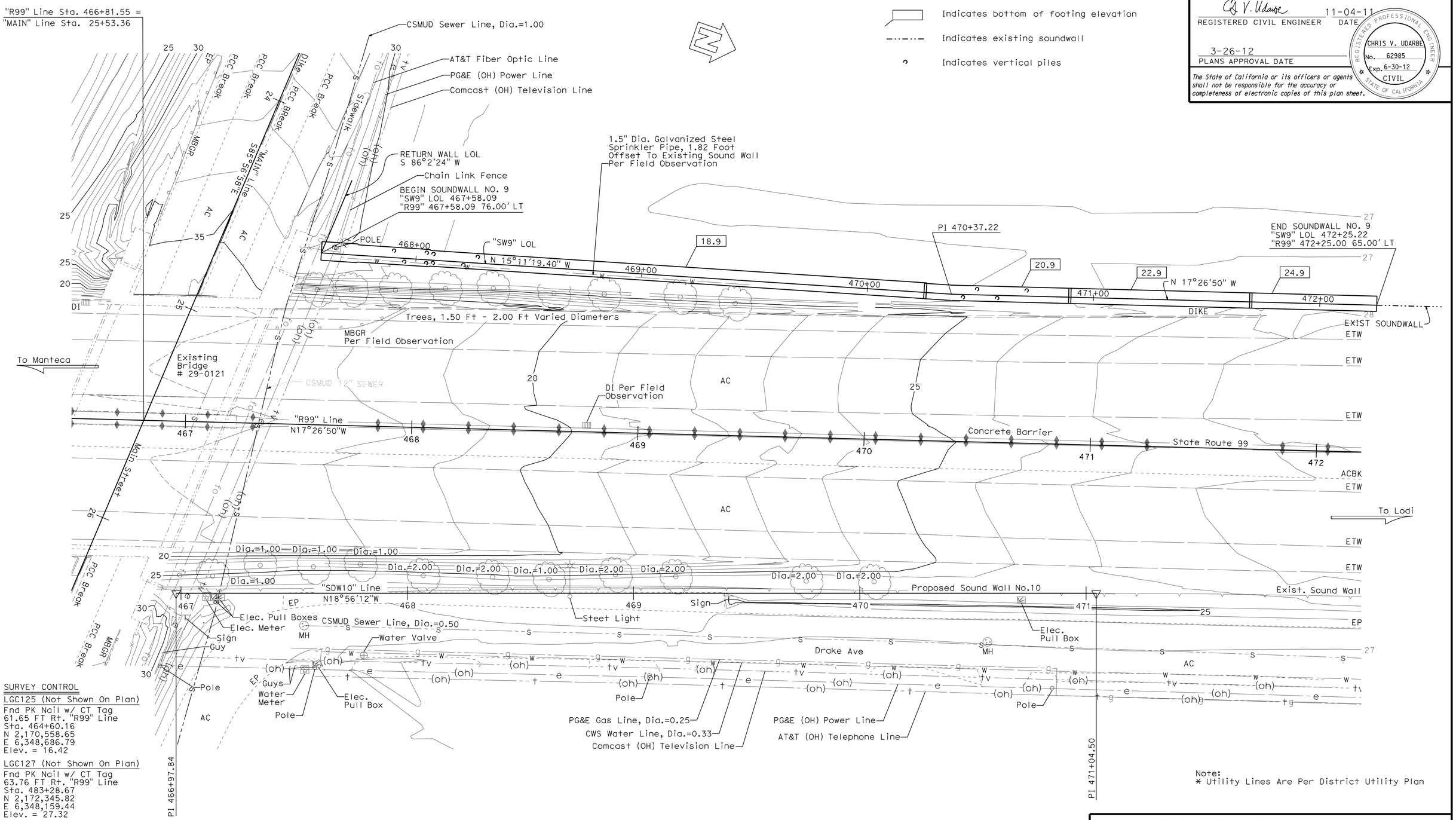

SURVEY CONTROL

LGC125 (Not Shown On Plan)
Fnd PK Nail w/ CT Tag
61.65 FT Rt. "R99" Line
Sta. 464+60.16
N 2,170,558.65
E 6,348,686.79
Elev. = 16.42

LGC127 (Not Shown On Plan)
Fnd PK Nail w/ CT Tag
63.76 FT Rt. "R99" Line
Sta. 483+28.67
N 2,172,345.82
E 6,348,159.44
Elev. = 27.32

Note:
* Utility Lines Are Per District Utility Plan

SOUTH STOCKTON WIDENING
SOUNDWALL NO. 9
FOUNDATION PLAN

PRELIMINARY INVESTIGATION SECTION

SCALE 1"=20'	VERT.DATUM NGVD29	PHOTOGRAMMETRY AS OF: X			
	HORZ.DATUM NAD83 (1991.35)	SURVEYED	BY District	CHECKED	BY T.Gillett 9/2009
ALIGNMENT TIES Dist. Traverse Sheet		DRAFTED	BY J.Martinez 9/2009	CHECKED	BY L.Lew 9/2009

DESIGN	BY M. Friedheim	CHECKED	R. Coria
DETAILS	BY E. Montevirgen/J. Yang	CHECKED	R. Coria
QUANTITIES	BY P. Vu	CHECKED	R. Coria

STATE OF CALIFORNIA
DEPARTMENT OF TRANSPORTATION

DIVISION OF ENGINEERING SERVICES
STRUCTURE DESIGN
DESIGN BRANCH 17

BRIDGE NO. 29E0009
POST MILE 18.15

STRUCTURES FOUNDATION PLAN SHEET (ENGLISH) (REV. 09-01-10)

ORIGINAL SCALE IN INCHES FOR REDUCED PLANS 0 1 2 3

UNIT: 3646
PROJECT NUMBER & PHASE: 1000000409 1
CONTRACT NO.: 10-3A1001

DISREGARD PRINTS BEARING EARLIER REVISION DATES

REVISION DATES 3/24/09 3/28/09 12/16/11 2/23/12

SHEET 2 OF 12

FILE => 29e-0009-e-fp.dgn

DIST	COUNTY	ROUTE	POST MILES TOTAL PROJECT	SHEET No.	TOTAL SHEETS
10	SJ	4,99	R19.5/R20.1, 15.0/18.6	1290	1414

REGISTERED CIVIL ENGINEER — DATE 11-04-11

3-26-12
PLANS APPROVAL DATE

REGISTERED PROFESSIONAL ENGINEER — CHRIS UDARBE — No. C62985 — Exp. 6-30-12 — CIVIL — STATE OF CALIFORNIA

The State of California or its officers or agents shall not be responsible for the accuracy or completeness of electronic copies of this plan sheet.

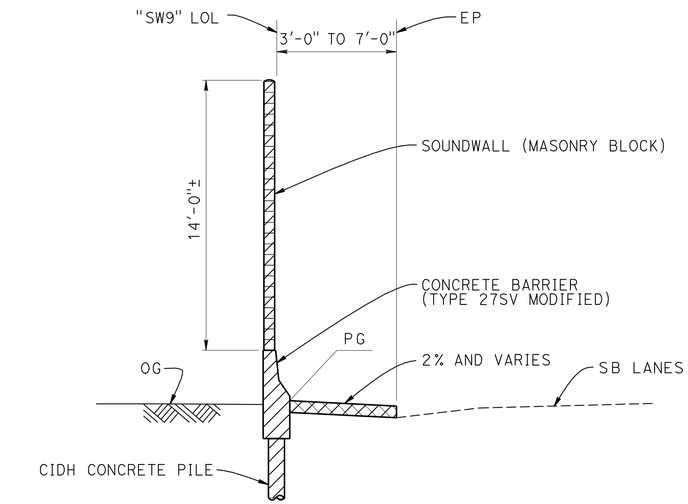

= INDICATES REMOVAL OF EXISTING WALL AND PILE CAP. APPROXIMATE LENGTH OF EXISTING SOUNDWALL REMOVAL IS 351'-0"±. Bridge removal (Portion), LOCATION H.

= EXISTING ROADWAY TO BE REMOVED, SEE "ROAD PLANS"

EXISTING SOUNDWALL SECTION

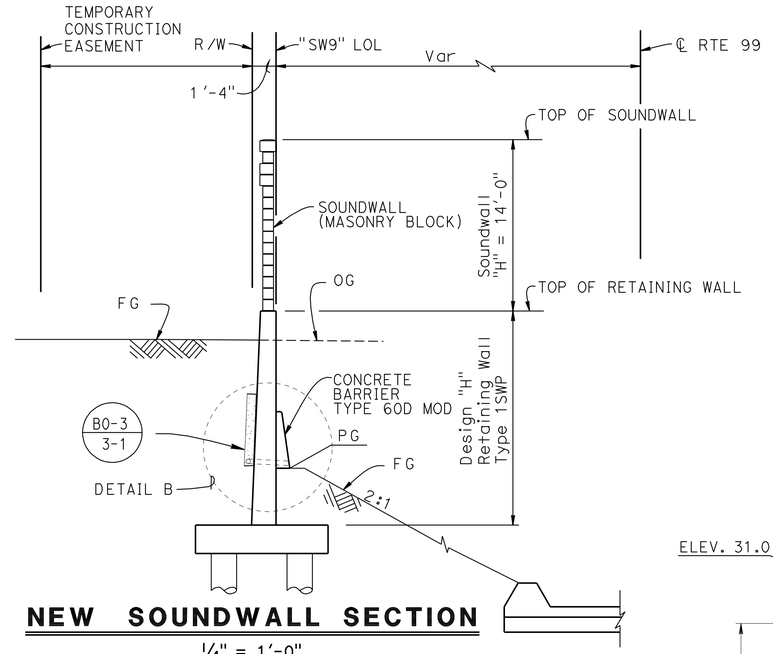

NEW SOUNDWALL SECTION

1/4" = 1'-0"

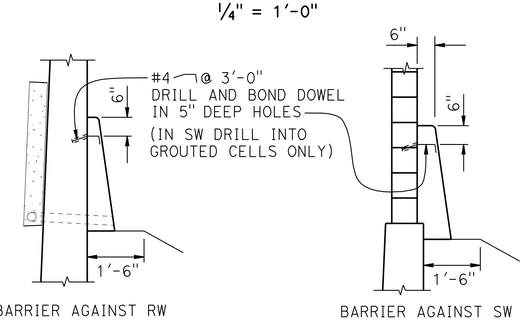

DETAIL B

1/2" = 1'-0"

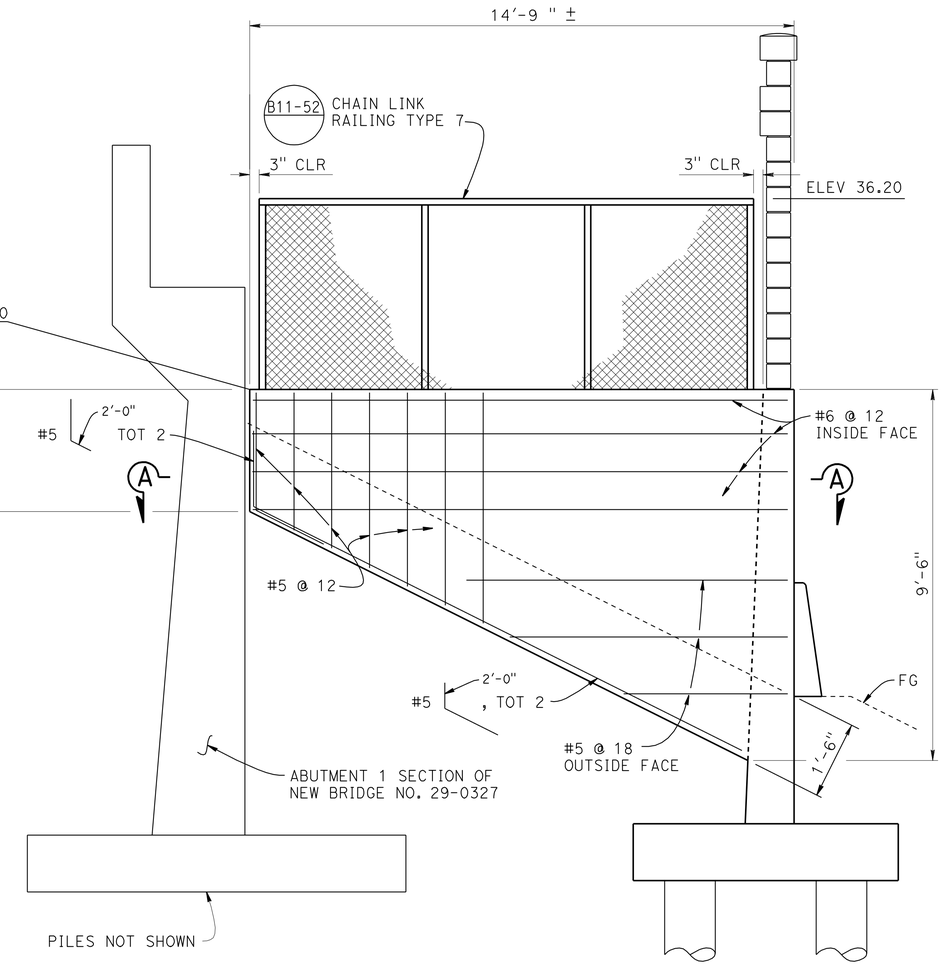

RETURN WALL ELEVATION

1/2" = 1'-0"

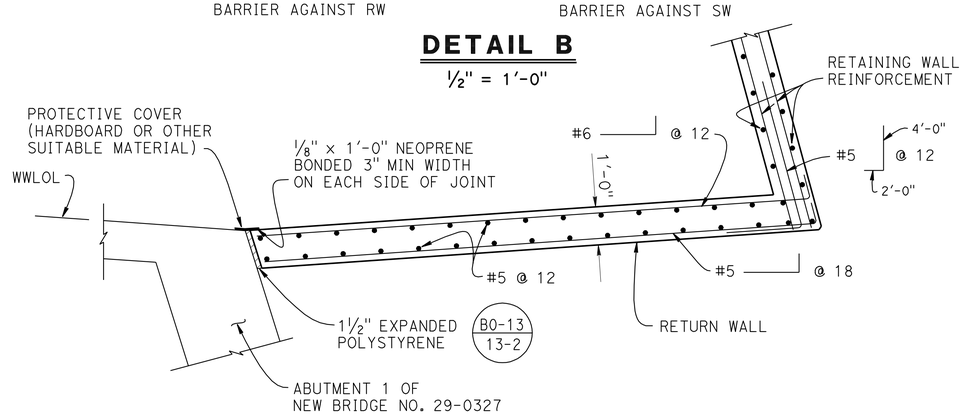

SECTION A-A

1/2" = 1'-0"

SOUNDWALL NO. 9 ELEVATIONS			
SOUNDWALL LOL	PG	TOP OF RETAINING WALL	TOP OF SOUNDWALL
467+58.09	22.69	31.00	40.33
467+72.76	22.69	31.00	41.00
467+79.43	22.69	29.67	41.00
467+95.43	22.72	28.33	41.00
468+11.43	22.75	27.00	41.00
468+50.00	22.90	27.00	41.00
468+75.00	23.05	27.00	41.00
469+00.00	23.19	27.00	41.00
468+25.00	23.33	27.00	41.00
469+50.00	23.47	27.00	41.00
469+75.00	23.61	27.00	41.00
470+00.00	23.75	27.00	41.00
470+25.00	23.89	27.00	41.00
470+37.22	24.27	27.00	41.00
470+50.00	24.65	27.00	41.00
470+75.00	25.36	27.00	41.00
471+00.00	26.01	27.00	41.00
471+25.00	26.59	27.00	41.00
471+50.00	27.10	27.64	41.64
471+75.00	27.55	28.27	42.27
471+75.00	27.55	28.27	42.27
472+00.00	27.93	28.27	42.27
472+25.00	28.27	28.27	42.27
472+25.22	28.27	28.27	42.27

	BY	CHECKED
DESIGN	M. Friedheim	R. Coria
DETAILS	C. Figuerres	R. Coria
QUANTITIES	P. Vu	R. Coria

STATE OF CALIFORNIA
DEPARTMENT OF TRANSPORTATION

DIVISION OF ENGINEERING SERVICES
STRUCTURE DESIGN
DESIGN BRANCH 17

BRIDGE NO. 29E0009
POST MILE 18.15

SOUTH STOCKTON WIDENING
SOUNDWALL NO. 9
MISCELLANEOUS DETAILS NO. 1

STRUCTURES DESIGN DETAIL SHEET (ENGLISH) (REV. 09-01-10)

ORIGINAL SCALE IN INCHES FOR REDUCED PLANS 0 1 2 3

UNIT: 3586
PROJECT NUMBER & PHASE: 10000004091
CONTRACT NO.: 10-3A1001

DISREGARD PRINTS BEARING EARLIER REVISION DATES

REVISION DATES 12-13-11 02-29-12 10-30-11

SHEET 3 OF 12

FILE => 29e-0009-g-dt01.dgn

USERNAME => s119571 DATE PLOTTED => 29-MAR-2012 TIME PLOTTED => 13:45

DIST	COUNTY	ROUTE	POST MILES TOTAL PROJECT	SHEET No.	TOTAL SHEETS
10	SJ	4,99	R19.5/R20.1, 15.0/18.6	1291	1414

REGISTERED CIVIL ENGINEER 11-04-11 DATE

3-26-12
PLANS APPROVAL DATE

REGISTERED PROFESSIONAL ENGINEER CHRIS UDARBE No. C62985 Exp. 6-30-12 CIVIL STATE OF CALIFORNIA

The State of California or its officers or agents shall not be responsible for the accuracy or completeness of electronic copies of this plan sheet.

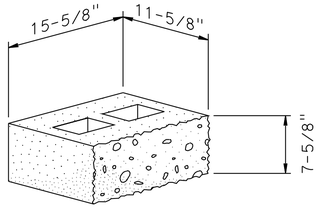

'A' BLOCK

SPLIT FACE ON SIDE
12 X 8 X 16 NOMINAL

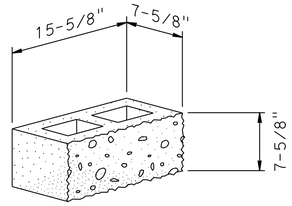

'B' BLOCK

SPLIT FACE ON SIDE
8 X 8 X 16 NOMINAL

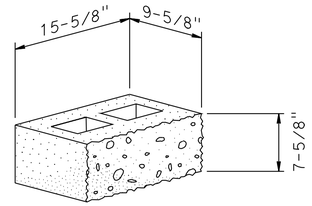

'C' BLOCK

SPLIT FACE ON SIDE
10 X 8 X 16 NOMINAL

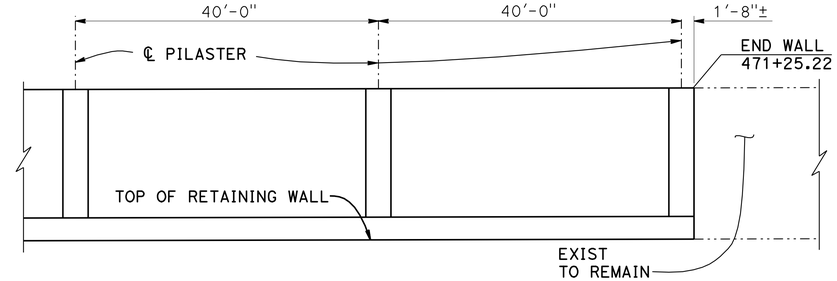

ELEVATION

NO SCALE

Notes:
1. For additional details see "XS" sheets

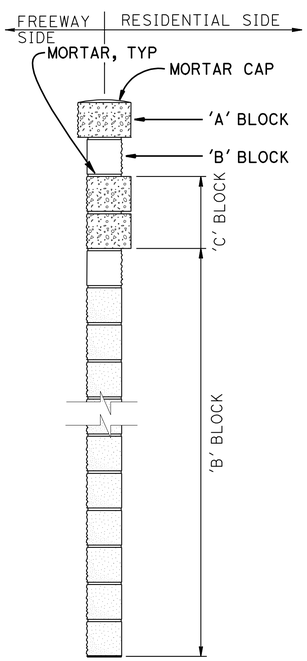

TYPICAL SECTION

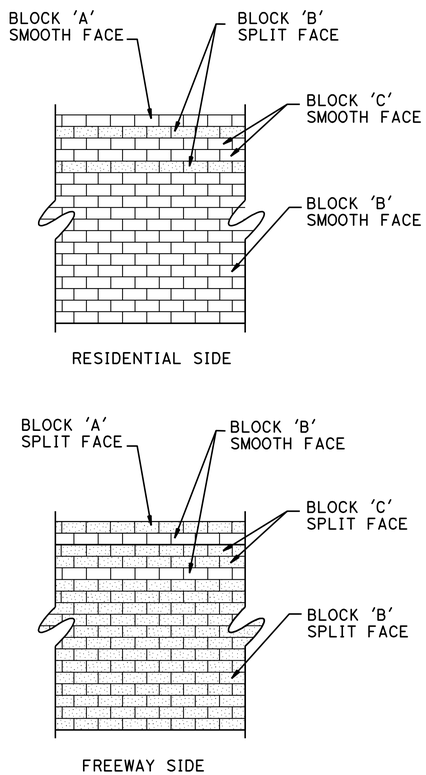

ELEVATION
TYPICAL TREATMENT

SOUND WALL DETAILS

NO SCALE

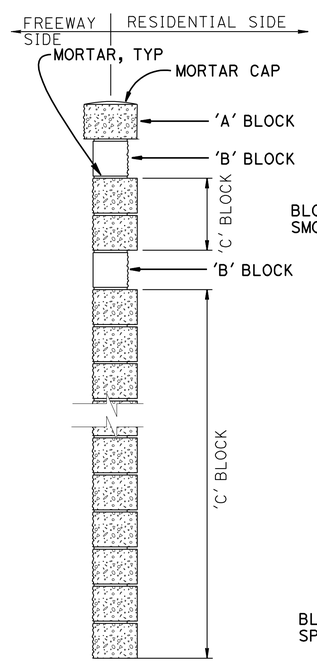

TYPICAL SECTION

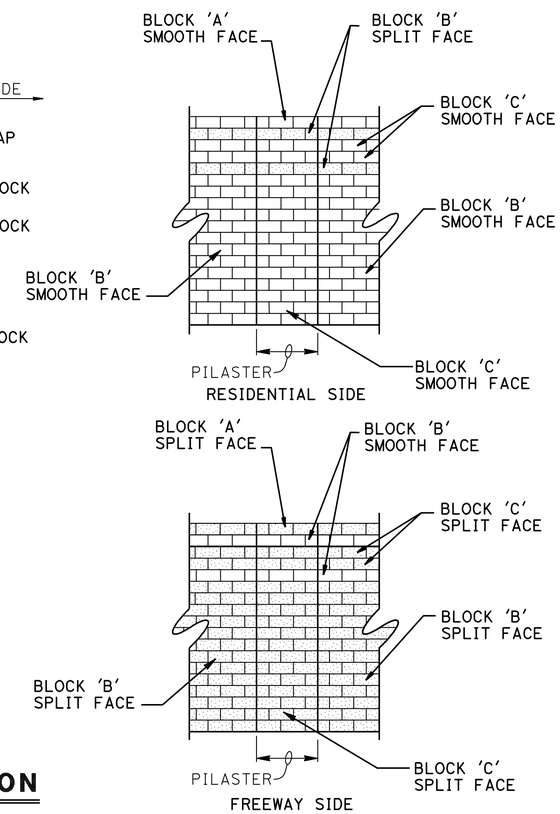

ELEVATION
TYPICAL TREATMENT

SOUND WALL AT PILASTER DETAILS

NO SCALE

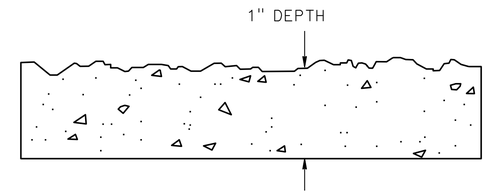

NOTES: - TEXTURE #T323 LIMESTONE1
- MEASUREMENTS ARE APPROXIMATE

TYPICAL SPLIT FACE DETAIL

NO SCALE

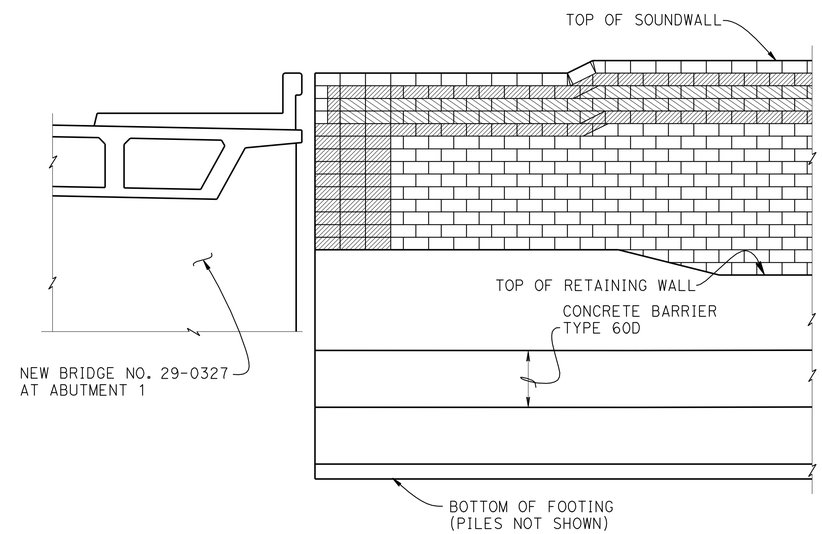

SOUNDWALL - PART ELEVATION

1/4" = 1'-0"

DESIGN	BY M. Friedheim	CHECKED R. Coria	
DETAILS	BY C. Figuerres	CHECKED R. Coria	
QUANTITIES	BY P. Vu	CHECKED R. Coria	

STATE OF CALIFORNIA
DEPARTMENT OF TRANSPORTATION

DIVISION OF ENGINEERING SERVICES
STRUCTURE DESIGN
DESIGN BRANCH 17

BRIDGE NO. 29E0009
POST MILE 18.15

SOUTH STOCKTON WIDENING
SOUNDWALL NO. 9
MISCELLANEOUS DETAILS NO. 2

STRUCTURES DESIGN DETAIL SHEET (ENGLISH) (REV. 09-01-10)

ORIGINAL SCALE IN INCHES FOR REDUCED PLANS 0 1 2 3

UNIT: 3586
PROJECT NUMBER & PHASE: 10000004091
CONTRACT NO.: 10-3A1001

DISREGARD PRINTS BEARING EARLIER REVISION DATES

REVISION DATES 04-20-11 09-20-11 10-20-11

SHEET 4 OF 12

FILE => 29e-0009-grwdt02.dgn

USERNAME => s119571 DATE PLOTTED => 29-MAR-2012 TIME PLOTTED => 13:46

DIST	COUNTY	ROUTE	POST MILES TOTAL PROJECT	SHEET No.	TOTAL SHEETS
10	SJ	4,99	R19.5/R20.1, 15.0/18.6	1292	1414

REGISTERED CIVIL ENGINEER 11-04-11 DATE

3-26-12
PLANS APPROVAL DATE

REGISTERED PROFESSIONAL ENGINEER CHRIS UDARBE No. C62985 Exp. 6-30-12 CIVIL STATE OF CALIFORNIA

The State of California or its officers or agents shall not be responsible for the accuracy or completeness of electronic copies of this plan sheet.

PILE DATA TABLE

SUPPORT LOCATION	PILE TYPE	NOMINAL RESISTANCE (kips)		DESIGN TIP ELEVATION (ft)	SPECIFIED TIP ELEVATION (ft)
		COMPRESSION	TENSION		
467+58.09 to 467+74.09 (H=12ft)	16" Ø CIDH	180	0	-18.0	-18.0
467+74.09 to 468+06.09 (H=10ft)	16" Ø CIDH	180	0	-18.0	-18.0
468+06.09 to 470+25.01 (H=8ft)	16" Ø CIDH	180	0	-18.0	-18.0
470+25.01 to 470+89.01 (H=6ft)	16" Ø CIDH	180	0	-14.0	-14.0
470+89.01 to 471+68.01 (H=6ft)	16" Ø CIDH	180	0	-12.0	-12.0
471+68.01 to 472+25.22 (H=6ft)	16" Ø CIDH	180	0	-10.0	-10.0

Note: Design tip elevations are controlled by compression.

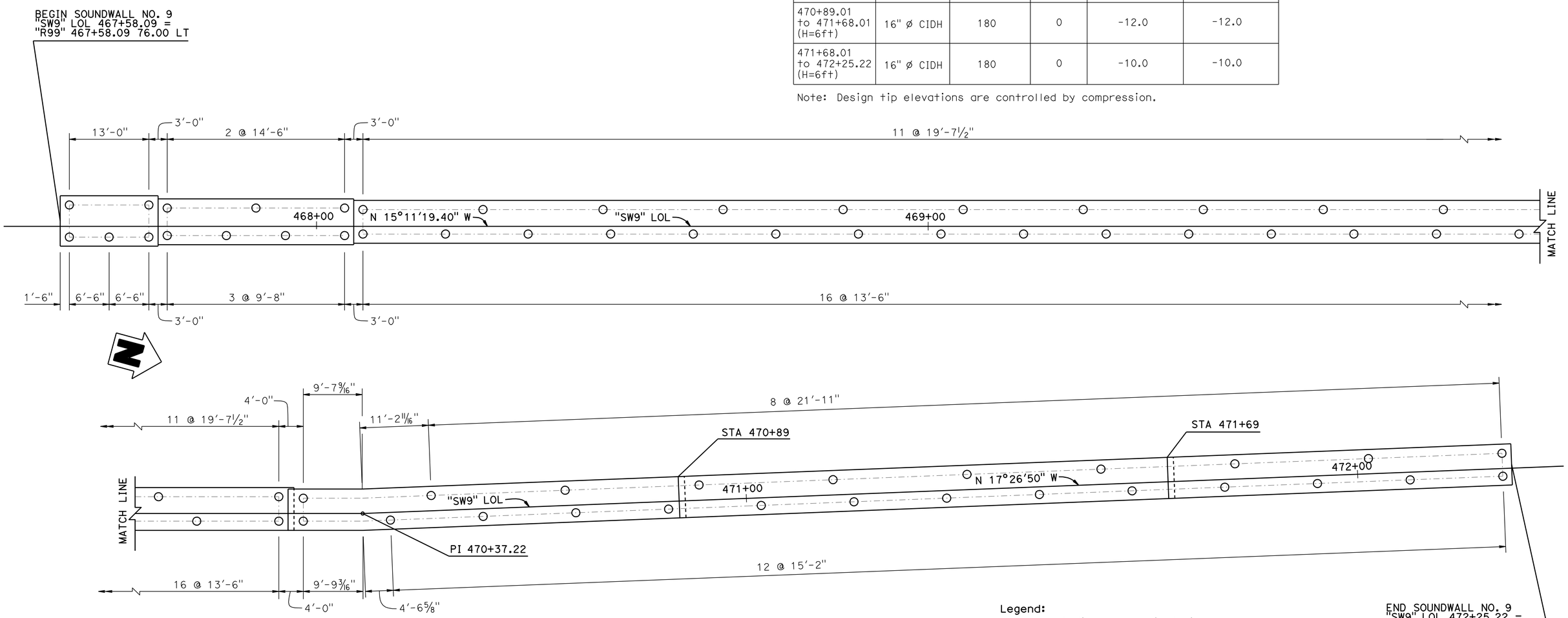

Legend:
○ Indicates vertical piles

PILE LAYOUT

⅛" = 1'-0"

B2-3

DESIGN	BY M. Friedheim	CHECKED R. Coria	
DETAILS	BY C. Figuerres	CHECKED R. Coria	
QUANTITIES	BY P. Vu	CHECKED R. Coria	

STATE OF CALIFORNIA
DEPARTMENT OF TRANSPORTATION

DIVISION OF ENGINEERING SERVICES
STRUCTURE DESIGN
DESIGN BRANCH 17

BRIDGE NO. 29E0009
POST MILE 18.15

SOUTH STOCKTON WIDENING
SOUNDWALL NO. 9
PILE LAYOUT

STRUCTURES DESIGN DETAIL SHEET (ENGLISH) (REV. 09-01-10)

ORIGINAL SCALE IN INCHES FOR REDUCED PLANS 0 1 2 3

UNIT: 3586
PROJECT NUMBER & PHASE: 10000004091
CONTRACT NO.: 10-3A1001

DISREGARD PRINTS BEARING EARLIER REVISION DATES

REVISION DATES 8-24-10 04-25-11 10-20-11

SHEET 5 OF 12

FILE => 29e-0009-p-pdt01.dgn

USERNAME => s119571 DATE PLOTTED => 29-MAR-2012 TIME PLOTTED => 13:45

DIST	COUNTY	ROUTE	POST MILES TOTAL PROJECT	SHEET No.	TOTAL SHEETS
10	SJ	4,99	R19.5/R20.1, 15.0/18.6	1293	1414

C.A. V. Udarbe 11-04-11
REGISTERED CIVIL ENGINEER DATE

3-26-12
PLANS APPROVAL DATE

REGISTERED PROFESSIONAL ENGINEER Chris Udarbe No. C62985 Exp. 6-30-12 CIVIL STATE OF CALIFORNIA

The State of California or its officers or agents shall not be responsible for the accuracy or completeness of electronic copies of this plan sheet.

1

TABLE OF PILE SPACING: 16" CIDH PILES

DESIGN H	6′	8′	10′	12′	14′	16′	18′	20′	22′	24′	26′	28′	30′	32′
W	6′-9"	7′-0"	7′-6"	8′-3"	9′-3"	10′-3"	11′-0"	12′-0"	13′-0"	14′-3"	16′-3"	16′-9"	18′-0"	20′-6"
C	2′-9"	2′-9"	3′-0"	3′-3"	3′-6"	4′-0"	4′-3"	4′-9"	5′-0"	5′-6"	6′-3"	6′-9"	7′-3"	7′-9"
B	4′-0"	4′-3"	4′-6"	5′-0"	5′-9"	6′-3"	6′-9"	7′-3"	8′-0"	8′-9"	10′-0"	10′-0"	10′-9"	12′-9"
F	1′-6"	1′-6"	1′-6"	1′-9"	1′-9"	2′-0"	2′-6"	2′-9"	3′-0"	3′-0"	3′-3"	3′-6"	3′-9"	4′-0"
M	1′-3"	1′-3"	1′-6"	1′-9"	2′-0"	2′-6"	2′-9"	3′-3"	3′-6"	4′-0"	4′-9"	5′-3"	5′-9"	6′-3"
N	2′-6"	2′-9"	3′-0"	3′-6"	4′-3"	4′-9"	5′-3"	5′-9"	6′-6"	7′-3"	8′-6"	8′-6"	9′-3"	11′-3"
ROW 1	16′-0"	14′-0"	12′-0"	10′-0"	8′-0"	6′-6"	5′-6"	4′-6"	4′-0′	4′-0"	4′-0"	4′-0"	4′-0"	4′-0"
ROW 2	24′-0"	21′-0"	18′-0"	15′-0"	14′-0"	13′-0"	11′-0"	9′-0"	8′-0"	12′-0"	10′-0"	6′-0"	4′-0"	4′-0"
ROW 3										8′-0"	5′-0"	4′-0"	4′-0"	6′-0"
ROW 4														6′-0"
CONFIGURATION	I	I	I	I	I	I	I	I	I	II	II	II	II	III

ALTERNATIVE A: TABLE OF REINFORCING STEEL DIMENSIONS AND DATA

DESIGN H	6′	8′	10′	12′	14′	16′	18′	20′	22′	24′	26′	28′	30′	32′
STEM BATTER	0	½:12	½:12	½:12	½:12	½:12	½:12	½:12	½:12	⅝:12	¾:12	⅞:12	1 : 12	1 : 12
STEM THICKNESS @ TOP	1′-0"	1′-0"	1′-0"	1′-0"	1′-0"	1′-0"	1′-0"	1′-0"	1′-0"	1′-0"	1′-0"	1′-0"	1′-0"	1′-0"
ⓐ BARS				#6@18 **	#7@18 **	#8@18 **	#9@18 **	#10@18 **	#8 @ 9 *	#8 @ 9 *	#7 @ 6 *	#10@12 **	#9 @ 9 *	#11@12 **
X				CONT	CONT	CONT	CONT	CONT	CONT	CONT	CONT	CONT	CONT	CONT
Y				8′-0"	6′-6"	7′-6"	8′-6"	9′-6"	9′-6"	11′-0"	11′-6"	13′-0"	14′-0"	15′-6"
ⓑ BARS	#5 @ 12	#5 @ 12	#5 @ 9	#6@18 **	#7@18 **	#8@18 **	#9@18 **	#10@18 **	#8 @ 9 *	#8 @ 9 *	#7 @ 6 *	#10@12 **	#9 @ 9 *	#11@12 **
X	CONT	CONT	CONT	CONT	CONT	CONT	CONT	CONT	CONT	CONT	CONT	CONT	CONT	CONT
Y	CONT	CONT	CONT	CONT	10′-6"	13′-0"	15′-0"	17′-6"	19′-6"	21′-0"	18′-6"	19′-0"	25′-6"	23′-6"
ⓒ BARS					#6 @ 18	#6 @ 18	#6 @ 18	#6 @ 18	#6 @ 18	#6 @ 18	#6 @ 12	#7 @ 12	#7 @ 18	#7 @ 12
ⓓ BARS	#5 @ 12	#5 @ 12	#5 @ 12	#5 @ 12	#5 @ 12	#5 @ 12	#5 @ 9	#5 @ 9	#6 @ 9	#5 @ 6	#7 @ 9	#7 @ 9	#6 @ 6	#7 @ 6
TOTAL ⓔ BARS	6 #5	6 #5	6 #5	6 #5	8 #5	8 #5	10 #5	10 #5	10 #5	10 #5	12 #5	12 #5	12 #5	14 #5
TOTAL ⓕ BARS	6 #5	6 #5	6 #5	6 #5	6 #5	8 #5	8 #5	8 #5	8 #5	10 #5	10 #5	10 #5	12 #5	12 #5

ALTERNATIVE B: TABLE OF REINFORCING STEEL DIMENSIONS AND DATA

DESIGN H	6′	8′	10′	12′	14′	16′	18′	20′	22′	24′	26′	28′	30′	32′
BATTER	0	0	0	0	0	0	0	0	0	0	¼:12	½:12	½:12	½:12
STEM THICKNESS @ TOP	1′-0"	1′-0"	1′-0"	1′-0"	1′-0"	1′-3"	1′-3"	1′-6"	2′-0"	2′-0"	2′-0"	2′-0"	2′-0"	2′-0"
ⓐ BARS				#6@12 **	#5 @ 6 *	#9@18 **	#9@12 **	#9@12 **	#9@12 **	#7 @ 6 *	#7 @ 6 *	#7 @ 6 *	#9 @ 9 *	#11@12
X				CONT	CONT	CONT	CONT	CONT	CONT	CONT	CONT	CONT	CONT	CONT
Y				5′-6"	5′-6"	8′-6"	8′-6"	8′-6"	8′-6"	9′-6"	11′-0"	12′-6"	13′-6"	14′-6"
ⓑ BARS	#5 @ 12	#5 @ 9	#6 @ 9	#6@12 **	#5 @ 6 *	#9@18 **	#9@12 **	#9@12 **	#9@12 **	#7 @ 6 *	#7 @ 6 *	#7 @ 6 *	#9 @ 9 *	#11@12 **
X	CONT	CONT	CONT	CONT	CONT	CONT	CONT	CONT	CONT	CONT	CONT	CONT	CONT	CONT
Y	CONT	CONT	CONT	CONT	CONT	11′-6"	11′-6"	12′-0"	12′-0"	17′-6"	20′-0"	21′-6"	24′-0"	24′-0"
ⓒ BARS						#7 @ 18	#7 @ 12	#7 @ 12	#7 @ 12	#6 @ 12	#6 @ 12	#6 @ 12	#7 @ 18	#7 @ 12
ⓓ BARS	#5 @ 12	#5 @ 12	#5 @ 12	#5 @ 12	#5 @ 12	#5 @ 12	#5 @ 9	#5 @ 9	#6 @ 9	#5 @ 6	#7 @ 9	#7 @ 9	#6 @ 6	#7 @ 6
TOTAL ⓔ BARS	6 #5	6 #5	6 #5	6 #5	8 #5	8 #5	10 #5	10 #5	10 #5	10 #5	12 #5	12 #5	12 #5	14 #5
TOTAL ⓕ BARS	6 #5	6 #5	6 #5	6 #5	6 #5	8 #5	8 #5	8 #5	8 #5	10 #5	10 #5	10 #5	12 #5	12 #5

CONT = CONTINUOUS
* = ⓐ AND ⓑ BARS ARE BUNDLED TOGETHER.
** = ALTERNATE ⓐ AND ⓑ BARS AS SHOWN IN DETAIL A.

DESIGN DATA

DESIGN: LOAD FACTOR DESIGN (LFD)
CONCRETE: REINFORCED CONCRETE, f′c = 3,600 psi
fy = 60,000 psi

LOADING CASE:
LEVEL GROUND WITH 240 psf LIVE LOAD SURCHARGE AND 16′ SOUNDWALL.
SEISMIC DEAD LOAD = 0.3 DEAD LOAD
WIND LOAD = 30 psf
DEAD LOAD OF SOUNDWALL = 1414 lb/lf

SEISMIC LOAD: SOIL
Kh = 0.3g
Kv = 0.0
Kae : MONONOBE-OKABE METHOD
3 Vs30 = 920 ft/sec

SOIL: ø = 34° γ = 120 pcf
EQUIVALENT FLUID PRESSURE:
= 36 pcf FOR DETERMINATION OF TOE PRESSURE
= 27 pcf FOR DETERMINATION OF HEEL PRESSURE

LOAD COMBINATIONS:
GROUP A : βD+1.7 E+1.7 SC
GROUP B : βD+1.7 E+1.3 W
GROUP C :
STEM : 1.0 D + 1.0 E + 1.0 EQD + 1.0 EQE
FOOTING : D+PYM

WHERE : β = 1.0 OR 1.3 WHICHEVER CONTROLS DESIGN
D = DEAD LOAD
E = LATERAL EARTH PRESSURE
SC = LIVE LOAD SURCHARGE
W = WIND LOAD
EQD = SEISMIC DEAD LOAD
EQE = SEISMIC LATERAL EARTH PRESSURE
PYM = PROBABLE YIELD MOMENT (1.3 X NOMINAL YIELD MOMENT OF STEM)

GENERAL NOTES 2

1. 16" ø CIDH CONCRETE PILES WERE USED FOR THE DESIGN.
2. MINIMUM DISTANCE BETWEEN CENTER PILE AND EDGE OF FOOTING IS 1′-6".
3. REDUCTION FACTORS:
   GROUPS A & B : ø = 0.75
   GROUP C : ø = 1.0
4. LATERAL RESISTANCE OF EACH PILE:
   GROUPS A & B : = 30 kip
   GROUP C : = 40 kip
5. MAXIMUM SPACING BETWEEN PILES IS SHOWN IN THE TABLE. REDUCE TO SUIT THE LENGTH OF FOOTING.
6. MINIMUM DISTANCE BETWEEN ANY TWO PILES IS 3′-0".

REVISED STANDARD DRAWING
FILE NO. xs14-310-1x
APPROVAL DATE JULY 2011

1 Table title text edit
2 General Notes text edit
3 Added note

STATE OF CALIFORNIA
DEPARTMENT OF TRANSPORTATION

DIVISION OF ENGINEERING SERVICES

BRIDGE NO. 29E0009
POST MILE 18.15

SOUTH STOCKTON WIDENING
SOUNDWALL NO. 9
RETAINING WALL TYPE 1SWP - DETAIL NO. 1

DS OSD 2147A (ENGLISH STANDARD DRAWING "XS" BORDER REV. (02-02-11)

ORIGINAL SCALE IN INCHES FOR REDUCED PLANS 0 1 2 3

UNIT: 3586
PROJECT NUMBER & PHASE: 10000004091
CONTRACT NO.: 10-3A1001

DISREGARD PRINTS BEARING EARLIER REVISION DATES
REVISION DATES 08-24-10 04-25-11 10-13-11 10-20-11
SHEET 6 OF 12

FILE => 29e-0009-q-xs-14-310-1x.dgn

USERNAME => s119571 DATE PLOTTED => 29-MAR-2012 TIME PLOTTED => 13:45

DIST	COUNTY	ROUTE	POST MILES TOTAL PROJECT	SHEET No.	TOTAL SHEETS
10	SJ	4,99	R19.5/R20.1, 15.0/18.6	1294	1414

REGISTERED CIVIL ENGINEER — 11-04-11 DATE

3-26-12
PLANS APPROVAL DATE

REGISTERED PROFESSIONAL ENGINEER — Chris Udarbe No. C62985 Exp. 6-30-12 CIVIL — STATE OF CALIFORNIA

The State of California or its officers or agents shall not be responsible for the accuracy or completeness of electronic copies of this plan sheet.

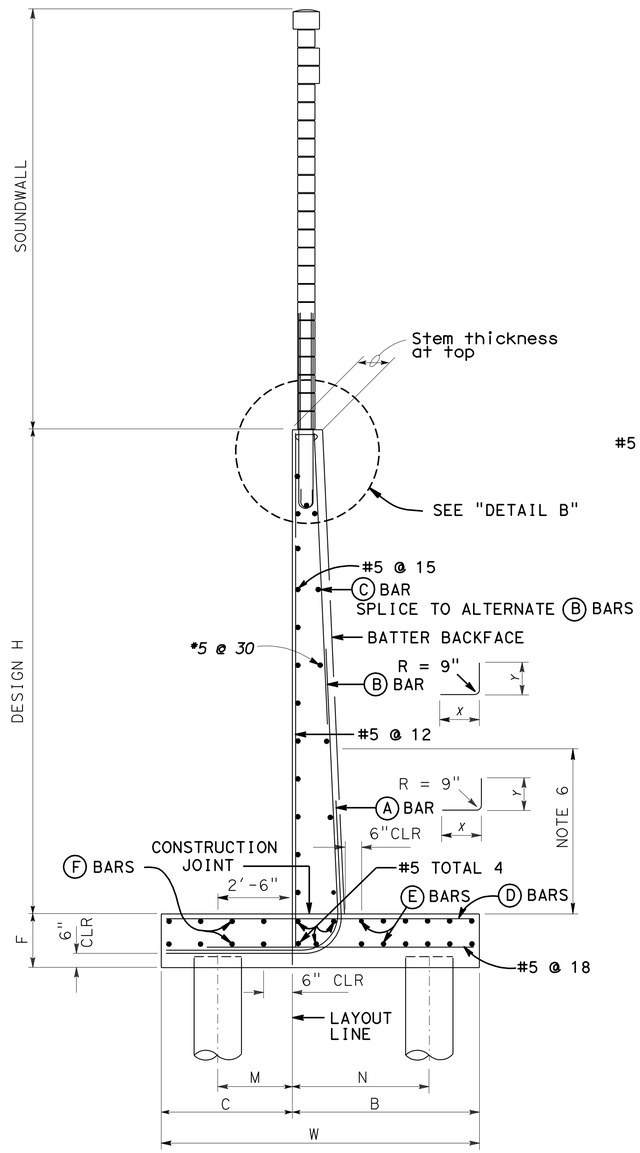

1 2 **16" CIDH PILE FOOTING SECTION** B2-3

NO SCALE

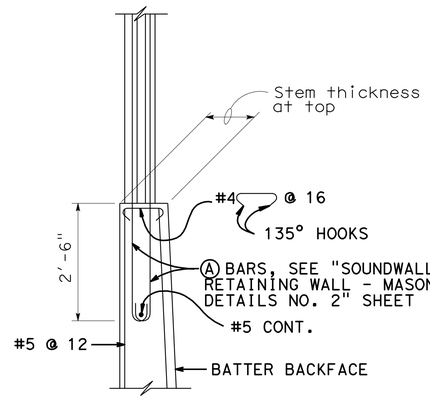

DETAIL B

NO SCALE

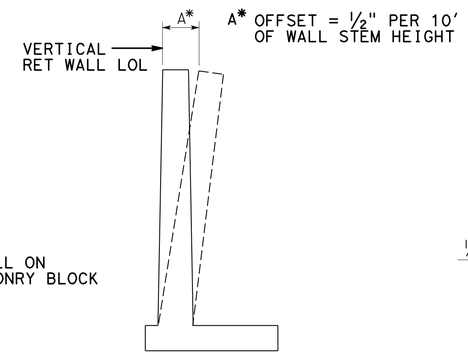

WALL OFFSET

NO SCALE

VALUES FOR OFFSETTING FORMS TO BE DETERMINED BY THE ENGINEER

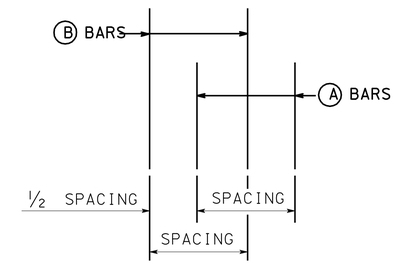

DETAIL A

NO SCALE

3 General Notes:

1. For details not shown and drainage notes, see B3-8
2. Footing cover, 1'-6" minimum
3. Increasing stem thickness not permitted
4. For soundwall details, see "Soundwall Masonry Block" sheets
5. Limit of no splicing for rebar = 3 times the bottom thickness of the stem

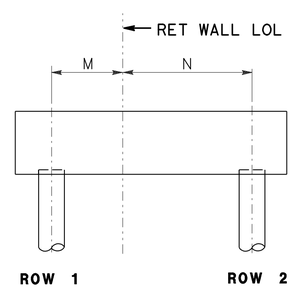

2 **CONFIGURATION I**

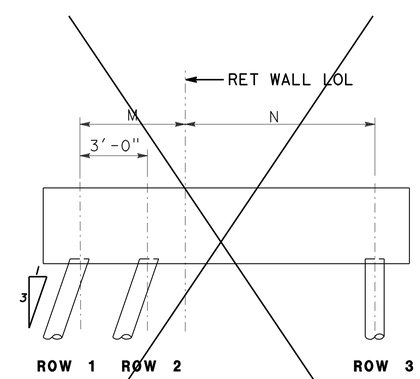

CONFIGURATION II

4

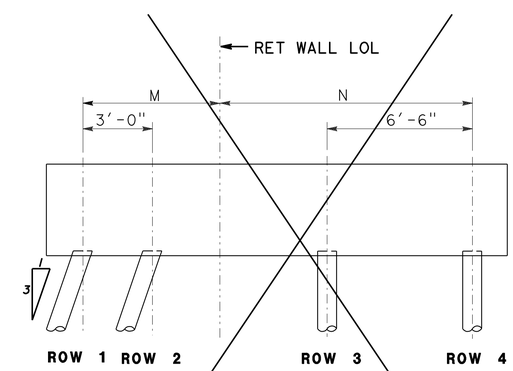

CONFIGURATION III

4

REVISED STANDARD DRAWING			
FILE NO. xs14-310-2x	APPROVAL DATE July 2011	1 Title text edit 2 Vertical pile Row 1	3 General Notes, text added 4 Configurations II & III omitted

STATE OF CALIFORNIA DEPARTMENT OF TRANSPORTATION

DIVISION OF ENGINEERING SERVICES

BRIDGE NO. 29E0009

POST MILE 18.15

SOUTH STOCKTON WIDENING

SOUNDWALL NO. 9

RETAINING WALL TYPE 1SWP - DETAILS NO. 2

DS OSD 2147A (ENGLISH STANDARD DRAWING "XS" BORDER REV. (02-02-11)

ORIGINAL SCALE IN INCHES FOR REDUCED PLANS 0 1 2 3

UNIT: 3586
PROJECT NUMBER & PHASE: 10000004091 CONTRACT NO.: 10-3A1001

DISREGARD PRINTS BEARING EARLIER REVISION DATES → REVISION DATES 08-24-10 04-25-11 10-19-11 10-20-11

SHEET 7 OF 12

FILE => 29e-0009-q-xs-14-310-2x.dgn

USERNAME => s119571 DATE PLOTTED => 29-MAR-2012 TIME PLOTTED => 13:46

DIST	COUNTY	ROUTE	POST MILES TOTAL PROJECT	SHEET No.	TOTAL SHEETS
10	SJ	4,99	R19.5/R20.1, 15.0/18.6	1295	1414

REGISTERED CIVIL ENGINEER 11-04-11 DATE

3-26-12
PLANS APPROVAL DATE

REGISTERED PROFESSIONAL ENGINEER Chris Udarbe No. C62985 Exp. 6-30-12 CIVIL STATE OF CALIFORNIA

The State of California or its officers or agents shall not be responsible for the accuracy or completeness of electronic copies of this plan sheet.

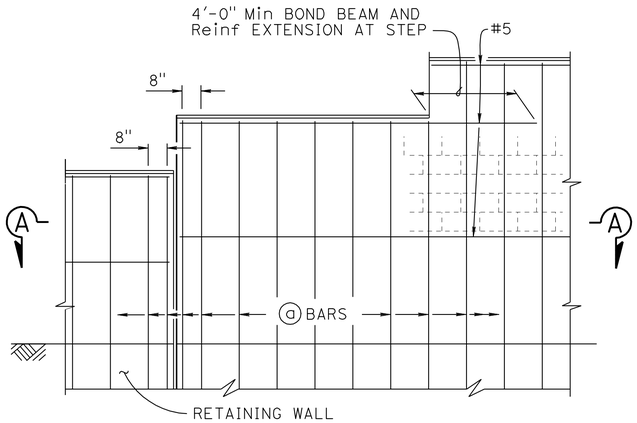

H=6'-0" THRU H=10'-0"

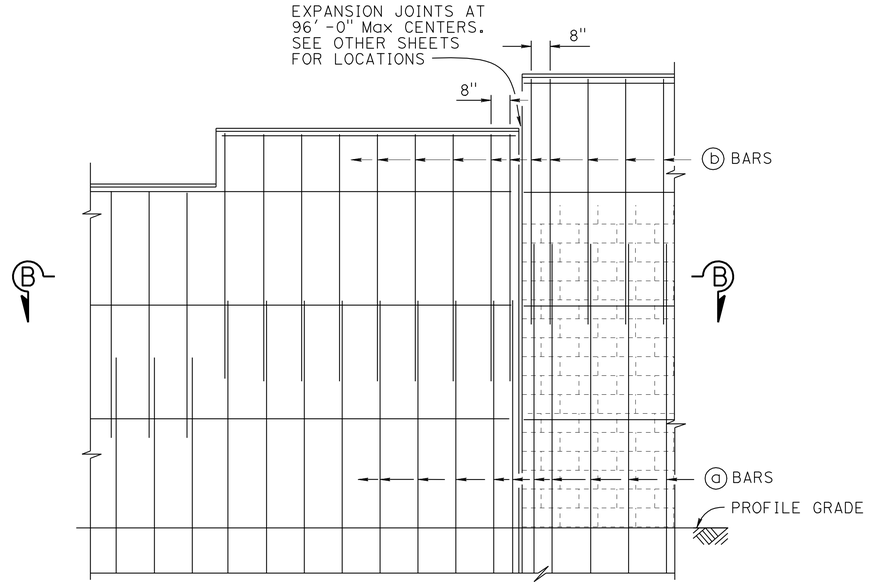

H=12'-0" THRU H=16'-0"

PART ELEVATION

SOUND WALL REINFORCEMENT TABLE						
MAXIMUM "H"	ⓐ BARS @ 1'-4" Max	ⓑ BARS @ 1'-4" Max	"Y"	f'm (psi)	COMPRESSIVE STRENGTH OF CMU (psi)	MAXIMUM "H"
6'-0"	#4	———	———	1500	1900	6'-0"
8'-0"	#4	———	———	1500	1900	8'-0"
10'-0"	#4	———	———	1500	1900	10'-0"
12'-0"	#5	#4	6'-0"	2000	2800	12'-0"
14'-0"	#6	#4	8'-0"	2500	3750	14'-0"
16'-0"	#6	#4	10'-0"	2500	3750	16'-0"

DESIGN NOTES

DESIGN
Uniform Building Code, 1997 Edition and the Bridge Design Specifications

DESIGN WIND LOAD
33 psf

DESIGN SEISMIC LOAD
0.57 Dead load

REINFORCED CONCRETE
f'c = 3600 ksi
fy = 60 ksi

CONCRETE MASONRY

REGULAR STRENGTH	HIGH STRENGTH	
f'm = 1500 psi	f'm = 2000 psi	f'm = 2500 psi
fb = 495 psi	fb = 660 psi	fb = 830 psi
fs = 24,000 psi	fs = 24,000 psi	fs = 24,000 psi
n = 25.8	n = 19.3	n = 15.5

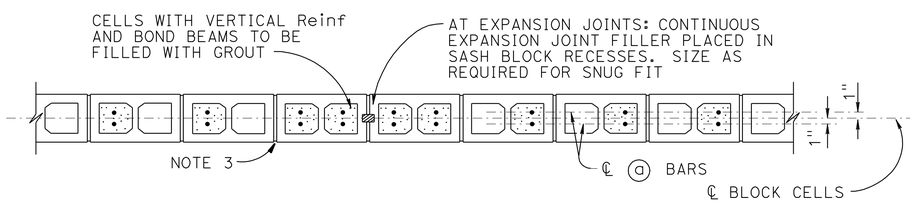

SECTION A-A

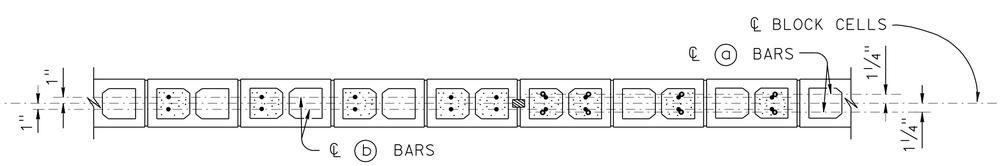

SECTION B-B

1 NOTES:

1. For type of block and joint finish, see other sheets
2. When blocks are laid in stacked bond, ladder type, galvanized joint reinforcement shall be provided. A minimum of 2 - 9 gauge wires continuous at 4'-0" maximum to be used. Locate reinforcement in joints that are at the approximate midpoint between bond beams
3. Horizontal joints shall be tooled concave or may be weathered
   Vertical joints shall be tooled concave or may be raked
4. For intermediate wall heights that are between the "H's" given, use the tabular information for the next higher "H"
5. See STANDARD PLANS B15-9 for other details
6. Masonry strengths are listed in the "SOUNDWALL REINFORCEMENT TABLE"

NO SCALE

REVISED STANDARD DRAWING

FILE NO. xs15-120-1

APPROVAL DATE July 2011

1 Note added

STATE OF CALIFORNIA DEPARTMENT OF TRANSPORTATION

DIVISION OF ENGINEERING SERVICES

BRIDGE NO. 290009

POST MILE 18.15

SOUTH STOCKTON WIDENING

MASONRY BLOCK SOUND WALL ON RETAINING WALL

DETAILS NO. 1

DS OSD 2147A (ENGLISH STANDARD DRAWING "XS" BORDER REV. (02-02-11)

ORIGINAL SCALE IN INCHES FOR REDUCED PLANS 0 1 2 3

UNIT: 3586
PROJECT NUMBER & PHASE: 10000004091
CONTRACT NO.: 10-3A1001

DISREGARD PRINTS BEARING EARLIER REVISION DATES

REVISION DATES 04-25-11 10-18-11 10-20-11

SHEET 8 OF 12

FILE => 29e-0009-q-xs15-120-1.dgn

USERNAME => s119571 DATE PLOTTED => 29-MAR-2012 TIME PLOTTED => 13:46

DIST	COUNTY	ROUTE	POST MILES TOTAL PROJECT	SHEET No.	TOTAL SHEETS
10	SJ	4,99	R19.5/R20.1, 15.0/18.6	1296	1414

REGISTERED CIVIL ENGINEER 11-04-11 DATE

3-26-12
PLANS APPROVAL DATE

REGISTERED PROFESSIONAL ENGINEER Chris Udarbe No. C62985 Exp. 06-30-2012 CIVIL STATE OF CALIFORNIA

The State of California or its officers or agents shall not be responsible for the accuracy or completeness of electronic copies of this plan sheet.

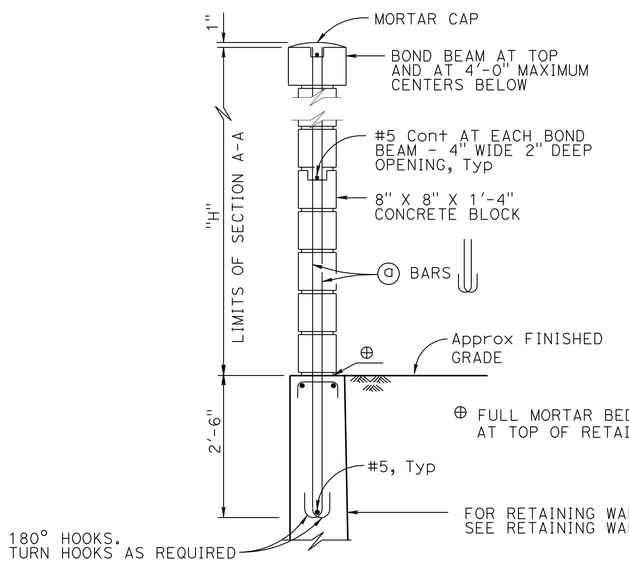

NOTE:
For details not shown, see H=12'-0" thru H=16'-0"

H=6'-0" THRU H=10'-0"

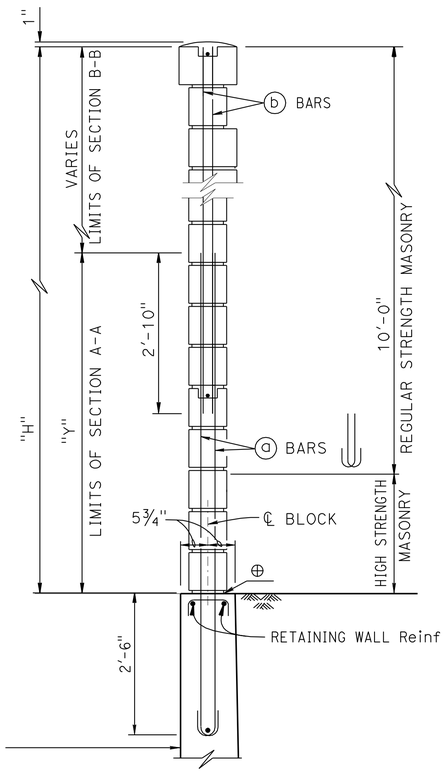

NOTE:
For details not shown, see H=6'-0" thru H=10'-0"

H=12'-0" THRU H=16'-0"

TYPICAL SECTION

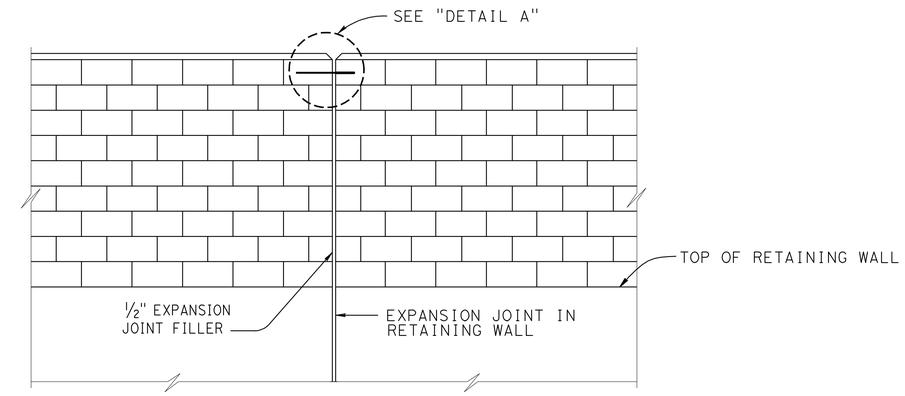

ALIGNMENT KEY DETAIL

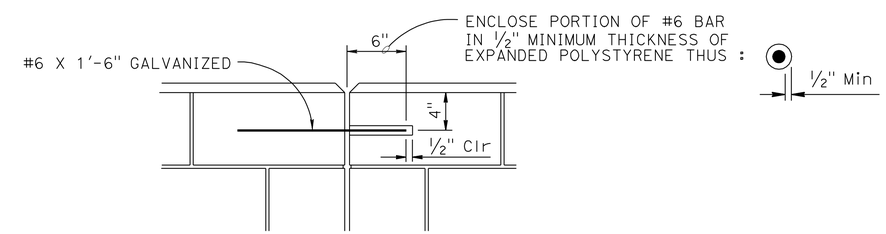

DETAIL A

NO SCALE

STANDARD DRAWING
FILE NO. xs15-120-2
APPROVAL DATE July 2011

STATE OF CALIFORNIA DEPARTMENT OF TRANSPORTATION

DIVISION OF ENGINEERING SERVICES

BRIDGE NO. 29E0009
POST MILE 18.15

SOUTH STOCKTON WIDENING
MASONRY BLOCK SOUND WALL ON RETAINING WALL
DETAILS NO. 2

DS OSD 2147A (ENGLISH STANDARD DRAWING "XS" BORDER REV. (02-02-11)

ORIGINAL SCALE IN INCHES FOR REDUCED PLANS 0 1 2 3

UNIT: 3586
PROJECT NUMBER & PHASE: 10000004091
CONTRACT NO.: 10-3A1001

DISREGARD PRINTS BEARING EARLIER REVISION DATES

REVISION DATES: 05-03-10 10-19-11 10-20-11

SHEET 9 OF 12

FILE => 29e-0009-q-xs15-120-2.dgn

USERNAME => s119571 DATE PLOTTED => 29-MAR-2012 TIME PLOTTED => 13:46

DIST	COUNTY	ROUTE	POST MILES TOTAL PROJECT	SHEET No	TOTAL SHEETS
10	SJ	4,99	R19.5/R20.1, 15.0/18.6	1297	1414

PROFESSIONAL GEOLOGIST 8-18-11

3-26-12
PLANS APPROVAL DATE

PROFESSIONAL GEOLOGIST Joseph Kaump No. 7837 Exp. 01-31-13 STATE OF CALIFORNIA

The State of California or its officers or agents shall not be responsible for the accuracy or completeness of electronic copies of this plan sheet.

This LOTB sheet was prepared in accordance with the Caltrans Soil & Rock Logging, Classification, & Presentation Manual (2010 Edition).

BENCH MARK

NW corner of existing Main Street OC
Br. No. 29-0121, 55.72 Lt ℄ Rte 99,
Sta 467+37.67
Elev 35.08′
Vert Datum: NGVD 29

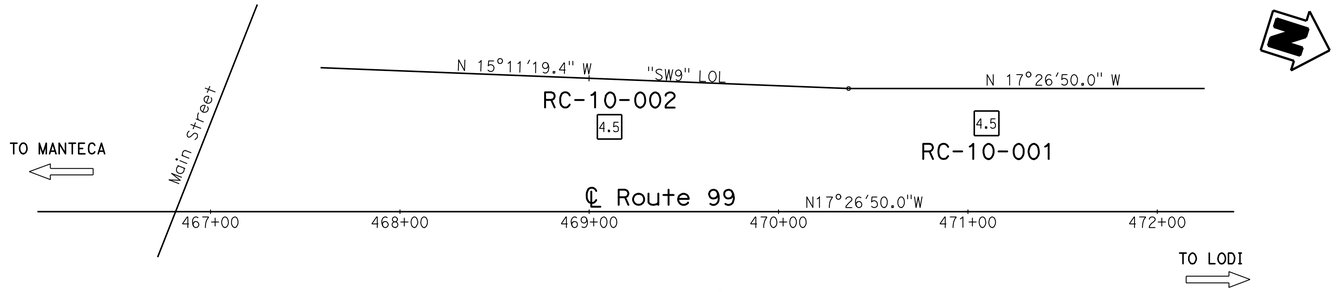

PLAN

1″ = 40′

Notes :

1. Groundwater was present but not measured in Boring RC-10-001.
2. Refer to Boring RC-10-002 for groundwater data.

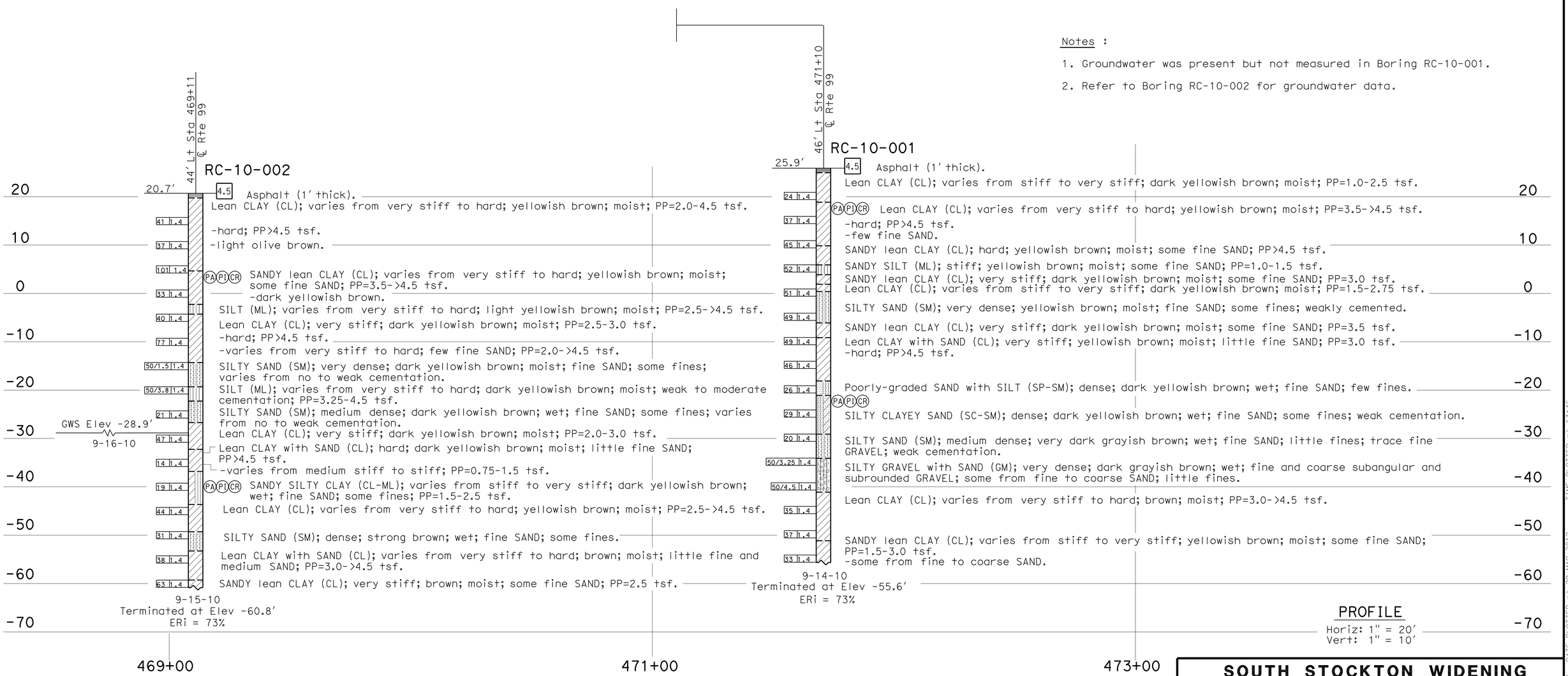

PROFILE

Horiz: 1″ = 20′
Vert: 1″ = 10′

ENGINEERING SERVICES	MATERIALS AND GEOTECHNICAL SERVICES	STATE OF CALIFORNIA DEPARTMENT OF TRANSPORTATION	DIVISION OF ENGINEERING SERVICES STRUCTURE DESIGN DESIGN BRANCH 17	BRIDGE NO. 29E0009 POST MILE 18.15	SOUTH STOCKTON WIDENING SOUND WALL NO. 9 LOG OF TEST BORINGS 1 OF 3
FUNCTIONAL SUPERVISOR NAME: R. Buell	DRAWN BY: I. G-Remmen CHECKED BY: A. Barrie	FIELD INVESTIGATION BY: J. Kaump			

OGS CIVIL LOG OF TEST BORINGS SHEET

ORIGINAL SCALE IN INCHES FOR REDUCED PLANS 0 1 2 3

UNIT: 3643
PROJECT NUMBER & PHASE: 10000004091 CONTRACT NO.: 10-3A1001

DISREGARD PRINTS BEARING EARLIER REVISION DATES → REVISION DATES 08-09-11 08-17-11 SHEET 10 OF 12

FILE => 29e-0009-z-ltb1of3.dgn

USERNAME => s119571 DATE PLOTTED => 29-MAR-2012 TIME PLOTTED => 13:46

DIST	COUNTY	ROUTE	POST MILES TOTAL PROJECT	SHEET No	TOTAL SHEETS
10	SJ	4,99	R19.5/R20.1, 15.0/18.6	1298	1414

Joseph M Kaump 8-18-11
PROFESSIONAL GEOLOGIST

3-26-12
PLANS APPROVAL DATE

PROFESSIONAL GEOLOGIST Joseph Kaump No. 7837 Exp. 01-31-13 STATE OF CALIFORNIA

The State of California or its officers or agents shall not be responsible for the accuracy or completeness of electronic copies of this plan sheet.

REFERENCE: CALTRANS SOIL & ROCK LOGGING, CLASSIFICATION, AND PRESENTATION MANUAL (2010)

CEMENTATION

Description	Criteria
Weak	Crumbles or breaks with handling or little finger pressure.
Moderate	Crumbles or breaks with considerable finger pressure.
Strong	Will not crumble or break with finger pressure.

BOREHOLE IDENTIFICATION

Symbol	Hole Type	Description
Size	A	Auger Boring (hollow or solid stem bucket)
Size	R RW RC P	Rotary drilled boring (conventional) Rotary drilled with self-casing wire-line Rotary core with continuously-sampled, self-casing wire-line Rotary percussion boring (air)
Size	R	Rotary drilled diamond core
Size	HD HA	Hand driven (1-inch soil tube) Hand Auger
●	D	Dynamic Cone Penetration Boring
▲	CPT	Cone Penetration Test (ASTM D 5778)
⬚	O	Other (note on LOTB)

Note: Size in inches.

CONSISTENCY OF COHESIVE SOILS

Description	Shear Strength (tsf)	Pocket Penetrometer Measurement, PP, (tsf)	Torvane Measurement, TV, (tsf)	Vane Shear Measurement, VS, (tsf)
Very Soft	Less than 0.12	Less than 0.25	Less than 0.12	Less than 0.12
Soft	0.12 - 0.25	0.25 - 0.5	0.12 - 0.25	0.12 - 0.25
Medium Stiff	0.25 - 0.5	0.5 - 1	0.25 - 0.5	0.25 - 0.5
Stiff	0.5 - 1	1 - 2	0.5 - 1	0.5 - 1
Very Stiff	1 - 2	2 - 4	1 - 2	1 - 2
Hard	Greater than 2	Greater than 4	Greater than 2	Greater than 2

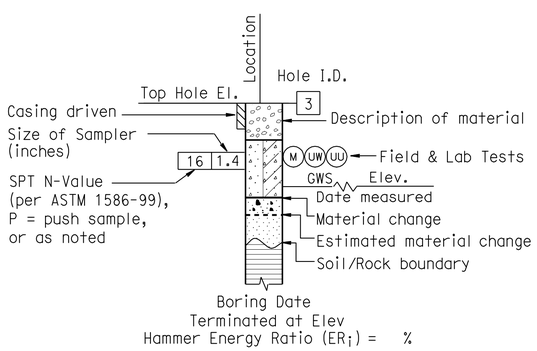

ROTARY BORING

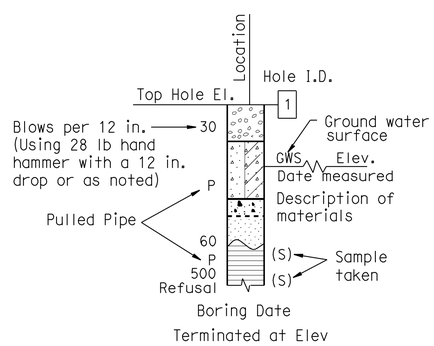

HAND BORING

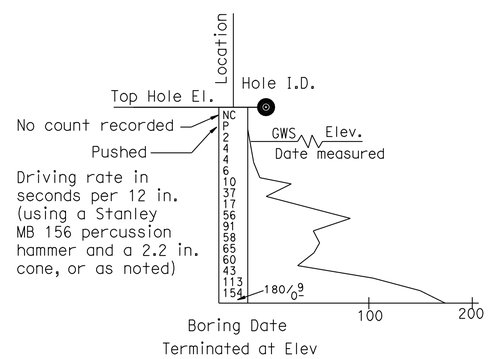

DYNAMIC CONE PENETRATION BORING

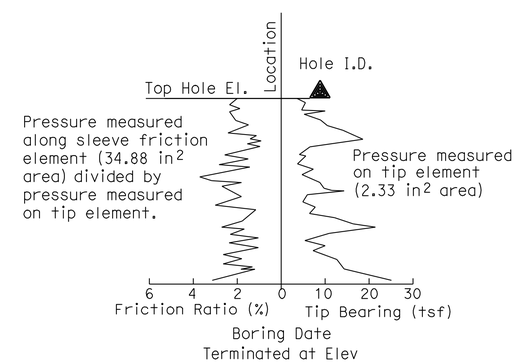

CONE PENETRATION TEST (CPT) BORING

ENGINEERING SERVICES	MATERIALS AND GEOTECHNICAL SERVICES	STATE OF CALIFORNIA DEPARTMENT OF TRANSPORTATION	DIVISION OF ENGINEERING SERVICES STRUCTURE DESIGN DESIGN BRANCH 17	BRIDGE NO. 29E0009 POST MILE 18.15	SOUTH STOCKTON WIDENING SOUND WALL NO. 9 LOG OF TEST BORINGS 2 OF 3
	PREPARED BY: I. G-Remmen				

GS LOTB SOIL LEGEND

ORIGINAL SCALE IN INCHES FOR REDUCED PLANS 0 1 2 3

UNIT: 3643
PROJECT NUMBER & PHASE: 10000004091 CONTRACT NO.: 10-3A1001

DISREGARD PRINTS BEARING EARLIER REVISION DATES → 9-7-11

REVISION DATES | SHEET 11 OF 12

FILE => 29e-0009-z-ltb2of3.dgn

USERNAME => s119571 DATE PLOTTED => 23-MAR-2012 TIME PLOTTED => 13:46

REFERENCE: CALTRANS SOIL & ROCK LOGGING, CLASSIFICATION, AND PRESENTATION MANUAL (2010)

DIST	COUNTY	ROUTE	POST MILES TOTAL PROJECT	SHEET No	TOTAL SHEETS
10	SJ	4,99	R19.5/R20.1, 15.0/18.6	1299	1414

PROFESSIONAL GEOLOGIST 8-18-11

3-26-12
PLANS APPROVAL DATE

PROFESSIONAL GEOLOGIST Joseph Kaump No. 7837 Exp. 01-31-13 STATE OF CALIFORNIA

The State of California or its officers or agents shall not be responsible for the accuracy or completeness of electronic copies of this plan sheet.

GROUP SYMBOLS AND NAMES

Graphic/Symbol	Group Names
GW	Well-graded GRAVEL Well-graded GRAVEL with SAND
GP	Poorly-graded GRAVEL Poorly-graded GRAVEL with SAND
GW-GM	Well-graded GRAVEL with SILT Well-graded GRAVEL with SILT and SAND
GW-GC	Well-graded GRAVEL with CLAY (or SILTY CLAY) Well-graded GRAVEL with CLAY and SAND (or SILTY CLAY and SAND)
GP-GM	Poorly-graded GRAVEL with SILT Poorly-graded GRAVEL with SILT and SAND
GP-GC	Poorly-graded GRAVEL with CLAY (or SILTY CLAY) Poorly-graded GRAVEL with CLAY and SAND (or SILTY CLAY and SAND)
GM	SILTY GRAVEL SILTY GRAVEL with SAND
GC	CLAYEY GRAVEL CLAYEY GRAVEL with SAND
GC-GM	SILTY, CLAYEY GRAVEL SILTY, CLAYEY GRAVEL with SAND
SW	Well-graded SAND Well-graded SAND with GRAVEL
SP	Poorly-graded SAND Poorly-graded SAND with GRAVEL
SW-SM	Well-graded SAND with SILT Well-graded SAND with SILT and GRAVEL
SW-SC	Well-graded SAND with CLAY (or SILTY CLAY) Well-graded SAND with CLAY and GRAVEL (or SILTY CLAY and GRAVEL)
SP-SM	Poorly-graded SAND with SILT Poorly-graded SAND with SILT and GRAVEL
SP-SC	Poorly-graded SAND with CLAY (or SILTY CLAY) Poorly-graded SAND with CLAY and GRAVEL (or SILTY CLAY and GRAVEL)
SM	SILTY SAND SILTY SAND with GRAVEL
SC	CLAYEY SAND CLAYEY SAND with GRAVEL
SC-SM	SILTY, CLAYEY SAND SILTY, CLAYEY SAND with GRAVEL
PT	PEAT
	COBBLES COBBLES and BOULDERS BOULDERS

Graphic/Symbol	Group Names
CL	Lean CLAY Lean CLAY with SAND Lean CLAY with GRAVEL SANDY lean CLAY SANDY lean CLAY with GRAVEL GRAVELLY lean CLAY GRAVELLY lean CLAY with SAND
CL-ML	SILTY CLAY SILTY CLAY with SAND SILTY CLAY with GRAVEL SANDY SILTY CLAY SANDY SILTY CLAY with GRAVEL GRAVELLY SILTY CLAY GRAVELLY SILTY CLAY with SAND
ML	SILT SILT with SAND SILT with GRAVEL SANDY SILT SANDY SILT with GRAVEL GRAVELLY SILT GRAVELLY SILT with SAND
OL	ORGANIC lean CLAY ORGANIC lean CLAY with SAND ORGANIC lean CLAY with GRAVEL SANDY ORGANIC lean CLAY SANDY ORGANIC lean CLAY with GRAVEL GRAVELLY ORGANIC lean CLAY GRAVELLY ORGANIC lean CLAY with SAND
OL	ORGANIC SILT ORGANIC SILT with SAND ORGANIC SILT with GRAVEL SANDY ORGANIC SILT SANDY ORGANIC SILT with GRAVEL GRAVELLY ORGANIC SILT GRAVELLY ORGANIC SILT with SAND
CH	Fat CLAY Fat CLAY with SAND Fat CLAY with GRAVEL SANDY fat CLAY SANDY fat CLAY with GRAVEL GRAVELLY fat CLAY GRAVELLY fat CLAY with SAND
MH	Elastic SILT Elastic SILT with SAND Elastic SILT with GRAVEL SANDY elastic SILT SANDY elastic SILT with GRAVEL GRAVELLY elastic SILT GRAVELLY elastic SILT with SAND
OH	ORGANIC fat CLAY ORGANIC fat CLAY with SAND ORGANIC fat CLAY with GRAVEL SANDY ORGANIC fat CLAY SANDY ORGANIC fat CLAY with GRAVEL GRAVELLY ORGANIC fat CLAY GRAVELLY ORGANIC fat CLAY with SAND
OH	ORGANIC elastic SILT ORGANIC elastic SILT with SAND ORGANIC elastic SILT with GRAVEL SANDY ORGANIC elastic SILT SANDY ORGANIC elastic SILT with GRAVEL GRAVELLY ORGANIC elastic SILT GRAVELLY ORGANIC elastic SILT with SAND
OL/OH	ORGANIC SOIL ORGANIC SOIL with SAND ORGANIC SOIL with GRAVEL SANDY ORGANIC SOIL SANDY ORGANIC SOIL with GRAVEL GRAVELLY ORGANIC SOIL GRAVELLY ORGANIC SOIL with SAND

FIELD AND LABORATORY TESTING

- (C) Consolidation (ASTM D 2435)
- (CL) Collapse Potential (ASTM D 5333)
- (CP) Compaction Curve (CTM 216)
- (CR) Corrosivity Testing (CTM 643, CTM 422, CTM 417)
- (CU) Consolidated Undrained Triaxial (ASTM D 4767)
- (DS) Direct Shear (ASTM D 3080)
- (EI) Expansion Index (ASTM D 4829)
- (M) Moisture Content (ASTM D 2216)
- (OC) Organic Content-% (ASTM D 2974)
- (P) Permeability (CTM 220)
- (PA) Particle Size Analysis (ASTM D 422)
- (PI) Plasticity Index (AASHTO T 90) Liquid Limit (AASHTO T 89)
- (PL) Point Load Index (ASTM D 5731)
- (PM) Pressure Meter
- (R) R-Value (CTM 301)
- (SE) Sand Equivalent (CTM 217)
- (SG) Specific Gravity (AASHTO T 100)
- (SL) Shrinkage Limit (ASTM D 427)
- (SW) Swell Potential (ASTM D 4546)
- (UC) Unconfined Compression-Soil (ASTM D 2166) Unconfined Compression-Rock (ASTM D 2938)
- (UU) Unconsolidated Undrained Triaxial (ASTM D 2850)
- (UW) Unit Weight (ASTM D 4767)

APPARENT DENSITY OF COHESIONLESS SOILS

Description	SPT N_{60} (Blows / 12 in.)
Very Loose	0 - 5
Loose	5 - 10
Medium Dense	10 - 30
Dense	30 - 50
Very Dense	Greater than 50

MOISTURE

Description	Criteria
Dry	No discernable moisture
Moist	Moisture present, but no free water
Wet	Visible free water

PERCENT OR PROPORTION OF SOILS

Description	Criteria
Trace	Particles are present but estimated to be less than 5%
Few	5% - 10%
Little	15% - 25%
Some	30% - 45%
Mostly	50% - 100%

PARTICLE SIZE

Description		Size (in.)
Boulder		Greater than 12
Cobble		3 - 12
Gravel	Coarse	3/4 - 3
	Fine	1/5 - 3/4
Sand	Coarse	1/16 - 1/5
	Medium	1/64 - 1/16
	Fine	1/300 - 1/64
Silt and Clay		Less than 1/300

ENGINEERING SERVICES

MATERIALS AND GEOTECHNICAL SERVICES

PREPARED BY: W. Tang 6/11

STATE OF CALIFORNIA DEPARTMENT OF TRANSPORTATION

DIVISION OF ENGINEERING SERVICES STRUCTURE DESIGN DESIGN BRANCH 17

BRIDGE NO. 29E0009

POST MILE 18.15

SOUTH STOCKTON WIDENING

SOUND WALL NO. 9

LOG OF TEST BORINGS 3 OF 3

GS LOTB SOIL LEGEND

ORIGINAL SCALE IN INCHES FOR REDUCED PLANS 0 1 2 3

UNIT: 3643
PROJECT NUMBER & PHASE: 10000004091
CONTRACT NO.: 10-3A1001

DISREGARD PRINTS BEARING EARLIER REVISION DATES

REVISION DATES 9-7-11

SHEET 12 OF 12

FILE => 29e-0009-z-ltb3of3.dgn

USERNAME => s119571 DATE PLOTTED => 29-MAR-2012 TIME PLOTTED => 13:47

DIST	COUNTY	ROUTE	POST MILES TOTAL PROJECT	SHEET No.	TOTAL SHEETS
10	SJ	4,99	R19.5/R20.1, 15.0/18.6	1300	1414

REGISTERED CIVIL ENGINEER — DATE 11-04-11

PLANS APPROVAL DATE 3-26-12

REGISTERED PROFESSIONAL ENGINEER — CHRIS UDARBE — No. C62985 — Exp. 06-30-12 — CIVIL — STATE OF CALIFORNIA

The State of California or its officers or agents shall not be responsible for the accuracy or completeness of electronic copies of this plan sheet.

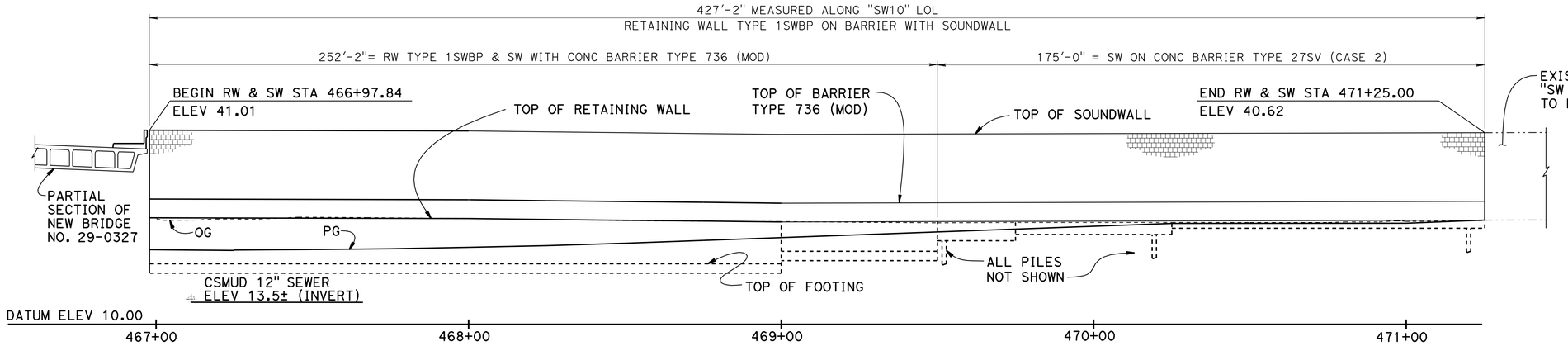

MIRRORED ELEVATION

VERT: 1" = 10'
HORIZ: 1" = 20'

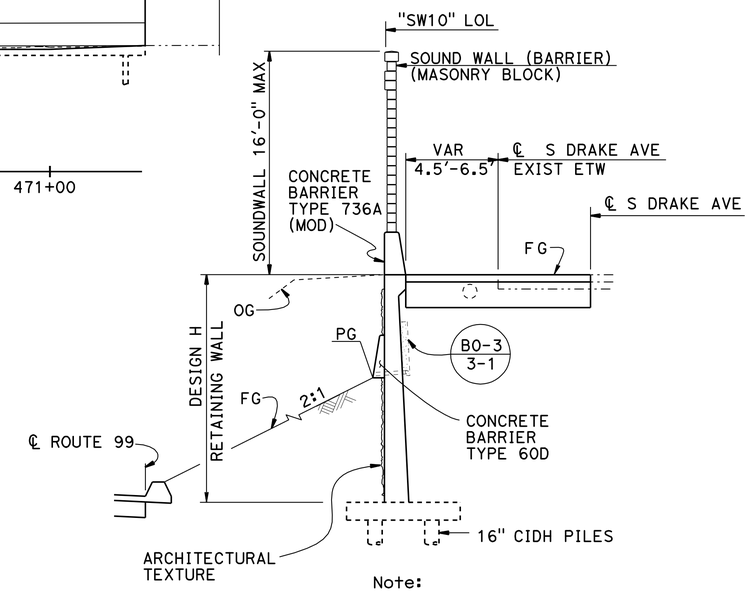

Note:

For RW & SW additional details, see "XS" sheets

TYPICAL SECTION

3/16" = 1'-0"

STANDARD PLANS DATED MAY 2006

SHEET NO.	TITLE
A10A - A10B	ACRONYMS AND ABBREVIATIONS
A10C - A10D	SYMBOLS AND BACKFILL - BRIDGE SURCHARGE AND WALL
A76A	CONCRETE BARRIER TYPE 60
B0-3	BRIDGE DETAILS
B0-13	BRIDGE DETAILS
B2-3	16" AND 24" CAST-IN-DRILLED-HOLE CONCRETE PILE
B3-8	RETAINING WALL DETAILS NO.1
B3-9	RETAINING WALL DETAILS NO.2
B11-52	CHAIN LINK RAILING TYPE 7
A62B	LIMITS OF PAYMENT FOR ECAVATION
B15-6	SOUND WALL MASONRY BLOCK ON TYPE 736S/SV BARRIER DETAILS (1)
B15-7	SOUND WALL MASONRY BLOCK ON TYPE 736S/SV BARRIER DETAILS (2)
B15-8	SOUND WALL MASONRY BLOCK ON TYPE 736S/SV BARRIER DETAILS (3)

STANDARD PLAN SHEET NO.

DETAIL NO.

QUANTITIES

BRIDGE REMOVAL (PORTION), LOCATION I	LUMP	SUM
STRUCTURE EXCAVATION (RETAINING WALL)	530	CY
STRUCTURE BACKFILL (RETAINING WALL)	297	CY
PERVIOUS BACKFILL MATERIAL (RETAINING WALL)	9	CY
16" CAST-IN-DRILLED-HOLE CONCRETE PILING	1,658	LF
STRUCTURAL CONCRETE, RETAINING WALL	176	CY
ARCHITECTURAL TEXTURE (SPLIT FACE)	505	SQFT
SOUND WALL (MASONRY BLOCK)	5,555	SQFT
BAR REINFORCING STEEL (RETAINING WALL)	16,453	LB
CONCRETE BARRIER (TYPE 60D)	427	LF
CONCRETE BARRIER (TYPE 736 MODIFIED)	252	LF
CONCRETE BARRIER (TYPE 736SV, HE=3')	25	LF
CONCRETE BARRIER (TYPE 736SV, HE=2')	50	LF
CONCRETE BARRIER (TYPE 736SV, HE=1')	100	LF

Note:

1. For additional details, see "STRUCTURE PLAN NO.1 & NO.2" sheets
2. For architectual treatment, see" ARCHITECTURAL DETAILS NO. 1 & NO. 2" sheets

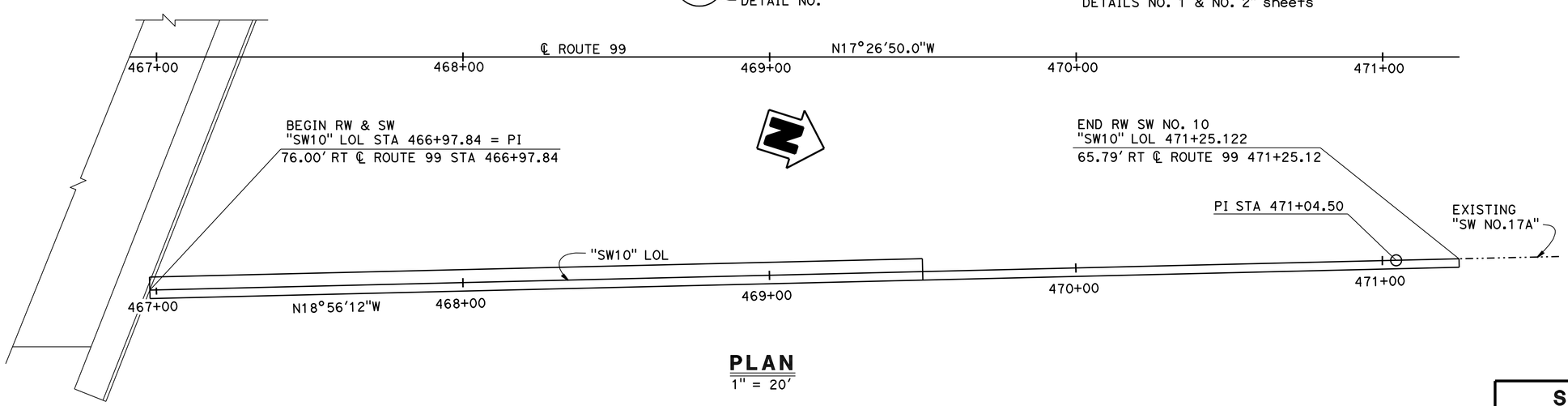

PLAN

1" = 20'

INDEX TO PLANS

1. GENERAL PLAN
2. STRUCTURE PLAN NO. 1
3. STRUCTURE PLAN NO. 2
4. FOUNDATION PLAN
5. TYPICAL SECTION
6. PILE DETAILS
7. MISCELLANEOUS DETAILS
8. RETAINING WALL TYPE 1SWBP - DETAIL NO.1
9. RETAINING WALL TYPE 1SWBP - DETAIL NO.2
10. SOUNDWALL ON RETAINING WALL- MASONRY BLOCK DETAILS NO. 1
11. SOUNDWALL ON RETAINING WALL- MASONRY BLOCK DETAILS NO. 2
12. ARCHITECTURAL DETAILS NO. 1
13. ARCHITECTURAL DETAILS NO. 2
14. LOG OF TEST BORINGS 1 OF 5
15. LOG OF TEST BORINGS 2 OF 5
16. LOG OF TEST BORINGS 3 OF 5
17. LOG OF TEST BORINGS 4 OF 5
18. LOG OF TEST BORINGS 5 OF 5

Gary Joe
DESIGN ENGINEER

	BY	CHECKED
DESIGN	C. Udarbe	R. Coria
DETAILS	L. Wang	C. Udarbe
QUANTITIES	P. Vu	R. Coria

LOAD & RESISTANCE FACTOR DESIGN — LIVE LOADING: HL93 W/"LOW-BOY": PERMIT DESIGN VEHICLE

	BY	CHECKED
LAYOUT	C. Udarbe	R. Coria
SPECIFICATIONS	V. Renganathan	PLANS AND SPECS COMPARED V. Renganathan

ORIGINAL SCALE IN INCHES FOR REDUCED PLANS 0 1 2 3

STATE OF CALIFORNIA
DEPARTMENT OF TRANSPORTATION

DIVISION OF ENGINEERING SERVICES
STRUCTURE DESIGN
DESIGN BRANCH 17

BRIDGE NO. 29E0010
POST MILE 18.15

UNIT: 3586
PROJECT NUMBER & PHASE: 10000004091
CONTRACT NO.: 10-3A1001

DISREGARD PRINTS BEARING EARLIER REVISION DATES → 06-02-10 9-29-10 02-29-12

SHEET 1 OF 18

SOUTH STOCKTON WIDENING
SOUNDWALL NO. 10
GENERAL PLAN

STRUCTURES DESIGN GENERAL PLAN SHEET (ENGLISH) (REV.09-01-10)

FILE => 29e-0010-a-gp.dgn

USERNAME => s119571 DATE PLOTTED => 29-MAR-2012 TIME PLOTTED => 13:47