Dist	COUNTY	ROUTE	POST MILES TOTAL PROJECT	SHEET No.	TOTAL SHEETS
10	SJ	4,99	R19.5/R20.1, 15.0/18.6	420	1414

Sean Pledger 12-05-11
REGISTERED CIVIL ENGINEER DATE

3-26-12
PLANS APPROVAL DATE

REGISTERED PROFESSIONAL ENGINEER SEAN M. PLEDGER No. 56328 Exp. 12-31-12 CIVIL STATE OF CALIFORNIA

THE STATE OF CALIFORNIA OR ITS OFFICERS OR AGENTS SHALL NOT BE RESPONSIBLE FOR THE ACCURACY OR COMPLETENESS OF SCANNED COPIES OF THIS PLAN SHEET.

NOTES (THIS SHEET ONLY):

1. FOR UNPAVED AREAS, LEAVE MAINTENANCE HOLE ABOVE GROUND AS REQUIRED BY AGENCY.
2. HEIGHT "H" IS THE DIFFERENCE IN ELEVATION BETWEEN THE COVER AND THE OUTFLOWING PIPE FLOW LINE.

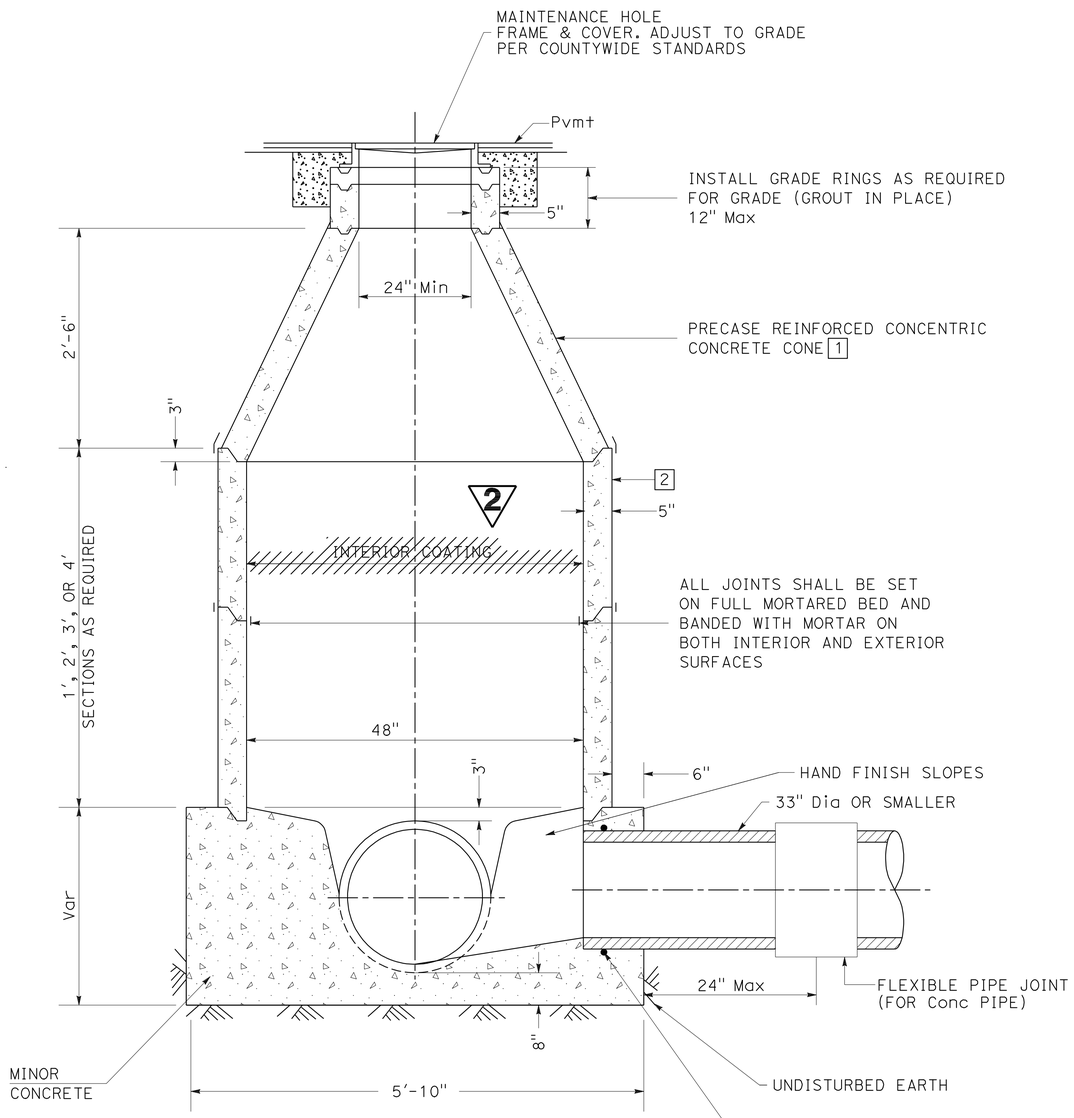

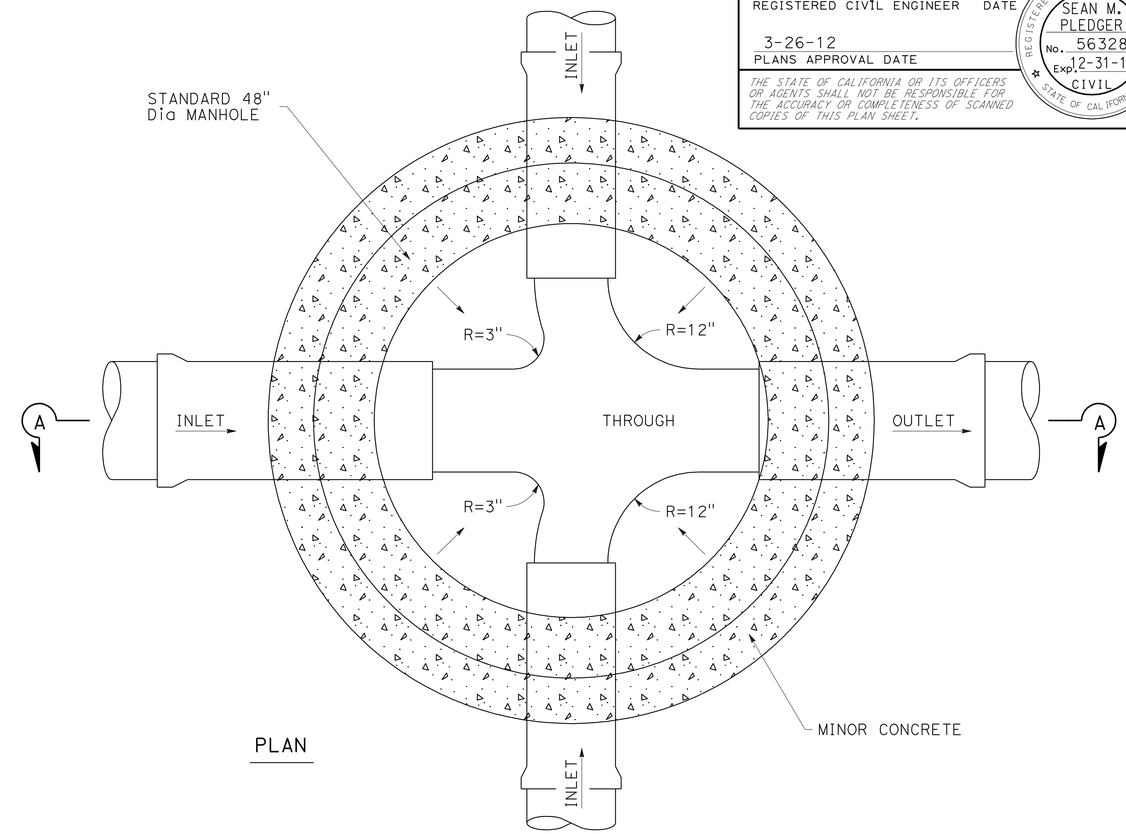

PLAN

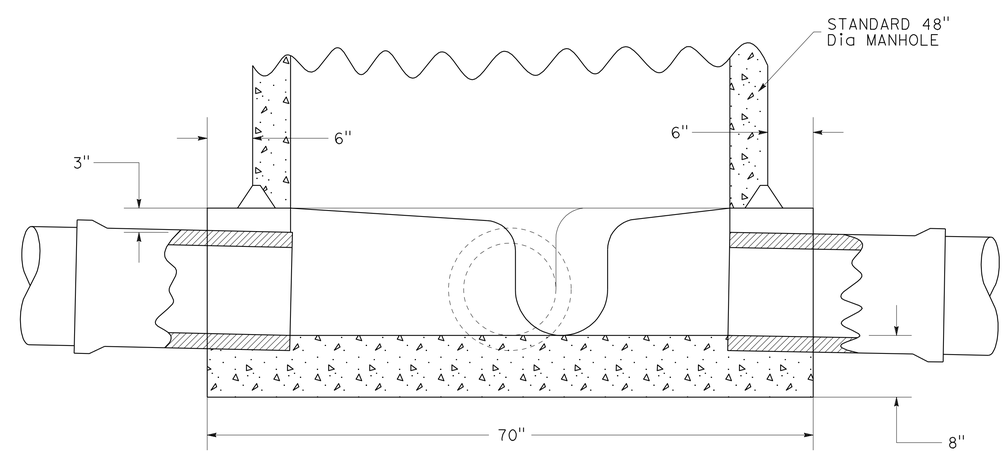

SECTION A-A

DRAINAGE DETAILS

TYPE 1 MANHOLE

2 **REVISED PER ADDENDUM No. 2 DATED SEPTEMBER 11, 2012**

NO SCALE

DD-8

STATE OF CALIFORNIA - DEPARTMENT OF TRANSPORTATION
Caltrans
06-DESIGN
FUNCTIONAL SUPERVISOR: MARTIN NISHIKAWA
CALCULATED-DESIGNED BY: JOSE A GONZALEZ
CHECKED BY: ASHLYN SWAN
REVISED BY
DATE REVISED

LAST REVISION 05-26-11
DATE PLOTTED => 10-SEP-2012
TIME PLOTTED => 05:54

Dist	COUNTY	ROUTE	POST MILES TOTAL PROJECT	SHEET No.	TOTAL SHEETS
10	SJ	4,99	R19.5/R20.1, 15.0/18.6	421	1414

REGISTERED CIVIL ENGINEER 12-05-11 DATE

3-26-12
PLANS APPROVAL DATE

REGISTERED PROFESSIONAL ENGINEER SEAN M. PLEDGER No. 56328 Exp. 12-31-12 CIVIL STATE OF CALIFORNIA

THE STATE OF CALIFORNIA OR ITS OFFICERS OR AGENTS SHALL NOT BE RESPONSIBLE FOR THE ACCURACY OR COMPLETENESS OF SCANNED COPIES OF THIS PLAN SHEET.

SET WEIGHT	
FRAME	126 LB
COVER	165 LB
TOTAL	291 LB

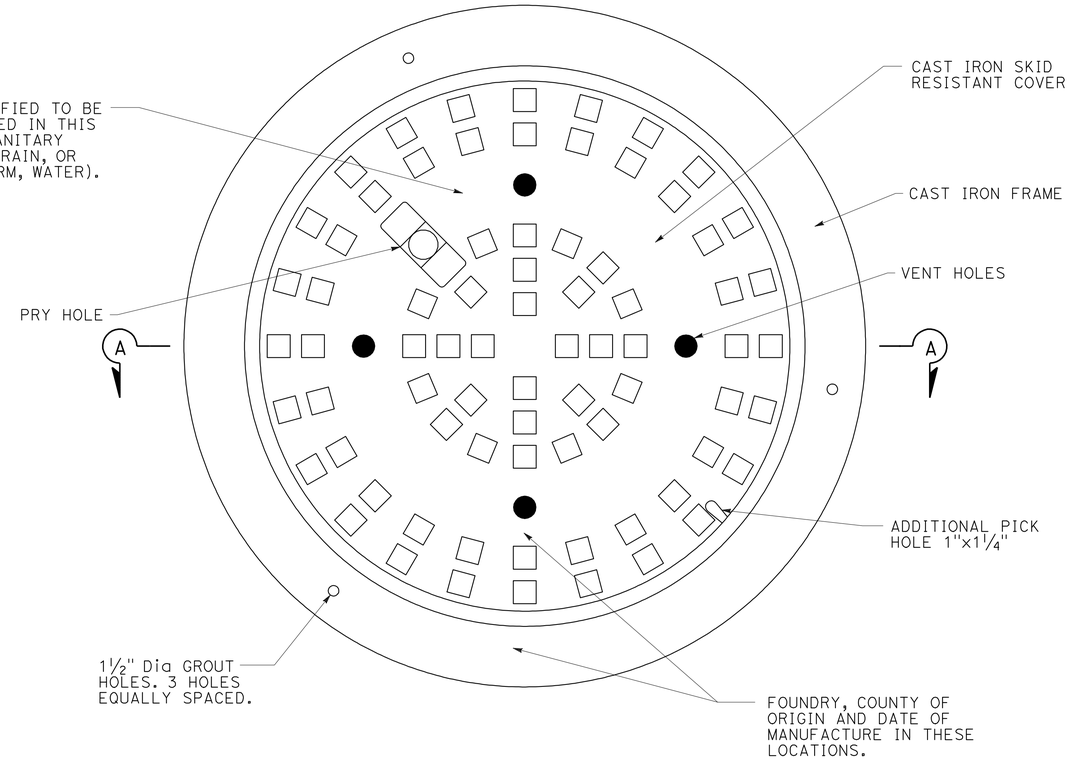

PLAN

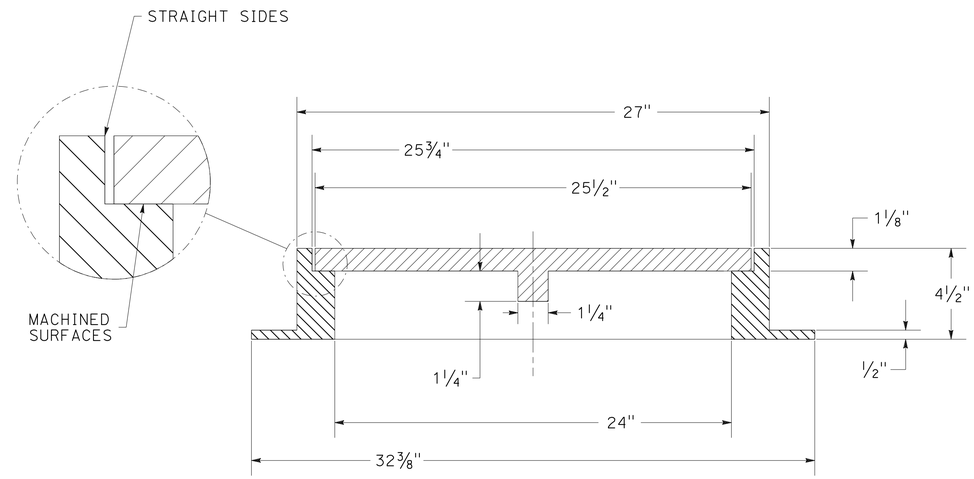

SECTION A-A

MANHOLE FRAME AND COVER

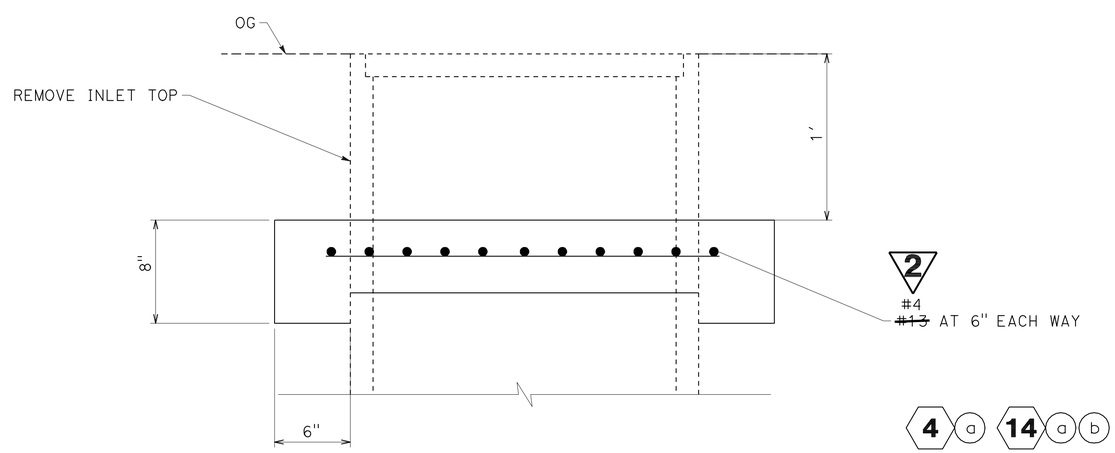

4 a 14 a b 208 e 230 a 238 a

CAP INLET

2 REVISED PER ADDENDUM No. 2 DATED SEPTEMBER 11, 2012

DRAINAGE DETAILS

NO SCALE

DD-9

STATE OF CALIFORNIA - DEPARTMENT OF TRANSPORTATION
Caltrans
06-DESIGN

FUNCTIONAL SUPERVISOR: MARTIN NISHIKAWA
CALCULATED-DESIGNED BY: JOSE A GONZALEZ
CHECKED BY: ASHLYN SWAN
REVISED BY
DATE REVISED

LAST REVISION 05-26-11
DATE PLOTTED => 10-SEP-2012
TIME PLOTTED => 09:54

Dist	COUNTY	ROUTE	POST MILES TOTAL PROJECT	SHEET No.	TOTAL SHEETS
10	SJ	4,99	R19.5/R20.1, 15.0/18.6	794	1414

REGISTERED CIVIL ENGINEER DATE 12-05-11

PLANS APPROVAL DATE 3-26-12

REGISTERED PROFESSIONAL ENGINEER SEAN M. PLEDGER No. 56328 Exp. 12-31-12 CIVIL STATE OF CALIFORNIA

THE STATE OF CALIFORNIA OR ITS OFFICERS OR AGENTS SHALL NOT BE RESPONSIBLE FOR THE ACCURACY OR COMPLETENESS OF SCANNED COPIES OF THIS PLAN SHEET.

FENCE AND GATE

LOCATION	SIDE	CHAIN LINK FENCE (TYPE CL-6)	CHAIN LINK FENCE (TYPE CL-6, SLATTED)	10' CHAIN LINK GATE (TYPE CL-6)	12' CHAIN LINK GATE (TYPE CL-6)	TEMPORARY FENCE (TYPE CL-6, SLATTED)	TEMPORARY FENCE (TYPE CL-8, SLATTED)	REMOVE FENCE	PIPE FENCE	PIPE GATE	REMARKS
		LF	LF	EA	EA	LF	LF	LF	LF	EA	
"GOLD" Sta 34+69.4 TO "GG3" Sta 436+09.9	Lt	246									
"GOLD" Sta 34+69.4 TO "GG1" Sta 431+93.3	Lt							834			
"GOLD" Sta 32+16.4 TO " GOLD Sta 45+47.7	Rt	1,366									
"GOLD" Sta 45+47.7 TO "R99" Sta 446+75.3	Lt							2,370			QUANTITY INCLUDES EXISTING PROPERTY FENCES IN CONFLICT
"GG3" Sta 437+09.9 TO "GG3" Sta 439+89.4	Lt							590			QUANTITY INCLUDES EXISTING PROPERTY FENCES IN CONFLICT
"GOLD" Sta 48+16.6 TO "GOLD" Sta 60+78.2	Rt	1,214									
"GG4" Sta 427+74.6 TO "GOLD" Sta 64+06.9	Rt	1,790									
"GG2" Sta 426+22.9 TO "R99" Sta 429+96.2	Rt							1,550			QUANTITY INCLUDES EXISTING PROPERTY FENCES IN CONFLICT
"R99" Sta 430+38.0 TO "R99" Sta 445+36.2	Rt							3.308			QUANTITY INCLUDES EXISTING PROPERTY FENCES IN CONFLICT
"GG2" Sta 426+22.9 TO "GOLD" Sta 60+78.2	Rt							4,313			QUANTITY INCLUDES EXISTING PROPERTY FENCES IN CONFLICT
"GOLD" Sta 60+38.1 TO "OLIVE" Sta 10+58.1	Rt							658			QUANTITY INCLUDES EXISTING PROPERTY FENCES IN CONFLICT
"R99" Sta 447+68.1 TO "MLK" Sta 47+17.5	Rt							1,602			
"GG3" Sta 444+55.3 TO "R99" Sta 447+22.8	Lt	283									
"R99" Sta 448+31.6 TO "R99" Sta 456+73.0	Lt							1,382			
"R99" Sta 448+55.7 TO "R99" Sta 452+84.8	Lt	1,119									
"R99" Sta 452+60.0	Lt				1						
"MLK" Sta 39+05.0 TO "MLK" Sta 39+76.0	Lt	66						71			
"MLK" Sta 46+12.0 TO "MLK" Sta 47+17.5	Rt	149									
"ANT" Sta 11+52.8 TO "MAIN" Sta 29+70.0	Rt							360			QUANTITY INCLUDES EXISTING PROPERTY FENCES IN CONFLICT
"MAIN" Sta 26+41.6 TO "MAIN" Sta 28+36.3	Rt							195			
"MAIN" Sta 26+41.0 TO "MAIN" Sta 27+19.5	Lt							79			
"MAIN" Sta 20+04.8 TO "MAIN" Sta 24+51.4	Lt							440			
"MAIN" Sta 23+06.0 TO "MAIN" Sta 24+73.3	Rt							283			
"MAIN" Sta 23+06.0 TO "MAIN" Sta 24+51.00	Rt	243									
"MAIN" Sta 23+15.9	Rt				1						
"MAIN" Sta 20+04.8 TO "MAIN" Sta 21+76.5	Lt	174									
"MAIN" Sta 22+00.4 TO "MAIN" Sta 24+46.0	Lt	247									
"MAIN" Sta 26+55.8 TO "MAIN" Sta 29+21.6	Lt	266									
"MLK" Sta 46+71.0 TO "MAIN" Sta 26+90.3	Lt	560									
"MAIN" Sta 22+00.0 TO "R99" Sta 472+99.5	Lt						760				
"GG4" Sta 430+41.9 TO "GG4" Sta 436+57.7	Rt	174				623					
"GG3" Sta 436+18.7 TO "GG3" Sta 439+55.3	Lt	247				422					
"R99" Sta 442+17.8 TO "R99" Sta 455+17.1	Rt	266				1,231					
"R99" Sta 452+85.4 TO "R99" Sta 458+61.0	Lt	560				579					
"R99" Sta 461+70.3 TO "R99" Sta 464+95.0	Lt	560				376	~~760~~ 2				
SUBTOTAL		9,530			2	3,231	760	18,035			
SHEET Q-4 TOTAL		13,816	3,174	10				22,407	691	5	
TOTAL		23,346	3,174	10	2	3,231	760	40,442	691	5	

2 REVISED PER ADDENDUM No. 2 DATED SEPTEMBER 11, 2012

SUMMARY OF QUANTITIES

Q-5

STATE OF CALIFORNIA - DEPARTMENT OF TRANSPORTATION

Caltrans 06-DESIGN

FUNCTIONAL SUPERVISOR MARTIN NISHIKAWA

CALCULATED-DESIGNED BY HAISAM SOLIMAN

CHECKED BY SEAN PLEDGER

REVISED BY

DATE REVISED

LAST REVISION DATE PLOTTED => 10-SEP-2012 TIME PLOTTED => 05:53

05-26-11

DIST	COUNTY	ROUTE	POST MILES TOTAL PROJECT	SHEET No.	TOTAL SHEETS
10	SJ	4,99	R19.5/R20.1, 15.0/18.6	992	1414

REGISTERED CIVIL ENGINEER — DATE 11-04-11

3-26-12
PLANS APPROVAL DATE

REGISTERED PROFESSIONAL ENGINEER — CHRIS UDARBE — No. C62985 — Exp. 06-30-12 — CIVIL — STATE OF CALIFORNIA

The State of California or its officers or agents shall not be responsible for the accuracy or completeness of electronic copies of this plan sheet.

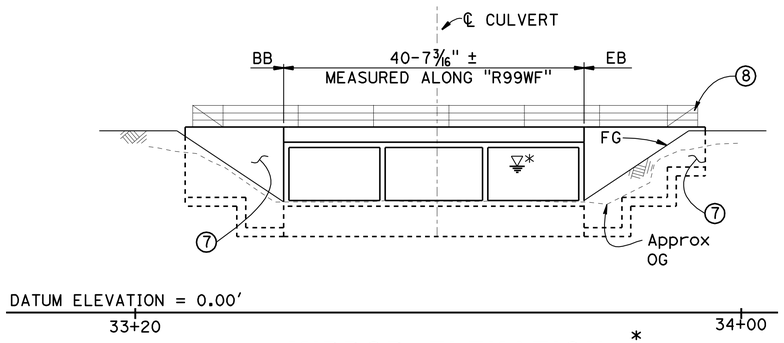

MIRROR ELEVATION
1" = 10'

* 100 YR HW ELEV = 24.9 ft.
FOR HYDROLOGIC SUMMARY,
SEE "FOUNDATION PLAN" SHEET

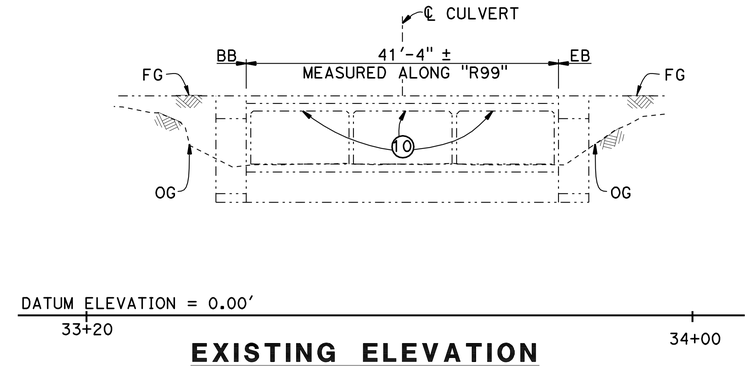

EXISTING ELEVATION
1" = 10'

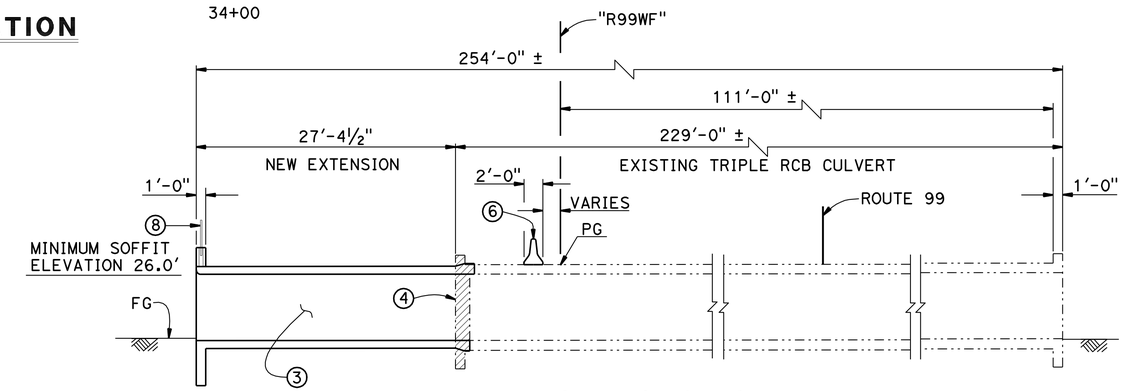

TYPICAL SECTION
1/8" = 1'-0"

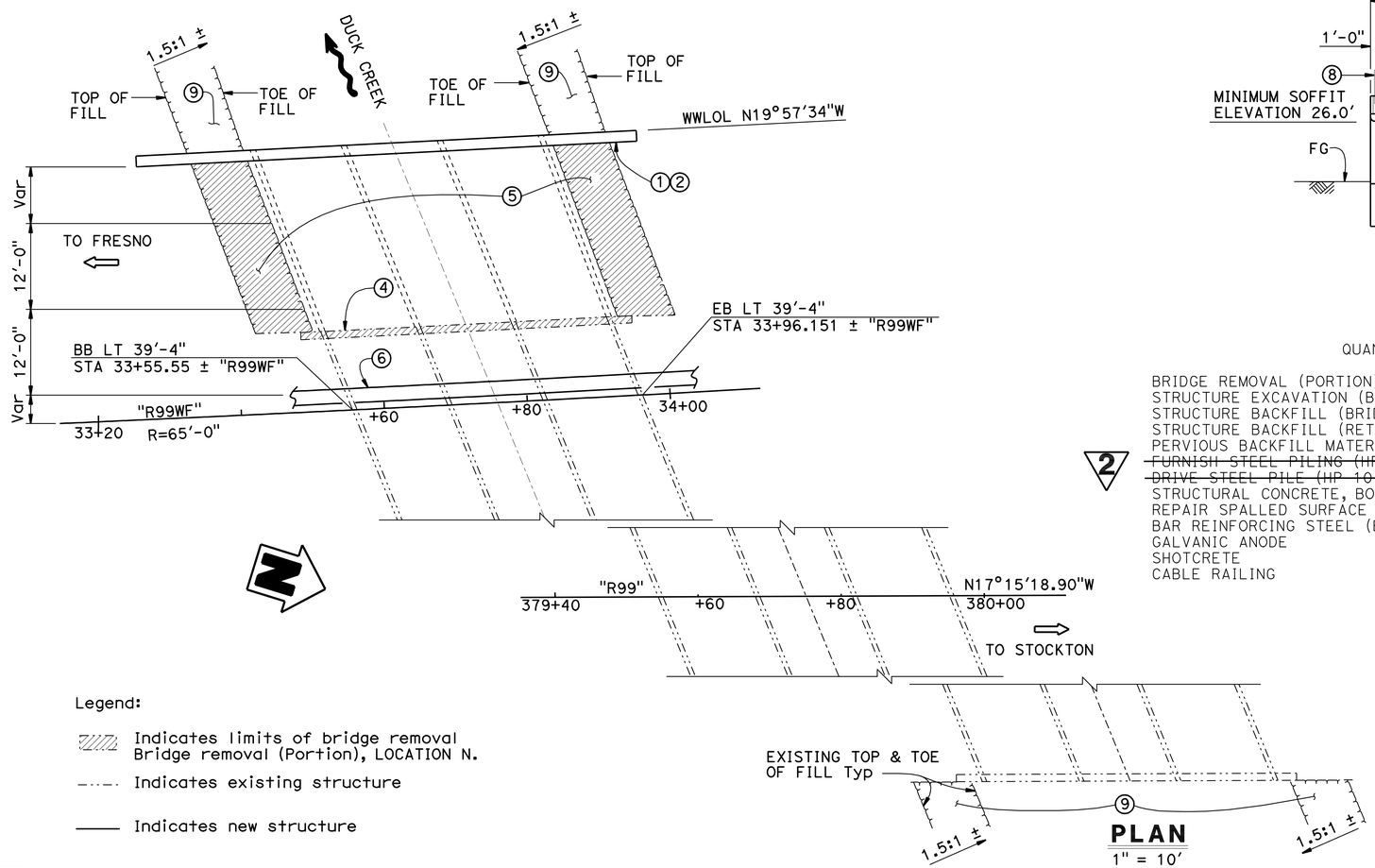

PLAN
1" = 10'

QUANTITIES

BRIDGE REMOVAL (PORTION), LOCATION N	LUMP	SUM
STRUCTURE EXCAVATION (BRIDGE)	296	CY
STRUCTURE BACKFILL (BRIDGE)	141	CY
STRUCTURE BACKFILL (RETAINING WALL)	693	CY
PERVIOUS BACKFILL MATERIAL	16	CY
~~FURNISH STEEL PILING (HP 10 X 42)~~	~~2,000~~	~~LF~~
~~DRIVE STEEL PILE (HP 10 X 42)~~	~~35~~	~~EA~~
STRUCTURAL CONCRETE, BOX CULVERT	128	CY
REPAIR SPALLED SURFACE AREA	102	SQFT
BAR REINFORCING STEEL (BOX CULVERT)	26,921	LB
GALVANIC ANODE	60	EA
SHOTCRETE	2	CY
CABLE RAILING	75	LF

Notes:

1. Paint "DUCK CREEK BRIDGE"
2. Paint "BR. NO. 29-0012"
3. Triple 12'-0" x 7'-0" RCB Culvert
4. Remove existing parapet, wingwalls and cut off wall
5. Remove existing slope paving
6. Temporary "K" railing, see "ROAD PLANS"
7. Box culvert wing wall (Type B)
8. Cable railing
9. Existing slope paving
10. Repair existing RCB culvert soffit.

Legend:

- Indicates limits of bridge removal Bridge removal (Portion), LOCATION N.
- Indicates existing structure
- Indicates new structure

2 REVISED PER ADDENDUM No. 2 DATED SEPTEMBER 11, 2012

Gary Joe
DESIGN ENGINEER

	BY	CHECKED			
DESIGN	T. Win	C. Udarbe	LOAD & RESISTANCE FACTOR DESIGN	LIVE LOADING: HL93 W/"LOW-BOY"; PERMIT DESIGN VEHICLE	
DETAILS	L. Wang	C. Udarbe	LAYOUT	C. Udarbe	T. Win
QUANTITIES	S. Mam	T. Win	SPECIFICATIONS	V. Renganathan	V. Renganathan

ORIGINAL SCALE IN INCHES FOR REDUCED PLANS 0 1 2 3

STATE OF CALIFORNIA
DEPARTMENT OF TRANSPORTATION

DIVISION OF ENGINEERING SERVICES
STRUCTURE DESIGN
DESIGN BRANCH 17

BRIDGE NO. 29-0012
POST MILE 16.47

SOUTH STOCKTON WIDENING
DUCK CREEK BRIDGE
GENERAL PLAN

UNIT: 3586
PROJECT NUMBER & PHASE: 10000004091
CONTRACT NO.: 10-3A1001

DISREGARD PRINTS BEARING EARLIER REVISION DATES

REVISION DATES: ~~06-27-11~~ ~~02-28-12~~ 02-29-12 — SHEET 1 OF 9

USERNAME => s121614 DATE PLOTTED => 10-SEP-2012 TIME PLOTTED => 05:51

STRUCTURES DESIGN GENERAL PLAN SHEET (ENGLISH) (REV.09-01-10)

FILE => 29-0012-a-gp.add

DIST	COUNTY	ROUTE	POST MILES TOTAL PROJECT	SHEET No.	TOTAL SHEETS
10	SJ	4,99	R19.5/R20.1, 15.0/18.6	1256	1414

REGISTERED CIVIL ENGINEER — DATE 11-04-11

PLANS APPROVAL DATE 3-26-12

REGISTERED PROFESSIONAL ENGINEER — CHRIS UDARBE — No. C62985 — Exp. 6-30-12 — CIVIL — STATE OF CALIFORNIA

The State of California or its officers or agents shall not be responsible for the accuracy or completeness of electronic copies of this plan sheet.

INDEX TO PLANS

Sheet No.	Title
1	GENERAL PLAN
2	FOUNDATION PLAN
3	WALL DETAILS
4	ARCHITECTURAL DETAILS NO. 1
5	ARCHITECTURAL DETAILS NO. 2

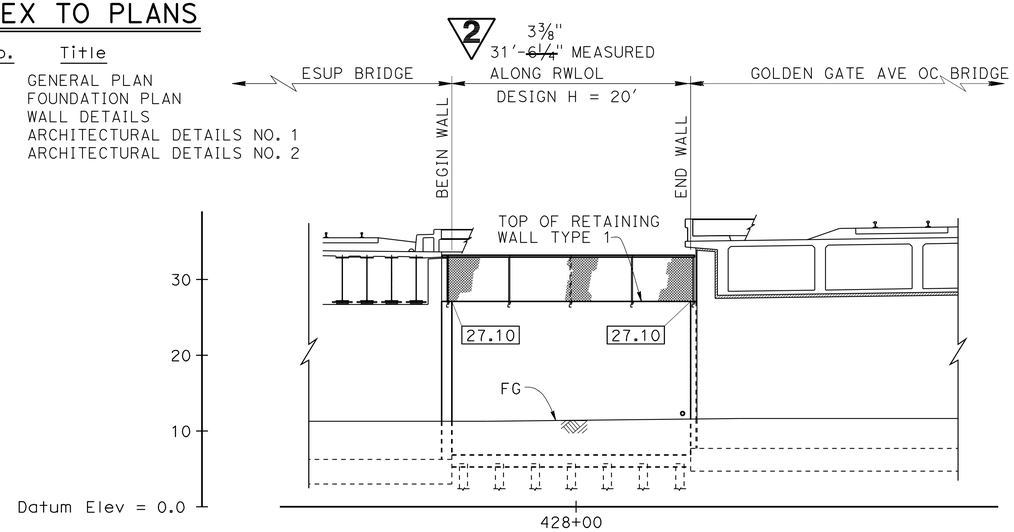

ELEVATION

1" = 10'

PILE DATA TABLE

Location	Pile Type	Nominal Resistance		Design Tip Elevation (ft)	Specified Tip Elevation (ft)	Nominal Driving Resistance (kips)
		Compression	Tension			
29E0003	HP 10 x 42	180 kips	0	-46	-46	180

Note: Design tip elevations for all support locations are controlled by Compression.
For log of test borings, see Br. No. 29-0330.

STANDARD PLANS DATED MAY 2006

A10A	ACRONYMS AND ABBREVIATIONS (SHEET 1 OF 2)
A10B	ACRONYMS AND ABBREVIATIONS (SHEET 2 OF 2)
A10C	SYMBOLS (SHEET 1 OF 2)
A10D	SYMBOLS (SHEET 2 OF 2)
A62B	LIMITS OF PAYMENT FOR EXCAVATION AND BACKFILL-BRIDGE SURCHARGE AND WALL
B0-3	BRIDGE DETAILS
B3-1	RETAINING WALL TYPE 1 H=4' THROUGH 30'
B3-8	RETAINING WALL DETAILS NO. 1
B3-9	RETAINING WALL DETAILS NO. 2
B11-52	CHAIN LINK RAILING TYPE 7

QUANTITIES

STRUCTURE EXCAVATION (RETAINING WALL)	201	CY
STRUCTURE BACKFILL (RETAINING WALL)	138	CY
PERVIOUS BACKFILL MATERIAL (RETAINING WALL)	15	CY
FURNISH STEEL PILING (HP 10 X 42)	711	LF
DRIVE STEEL PILE (HP 10 X 42)	15	EA
STRUCTURAL CONCRETE, BRIDGE FOOTING	21	CY
STRUCTURAL CONCRETE, RETAINING WALL	33	CY
ARCHITECTURAL TEXTURE (SPLIT FACE)	368	SQFT
ARCHITECTURAL TEXTURE (RIVER ROCK)	92	SQFT
BAR REINFORCING STEEL (RETAINING WALL)	8,267	LB
MINOR CONCRETE (GUTTER)	32	LF
CHAIN LINK RAILING (TYPE 7)	32	LF
CONCRETE BARRIER (TYPE 60D)	32	LF

STANDARD PLAN SHEET NO.

DETAIL NO.

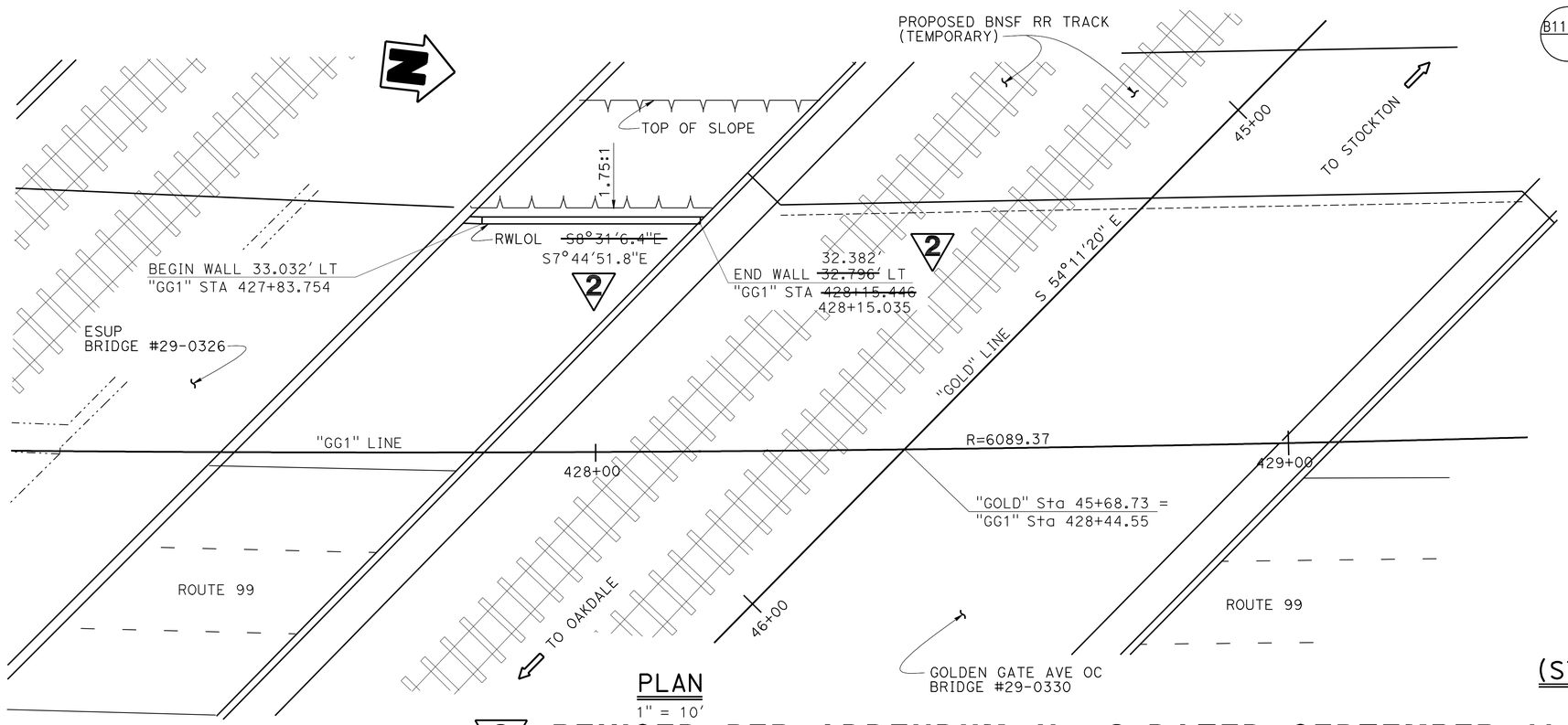

PLAN

1" = 10'

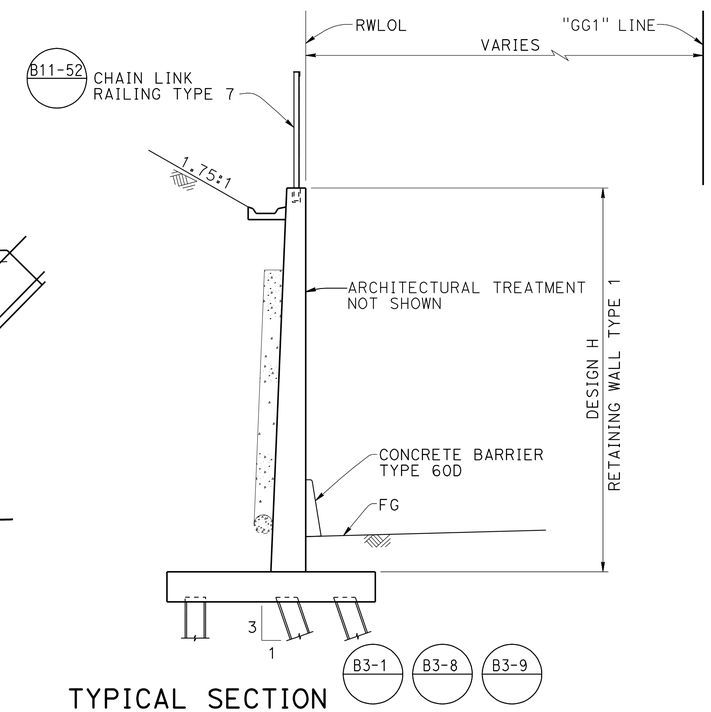

TYPICAL SECTION

83.754 2 15.035 2

(STA 427+~~81.80~~ TO STA 428+~~15.03~~)

¼" = 1'-0"

2 **REVISED PER ADDENDUM No. 2 DATED SEPTEMBER 11, 2012**

DESIGN	BY M. FRIEDHEIM	CHECKED I. CHERNIOGLO	LOAD & RESISTANCE FACTOR DESIGN	LIVE LOADING: HL93 W/"LOW-BOY"; PERMIT DESIGN VEHICLE
DETAILS	BY C. FIGUERRES	CHECKED I. CHERNIOGLO	LAYOUT BY M. FRIEDHEIM	CHECKED I. CHERNIOGLO
QUANTITIES	BY I. CHERNIOGLO	CHECKED M. FRIEDHEIM	SPECIFICATIONS BY V. RENGANATHAN	PLANS AND SPECS COMPARED V. RENGANATHAN

Gary Joe
DESIGN ENGINEER

ORIGINAL SCALE IN INCHES FOR REDUCED PLANS 0 1 2 3

STATE OF CALIFORNIA
DEPARTMENT OF TRANSPORTATION

DIVISION OF ENGINEERING SERVICES
STRUCTURE DESIGN
DESIGN BRANCH 17

BRIDGE NO. 29E0003
POST MILE 17.41

SOUTH STOCKTON WIDENING
CONNECTING WALL
GENERAL PLAN

UNIT: 3586
PROJECT NUMBER & PHASE: 10000004091
CONTRACT NO.: 10-3A1001

DISREGARD PRINTS BEARING EARLIER REVISION DATES

REVISION DATES: 06-13-11 02-22-12 05-02-11

SHEET 1 OF 5

USERNAME => s121614 DATE PLOTTED => 10-SEP-2012 TIME PLOTTED => 05:51

STRUCTURES DESIGN GENERAL PLAN SHEET (ENGLISH) (REV.09-01-10)

FILE => 29e0003-a-gp.add

DIST	COUNTY	ROUTE	POST MILES TOTAL PROJECT	SHEET No	TOTAL SHEETS
10	SJ	4,99	R19.5/R20.1, 15.0/18.6	1257	1414

REGISTERED CIVIL ENGINEER — DATE 11-04-11

3-26-12
PLANS APPROVAL DATE

The State of California or its officers or agents shall not be responsible for the accuracy or completeness of electronic copies of this plan sheet.

REGISTERED PROFESSIONAL ENGINEER — CHRIS V. UDARBE — No. 62985 — Exp. 06-30-12 — CIVIL — STATE OF CALIFORNIA

CURVE DATA

No.	R	Δ	T	L
(B)	6089.37	2°49'33"	150.20	300.33
(C)	2002.63	4°46'25"	83.47	166.84
(D)	6136.47	12°22'40"	665.44	1325.69
(E)	150.00	201°00'46"	808.83	526.25
(F)	3819.72	13°22'49"	448.05	892.02
(G)	3819.72	13°22'49"	448.05	892.02

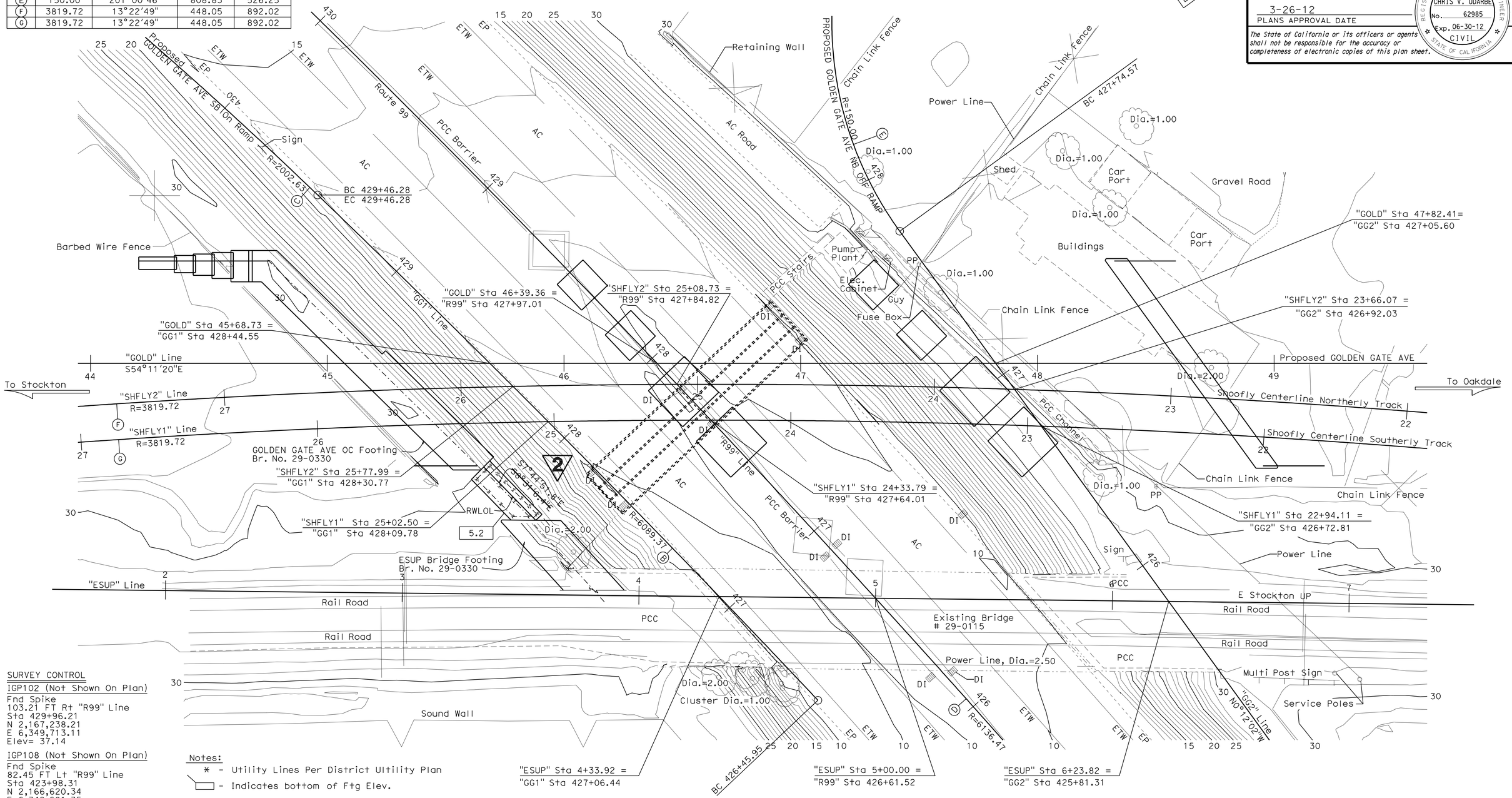

SURVEY CONTROL

IGP102 (Not Shown On Plan)
Fnd Spike
103.21 FT Rt "R99" Line
Sta 429+96.21
N 2,167,238.21
E 6,349,713.11
Elev= 37.14

IGP108 (Not Shown On Plan)
Fnd Spike
82.45 FT Lt "R99" Line
Sta 423+98.31
N 2,166,620.34
E 6,349,601.35
Elev= 28.53

Notes:
* - Utility Lines Per District Ultility Plan
▭ - Indicates bottom of Ftg Elev.

2 REVISED PER ADDENDUM No. 2 DATED SEPTEMBER 11, 2012

PRELIMINARY INVESTIGATION SECTION

SCALE	VERT.DATUM	NGVD29	PHOTOGRAMMETRY AS OF: X			
1"=20'	HORZ.DATUM	NAD198 (1991.35)	SURVEYED	BY District/T.Gillett	CHECKED	BY T.Gillett 09/2009
ALIGNMENT TIES	Dist. Traverse Sheet		DRAFTED	BY J.Martinez 09/2009	CHECKED	BY L.Lew 09/2009

	BY	CHECKED
DESIGN	M. FRIEDHEIM	I. CHERNIOGLO
DETAILS	C. FIGUERRES	I. CHERNIOGLO
QUANTITIES	I. CHERNIOGLO	M. FRIEDHEIM

STATE OF CALIFORNIA
DEPARTMENT OF TRANSPORTATION

DIVISION OF ENGINEERING SERVICES
STRUCTURE DESIGN
DESIGN BRANCH 17

BRIDGE NO. 29E0003
POST MILE 17.41

SOUTH STOCKTON WIDENING
CONNECTING WALL
FOUNDATION PLAN

STRUCTURES FOUNDATION PLAN SHEET (ENGLISH) (REV. 10/25/05)

ORIGINAL SCALE IN INCHES FOR REDUCED PLANS 0 1 2 3

UNIT: 3586
PROJECT NUMBER & PHASE: 10000004091
CONTRACT NO.: 10-3A1001

DISREGARD PRINTS BEARING EARLIER REVISION DATES

REVISION DATES: 04-26-11 06-13-11 06-14-11 1-29-11

SHEET 2 OF 5

FILE => 29e0003-e-fp.add

USERNAME => s121614 DATE PLOTTED => 10-SEP-2012 TIME PLOTTED => 05:52

DIST	COUNTY	ROUTE	POST MILES TOTAL PROJECT	SHEET No.	TOTAL SHEETS
10	SJ	4,99	R19.5/R20.1, 15.0/18.6	1258	1414

REGISTERED CIVIL ENGINEER 11-04-11 DATE

3-26-12
PLANS APPROVAL DATE

REGISTERED PROFESSIONAL ENGINEER CHRIS V. UDARBE No. 62985 Exp. 06-30-12 CIVIL STATE OF CALIFORNIA

The State of California or its officers or agents shall not be responsible for the accuracy or completeness of electronic copies of this plan sheet.

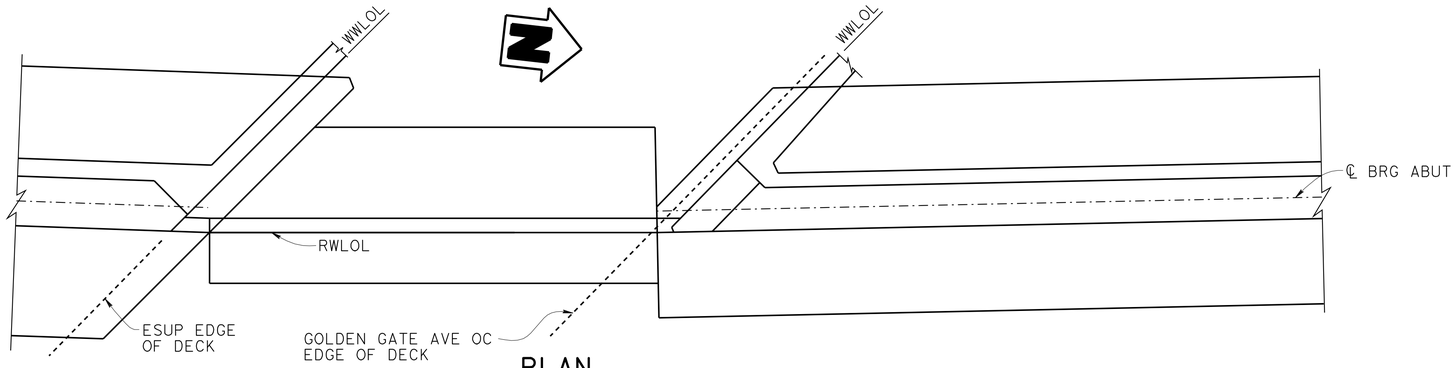

PLAN
3/16" = 1'-0"

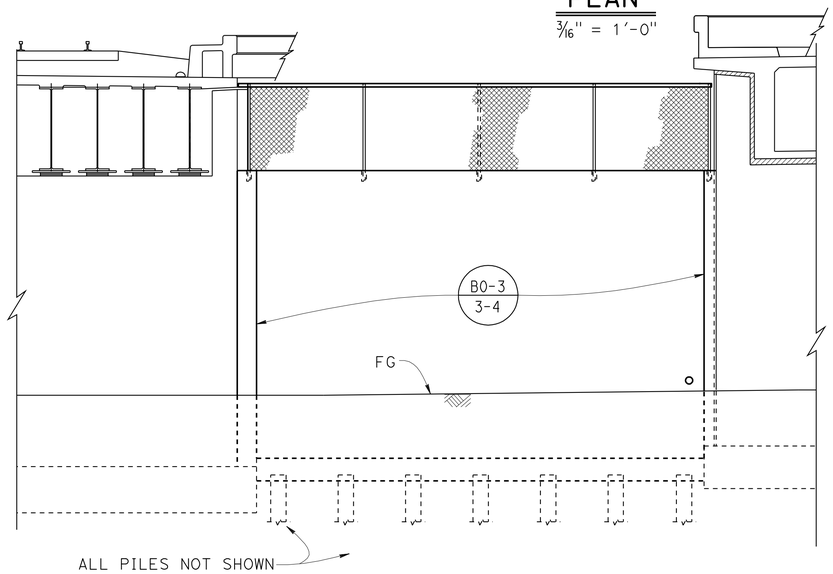

ELEVATION
3/16" = 1'-0"

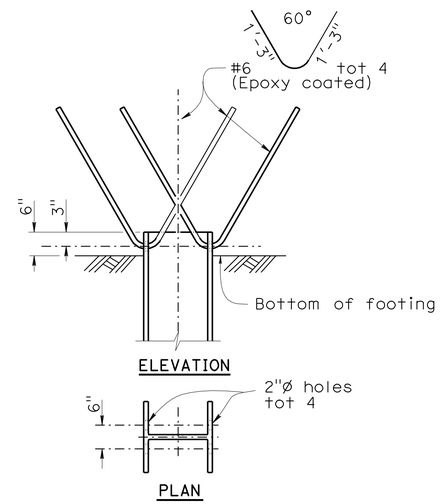

STEEL PILE ANCHOR
NO SCALE

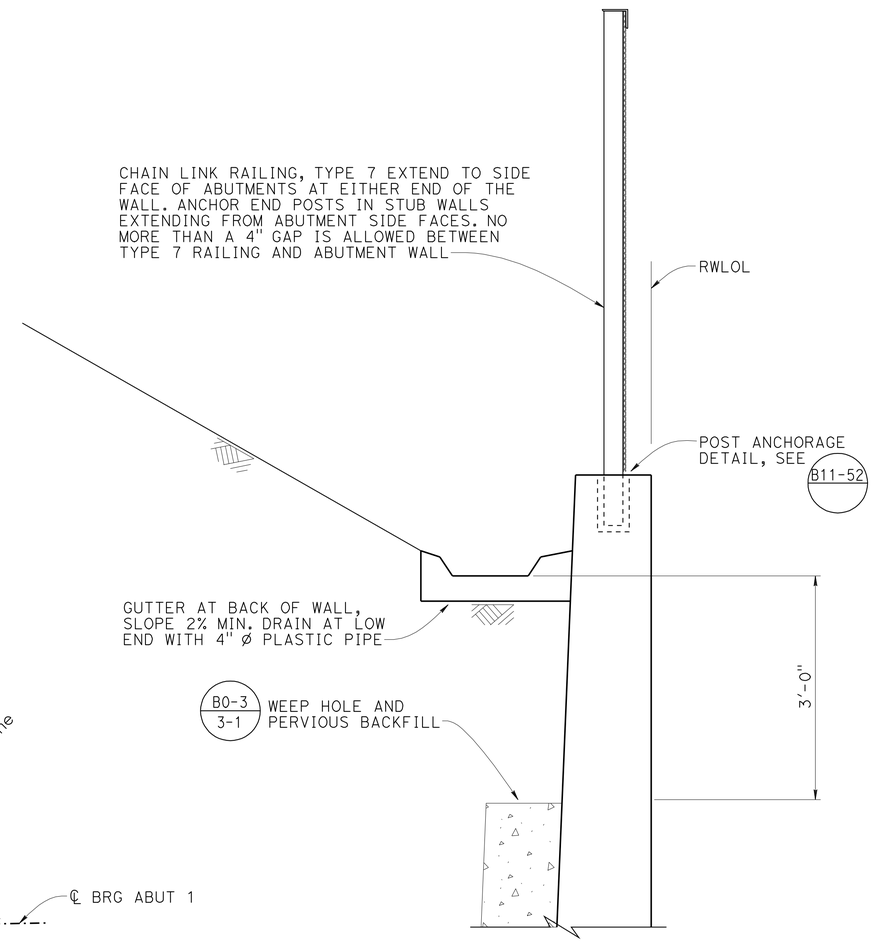

TOP OF WALL DETAIL
1" = 1'-0"

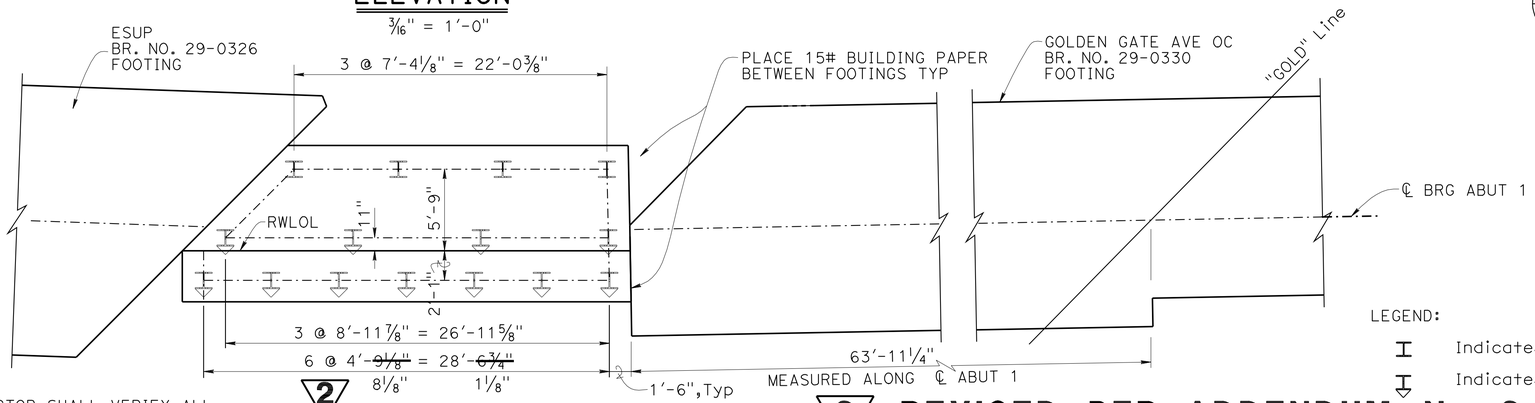

FOOTING PLAN
3/16" = 1'-0"

LEGEND:

- Indicates vertical pile
- Indicates battered pile (1:3)

NOTE:
THE CONTRACTOR SHALL VERIFY ALL CONTROLLING FIELD DIMENSIONS BEFORE ORDERING OR FABRICATING ANY MATERIAL.

REVISED PER ADDENDUM No. 2
DATED SEPTEMBER 11, 2012

	BY	CHECKED
DESIGN	M. FRIEDHEIM	I. CHERNIOGLO
DETAILS	C. FIGUERRES	I. CHERNIOGLO
QUANTITIES	I. CHERNIOGLO	M. FRIEDHEIM

STATE OF CALIFORNIA
DEPARTMENT OF TRANSPORTATION

DIVISION OF ENGINEERING SERVICES
STRUCTURE DESIGN
DESIGN BRANCH 17

BRIDGE NO. 29E0003
POST MILE 17.41

SOUTH STOCKTON WIDENING
CONNECTING WALL
WALL DETAILS

STRUCTURES DESIGN DETAIL SHEET (ENGLISH) (REV. 09-01-10)

ORIGINAL SCALE IN INCHES FOR REDUCED PLANS 0 1 2 3

UNIT: 3586
PROJECT NUMBER & PHASE: 10000004091
CONTRACT NO.: 10-3A1001

DISREGARD PRINTS BEARING EARLIER REVISION DATES

REVISION DATES 06-13-11 1-20-11 4-27-11 5-02-11

SHEET 3 OF 5

FILE => 29e0003-h-conwallio.add

USERNAME => s121614 DATE PLOTTED => 10-SEP-2012 TIME PLOTTED => 05:52

DIST	COUNTY	ROUTE	POST MILES TOTAL PROJECT	SHEET No.	TOTAL SHEETS
10	SJ	4,99	R19.5/R20.1, 15.0/18.6	1261	1414

REGISTERED CIVIL ENGINEER — DATE 11-04-11

PLANS APPROVAL DATE 3-26-12

REGISTERED PROFESSIONAL ENGINEER — CHRIS V. UDARBE — No. C62985 — Exp. 06-30-12 — CIVIL — STATE OF CALIFORNIA

The State of California or its officers or agents shall not be responsible for the accuracy or completeness of electronic copies of this plan sheet.

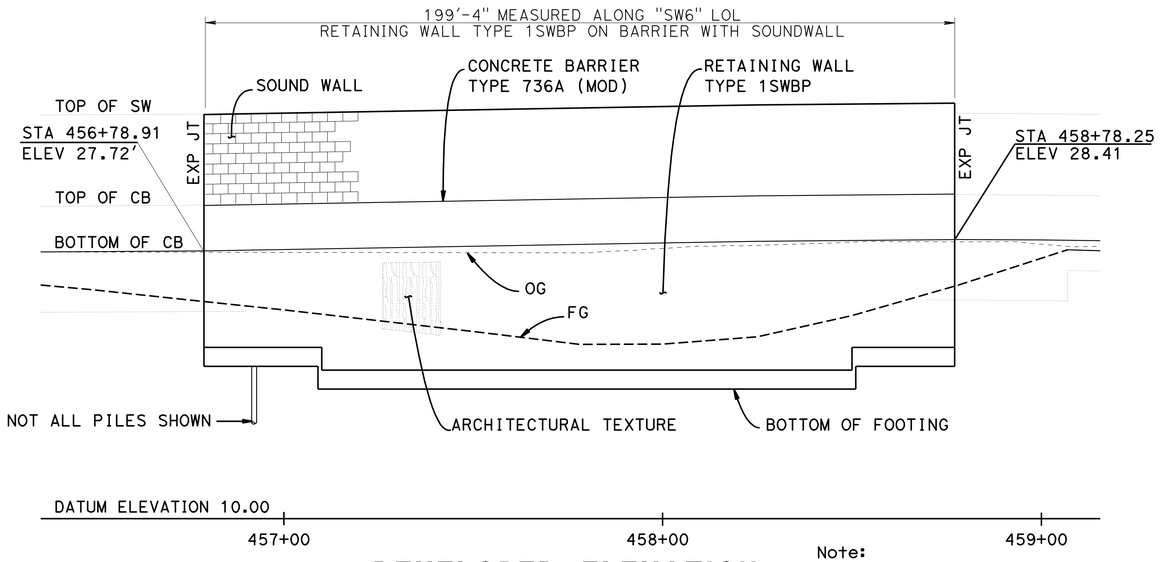

DEVELOPED ELEVATION

HOR 1" = 20"
VER 1" = 5'

Note:

For Pile Data, see "PILE LAYOUT" Sheet

INDEX TO PLANS

SHEET NO.	TITLE
1.	GENERAL PLAN
2.	STRUCTURE PLAN
3.	FOUNDATION PLAN
4.	PILE LAYOUT
5.	RETAINING WALL TYPE 1SWBP - DETAILS NO. 1
6.	RETAINING WALL TYPE 1SWBP - DETAILS NO. 2
7.	SOUNDWALL - MASONRY BLOCK WITH BARRIER ON RETAINING WALL DETAILS NO. 1
8.	SOUNDWALL - MASONRY BLOCK WITH BARRIER ON RETAINING WALL DETAILS NO. 2
9.	ARCHITECTURAL DETAILS
10.	LOG OF TEST BORINGS 1 OF 3
11.	LOG OF TEST BORINGS 2 OF 3
12.	LOG OF TEST BORINGS 3 OF 3

STANDARD PLANS DATED MAY 2006

SHEET NO.	TITLE
A10A - A10B	ACRONYMS AND ABBREVIATIONS
A10C - A10D	SYMBOLS
A62B	LIMITS OF PAYMENT FOR EXCAVATION AND BACKFILL - BRIDGE SURCHARGE AND WALL
A76C	CONCRETE BARRIER TYPE 60E
BO-3	BRIDGE DETAILS
B2-3	16" AND 24" CAST-IN-DRILLED-HOLE CONCRETE PILE
B3-8	RETAINING WALL DETAILS NO. 1
B11-56	CONCRETE BARRIER TYPE 736
B15-9	SOUND WALL MASONRY BLOCK MISCELLANEOUS DETAILS

STANDARD PLAN SHEET NO.

DETAIL NO.

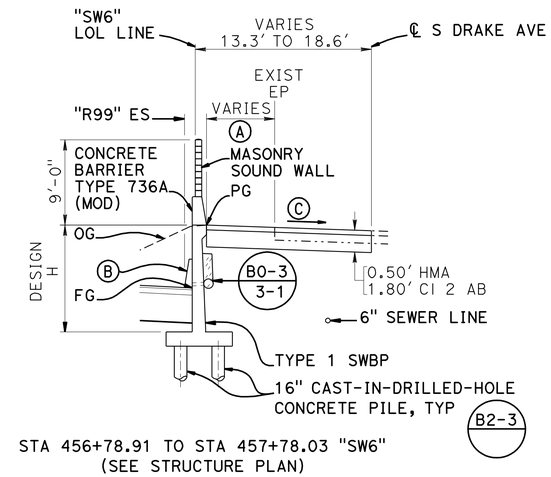

STA 456+78.91 TO STA 457+78.03 "SW6"
(SEE STRUCTURE PLAN)

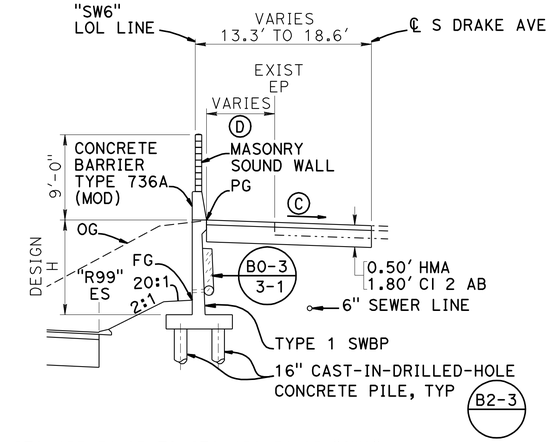

STA 457+78.03 TO STA 458+78.25 "SW6"
(SEE STRUCTURE PLAN)

TYPICAL SECTION

1/8" = 1'-0"

CURVE DATA

No.	R	Δ	T	L
SW6	650.00'	~~25°23'11.2"~~ 25°23'09"	146.40'	288.00'

QUANTITIES

STRUCTURE EXCAVATION (RETAINING WALL)	579	CY
STRUCTURE BACKFILL (RETAINING WALL)	205	CY
PERVIOUS BACKFILL MATERIAL (RETAINING WALL)	13	CY
16" CAST-IN-DRILLED-HOLE CONCRETE PILING	1,085	LF
STRUCTURAL CONCRETE, RETAINING WALL	145	CY
ARCHITECTURAL TEXTURE (SPLIT FACE)	1,196	SQFT
SOUND WALL (MASONRY BLOCK)	1,196	SQFT
BAR REINFORCING STEEL (RETAINING WALL)	13,179	LB
CONCRETE BARRIER (TYPE 736A MODIFIED)	199	LF

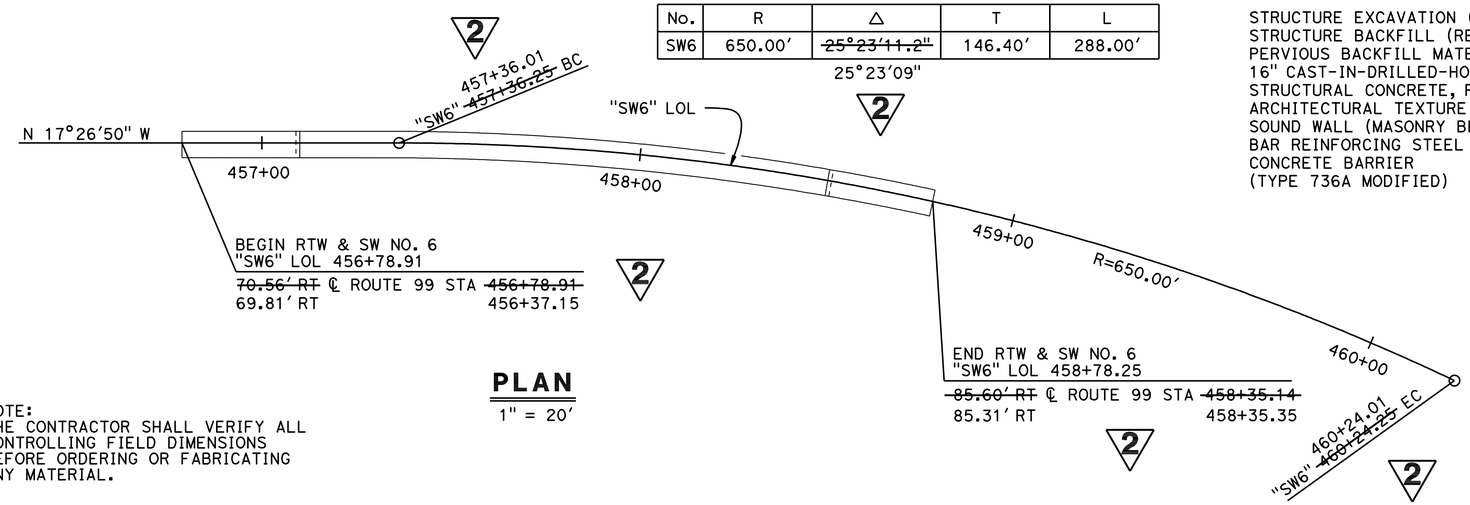

PLAN

1" = 20'

NOTE:
THE CONTRACTOR SHALL VERIFY ALL CONTROLLING FIELD DIMENSIONS BEFORE ORDERING OR FABRICATING ANY MATERIAL.

Notes:

(A) Varies from 0' to 5.8'
(B) Concrete Barrier Type 60E
(C) Match existing slope
(D) Varies from 5.8' to 7.2'

Legend:

Indicates new Structure
Indicates Existing Structure

2 REVISED PER ADDENDUM No. 2 DATED SEPTEMBER 11, 2012

DESIGN	BY C. UDARBE	CHECKED R. CORIA	LOAD & RESISTANCE FACTOR DESIGN	LIVE LOADING: HL93 W/"LOW-BOY"; PERMIT DESIGN VEHICLE	
DETAILS	BY MINH TRAN	CHECKED C. UDARBE	LAYOUT	BY MINH TRAN	CHECKED R. CORIA
QUANTITIES	BY P. VU	CHECKED R. CORIA	SPECIFICATIONS	BY V. RANGANATHAN	PLANS AND SPECS COMPARED V. RANGANATHAN

Gary Joe
DESIGN ENGINEER

ORIGINAL SCALE IN INCHES FOR REDUCED PLANS 0 1 2 3

STATE OF CALIFORNIA
DEPARTMENT OF TRANSPORTATION

DIVISION OF ENGINEERING SERVICES
STRUCTURE DESIGN
DESIGN BRANCH 17

BRIDGE NO. 29E0006
POST MILE 17.79

UNIT: 3586
PROJECT NUMBER & PHASE: 10000004091
CONTRACT NO.: 10-3A1001

DISREGARD PRINTS BEARING EARLIER REVISION DATES
REVISION DATES 01-04-11 2-15-12 08-03-11
SHEET 1 OF 12

SOUTH STOCKTON WIDENING
SOUND WALL NO. 06
GENERAL PLAN

STRUCTURES DESIGN GENERAL PLAN SHEET (ENGLISH) (REV.09-01-10)

FILE => 29e0006-sw-a-gp.dgn

USERNAME => s121614 DATE PLOTTED => 10-SEP-2012 TIME PLOTTED => 05:52