SARRA-STP-BRSTP-P165(011)

Dist	COUNTY	ROUTE	POST MILES TOTAL PROJECT	SHEET No.	TOTAL SHEETS
10	Mer	165	11.7/26.7	1	110

STATE OF CALIFORNIA

DEPARTMENT OF TRANSPORTATION

PROJECT PLANS FOR CONSTRUCTION ON

STATE HIGHWAY

IN MERCED COUNTY
NEAR LOS BANOS
FROM HENRY MILLER ROAD
TO 0.1 MILE SOUTH OF ROUTE 140

TO BE SUPPLEMENTED BY STANDARD PLANS DATED MAY 2006

INDEX OF PLANS

SHEET No.	DESCRIPTION
1	TITLE AND LOCATION MAP
2	TYPICAL CROSS SECTIONS
3	PROJECT CONTROL
4-8	LAYOUTS
9-10	PROFILE AND SUPERELEVATION DIAGRAM
11-14	CONSTRUCTION DETAILS
15-18	EROSION CONTROL
19-22	DRAINAGE PLANS, PROFILES AND QUANTITIES
23-24	UTILITY PLANS
25	CONSTRUCTION AREA SIGNS
26-34	DETOUR PLANS AND QUANTITIES
35-40	PAVEMENT DELINEATION AND SIGN PLAN AND QUANTITIES
41-46	SIGN DETAILS AND QUANTITIES
47-49	SUMMARY OF QUANTITIES
50-62	REVISED AND NEW STANDARD PLANS

STRUCTURE PLANS

63-75	SALT SLOUGH BRIDGE (WIDEN)
76-87	SAN JOAQUIN RIVER OVERFLOW BRIDGE (WIDEN)
88-110	SAN JOAQUIN RIVER BRIDGE (REPLACE)

THE STANDARD PLANS LIST APPLICABLE TO THIS CONTRACT IS INCLUDED IN THE NOTICE TO BIDDERS AND SPECIAL PROVISIONS BOOK.

LOCATION MAP

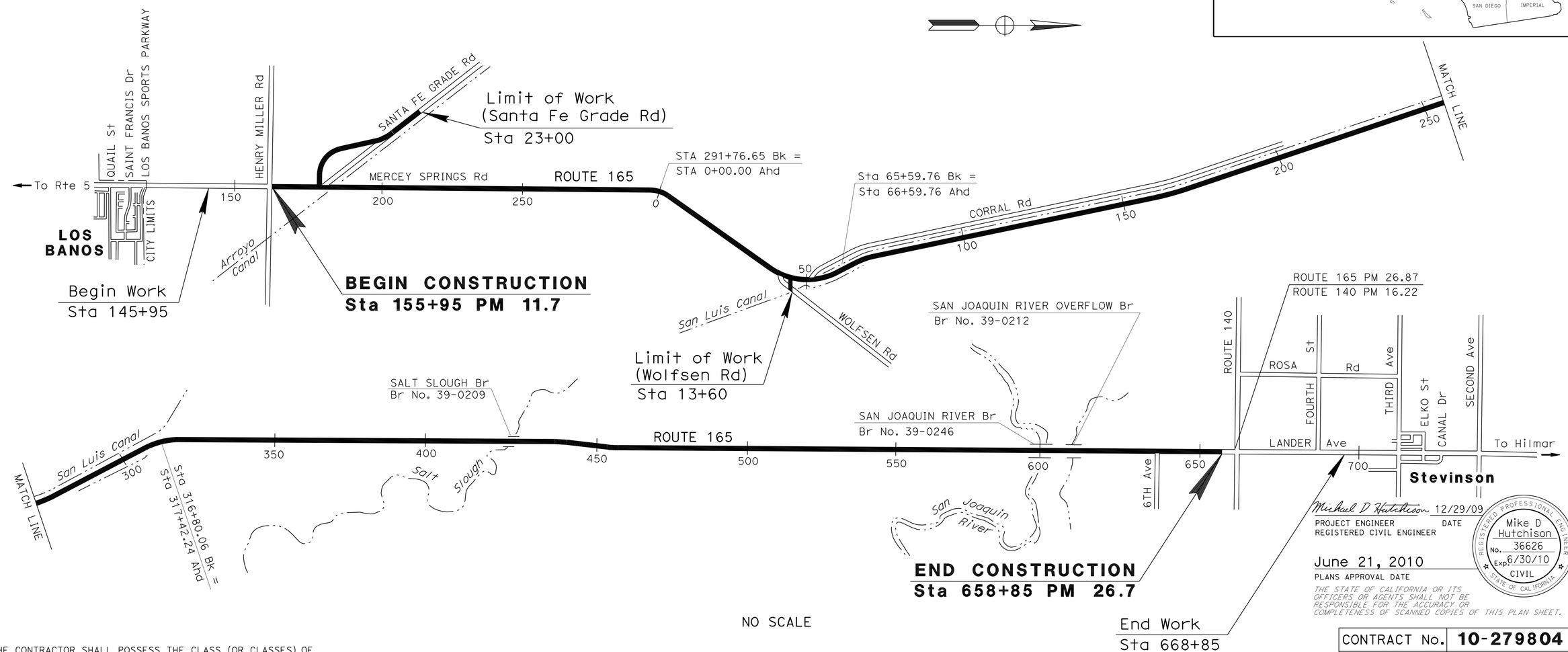

NO SCALE

Michael D Hutchison 12/29/09
PROJECT ENGINEER DATE
REGISTERED CIVIL ENGINEER

REGISTERED PROFESSIONAL ENGINEER
Mike D Hutchison
No. 36626
Exp. 6/30/10
CIVIL
STATE OF CALIFORNIA

June 21, 2010
PLANS APPROVAL DATE

THE STATE OF CALIFORNIA OR ITS OFFICERS OR AGENTS SHALL NOT BE RESPONSIBLE FOR THE ACCURACY OR COMPLETENESS OF SCANNED COPIES OF THIS PLAN SHEET.

THE CONTRACTOR SHALL POSSESS THE CLASS (OR CLASSES) OF LICENSE AS SPECIFIED IN THE "NOTICE TO BIDDERS."

PROJECT MANAGER TONY SINGH
DESIGN ENGINEER CAROLINE REYES

CONTRACT No.	10-279804
PROJECT ID	1000000379

LAST REVISION 00-00-00
DATE PLOTTED => 23-AUG-2010
TIME PLOTTED => 15:04

Dist	COUNTY	ROUTE	POST MILES TOTAL PROJECT	SHEET No.	TOTAL SHEETS
10	Mer	165	11.7/26.7	2	110

Michael D Hutchison 12/29/09
REGISTERED CIVIL ENGINEER DATE

6-21-10
PLANS APPROVAL DATE

REGISTERED PROFESSIONAL ENGINEER Mike Hutchison No. 36626 Exp. 6/30/10 CIVIL STATE OF CALIFORNIA

THE STATE OF CALIFORNIA OR ITS OFFICERS OR AGENTS SHALL NOT BE RESPONSIBLE FOR THE ACCURACY OR COMPLETENESS OF SCANNED COPIES OF THIS PLAN SHEET.

NOTES: 1. DIMENSIONS OF THE PAVEMENT STRUCTURES (STRUCTURAL SECTIONS) ARE SUBJECT TO TOLERANCES SPECIFIED IN THE STANDARD SPECIFICATIONS.

2. SUPERELEVATION AS SHOWN OR AS DIRECTED BY THE ENGINEER.

DESIGN DESIGNATION

ADT (2010)	6100	D	55%
ADT (2030)	12,300	T	7%
DHV	1200		

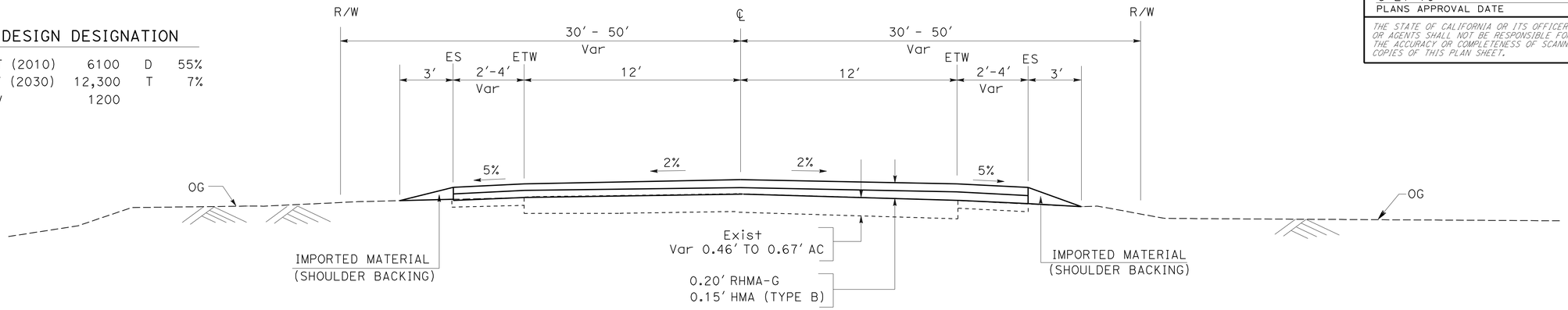

ROUTE 165

STA 155+95.00 TO STA 425+68.44
STA 426+69.76 TO STA 597+93.00
STA 602+05.00 TO STA 606+47.53
STA 607+02.77 TO STA 658+85.00

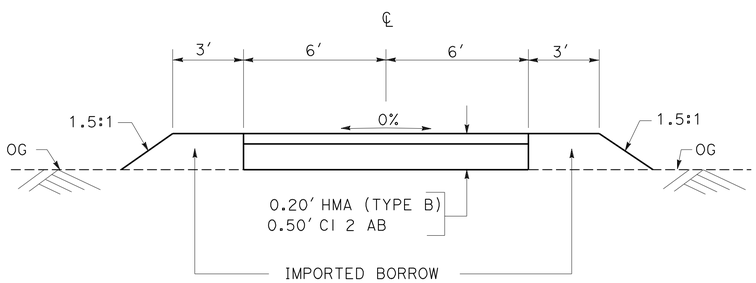

DRIVEWAY No. 1

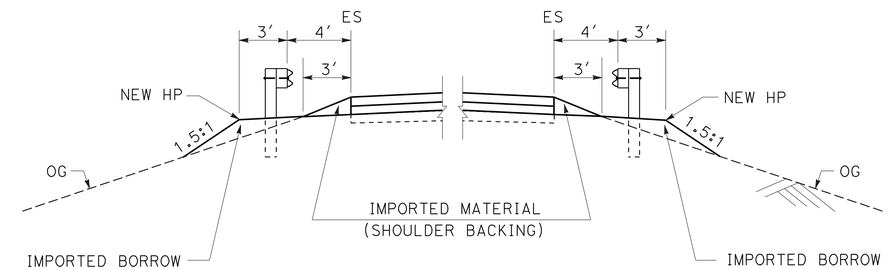

ROUTE 165

(SEE SHEET Q-1 FOR IMPORTED BORROW LOCATIONS)

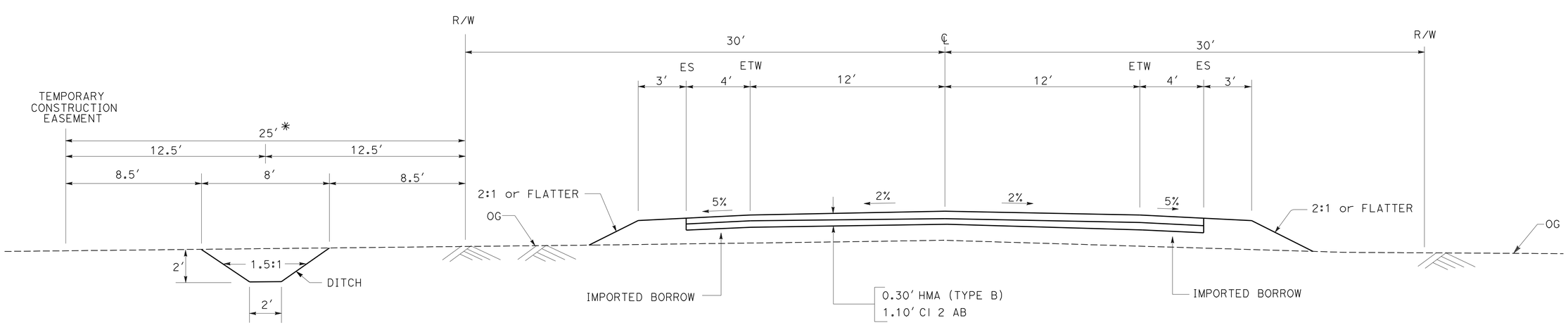

*** SANTA FE GRADE ROAD**
STA 11+50.00 TO STA 16+00.00

SANTA FE GRADE ROAD
STA 10+16.00 TO STA 23+00.00

WOLFSEN ROAD
STA 10+16.00 TO STA 13+50.00

TYPICAL CROSS SECTIONS

NO SCALE

X-1

STATE OF CALIFORNIA - DEPARTMENT OF TRANSPORTATION
DESIGN

FUNCTIONAL SUPERVISOR	CALCULATED-DESIGNED BY	CHECKED BY	REVISED BY	DATE REVISED
CAROLINE REYES	MARLON LOPEZ	MIKE HUTCHISON	ML	12/29/09

LAST REVISION 00-00-00 | DATE PLOTTED => 24-JUN-2010 | TIME PLOTTED => 07:03

Dist	COUNTY	ROUTE	POST MILES TOTAL PROJECT	SHEET No.	TOTAL SHEETS
10	Mer	165	11.7/26.7	3	110

PROFESSIONAL LAND SURVEYOR — DATE 12/29/09

6-21-10
PLANS APPROVAL DATE

LAND SURVEYOR — ROBERT P. CUNNINGHAM No. 6765 Exp. 9/30/10 — STATE OF CALIFORNIA

THE STATE OF CALIFORNIA OR ITS OFFICERS OR AGENTS SHALL NOT BE RESPONSIBLE FOR THE ACCURACY OR COMPLETENESS OF SCANNED COPIES OF THIS PLAN SHEET.

NOTES:

1. FOR COMPLETE PROJECT CONTROL DATA, SEE THE SURVEY RECORDS ON FILE IN THE SURVEYS DEPARTMENT AT THE DISTRICT OFFICE.
2. BASIS OF BEARINGS AND COORDINATES

   FOR THIS PROJECT ARE THE CALIFORNIA COORDINATE SYSTEM OF 1983, HPGN EPOCH ADJUSTMENT CCS83 1991.35, ZONE 3, U.S. SURVEY FOOT. 2ND ORDER PROJECT CONTROL STATIONS WERE ESTABLISHED IN FEBRUARY 2003 ACCORDING TO CRITERIA SET FORTH IN THE CALTRANS SURVEY MANUAL CHAPTER 6, GLOBAL POSITIONING SYSTEM (GPS) SURVEY SPECIFICATIONS , MARCH 2002.

   THIS GPS STATIC SURVEY WAS CONSTRAINED TO "B" ORDER AND 1ST ORDER STATIONS: BANOPORT HS5126, SALT RM1 HS1827, AND HPGN 10 10 1991 RESULTED IN RESIDUAL ERRORS RANGING FROM 0.01′ TO 0.04′ HORIZONTALLY AT THE 95% CONFIDENCE LEVEL. THE VALUES REPRESENTED IN THIS SURVEY MEET THE ABOVE-REFERENCED STANDARDS FOR 1ST ORDER HORIZONTAL REQUIREMENTS.

   SUBSEQUENT GPS AND CONVENTIONAL SURVEYS ESTABLISHED THE LISTED 2ND ORDER STATIONS.

3. BASIS OF ELEVATIONS

   FOR THIS PROJECT IS THE NATIONAL GEODETIC VERTICAL DATUM OF 1929 (NGVD 29). STATIONS AND RESPECTIVE ELEVATIONS CONSTRAINED TO ARE:
   87 CAHD, PID HS1821 NGVD29 ELEVATION 85.794 U.S. SURVEY FEET

4. IN THE EVENT GPS MACHINE CONTROL/GUIDANCE IS USED FOR THIS PROJECT, THE CONTRACTOR SHALL CONTACT AND MEET WITH THE SURVEYS DEPARTMENT AT THE DISTRICT OFFICE TO OBTAIN THE CONTROL NECESSARY TO ESTABLISH A PROJECT CALIBRATION COMPATIBLE FOR ALL USERS.

ABBREVIATIONS:

CT - CALIFORNIA DEPARTMENT OF TRANSPORTATION (CALTRANS)
PID - "HS__" NATIONAL GEODETIC SURVEY PERMANENT IDENTIFIER

LEGEND:

- (B) B ORDER STATION IN THE NATIONAL SPATIAL REFERENCE SYSTEM
- (1) 1ST ORDER STATION
- (2) 2ND ORDER STATION

CONTROL FOR DESIGN AND CONSTRUCTION

STATION DESIGNATION OR PID	ORDER	NORTHING	EASTING	NGVD 29 ELEVATION	DESCRIPTION
HPGN CA 10 01	B	1,842,488.562	6,490,735.3905	100.065	ALUMINUM ROD W/CT DISK
BANOPORT HS5126	1ST	1,844,537.075	6,454,289.358	118.274	NGS DISK TOP OF CONC MON
SALT RM1 HS1827	1ST	1,892,717.189	6,462,696.011	82.687	NGS DISK TOP OF CONC MON
PM11.88	2nd	1,859,664.558	6,463,993.072	97.5456	1"IP w/RED PLUG
PM12.18	2nd	1,861,200.080	6,464,042.8127	97.6245	1"IP w/RED PLUG
PM14.99	2nd	1,875,272.936	6,466,675.747	88.376	1"IP w/RED PLUG
PM15.20	2nd	1,876,218.088	6,467,257.3535	89.304	1"IP w/RED PLUG
PM15.45	2nd	1,877,533.804	6,466,623.129	86.509	1"IP w/RED PLUG
NGS VERTICAL					
KS13 HS1820	1ST			86.614	SURVEY DISK
KS15 HS1818	1ST			87.149	SURVEY DISK
KS14 HS1819	1ST			87.106	SURVEY DISK
87CAHD HS1821	1ST			85.794	SURVEY DISK
KS16 HS2025	1ST			87.828	SURVEY DISK

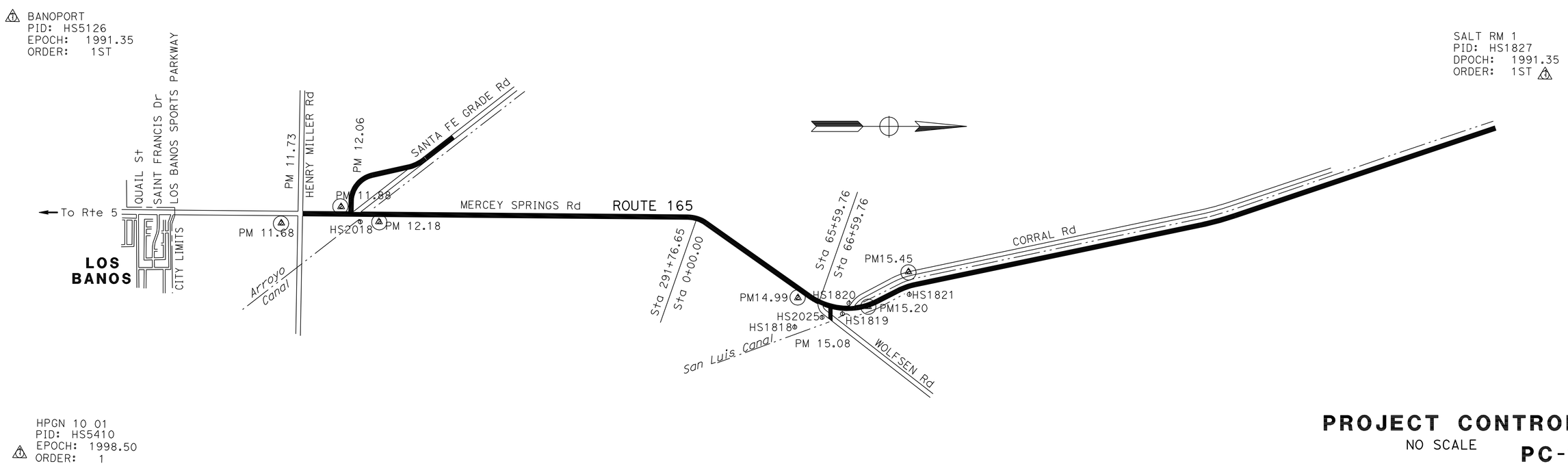

PROJECT CONTROL

NO SCALE

PC-1

STATE OF CALIFORNIA - DEPARTMENT OF TRANSPORTATION
Caltrans® OFFICE OF LAND SURVEYS

FUNCTIONAL SUPERVISOR: MIKE WAGNER
CALCULATED-DESIGNED BY: H. DELETTRE
CHECKED BY: B. ATKINSON
REVISED BY: HD
DATE REVISED: 12/17/09

RELATIVE BORDER SCALE IS IN INCHES 0 1 2 3

USERNAME => trlenard
DGN FILE => a27980dc001.dgn

CU 06840

EA 279801

LAST REVISION 00-00-00
DATE PLOTTED => 24-JUN-2010
TIME PLOTTED => 07:03

Dist	COUNTY	ROUTE	POST MILES TOTAL PROJECT	SHEET No.	TOTAL SHEETS
10	Mer	165	11.7/26.7	4	110

Michael D Hutchison 12/29/09
REGISTERED CIVIL ENGINEER DATE

6-21-10
PLANS APPROVAL DATE

REGISTERED PROFESSIONAL ENGINEER Mike Hutchison No. 36626 Exp. 6/30/10 CIVIL STATE OF CALIFORNIA

THE STATE OF CALIFORNIA OR ITS OFFICERS OR AGENTS SHALL NOT BE RESPONSIBLE FOR THE ACCURACY OR COMPLETENESS OF SCANNED COPIES OF THIS PLAN SHEET.

NOTES: 1. FOR ACCURATE RIGHT OF WAY, CONTACT RIGHT OF WAY ENGINEERING AT THE DISTRICT OFFICE.

2. SEE SHEET C-1 FOR INTERSECTION LAYOUT DETAILS.

CURVE DATA

No.	R	Δ	T	L
1	300	74°0′20"	226.09′	387.49′
2	1300	22°6′10"	253.91′	501.50′

LEGEND

- HMA
- CLASS 2 AB (SEE SHEET C-4 FOR DETAILS)
- COLD PLANE AC PAVEMENT (SEE SHEET C-3 FOR DETAILS)
- REMOVE BASE AND SURFACING
- BRIDGE WIDENING (SEE STRUCTURE PLANS FOR DETAILS)
- a F+ - REMOVE FENCE
- b F+ - FENCE (TYPE BW, 4-STRAND, WOOD POST)
- TEMPORARY FENCE (TYPE ESA)

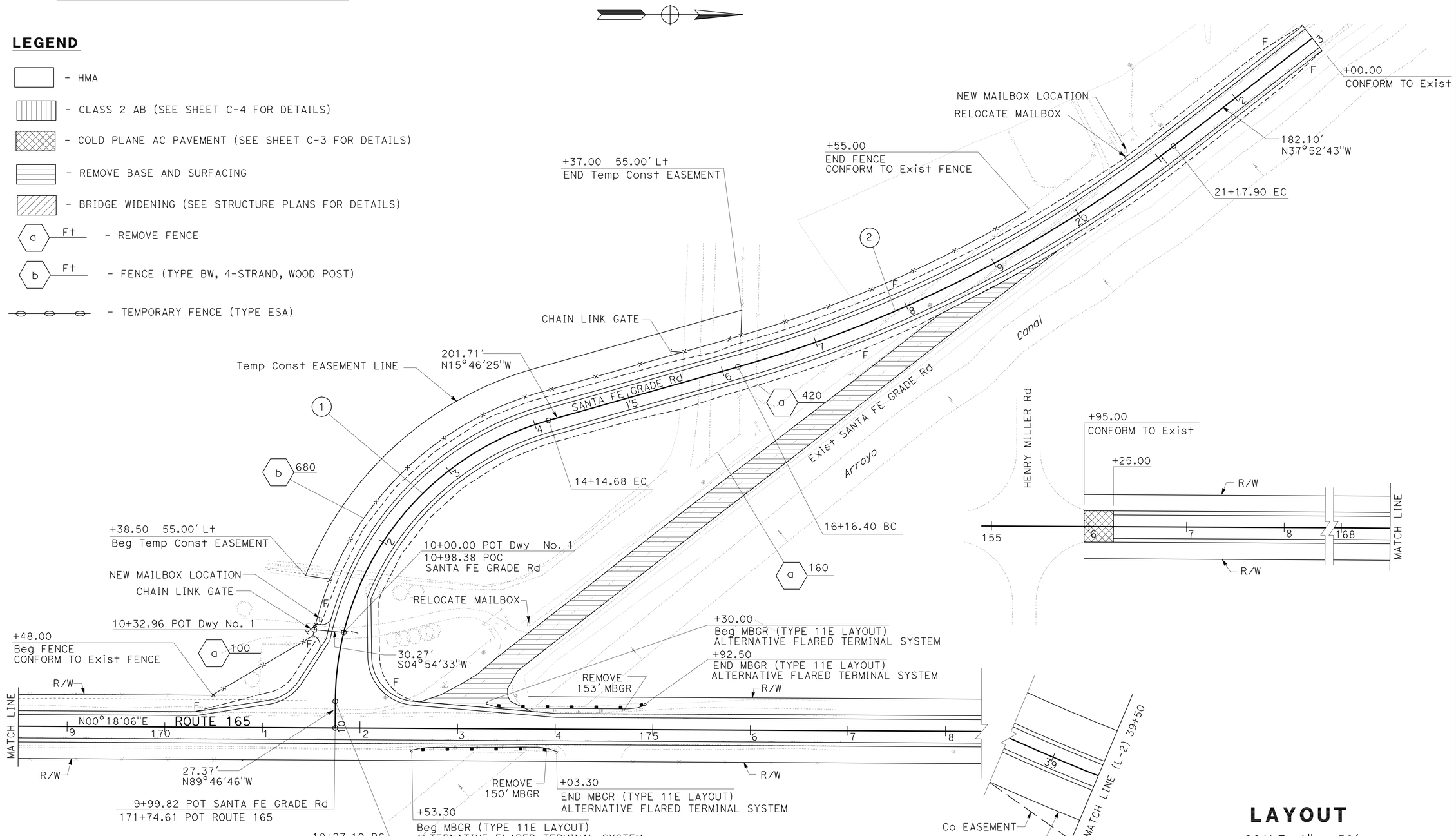

LAYOUT

SCALE: 1" = 50′

L-1

STATE OF CALIFORNIA - DEPARTMENT OF TRANSPORTATION
Caltrans
DESIGN

FUNCTIONAL SUPERVISOR: CAROLINE REYES
CALCULATED-DESIGNED BY: MARLON LOPEZ
CHECKED BY: MIKE HUTCHISON
REVISED BY: ML
DATE REVISED: 4/1/410

LAST REVISION: 00-00-00
DATE PLOTTED => 24-JUN-2010
TIME PLOTTED => 07:03

Dist	COUNTY	ROUTE	POST MILES TOTAL PROJECT	SHEET No.	TOTAL SHEETS
10	Mer	165	11.7/26.7	5	110

Michael D Hutchison 12/29/09
REGISTERED CIVIL ENGINEER DATE

6-21-10
PLANS APPROVAL DATE

REGISTERED PROFESSIONAL ENGINEER
Mike Hutchison
No. 36626
Exp 6/30/10
CIVIL
STATE OF CALIFORNIA

THE STATE OF CALIFORNIA OR ITS OFFICERS OR AGENTS SHALL NOT BE RESPONSIBLE FOR THE ACCURACY OR COMPLETENESS OF SCANNED COPIES OF THIS PLAN SHEET.

NOTES: 1. FOR ACCURATE RIGHT OF WAY, CONTACT RIGHT OF WAY ENGINEERING AT THE DISTRICT OFFICE.
2. SEE SHEET C-2 FOR INTERSECTION LAYOUT DETAILS.

CURVE DATA

No.	R	Δ	T	L
3	175	69°03′17″	120.40′	210.92′
4	2000	22°47′33″	403.14′	795.61′

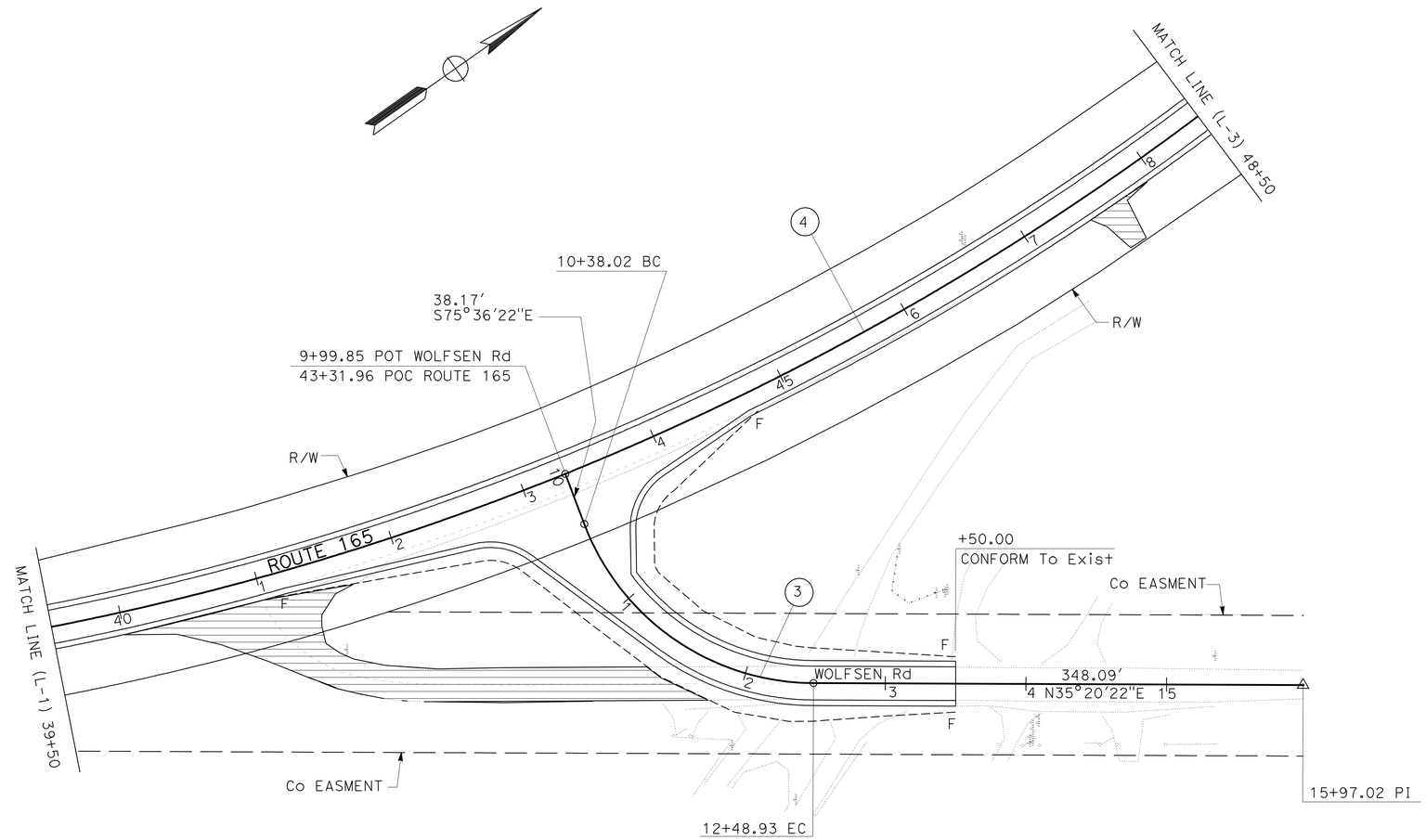

LAYOUT

SCALE: 1″ = 50′

L-2

STATE OF CALIFORNIA - DEPARTMENT OF TRANSPORTATION
Caltrans
DESIGN

FUNCTIONAL SUPERVISOR: CAROLINE REYES
CALCULATED-DESIGNED BY: MARLON LOPEZ
CHECKED BY: MIKE HUTCHISON
REVISED BY: MH
DATE REVISED: 4/14/10

LAST REVISION 00-00-00
DATE PLOTTED => 24-JUN-2010
TIME PLOTTED => 07:03

Dist	COUNTY	ROUTE	POST MILES TOTAL PROJECT	SHEET No.	TOTAL SHEETS
10	Mer	165	11.7/26.7	6	110

Michael D Hutchison 12/29/09
REGISTERED CIVIL ENGINEER DATE

6-21-10
PLANS APPROVAL DATE

REGISTERED PROFESSIONAL ENGINEER Mike Hutchison No. 36626 Exp 6/30/10 CIVIL STATE OF CALIFORNIA

THE STATE OF CALIFORNIA OR ITS OFFICERS OR AGENTS SHALL NOT BE RESPONSIBLE FOR THE ACCURACY OR COMPLETENESS OF SCANNED COPIES OF THIS PLAN SHEET.

NOTE: FOR ACCURATE RIGHT OF WAY, CONTACT RIGHT OF WAY ENGINEERING AT THE DISTRICT OFFICE.

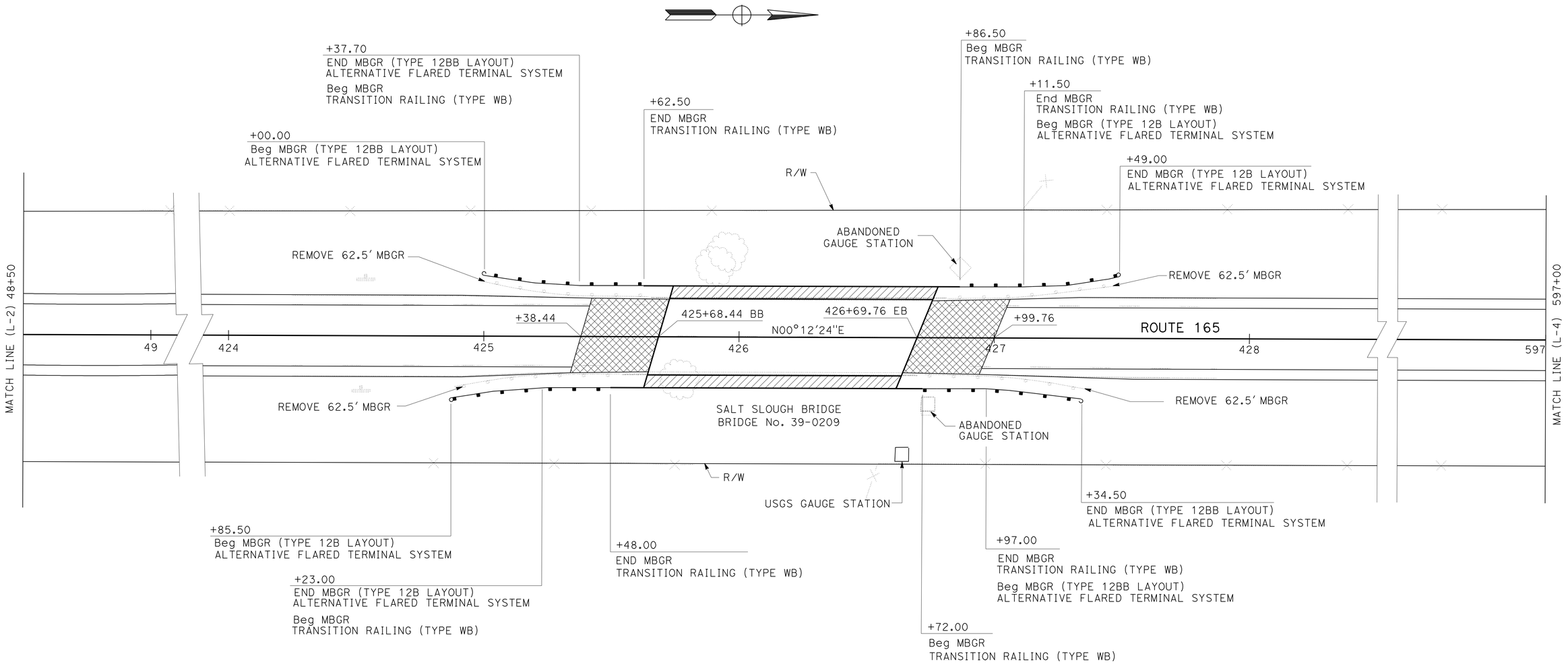

LAYOUT

SCALE: 1" = 20'

L-3

REVISED BY	DATE REVISED
ML	12/29/09

CALCULATED-DESIGNED BY: MARLON LOPEZ
CHECKED BY: MIKE HUTCHISON
FUNCTIONAL SUPERVISOR: CAROLINE REYES

STATE OF CALIFORNIA - DEPARTMENT OF TRANSPORTATION
Caltrans®
DESIGN

LAST REVISION 00-00-00
DATE PLOTTED => 24-JUN-2010
TIME PLOTTED => 07:04

Dist	COUNTY	ROUTE	POST MILES TOTAL PROJECT	SHEET No.	TOTAL SHEETS
10	Mer	165	11.7/26.7	7	110

Michael D Hutchison 12/29/09
REGISTERED CIVIL ENGINEER DATE

6-21-10
PLANS APPROVAL DATE

REGISTERED PROFESSIONAL ENGINEER
Mike Hutchison
No. 36626
Exp 6/30/10
CIVIL
STATE OF CALIFORNIA

THE STATE OF CALIFORNIA OR ITS OFFICERS OR AGENTS SHALL NOT BE RESPONSIBLE FOR THE ACCURACY OR COMPLETENESS OF SCANNED COPIES OF THIS PLAN SHEET.

NOTE: FOR ACCURATE RIGHT OF WAY, CONTACT RIGHT OF WAY ENGINEERING AT THE DISTRICT OFFICE.

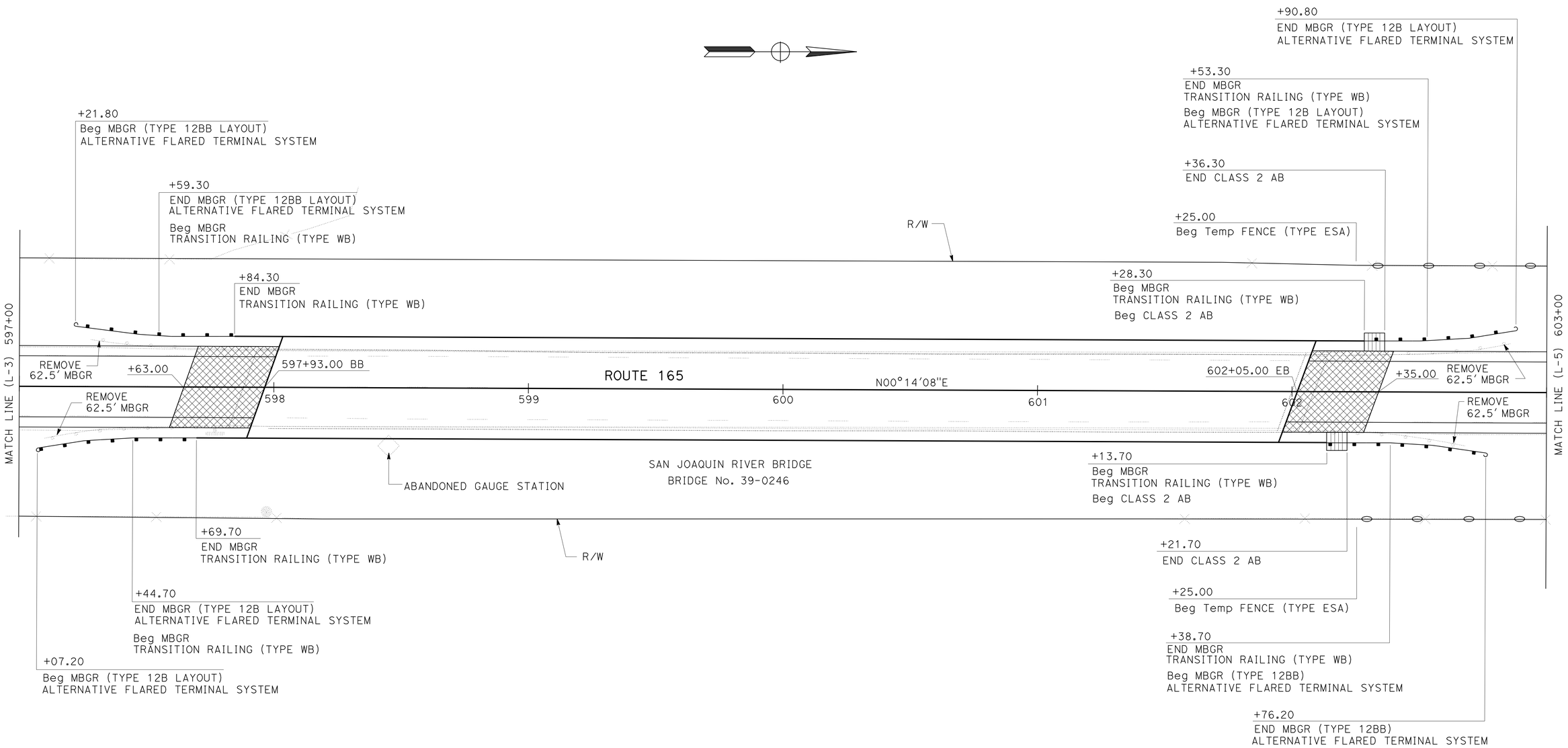

LAYOUT

SCALE: 1" = 20'

L-4

CALCULATED-DESIGNED BY	MARLON LOPEZ
CHECKED BY	MIKE HUTCHISON
REVISED BY	ML
DATE REVISED	12/29/09
FUNCTIONAL SUPERVISOR	CAROLINE REYES

STATE OF CALIFORNIA - DEPARTMENT OF TRANSPORTATION
Caltrans
DESIGN

LAST REVISION 00-00-00 | DATE PLOTTED => 24-JUN-2010 | TIME PLOTTED => 07:04

Dist	COUNTY	ROUTE	POST MILES TOTAL PROJECT	SHEET No.	TOTAL SHEETS
10	Mer	165	11.7/26.7	8	110

Michael D Hutchison 12/29/09
REGISTERED CIVIL ENGINEER DATE

6-21-10
PLANS APPROVAL DATE

REGISTERED PROFESSIONAL ENGINEER Mike Hutchison No. 36626 Exp. 6/30/10 CIVIL STATE OF CALIFORNIA

THE STATE OF CALIFORNIA OR ITS OFFICERS OR AGENTS SHALL NOT BE RESPONSIBLE FOR THE ACCURACY OR COMPLETENESS OF SCANNED COPIES OF THIS PLAN SHEET.

NOTE: FOR ACCURATE RIGHT OF WAY, CONTACT RIGHT OF WAY ENGINEERING AT THE DISTRICT OFFICE.

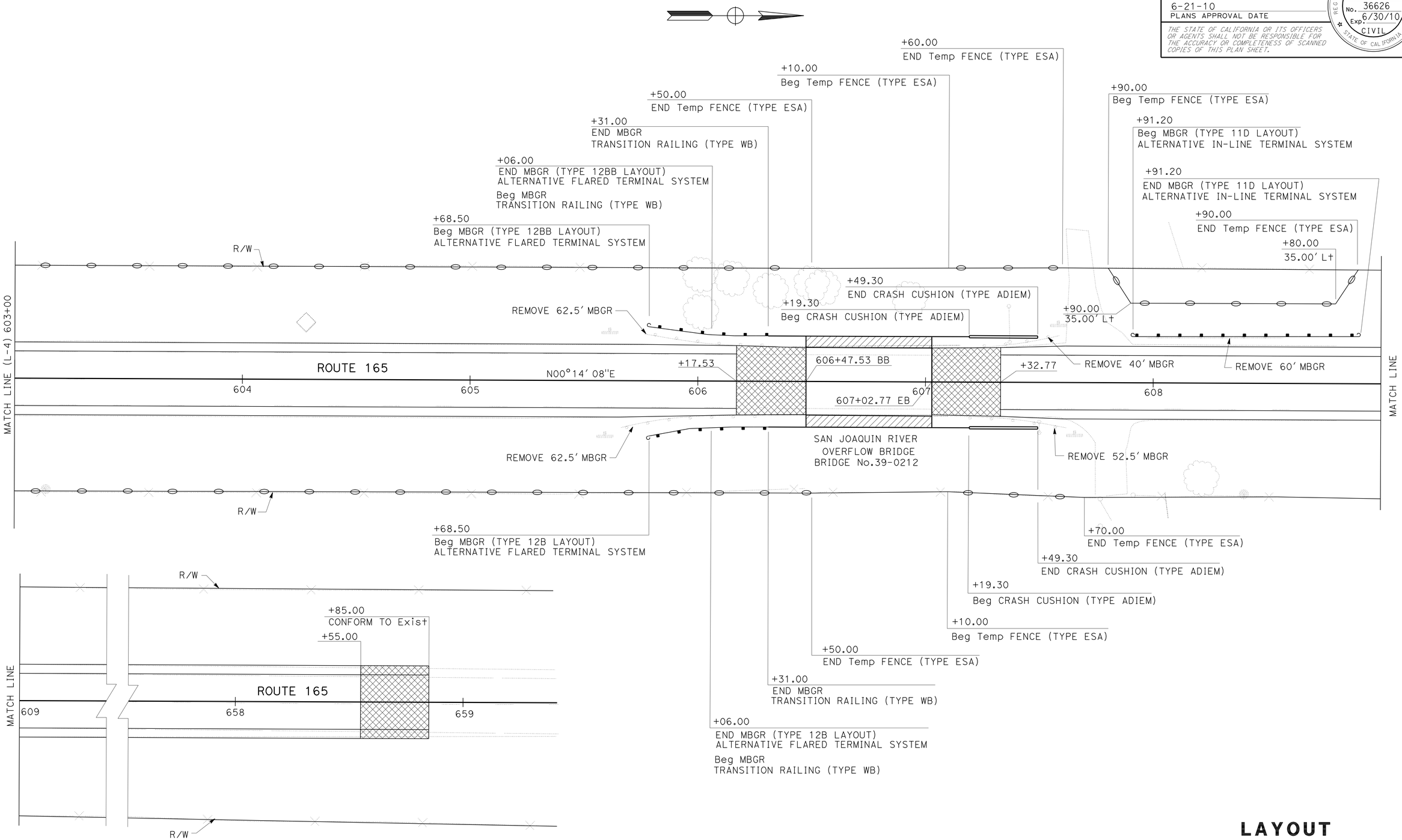

LAYOUT

SCALE: 1" = 20'

L-5

REVISED BY	DATE REVISED
ML	5/13/09

CALCULATED-DESIGNED BY: MARLON LOPEZ
CHECKED BY: MIKE HUTHISON
FUNCTIONAL SUPERVISOR: CAROLINE REYES

STATE OF CALIFORNIA - DEPARTMENT OF TRANSPORTATION
Caltrans®
DESIGN

LAST REVISION 00-00-00
DATE PLOTTED => 24-JUN-2010
TIME PLOTTED => 07:04

Dist	COUNTY	ROUTE	POST MILES TOTAL PROJECT	SHEET No.	TOTAL SHEETS
10	Mer	165	11.7/26.7	9	110

Michael D Hutchison 12/29/09
REGISTERED CIVIL ENGINEER DATE

6-21-10
PLANS APPROVAL DATE

REGISTERED PROFESSIONAL ENGINEER Mike Hutchison No. 36626 Exp 6/30/10 CIVIL STATE OF CALIFORNIA

THE STATE OF CALIFORNIA OR ITS OFFICERS OR AGENTS SHALL NOT BE RESPONSIBLE FOR THE ACCURACY OR COMPLETENESS OF SCANNED COPIES OF THIS PLAN SHEET.

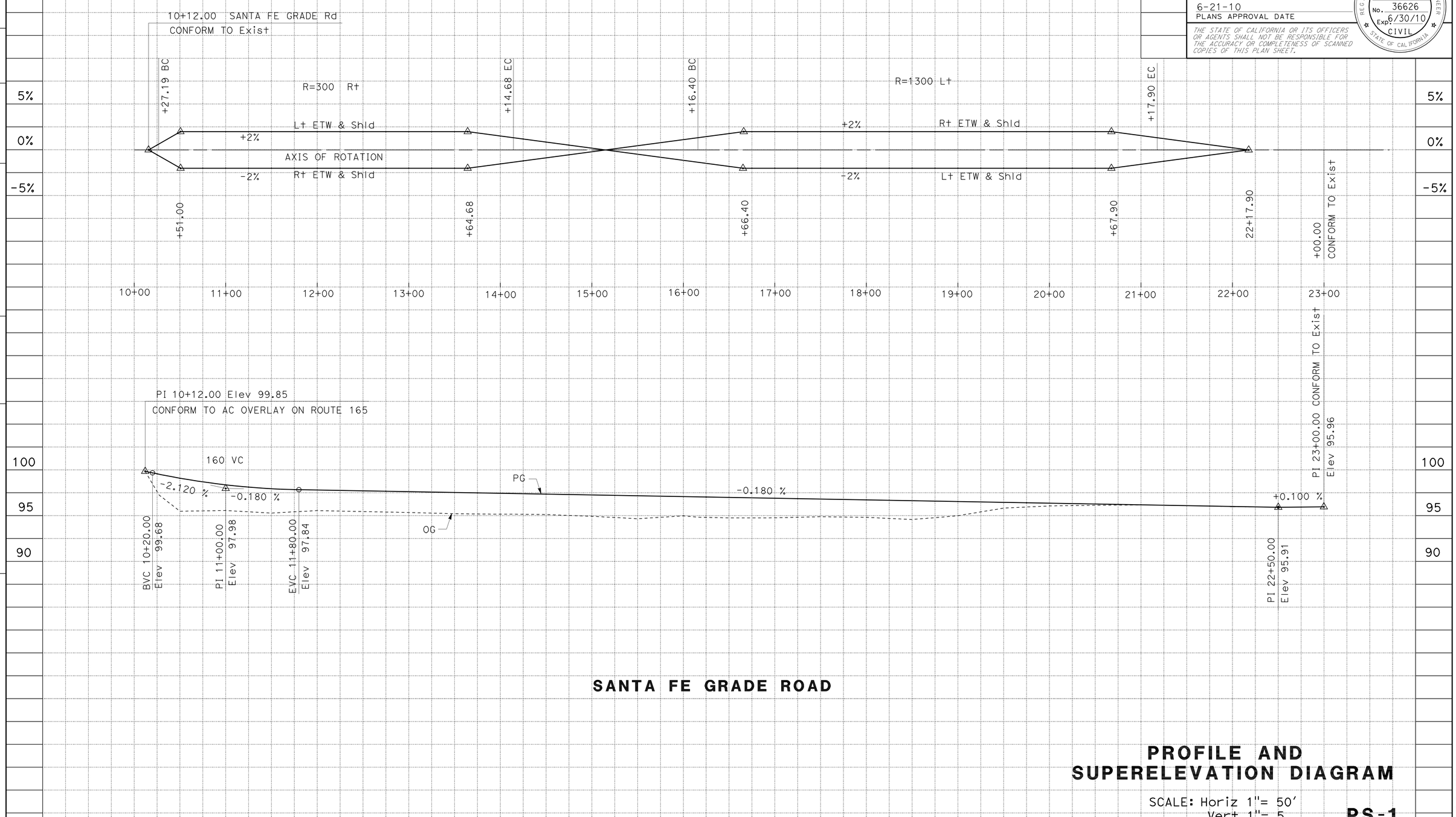

SANTA FE GRADE ROAD

PROFILE AND SUPERELEVATION DIAGRAM

SCALE: Horiz 1"= 50'
Vert 1"= 5

PS-1

STATION		10+00	11+00	12+00	13+00	14+00	15+00	16+00	17+00	18+00	19+00	20+00	21+00	22+00	23+00	TOTAL
CY	Exc	475														
	Emb	1800														

REVISED BY	DATE REVISED
ML	5/13/09

CALCULATED-DESIGNED BY: MARLON LOPEZ
CHECKED BY: MIKE HUTCHISON
FUNCTIONAL SUPERVISOR: CAROLINE REYES

STATE OF CALIFORNIA - DEPARTMENT OF TRANSPORTATION
Caltrans® DESIGN

LAST REVISION 00-00-00
DATE PLOTTED => 24-JUN-2010
TIME PLOTTED => 07:04

Dist	COUNTY	ROUTE	POST MILES TOTAL PROJECT	SHEET No.	TOTAL SHEETS
10	Mer	165	11.7/26.7	10	110

Michael D Hutchison 12/29/09
REGISTERED CIVIL ENGINEER DATE

6-21-10
PLANS APPROVAL DATE

REGISTERED PROFESSIONAL ENGINEER
Mike Hutchison
No. 36626
Exp 6/30/10
CIVIL
STATE OF CALIFORNIA

THE STATE OF CALIFORNIA OR ITS OFFICERS OR AGENTS SHALL NOT BE RESPONSIBLE FOR THE ACCURACY OR COMPLETENESS OF SCANNED COPIES OF THIS PLAN SHEET.

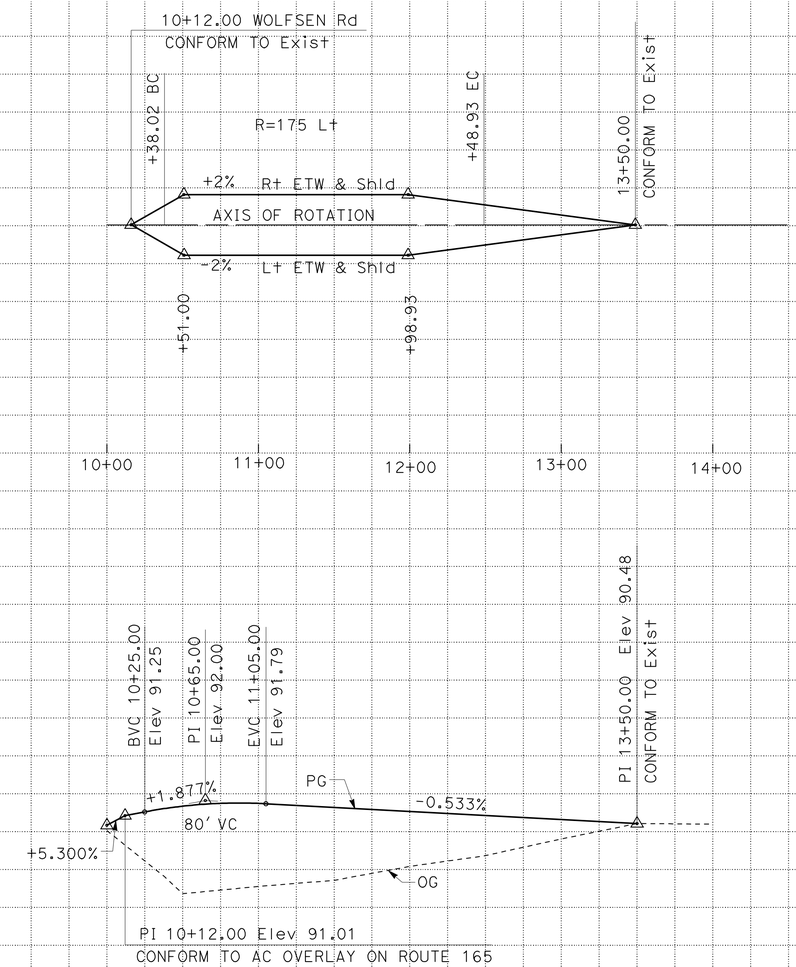

WOLFSEN ROAD

PROFILE AND SUPERELEVATION DIAGRAM

SCALE: Horiz 1"= 50'
Vert 1"= 5'

PS-2

STATION		10+00	11+00	12+00	13+00	14+00	TOTAL
CY	Exc	105					
	Emb	1995					

STATE OF CALIFORNIA - DEPARTMENT OF TRANSPORTATION
Caltrans® DESIGN

FUNCTIONAL SUPERVISOR: CAROLINE REYES
CALCULATED-DESIGNED BY: MARLON LOPEZ
CHECKED BY: MIKE HUTCHISON
REVISED BY: ML
DATE REVISED: 5/14/09

LAST REVISION 00-00-00
DATE PLOTTED => 24-JUN-2010
TIME PLOTTED => 07:04

Dist	COUNTY	ROUTE	POST MILES TOTAL PROJECT	SHEET No.	TOTAL SHEETS
10	Mer	165	11.7/26.7	11	110

Michael D Hutchison 12/29/09
REGISTERED CIVIL ENGINEER DATE

6-21-10
PLANS APPROVAL DATE

REGISTERED PROFESSIONAL ENGINEER Mike Hutchison No. 36626 Exp 6/30/10 CIVIL STATE OF CALIFORNIA

THE STATE OF CALIFORNIA OR ITS OFFICERS OR AGENTS SHALL NOT BE RESPONSIBLE FOR THE ACCURACY OR COMPLETENESS OF SCANNED COPIES OF THIS PLAN SHEET.

CURVE DATA

No.	R	Δ	T	L
1	300	74°00′20"	266.09′	387.49′
2	50	47°52′07"	22.19′	41.77′
3	46	47°52′07"	20.42′	38.43′
4	50	84°24′17"	45.34′	73.66′
5	46	84°24′17"	41.71′	67.76′
6	10	78°57′22"	8.24′	13.78′
7	10	118°21′56"	16.76′	20.66′

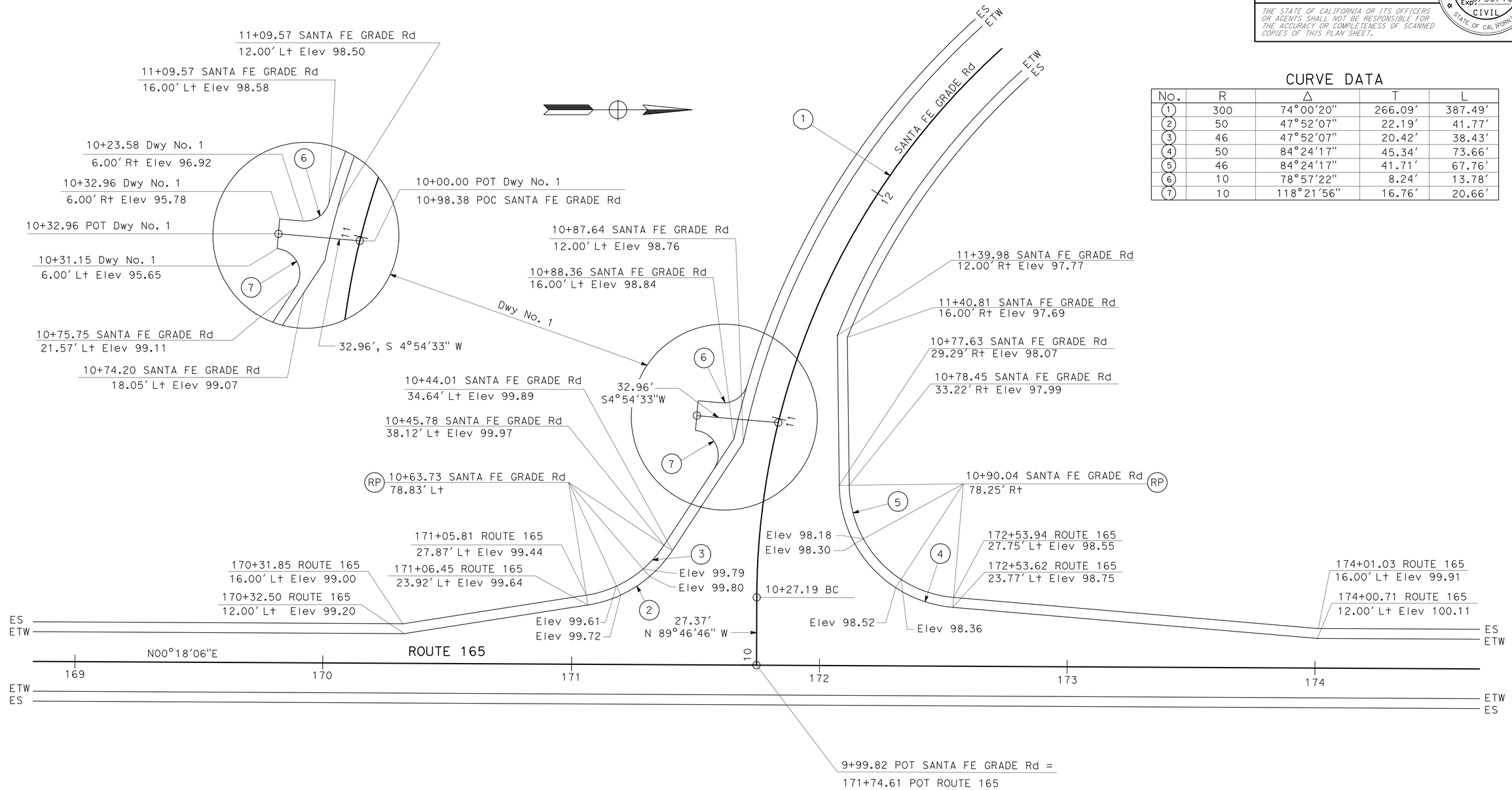

CONSTRUCTION DETAILS

SCALE: 1" = 20′

C-1

STATE OF CALIFORNIA - DEPARTMENT OF TRANSPORTATION
Caltrans®
DESIGN

FUNCTIONAL SUPERVISOR: CAROLINE REYES
CALCULATED-DESIGNED BY: MARLON LOPEZ
CHECKED BY: MIKE HUTCHISON
REVISED BY: ML
DATE REVISED: 12/29/09

LAST REVISION 00-00-00
DATE PLOTTED => 24-JUN-2010
TIME PLOTTED => 12:56

Dist	COUNTY	ROUTE	POST MILES TOTAL PROJECT	SHEET No.	TOTAL SHEETS
10	Mer	165	11.7/26.7	12	110

Michael D Hutchison 12/29/09
REGISTERED CIVIL ENGINEER DATE

6-21-10
PLANS APPROVAL DATE

REGISTERED PROFESSIONAL ENGINEER
Mike Hutchison
No. 36626
Exp 6/30/10
CIVIL
STATE OF CALIFORNIA

THE STATE OF CALIFORNIA OR ITS OFFICERS OR AGENTS SHALL NOT BE RESPONSIBLE FOR THE ACCURACY OR COMPLETENESS OF SCANNED COPIES OF THIS PLAN SHEET.

CURVE DATA

No.	R	Δ	T	L
1	175.00	20°56′43″	120.40′	210.92′
2	2000.00	22°47′33″	403.14′	795.61′
3	46.00	49°49′57″	21.24′	40.00′
4	50.00	49°49′57″	23.09′	43.49′
5	50.00	56°42′45″	26.99′	49.49′
6	46.00	56°42′45″	24.83′	45.52′

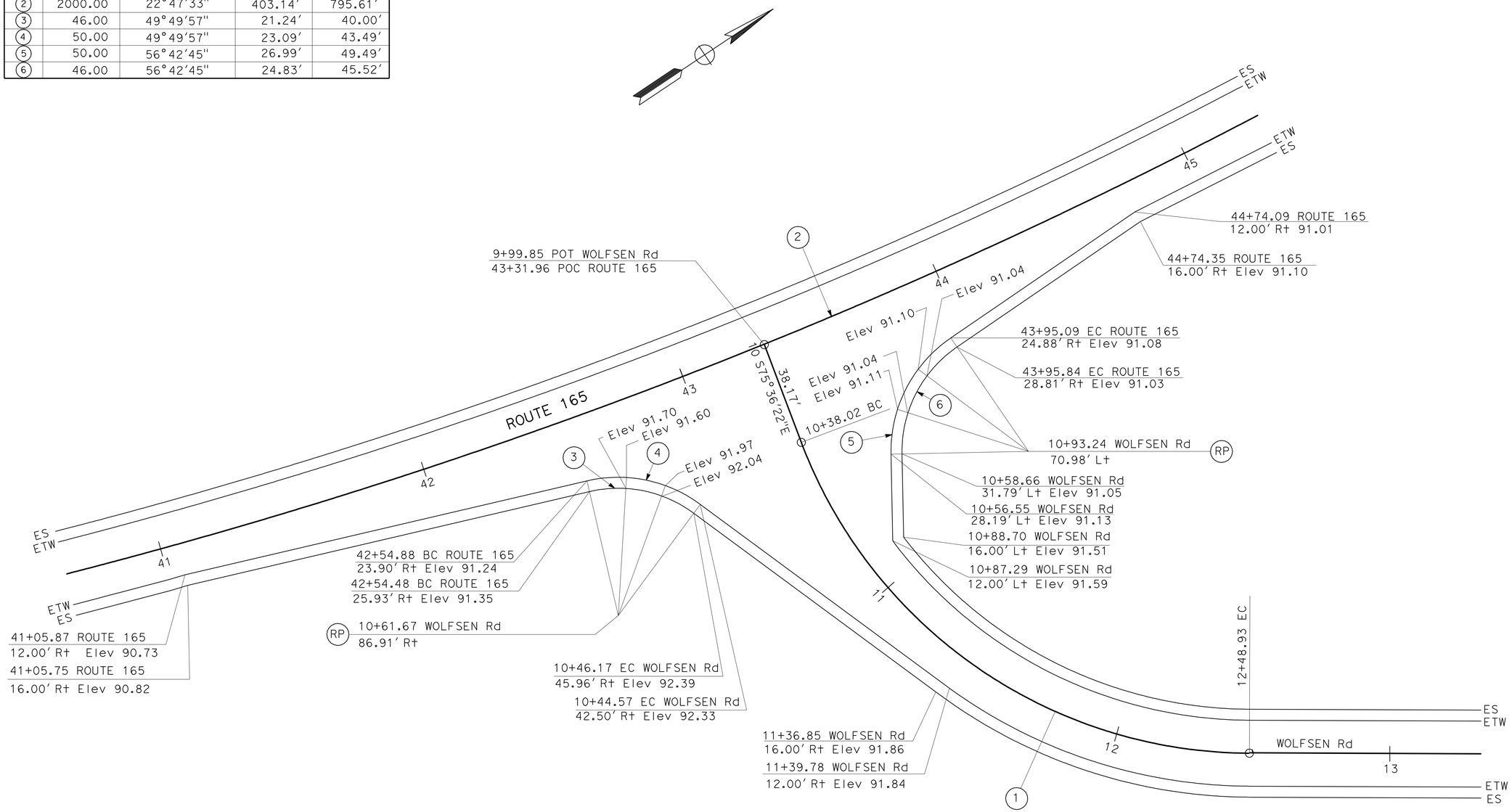

CONSTRUCTION DETAILS

SCALE: 1" = 20′

C-2

STATE OF CALIFORNIA - DEPARTMENT OF TRANSPORTATION
Caltrans
DESIGN

FUNCTIONAL SUPERVISOR: CAROLINE REYES
CALCULATED-DESIGNED BY: MARLON LOPEZ
CHECKED BY: MIKE HUTCHISON
REVISED BY: ML
DATE REVISED: 12/29/09

LAST REVISION 00-00-00
DATE PLOTTED => 24-JUN-2010
TIME PLOTTED => 07:14

Dist	COUNTY	ROUTE	POST MILES TOTAL PROJECT	SHEET No.	TOTAL SHEETS
10	Mer	165	11.7/26.7	13	110

Michael D Hutchison 12/29/09
REGISTERED CIVIL ENGINEER DATE

6-21-10
PLANS APPROVAL DATE

REGISTERED PROFESSIONAL ENGINEER Mike Hutchison No. 36626 Exp 6/30/10 CIVIL STATE OF CALIFORNIA

THE STATE OF CALIFORNIA OR ITS OFFICERS OR AGENTS SHALL NOT BE RESPONSIBLE FOR THE ACCURACY OR COMPLETENESS OF SCANNED COPIES OF THIS PLAN SHEET.

LEGEND

- ROADWAY EXCAVATION
- COLD PLANE AC PAVEMENT

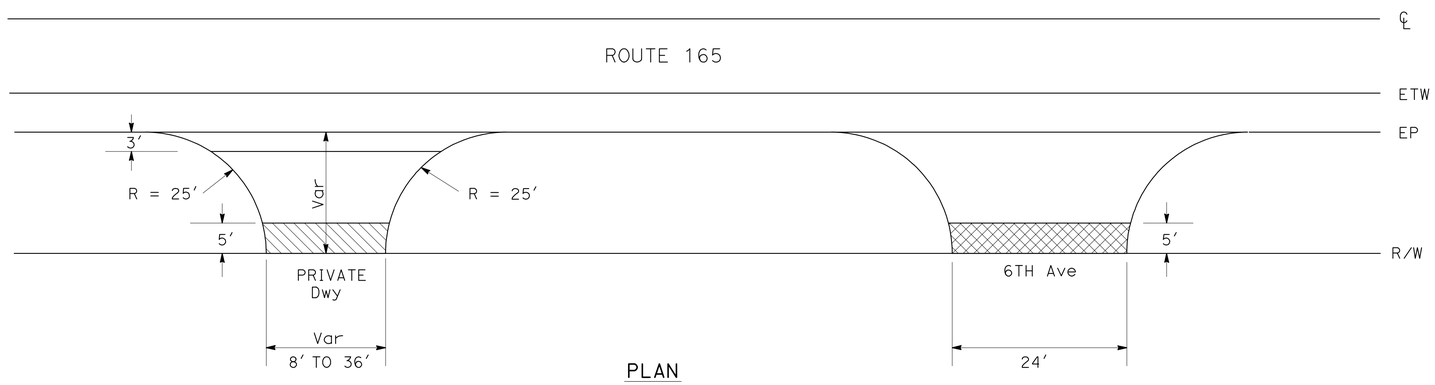

PLAN

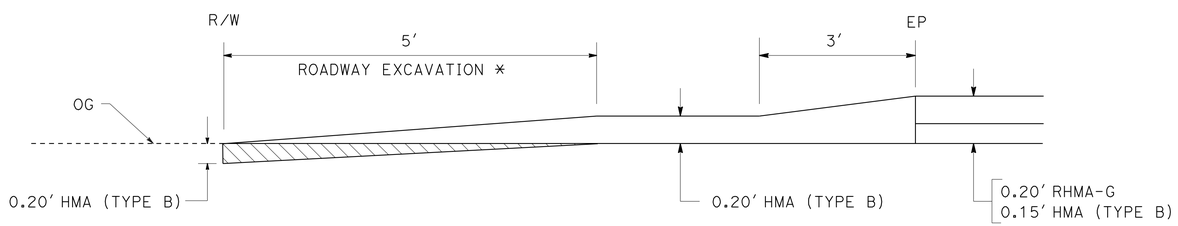

SECTION

PAVING CONFORMS AT PRIVATE DRIVEWAYS

* COLD PLANE AT 6TH AVENUE

COLD PLANE AC Pvmt LOCATIONS

STATION TO STATION ROUTE 165	X	Y	Z
	Ft	Ft	Ft
155+95.00 TO 156+25.00	30	0.35	0.35
425+38.44 TO 425+68.44	30	0.35	0.35
426+69.76 TO 426+99.76	30	0.35	0.35
597+63.00 TO 597+93.00	30	0.35	0.35
602+05.00 TO 602+35.00	30	0.35	0.35
606+17.53 TO 606+47.53	30	0.35	0.35
607+02.77 TO 607+32.77	30	0.35	0.35
658+55.00 TO 658+85.00	30	0.35	0.35
6TH AVENUE	5	0.20	0.20

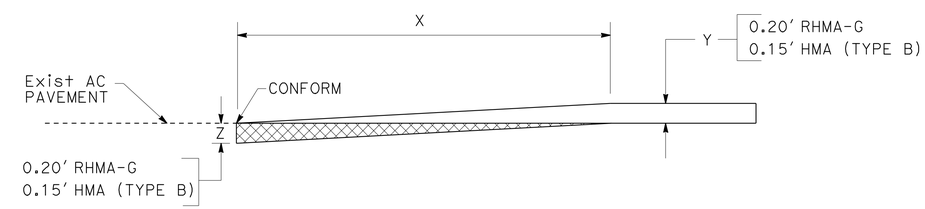

COLD PLANE AC PAVEMENT

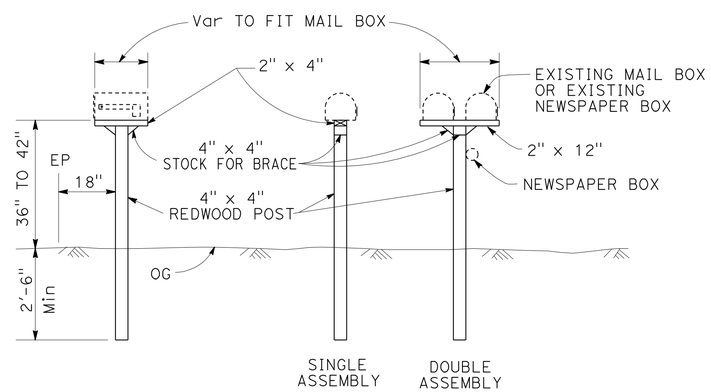

RELOCATE MAILBOX DETAIL

CONSTRUCTION DETAILS

NO SCALE

C-3

STATE OF CALIFORNIA - DEPARTMENT OF TRANSPORTATION
Caltrans
DESIGN

FUNCTIONAL SUPERVISOR: CAROLINE REYES
CALCULATED-DESIGNED BY: MARLON LOPEZ
CHECKED BY: MIKE HUTCHISON
REVISED BY: ML
DATE REVISED: 6/1/09

LAST REVISION 00-00-00
DATE PLOTTED => 24-JUN-2010
TIME PLOTTED => 13:08

Dist	COUNTY	ROUTE	POST MILES TOTAL PROJECT	SHEET No.	TOTAL SHEETS
10	Mer	165	11.7/26.7	14	110

Michael D Hutchison 12/29/09
REGISTERED CIVIL ENGINEER DATE

6-21-10
PLANS APPROVAL DATE

REGISTERED PROFESSIONAL ENGINEER
Mike Hutchison
No. 36626
Exp 6/30/10
CIVIL
STATE OF CALIFORNIA

THE STATE OF CALIFORNIA OR ITS OFFICERS OR AGENTS SHALL NOT BE RESPONSIBLE FOR THE ACCURACY OR COMPLETENESS OF SCANNED COPIES OF THIS PLAN SHEET.

LEGEND

- CLASS 2 AB
- COLD PLANE AC PAVEMENT

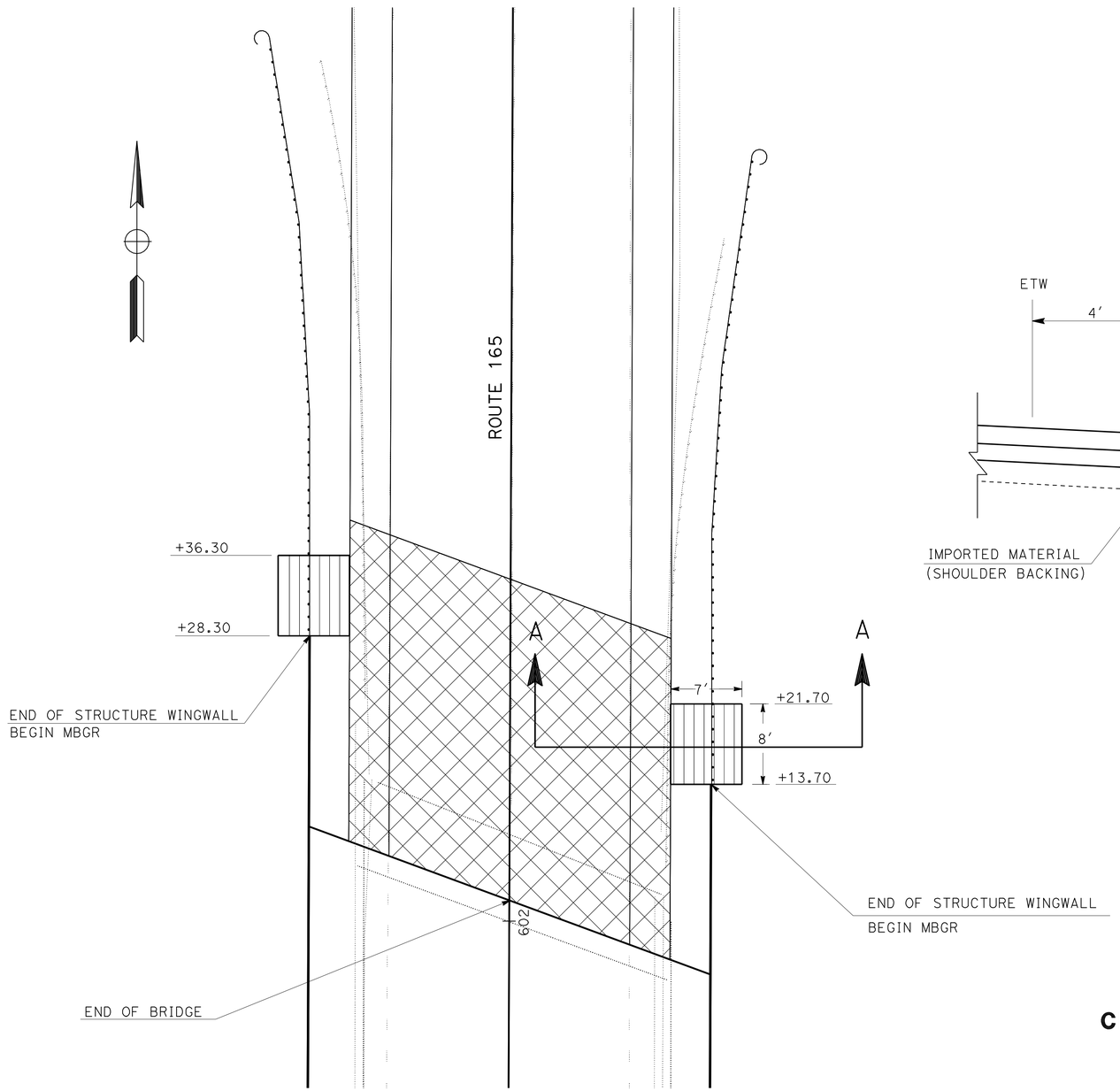

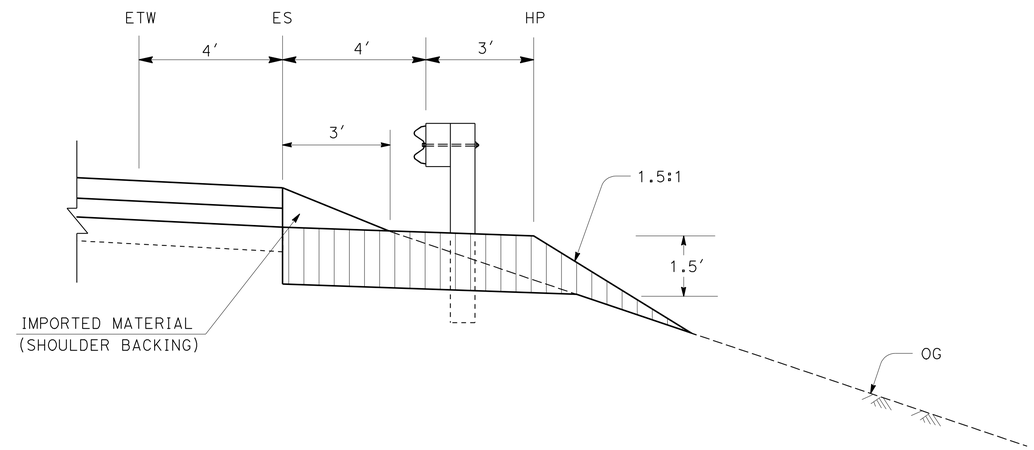

SECTION A-A

CLASS 2 AB DETAIL

CONSTRUCTION DETAILS

NO SCALE

C-4

CALCULATED-DESIGNED BY	MARLON LOPEZ
CHECKED BY	MIKE HUTCHISON
REVISED BY	ML
DATE REVISED	6/1/09
FUNCTIONAL SUPERVISOR	CAROLINE REYES

STATE OF CALIFORNIA - DEPARTMENT OF TRANSPORTATION
Caltrans
DESIGN

LAST REVISION 00-00-00
DATE PLOTTED => 24-JUN-2010
TIME PLOTTED => 13:08

Dist	COUNTY	ROUTE	POST MILES TOTAL PROJECT	SHEET No.	TOTAL SHEETS
10	Mer	165	11.7/26.7	15	110

LICENSED LANDSCAPE ARCHITECT

6-21-10
PLANS APPROVAL DATE

LICENSED LANDSCAPE ARCHITECT
JAMES VON DOHLEN
Signature
1/31/12
Renewal Date
12/29/09
Date
STATE OF CALIFORNIA

THE STATE OF CALIFORNIA OR ITS OFFICERS OR AGENTS SHALL NOT BE RESPONSIBLE FOR THE ACCURACY OR COMPLETENESS OF SCANNED COPIES OF THIS PLAN SHEET.

NOTE: FOR ACCURATE RIGHT OF WAY, CONTACT RIGHT OF WAY ENGINEERING AT THE DISTRICT OFFICE.

LEGEND

- EROSION CONTROL (HYDROSEED) AND COMPOST INCORPORATE

FR - FIBER ROLLS

ABBREVIATIONS

(EC) - EROSION CONTROL (HYDROSEED)
(CI) - COMPOST INCORPORATE

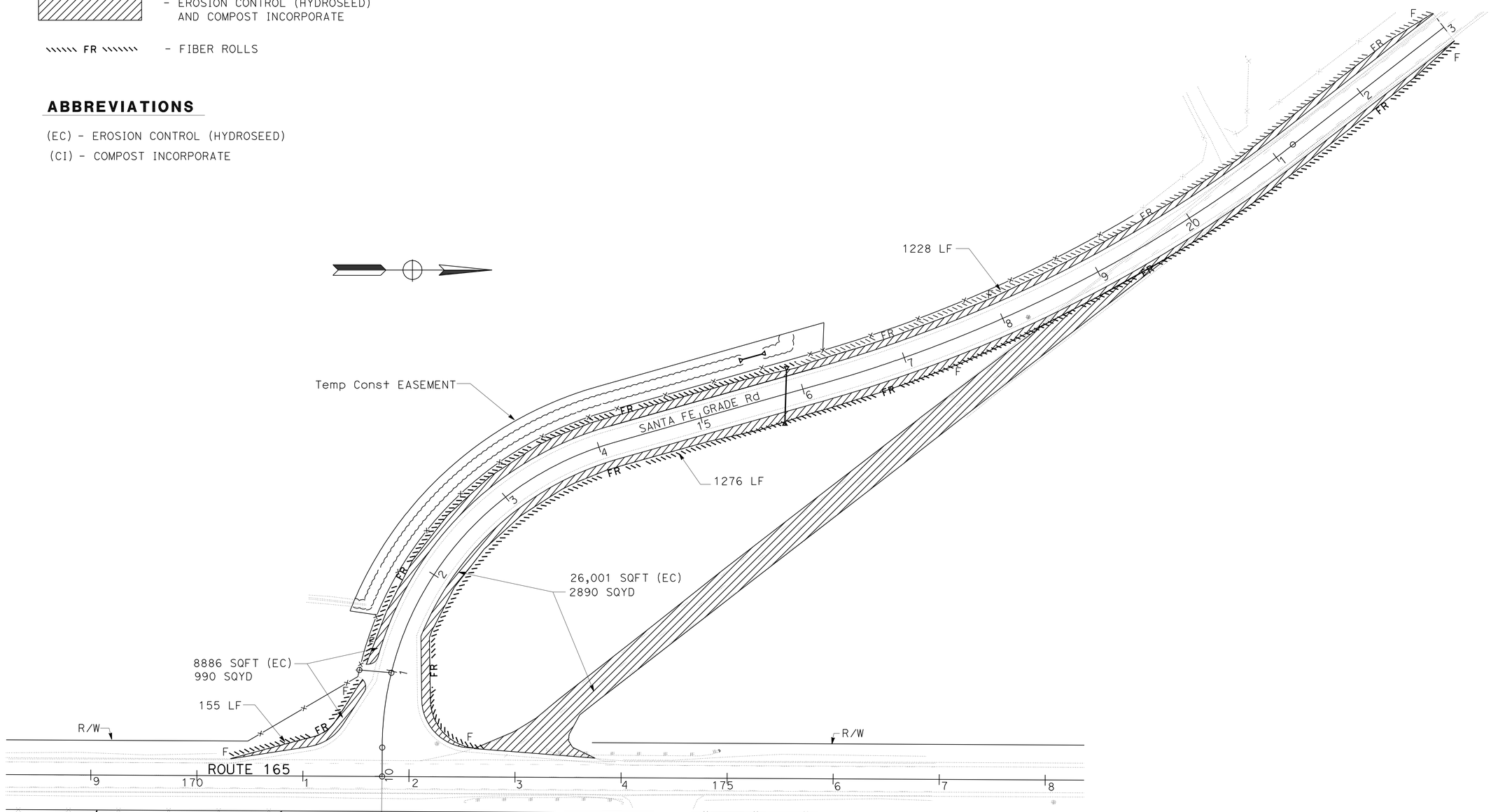

THIS PLAN ACCURATE FOR EROSION CONTROL WORK ONLY.

EROSION CONTROL PLAN

SCALE: 1" = 50'

EC-1

STATE OF CALIFORNIA - DEPARTMENT OF TRANSPORTATION
Caltrans® LANDSCAPE ARCHITECTURE

FUNCTIONAL SUPERVISOR: BRAD COLE
CALCULATED-DESIGNED BY: GUS ESCUTIA
CHECKED BY: JAMES VON DOHLEN
REVISED BY: G.E.
DATE REVISED: 04-14-10

LAST REVISION: 00-00-00
DATE PLOTTED => 24-JUN-2010
TIME PLOTTED => 13:08

Dist	COUNTY	ROUTE	POST MILES TOTAL PROJECT	SHEET No.	TOTAL SHEETS
10	Mer	165	11.7/26.7	16	110

LICENSED LANDSCAPE ARCHITECT

6-21-10
PLANS APPROVAL DATE

LICENSED LANDSCAPE ARCHITECT
JAMES VON DOHLEN
Signature
1/31/12
Renewal Date
12/29/09
Date
STATE OF CALIFORNIA

THE STATE OF CALIFORNIA OR ITS OFFICERS OR AGENTS SHALL NOT BE RESPONSIBLE FOR THE ACCURACY OR COMPLETENESS OF SCANNED COPIES OF THIS PLAN SHEET.

NOTE: FOR ACCURATE RIGHT OF WAY, CONTACT
RIGHT OF WAY ENGINEERING AT THE DISTRICT OFFICE.

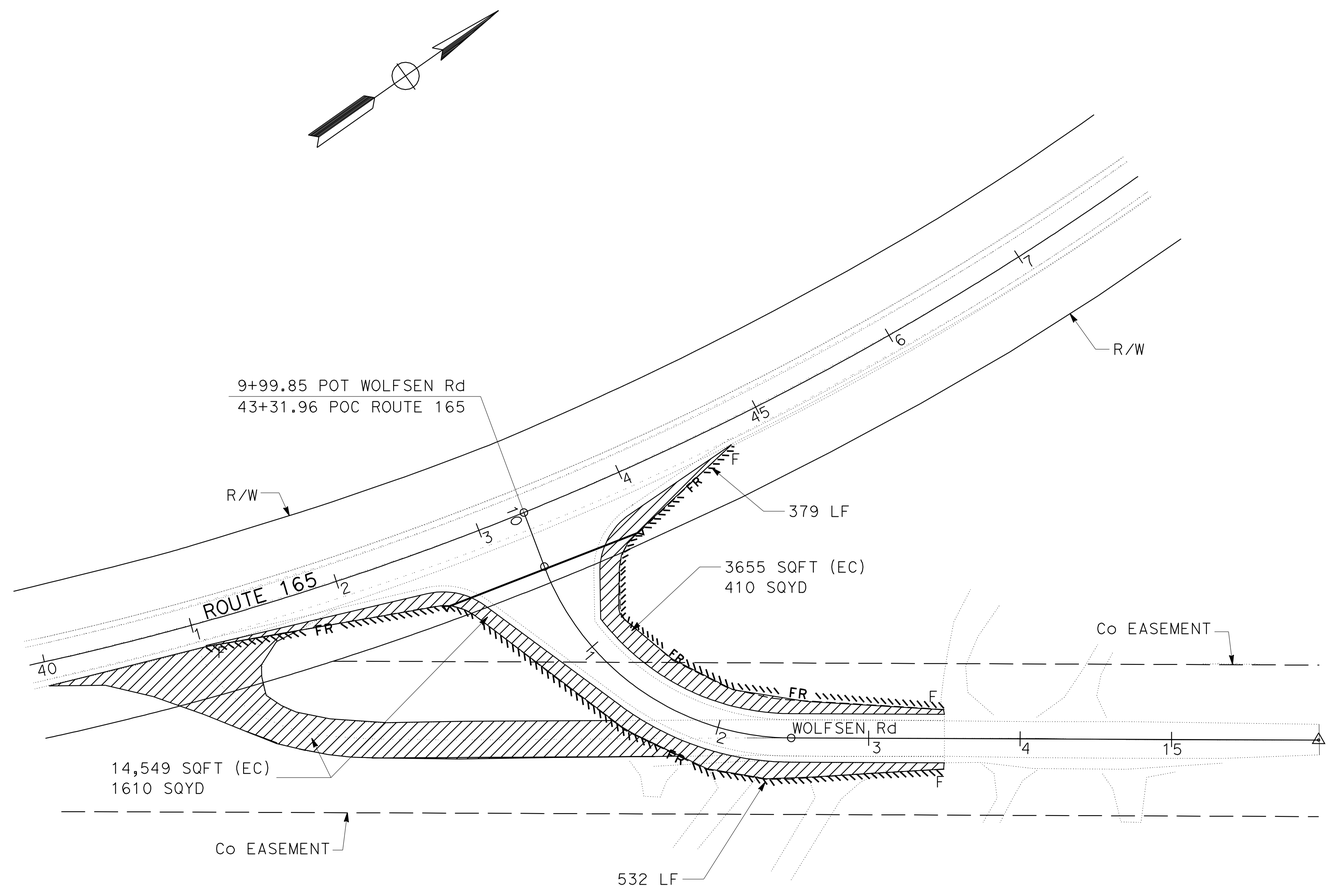

THIS PLAN ACCURATE FOR EROSION CONTROL WORK ONLY.

EROSION CONTROL PLAN

SCALE: 1" = 50'

EC-2

STATE OF CALIFORNIA - DEPARTMENT OF TRANSPORTATION
Caltrans® LANDSCAPE ARCHITECTURE

FUNCTIONAL SUPERVISOR: BRAD COLE

CALCULATED-DESIGNED BY: GUS ESCUTIA
CHECKED BY: JAMES VON DOHLEN

REVISED BY: G.E.
DATE REVISED: 04-14-10

LAST REVISION 00-00-00
DATE PLOTTED => 24-JUN-2010
TIME PLOTTED => 13:08

Dist	COUNTY	ROUTE	POST MILES TOTAL PROJECT	SHEET No.	TOTAL SHEETS
10	Mer	165	11.7/26.7	17	110

LICENSED LANDSCAPE ARCHITECT

6-21-10
PLANS APPROVAL DATE

LICENSED LANDSCAPE ARCHITECT
JAMES VON DOHLEN
Signature
1/31/10
Renewal Date
12/29/09
Date
STATE OF CALIFORNIA

THE STATE OF CALIFORNIA OR ITS OFFICERS OR AGENTS SHALL NOT BE RESPONSIBLE FOR THE ACCURACY OR COMPLETENESS OF SCANNED COPIES OF THIS PLAN SHEET.

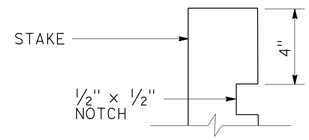

ELEVATION

STAKE NOTCH DETAIL

NOTES:

1. FIBER ROLL SPACING VARIES DEPENDING UPON SLOPE INCLINATION.
2. INSTALLATIONS SHOWN IN THE PERSPECTIVES ARE FOR SLOPE INCLINATION OF 10:1 AND STEEPER.

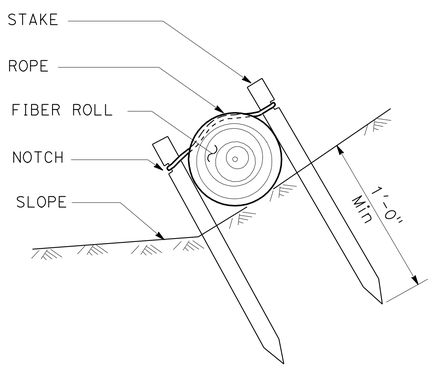

SECTION

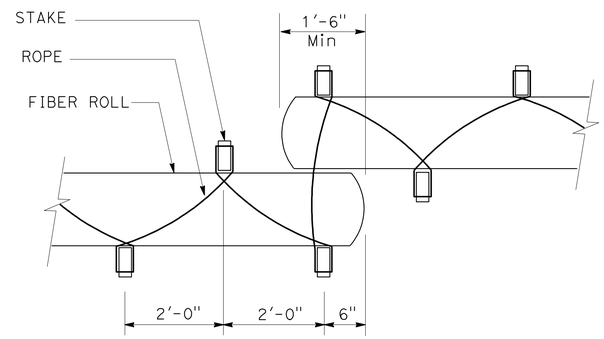

PLAN

FIBER ROLLS

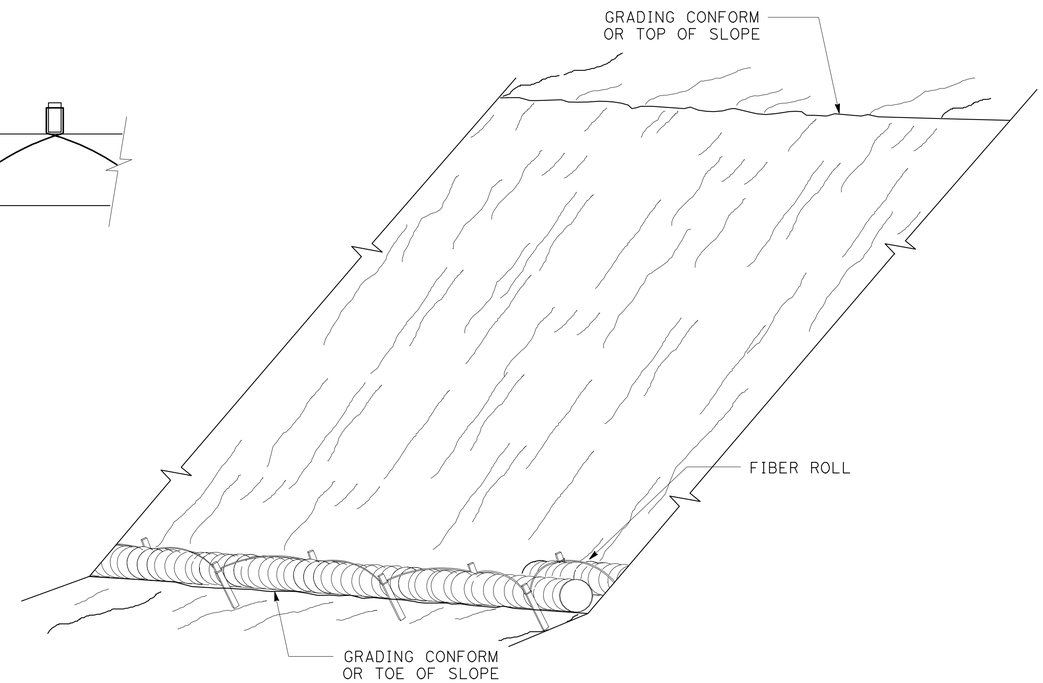

PERSPECTIVE

FIBER ROLLS

EROSION CONTROL DETAILS

NO SCALE

ECD-1

STATE OF CALIFORNIA - DEPARTMENT OF TRANSPORTATION
Caltrans® LANDSCAPE ARCHITECTURE

FUNCTIONAL SUPERVISOR: BRAD COLE

CALCULATED-DESIGNED BY: GUS ESCUTIA
CHECKED BY: JAMES VON DOHLEN

REVISED BY: GE
DATE REVISED: 04-14-10

LAST REVISION: 00-00-00
DATE PLOTTED => 24-JUN-2010
TIME PLOTTED => 07:14

Dist	COUNTY	ROUTE	POST MILES TOTAL PROJECT	SHEET No.	TOTAL SHEETS
10	Mer	165	11.7/26.7	18	110

LICENSED LANDSCAPE ARCHITECT

6-21-10
PLANS APPROVAL DATE

LICENSED LANDSCAPE ARCHITECT
JAMES VON DOHLEN
Signature
1/31/10
Renewal Date
12/29/09
Date
STATE OF CALIFORNIA

THE STATE OF CALIFORNIA OR ITS OFFICERS OR AGENTS SHALL NOT BE RESPONSIBLE FOR THE ACCURACY OR COMPLETENESS OF SCANNED COPIES OF THIS PLAN SHEET.

NOTE: (N) - NOT A SEPARATE PAY ITEM, FOR INFORMATION ONLY.

EROSION CONTROL (HYDROSEED)

LOCATION	STATION TO STATION	AREA	STRAW (N)	PURE LIVE SEED (N)	COMMERCIAL FERTILIZER (N)
		SQFT	TON	LB	LB
SANTA FE GRADE Rd	10+00 TO 23+00 L+	8886	0.46	11.50	13.80
SANTA FE GRADE Rd	10+00 TO 23+00 R+	26,001	1.04	26.00	31.20
WOLFSEN Rd	10+00 TO 13+50 L+	3655	0.18	4.50	5.40
WOLFSEN Rd	10+00 TO 13+50 R+	14,549	0.70	17.50	21.00
TOTAL		53,091			

TOTAL QUANTITY INCLUDED IN EROSION CONTROL TABLE

COMPOST INCORPORATE

LOCATION	STATION TO STATION	COMPOST
		SQYD
SANTA FE GRADE Rd	10+00 TO 23+00 L+	990
SANTA FE GRADE Rd	10+00 TO 23+00 R+	2890
WOLFSEN Rd	10+00 TO 13+50 L+	410
WOLFSEN Rd	10+00 TO 13+50 R+	1610
TOTAL		5900

FIBER ROLLS

LOCATION SHEET NUMBER	FIBER ROLL
	LF
EC-1	2659
EC-2	911
TOTAL	3570

EROSION CONTROL QUANTITIES
ECQ-1

GUS ESCUTIA	GE	04-14-10	
JAMES VON DOHLEN	REVISED BY	DATE REVISED	
CALCULATED-DESIGNED BY			
CHECKED BY			
FUNCTIONAL SUPERVISOR			
BRAD COLE			

STATE OF CALIFORNIA - DEPARTMENT OF TRANSPORTATION
Caltrans® LANDSCAPE ARCHITECTURE

LAST REVISION 04-22-09 | DATE PLOTTED => 24-JUN-2010 | TIME PLOTTED => 07:14

Dist	COUNTY	ROUTE	POST MILES TOTAL PROJECT	SHEET No.	TOTAL SHEETS
10	Mer	165	11.7/26.7	19	110

Michael D Hutchison 12/29/09
REGISTERED CIVIL ENGINEER DATE

6-21-10
PLANS APPROVAL DATE

REGISTERED PROFESSIONAL ENGINEER Mike Hutchison No. 36626 Exp. 6/30/10 CIVIL STATE OF CALIFORNIA

THE STATE OF CALIFORNIA OR ITS OFFICERS OR AGENTS SHALL NOT BE RESPONSIBLE FOR THE ACCURACY OR COMPLETENESS OF SCANNED COPIES OF THIS PLAN SHEET.

NOTES: 1. SEE SHEET X-1 FOR DITCH DETAILS.
2. FOR ACCURATE RIGHT OF WAY DATA, CONTACT RIGHT OF WAY ENGINEERING AT THE DISTRICT OFFICE.

LEGEND

(X) - DRAINAGE SYSTEM No.

(X) - DRAINAGE UNIT No.

ABBREVIATIONS

SFES - STEEL FLARED END SECTION

CFES - CONCRETE FLARED END SECTION

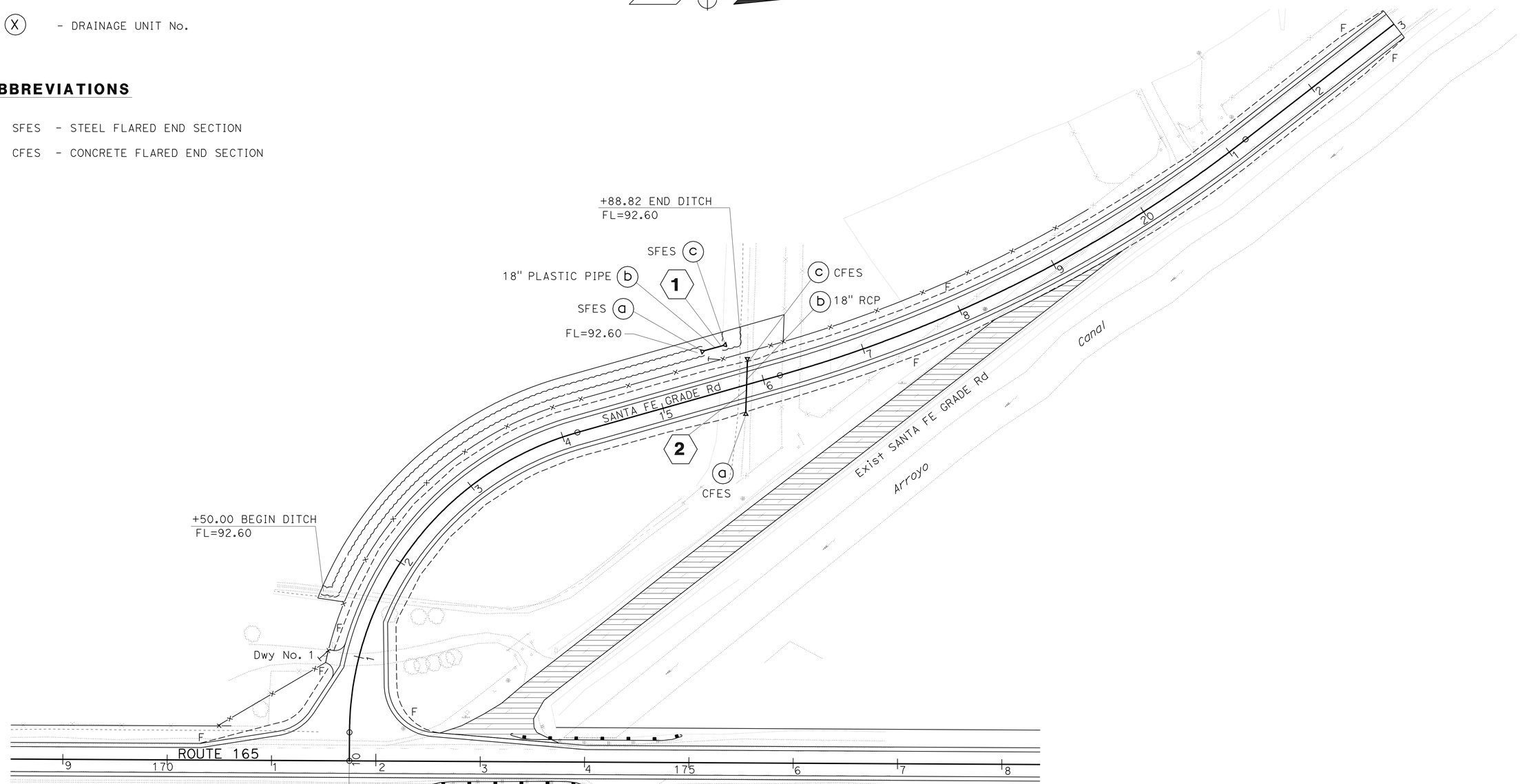

THIS PLAN ACCURATE FOR DRAINAGE WORK ONLY.

DRAINAGE PLAN

SCALE: 1" = 50'

D-1

STATE OF CALIFORNIA - DEPARTMENT OF TRANSPORTATION
Caltrans
DESIGN

FUNCTIONAL SUPERVISOR: CAROLINE REYES
CALCULATED-DESIGNED BY: MARLON LOPEZ
CHECKED BY: MIKE HUTCHISON
REVISED BY: ML
DATE REVISED: 5/12/09

LAST REVISION 00-00-00
DATE PLOTTED => 24-JUN-2010
TIME PLOTTED => 07:14

Dist	COUNTY	ROUTE	POST MILES TOTAL PROJECT	SHEET No.	TOTAL SHEETS
10	Mer	165	11.7/26.7	20	110

Michael D Hutchison 12/29/09
REGISTERED CIVIL ENGINEER DATE

6-21-10
PLANS APPROVAL DATE

REGISTERED PROFESSIONAL ENGINEER
Mike Hutchison
No. 36626
Exp 6/30/10
CIVIL
STATE OF CALIFORNIA

THE STATE OF CALIFORNIA OR ITS OFFICERS OR AGENTS SHALL NOT BE RESPONSIBLE FOR THE ACCURACY OR COMPLETENESS OF SCANNED COPIES OF THIS PLAN SHEET.

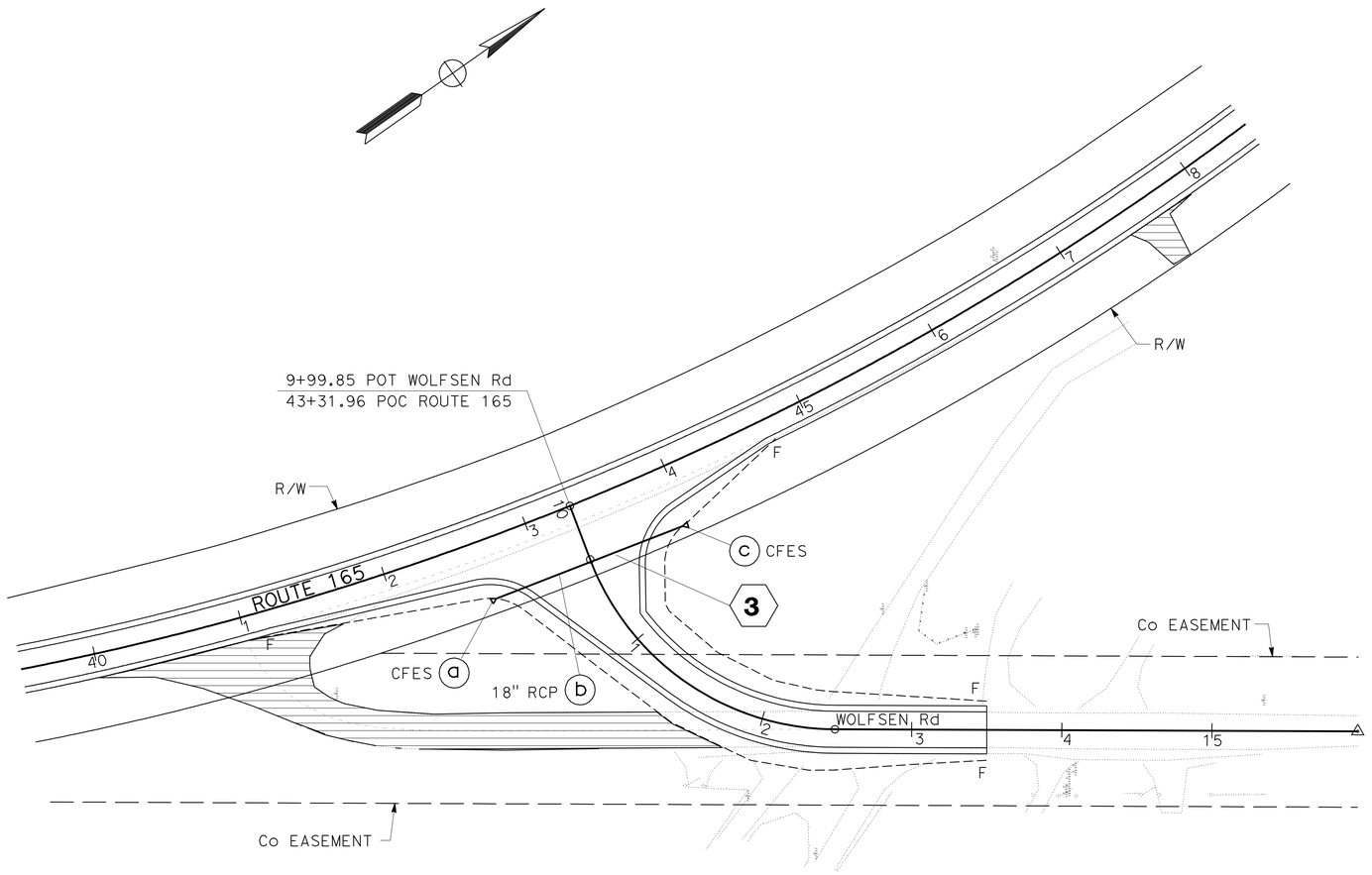

THIS PLAN ACCURATE FOR DRAINAGE WORK ONLY.

DRAINAGE PLAN

SCALE: 1" = 50'

D-2

REVISED BY	MH
DATE REVISED	4/14/10
CALCULATED-DESIGNED BY	MARLON LOPEZ
CHECKED BY	MIKE HUTCHISON
FUNCTIONAL SUPERVISOR	CAROLINE REYES

STATE OF CALIFORNIA - DEPARTMENT OF TRANSPORTATION
Caltrans
DESIGN

LAST REVISION 00-00-00 | DATE PLOTTED => 24-JUN-2010 | TIME PLOTTED => 07:14

Dist	COUNTY	ROUTE	POST MILES TOTAL PROJECT	SHEET No.	TOTAL SHEETS
10	Mer	165	11.7/26.7	21	110

Michael D Hutchison 12/29/09
REGISTERED CIVIL ENGINEER DATE

6-21-10
PLANS APPROVAL DATE

REGISTERED PROFESSIONAL ENGINEER Mike Hutchison No. 36626 Exp 6/30/10 CIVIL STATE OF CALIFORNIA

THE STATE OF CALIFORNIA OR ITS OFFICERS OR AGENTS SHALL NOT BE RESPONSIBLE FOR THE ACCURACY OR COMPLETENESS OF SCANNED COPIES OF THIS PLAN SHEET.

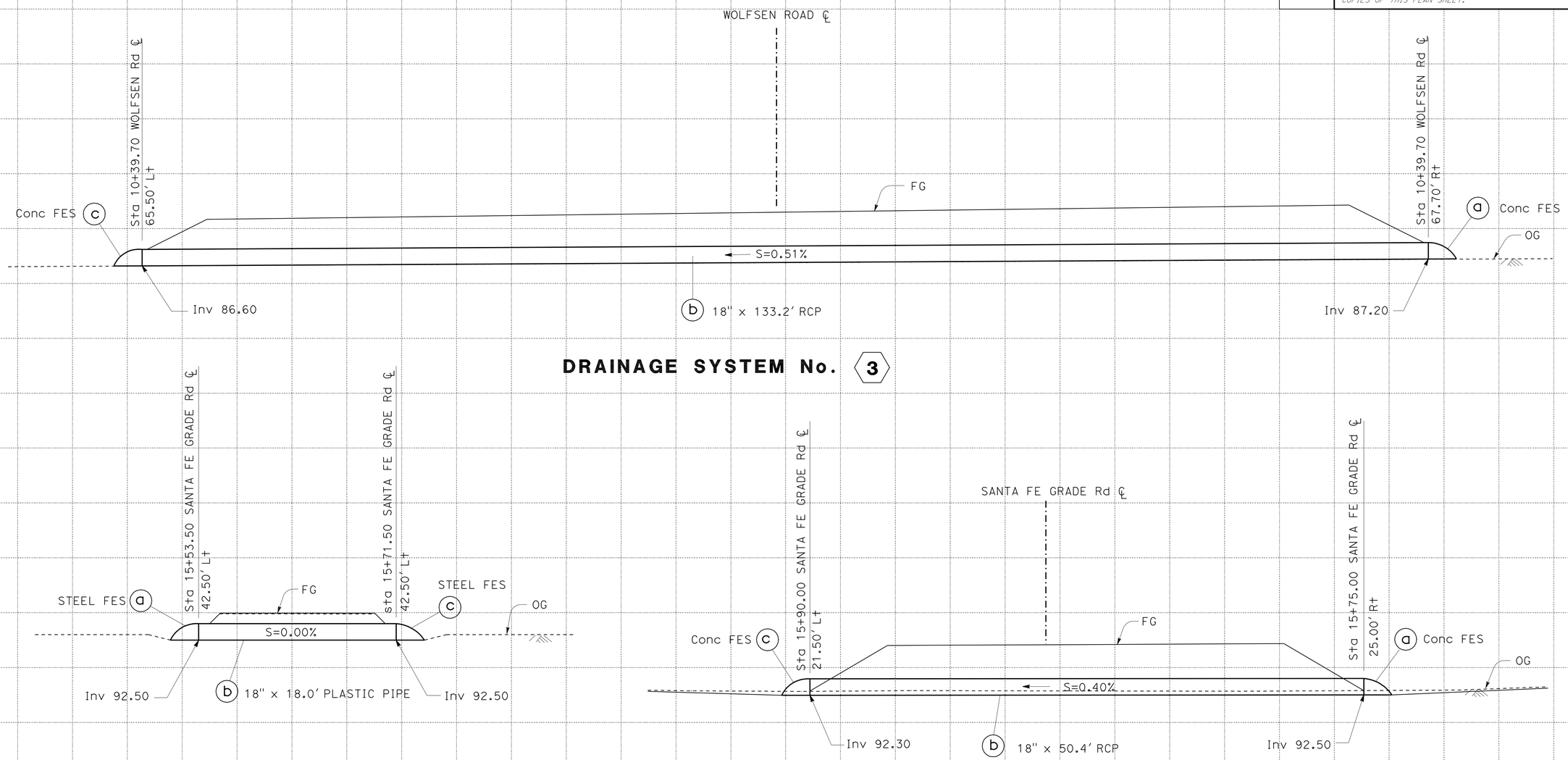

DRAINAGE PROFILES

SCALE: Horiz 1"= 5'
Vert 1"= 5'

DP-1

STATION		TOTAL
CY	Exc	
	Emb	

STATE OF CALIFORNIA - DEPARTMENT OF TRANSPORTATION
Caltrans DESIGN

FUNCTIONAL SUPERVISOR: CAROLINE REYES
CALCULATED-DESIGNED BY: MARLON LOPEZ
CHECKED BY: MIKE HUTCHISON
REVISED BY: ML
DATE REVISED: 6/1/09

LAST REVISION 00-00-00
DATE PLOTTED => 24-JUN-2010
TIME PLOTTED => 07:20

Dist	COUNTY	ROUTE	POST MILES TOTAL PROJECT	SHEET No.	TOTAL SHEETS
10	Mer	165	11.7/26.7	22	110

Michael D Hutchison 12/29/09
REGISTERED CIVIL ENGINEER DATE

6-21-10
PLANS APPROVAL DATE

REGISTERED PROFESSIONAL ENGINEER
Mike Hutchison
No. 36626
Exp. 6/30/10
CIVIL
STATE OF CALIFORNIA

THE STATE OF CALIFORNIA OR ITS OFFICERS OR AGENTS SHALL NOT BE RESPONSIBLE FOR THE ACCURACY OR COMPLETENESS OF SCANNED COPIES OF THIS PLAN SHEET.

DRAINAGE QUANTITIES

DRAINAGE SYSTEM No.	DRAINAGE UNIT No.	18" RCP	18" PLASTIC PIPE	18" Conc FES	18" STEEL FES	(N) PIPE JOINT CLASSIFICATION	DESCRIPTION	STATION	PLAN SHEETS No.	DRAINAGE SYSTEM No.	DRAINAGE UNIT No.
		LF	LF	EA	EA						
1	a				1		18" STEEL FES	Sta 15+53.50, 42.5' Lt, SANTA FE GRADE Rd	D-1	1	a
	b		18.0			Std	18" PLASTIC PIPE	Sta 15+53.50, 42.5' Lt, SANTA FE GRADE Rd			b
	c				1		18" STEEL FES	Sta 15+71.50, 42.5' Lt, SANTA FE GRADE Rd			c
2	a			1			18" Conc FES	Sta 15+75.00, 25.0' Rt, SANTA FE GRADE Rd	D-1	2	a
	b	50.4				Std	18" RCP	Sta 15+75.00, 25.0' Rt, SANTA FE GRADE Rd			b
	c			1			18" Conc FES	Sta 15+90.00, 21.5' Lt, SANTA FE GRADE Rd			c
3	a			1			18" Conc FES	Sta 10+39.70, 67.7' Rt, WOLFSEN Rd	D-2	3	a
	b	133.2				Std	18" RCP	Sta 10+39.70, 67.7' Rt, WOLFSEN Rd			b
	c			1			18" Conc FES	Sta 10+39.70, 65.5' Lt, WOLFSEN Rd			c
TOTAL		183.6	18.0	4	2						

(N) - NOT A SEPARATE PAY ITEM, FOR INFORMATION ONLY.

STATE OF CALIFORNIA - DEPARTMENT OF TRANSPORTATION
Caltrans
DESIGN

FUNCTIONAL SUPERVISOR: CAROLINE REYES

CALCULATED-DESIGNED BY: MARLON LOPEZ
CHECKED BY: MIKE HUTCHISON

REVISED BY: ML
DATE REVISED: 6/1/09

DRAINAGE QUANTITIES
DQ-1

LAST REVISION 00-00-00
DATE PLOTTED => 24-JUN-2010
TIME PLOTTED => 07:20

Dist	COUNTY	ROUTE	POST MILES TOTAL PROJECT	SHEET No.	TOTAL SHEETS
10	Mer	165	11.7/26.7	23	110

Michael D Hutchison 12/29/09
REGISTERED CIVIL ENGINEER DATE

6-21-10
PLANS APPROVAL DATE

REGISTERED PROFESSIONAL ENGINEER
Mike Hutchison
No. 36626
Exp 6/30/10
CIVIL
STATE OF CALIFORNIA

THE STATE OF CALIFORNIA OR ITS OFFICERS OR AGENTS SHALL NOT BE RESPONSIBLE FOR THE ACCURACY OR COMPLETENESS OF SCANNED COPIES OF THIS PLAN SHEET.

NOTE: LOCATIONS OF UTILITY FACILITIES SHOWN ARE APPROXIMATE AND HAVE NOT BEEN POSITIVELY LOCATED. CONTRACTOR SHALL VERIFY UTILITY LOCATIONS PRIOR TO CONSTRUCTION.

UTILITY OWNERSHIP

—— e —— —— (oh) ——	EXISTING OVERHEAD ELECTRICAL LINE - PG&E
—— E —— —— (OH) ——	NEW OVERHEAD ELECTRICAL LINE - PG&E
—— t —— —— (oh) ——	EXISTING OVERHEAD TELEPHONE LINE - AT&T
—— t —— —— t ——	EXISTING UNDERGROUND TELEPHONE LINE - AT&T

ABBREVIATIONS

PG&E - PACIFIC GAS AND ELECTRIC
AT&T - AMERICAN TELEPHONE AND TELEGRAPH

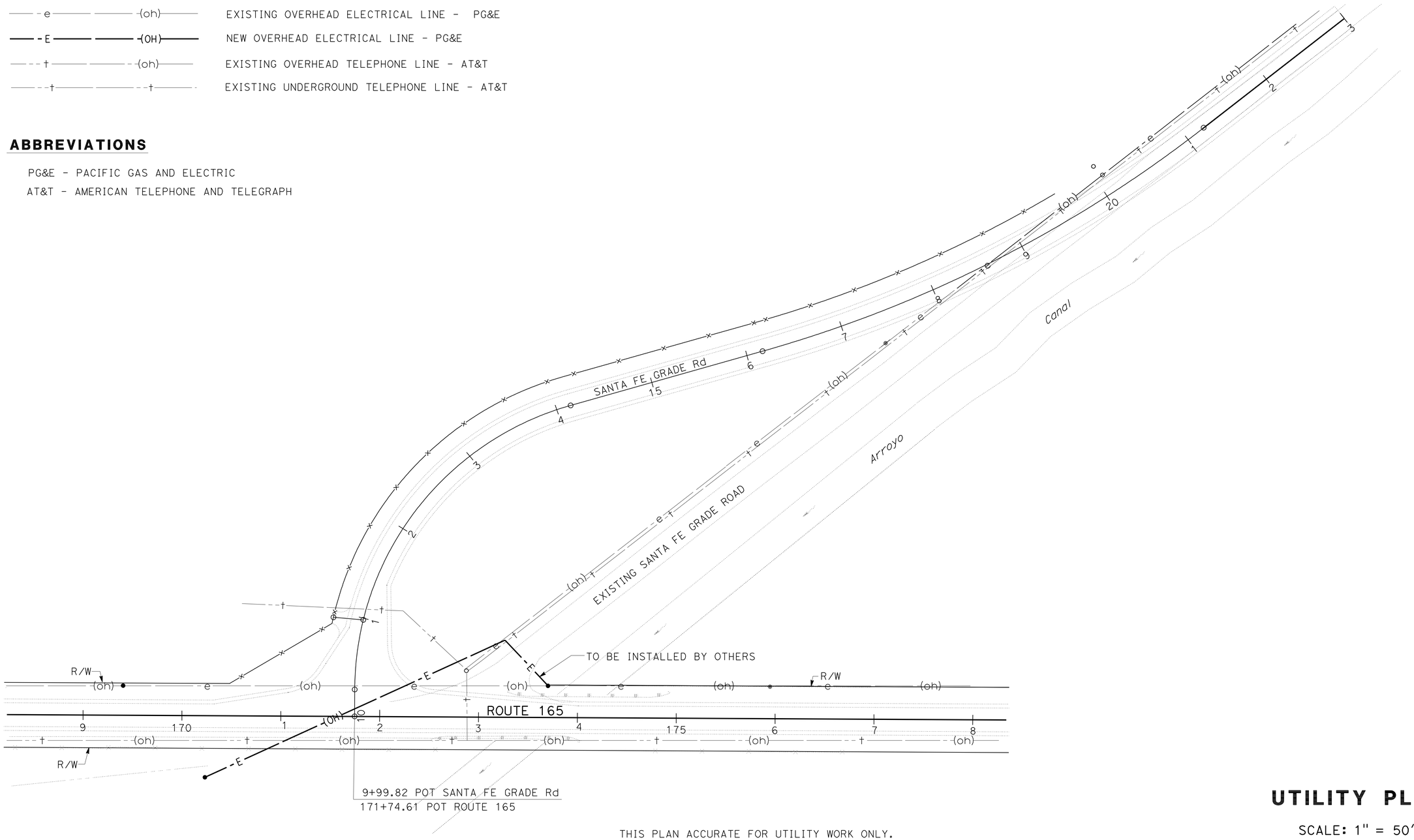

THIS PLAN ACCURATE FOR UTILITY WORK ONLY.

UTILITY PLAN

SCALE: 1" = 50′ **U-1**

MARLON LOPEZ	REVISED BY
MIKE HUTCHISON	DATE REVISED
ML	6/2/09
CALCULATED-DESIGNED BY	
CHECKED BY	
FUNCTIONAL SUPERVISOR	
CAROLINE REYES	

STATE OF CALIFORNIA - DEPARTMENT OF TRANSPORTATION
Caltrans
DESIGN

LAST REVISION 00-00-00
DATE PLOTTED => 24-JUN-2010
TIME PLOTTED => 07:20

Dist	COUNTY	ROUTE	POST MILES TOTAL PROJECT	SHEET No.	TOTAL SHEETS
10	Mer	165	11.7/26.7	24	110

Michael D Hutchison 12/29/09
REGISTERED CIVIL ENGINEER DATE

6-21-10
PLANS APPROVAL DATE

REGISTERED PROFESSIONAL ENGINEER
Mike Hutchison
No. 36626
Exp 6/30/10
CIVIL
STATE OF CALIFORNIA

THE STATE OF CALIFORNIA OR ITS OFFICERS OR AGENTS SHALL NOT BE RESPONSIBLE FOR THE ACCURACY OR COMPLETENESS OF SCANNED COPIES OF THIS PLAN SHEET.

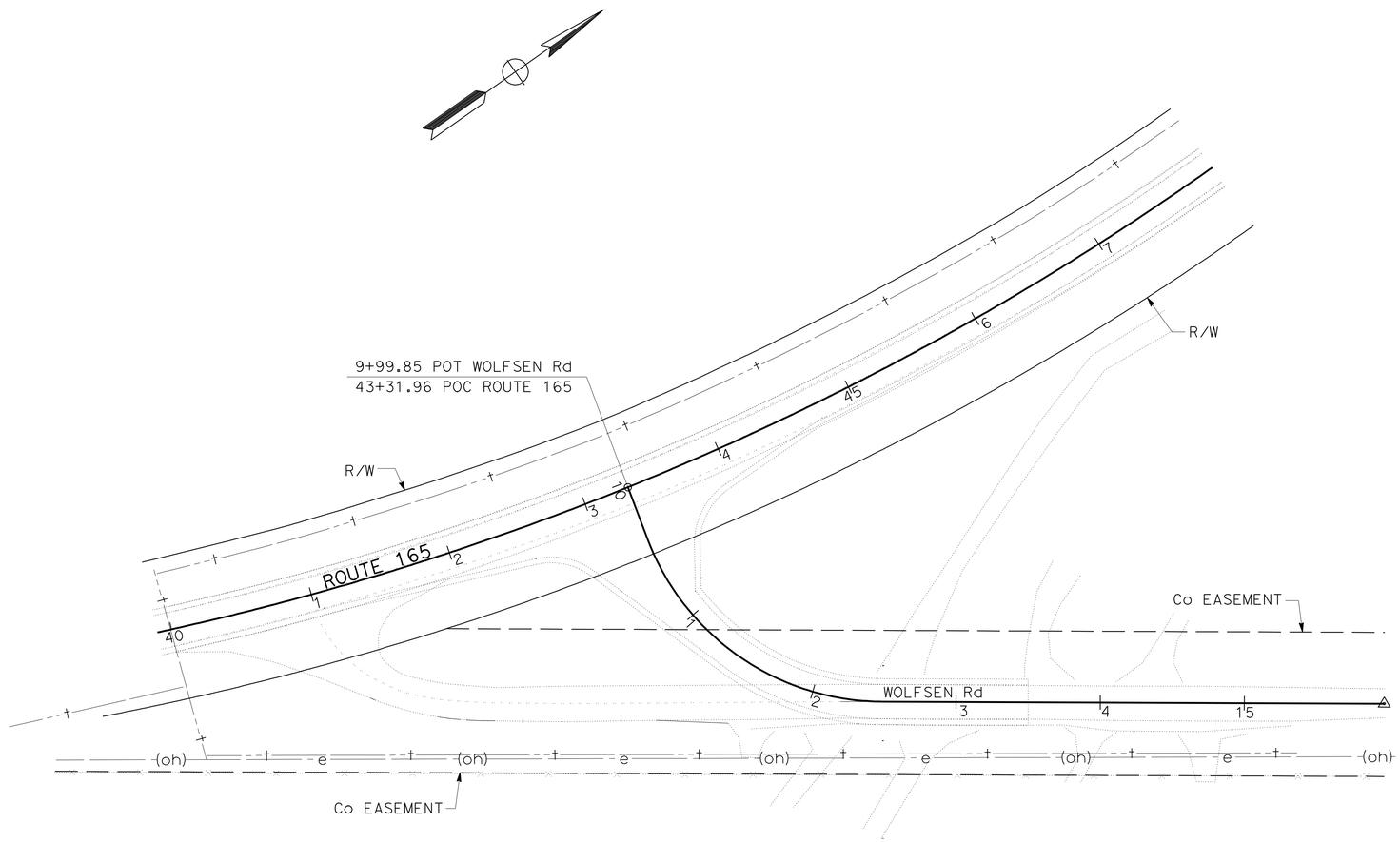

THIS PLAN ACCURATE FOR UTILITY WORK ONLY.

UTILITY PLAN

SCALE: 1" = 50'

U-2

STATE OF CALIFORNIA - DEPARTMENT OF TRANSPORTATION
Caltrans
DESIGN

FUNCTIONAL SUPERVISOR: CAROLINE REYES
CALCULATED-DESIGNED BY: MARLON LOPEZ
CHECKED BY: MIKE HUTCHISON
REVISED BY: ML
DATE REVISED: 4/14/10

LAST REVISION 00-00-00
DATE PLOTTED => 24-JUN-2010
TIME PLOTTED => 07:20

Dist	COUNTY	ROUTE	POST MILES TOTAL PROJECT	SHEET No.	TOTAL SHEETS
10	Mer	165	11.7/26.7	25	110

REGISTERED CIVIL ENGINEER 12/29/09 DATE

6-21-10
PLANS APPROVAL DATE

REGISTERED PROFESSIONAL ENGINEER Hassan Marei No. 35068 Exp. 9/30/11 CIVIL STATE OF CALIFORNIA

THE STATE OF CALIFORNIA OR ITS OFFICERS OR AGENTS SHALL NOT BE RESPONSIBLE FOR THE ACCURACY OR COMPLETENESS OF SCANNED COPIES OF THIS PLAN SHEET.

STATIONARY MOUNTED CONSTRUCTION AREA SIGNS

SIGN No.	SIGN CODE	PANEL SIZE	No. OF POST AND SIZE	No. OF SIGN	SIGN MESSAGE
A	W20-1	48" x 48"	1- 6" x 6"	2	ROAD WORK AHEAD
B	G20-2	36" x 18"	1- 4" x 4"	9	END ROAD WORK
C	W20-1	36" x 36"	1- 4" x 6"	8	ROAD WORK AHEAD
D	C40(CA)	36" x 18"	1- 4" x 4"	2	TRAFFIC FINES DOUBLED IN CONSTRUCTION ZONES
E	CPFIS	90" x 60"	2- 6" x 6"	2	FUNDING SIGN
F	G20-1	36" x 18"	1- 4" x 4"	2	ROAD WORK NEXT 15 MILES

NOTE: EXACT SIGN LOCATIONS TO BE DETERMINED BY THE ENGINEER.

LEGEND:

○ - CONSTRUCTION AREA SIGN

ABBREVIATION:

CPFIS - CONSTRUCTION PROJECT FUNDING IDENTIFICATION SIGN

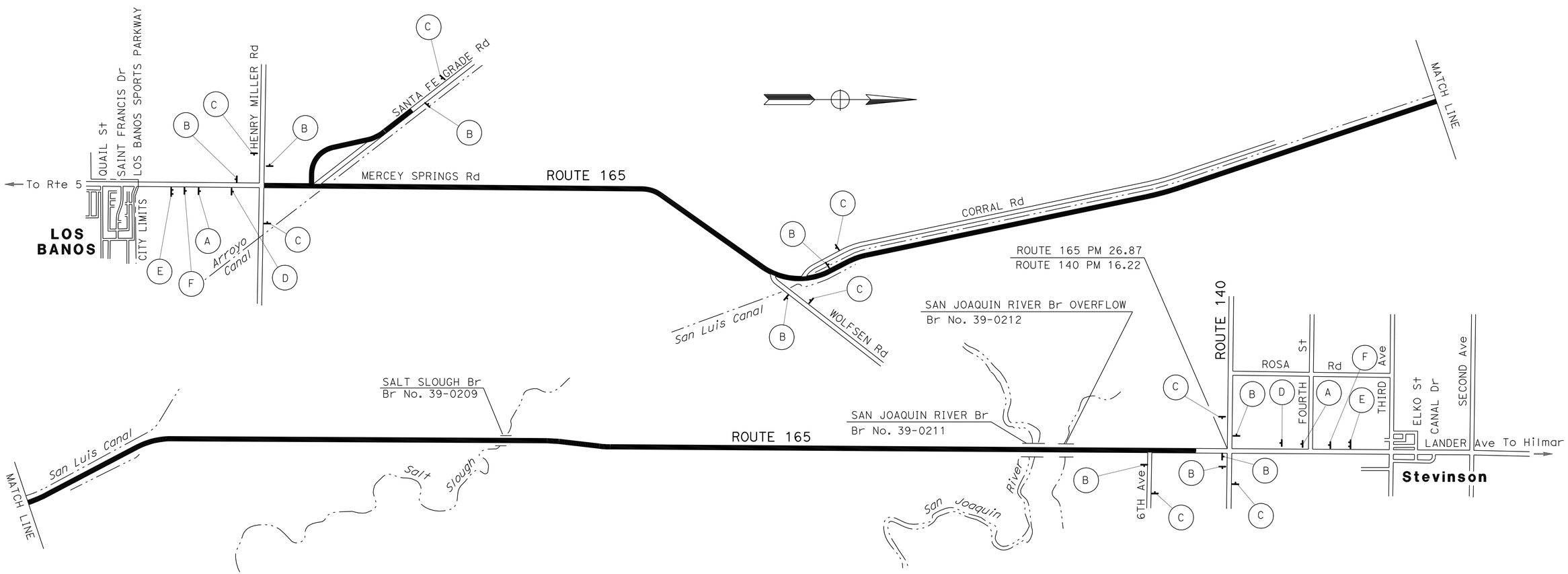

THIS PLAN ACCURATE FOR CONSTRUCTION AREA SIGN WORK ONLY.

CONSTRUCTION AREA SIGNS

NO SCALE

CS-1

CN	6/9/09
REVISED BY	DATE REVISED
CHRISTOPHER M HANSON	CECILE NGUYEN
CALCULATED-DESIGNED BY	CHECKED BY
FUNCTIONAL SUPERVISOR	MOHAMMED QATAMI

STATE OF CALIFORNIA - DEPARTMENT OF TRANSPORTATION
Caltrans® TRAFFIC DESIGN

LAST REVISION 00-00-00 | DATE PLOTTED => 24-JUN-2010 | TIME PLOTTED => 07:20

NOTES:
1. * INDICATES SIGN TO BE MOUNTED TO EXISTING GUIDE SIGN POST. EXACT POSITION TO BE DETERMINED BY THE ENGINEER.
2. GUIDE SIGNS ARE TO BE PLACED ON EXISTING SIGN POSTS WHERE POSSIBLE AND AS DETERMINED BY THE ENGINEER.
3. EXACT LOCATION OF ALL SIGNS TO BE DETERMINED BY THE ENGINEER
4. FOR MORE DETAILS, SEE DETOUR SHEETS.

Dist	COUNTY	ROUTE	POST MILES TOTAL PROJECT	SHEET No.	TOTAL SHEETS
10	Mer	165	11.7/26.7	26	110

REGISTERED CIVIL ENGINEER 12/29/09 DATE

6-21-10
PLANS APPROVAL DATE

REGISTERED PROFESSIONAL ENGINEER Hassan Marei No. 35068 Exp. 9/30/11 CIVIL STATE OF CALIFORNIA

THE STATE OF CALIFORNIA OR ITS OFFICERS OR AGENTS SHALL NOT BE RESPONSIBLE FOR THE ACCURACY OR COMPLETENESS OF SCANNED COPIES OF THIS PLAN SHEET.

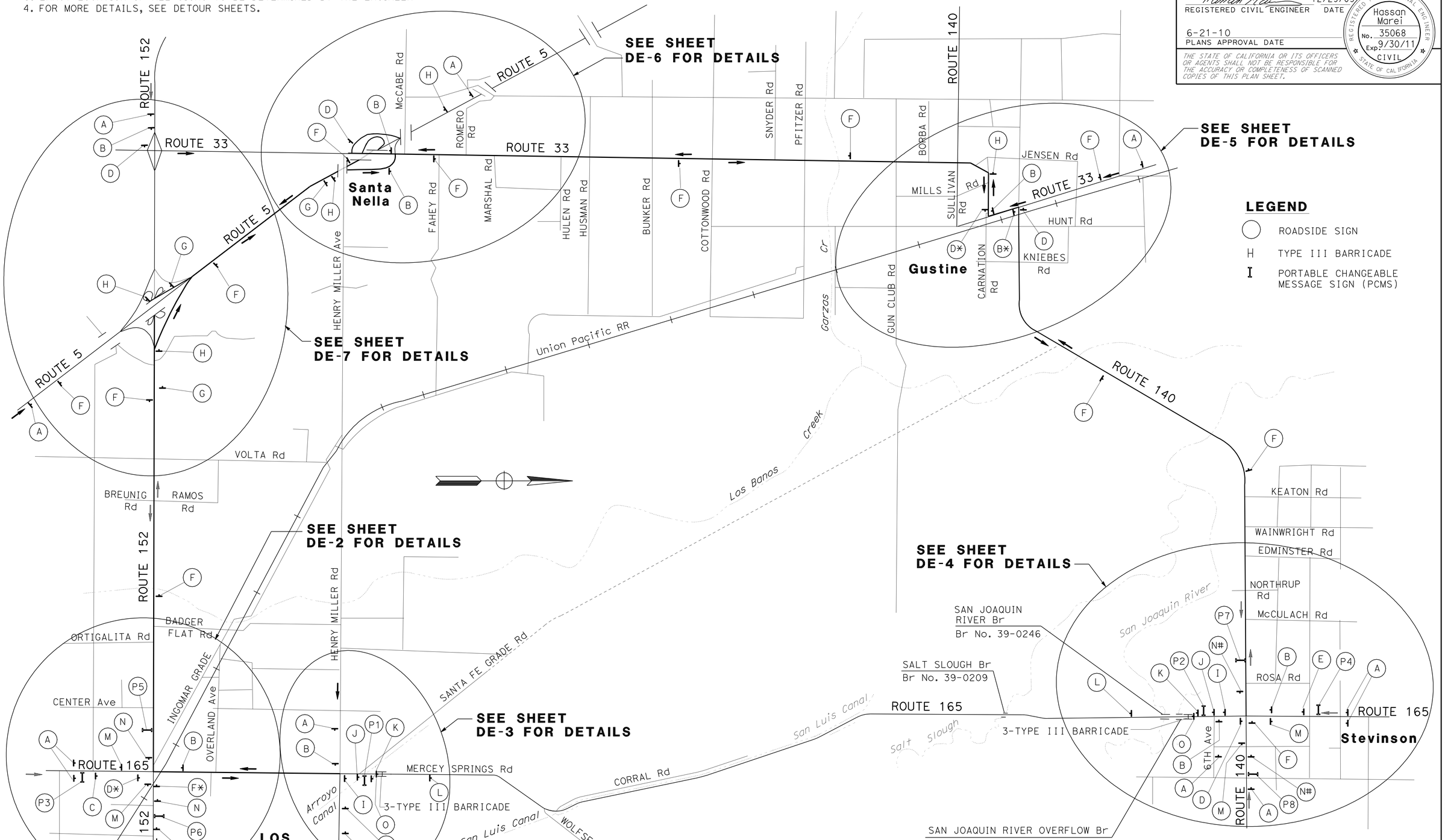

LEGEND

- ROADSIDE SIGN
- H TYPE III BARRICADE
- I PORTABLE CHANGEABLE MESSAGE SIGN (PCMS)

THIS PLAN ACCURATE FOR DETOUR WORK ONLY.

DETOUR PLAN

NO SCALE **DE-1**

REVISED BY	DATE REVISED
CN	6/9/09

CALCULATED-DESIGNED BY: CHRISTOPHER M HANSON
CHECKED BY: CECILE NGUYEN
FUNCTIONAL SUPERVISOR: MOHAMMED QATAMI

STATE OF CALIFORNIA - DEPARTMENT OF TRANSPORTATION
Caltrans® TRAFFIC DESIGN

LAST REVISION 00-00-00 | DATE PLOTTED => 24-JUN-2010 | TIME PLOTTED => 07:20

BORDER LAST REVISED 4/11/2008 | RELATIVE BORDER SCALE IS IN INCHES 0 1 2 3 | USERNAME => trlenard | DGN FILE => a27980mg001.dgn | CU 06385 | EA 279801

Dist	COUNTY	ROUTE	POST MILES TOTAL PROJECT	SHEET No.	TOTAL SHEETS
10	Mer	165	11.7/26.7	27	110

REGISTERED CIVIL ENGINEER 12/29/09 DATE

6-21-10
PLANS APPROVAL DATE

REGISTERED PROFESSIONAL ENGINEER Hassan Marei No. 35068 Exp. 9/30/11 CIVIL STATE OF CALIFORNIA

THE STATE OF CALIFORNIA OR ITS OFFICERS OR AGENTS SHALL NOT BE RESPONSIBLE FOR THE ACCURACY OR COMPLETENESS OF SCANNED COPIES OF THIS PLAN SHEET.

NOTE: SEE SIGN DETAILS SHEET SD-4 FOR MORE INFORMATION.

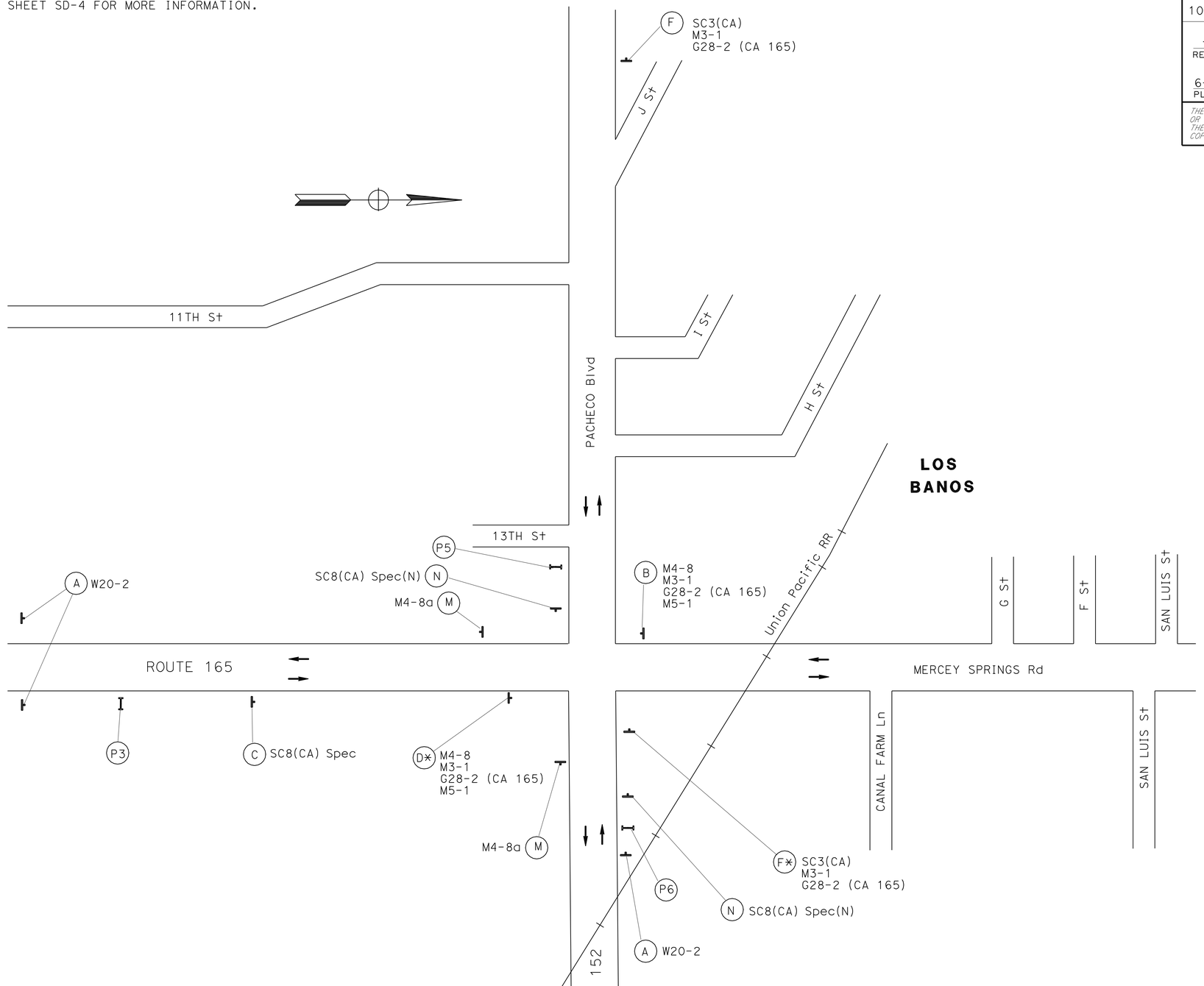

THIS PLAN ACCURATE FOR DETOUR WORK ONLY.

DETOUR PLAN

NO SCALE

DE-2

CHRISTOPHER M HANSON	CN
CECILE NGUYEN	6/9/09
CALCULATED-DESIGNED BY	REVISED BY
CHECKED BY	DATE REVISED
FUNCTIONAL SUPERVISOR	
MOHAMMED QATAMI	

STATE OF CALIFORNIA - DEPARTMENT OF TRANSPORTATION

Caltrans

TRAFFIC DESIGN

LAST REVISION 00-00-00 DATE PLOTTED => 24-JUN-2010 TIME PLOTTED => 07:20

Dist	COUNTY	ROUTE	POST MILES TOTAL PROJECT	SHEET No.	TOTAL SHEETS
10	Mer	165	11.7/26.7	28	110

REGISTERED CIVIL ENGINEER 12/29/09 DATE

6-21-10
PLANS APPROVAL DATE

REGISTERED PROFESSIONAL ENGINEER Hassan Marei No. 35068 Exp. 9/30/11 CIVIL STATE OF CALIFORNIA

THE STATE OF CALIFORNIA OR ITS OFFICERS OR AGENTS SHALL NOT BE RESPONSIBLE FOR THE ACCURACY OR COMPLETENESS OF SCANNED COPIES OF THIS PLAN SHEET.

NOTE: SEE SIGN DETAILS SHEET SD-4 FOR MORE INFORMATION.

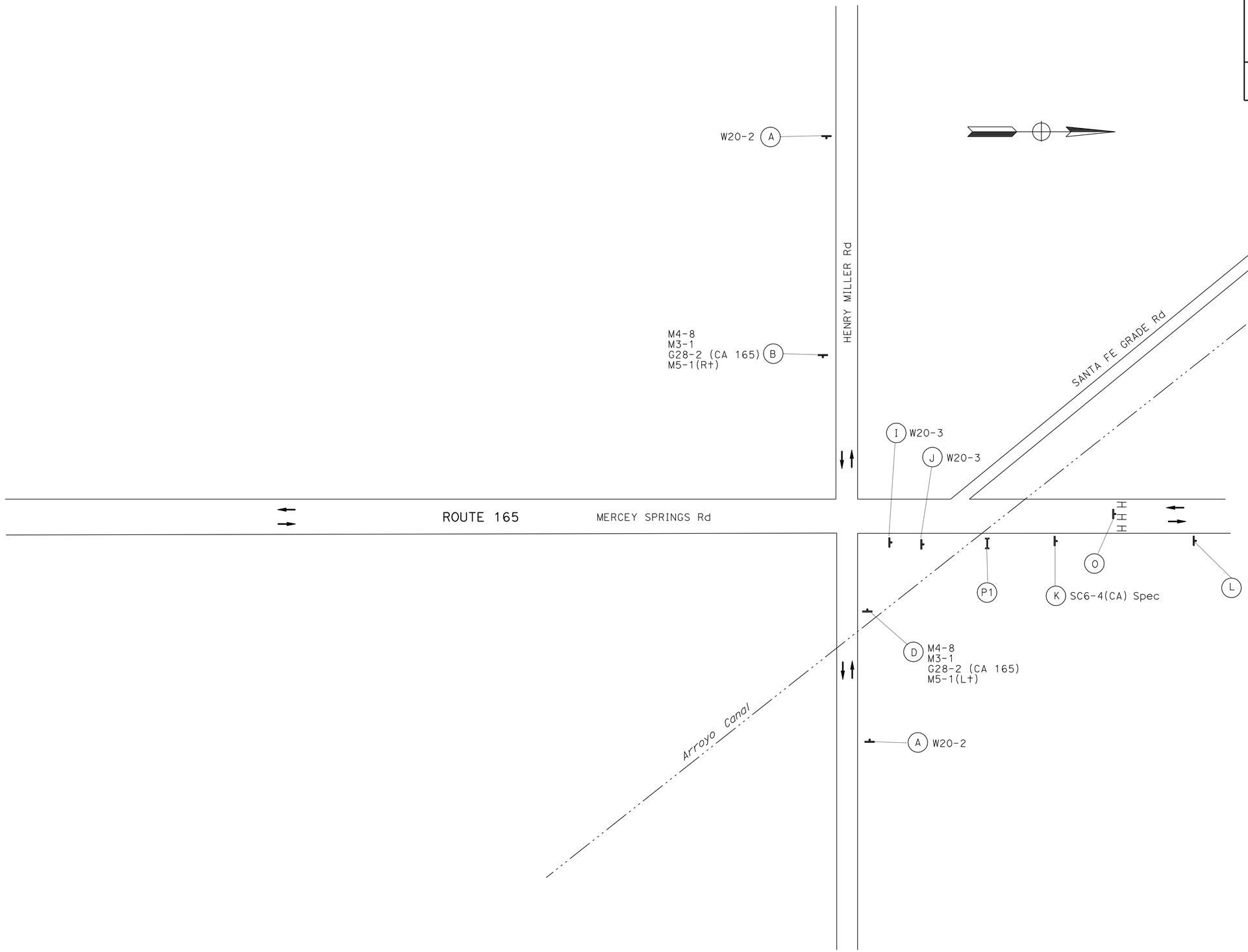

THIS PLAN ACCURATE FOR DETOUR WORK ONLY.

DETOUR PLAN

NO SCALE

DE-3

STATE OF CALIFORNIA - DEPARTMENT OF TRANSPORTATION
Caltrans® **TRAFFIC DESIGN**

FUNCTIONAL SUPERVISOR: MOHAMMED QATAMI
CALCULATED-DESIGNED BY: CHRISTOPHER M HANSON
CHECKED BY: CECILE NGUYEN
REVISED BY: CN
DATE REVISED: 6/9/09

LAST REVISION 00-00-00
DATE PLOTTED => 24-JUN-2010
TIME PLOTTED => 07:20

Dist	COUNTY	ROUTE	POST MILES TOTAL PROJECT	SHEET No.	TOTAL SHEETS
10	Mer	165	11.7/26.7	29	110

REGISTERED CIVIL ENGINEER 12/29/09 DATE

6-21-10
PLANS APPROVAL DATE

REGISTERED PROFESSIONAL ENGINEER Hassan Marei No. 35068 Exp. 9/30/11 CIVIL STATE OF CALIFORNIA

THE STATE OF CALIFORNIA OR ITS OFFICERS OR AGENTS SHALL NOT BE RESPONSIBLE FOR THE ACCURACY OR COMPLETENESS OF SCANNED COPIES OF THIS PLAN SHEET.

NOTE: SEE SIGN DETAILS SHEET SD-4 FOR MORE INFORMATION.

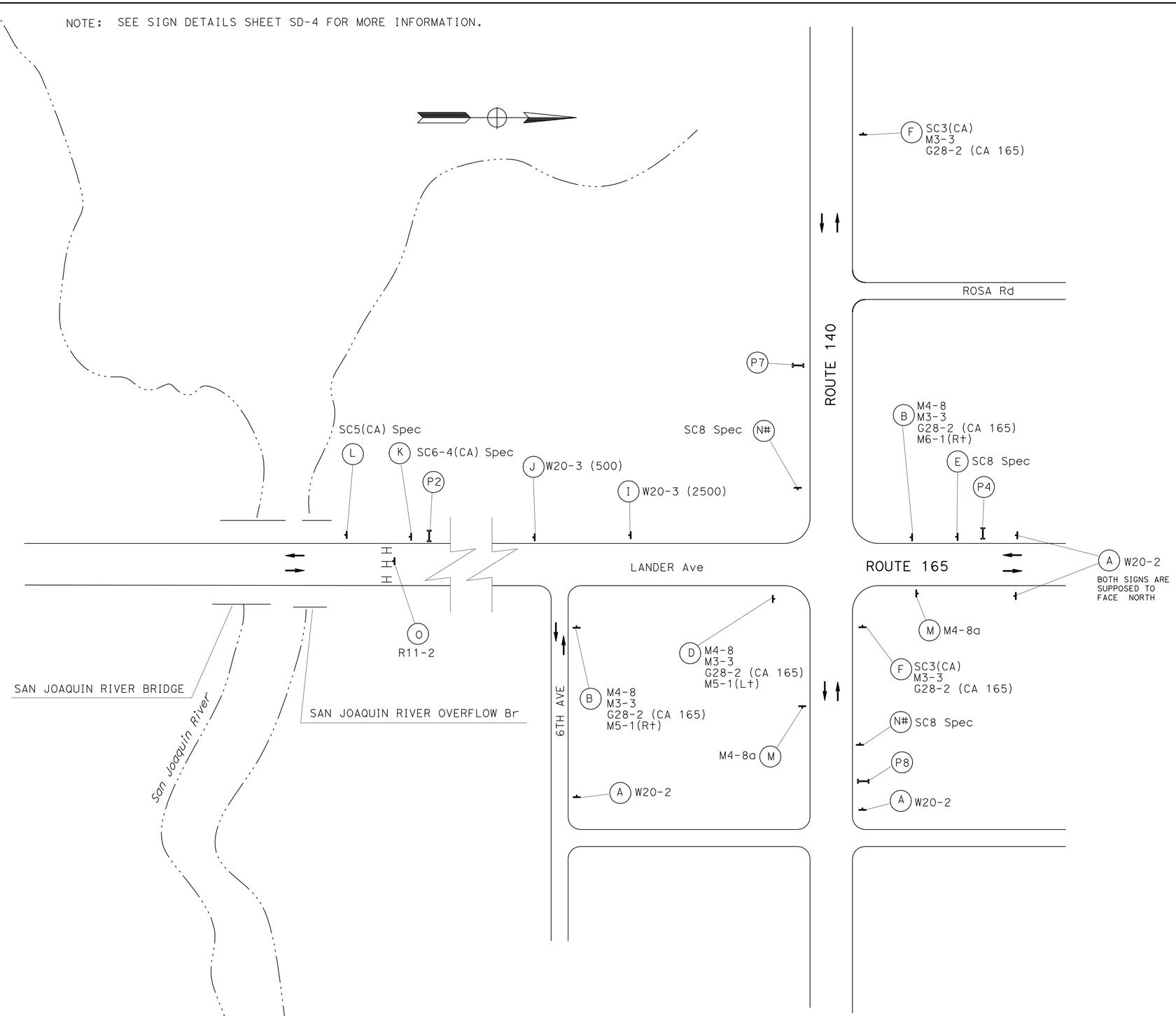

THIS PLAN ACCURATE FOR DETOUR WORK ONLY.

DETOUR PLAN

NO SCALE

DE-4

STATE OF CALIFORNIA - DEPARTMENT OF TRANSPORTATION
Caltrans® **TRAFFIC DESIGN**

FUNCTIONAL SUPERVISOR: MOHAMMED QATAMI

CALCULATED-DESIGNED BY: CHRISTOPHER M HANSON
CHECKED BY: CECILE NGUYEN

REVISED BY: CN
DATE REVISED: 6/9/09

LAST REVISION 00-00-00
DATE PLOTTED => 24-JUN-2010
TIME PLOTTED => 07:20

NOTE: SEE SIGN DETAILS SHEET SD-4 FOR MORE INFORMATION.

Dist	COUNTY	ROUTE	POST MILES TOTAL PROJECT	SHEET No.	TOTAL SHEETS
10	Mer	165	11.7/26.7	30	110

REGISTERED CIVIL ENGINEER 12/29/09 DATE

6-21-10
PLANS APPROVAL DATE

REGISTERED PROFESSIONAL ENGINEER Hassan Marei No. 35068 Exp. 9/30/11 CIVIL STATE OF CALIFORNIA

THE STATE OF CALIFORNIA OR ITS OFFICERS OR AGENTS SHALL NOT BE RESPONSIBLE FOR THE ACCURACY OR COMPLETENESS OF SCANNED COPIES OF THIS PLAN SHEET.

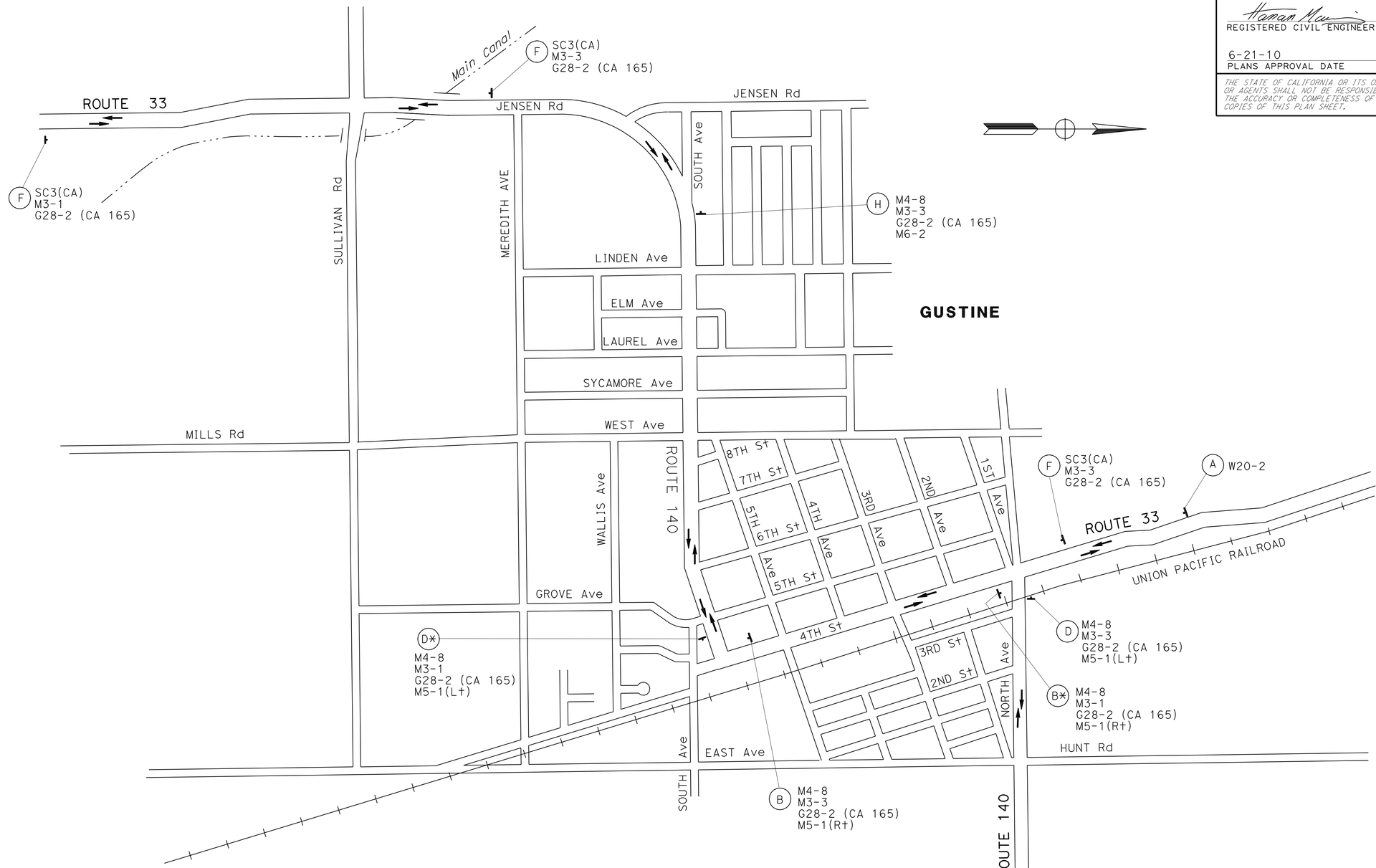

THIS PLAN ACCURATE FOR DETOUR WORK ONLY.

DETOUR PLAN

NO SCALE

DE-5

STATE OF CALIFORNIA - DEPARTMENT OF TRANSPORTATION
Caltrans TRAFFIC DESIGN

FUNCTIONAL SUPERVISOR: MOHAMMED QATAMI
CALCULATED-DESIGNED BY: CHRISTOPHER M HANSON
CHECKED BY: CECILE NGUYEN
REVISED BY: CN
DATE REVISED: 6/9/09

LAST REVISION 00-00-00
DATE PLOTTED => 24-JUN-2010
TIME PLOTTED => 07:20

Dist	COUNTY	ROUTE	POST MILES TOTAL PROJECT	SHEET No.	TOTAL SHEETS
10	Mer	165	11.7/26.7	31	110

REGISTERED CIVIL ENGINEER 12/29/09 DATE

6-21-10
PLANS APPROVAL DATE

REGISTERED PROFESSIONAL ENGINEER Hassan Marei No. 35068 Exp. 9/30/11 CIVIL STATE OF CALIFORNIA

THE STATE OF CALIFORNIA OR ITS OFFICERS OR AGENTS SHALL NOT BE RESPONSIBLE FOR THE ACCURACY OR COMPLETENESS OF SCANNED COPIES OF THIS PLAN SHEET.

NOTE: SEE SIGN DETAILS SHEET SD-4 FOR MORE INFORMATION.

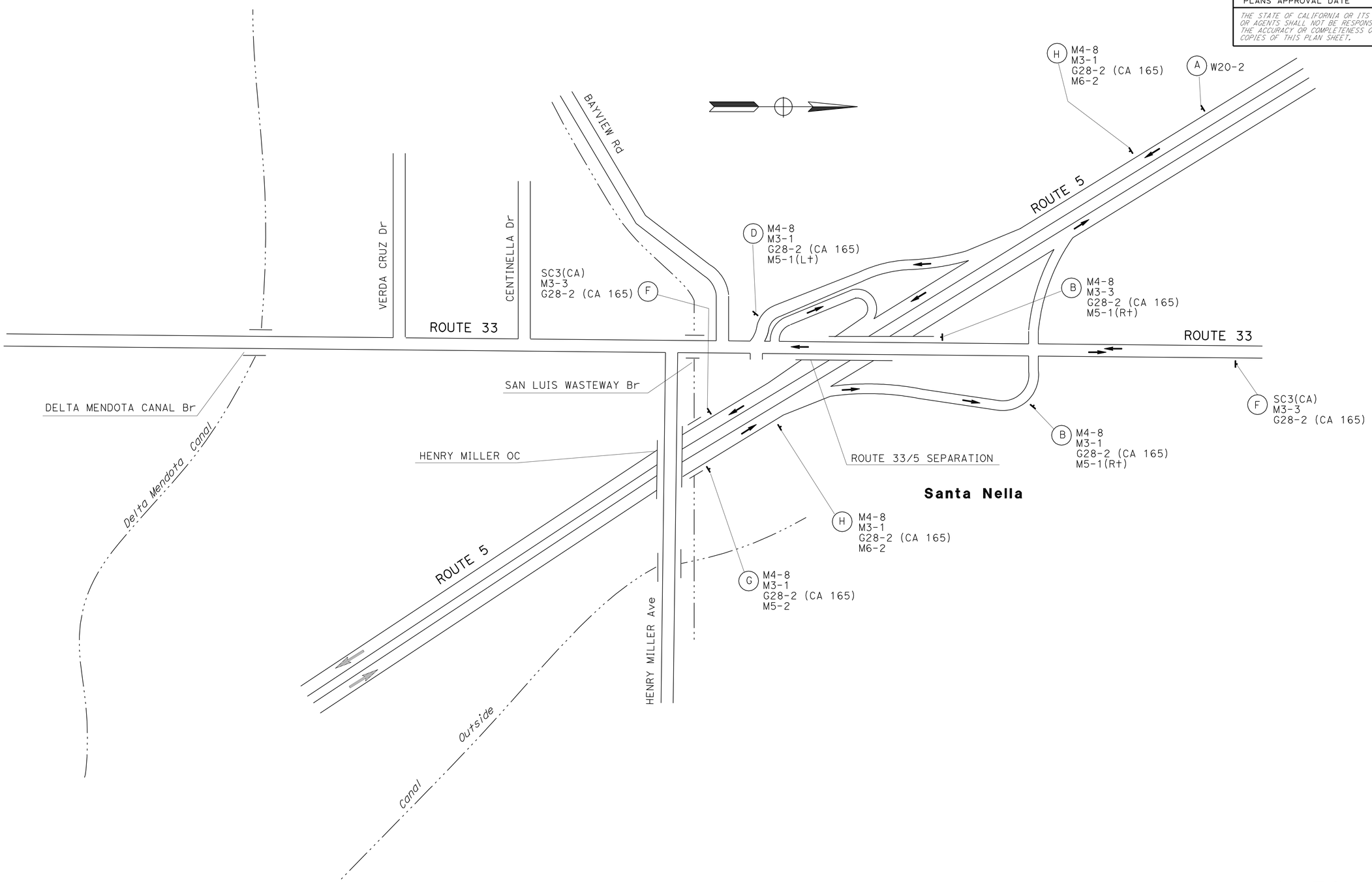

THIS PLAN ACCURATE FOR DETOUR WORK ONLY.

DETOUR PLAN

NO SCALE **DE-6**

CHRISTOPHER M HANSON	CN	FUNCTIONAL SUPERVISOR	MOHAMMED QATAMI
CECILE NGUYEN	6/9/09	CALCULATED-DESIGNED BY	REVISED BY
		CHECKED BY	DATE REVISED

STATE OF CALIFORNIA - DEPARTMENT OF TRANSPORTATION
Caltrans® **TRAFFIC DESIGN**

LAST REVISION 00-00-00 | DATE PLOTTED => 24-JUN-2010 | TIME PLOTTED => 07:27

Dist	COUNTY	ROUTE	POST MILES TOTAL PROJECT	SHEET No.	TOTAL SHEETS
10	Mer	165	11.7/26.7	32	110

REGISTERED CIVIL ENGINEER 12/29/09 DATE

6-21-10
PLANS APPROVAL DATE

REGISTERED PROFESSIONAL ENGINEER Hassan Marei No. 35068 Exp. 9/30/11 CIVIL STATE OF CALIFORNIA

THE STATE OF CALIFORNIA OR ITS OFFICERS OR AGENTS SHALL NOT BE RESPONSIBLE FOR THE ACCURACY OR COMPLETENESS OF SCANNED COPIES OF THIS PLAN SHEET.

NOTE:
SEE SIGN DETAILS SHEET SD-4 FOR MORE INFORMATION.

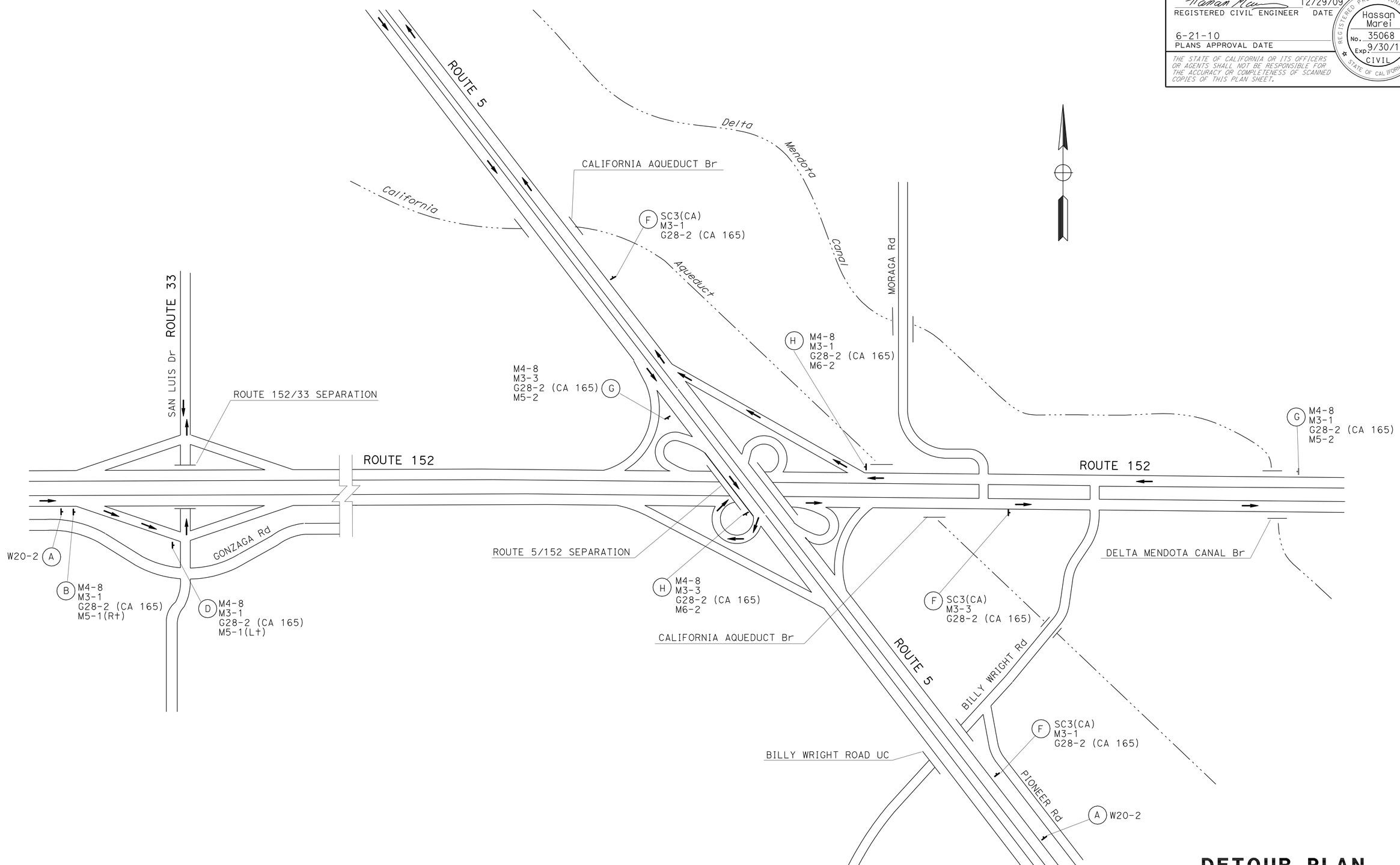

THIS PLAN ACCURATE FOR DETOUR WORK ONLY.

DETOUR PLAN
NO SCALE

DE-7

STATE OF CALIFORNIA - DEPARTMENT OF TRANSPORTATION
Caltrans®
TRAFFIC DESIGN

FUNCTIONAL SUPERVISOR: MOHAMMED QATAMI
CALCULATED-DESIGNED BY: CHRISTOPHER M HANSON
CHECKED BY: CECILE NGUYEN
REVISED BY: CN
DATE REVISED: 6/9/09

LAST REVISION 00-00-00
DATE PLOTTED => 24-JUN-2010
TIME PLOTTED => 07:27

Dist	COUNTY	ROUTE	POST MILES TOTAL PROJECT	SHEET No.	TOTAL SHEETS
10	Mer	165	11.7/26.7	33	110

REGISTERED CIVIL ENGINEER 12/29/09 DATE

6-21-10
PLANS APPROVAL DATE

REGISTERED PROFESSIONAL ENGINEER Hassan Marei No. 35068 Exp. 9/30/11 CIVIL STATE OF CALIFORNIA

THE STATE OF CALIFORNIA OR ITS OFFICERS OR AGENTS SHALL NOT BE RESPONSIBLE FOR THE ACCURACY OR COMPLETENESS OF SCANNED COPIES OF THIS PLAN SHEET.

TYPE III BARRICADE

SHEET No.	EA
DE-3	3
DE-4	3
TOTAL	6

SIGN ARRAY

SIGN TYPE	PANEL SIZE	MESSAGE OR DESCRIPTION	IMAGE
M4-8	26" x 12"	DETOUR	DETOUR
G28-2(CA 165)	28" x 25"	CALIFORNIA 165	CALIFORNIA 165
M6-2	21" x 15"	ANGLED ARROW	
M5-2	21" x 15"	ADVANCED ANGLED ARROW	
M5-1	26" x 12"	ADVANCED RIGHT ARROW	
M5-1	26" x 12"	ADVANCED LEFT ARROW	
M3-1	26" x 12"	NORTH	NORTH
M3-3	26" x 12"	SOUTH	SOUTH
SC3 (CA)	36" x 12"	DETOUR WITH ARROW	DETOUR

PCMS QUANTITIES

LOCATION	PORTABLE CHANGEABLE MESSAGE SIGN
	EA
ROUTE 165	4
ROUTE 152	2
ROUTE 140	2

DETOUR SIGN QUANTITIES

SIGN No.	SIGN TYPE	PANEL SIZE	MESSAGE OR DESCRIPTION	No. OF POSTS AND SIZE	No. OF SIGN	No. OF SIGN PANEL	REMARK
A	W20-2	36" x 36"	DETOUR AHEAD	1 - 4" x 6"	13		
B	ARRAY		ARRAY B	1 - 4" x 6"	8		
D	ARRAY		ARRAY D	1 - 4" x 6"	7		
F	ARRAY		ARRAY F	1 - 4" x 6"	13		
G	ARRAY		ARRAY G	1 - 4" x 6"	3		
H	ARRAY		ARRAY H	1 - 4" x 6"	4		
I	W20-3	48" x 48"	ROAD CLOSED 2500 FT	1 - 4" x 6"	2		
J	W20-3	48" x 48"	ROAD CLOSED 1000 FT	1 - 4" x 6"	2		
M	M4-8a	24" x 18"	END DETOUR	1 - 4" x 6"	4		
O	R11-2	48" x 30"	ROAD CLOSED			2	MOUNT ON BARRICADE
SUBTOTAL					56*	2*	

NOTES:
1. EXACT SIGN LOCATIONS TO BE DETERMINED BY THE ENGINEER.
2. M3-1 AND M3-3 IN ARRAY DETAIL ARE FOR EXAMPLE OF PLACEMENT ONLY. USE APPROPRIATE M3-1 "NORTH" AND M3-3 "SOUTH" FOR EACH DETOUR DIRECTION.
3. SEE SHEET SD-4 FOR MORE ARRAY INFORMATION.
4. SEE SHEETS SD-3 AND SQ- 4 FOR MORE DETOUR SIGN INFORMATION.
5. * QUANTITIES TOTALED IN DEQ-2 SHEET.

DETOUR QUANTITIES
DEQ-1

STATE OF CALIFORNIA - DEPARTMENT OF TRANSPORTATION
Caltrans TRAFFIC DESIGN

FUNCTIONAL SUPERVISOR: MOHAMMED QATAMI
CALCULATED-DESIGNED BY: CHRISTOPHER M HANSON
CHECKED BY: CECILE NGUYEN
REVISED BY: CN
DATE REVISED: 12/29/09

LAST REVISION 00-00-00
DATE PLOTTED => 24-JUN-2010
TIME PLOTTED => 07:27

Dist	COUNTY	ROUTE	POST MILES TOTAL PROJECT	SHEET No.	TOTAL SHEETS
10	Mer	165	11.7/26.7	34	110

REGISTERED CIVIL ENGINEER 12/29/09 DATE

6-21-10
PLANS APPROVAL DATE

REGISTERED PROFESSIONAL ENGINEER Hassan Marei No. 35068 Exp. 9/30/11 CIVIL STATE OF CALIFORNIA

THE STATE OF CALIFORNIA OR ITS OFFICERS OR AGENTS SHALL NOT BE RESPONSIBLE FOR THE ACCURACY OR COMPLETENESS OF SCANNED COPIES OF THIS PLAN SHEET.

DETOUR SIGN QUANTITIES

CONSTRUCTION PERIOD	PCMS No.	PORTABLE CHANGEABLE MESSAGE SIGN MESSAGE			STATIONARY MOUNTED CONSTRUCTION AREA SIGN SIGN No.	SIGN CODE	No. OF SIGN PANEL	No. OF SIGN	PANEL SIZE	No. OF SIGN AND SIZE	MESSAGE
ADVANCE WARNING	P1 & P2	HWY-165 WILL BE CLOSED	MMM DD TO MMM DD	TUNE TO AM-1610	K	SC6-4(CA) Spec		2	50" x 55"	1 - 6" x 6"	HWY-165 CLOSED MMM DD TO MMM DD
CONSTRUCTION 2-WEEKS	P1 & P2	PREPARE TO STOP	ROAD CLOSED AHEAD		L	SC5(CA) Spec		2	47.8" x 47.8"	1 - 6" x 6"	TUNE TO AM-1610
	P3	HWY-165 CLOSED	3-MILES AHEAD	LOCAL TRAFFIC ONLY	C	SC8(CA) Spec		1	90" x 60"	2 - 6" x 6"	HWY-165 CLOSED 3-MILES AHEAD LOCAL TRAFFIC ONLY
	P4	HWY-165 CLOSED AHEAD	LOCAL TRAFFIC ONLY		E	SC8(CA) Spec		1	88" x 60"	2 - 6" x 6"	HWY-165 CLOSED AHEAD LOCAL TRAFFIC ONLY
	P5 P6	HWY-165 NORTH CLOSED	LOCAL TRAFFIC ONLY		N	SC8(CA) Spec		2	54" x 72"	2 - 4" x 6"	NORTH HWY-165 CLOSED LOCAL TRAFFIC ONLY
	P7 P8	HWY-165 SOUTH CLOSED	LOCAL TRAFFIC ONLY		N#	SC8(CA) Spec		2	54" x 72"	2 - 4" x 6"	SOUTH HWY-165 CLOSED LOCAL TRAFFIC ONLY
DURING COSTRUCTION	P1 & P2	PREPARE TO STOP	ROAD CLOSED AHEAD		L	SC5(CA) Spec		REMAIN IN PLACE			TUNE TO AM-1610
	P3	HWY-165 CLOSED	3-MILES AHEAD	LOCAL TRAFFIC ONLY	C	SC8(CA) Spec		REMAIN IN PLACE			HWY-165 CLOSED 3-MILES AHEAD LOCAL TRAFFIC ONLY
	P4	HWY-165 CLOSED AHEAD	LOCAL TRAFFIC ONLY		E	SC8(CA) Spec		REMAIN IN PLACE			HWY-165 CLOSED AHEAD LOCAL TRAFFIC ONLY
					N	SC8(CA) Spec		REMAIN IN PLACE			NORTH HWY-165 CLOSED LOCAL TRAFFIC ONLY
					N*	SC8(CA) Spec		REMAIN IN PLACE			SOUTH HWY-165 CLOSED LOCAL TRAFFIC ONLY
SUBTOTAL								10			
SUBTOTAL DQ-1							2	56			
TOTAL							2	66			

NOTE: 1. EXACT SIGN LOCATIONS TO BE DETERMINED BY THE ENGINEER.

DETOUR QUANTITIES
DEQ-2

STATE OF CALIFORNIA - DEPARTMENT OF TRANSPORTATION
Caltrans® TRAFFIC DESIGN

FUNCTIONAL SUPERVISOR: MOHAMMED QATAMI
CALCULATED-DESIGNED BY: CHRISTOPHER M HANSON
CHECKED BY: CECILE NGUYEN
REVISED BY: CN
DATE REVISED: 6/9/09

LAST REVISION 00-00-00
DATE PLOTTED => 24-JUN-2010
TIME PLOTTED => 07:27

Dist	COUNTY	ROUTE	POST MILES TOTAL PROJECT	SHEET No.	TOTAL SHEETS
10	Mer	165	11.7/26.7	35	110

REGISTERED CIVIL ENGINEER 12/29/09 DATE

6-21-10
PLANS APPROVAL DATE

REGISTERED PROFESSIONAL ENGINEER Hassan Marei No. 35068 Exp. 9/30/11 CIVIL STATE OF CALIFORNIA

THE STATE OF CALIFORNIA OR ITS OFFICERS OR AGENTS SHALL NOT BE RESPONSIBLE FOR THE ACCURACY OR COMPLETENESS OF SCANNED COPIES OF THIS PLAN SHEET.

LEGEND

- THERMOPLASTIC TRAFFIC STRIPE (SPRAYABLE) DETAIL No.
- THERMOPLASTIC TRAFFIC STRIPE DETAIL No.
- THERMOPLASTIC PAVEMENT MARKING
- ROADSIDE SIGN
- REMOVE ROADSIDE SIGN
- RELOCATE ROADSIDE SIGN — FROM / TO
- ROADSIDE SIGN No.
- ROADSIDE SIGN ONE POST OR OBJECT MARKER TYPE L
- ROADSIDE SIGN TWO POST
- E F — DELINEATOR (CLASS 1) TYPE E OR TYPE F
- REMOVE OBJECT MARKER (TYPE P)
- REMOVE MILEPOST MARKER (PM)
- x — GUARDRAIL DELINEATOR (FLEXIBLE POST)

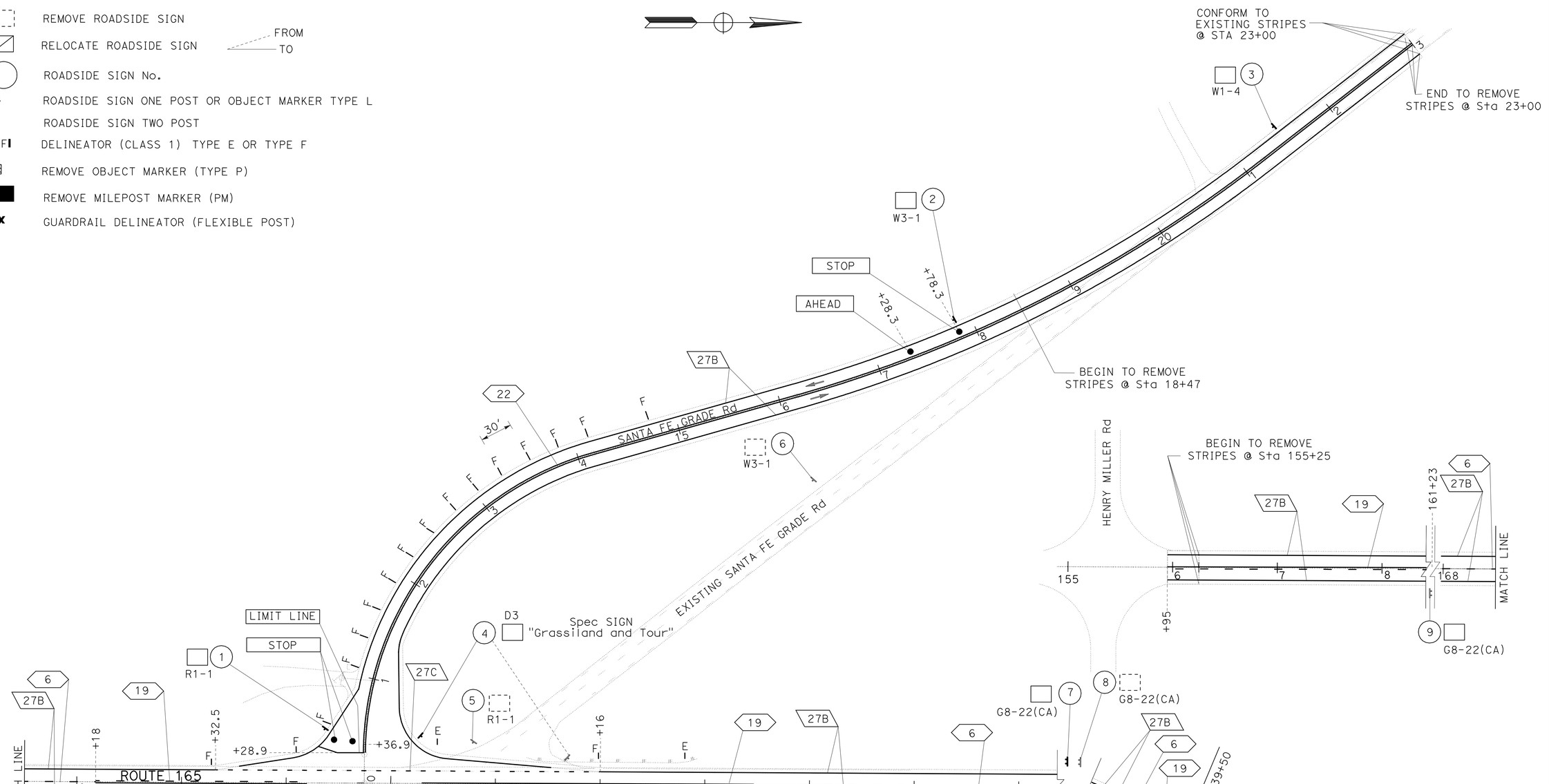

THIS PLAN ACCURATE FOR PAVEMENT DELINEATION AND SIGN WORK ONLY.

PAVEMENT DELINEATION AND SIGN PLAN

SCALE: 1" = 50'

PD-1

CALCULATED-DESIGNED BY	CN
CHECKED BY	CECILE NGUYEN
REVISED BY	CHRISTOPHER M HANSON
DATE REVISED	6/9/09
FUNCTIONAL SUPERVISOR	HASSAN MAREI

STATE OF CALIFORNIA - DEPARTMENT OF TRANSPORTATION
Caltrans
TRAFFIC DESIGN

LAST REVISION 06-05-09 | DATE PLOTTED => 24-JUN-2010 | TIME PLOTTED => 07:27

Dist	COUNTY	ROUTE	POST MILES TOTAL PROJECT	SHEET No.	TOTAL SHEETS
10	Mer	165	11.7/26.7	36	110

REGISTERED CIVIL ENGINEER 12/29/09 DATE

6-21-10
PLANS APPROVAL DATE

REGISTERED PROFESSIONAL ENGINEER Hassan Marei No. 35068 Exp. 9/30/11 CIVIL STATE OF CALIFORNIA

THE STATE OF CALIFORNIA OR ITS OFFICERS OR AGENTS SHALL NOT BE RESPONSIBLE FOR THE ACCURACY OR COMPLETENESS OF SCANNED COPIES OF THIS PLAN SHEET.

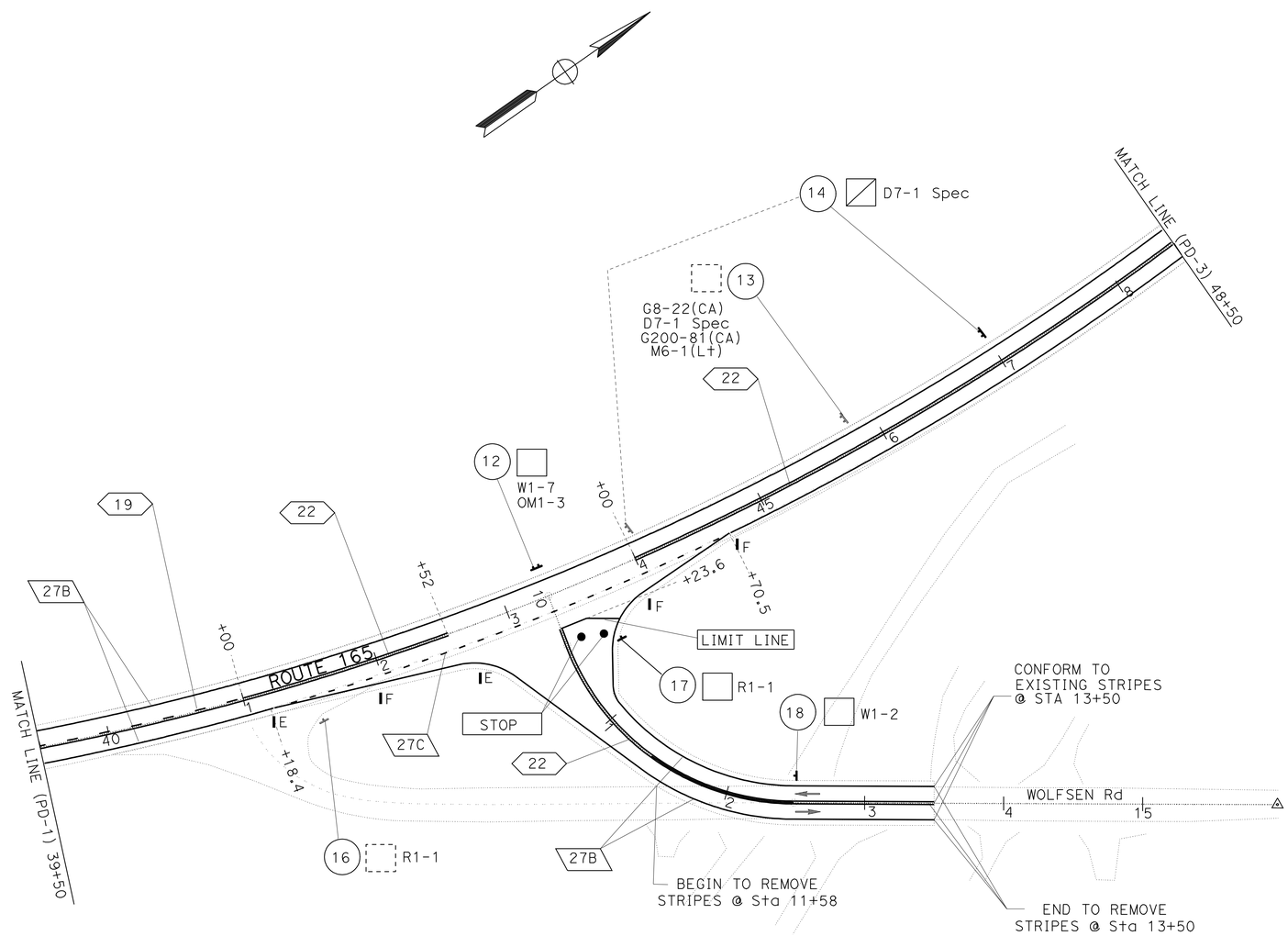

PAVEMENT DELINEATION PLAN AND SIGN PLAN

SCALE: 1" = 50'

PD-2

THIS PLAN ACCURATE FOR PAVEMENT DELINEATION AND SIGN WORK ONLY.

STATE OF CALIFORNIA - DEPARTMENT OF TRANSPORTATION
Caltrans® TRAFFIC DESIGN

FUNCTIONAL SUPERVISOR: MOHAMMED QATAMI
CALCULATED-DESIGNED BY: CHRISTOPHER M HANSON
CHECKED BY: CECILE NGUYEN
REVISED BY: CN
DATE REVISED: 6/9/09

LAST REVISION 00-00-00
DATE PLOTTED => 24-JUN-2010
TIME PLOTTED => 07:27

Dist	COUNTY	ROUTE	POST MILES TOTAL PROJECT	SHEET No.	TOTAL SHEETS
10	Mer	165	11.7/26.7	37	110

REGISTERED CIVIL ENGINEER 12/29/09 DATE

6-21-10
PLANS APPROVAL DATE

REGISTERED PROFESSIONAL ENGINEER Hassan Marei No. 35068 Exp. 9/30/11 CIVIL STATE OF CALIFORNIA

THE STATE OF CALIFORNIA OR ITS OFFICERS OR AGENTS SHALL NOT BE RESPONSIBLE FOR THE ACCURACY OR COMPLETENESS OF SCANNED COPIES OF THIS PLAN SHEET.

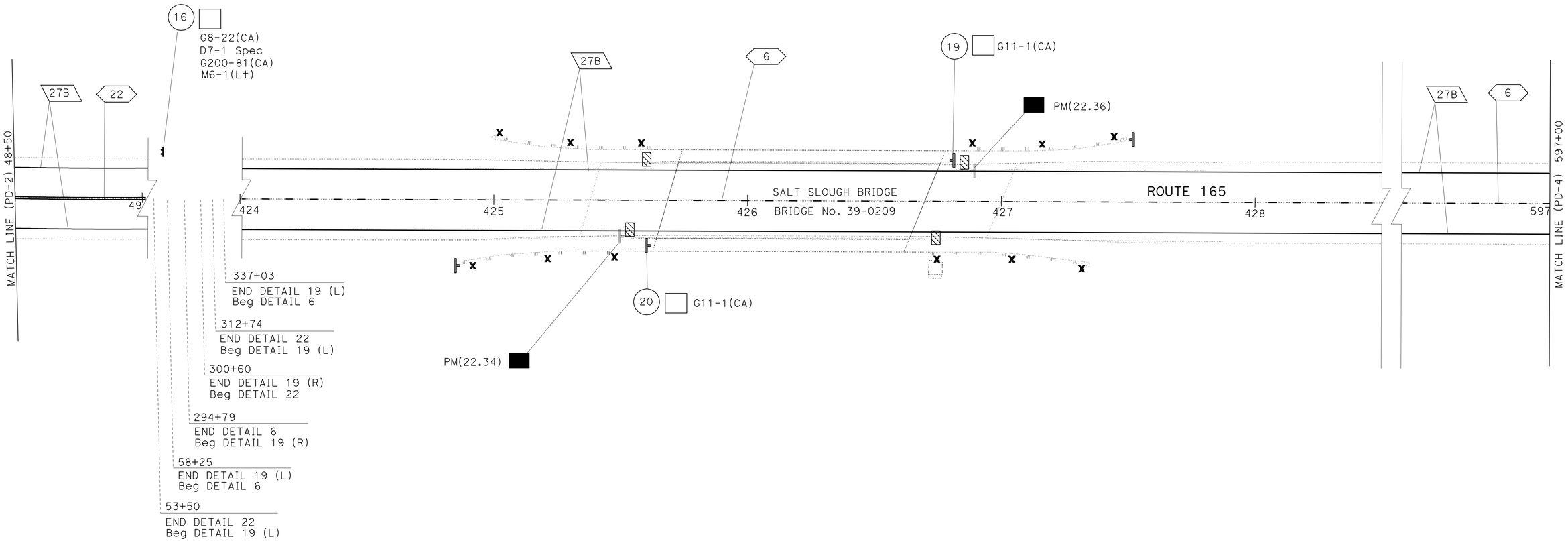

THIS PLAN ACCURATE FOR PAVEMENT DELINEATION AND SIGN WORK ONLY.

PAVEMENT DELINEATION PLAN AND SIGN PLAN

SCALE: 1" = 20'

PD-3

STATE OF CALIFORNIA - DEPARTMENT OF TRANSPORTATION
Caltrans®
TRAFFIC DESIGN

FUNCTIONAL SUPERVISOR: MOHAMMED QATAMI
CALCULATED-DESIGNED BY: CHRISTOPHER M HANSON
CHECKED BY: CECILE NGUYEN
REVISED BY: CN
DATE REVISED: 6/0/09

LAST REVISION 00-00-00
DATE PLOTTED => 24-JUN-2010
TIME PLOTTED => 07:27

Dist	COUNTY	ROUTE	POST MILES TOTAL PROJECT	SHEET No.	TOTAL SHEETS
10	Mer	165	11.7/26.7	38	110

REGISTERED CIVIL ENGINEER — DATE 12/29/09

6-21-10
PLANS APPROVAL DATE

REGISTERED PROFESSIONAL ENGINEER — Hassan Marei — No. 35068 — Exp 9/30/11 — CIVIL — STATE OF CALIFORNIA

THE STATE OF CALIFORNIA OR ITS OFFICERS OR AGENTS SHALL NOT BE RESPONSIBLE FOR THE ACCURACY OR COMPLETENESS OF SCANNED COPIES OF THIS PLAN SHEET.

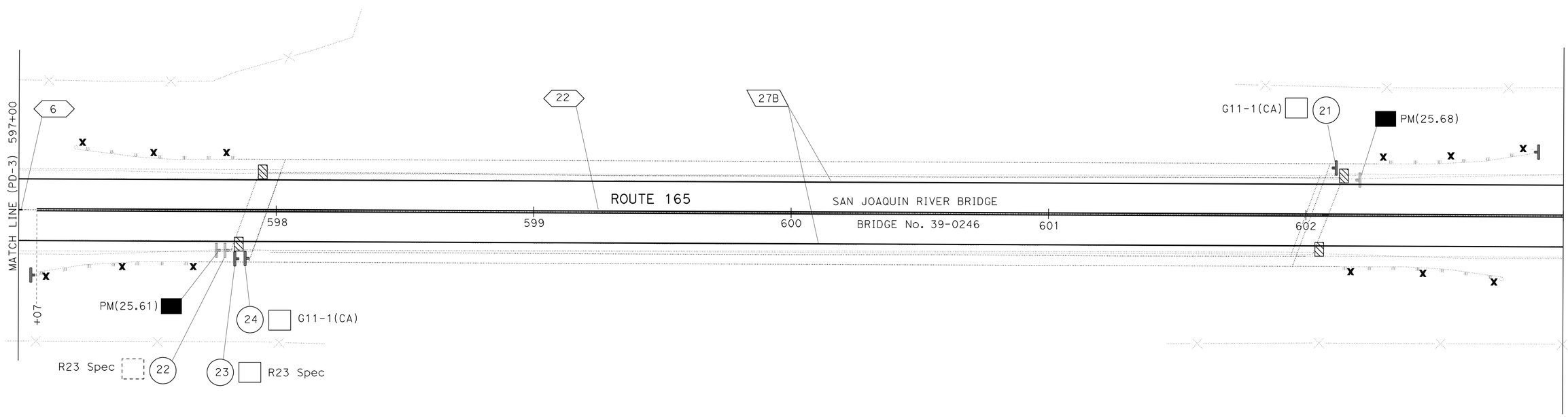

THIS PLAN ACCURATE FOR PAVEMENT DELINEATION AND SIGN WORK ONLY.

PAVEMENT DELINEATION PLAN AND SIGN PLAN

SCALE: 1" = 20'

PD-4

CALCULATED-DESIGNED BY	CHRISTOPHER M HANSON
CHECKED BY	CECILE NGUYEN
REVISED BY	CN
DATE REVISED	12/31/09
FUNCTIONAL SUPERVISOR	HASSAN MAREI

STATE OF CALIFORNIA - DEPARTMENT OF TRANSPORTATION
Caltrans
TRAFFIC DESIGN

LAST REVISION 00-00-00 | DATE PLOTTED => 24-JUN-2010 | TIME PLOTTED => 07:27

Dist	COUNTY	ROUTE	POST MILES TOTAL PROJECT	SHEET No.	TOTAL SHEETS
10	Mer	165	11.7/26.7	39	110

REGISTERED CIVIL ENGINEER 12/29/09 DATE

6-21-10
PLANS APPROVAL DATE

REGISTERED PROFESSIONAL ENGINEER
Hassan Marei
No. 35068
Exp. 9/30/11
CIVIL
STATE OF CALIFORNIA

THE STATE OF CALIFORNIA OR ITS OFFICERS OR AGENTS SHALL NOT BE RESPONSIBLE FOR THE ACCURACY OR COMPLETENESS OF SCANNED COPIES OF THIS PLAN SHEET.

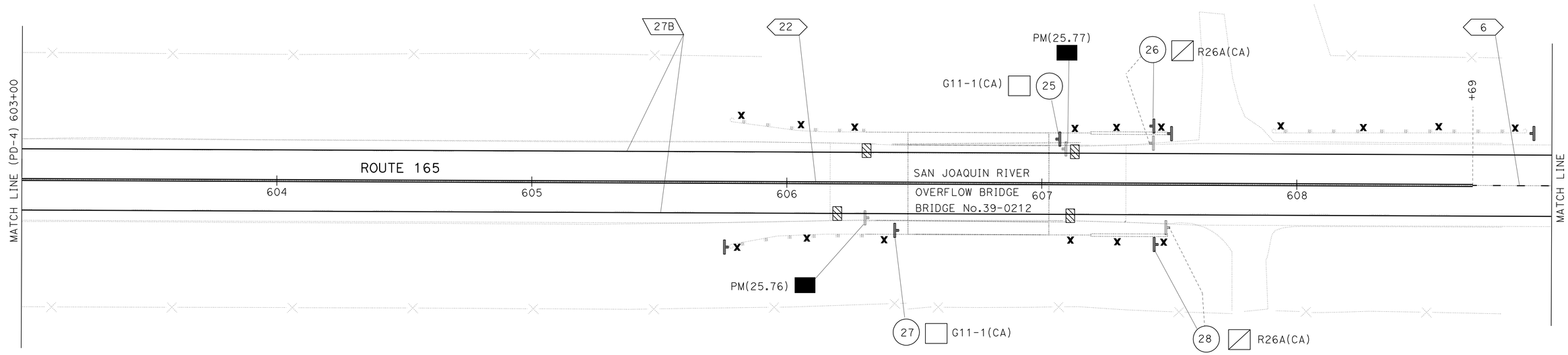

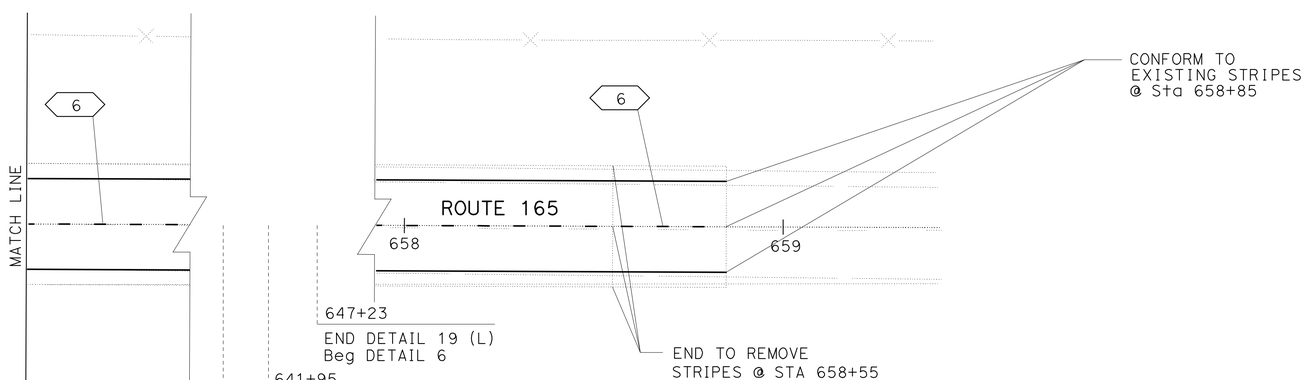

THIS PLAN ACCURATE FOR PAVEMENT DELINEATION AND SIGN WORK ONLY.

PAVEMENT DELINEATION PLAN AND SIGN PLAN

SCALE: 1" = 20'

PD-5

CALCULATED-DESIGNED BY	CHRISTOPHER M HANSON	REVISED BY	CN
CHECKED BY	CECILE NGUYEN	DATE REVISED	12/31/09

FUNCTIONAL SUPERVISOR HASSAN MAREI

STATE OF CALIFORNIA - DEPARTMENT OF TRANSPORTATION
Caltrans® TRAFFIC DESIGN

LAST REVISION 00-00-00
DATE PLOTTED => 24-JUN-2010
TIME PLOTTED => 07:27

Dist	COUNTY	ROUTE	POST MILES TOTAL PROJECT	SHEET No.	TOTAL SHEETS
10	Mer	165	11.7/26.7	40	110

REGISTERED CIVIL ENGINEER 12/29/09 DATE

6-21-10
PLANS APPROVAL DATE

REGISTERED PROFESSIONAL ENGINEER Hassan Marei No. 35068 Exp. 9/30/11 CIVIL STATE OF CALIFORNIA

THE STATE OF CALIFORNIA OR ITS OFFICERS OR AGENTS SHALL NOT BE RESPONSIBLE FOR THE ACCURACY OR COMPLETENESS OF SCANNED COPIES OF THIS PLAN SHEET.

PAVEMENT DELINEATION QUANTITIES

SHEET No.	LOCATION	THERMOPLASTIC TRAFFIC STRIPE DETAIL 27C 4" BROKEN WHITE	THERMOPLASTIC TRAFFIC STRIPE DETAIL 27B 4" SOLID WHITE	THERMOPLASTIC TRAFFIC STRIPE (SPRAYABLE) DETAIL 19 R 4" SOLID & BROKEN YELLOW	DETAIL 19 L 4" SOLID & BROKEN YELLOW	DETAIL 22 4" DOUBLE YELLOW	DETAIL 6 4" BROKEN YELLOW	PAVEMENT MARKER RETROREFLECTIVE TYPE D	PAVEMENT MARKER RETROREFLECTIVE TYPE H	THERMOPLASTIC PAVEMENT MARKING LIMIT LINE	THERMOPLASTIC PAVEMENT MARKING STOP	THERMOPLASTIC PAVEMENT MARKING AHEAD	REMOVE MARKER	DELINEATOR (CLASS 1) TYPE F	DELINEATOR (CLASS 1) TYPE E	GUARD RAILING DELINEATOR	OBJECT MARKER (TYPE L)	REMOVE PAVEMENT MARKER	REMOVE THERMOPLASTIC PAVEMENT MARKING	REMOVE YELLOW THERMOPLASTIC TRAFFIC STRIPE	REMOVE WHITE THERMOPLASTIC TRAFFIC STRIPE
		LF		LF				EA		SQFT			EA	EA		EA	EA	EA	SQFT	LF	LF
PD-1	Sta 155+95 To Sta 161+23		1056.0		528.0			12	23												
	Sta 161+23 To Sta 169+18		1590.0				795.0	18													
	Sta 169+18 To Sta 171+20	367.6	255.8	202.0				5	9												
	Sta 172+30 To Sta 175+47		634.0		317.0			8	14												
	Sta 175+47 To Sta 291+76.65		8859.3				4429.7	93													
	Sta 00+00 To Sta 39+07		7814.0				3907.0	82													
	Sta 39+07 To Sta 39+50		86.0	43.0				2	3												
PD-2	Sta 39+50 To Sta 41+00	356.2	300.0	150.0				4	7												
	Sta 41+00 To Sta 42+52		304.0			152.0		15													
	Sta 44+00 To Sta 48+50		900.0			450.0		40													
PD-3	Sta 48+50 To Sta 53+50		1000.0			500.0		44													
	Sta 53+50 To Sta 58+25		950.0		475.0			11	21												
	Sta 58+25 To Sta 294+79		47,308.0				23,654.0	494					2			12	2				
	Sta 294+79 To Sta 300+60		1162.0	581.0				13	25												
	Sta 300+60 To Sta 312+74		2428.0			1214.0		204													
	Sta 312+74 To Sta 337+03		4858.0		2429.0			52													
	Sta 337+03 To Sta 597+00		51,994.0				25,997.0	543													
PD-4	Sta 597+00 To Sta 597+07		14.0				7.0	1					2			12	2				
	Sta 597+07 To Sta 603+00		1186.0			593.0		51													
PD-5	Sta 603+00 To Sta 608+69		1138.0			569.0		49													
	Sta 608+69 To Sta 637+20		5702.0				2851.0	60													
	Sta 637+20 To Sta 641+95		950.0	475.0				11	21												
	Sta 641+95 To Sta 647+23		1056.0		528.0			12	23				6			16	3				
	Sta 647+23 To Sta 658+85		2324.0				1162.0	25			22.0	31.0									
	PD-1 SANTA FE GRADE Rd STA 10+28.9 TO STA 22+23.0		2388.2			1194.1		102		45.0	66	31.0	4	17	2						
	PD-2 WOLFSEN Rd STA 10+23.6 TO STA 13+50.0		672.8			336.4		21		45.4	44		4	3	2						
	SUBTOTAL	723.8	146,930.1	1451.0	4277.0	5008.5	62,802.7	1871	146	90.4	132.0	62.0	18	20	4	40	7	1854	53.0	79,683.0	142,731.1
	TOTAL	147,653.9		73,539.2				2017		284.4			18	24		40	7	1854	53.0	79,683.0	142,731.1

PAVEMENT DELINEATION QUANTITIES
PDQ-1

STATE OF CALIFORNIA - DEPARTMENT OF TRANSPORTATION
Caltrans
TRAFFIC DESIGN

FUNCTIONAL SUPERVISOR: HASSAN MAREI
CALCULATED-DESIGNED BY: CHRISTOPHER M HANSON
CHECKED BY: CECILE NGUYEN
REVISED BY: CN
DATE REVISED: 12/31/09

LAST REVISION 00-00-00
DATE PLOTTED => 24-JUN-2010
TIME PLOTTED => 07:27

Dist	COUNTY	ROUTE	POST MILES TOTAL PROJECT	SHEET No.	TOTAL SHEETS
10	Mer	165	11.7/26.7	41	110

REGISTERED CIVIL ENGINEER — DATE 12/29/09

6-21-10
PLANS APPROVAL DATE

REGISTERED PROFESSIONAL ENGINEER — Hassan Marei — No. 35068 — Exp. 9/30/11 — CIVIL — STATE OF CALIFORNIA

THE STATE OF CALIFORNIA OR ITS OFFICERS OR AGENTS SHALL NOT BE RESPONSIBLE FOR THE ACCURACY OR COMPLETENESS OF SCANNED COPIES OF THIS PLAN SHEET.

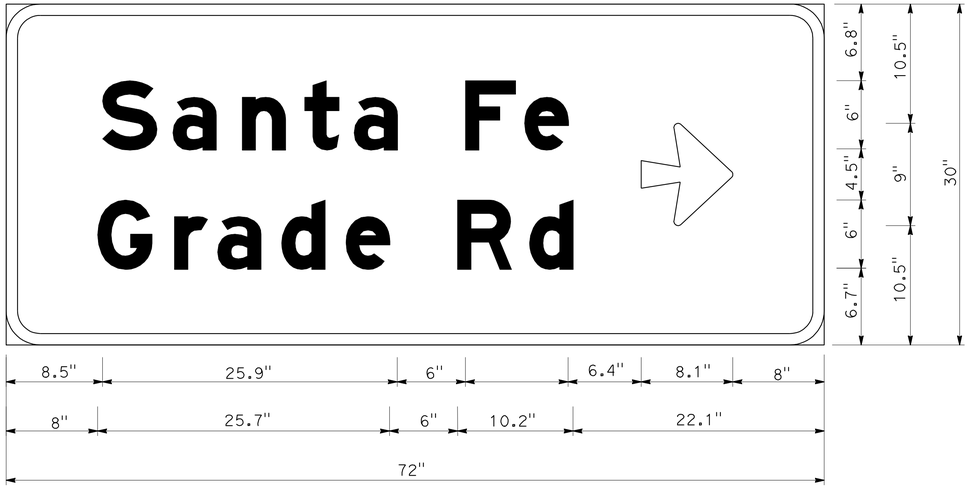

3.0" RADIUS, 1.0" BORDER, WHITE ON GREEN;
[Santa Fe] E Mod; [Grade Rd] E Mod;
ARROW 5CAP-2LH - 8.1" 0°;

SIGN No. 7 G8-22 (CA)

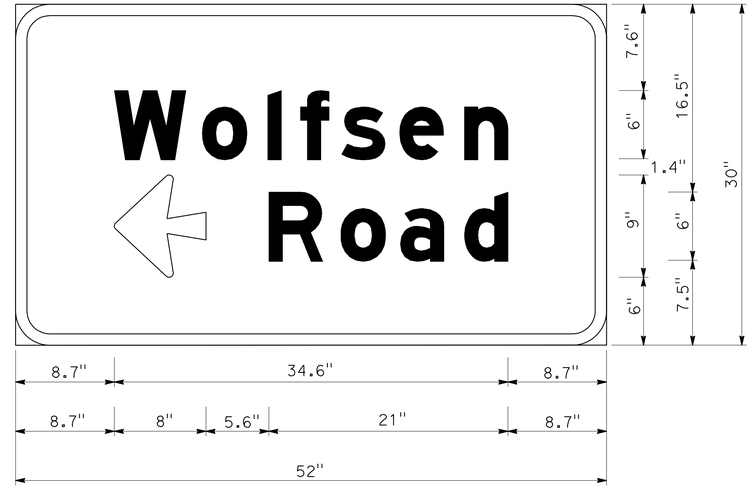

3.0" RADIUS, 1.0" BORDER, WHITE ON GREEN;
[Wolfsen] E Mod;
ARROW 5CAP-2LH - 8.1" 180°;
[Road] E Mod;

SIGN No. 15 G8-22 (CA)

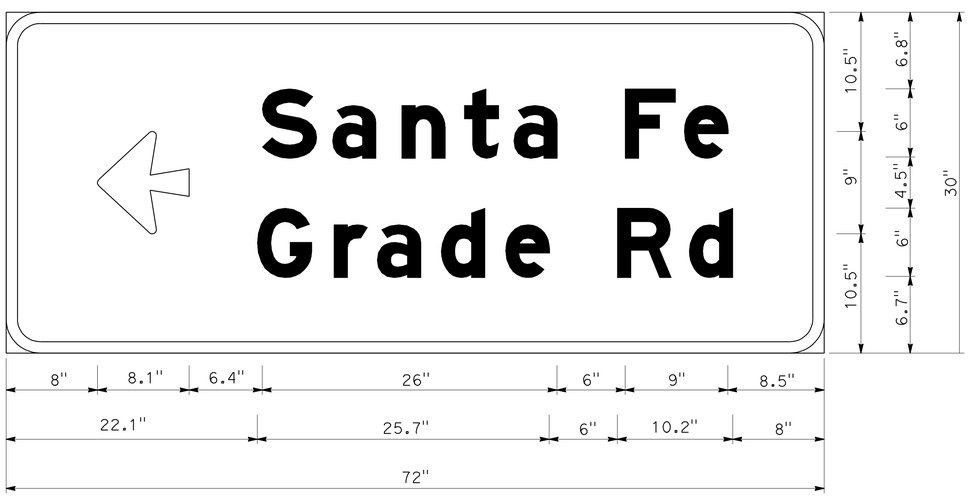

3.0" RADIUS, 1.0" BORDER, WHITE ON GREEN;
ARROW 5CAP-2LH - 8.1" 180°; [Santa Fe] E Mod;
[Grade Rd] E Mod;

SIGN No. 9 G8-22 (CA)

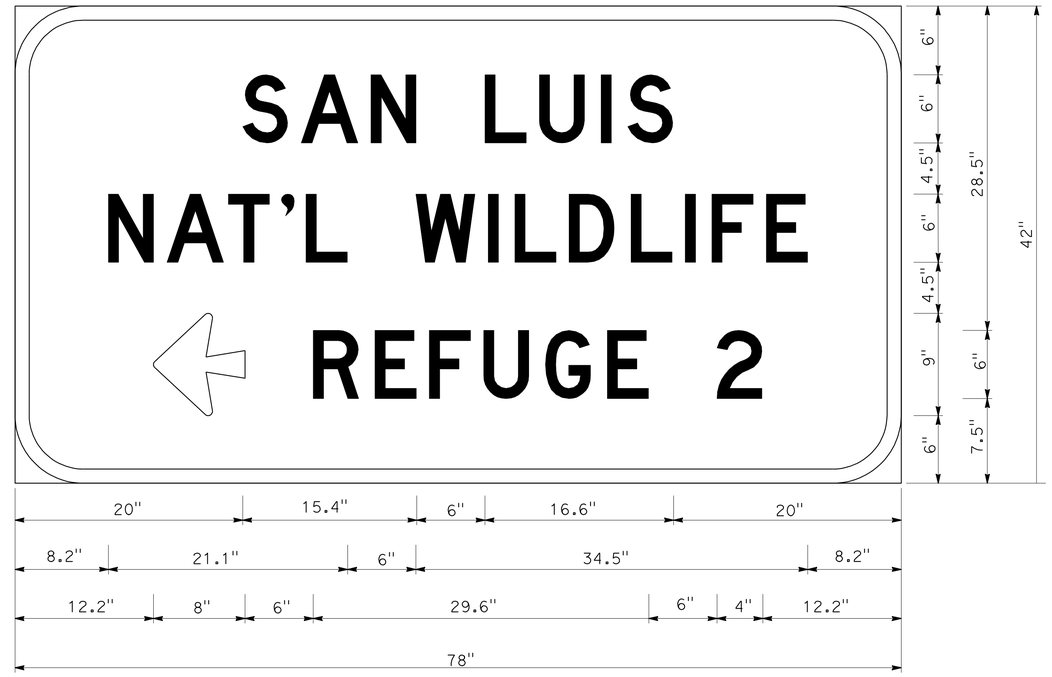

6.0" RADIUS, 1.3" BORDER, WHITE ON WHITE;
[SAN LUIS] D; [NAT'L WILDLIFE] D;
ARROW 5CAP-2LH - 8.1" 180°; [REFUGE 2] D;

SIGN No. 15 D7-1(CA)Spec

SIGN DETAILS

NO SCALE

SD-1

CALCULATED-DESIGNED BY	CHECKED BY	REVISED BY	DATE REVISED
CHRISTOPHER M HANSON	CECILE NGUYEN	CN	6/9/09

FUNCTIONAL SUPERVISOR: HASSAN MAREI

STATE OF CALIFORNIA - DEPARTMENT OF TRANSPORTATION
Caltrans®
TRAFFIC DESIGN

LAST REVISION 00-00-00 — DATE PLOTTED => 24-JUN-2010 — TIME PLOTTED => 07:32

Dist	COUNTY	ROUTE	POST MILES TOTAL PROJECT	SHEET No.	TOTAL SHEETS
10	Mer	165	11.7/26.7	42	110

REGISTERED CIVIL ENGINEER 1/29/09 DATE

6-21-10
PLANS APPROVAL DATE

REGISTERED PROFESSIONAL ENGINEER Hassan Marei No. 35068 Exp. 9/30/11 CIVIL STATE OF CALIFORNIA

THE STATE OF CALIFORNIA OR ITS OFFICERS OR AGENTS SHALL NOT BE RESPONSIBLE FOR THE ACCURACY OR COMPLETENESS OF SCANNED COPIES OF THIS PLAN SHEET.

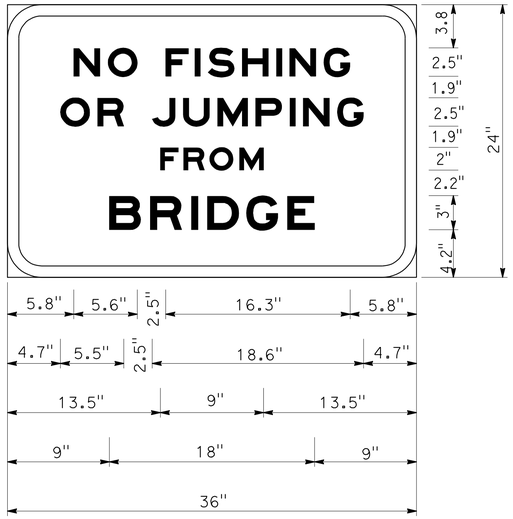

3.0" RADIUS, 1.0" BORDER, WHITE ON WHITE;
[NO FISHING] BLACK F;
[OR JUMPING] BLACK F;
[FROM] BLACK F;
[BRIDGE] BLACK F;

SIGN No. 23 R23 Spec

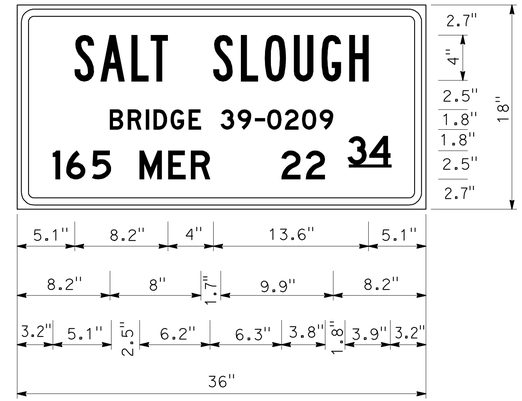

1.5" RADIUS, 0.6" BORDER, 0.4" INDENT, WHITE ON WHITE;
[SALT SLOUGH] BLACK B;
[BRIDGE 39-0209] BLACK D;
[165 MER] BLACK D;
[22] BLACK D; [34] BLACK D;

SIGN No. 19 & 20 G11-1 (CA)

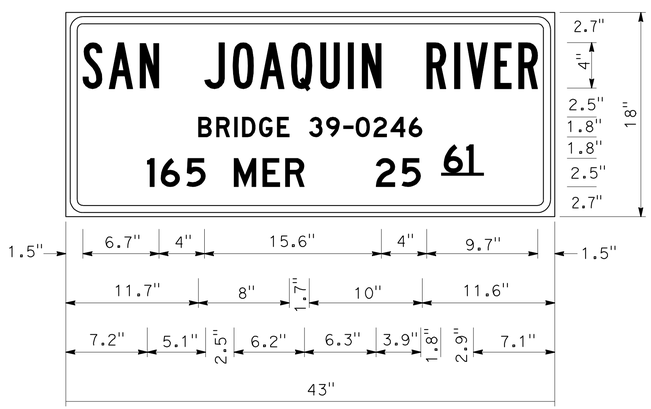

1.5" RADIUS, 0.6" BORDER, 0.4" INDENT, BLACK ON WHITE;
[SAN JOAQUIN RIVER] B;
[BRIDGE 39-0246] D;
[165 MER] D; [25] D; [61] D;

SIGN No. 21 & 24 G11-1 (CA)

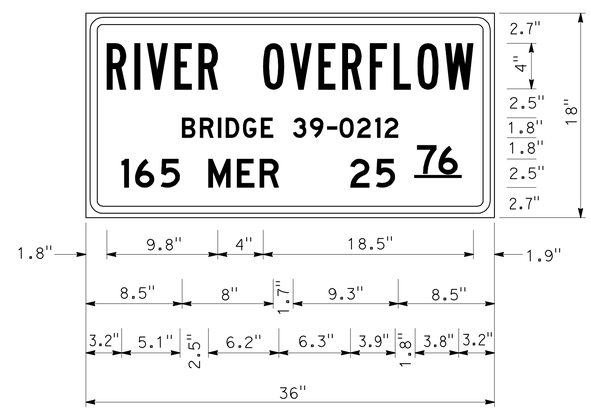

1.5" RADIUS, 0.6" BORDER, 0.4" INDENT, WHITE ON WHITE;
[RIVER OVERFLOW] BLACK B;
[BRIDGE 39-0212] BLACK D;
[165 MER] BLACK D;
[25] BLACK D; [76] BLACK D;

SIGN No. 25 & 26 G11-1 (CA)

SIGN DETAILS

NO SCALE

SD-2

STATE OF CALIFORNIA - DEPARTMENT OF TRANSPORTATION
Caltrans® TRAFFIC DESIGN

FUNCTIONAL SUPERVISOR: HASSAN MAREI
CALCULATED-DESIGNED BY: CHRISTOPHER M HANSON
CHECKED BY: CECILE NGUYEN
REVISED BY: CN
DATE REVISED: 6/9/09

LAST REVISION 00-00-00
DATE PLOTTED => 24-JUN-2010
TIME PLOTTED => 07:32

Dist	COUNTY	ROUTE	POST MILES TOTAL PROJECT	SHEET No.	TOTAL SHEETS
10	Mer	165	11.7/26.7	43	110

REGISTERED CIVIL ENGINEER 12/29/09 DATE

6-21-10
PLANS APPROVAL DATE

REGISTERED PROFESSIONAL ENGINEER
Hassan Marei
No. 35068
Exp 9/30/11
CIVIL
STATE OF CALIFORNIA

THE STATE OF CALIFORNIA OR ITS OFFICERS OR AGENTS SHALL NOT BE RESPONSIBLE FOR THE ACCURACY OR COMPLETENESS OF SCANNED COPIES OF THIS PLAN SHEET.

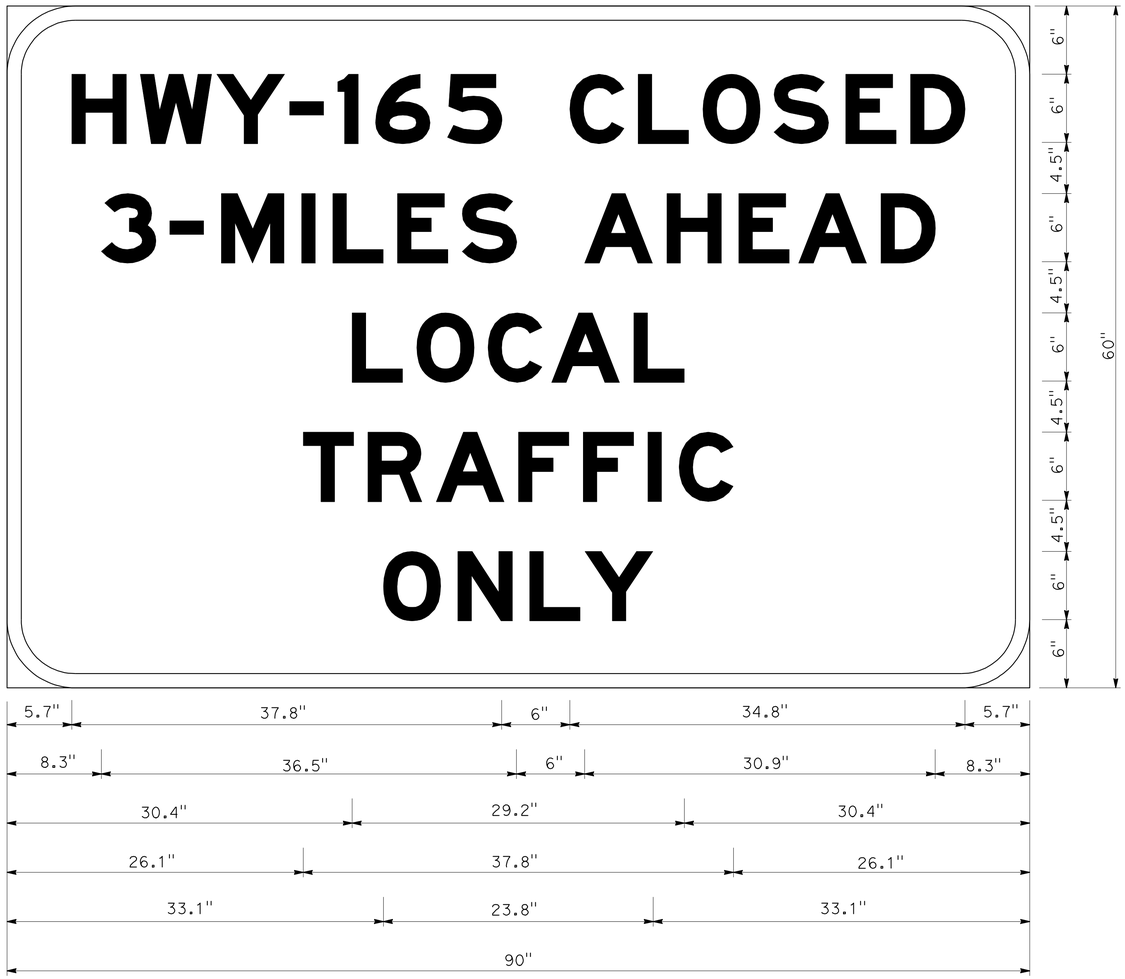

6.0" RADIUS, 1.3" BORDER, WHITE ON WHITE;
[HWY-165 CLOSED] BLACK E Mod; [3-MILES AHEAD] BLACK E Mod;
[LOCAL] BLACK E Mod; [TRAFFIC] BLACK E Mod; [ONLY] BLACK E Mod;

SIGN No. C

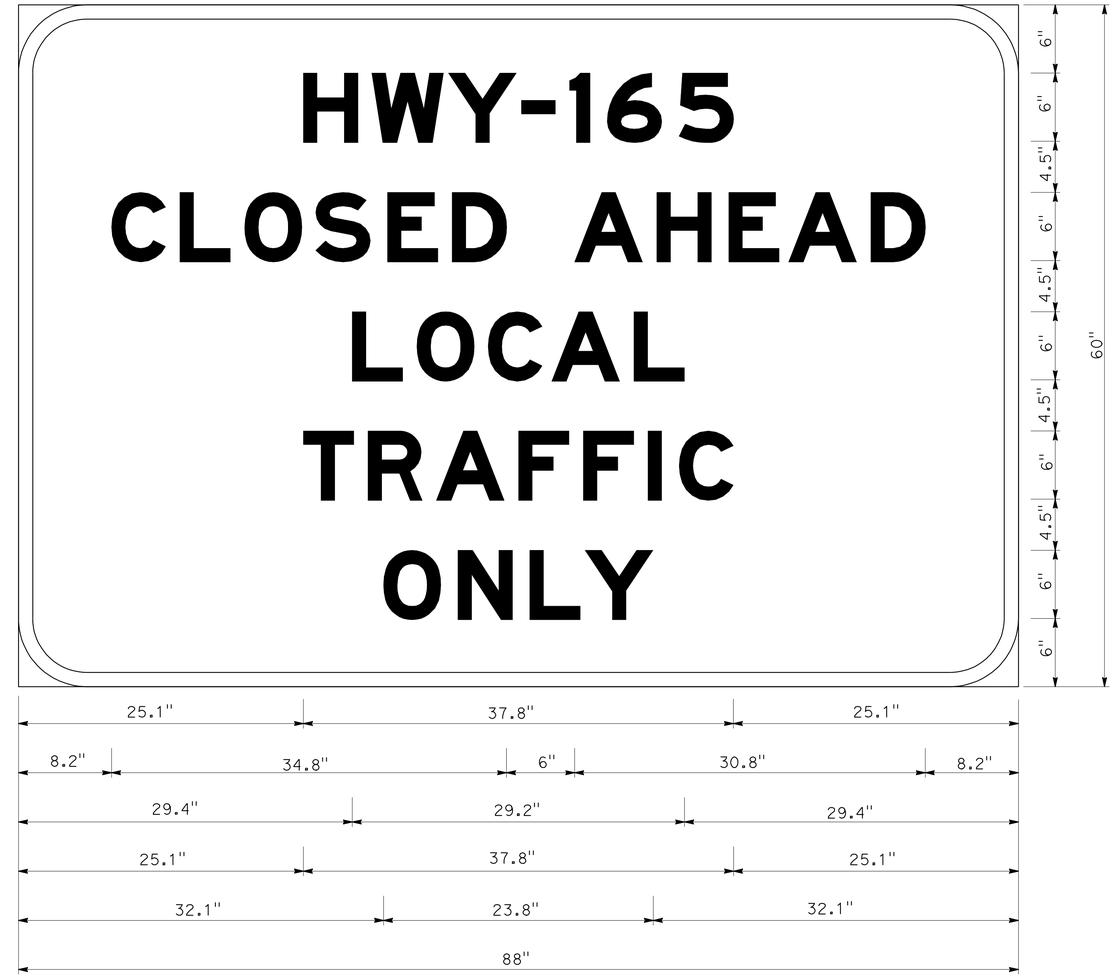

6.0" RADIUS, 1.3" BORDER, WHITE ON WHITE;
[HWY-165] BLACK E Mod; [CLOSED AHEAD] BLACK E Mod;
[LOCAL] BLACK E Mod; [TRAFFIC] BLACK E Mod; [ONLY] BLACK E Mod;

SIGN No. E

SIGN DETAILS

NO SCALE

SD-3

CALCULATED-DESIGNED BY	CHECKED BY	FUNCTIONAL SUPERVISOR	REVISED BY	DATE REVISED
CHRISTOPHER M HANSON	CECILE NGUYEN	HASSAN MAREI	CN	6/9/09

STATE OF CALIFORNIA - DEPARTMENT OF TRANSPORTATION
Caltrans® TRAFFIC DESIGN

LAST REVISION 00-00-00 | DATE PLOTTED => 24-JUN-2010 | TIME PLOTTED => 07:32

Dist	COUNTY	ROUTE	POST MILES TOTAL PROJECT	SHEET No.	TOTAL SHEETS
10	Mer	165	11.7/26.7	44	110

REGISTERED CIVIL ENGINEER 12/29/09 DATE

6-21-10
PLANS APPROVAL DATE

REGISTERED PROFESSIONAL ENGINEER Hassan Marei No. 35068 Exp. 9/30/11 CIVIL STATE OF CALIFORNIA

THE STATE OF CALIFORNIA OR ITS OFFICERS OR AGENTS SHALL NOT BE RESPONSIBLE FOR THE ACCURACY OR COMPLETENESS OF SCANNED COPIES OF THIS PLAN SHEET.

6.0" RADIUS, 1.3" BORDER, WHITE ON WHITE;
[NORTH] BLACK E Mod; [HWY-165] BLACK E Mod;
[CLOSED] BLACK E Mod; [LOCAL] BLACK E Mod;
[TRAFFIC] BLACK E Mod; [ONLY] BLACK E Mod;

SIGN No. N (NORTH)

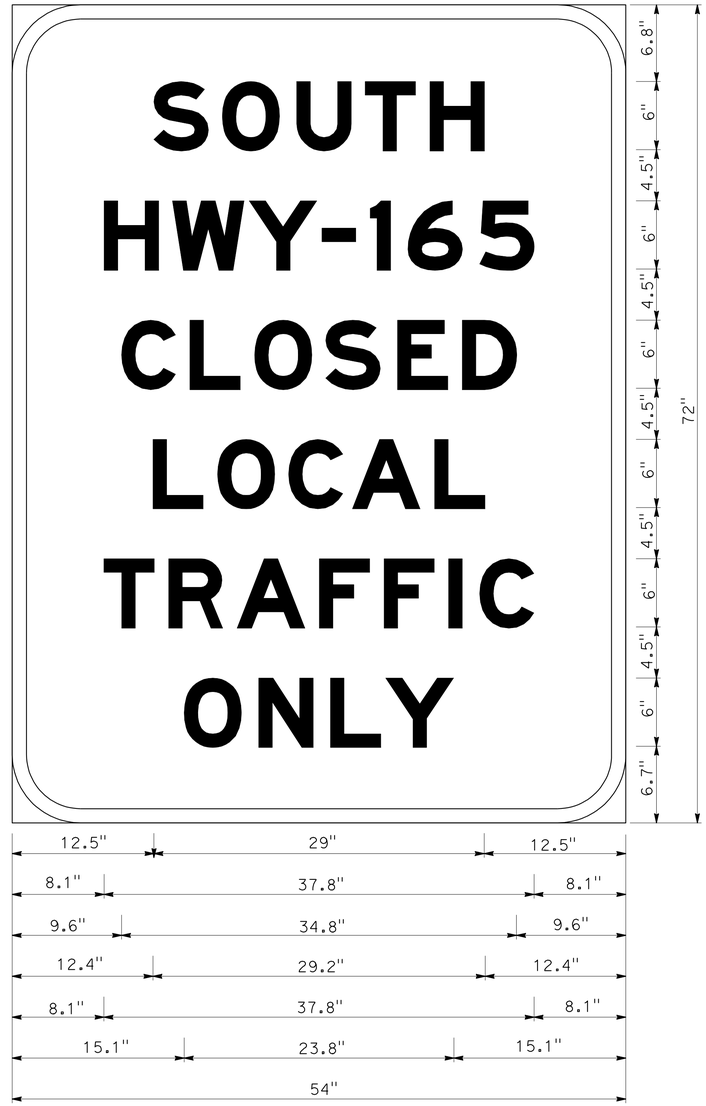

6.0" RADIUS, 1.3" BORDER, WHITE ON WHITE;
[SOUTH] BLACK E Mod; [HWY-165] BLACK E Mod;
[CLOSED] BLACK E Mod; [LOCAL] BLACK E Mod;
[TRAFFIC] BLACK E Mod; [ONLY] BLACK E Mod;

SIGN Mo. N (SOUTH)

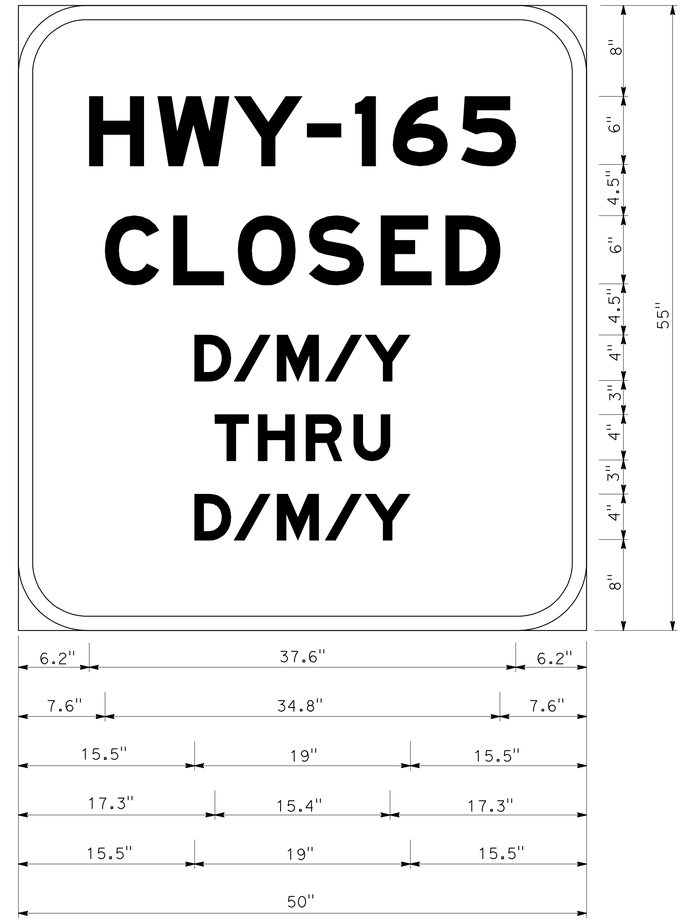

6.0" RADIUS, 1.3" BORDER, WHITE ON WHITE;
[HWY-156] BLACK E Mod;
[CLOSED] BLACK E Mod;
[D/M/Y] BLACK E Mod;
[THRU] BLACK E Mod;
[D/M/Y] BLACK E Mod;

SIGN No. K

SIGN DETAILS

NO SCALE

SD-4

STATE OF CALIFORNIA - DEPARTMENT OF TRANSPORTATION
Caltrans® TRAFFIC DESIGN

FUNCTIONAL SUPERVISOR: HASSAN MAREI
CALCULATED-DESIGNED BY: CHRISTOPHER M HANSON
CHECKED BY: CECILE NGUYEN
REVISED BY: CN
DATE REVISED: 6/9/09

LAST REVISION 00-00-00
DATE PLOTTED => 24-JUN-2010
TIME PLOTTED => 07:32

BORDER LAST REVISED 4/11/2008
RELATIVE BORDER SCALE IS IN INCHES 0 1 2 3
USERNAME => trlenard
DGN FILE => d279800b004.dgn
CU 06385
EA 279801

Dist	COUNTY	ROUTE	POST MILES TOTAL PROJECT	SHEET No.	TOTAL SHEETS
10	Mer	165	11.7/26.7	45	110

REGISTERED CIVIL ENGINEER 12/29/09 DATE

6-21-10
PLANS APPROVAL DATE

REGISTERED PROFESSIONAL ENGINEER Hassan Marei No. 35068 Exp. 9/30/11 CIVIL STATE OF CALIFORNIA

THE STATE OF CALIFORNIA OR ITS OFFICERS OR AGENTS SHALL NOT BE RESPONSIBLE FOR THE ACCURACY OR COMPLETENESS OF SCANNED COPIES OF THIS PLAN SHEET.

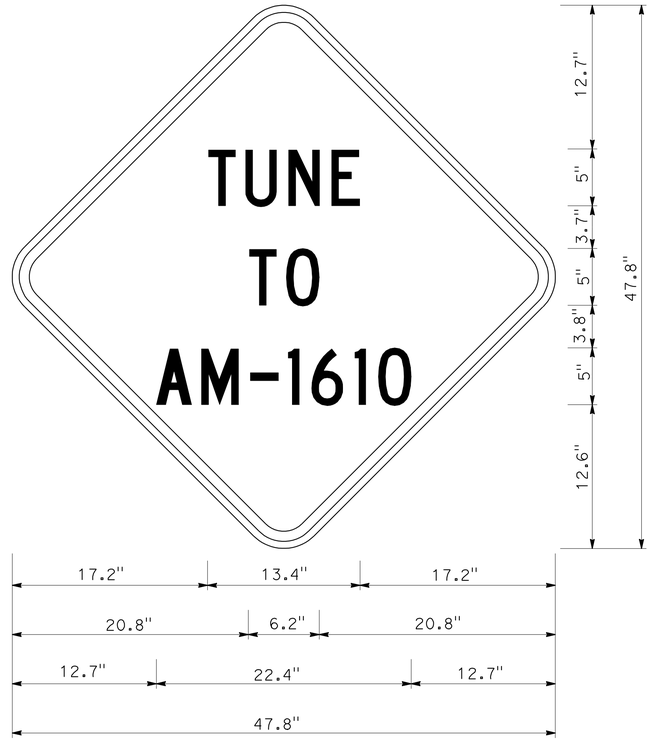

36.0" ACROSS SIDES 3.8" RADIUS, 0.9" BORDER, 0.6" INDENT, BLACK ON WHITE;
[TUNE] WHITE C; [TO] WHITE C;
[AM-1610] WHITE C;

SIGN No. L (MOUNT ON EXISTING POST SIGN No. K)

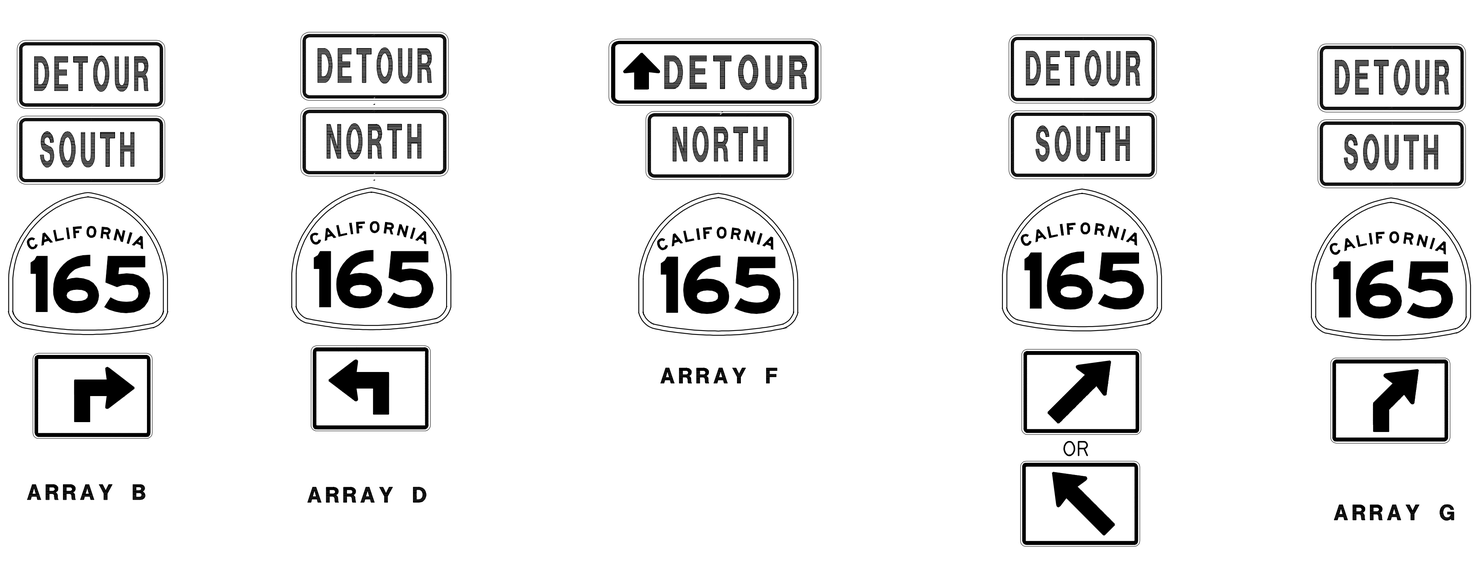

SIGN ARRAY DETAILS

SIGN DETAILS

NO SCALE

SD-5

STATE OF CALIFORNIA - DEPARTMENT OF TRANSPORTATION
Caltrans® **TRAFFIC DESIGN**

FUNCTIONAL SUPERVISOR: HASSAN MAREI

CALCULATED-DESIGNED BY: CHRISTOPHER M HANSON
CHECKED BY: CECILE NGUYEN

REVISED BY: CN
DATE REVISED: 6/9/09

LAST REVISION 00-00-00 | DATE PLOTTED => 24-JUN-2010 | TIME PLOTTED => 07:32

Dist	COUNTY	ROUTE	POST MILES TOTAL PROJECT	SHEET No.	TOTAL SHEETS
10	Mer	165	11.7/26.7	46	110

REGISTERED CIVIL ENGINEER 12/29/09 DATE

6-21-10
PLANS APPROVAL DATE

REGISTERED PROFESSIONAL ENGINEER Hassan Marei No. 35068 Exp. 9/30/11 CIVIL STATE OF CALIFORNIA

THE STATE OF CALIFORNIA OR ITS OFFICERS OR AGENTS SHALL NOT BE RESPONSIBLE FOR THE ACCURACY OR COMPLETENESS OF SCANNED COPIES OF THIS PLAN SHEET.

SIGN QUANTITIES

SHEET No.	SIGN No.	SIGN CODE	SIGN MESSAGE	PANEL SIZE (L X D)	POST SIZE	REMOVE ROADSIDE SIGN	RELOCATE ROADSIDE SIGN	ROADSIDE SIGN (ONE POST)	ROADSIDE SIGN (TWO POST)	SIGN MATERIALS: FURNISH SINGLE SHEET ALUMINUM SIGN 0.063" - FRAMED	0.063" - UNFRAMED	0.080" - UNFRAMED	SINGLE FACED	BACKGROUND SHEETING COLOR	BACKGROUND RETROFLECTIVE ASTM TYPE	LEGEND SHEETING COLOR	LEGEND RETROFLECTIVE ASTM TYPE	GRAFFITI FILM STANDARD	GRAFFITI FILM PREMIUM
				F+	F+	EA	EA	EA	EA	SQFT									
PD-1	1	R1-1	STOP	3.0 x 3.0	0.3 x 0.5			1			9.0		×	RED	VII	WHITE	VII		×
	2	W3-1	STOP AHEAD	3.0 x 3.0	0.3 x 0.5			1			9.0		×	YELLOW	III	B/R			×
	3	W1-4	REVERSE CURVE	3.0 x 3.0	0.3 x 0.5			1			9.0		×	YELLOW	III	BLACK			×
	4	D3	STREET NAME																
		Spec SIGN	"GRASSILAND AND TOUR"				1												
	5	R1-1	STOP			1													
	6	W3-1	STOP AHEAD			1													
	7	G8-22(CA)	SANTA FE GRADE Rd →	6.0 x 2.5	0.3 x 0.5			1		15.0			×	GREEN	IV	WHITE	IV		×
	8	G8-22(CA)	SANTA FE GRADE Rd →			1													
	9	G8-22(CA)	← SANTA FE GRADE Rd	6.0 x 2.5	0.3 x 0.5			1		15.0			×	GREEN	IV	WHITE	IV		×
	10	G8-22(CA)	← SANTA FE GRADE Rd			1													
	11	W1-7	TWO-DIRECTION LARGE ARROW	4.0 x 2.0	0.3 x 0.5			1				8.0	×	YELLOW	III	BLACK			×
		OM1-3	YELLOW OBJECT MARKER	1.5 x 1.5							2.25			YELLOW	III				
PD-2	12	W1-7	TWO-DIRECTION LARGE ARROW	4.0 x 2.0	0.3 x 0.5			1				8.0	×	YELLOW	III	BLACK			×
		OM1-3	YELLOW OBJECT MARKER	1.5 x 1.5							2.25			YELLOW	III				
	13	G8-22(CA) D7-1Spec G200-81(CA) M6-1(L+)	← WOLFSEN Rd SAN LUIS NAT'L WILDLIFE ← REFUGE 2 WILDLIFE VIEWING ADVANCE ARROW AHEAD			1													
	14	D7-1 Spec	SAN LUIS NAT'L WILDLIFE ← REFUGE 2				1												
	15	G8-22(CA) D7-1Spec G200-81(CA) M6-1(L+)	← WOLFSEN Rd	4.3 x 2.5	0.3 x 0.5				1	10.75			×	GREEN	IV	WHITE	IV		×
			SAN LUIS NAT'L WILDLIFE ← REFUGE 2	6.5 x 3.5						22.75				BROWN	III	WHITE	III		
			WILDLIFE VIEWING	2.0 x 2.0							4.0			BROWN	III	WHITE	III	×	
			ADVANCE ARROW AHEAD	1.7 x 1.2							2.04			BROWN	III	WHITE	III		
	16	R1-1	STOP			1													
	17	R1-1	STOP	3.0 x 3.0	0.3 x 0.5			1			9.0		×	Red	VII	WHITE	VII		×
	18	W1-2	CURVE					1											
PD-3	19	G11-1(CA)	SALT SLOUGH BRIDGE	3.0 x 1.5	0.3 x 0.3			1			4.5		×	WHITE	III	BLACK			×
	20	G11-1(CA)	SALT SLOUGH BRIDGE	3.0 x 1.5	0.3 x 0.3			1			4.5		×	WHITE	III	BLACK			×
PD-4	21	G11-1(CA)	SAN JOAQUIN RIVER BRIDGE	3.6 x 1.5	0.3 x 0.3			1			5.4		×	WHITE	III	BLACK			×
	22	R23 Spec	NO FISHING OR JUMPING FROM BRIDGE			1													
	23	R23 Spec	NO FISHING OR JUMPING FROM BRIDGE	3.0 x 2.0	0.3 x 0.3			1			6.0		×	WHITE	III	BLACK			×
	24	G11-1(CA)	SAN JOAQUIN RIVER BRIDGE	3.6 x 1.5	0.3 x 0.3			1			5.4		×	WHITE	III	BLACK			×
PD-5	25	G11-1(CA)	SAN JOAQUIN RIVER OVERFLOW BRIDGE	3.0 x 1.5	0.3 x 0.3			1			4.5		×	WHITE	III	BLACK			×
	26	R26A(CA)	NO PARKING ANY TIME				1												
	27	G11-1(CA)	SAN JOAQUIN RIVER OVERFLOW BRIDGE	3.0 x 1.5	0.3 x 0.3			1			4.5		×	WHITE	III	BLACK			×
	28	R26A(CA)	NO PARKING ANY TIME				1												
			TOTAL			7	4	16	1	63.5	81.34	16.0							

L= Length of Sign
D = Depth of Sign
Note: California Sign Code are designated by (CA). Otherwise, Federal Sign Codes are shown.
B/R= Black/Red

NOTE: EXACT SIGN LOCATIONS TO BE DETERMINED BY THE ENGINEER.

SIGN QUANTITIES
SQ-1

REVISED BY	CN
DATE REVISED	6/9/09
CALCULATED-DESIGNED BY	CHRISTOPHER M HANSON
CHECKED BY	CECILE NGUYEN
FUNCTIONAL SUPERVISOR	HASSAN MAREI

STATE OF CALIFORNIA - DEPARTMENT OF TRANSPORTATION
Caltrans
TRAFFIC DESIGN

LAST REVISION 00-00-00
DATE PLOTTED => 24-JUN-2010
TIME PLOTTED => 07:33

Dist	COUNTY	ROUTE	POST MILES TOTAL PROJECT	SHEET No.	TOTAL SHEETS
10	Mer	165	11.7/26.7	47	110

Michael D Hutchison 12/29/09
REGISTERED CIVIL ENGINEER DATE

6-21-10
PLANS APPROVAL DATE

REGISTERED PROFESSIONAL ENGINEER Mike Hutchison No. 36626 Exp. 6/30/10 CIVIL STATE OF CALIFORNIA

THE STATE OF CALIFORNIA OR ITS OFFICERS OR AGENTS SHALL NOT BE RESPONSIBLE FOR THE ACCURACY OR COMPLETENESS OF SCANNED COPIES OF THIS PLAN SHEET.

ROADWAY QUANTITIES

LOCATION	STATION TO STATION	ROADWAY EXCAVATION	IMPORTED BORROW	DITCH EXCAVATION	RUBBERIZED HOT MIX ASPHALT (GAP GRADED)	CLASS 2 AGGREGATE BASE	HOT MIX ASPHALT (Type B)	IMPORTED MATERIAL (SHOULDER BACKING)	TACK COAT
		CY	CY	CY	TON	CY	TON	TON	TON
SANTA FE GRADE Rd	10+16.00 TO 23+00.00	475	1,800			1,910	1,040		
	11+50.00 L+ TO 16+00.00 L+			167					
	DRIVEWAY No. 1		10			5	4		
WOLFSEN Rd	10+16.00 TO 12+60.00	105	1,995			715	390		
ROUTE 165	155+95.00 TO 425+68.00				26,544		20,910	6,100	99.5
	426+70.00 TO 597+93.00				8,120		6,400	1,870	30.5
	602+05.00 TO 606+47.00				211		170	50	0.8
	607+03.00 TO 658+85.00				2,455		1,935	565	9.2
	DRIVEWAYS (58) AND 6TH AVENUE	20					610		
	425+00.00 L+ TO 425+68.00 L+		90						
	424+85.00 R+ TO 425+68.00 R+		90						
	426+69.00 L+ TO 427+49.00 L+		45						
	426+69.00 R+ TO 427+34.00 R+		45						
	597+21.00 L+ TO 597+93.00 L+		100						
	597+07.00 R+ TO 597+93.00 R+		100						
	602+05.00 L+ TO 602+90.00 L+		55						
	602+05.00 R+ TO 602+76.00 R+		55						
	605+68.50 L+ TO 606+47.00 L+		70						
	605+68.50 R+ TO 606+47.00 R+		70						
	607+02.00 L+ TO 607+49.00 L+		75						
	607+02.00 R+ TO 607+49.00 R+		75						
	602+28.30 L+ TO 602+36.30 L+					4			
	602+13.70 R+ TO 602+21.70 R+					4			
	TOTAL	600	4,675	167	37,330	2,638	31,459	8,585	140

SUMMARY OF QUANTITIES

Q-1

STATE OF CALIFORNIA - DEPARTMENT OF TRANSPORTATION
Caltrans DESIGN

FUNCTIONAL SUPERVISOR: CAROLINE REYES
CALCULATED-DESIGNED BY: MARLON LOPEZ
CHECKED BY: MIKE HUTCHISON
REVISED BY: ML
DATE REVISED: 6/2/09

LAST REVISION 00-00-00 | DATE PLOTTED => 24-JUN-2010 | TIME PLOTTED => 07:33

Dist	COUNTY	ROUTE	POST MILES TOTAL PROJECT	SHEET No.	TOTAL SHEETS
10	Mer	165	11.7/26.7	48	110

Michael D Hutchison 12/29/09
REGISTERED CIVIL ENGINEER DATE

6-21-10
PLANS APPROVAL DATE

REGISTERED PROFESSIONAL ENGINEER
Mike Hutchison
No. 36626
Exp 6/30/10
CIVIL
STATE OF CALIFORNIA

THE STATE OF CALIFORNIA OR ITS OFFICERS OR AGENTS SHALL NOT BE RESPONSIBLE FOR THE ACCURACY OR COMPLETENESS OF SCANNED COPIES OF THIS PLAN SHEET.

TEMPORARY FENCE (TYPE ESA)

LOCATION	STATION TO STATION	SIDE	LENGTH (LF)
ROUTE 165	310+37.00 TO 326+21.00	L†	1,584
	310+37.00 TO 326+21.00	R†	1,584
	602+25.00 TO 606+50.00	L†	425
	602+25.00 TO 606+50.00	R†	425
	607+10.00 TO 607+60.00	L†	50
	607+10.00 TO 607+70.00	R†	60
	607+80.00 TO 608+90.00	L†	126
TOTAL			4,254

COLD PLANE AC PAVEMENT

LOCATION	STATION TO STATION	SQYD
ROUTE 165	155+95.00 TO 156+25.00	107
	425+38.44 TO 425+68.44	107
	426+69.76 TO 426+99.76	107
	597+63.00 TO 597+93.00	107
	602+05.00 TO 602+35.00	107
	606+17.53 TO 606+47.53	107
	607+02.77 TO 607+32.77	107
	658+55.00 TO 658+85.00	107
	6TH STREET	14
TOTAL		870

MISCELLANEOUS ITEMS

LOCATION	STATION TO STATION	RELOCATE MAILBOX	REMOVE FENCE	FENCE (TYPE BW 4-STRAND, WOOD POST)	12' CHAIN LINK GATE (TYPE CL-4)	REMOVE BASE AND SURFACING
		EA	LF	LF	EA	CY
SANTA FE GRADE Rd	11+05.00 L†	1				
	20+82.00 L†	1				
R†e 165 / SANTA FE GRADE Rd	170+48.00 L† TO 19+55.00 L†			680		
SANTA FE GRADE Rd	10+97.00 L†				1	
	15+61.00 L†				1	
SANTA FE GRADE Rd	10+18.00 R† TO 20+00.00 R†					343
R†e 165 / WOLFSEN Rd	41+00.00 R† TO 12+00.00 R†					203
	47+63.00 R†					13
SANTA FE GRADE Rd	10+32.00 L† TO 10+80.00 R†		100			
	15+44.00 R† TO 16+30.00 L†		160			
	16+46.00 L† TO 19+60.00 L†		420			
TOTAL		2	680	680	2	559

SUMMARY OF QUANTITIES
Q-2

STATE OF CALIFORNIA - DEPARTMENT OF TRANSPORTATION
Caltrans
DESIGN

FUNCTIONAL SUPERVISOR: CAROLINE REYES
CALCULATED-DESIGNED BY: MARLON LOPEZ
CHECKED BY: MIKE HUTCHISON
REVISED BY: ML
DATE REVISED: 6/2/09

LAST REVISION 00-00-00
DATE PLOTTED => 24-JUN-2010
TIME PLOTTED => 07:33

Dist	COUNTY	ROUTE	POST MILES TOTAL PROJECT	SHEET No.	TOTAL SHEETS
10	Mer	165	11.7/26.7	49	110

Michael D Hutchison 12/29/09
REGISTERED CIVIL ENGINEER DATE

6-21-10
PLANS APPROVAL DATE

REGISTERED PROFESSIONAL ENGINEER
Mike Hutchison
No. 36626
Exp. 6/30/10
CIVIL
STATE OF CALIFORNIA

THE STATE OF CALIFORNIA OR ITS OFFICERS OR AGENTS SHALL NOT BE RESPONSIBLE FOR THE ACCURACY OR COMPLETENESS OF SCANNED COPIES OF THIS PLAN SHEET.

METAL BEAM GUARD RAILING

LOCATION	ALTERNATIVE IN-LINE TERMINAL SYSTEM	ALTERNATIVE FLARED TERMINAL SYSTEM	TRANSITION RAILING (Type WB)	(N) GUARD RAIL LAYOUT	REMOVE METAL BEAM GUARD RAILING	MBGR (WOOD POST)	CRASH CUSHION (Type ADIEM)
STA TO STA	EA	EA	EA	TYPE	LF	LF	EA
172+53.30 R+ To 174+03.30 R+ ROUTE 165		2		11E	150.0	75.0	
173+30.00 L+ To 174+92.50 L+ ROUTE 165		2		11E	153.0	87.5	
425+00.00 L+ To 425+62.50 L+ ROUTE 165		1	1	12BB	62.5		
426+86.50 L+ To 427+49.00 L+ ROUTE 165		1	1	12B	62.5		
424+85.50 R+ To 425+48.00 R+ ROUTE 165		1	1	12B	62.5		
426+72.00 R+ To 427+34.50 R+ ROUTE 165		1	1	12BB	62.5		
597+21.80 L+ To 597+84.30 L+ ROUTE 165		1	1	12BB	62.5		
602+28.30 L+ To 602+90.80 L+ ROUTE 165		1	1	12B	62.5		
597+07.20 R+ To 597+69.70 R+ ROUTE 165		1	1	12B	62.5		
602+13.70 R+ To 602+76.20 R+ ROUTE 165		1	1	12BB	62.5		
605+68.50 L+To 606+31.00 L+ ROUTE 165		1	1	12BB	62.5		
607+19.30 L+ To 607+49.30 L+ ROUTE 165		1	1		40.0		1
605+68.50 R+ To 606+31.00 R+ ROUTE 165		1	1	12B	62.5		
607+19.30 R+ To 607+49.30 R+ ROUTE 165		1	1		52.5		1
607+91.20 L+ To 608+91.20 L+ ROUTE 165	2			11D	60.0	100.0	
TOTAL	2	16	12		1,080.5	262.5	2

(N) - NOT A SEPARATE PAY ITEM, FOR INFORMATION ONLY.

TEMPORARY REINFORCED SILT FENCE

LOCATION	QUANTITY (LF)
SAN JOAQUIN RIVER BRIDGE	200

SUMMARY OF QUANTITIES

Q-3

STATE OF CALIFORNIA - DEPARTMENT OF TRANSPORTATION
Caltrans DESIGN

FUNCTIONAL SUPERVISOR: CAROLINE REYES
CALCULATED-DESIGNED BY: MARLON LOPEZ
CHECKED BY: MIKE HUTCHISON
REVISED BY: ML
DATE REVISED: 6/2/09

LAST REVISION 00-00-00
DATE PLOTTED => 24-JUN-2010
TIME PLOTTED => 07:33

DIST	COUNTY	ROUTE	POST MILES TOTAL PROJECT	SHEET NO.	TOTAL SHEETS
10	Mer	165	11.7/26.7	50	110

REGISTERED CIVIL ENGINEER

November 17, 2006
PLANS APPROVAL DATE

REGISTERED PROFESSIONAL ENGINEER Dallas Forester No. C37765 Exp. 12-31-06 CIVIL STATE OF CALIFORNIA

The State of California or its officers or agents shall not be responsible for the accuracy or completeness of electronic copies of this plan sheet.

To accompany plans dated 6-21-10

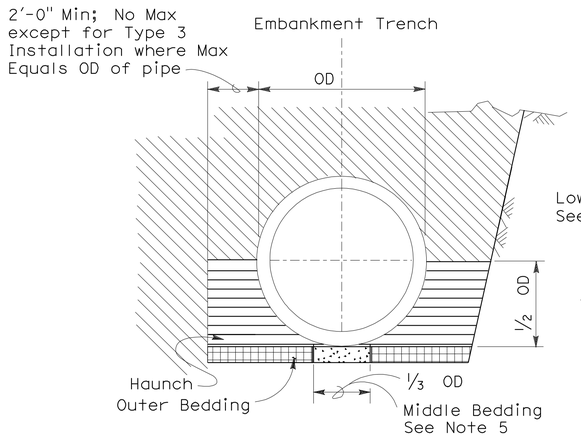

BACKFILL

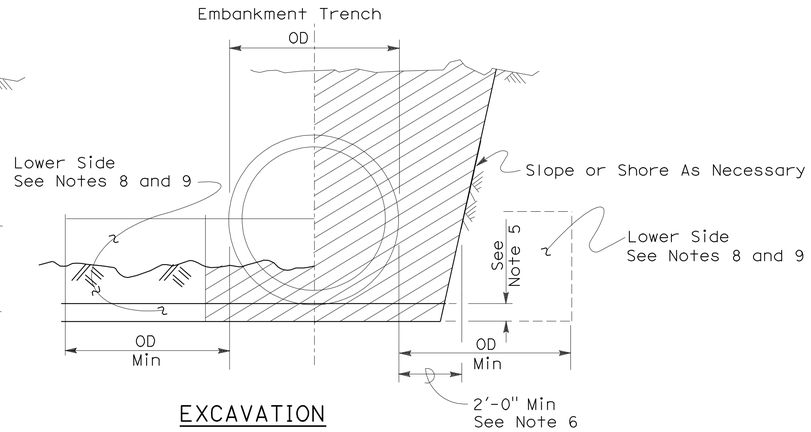

EXCAVATION

Roadway Embankment

Structure Backfill (Culvert) See Note 6

Structure Backfill (Culvert) See Note 6

Loose Backfill

Excavation Structure (Culvert)

TYPE 1 INSTALLATION:

The haunch and outer bedding shall be compacted to a minimum 90 percent relative compaction. In addition, the minimum sand equivalent in these areas shall be 30 and the maximum percentage passing the 75 μm sieve size shall be 12.

TYPE 2 INSTALLATION:

The haunch and outer bedding shall be compacted to a minimum 90 percent relative compaction. In addition, the minimum sand equivalent in these areas shall be 25.

TYPE 3 INSTALLATION:

The haunch and outer bedding shall be compacted to a minimum 85 percent relative compaction. 90 percent relative compaction will be required where the fill over the pipe is less than 4'-0" or 1/2 OD.

NOTES:

1. Unless otherwise shown on the plans or specified in the special provision, the Contractor shall have the option of selecting the class of RCP and the type of installation to be used, provided the height of cover does not exceed the value shown for the RCP selected.
   Example: 24" RCP culvert with maximum cover of 19'-0" the options are:
   a) Class III or stronger with Installation Type 1.
   b) Class III Special or stronger with Installation Type 2.
   c) Class IV Special or stronger with Installation Type 3.
   Cover is defined as the maximum vertical distance from top of the pipe to finished grade within the length of any given culvert.
2. The class of RCP and Installation Type selected shall be the same throughout the length of any given culvert.
3. The "length of any culvert" is defined as the culvert between:
   a) Successive drainage structure (inlets, junction boxes, headwalls, etc.).
   b) A drainage structure and the inlet or outlet end of the culvert.
   c) The inlet and outlet end of the culvert when there are no intervening drainage structures.
4. Oval and arch shaped RCP shall not be used.
5. 1/25 OD Min, not less than 3".
6. Slurry cement backfill may be substituted for backfill in the outer bedding and haunch areas. If slurry is used the outer and middle beddings shall be omitted. Prior to installation the soil under the middle 1/3 of the outside diameter of the pipe shall be softened by scarifying or other means to a minimum depth of 1/25 OD, but not less than 3". Where slurry cement backfill is used clear distance to trench wall may be reduced as set forth in Section 19-3.062 of the Standard Specifications.
7. Backfill shall be placed full width of excavation except where dimensions are shown for backfill width or thickness. Dimensions shown are minimums.
8. Lower side shall be suitable material as determined by the Engineer. Otherwise it shall be considered unsuitable as set forth in Section 19-2.02 of the Standard Specifications. See Note 9.
9. Where the pipe is placed in a trench, if the trench walls are sloped at 5 vertical to 1 horizontal or steeper for at least 90 percent of the trench height or up to not less than 12" from the grading plane, the firmness of the soil in the lower side need not be considered.
10. Non-reinforced precast concrete pipe sizes 3'-0" or smaller may be placed under installation Types 1, 2 or 3.

INSTALLATION TYPE 1

MINIMUM CLASS AND D-LOAD	COVER	
	108" Dia AND SMALLER	OVER 108" Dia
Class II 1000D	14.9'	12.9'
Class III 1350D	15.0' - 20.9'	13.0' - 18.9'
Class III Special 1700D	21.0' - 26.9'	19.0' - 24.9'
Class IV 2000D	27.0' - 31.9'	25.0' - 29.9'
Class IV Special 2500D	32.0' - 40.9'	30.0' - 38.9'
Class V 3000D	41.0' - 49.9'	39.0' - 46.9'
Class V Special 3600D	50.0' - 59.0'	47.0' - 58.0'

INSTALLATION TYPE 2

MINIMUM CLASS AND D-LOAD	COVER
Class II 1000D	9.9'
Class III 1350D	10.0'- 14.9'
Class III Special 1700D	15.0' - 19.9'
Class IV 2000D	20.0' - 24.9'
Class IV Special 2500D	25.0' - 31.9'
Class V 3000D	32.0' - 38.9'
Class V Special 3600D	39.0' - 47.0'

INSTALLATION TYPE 3

MINIMUM CLASS AND D-LOAD	COVER	
	48" Dia AND SMALLER	OVER 48" Dia
Class II 1000D	7.9'	5.9'
Class III 1350D	8.0' - 10.9'	6.0' - 8.9'
Class III Special 1700D	11.0' - 14.9'	9.0' - 12.9'
Class IV 2000D	15.0' - 17.9'	13.0' - 15.9'
Class IV Special 2500D	18.0' - 21.9'	16.0' - 19.9'
Class V 3000D	22.0' - 26.9'	20.0' - 24.9'
Class V Special 3600D	30.0' - 33.0'	25.0' - 31.0'

STATE OF CALIFORNIA
DEPARTMENT OF TRANSPORTATION

EXCAVATION AND BACKFILL CONCRETE PIPE CULVERTS

NO SCALE

RSP A62DA DATED NOVEMBER 17, 2006 SUPERSEDES STANDARD PLAN A62DA DATED MAY 1, 2006 - PAGE 20 OF THE STANDARD PLANS BOOK DATED MAY 2006.

REVISED STANDARD PLAN RSP A62DA

2006 REVISED STANDARD PLAN RSP A62DA

10-26-06

DIST	COUNTY	ROUTE	POST MILES TOTAL PROJECT	SHEET NO.	TOTAL SHEETS
10	Mer	165	11.7/26.7	51	110

Randell D. Hiatt
REGISTERED CIVIL ENGINEER

June 6, 2008
PLANS APPROVAL DATE

REGISTERED PROFESSIONAL ENGINEER
Randell D. Hiatt
No. C50200
Exp. 6-30-09
CIVIL
STATE OF CALIFORNIA

The State of California or its officers or agents shall not be responsible for the accuracy or completeness of electronic copies of this plan sheet.

To accompany plans dated 6-21-10

NOTES:

1. When necessary to place dike in front of face of guard railing, only Type C dike may be used. For dike details, see Standard Plan A87B.
2. For standard railing post embedment, see Standard Plans A77C3.
3. Guard railing delineation to be used where shown on the Project Plans.
4. When dike or curb is placed under guard railing, the maximum height of the dike or curb shall be 4". Mountable dike should not be used. For dike and curb details, see Revised Standard Plans RSP A87A and Standard Plan A87B.
5. For details of typical distance between the face of rail and hinge point, see Standard Plan A77C3.

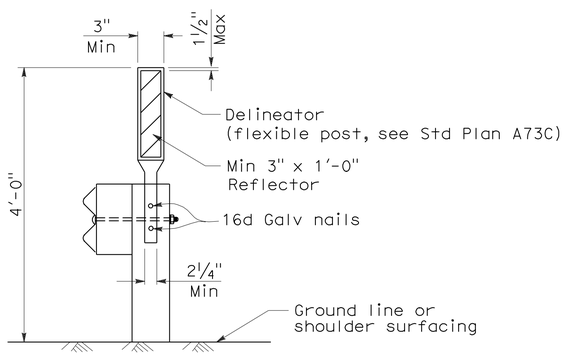

GUARD RAILING DELINEATION

See Note 3

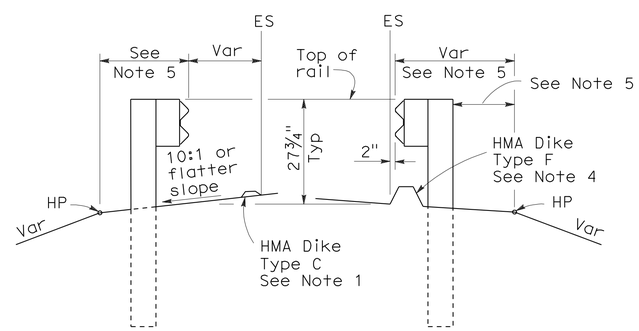

DIKE POSITIONING

See Note 1

STATE OF CALIFORNIA
DEPARTMENT OF TRANSPORTATION

METAL BEAM GUARD RAILING TYPICAL RAILING DELINEATION AND DIKE POSITIONING DETAILS

NO SCALE

RSP A77C4 DATED JUNE 6, 2008 SUPERSEDES STANDARD PLAN A77C4
DATED MAY 1, 2006 - PAGE 47 OF THE STANDARD PLANS BOOK DATED MAY 2006.

REVISED STANDARD PLAN RSP A77C4

2006 REVISED STANDARD PLAN RSP A77C4

12-10-07

DIST	COUNTY	ROUTE	POST MILES TOTAL PROJECT	SHEET NO.	TOTAL SHEETS
10	Mer	165	11.7/26.7	52	110

Randell D. Hiatt
REGISTERED CIVIL ENGINEER

June 6, 2008
PLANS APPROVAL DATE

REGISTERED PROFESSIONAL ENGINEER
Randell D. Hiatt
No. C50200
Exp. 6-30-09
CIVIL
STATE OF CALIFORNIA

The State of California or its officers or agents shall not be responsible for the accuracy or completeness of electronic copies of this plan sheet.

To accompany plans dated 6-21-10

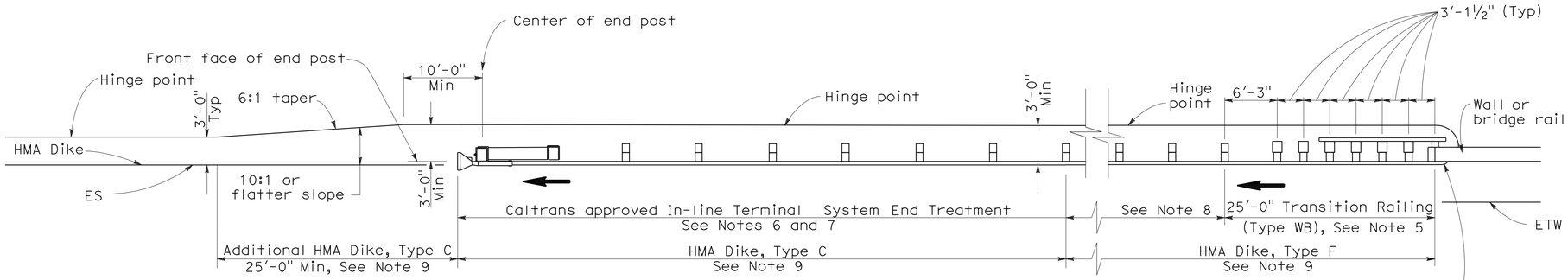

TYPE 12AA LAYOUT

(GUARD RAILING INSTALLATION AT STRUCTURE DEPARTURE WITH AN IN-LINE END TREATMENT AT TRAILING END OF RAILING)
See Notes 9 and 10

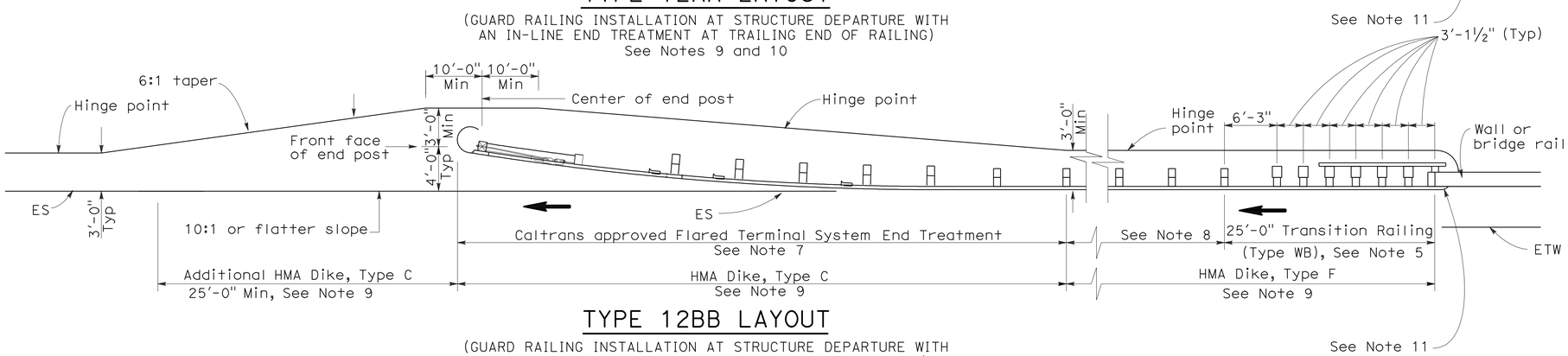

TYPE 12BB LAYOUT

(GUARD RAILING INSTALLATION AT STRUCTURE DEPARTURE WITH A FLARED END TREATMENT AT TRAILING END OF RAILING)
See Notes 9 and 10

NOTES:

1. Line post, blocks and hardware to be used are shown on Standard Plans A77A1, A77A2, A77B1, A77C1 and A77C2.
2. Guard rail post spacing to be 6'-3" center to center, except as otherwise noted.
3. Except as noted, line posts are 6" x 8" x 6'-0" wood with 6" x 8" x 1'-2" wood blocks. W6 x 9 steel posts, 6'-0" in length, with 6" x 8" x 1-2" notched wood blocks or notched recycled plastic blocks may be used for 6" x 8" x 6'-0" wood posts with 6" x 8" x 1'-2" wood blocks where applicable and when specified.
4. Direction of adjacent traffic indicated by ➡.
5. For Transition Railing (Type WB) details for Types 12AA and 12BB Layouts, see Standard Plan A77J4.
6. In-line Terminal System Treatments are used where site conditions will not accommodate a flared end treatment.
7. The type of terminal system to be used will be shown on the Project Plans.
8. Dependent on site conditions (embankment height, side slopes, other fixed objects), it may be advisable to construct additional guard railing (a length equal to multiples of 12'-6" with 6'-3" post spacing) between the transition railing and end treatments.
9. Where placement of dike is required with guard railing installations, see Revised Standard Plan RSP A77C4 for dike positioning details.
10. Type 12AA or Type 12BB Layouts are typically used to the right of traffic departing a structure on two-way conventional highways where the roadbed width across the structure is less than 40 feet.
11. For additional details of typical connections to bridge rail, see Connection Detail CC on Revised Standard Plan RSP A77J2 and Connection Detail HH on Standard Plans A77k2.

STATE OF CALIFORNIA
DEPARTMENT OF TRANSPORTATION

METAL BEAM GUARD RAILING TYPICAL LAYOUTS FOR STRUCTURE DEPARTURE

NO SCALE

RSP A77F4 DATED JUNE 6, 2008 SUPERSEDES STANDARD PLAN A77F4
DATED MAY 1, 2006 - PAGE 57 OF THE STANDARD PLANS BOOK DATED MAY 2006.

REVISED STANDARD PLAN RSP A77F4

2006 REVISED STANDARD PLAN RSP A77F4

12-10-07

DIST	COUNTY	ROUTE	POST MILES TOTAL PROJECT	SHEET NO.	TOTAL SHEETS
10	Mer	165	11.7/26.7	53	110

Randell D. Hiatt
REGISTERED CIVIL ENGINEER

June 5, 2009
PLANS APPROVAL DATE

REGISTERED PROFESSIONAL ENGINEER
Randell D. Hiatt
No. C50200
Exp. 6-30-09
CIVIL
STATE OF CALIFORNIA

The State of California or its officers or agents shall not be responsible for the accuracy or completeness of electronic copies of this plan sheet.

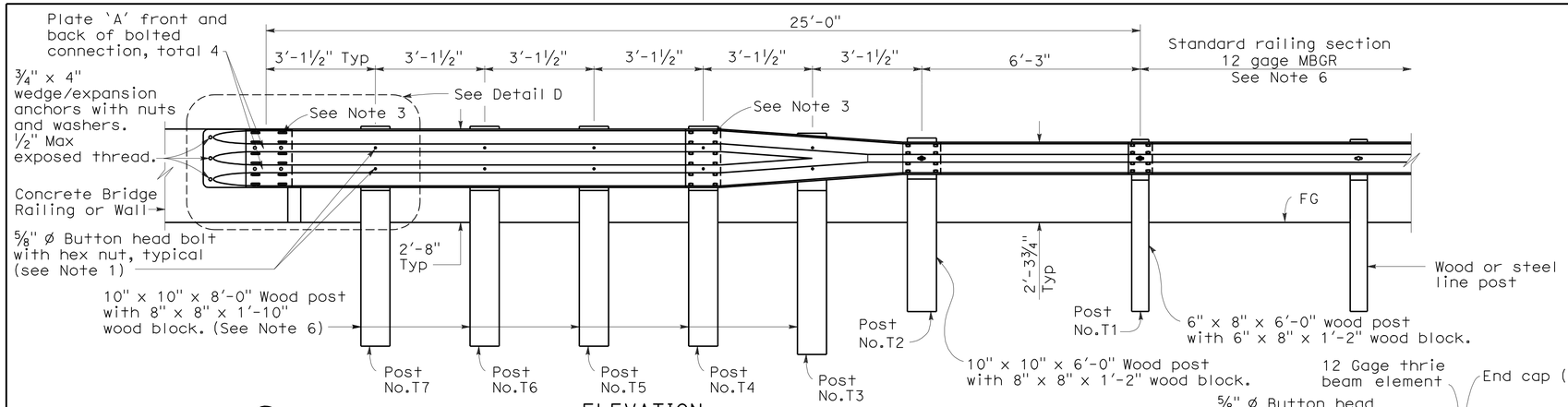

ELEVATION

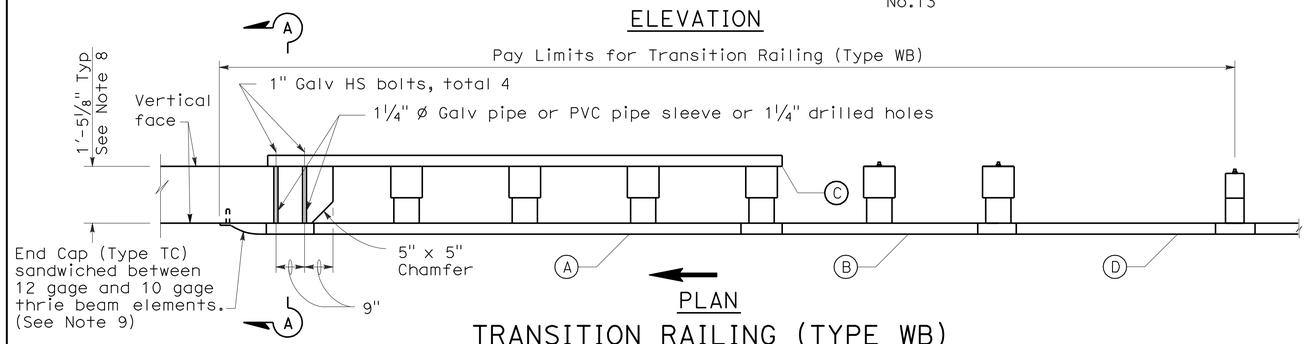

PLAN

TRANSITION RAILING (TYPE WB)

(No Blockout Attachment)

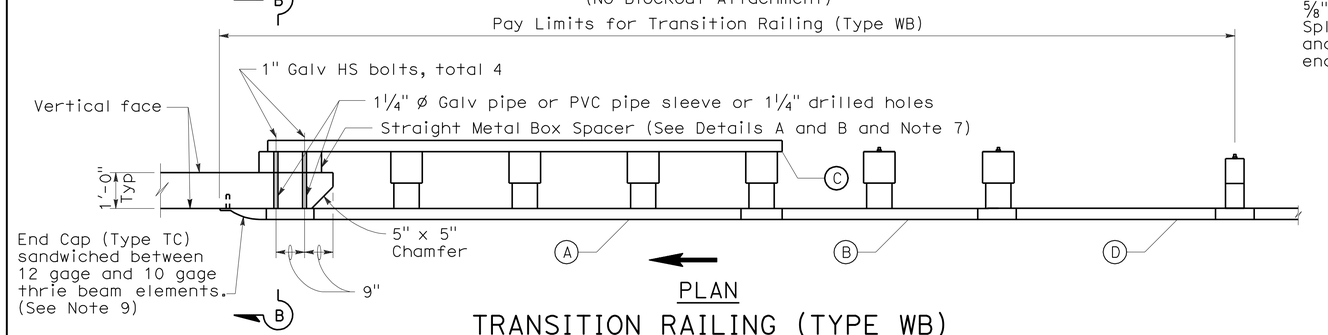

PLAN

TRANSITION RAILING (TYPE WB)

(Blockout Attachment)

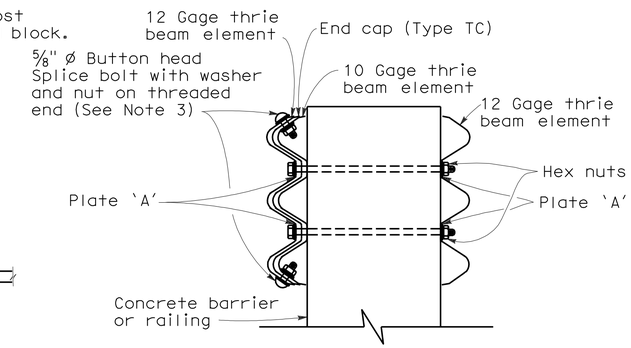

SECTION A-A

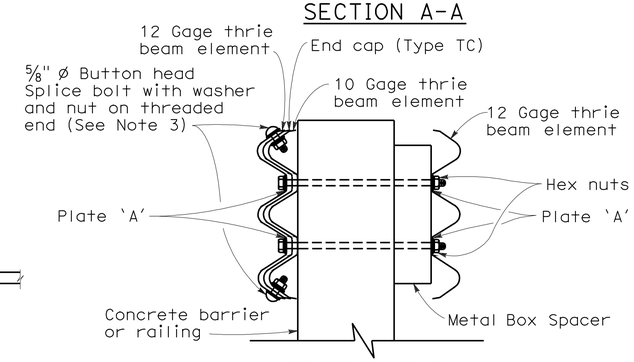

SECTION B-B

LEGEND

(A) Nested thrie beam elements (one 12 gage element nested over one 10 gage element).

(B) One 10 gage "W" beam to thrie beam element.

(C) One 12 gage thrie beam element.

(D) One 10 gage "W" beam rail element (7'-3½" length)

10 gage = 0.135" thick

12 gage = 0.108" thick

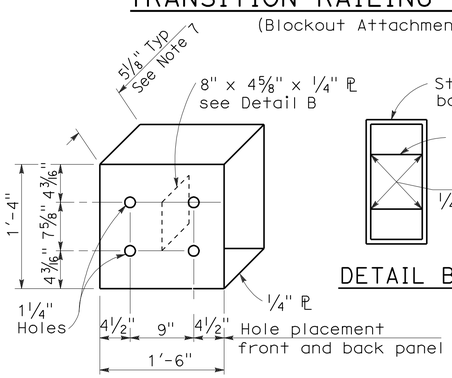

DETAIL A

STRAIGHT METAL BOX SPACER

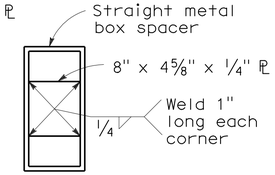

DETAIL B

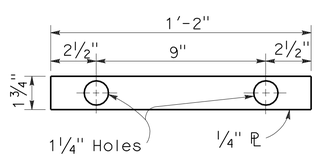

DETAIL C

PLATE 'A'

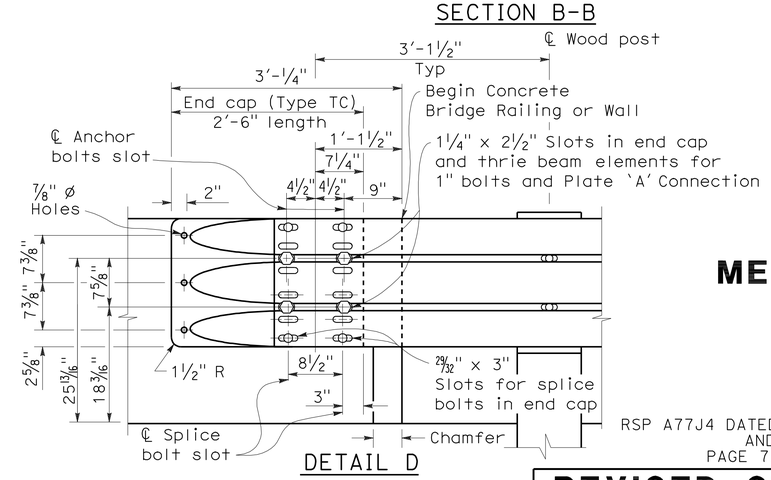

DETAIL D

NOTES:

To accompany plans dated 6-21-10

1. Use 5/8 " ø Button head bolts and hex nuts for connections to posts. No washer on rail face for bolted connections to post.
2. The nested rail elements, end cap, and 'W' beam to thrie beam element may be spliced together prior to bolting the elements to the wood post and concrete barrier or railing.
3. Exterior splice bolt holes for rail element splices at Post No.T4 and the connection to the concrete barrier or railing shall be the standard 29/32 " x 1 1/8 " slot size. Interior splice bolt holes at these locations may be increased up to 1 1/4 " ø. Only the top 2 and the bottom 2 splice bolts with washers and nuts are required for rail splices at Post No.T4 and the connection to the concrete barrier or railing.
4. Direction of adjacent traffic indicated by →.
5. The top elevation of Post Nos.T2 through T7 shall not project more than 1" above the top elevation of the rail element.
6. Typically, the railing connected to Transition Railing (Type WB) will be either standard railing section of metal beam guard railing or an approved Caltrans end treatment attached to Post No.T1.
7. The depth of the metal box spacer varies from the 5 1/8 " to 1 1/2 " and is dependent on the width of the concrete railing or wall. The combined dimension for the depth of the metal box spacer plus the width of railing or wall is typically 17 1/8 ". Where the space between the backside of the concrete railing or wall and the rear thrie beam element is less than 1 1/2 ", metal plates similar to Plate 'A' are to be used as spacers.
8. Where the width of the concrete railing or wall is greater than 17 1/8 ", wood blocks are to be used to fill the space created between the backside of Posts No.4 through No.7 and the rear thrie beam element. These wood blocks shall be 8" in width and 1'-2" in length. The dimension between the front thrie beam element and the rear thrie beam element is to match the width of the concrete railing or wall.
9. End cap may be installed over 12 gage and 10 gage thrie beam elements where transition railing is installed on the departure end of bridge railing.

STATE OF CALIFORNIA
DEPARTMENT OF TRANSPORTATION

METAL BEAM GUARD RAILING TRANSITION RAILING (TYPE WB)

NO SCALE

RSP A77J4 DATED JUNE 5, 2009 SUPERSEDES RSP A77J4 DATED JUNE 6, 2008 AND STANDARD PLAN A77J4 DATED MAY 1, 2006 - PAGE 75 OF THE STANDARD PLANS BOOK DATED MAY 2006.

REVISED STANDARD PLAN RSP A77J4

2006 REVISED STANDARD PLAN RSP A77J4

5-14-09

DIST	COUNTY	ROUTE	POST MILES TOTAL PROJECT	SHEET NO.	TOTAL SHEETS
10	Mer	165	11.7/26.7	54	110

LICENSED LANDSCAPE ARCHITECT

April 3, 2009
PLANS APPROVAL DATE

The State of California or its officers or agents shall not be responsible for the accuracy or completeness of electronic copies of this plan sheet.

LICENSED LANDSCAPE ARCHITECT — Gregory A. Balzer 3878 — Registered Professional Engineer — 02-28-11 Renewal Date — 03-04-09 Date — STATE OF CALIFORNIA

To accompany plans dated 6-21-10

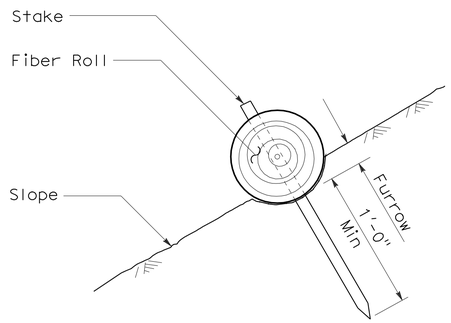

SECTION

FIBER ROLL (TYPE 1)

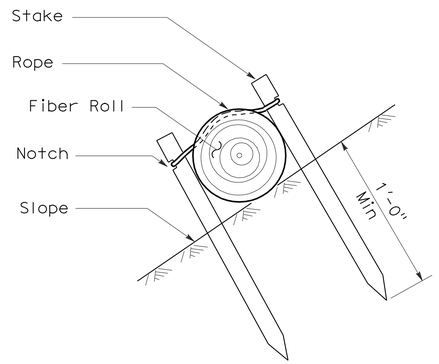

SECTION

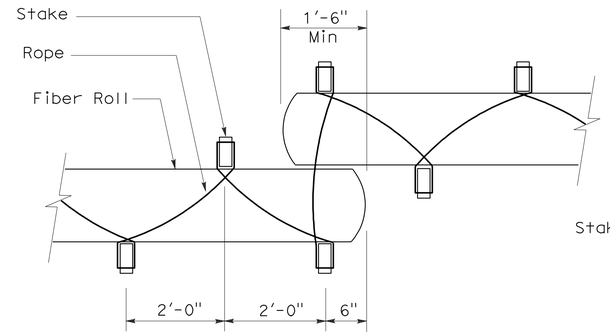

PLAN

FIBER ROLL (TYPE 2)

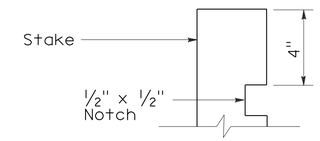

ELEVATION

STAKE NOTCH DETAIL

NOTES:

1. Fiber roll spacing varies depending upon slope inclination.
2. Installations shown in the perspectives are for slope inclination of 10:1 and steeper.

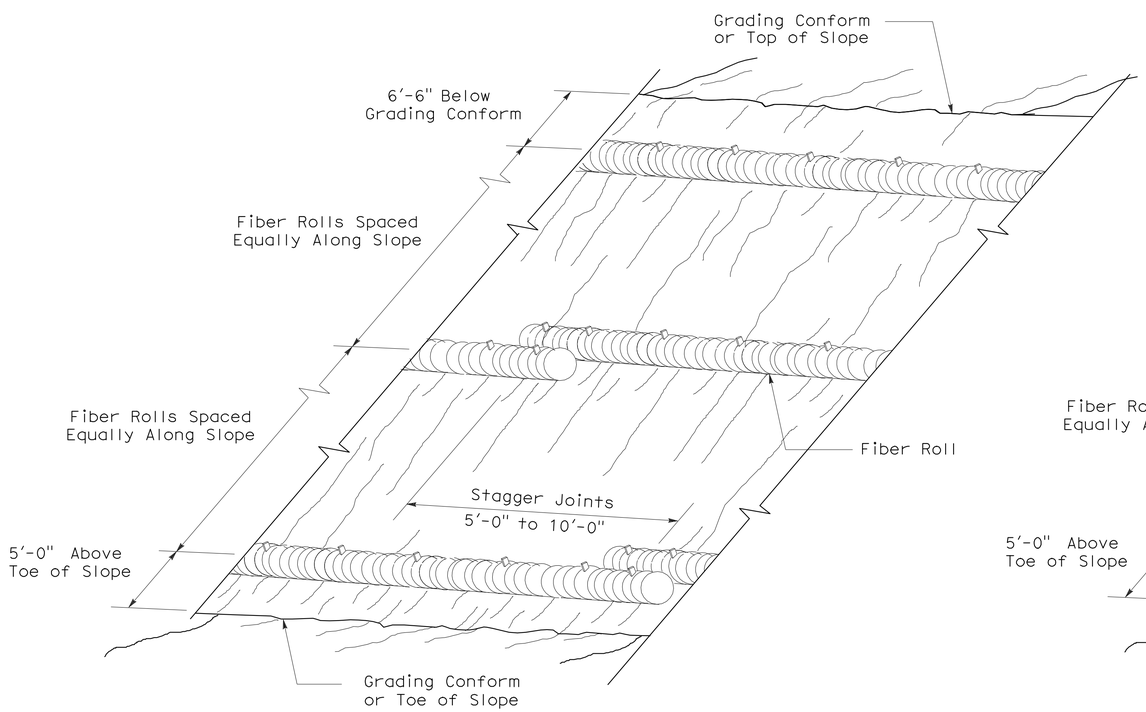

PERSPECTIVE

FIBER ROLL (TYPE 1)

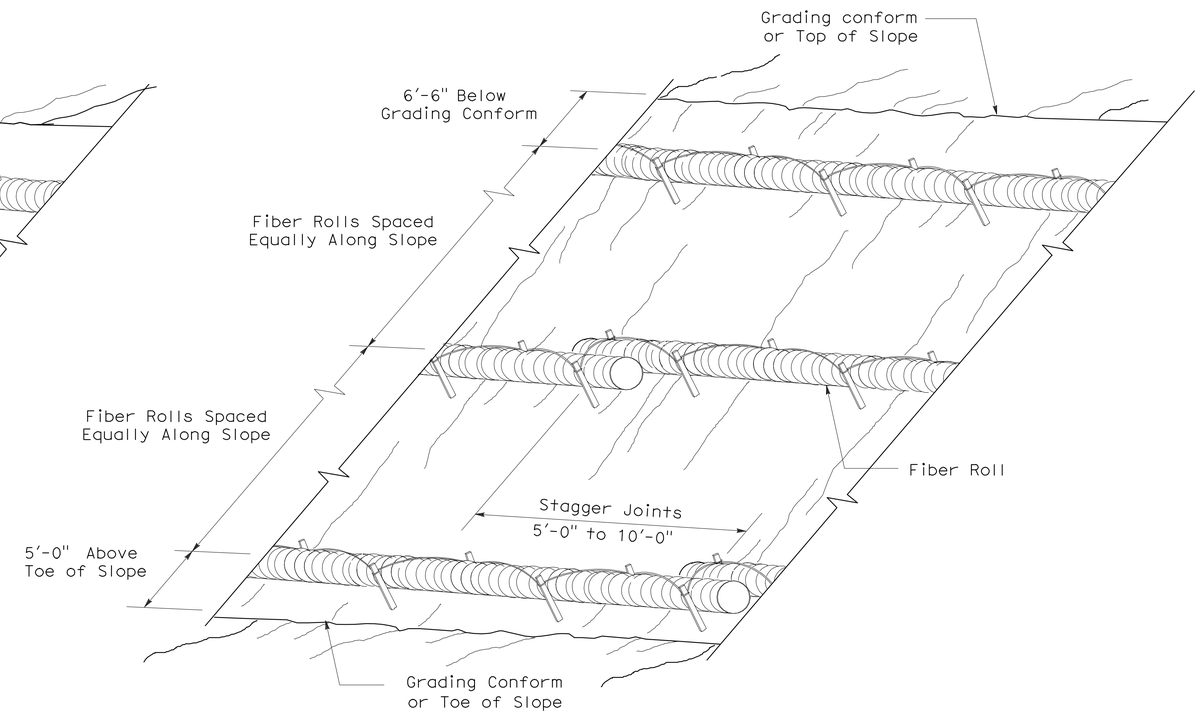

PERSPECTIVE

FIBER ROLL (TYPE 2)

STATE OF CALIFORNIA
DEPARTMENT OF TRANSPORTATION

EROSION CONTROL DETAILS (FIBER ROLL)

NO SCALE

RNSP H51 DATED APRIL 3, 2009 SUPERSEDES NSP H51 DATED DECEMBER 1, 2006 THAT SUPPLEMENTS THE STANDARD PLANS BOOK DATED MAY 2006.

REVISED NEW STANDARD PLAN RNSP H51

2006 REVISED NEW STANDARD PLAN RNSP H51

3-4-09

DIST	COUNTY	ROUTE	POST MILES TOTAL PROJECT	SHEET NO.	TOTAL SHEETS
10	Mer	165	11.7/26.7	55	110

Randell D. Hiatt
REGISTERED CIVIL ENGINEER

June 6, 2008
PLANS APPROVAL DATE

REGISTERED PROFESSIONAL ENGINEER
Randell D. Hiatt
No. C50200
Exp. 6-30-09
CIVIL
STATE OF CALIFORNIA

The State of California or its officers or agents shall not be responsible for the accuracy or completeness of electronic copies of this plan sheet.

To accompany plans dated 6-21-10

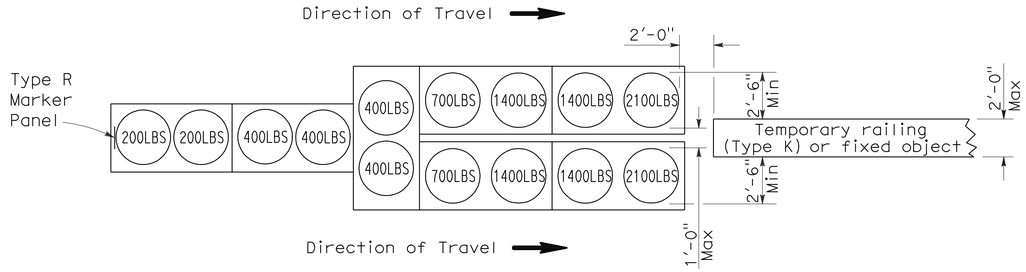

ARRAY 'TU14'

Approach speed 45 mph or more

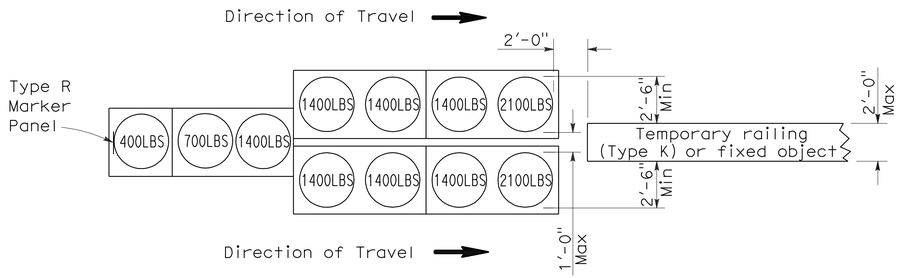

ARRAY 'TU11'

Approach speed less than 45 mph

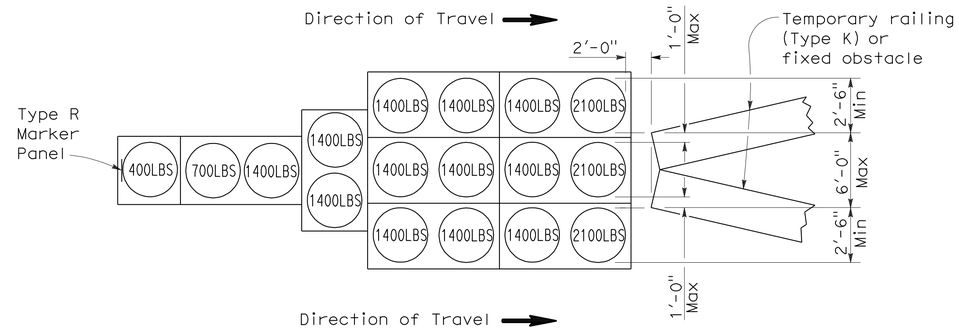

ARRAY 'TU17'

Approach speed less than 45 mph

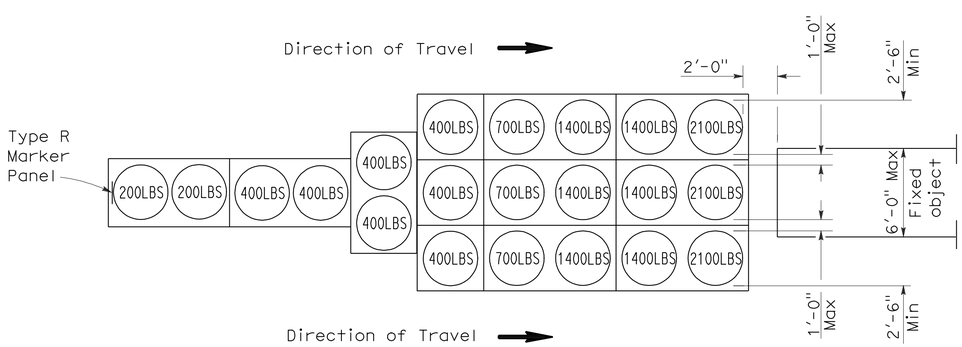

ARRAY 'TU21'

Approach speed 45 mph or more

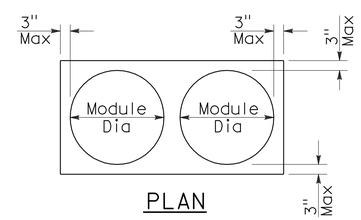

PLAN

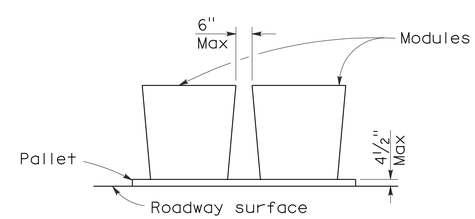

ELEVATION

CRASH CUSHION PALLET DETAIL

See Note 7

NOTES:

1. (XXX) Indicates sand filled module location and weight of sand in pounds for each module. Module spacing is based on the greater diameter of the module.
2. All sand weights are nominal.
3. Temporary crash cushion arrays shall not encroach on the traveled way.
4. Place the top of Type R marker panel 1" below the module lid.
5. Refer to Standard Plan A73B for marker details.
6. Approach speeds indicated conform to NCHRP 350 Report criteria.
7. Use of pallets is optional.

STATE OF CALIFORNIA
DEPARTMENT OF TRANSPORTATION

TEMPORARY CRASH CUSHION, SAND FILLED (UNIDIRECTIONAL)

NO SCALE

RSP T1A DATED JUNE 6, 2008 SUPERSEDES STANDARD PLAN T1A
DATED MAY 1, 2006 - PAGE 211 OF THE STANDARD PLANS BOOK DATED MAY 2006.

REVISED STANDARD PLAN RSP T1A

2006 REVISED STANDARD PLAN RSP T1A

DIST	COUNTY	ROUTE	POST MILES TOTAL PROJECT	SHEET NO.	TOTAL SHEETS
10	Mer	165	11.7/26.7	56	110

Randell D. Hiatt
REGISTERED CIVIL ENGINEER

June 6, 2008
PLANS APPROVAL DATE

REGISTERED PROFESSIONAL ENGINEER
Randell D. Hiatt
No. C50200
Exp. 6-30-09
CIVIL
STATE OF CALIFORNIA

The State of California or its officers or agents shall not be responsible for the accuracy or completeness of electronic copies of this plan sheet.

To accompany plans dated 6-21-10

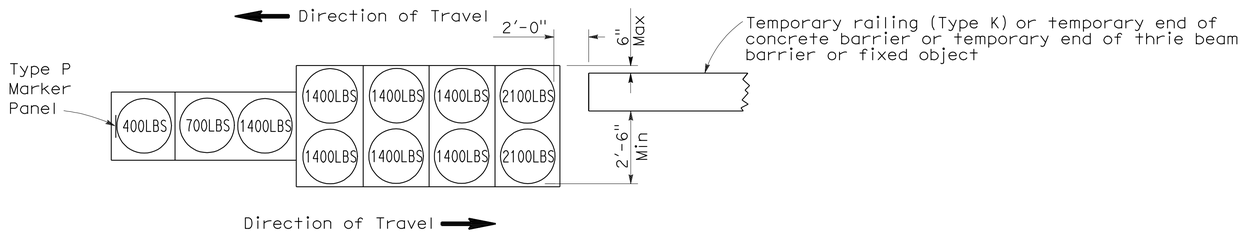

ARRAY 'TB11'

Approach speed less than 45 mph

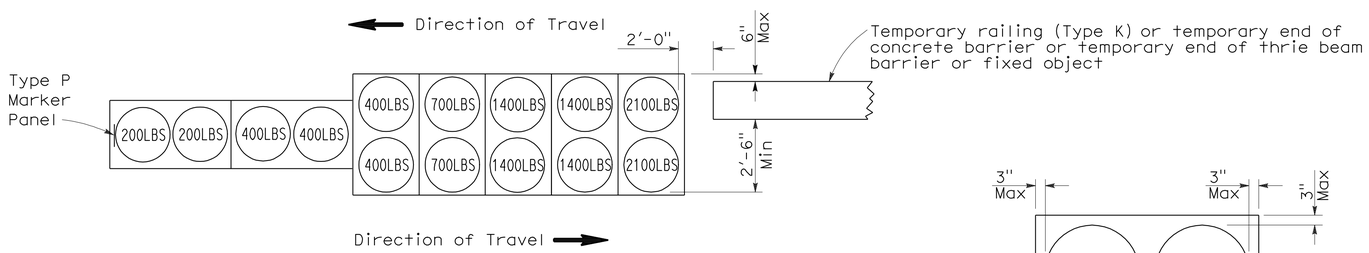

ARRAY 'TB14'

Approach speed 45 mph or more

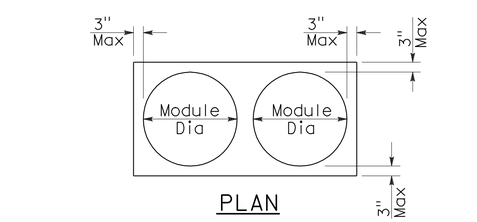

PLAN

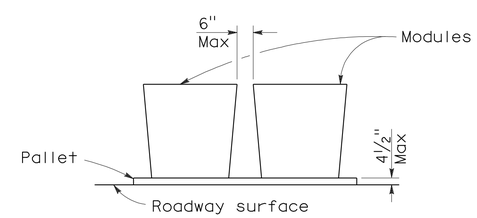

ELEVATION

CRASH CUSHION PALLET DETAIL

See Note 7

NOTES:

1. (XXX) Indicates sand filled module location and weight of sand in pounds for each module. Module spacing is based on the greater diameter of the module.
2. All sand weights are nominal.
3. Temporary crash cushion arrays shall not encroach on the traveled way.
4. Place the Type P marker panel so that the bottom of the panel rests upon the pallet.
5. Refer to Standard Plan A73B for marker details.
6. Approach speeds indicated conform to NCHRP 350 Report criteria.
7. Use of pallets is optional.

STATE OF CALIFORNIA
DEPARTMENT OF TRANSPORTATION

TEMPORARY CRASH CUSHION, SAND FILLED (BIDIRECTIONAL)

NO SCALE

RSP T1B DATED JUNE 6, 2008 SUPERSEDES STANDARD PLAN T1B
DATED MAY 1, 2006 - PAGE 212 OF THE STANDARD PLANS BOOK DATED MAY 2006.

REVISED STANDARD PLAN RSP T1B

2006 REVISED STANDARD PLAN RSP T1B

5-15-08

DIST	COUNTY	ROUTE	POST MILES TOTAL PROJECT	SHEET NO.	TOTAL SHEETS
10	Mer	165	11.7/26.7	57	110

Randell D. Hiatt
REGISTERED CIVIL ENGINEER

June 6, 2008
PLANS APPROVAL DATE

REGISTERED PROFESSIONAL ENGINEER
Randell D. Hiatt
No. C50200
Exp. 6-30-09
CIVIL
STATE OF CALIFORNIA

The State of California or its officers or agents shall not be responsible for the accuracy or completeness of electronic copies of this plan sheet.

To accompany plans dated 6-21-10

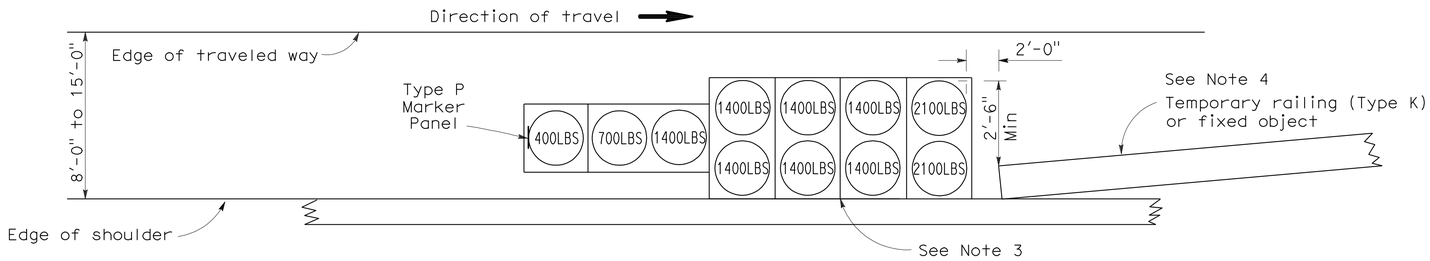

ARRAY 'TS11'

Approach speed less than 45 mph
See Note 9

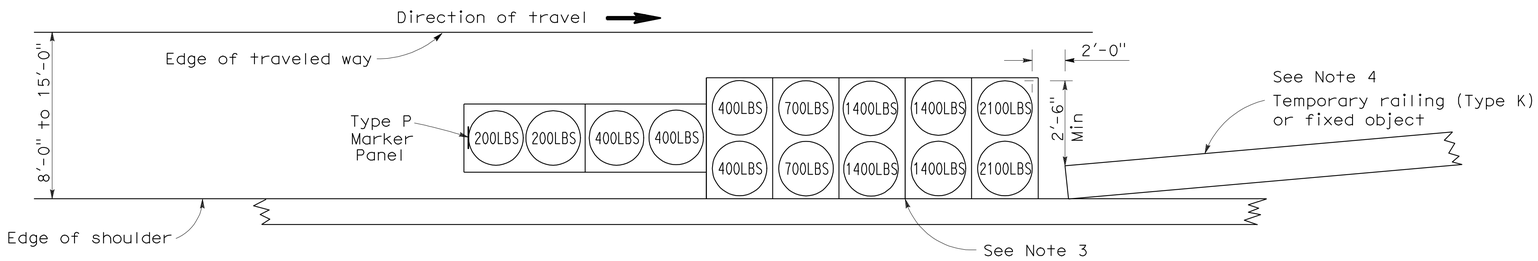

ARRAY 'TS14'

Approach speed 45 mph or more
See Note 9

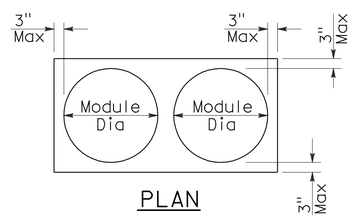

PLAN

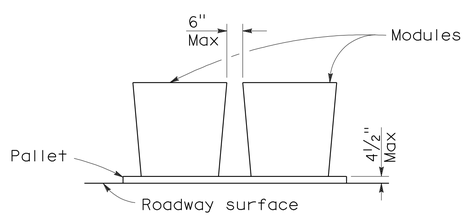

ELEVATION

CRASH CUSHION PALLET DETAIL

See Note 11

NOTES:

1. (XXX) Indicates sand filled module location and weight of sand in pounds for each module. Module spacing is based on the greater diameter of the module.
2. All sand weights are nominal.
3. The temporary crash cushion arrays shown on this plan shall be used only in locations where there will be traffic on one side of the temporary crash cushion array.
4. If the fixed object or approach end of the temporary railing is less than 15'-0" from the edge of traveled way, a temporary crash cushion is required in a construction or work zone.
5. Temporary crash cushion arrays shall not encroach on the traveled way.
6. Arrays for median shoulders shall conform to details shown on this plan for outside shoulders.
7. Place the Type P marker panel so that the bottom of the panel rests upon the pallet and faces traffic.
8. Refer to Standard Plan A73B for marker details.
9. For shoulder widths less than 8'-0", appropriate approved crash cushion protection, other than sand filled modules, shall be provided at fixed objects and at approach ends of temporary railing. The specific type of crash cushion shall be as shown on the project plans or as specified in the Special Provisions, or if not shown on the project plans or specified in the Special Provisions, shall be as approved by the Engineer.
10. Approach speeds indicated conform to NCHRP 350 Report criteria.
11. Use of pallets is optional.

STATE OF CALIFORNIA
DEPARTMENT OF TRANSPORTATION

TEMPORARY CRASH CUSHION, SAND FILLED (SHOULDER INSTALLATIONS)

NO SCALE

RSP T2 DATED JUNE 6, 2008 SUPERSEDES STANDARD PLAN T2
DATED MAY 1, 2006 - PAGE 213 OF THE STANDARD PLANS BOOK DATED MAY 2006.

REVISED STANDARD PLAN RSP T2

2006 REVISED STANDARD PLAN RSP T2

5-15-08

DIST	COUNTY	ROUTE	POST MILES TOTAL PROJECT	SHEET NO.	TOTAL SHEETS
10	Mer	165	11.7/26.7	58	110

REGISTERED CIVIL ENGINEER

November 17, 2006
PLANS APPROVAL DATE

REGISTERED PROFESSIONAL ENGINEER — Greg W. Edwards — No. C36386 — Exp. 6-30-08 — CIVIL — STATE OF CALIFORNIA

The State of California or its officers or agents shall not be responsible for the accuracy or completeness of electronic copies of this plan sheet.

To accompany plans dated 6-21-10

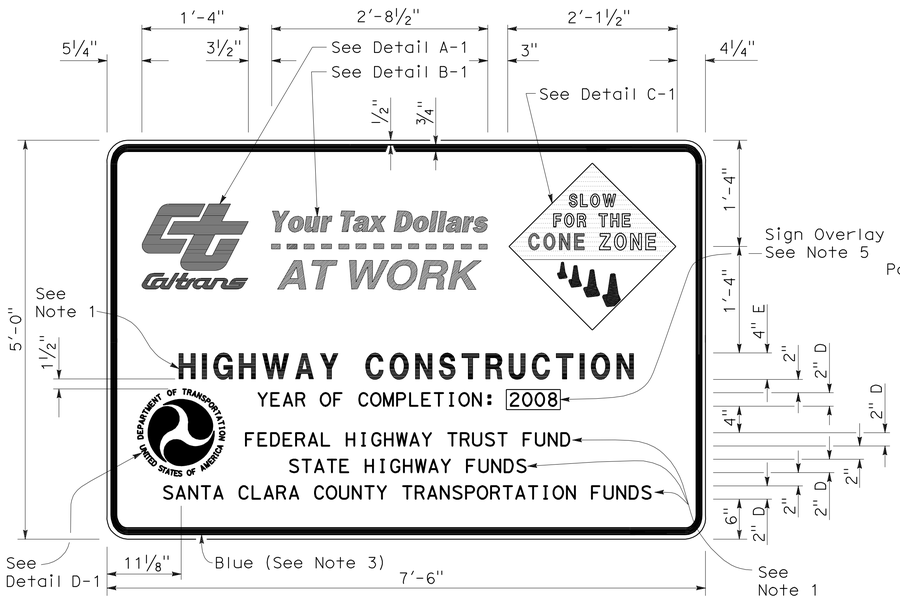

TYPE 1

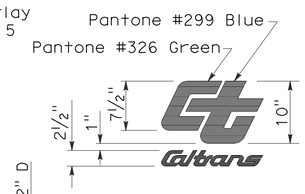

DETAIL A-1

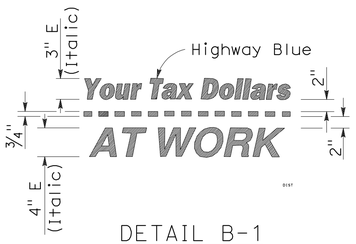

DETAIL B-1
(See Note 3)

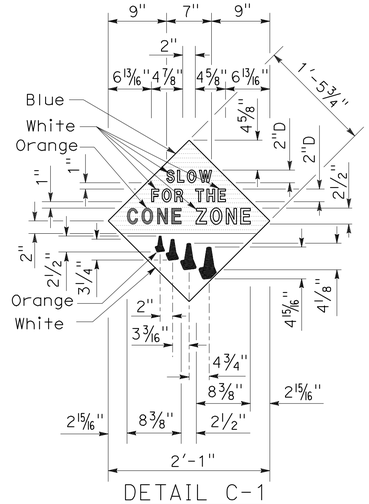

DETAIL C-1
(See Note 4)

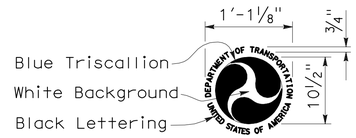

DETAIL D-1
(See Note 6)

NOTES:

1. The sign messages shown for type of project and fund types are examples only. See the Special Provisions for the applicable type of project and fund type messages to be used.
2. Except as otherwise shown, the legend of sign shall be black on a white background (non-reflective).
3. The border of the signs and details "B-1" and "B-2" shall be blue (non-reflective).
4. The diamond in details "C-1" and "C-2" shall be blue for the background of message, " SLOW FOR THE CONE ZONE", and white background for the orange cones. The color and type of font for the "SLOW FOR THE CONE ZONE" message shall be: "SLOW" white D; "FOR THE" white D; "CONE" orange Arial font; "ZONE" white Arial font.
5. Year of completion of project construction shown on the overlay is an example only. See the Special Provisions.
6. Use when the Project involves Federal Highway Trust Fund.

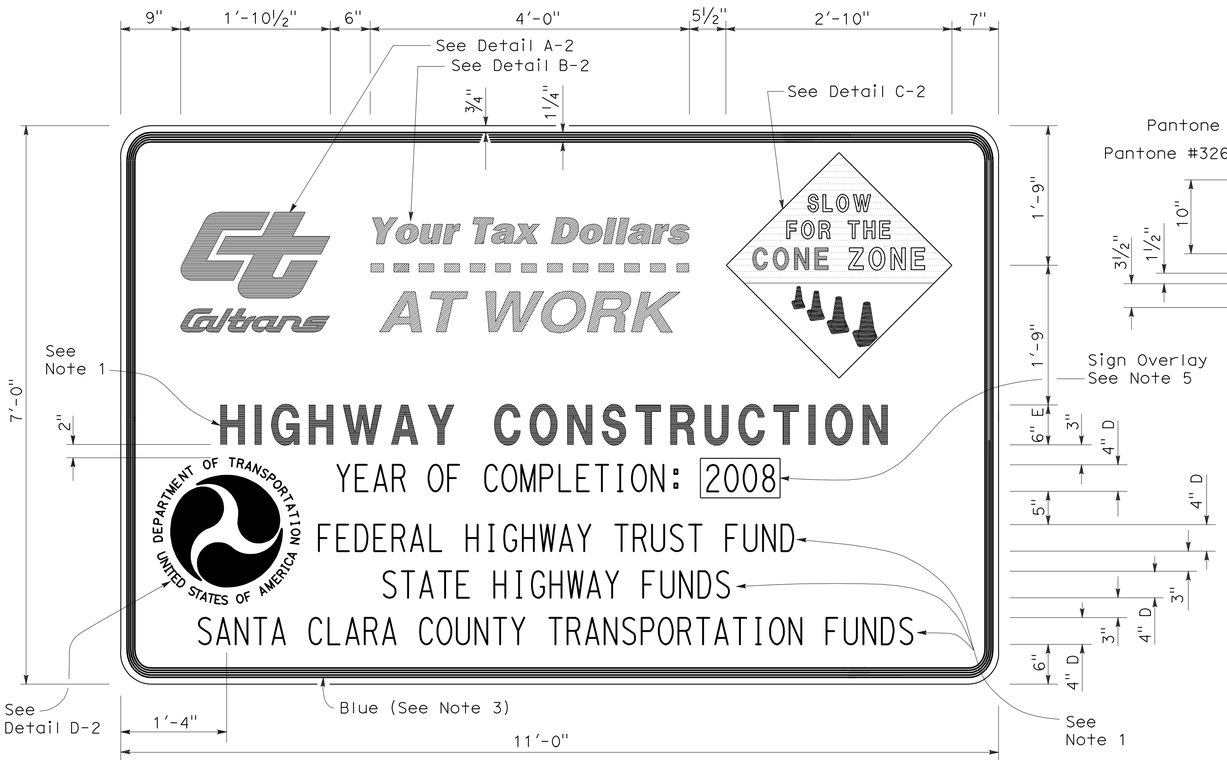

TYPE 2

DETAIL A-2

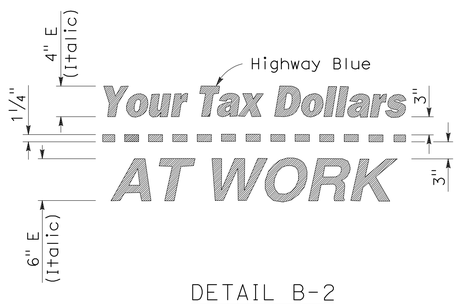

DETAIL B-2
(See Note 3)

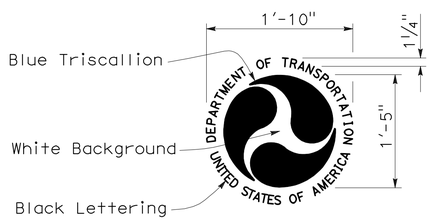

DETAIL D-2
(See Note 6)

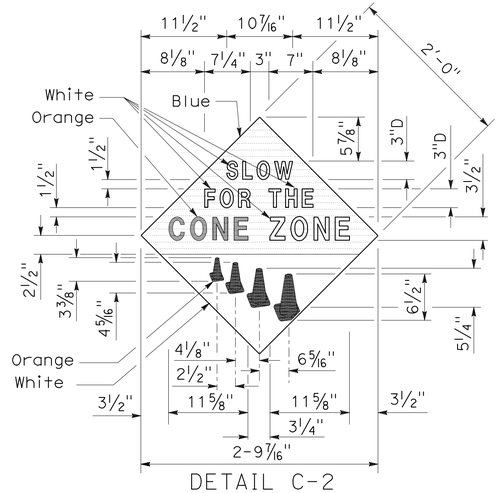

DETAIL C-2
(See Note 4)

STATE OF CALIFORNIA
DEPARTMENT OF TRANSPORTATION

CONSTRUCTION PROJECT FUNDING IDENTIFICATION SIGNS

NO SCALE

RSP T7 DATED NOVEMBER 17, 2006 SUPERSEDES STANDARD PLAN T7
DATED MAY 1, 2006 - PAGE 217 OF THE STANDARD PLANS BOOK DATED MAY 2006.

REVISED STANDARD PLAN RSP T7

2006 REVISED STANDARD PLAN RSP T7

9-7-06

DIST	COUNTY	ROUTE	POST MILES TOTAL PROJECT	SHEET NO.	TOTAL SHEETS
10	Mer	165	11.7/26.7	59	110

Robert B Schott
LICENSED LANDSCAPE ARCHITECT

April 3, 2009
PLANS APPROVAL DATE

LICENSED LANDSCAPE ARCHITECT
Robert B. Schott 3025
Robert B Schott
Signature
11-30-10
Renewal Date
2-25-09
Date
STATE OF CALIFORNIA

The State of California or its officers or agents shall not be responsible for the accuracy or completeness of electronic copies of this plan sheet.

To accompany plans dated 6-21-10

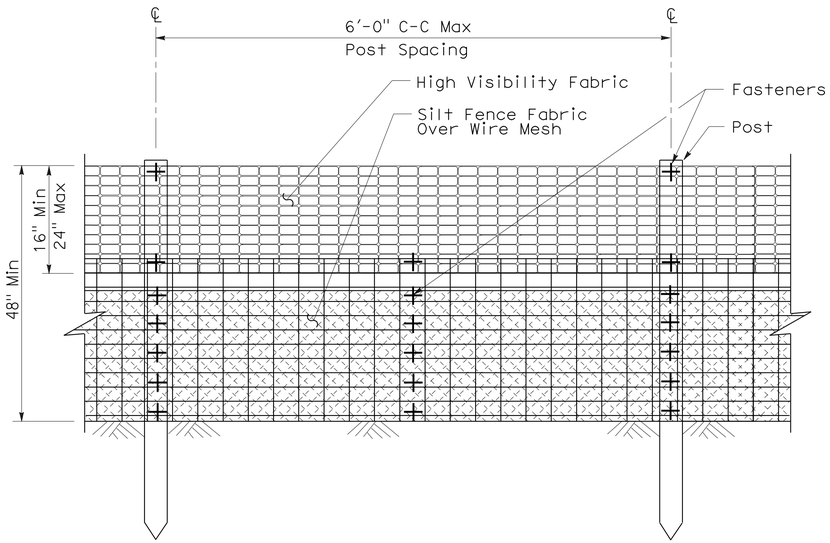

ELEVATION

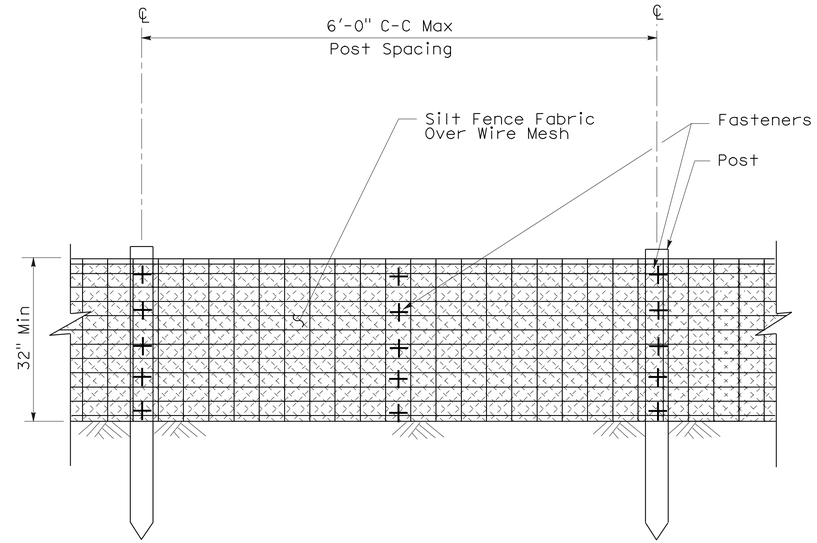

ELEVATION

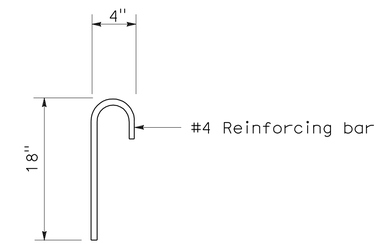

ANCHOR

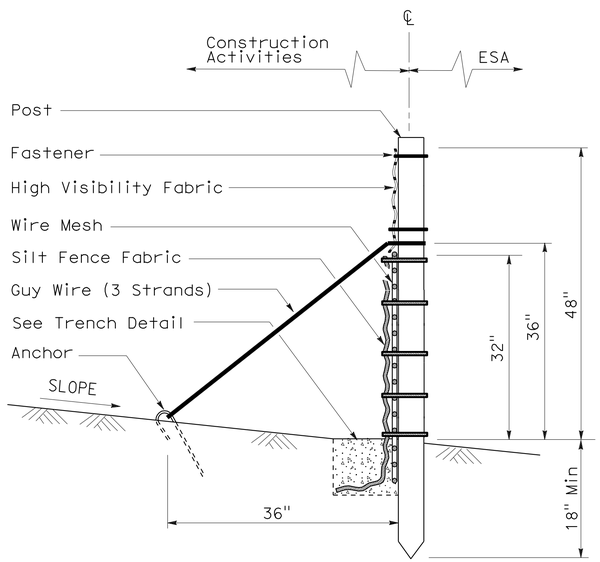

SECTION

TEMPORARY REINFORCED SILT FENCE (TYPE I)

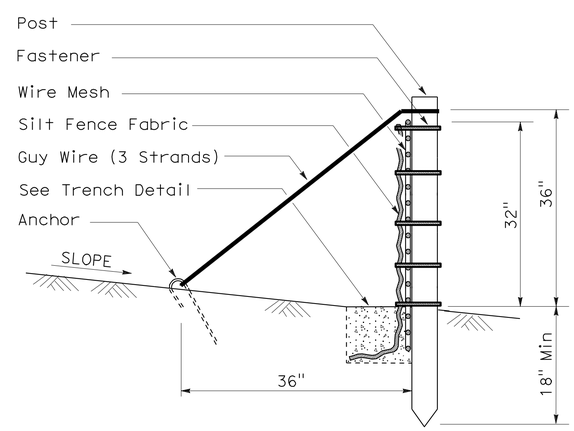

SECTION

TEMPORARY REINFORCED SILT FENCE (TYPE 2)

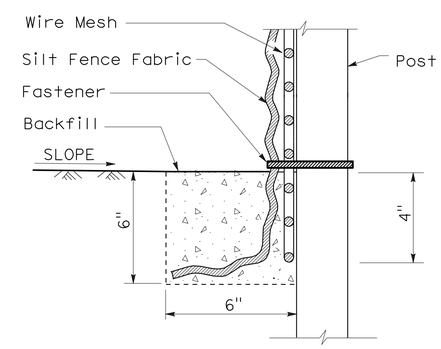

SECTION

TRENCH DETAIL

STATE OF CALIFORNIA
DEPARTMENT OF TRANSPORTATION

TEMPORARY WATER POLLUTION CONTROL DETAILS (TEMPORARY REINFORCED SILT FENCE)

NO SCALE

NSP T60 DATED APRIL 3, 2009 SUPPLEMENTS
THE STANDARD PLANS BOOK DATED MAY 2006.

NEW STANDARD PLAN NSP T60

2006 NEW STANDARD PLAN NSP T60

1-7-09

DIST	COUNTY	ROUTE	POST MILES TOTAL PROJECT	SHEET NO.	TOTAL SHEETS
10	Mer	165	11.7/26.7	60	110

LICENSED LANDSCAPE ARCHITECT

April 3, 2009
PLANS APPROVAL DATE

The State of California or its officers or agents shall not be responsible for the accuracy or completeness of electronic copies of this plan sheet.

LICENSED LANDSCAPE ARCHITECT — Robert B. Schott 3025 — Signature — 11-30-10 Renewal Date — 2-25-09 Date — STATE OF CALIFORNIA

To accompany plans dated 6-21-10

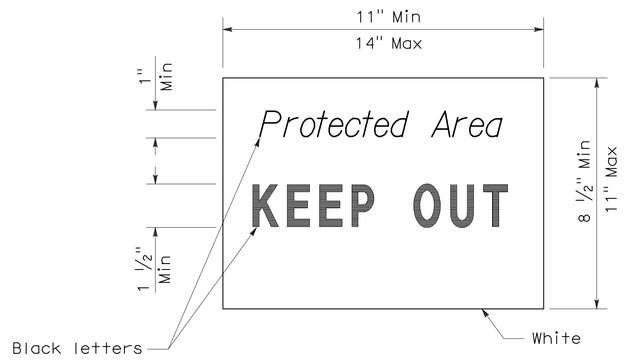

SIGN DETAIL

NOTE:

1. Temporary silt fence and temporary straw bale barrier shown for reference purposes only.

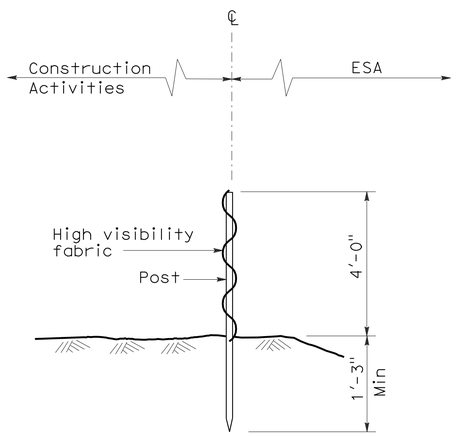

SECTION
TEMPORARY FENCE (TYPE ESA)

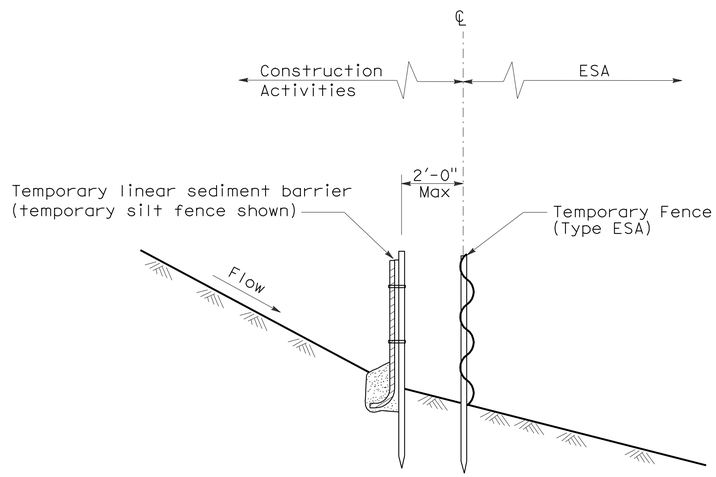

SECTION
PLACEMENT DETAIL
FOR TEMPORARY LINEAR SEDIMENT BARRIER
USED WITH TEMPORARY
FENCE (TYPE ESA)
(See Note 1)

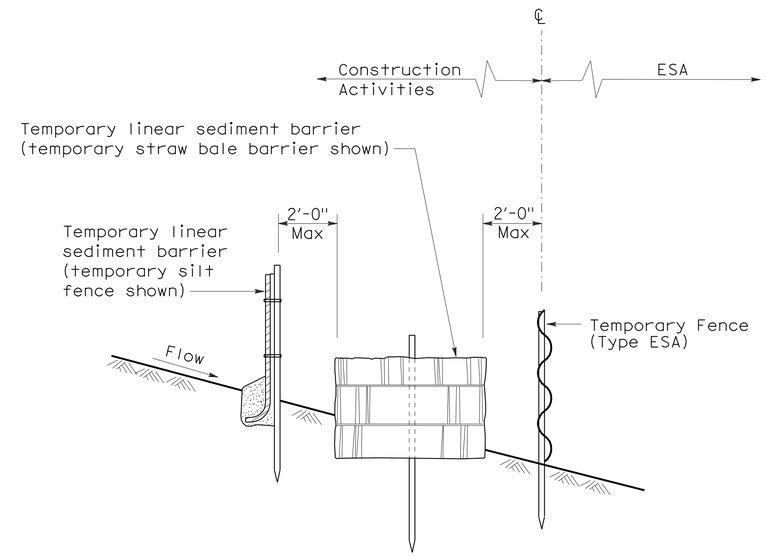

SECTION
PLACEMENT DETAIL
FOR TEMPORARY SILT FENCE
AND TEMPORARY STRAW BALE BARRIER
USED WITH TEMPORARY FENCE (TYPE ESA)
(See Note 1)

STATE OF CALIFORNIA
DEPARTMENT OF TRANSPORTATION

TEMPORARY WATER POLLUTION CONTROL DETAILS [TEMPORARY FENCE (TYPE ESA)]

NO SCALE

NSP T65 DATED APRIL 3, 2009 SUPPLEMENTS
THE STANDARD PLANS BOOK DATED MAY 2006.

NEW STANDARD PLAN NSP T65

2006 NEW STANDARD PLAN NSP T65

DIST	COUNTY	ROUTE	POST MILES TOTAL PROJECT	SHEET NO.	TOTAL SHEETS
10	Mer	165	11.7/26.7	61	110

Daniel T. Adams
REGISTERED CIVIL ENGINEER

October 20, 2006
PLANS APPROVAL DATE

REGISTERED PROFESSIONAL ENGINEER
Daniel T. Adams
No. C46476
Exp. 06-30-07
CIVIL
STATE OF CALIFORNIA

The State of California or its officers or agents shall not be responsible for the accuracy or completeness of electronic copies of this plan sheet.

To accompany plans dated 6-21-10

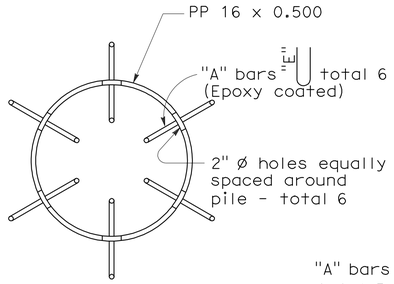

SECTION W-W

PP = Steel pipe pile

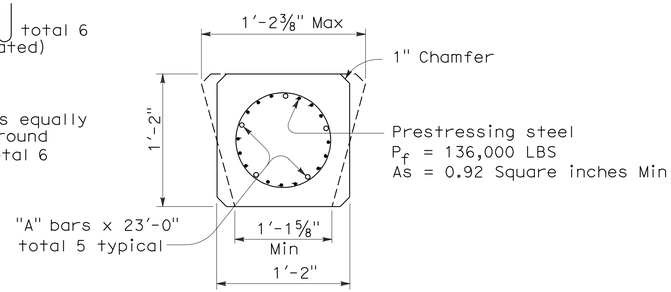

SECTION X-X

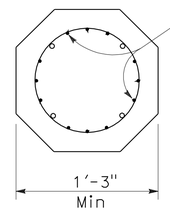

SECTION Y-Y

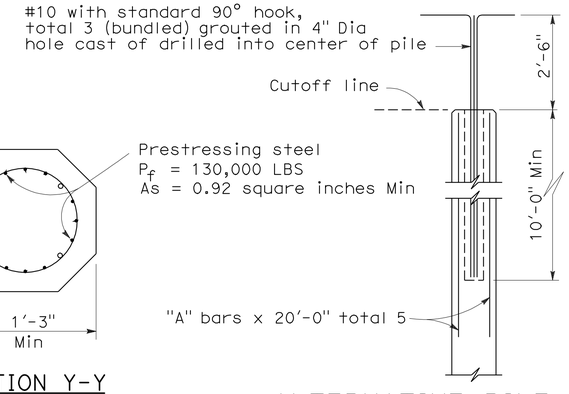

ALTERNATIVE PILE ANCHOR FOR PRESTRESSED PILE

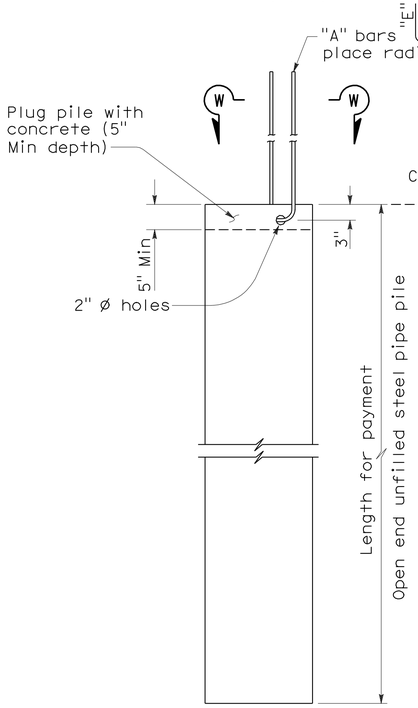

ALTERNATIVE "W"

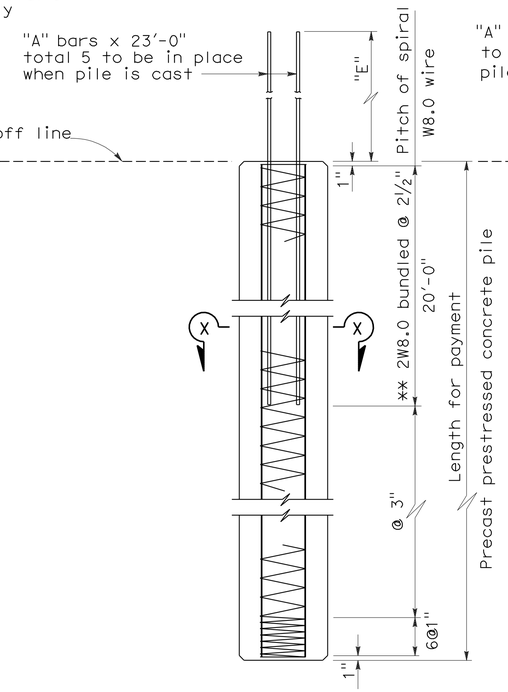

** W11.0 @ 1 3/4" may be substituted

ALTERNATIVE "X"

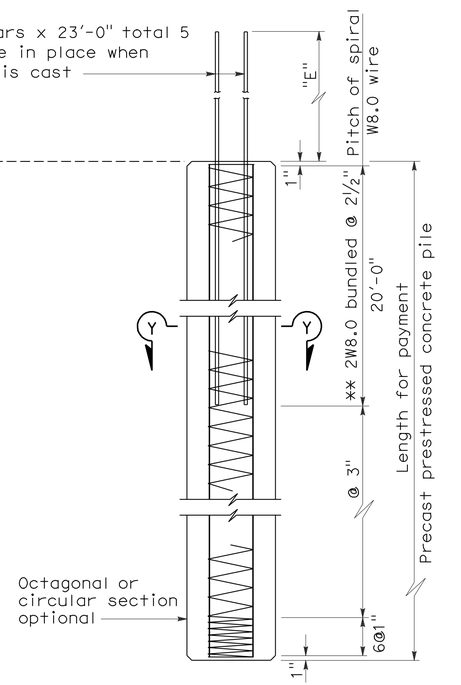

** W11.0 @ 1 3/4" may be substituted

ALTERNATIVE "Y"

	Nomimal Resistance (Tension) *	
	Not Required	Required
"A" bars	#6	#8
"E" Dimension	2'-0"	2'-10"

* See Pile Data Table in the Project Plans for Nominal Resistance (Tension) Requirements

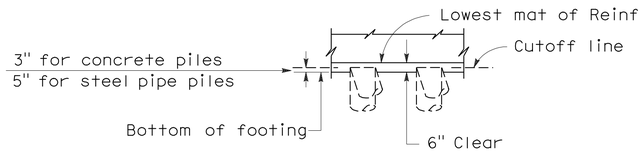

PILE EMBEDMENT

DESIGN NOTES:

DESIGN CAPACITY :

Compression = 200 kip (Service state)
= 400 kip (Nominal axial strength)
Tension = 80 kip (Service state)
= 200 kip (Nominal axial strength)

REINFORCED CONCRETE

f'_c = 4,000 psi
f_y = 60,000 psi

PRECAST PRESTRESSED PILES

P_f = Prestress Force (After losses)
Concrete Strength f'_c @ 28 days = 7,000 psi
f'_{ci} @ transfer = 4,000 psi

STEEL PIPE PILE

Fy (minimum yield strength) = 45,000 psi
Fu (minimum tensile strength) = 66,000 psi

NOTES:

1. Pile reinforcement extending into footing shall be hooked as required to provide clearance to top of footing.
2. Lapped splices in spiral pile reinforcement shall be lapped 80 wire diameters minimum. Spiral pile reinforcement at splices and at ends shall be terminated by a 135° hook with 6" tail hooked around a longitudinal bar or strand.
3. At the Contractor's option, alternative steel pipe with at least the diameter and wall thickness shown on these plans may be used. The diameter shall not exceed 1'-6".
4. Alternative "W" piles shall not be used for corrosive environments.
5. Maximum cut-off length at the top of the Alternative "X" and Alternative "Y" piles is 10'-0".

STATE OF CALIFORNIA
DEPARTMENT OF TRANSPORTATION

PILE DETAILS CLASS 200

NO SCALE

RSP B2-8 DATED OCTOBER 20, 2006 SUPERSEDES STANDARD PLAN B2-8 DATED MAY 1, 2006-PAGE 242 OF THE STANDARD PLANS BOOK DATED MAY 2006.

REVISED STANDARD PLAN RSP B2-8

2006 REVISED STANDARD PLAN RSP B2-8

10-5-06

DIST	COUNTY	ROUTE	POST MILES TOTAL PROJECT	SHEET NO.	TOTAL SHEETS
10	Mer	165	11.7/26.7	62	110

REGISTERED CIVIL ENGINEER

October 5, 2007
PLANS APPROVAL DATE

REGISTERED PROFESSIONAL ENGINEER Efthymios Delis No. C51434 Exp. 6-30-08 CIVIL STATE OF CALIFORNIA

The State of California or its officers or agents shall not be responsible for the accuracy or completeness of electronic copies of this plan sheet.

To accompany plans dated 6-21-10

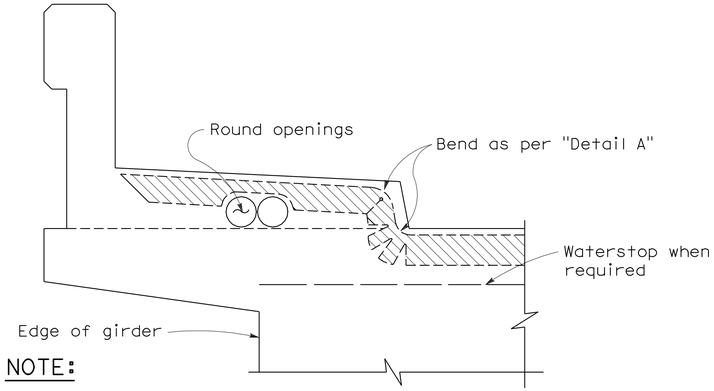

NOTE:

Type "B" seal shown. Type "A" seals to comform to the general path of seal shown, cuts for bending not required. Bend Type "A" seals 3" up into curb or barrier rail on only the low end of the seal.

CONCRETE BARRIER AND SIDEWALK

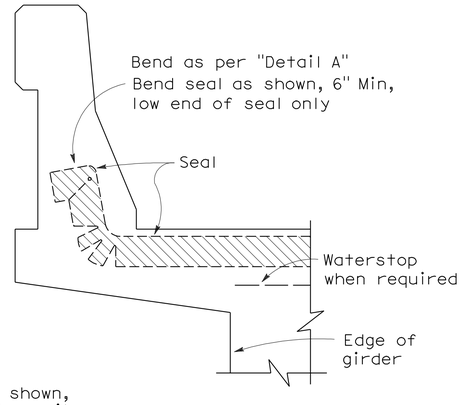

CONCRETE BARRIER

JOINT SEALS DETAILS

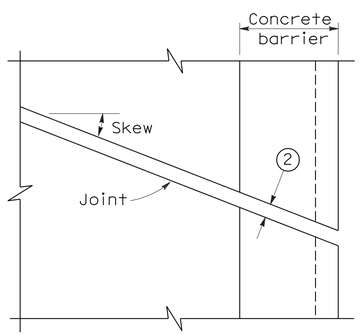

PLAN OF JOINT (SKEW ≤ 20°)

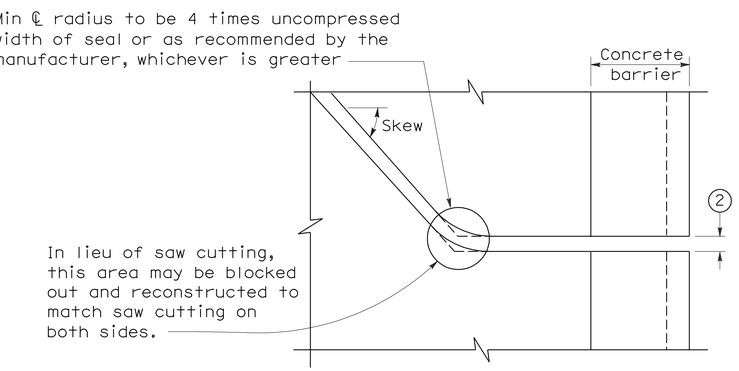

PLAN OF JOINT (SKEW > 20°)

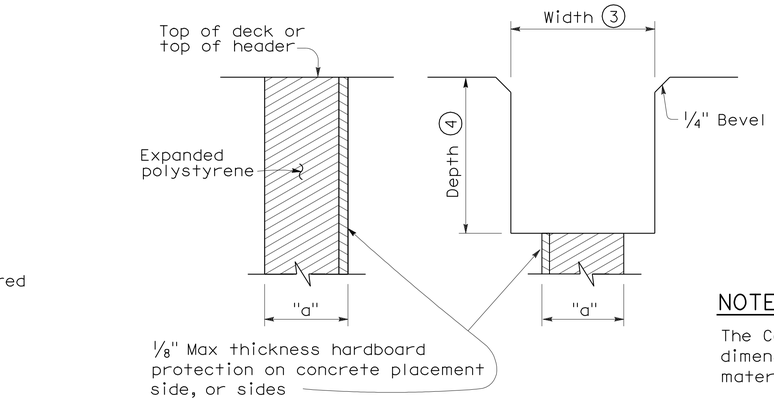

FORMING DETAIL SAWCUT DETAIL

NOTE:

The Contractor shall verify all controlling field dimensions before ordering or fabricatiing any material.

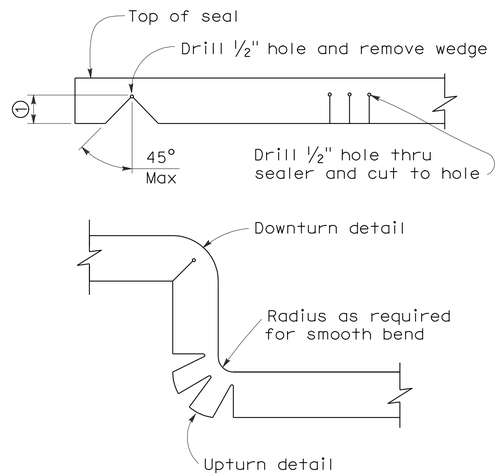

DETAIL A

NOTES:

1. Make smooth cuts from the bottom of seal to 1½" clear of top leaving at least one complete cell between the top of the cut and top of the seal. When necessary cut back of seal to clear conduit and round openings.
2. Opening in barrier to match width of sawn deck joint.
3. Sawcut groove widths shall be as ordered by the Engineer.
4. Depth of sawcut: Type A - Depth to be 2" minimum.
   Type B - Depth to be equal to or greater than the depth of seal measured along the contact surface, when compressed to minimum width position (W_2) plus dimensions shown.
5. MR (movement rating) as shown on other plan sheets.
6. Other depths must be approved by the Engineer.

DIMENSIONS "a" OF JOINT REQUIRED

Movement Rating (MR) 5	Bridge Type	"a" Dimension Deck Concrete Placed		
		Winter	Fall-Spring	Summer
2"	All except CIP/PS	1½"	1¼"	¾"
	CIP/PS	1¼"	1"	½"
1½"	All except CIP/PS	1¼"	1"	½"
	CIP/PS	1"	¾"	½"
1"	All except CIP/PS	1"	¾"	½"
	CIP/PS	¾"	½"	½"
½"	All except CIP/PS	¾"	¾"	½"
	CIP/PS	½"	½"	½"

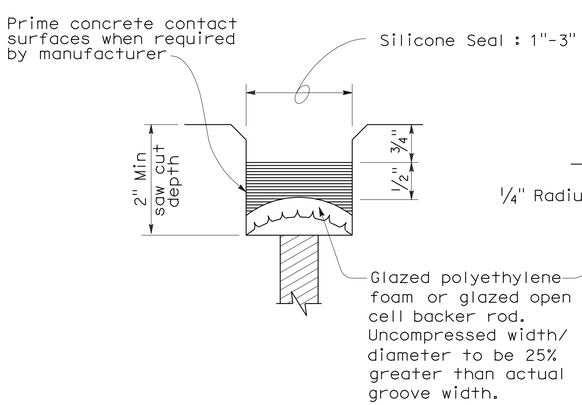

TYPE A SEAL

Movement rating : Silicone = 1" Max

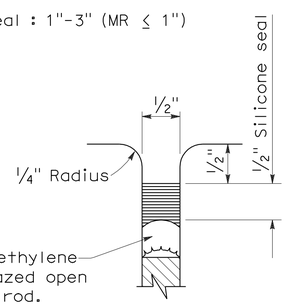

TYPE AL SEAL

Longitudinal joints only

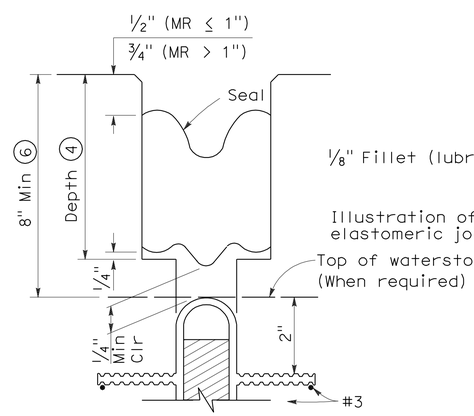

TYPE B JOINT SEAL
IN MINIMUM WIDTH POSITION (W_2)

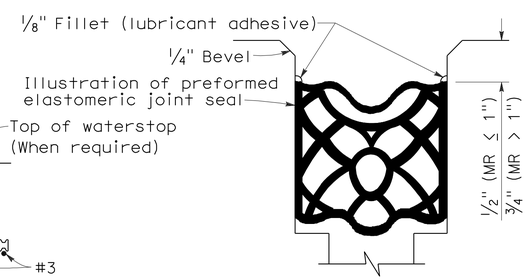

TYPE B SEAL

Movement Rating ≤ 2"

STATE OF CALIFORNIA
DEPARTMENT OF TRANSPORTATION

JOINT SEALS (MAXIMUM MOVEMENT RATING = 2")

NO SCALE

RSP B6-21 DATED OCTOBER 5, 2007 SUPERSEDES STANDARD PLAN B6-21 DATED MAY 1, 2006 - PAGE 258 OF THE STANDARD PLANS BOOK DATED MAY 2006.

REVISED STANDARD PLAN RSP B6-21

2006 REVISED STANDARD PLAN RSP B6-21

5-8-07

DIST	COUNTY	ROUTE	POST MILES TOTAL PROJECT	SHEET No	TOTAL SHEETS
10	Mer	165	11.7/26.7	63	110

REGISTERED CIVIL ENGINEER 11-18-09 DATE

6-21-10
PLANS APPROVAL DATE

REGISTERED PROFESSIONAL ENGINEER RODNEY SIMMONS No. C51174 Exp. 09-30-11 CIVIL STATE OF CALIFORNIA

The State of California or its officers or agents shall not be responsible for the accuracy or completeness of electronic copies of this plan sheet.

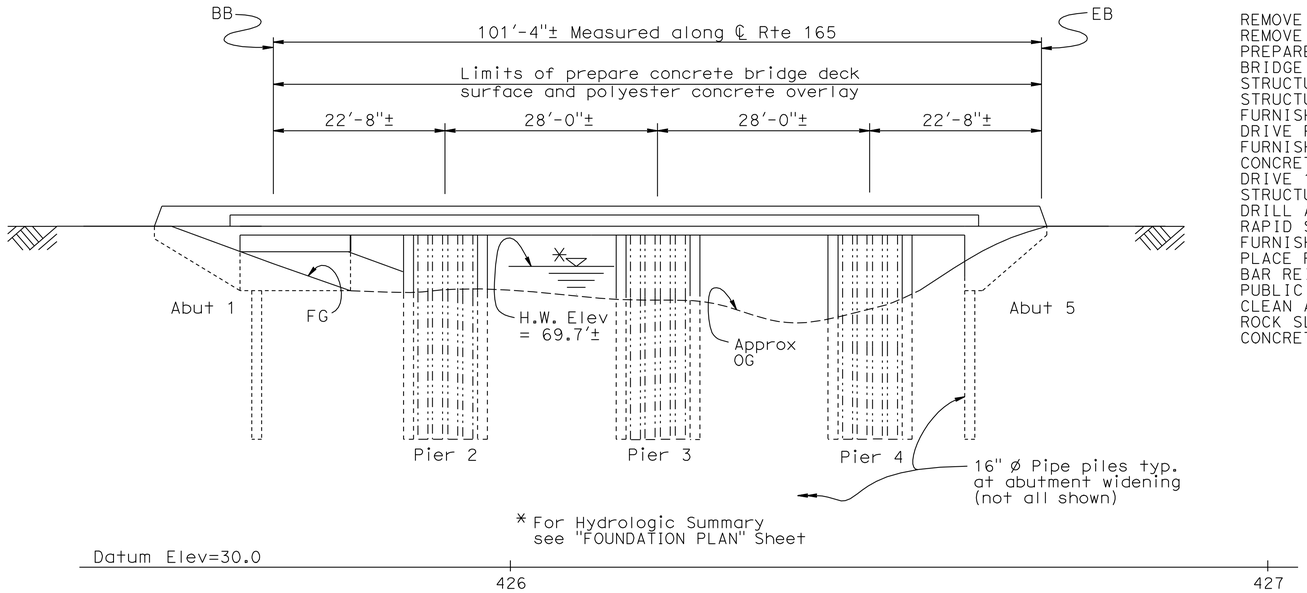

ELEVATION

1" = 10'

QUANTITIES

REMOVE ASPHALT CONCRETE SURFACING	3,100	SQFT
REMOVE UNSOUND CONCRETE	8	CF
PREPARE CONCRETE BRIDGE DECK SURFACE	4,053	SQFT
BRIDGE REMOVAL (PORTION), LOCATION B	LUMP	SUM
STRUCTURE EXCAVATION (BRIDGE)	28	CY
STRUCTURE BACKFILL (BRIDGE)	24	CY
FURNISH PILING (CLASS 200) (ALTERNATIVE W)	197	LF
DRIVE PILE (CLASS 200) (ALTERNATIVE W)	4	EA
FURNISH 18" CAST-IN-STEEL SHELL CONCRETE PILING	355	LF
DRIVE 18" CAST-IN-STEEL SHELL CONCRETE PILE	6	EA
STRUCTURAL CONCRETE, BRIDGE	85	CY
DRILL AND BOND DOWEL	370	LF
RAPID SETTING CONCRETE (PATCH)	8	CF
FURNISH POLYESTER CONCRETE OVERLAY	254	CF
PLACE POLYESTER CONCRETE OVERLAY	4,053	SQFT
BAR REINFORCING STEEL (BRIDGE)	24,400	LB
PUBLIC SAFETY PLAN	LUMP	SUM
CLEAN AND THERMAL SPRAY COAT STEEL PILING	LUMP	SUM
ROCK SLOPE PROTECTION (1/4 TON, METHOD B)	70	CY
CONCRETE BARRIER (TYPE 732)	242	LF

NOTE:
THE CONTRACTOR SHALL VERIFY ALL CONTROLLING FIELD DIMENSIONS BEFORE ORDERING OR FABRICATING ANY MATERIAL.

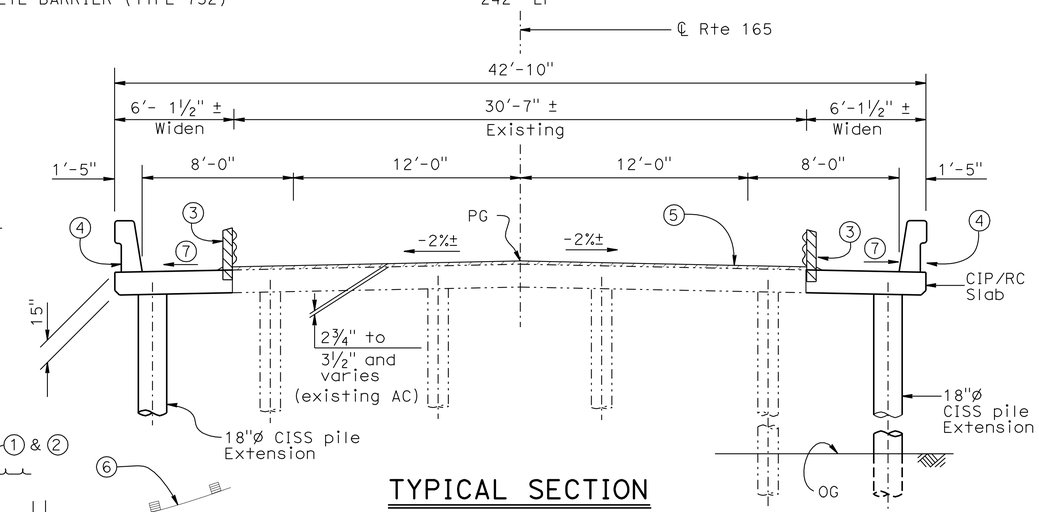

TYPICAL SECTION

¼" = 1'

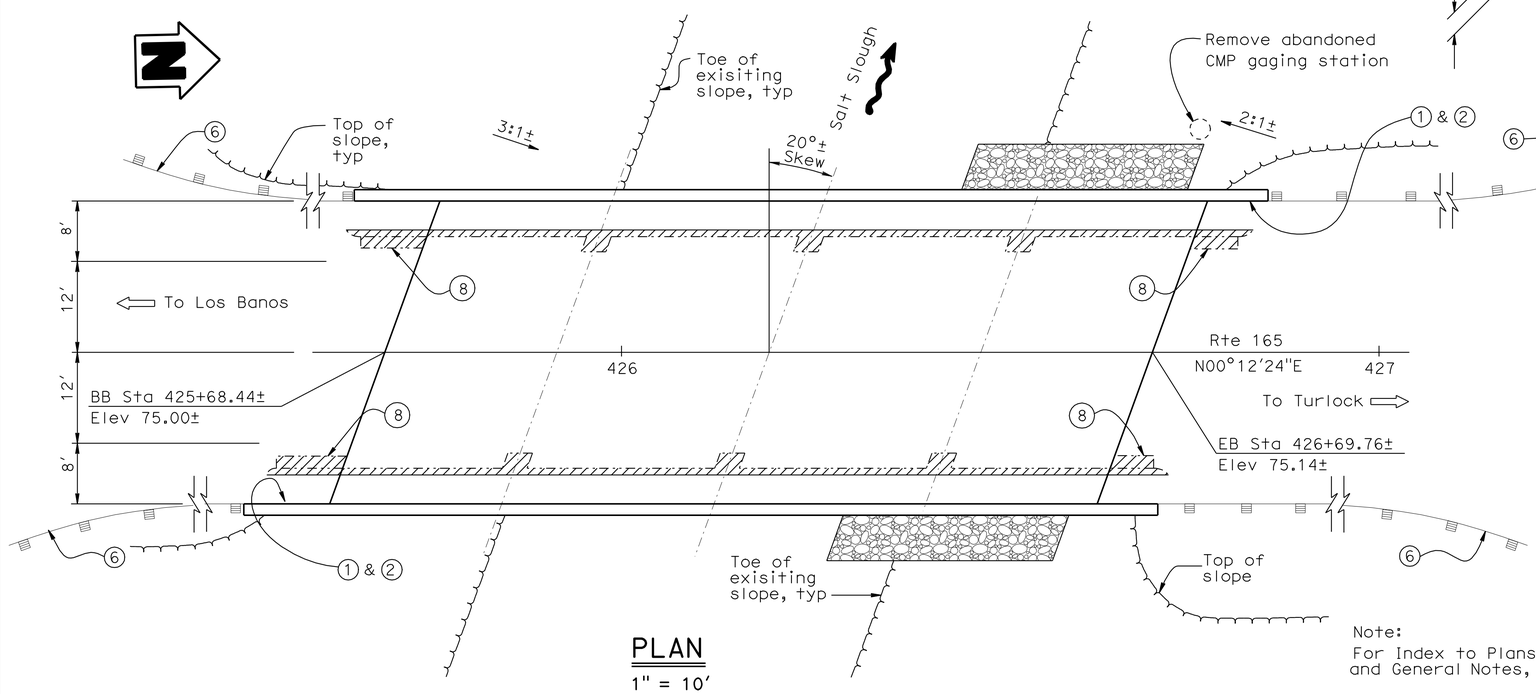

PLAN

1" = 10'

Notes:

1. Paint "Salt Slough Bridge."
2. Paint "Br. No. 39-0209."
3. Remove existing metal guard railing. Salvage posts.
4. Concrete Barrier Type 732.
5. Existing AC overlay to be removed.
6. MBGR, see "Road Plans".
7. Match existing cross slope.
8. Remove existing wing wall to 3' below finish grade.

AC shall be removed prior to bridge widening.

Indicates existing structure.

Indicates limits of removal of existing barrier railing, existing slab at bents and existing wingwalls.

Indicates rock slope protection.

Note:
For Index to Plans, Standard Plan List, and General Notes, see "INDEX TO PLANS" sheet.

Kevin Keady
DESIGN ENGINEER

	BY	CHECKED			
DESIGN	Igor Chernioglo	Mostafa Kattaa	LOAD FACTOR DESIGN	LIVE LOADING: HS20-44; Alternative; PERMIT DESIGN VEHICLE	
DETAILS	Craig Schellenger	Mostafa Kattaa	LAYOUT	Rod Simmons	Igor Chernioglo
QUANTITIES	Igor Chernioglo	Mostafa Kattaa	SPECIFICATIONS	Xiahong Li	PLANS AND SPECS COMPARED X

ORIGINAL SCALE IN INCHES FOR REDUCED PLANS 0 1 2 3

STATE OF CALIFORNIA
DEPARTMENT OF TRANSPORTATION

DIVISION OF ENGINEERING SERVICES
STRUCTURE DESIGN
DESIGN BRANCH 17

CU 06241
EA 279801

BRIDGE NO. 39-0209
POST MILE 22.34

SALT SLOUGH BRIDGE (WIDEN)
GENERAL PLAN

DISREGARD PRINTS BEARING EARLIER REVISION DATES

REVISION DATES: 12-14-08 12-31-08 1-04-09 1-08-09 2-05-09 2-25-09 3-31-09 4-13-09 5-05-09 11-18-09

SHEET 1 OF 13

STRUCTURES DESIGN GENERAL PLAN SHEET (ENGLISH) (REV.07-24-06)

FILE => 39-0209-a-gp.dgn

USERNAME => trlenard DATE PLOTTED => 24-JUN-2010 TIME PLOTTED => 07:46

DIST	COUNTY	ROUTE	POST MILES TOTAL PROJECT	SHEET No	TOTAL SHEETS
10	Mer	165	11.7/26.7	64	110

REGISTERED CIVIL ENGINEER 9-4-09 DATE

6-21-10
PLANS APPROVAL DATE

REGISTERED PROFESSIONAL ENGINEER RODNEY SIMMONS No. C51174 Exp. 09-30-09 CIVIL STATE OF CALIFORNIA

The State of California or its officers or agents shall not be responsible for the accuracy or completeness of electronic copies of this plan sheet.

INDEX TO PLANS

SHEET NO.	TITLE
1.	GENERAL PLAN
2.	INDEX TO PLANS
3.	FOUNDATION PLAN
4.	ABUTMENT LAYOUT
5.	ABUTMENT DETAILS
6.	PIER DETAILS NO. 1
7.	PIER DETAILS NO. 2
8.	TYPICAL SECTION
9.	SLAB REINFORCEMENT
10.	SLAB REINFORCMENT DETAILS
11.	LOG OF TEST BORINGS 1 OF 3
12.	LOG OF TEST BORINGS 2 OF 3
13.	LOG OF TEST BORINGS 3 OF 3

STANDARD PLANS DATED MAY 2006

A10A	ACRONYMS AND ABBREVIATIONS (A-L)
A10B	ACRONYMS AND ABBREVIATIONS (M-Z)
A62C	LIMITS OF PAYMENT FOR EXCAVATION AND BACKFILL - BRIDGE
B0-1	BRIDGE DETAILS
B0-3	BRIDGE DETAILS
B2-8	PILE DETAILS CLASS 200
B11-55	CONCRETE BARRIER TYPE 732

STANDARD PLAN SHEET NO.

DETAIL NO.

GENERAL NOTES
LOAD FACTOR DESIGN

DESIGN:
CALTRANS BRIDGE DESIGN SPECIFICATIONS
LFD Version April 2000

SEISMIC DESIGN:
Caltrans Seismic Design Criteria (SDC),
Version 1.4 dated June 2006

DEAD LOAD:
Includes 35 psf for future wearing surface.

LIVE LOADING:
HS20-44 and Alternative and Permit Design Load.

SEISMIC LOADING:
SDC ARS Curve for soil Profile E (M=6.75)
Peak Rock Acceleration = 0.3g

REINFORCED CONCRETE:
f_y = 60,000 psi
f'c = 4000 psi
n = 8

STRUCTURAL STEEL (new construction):
Steel Pipe Piles: ASTM A252 Grade 3
fy = 45 ksi

STRUCTURAL STEEL
(assumed for evaluation of existing structure):
fy = 36 ksi

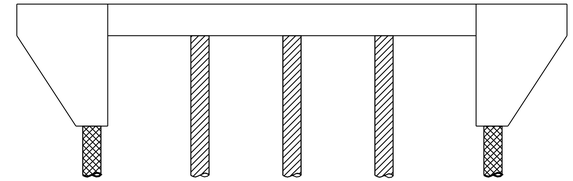

Structural Concrete, Bridge (4ksi @ 28 days)

18" Ø CISS Piles

B2-8 / W — Pipe Pile, Alternative "W"

CONCRETE STRENGTH AND TYPE LIMITS

No Scale

PILE DATA TABLE (New Piles)

Location	Pile Type	Design Loading (kips)	Nominal Resistance (kips)		Design Tip Elevation (ft)	Specified Tip Elevation (ft)	Nominal Driving Resistance (kips)
			Compression	Tension			
Abut 1	Class 200, Alt. W	90	180	—	+21.0 (1b)	+21.0	450
Pier 2	18" OD x 0.5" CISS	—	180	—	+5.1 (1b); +41 (2)	+5.1	450
Pier 3	18" OD x 0.5" CISS	—	190	—	+19.7 (1a); +41 (2)	+19.7	450
Pier 4	18" OD x 0.5" CISS	—	180	—	+20.0 (1a); +41 (2)	+20.0	450
Abut 5	Class 200, Alt. W	90	180	—	+18.7 (1a)	+18.7	450

Design tip elevation is controlled by the following demands:
1. Compression; a) scour, b) Liquefaction
2. Lateral loads

	BY	CHECKED
DESIGN	Igor Chernioglo	Mostafa Kattaa
DETAILS	Craig Schellenger	Mostafa Kattaa
QUANTITIES	Igor Chernioglo	Mostafa Kattaa

STATE OF CALIFORNIA
DEPARTMENT OF TRANSPORTATION

DIVISION OF ENGINEERING SERVICES
STRUCTURE DESIGN
DESIGN BRANCH 17

BRIDGE NO. 39-0209
POST MILE 22.34

SALT SLOUGH BRIDGE (WIDEN)
INDEX TO PLANS

STRUCTURES DESIGN DETAIL SHEET (ENGLISH) (REV. 10/25/05)

ORIGINAL SCALE IN INCHES FOR REDUCED PLANS 0 1 2 3

CU 06241
EA 279801

DISREGARD PRINTS BEARING EARLIER REVISION DATES

REVISION DATES: 1-08-09 3-31-09 4-14-09 5-06-09 8-20-09

SHEET 2 OF 13

FILE => 39-0209-a-itp.dgn

USERNAME => trlenard DATE PLOTTED => 24-JUN-2010 TIME PLOTTED => 07:46

DIST	COUNTY	ROUTE	POST MILES TOTAL PROJECT	SHEET No	TOTAL SHEETS
10	Mer	165	11.7/26.7	65	110

REGISTERED CIVIL ENGINEER 9-4-09 DATE

6-21-10
PLANS APPROVAL DATE

REGISTERED PROFESSIONAL ENGINEER RODNEY SIMMONS No. C51174 Exp. 09-30-09 CIVIL STATE OF CALIFORNIA

The State of California or its officers or agents shall not be responsible for the accuracy or completeness of electronic copies of this plan sheet.

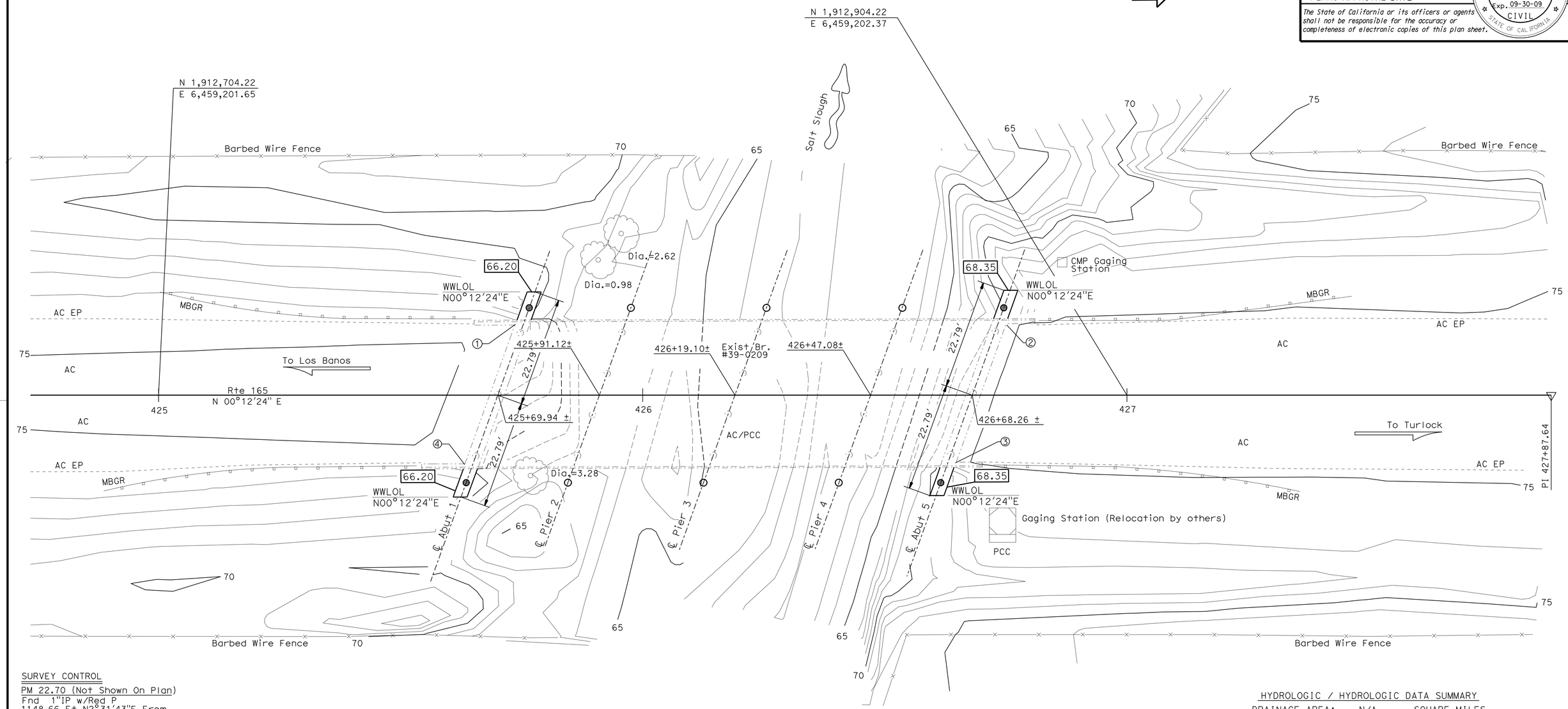

SURVEY CONTROL

PM 22.70 (Not Shown On Plan)
Fnd 1"IP w/Red P
1148.66 Ft N2°31'43"E From
Sta. 427+87.64 "B1" Line ℄ Rte 165
N 1,914,139.39
E 6,459,253.37
Elev.=75.20

PM22.36 (Not Shown On Plan)
Fnd 1"IP w/Red P
130.59 Ft N13°04'07"E From
Sta. 427+87.64 "B1" Line ℄ Rte 165
N 1,913,119.06
E 6,459,232.22
Elev.=73.40

Bridge Location (PN Points)

① - 14.68 Lt. "B1" Line ℄ Rte 165, Sta.425+73.75, Elev.=74.70
② - 14.51 Lt. "B1" Line ℄ Rte 165, Sta.426+75.16, Elev.=74.85
③ - 13.96 Rt. "B1" Line ℄ Rte 165, Sta.426+64.57, Elev.=74.86
④ - 14.33 Rt. "B1" Line ℄ Rte 165, Sta.425+63.25, Elev.=74.70

Notes:

Indicates bottom of abutment footing elevation

Indicates 18" CISS pile

Indicates Class 200 steel pipe pile

HYDROLOGIC / HYDROLOGIC DATA SUMMARY

DRAINAGE AREA: N/A SQUARE MILES

	DESIGN FLOOD	BASE FLOOD
FREQUENCY (YEARS)	50 Year	100 Year
DISCHARGE (CUBIC FEET PER SECOND)	900 cfs	1000 cfs
WATER SURFACE ELEV. (FEET)	69.3 ft	69.7 ft

FLOOD PLAIN DATA ARE BASED UPON INFORMATION AVAILABLE WHEN THE PLANS WERE PREPARED AND ARE SHOWN TO MEET FEDERAL REQUIREMENTS. THE ACCURACY OF SAID INFORMATION IS NOT WARRANTED BY THE STATE AND INTERESTED OR AFFECTED PARTIES SHOULD MAKE THEIR OWN INVESTIGATIONS.

PRELIMINARY INVESTIGATION SECTION

SCALE	VERT.DATUM NGVD29	PHOTOGRAMMETRY AS OF: X			
1"=10'	HORZ.DATUM NAD83-92(1991.35)	SURVEYED	BY District	CHECKED	BY T. Schmalz 05/08
ALIGNMENT TIES Dist. Traverse Sheet		DRAFTED	BY S. Zheng 05/2008	CHECKED	BY T. Zolnikova 05/08

STRUCTURES FOUNDATION PLAN SHEET (ENGLISH) (REV. 10/25/05)

DESIGN	BY Igor Chernioglo	CHECKED Mostafa Kattaa
DETAILS	BY Craig Schellenger	CHECKED Mostafa Kattaa
QUANTITIES	BY Igor Chernioglo	CHECKED Mostafa Kattaa

ORIGINAL SCALE IN INCHES FOR REDUCED PLANS 0 1 2 3

STATE OF CALIFORNIA
DEPARTMENT OF TRANSPORTATION

DIVISION OF ENGINEERING SERVICES
STRUCTURE DESIGN
DESIGN BRANCH 17

CU 06241
EA 279801

BRIDGE NO. 39-0209
POST MILE 22.34

SALT SLOUGH BRIDGE (WIDENING)
FOUNDATION PLAN

DISREGARD PRINTS BEARING EARLIER REVISION DATES

REVISION DATES: 05/08/08 10/25/08 01/04/09 2-05-09 3-31-09 4-14-09 5-05-09

SHEET 3 OF 13

FILE => 39-0209-e-fp.dgn

USERNAME => friehard DATE PLOTTED => 24-JUN-2010 TIME PLOTTED => 07:46

DIST	COUNTY	ROUTE	POST MILES TOTAL PROJECT	SHEET No	TOTAL SHEETS
10	Mer	165	11.7/26.7	66	110

REGISTERED CIVIL ENGINEER 9-4-09 DATE

6-21-10
PLANS APPROVAL DATE

REGISTERED PROFESSIONAL ENGINEER
RODNEY SIMMONS
No. C51174
Exp. 09-30-09
CIVIL
STATE OF CALIFORNIA

The State of California or its officers or agents shall not be responsible for the accuracy or completeness of electronic copies of this plan sheet.

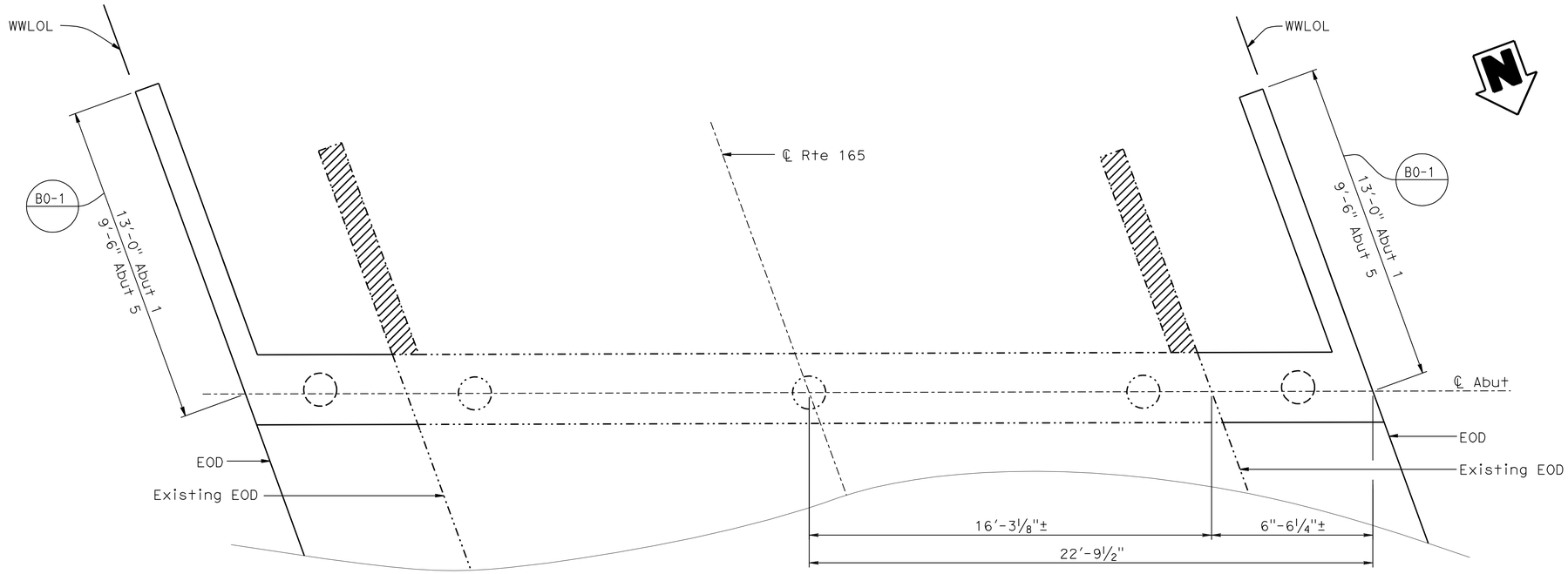

Note: Abutment 1 shown, Abutment 5 similar

PLAN
3/8" = 1'-0"

Legend:
- Indicates new pile
- Indicates existing pile

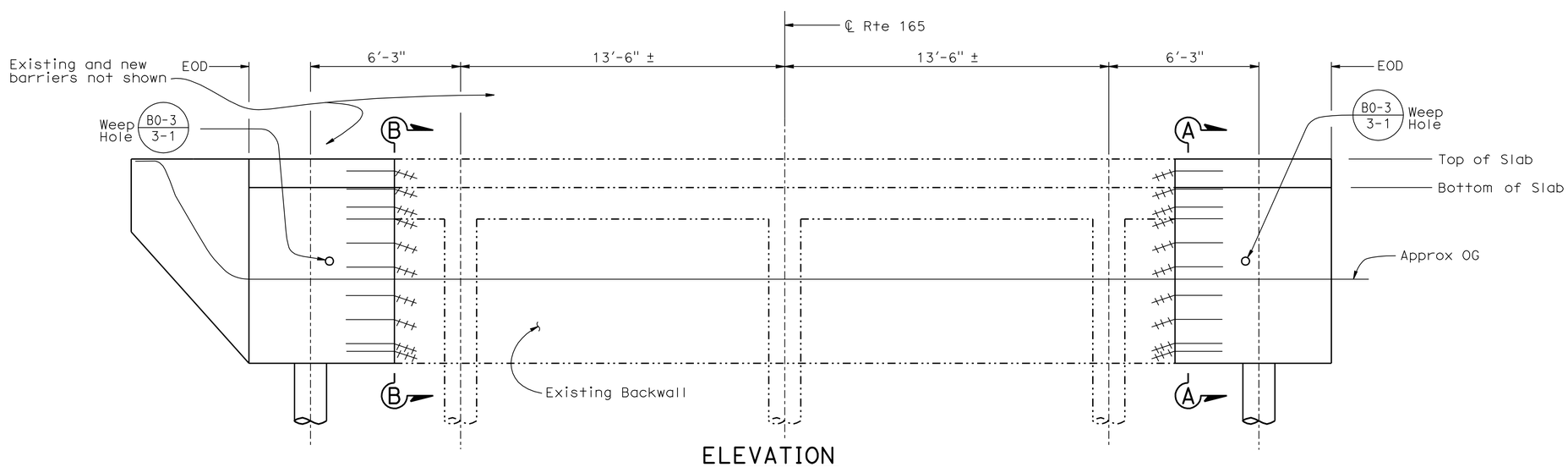

ELEVATION
3/8" = 1'-0"

NOTE:
THE CONTRACTOR SHALL VERIFY ALL CONTROLLING FIELD DIMENSIONS BEFORE ORDERING OR FABRICATING ANY MATERIAL.

NOTES:
- Denotes limits of removal of existing concrete
- Denotes existing structure

See "ABUTMENT DETAILS" sheet for Sections A-A and B-B

DESIGN	BY Igor Cherniogio	CHECKED Mostafa Kattaa	
DETAILS	BY Craig Schellenger	CHECKED Mostafa Kattaa	
QUANTITIES	BY Igor Cherniogio	CHECKED Mostafa Kattaa	

STATE OF CALIFORNIA
DEPARTMENT OF TRANSPORTATION

DIVISION OF ENGINEERING SERVICES
STRUCTURE DESIGN
DESIGN BRANCH 17

BRIDGE NO. 39-0209
POST MILE 22.34

SALT SLOUGH BRIDGE (WIDEN)
ABUTMENT LAYOUT

STRUCTURES DESIGN DETAIL SHEET (ENGLISH) (REV. 10/25/05)

ORIGINAL SCALE IN INCHES FOR REDUCED PLANS 0 1 2 3

CU 06241
EA 279801

DISREGARD PRINTS BEARING EARLIER REVISION DATES

REVISION DATES: 1-04-09 1-08-09 1-14-09 1-15-09 2-05-09 3-31-09 4-15-09 5-05-09

SHEET 4 OF 13

FILE => 39-0209-f-abt.dgn

USERNAME => trlenard DATE PLOTTED => 24-JUN-2010 TIME PLOTTED => 07:46

DIST	COUNTY	ROUTE	POST MILES TOTAL PROJECT	SHEET No	TOTAL SHEETS
10	Mer	165	11.7/26.7	67	110

REGISTERED CIVIL ENGINEER 9-4-09 DATE

6-21-10
PLANS APPROVAL DATE

REGISTERED PROFESSIONAL ENGINEER RODNEY SIMMONS No. C51174 Exp. 09-30-09 CIVIL STATE OF CALIFORNIA

The State of California or its officers or agents shall not be responsible for the accuracy or completeness of electronic copies of this plan sheet.

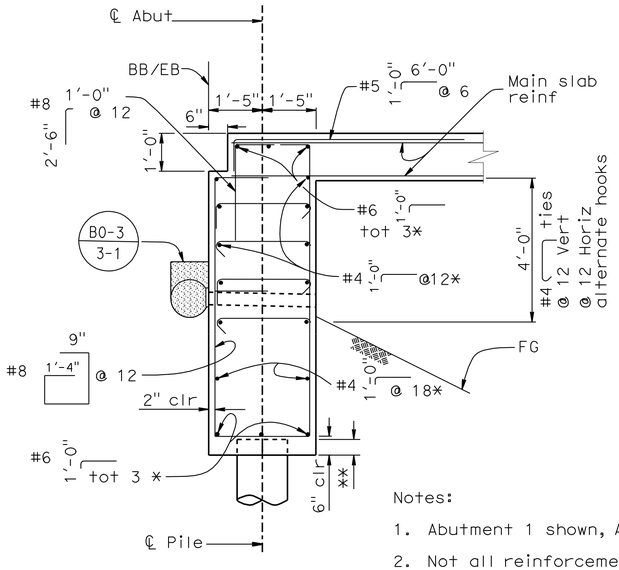

Notes:

1. Abutment 1 shown, Abutment 5 similar
2. Not all reinforcement shown

* - Bar hooked into wingwall

** - See pile details B2-8 / W

SECTION A-A

½" = 1'-0"

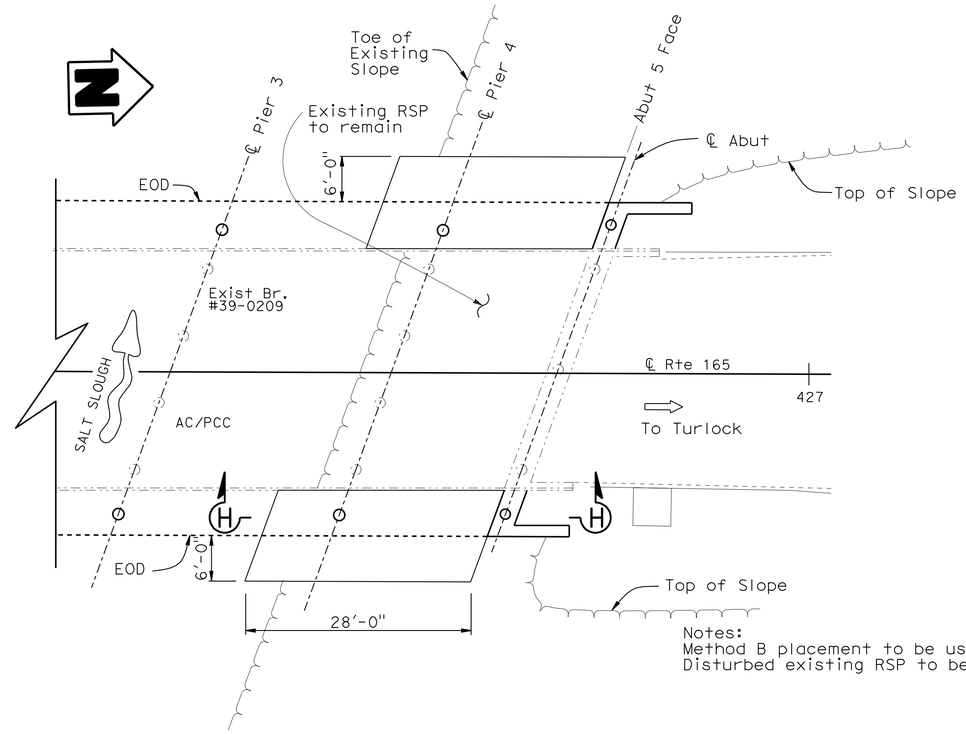

Notes:
Method B placement to be used
Disturbed existing RSP to be replaced

NOTE:
THE CONTRACTOR SHALL VERIFY ALL CONTROLLING FIELD DIMENSIONS BEFORE ORDERING OR FABRICATING ANY MATERIAL.

RSP PLACEMENT PLAN

1" = 10'-0"

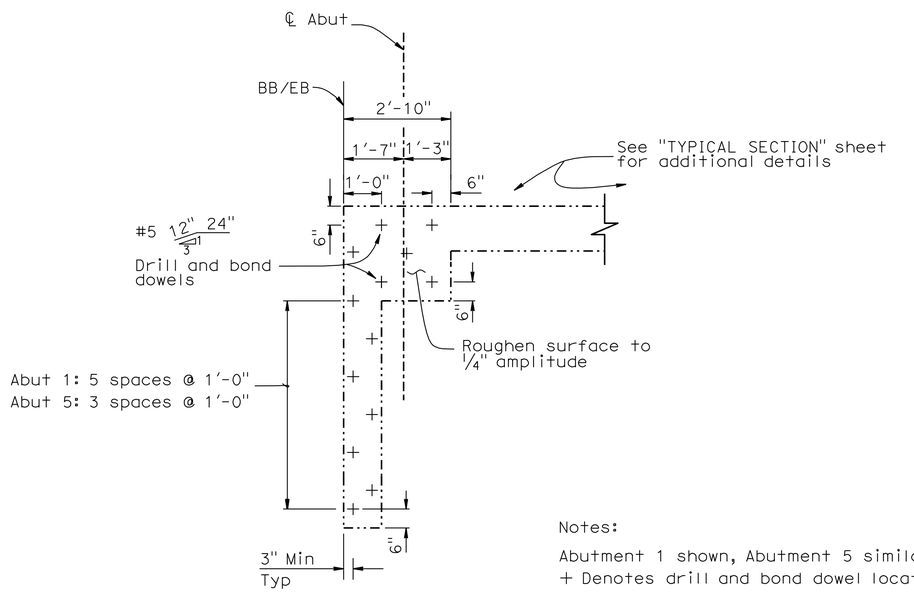

Notes:

Abutment 1 shown, Abutment 5 similar

\+ Denotes drill and bond dowel location

SECTION B-B

½" = 1'-0"

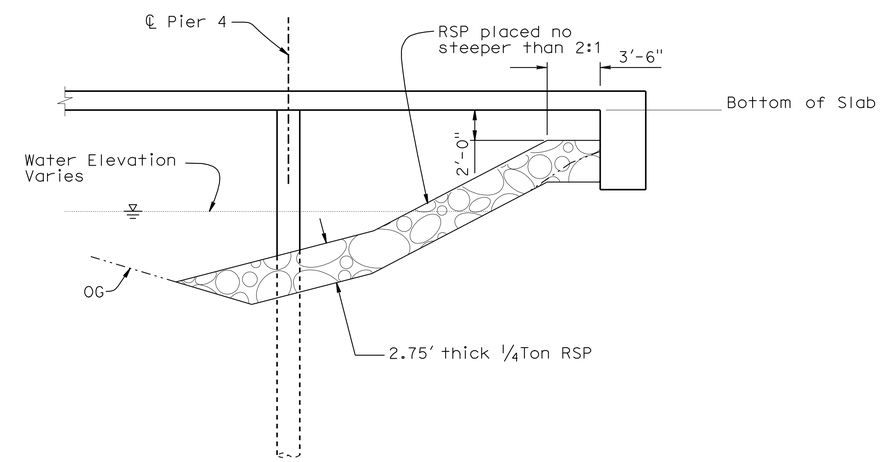

SECTION H-H

1" = 5'-0"

DESIGN	BY Igor Cherniogio	CHECKED Mostafa Kattaa	
DETAILS	BY Craig Schellenger	CHECKED Mostafa Kattaa	
QUANTITIES	BY Igor Cherniogio	CHECKED Mostafa Kattaa	

STATE OF CALIFORNIA
DEPARTMENT OF TRANSPORTATION

DIVISION OF ENGINEERING SERVICES
STRUCTURE DESIGN
DESIGN BRANCH 17

BRIDGE NO. 39-0209
POST MILE 22.34

SALT SLOUGH BRIDGE (WIDEN)
ABUTMENT DETAILS

STRUCTURES DESIGN DETAIL SHEET (ENGLISH) (REV. 10/25/05)

ORIGINAL SCALE IN INCHES FOR REDUCED PLANS 0 1 2 3

CU 06241
EA 279801

DISREGARD PRINTS BEARING EARLIER REVISION DATES

REVISION DATES: 1-04-09 1-09-09 1-15-09 3-01-09 3-31-09 4-15-09 5-05-09

SHEET 5 OF 13

FILE => 39-0209-f-abt-det.dgn

USERNAME => trmikesl DATE PLOTTED => 24-JUN-2010 TIME PLOTTED => 13:17

DIST	COUNTY	ROUTE	POST MILES TOTAL PROJECT	SHEET No	TOTAL SHEETS
10	Mer	165	11.7/26.7	68	110

REGISTERED CIVIL ENGINEER 9-4-09 DATE

6-21-10
PLANS APPROVAL DATE

REGISTERED PROFESSIONAL ENGINEER RODNEY SIMMONS No. C51174 Exp. 09-30-09 CIVIL STATE OF CALIFORNIA

The State of California or its officers or agents shall not be responsible for the accuracy or completeness of electronic copies of this plan sheet.

Notes:

Denotes existing structure

Denotes limits of concrete removal and replacement

For Section D-D, and Section E-E, see "PIER DETAILS NO. 2" sheet

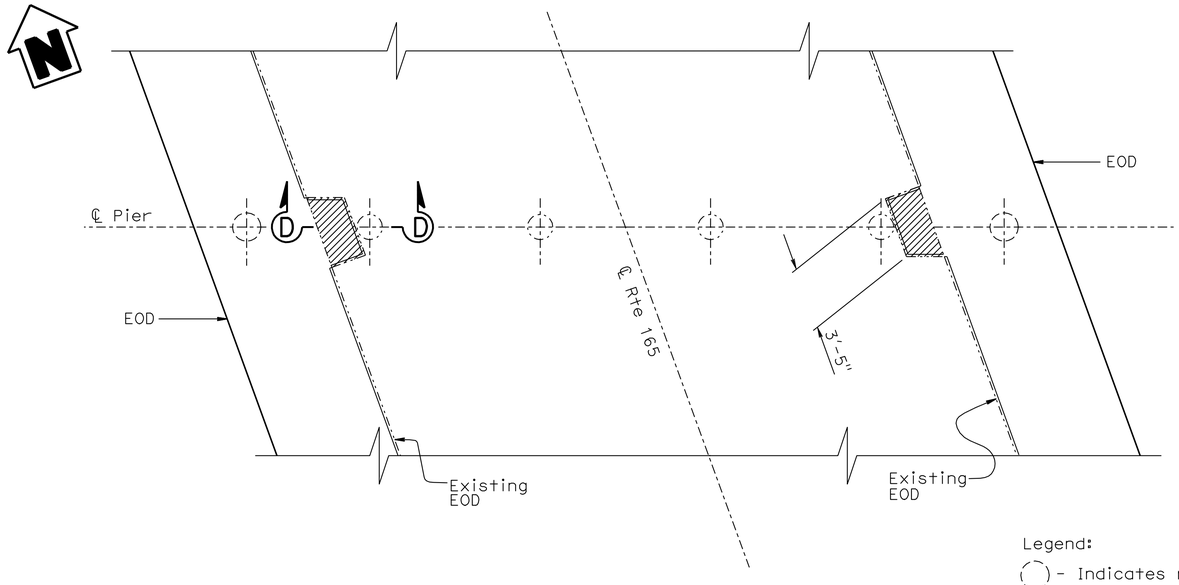

PLAN
1/4" = 1'-0"

Legend:

- Indicates new CISS piles
- Indicates existing pile extensions

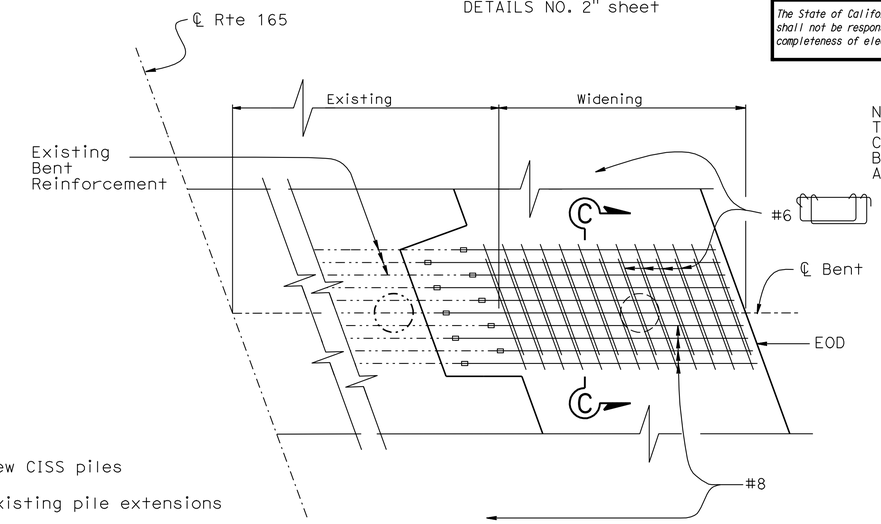

NOTE:
THE CONTRACTOR SHALL VERIFY ALL CONTROLLING FIELD DIMENSIONS BEFORE ORDERING OR FABRICATING ANY MATERIAL.

PART PLAN
1/2" = 1'-0"

Note:
Not all reinforcement shown.

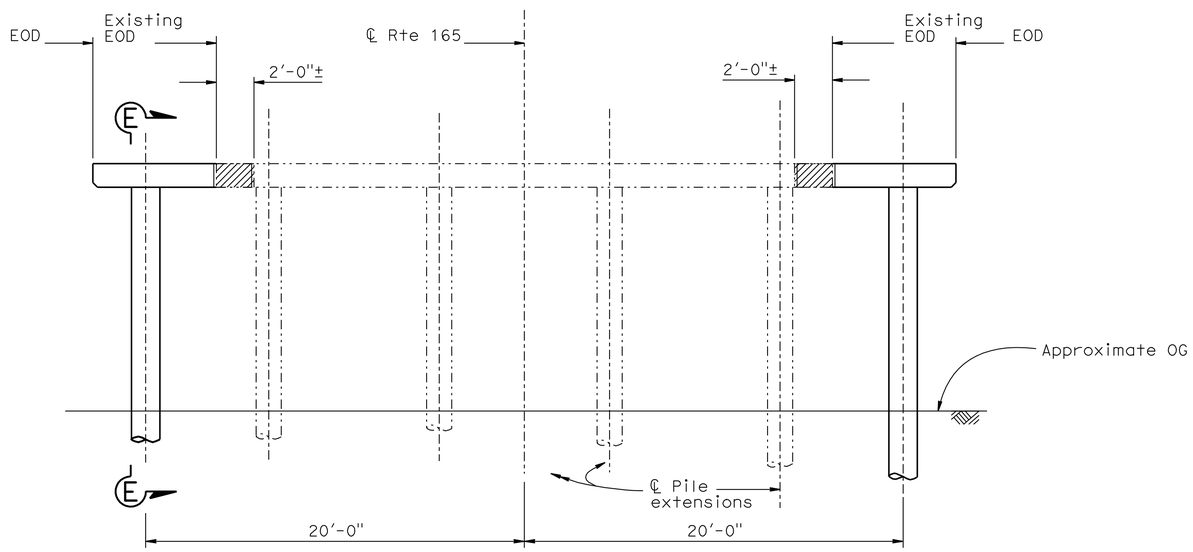

ELEVATION
1/4" = 1'-0"

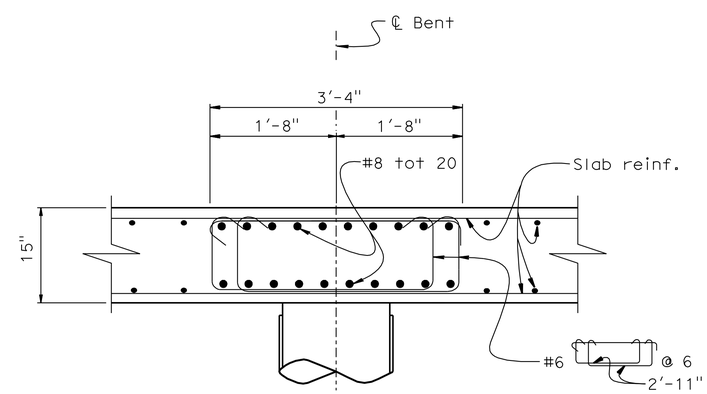

Place parallel to ℄ Rte 165 and space along ℄ bent

SECTION C-C
1" = 1'-0"

DESIGN	BY Igor Cherniogio	CHECKED Mostafa Kattaa	
DETAILS	BY Craig Schellenger	CHECKED Mostafa Kattaa	
QUANTITIES	BY Igor Cherniogio	CHECKED Mostafa Kattaa	

STATE OF CALIFORNIA
DEPARTMENT OF TRANSPORTATION

DIVISION OF ENGINEERING SERVICES
STRUCTURE DESIGN
DESIGN BRANCH 17

BRIDGE NO. 39-0209
POST MILE 22.34

SALT SLOUGH BRIDGE (WIDEN)
PIER DETAILS NO. 1

STRUCTURES DESIGN DETAIL SHEET (ENGLISH) (REV. 10/25/05)

ORIGINAL SCALE IN INCHES FOR REDUCED PLANS 0 1 2 3

CU 06241
EA 279801

DISREGARD PRINTS BEARING EARLIER REVISION DATES

REVISION DATES: 10-29-08 1-04-09 1-09-09 1-14-09 1-15-09 2-05-09 3-31-09 4-15-09 5-05-09

SHEET 6 OF 13

FILE => 39-0209-i-pier-det1.dgn

USERNAME => trlenard DATE PLOTTED => 24-JUN-2010 TIME PLOTTED => 07:46

DIST	COUNTY	ROUTE	POST MILES TOTAL PROJECT	SHEET No	TOTAL SHEETS
10	Mer	165	11.7/26.7	69	110

REGISTERED CIVIL ENGINEER 9-4-09 DATE

6-21-10
PLANS APPROVAL DATE

REGISTERED PROFESSIONAL ENGINEER RODNEY SIMMONS No. C51174 Exp. 09-30-09 CIVIL STATE OF CALIFORNIA

The State of California or its officers or agents shall not be responsible for the accuracy or completeness of electronic copies of this plan sheet.

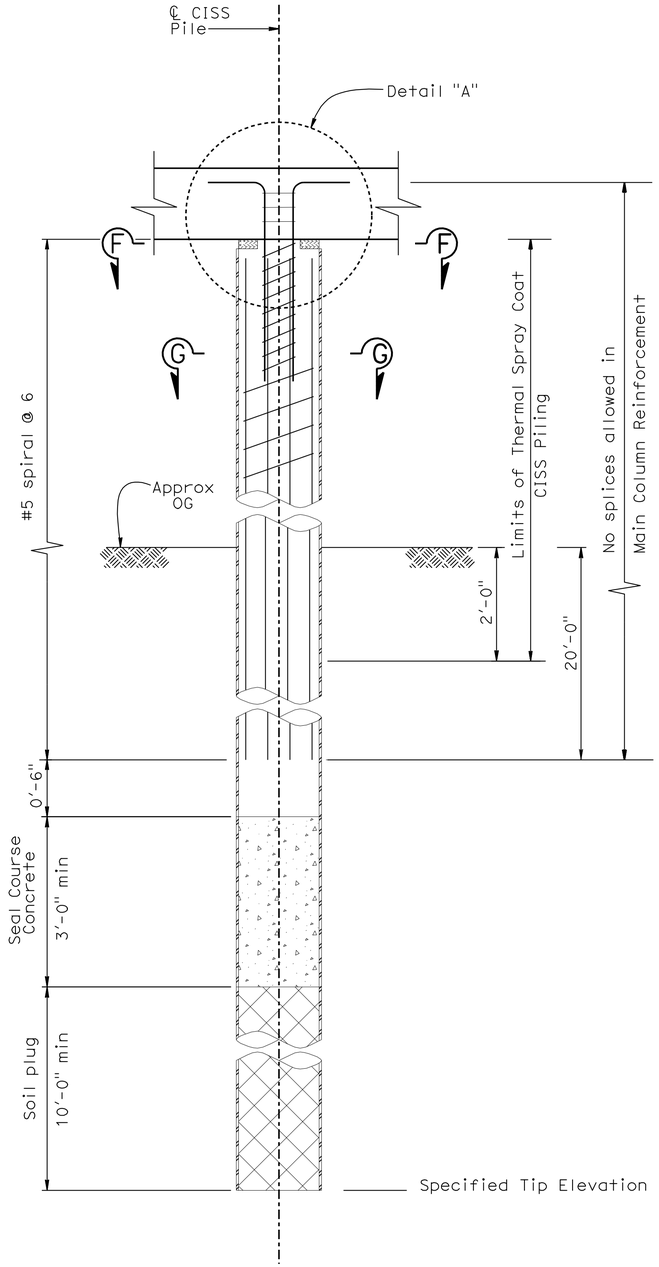

SECTION E-E
¾" = 1'-0"

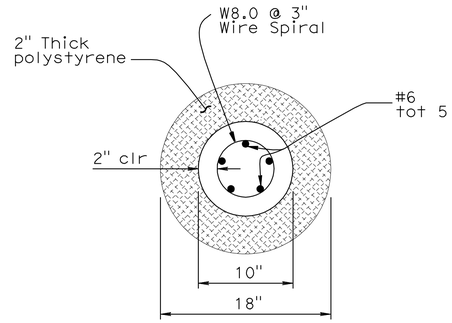

SECTION F-F
1½" = 1'-0"

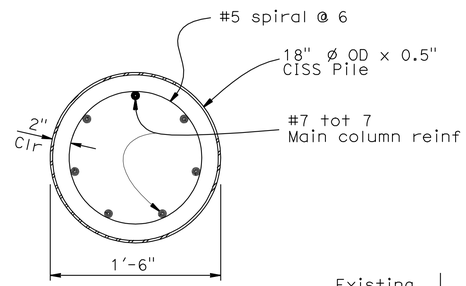

SECTION G-G
1½" = 1'-0"

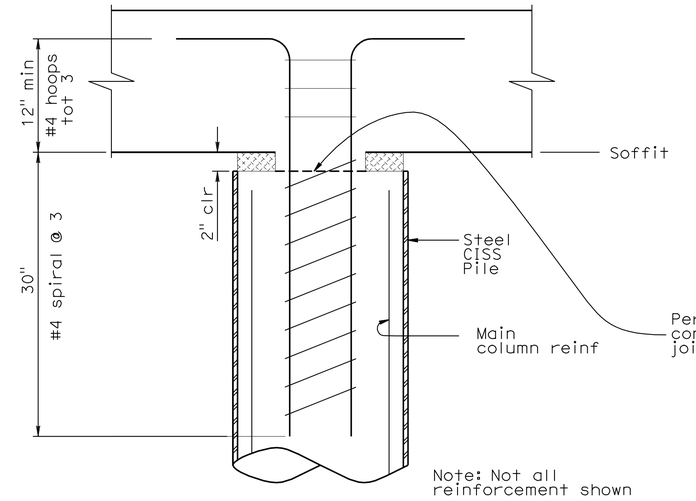

DETAIL A
1½" = 1'-0"

NOTE:
THE CONTRACTOR SHALL VERIFY ALL CONTROLLING FIELD DIMENSIONS BEFORE ORDERING OR FABRICATING ANY MATERIAL.

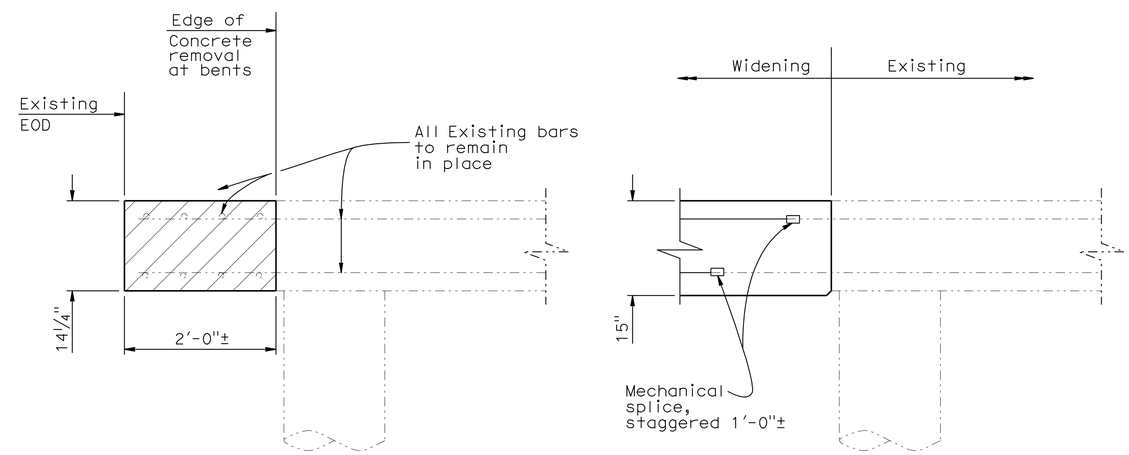

REMOVAL

RECONSTRUCTION

SECTION D-D
1" = 1'-0"

Notes:

Denotes limits of concrete removal and replacement

Not all reinforcement shown in individual sections

For location of Section D-D, and Section E-E, see "PIER DETAILS NO. 1" sheet

DESIGN	BY Igor Chernioglo	CHECKED Mostafa Kattaa	
DETAILS	BY Craig Schellenger	CHECKED Mostafa Kattaa	
QUANTITIES	BY Igor Chernioglo	CHECKED Mostafa Kattaa	

STATE OF CALIFORNIA
DEPARTMENT OF TRANSPORTATION

DIVISION OF ENGINEERING SERVICES
STRUCTURE DESIGN
DESIGN BRANCH 17

BRIDGE NO. 39-0209
POST MILE 22.34

SALT SLOUGH BRIDGE (WIDEN)
PIER DETAILS NO. 2

STRUCTURES DESIGN DETAIL SHEET (ENGLISH) (REV. 10/25/05)

ORIGINAL SCALE IN INCHES FOR REDUCED PLANS 0 1 2 3

CU 06241
EA 279801

DISREGARD PRINTS BEARING EARLIER REVISION DATES

REVISION DATES: 1-04-09 1-13-09 1-14-09 1-15-09 2-25-09 2-26-09 3-31-09 4-15-09 9-02-09

SHEET 7 OF 13

FILE => 39-0209-1-pier-det2.dgn

USERNAME => friehard DATE PLOTTED => 24-JUN-2010 TIME PLOTTED => 07:47

DIST	COUNTY	ROUTE	POST MILES TOTAL PROJECT	SHEET No	TOTAL SHEETS
10	Mer	165	11.7/26.7	70	110

REGISTERED CIVIL ENGINEER 9-4-09 DATE

6-21-10
PLANS APPROVAL DATE

REGISTERED PROFESSIONAL ENGINEER RODNEY SIMMONS No. C51174 Exp. 09-30-09 CIVIL STATE OF CALIFORNIA

The State of California or its officers or agents shall not be responsible for the accuracy or completeness of electronic copies of this plan sheet.

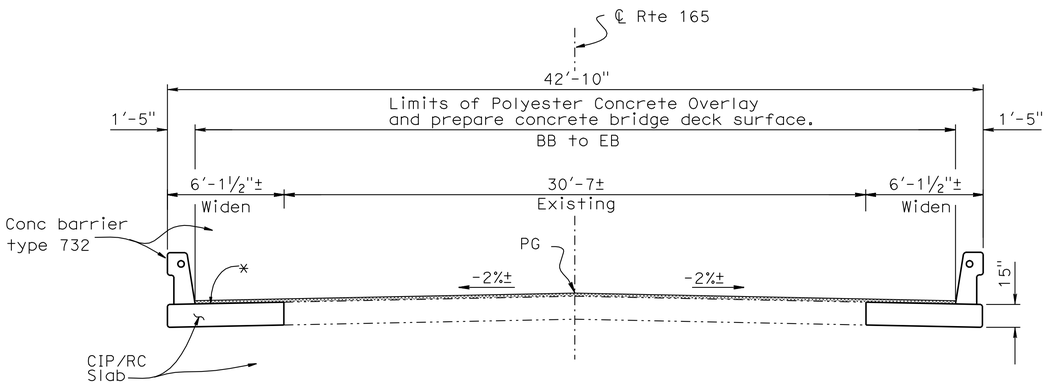

TYPICAL SECTION

¼" = 1'-0"

Deck Repair Notes:

Approximately 1 percent of the existing deck area will require repair

Repair consists of remove unsound concrete and patch with rapid setting concrete

Repairs are approximately 3 inches deep

For details, see "Deck Repair Detail"

Repair locations to be determined by the Engineer

NOTE:
THE CONTRACTOR SHALL VERIFY ALL CONTROLLING FIELD DIMENSIONS BEFORE ORDERING OR FABRICATING ANY MATERIAL.

LEGEND

* Match existing grade and cross slope

** Bars to be placed before placement of slab concrete

-·-·-·-·- Denotes existing structure

Denotes ¾" polyester overlay

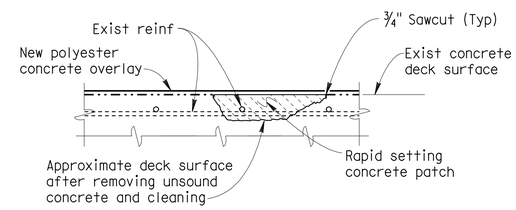

DECK REPAIR DETAIL

Reinforcement may be encountered during deck concrete removal.
NO SCALE

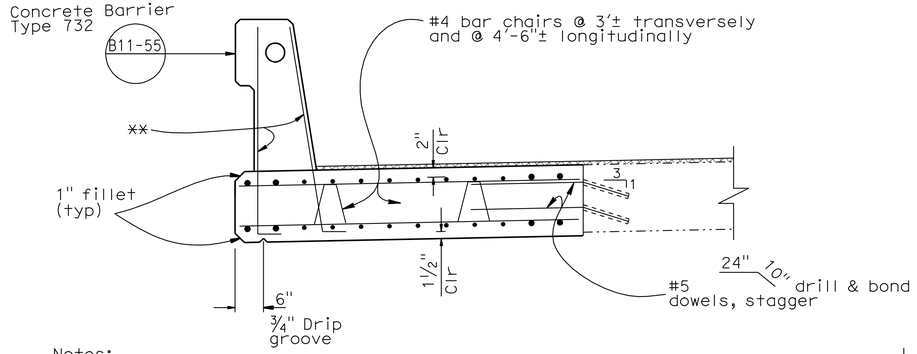

Notes:

For longitudinal reinforcement, see "SLAB REINFORCEMENT" sheet

For transverse reinforcement, see "SLAB REINFORCEMENT DETAILS" sheet.

PART TYPICAL SECTION

¾" = 1-0'

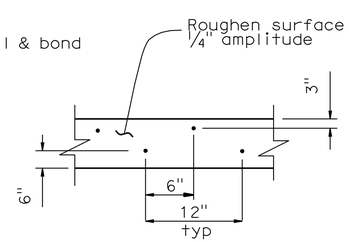

DRILL AND BOND LAYOUT

NO SCALE

DESIGN	BY Igor Chernioglo	CHECKED Mostafa Kattaa	
DETAILS	BY Craig Schellenger	CHECKED Mostafa Kattaa	
QUANTITIES	BY Igor Chernioglo	CHECKED Mostafa Kattaa	

STATE OF CALIFORNIA
DEPARTMENT OF TRANSPORTATION

DIVISION OF ENGINEERING SERVICES
STRUCTURE DESIGN
DESIGN BRANCH 17

BRIDGE NO. 39-0209
POST MILE 22.34

SALT SLOUGH BRIDGE (WIDEN)
TYPICAL SECTION

STRUCTURES DESIGN DETAIL SHEET (ENGLISH) (REV. 10/25/05)

ORIGINAL SCALE IN INCHES FOR REDUCED PLANS 0 1 2 3

CU 06241
EA 279801

DISREGARD PRINTS BEARING EARLIER REVISION DATES

REVISION DATES: 12-12-08 1-08-09 1-15-09 2-25-09 3-31-09 4-16-09 5-05-09

SHEET 8 OF 13

FILE => 39-0209-k-ts.dgn

USERNAME => trlenord DATE PLOTTED => 24-JUN-2010 TIME PLOTTED => 07:47

DIST	COUNTY	ROUTE	POST MILES TOTAL PROJECT	SHEET No	TOTAL SHEETS
10	Mer	165	11.7/26.7	71	110

REGISTERED CIVIL ENGINEER 9-4-09 DATE

6-21-10
PLANS APPROVAL DATE

REGISTERED PROFESSIONAL ENGINEER
RODNEY SIMMONS
No. C51174
Exp. 09-30-09
CIVIL
STATE OF CALIFORNIA

The State of California or its officers or agents shall not be responsible for the accuracy or completeness of electronic copies of this plan sheet.

NOTE:
THE CONTRACTOR SHALL VERIFY ALL CONTROLLING FIELD DIMENSIONS BEFORE ORDERING OR FABRICATING ANY MATERIAL.

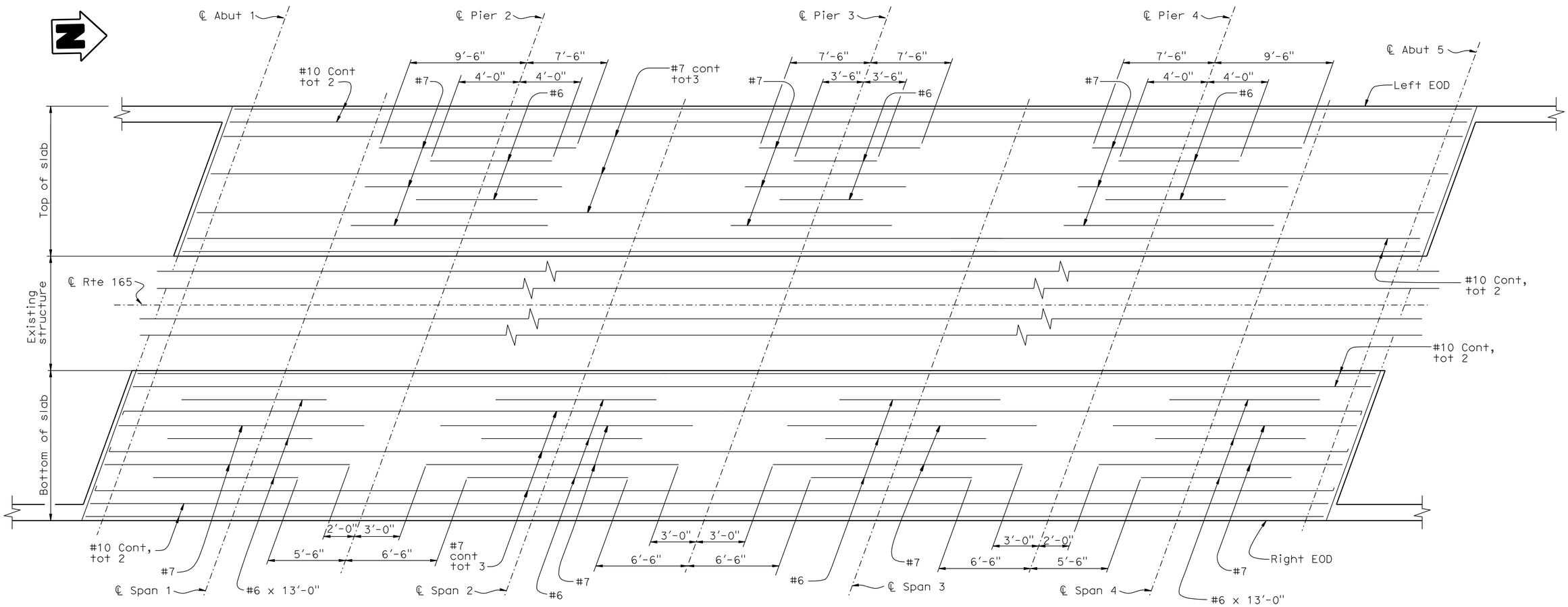

SLAB REINFORCEMENT

No Scale

Notes:

1. All reinforcement to be spaced at 6 inches.
2. Not all reinforcement shown.
3. Slab removal not shown.

DESIGN	BY Igor Cherniogio	CHECKED Mostafa Kattaa	
DETAILS	BY Craig Schellenger	CHECKED Mostafa Kattaa	
QUANTITIES	BY Igor Cherniogio	CHECKED Mostafa Kattaa	

STATE OF CALIFORNIA
DEPARTMENT OF TRANSPORTATION

DIVISION OF ENGINEERING SERVICES
STRUCTURE DESIGN
DESIGN BRANCH 17

BRIDGE NO. 39-0209
POST MILE 22.34

SALT SLOUGH BRIDGE (WIDEN)
SLAB REINFORCEMENT

STRUCTURES DESIGN DETAIL SHEET (ENGLISH) (REV. 10/25/05)

ORIGINAL SCALE IN INCHES FOR REDUCED PLANS 0 1 2 3

CU 06241
EA 279801

DISREGARD PRINTS BEARING EARLIER REVISION DATES

REVISION DATES: 10-30-08 1-05-09 1-08-09 1-15-09 2-25-09 3-31-09 4-16-09 5-05-09

SHEET 9 OF 13

FILE => 39-0209-o-g.dgn

USERNAME => trlenard DATE PLOTTED => 24-JUN-2010 TIME PLOTTED => 07:54

DIST	COUNTY	ROUTE	POST MILES TOTAL PROJECT	SHEET No	TOTAL SHEETS
10	Mer	165	11.7/26.7	72	110

REGISTERED CIVIL ENGINEER 9-4-09 DATE

6-21-10
PLANS APPROVAL DATE

REGISTERED PROFESSIONAL ENGINEER RODNEY SIMMONS No. C51174 Exp. 09-30-09 CIVIL STATE OF CALIFORNIA

The State of California or its officers or agents shall not be responsible for the accuracy or completeness of electronic copies of this plan sheet.

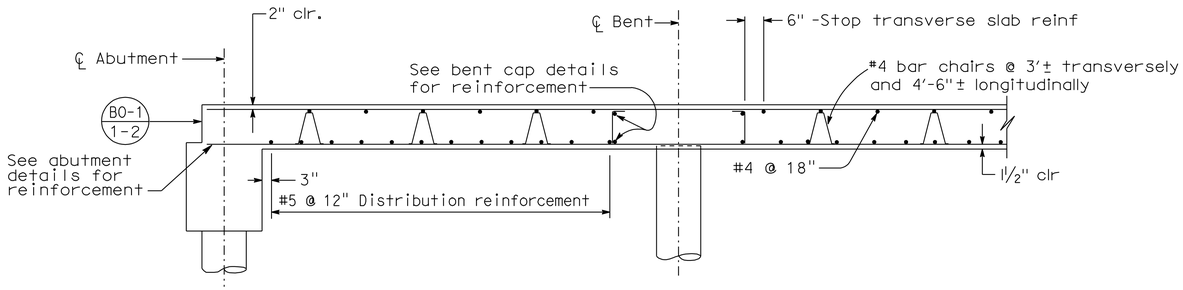

LONGITUDINAL SECTION

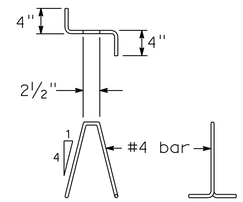

BAR CHAIR DETAIL

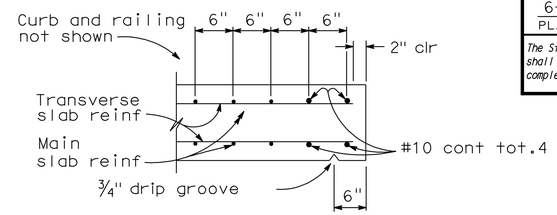

EDGE OF SLAB DETAILS

BAR SPLICE LENGTH								
Bar size	#4	#5	#6	#7	#8	#9	#10	#11
All bars, except top bars in spans over 23 feet	23	28	34	39	45	68	76	85
Top bars in spans over 23 feet	23	28	34	53	60	77	97	120

REINFORCEMENT NOTES:

Splices in top main bars to be located near center of span.
Splices in bottom main bars to be located near bent.
Spacing of all transverse bars is measured along ℄ roadway.

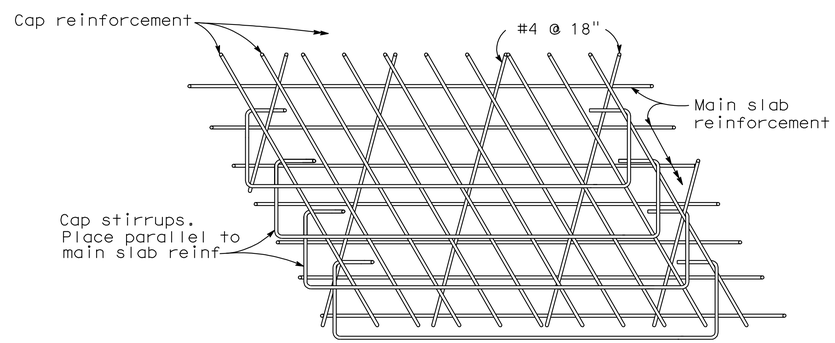

TOP SLAB REINFORCEMENT AT BENT

Note: View for main span over 24 feet
Bar placement similar for spans under 24 feet

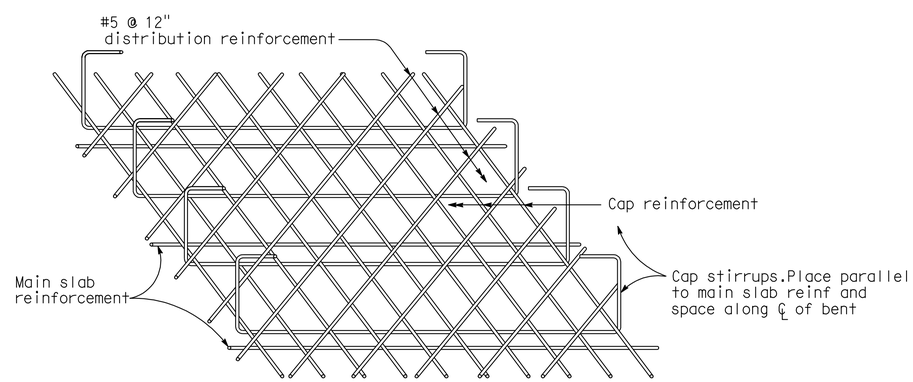

FLUSH CAP

BOTTOM SLAB REINFORCEMENT AT BENT

NO SCALE

ALL DIMENSIONS ARE IN INCHES UNLESS OTHERWISE SHOWN

	BY	CHECKED
DESIGN	Igor Chernioglo	Mostafa Kattaa
DETAILS	Craig Schellenger	Mostafa Kattaa
QUANTITIES	Igor Chernioglo	Mostafa Kattaa

STATE OF CALIFORNIA
DEPARTMENT OF TRANSPORTATION

DIVISION OF ENGINEERING SERVICES
STRUCTURE DESIGN
DESIGN BRANCH 17

BRIDGE NO. 39-0209
POST MILE 22.34

SALT SLOUGH BRIDGE (WIDEN)
SLAB REINFORCEMENT DETAILS

STRUCTURES DESIGN DETAIL SHEET (ENGLISH) (REV. 10/25/05)

ORIGINAL SCALE IN INCHES FOR REDUCED PLANS 0 1 2 3

CU 06241
EA 279801

DISREGARD PRINTS BEARING EARLIER REVISION DATES

REVISION DATES: 10-29-08 3-31-09 4-16-09 5-06-09

SHEET 10 OF 13

FILE => 39-0209-o-gbot.dgn

USERNAME => friehard DATE PLOTTED => 24-JUN-2010 TIME PLOTTED => 07:54

DIST	COUNTY	ROUTE	POST MILES TOTAL PROJECT	SHEET No	TOTAL SHEETS
10	Mer	165	11.7/26.7	73	110

REGISTERED CIVIL ENGINEER 9-4-09

6-21-10
PLANS APPROVAL DATE

REGISTERED GEOLOGIST Zheng Xing No. 2130 Exp. 3-31-2011 CERTIFIED ENGINEERING GEOLOGIST STATE OF CALIFORNIA

The State of California or its officers or agents shall not be responsible for the accuracy or completeness of electronic copies of this plan sheet.

This LOTB sheet was prepared in accordance with the Caltrans Soil & Rock Logging, Classification, & Presentation Manual.

BENCH MARK

PM22.36
Fnd 1"IP w/Red P
130.59' N 13°04'07" E From
Sta 427+87.64 "B1" Line ℄ Rte 165
N 1,913,119.06
E 6,459,232.22
Elev = 73.40

NGVD 29

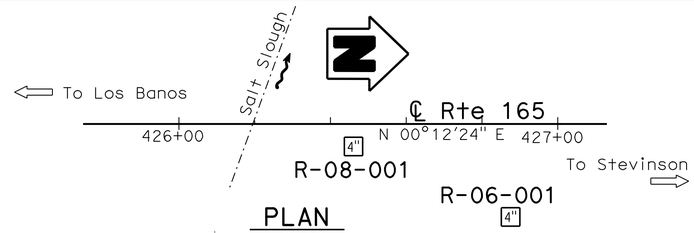

PLAN

1"=20'

Notes:

1. CME-75 truck mounted drill rig (C# 5677) with automatic hammer was used to obtain SPT samples in boring R-06-001. CS-2000 truck mounted drill rig (C# 6832) with automatic hammer was used to obtain SPT samples in boring R-08-001.
2. SPT N values shown on Log of Test Boring (LOTB) sheets are actual values recorded in the field.
3. pp = Pocket Penetrometer test (tsf).

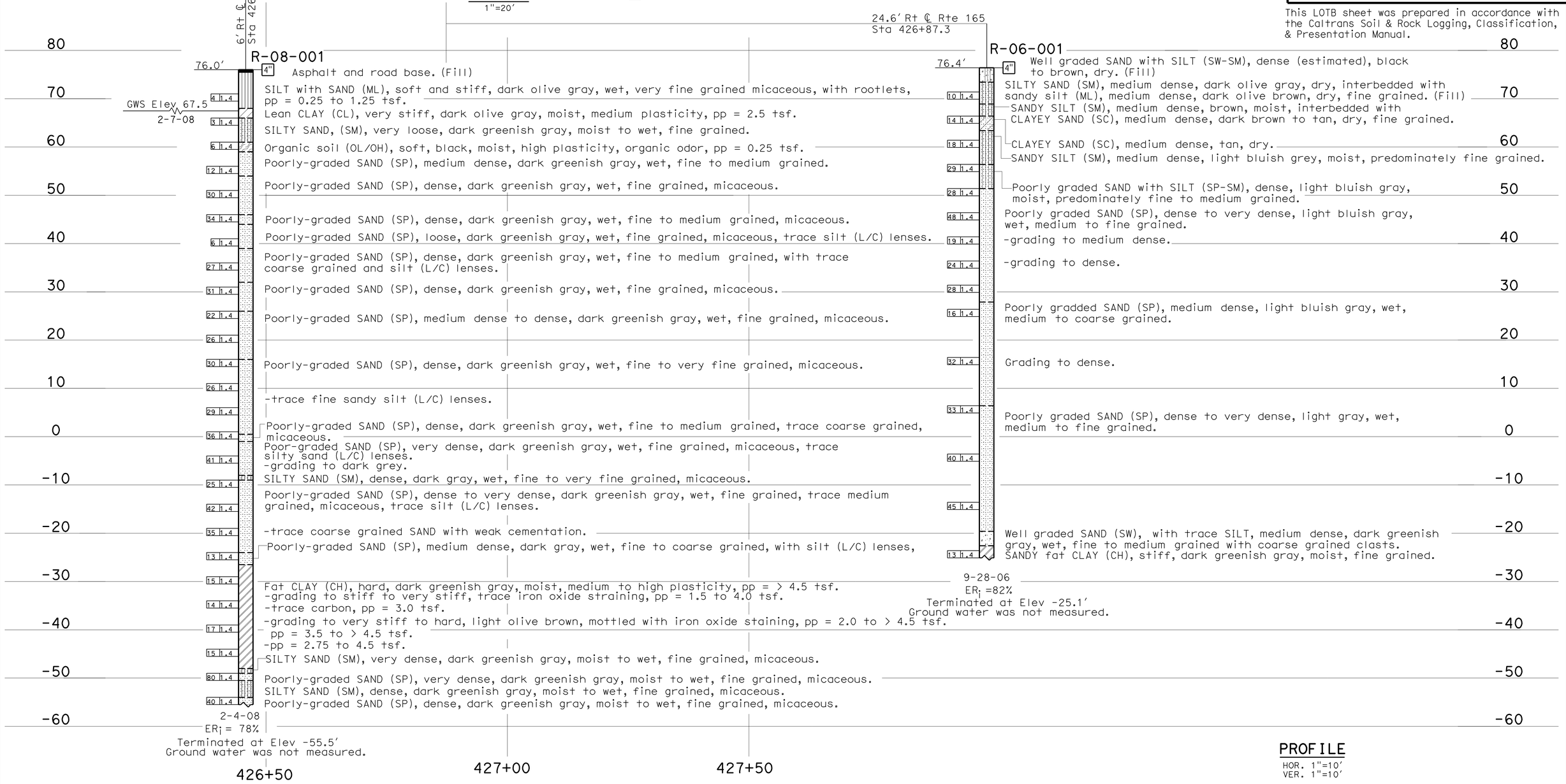

PROFILE

HOR. 1"=10'
VER. 1"=10'

ENGINEERING SERVICES	GEOTECHNICAL SERVICES	STATE OF CALIFORNIA DEPARTMENT OF TRANSPORTATION	DIVISION OF ENGINEERING SERVICES STRUCTURE DESIGN DESIGN BRANCH 17	BRIDGE NO. 39-0209 POST MILES 22.34	SALT SLOUGH BRIDGE (WIDEN) LOG OF TEST BORINGS 1 OF 3
FUNCTIONAL SUPERVISOR NAME: Q. Huang	DRAWN BY: W. Tang 04/09 CHECKED BY: J. Thhorne	FIELD INVESTIGATION BY: S. Sunding, J. Thorne			

OGS CIVIL LOG OF TEST BORINGS SHEET

ORIGINAL SCALE IN INCHES FOR REDUCED PLANS 0 1 2 3

CU 06241
EA 279801

DISREGARD PRINTS BEARING EARLIER REVISION DATES

REVISION DATES: 04-01-09 05-21-09 06-08-09 08-20-09

SHEET 11 OF 13

FILE => 39-0209-z-ltb01.dgn

USERNAME => friehard DATE PLOTTED => 24-JUN-2010 TIME PLOTTED => 07:54

DIST	COUNTY	ROUTE	POST MILES TOTAL PROJECT	SHEET No	TOTAL SHEETS
10	Mer	165	11.7/26.7	74	110

REGISTERED CIVIL ENGINEER 9-4-09

6-21-10
PLANS APPROVAL DATE

REGISTERED GEOLOGIST
Zheng Xing
No. 2130
Exp. 3-31-2011
CERTIFIED ENGINEERING GEOLOGIST
STATE OF CALIFORNIA

The State of California or its officers or agents shall not be responsible for the accuracy or completeness of electronic copies of this plan sheet.

REFERENCE: CALTRANS SOIL & ROCK LOGGING, CLASSIFICATION, AND PRESENTATION MANUAL.

CEMENTATION

Description	Criteria
Weak	Crumbles or breaks with handling or little finger pressure.
Moderate	Crumbles or breaks with considerable finger pressure.
Strong	Will not crumble or break with finger pressure.

CONSISTENCY OF COHESIVE SOILS

Description	Unconfined Compressive Strength (tsf)	Pocket Penetrometer Measurement (tsf)	Torvane Measurement (tsf)	Field Approximation
Very Soft	< 0.25	< 0.25	< 0.12	Easily penetrated several inches by fist
Soft	0.25 to 0.50	0.25 to 0.50	0.12 to 0.25	Easily penetrated several inches by thumb
Medium Stiff	0.50 to 1.0	0.50 to 1.0	0.25 to 0.50	Penetrated several inches by thumb with moderate effort
Stiff	1 to 2	1 to 2	0.50 to 1.0	Readily indented by thumb but penetrated only with great effort
Very Stiff	2 to 4	2 to 4	1.0 to 2.0	Readily indented by thumbnail
Hard	> 4.0	> 4.0	> 2.0	Indented by thumbnail with difficulty

BOREHOLE IDENTIFICATION

Symbol	Hole Type	Description
Size	A	Auger Boring
Size	R P	Rotary drilled boring Rotary percussion boring (air)
Size	R	Rotary drilled diamond core
Size	HD HA	Hand driven (1-inch soil tube) Hand Auger
●	D	Dynamic Cone Penetration Boring
▲	CPT	Cone Penetration Test (ASTM D 5778-95)
⬚	O	Other

Note: Size in inches.

PLASTICITY OF FINE-GRAINED SOILS

Description	Criteria
Nonplastic	A 1/8-inch thread cannot be rolled at any water content.
Low	The thread can barely be rolled and the lump cannot be formed when drier than the plastic limit.
Medium	The thread is easy to roll and not much time is required to reach the plastic limit. The thread cannot be rerolled after reaching the plastic limit. The lump crumbles when drier than the plastic limit.
High	It takes considerable time rolling and kneading to reach the plastic limit. The thread can be rerolled several times after reaching the plastic limit. The lump can be formed without crumbling when drier than the plastic limit.

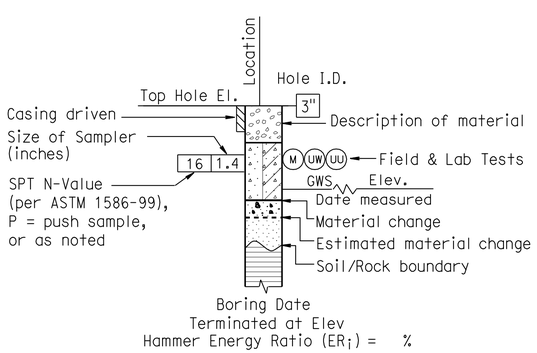

ROTARY BORING

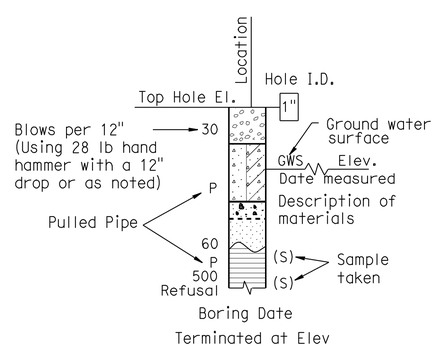

HAND BORING

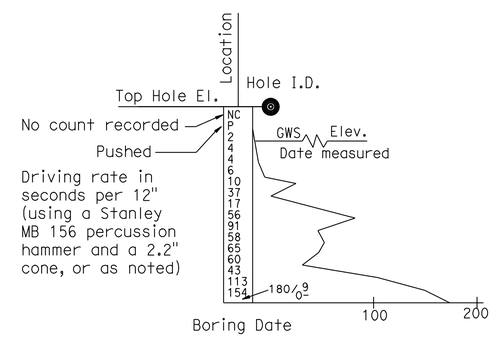

DYNAMIC CONE PENETRATION BORING

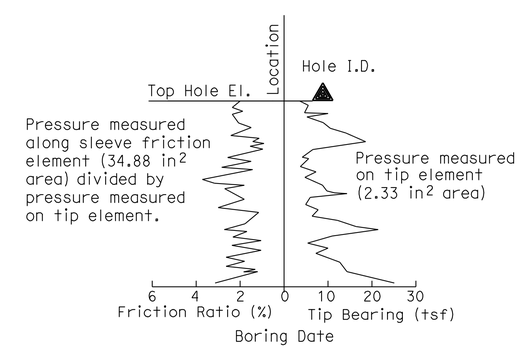

CONE PENETRATION TEST (CPT) SOUNDING

ENGINEERING SERVICES	GEOTECHNICAL SERVICES	STATE OF CALIFORNIA DEPARTMENT OF TRANSPORTATION	DIVISION OF ENGINEERING SERVICES STRUCTURE DESIGN DESIGN BRANCH 17	BRIDGE NO. 39-0209 / POST MILES 22.34	SALT SLOUGH BRIDGE (WIDEN) LOG OF TEST BORINGS 2 OF 3
FUNCTIONAL SUPERVISOR NAME: Q. Huang	DRAWN BY: W. Tang 04/09 CHECKED BY: J. Thhorne	FIELD INVESTIGATION BY: S. Sunding, J. Thorne			

OGS CIVIL LOG OF TEST BORINGS SHEET

ORIGINAL SCALE IN INCHES FOR REDUCED PLANS 0 1 2 3

CU 06241
EA 279801

DISREGARD PRINTS BEARING EARLIER REVISION DATES → 04-01-09 06-08-09 08-20-09

REVISION DATES

SHEET 12 OF 13

FILE => 39-0209-z-1tb02.dgn

USERNAME => friehard DATE PLOTTED => 24-JUN-2010 TIME PLOTTED => 07:54

REFERENCE: CALTRANS SOIL & ROCK LOGGING, CLASSIFICATION, AND PRESENTATION MANUAL.

DIST	COUNTY	ROUTE	POST MILES TOTAL PROJECT	SHEET No	TOTAL SHEETS
10	Mer	165	11.7/26.7	75	110

Zheng Xing 9-4-09
REGISTERED CIVIL ENGINEER

6-21-10
PLANS APPROVAL DATE

REGISTERED GEOLOGIST Zheng Xing No. 2130 Exp. 3-31-2011 CERTIFIED ENGINEERING GEOLOGIST STATE OF CALIFORNIA

The State of California or its officers or agents shall not be responsible for the accuracy or completeness of electronic copies of this plan sheet.

GROUP SYMBOLS AND NAMES

Graphic/Symbol	Group Names	Graphic/Symbol	Group Names
GW	Well-graded GRAVEL Well-graded GRAVEL with SAND	CL	Lean CLAY Lean CLAY with SAND Lean CLAY with GRAVEL SANDY lean CLAY SANDY lean CLAY with GRAVEL GRAVELLY lean CLAY GRAVELLY lean CLAY with SAND
GP	Poorly graded GRAVEL Poorly graded GRAVEL with SAND		
GW-GM	Well-graded GRAVEL with SILT Well-graded GRAVEL with SILT and SAND	CL-ML	SILTY CLAY SILTY CLAY with SAND SILTY CLAY with GRAVEL SANDY SILTY CLAY SANDY SILTY CLAY with GRAVEL GRAVELLY SILTY CLAY GRAVELLY SILTY CLAY with SAND
GW-GC	Well-graded GRAVEL with CLAY (or SILTY CLAY) Well-graded GRAVEL with CLAY and SAND (or SILTY CLAY and SAND)		
GP-GM	Poorly graded GRAVEL with SILT Poorly graded GRAVEL with SILT and SAND	ML	SILT SILT with SAND SILT with GRAVEL SANDY SILT SANDY SILT with GRAVEL GRAVELLY SILT GRAVELLY SILT with SAND
GP-GC	Poorly graded GRAVEL with CLAY (or SILTY CLAY) Poorly graded GRAVEL with CLAY and SAND (or SILTY CLAY and SAND)		
GM	SILTY GRAVEL SILTY GRAVEL with SAND	OL	ORGANIC lean CLAY ORGANIC lean CLAY with SAND ORGANIC lean CLAY with GRAVEL SANDY ORGANIC lean CLAY SANDY ORGANIC lean CLAY with GRAVEL GRAVELLY ORGANIC lean CLAY GRAVELLY ORGANIC lean CLAY with SAND
GC	CLAYEY GRAVEL CLAYEY GRAVEL with SAND		
GC-GM	SILTY, CLAYEY GRAVEL SILTY, CLAYEY GRAVEL with SAND	OL	ORGANIC SILT ORGANIC SILT with SAND ORGANIC SILT with GRAVEL SANDY ORGANIC SILT SANDY ORGANIC SILT with GRAVEL GRAVELLY ORGANIC SILT GRAVELLY ORGANIC SILT with SAND
SW	Well-graded SAND Well-graded SAND with GRAVEL		
SP	Poorly graded SAND Poorly graded SAND with GRAVEL	CH	Fat CLAY Fat CLAY with SAND Fat CLAY with GRAVEL SANDY fat CLAY SANDY fat CLAY with GRAVEL GRAVELLY fat CLAY GRAVELLY fat CLAY with SAND
SW-SM	Well-graded SAND with SILT Well-graded SAND with SILT and GRAVEL		
SW-SC	Well-graded SAND with CLAY (or SILTY CLAY) Well-graded SAND with CLAY and GRAVEL (or SILTY CLAY and GRAVEL)	MH	Elastic SILT Elastic SILT with SAND Elastic SILT with GRAVEL SANDY elastic SILT SANDY elastic SILT with GRAVEL GRAVELLY elastic SILT GRAVELLY elastic SILT with SAND
SP-SM	Poorly graded SAND with SILT Poorly graded SAND with SILT and GRAVEL		
SP-SC	Poorly graded SAND with CLAY (or SILTY CLAY) Poorly graded SAND with CLAY and GRAVEL (or SILTY CLAY and GRAVEL)	OH	ORGANIC fat CLAY ORGANIC fat CLAY with SAND ORGANIC fat CLAY with GRAVEL SANDY ORGANIC fat CLAY SANDY ORGANIC fat CLAY with GRAVEL GRAVELLY ORGANIC fat CLAY GRAVELLY ORGANIC fat CLAY with SAND
SM	SILTY SAND SILTY SAND with GRAVEL		
SC	CLAYEY SAND CLAYEY SAND with GRAVEL	OH	ORGANIC elastic SILT ORGANIC elastic SILT with SAND ORGANIC elastic SILT with GRAVEL SANDY ORGANIC elastic SILT SANDY ORGANIC elastic SILT with GRAVEL GRAVELLY ORGANIC elastic SILT GRAVELLY ORGANIC elastic SILT with SAND
SC-SM	SILTY, CLAYEY SAND SILTY, CLAYEY SAND with GRAVEL		
PT	PEAT	OL/OH	ORGANIC SOIL ORGANIC SOIL with SAND ORGANIC SOIL with GRAVEL SANDY ORGANIC SOIL SANDY ORGANIC SOIL with GRAVEL GRAVELLY ORGANIC SOIL GRAVELLY ORGANIC SOIL with SAND
	COBBLES COBBLES and BOULDERS BOULDERS		

FIELD AND LABORATORY TESTING

- (C) Consolidation (ASTM D 2435)
- (CL) Collapse Potential (ASTM D 5333)
- (CP) Compaction Curve (CTM 216)
- (CR) Corrosivity Testing (CTM 643, CTM 422, CTM 417)
- (CU) Consolidated Undrained Triaxial (ASTM D 4767)
- (DS) Direct Shear (ASTM D 3080)
- (EI) Expansion Index (ASTM D 4829)
- (M) Moisture Content (ASTM D 2216)
- (OC) Organic Content-% (ASTM D 2974)
- (P) Permeability (CTM 220)
- (PA) Particle Size Analysis (ASTM D 422)
- (PI) Plasticity Index (AASHTO T 90) Liquid Limit (AASHTO T 89)
- (PL) Point Load Index (ASTM D 5731)
- (PM) Pressure Meter
- (PP) Pocket Penetrometer
- (R) R-Value (CTM 301)
- (SE) Sand Equivalent (CTM 217)
- (SG) Specific Gravity (AASHTO T 100)
- (SL) Shrinkage Limit (ASTM D 427)
- (SW) Swell Potential (ASTM D 4546)
- (TV) Pocket Torvane
- (UC) Unconfined Compression-Soil (ASTM D 2166) Unconfined Compression-Rock (ASTM D 2938)
- (UU) Unconsolidated Undrained Triaxial (ASTM D 2850)
- (UW) Unit Weight (ASTM D 4767)
- (VS) Vane Shear (AASHTO T 223)

APPARENT DENSITY OF COHESIONLESS SOILS

Description	SPT N_{60} (Blows / 12 inches)
Very loose	0 - 4
Loose	5 - 10
Medium Dense	11 - 30
Dense	31 - 50
Very Dense	> 50

MOISTURE

Description	Criteria
Dry	Absence of moisture, dusty, dry to the touch
Moist	Damp but no visible water
Wet	Visible free water, usually soil is below water table

PERCENT OR PROPORTION OF SOILS

Description	Criteria
Trace	Particles are present but estimated to be less than 5%
Few	5 to 10%
Little	15 to 25%
Some	30 to 45%
Mostly	50 to 100%

PARTICLE SIZE

Description		Size
Boulder		> 12"
Cobble		3" to 12"
Gravel	Coarse	3/4" to 3"
	Fine	No. 4 to 3/4"
Sand	Coarse	No. 10 to No. 4
	Medium	No. 40 to No. 10
	Fine	No. 200 to No. 40

ENGINEERING SERVICES	GEOTECHNICAL SERVICES	STATE OF CALIFORNIA DEPARTMENT OF TRANSPORTATION	DIVISION OF ENGINEERING SERVICES STRUCTURE DESIGN DESIGN BRANCH 17	BRIDGE NO. 39-0209 POST MILES 22.34	SALT SLOUGH BRIDGE (WIDEN) LOG OF TEST BORINGS 3 OF 3
FUNCTIONAL SUPERVISOR NAME: Q. Huang	DRAWN BY: W. Tang 04/09 CHECKED BY: J. Thhorne	FIELD INVESTIGATION BY: S. Sunding, J. Thorne	CU 06241 EA 279801	DISREGARD PRINTS BEARING EARLIER REVISION DATES 04-01-09 06-08-09 08-20-09	SHEET 13 OF 13

OGS CIVIL LOG OF TEST BORINGS SHEET

ORIGINAL SCALE IN INCHES FOR REDUCED PLANS 0 1 2 3

FILE => 39-0209-z-ltb03.dgn

USERNAME => trlenard DATE PLOTTED => 24-JUN-2010 TIME PLOTTED => 07:54

DIST	COUNTY	ROUTE	POST MILES TOTAL PROJECT	SHEET No	TOTAL SHEETS
10	Mer	165	11.7/26.7	76	110

REGISTERED CIVIL ENGINEER 11-18-09 DATE

6-21-10
PLANS APPROVAL DATE

REGISTERED PROFESSIONAL ENGINEER RODNEY SIMMONS No. C 51174 Exp. 09-30-11 CIVIL STATE OF CALIFORNIA

The State of California or its officers or agents shall not be responsible for the accuracy or completeness of electronic copies of this plan sheet.

QUANTITIES

REMOVE ASPHALT CONCRETE SURFACING	1,688	SQFT
REMOVE UNSOUND CONCRETE	5	CF
PREPARE CONCRETE BRIDGE DECK SURFACE	2,200	SQFT
BRIDGE REMOVAL (PORTION), LOCATION A	LUMP	SUM
STRUCTURE EXCAVATION (BRIDGE)	65	CY
STRUCTURE BACKFILL (BRIDGE)	40	CY
FURNISH PILING (CLASS 200) (ALTERNATIVE W)	207	LF
DRIVE PILE (CLASS 200) (ALTERNATIVE W)	4	EA
FURNISH 18" CAST-IN-STEEL SHELL CONCRETE PILING	115	LF
DRIVE 18" CAST-IN-STEEL SHELL CONCRETE PILE	2	EA
STRUCTURAL CONCRETE, BRIDGE	70	CY
DRILL AND BOND DOWEL	250	LF
RAPID SETTING CONCRETE (PATCH)	5	CF
FURNISH POLYESTER CONCRETE OVERLAY	135	CF
PLACE POLYESTER CONCRETE OVERLAY	2,200	SQFT
BAR REINFORCING STEEL (BRIDGE)	16,100	LB
PUBLIC SAFETY PLAN	LUMP	SUM
CLEAN AND THERMAL SPRAY COAT STEEL PILING	LUMP	SUM
CONCRETE BARRIER (TYPE 732)	174	LF

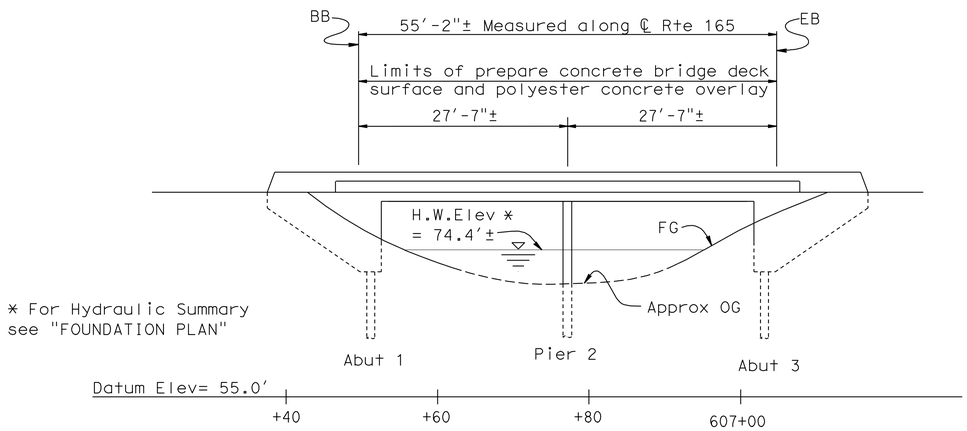

ELEVATION

1" = 10'

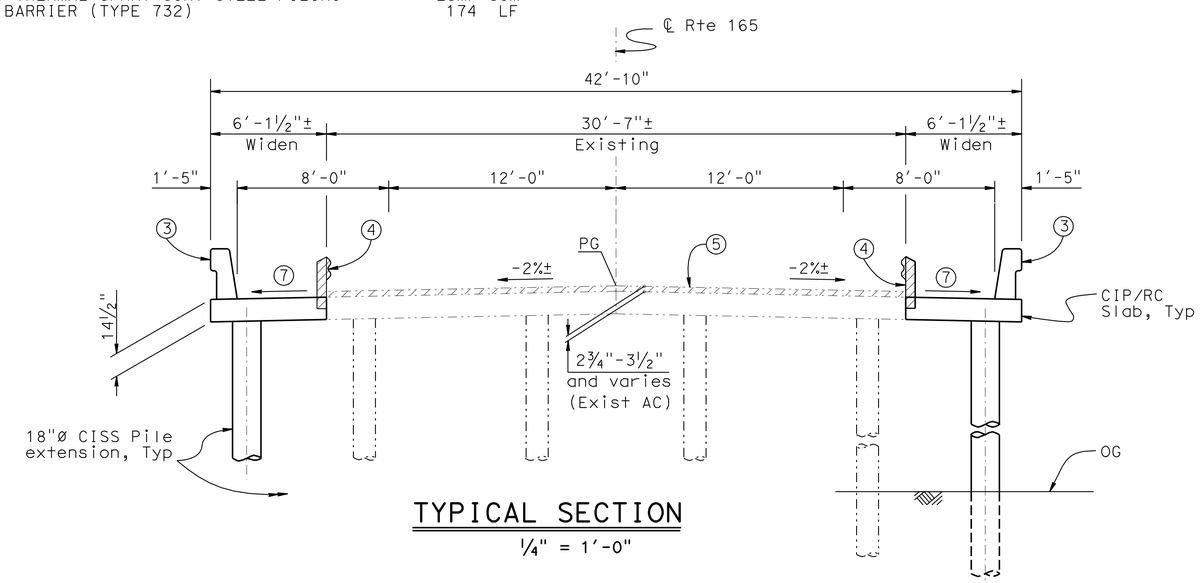

TYPICAL SECTION

¼" = 1'-0"

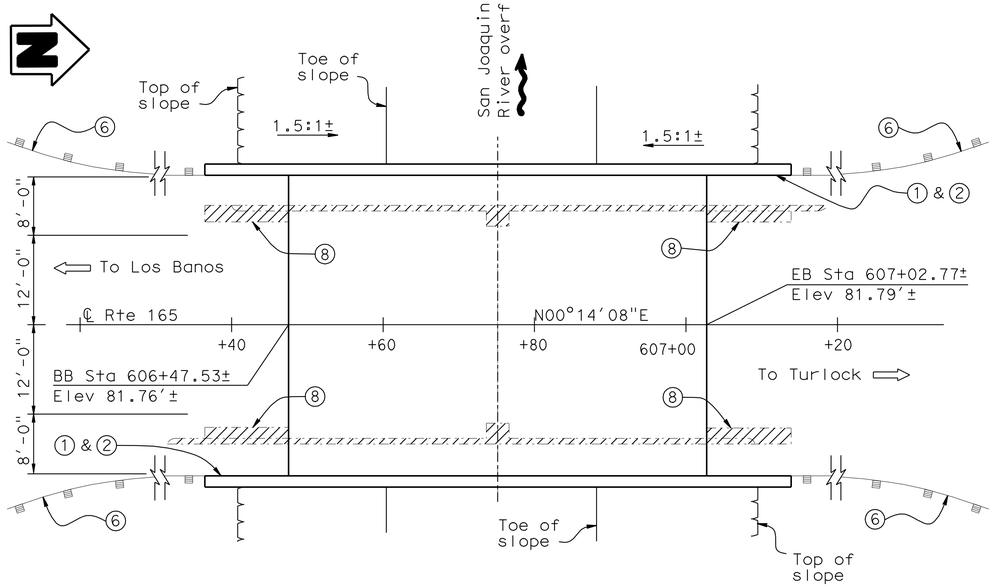

PLAN

1" = 10'

Notes:

1. Paint "San Joaquin River Overflow Bridge".
2. Paint "Br. No. 39-0212".
3. Concrete Barrier Type 732.
4. Existing Rail to be removed. Salvage posts.
5. Existing AC overlay to be removed.
6. MBGR, see "Road Plans"
7. Match existing cross slope.
8. Remove existing wing wall to 3'-0" below finish grade.

Indicates limits of removal of existing barrier railing, existing slab at bents and existing wingwalls.

Indicates existing structures

AC shall be removed prior to bridge widening.

See "Typical Section" sheet for polyester overlay

For "Index To Plans", "Standard Plan List", and "General Notes", see "Index To Plans" sheet.

NOTE:
THE CONTRACTOR SHALL VERIFY ALL CONTROLLING FIELD DIMENSIONS BEFORE ORDERING OR FABRICATING ANY MATERIAL.

Kevin Keady
DESIGN ENGINEER

	BY	CHECKED
DESIGN	Igor Chernioglo	Clarence Hensel
DETAILS	Susan Ng	Clarence Hensel
QUANTITIES	Clarence Hensel	Craig Schellenger

LOAD FACTOR DESIGN — LIVE LOADING: HS 20-44; Alternative; PERMIT DESIGN VEHICLE

	BY	CHECKED
LAYOUT	Rod Simmons	Igor Chernioglo
SPECIFICATIONS	Xiahong Li	PLANS AND SPECS COMPARED X

ORIGINAL SCALE IN INCHES FOR REDUCED PLANS 0 1 2 3

STATE OF CALIFORNIA
DEPARTMENT OF TRANSPORTATION

DIVISION OF ENGINEERING SERVICES
STRUCTURE DESIGN
DESIGN BRANCH 17

CU 06241
EA 279801

BRIDGE NO. 39-0212
POST MILE 25.77

SAN JOAQUIN RIVER OVERFLOW BRIDGE (WIDEN)
GENERAL PLAN

DISREGARD PRINTS BEARING EARLIER REVISION DATES

REVISION DATES: 1-04-06 6-15-09 11-18-09 11-18-08 11-13-08 11-21-08 3-31-09 5-29-09 6-29-09

SHEET 1 OF 12

STRUCTURES DESIGN GENERAL PLAN SHEET (ENGLISH) (REV.07-24-06)

FILE => 39-0212-a-gp.dgn

USERNAME => trienard DATE PLOTTED => 24-JUN-2010 TIME PLOTTED => 07:54

DIST	COUNTY	ROUTE	POST MILES TOTAL PROJECT	SHEET No	TOTAL SHEETS
10	Mer	165	11.7/26.7	77	110

REGISTERED CIVIL ENGINEER 9-4-09 DATE

6-21-10
PLANS APPROVAL DATE

REGISTERED PROFESSIONAL ENGINEER RODNEY SIMMONS No. C 51174 Exp. 09-30-09 CIVIL STATE OF CALIFORNIA

The State of California or its officers or agents shall not be responsible for the accuracy or completeness of electronic copies of this plan sheet.

INDEX TO PLANS

SHEET NO.	TITLE
1	GENERAL PLAN
2	INDEX TO PLANS
3	FOUNDATION PLAN
4	ABUTMENT LAYOUT
5	PIER LAYOUT
6	PIER DETAILS
7	TYPICAL SECTION
8	SLAB REINFORCEMENT
9	SLAB REINFORCEMENT DETAILS
10	LOG OF TEST BORINGS 1 OF 3
11	LOG OF TEST BORINGS 2 OF 3
12	LOG OF TEST BORINGS 3 OF 3

PILE DATA TABLE (NEW PILES)

LOCATION	PILE TYPE	DESIGN LOADING (kips)	NOMINAL RESISTANCE (kips)		DESIGN TIP ELEVATION (ft)	SPECIFIED TIP ELEVATION (ft)	NOMINAL DRIVING RESISTANCE (kips)
			COMPRESSION	TENSION			
Abut 1	Class 200 Alt. "W"	90	180	0	+22.3 (1b)	+22.3	500
Pier 2	18 x 0.5 CISS	0	180	0	+23.7 (1b); +30.0 (2)	+23.7	500
Abut 3	Class 200, Alt. "W"	90	180	0	+16.8 (1b)	+16.8	450

Design tip elevation is controlled by the following demands:

1. Compression; 1) Scour, b) Liquefaction
2. Lateral Loads

GENERAL NOTES
LOAD FACTOR DESIGN

DESIGN:
Caltrans Bridge Design Specifications,
LFD Version April 2000

SEISMIC DESIGN:
Caltrans Seismic Design Criteria (SDC),
Version 1.4 dated June 2006

DEAD LOAD:
Includes 35 psf for future wearing surface.

LIVE LOADING:
HL 20-44 and Alternative and permit design load.

SEISMIC LOADING:
Soil profile type E
Magnitude group 6.5 +/- 0.25
Peak Rock Acceleration 0.3g

CONCRETE:
fy = 60 ksi
f'c = 4.0 ksi
n = 8

STRUCTURAL STEEL (new construction):
Steel Pipe Piles: ASTM A252 Grade 3
fy = 45 ksi

STRUCTURAL STEEL
(assumed for evaluation of existing structure):
fy = 36 ksi

STANDARD PLANS DATED MAY 2006

A10A	ACRONYMS AND ABBREVIATIONS (SHEET 1 OF 2)
A10B	ACRONYMS AND ABBREVIATIONS (SHEET 2 OF 2)
A62C	LIMITS OF PAYMENT FOR EXCAVATION AND BACKFILL - BRIDGE
B0-1	BRIDGE DETAILS
B0-3	BRIDGE DETAILS
B2-8	PILE DETAILS CLASS 200
B11-55	CONCRETE BARRIER TYPE 732

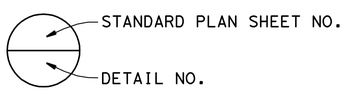

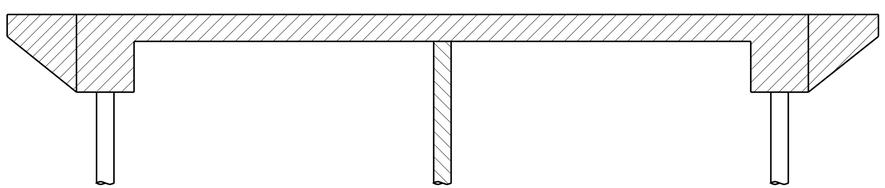

Pipe Piles

Structural Concrete, Bridge (4ksi @ 28 days)

18"Ø CISS Piles

CONCRETE STRENGTH AND TYPE LIMITS

No Scale

NOTE:
THE CONTRACTOR SHALL VERIFY ALL CONTROLLING FIELD DIMENSIONS BEFORE ORDERING OR FABRICATING ANY MATERIAL.

	BY	CHECKED
DESIGN	Igor Cherniogio	Clarence Hensel
DETAILS	Susan Ng	Clarence Hensel
QUANTITIES	Clarence Hensel	Craig Schellenger

STATE OF CALIFORNIA
DEPARTMENT OF TRANSPORTATION

DIVISION OF ENGINEERING SERVICES
STRUCTURE DESIGN
DESIGN BRANCH 17

BRIDGE NO. 39-0212
POST MILE 25.77

SAN JOAQUIN RIVER OVERFLOW BRIDGE (WIDEN)
INDEX TO PLANS

STRUCTURES DESIGN DETAIL SHEET (ENGLISH) (REV. 10/25/05)

ORIGINAL SCALE IN INCHES FOR REDUCED PLANS 0 1 2 3

CU 06241
EA 279801

DISREGARD PRINTS BEARING EARLIER REVISION DATES

REVISION DATES: 01-05-07 10-31-08 11-10-08 3-31-09 4-21-09 4-28-09 6-10-09 8-20-09

SHEET 2 OF 12

FILE => 39-0212-a-itp.dgn

USERNAME => trlemard DATE PLOTTED => 24-JUN-2010 TIME PLOTTED => 07:54

DIST	COUNTY	ROUTE	POST MILES TOTAL PROJECT	SHEET No	TOTAL SHEETS
10	Mer	165	11.7/26.7	78	110

REGISTERED CIVIL ENGINEER 9-4-09 DATE

6-21-10
PLANS APPROVAL DATE

REGISTERED PROFESSIONAL ENGINEER RODNEY SIMMONS No. C 51174 Exp. 09-30-09 CIVIL STATE OF CALIFORNIA

The State of California or its officers or agents shall not be responsible for the accuracy or completeness of electronic copies of this plan sheet.

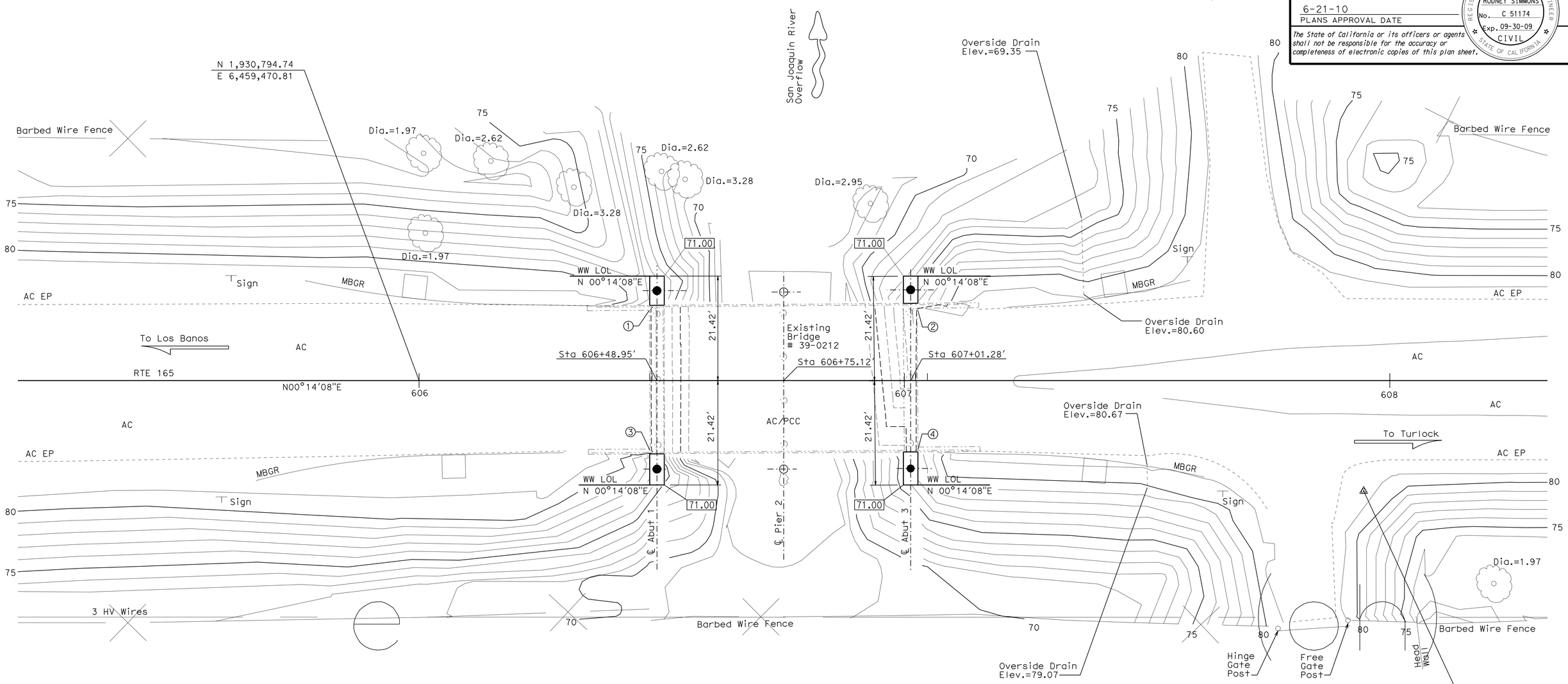

SURVEY CONTROL

PM 25.75 (Not Shown On Plan)
Fnd 1" IP With Red Plug
25.11 FT Lt. ℄ "A1" Line Rte 165
Sta. 604+27.91
N 1,930,622.75
E 6,459,445.00
Elev. = 80.90

PM 25.82
Fnd 1" IP With Red Plug
22.77 FT Rt. ℄ "A1" Line Rte 165
Sta. 607+94.62
N 1,930,989.26
E 6,459,494.38
Elev. = 80.26

Bridge Location

① - 14.52 Lt. ℄ "A1" Line Rte 165, Sta.606+47.52, Elev.=81.47 ±
② - 14.53 Lt. ℄ "A1" Line Rte 165, Sta.607+02.77, Elev.=81.50 ±
③ - 14.38 Rt. ℄ "A1" Line Rte 165, Sta.606+47.57, Elev.=81.47 ±
④ - 14.23 Rt. ℄ "A1" Line Rte 165, Sta.607+02.78, Elev.=81.50 ±

LEGEND

71.00 — Denotes bottom of abutment footing elevation

Indicates 18" ø CISS piles

Indicates class 200 steel pipe piles

HYDROLOGIC / HYDRAULIC DATA SUMMARY

DRAINAGE AREA: N/A SQUARE MILES

	DESIGN FLOOD	BASE FLOOD
FREQUENCY (YEARS)	50	100
DISCHARGE (CUBIC FEET PER SECOND)	N/A	405
WATER SURFACE ELEV. (FEET)	N/A	74.4 ft

FLOOD PLAIN DATA ARE BASED UPON INFORMATION AVAILABLE WHEN THE PLANS WERE PREPARED AND ARE SHOWN TO MEET FEDERAL REQUIREMENTS. THE ACCURACY OF SAID INFORMATION IS NOT WARRANTED BY THE STATE AND INTERESTED OR AFFECTED PARTIES SHOULD MAKE THEIR OWN INVESTIGATIONS.

PRELIMINARY INVESTIGATION SECTION

SCALE	VERT.DATUM NGVD29	PHOTOGRAMMETRY AS OF: X		
1"=10'	HORZ.DATUM NAD83 (1991.35)	SURVEYED BY District/T.Gillett	CHECKED BY T.Gillett 05/2008	
ALIGNMENT TIES Dist.Traverse Sheet		DRAFTED BY T.Zolnikova 05/2008	CHECKED BY J.Pallares 05/2008	

	BY	CHECKED
DESIGN	Igor Chernioglo	Clarence Hensel
DETAILS	Farideh Rashedi	Clarence Hensel
QUANTITIES	Clarence Hensel	Craig Schellenger

STATE OF CALIFORNIA
DEPARTMENT OF TRANSPORTATION

DIVISION OF ENGINEERING SERVICES
STRUCTURE DESIGN
DESIGN BRANCH 17

BRIDGE NO. 39-0212
POST MILE 25.77

SAN JOAQUIN RIVER OVERFLOW BRIDGE (WIDEN)
FOUNDATION PLAN

STRUCTURES FOUNDATION PLAN SHEET (ENGLISH) (REV. 10/25/05)

ORIGINAL SCALE IN INCHES FOR REDUCED PLANS 0 1 2 3

CU 06241
EA 279801

DISREGARD PRINTS BEARING EARLIER REVISION DATES

REVISION DATES: 06/04/08 10/31/08 12/30/08 1/16/09 3/31/09 4/14/09 4/24/09 4/29/09

SHEET 3 OF 12

FILE => 39-0212-e-fp.dgn

USERNAME => friehard DATE PLOTTED => 24-JUN-2010 TIME PLOTTED => 07:54

DIST	COUNTY	ROUTE	POST MILES TOTAL PROJECT	SHEET No	TOTAL SHEETS
10	Mer	165	11.7/26.7	79	110

REGISTERED CIVIL ENGINEER 9-4-09 DATE

6-21-10
PLANS APPROVAL DATE

REGISTERED PROFESSIONAL ENGINEER RODNEY SIMMONS No. C51174 Exp. 09-30-09 CIVIL STATE OF CALIFORNIA

The State of California or its officers or agents shall not be responsible for the accuracy or completeness of electronic copies of this plan sheet.

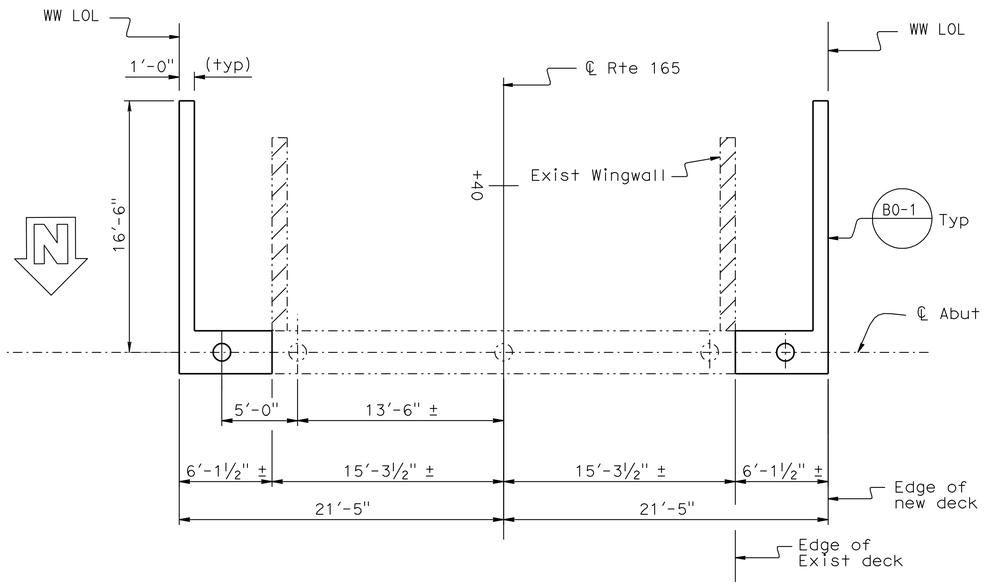

PLAN

Note: Abutment 1 shown, Abutment 3 similar 1" = 5'

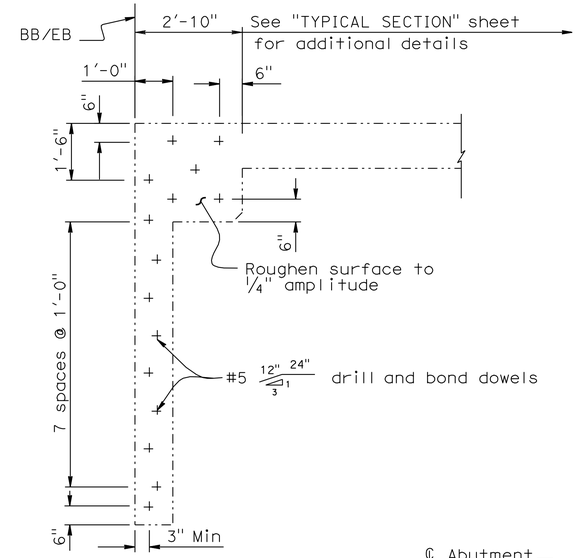

SECTION A-A

½" = 1'-0

LEGEND

▨	Denotes limits of removal of existing concrete
+	Denotes drill and bond dowel locations
○	Indicates new piles
◌	Indicates existing piles

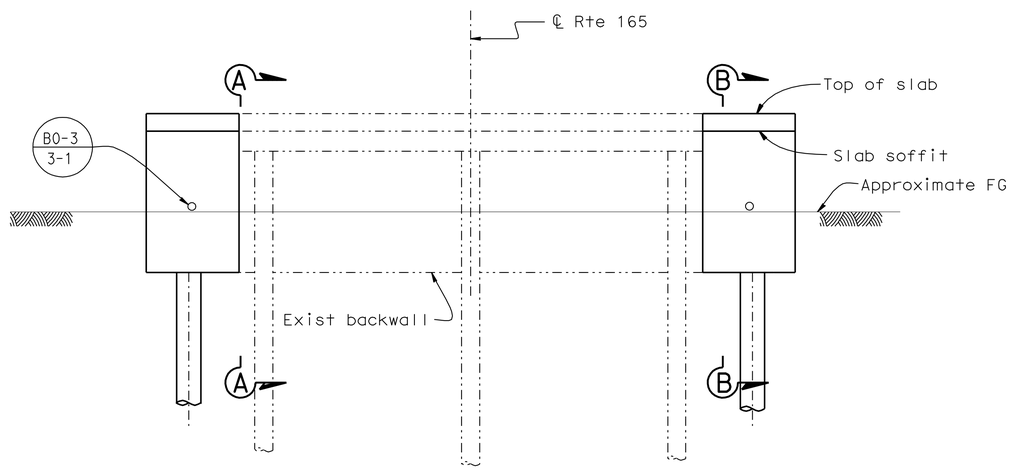

Note:
Barrier not shown

ELEVATION

1" = 5'

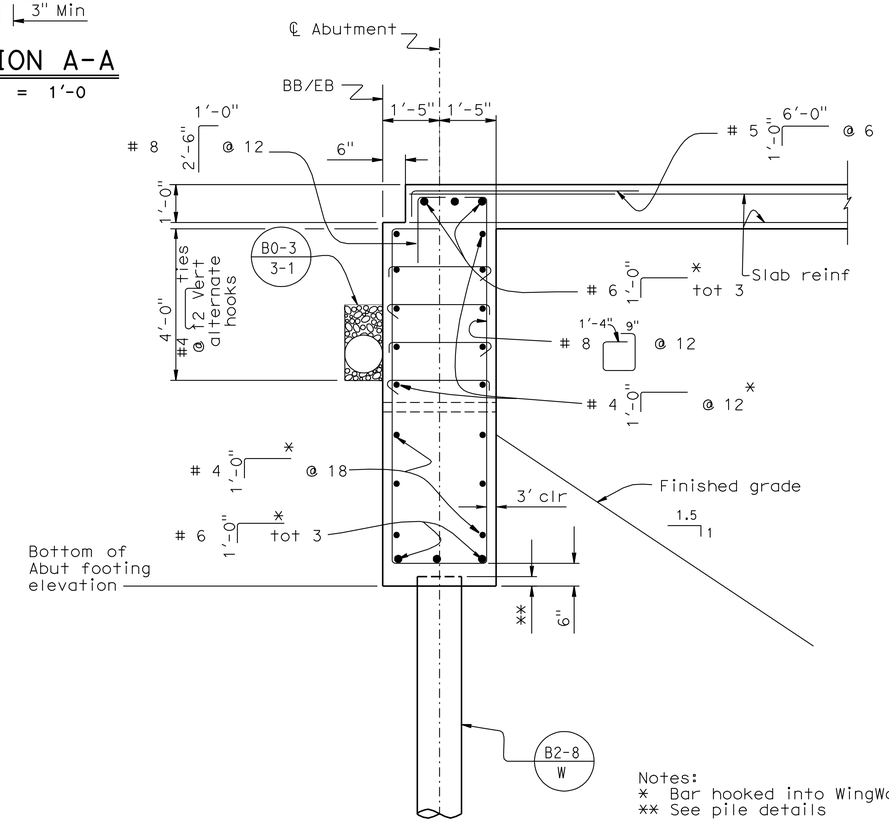

SECTION B-B

½" = 1'-0

Notes:
* Bar hooked into WingWall
** See pile details
Not all reinforcement shown

NOTE:
THE CONTRACTOR SHALL VERIFY ALL CONTROLLING FIELD DIMENSIONS BEFORE ORDERING OR FABRICATING ANY MATERIAL.

	BY	CHECKED
DESIGN	Igor Chernigolo	Clarence Hensel
DETAILS	Farideh Rashedi	Clarence Hensel
QUANTITIES	Clarence Hensel	Craig Schellenger

STATE OF CALIFORNIA DEPARTMENT OF TRANSPORTATION

DIVISION OF ENGINEERING SERVICES STRUCTURE DESIGN DESIGN BRANCH 17

BRIDGE NO. 39-0212
POST MILE 25.77

SAN JOAQUIN RIVER OVERFLOW BRIDGE (WIDEN)

ABUTMENT LAYOUT

STRUCTURES DESIGN DETAIL SHEET (ENGLISH) (REV. 10/25/05)

ORIGINAL SCALE IN INCHES FOR REDUCED PLANS 0 1 2 3

CU 06241
EA 279801

DISREGARD PRINTS BEARING EARLIER REVISION DATES

REVISION DATES: 1-18-09 3-31-09 4-24-09 4-30-09 6-10-09

SHEET 4 OF 12

FILE => 39-0212-f-abut_lo.dgn

USERNAME => trienard DATE PLOTTED => 24-JUN-2010 TIME PLOTTED => 07:54

DIST	COUNTY	ROUTE	POST MILES TOTAL PROJECT	SHEET No	TOTAL SHEETS
10	Mer	165	11.7/26.7	80	110

REGISTERED CIVIL ENGINEER 9-4-09 DATE

6-21-10
PLANS APPROVAL DATE

REGISTERED PROFESSIONAL ENGINEER RODNEY SIMMONS No. C 51174 Exp. 09-30-09 CIVIL STATE OF CALIFORNIA

The State of California or its officers or agents shall not be responsible for the accuracy or completeness of electronic copies of this plan sheet.

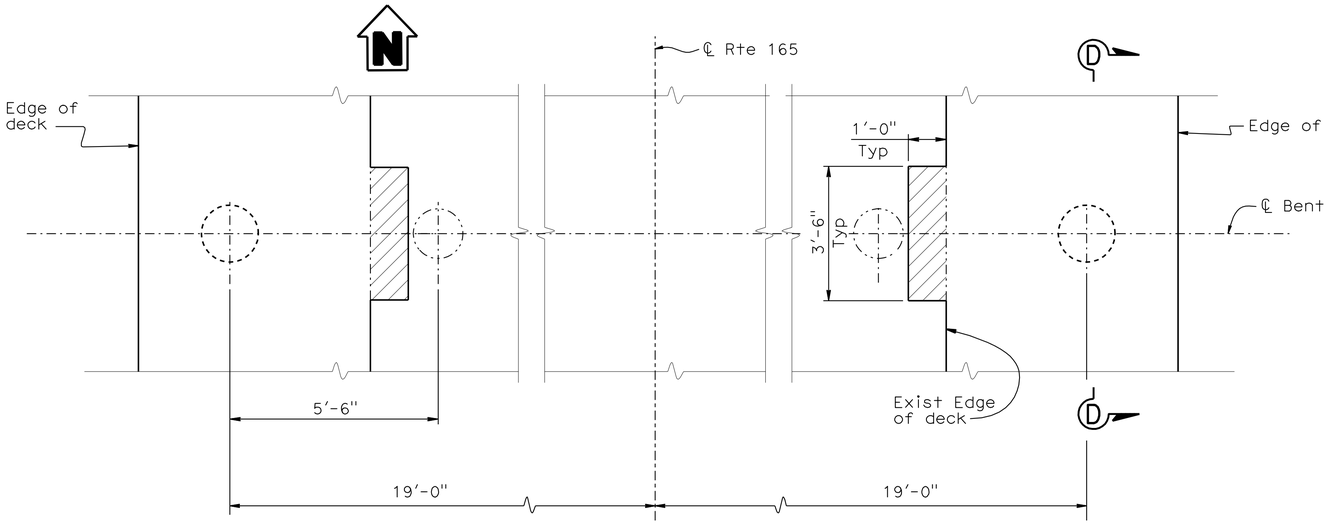

PLAN
1/2" = 1'-0"

Note: Not all reinforcement shown

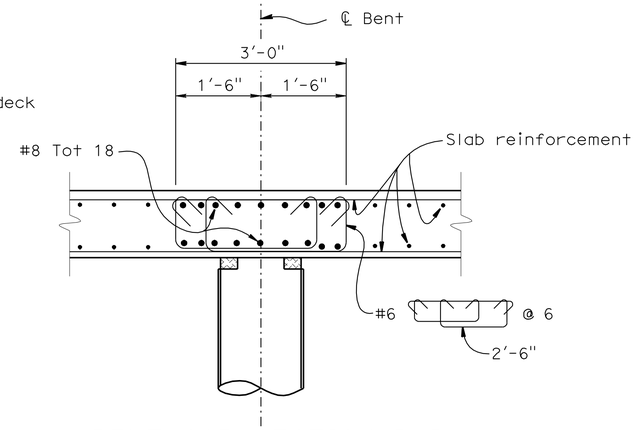

BENT CAP SECTION D-D
3/4" = 1'-0"

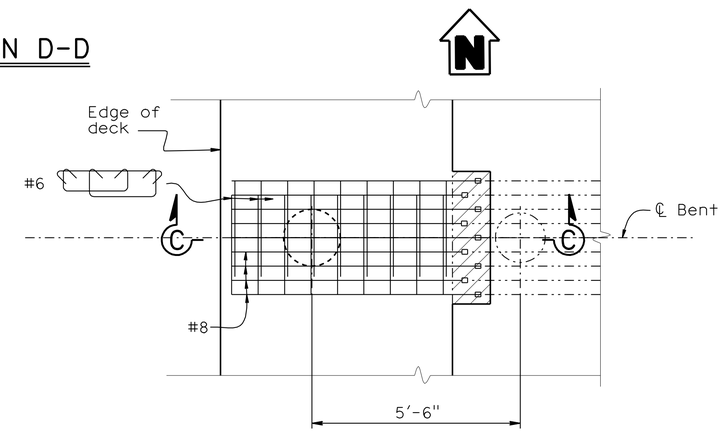

PART PLAN
1/2" = 1'-0"

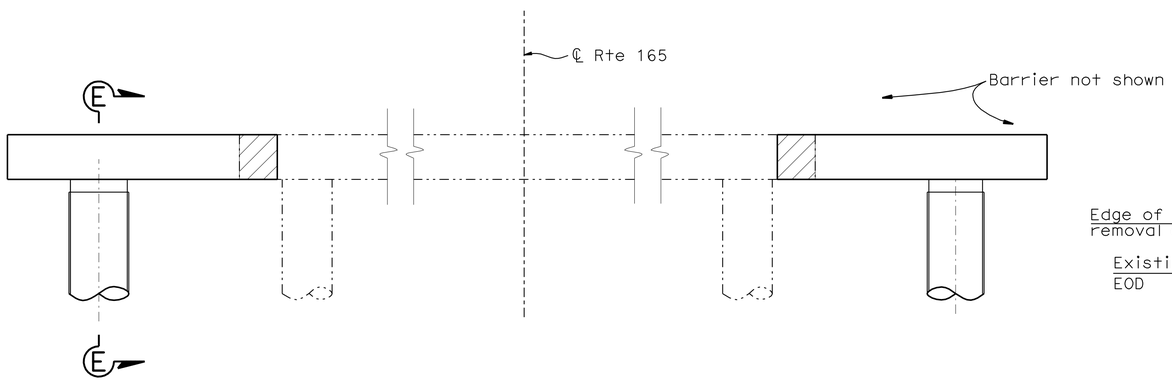

Note:
For Section E-E, see "Pier Details" sheet.

ELEVATION
1/2" = 1'-0"

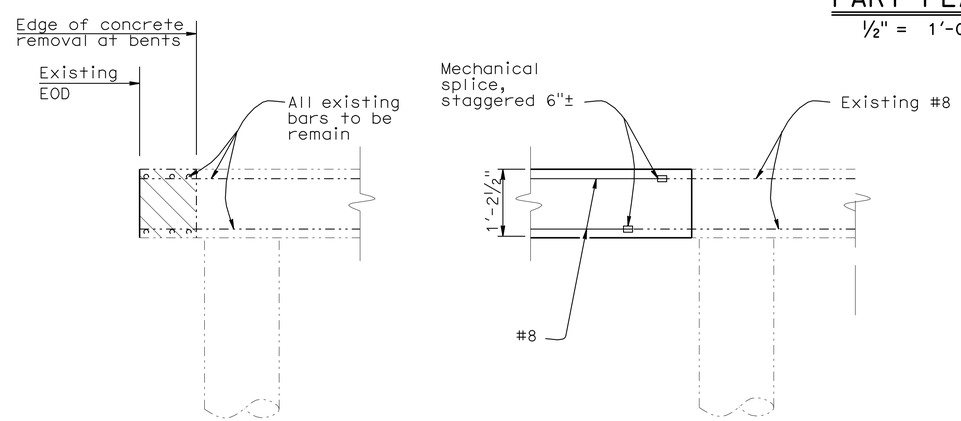

SECTION C-C
3/4" = 1'

Note: Not all reinforcement shown

LEGEND

Denotes limits of concrete removal and replacement

NOTE:
THE CONTRACTOR SHALL VERIFY ALL CONTROLLING FIELD DIMENSIONS BEFORE ORDERING OR FABRICATING ANY MATERIAL.

	BY	CHECKED
DESIGN	Igor Chernioglo	Clarence Hensel
DETAILS	Farideh Rashedi	Clarence Hensel
QUANTITIES	Clarence Hensel	Craig Schellenger

STATE OF CALIFORNIA
DEPARTMENT OF TRANSPORTATION

DIVISION OF ENGINEERING SERVICES
STRUCTURE DESIGN
DESIGN BRANCH 17

BRIDGE NO. 39-0212
POST MILE 25.77

SAN JOAQUIN RIVER OVERFLOW BRIDGE (WIDEN)
PIER LAYOUT

STRUCTURES DESIGN DETAIL SHEET (ENGLISH) (REV. 10/25/05)

ORIGINAL SCALE IN INCHES FOR REDUCED PLANS 0 1 2 3

CU 06241
EA 279801

DISREGARD PRINTS BEARING EARLIER REVISION DATES

REVISION DATES: 11-10-08 1-26-09 3-31-09 4-28-09 4-30-09

SHEET 5 OF 12

FILE => 39-0212-i-pier-1.dgn

USERNAME => rriebenard DATE PLOTTED => 24-JUN-2010 TIME PLOTTED => 07:55

DIST	COUNTY	ROUTE	POST MILES TOTAL PROJECT	SHEET No	TOTAL SHEETS
10	Mer	165	11.7/26.7	81	110

REGISTERED CIVIL ENGINEER 9-4-09 DATE

6-21-10
PLANS APPROVAL DATE

REGISTERED PROFESSIONAL ENGINEER RODNEY SIMMONS No. C51174 Exp. 09-30-09 CIVIL STATE OF CALIFORNIA

The State of California or its officers or agents shall not be responsible for the accuracy or completeness of electronic copies of this plan sheet.

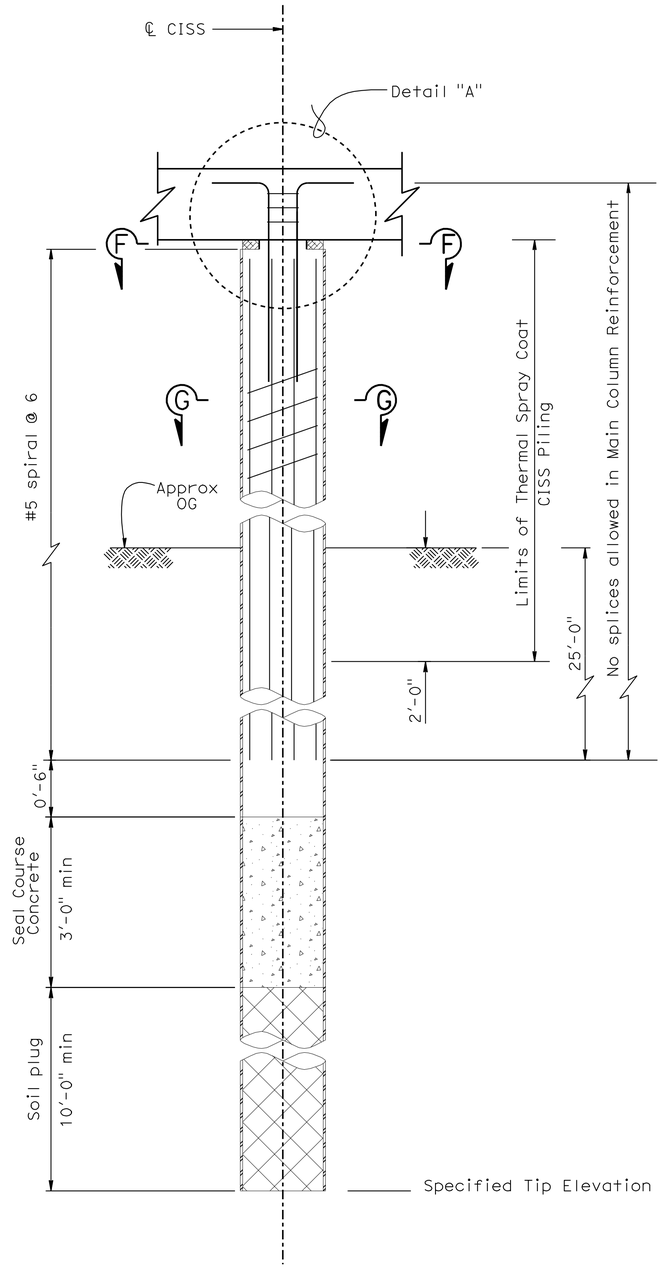

SECTION E-E

¾" = 1'-0"

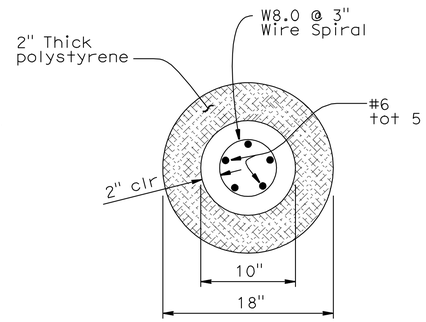

SECTION F-F

1½" = 1'0"

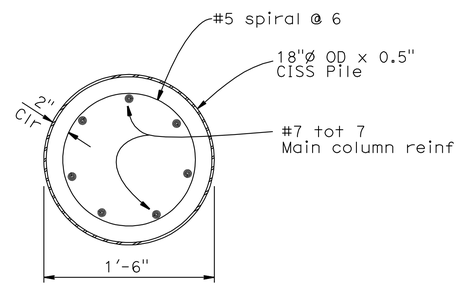

SECTION G-G

1½" = 1'0"

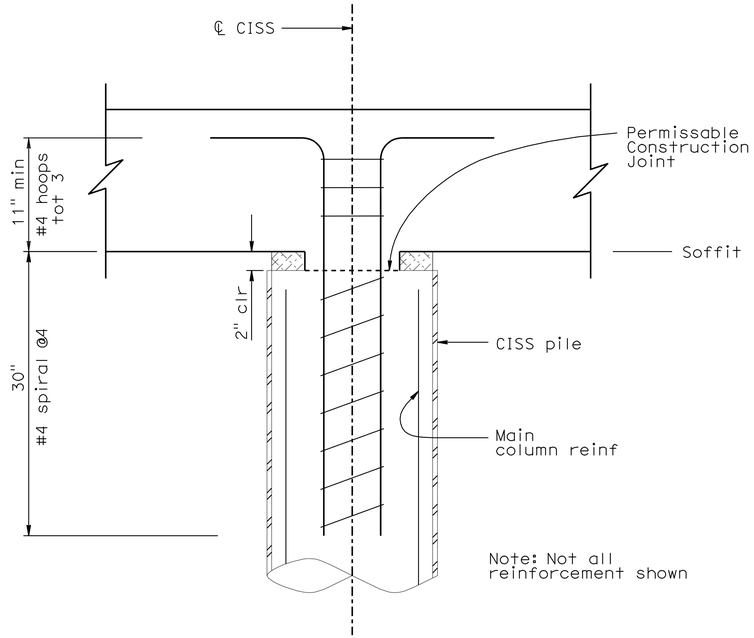

DETAIL A

1½" = 1'-0"

NOTE:
THE CONTRACTOR SHALL VERIFY ALL CONTROLLING FIELD DIMENSIONS BEFORE ORDERING OR FABRICATING ANY MATERIAL.

	BY	CHECKED
DESIGN	Igor Chernioglo	Clarence Hensel
DETAILS	Craig Schellenger	Clarence Hensel
QUANTITIES	Clarence Hensel	Carig Schellenger

STATE OF CALIFORNIA
DEPARTMENT OF TRANSPORTATION

DIVISION OF ENGINEERING SERVICES
STRUCTURE DESIGN
DESIGN BRANCH 17

BRIDGE NO. 39-0212
POST MILE 25.77

SAN JOAQUIN RIVER OVERFLOW BRIDGE (WIDEN)

PIER DETAILS

STRUCTURES DESIGN DETAIL SHEET (ENGLISH) (REV. 10/25/05)

ORIGINAL SCALE IN INCHES FOR REDUCED PLANS 0 1 2 3

CU 06241
EA 279801

DISREGARD PRINTS BEARING EARLIER REVISION DATES

REVISION DATES: 1-04-09 1-31-09 4-22-09 9-2-09

SHEET 6 OF 12

FILE => 39-0212-i-pier-2.dgn

USERNAME => friehard DATE PLOTTED => 24-JUN-2010 TIME PLOTTED => 08:00

DIST	COUNTY	ROUTE	POST MILES TOTAL PROJECT	SHEET No	TOTAL SHEETS
10	Mer	165	11.7/26.7	82	110

REGISTERED CIVIL ENGINEER 9-4-09 DATE

6-21-10
PLANS APPROVAL DATE

REGISTERED PROFESSIONAL ENGINEER RODNEY SIMMONS No. C 51174 Exp. 09-30-09 CIVIL STATE OF CALIFORNIA

The State of California or its officers or agents shall not be responsible for the accuracy or completeness of electronic copies of this plan sheet.

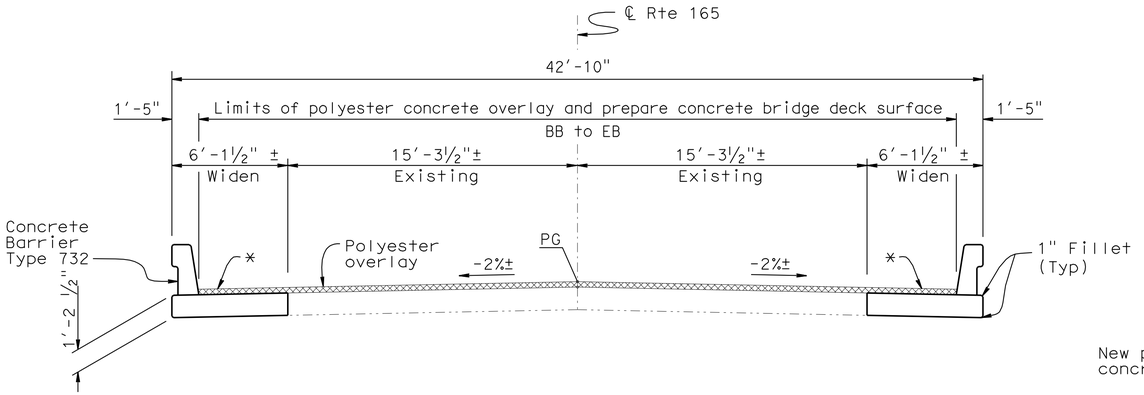

TYPICAL SECTION

¼" = 1'-0"

LEGEND

* Match existing grade and cross slope

Denotes ¾" polyester overlay

** Bars to be placed before slab pour

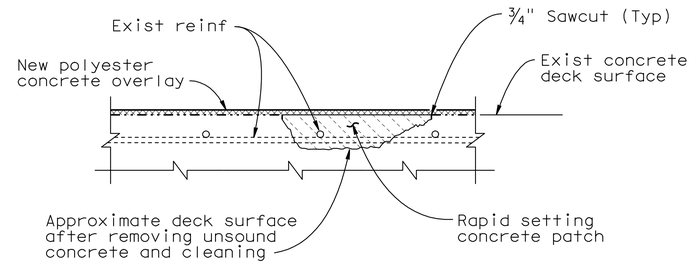

Deck Repair Notes:

Approximately 1 percent of the existing deck area will require repair.

Repair consists of remove unsound concrete and patch with rapid setting concrete.

Repairs are approximately 3 inches deep.

For details, see "Deck Repair Detail.

Repair locations to be determined by the Engineer

DECK REPAIR DETAIL

Reinforcement may be encountered during deck concrete removal.
NO SCALE

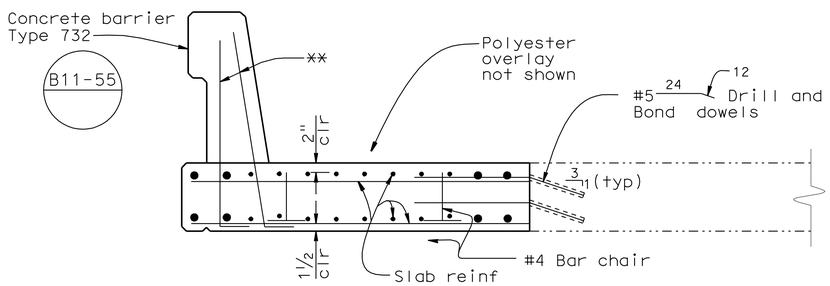

PART TYPICAL SECTION

¾" = 1'-0"

Notes:
1. For longitudinal reinforcement, see"SLAB REINFORCEMENT"sheet
2. For Transverse reinforcement, see "SLAB REINFORCEMENT DETAILS" sheet

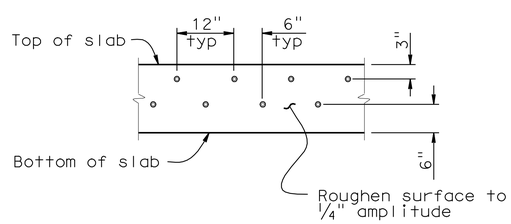

DRILL & BOND LAYOUT

¾" = 1'-0"

NOTE:
THE CONTRACTOR SHALL VERIFY ALL CONTROLLING FIELD DIMENSIONS BEFORE ORDERING OR FABRICATING ANY MATERIAL.

	BY	CHECKED
DESIGN	Igor Chernioglo	Clarence Hensel
DETAILS	Susan Ng	Clarence Hensel
QUANTITIES	Clarence Hensel	Craig Schellenger

STATE OF CALIFORNIA
DEPARTMENT OF TRANSPORTATION

DIVISION OF ENGINEERING SERVICES
STRUCTURE DESIGN
DESIGN BRANCH 17

BRIDGE NO. 39-0212
POST MILE 25.77

SAN JOAQUIN RIVER OVERFLOW BRIDGE (WIDEN)
TYPICAL SECTION

STRUCTURES DESIGN DETAIL SHEET (ENGLISH) (REV. 10/25/05)

ORIGINAL SCALE IN INCHES FOR REDUCED PLANS 0 1 2 3

CU 06241
EA 279801

DISREGARD PRINTS BEARING EARLIER REVISION DATES

REVISION DATES: 1-22-07, 11-12-08, 1-07-09, 3-31-09, 4-22-09, 4-30-09, 6-10-09

SHEET 7 OF 12

FILE => 39-0212-k-ts.dgn

USERNAME => trlenard 08:00

DIST	COUNTY	ROUTE	POST MILES TOTAL PROJECT	SHEET No	TOTAL SHEETS
10	Mer	165	11.7/26.7	83	110

REGISTERED CIVIL ENGINEER 9-4-09 DATE

6-21-10
PLANS APPROVAL DATE

REGISTERED PROFESSIONAL ENGINEER
RODNEY SIMMONS
No. C 51174
Exp. 09-30-09
CIVIL
STATE OF CALIFORNIA

The State of California or its officers or agents shall not be responsible for the accuracy or completeness of electronic copies of this plan sheet.

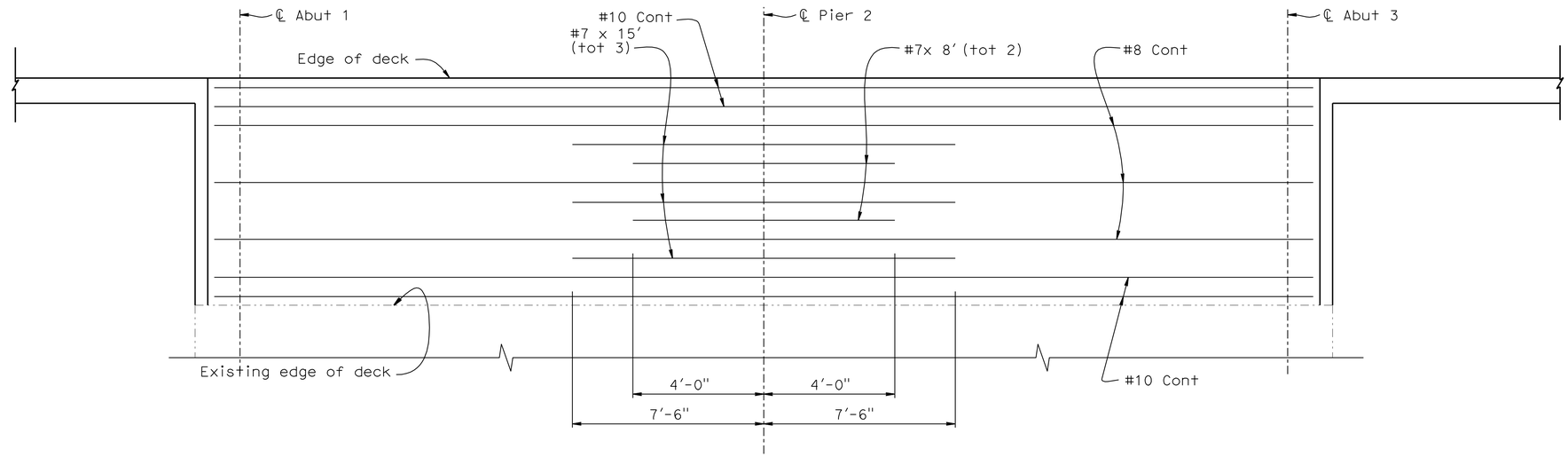

TOP REINFORCEMENT

No Scale

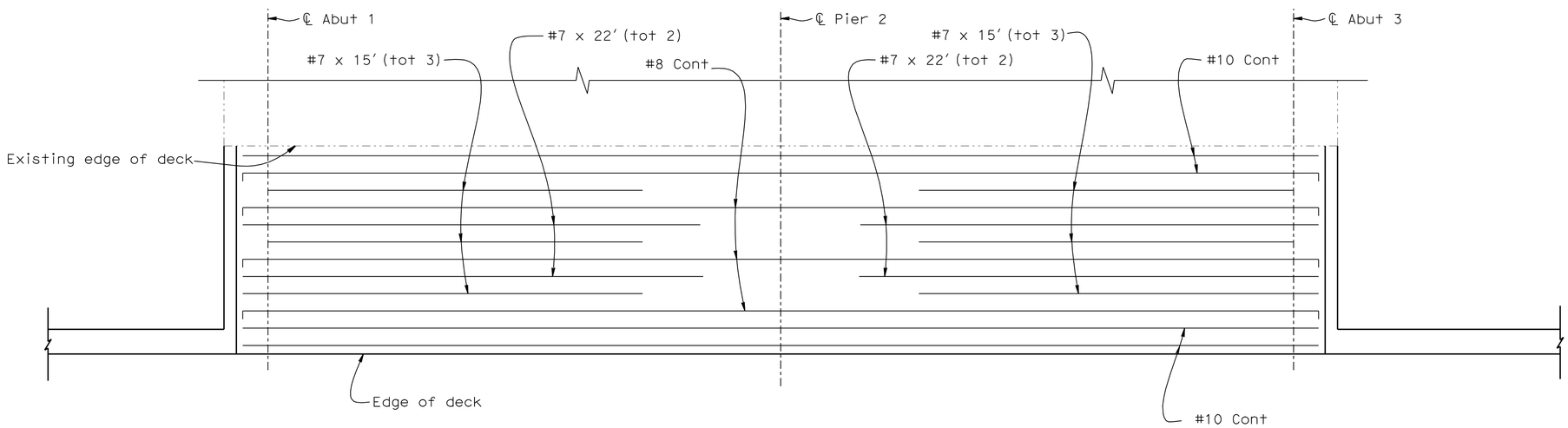

NOTE:
THE CONTRACTOR SHALL VERIFY ALL CONTROLLING FIELD DIMENSIONS BEFORE ORDERING OR FABRICATING ANY MATERIAL.

BOTTOM REINFORCEMENT

No Scale

	BY	CHECKED
DESIGN	Igor Chernioglo	Clarence Hensel
DETAILS	Susan Ng	Clarence Hensel
QUANTITIES	Clarence Hensel	Craig Schellenger

STATE OF CALIFORNIA
DEPARTMENT OF TRANSPORTATION

DIVISION OF ENGINEERING SERVICES
STRUCTURE DESIGN
DESIGN BRANCH 17

BRIDGE NO. 39-0212
POST MILE 25.77

SAN JOAQUIN RIVER OVERFLOW BRIDGE (WIDEN)
SLAB REINFORCEMENT

STRUCTURES DESIGN DETAIL SHEET (ENGLISH) (REV. 10/25/05)

ORIGINAL SCALE IN INCHES FOR REDUCED PLANS 0 1 2 3

CU 06241
EA 279801

DISREGARD PRINTS BEARING EARLIER REVISION DATES

REVISION DATES: 11-14-06, 11-13-08, 1-26-09, 3-31-09, 4-22-09, 4-30-09

SHEET 8 OF 12

FILE => 39-0212-o-gr1.dgn

USERNAME => friehard DATE PLOTTED => 24-JUN-2010 TIME PLOTTED => 08:00

DIST	COUNTY	ROUTE	POST MILES TOTAL PROJECT	SHEET No	TOTAL SHEETS
10	Mer	165	11.7/26.7	84	110

REGISTERED CIVIL ENGINEER 9-4-09 DATE

6-21-10
PLANS APPROVAL DATE

REGISTERED PROFESSIONAL ENGINEER RODNEY SIMMONS No. C 51174 Exp. 09-30-09 CIVIL STATE OF CALIFORNIA

The State of California or its officers or agents shall not be responsible for the accuracy or completeness of electronic copies of this plan sheet.

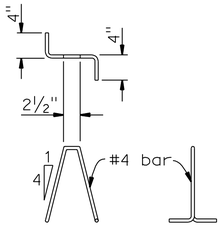

BAR CHAIR DETAIL

No Scale

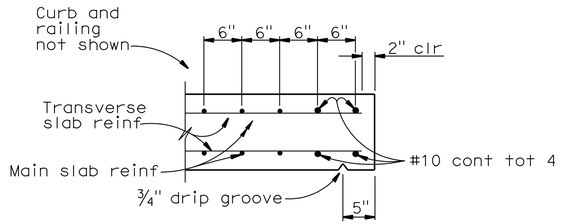

EDGE OF SLAB DETAILS

No Scale

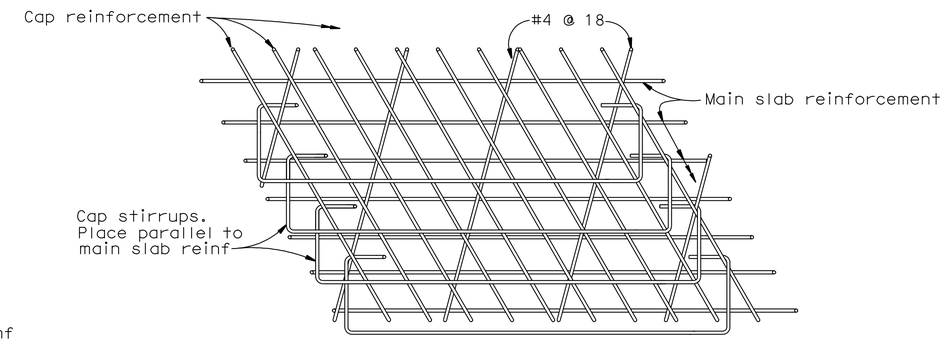

TOP SLAB REINFORCEMENT AT BENT

No Scale

Note:

View for main span over 24'.
Bar placement similar for spans under 24"

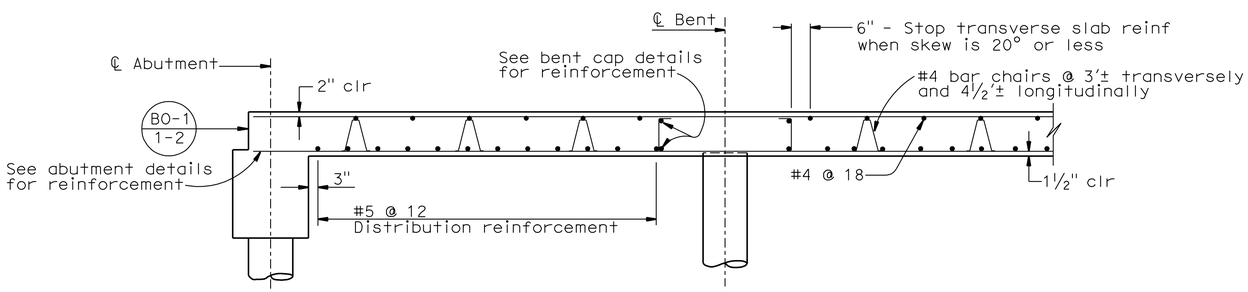

LONGITUDINAL SECTION

No Scale

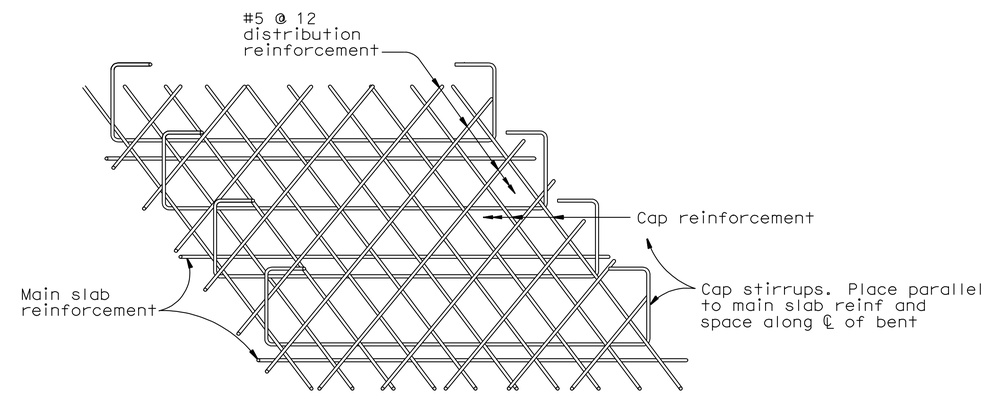

FLUSH CAP

BOTTOM SLAB REINFORCEMENT AT BENT

No Scale

BAR SPLICE LENGTH								
Bar size	#4	#5	#6	#7	#8	#9	#10	#11
All bars, except top bars in spans over 24'	23"	28"	34"	39"	45"	68"	76"	85"
Top bars in spans over 24'	23"	28"	34"	53"	60"	77"	97"	120"

Reinforcement notes:

1. Splices in top main bars to be located near center of span.
2. Splices in bottom main bars to be located near bent.
3. Spacing of all transverse bars is measured along ℄ roadway.
4. Skew 0° to 20° : Place all transverse bars parallel to bent.
5. Skew over 20° : Place transverse slab bars perpendicular to ℄ bridge. See details at right and below.

	BY	CHECKED
DESIGN	Igor Chernioglo	Clarence Hensel
DETAILS	L. Wang	Clarence Hensel
QUANTITIES	Clarence Hensel	Craig Schellenger

STATE OF CALIFORNIA
DEPARTMENT OF TRANSPORTATION

DIVISION OF ENGINEERING SERVICES
STRUCTURE DESIGN
DESIGN BRANCH 17

BRIDGE NO. 39-0212
POST MILE 25.77

SAN JOAQUIN RIVER OVERFLOW BRIDGE (WIDEN)
SLAB REINFORCEMENT DETAILS

STRUCTURES DESIGN DETAIL SHEET (ENGLISH) (REV. 10/25/05)

ORIGINAL SCALE IN INCHES FOR REDUCED PLANS 0 1 2 3

CU 06241
EA 279801

DISREGARD PRINTS BEARING EARLIER REVISION DATES 5-04-09

REVISION DATES

SHEET 9 OF 12

FILE => 39-0212-u-sl-rfdt.dgn

USERNAME => friehard DATE PLOTTED => 24-JUN-2010 TIME PLOTTED => 08:00

DIST	COUNTY	ROUTE	POST MILES TOTAL PROJECT	SHEET No	TOTAL SHEETS
10	Mer	165	11.7/26.7	85	110

REGISTERED CIVIL ENGINEER 9-4-09

6-21-10
PLANS APPROVAL DATE

REGISTERED GEOLOGIST Zheng Xing No. 2130 Exp. 3-31-2011 CERTIFIED ENGINEERING GEOLOGIST STATE OF CALIFORNIA

The State of California or its officers or agents shall not be responsible for the accuracy or completeness of electronic copies of this plan sheet.

This LOTB sheet was prepared in accordance with the Caltrans Soil & Rock Logging, Classification, & Presentation Manual.(June 2007).

Notes:

1. CME-75 truck mounted rig (C#5677) with automatic hammer was used to obtain SPT samples in Borings R-06-001 and R-06-002
2. SPT N values shown on the Log of Test Boring (LOTB) sheet are actual values recorded in the field.

BENCH MARK

SURVEY CONTROL

PM 25.75

Fnd 1" IP With Red Plug
25.11' Lt "A1" ℄ Line Rte 165
Sta 604+27.91
N 1,930,622.75
E 6,459,445.00
Elev = 80.90

NGVD 29

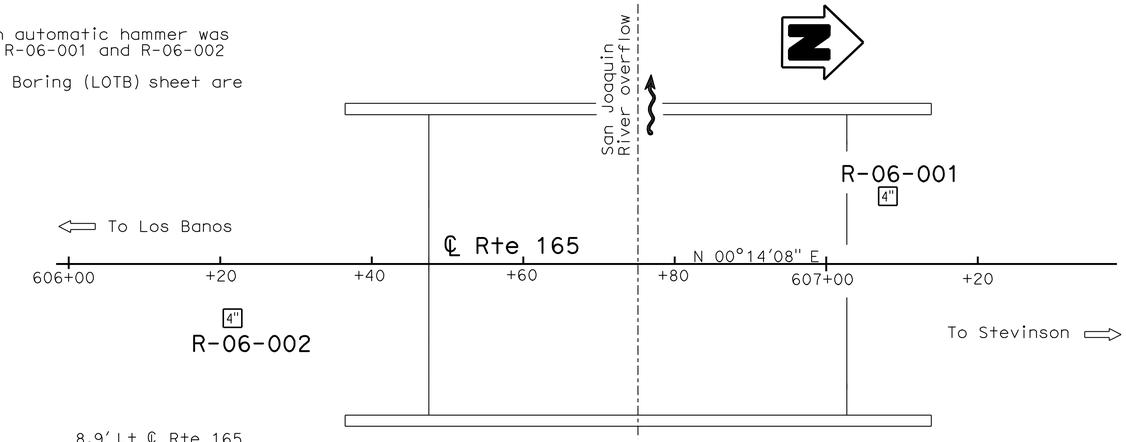

PLAN
1":10'

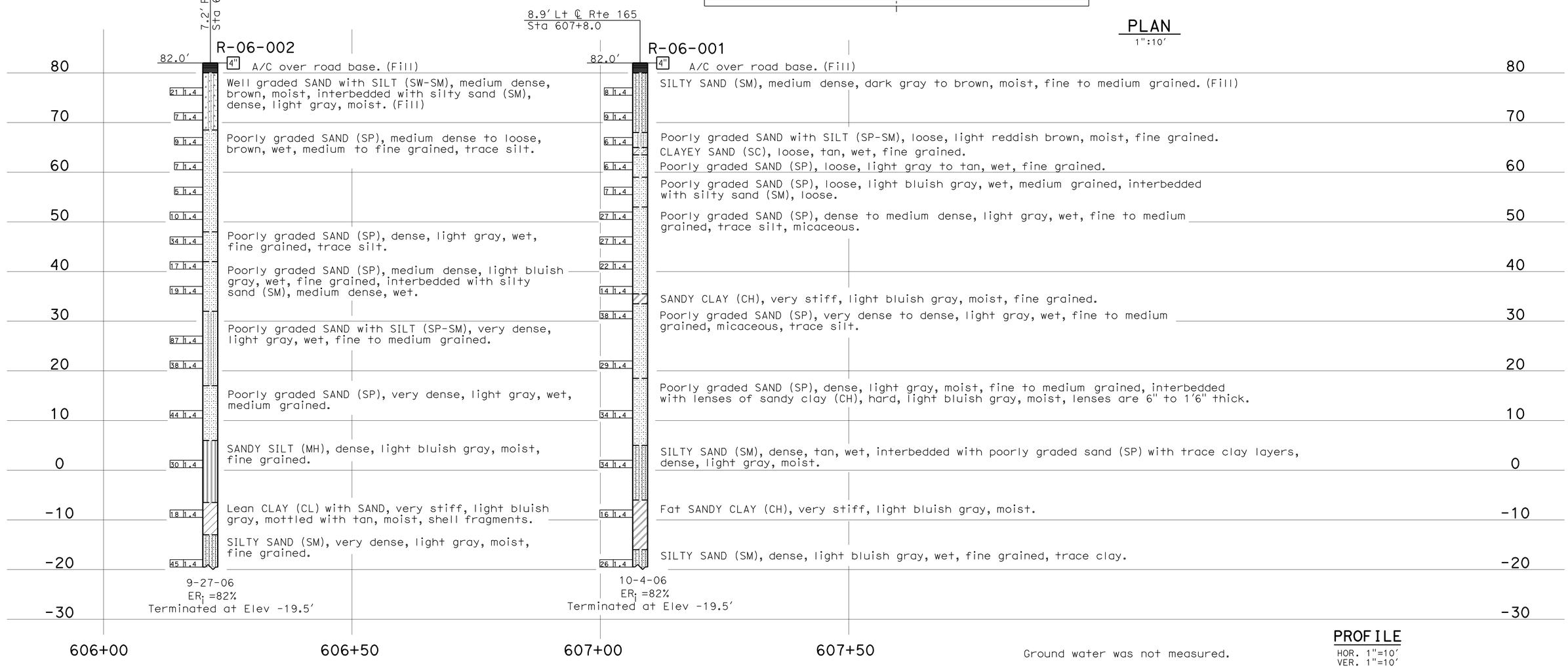

Ground water was not measured.

PROFILE
HOR. 1"=10'
VER. 1"=10'

ENGINEERING SERVICES		GEOTECHNICAL SERVICES	STATE OF CALIFORNIA DEPARTMENT OF TRANSPORTATION	DIVISION OF ENGINEERING SERVICES STRUCTURE DESIGN	BRIDGE NO. 39-0212	SAN JOAQUIN RIVER OVERFLOW BRIDGE (WIDEN)
FUNCTIONAL SUPERVISOR	DRAWN BY: W. Tang 04/09	FIELD INVESTIGATION BY:		DESIGN BRANCH 17	POST MILES 25.77	LOG OF TEST BORINGS 1 OF 3
NAME: Q. Huang	CHECKED BY: J. Thorne	S. Sunding				

OGS CIVIL LOG OF TEST BORINGS SHEET

ORIGINAL SCALE IN INCHES FOR REDUCED PLANS 0 1 2 3

CU 06241
EA 279801

DISREGARD PRINTS BEARING EARLIER REVISION DATES

REVISION DATES: 04-01-09 05-21-09 06-08-09 08-20-09

SHEET 10 OF 12

FILE => 39-0212-z-ltb01.dgn

USERNAME => friehard DATE PLOTTED => 24-JUN-2010 TIME PLOTTED => 08:01

DIST	COUNTY	ROUTE	POST MILES TOTAL PROJECT	SHEET No	TOTAL SHEETS
10	Mer	165	11.7/26.7	86	110

REGISTERED CIVIL ENGINEER 9-4-09

6-21-10
PLANS APPROVAL DATE

REGISTERED GEOLOGIST
Zheng Xing
No. 2130
Exp. 3-31-2011
CERTIFIED ENGINEERING GEOLOGIST
STATE OF CALIFORNIA

The State of California or its officers or agents shall not be responsible for the accuracy or completeness of electronic copies of this plan sheet.

REFERENCE: CALTRANS SOIL & ROCK LOGGING, CLASSIFICATION, AND PRESENTATION MANUAL.

CEMENTATION

Description	Criteria
Weak	Crumbles or breaks with handling or little finger pressure.
Moderate	Crumbles or breaks with considerable finger pressure.
Strong	Will not crumble or break with finger pressure.

CONSISTENCY OF COHESIVE SOILS

Description	Unconfined Compressive Strength (tsf)	Pocket Penetrometer Measurement (tsf)	Torvane Measurement (tsf)	Field Approximation
Very Soft	< 0.25	< 0.25	< 0.12	Easily penetrated several inches by fist
Soft	0.25 to 0.50	0.25 to 0.50	0.12 to 0.25	Easily penetrated several inches by thumb
Medium Stiff	0.50 to 1.0	0.50 to 1.0	0.25 to 0.50	Penetrated several inches by thumb with moderate effort
Stiff	1 to 2	1 to 2	0.50 to 1.0	Readily indented by thumb but penetrated only with great effort
Very Stiff	2 to 4	2 to 4	1.0 to 2.0	Readily indented by thumbnail
Hard	> 4.0	> 4.0	> 2.0	Indented by thumbnail with difficulty

BOREHOLE IDENTIFICATION

Symbol	Hole Type	Description
Size	A	Auger Boring
Size	R P	Rotary drilled boring Rotary percussion boring (air)
Size	R	Rotary drilled diamond core
Size	HD HA	Hand driven (1-inch soil tube) Hand Auger
●	D	Dynamic Cone Penetration Boring
▲	CPT	Cone Penetration Test (ASTM D 5778-95)
⬚	O	Other

Note: Size in inches.

PLASTICITY OF FINE-GRAINED SOILS

Description	Criteria
Nonplastic	A 1/8-inch thread cannot be rolled at any water content.
Low	The thread can barely be rolled and the lump cannot be formed when drier than the plastic limit.
Medium	The thread is easy to roll and not much time is required to reach the plastic limit. The thread cannot be rerolled after reaching the plastic limit. The lump crumbles when drier than the plastic limit.
High	It takes considerable time rolling and kneading to reach the plastic limit. The thread can be rerolled several times after reaching the plastic limit. The lump can be formed without crumbling when drier than the plastic limit.

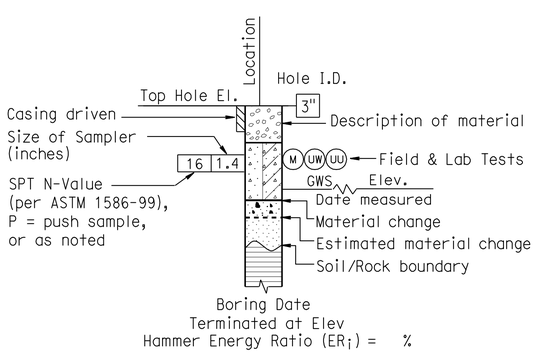

ROTARY BORING

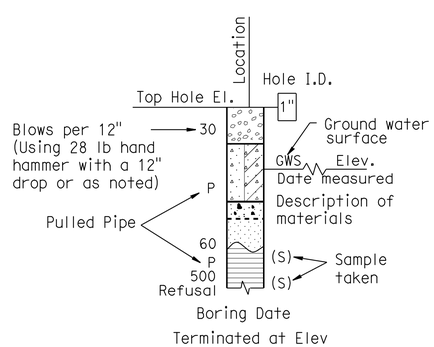

HAND BORING

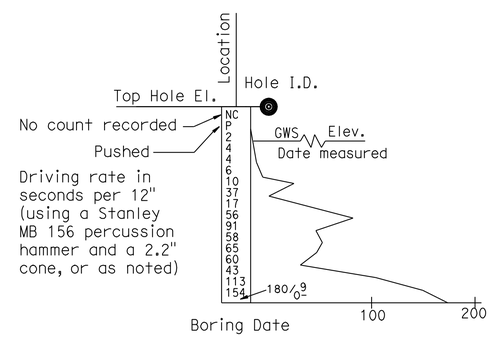

DYNAMIC CONE PENETRATION BORING

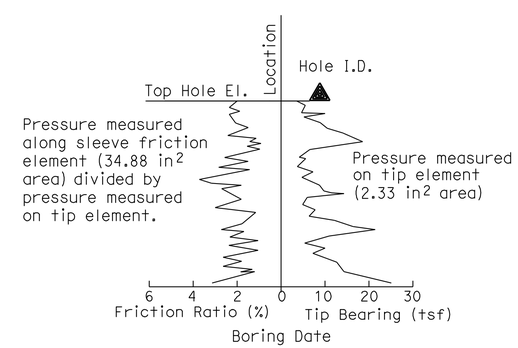

CONE PENETRATION TEST (CPT) SOUNDING

ENGINEERING SERVICES	GEOTECHNICAL SERVICES	STATE OF CALIFORNIA DEPARTMENT OF TRANSPORTATION	DIVISION OF ENGINEERING SERVICES STRUCTURE DESIGN DESIGN BRANCH 17	BRIDGE NO. 39-0212 POST MILES 25.77	SAN JOAQUIN RIVER OVERFLOW BRIDGE (WIDEN)
FUNCTIONAL SUPERVISOR	DRAWN BY: W. Tang 04/09	FIELD INVESTIGATION BY:			LOG OF TEST BORINGS 2 OF 3
NAME: Q. Huang	CHECKED BY: J. Thorne	S. Sunding			

OGS CIVIL LOG OF TEST BORINGS SHEET

ORIGINAL SCALE IN INCHES FOR REDUCED PLANS 0 1 2 3

CU 06241
EA 279801

DISREGARD PRINTS BEARING EARLIER REVISION DATES

REVISION DATES: 04-01-09 06-09-09 08-20-09

SHEET 11 OF 12

FILE => 39-0212-z-lltb02.dgn

USERNAME => friehard DATE PLOTTED => 24-JUN-2010 TIME PLOTTED => 08:01

REFERENCE: CALTRANS SOIL & ROCK LOGGING, CLASSIFICATION, AND PRESENTATION MANUAL.

DIST	COUNTY	ROUTE	POST MILES TOTAL PROJECT	SHEET No	TOTAL SHEETS
10	Mer	165	11.7/26.7	87	110

REGISTERED CIVIL ENGINEER 9-4-09

6-21-10
PLANS APPROVAL DATE

REGISTERED GEOLOGIST
Zheng Xing
No. 2130
Exp. 3-31-2011
CERTIFIED ENGINEERING GEOLOGIST
STATE OF CALIFORNIA

The State of California or its officers or agents shall not be responsible for the accuracy or completeness of electronic copies of this plan sheet.

GROUP SYMBOLS AND NAMES

Graphic/Symbol	Group Names
GW	Well-graded GRAVEL Well-graded GRAVEL with SAND
GP	Poorly graded GRAVEL Poorly graded GRAVEL with SAND
GW-GM	Well-graded GRAVEL with SILT Well-graded GRAVEL with SILT and SAND
GW-GC	Well-graded GRAVEL with CLAY (or SILTY CLAY) Well-graded GRAVEL with CLAY and SAND (or SILTY CLAY and SAND)
GP-GM	Poorly graded GRAVEL with SILT Poorly graded GRAVEL with SILT and SAND
GP-GC	Poorly graded GRAVEL with CLAY (or SILTY CLAY) Poorly graded GRAVEL with CLAY and SAND (or SILTY CLAY and SAND)
GM	SILTY GRAVEL SILTY GRAVEL with SAND
GC	CLAYEY GRAVEL CLAYEY GRAVEL with SAND
GC-GM	SILTY, CLAYEY GRAVEL SILTY, CLAYEY GRAVEL with SAND
SW	Well-graded SAND Well-graded SAND with GRAVEL
SP	Poorly graded SAND Poorly graded SAND with GRAVEL
SW-SM	Well-graded SAND with SILT Well-graded SAND with SILT and GRAVEL
SW-SC	Well-graded SAND with CLAY (or SILTY CLAY) Well-graded SAND with CLAY and GRAVEL (or SILTY CLAY and GRAVEL)
SP-SM	Poorly graded SAND with SILT Poorly graded SAND with SILT and GRAVEL
SP-SC	Poorly graded SAND with CLAY (or SILTY CLAY) Poorly graded SAND with CLAY and GRAVEL (or SILTY CLAY and GRAVEL)
SM	SILTY SAND SILTY SAND with GRAVEL
SC	CLAYEY SAND CLAYEY SAND with GRAVEL
SC-SM	SILTY, CLAYEY SAND SILTY, CLAYEY SAND with GRAVEL
PT	PEAT
	COBBLES COBBLES and BOULDERS BOULDERS

Graphic/Symbol	Group Names
CL	Lean CLAY Lean CLAY with SAND Lean CLAY with GRAVEL SANDY lean CLAY SANDY lean CLAY with GRAVEL GRAVELLY lean CLAY GRAVELLY lean CLAY with SAND
CL-ML	SILTY CLAY SILTY CLAY with SAND SILTY CLAY with GRAVEL SANDY SILTY CLAY SANDY SILTY CLAY with GRAVEL GRAVELLY SILTY CLAY GRAVELLY SILTY CLAY with SAND
ML	SILT SILT with SAND SILT with GRAVEL SANDY SILT SANDY SILT with GRAVEL GRAVELLY SILT GRAVELLY SILT with SAND
OL	ORGANIC lean CLAY ORGANIC lean CLAY with SAND ORGANIC lean CLAY with GRAVEL SANDY ORGANIC lean CLAY SANDY ORGANIC lean CLAY with GRAVEL GRAVELLY ORGANIC lean CLAY GRAVELLY ORGANIC lean CLAY with SAND
OL	ORGANIC SILT ORGANIC SILT with SAND ORGANIC SILT with GRAVEL SANDY ORGANIC SILT SANDY ORGANIC SILT with GRAVEL GRAVELLY ORGANIC SILT GRAVELLY ORGANIC SILT with SAND
CH	Fat CLAY Fat CLAY with SAND Fat CLAY with GRAVEL SANDY fat CLAY SANDY fat CLAY with GRAVEL GRAVELLY fat CLAY GRAVELLY fat CLAY with SAND
MH	Elastic SILT Elastic SILT with SAND Elastic SILT with GRAVEL SANDY elastic SILT SANDY elastic SILT with GRAVEL GRAVELLY elastic SILT GRAVELLY elastic SILT with SAND
OH	ORGANIC fat CLAY ORGANIC fat CLAY with SAND ORGANIC fat CLAY with GRAVEL SANDY ORGANIC fat CLAY SANDY ORGANIC fat CLAY with GRAVEL GRAVELLY ORGANIC fat CLAY GRAVELLY ORGANIC fat CLAY with SAND
OH	ORGANIC elastic SILT ORGANIC elastic SILT with SAND ORGANIC elastic SILT with GRAVEL SANDY ORGANIC elastic SILT SANDY ORGANIC elastic SILT with GRAVEL GRAVELLY ORGANIC elastic SILT GRAVELLY ORGANIC elastic SILT with SAND
OL/OH	ORGANIC SOIL ORGANIC SOIL with SAND ORGANIC SOIL with GRAVEL SANDY ORGANIC SOIL SANDY ORGANIC SOIL with GRAVEL GRAVELLY ORGANIC SOIL GRAVELLY ORGANIC SOIL with SAND

FIELD AND LABORATORY TESTING

- (C) Consolidation (ASTM D 2435)
- (CL) Collapse Potential (ASTM D 5333)
- (CP) Compaction Curve (CTM 216)
- (CR) Corrosivity Testing (CTM 643, CTM 422, CTM 417)
- (CU) Consolidated Undrained Triaxial (ASTM D 4767)
- (DS) Direct Shear (ASTM D 3080)
- (EI) Expansion Index (ASTM D 4829)
- (M) Moisture Content (ASTM D 2216)
- (OC) Organic Content-% (ASTM D 2974)
- (P) Permeability (CTM 220)
- (PA) Particle Size Analysis (ASTM D 422)
- (PI) Plasticity Index (AASHTO T 90) Liquid Limit (AASHTO T 89)
- (PL) Point Load Index (ASTM D 5731)
- (PM) Pressure Meter
- (PP) Pocket Penetrometer
- (R) R-Value (CTM 301)
- (SE) Sand Equivalent (CTM 217)
- (SG) Specific Gravity (AASHTO T 100)
- (SL) Shrinkage Limit (ASTM D 427)
- (SW) Swell Potential (ASTM D 4546)
- (TV) Pocket Torvane
- (UC) Unconfined Compression-Soil (ASTM D 2166) Unconfined Compression-Rock (ASTM D 2938)
- (UU) Unconsolidated Undrained Triaxial (ASTM D 2850)
- (UW) Unit Weight (ASTM D 4767)
- (VS) Vane Shear (AASHTO T 223)

APPARENT DENSITY OF COHESIONLESS SOILS

Description	SPT N_{60} (Blows / 12 inches)
Very loose	0 - 4
Loose	5 - 10
Medium Dense	11 - 30
Dense	31 - 50
Very Dense	> 50

MOISTURE

Description	Criteria
Dry	Absence of moisture, dusty, dry to the touch
Moist	Damp but no visible water
Wet	Visible free water, usually soil is below water table

PERCENT OR PROPORTION OF SOILS

Description	Criteria
Trace	Particles are present but estimated to be less than 5%
Few	5 to 10%
Little	15 to 25%
Some	30 to 45%
Mostly	50 to 100%

PARTICLE SIZE

Description		Size
Boulder		> 12"
Cobble		3" to 12"
Gravel	Coarse	3/4" to 3"
	Fine	No. 4 to 3/4"
Sand	Coarse	No. 10 to No. 4
	Medium	No. 40 to No. 10
	Fine	No. 200 to No. 40

ENGINEERING SERVICES	GEOTECHNICAL SERVICES	STATE OF CALIFORNIA DEPARTMENT OF TRANSPORTATION	DIVISION OF ENGINEERING SERVICES STRUCTURE DESIGN DESIGN BRANCH 17	BRIDGE NO. 39-0212 POST MILES 25.77	SAN JOAQUIN RIVER OVERFLOW BRIDGE (WIDEN) LOG OF TEST BORINGS 3 OF 3
FUNCTIONAL SUPERVISOR NAME: Q. Huang	DRAWN BY: W. Tang 04/09 CHECKED BY: J. Thorne	FIELD INVESTIGATION BY: S. Sunding			

OGS CIVIL LOG OF TEST BORINGS SHEET

ORIGINAL SCALE IN INCHES FOR REDUCED PLANS 0 1 2 3

CU 06241
EA 279801

DISREGARD PRINTS BEARING EARLIER REVISION DATES 04-01-09 06-08-09 08-20-09

REVISION DATES

SHEET 12 OF 12

FILE => 39-0212-z-ltb03.dgn

USERNAME => trlenard DATE PLOTTED => 24-JUN-2010 TIME PLOTTED => 08:01

DIST	COUNTY	ROUTE	POST MILES TOTAL PROJECT	SHEET No	TOTAL SHEETS
10	Mer	165	11.7/26.7	88	110

REGISTERED CIVIL ENGINEER 11-18-09 DATE

6-21-10
PLANS APPROVAL DATE

REGISTERED PROFESSIONAL ENGINEER RODNEY SIMMONS No. C 51174 Exp. 09-30-11 CIVIL STATE OF CALIFORNIA

The State of California or its officers or agents shall not be responsible for the accuracy or completeness of electronic copies of this plan sheet.

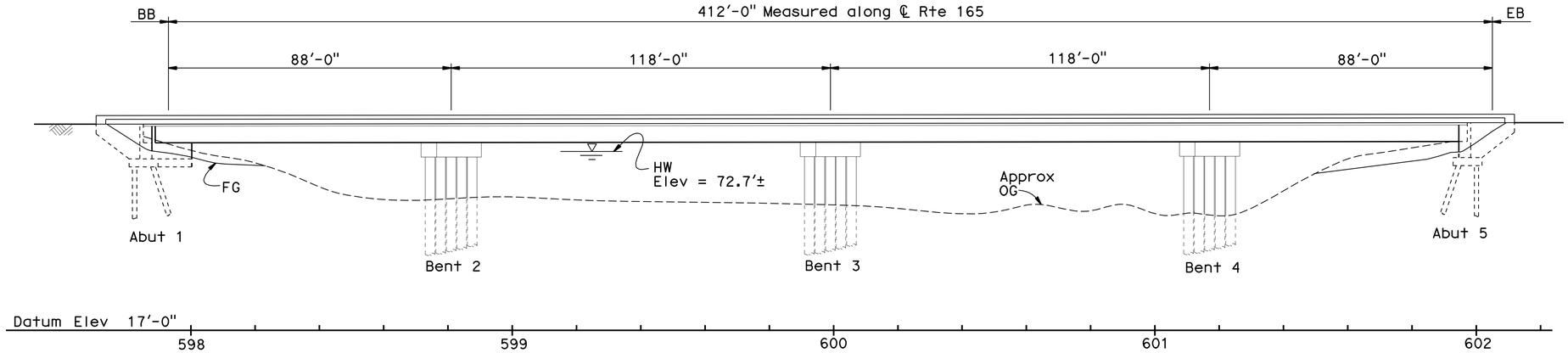

ELEVATION
1" = 20'

SCUPPER STATIONING

Left Edge of Deck Station				Right Edge of Deck Station			
1.	598+06	10.	600+26	1.	597+91	10.	600+11
2.	598+26	11.	600+46	2.	598+11	11.	600+31
3.	598+46	12.	600+66	3.	598+31	12.	600+51
4.	598+66	13.	600+86	4.	598+51	13.	600+71
5.	599+06	14.	601+06	5.	598+91	14.	600+91
6.	599+26	15.	601+46	6.	599+11	15.	601+31
7.	599+46	16.	601+66	7.	599+31	16.	601+51
8.	599+66	17.	601+86	8.	599+51	17.	601+71
9.	599+86	18.	602+06	9.	599+71	18.	610+91

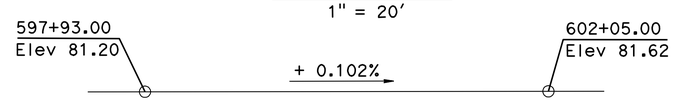

PROFILE GRADE
No Scale

QUANTITIES

BRIDGE REMOVAL	LUMP	SUM
STRUCTURE EXCAVATION (BRIDGE)	405	CY
STRUCTURE BACKFILL (BRIDGE)	145	CY
FURNISH PILING (CLASS 200) (ALTERNATIVE W)	1,286	LF
DRIVE PILE (CLASS 200)(ALTERNATIVE W)	24	EA
FURNISH 36" CAST-IN-STEEL SHELL CONCRETE PILING	1,559	LF
DRIVE 36" CAST-IN-STEEL SHELL CONCRETE PILE	15	EA
STRUCTURAL CONCRETE, BRIDGE FOOTING	50	CY
STRUCTURAL CONCRETE, BRIDGE	790	CY
FURNISH PRECAST PRESTRESSED CONCRETE BULB-TEE GIRDER (80'-90')	10	EA
FURNISH PRECAST PRESTRESSED CONCRETE BULB-TEE GIRDER (110'-120')	10	EA
ERECT PRECAST PRESTRESSED CONCRETE GIRDER	20	EA
JOINT SEAL (MR 2")	92	LF
BAR REINFORCING STEEL (BRIDGE)	252,500	LB
CLEAN AND THERMAL SPRAY COAT STEEL PILING	LUMP	SUM
CONCRETE BARRIER (TYPE 732)	879	LF

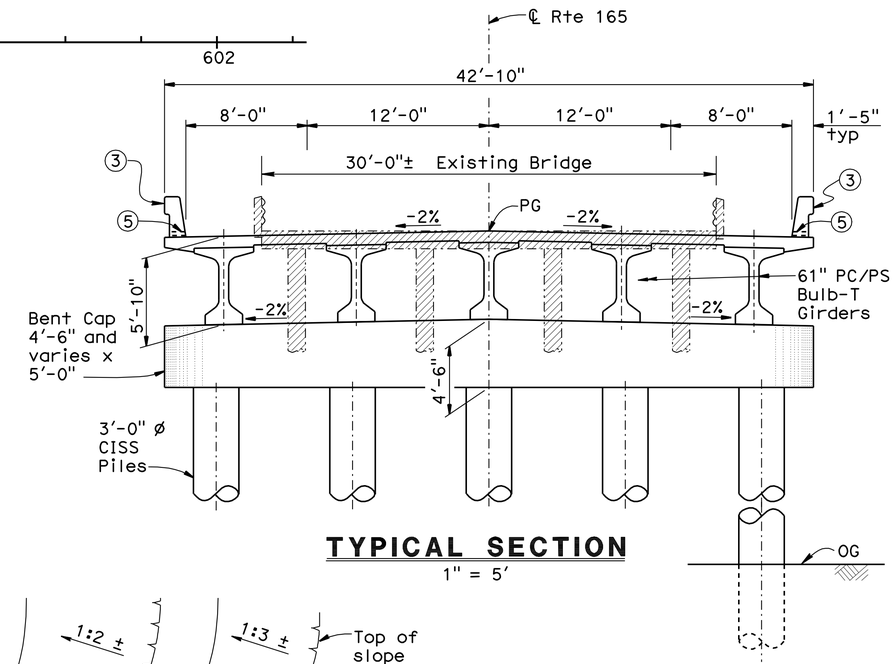

TYPICAL SECTION
1" = 5'

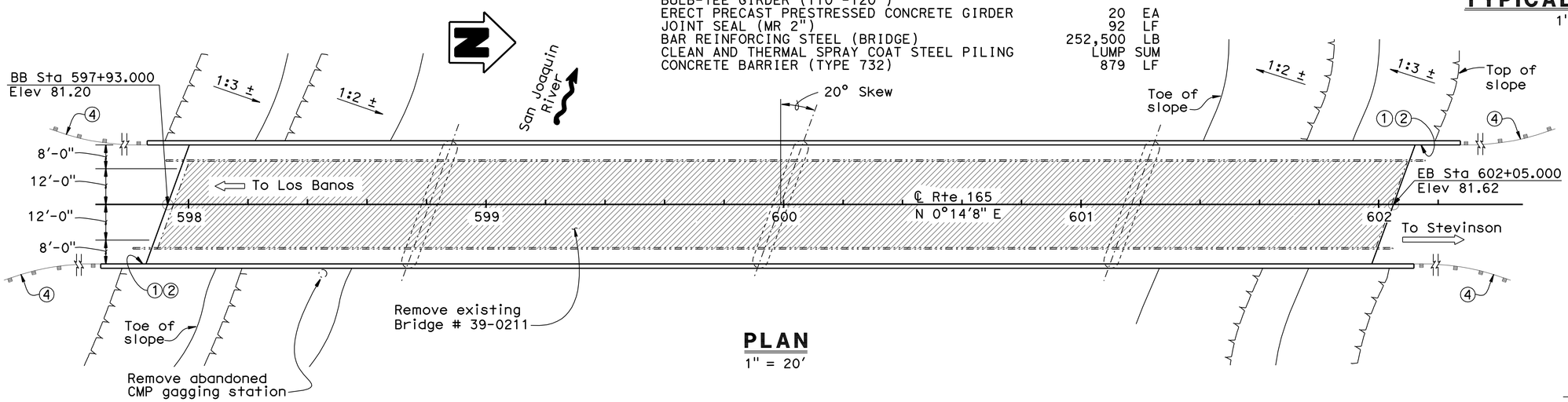

PLAN
1" = 20'

NOTES:

For "STANDARD PLAN LIST" and "GENERAL NOTES", see "INDEX TO PLANS" sheet.

1. Paint "San Joaquin River Bridge".
2. Paint "Br. No. 39-0246".
3. Concrete Barrier Type 732.
4. MBGR, see "Road Plans".
5. Scuppers. For scupper location, see "SCUPPER STATIONING" table. For scupper details, see "Typical Section" sheet.

Indicates Material removal. Existing bridge, including supplemental steel bents, to be removed to 3 ft below existing grade minimum.

Indicates existing structure.

Kevin Keady
DESIGN ENGINEER

	BY	CHECKED
DESIGN	Rod Simmons/Ae Tern	Zihan Yan
DETAILS	Lily Wang	Rod Simmons
QUANTITIES	Igor Chernioglo	Rod Simmons

LOAD & RESISTANCE FACTOR DESIGN — LIVE LOADING: HL93 W/"LOW-BOY"; PERMIT DESIGN VEHICLE

	BY	CHECKED
LAYOUT	Rod Simmons	Ae Tern
SPECIFICATIONS	Xiahong Li	PLANS AND SPECS COMPARED X

ORIGINAL SCALE IN INCHES FOR REDUCED PLANS 0 1 2 3

STATE OF CALIFORNIA
DEPARTMENT OF TRANSPORTATION

DIVISION OF ENGINEERING SERVICES
STRUCTURE DESIGN
DESIGN BRANCH 17

CU 06241
EA 279801

BRIDGE NO. 39-0246
POST MILE 25.61

SAN JOAQUIN RIVER BR. (REPLACE)
GENERAL PLAN

DISREGARD PRINTS BEARING EARLIER REVISION DATES

REVISION DATES: 01-28-08 04-04-08 06-08-08 11-18-09 02-04-09 02-26-09 03-06-09 03-16-09 03-26-09

SHEET 1 OF 23

STRUCTURES DESIGN GENERAL PLAN SHEET (ENGLISH) (REV.07-24-06)

FILE => 39-0246-a-gp.dgn

USERNAME => trmikest DATE PLOTTED => 24-JUN-2010 TIME PLOTTED => 13:22

DIST	COUNTY	ROUTE	POST MILES TOTAL PROJECT	SHEET No	TOTAL SHEETS
10	Mer	165	11.7/26.7	89	110

REGISTERED CIVIL ENGINEER 11-18-09 DATE

6-21-10
PLANS APPROVAL DATE

REGISTERED PROFESSIONAL ENGINEER RODNEY SIMMONS No. C 51174 Exp. 09-30-11 CIVIL STATE OF CALIFORNIA

The State of California or its officers or agents shall not be responsible for the accuracy or completeness of electronic copies of this plan sheet.

GENERAL NOTES
LOAD AND RESISTANCE FACTOR DESIGN

DESIGN:
AASHTO LRFD Bridge Design Specifications, 3rd edition with Interims through 2006 and California Amendments v 3.06.01

SEISMIC DESIGN:
Caltrans Seismic Design Criteria (SDC), Version 1.4 dated June 2006

DEAD LOAD:
Includes 35 psf for future wearing surface. The deck load between the girders has been increased by a factor of 10% to allow for the use of steel deck forms.

LIVE LOADING:
HL93 and permit design load.

SEISMIC LOADING:
Soil profile type (E)
Magnitude group (6.5 +/- 0.25)
Peak Rock Acceleration 0.3 g

CONCRETE:
fy = 60 ksi
f'c = 3.6 ksi
n = 8
See prestressing notes.

STRUCTURAL STEEL (new construction):
Steel Pipe Piles: ASTM A252 Grade 3
fy = 45 ksi

PILE DATA TABLE

LOCATION	PILE TYPE	NOMINAL RESISTANCE COMPRESSION	NOMINAL RESISTANCE TENSION	DESIGN TIP ELEVATION	SPECIFIED TIP ELEVATION	NOMINAL DRIVING RESISTANCE
Abut 1	16" Class 200 Alt W	230 kips	N/A	9.0 (a)	9.0	349 kips
Bent 2	36" CISS	900 Kips	N/A	-24.1 (a) -9.5 (b)	-24.1	1626 Kips
Bent 3	36" CISS	990 Kips	N/A	-19.4 (a) -9.5 (b)	-19.4	1290 Kips
Bent 4	36" CISS	900 Kips	N/A	-16.0 (a) -9.5 (b)	-16.0	1426 Kips
Abut 5	16" Class 200 Alt W	230 kips	N/A	24.0 (a)	24.0	349 kips

Notes:
1. For Pile Details, see "Abutment Details No. 1" and "Bent Details No. 2" sheets
2. Design tip elevations are controlled by: (a) compression (b) lateral loads.
3. The length of 36" CISS piling to be provided shall be the length required to reach the specified tip elevation, plus an additional 200 feet for use as required by the engineer.

INDEX TO PLANS

SHEET NO.	TITLE
1.	GENERAL PLAN
2.	INDEX TO PLANS
3.	DECK CONTOURS
4.	FOUNDATION PLAN
5.	ABUTMENT LAYOUT
6.	ABUTMENT DETAILS NO. 1
7.	ABUTMENT DETAILS NO. 2
8.	BENT LAYOUT
9.	BENT DETAILS NO. 1
10.	BENT DETAILS NO. 2
11.	TYPICAL SECTION
12.	GIRDER LAYOUT & DETAILS NO. 1
13.	GIRDER LAYOUT & DETAILS NO. 2
14.	GIRDER REINFORCEMENT
15.	PRESTRESSED BULB-TEE GIRDER DETAILS NO. 1
16.	PRESTRESSED BULB-TEE GIRDER DETAILS NO. 2
17.	LOG OF TEST BORINGS 1 OF 7
18.	LOG OF TEST BORINGS 2 OF 7
19.	LOG OF TEST BORINGS 3 OF 7
20.	LOG OF TEST BORINGS 4 OF 7
21.	LOG OF TEST BORINGS 5 OF 7
22.	LOG OF TEST BORINGS 6 OF 7
23.	LOG OF TEST BORINGS 7 OF 7

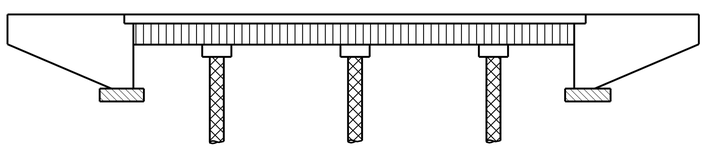

Structural Concrete, Bridge (f'c = 4000 psi @ 28 days)

Structural Concrete, Bridge Footing

Prestressed Bulb-Tee Girders, see "Prestressed Bulb-Tee Girder Details No. 1" and "Prestressed Bulb-Tee Girder Details No. 2" sheets

CISS Pile

CONCRETE STRENGTH AND TYPE LIMITS
NO SCALE

STANDARD PLANS DATED MAY 2006

A10A	ACRONYMS AND ABBREVIATIONS (A-L)
A10B	ACRONYMS AND ABBREVIATIONS (M-Z)
A10C	SYMBOLS (SHEET 1 OF 2)
A10D	SYMBOLS (SHEET 2 OF 2)
B0-1	BRIDGE DETAILS
B0-5	BRIDGE DETAILS
B0-13	BRIDGE DETAILS
B2-8	PILE DETAILS CLASS 200
B6-21	JOINT SEALS (MAXIMUM MOVEMENT RATING = 2")
B11-55	CONCRETE BARRIER TYPE 732

Standard Plan sheet number

Detail number

	BY	CHECKED
DESIGN	Zihan Yan	Rod Simmons
DETAILS	Susan Ng	Rod Simmons
QUANTITIES	Igor Cherniogio	Rod Simmons

STATE OF CALIFORNIA
DEPARTMENT OF TRANSPORTATION

DIVISION OF ENGINEERING SERVICES
STRUCTURE DESIGN
DESIGN BRANCH 17

BRIDGE NO. 39-0246
POST MILE 25.61

SAN JOAQUIN RIVER BR. (REPLACE)
INDEX TO PLANS

STRUCTURES DESIGN DETAIL SHEET (ENGLISH) (REV. 10/25/05)

ORIGINAL SCALE IN INCHES FOR REDUCED PLANS 0 1 2 3

CU 06241
EA 279801

DISREGARD PRINTS BEARING EARLIER REVISION DATES

REVISION DATES: 01-16-09 08-19-09 11-18-09 03-16-09 03-26-09 04-02-09 04-04-09 04-23-09 06-12-09 06-12-09

SHEET 2 OF 23

FILE => 39-0246-a-itp.dgn

USERNAME => tfriehard DATE PLOTTED => 24-JUN-2010 TIME PLOTTED => 08:01

DIST	COUNTY	ROUTE	POST MILES TOTAL PROJECT	SHEET No	TOTAL SHEETS
10	Mer	165	11.7/26.7	90	110

REGISTERED CIVIL ENGINEER — DATE 9-4-09

6-21-10
PLANS APPROVAL DATE

REGISTERED PROFESSIONAL ENGINEER — RODNEY SIMMONS — No. C 51174 — Exp. 09-30-09 — CIVIL — STATE OF CALIFORNIA

The State of California or its officers or agents shall not be responsible for the accuracy or completeness of electronic copies of this plan sheet.

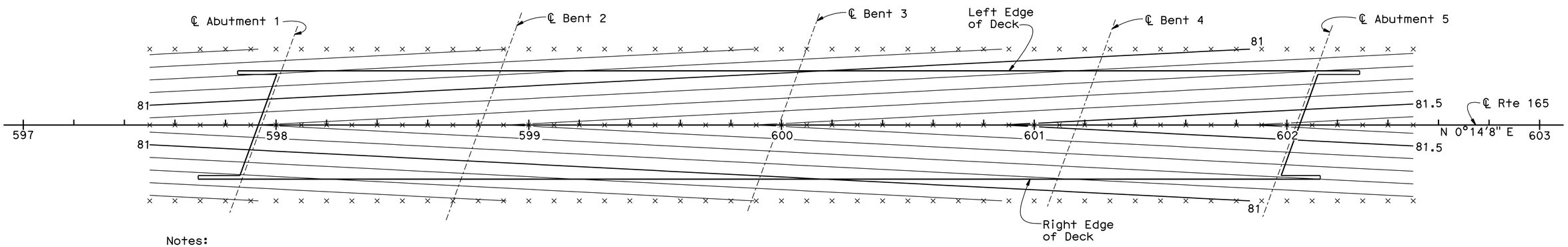

Notes:

1. 0.1′ Contour Interval.
2. Contours do not include camber.

x = 10′ Intervals along station line.

PLAN
1" = 20′

DESIGN	BY Ae Tern	CHECKED Rod Simmons	
DETAILS	BY Lily Wang	CHECKED Ae Tern	
QUANTITIES	BY Igor Cherniogio	CHECKED Rod Simmons	

STATE OF CALIFORNIA
DEPARTMENT OF TRANSPORTATION

DIVISION OF ENGINEERING SERVICES
STRUCTURE DESIGN
DESIGN BRANCH 17

BRIDGE NO. 39-0246
POST MILE 25.61

SAN JOAQUIN RIVER BR. (REPLACE)
DECK CONTOURS

STRUCTURES DESIGN DETAIL SHEET (ENGLISH) (REV. 10/25/05)

ORIGINAL SCALE IN INCHES FOR REDUCED PLANS 0 1 2 3

CU 06241
EA 279801

DISREGARD PRINTS BEARING EARLIER REVISION DATES

REVISION DATES: 02-23-09 02-25-09 03-05-09 03-16-09 04-23-09 06-10-09

SHEET 3 OF 23

FILE => 39-0246-d-dc.dgn

USERNAME => friehard DATE PLOTTED => 24-JUN-2010 TIME PLOTTED => 08:01

DIST	COUNTY	ROUTE	POST MILES TOTAL PROJECT	SHEET No	TOTAL SHEETS
10	Mer	165	11.7/26.7	91	110

REGISTERED CIVIL ENGINEER 9-4-09 DATE

6-21-10
PLANS APPROVAL DATE

REGISTERED PROFESSIONAL ENGINEER RODNEY SIMMONS No. C 51174 Exp. 09-30-09 CIVIL STATE OF CALIFORNIA

The State of California or its officers or agents shall not be responsible for the accuracy or completeness of electronic copies of this plan sheet.

LEGEND

- Denotes bottom of footing elevation
- Denotes existing piles and pile extensions (to be removed)
- Denotes Class 200 Steel Pipe Pile, Alt "W" Not all piles are shown
- Denotes 36" ø CISS Piles
- Denotes existing structure (to be removed)

Note:
Existing supplemental steel bents in spans 4-12 not shown (to be removed)

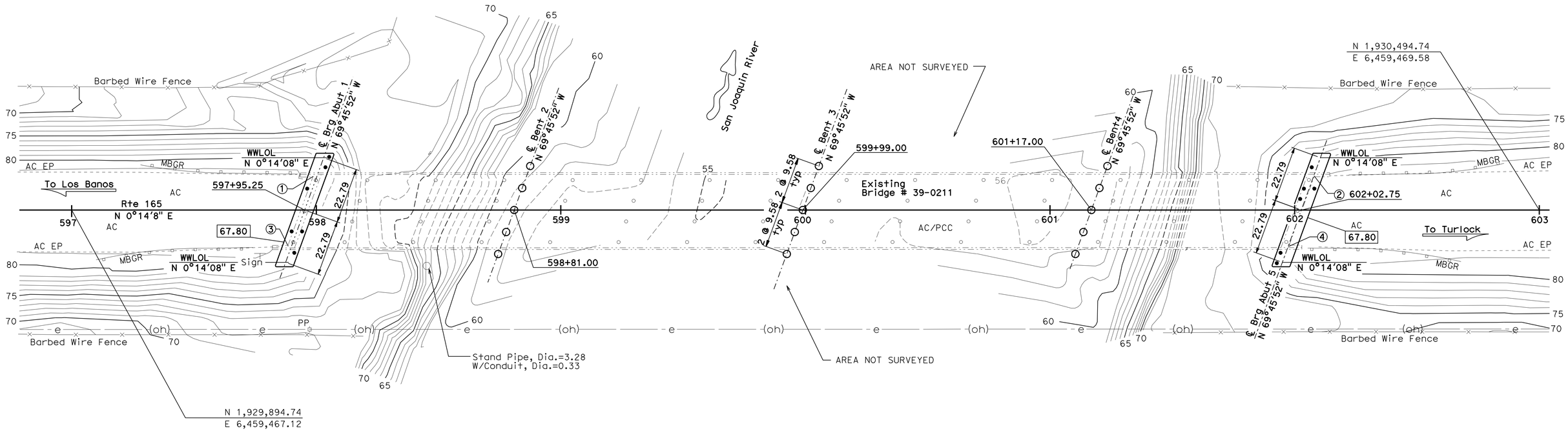

SURVEY CONTROL

PM25.60 (Not Shown On Plan)
Fnd 1" IP with Red Plug
20.48 FT Rt.℄ "A1" Line Rte 165
Sta. 596+60.50
N 1,929,835.16
E 6,459,487.44
Elev. = 80.13

PM 25.75 (Not Shown On Plan)
Fnd 1" IP With Red Plug
25.11 FT Lt.℄ "A1" Line Rte 165
Sta. 604+27.91
N 1,930,622.75
E 6,459,445.00
Elev. = 80.90

Bridge Location

① - 13.81 Lt ℄ "A1" Line Rte 165, Sta.597+98.83, Elev.=81.02 ±
② - 13.99 Lt ℄ "A1" Line Rte 165, Sta.602+07.94, Elev.=81.29 ±
③ - 14.82 Rt ℄ "A1" Line Rte 165, Sta.597+88.50, Elev.=81.07 ±
④ - 14.97 Rt ℄ "A1" Line Rte 165, Sta.601+97.38, Elev.=81.26 ±

HYDROLOGIC / HYDRAULIC DATA SUMMARY

DRAINAGE AREA: 7,500 SQUARE MILES

	DESIGN FLOOD	BASE FLOOD
FREQUENCY (YEARS)	50	100
DISCHARGE (CUBIC FEET PER SECOND)	16,800	21,655
WATER SURFACE ELEV. (FEET)	72.0	74.4

FLOOD PLAIN DATA ARE BASED UPON INFORMATION AVAILABLE WHEN THE PLANS WERE PREPARED AND ARE SHOWN TO MEET FEDERAL REQUIREMENTS. THE ACCURACY OF SAID INFORMATION IS NOT WARRANTED BY THE STATE AND INTERESTED OR AFFECTED PARTIES SHOULD MAKE THEIR OWN INVESTIGATIONS.

PRELIMINARY INVESTIGATION SECTION

SCALE	VERT.DATUM NGVD29	PHOTOGRAMMETRY AS OF: X			
1"=20'	HORZ.DATUM NAD83 (1991.35)	SURVEYED	BY District/T.Gillett	CHECKED	BY T.Gillett 05/2008
ALIGNMENT TIES Dist.Traverse Sheet		DRAFTED	BY T/Zolnikova 05/2008	CHECKED	BY J.Pallares 05/2008

	BY	CHECKED
DESIGN	Zihan Yan	Rod Simmons
DETAILS	Susan Ng/Lily Wang	Rod Simmons
QUANTITIES	Rick Macala	Rod Simmons

STATE OF CALIFORNIA
DEPARTMENT OF TRANSPORTATION

DIVISION OF ENGINEERING SERVICES
STRUCTURE DESIGN
DESIGN BRANCH 17

BRIDGE NO. 39-0246
POST MILE 25.61

SAN JOAQUIN RIVER BR. (REPLACE)
FOUNDATION PLAN

STRUCTURES FOUNDATION PLAN SHEET (ENGLISH) (REV. 10/25/05)

ORIGINAL SCALE IN INCHES FOR REDUCED PLANS 0 1 2 3

CU 06241
EA 279801

DISREGARD PRINTS BEARING EARLIER REVISION DATES

REVISION DATES: 08-08-08 01-22-09 02-05-09 03-06-09 03-16-09 03-16-09 04-07-09 06-12-09 6-12-09

SHEET 4 OF 23

FILE => 39-0246-e-fp101.dgn

USERNAME => trlenard DATE PLOTTED => 24-JUN-2010 TIME PLOTTED => 08:06

DIST	COUNTY	ROUTE	POST MILES TOTAL PROJECT	SHEET No	TOTAL SHEETS
10	Mer	165	11.7/26.7	92	110

REGISTERED CIVIL ENGINEER 9-4-09 DATE

6-21-10
PLANS APPROVAL DATE

REGISTERED PROFESSIONAL ENGINEER
RODNEY SIMMONS
No. C 51174
Exp. 09-30-09
CIVIL
STATE OF CALIFORNIA

The State of California or its officers or agents shall not be responsible for the accuracy or completeness of electronic copies of this plan sheet.

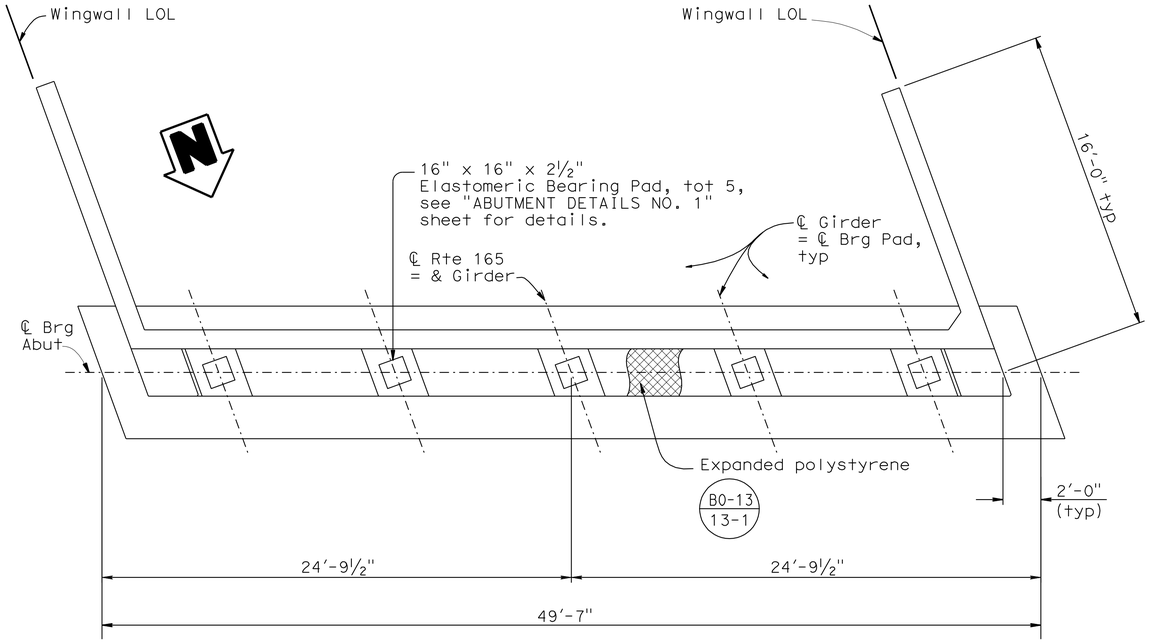

PLAN
¼"=1'-0"

NOTES:

1. Abutment 1 shown Abutment 5 similar.
2. For "Section A-A", see "ABUTMENT DETAILS NO. 1" sheet.

LEGEND:

Indicates 3:1 battered Pile

Indicates vertical Pile

Indicates approx location of existing Pile.

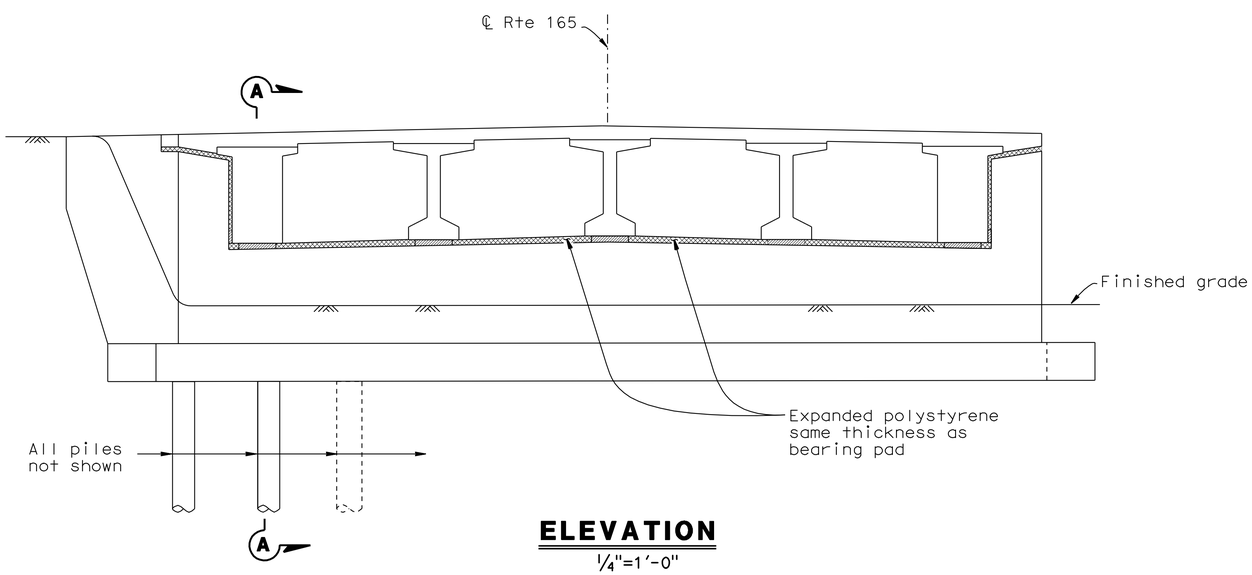

ELEVATION
¼"=1'-0"

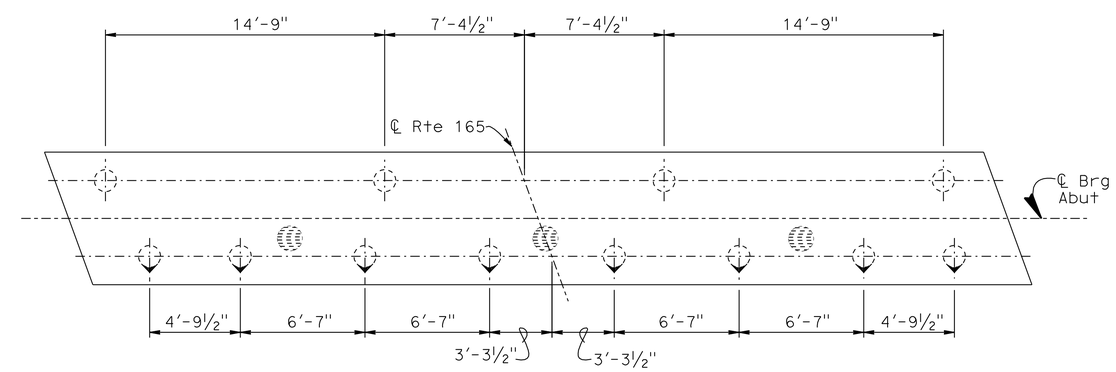

FOOTING & PILE LAYOUT
¼"=1'-0"

DESIGN	BY Zihan Yan	CHECKED Rod Simmons
DETAILS	BY Minh Tran	CHECKED Rod Simmons
QUANTITIES	BY Igor Cherniogio	CHECKED Rod Simmons

STATE OF CALIFORNIA
DEPARTMENT OF TRANSPORTATION

DIVISION OF ENGINEERING SERVICES
STRUCTURE DESIGN
DESIGN BRANCH 17

BRIDGE NO. 39-0246
POST MILE 25.61

SAN JOAQUIN RIVER BR. (REPLACE)
ABUTMENT LAYOUT

STRUCTURES DESIGN DETAIL SHEET (ENGLISH) (REV. 10/25/05)

ORIGINAL SCALE IN INCHES FOR REDUCED PLANS 0 1 2 3

CU 06241
EA 279801

DISREGARD PRINTS BEARING EARLIER REVISION DATES

REVISION DATES: 01-15-09, 03-09-09, 03-12-09, 03-19-09, 04-01-09, 06-10-09

SHEET 5 OF 23

FILE => 39-0246-f-ao.dgn

USERNAME => trlehard DATE PLOTTED => 24-JUN-2010 TIME PLOTTED => 08:06

DIST	COUNTY	ROUTE	POST MILES TOTAL PROJECT	SHEET No	TOTAL SHEETS
10	Mer	165	11.7/26.7	93	110

REGISTERED CIVIL ENGINEER 9-4-09 DATE

6-21-10
PLANS APPROVAL DATE

REGISTERED PROFESSIONAL ENGINEER RODNEY SIMMONS No. C 51174 Exp. 09-30-09 CIVIL STATE OF CALIFORNIA

The State of California or its officers or agents shall not be responsible for the accuracy or completeness of electronic copies of this plan sheet.

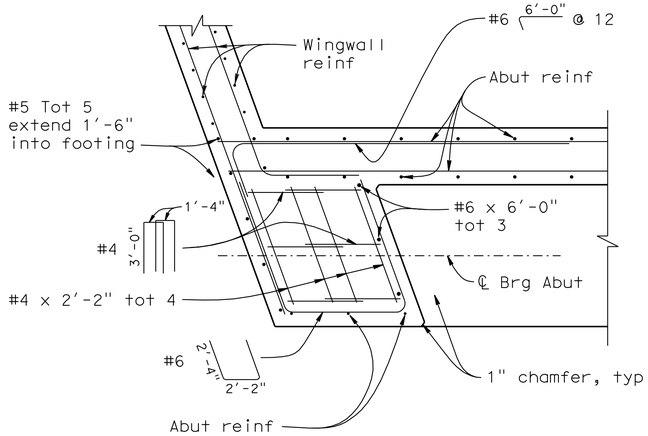

SECTION B-B

3/4"= 1'-0"

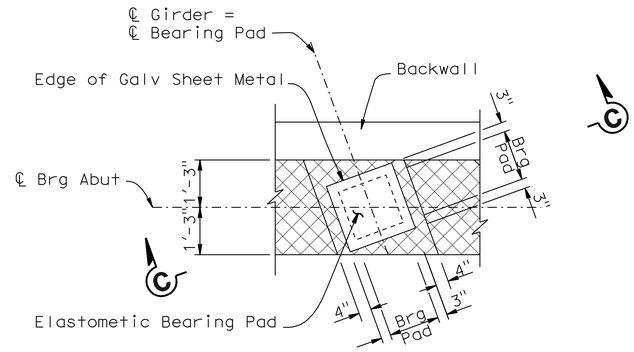

PLAN

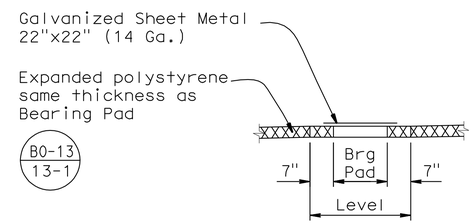

SECTION C-C

ABUTMENT BEARING PAD DETAIL

No Scale

(Details typical at all abutment bearing pads)

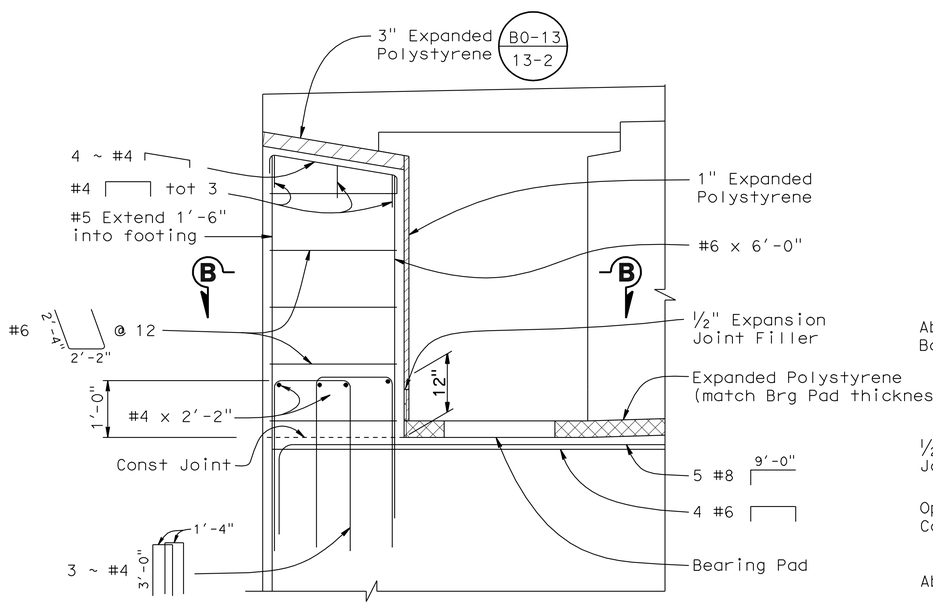

EXTERNAL SHEAR KEY DETAIL

3/4"= 1'-0"

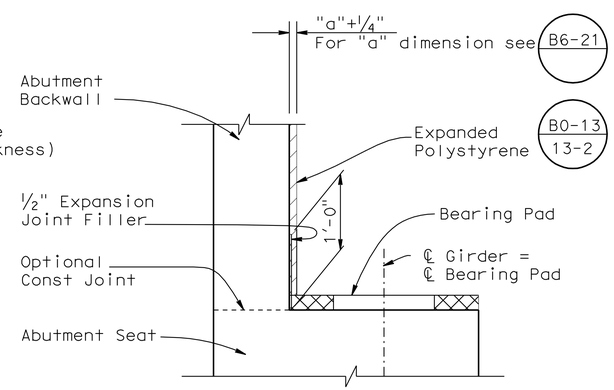

BACKWALL BASE DETAIL

No Scale

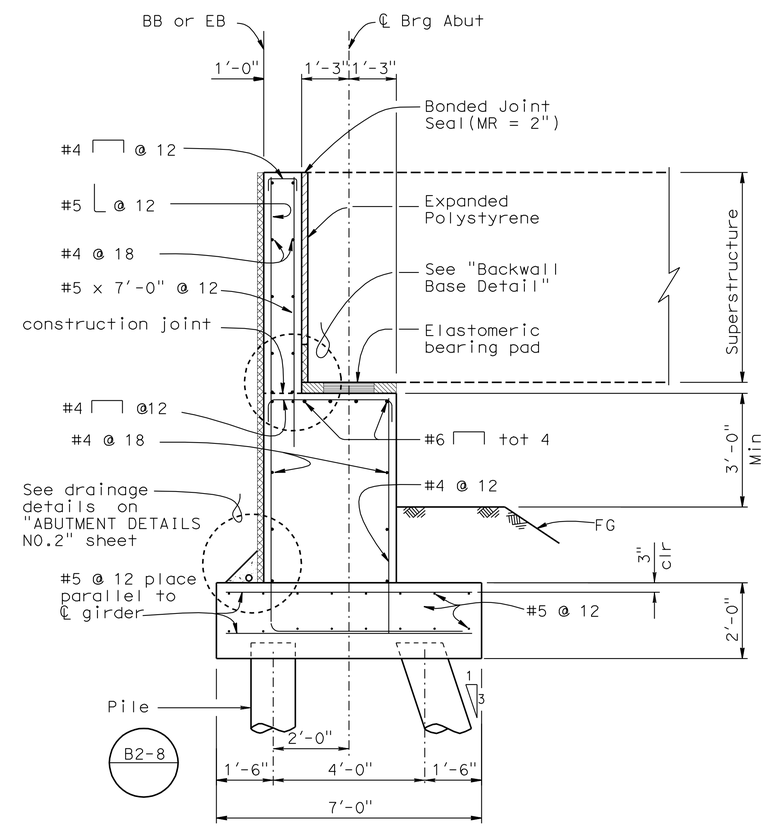

SECTION A-A

1/2"=1'-0"

DESIGN	BY Zihan Yan	CHECKED Rod Simmons	
DETAILS	BY Minh Tran/Susan Ng	CHECKED Rod Simmons	
QUANTITIES	BY Igor Cherniogio	CHECKED Rod Simmons	

STATE OF CALIFORNIA
DEPARTMENT OF TRANSPORTATION

DIVISION OF ENGINEERING SERVICES
STRUCTURE DESIGN
DESIGN BRANCH 17

BRIDGE NO. 39-0246
POST MILE 25.61

SAN JOAQUIN RIVER BR. (REPLACE)
ABUTMENT DETAILS NO.1

STRUCTURES DESIGN DETAIL SHEET (ENGLISH) (REV. 10/25/05)

ORIGINAL SCALE IN INCHES FOR REDUCED PLANS 0 1 2 3

CU 06241
EA 279801

DISREGARD PRINTS BEARING EARLIER REVISION DATES

REVISION DATES: 02-26-09 03-04-09 03-31-09 04-01-09 04-22-09 06-10-09 08-19-09

SHEET 6 OF 23

FILE => 39-0246-f-det.dgn

USERNAME => trlenard DATE PLOTTED => 24-JUN-2010 TIME PLOTTED => 08:07

DIST	COUNTY	ROUTE	POST MILES TOTAL PROJECT	SHEET No	TOTAL SHEETS
10	Mer	165	11.7/26.7	94	110

REGISTERED CIVIL ENGINEER — DATE 9-4-09

6-21-10
PLANS APPROVAL DATE

REGISTERED PROFESSIONAL ENGINEER — RODNEY SIMMONS — No. C 51174 — Exp. 09-30-09 — CIVIL — STATE OF CALIFORNIA

The State of California or its officers or agents shall not be responsible for the accuracy or completeness of electronic copies of this plan sheet.

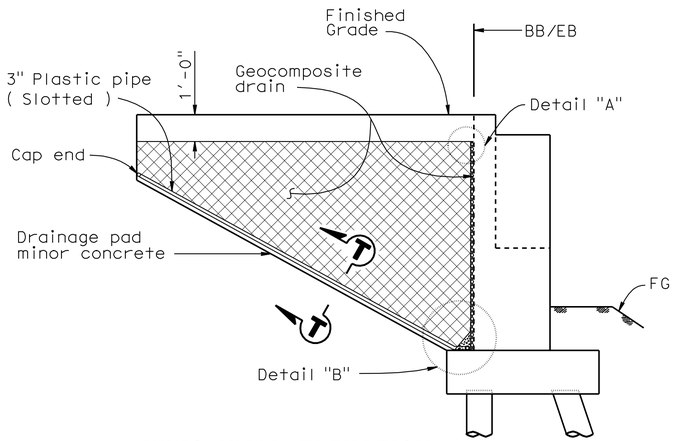

WING WALL ELEVATION

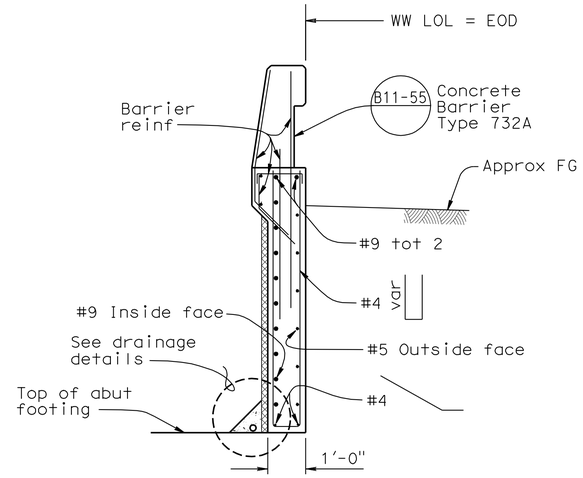

SECTION D-D

½"=1'-0"

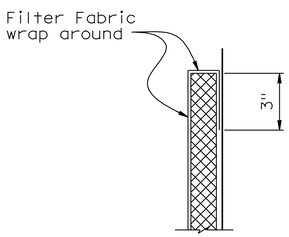

DETAIL "A"

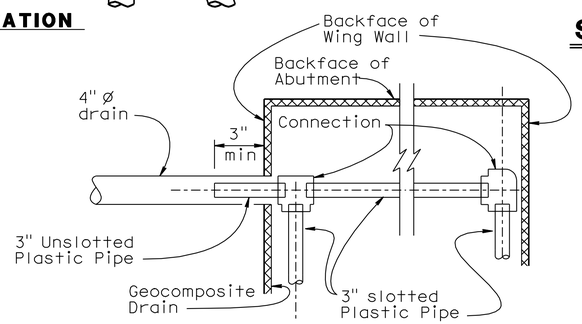

SECTION S-S

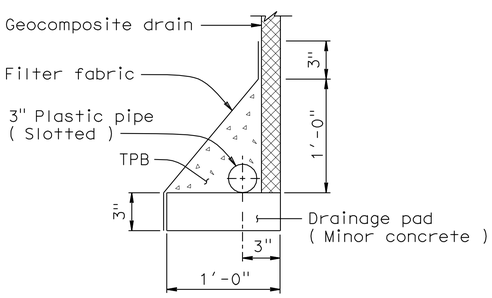

WITHOUT FOOTING

SECTION T-T

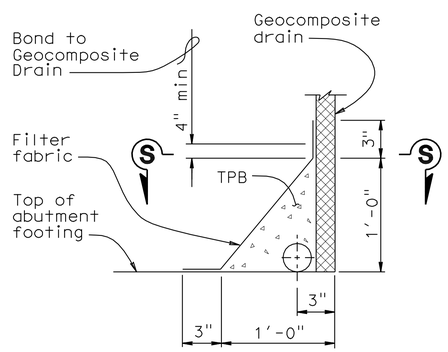

WITH FOOTING

DETAIL "B"

GEOCOMPOSITE DRAIN

NO SCALE

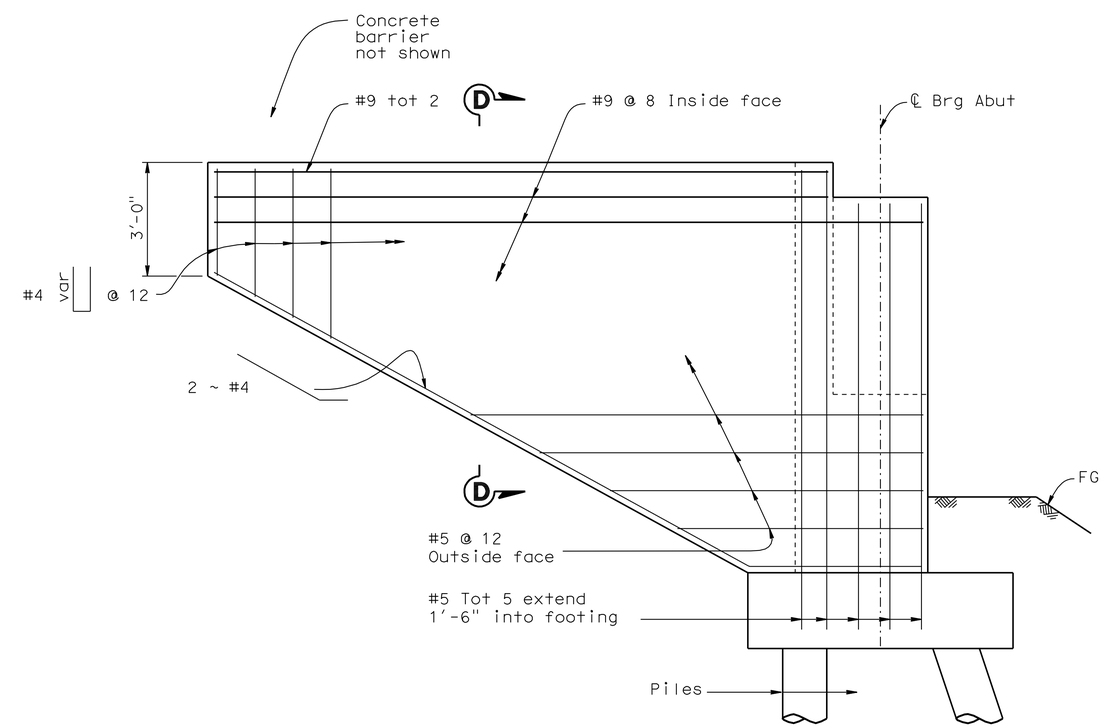

WINGWALL ELEVATION

½"=1'-0"

	BY	CHECKED
DESIGN	Zihan Yan	Rod Simmons
DETAILS	Minh Tran/Susan Ng	Rod Simmons
QUANTITIES	Igor Cherniogio	Rod Simmons

STATE OF CALIFORNIA
DEPARTMENT OF TRANSPORTATION

DIVISION OF ENGINEERING SERVICES
STRUCTURE DESIGN
DESIGN BRANCH 17

BRIDGE NO. 39-0246
POST MILE 25.61

SAN JOAQUIN RIVER BR. (REPLACE)
ABUTMENT DETAILS NO. 2

STRUCTURES DESIGN DETAIL SHEET (ENGLISH) (REV. 10/25/05)

ORIGINAL SCALE IN INCHES FOR REDUCED PLANS 0 1 2 3

CU 06241
EA 279801

DISREGARD PRINTS BEARING EARLIER REVISION DATES

REVISION DATES: 02-25-09 03-04-09 03-18-09 04-02-09 04-23-09 06-10-09

SHEET 7 OF 23

FILE => 39-0246-f-dt02-abut.dgn

USERNAME => friehard DATE PLOTTED => 24-JUN-2010 TIME PLOTTED => 08:07

DIST	COUNTY	ROUTE	POST MILES TOTAL PROJECT	SHEET No	TOTAL SHEETS
10	Mer	165	11.7/26.7	95	110

REGISTERED CIVIL ENGINEER 9-4-09 DATE

6-21-10
PLANS APPROVAL DATE

REGISTERED PROFESSIONAL ENGINEER RODNEY SIMMONS No. C 51174 Exp. 09-30-09 CIVIL STATE OF CALIFORNIA

The State of California or its officers or agents shall not be responsible for the accuracy or completeness of electronic copies of this plan sheet.

NOTE:

For Sections "F-F", and "G-G", see "BENT DETAILS NO. 1" sheet

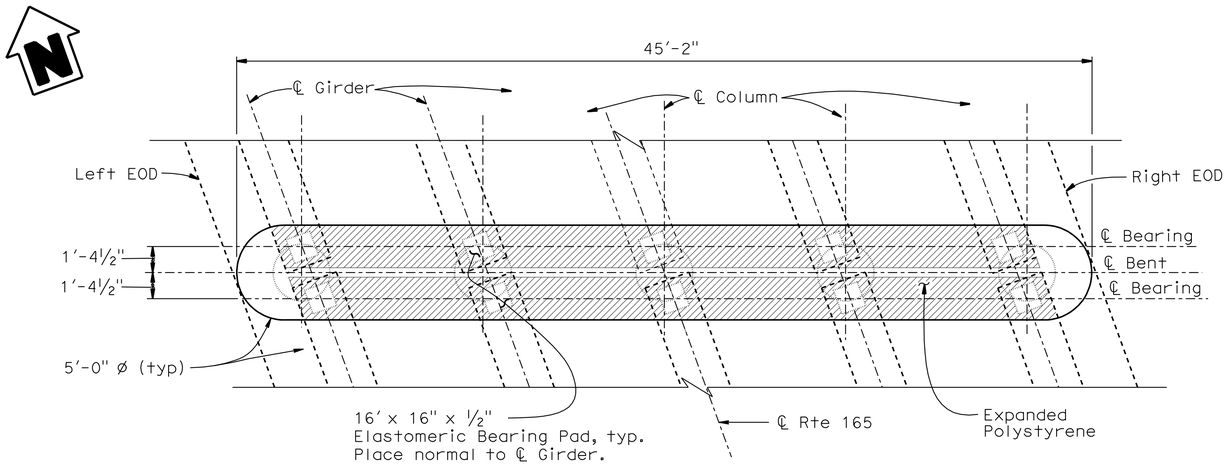

PLAN
¼" = 1'

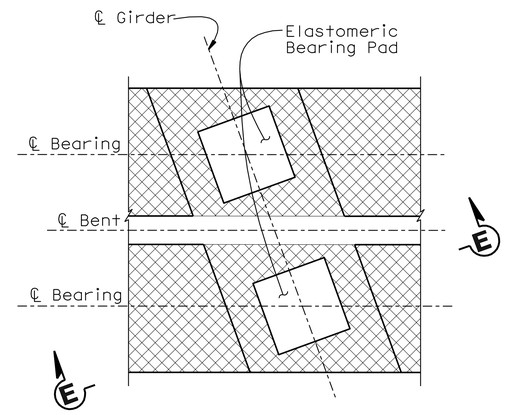

PLAN

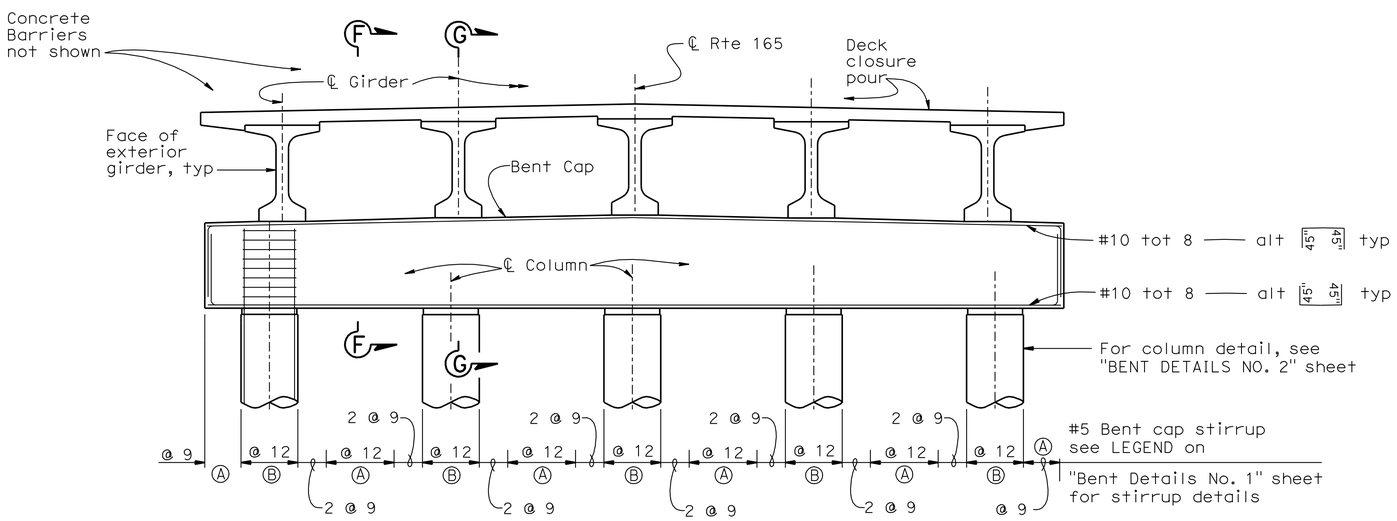

ELEVATION
¼" = 1'

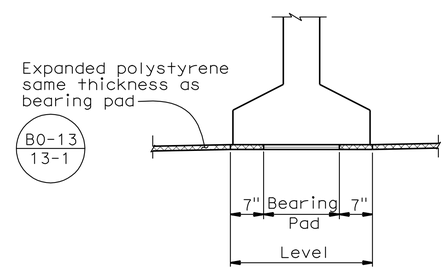

SECTION E-E

BENT CAP
BEARING PAD DETAIL
¾" = 1'-0"

DESIGN	BY Ae Tern	CHECKED Ron Simmons	
DETAILS	BY Lily Wang	CHECKED Rod Simmons	
QUANTITIES	BY Igor Chernioglo	CHECKED Rod Simmons	

STATE OF CALIFORNIA
DEPARTMENT OF TRANSPORTATION

DIVISION OF ENGINEERING SERVICES
STRUCTURE DESIGN
DESIGN BRANCH 17

BRIDGE NO. 39-0246
POST MILE 41.21

SAN JOAQUIN RIVER BR. (REPLACE)
BENT LAYOUT

STRUCTURES DESIGN DETAIL SHEET (ENGLISH) (REV. 10/25/05)

ORIGINAL SCALE IN INCHES FOR REDUCED PLANS 0 1 2 3

CU 06241
EA 279801

DISREGARD PRINTS BEARING EARLIER REVISION DATES

REVISION DATES: 01-28-09 03-02-09 03-09-09 03-16-09 03-26-09 04-01-09 4-21-09 6-12-09

SHEET 8 OF 20

FILE => 39-0246-h-b01_lo01.dgn

USERNAME => friemard DATE PLOTTED => 24-JUN-2010 TIME PLOTTED => 08:07

DIST	COUNTY	ROUTE	POST MILES TOTAL PROJECT	SHEET No	TOTAL SHEETS
10	Mer	165	11.7/26.7	96	110

REGISTERED CIVIL ENGINEER 9-4-09 DATE

6-21-10
PLANS APPROVAL DATE

REGISTERED PROFESSIONAL ENGINEER RODNEY SIMMONS No. C 51174 Exp. 09-30-09 CIVIL STATE OF CALIFORNIA

The State of California or its officers or agents shall not be responsible for the accuracy or completeness of electronic copies of this plan sheet.

NOTES:

1. Place stirrups parallel to ℄ Rte 165 and space along ℄ Bent.
2. Exterior bay shown, interior bays similar.

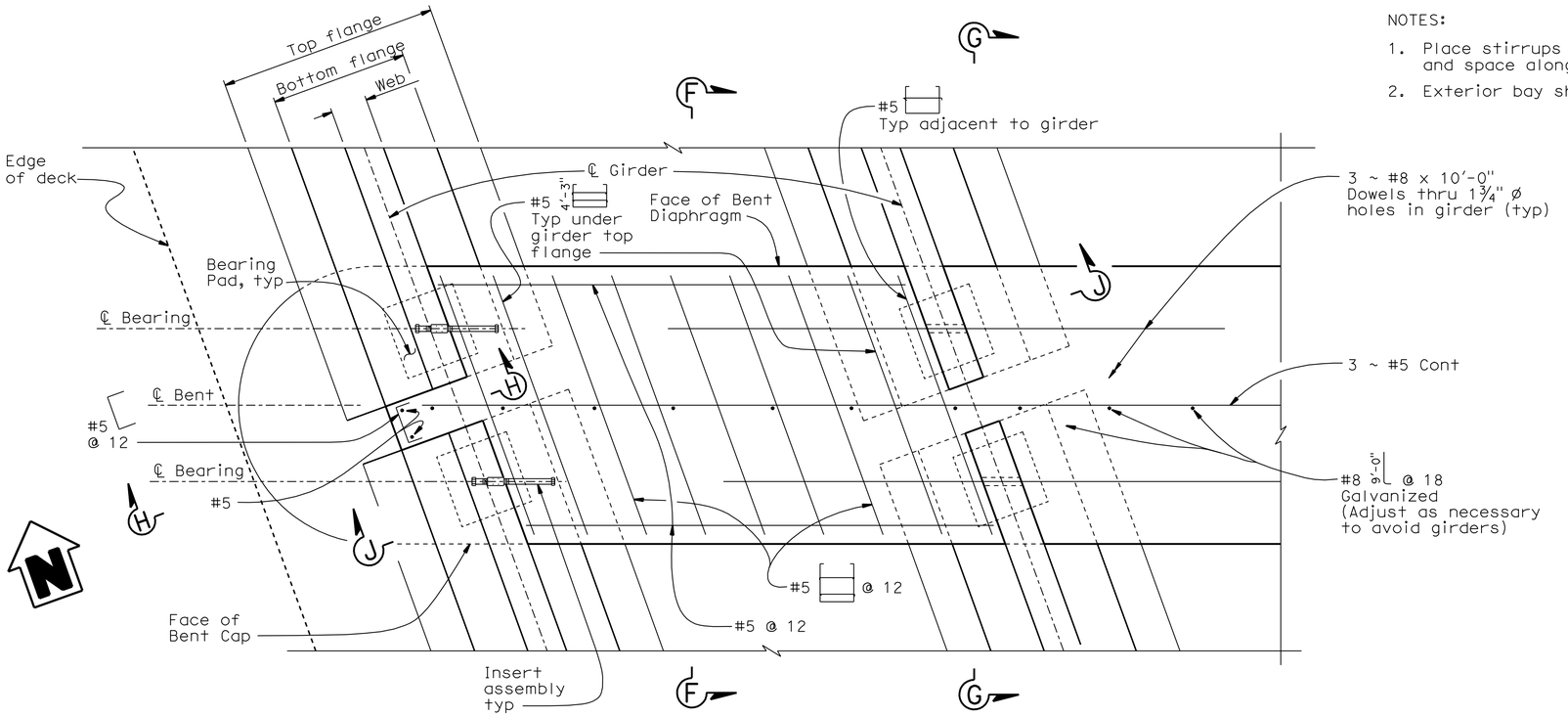

BENT DIAPHRAGM PART PLAN

¾" = 1'-0"

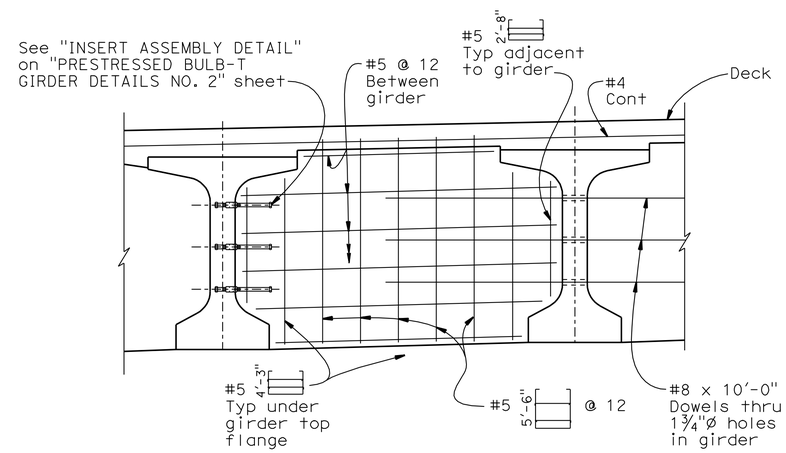

SECTION J-J

½"= 1'-0"

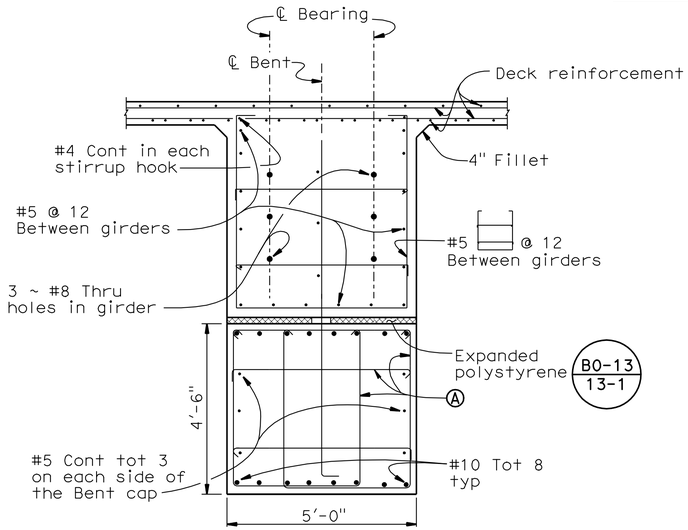

SECTION F-F

½"= 1'-0"

LEGEND

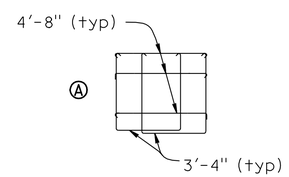

#5 Bent cap stirrup

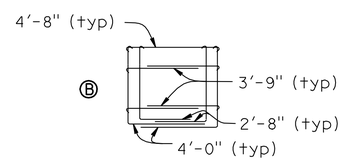

#5 Bent cap stirrup

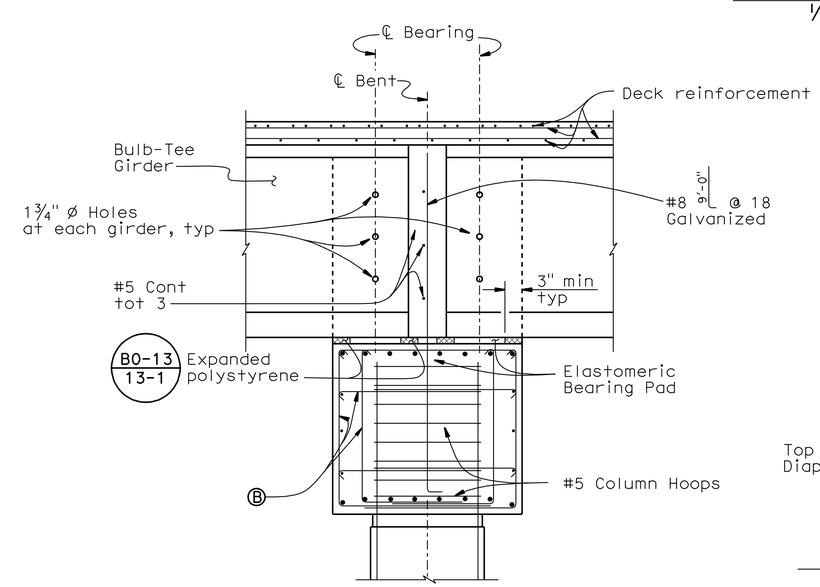

SECTION G-G

½" = 1'-0"

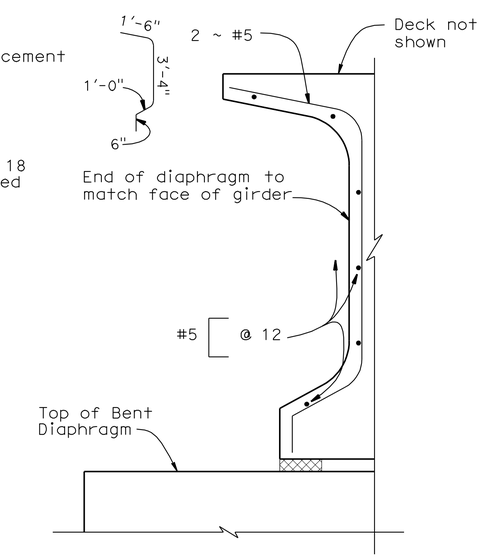

SECTION H-H

1"=1'-0"

DESIGN	BY Ae Tern	CHECKED Rod Simmons	
DETAILS	BY Lily Wang	CHECKED Rod Simmons	
QUANTITIES	BY Craig Schellenger	CHECKED Rod Simmons	

STATE OF CALIFORNIA DEPARTMENT OF TRANSPORTATION

DIVISION OF ENGINEERING SERVICES STRUCTURE DESIGN DESIGN BRANCH 17

BRIDGE NO. 39-0246
POST MILE 25.61

SAN JOAQUIN RIVER BR. (REPLACE)

BENT DETAILS NO. 1

STRUCTURES DESIGN DETAIL SHEET (ENGLISH) (REV. 10/25/05)

ORIGINAL SCALE IN INCHES FOR REDUCED PLANS 0 1 2 3

CU 06241
EA 279801

DISREGARD PRINTS BEARING EARLIER REVISION DATES

REVISION DATES: 03-05-09 03-10-09 03-26-09 03-26-09 04-01-09 04-08-09 04-21-09 06-10-09 6-12-09

SHEET 9 OF 23

FILE => 39-0246-h-bdt01.dgn

USERNAME => trlenard DATE PLOTTED => 24-JUN-2010 TIME PLOTTED => 08:07

DIST	COUNTY	ROUTE	POST MILES TOTAL PROJECT	SHEET No	TOTAL SHEETS
10	Mer	165	11.7/26.7	97	110

REGISTERED CIVIL ENGINEER 9-4-09 DATE

6-21-10
PLANS APPROVAL DATE

REGISTERED PROFESSIONAL ENGINEER RODNEY SIMMONS No. C 51174 Exp. 09-30-09 CIVIL STATE OF CALIFORNIA

The State of California or its officers or agents shall not be responsible for the accuracy or completeness of electronic copies of this plan sheet.

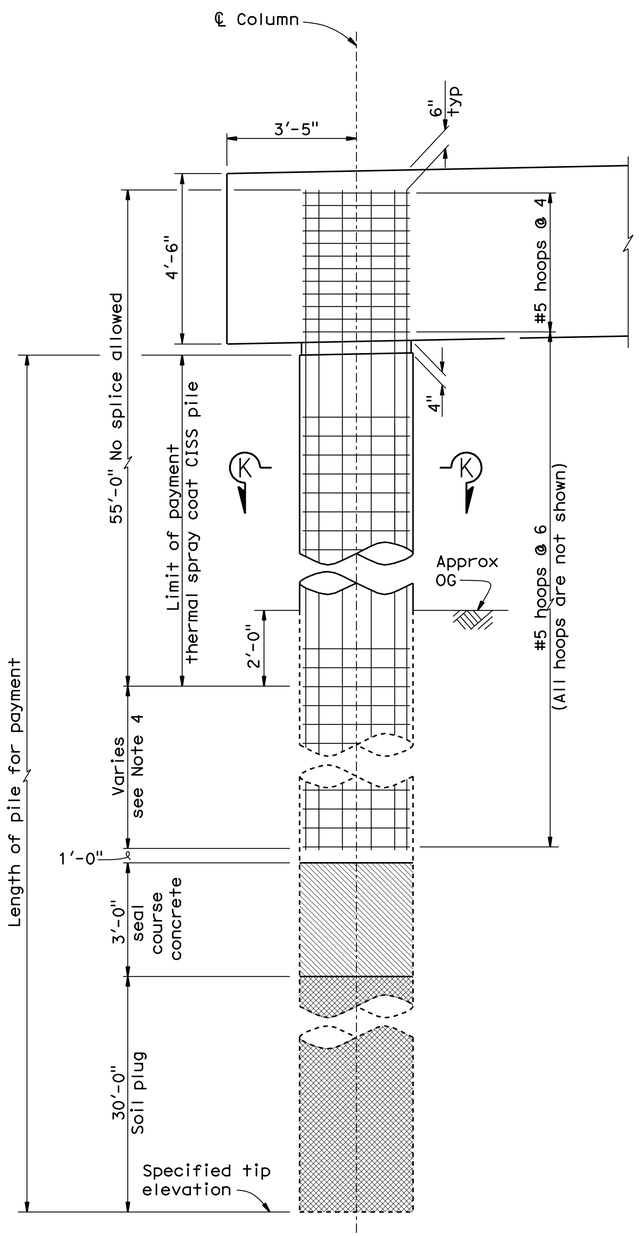

TYPICAL BENT SECTION

½" = 1'

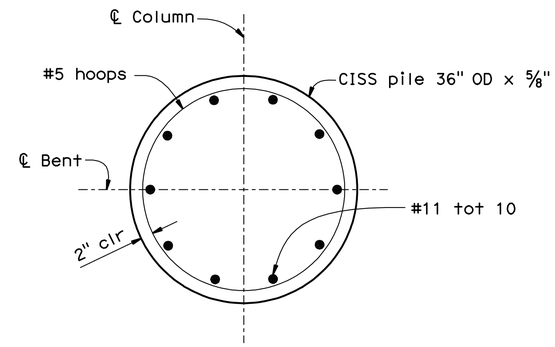

SECTION K-K

1" = 1'

NOTES:

1. Reinforcing steel and pile details apply to all columns at all piers.
2. All hoops shall be "Ultimate" butt spliced.
3. For pile data see "INDEX TO PLANS" sheet
4. Only ultimate splice allowed in main pile reinforcement in this zone.

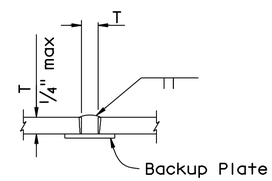

SQUARE GROOVE

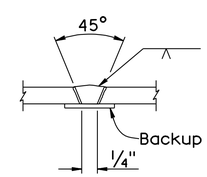

SINGLE VEE-GROOVE

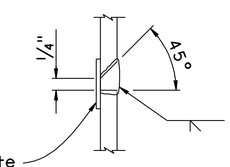

SINGLE BEVEL-GROOVE

Notes:

1. Single Vee-Groove And Square Groove Permitted for all positions.
2. Single Bevel-Groove permitted for horizontal joints only.

PILE WELDING DETAIL-BUTT JOINTS

No Scale

	BY	CHECKED
DESIGN	Ae Tern	Rod Simmons
DETAILS	Lily Wang	Rod Simmons
QUANTITIES	Rick Macala	Rod Simmons

STATE OF CALIFORNIA DEPARTMENT OF TRANSPORTATION

DIVISION OF ENGINEERING SERVICES STRUCTURE DESIGN DESIGN BRANCH 17

BRIDGE NO. 39-0246
POST MILE 25.61

SAN JOAQUIN RIVER BR. (REPLACE)

BENT DETAILS NO. 2

STRUCTURES DESIGN DETAIL SHEET (ENGLISH) (REV. 10/25/05)

ORIGINAL SCALE IN INCHES FOR REDUCED PLANS 0 1 2 3

CU 06241
EA 279801

DISREGARD PRINTS BEARING EARLIER REVISION DATES

REVISION DATES: 02-03-09 02-11-09 03-03-09 03-10-09 03-18-09 03-26-09 04-06-09 04-28-09 06-16-09 08-20-09

SHEET 10 OF 23

FILE => 39-0246-h-bdt02.dgn

USERNAME => trlenard DATE PLOTTED => 24-JUN-2010 TIME PLOTTED => 08:07

DIST	COUNTY	ROUTE	POST MILES TOTAL PROJECT	SHEET No	TOTAL SHEETS
10	Mer	165	11.7/26.7	98	110

REGISTERED CIVIL ENGINEER 9-4-09 DATE

6-21-10
PLANS APPROVAL DATE

REGISTERED PROFESSIONAL ENGINEER RODNEY SIMMONS No. C 51174 Exp. 09-30-09 CIVIL STATE OF CALIFORNIA

The State of California or its officers or agents shall not be responsible for the accuracy or completeness of electronic copies of this plan sheet.

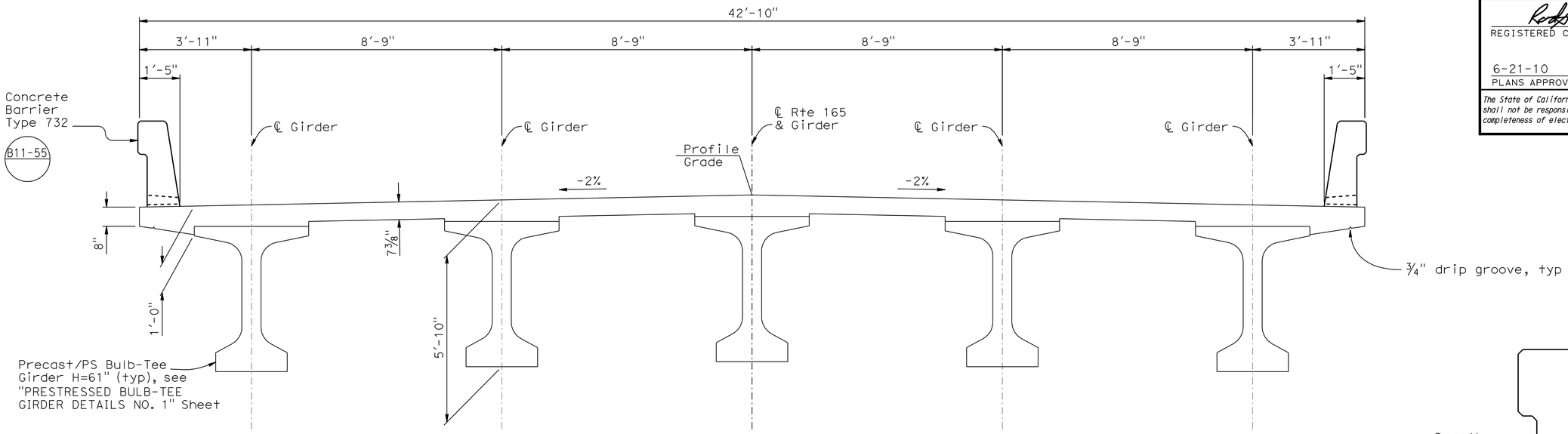

TYPICAL SECTION

1/2" = 1'-0"

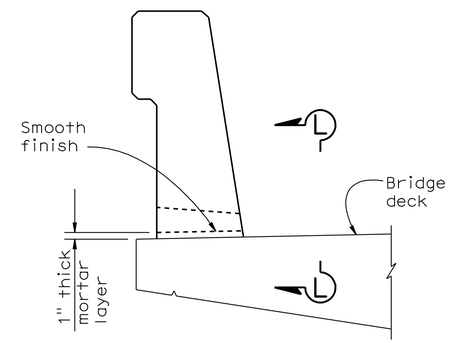

SECTION

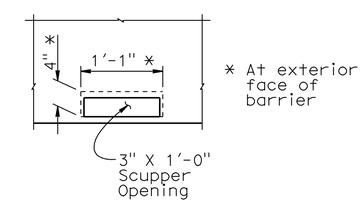

VIEW L-L

SCUPPER DETAIL

1 " = 1'-0"

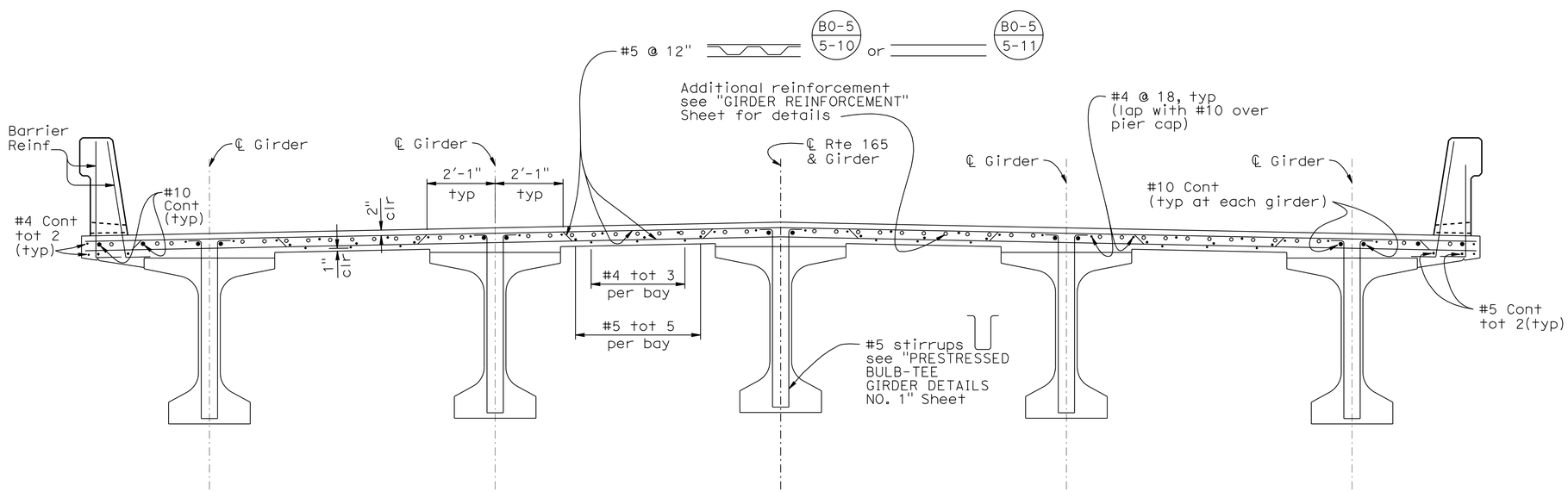

PART TYPICAL SECTION

1/2" = 1'-0"

B0-5

DESIGN	BY Zihan Yan	CHECKED Rod Simmons	
DETAILS	BY Minh Tran/Lily Wang	CHECKED Rod Simmons	
QUANTITIES	BY C. Schellenger	CHECKED Rod Simmons	

STATE OF CALIFORNIA DEPARTMENT OF TRANSPORTATION

DIVISION OF ENGINEERING SERVICES STRUCTURE DESIGN DESIGN BRANCH 17

BRIDGE NO. 39-0246
POST MILE 25.61

SAN JOAQUIN RIVER BR. (REPLACE)
TYPICAL SECTION

STRUCTURES DESIGN DETAIL SHEET (ENGLISH) (REV. 10/25/05)

ORIGINAL SCALE IN INCHES FOR REDUCED PLANS 0 1 2 3

CU 06241
EA 279801

DISREGARD PRINTS BEARING EARLIER REVISION DATES

REVISION DATES: 03-11-09 03-18-09 03-24-09 04-10-09 04-28-09 06-10-09

SHEET 11 OF 23

FILE => 39-0246-K-ts.dgn

USERNAME => friehard DATE PLOTTED => 24-JUN-2010 TIME PLOTTED => 08:07

DIST	COUNTY	ROUTE	POST MILES TOTAL PROJECT	SHEET No	TOTAL SHEETS
10	Mer	165	11.7/26.7	99	110

REGISTERED CIVIL ENGINEER 9-4-09 DATE

6-21-10
PLANS APPROVAL DATE

REGISTERED PROFESSIONAL ENGINEER
RODNEY SIMMONS
No. C 51174
Exp. 09-30-09
CIVIL
STATE OF CALIFORNIA

The State of California or its officers or agents shall not be responsible for the accuracy or completeness of electronic copies of this plan sheet.

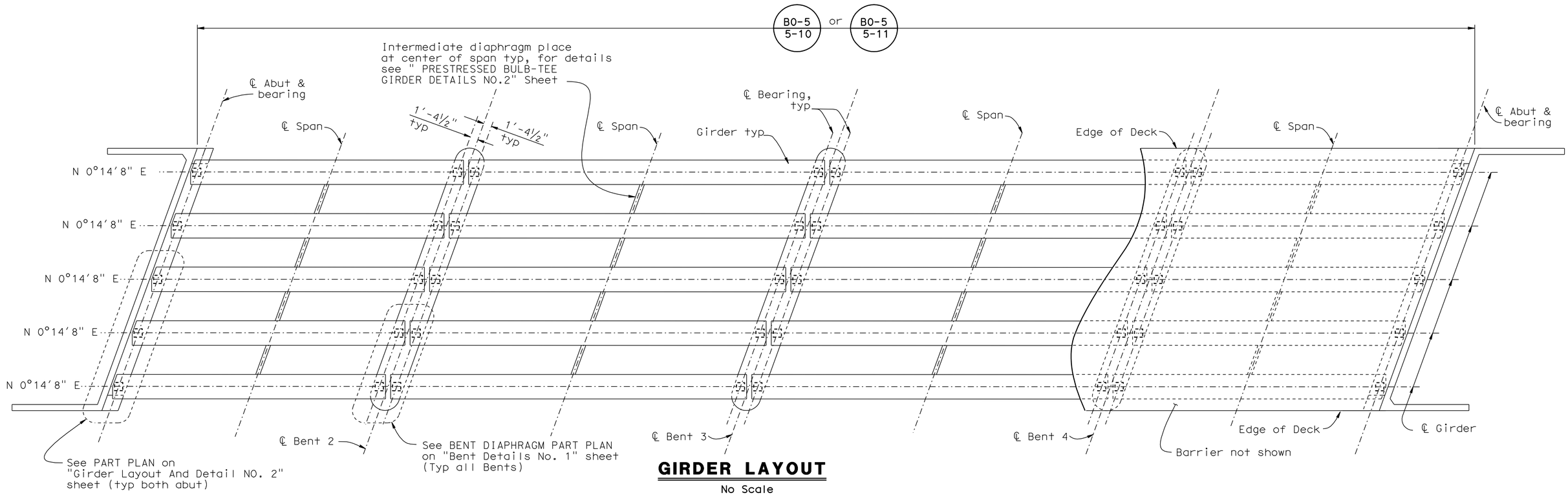

GIRDER LAYOUT

No Scale

DESIGN	BY Zihan Yan	CHECKED Rod Simmons	
DETAILS	BY Minh Tran	CHECKED Rod Simmons	
QUANTITIES	BY Rick Macala	CHECKED Rod Simmons	

STATE OF CALIFORNIA
DEPARTMENT OF TRANSPORTATION

DIVISION OF ENGINEERING SERVICES
STRUCTURE DESIGN
DESIGN BRANCH 17

BRIDGE NO. 39-0246
POST MILE 25.61

SAN JOAQUIN RIVER BR. (REPLACE)
GIRDER LAYOUT AND DETAILS NO. 1

STRUCTURES DESIGN DETAIL SHEET (ENGLISH) (REV. 10/25/05)

ORIGINAL SCALE IN INCHES FOR REDUCED PLANS 0 1 2 3

CU 06241
EA 279801

DISREGARD PRINTS BEARING EARLIER REVISION DATES

REVISION DATES: 01-15-09 3-18-09 3-24-09 4-28-09 6-10-09

SHEET 12 OF 23

FILE => 39-0246-1-g_lyo.dgn

USERNAME => friehard DATE PLOTTED => 24-JUN-2010 TIME PLOTTED => 08:07

DIST	COUNTY	ROUTE	POST MILES TOTAL PROJECT	SHEET No	TOTAL SHEETS
10	Mer	165	11.7/26.7	100	110

REGISTERED CIVIL ENGINEER 9-4-09 DATE

6-21-10
PLANS APPROVAL DATE

REGISTERED PROFESSIONAL ENGINEER RODNEY SIMMONS No. C 51174 Exp. 09-30-09 CIVIL STATE OF CALIFORNIA

The State of California or its officers or agents shall not be responsible for the accuracy or completeness of electronic copies of this plan sheet.

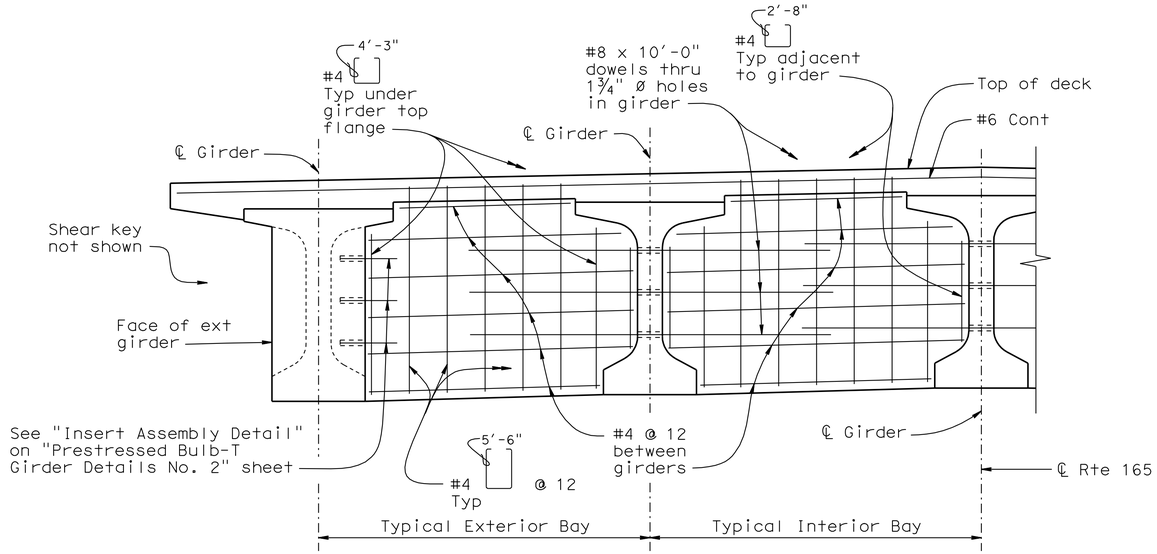

SECTION N-N

½"=1'-0"

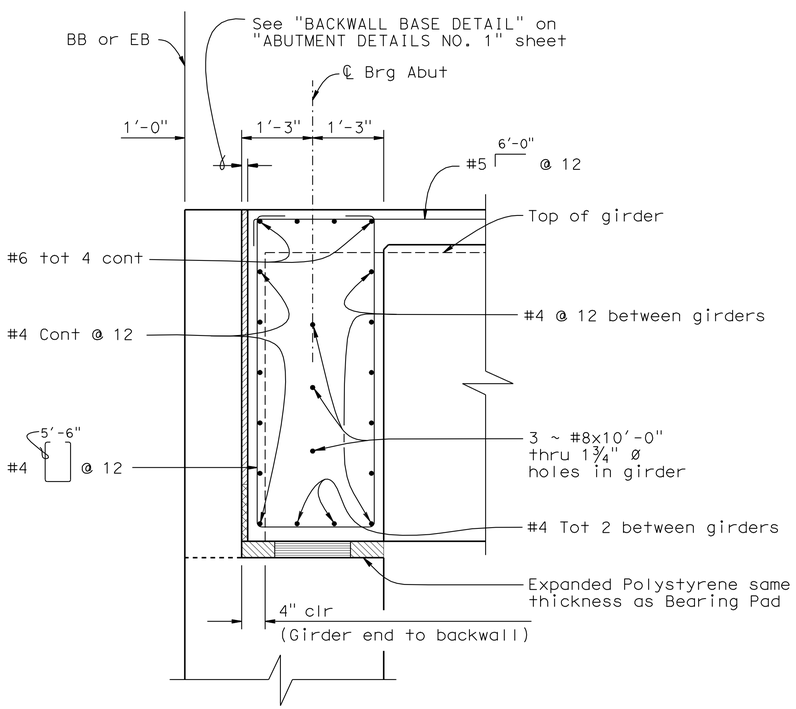

SECTION M-M

¾"=1'-0"

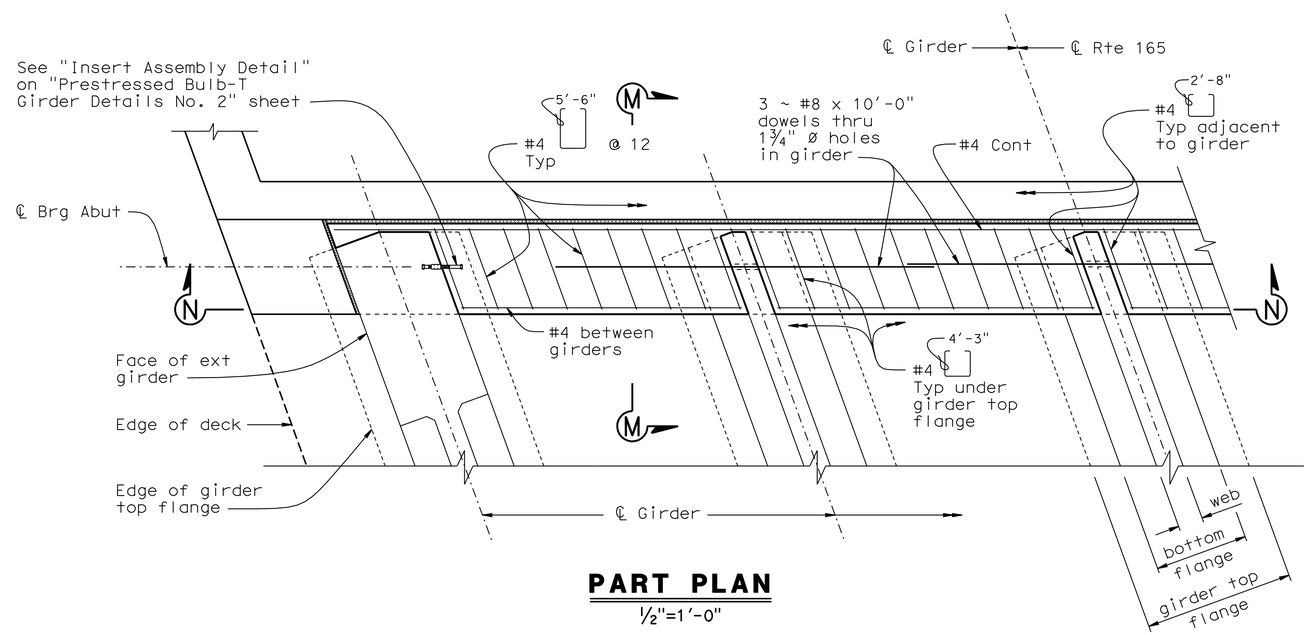

PART PLAN

½"=1'-0"

	BY	CHECKED
DESIGN	Zihan Yan	Rod Simmons
DETAILS	Susan Ng	Rod Simmons
QUANTITIES	Igor Chernioglo	Rod Simmons

STATE OF CALIFORNIA
DEPARTMENT OF TRANSPORTATION

DIVISION OF ENGINEERING SERVICES
STRUCTURE DESIGN
DESIGN BRANCH 17

BRIDGE NO. 39-0246
POST MILE 25.61

SAN JOAQUIN RIVER BR. (REPLACE)
GIRDER LAYOUT AND DETAILS NO. 2

STRUCTURES DESIGN DETAIL SHEET (ENGLISH) (REV. 10/25/05)

ORIGINAL SCALE IN INCHES FOR REDUCED PLANS 0 1 2 3

CU 06241
EA 279801

DISREGARD PRINTS BEARING EARLIER REVISION DATES

REVISION DATES: 03-25-09 03-26-09 04-10-09 04-29-09 06-10-09

SHEET 13 OF 23

FILE => 39-0246-1-g_lyo2.dgn

USERNAME => friemard DATE PLOTTED => 24-JUN-2010 TIME PLOTTED => 08:07

DIST	COUNTY	ROUTE	POST MILES TOTAL PROJECT	SHEET No	TOTAL SHEETS
10	Mer	165	11.7/26.7	101	110

REGISTERED CIVIL ENGINEER 9-4-09 DATE

6-21-10
PLANS APPROVAL DATE

REGISTERED PROFESSIONAL ENGINEER
RODNEY SIMMONS
No. C 51174
Exp. 09-30-09
CIVIL
STATE OF CALIFORNIA

The State of California or its officers or agents shall not be responsible for the accuracy or completeness of electronic copies of this plan sheet.

NOTE: For details and reinforcement not shown, see "Typical Section" sheet.

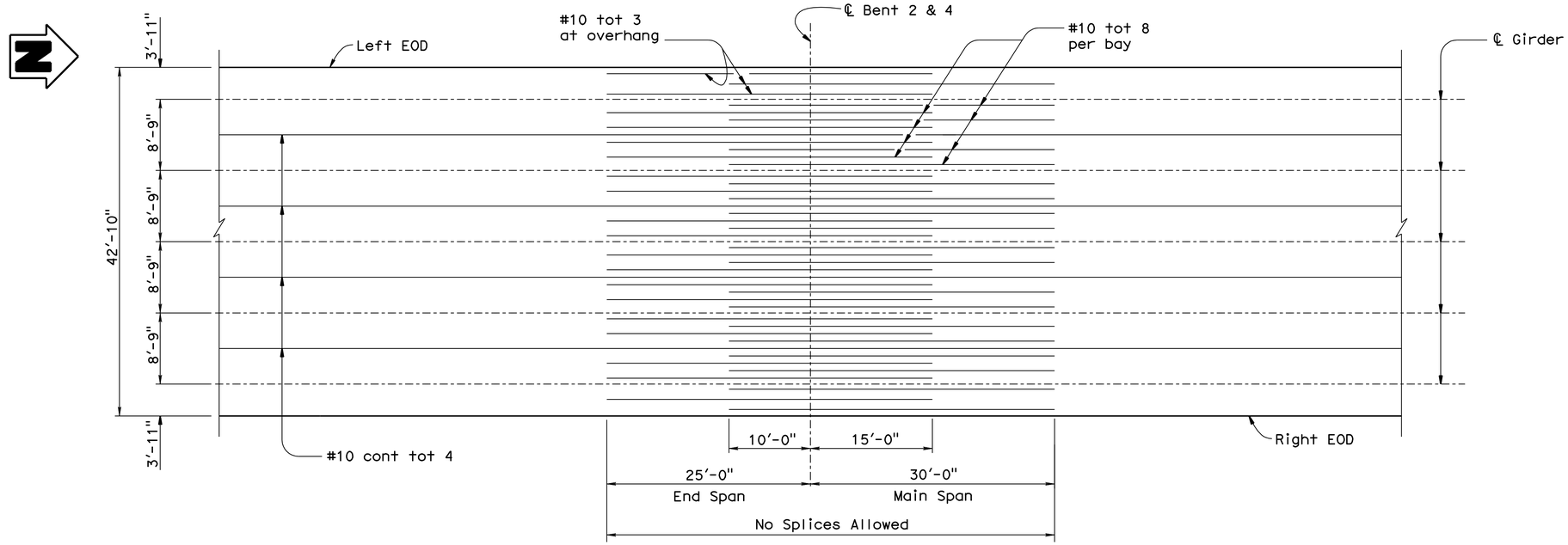

BENT 2 & 4

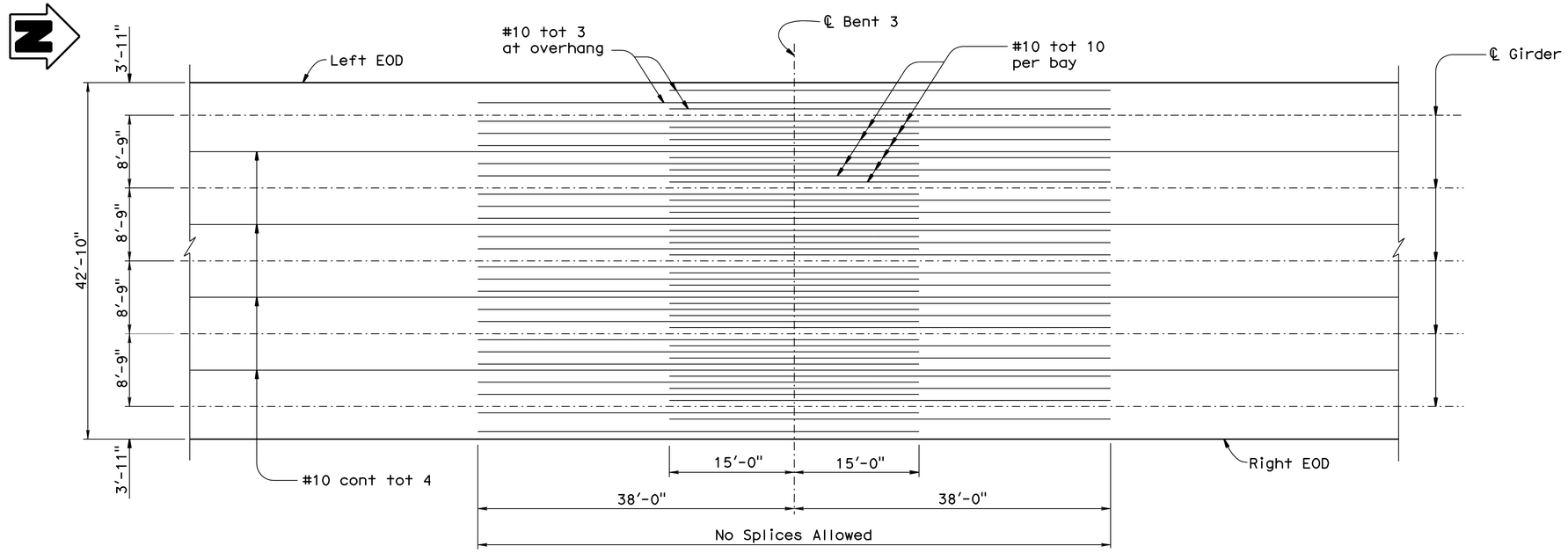

BENT 3

TOP REINFORCEMENT

1/8"= 1'-0"

DESIGN	BY Zihan Yan	CHECKED Rod Simmons
DETAILS	BY Minh Tran/Lily Wang	CHECKED Rod Simmons
QUANTITIES	BY Craig Schellenger	CHECKED Rod Simmons

STATE OF CALIFORNIA
DEPARTMENT OF TRANSPORTATION

DIVISION OF ENGINEERING SERVICES
STRUCTURE DESIGN
DESIGN BRANCH 17

BRIDGE NO. 39-0246
POST MILE 25.61

SAN JOAQUIN RIVER BR. (REPLACE)
GIRDER REINFORCEMENT

STRUCTURES DESIGN DETAIL SHEET (ENGLISH) (REV. 10/25/05)

ORIGINAL SCALE IN INCHES FOR REDUCED PLANS 0 1 2 3

CU 06241
EA 279801

DISREGARD PRINTS BEARING EARLIER REVISION DATES

REVISION DATES: 01-15-09 03-20-09 03-26-09 04-10-09 04-29-09 06-10-09

SHEET 14 OF 23

FILE => 39-0246-o-gir_rf.dgn

USERNAME => friehard DATE PLOTTED => 24-JUN-2010 TIME PLOTTED => 08:12

DIST	COUNTY	ROUTE	POST MILES TOTAL PROJECT	SHEET No	TOTAL SHEETS
10	Mer	165	11.7/26.7	102	110

REGISTERED CIVIL ENGINEER 9-4-09 DATE

6-21-10
PLANS APPROVAL DATE

REGISTERED PROFESSIONAL ENGINEER RODNEY SIMMONS No. C 51174 Exp. 09-30-09 CIVIL STATE OF CALIFORNIA

The State of California or its officers or agents shall not be responsible for the accuracy or completeness of electronic copies of this plan sheet.

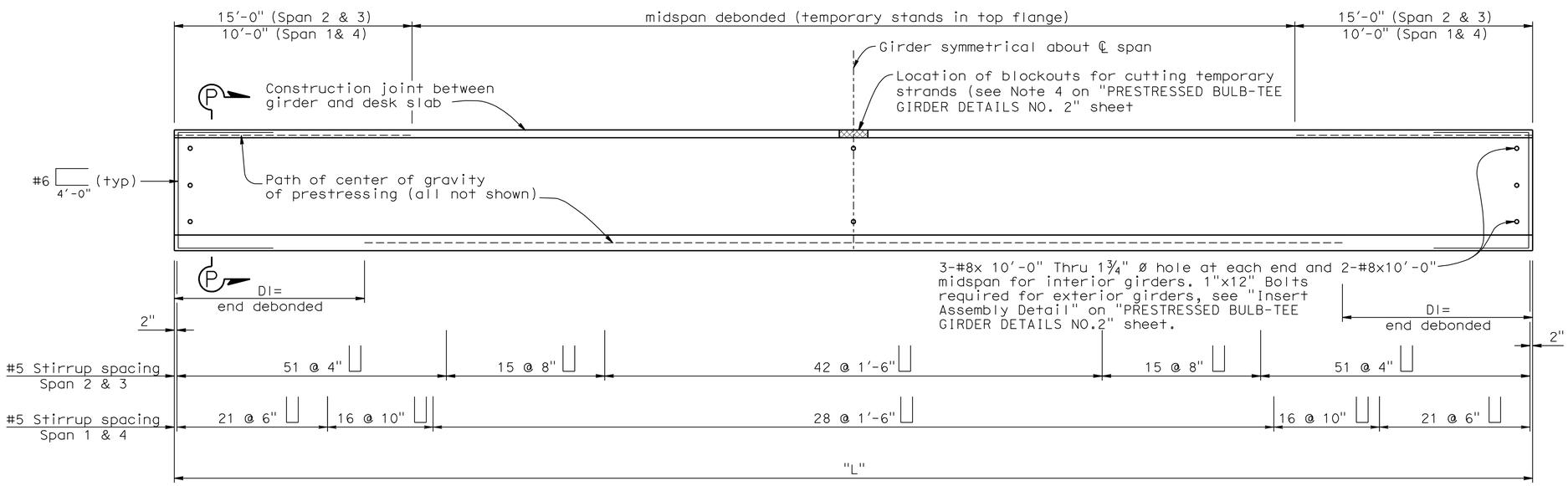

DI= Debonded length, see "Debond Schedule" on "PRESTRESSED BULB-TEE GIRDER DETAILS NO.2" Sheet for length not shown.

ELEVATION

No Scale

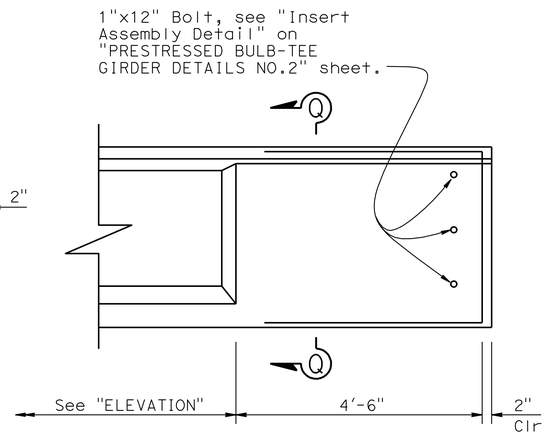

END BLOCK

No Scale

Note: End block only at abutment ends of end span exterior girders

Girder location or designation	L= Girder length	P= Working Force (Kips)	Concrete strength (Ksi)		Midspan dead load deflection	
			f'ci	f'c	Deck DL	Rail DL
Span 1	86'-2"	26 strands @ 38.8 K ea (tot 1008 K)	5	6.7	½"	-
Span 2	117'-2"	38 strands @ 38.3 K ea (tot 1456 K)	5	6.7	1¾"	-
Span 3	117'-2"	38 strands @ 38.3 K ea (tot 1456 K)	5	6.7	1¾"	-
Span 4	86'-2"	26 strands @ 38.8 K ea (tot 1008 K)	5	6.7	½"	-

PRESTRESSING NOTES

Working force: The force required at center of span after all losses.

Concrete strength: f'ci is at time of initial stressing,
f'c is at 28 days

Deflection components: Informational- to be used in setting screed line elevations.

Screed line elevations for deck concrete will be determined by the Engineer.

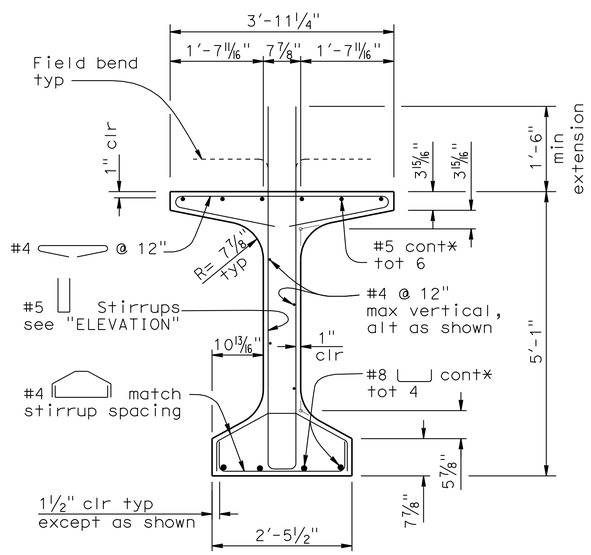

* Extend reinf. 2'-0" into bent diaphragms. Bend as required

TYPICAL GIRDER SECTION

¾" = 1'-0"

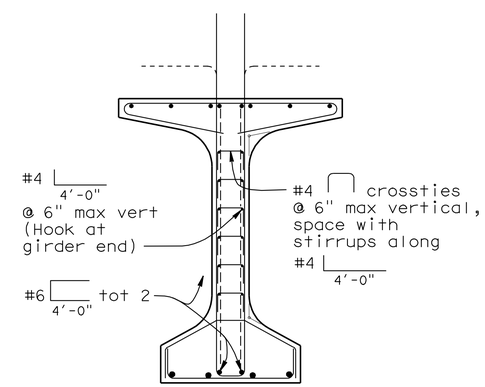

Notes: For details not shown, see "Typical Girder Section" detail.

SECTION P-P

¾" = 1'-0"

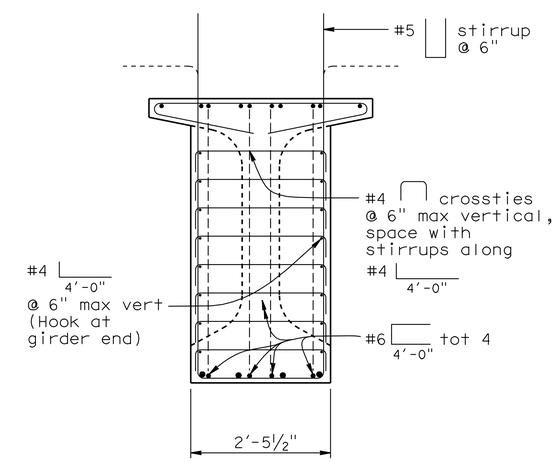

Notes: For details not shown, see "Typical Girder Section" detail.

SECTION Q-Q

¾" = 1'-0"

	BY	CHECKED
DESIGN	Zihan Yan	Rod Simmons
DETAILS	Minh Tran	Rod Simmons
QUANTITIES	Rick Macala	Rod Simmons

STATE OF CALIFORNIA DEPARTMENT OF TRANSPORTATION

DIVISION OF ENGINEERING SERVICES STRUCTURE DESIGN DESIGN BRANCH 17

BRIDGE NO. 39-0246
POST MILE 25.61

SAN JOAQUIN RIVER BR. (REPLACE)
PRESTRESSED BULB-TEE GIRDER DETAILS NO. 1

STRUCTURES DESIGN DETAIL SHEET (ENGLISH) (REV. 10/25/05)

ORIGINAL SCALE IN INCHES FOR REDUCED PLANS 0 1 2 3

CU 06241
EA 279801

DISREGARD PRINTS BEARING EARLIER REVISION DATES

REVISION DATES: 01-16-09 3-16-09 3-24-09 04-10-09 04-30-09 06-10-09 06-12-09

SHEET 15 OF 23

FILE => 39-0246-p-pbtee-grdet01.dgn

USERNAME => trienard DATE PLOTTED => 24-JUN-2010 TIME PLOTTED => 08:12

DIST	COUNTY	ROUTE	POST MILES TOTAL PROJECT	SHEET No	TOTAL SHEETS
10	Mer	165	11.7/26.7	103	110

REGISTERED CIVIL ENGINEER — DATE 9-4-09

6-21-10
PLANS APPROVAL DATE

The State of California or its officers or agents shall not be responsible for the accuracy or completeness of electronic copies of this plan sheet.

REGISTERED PROFESSIONAL ENGINEER — RODNEY SIMMONS — No. C 51174 — Exp. 09-30-09 — CIVIL — STATE OF CALIFORNIA

NOTES:

1. Numbered strands are debonded, for debond lengths, Dl, see "Debond Schedule".
2. Strands are 0.6"Ø - 270 Ksi low relaxation. Strand locations may be adjusted as approved by the Engineer.
3. ● Indicates continuously bonded strand
   ③ Denotes debonded strand
   ∘ Indicates debonded strand at midspan
4. Temporary strands shall be cut after all intermediate diaphragms are placed and cured, but prior to deck placement. Provide blockouts at mid-span to facilitate cutting of temporary strands.

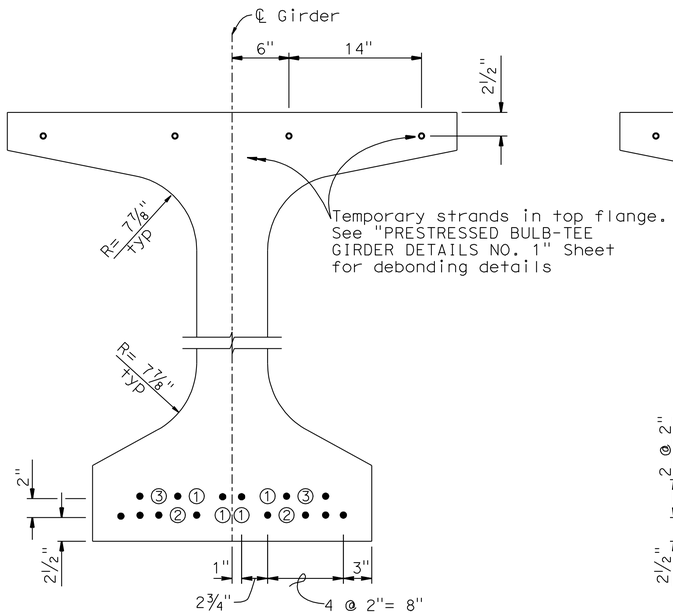

SPANS 1 & 4

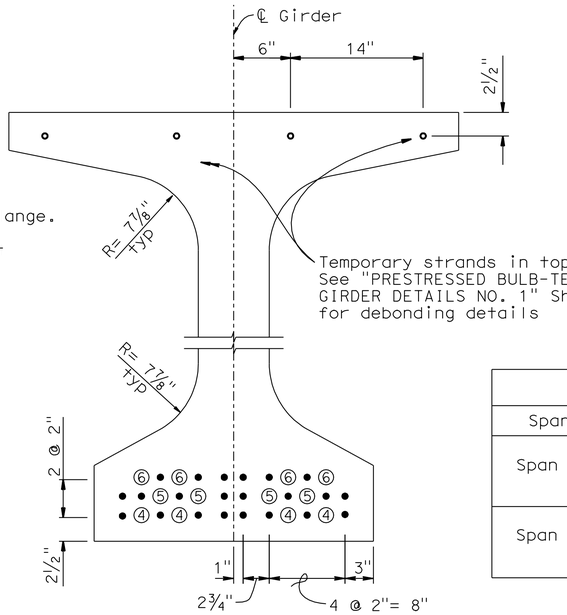

SPANS 2 & 3

TYPICAL SECTION

1½"= 1'-0"

DEBOND SCHEDULE		
Span No.	Strand No.	Dl
Span 1 & 4	3	8'-0"
	2	16'-0"
	1	16'-0"
Span 2 & 3	6	8'-0"
	5	16'-0"
	4	24'-0"

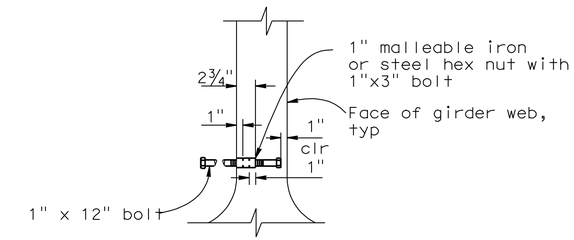

INSERT ASSEMBLY DETAIL

No Scale

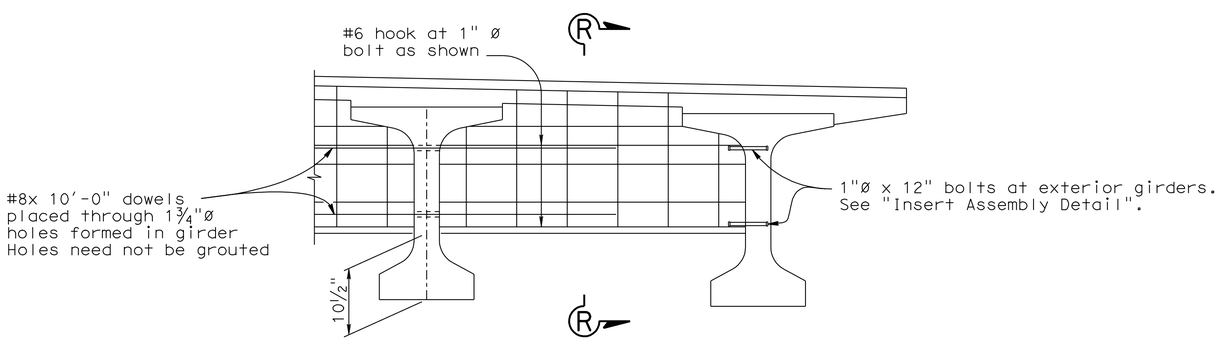

INTERMEDIATE DIAPHRAGM DETAIL

½"= 1'-0"

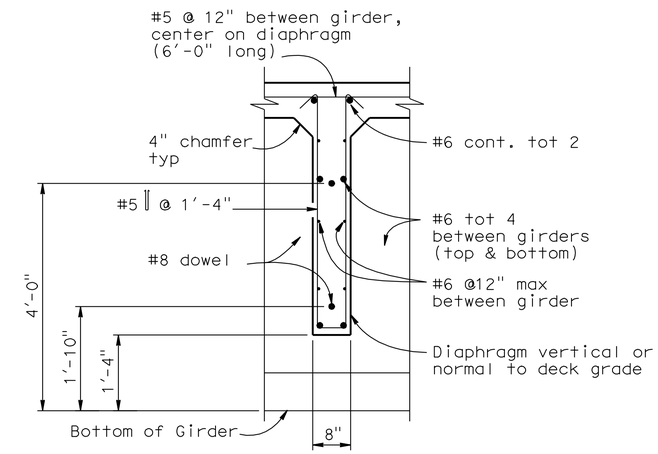

SECTION R-R

No Scale

DESIGN	BY Zihan Yan	CHECKED Rod Simmons	
DETAILS	BY Minh Tran	CHECKED Rod Simmons	
QUANTITIES	BY Rick Macala	CHECKED Rod Simmons	

STATE OF CALIFORNIA
DEPARTMENT OF TRANSPORTATION

DIVISION OF ENGINEERING SERVICES
STRUCTURE DESIGN
DESIGN BRANCH 17

BRIDGE NO. 39-0246
POST MILE 25.61

SAN JOAQUIN RIVER BR. (REPLACE)
PRESTRESSED BULB-TEE GIRDER DETAILS NO. 2

STRUCTURES DESIGN DETAIL SHEET (ENGLISH) (REV. 10/25/05)

ORIGINAL SCALE IN INCHES FOR REDUCED PLANS 0 1 2 3

CU 06241
EA 279801

DISREGARD PRINTS BEARING EARLIER REVISION DATES

REVISION DATES: 01-15-09 3-10-09 3-11-09 3-24-09 04-10-09 04-29-09 06-10-09 06-12-09

SHEET 16 OF 23

FILE => 39-0246-p-pbtee-grdet02.dgn

USERNAME => friehard DATE PLOTTED => 24-JUN-2010 TIME PLOTTED => 08:12

DIST	COUNTY	ROUTE	POST MILES TOTAL PROJECT	SHEET No	TOTAL SHEETS
10	Mer	165	11.7/26.7	104	110

REGISTERED CIVIL ENGINEER 9-4-09

6-21-10
PLANS APPROVAL DATE

The State of California or its officers or agents shall not be responsible for the accuracy or completeness of electronic copies of this plan sheet.

REGISTERED GEOLOGIST — Zheng Xing — No. 2130 — Exp. 3-31-2011 — CERTIFIED ENGINEERING GEOLOGIST — STATE OF CALIFORNIA

This LOTB sheet was prepared in accordance with the Caltrans Soil & Rock Logging, Classification, & Presentation Manual.

BENCH MARK

SURVEY CONTROL

PM 25.60
Fnd 1" IP with Red Plug
20.48' Rt ℄ "A1" Line Rte 165
Sta 596+60.50
N 1,929,835.16
E 6,459,487.44
Elev = 80.13

PM 25.75
Fnd 1" IP With Red Plug
25.11' Lt ℄ "A1" Line Rte 165
Sta 604+27.91
N 1,930,622.75
E 6,459,445.00
Elev = 80.90

NGVD 29

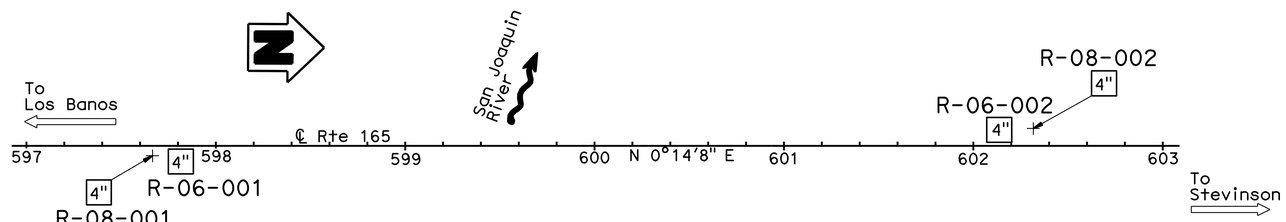

PLAN

1" = 40'

Notes:

1. CME-75 truck mounted drill rig (C# 5677) with automatic hammer was used to obtain SPT samples in borings R-06-001 and R-06-002. CS-2000 truck mounted drill rig (C# 6832) with automatic hammer was used to obtain SPT samples in borings R-08-001 and R-08-002.
2. SPT N values shown on Log of Test Boring (LOTB) sheets are actual values recorded in the field.
3. pp = Pocket Penetrometer test (tsf).

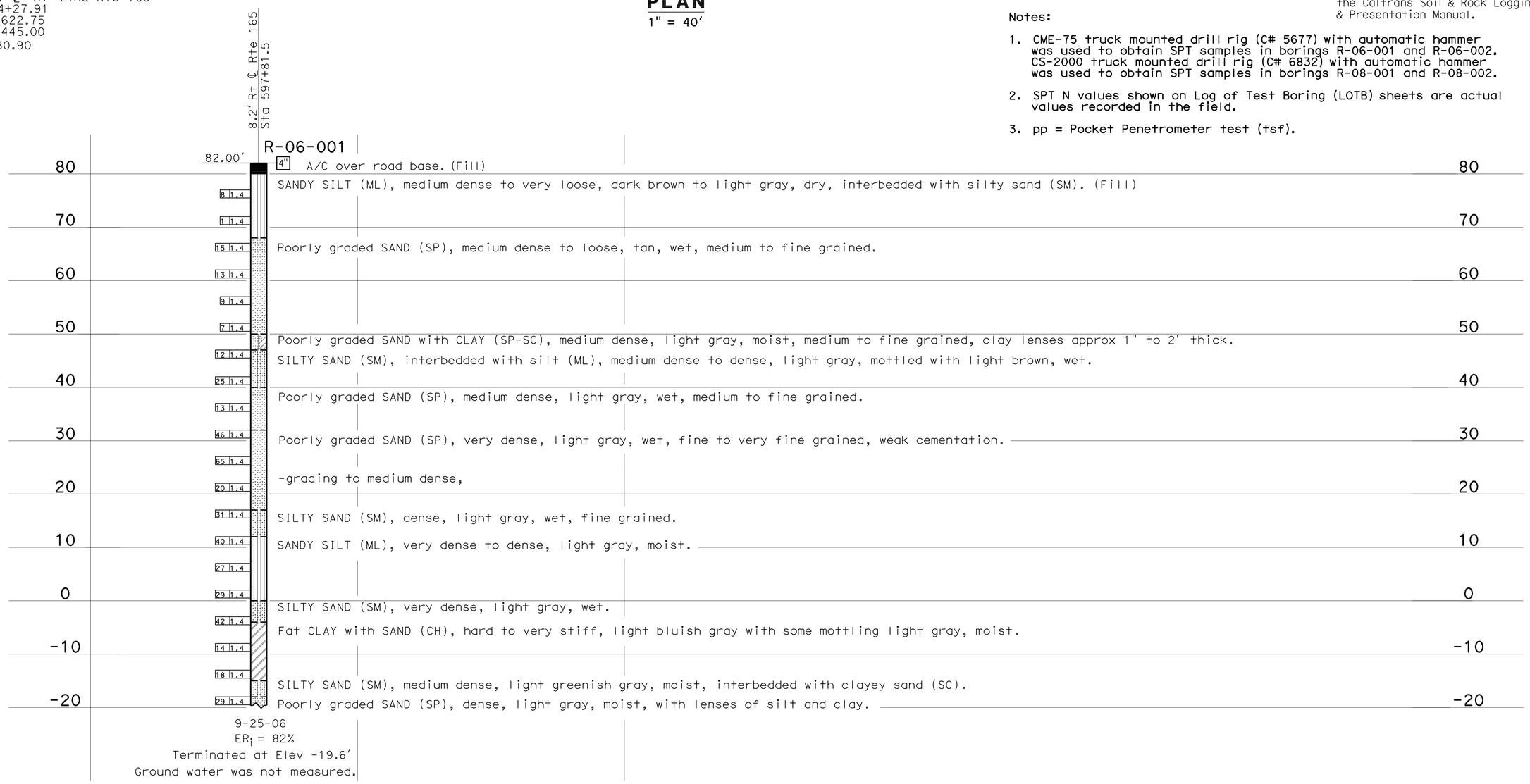

PROFILE

HOR. 1"=10'
VER. 1"=10'

ENGINEERING SERVICES	GEOTECHNICAL SERVICES	STATE OF CALIFORNIA DEPARTMENT OF TRANSPORTATION	DIVISION OF ENGINEERING SERVICES STRUCTURE DESIGN	BRIDGE NO. 39-0246	SAN JOAQUIN RIVER BRIDGE (REPLACE)
FUNCTIONAL SUPERVISOR	DRAWN BY: W. Tang 03/09	FIELD INVESTIGATION BY:	DESIGN BRANCH 17	POST MILES 25.61	LOG OF TEST BORINGS 1 OF 7
NAME: R. Bvell	CHECKED BY: J. Thhorne	S. Sunding, J. Thorne			

OGS CIVIL LOG OF TEST BORINGS SHEET

ORIGINAL SCALE IN INCHES FOR REDUCED PLANS 0 1 2 3

CU 06241
EA 279801

DISREGARD PRINTS BEARING EARLIER REVISION DATES → 03-09-09 05-18-09 06-05-09 08-20-09

REVISION DATES

SHEET 17 OF 23

FILE => 39-0246-z-1tb01.dgn

USERNAME => trlenard DATE PLOTTED => 24-JUN-2010 TIME PLOTTED => 08:12

FOR PLAN VIEW, SEE
"LOG OF TEST BORINGS" 1 OF 7

5.2' Rt ℄ Rte 165
Sta 597+66.0

R-08-001

82.00'

4"

See Boring R-06-001 for the first 100' soil description.

CLAY (CL), very stiff to hard, dark greenish gray, moist, medium plasticity, pp = 3.0 to 4.5 tsf.

SILTY SAND (SM), medium dense, greenish gray, wet, fine grained, micaceous.

15 ⅊.4

Lean CLAY (CL), very stiff, dark gray, moist, medium plasticity, trace silt (L/C) seams, pp = 3.5 tsf.

24 ⅊.4

30 ⅊.4

Poorly graded SAND with SILT (SP-SM)), dense, dark greenish gray, wet, fine grained, micaceous.

SILT (ML), stiff, greenish gray, moist, low plasticit, pp = 1.0 tsf.

69 ⅊.4

SILT (ML), very stiff, greenish gray, moist, with fine SAND lenses, low plasticity, micaceous, pp = 2.25 tsf.

41 ⅊.4

Poorly graded SAND (SP), very dense, greenish gray, wet, fine grained, micaceous.

SANDY lean CLAY (CL), hard, greenish gray, moist to wet, fine grained, low to medium plasticity, micaceous, pp = 4.5+ tsf.

Poorly graded SAND (SP), very dense, greenish gray, wet, fine grained.

35 ⅊.4

SANDY lean CLAY (CL), hard, dark yellowish brown, moist, fine grained, low plasticity, micaceous, weakly cemented, pp = 4.5+ tsf.

SILT (ML), hard, grayish brown, moist, low plasticity, mottled with calcium carbonate, pp = 4.5+ tsf.

31 ⅊.4

SILTY SAND (SM), dense, greenish gray, moist to wet, fine grained, micaceous, some calcium carbonate veins.

SILT (ML), hard, dark yellowish brown, moist, low plasticity, trace iron oxide staining.

SILT with SAND, hard, dark yellowish brown, moist, fine grained with trace coarse grained, low plasticity, micaceous, iron oxide staining.

74 ⅊.4

SILTY CLAY (CL-ML), very stiff, dark yellowish brown, moist, low plasticity, weakly cemented, pp = 3.5 to 4.0 tsf.

SILTY SAND (SM), very dense, dark yellowish brown, moist to wet, fine grained, low plasticity, micaceous, iron oxide staining.

-grading to olive yellow, carbon flecks, weakly to moderately cemented, pp = 4.25 tsf.

16 ⅊.4

Poorly graded SAND (SP), medium dense, olive yellow, wet, fine grained, micaceous, carbon flecks.

Lean CLAY (CL), very stiff to hard, olive yellow, moist, medium plasticity, carbon flecks, pp = 2.5 to 4.5+ tsf.

13 ⅊.4

-carbon, pp = 3.0 to 4.5+ tsf.

Lean CLAY/SILT with SAND (CL/ML), hard, greenish gray, moist, very fine grained, medium plasticity, micaceous, some iron oxide staining, pp = 4.5+ tsf.

9 ⅊.4

-grading to light brownish gray.

Lean CLAY with SAND (CL), stiff to very stiff, dark greenish gray, moist, very fine grained, micaceous SAND, medium plasticity, trace organics, pp = 1.5 to 3.0 tsf.

21 ⅊.4

-hydrogen sulfied odor.

-varved with fine sand.

-grading to very stiff to hard, pp = 2.5 to 4.5+ tsf.

8 ⅊.4

-pp = 3.0 to 4.5+ tsf

-pp = 2.25 to 3.5 tsf

8 ⅊.4

80 70 60 50 40 30 20 10 0 -10 -20 -30 -40 -50 -60 -70 -80 -90 -100 -110 -120 -130 -140 -150

597+50 598+00 598+50

1-31-08
ER_i=78%
Terminated at Elev -149.5'
Ground water was not measured.

PROFILE
HOR. 1"=10'
VER. 1"=10'

This LOTB sheet was prepared in accordance with the Caltrans Soil & Rock Logging, Classification, & Presentation Manual.

Zheng Xing 9-4-09
REGISTERED CIVIL ENGINEER

6-21-10
PLANS APPROVAL DATE

The State of California or its officers or agents shall not be responsible for the accuracy or completeness of electronic copies of this plan sheet.

REGISTERED GEOLOGIST
Zheng Xing
No. 2130
Exp. 3-31-2011
CERTIFIED ENGINEERING GEOLOGIST
STATE OF CALIFORNIA

DIST	COUNTY	ROUTE	POST MILES TOTAL PROJECT	SHEET NO	TOTAL SHEETS
10	Mer	165	11.7/26.7	105	110

ENGINEERING SERVICES

FUNCTIONAL SUPERVISOR
NAME: R. Byell

DRAWN BY: W. Tang 03/09
CHECKED BY: J. Thorne

GEOTECHNICAL SERVICES

FIELD INVESTIGATION BY:
S. Sunding, J. Thorne

STATE OF CALIFORNIA
DEPARTMENT OF TRANSPORTATION

DIVISION OF ENGINEERING SERVICES
STRUCTURE DESIGN
DESIGN BRANCH 17

BRIDGE NO. 39-0246
POST MILES 25.61

SAN JOAQUIN RIVER BRIDGE (REPLACE)

LOG OF TEST BORINGS 2 OF 7

SHEET 18 OF 23

DISREGARD PRINTS BEARING EARLIER REVISION DATES

REVISION DATES

CU 06241
EA 279801

OGS CIVIL LOG OF TEST BORINGS SHEET

ORIGINAL SCALE IN INCHES FOR REDUCED PLANS 0 1 2 3

FILE => 39-0246-Z-TB02.dgn

USERNAME => trlenard DATE PLOTTED => 24-JUN-2010 TIME PLOTTED => 08:12

FOR PLAN VIEW, SEE
"LOG OF TEST BORINGS" 1 OF 7

8.5' Lt @ Rte 165
Sta 602+13.7

R-06-002

82.00

Elev	Blows	Description
80		4" A/C over road base. (Fill)
	11 1.4	SILTY SAND (SM), medium dense, dark gray, moist, interbedded with well graded sand (SW), medium dense, tan, moist and sandy clay (CH), stiff, dark gray, moist. (Fill)
70	2 1.4	SANDY SILT (ML), very loose, light brown to gray, wet.
	11 1.4	Poorly graded SAND (SP), medium dense to loose, light brown, wet, medium grained.
60	4 1.4	
	9 1.4	Poorly graded SAND with SILT (SP-SM), medium dense, light bluish gray, moist, fine grained.
50	14 1.4	Poorly graded SAND (SP), medium dense to dense, light gray, wet, medium to fine grained.
	37 1.4	
40	5 1.4	CLAYEY SAND (SC), loose, light tan, wet.
	10 1.4	Poorly graded SAND with SILT (SP-SM), medium dense, light reddish gray, moist, fine grained, trace clay.
30	33 1.4	SANDY SILT (ML), dense, light gray, moist, 1" thick caliche lens at Elev 34', interbedded with lenses of poorly graded sand (SP), light gray, wet, fine to medium grained.
	28 1.4	Elastic SILT with SAND (MH), very stiff, gray, moist.
20	31 1.4	SANDY SILT (ML), dense, light gray, moist, interbedded with poorly graded sand (SP), dense, light gray to reddish gray, moist, fine to medium grained.
	31 1.4	
10	36 1.4	Poorly graded SAND (SP), dense, light gray, moist, medium to fine grained.
0	15 1.4	SILTY SAND (SM), medium dense, greenish brown, wet.
-10	15 1.4	SILTY SAND (SM), medium dense, light bluish gray, moist, interbedded with clayey sand (SC), medium dense, light bluish gray, moist, fine grained.
		Fat CLAY (CH), very stiff, light gray with tan zones, moist, trace sand, trace fossils.
-20	17 1.4	Poorly graded SAND with SILT (SP-SM), medium dense, light gray, moist, fine grained.
-30	16 1.4	Poorly graded SAND (SP), very dense(estimated), tan, dry, sand is cemented into concretions. SILTY SAND (SM), medium dense, light reddish gray, moist, fine grained.
-40	70 1.4	- grading to very dense.
		Poorly graded SAND (SP), very dense, light gray, wet, medium grained.
-50	81 1.4	
-60	42 1.4	Poorly graded SAND (SP), very dense, brown, moist, trace silt and silt lenses, small concretionary lenses of well cemented sand at various depths.
-70	74 1.4	

10-3-06
ER_i=71%
Terminated at Elev -70.5'
Ground water was not measured.

602+00 602+50 603+00

PROFILE
HOR. 1"=10'
VER. 1"=10'

This LOTB sheet was prepared in accordance with the Caltrans Soil & Rock Logging, Classification, & Presentation Manual.

Zheng Xing 9-4-09
REGISTERED CIVIL ENGINEER

6-21-10
PLANS APPROVAL DATE

REGISTERED GEOLOGIST
Zheng Xing
No. 2130
Exp. 3-31-2011
CERTIFIED ENGINEERING GEOLOGIST
STATE OF CALIFORNIA

The State of California or its officers or agents shall not be responsible for the accuracy or completeness of electronic copies of this plan sheet.

DIST	COUNTY	ROUTE	POST MILES TOTAL PROJECT	SHEET NO	TOTAL SHEETS
10	Mer	165	11.7/26.7	106	110

ENGINEERING SERVICES
GEOTECHNICAL SERVICES

FUNCTIONAL SUPERVISOR
NAME: R. Byell

DRAWN BY: W. Tang 03/09
CHECKED BY: J. Thorne

FIELD INVESTIGATION BY:
S. Sunding, J. Thorne

ORIGINAL SCALE IN INCHES FOR REDUCED PLANS
0 1 2 3

STATE OF CALIFORNIA
DEPARTMENT OF TRANSPORTATION

DIVISION OF ENGINEERING SERVICES
STRUCTURE DESIGN
DESIGN BRANCH 17

BRIDGE NO. 39-0246
POST MILES 25.61

DISREGARD PRINTS BEARING EARLIER REVISION DATES

SAN JOAQUIN RIVER BRIDGE (REPLACE)

LOG OF TEST BORINGS 3 OF 7

REVISION DATES

SHEET 19 OF 23

CU 06241
EA 279801

FILE => 39-0246-2-tb03.dgn

ODS CIVIL LOG OF TEST BORINGS SHEET

USERNAME => trlenard DATE PLOTTED => 24-JUN-2010 TIME PLOTTED => 08:12

DIST	COUNTY	ROUTE	POST MILES TOTAL PROJECT	SHEET No	TOTAL SHEETS
10	Mer	165	11.7/26.7	107	110

REGISTERED CIVIL ENGINEER 9-4-09

6-21-10
PLANS APPROVAL DATE

REGISTERED GEOLOGIST
Zheng Xing
No. 2130
Exp. 3-31-2011
CERTIFIED ENGINEERING GEOLOGIST
STATE OF CALIFORNIA

The State of California or its officers or agents shall not be responsible for the accuracy or completeness of electronic copies of this plan sheet.

This LOTB sheet was prepared in accordance with the Caltrans Soil & Rock Logging, Classification, & Presentation Manual.

FOR PLAN VIEW, SEE
"LOG OF TEST BORINGS" 1 OF 7

ENGINEERING SERVICES		GEOTECHNICAL SERVICES	STATE OF CALIFORNIA DEPARTMENT OF TRANSPORTATION	DIVISION OF ENGINEERING SERVICES STRUCTURE DESIGN DESIGN BRANCH 17	BRIDGE NO. 39-0246 POST MILES 25.61	SAN JOAQUIN RIVER BRIDGE (REPLACE)
FUNCTIONAL SUPERVISOR NAME: R. Bvell	DRAWN BY: W. Tang 03/09 CHECKED BY: J. Thhorne	FIELD INVESTIGATION BY: S. Sunding, J. Thorne				LOG OF TEST BORINGS 4 OF 7

OGS CIVIL LOG OF TEST BORINGS SHEET

ORIGINAL SCALE IN INCHES FOR REDUCED PLANS 0 1 2 3

CU 06241
EA 279801

DISREGARD PRINTS BEARING EARLIER REVISION DATES → 03-10-09 05-18-09 06-08-09 08-20-09

REVISION DATES

SHEET 20 OF 23

FILE => 39-0246-z-ltb04.dgn

USERNAME => friehard DATE PLOTTED => 24-JUN-2010 TIME PLOTTED => 08:13

DIST	COUNTY	ROUTE	POST MILES TOTAL PROJECT	SHEET No	TOTAL SHEETS
10	Mer	165	11.7/26.7	108	110

REGISTERED CIVIL ENGINEER 9-4-09

6-21-10
PLANS APPROVAL DATE

REGISTERED GEOLOGIST Zheng Xing No. 2130 Exp. 3-31-2011 CERTIFIED ENGINEERING GEOLOGIST STATE OF CALIFORNIA

The State of California or its officers or agents shall not be responsible for the accuracy or completeness of electronic copies of this plan sheet.

REFERENCE: CALTRANS SOIL & ROCK LOGGING, CLASSIFICATION, AND PRESENTATION MANUAL.

CEMENTATION

Description	Criteria
Weak	Crumbles or breaks with handling or little finger pressure.
Moderate	Crumbles or breaks with considerable finger pressure.
Strong	Will not crumble or break with finger pressure.

CONSISTENCY OF COHESIVE SOILS

Description	Unconfined Compressive Strength (tsf)	Pocket Penetrometer Measurement (tsf)	Torvane Measurement (tsf)	Field Approximation
Very Soft	< 0.25	< 0.25	< 0.12	Easily penetrated several inches by fist
Soft	0.25 to 0.50	0.25 to 0.50	0.12 to 0.25	Easily penetrated several inches by thumb
Medium Stiff	0.50 to 1.0	0.50 to 1.0	0.25 to 0.50	Penetrated several inches by thumb with moderate effort
Stiff	1 to 2	1 to 2	0.50 to 1.0	Readily indented by thumb but penetrated only with great effort
Very Stiff	2 to 4	2 to 4	1.0 to 2.0	Readily indented by thumbnail
Hard	> 4.0	> 4.0	> 2.0	Indented by thumbnail with difficulty

BOREHOLE IDENTIFICATION

Symbol	Hole Type	Description
Size	A	Auger Boring
Size	R P	Rotary drilled boring Rotary percussion boring (air)
Size	R	Rotary drilled diamond core
Size	HD HA	Hand driven (1-inch soil tube) Hand Auger
●	D	Dynamic Cone Penetration Boring
▲	CPT	Cone Penetration Test (ASTM D 5778-95)
⬚	O	Other

Note: Size in inches.

PLASTICITY OF FINE-GRAINED SOILS

Description	Criteria
Nonplastic	A 1/8-inch thread cannot be rolled at any water content.
Low	The thread can barely be rolled and the lump cannot be formed when drier than the plastic limit.
Medium	The thread is easy to roll and not much time is required to reach the plastic limit. The thread cannot be rerolled after reaching the plastic limit. The lump crumbles when drier than the plastic limit.
High	It takes considerable time rolling and kneading to reach the plastic limit. The thread can be rerolled several times after reaching the plastic limit. The lump can be formed without crumbling when drier than the plastic limit.

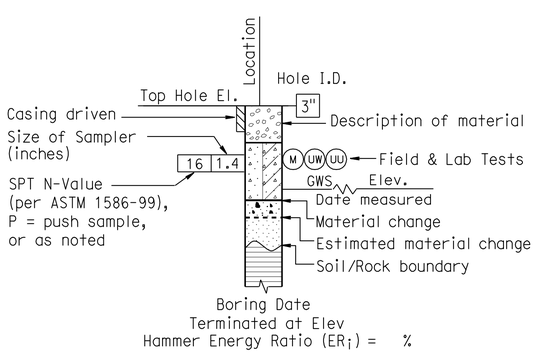

ROTARY BORING

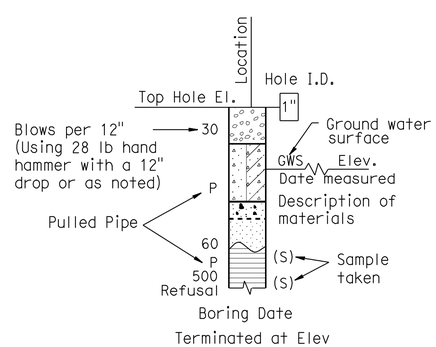

HAND BORING

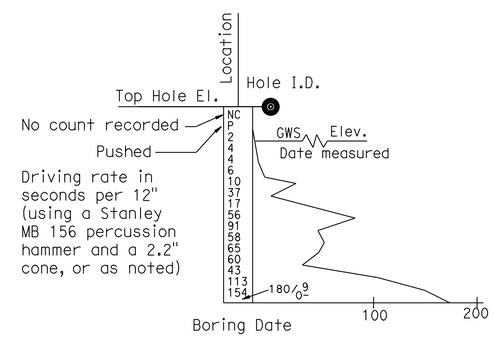

DYNAMIC CONE PENETRATION BORING

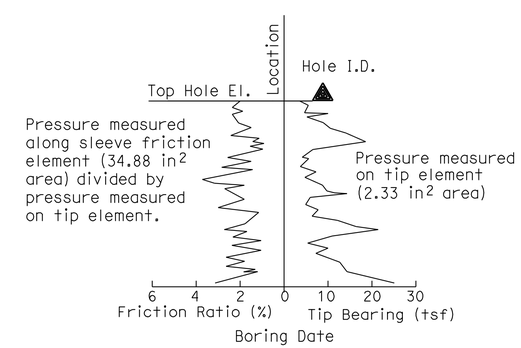

CONE PENETRATION TEST (CPT) SOUNDING

ENGINEERING SERVICES	GEOTECHNICAL SERVICES	STATE OF CALIFORNIA DEPARTMENT OF TRANSPORTATION	DIVISION OF ENGINEERING SERVICES STRUCTURE DESIGN DESIGN BRANCH 17	BRIDGE NO. 39-0246 POST MILES 25.61	SAN JOAQUIN RIVER BRIDGE (REPLACE) LOG OF TEST BORINGS 5 OF 7
FUNCTIONAL SUPERVISOR NAME: R. Bvell	DRAWN BY: W. Tang 03/09 CHECKED BY: J. Thhorne	FIELD INVESTIGATION BY: S. Sunding, J. Thorne			

OGS CIVIL LOG OF TEST BORINGS SHEET

ORIGINAL SCALE IN INCHES FOR REDUCED PLANS 0 1 2 3

CU 06241
EA 279801

DISREGARD PRINTS BEARING EARLIER REVISION DATES 03-10-09 06-09-09 08-20-09

REVISION DATES

SHEET 21 OF 23

FILE => 39-0246-z-1tb05.dgn

USERNAME => trlenard DATE PLOTTED => 24-JUN-2010 TIME PLOTTED => 08:13

REFERENCE: CALTRANS SOIL & ROCK LOGGING, CLASSIFICATION, AND PRESENTATION MANUAL.

DIST	COUNTY	ROUTE	POST MILES TOTAL PROJECT	SHEET No	TOTAL SHEETS
10	Mer	165	11.7/26.7	109	110

Zheng Xing 9-4-09
REGISTERED CIVIL ENGINEER

6-21-10
PLANS APPROVAL DATE

REGISTERED GEOLOGIST Zheng Xing No. 2130 Exp. 3-31-2011 CERTIFIED ENGINEERING GEOLOGIST STATE OF CALIFORNIA

The State of California or its officers or agents shall not be responsible for the accuracy or completeness of electronic copies of this plan sheet.

GROUP SYMBOLS AND NAMES

Graphic/Symbol	Group Names
GW	Well-graded GRAVEL Well-graded GRAVEL with SAND
GP	Poorly graded GRAVEL Poorly graded GRAVEL with SAND
GW-GM	Well-graded GRAVEL with SILT Well-graded GRAVEL with SILT and SAND
GW-GC	Well-graded GRAVEL with CLAY (or SILTY CLAY) Well-graded GRAVEL with CLAY and SAND (or SILTY CLAY and SAND)
GP-GM	Poorly graded GRAVEL with SILT Poorly graded GRAVEL with SILT and SAND
GP-GC	Poorly graded GRAVEL with CLAY (or SILTY CLAY) Poorly graded GRAVEL with CLAY and SAND (or SILTY CLAY and SAND)
GM	SILTY GRAVEL SILTY GRAVEL with SAND
GC	CLAYEY GRAVEL CLAYEY GRAVEL with SAND
GC-GM	SILTY, CLAYEY GRAVEL SILTY, CLAYEY GRAVEL with SAND
SW	Well-graded SAND Well-graded SAND with GRAVEL
SP	Poorly graded SAND Poorly graded SAND with GRAVEL
SW-SM	Well-graded SAND with SILT Well-graded SAND with SILT and GRAVEL
SW-SC	Well-graded SAND with CLAY (or SILTY CLAY) Well-graded SAND with CLAY and GRAVEL (or SILTY CLAY and GRAVEL)
SP-SM	Poorly graded SAND with SILT Poorly graded SAND with SILT and GRAVEL
SP-SC	Poorly graded SAND with CLAY (or SILTY CLAY) Poorly graded SAND with CLAY and GRAVEL (or SILTY CLAY and GRAVEL)
SM	SILTY SAND SILTY SAND with GRAVEL
SC	CLAYEY SAND CLAYEY SAND with GRAVEL
SC-SM	SILTY, CLAYEY SAND SILTY, CLAYEY SAND with GRAVEL
PT	PEAT
	COBBLES COBBLES and BOULDERS BOULDERS

Graphic/Symbol	Group Names
CL	Lean CLAY Lean CLAY with SAND Lean CLAY with GRAVEL SANDY lean CLAY SANDY lean CLAY with GRAVEL GRAVELLY lean CLAY GRAVELLY lean CLAY with SAND
CL-ML	SILTY CLAY SILTY CLAY with SAND SILTY CLAY with GRAVEL SANDY SILTY CLAY SANDY SILTY CLAY with GRAVEL GRAVELLY SILTY CLAY GRAVELLY SILTY CLAY with SAND
ML	SILT SILT with SAND SILT with GRAVEL SANDY SILT SANDY SILT with GRAVEL GRAVELLY SILT GRAVELLY SILT with SAND
OL	ORGANIC lean CLAY ORGANIC lean CLAY with SAND ORGANIC lean CLAY with GRAVEL SANDY ORGANIC lean CLAY SANDY ORGANIC lean CLAY with GRAVEL GRAVELLY ORGANIC lean CLAY GRAVELLY ORGANIC lean CLAY with SAND
OL	ORGANIC SILT ORGANIC SILT with SAND ORGANIC SILT with GRAVEL SANDY ORGANIC SILT SANDY ORGANIC SILT with GRAVEL GRAVELLY ORGANIC SILT GRAVELLY ORGANIC SILT with SAND
CH	Fat CLAY Fat CLAY with SAND Fat CLAY with GRAVEL SANDY fat CLAY SANDY fat CLAY with GRAVEL GRAVELLY fat CLAY GRAVELLY fat CLAY with SAND
MH	Elastic SILT Elastic SILT with SAND Elastic SILT with GRAVEL SANDY elastic SILT SANDY elastic SILT with GRAVEL GRAVELLY elastic SILT GRAVELLY elastic SILT with SAND
OH	ORGANIC fat CLAY ORGANIC fat CLAY with SAND ORGANIC fat CLAY with GRAVEL SANDY ORGANIC fat CLAY SANDY ORGANIC fat CLAY with GRAVEL GRAVELLY ORGANIC fat CLAY GRAVELLY ORGANIC fat CLAY with SAND
OH	ORGANIC elastic SILT ORGANIC elastic SILT with SAND ORGANIC elastic SILT with GRAVEL SANDY ORGANIC elastic SILT SANDY ORGANIC elastic SILT with GRAVEL GRAVELLY ORGANIC elastic SILT GRAVELLY ORGANIC elastic SILT with SAND
OL/OH	ORGANIC SOIL ORGANIC SOIL with SAND ORGANIC SOIL with GRAVEL SANDY ORGANIC SOIL SANDY ORGANIC SOIL with GRAVEL GRAVELLY ORGANIC SOIL GRAVELLY ORGANIC SOIL with SAND

FIELD AND LABORATORY TESTING

- (C) Consolidation (ASTM D 2435)
- (CL) Collapse Potential (ASTM D 5333)
- (CP) Compaction Curve (CTM 216)
- (CR) Corrosivity Testing (CTM 643, CTM 422, CTM 417)
- (CU) Consolidated Undrained Triaxial (ASTM D 4767)
- (DS) Direct Shear (ASTM D 3080)
- (EI) Expansion Index (ASTM D 4829)
- (M) Moisture Content (ASTM D 2216)
- (OC) Organic Content-% (ASTM D 2974)
- (P) Permeability (CTM 220)
- (PA) Particle Size Analysis (ASTM D 422)
- (PI) Plasticity Index (AASHTO T 90) Liquid Limit (AASHTO T 89)
- (PL) Point Load Index (ASTM D 5731)
- (PM) Pressure Meter
- (PP) Pocket Penetrometer
- (R) R-Value (CTM 301)
- (SE) Sand Equivalent (CTM 217)
- (SG) Specific Gravity (AASHTO T 100)
- (SL) Shrinkage Limit (ASTM D 427)
- (SW) Swell Potential (ASTM D 4546)
- (TV) Pocket Torvane
- (UC) Unconfined Compression-Soil (ASTM D 2166) Unconfined Compression-Rock (ASTM D 2938)
- (UU) Unconsolidated Undrained Triaxial (ASTM D 2850)
- (UW) Unit Weight (ASTM D 4767)
- (VS) Vane Shear (AASHTO T 223)

APPARENT DENSITY OF COHESIONLESS SOILS

Description	SPT N_{60} (Blows / 12 inches)
Very loose	0 - 4
Loose	5 - 10
Medium Dense	11 - 30
Dense	31 - 50
Very Dense	> 50

MOISTURE

Description	Criteria
Dry	Absence of moisture, dusty, dry to the touch
Moist	Damp but no visible water
Wet	Visible free water, usually soil is below water table

PERCENT OR PROPORTION OF SOILS

Description	Criteria
Trace	Particles are present but estimated to be less than 5%
Few	5 to 10%
Little	15 to 25%
Some	30 to 45%
Mostly	50 to 100%

PARTICLE SIZE

Description		Size
Boulder		> 12"
Cobble		3" to 12"
Gravel	Coarse	3/4" to 3"
	Fine	No. 4 to 3/4"
Sand	Coarse	No. 10 to No. 4
	Medium	No. 40 to No. 10
	Fine	No. 200 to No. 40

ENGINEERING SERVICES	GEOTECHNICAL SERVICES	STATE OF CALIFORNIA DEPARTMENT OF TRANSPORTATION	DIVISION OF ENGINEERING SERVICES STRUCTURE DESIGN DESIGN BRANCH 17	BRIDGE NO. 39-0246 POST MILES 25.61	SAN JOAQUIN RIVER BRIDGE (REPLACE)
FUNCTIONAL SUPERVISOR NAME: R. Bvell	DRAWN BY: W. Tang 03/09 CHECKED BY: J. Thhorne	FIELD INVESTIGATION BY: S. Sunding, J. Thorne			LOG OF TEST BORINGS 6 OF 7

OGS CIVIL LOG OF TEST BORINGS SHEET

ORIGINAL SCALE IN INCHES FOR REDUCED PLANS 0 1 2 3

CU 06241
EA 279801

DISREGARD PRINTS BEARING EARLIER REVISION DATES 05-18-09 06-09-09 08-20-09

REVISION DATES

SHEET 22 OF 23

FILE => 39-0246-z-ltb06.dgn

USERNAME => trlenard DATE PLOTTED => 24-JUN-2010 TIME PLOTTED => 08:13

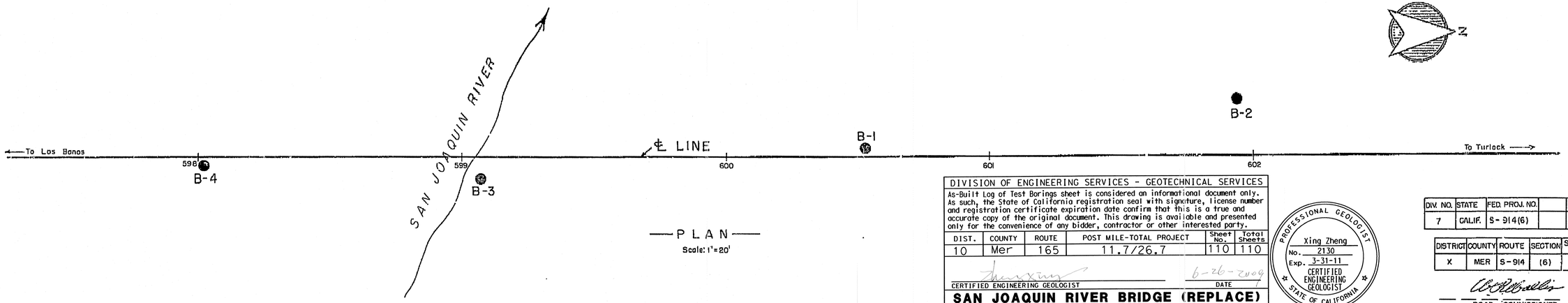

—PLAN—
Scale: 1"=20'

DIVISION OF ENGINEERING SERVICES - GEOTECHNICAL SERVICES

As-Built Log of Test Borings sheet is considered an informational document only. As such, the State of California registration seal with signature, license number and registration certificate expiration date confirm that this is a true and accurate copy of the original document. This drawing is available and presented only for the convenience of any bidder, contractor or other interested party.

DIST.	COUNTY	ROUTE	POST MILE-TOTAL PROJECT	Sheet No.	Total Sheets
10	Mer	165	11.7/26.7	110	110

CERTIFIED ENGINEERING GEOLOGIST — DATE 6-26-2009

PROFESSIONAL GEOLOGIST — Xing Zheng — No. 2130 — Exp. 3-31-11 — CERTIFIED ENGINEERING GEOLOGIST — STATE OF CALIFORNIA

SAN JOAQUIN RIVER BRIDGE (REPLACE)

LOG OF TEST BORINGS 7 OF 7

NOTE: A COPY OF THIS LOG OF TEST BORINGS IS AVAILABLE AT OFFICE OF STRUCTURE MAINTENANCE AND INVESTIGATIONS, SACRAMENTO, CALIFORNIA

CU: 10
EA: 279801

BRIDGE No. 39-0246
Sheet ___ of ___

DIV. NO.	STATE	FED. PROJ. NO.		SHEET NO.	SHEET TOTALS
7	CALIF.	S-914(6)		33	44

DISTRICT	COUNTY	ROUTE	SECTION	SHEET NO.	SHEET TOTALS
X	MER	S-914	(6)	33	44

ROAD COMMISSIONER
O.E. License No. 6482

Approved September 15, 1958
DISTRICT ENGINEER, DISTRICT X

TO ACCOMPANY PLANS DATED 6-21-10

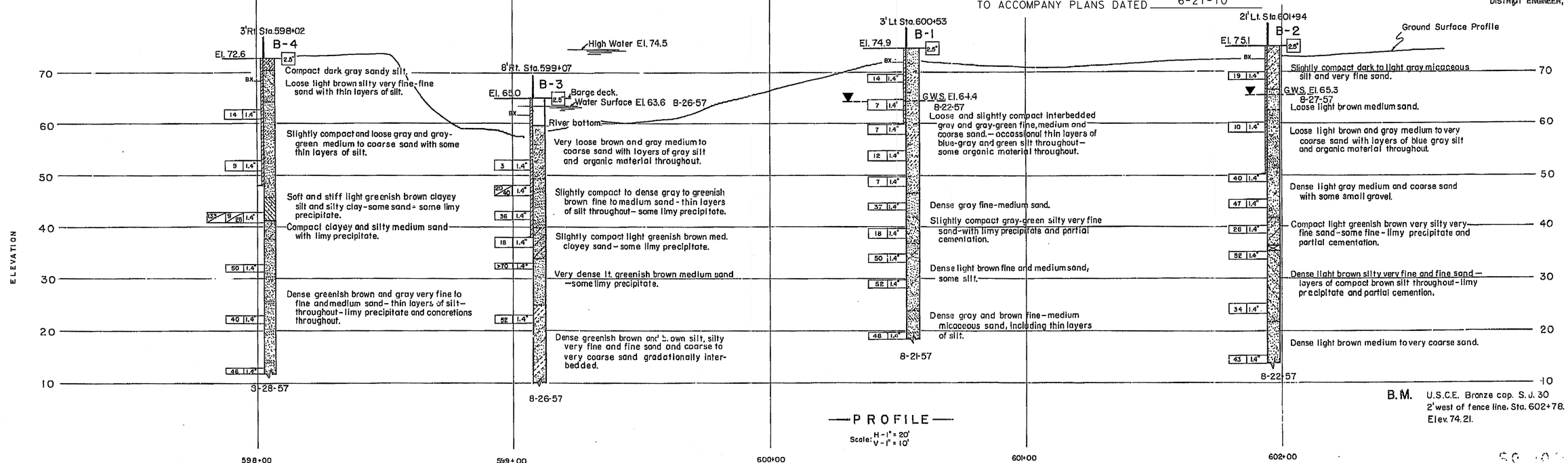

—PROFILE—
Scale: H-1" = 20'
V-1" = 10'

B.M. U.S.C.E. Bronze cap. S.J. 30
2' west of fence line. Sta. 602+78.
Elev. 74.21.

Br. No. 39C-32

LEGEND OF EARTH MATERIALS

SIZE CLASSIFICATION

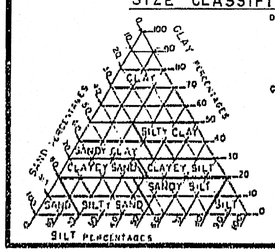

Diagram showing the basis of grain size distribution used in determination of class names. Size classification is based on the Wentworth grade scale in field classification or the ASTM grade scale in the laboratory. See sheet 5.

Classification of earth material shown on this sheet is based on field inspection and should not be construed to imply mechanical analysis unless so stated.

MATERIAL SYMBOLS

Gravel
Sand
Silt
Clay
Sandy clay or clay
Sandy silt or silty sand
Silty clay or clayey silt
Peat or organic matter
Fill material
Shale
Sandstone
Limestone
Metamorphic rock
Igneous rock

CONSISTENCY CLASSIFICATION

According to the Standard Penetration Test

No. of blows	Granular	Cohesive
0-5	very loose	very soft
6-10	loose	soft
11-20	slightly compact	stiff
21-35	compact	very stiff
36-70	dense	hard
70+	very dense	very hard

LEGEND OF BORING OPERATIONS

Plan of any boring
Size Flush penetrometer
Size 2 1/2" Cone penetrometer
Size Rotary boring
Size Auger boring
Size Sample boring
Size Jet boring
Size Diamond core boring
Test pit

ROTARY BORING

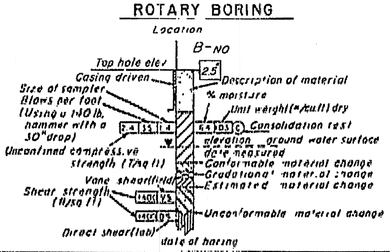

PENETRATION TEST

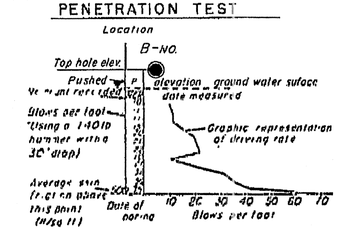

GEO-ENGINEERING COMPANY

F-321-1 APPROVED H.R. Taber 9/9/59
LICENSED CIVIL ENGINEER No. 9165

MERCED COUNTY

BRIDGE ACROSS

SAN JOAQUIN RIVER

LOG OF TEST BORINGS

Scale As Shown | Date Sept. 5, 1957 | File | Drawing C-5946-5

FILENAME => 39-0246-z-ltb07.tif

AS BUILT 7E-2876.2