DIST	COUNTY	ROUTE	POST MILES TOTAL PROJECT	SHEET No	TOTAL SHEETS
10	Mer	165	11.7/26.7	88	110

REGISTERED CIVIL ENGINEER 9-04-09 DATE

6-21-10
PLANS APPROVAL DATE

REGISTERED PROFESSIONAL ENGINEER RODNEY SIMMONS No. C 51174 Exp. 09-30-11 CIVIL STATE OF CALIFORNIA

The State of California or its officers or agents shall not be responsible for the accuracy or completeness of electronic copies of this plan sheet.

3

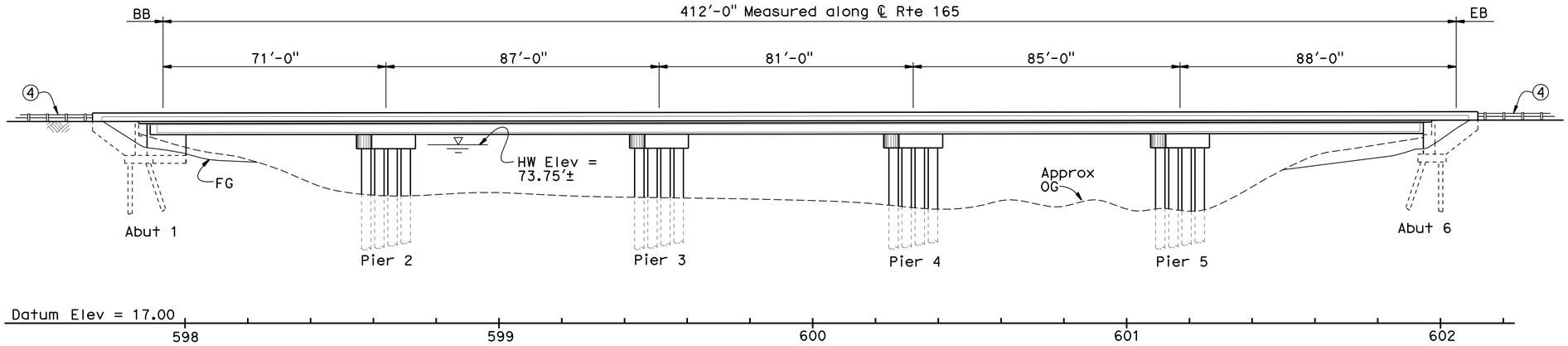

ELEVATION

1" = 20'

QUANTITIES

BRIDGE REMOVAL	1 LUMP SUM
STRUCTURE EXCAVATION (BRIDGE)	354 CY
STRUCTURE BACKFILL (BRIDGE)	169 CY
FURNISH PILING (CLASS 200) (ALTERNATIVE W)	1,375 LF
DRIVE PILE (CLASS 200) (ALTERNATIVE W)	17 EA
FURNISH 36" CAST-IN-STEEL SHELL CONCRETE PILING	1,888 LF
DRIVE 36" CAST-IN-STEEL SHELL CONCRETE PILE	16 EA
STRUCTURAL CONCRETE, BRIDGE FOOTING	68 CY
STRUCTURAL CONCRETE, BRIDGE	1,129 CY
FURNISH PRECAST PRESTRESSED CONCRETE BULB-TEE GIRDER (80'-90')	28 EA
FURNISH PRECAST PRESTRESSED CONCRETE BULB-TEE GIRDER (60'-70')	7 EA
ERECT PRECAST PRESTRESSED CONCRETE GIRDER	35 EA
JOINT SEAL (MOVEMENT RATING 1½")	93 LF
BAR REINFORCING STEEL (BRIDGE)	303,650 LB
CLEAN AND THERMAL SPRAY COAT STEEL PILING	LUMP SUM
CONCRETE BARRIER (TYPE 732)	890 LF

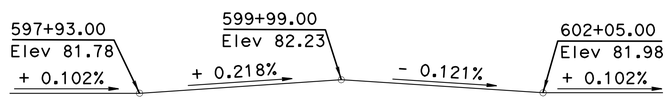

PROFILE GRADE

No Scale

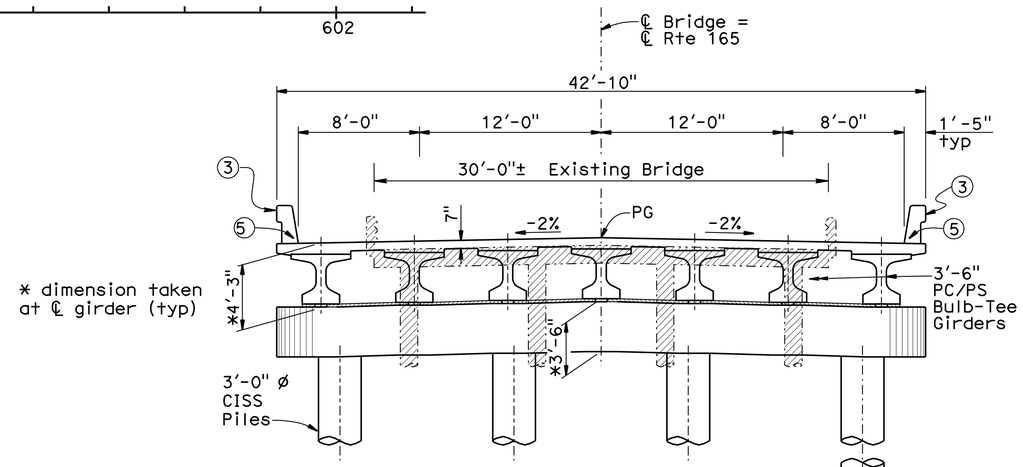

TYPICAL SECTION

1" = 5'

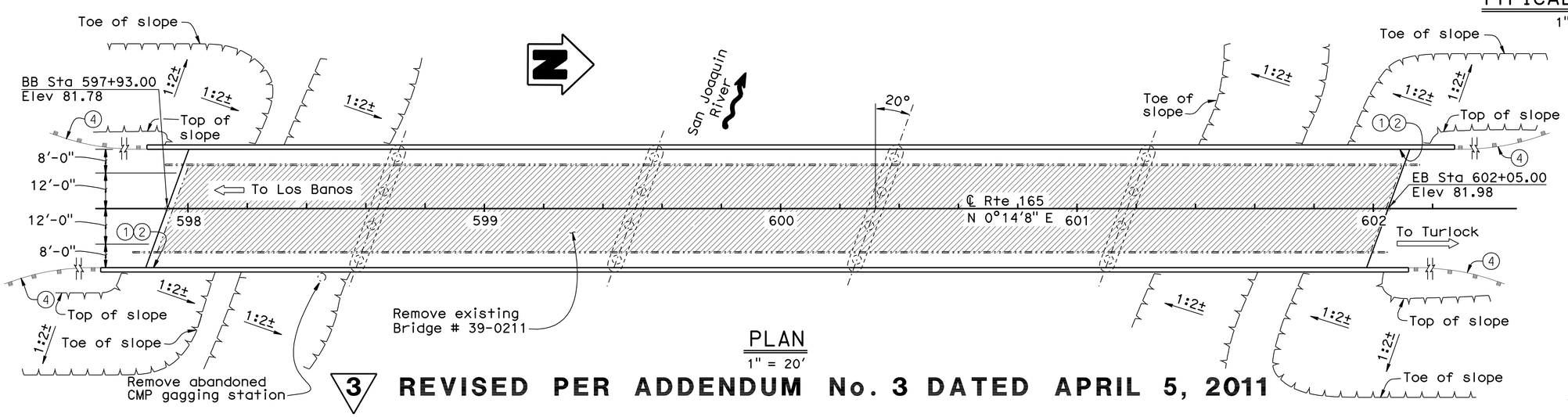

PLAN

1" = 20'

3 **REVISED PER ADDENDUM No. 3 DATED APRIL 5, 2011**

NOTES:

For "STANDARD PLAN LIST" and "GENERAL NOTES", see "INDEX TO PLANS" sheet.

1. Paint "San Joaquin River Bridge".
2. Paint "Br. No. 39-0246".
3. Concrete Barrier Type 732.
4. MBGR, see "Road Plans".
5. Scuppers. For scupper location, see "SCUPPER STATIONING" table. on "Typical Section" sheet.

Indicates material removal. Existing bridge, including supplemental steel bents, to be removed to 3 ft below existing grade minimum.

Indicates existing structure.

DESIGN	BY M. Kodsuntie	CHECKED G. Schuster	LOAD & RESISTANCE FACTOR DESIGN	LIVE LOADING: HL93 W/"LOW-BOY"; PERMIT DESIGN VEHICLE	
DETAILS	BY Lily Wang/G. M. Souza	CHECKED G. Schuster	LAYOUT	BY M. Kodsuntie	CHECKED G. Schuster
QUANTITIES	BY M.K/P.H.	CHECKED G. Schuster	SPECIFICATIONS	BY Xiahong Li	PLANS AND SPECS COMPARED

X
DESIGN ENGINEER

STATE OF CALIFORNIA
DEPARTMENT OF TRANSPORTATION

DIVISION OF ENGINEERING SERVICES
STRUCTURE DESIGN
DESIGN BRANCH 17

BRIDGE NO. 39-0246
POST MILE 25.61

SAN JOAQUIN RIVER BR. (REPLACE)
GENERAL PLAN

ORIGINAL SCALE IN INCHES FOR REDUCED PLANS 0 1 2 3

CU 06241
EA 279801

DISREGARD PRINTS BEARING EARLIER REVISION DATES

REVISION DATES: 01-23-08 04-01-09 06-08-09 01-31-11 02-04-11 02-07-11 03-01-11 03-11-11 03-26-09

SHEET 1 OF 22

USERNAME => trmmgaye DATE PLOTTED => 04-APR-2011 TIME PLOTTED => 13:44

STRUCTURES DESIGN GENERAL PLAN SHEET (ENGLISH) (REV.07-24-06)

FILE => 39-0246-01-a-gp.add

DIST	COUNTY	ROUTE	POST MILES TOTAL PROJECT	SHEET No	TOTAL SHEETS
10	Mer	165	11.7/26.7	89	110

REGISTERED CIVIL ENGINEER 9-04-09 DATE

6-21-10
PLANS APPROVAL DATE

REGISTERED PROFESSIONAL ENGINEER RODNEY SIMMONS No. C 51174 Exp. 09-30-11 CIVIL STATE OF CALIFORNIA

The State of California or its officers or agents shall not be responsible for the accuracy or completeness of electronic copies of this plan sheet.

3

GENERAL NOTES
LOAD AND RESISTANCE FACTOR DESIGN

DESIGN:
AASHTO LRFD Bridge Design Specifications, 4th edition and the Caltrans Amendments, preface dated December 2008

SEISMIC DESIGN:
Caltrans Seismic Design Criteria (SDC), Version 1.4 dated June 2006

DEAD LOAD:
Includes 35 psf for future wearing surface. The deck load between the girders has been increased by a factor of 10% to allow for the use of steel deck forms.

LIVE LOADING:
HL93 and permit design load.

SEISMIC LOADING:

Peak Rock Acceleration 0.3 g
Site specific ARS Curve

CONCRETE:

fy = 60 ksi
f'c = 4.0 ksi
n = 8
See prestressing notes.

STRUCTURAL STEEL (new construction):

Steel Pipe Piles: ASTM A252 Grade 3
fy = ASTM A709 Grade 50

PILE DATA TABLE

LOCATION	PILE TYPE	NOMINAL RESISTANCE COMPRESSION	NOMINAL RESISTANCE TENSION	DESIGN TIP ELEVATION	SPECIFIED TIP ELEVATION	NOMINAL DRIVING RESISTANCE
Abut 1	16" Class 200 Alt W	400 kips	N/A	-8.0 (a)	-8	620 kips
Pier 2	36" CISS	1270 Kips	N/A	-34 (a) -7.3 (b)	-34	1800 kips
Pier 3	36" CISS	1350 Kips	N/A	-38 (a) 15.1 (b)	-38	1800 kips
Pier 4	36" CISS	1325 Kips	N/A	-51 (a) -2.1 (b)	-51	2200 kips
Pier 5	36" CISS	1370 Kips	N/A	-53 (a) -1.5 (b)	-53	2200 kips
Abut 5	16" Class 200 Alt W	400 kips	N/A	-9.0 (a)	-9	600 kips

Notes:
1. For Pile Details, see "Abutment Details No. 1" and "Bent Details No. 2" sheets
2. Design tip elevations are controlled by: (a) compression (b) lateral loads.

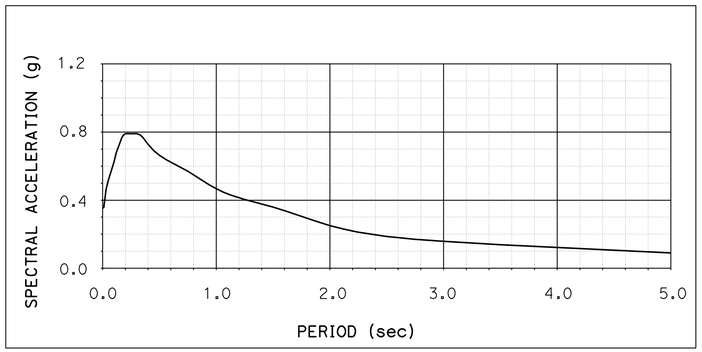

ARS Curve
NO SCALE

INDEX TO PLANS

SHEET NO.	TITLE
1.	GENERAL PLAN
2.	INDEX TO PLANS
3.	DECK CONTOURS
4.	FOUNDATION PLAN
5.	ABUTMENT LAYOUT
6.	ABUTMENT DETAILS NO. 1
7.	ABUTMENT DETAILS NO. 2
8.	PIER LAYOUT
9.	PIER DETAILS
10.	TYPICAL SECTION
11.	GIRDER LAYOUT
12.	GIRDER DETAILS
13.	GIRDER REINFORCEMENT
14.	PRESTRESSED BULB-TEE GIRDER DETAILS NO. 1
15.	PRESTRESSED BULB-TEE GIRDER DETAILS NO. 2
16.	LOG OF TEST BORINGS 1 OF 7
17.	LOG OF TEST BORINGS 2 OF 7
18.	LOG OF TEST BORINGS 3 OF 7
19.	LOG OF TEST BORINGS 4 OF 7
20.	LOG OF TEST BORINGS 5 OF 7
21.	LOG OF TEST BORINGS 6 OF 7
22.	LOG OF TEST BORINGS 7 OF 7

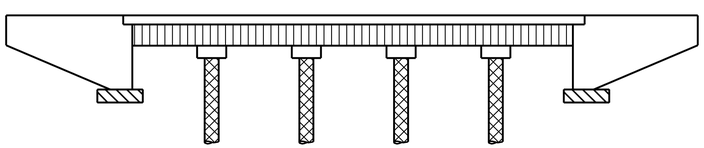

Structural Concrete, Bridge (f'c = 4000 psi @ 28 days)

Prestressed Bulb-Tee Girders, see "Prestressed Bulb-Tee Girder Details No. 1" and "Prestressed Bulb-Tee Girder Details No. 2" sheets

CISS Pile

Structural Concrete, Bridge Footing

CONCRETE STRENGTH AND TYPE LIMITS
NO SCALE

STANDARD PLANS DATED MAY 2006

A10A	ACRONYMS AND ABBREVIATIONS (A-L)
A10B	ACRONYMS AND ABBREVIATIONS (M-Z)
A10C	SYMBOLS (SHEET 1 OF 2)
A10D	SYMBOLS (SHEET 2 OF 2)
B0-1	BRIDGE DETAILS
B0-3	BRIDGE DETAILS
B0-5	BRIDGE DETAILS
B0-13	BRIDGE DETAILS
B2-8	PILE DETAILS CLASS 200
RSP B6-21	JOINT SEALS (MAXIMUM MOVEMENT RATING = 2")
B11-55	CONCRETE BARRIER TYPE 732

Standard Plan sheet number
Detail number

3 **REVISED PER ADDENDUM No. 3 DATED APRIL 5, 2011**

	BY	CHECKED
DESIGN	M. Kodsuntie	G. Schuster
DETAILS	G. m. Souza/S. Jiang	G. Schuster
QUANTITIES	M.K./P.H	G. Schuster

STATE OF CALIFORNIA
DEPARTMENT OF TRANSPORTATION

DIVISION OF ENGINEERING SERVICES
STRUCTURE DESIGN
DESIGN BRANCH 17

BRIDGE NO. 39-0246
POST MILE 25.61

SAN JOAQUIN RIVER BR. (REPLACE)
INDEX TO PLANS

STRUCTURES DESIGN DETAIL SHEET (ENGLISH) (REV. 10/25/05)

ORIGINAL SCALE IN INCHES FOR REDUCED PLANS 0 1 2 3

CU 06241
EA 279801

DISREGARD PRINTS BEARING EARLIER REVISION DATES

REVISION DATES: 01-16-09 08-18-09 03-04-11 3-14-11 3-15-11 04-04-09 04-24-09 06-12-09 06-12-09

SHEET 2 OF 22

FILE => 39-0246-02-a-itp.add

USERNAME => trmikest DATE PLOTTED => 04-APR-2011 TIME PLOTTED => 14:35

DIST	COUNTY	ROUTE	POST MILES TOTAL PROJECT	SHEET No	TOTAL SHEETS
10	Mer	165	11.7/26.7	90	110

REGISTERED CIVIL ENGINEER 9-04-09 DATE

6-21-10
PLANS APPROVAL DATE

REGISTERED PROFESSIONAL ENGINEER
RODNEY SIMMONS
No. C 51174
Exp. 09-30-11
CIVIL
STATE OF CALIFORNIA

The State of California or its officers or agents shall not be responsible for the accuracy or completeness of electronic copies of this plan sheet.

3

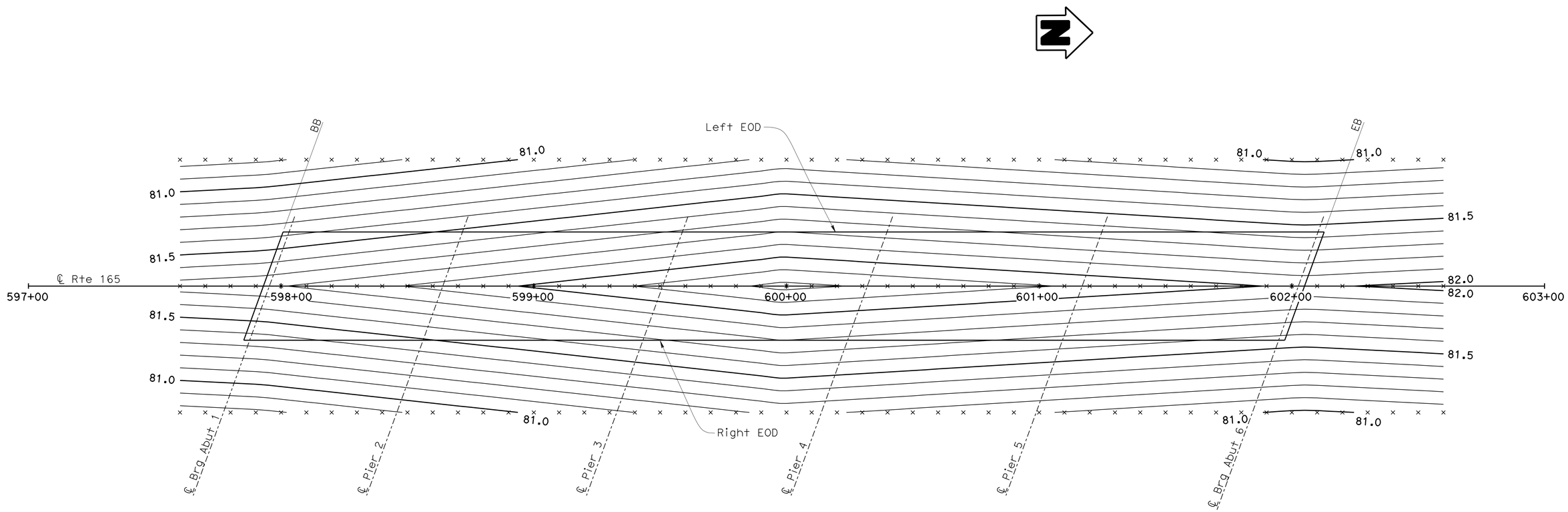

DECK CONTOURS

1" = 20'

Notes:

1. Contour Interval = 0.10'
2. Contours do not include camber.

x = 10' Intervals along station line.

3 **REVISED PER ADDENDUM No. 3 DATED APRIL 5, 2011**

	BY	CHECKED
DESIGN	M. Kodsuntie	G. Schuster
DETAILS	G. M. Souza	G. Schuster
QUANTITIES	M. Kodsuntie	G. Schuster

STATE OF CALIFORNIA
DEPARTMENT OF TRANSPORTATION

DIVISION OF ENGINEERING SERVICES
STRUCTURE DESIGN
DESIGN BRANCH 17

BRIDGE NO. 39-0246
POST MILE 25.61

SAN JOAQUIN RIVER BR. (REPLACE)
DECK CONTOURS

STRUCTURES DESIGN DETAIL SHEET (ENGLISH) (REV. 10/25/05)

ORIGINAL SCALE IN INCHES FOR REDUCED PLANS 0 1 2 3

CU 06241
EA 279801

DISREGARD PRINTS BEARING EARLIER REVISION DATES 02-14-11 03-11-11

REVISION DATES

SHEET 3 OF 22

FILE => 39-0246-03-b-deck-con.add

USERNAME => trmnguye DATE PLOTTED => 04-APR-2011 TIME PLOTTED => 13:45

DIST	COUNTY	ROUTE	POST MILES TOTAL PROJECT	SHEET No	TOTAL SHEETS
10	Mer	165	11.7/26.7	91	110

REGISTERED CIVIL ENGINEER 9-04-09 DATE

6-21-10
PLANS APPROVAL DATE

The State of California or its officers or agents shall not be responsible for the accuracy or completeness of electronic copies of this plan sheet.

REGISTERED PROFESSIONAL ENGINEER RODNEY SIMMONS No. C 51174 Exp. 09-30-11 CIVIL STATE OF CALIFORNIA

3

LEGEND

Denotes bottom of footing elevation

Denotes existing piles and pile extensions (to be removed)

Denotes Class 200 Steel Pipe Pile, Alt "W"
Not all piles are shown

Denotes 36" ø CISS Piles

Denotes existing structure (to be removed)

Indicates existing supplemental steel bents in spans 4-12 to be removed.

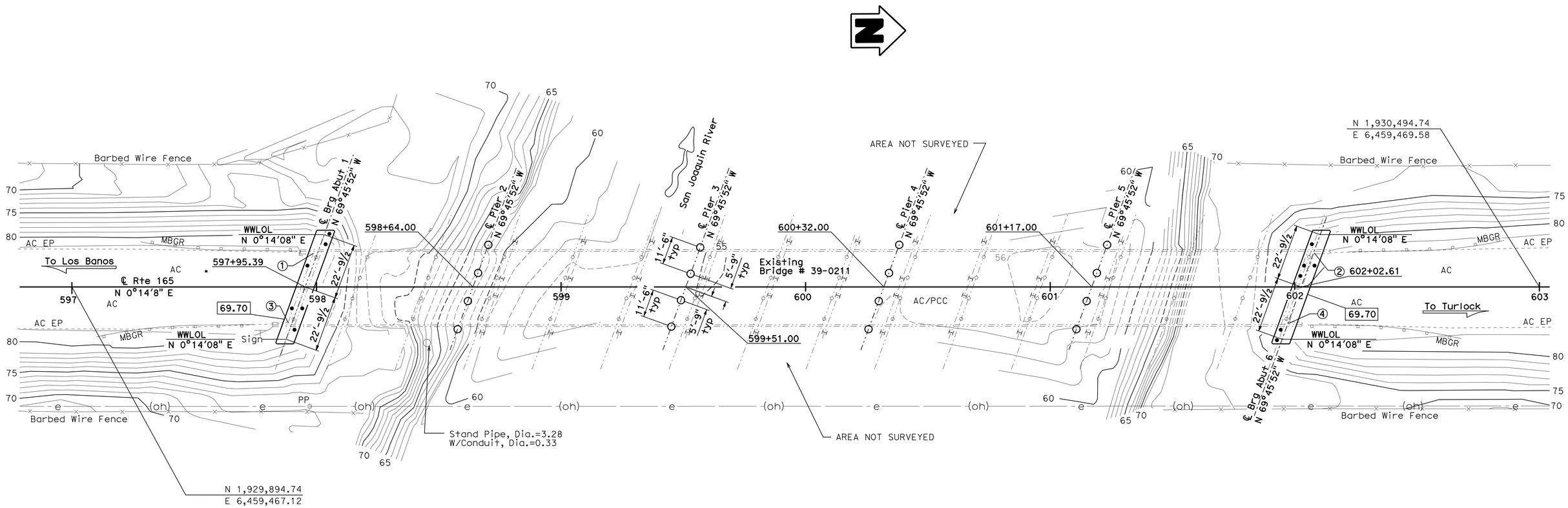

SURVEY CONTROL

PM25.60 (Not Shown On Plan)
Fnd 1" IP with Red Plug
20.48 FT Rt. ℄ "A1" Line Rte 165
Sta. 596+60.50
N 1,929,835.16
E 6,459,487.44
Elev. = 80.13

PM 25.75 (Not Shown On Plan)
Fnd 1" IP With Red Plug
25.11 FT Lt. ℄ "A1" Line Rte 165
Sta. 604+27.91
N 1,930,622.75
E 6,459,445.00
Elev. = 80.90

Bridge Location

① - 13.81 Lt ℄ "A1" Line Rte 165, Sta.597+98.83, Elev.=81.02 ±
② - 13.99 Lt ℄ "A1" Line Rte 165, Sta.602+07.94, Elev.=81.29 ±
③ - 14.82 Rt ℄ "A1" Line Rte 165, Sta.597+88.50, Elev.=81.07 ±
④ - 14.97 Rt ℄ "A1" Line Rte 165, Sta.601+97.38, Elev.=81.26 ±

HYDROLOGIC / HYDRAULIC DATA SUMMARY

DRAINAGE AREA: 7,500 SQUARE MILES

	DESIGN FLOOD	BASE FLOOD	CVFPD
FREQUENCY (YEARS)	50	100	N/A
DISCHARGE (CUBIC FEET PER SECOND)	16,800	21,655	26,000
WATER SURFACE ELEV. (FEET)	72.2	73.1	73.8

FLOOD PLAIN DATA ARE BASED UPON INFORMATION AVAILABLE WHEN THE PLANS WERE PREPARED AND ARE SHOWN TO MEET FEDERAL REQUIREMENTS. THE ACCURACY OF SAID INFORMATION IS NOT WARRANTED BY THE STATE AND INTERESTED OR AFFECTED PARTIES SHOULD MAKE THEIR OWN INVESTIGATIONS.

3 **REVISED PER ADDENDUM No. 3 DATED APRIL 5, 2011**

PRELIMINARY INVESTIGATION SECTION

SCALE	VERT.DATUM NGVD29	PHOTOGRAMMETRY AS OF: X		
1"=20'	HORZ.DATUM NAD83 (1991.35)	SURVEYED	BY District/T.Gillett	CHECKED BY T.Gillett 05/2008
ALIGNMENT TIES Dist.Traverse Sheet		DRAFTED	BY T/Zolnikova 05/2008	CHECKED BY J.Pallares 05/2008

	BY	CHECKED
DESIGN	M.K./P.H	G. Schuster
DETAILS	G. Souza/S. Jiang	G. Schuster
QUANTITIES	M.K./P.H	G. Schuster

STATE OF CALIFORNIA
DEPARTMENT OF TRANSPORTATION

DIVISION OF ENGINEERING SERVICES
STRUCTURE DESIGN
DESIGN BRANCH 17

BRIDGE NO. 39-0246
POST MILE 25.61

SAN JOAQUIN RIVER BR. (REPLACE)
FOUNDATION PLAN

STRUCTURES FOUNDATION PLAN SHEET (ENGLISH) (REV. 10/25/05)

ORIGINAL SCALE IN INCHES FOR REDUCED PLANS 0 1 2 3

CU 06241
EA 279801

DISREGARD PRINTS BEARING EARLIER REVISION DATES

REVISION DATES: 05-04-08 07-24-11 01-31-11 02-04-11 02-07-11 03-03-11 03-10-11 06-12-09 01-24-11

SHEET 4 OF 22

FILE => 39-0246-04-e-fpl.add

USERNAME => frmmgaye DATE PLOTTED => 04-APR-2011 TIME PLOTTED => 13:45

DIST	COUNTY	ROUTE	POST MILES TOTAL PROJECT	SHEET No	TOTAL SHEETS
10	Mer	165	11.7/26.7	92	110

REGISTERED CIVIL ENGINEER 9-04-09 DATE

6-21-10
PLANS APPROVAL DATE

REGISTERED PROFESSIONAL ENGINEER RODNEY SIMMONS No. C 51174 Exp. 09-30-11 CIVIL STATE OF CALIFORNIA

The State of California or its officers or agents shall not be responsible for the accuracy or completeness of electronic copies of this plan sheet.

3

LEGEND:

- Indicates 3:1 battered Pile
- Indicates vertical Pile
- Indicates approx location of existing Pile.

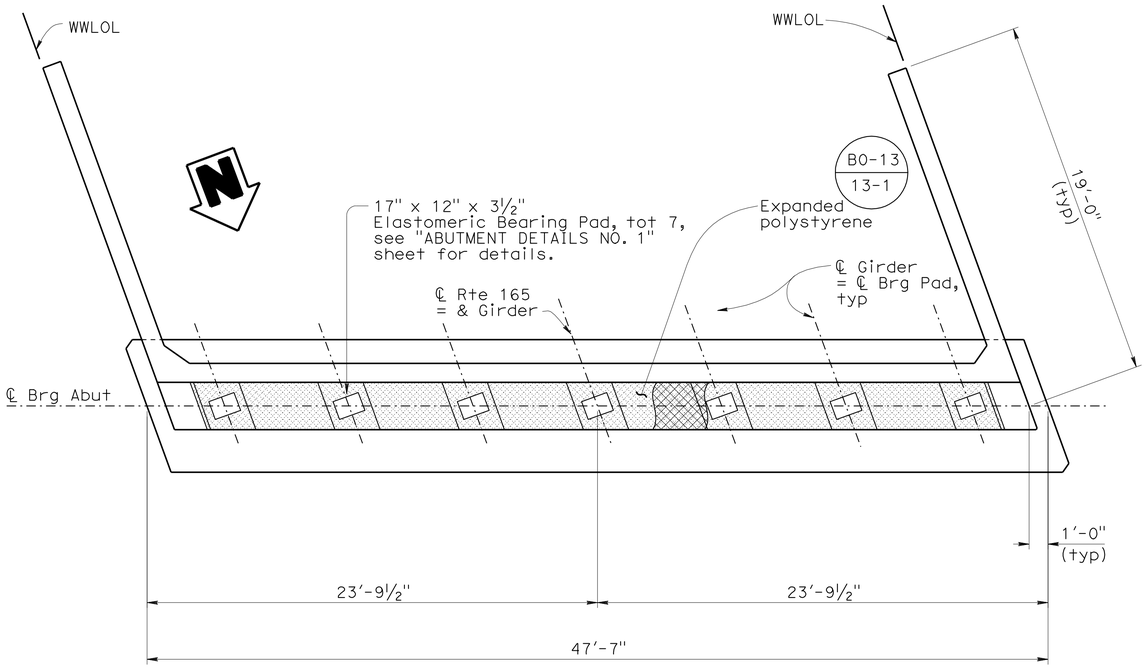

PLAN
¼" = 1'-0"

NOTES:

1. Abutment 1 shown Abutment 6 similar.
2. For "Section A-A", see "ABUTMENT DETAILS NO. 1" sheet.

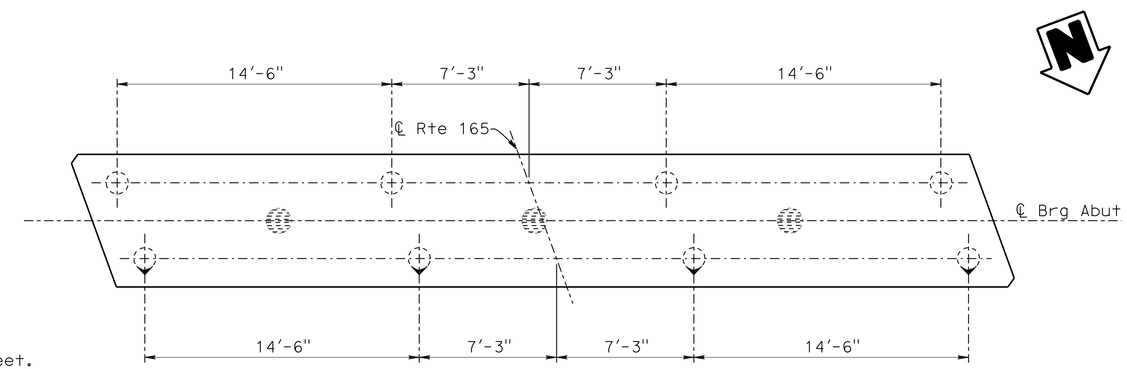

ABUTMENT 1 PILE LAYOUT
¼" = 1'-0"

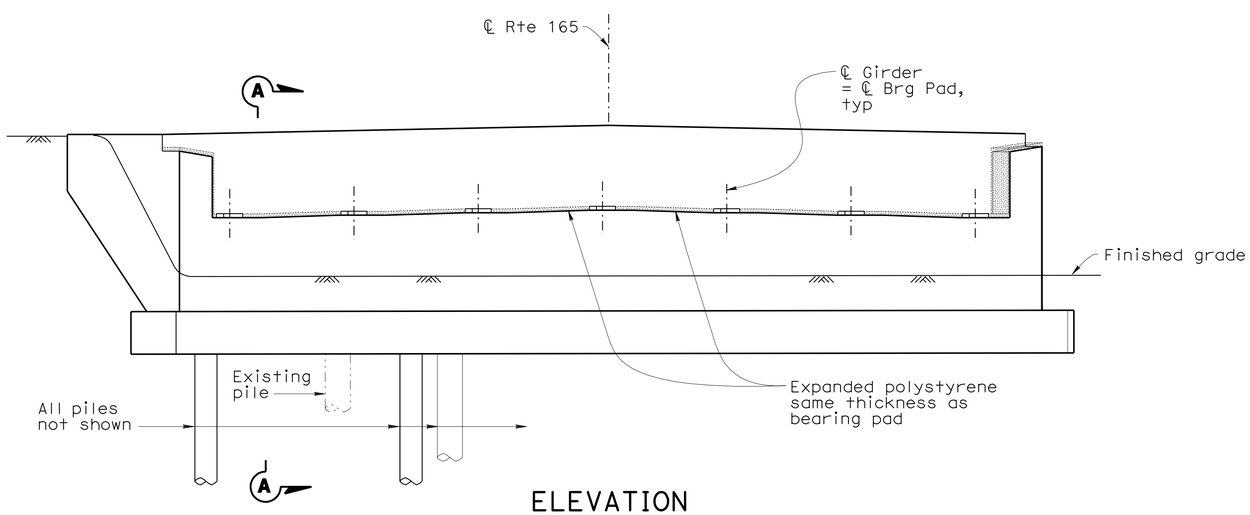

ELEVATION
¼" = 1'-0"

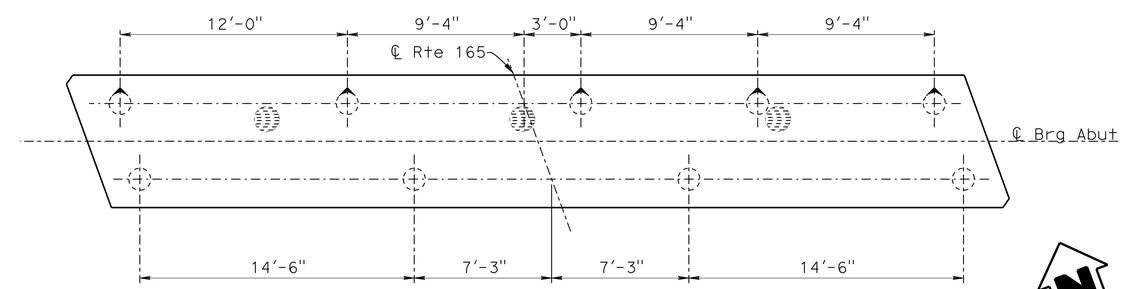

ABUTMENT 6 PILE LAYOUT
¼" = 1'-0"

3 **REVISED PER ADDENDUM No. 3 DATED APRIL 5, 2011**

DESIGN	BY P.H./M.K.	CHECKED G. Schuster	
DETAILS	BY G. M. Souza	CHECKED G. Schuster	
QUANTITIES	BY M. Kodsuntie	CHECKED G.S./P.H.	

STATE OF CALIFORNIA
DEPARTMENT OF TRANSPORTATION

DIVISION OF ENGINEERING SERVICES
STRUCTURE DESIGN
DESIGN BRANCH 17

BRIDGE NO. 39-0246
POST MILE 25.61

SAN JOAQUIN RIVER BR. (REPLACE)
ABUTMENT LAYOUT

STRUCTURES DESIGN DETAIL SHEET (ENGLISH) (REV. 10/25/05)

ORIGINAL SCALE IN INCHES FOR REDUCED PLANS 0 1 2 3

CU 06241
EA 279801

DISREGARD PRINTS BEARING EARLIER REVISION DATES

REVISION DATES: 02-18-11 3-03-11 02-18-11

SHEET 5 OF 22

FILE => 39-0246-05-f_abut-lyt.add

USERNAME => ttmmguye DATE PLOTTED => 04-APR-2011 TIME PLOTTED => 13:45

DIST	COUNTY	ROUTE	POST MILES TOTAL PROJECT	SHEET No	TOTAL SHEETS
10	Mer	165	11.7/26.7	93	110

REGISTERED CIVIL ENGINEER 9-04-09 DATE

6-21-10
PLANS APPROVAL DATE

REGISTERED PROFESSIONAL ENGINEER RODNEY SIMMONS No. C 51174 Exp. 09-30-11 CIVIL STATE OF CALIFORNIA

The State of California or its officers or agents shall not be responsible for the accuracy or completeness of electronic copies of this plan sheet.

3

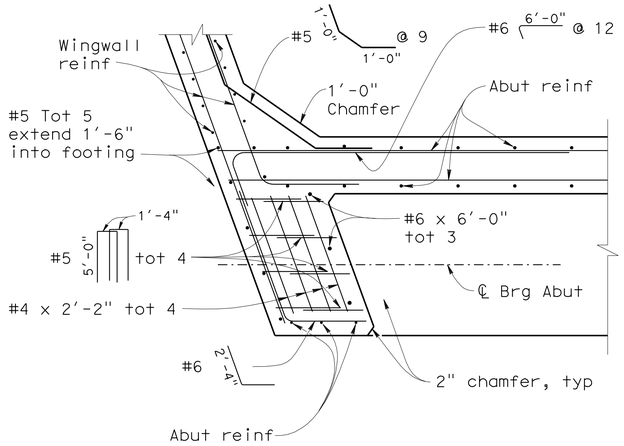

SECTION B-B

¾"= 1'-0"

* Abut 1 right shown, others similar

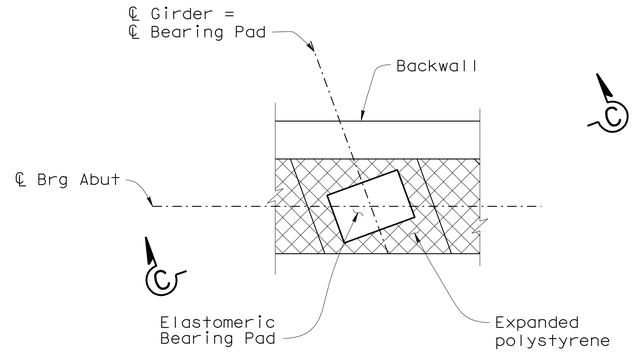

PLAN

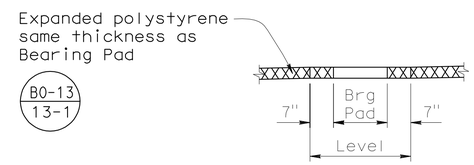

SECTION C-C

ABUTMENT BEARING PAD DETAIL

No Scale

(Details typical at all abutment bearing pads)

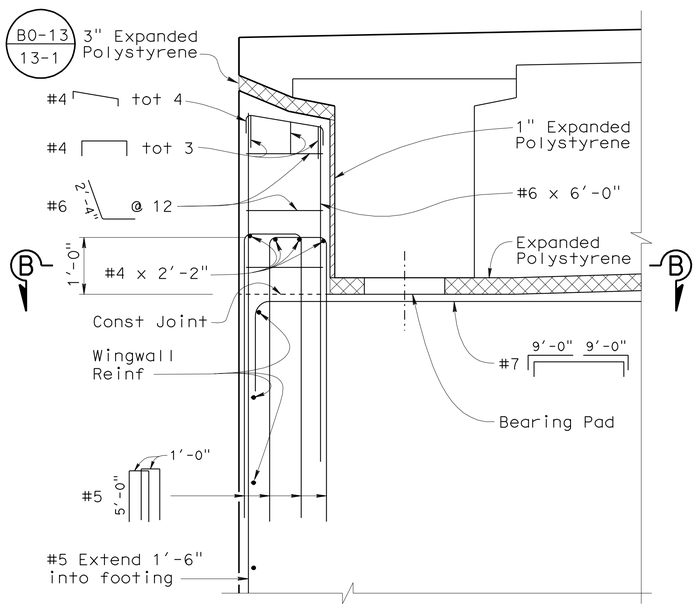

EXTERNAL SHEAR KEY DETAIL

¾"= 1'-0"

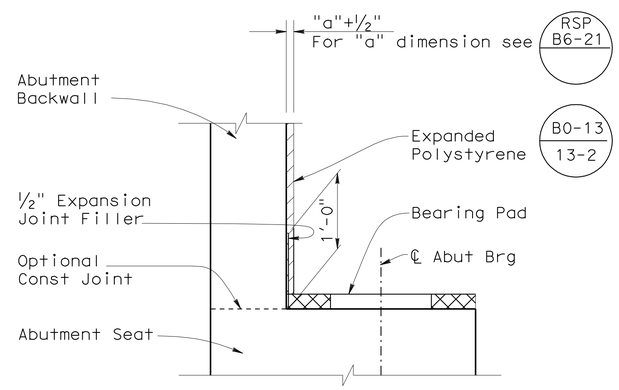

BACKWALL BASE DETAIL

No Scale

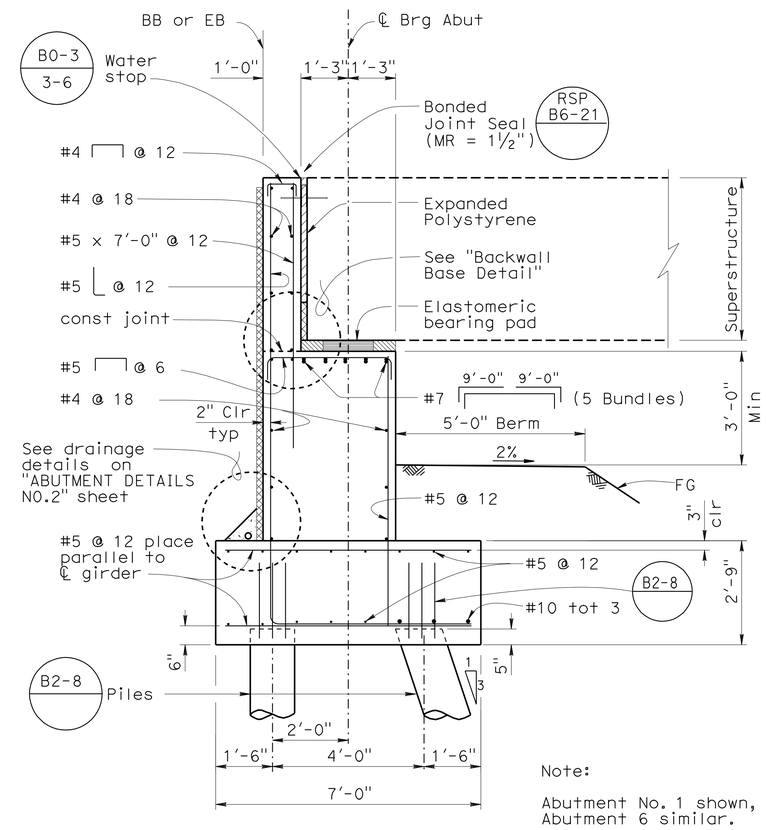

Note:

Abutment No. 1 shown, Abutment 6 similar.

SECTION A-A

½"=1'-0"

3 **REVISED PER ADDENDUM No. 3 DATED APRIL 5, 2011**

	BY	CHECKED
DESIGN	P. Hong	M.K./G.S.
DETAILS	S. Jiang/G.S.	M.K./G.S.
QUANTITIES	M. Kodsuntie	G. Schuster

STATE OF CALIFORNIA DEPARTMENT OF TRANSPORTATION

DIVISION OF ENGINEERING SERVICES STRUCTURE DESIGN DESIGN BRANCH 17

BRIDGE NO. 39-0246 POST MILE 25.61

SAN JOAQUIN RIVER BR. (REPLACE)

ABUTMENT DETAILS NO.1

STRUCTURES DESIGN DETAIL SHEET (ENGLISH) (REV. 10/25/05)

ORIGINAL SCALE IN INCHES FOR REDUCED PLANS 0 1 2 3

CU 06241
EA 279801

DISREGARD PRINTS BEARING EARLIER REVISION DATES

REVISION DATES: 02-28-09 3-03-11 03-10-11 03-15-11 06-12-09 08-19-09 02-14-11 02-18-11 03-04-11

SHEET 6 OF 22

FILE => 39-0246-06-f-abut-det01.add

USERNAME => trmikest DATE PLOTTED => 04-APR-2011 TIME PLOTTED => 14:42

DIST	COUNTY	ROUTE	POST MILES TOTAL PROJECT	SHEET No	TOTAL SHEETS
10	Mer	165	11.7/26.7	94	110

REGISTERED CIVIL ENGINEER 9-04-09 DATE

6-21-10
PLANS APPROVAL DATE

REGISTERED PROFESSIONAL ENGINEER RODNEY SIMMONS No. C 51174 Exp. 09-30-11 CIVIL STATE OF CALIFORNIA

The State of California or its officers or agents shall not be responsible for the accuracy or completeness of electronic copies of this plan sheet.

3

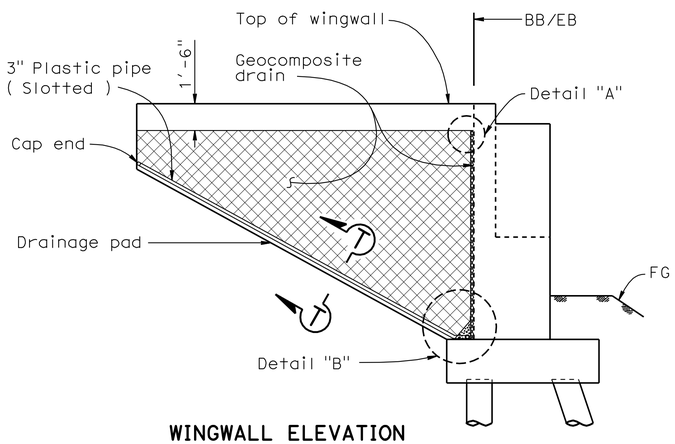

WINGWALL ELEVATION

Note: Abutment 1 right Wingwall shown others similar

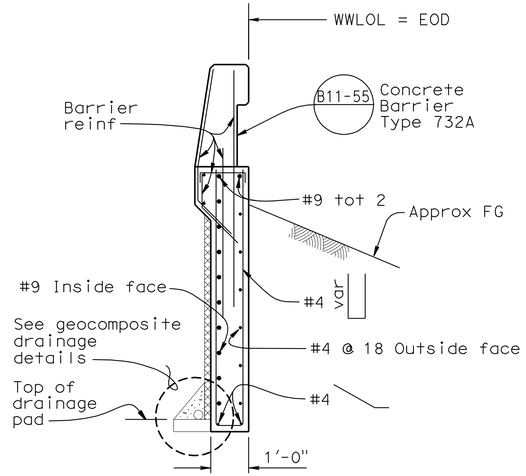

SECTION D-D

½"=1'-0"

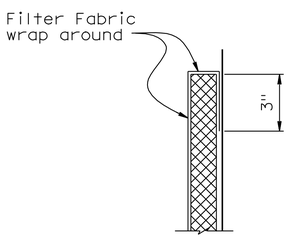

DETAIL "A"

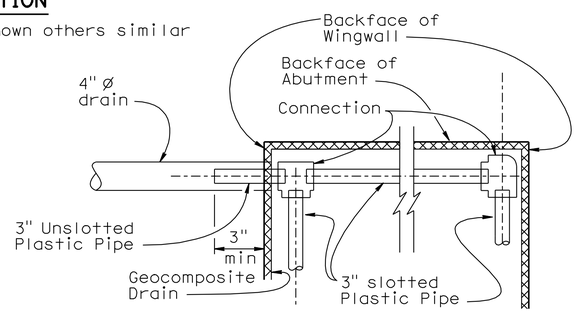

SECTION S-S

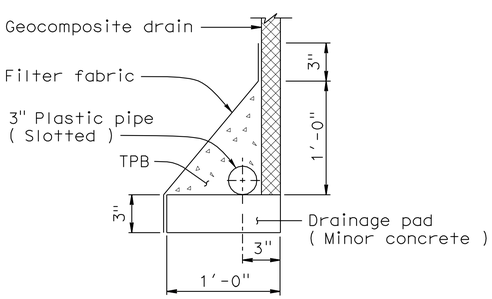

SECTION T-T

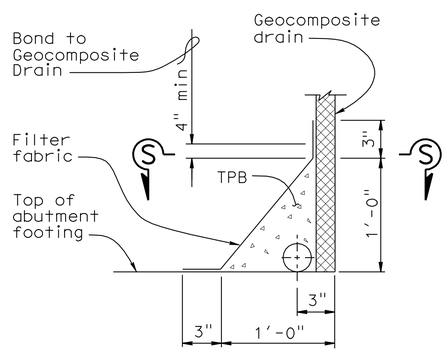

DETAIL "B"

GEOCOMPOSITE DRAIN

NO SCALE

3 **REVISED PER ADDENDUM No. 3 DATED APRIL 5, 2011**

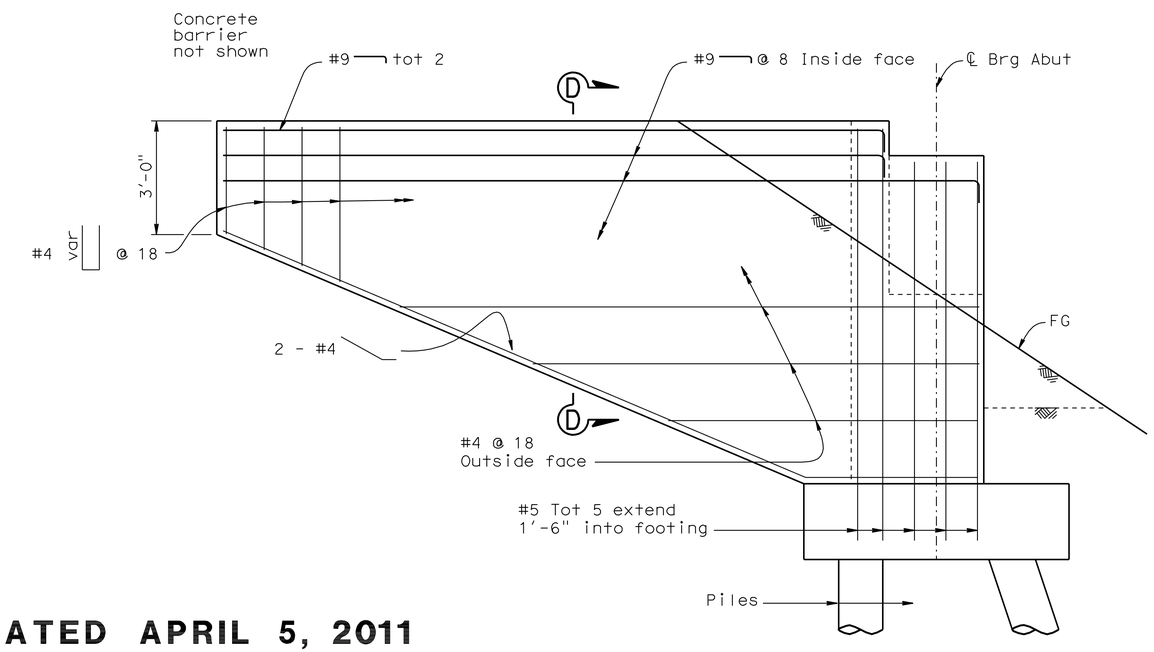

Note: Abutment 1 right wingwall shown others similar

WINGWALL ELEVATION

½"=1'-0"

DESIGN	BY P. Hong	CHECKED M. Kodsuntie	
DETAILS	BY S. Jiang	CHECKED M. Kodsuntie	
QUANTITIES	BY M. Kodsuntie	CHECKED G. Schuster	

ORIGINAL SCALE IN INCHES FOR REDUCED PLANS 0 1 2 3

STATE OF CALIFORNIA
DEPARTMENT OF TRANSPORTATION

DIVISION OF ENGINEERING SERVICES
STRUCTURE DESIGN
DESIGN BRANCH 17

CU 06241
EA 279801

BRIDGE NO. 39-0246
POST MILE 25.61

SAN JOAQUIN RIVER BR. (REPLACE)
ABUTMENT DETAILS NO. 2

DISREGARD PRINTS BEARING EARLIER REVISION DATES

REVISION DATES: 02-25-09 03-04-09 03-18-09 04-01-09 04-23-09 06-12-09 02-11-11 03-01-11 03-10-11

SHEET 7 OF 22

FILE => 39-0246-07-f-abut-det02.dgn

USERNAME => trpierce DATE PLOTTED => 04-APR-2011 TIME PLOTTED => 13:36

DIST	COUNTY	ROUTE	POST MILES TOTAL PROJECT	SHEET No	TOTAL SHEETS
10	Mer	165	11.7/26.7	95	110

REGISTERED CIVIL ENGINEER 9-04-09 DATE

6-21-10
PLANS APPROVAL DATE

REGISTERED PROFESSIONAL ENGINEER RODNEY SIMMONS No. C 51174 Exp. 09-30-11 CIVIL STATE OF CALIFORNIA

The State of California or its officers or agents shall not be responsible for the accuracy or completeness of electronic copies of this plan sheet.

3

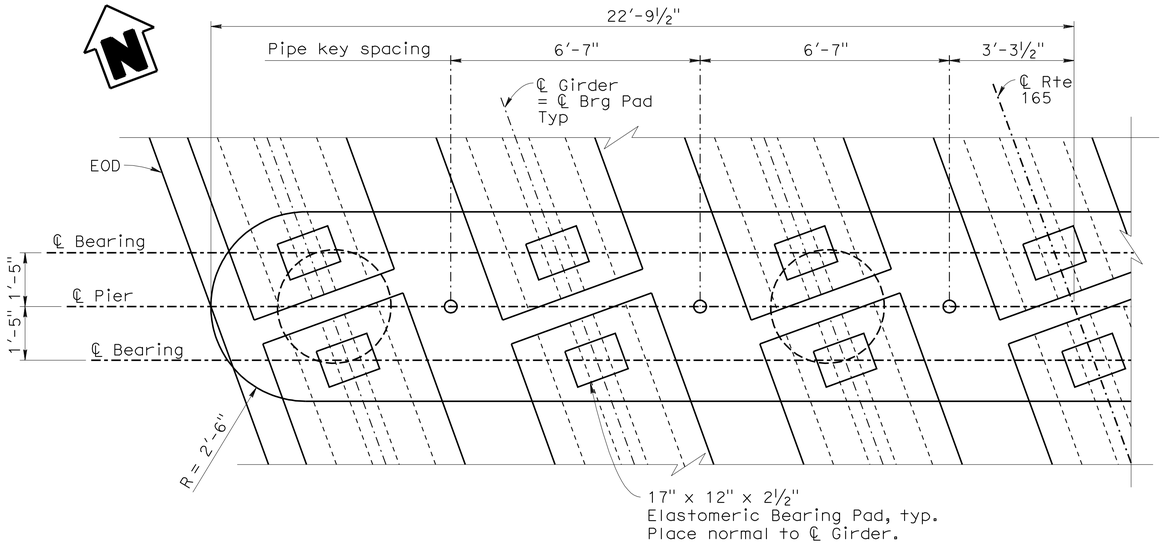

PLAN
½" = 1'-0"

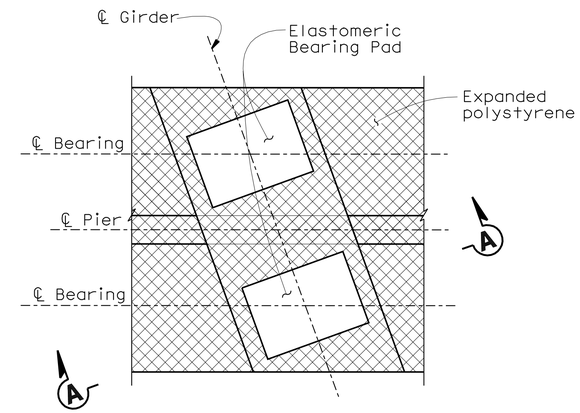

PLAN

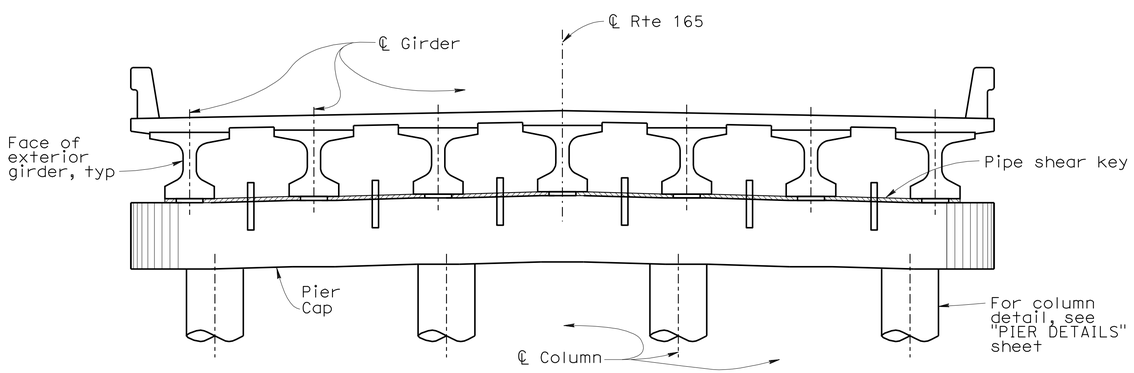

ELEVATION
¼" = 1'-0"

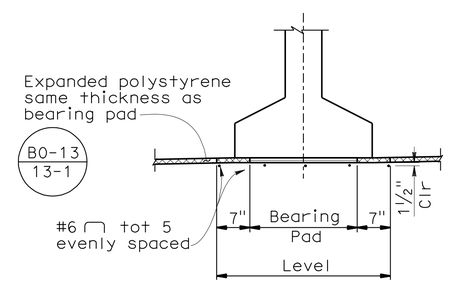

SECTION A-A

BENT CAP
BEARING PAD DETAIL
no scale

3 **REVISED PER ADDENDUM No. 3 DATED APRIL 5, 2011**

DESIGN	BY M.K./G.S.	CHECKED P. Hong	
DETAILS	BY G. M. Souza/S. Jiang	CHECKED P. Hong	
QUANTITIES	BY M. Kodsuntie	CHECKED G. Schuster	

STATE OF CALIFORNIA
DEPARTMENT OF TRANSPORTATION

DIVISION OF ENGINEERING SERVICES
STRUCTURE DESIGN
DESIGN BRANCH 17

BRIDGE NO. 39-0246
POST MILE 25.61

SAN JOAQUIN RIVER BR. (REPLACE)
PIER LAYOUT

STRUCTURES DESIGN DETAIL SHEET (ENGLISH) (REV. 10/25/05)

ORIGINAL SCALE IN INCHES FOR REDUCED PLANS 0 1 2 3

CU 06241
EA 279801

DISREGARD PRINTS BEARING EARLIER REVISION DATES

REVISION DATES: 02-22-11 2-25-11 3-03-11 3-10-11

SHEET 8 OF 22

FILE => 39-0246-08-h-pier-lyt.add

USERNAME => trpierce DATE PLOTTED => 04-APR-2011 TIME PLOTTED => 13:36

DIST	COUNTY	ROUTE	POST MILES TOTAL PROJECT	SHEET No	TOTAL SHEETS
10	Mer	165	11.7/26.7	96	110

REGISTERED CIVIL ENGINEER 9-04-09 DATE

6-21-10
PLANS APPROVAL DATE

REGISTERED PROFESSIONAL ENGINEER RODNEY SIMMONS No. C 51174 Exp. 09-30-11 CIVIL STATE OF CALIFORNIA

The State of California or its officers or agents shall not be responsible for the accuracy or completeness of electronic copies of this plan sheet.

3

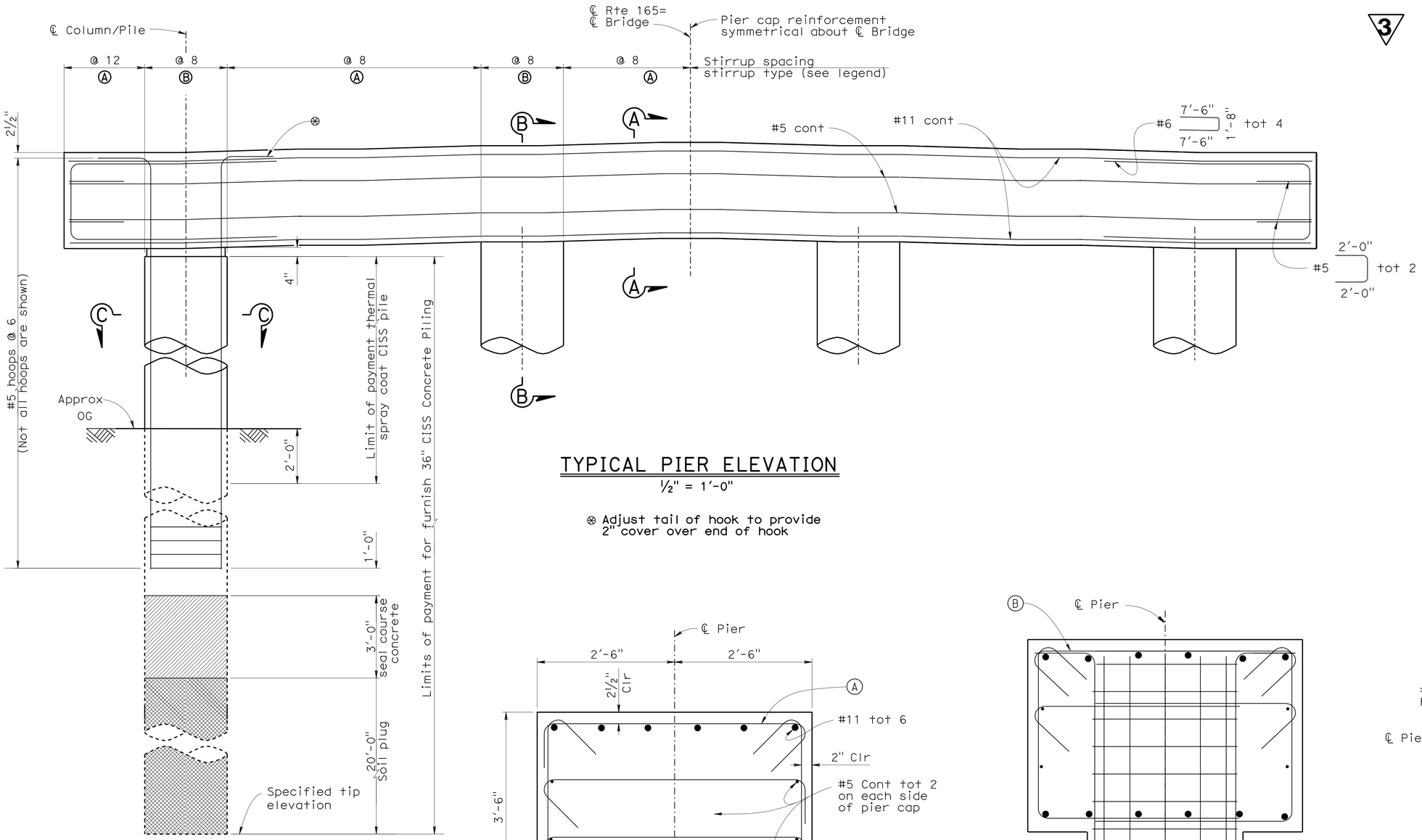

TYPICAL PIER ELEVATION

½" = 1'-0"

⊗ Adjust tail of hook to provide 2" cover over end of hook

NOTE: No splice allowed in column/pile longitudinal reinforcement within 40 feet of top of pier cap and 65 feet of specified tip elevation

LEGEND:

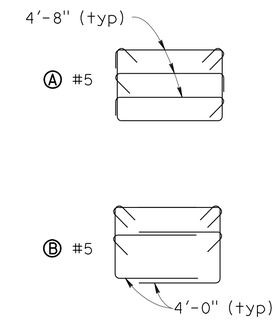

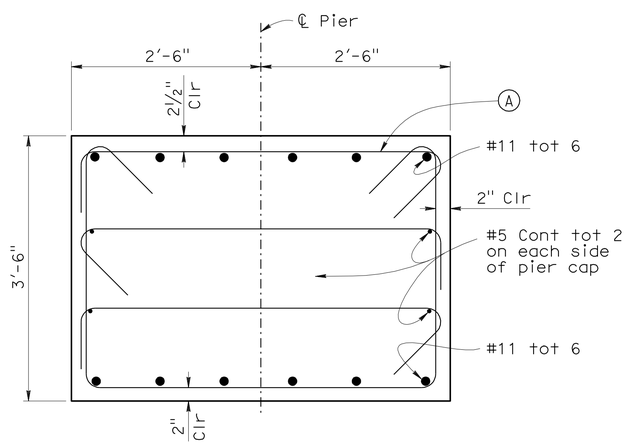

SECTION A-A

1" = 1'-0"

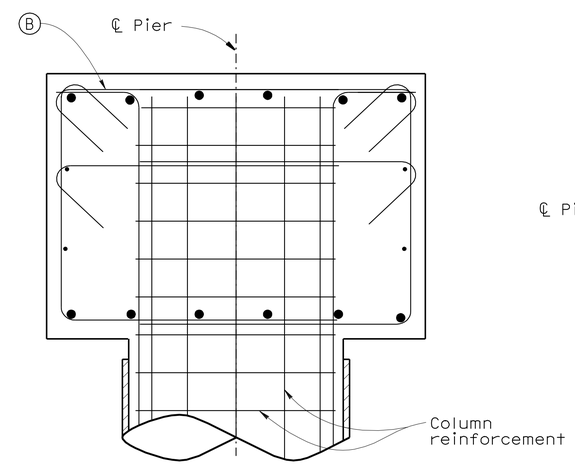

For dimensions and details not shown, see "SECTION A-A"

SECTION B-B

1" = 1'-0"

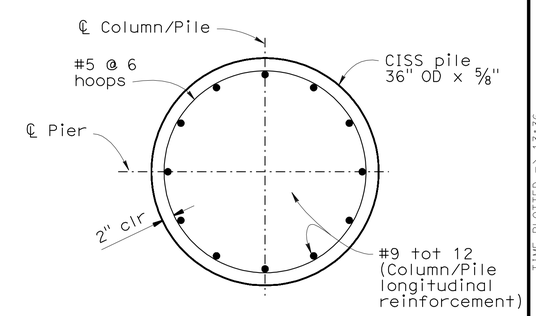

SECTION C-C

1" = 1'-0"

3 **REVISED PER ADDENDUM No. 3 DATED APRIL 5, 2011**

	BY	CHECKED
DESIGN	P. Hong	M.K./G.S.
DETAILS	S. Jiang	M.K./G.S.
QUANTITIES	M. Kodsuntie	G. Schuster

STATE OF CALIFORNIA DEPARTMENT OF TRANSPORTATION

DIVISION OF ENGINEERING SERVICES STRUCTURE DESIGN DESIGN BRANCH 17

BRIDGE NO. 39-0246
POST MILE 25.61

SAN JOAQUIN RIVER BR. (REPLACE)

PIER DETAILS

STRUCTURES DESIGN DETAIL SHEET (ENGLISH) (REV. 10/25/05)

ORIGINAL SCALE IN INCHES FOR REDUCED PLANS 0 1 2 3

CU 06241
EA 279801

DISREGARD PRINTS BEARING EARLIER REVISION DATES → 2-28-11 3-04-11 3-08-11 3-09-11

REVISION DATES

SHEET 9 OF 22

FILE => 39-0246-09-h-pier-cap-det.add

USERNAME => trpierce DATE PLOTTED => 04-APR-2011 TIME PLOTTED => 13:36

DIST	COUNTY	ROUTE	POST MILES TOTAL PROJECT	SHEET No	TOTAL SHEETS
10	Mer	165	11.7/26.7	97	110

REGISTERED CIVIL ENGINEER 9-04-09 DATE

6-21-10
PLANS APPROVAL DATE

REGISTERED PROFESSIONAL ENGINEER RODNEY SIMMONS No. C 51174 Exp. 09-30-11 CIVIL STATE OF CALIFORNIA

The State of California or its officers or agents shall not be responsible for the accuracy or completeness of electronic copies of this plan sheet.

3

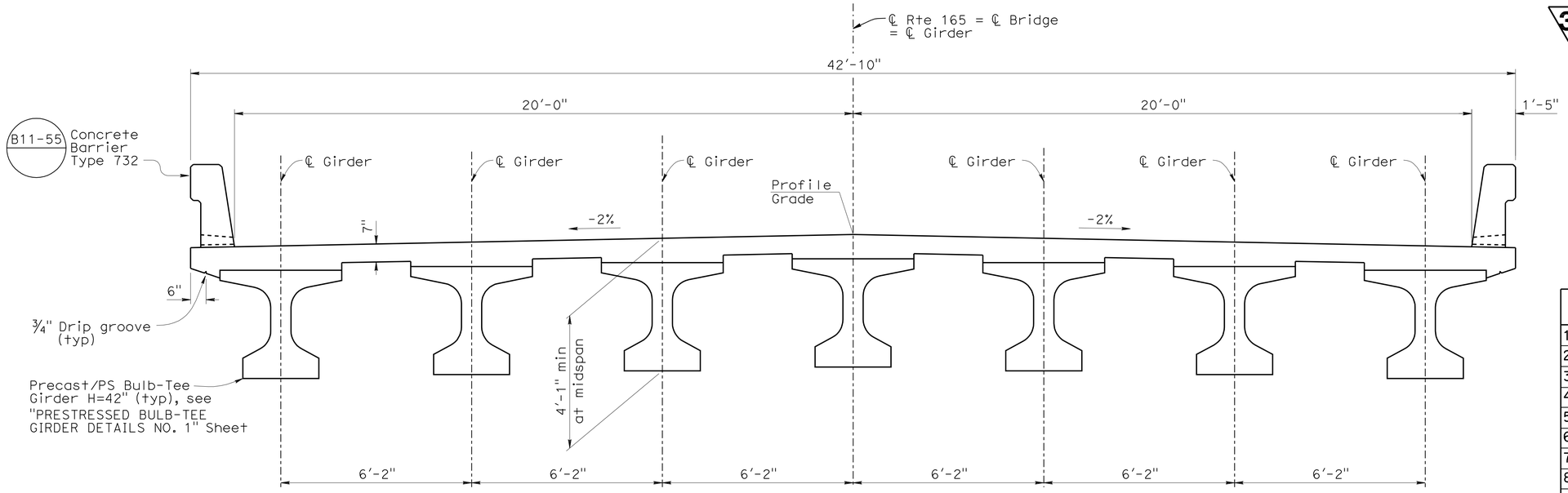

TYPICAL SECTION

½" = 1'-0"

SCUPPER STATIONING

Left Edge of Deck Station				Right Edge of Deck Station			
1.	598+06	10.	600+26	1.	597+91	10.	600+11
2.	598+26	11.	600+46	2.	598+11	11.	600+31
3.	598+46	12.	600+66	3.	598+31	12.	600+51
4.	598+66	13.	600+86	4.	598+51	13.	600+71
5.	599+06	14.	601+06	5.	598+91	14.	600+91
6.	599+26	15.	601+46	6.	599+11	15.	601+31
7.	599+46	16.	601+66	7.	599+31	16.	601+51
8.	599+66	17.	601+86	8.	599+51	17.	601+71
9.	599+86	18.	602+06	9.	599+71	18.	610+91

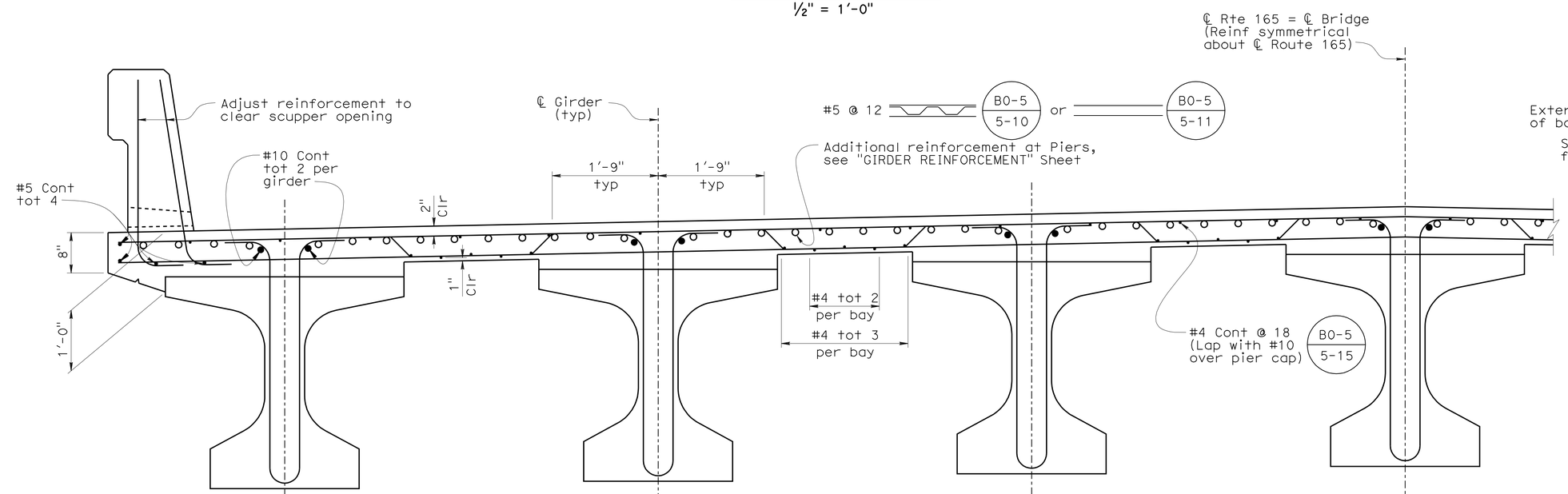

3 **REVISED PER ADDENDUM No. 3 DATED APRIL 5, 2011**

PART TYPICAL SECTION (B0-5)

1" = 1'-0"

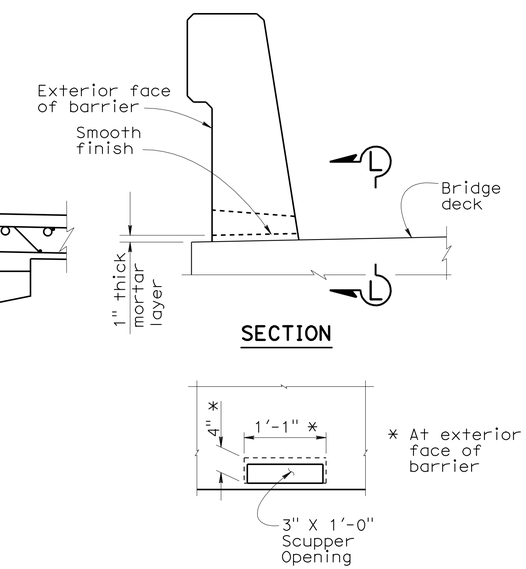

VIEW L-L

SCUPPER DETAIL

1" = 1'-0"

DESIGN	BY M. Kodsuntie	CHECKED G. Schuster	
DETAILS	BY G. M. Souza/S. Jiang	CHECKED G. Schuster	
QUANTITIES	BY M. Kodsuntie	CHECKED G. Schuster	

STATE OF CALIFORNIA
DEPARTMENT OF TRANSPORTATION

DIVISION OF ENGINEERING SERVICES
STRUCTURE DESIGN
DESIGN BRANCH 17

BRIDGE NO. 39-0246
POST MILE 25.61

SAN JOAQUIN RIVER BR. (REPLACE)
TYPICAL SECTION

STRUCTURES DESIGN DETAIL SHEET (ENGLISH) (REV. 10/25/05)

ORIGINAL SCALE IN INCHES FOR REDUCED PLANS 0 1 2 3

CU 06241
EA 279801

DISREGARD PRINTS BEARING EARLIER REVISION DATES

REVISION DATES: 02-26-11 3-10-11

SHEET 10 OF 22

FILE => 39-0246-10-k-typ-sec.dgn

USERNAME => trpierce DATE PLOTTED => 04-APR-2011 TIME PLOTTED => 13:36

DIST	COUNTY	ROUTE	POST MILES TOTAL PROJECT	SHEET No	TOTAL SHEETS
10	Mer	165	11.7/26.7	98	110

REGISTERED CIVIL ENGINEER 9-04-09 DATE

6-21-10
PLANS APPROVAL DATE

REGISTERED PROFESSIONAL ENGINEER RODNEY SIMMONS No. C 51174 Exp. 09-30-11 CIVIL STATE OF CALIFORNIA

The State of California or its officers or agents shall not be responsible for the accuracy or completeness of electronic copies of this plan sheet.

3

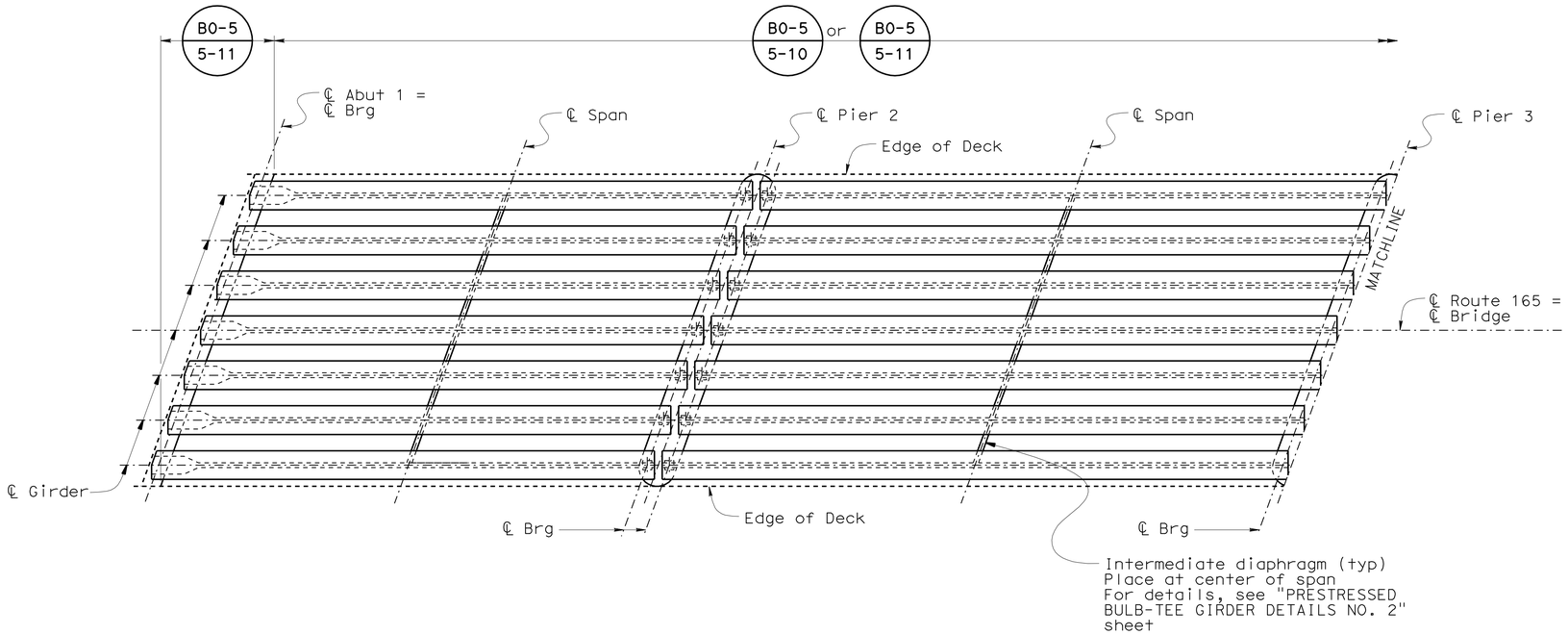

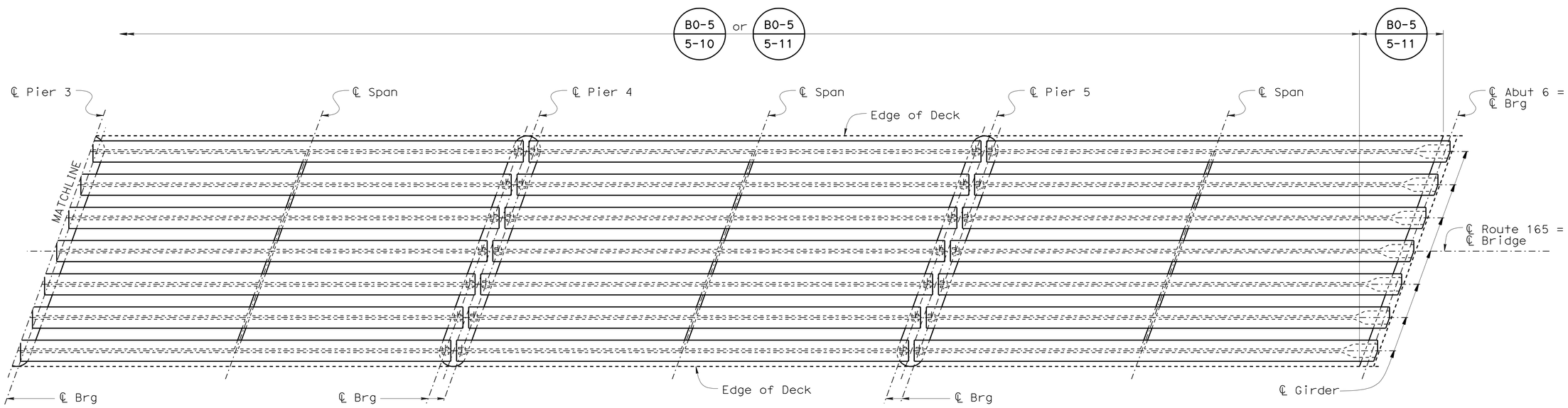

3 **REVISED PER ADDENDUM No. 3 DATED APRIL 5, 2011**

GIRDER LAYOUT

1" = 10'

Note:

For girder details, see "PRESTRESSED BULB-TEE GIRDER DETAILS NO. 1 and NO. 2" sheets.

	BY	CHECKED
DESIGN	M. Kodsuntie	G. Schuser
DETAILS	G. M. Souza/S. Jiang	G. Schuser
QUANTITIES	M. Kodsuntie	G. Schuser

STATE OF CALIFORNIA
DEPARTMENT OF TRANSPORTATION

DIVISION OF ENGINEERING SERVICES
STRUCTURE DESIGN
DESIGN BRANCH 17

BRIDGE NO. 39-0246
POST MILE 25.61

SAN JOAQUIN RIVER BR. (REPLACE)

GIRDER LAYOUT

STRUCTURES DESIGN DETAIL SHEET (ENGLISH) (REV. 10/25/05)

ORIGINAL SCALE IN INCHES FOR REDUCED PLANS 0 1 2 3

CU 06241
EA 279801

DISREGARD PRINTS BEARING EARLIER REVISION DATES

REVISION DATES: 02-24-11 3-10-11

SHEET 11 OF 22

FILE => 39-0246-11-o-girder-lyt.add

USERNAME => trpierce DATE PLOTTED => 04-APR-2011 TIME PLOTTED => 13:37

3 **REVISED PER ADDENDUM No. 3 DATED APRIL 5, 2011**

DIST	COUNTY	ROUTE	POST MILES TOTAL PROJECT	SHEET No	TOTAL SHEETS
10	Mer	165	11.7/26.7	99	110

REGISTERED CIVIL ENGINEER 9-04-09 DATE

6-21-10
PLANS APPROVAL DATE

REGISTERED PROFESSIONAL ENGINEER RODNEY SIMMONS No. C 51174 Exp. 09-30-11 CIVIL STATE OF CALIFORNIA

The State of California or its officers or agents shall not be responsible for the accuracy or completeness of electronic copies of this plan sheet.

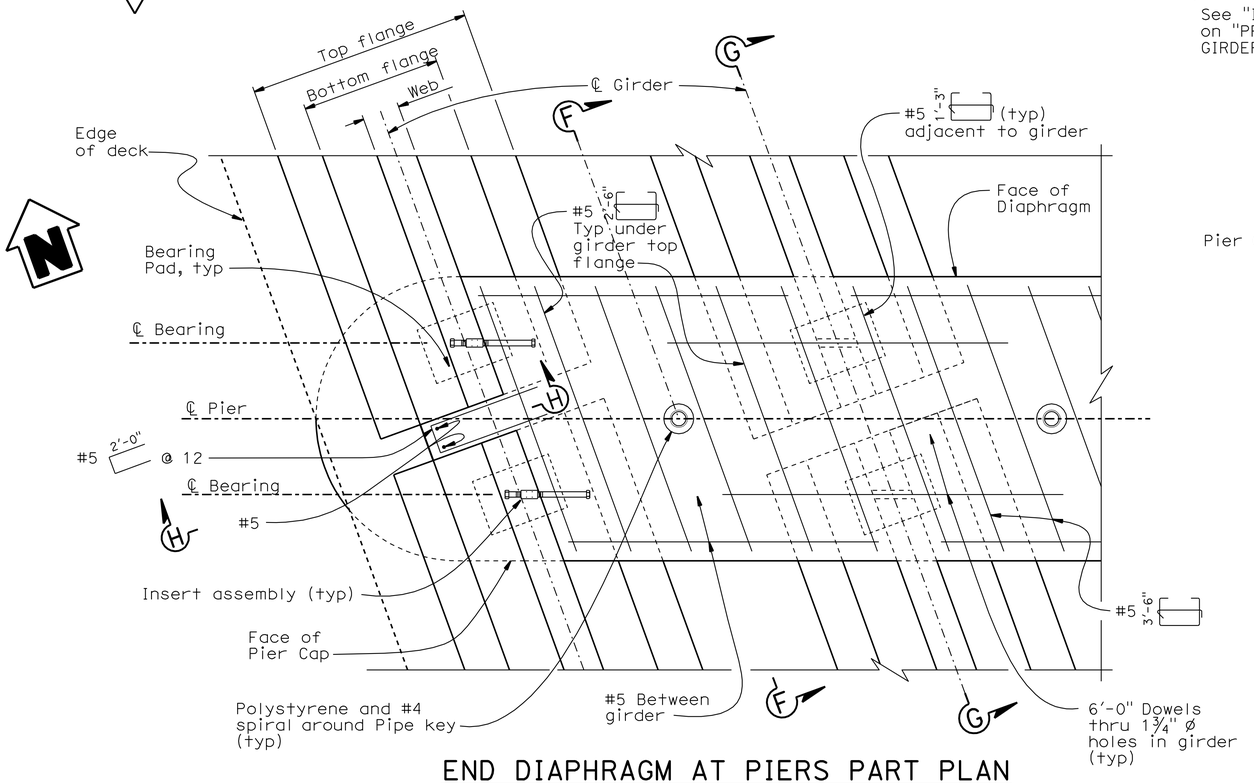

END DIAPHRAGM AT PIERS PART PLAN

¾" = 1'-0"

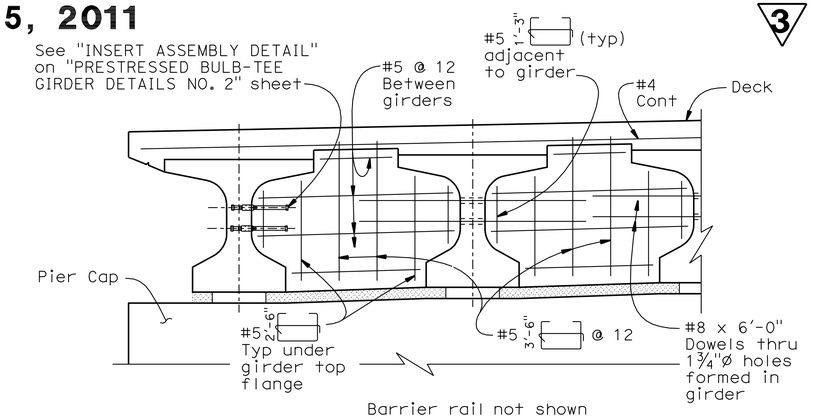

Barrier rail not shown

PART ELEVATION

½"= 1'-0"

NOTES:

1. Place stirrups parallel to ℄ Rte 165 and space along ℄ Pier.
2. Exterior bay shown, interior bays similar.

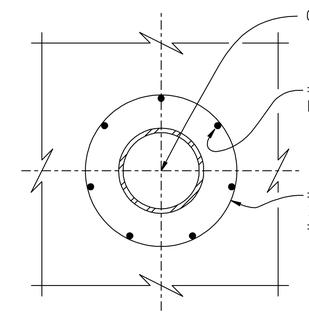

SECTION I-I

3" = 1'-0"

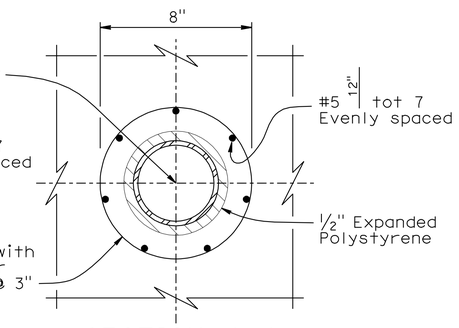

SECTION J-J

3" = 1'-0"

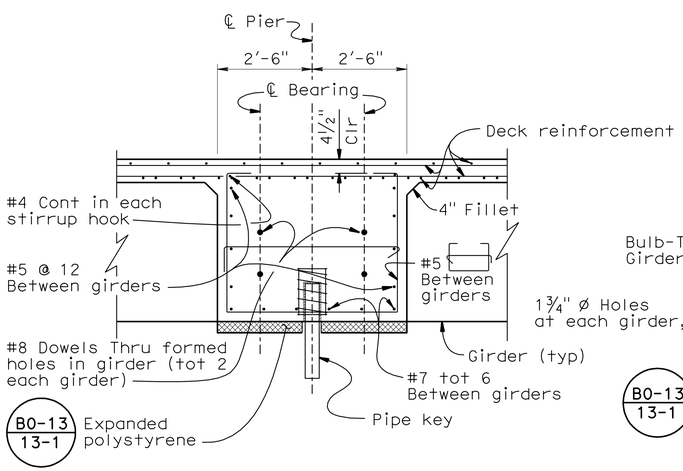

SECTION F-F

½"= 1'-0"

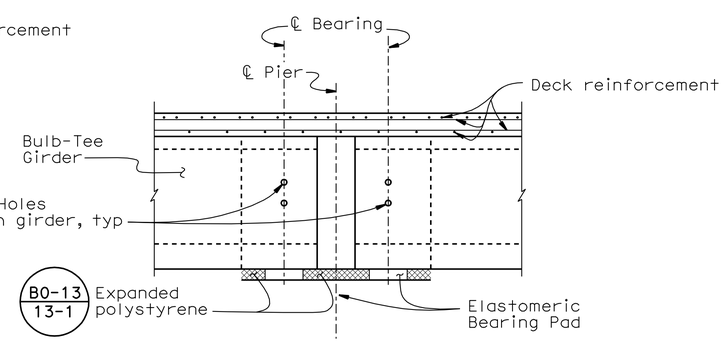

SECTION G-G

½"= 1'-0"

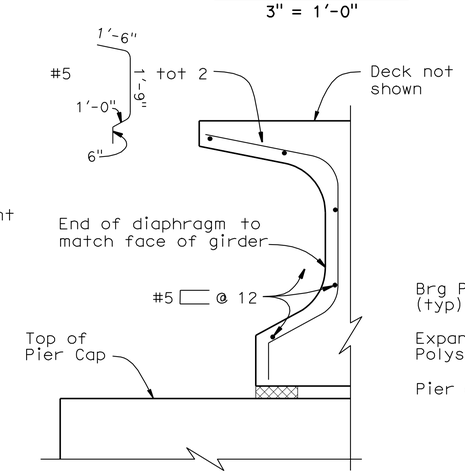

SECTION H-H

1"= 1'-0"

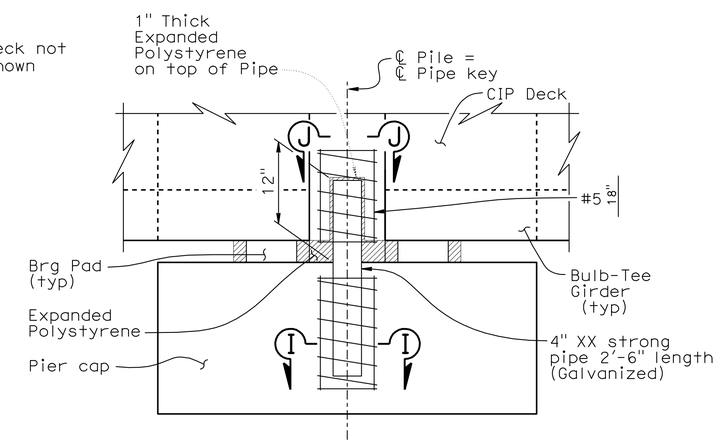

PIPE KEY DETAIL

1" = 1'-0"

DESIGN	BY M. Kodsuntie	CHECKED P.H./G.S.	
DETAILS	BY G. M. Souza	CHECKED P.H./G.S.	
QUANTITIES	BY M. Kodsuntie	CHECKED G. Schuster	

STATE OF CALIFORNIA
DEPARTMENT OF TRANSPORTATION

DIVISION OF ENGINEERING SERVICES
STRUCTURE DESIGN
DESIGN BRANCH 17

BRIDGE NO. 39-0246
POST MILE 25.61

SAN JOAQUIN RIVER BR. (REPLACE)
GIRDER DETAILS

STRUCTURES DESIGN DETAIL SHEET (ENGLISH) (REV. 10/25/05)

ORIGINAL SCALE IN INCHES FOR REDUCED PLANS 0 1 2 3

CU 06241
EA 279801

DISREGARD PRINTS BEARING EARLIER REVISION DATES 02-28-11 03-10-11 03-15-11

REVISION DATES

SHEET 12 OF 22

FILE => 39-0246-12-o-girder-det.dd

USERNAME => tripierce DATE PLOTTED => 04-APR-2011 TIME PLOTTED => 13:37

DIST	COUNTY	ROUTE	POST MILES TOTAL PROJECT	SHEET No	TOTAL SHEETS
10	Mer	165	11.7/26.7	100	110

REGISTERED CIVIL ENGINEER 9-04-09 DATE

6-21-10
PLANS APPROVAL DATE

REGISTERED PROFESSIONAL ENGINEER
RODNEY SIMMONS
No. C 51174
Exp. 09-30-11
CIVIL
STATE OF CALIFORNIA

The State of California or its officers or agents shall not be responsible for the accuracy or completeness of electronic copies of this plan sheet.

3

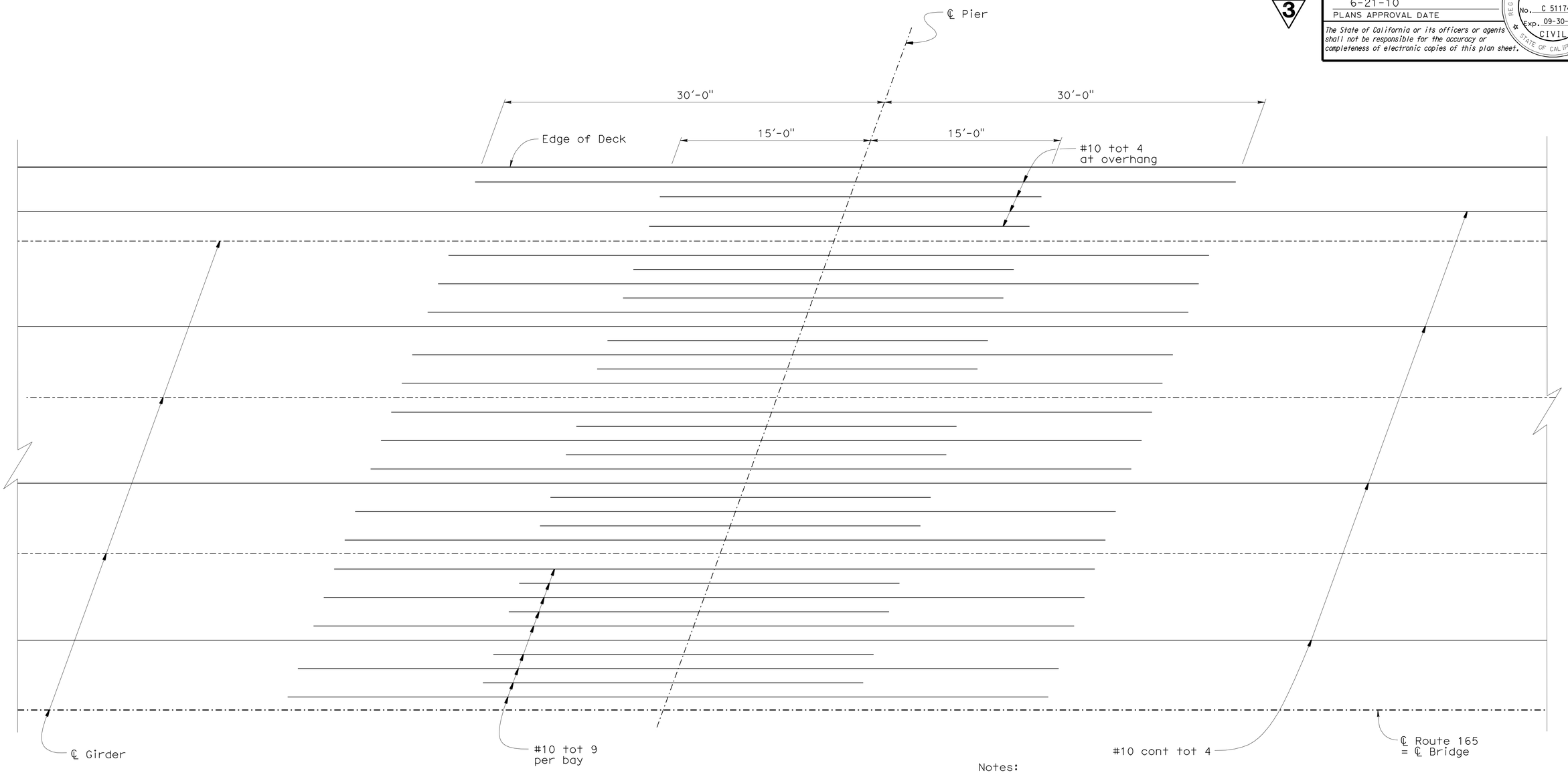

3 **REVISED PER ADDENDUM No. 3 DATED APRIL 5, 2011**

TOP REINFORCEMENT

No Scale

Notes:

1. Top reinforcement symmetrical about ℄ Route 165.
2. Top reinforcement layout typical for all pier locations.
3. For details and reinforcement not shown, see "Typical Section" sheet.

DESIGN	BY M. Kodsuntie	CHECKED G. Shuster	
DETAILS	BY G. M. Souza/S. Jiang	CHECKED G. Shuster	
QUANTITIES	BY M. Kodsuntie	CHECKED G. Shuster	

STATE OF CALIFORNIA
DEPARTMENT OF TRANSPORTATION

DIVISION OF ENGINEERING SERVICES
STRUCTURE DESIGN
DESIGN BRANCH 17

BRIDGE NO. 39-0246
POST MILE 25.61

SAN JOAQUIN RIVER BR. (REPLACE)
GIRDER REINFORCEMENT

STRUCTURES DESIGN DETAIL SHEET (ENGLISH) (REV. 10/25/05)

ORIGINAL SCALE IN INCHES FOR REDUCED PLANS 0 1 2 3

CU 06241
EA 279801

DISREGARD PRINTS BEARING EARLIER REVISION DATES

REVISION DATES: 02-22-11 3-10-11

SHEET 13 OF 22

FILE => 39-0246-13-o-girder-reinf.add

USERNAME => trrichf DATE PLOTTED => 04-APR-2011 TIME PLOTTED => 13:24

DIST	COUNTY	ROUTE	POST MILES TOTAL PROJECT	SHEET No	TOTAL SHEETS
10	Mer	165	11.7/26.7	101	110

REGISTERED CIVIL ENGINEER 9-04-09 DATE

6-21-10
PLANS APPROVAL DATE

REGISTERED PROFESSIONAL ENGINEER RODNEY SIMMONS No. C 51174 Exp. 09-30-11 CIVIL STATE OF CALIFORNIA

The State of California or its officers or agents shall not be responsible for the accuracy or completeness of electronic copies of this plan sheet.

3

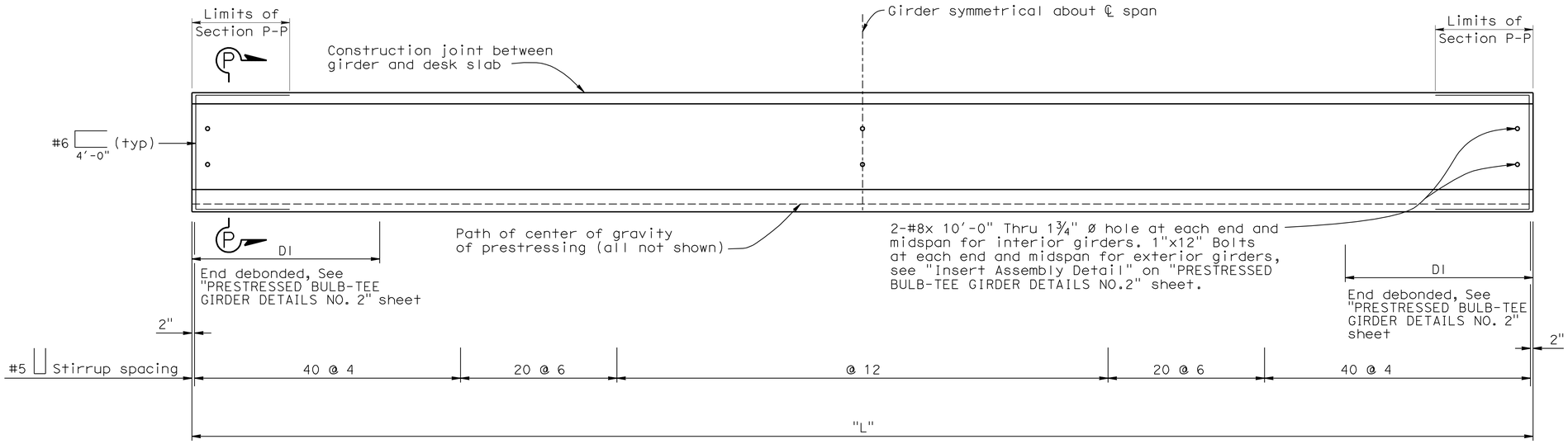

ELEVATION
No Scale

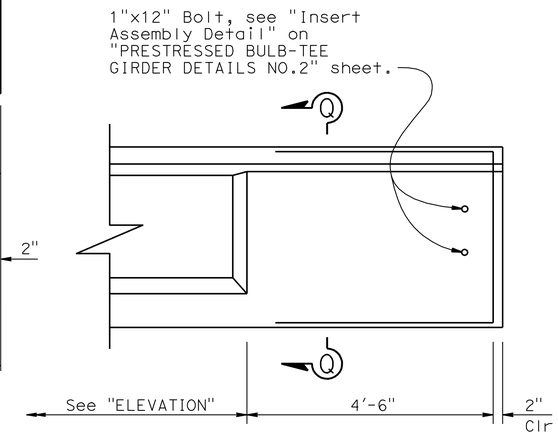

END BLOCK
No Scale

Note: End block at all abutments ends.

3 **REVISED PER ADDENDUM No. 3 DATED APRIL 5, 2011**

Girder location	L= Girder length	Number of strands	Concrete strength (ksi)		Midspan dead load deflection component	
			f'ci	f'c	Deck DL	Rail DL
Span 1	69'-7"	16	4.0	5.0	⅜"	-
Span 2	86'-4"	22	4.0	5.0	⅞"	-
Span 3	80'-4"	18	4.0	5.0	¾"	-
Span 4	84'-4"	20	4.0	5.0	⅞"	-
Span 5	86'-7"	22	4.0	5.0	⅞"	-

PRESTRESSING NOTES

Concrete strength:
f'ci is at time of initial stressing,
f'c is at 28 days

Number of prestressing strands based on:
0.6" ø low relaxation strand
fpu = 270 ksi (mimimum tensile strength of prestressing steel)
Strands stressed to 0.75 fpu

Deflection components:
Informational- to be used in setting screed line elevations.

Screed line elevations for deck concrete will be determined by the Engineer.

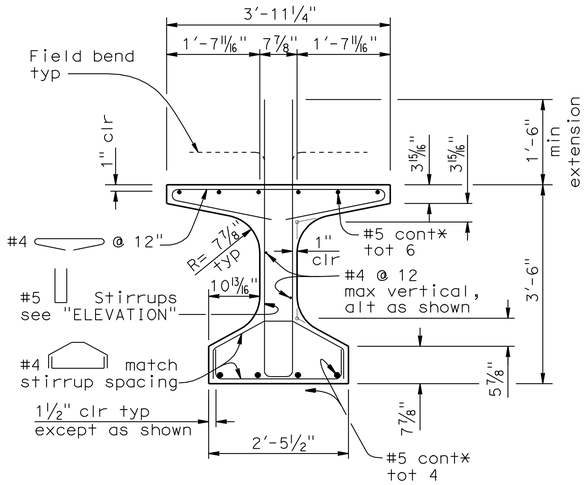

* Extend reinf. 2'-0" into pier diaphragms. Bend as required

TYPICAL GIRDER SECTION
¾" = 1'-0"

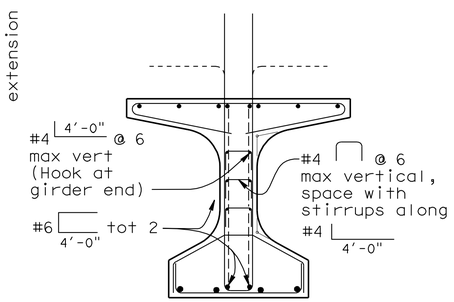

Notes: For details not shown, see "Typical Girder Section"

SECTION P-P
¾" = 1'-0"

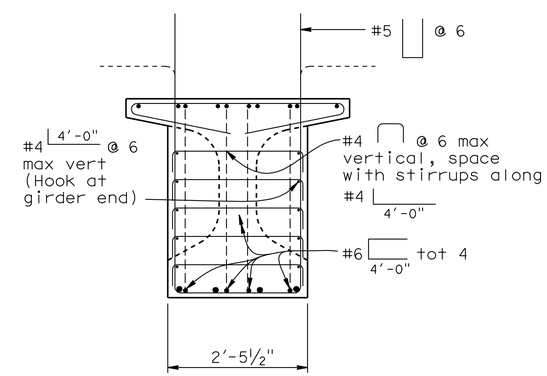

Notes: For details not shown, see "Typical Girder Section"

SECTION Q-Q
¾" = 1'-0"

	BY	CHECKED
DESIGN	M. Kodsuntie	G. Schuster
DETAILS	G. M. Souza/S. Jiang	G. Schuster
QUANTITIES	P.H./M.K.	G. Schuster

STATE OF CALIFORNIA DEPARTMENT OF TRANSPORTATION

DIVISION OF ENGINEERING SERVICES STRUCTURE DESIGN DESIGN BRANCH 17

BRIDGE NO. 39-0246
POST MILE 25.61

SAN JOAQUIN RIVER BR. (REPLACE)
PRESTRESSED BULB-TEE GIRDER DETAILS NO. 1

STRUCTURES DESIGN DETAIL SHEET (ENGLISH) (REV. 10/25/05)

ORIGINAL SCALE IN INCHES FOR REDUCED PLANS 0 1 2 3

CU 06241
EA 279801

DISREGARD PRINTS BEARING EARLIER REVISION DATES

REVISION DATES: 02-14-11 3-10-11

SHEET 14 OF 22

FILE => 39-0246-14-p-bulb-tee-det01.add

USERNAME => trright DATE PLOTTED => 04-APR-2011 TIME PLOTTED => 13:24

DIST	COUNTY	ROUTE	POST MILES TOTAL PROJECT	SHEET No	TOTAL SHEETS
10	Mer	165	11.7/26.7	102	110

REGISTERED CIVIL ENGINEER 9-04-09 DATE

6-21-10
PLANS APPROVAL DATE

REGISTERED PROFESSIONAL ENGINEER RODNEY SIMMONS No. C 51174 Exp. 09-30-11 CIVIL STATE OF CALIFORNIA

The State of California or its officers or agents shall not be responsible for the accuracy or completeness of electronic copies of this plan sheet.

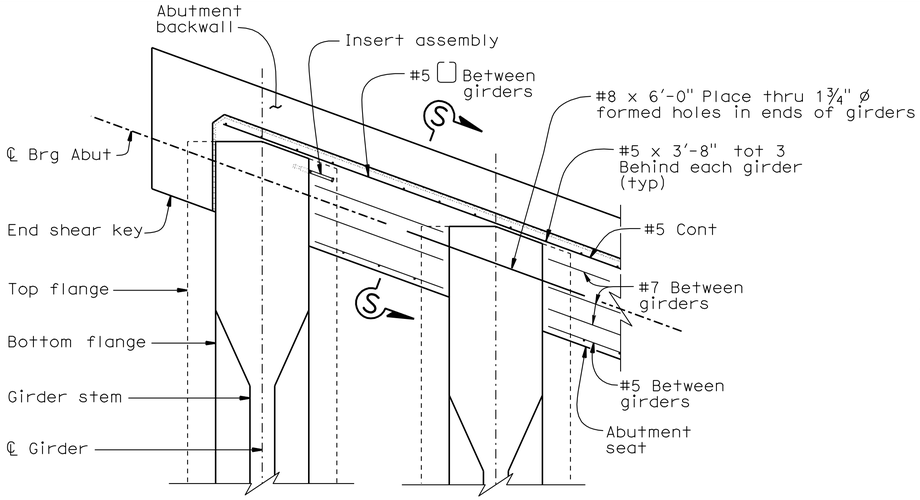

PART PLAN

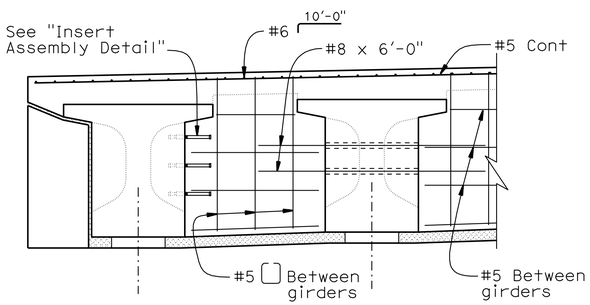

PART ELEVATION

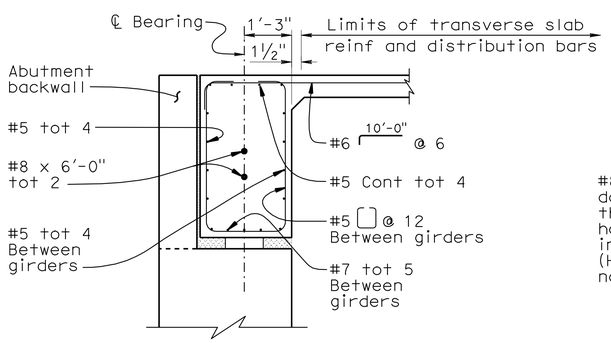

SECTION S-S

ABUTMENT DIAPHRAGM

½" = 1'-0"

DEBOND SCHEDULE		
Span No.	Strand No.	DI
All Spans	②	10'-0"
	①	10'-0"

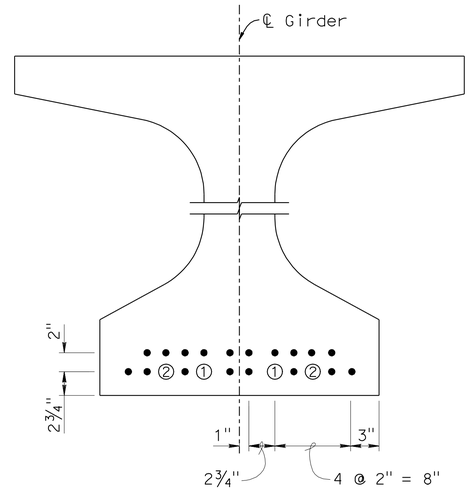

TYPICAL SECTION

1½" = 1'-0"

Notes:

③ Denotes debonded strand
For debond lengths, DI, see "Debond Schedule".

• Indicates continuously bonded strand

Strands are 0.6"ø - 270 Ksi low relaxation.
Strand locations may be adjusted as approved by the Engineer.

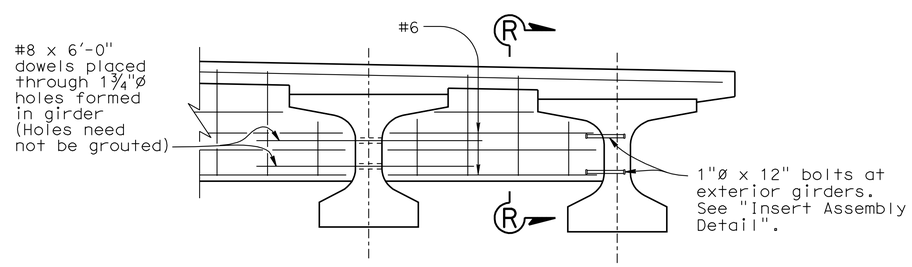

INTERMEDIATE DIAPHRAGM DETAIL

½" = 1'-0"

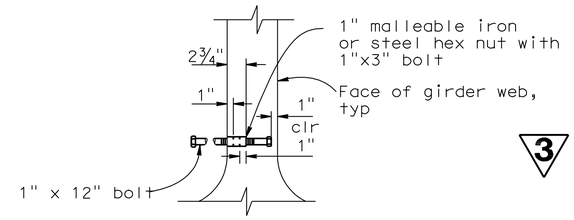

INSERT ASSEMBLY DETAIL

No Scale

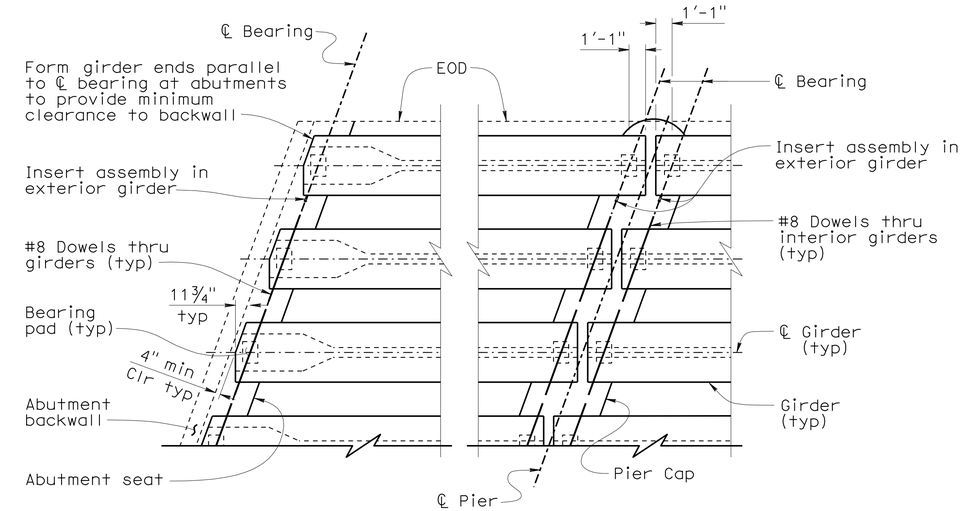

GIRDER END DETAIL

1" = 5'

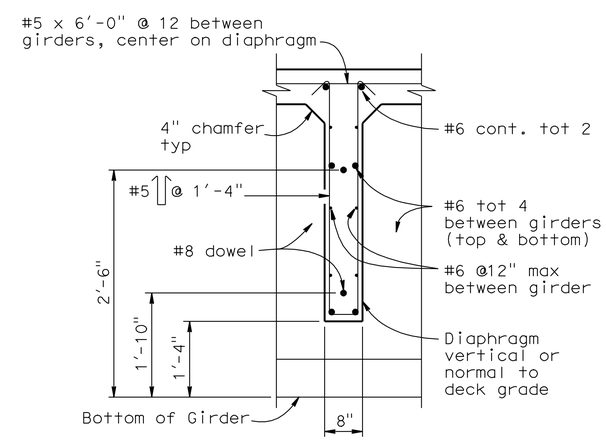

SECTION R-R

No Scale

③ **REVISED PER ADDENDUM No. 3 DATED APRIL 5, 2011**

	BY	CHECKED
DESIGN	M. Kodsuntie	G. Schuster
DETAILS	G. M. Souza	G. Schuster
QUANTITIES		

STATE OF CALIFORNIA
DEPARTMENT OF TRANSPORTATION

DIVISION OF ENGINEERING SERVICES
STRUCTURE DESIGN
DESIGN BRANCH 17

BRIDGE NO. 39-0246
POST MILE 25.61

SAN JOAQUIN RIVER BR. (REPLACE)
PRESTRESSED BULB-TEE GIRDER DETAILS NO. 2

STRUCTURES DESIGN DETAIL SHEET (ENGLISH) (REV. 10/25/05)

ORIGINAL SCALE IN INCHES FOR REDUCED PLANS 0 1 2 3

CU 06241
EA 279801

DISREGARD PRINTS BEARING EARLIER REVISION DATES 03-04-11 03-14-11 03-15-11

REVISION DATES

SHEET 15 OF 22

FILE => 39-0246-15-p-bulb-tee-det02.dgn

USERNAME => trrichf DATE PLOTTED => 04-APR-2011 TIME PLOTTED => 13:25

DIST	COUNTY	ROUTE	POST MILES TOTAL PROJECT	SHEET No	TOTAL SHEETS
10	Mer	165	11.7/26.7	103	110

REGISTERED CIVIL ENGINEER 9-04-09

6-21-10
PLANS APPROVAL DATE

The State of California or its officers or agents shall not be responsible for the accuracy or completeness of electronic copies of this plan sheet.

REGISTERED GEOLOGIST — Zheng Xing — No. 2130 — Exp. 3-31-2011 — CERTIFIED ENGINEERING GEOLOGIST — STATE OF CALIFORNIA

This LOTB sheet was prepared in accordance with the Caltrans Soil & Rock Logging, Classification, & Presentation Manual.

BENCH MARK

SURVEY CONTROL

PM 25.60
Fnd 1" IP with Red Plug
20.48' Rt ℄ "A1" Line Rte 165
Sta 596+60.50
N 1,929,835.16
E 6,459,487.44
Elev = 80.13

PM 25.75
Fnd 1" IP With Red Plug
25.11' Lt ℄ "A1" Line Rte 165
Sta 604+27.91
N 1,930,622.75
E 6,459,445.00
Elev = 80.90

NGVD 29

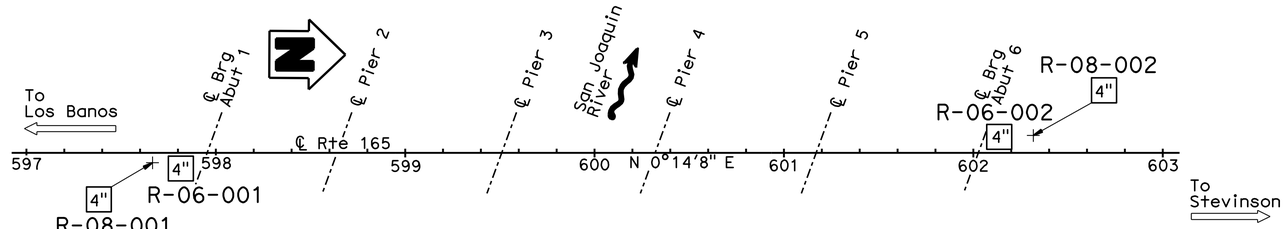

PLAN

1" = 40'

Notes:

1. CME-75 truck mounted drill rig (C# 5677) with automatic hammer was used to obtain SPT samples in borings R-06-001 and R-06-002. CS-2000 truck mounted drill rig (C# 6832) with automatic hammer was used to obtain SPT samples in borings R-08-001 and R-08-002.
2. SPT N values shown on Log of Test Boring (LOTB) sheets are actual values recorded in the field.
3. pp = Pocket Penetrometer test (tsf).

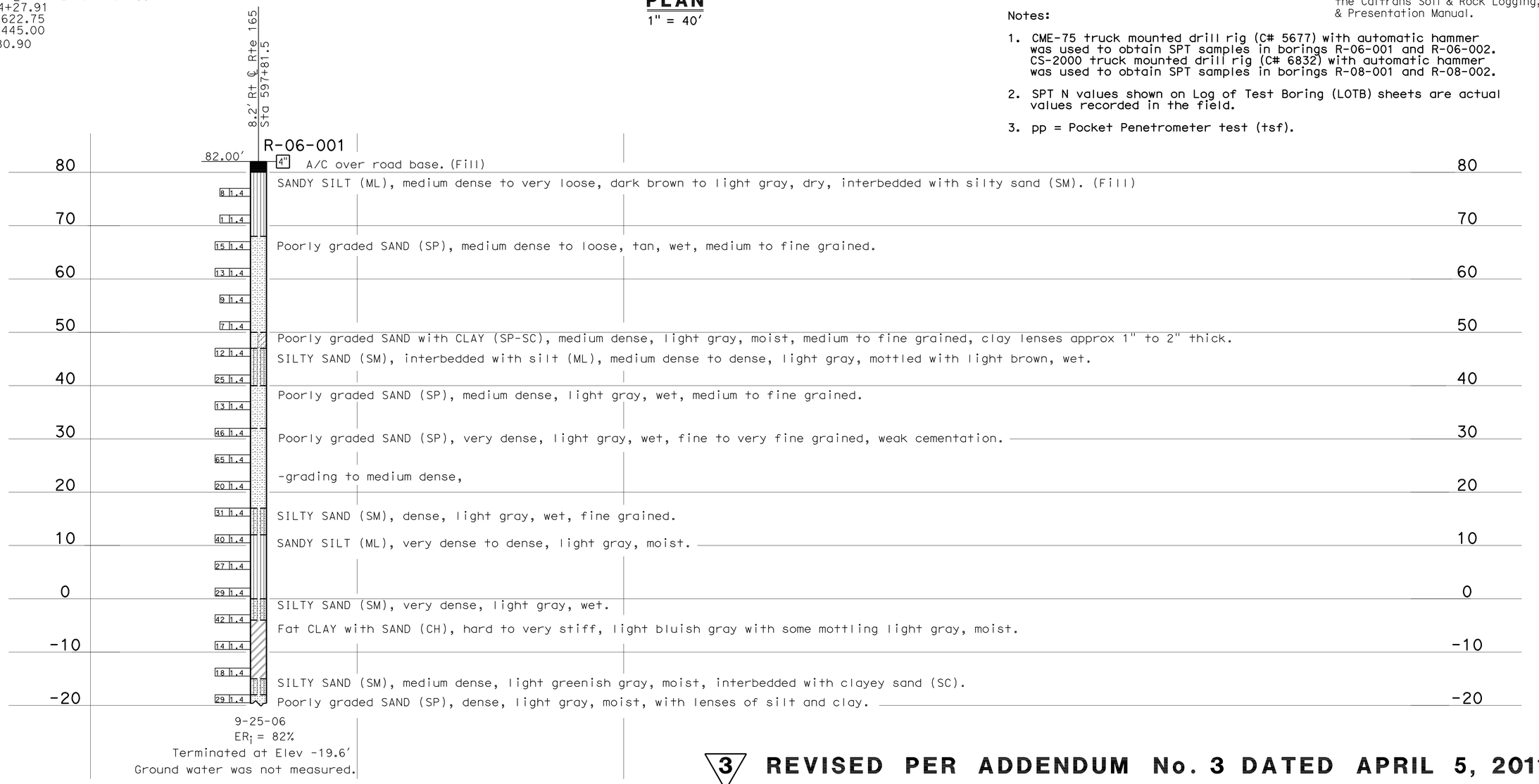

3 **REVISED PER ADDENDUM No. 3 DATED APRIL 5, 2011**

PROFILE

HOR. 1"=10'
VER. 1"=10'

ENGINEERING SERVICES		GEOTECHNICAL SERVICES	STATE OF CALIFORNIA DEPARTMENT OF TRANSPORTATION	DIVISION OF ENGINEERING SERVICES STRUCTURE DESIGN	BRIDGE NO. 39-0246	SAN JOAQUIN RIVER BRIDGE (REPLACE)
FUNCTIONAL SUPERVISOR	DRAWN BY: W. Tang 03/09	FIELD INVESTIGATION BY:		DESIGN BRANCH 17	POST MILES 25.61	LOG OF TEST BORINGS 1 OF 7
NAME: R. Bvell	CHECKED BY: J. Thhorne	S. Sunding, J. Thorne				

OGS CIVIL LOG OF TEST BORINGS SHEET

ORIGINAL SCALE IN INCHES FOR REDUCED PLANS 0 1 2 3

CU 06241
EA 279801

DISREGARD PRINTS BEARING EARLIER REVISION DATES → 03-09-09 05-18-09 06-05-09 08-20-09 03-04-11

REVISION DATES

SHEET 16 OF 22

FILE => 39-0246-16-z-ltb01.add

USERNAME => trrichf DATE PLOTTED => 04-APR-2011 TIME PLOTTED => 13:25

FOR PLAN VIEW, SEE
"LOG OF TEST BORINGS" 1 OF 7

3 REVISED PER ADDENDUM No. 3 DATED APRIL 5, 2011

5.2' Rt ℄ Rte 165
Sta 597+66.0

R-08-001

82.00'

4"

80 70 60 50 40 30 20 10 0 -10 -20 -30 -40 -50 -60 -70 -80 -90 -100 -110 -120 -130 -140 -150

See Boring R-06-001 for the first 100' soil description.

CLAY (CL), very stiff to hard, dark greenish gray, moist, medium plasticity, pp = 3.0 to 4.5 tsf.

SILTY SAND (SM), medium dense, greenish gray, wet, fine grained, micaceous.

15 ⊥.4

Lean CLAY (CL), very stiff, dark gray, moist, medium plasticity, trace silt (L/C) seams, pp = 3.5 tsf.

24 ⊥.4

Poorly graded SAND with SILT (SP-SM)), dense, dark greenish gray, wet, fine grained, micaceous.

30 ⊥.4

SILT (ML), stiff, greenish gray, moist, low plasticit, pp = 1.0 tsf.

69 ⊥.4

SILT (ML), very stiff, greenish gray, moist, with fine SAND lenses, low plasticity, micaceous, pp = 2.25 tsf.

41 ⊥.4

Poorly graded SAND (SP), very dense, greenish gray, wet, fine grained, micaceous.

SANDY lean CLAY (CL), hard, greenish gray, moist to wet, fine grained, low to medium plasticity, micaceous, pp = 4.5+ tsf.

Poorly graded SAND (SP), very dense, greenish gray, wet, fine grained.

35 ⊥.4

SANDY lean CLAY (CL), hard, dark yellowish brown, moist, fine grained, low plasticity, micaceous, weakly cemented, pp = 4.5+ tsf.

SILT (ML), hard, grayish brown, moist, low plasticity, mottled with calcium carbonate, pp = 4.5+ tsf.

31 ⊥.4

SILTY SAND (SM), dense, greenish gray, moist to wet, fine grained, micaceous, some calcium carbonate veins.

SILT (ML), hard, dark yellowish brown, moist, low plasticity, trace iron oxide staining.

SILT with SAND, hard, dark yellowish brown, moist, fine grained with trace coarse grained, low plasticity, micaceous, iron oxide staining.

74 ⊥.4

SILTY CLAY (CL-ML), very stiff, dark yellowish brown, moist, low plasticity, weakly cemented, pp = 3.5 to 4.0 tsf.

SILTY SAND (SM), very dense, dark yellowish brown, moist to wet, fine grained, low plasticity, micaceous, iron oxide staining.

-grading to olive yellow, carbon flecks, weakly to moderately cemented, pp = 4.25 tsf.

16 ⊥.4

Poorly graded SAND (SP), medium dense, olive yellow, wet, fine grained, micaceous, carbon flecks.

Lean CLAY (CL), very stiff to hard, olive yellow, moist, medium plasticity, carbon flecks, pp = 2.5 to 4.5+ tsf.

13 ⊥.4

-carbon, pp = 3.0 to 4.5+ tsf.

9 ⊥.4

Lean CLAY/SILT with SAND (CL/ML), hard, greenish gray, moist, very fine grained, medium plasticity, micaceous, some iron oxide staining, pp = 4.5+ tsf.

-grading to light brownish gray.

21 ⊥.4

Lean CLAY with SAND (CL), stiff to very stiff, dark greenish gray, moist, very fine grained, micaceous SAND, medium plasticity, trace organics, pp = 1.5 to 3.0 tsf.

-hydrogen sulfied odor.

-varved with fine sand.

8 ⊥.4

-grading to very stiff to hard, pp = 2.5 to 4.5+ tsf.

-pp = 3.0 to 4.5+ tsf

-pp = 2.25 to 3.5 tsf

8 ⊥.4

597+50 598+00 598+50

1-31-08
ER_i=78%
Terminated at Elev -149.5'
Ground water was not measured.

PROFILE
HOR. 1"=10'
VER. 1"=10'

This LOTB sheet was prepared in accordance with the Caltrans Soil & Rock Logging, Classification, & Presentation Manual.

3

Zheng Xing 9-04-09
REGISTERED CIVIL ENGINEER

6-21-10
PLANS APPROVAL DATE

REGISTERED GEOLOGIST
Zheng Xing
No. 2130
Exp. 3-31-2011
CERTIFIED ENGINEERING GEOLOGIST
STATE OF CALIFORNIA

The State of California or its officers or agents shall not be responsible for the accuracy or completeness of electronic copies of this plan sheet.

DIST	COUNTY	ROUTE	POST MILES TOTAL PROJECT	SHEET NO	TOTAL SHEETS
10	Mer	165	11.7/26.7	104	110

ENGINEERING SERVICES

FUNCTIONAL SUPERVISOR
NAME: R. Byell

DRAWN BY: W. Tang 03/09
CHECKED BY: J. Thorne

GEOTECHNICAL SERVICES

FIELD INVESTIGATION BY:
S. Sunding, J. Thorne

STATE OF CALIFORNIA
DEPARTMENT OF TRANSPORTATION

DIVISION OF ENGINEERING SERVICES
STRUCTURE DESIGN
DESIGN BRANCH 17

BRIDGE NO. 39-0246
POST MILES 25.61

SAN JOAQUIN RIVER BRIDGE (REPLACE)

LOG OF TEST BORINGS 2 OF 7

SHEET 17 OF 22

CU 06241
EA 279801

DISREGARD PRINTS BEARING EARLIER REVISION DATES

REVISION DATES

ORIGINAL SCALE IN INCHES FOR REDUCED PLANS 0 1 2 3

OGS CIVIL LOG OF TEST BORINGS SHEET

FILE => 39-0246-17-z-LTB02.dgn

USERNAME => trrichf DATE PLOTTED => 04-APR-2011 TIME PLOTTED => 13:25

3 REVISED PER ADDENDUM No. 3 DATED APRIL 5, 2011

FOR PLAN VIEW, SEE
"LOG OF TEST BORINGS" 1 OF 7

8.5' Lt @ Rte 165
Sta 602+13.7

R-06-002

82.00

4" A/C over road base. (Fill)

SILTY SAND (SM), medium dense, dark gray, moist, interbedded with well graded sand (SW), medium dense, tan, moist and sandy clay (CH), stiff, dark gray, moist. (Fill)

SANDY SILT (ML), very loose, light brown to gray, wet.

Poorly graded SAND (SP), medium dense to loose, light brown, wet, medium grained.

Poorly graded SAND with SILT (SP-SM), medium dense, light bluish gray, moist, fine grained.

Poorly graded SAND (SP), medium dense to dense, light gray, wet, medium to fine grained.

CLAYEY SAND (SC), loose, light tan, wet.

Poorly graded SAND with SILT (SP-SM), medium dense, light reddish gray, moist, fine grained, trace clay.

SANDY SILT (ML), dense, light gray, moist, 1" thick caliche lens at Elev 34', interbedded with lenses of poorly graded sand (SP), light gray, wet, fine to medium grained.

Elastic SILT with SAND (MH), very stiff, gray, moist.

SANDY SILT (ML), dense, light gray, moist, interbedded with poorly graded sand (SP), dense, light gray to reddish gray, moist, fine to medium grained.

Poorly graded SAND (SP), dense, light gray, moist, medium to fine grained.

SILTY SAND (SM), medium dense, greenish brown, wet.

SILTY SAND (SM), medium dense, light bluish gray, moist, interbedded with clayey sand (SC), medium dense, light bluish gray, moist, fine grained.

Fat CLAY (CH), very stiff, light gray with tan zones, moist, trace sand, trace fossils.

Poorly graded SAND with SILT (SP-SM), medium dense, light gray, moist, fine grained.

Poorly graded SAND (SP), very dense(estimated), tan, dry, sand is cemented into concretions.
SILTY SAND (SM), medium dense, light reddish gray, moist, fine grained.

- grading to very dense.

Poorly graded SAND (SP), very dense, light gray, wet, medium grained.

Poorly graded SAND (SP), very dense, brown, moist, trace silt and silt lenses, small concretionary lenses of well cemented sand at various depths.

Elev	Blows
80	11 1.4
70	2 1.4
	11 1.4
60	4 1.4
	9 1.4
50	14 1.4
	37 1.4
40	5 1.4
	10 1.4
30	33 1.4
	28 1.4
20	31 1.4
	31 1.4
10	36 1.4
0	15 1.4
-10	15 1.4
-20	17 1.4
-30	16 1.4
-40	70 1.4
-50	81 1.4
-60	42 1.4
-70	74 1.4

10-3-06
ER_i=71%
Terminated at Elev -70.5'
Ground water was not measured.

602+00 602+50 603+00

PROFILE
HOR. 1"=10'
VER. 1"=10'

3

This LOTB sheet was prepared in accordance with the Caltrans Soil & Rock Logging, Classification, & Presentation Manual.

Zheng Xing 9-04-09
REGISTERED CIVIL ENGINEER

6-21-10
PLANS APPROVAL DATE

REGISTERED GEOLOGIST
Zheng Xing
No. 2130
Exp. 3-31-2011
CERTIFIED ENGINEERING GEOLOGIST
STATE OF CALIFORNIA

The State of California or its officers or agents shall not be responsible for the accuracy or completeness of electronic copies of this plan sheet.

DIST	COUNTY	ROUTE	POST MILES TOTAL PROJECT	SHEET NO	TOTAL SHEETS
10	Mer	165	11.7/26.7	105	110

ENGINEERING SERVICES

FUNCTIONAL SUPERVISOR
NAME: R. Byell

DRAWN BY: W. Tang 03/09
CHECKED BY: J. Thhorne

GEOTECHNICAL SERVICES

FIELD INVESTIGATION BY:
S. Sunding, J. Thorne

ORIGINAL SCALE IN INCHES FOR REDUCED PLANS 0 1 2 3

STATE OF CALIFORNIA
DEPARTMENT OF TRANSPORTATION

DIVISION OF ENGINEERING SERVICES
STRUCTURE DESIGN
DESIGN BRANCH 17

BRIDGE NO. 39-0246
POST MILES 25.61

DISREGARD PRINTS BEARING EARLIER REVISION DATES

SAN JOAQUIN RIVER BRIDGE (REPLACE)

LOG OF TEST BORINGS 3 OF 7

REVISION DATES

SHEET 18 OF 22

CU 06241
EA 279801

ODS CIVIL LOG OF TEST BORINGS SHEET

FILE => 39-0246-18-2-11b03.dgn

USERNAME => trrichf DATE PLOTTED => 04-APR-2011 TIME PLOTTED => 13:31

DIST	COUNTY	ROUTE	POST MILES TOTAL PROJECT	SHEET No	TOTAL SHEETS
10	Mer	165	11.7/26.7	106	110

REGISTERED CIVIL ENGINEER 9-04-09

6-21-10
PLANS APPROVAL DATE

REGISTERED GEOLOGIST
Zheng Xing
No. 2130
Exp. 3-31-2011
CERTIFIED ENGINEERING GEOLOGIST
STATE OF CALIFORNIA

The State of California or its officers or agents shall not be responsible for the accuracy or completeness of electronic copies of this plan sheet.

3

This LOTB sheet was prepared in accordance with the Caltrans Soil & Rock Logging, Classification, & Presentation Manual.

9.2' Lt ℄ Rte 165
Sta 602+31.7

R-08-002

82.00'

4"

FOR PLAN VIEW, SEE
"LOG OF TEST BORINGS" 1 OF 7

See Boring R-06-002 for the first 150' soil description.

Elev	Description
-70	SILT (ML), stiff, yellowish brown, moist, medium plasticity, pp = 1.0 tsf.
	SILTY SAND (SM), very dense, wet, fine grained, micaceous.
	SILTY CLAY (CL-ML), hard, yellowish brown, moist, moderately to strongly cemented, pp = 4.0 to 4.5 tsf.
	Lean CLAY (CL), hard, pale white, moist, low to medium plasticity, weakly cemented, pp = 4.0 to 4.5 tsf.
-80 (5 ⅱ.4)	SILTY CLAY (CL-ML), stiff, pale olive, moist, medium plasticity, with iron oxide staining, pp = 1.5 tsf.
	SILTY SAND (SM), dense, pale olive, moist, fine grained, micaceous.
	Lean CLAY (CL), hard, pale olive, moist, low to medium plasticity, with fine silty sand lenses and iron oxide staining, pp = 4.5 tsf.
-90 (57 ⅱ.4)	Poorly-graded SAND (SP), dense, pale olive, wet, fine grained, with iron oxide staining, micaceous, with silt lens at Elev -92.55', pp = 4.5 tsf.
	Poorly-graded SAND (SP) to SILTY SAND (SM), medium dense, pale olive, moist to wet, fine grained, moderately to strongly cemented.
-100 (15 ⅱ.4)	Lean CLAY (CL), very stiff to hard,. pale olive, moist, medium plasticity, carbon, pp = 3.5 to 4.5 tsf, sand lens at Elev -99.25' to -99.75', fine grained.
	FAT CLAY (CH), medium stiff, pale olive, moist, high plasticity, pp = 0.75 to 1.0 tsf.
-110 (26 ⅱ.4)	Lean CLAY (CL), hard, pale olive, moist, medium to low plasticity,iron oxide staining, carbon, pp = 4.5 tsf.
	-grading to silty clay (CL-ML), micaceous. pp = 4.5 tsf..
	grading to very stiff to hard, pp = 3.5 to 4.5 tsf.
-120 (9 ⅱ.4)	FAT CLAY (CH), stiff to very stiff, pale olive, moist, medium to high plasticity, trace fine sand, pp = 1.25 to 2.25 tsf.
	PP = 1.0 to 1.5 tsf.
	SILT (ML), stiff to very stiff, dark greenish gray, moist, micaceous, pp = 1.75 to 2.5 tsf.
	Poorly-graded SAND (SP), medium dense, dark greenish gray, moist, fine grained, micaceous, some clay binder.
-130 (18 ⅱ.4)	Lean CLAY (CL), very stiff to hard, dark greenish gray, moist, medium plasticity, pp = 4.5 tsf.
	pp = 3.0 to 4.5 tsf.
	-moderately cemented at Elev -131'.
	SANDY SILT (ML), very stiff to hard, dark greenish gray, moist, fine grained, low to medium plasticity, micaceous, trace organics, pp = 2.0 to 4.5 tsf.
-140 (17 ⅱ.4)	SILTY CLAY (CL-ML), very stiff, dark greenish gray, moist, medium plasticity, micaceous, trace very fine sand, pp = 3.0 to 4.0 tsf.

2-6-08
ER_i =78%
Terminated at Elev -139.5'
Ground water was not measured.

80 70 60 50 40 30 20 10 0 -10 -20 -30 -40 -50 -60 -70

602+00 602+50 603+00 603+50

PROFILE
HOR. 1"=10'
VER. 1"=10'

3 REVISED PER ADDENDUM No. 3 DATED APRIL 5, 2011

ENGINEERING SERVICES	GEOTECHNICAL SERVICES	STATE OF CALIFORNIA DEPARTMENT OF TRANSPORTATION	DIVISION OF ENGINEERING SERVICES STRUCTURE DESIGN DESIGN BRANCH 17	BRIDGE NO. 39-0246 POST MILES 25.61	SAN JOAQUIN RIVER BRIDGE (REPLACE)
FUNCTIONAL SUPERVISOR NAME: R. Bvell	DRAWN BY: W. Tang 03/09 CHECKED BY: J. Thhorne	FIELD INVESTIGATION BY: S. Sunding, J. Thorne			LOG OF TEST BORINGS 4 OF 7

OGS CIVIL LOG OF TEST BORINGS SHEET

ORIGINAL SCALE IN INCHES FOR REDUCED PLANS 0 1 2 3

CU 06241
EA 279801

DISREGARD PRINTS BEARING EARLIER REVISION DATES → 03-10-09 05-18-09 06-08-09 08-20-09

REVISION DATES

SHEET 19 OF 22

FILE => 39-0246-19-z-lltb04.add

USERNAME => frrright DATE PLOTTED => 04-APR-2011 TIME PLOTTED => 13:32

REFERENCE: CALTRANS SOIL & ROCK LOGGING, CLASSIFICATION, AND PRESENTATION MANUAL.

DIST	COUNTY	ROUTE	POST MILES TOTAL PROJECT	SHEET No	TOTAL SHEETS
10	Mer	165	11.7/26.7	107	110

3

REGISTERED CIVIL ENGINEER 9-04-09

6-21-10
PLANS APPROVAL DATE

REGISTERED GEOLOGIST — Zheng Xing — No. 2130 — Exp. 3-31-2011 — CERTIFIED ENGINEERING GEOLOGIST — STATE OF CALIFORNIA

The State of California or its officers or agents shall not be responsible for the accuracy or completeness of electronic copies of this plan sheet.

CEMENTATION

Description	Criteria
Weak	Crumbles or breaks with handling or little finger pressure.
Moderate	Crumbles or breaks with considerable finger pressure.
Strong	Will not crumble or break with finger pressure.

CONSISTENCY OF COHESIVE SOILS

Description	Unconfined Compressive Strength (tsf)	Pocket Penetrometer Measurement (tsf)	Torvane Measurement (tsf)	Field Approximation
Very Soft	< 0.25	< 0.25	< 0.12	Easily penetrated several inches by fist
Soft	0.25 to 0.50	0.25 to 0.50	0.12 to 0.25	Easily penetrated several inches by thumb
Medium Stiff	0.50 to 1.0	0.50 to 1.0	0.25 to 0.50	Penetrated several inches by thumb with moderate effort
Stiff	1 to 2	1 to 2	0.50 to 1.0	Readily indented by thumb but penetrated only with great effort
Very Stiff	2 to 4	2 to 4	1.0 to 2.0	Readily indented by thumbnail
Hard	> 4.0	> 4.0	> 2.0	Indented by thumbnail with difficulty

BOREHOLE IDENTIFICATION

Symbol	Hole Type	Description
Size	A	Auger Boring
Size	R P	Rotary drilled boring Rotary percussion boring (air)
Size	R	Rotary drilled diamond core
Size	HD HA	Hand driven (1-inch soil tube) Hand Auger
●	D	Dynamic Cone Penetration Boring
▲	CPT	Cone Penetration Test (ASTM D 5778-95)
⬚	O	Other

Note: Size in inches.

PLASTICITY OF FINE-GRAINED SOILS

Description	Criteria
Nonplastic	A 1/8-inch thread cannot be rolled at any water content.
Low	The thread can barely be rolled and the lump cannot be formed when drier than the plastic limit.
Medium	The thread is easy to roll and not much time is required to reach the plastic limit. The thread cannot be rerolled after reaching the plastic limit. The lump crumbles when drier than the plastic limit.
High	It takes considerable time rolling and kneading to reach the plastic limit. The thread can be rerolled several times after reaching the plastic limit. The lump can be formed without crumbling when drier than the plastic limit.

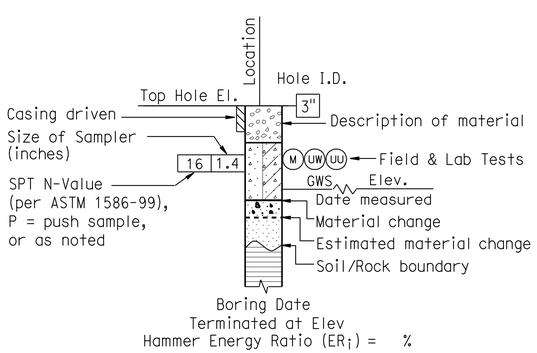

ROTARY BORING

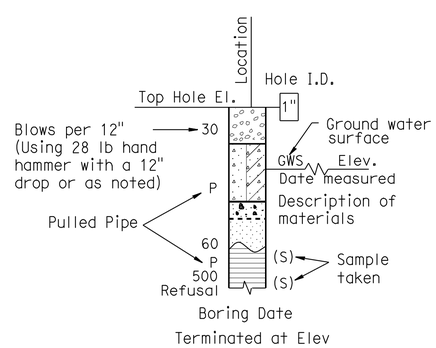

HAND BORING

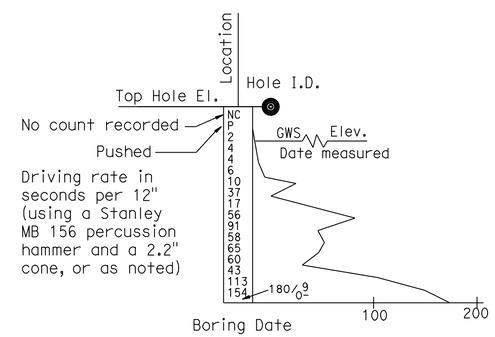

DYNAMIC CONE PENETRATION BORING

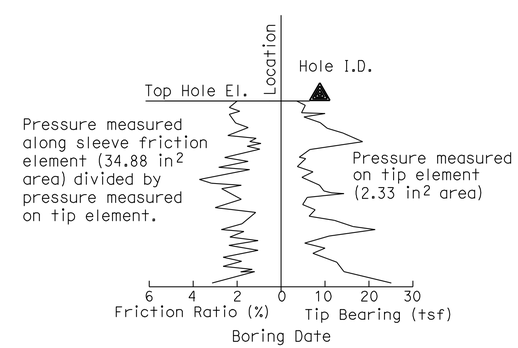

CONE PENETRATION TEST (CPT) SOUNDING

3 **REVISED PER ADDENDUM No. 3 DATED APRIL 5, 2011**

ENGINEERING SERVICES	GEOTECHNICAL SERVICES	STATE OF CALIFORNIA DEPARTMENT OF TRANSPORTATION	DIVISION OF ENGINEERING SERVICES STRUCTURE DESIGN DESIGN BRANCH 17	BRIDGE NO. 39-0246 POST MILES 25.61	SAN JOAQUIN RIVER BRIDGE (REPLACE) LOG OF TEST BORINGS 5 OF 7
FUNCTIONAL SUPERVISOR NAME: R. Bvell	DRAWN BY: W. Tang 03/09 CHECKED BY: J. Thhorne	FIELD INVESTIGATION BY: S. Sunding, J. Thorne			

OGS CIVIL LOG OF TEST BORINGS SHEET

ORIGINAL SCALE IN INCHES FOR REDUCED PLANS 0 1 2 3

CU 06241
EA 279801

DISREGARD PRINTS BEARING EARLIER REVISION DATES 03-10-09 06-09-09 08-20-09

REVISION DATES

SHEET 20 OF 22

FILE => 39-0246-20-z-ltb05.add

USERNAME => trrrlchf DATE PLOTTED => 04-APR-2011 TIME PLOTTED => 13:32

DIST	COUNTY	ROUTE	POST MILES TOTAL PROJECT	SHEET No	TOTAL SHEETS
10	Mer	165	11.7/26.7	108	110

REGISTERED CIVIL ENGINEER 9-04-09

6-21-10
PLANS APPROVAL DATE

REGISTERED GEOLOGIST
Zheng Xing
No. 2130
Exp. 3-31-2011
CERTIFIED ENGINEERING GEOLOGIST
STATE OF CALIFORNIA

The State of California or its officers or agents shall not be responsible for the accuracy or completeness of electronic copies of this plan sheet.

3

GROUP SYMBOLS AND NAMES

Graphic/Symbol	Group Names
GW	Well-graded GRAVEL Well-graded GRAVEL with SAND
GP	Poorly graded GRAVEL Poorly graded GRAVEL with SAND
GW-GM	Well-graded GRAVEL with SILT Well-graded GRAVEL with SILT and SAND
GW-GC	Well-graded GRAVEL with CLAY (or SILTY CLAY) Well-graded GRAVEL with CLAY and SAND (or SILTY CLAY and SAND)
GP-GM	Poorly graded GRAVEL with SILT Poorly graded GRAVEL with SILT and SAND
GP-GC	Poorly graded GRAVEL with CLAY (or SILTY CLAY) Poorly graded GRAVEL with CLAY and SAND (or SILTY CLAY and SAND)
GM	SILTY GRAVEL SILTY GRAVEL with SAND
GC	CLAYEY GRAVEL CLAYEY GRAVEL with SAND
GC-GM	SILTY, CLAYEY GRAVEL SILTY, CLAYEY GRAVEL with SAND
SW	Well-graded SAND Well-graded SAND with GRAVEL
SP	Poorly graded SAND Poorly graded SAND with GRAVEL
SW-SM	Well-graded SAND with SILT Well-graded SAND with SILT and GRAVEL
SW-SC	Well-graded SAND with CLAY (or SILTY CLAY) Well-graded SAND with CLAY and GRAVEL (or SILTY CLAY and GRAVEL)
SP-SM	Poorly graded SAND with SILT Poorly graded SAND with SILT and GRAVEL
SP-SC	Poorly graded SAND with CLAY (or SILTY CLAY) Poorly graded SAND with CLAY and GRAVEL (or SILTY CLAY and GRAVEL)
SM	SILTY SAND SILTY SAND with GRAVEL
SC	CLAYEY SAND CLAYEY SAND with GRAVEL
SC-SM	SILTY, CLAYEY SAND SILTY, CLAYEY SAND with GRAVEL
PT	PEAT
	COBBLES COBBLES and BOULDERS BOULDERS

Graphic/Symbol	Group Names
CL	Lean CLAY Lean CLAY with SAND Lean CLAY with GRAVEL SANDY lean CLAY SANDY lean CLAY with GRAVEL GRAVELLY lean CLAY GRAVELLY lean CLAY with SAND
CL-ML	SILTY CLAY SILTY CLAY with SAND SILTY CLAY with GRAVEL SANDY SILTY CLAY SANDY SILTY CLAY with GRAVEL GRAVELLY SILTY CLAY GRAVELLY SILTY CLAY with SAND
ML	SILT SILT with SAND SILT with GRAVEL SANDY SILT SANDY SILT with GRAVEL GRAVELLY SILT GRAVELLY SILT with SAND
OL	ORGANIC lean CLAY ORGANIC lean CLAY with SAND ORGANIC lean CLAY with GRAVEL SANDY ORGANIC lean CLAY SANDY ORGANIC lean CLAY with GRAVEL GRAVELLY ORGANIC lean CLAY GRAVELLY ORGANIC lean CLAY with SAND
OL	ORGANIC SILT ORGANIC SILT with SAND ORGANIC SILT with GRAVEL SANDY ORGANIC SILT SANDY ORGANIC SILT with GRAVEL GRAVELLY ORGANIC SILT GRAVELLY ORGANIC SILT with SAND
CH	Fat CLAY Fat CLAY with SAND Fat CLAY with GRAVEL SANDY fat CLAY SANDY fat CLAY with GRAVEL GRAVELLY fat CLAY GRAVELLY fat CLAY with SAND
MH	Elastic SILT Elastic SILT with SAND Elastic SILT with GRAVEL SANDY elastic SILT SANDY elastic SILT with GRAVEL GRAVELLY elastic SILT GRAVELLY elastic SILT with SAND
OH	ORGANIC fat CLAY ORGANIC fat CLAY with SAND ORGANIC fat CLAY with GRAVEL SANDY ORGANIC fat CLAY SANDY ORGANIC fat CLAY with GRAVEL GRAVELLY ORGANIC fat CLAY GRAVELLY ORGANIC fat CLAY with SAND
OH	ORGANIC elastic SILT ORGANIC elastic SILT with SAND ORGANIC elastic SILT with GRAVEL SANDY ORGANIC elastic SILT SANDY ORGANIC elastic SILT with GRAVEL GRAVELLY ORGANIC elastic SILT GRAVELLY ORGANIC elastic SILT with SAND
OL/OH	ORGANIC SOIL ORGANIC SOIL with SAND ORGANIC SOIL with GRAVEL SANDY ORGANIC SOIL SANDY ORGANIC SOIL with GRAVEL GRAVELLY ORGANIC SOIL GRAVELLY ORGANIC SOIL with SAND

FIELD AND LABORATORY TESTING

- (C) Consolidation (ASTM D 2435)
- (CL) Collapse Potential (ASTM D 5333)
- (CP) Compaction Curve (CTM 216)
- (CR) Corrosivity Testing (CTM 643, CTM 422, CTM 417)
- (CU) Consolidated Undrained Triaxial (ASTM D 4767)
- (DS) Direct Shear (ASTM D 3080)
- (EI) Expansion Index (ASTM D 4829)
- (M) Moisture Content (ASTM D 2216)
- (OC) Organic Content-% (ASTM D 2974)
- (P) Permeability (CTM 220)
- (PA) Particle Size Analysis (ASTM D 422)
- (PI) Plasticity Index (AASHTO T 90) Liquid Limit (AASHTO T 89)
- (PL) Point Load Index (ASTM D 5731)
- (PM) Pressure Meter
- (PP) Pocket Penetrometer
- (R) R-Value (CTM 301)
- (SE) Sand Equivalent (CTM 217)
- (SG) Specific Gravity (AASHTO T 100)
- (SL) Shrinkage Limit (ASTM D 427)
- (SW) Swell Potential (ASTM D 4546)
- (TV) Pocket Torvane
- (UC) Unconfined Compression-Soil (ASTM D 2166) Unconfined Compression-Rock (ASTM D 2938)
- (UU) Unconsolidated Undrained Triaxial (ASTM D 2850)
- (UW) Unit Weight (ASTM D 4767)
- (VS) Vane Shear (AASHTO T 223)

APPARENT DENSITY OF COHESIONLESS SOILS

Description	SPT N_{60} (Blows / 12 inches)
Very loose	0 - 4
Loose	5 - 10
Medium Dense	11 - 30
Dense	31 - 50
Very Dense	> 50

MOISTURE

Description	Criteria
Dry	Absence of moisture, dusty, dry to the touch
Moist	Damp but no visible water
Wet	Visible free water, usually soil is below water table

PERCENT OR PROPORTION OF SOILS

Description	Criteria
Trace	Particles are present but estimated to be less than 5%
Few	5 to 10%
Little	15 to 25%
Some	30 to 45%
Mostly	50 to 100%

PARTICLE SIZE

Description		Size
Boulder		> 12"
Cobble		3" to 12"
Gravel	Coarse	3/4" to 3"
	Fine	No. 4 to 3/4"
Sand	Coarse	No. 10 to No. 4
	Medium	No. 40 to No. 10
	Fine	No. 200 to No. 40

3 **REVISED PER ADDENDUM No. 3 DATED APRIL 5, 2011**

REFERENCE: CALTRANS SOIL & ROCK LOGGING, CLASSIFICATION, AND PRESENTATION MANUAL.

ENGINEERING SERVICES	GEOTECHNICAL SERVICES	STATE OF CALIFORNIA DEPARTMENT OF TRANSPORTATION	DIVISION OF ENGINEERING SERVICES STRUCTURE DESIGN DESIGN BRANCH 17	BRIDGE NO. 39-0246 POST MILES 25.61	SAN JOAQUIN RIVER BRIDGE (REPLACE) LOG OF TEST BORINGS 6 OF 7
FUNCTIONAL SUPERVISOR NAME: R. Bvell	DRAWN BY: W. Tang 03/09 CHECKED BY: J. Thhorne	FIELD INVESTIGATION BY: S. Sunding, J. Thorne			

OGS CIVIL LOG OF TEST BORINGS SHEET

ORIGINAL SCALE IN INCHES FOR REDUCED PLANS 0 1 2 3

CU 06241
EA 279801

DISREGARD PRINTS BEARING EARLIER REVISION DATES → 05-18-09 06-04-09 08-20-09

REVISION DATES

SHEET 21 OF 22

FILE => 39-0246-21-z-ltb06.add

USERNAME => trmikes1 DATE PLOTTED => 04-APR-2011 TIME PLOTTED => 14:22

3 REVISED PER ADDENDUM No. 3 DATED APRIL 5, 2011

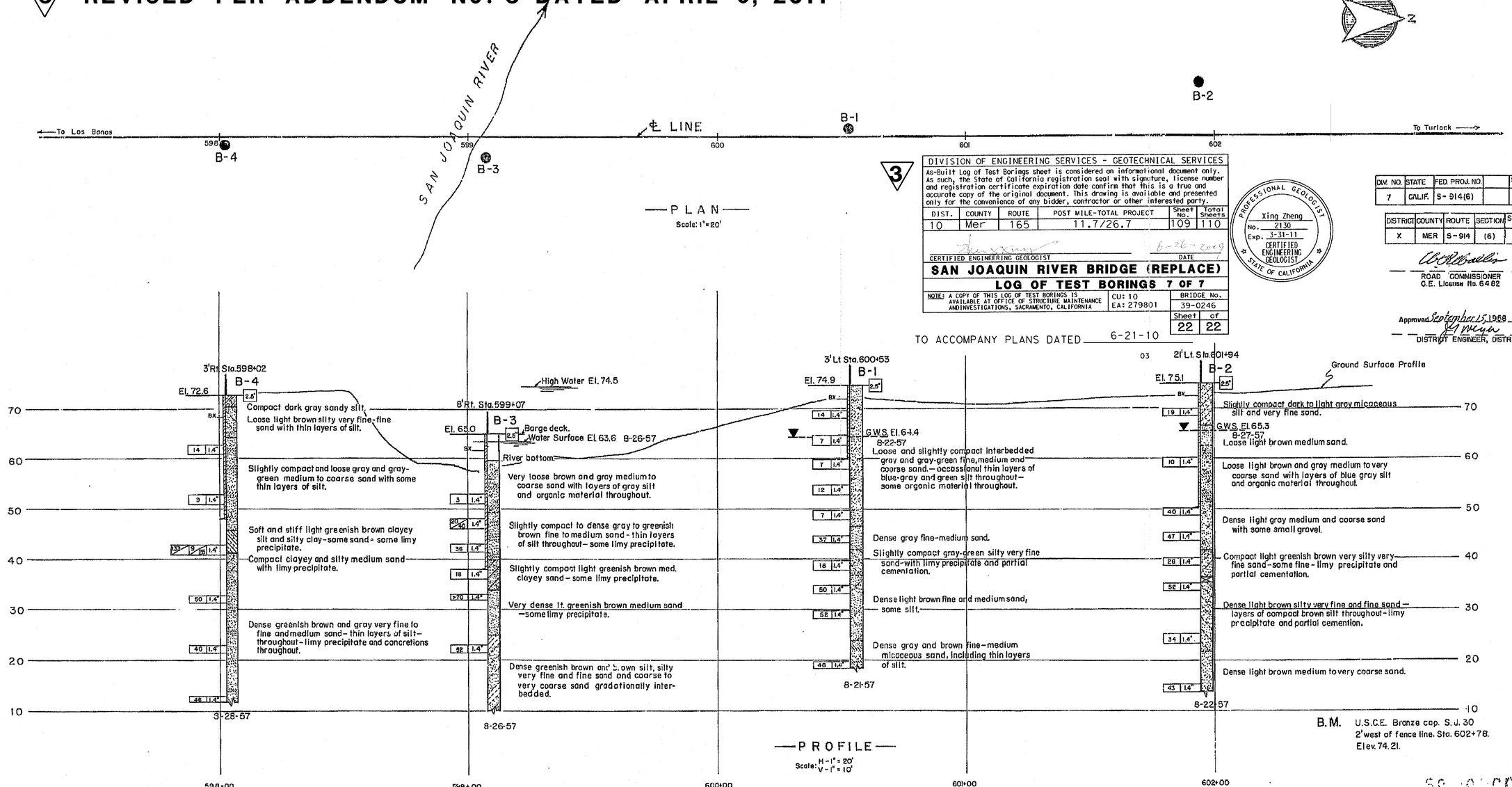

B.M. U.S.C.E. Bronze cap. S.J. 30 2' west of fence line. Sta. 602+78. Elev. 74.21.

Br. No. 39C-32

DIVISION OF ENGINEERING SERVICES - GEOTECHNICAL SERVICES

As-Built Log of Test Borings sheet is considered an informational document only. As such, the State of California registration seal with signature, license number and registration certificate expiration date confirm that this is a true and accurate copy of the original document. This drawing is available and presented only for the convenience of any bidder, contractor or other interested party.

DIST.	COUNTY	ROUTE	POST MILE-TOTAL PROJECT	Sheet No.	Total Sheets
10	Mer	165	11.7/26.7	109	110

CERTIFIED ENGINEERING GEOLOGIST — DATE 6-26-2009

PROFESSIONAL GEOLOGIST — Xing Zheng — No. 2130 — Exp. 3-31-11 — CERTIFIED ENGINEERING GEOLOGIST — STATE OF CALIFORNIA

SAN JOAQUIN RIVER BRIDGE (REPLACE)

LOG OF TEST BORINGS 7 OF 7

NOTE: A COPY OF THIS LOG OF TEST BORINGS IS AVAILABLE AT OFFICE OF STRUCTURE MAINTENANCE AND INVESTIGATIONS, SACRAMENTO, CALIFORNIA

CU: 10
EA: 279801

BRIDGE No. 39-0246

Sheet 22 of 22

TO ACCOMPANY PLANS DATED 6-21-10

DIV. NO.	STATE	FED. PROJ. NO.		SHEET NO.	SHEET TOTALS
7	CALIF.	S-914(6)		33	44

DISTRICT	COUNTY	ROUTE	SECTION	SHEET NO.	SHEET TOTALS
X	MER	S-914	(6)	33	44

ROAD COMMISSIONER
C.E. License No. 6482

Approved September 15, 1958
DISTRICT ENGINEER, DISTRICT X

LEGEND OF EARTH MATERIALS

SIZE CLASSIFICATION

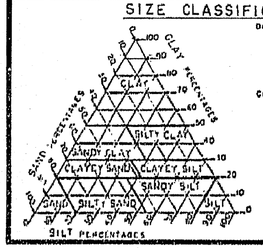

Diagram showing the basis of grainsize distribution used in determination of class names. Site classification is based on the Wentworth grade scale in field classification or the ASTM grade scale in the laboratory have the same.

Classification of earth material shown on this sheet is based on field inspection and should not be construed to imply mech anical analysis unless so stated.

MATERIAL SYMBOLS

Gravel
Sand
Silt
Clay
Sandy clay or clayey sand
Sandy silt or silty sand
Silty clay or clayey silt
Peat or organic matter
Fill material
Shale
Sandstone
Limestone
Metamorphic rock
Igneous rock

CONSISTENCY CLASSIFICATION

According to the Standard Penetration Test

No. of blows	Granular	Cohesive
0-5	very loose	very soft
6-10	loose	soft
11-20	slightly compact	stiff
21-35	compact	very stiff
36-70	dense	hard
70+	very dense	very hard

LEGEND OF BORING OPERATIONS

Plan of any boring
Flush penetrometer
2 1/2" Cone penetrometer
Rotary boring
Auger boring
Sample boring
Jet boring
Diamond core boring
Test pit

ROTARY BORING

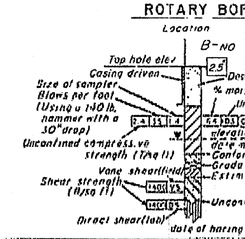

PENETRATION TEST

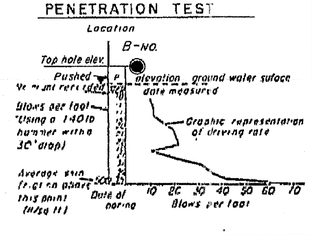

GEO-ENGINEERING COMPANY

F-321-1 APPROVED H.R. Taber 9/9/57
LICENSED CIVIL ENGINEER No. 9165

MERCED COUNTY

BRIDGE ACROSS

SAN JOAQUIN RIVER

LOG OF TEST BORINGS

Scale As Shown | Date Sept. 5, 1957 | Drawing C-59 hb-5

AS BUILT 7E-2876.2

39-0246-22-z-1tb07.tif