Dist	COUNTY	ROUTE	POST MILES TOTAL PROJECT	SHEET No.	TOTAL SHEETS
10	Ama	88	0.0/5.5	101	216

REGISTERED CIVIL ENGINEER 05-15-11 DATE

PLANS APPROVAL DATE 10-17-11

REGISTERED PROFESSIONAL ENGINEER ERIC C-S CHIN No. 71272 Exp. 12-30-11 CIVIL STATE OF CALIFORNIA

THE STATE OF CALIFORNIA OR ITS OFFICERS OR AGENTS SHALL NOT BE RESPONSIBLE FOR THE ACCURACY OR COMPLETENESS OF SCANNED COPIES OF THIS PLAN SHEET.

NOTES:

1. FOR ACCURATE RIGHT OF WAY DATA, CONTACT RIGHT OF WAY ENGINEERING AT THE DISTRICT OFFICE.
2. LOCATIONS OF UTILITY FACILITIES SHOWN ARE APPROXIMATE AND ~~SHALL BE~~ VERIFIED BY THE CONTRACTOR PRIOR TO CONSTRUCTION.

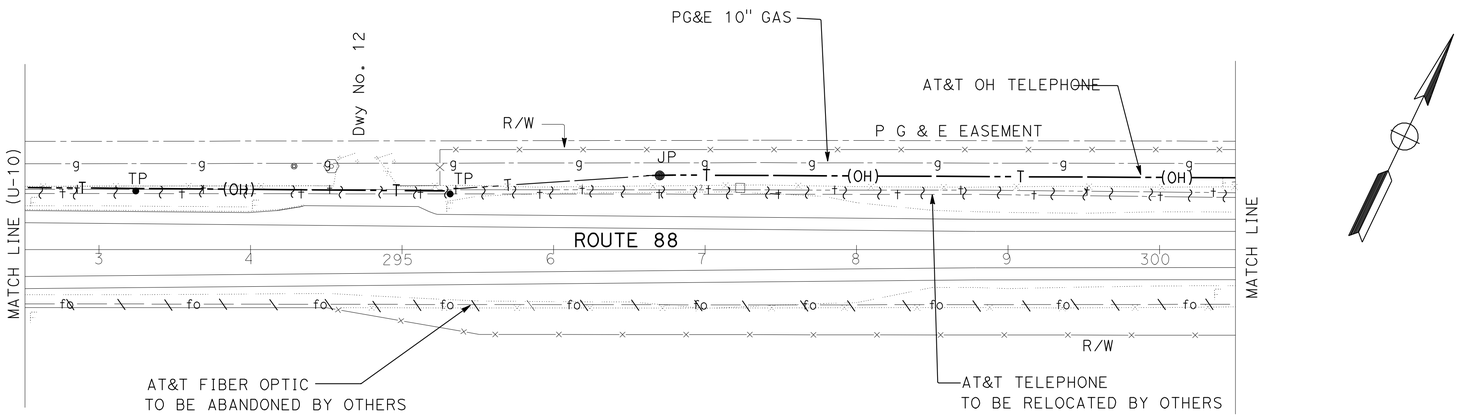

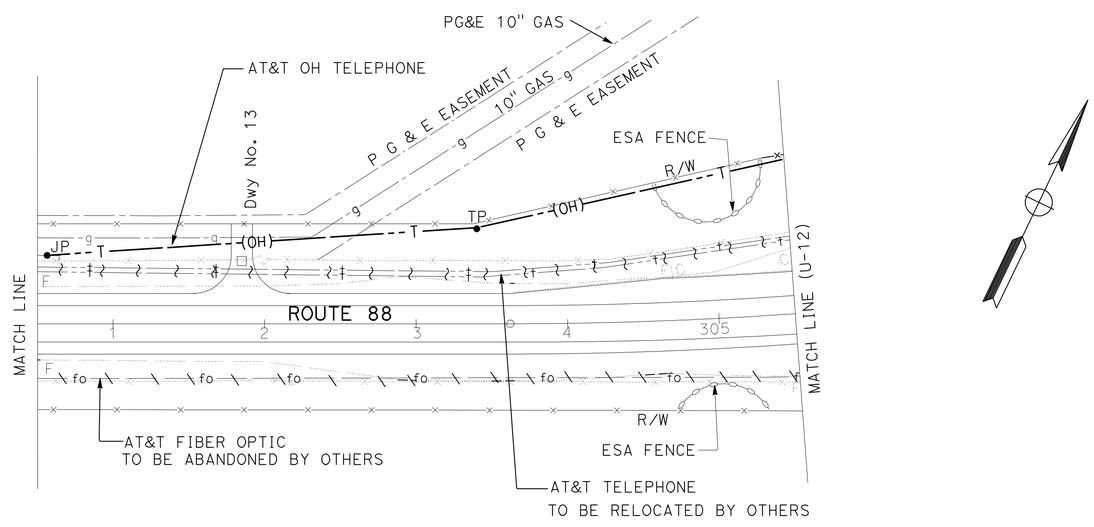

UTILITY PLAN

THIS PLAN ACCURATE FOR UTILITY INFORMATION ONLY.

SCALE: 1" = 50′ **U-11**

STATE OF CALIFORNIA - DEPARTMENT OF TRANSPORTATION

Caltrans® DESIGN

FUNCTIONAL SUPERVISOR: TERRY OGLE

CALCULATED-DESIGNED BY: ERIC C-S CHIN

CHECKED BY: GABRIEL ELEFANTE

REVISED BY: RS

DATE REVISED: 05-5-11

LAST REVISION: 00-00-00

DATE PLOTTED => 19-OCT-2011

TIME PLOTTED => 08:48

Dist	COUNTY	ROUTE	POST MILES TOTAL PROJECT	SHEET No.	TOTAL SHEETS
10	Ama	88	0.0/5.5	102	216

REGISTERED CIVIL ENGINEER 05-15-11 DATE

10-17-11
PLANS APPROVAL DATE

REGISTERED PROFESSIONAL ENGINEER ERIC C-S CHIN No. 71272 Exp. 12-30-11 CIVIL STATE OF CALIFORNIA

THE STATE OF CALIFORNIA OR ITS OFFICERS OR AGENTS SHALL NOT BE RESPONSIBLE FOR THE ACCURACY OR COMPLETENESS OF SCANNED COPIES OF THIS PLAN SHEET.

NOTES:

1. FOR ACCURATE RIGHT OF WAY DATA, CONTACT RIGHT OF WAY ENGINEERING AT THE DISTRICT OFFICE.
2. LOCATIONS OF UTILITY FACILITIES SHOWN ARE APPROXIMATE AND SHALL BE VERIFIED BY THE CONTRACTOR PRIOR TO CONSTRUCTION.

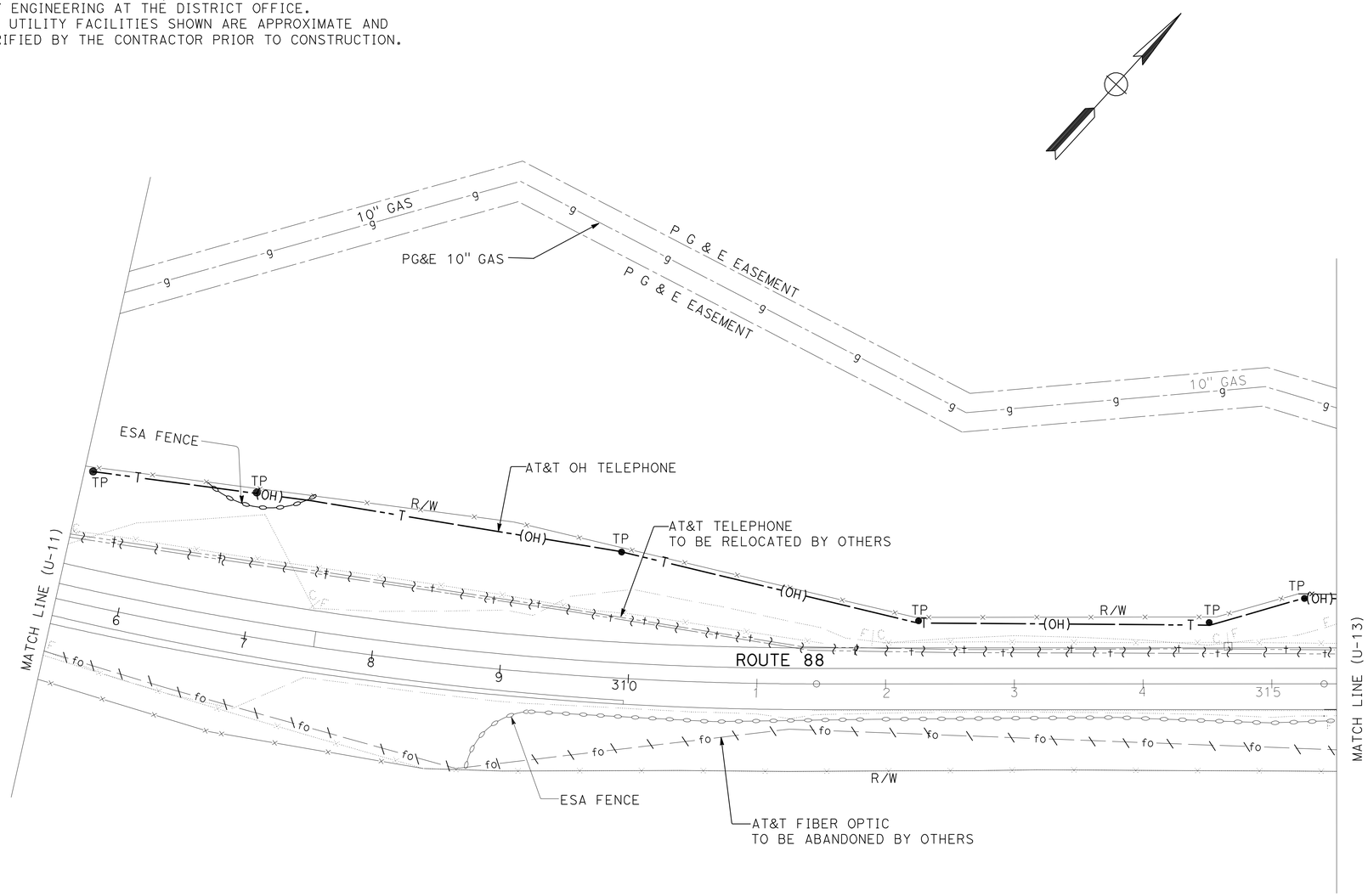

THIS PLAN ACCURATE FOR UTILITY INFORMATION ONLY.

UTILITY PLAN

SCALE: 1" = 50'

U-12

STATE OF CALIFORNIA - DEPARTMENT OF TRANSPORTATION
Caltrans
DESIGN

FUNCTIONAL SUPERVISOR: TERRY OGLE
CALCULATED-DESIGNED BY: ERIC C-S CHIN
CHECKED BY: GABRIEL ELEFANTE
REVISED BY: RS
DATE REVISED: 05-5-11

LAST REVISION 00-00-00
DATE PLOTTED => 19-OCT-2011
TIME PLOTTED => 08:48

Dist	COUNTY	ROUTE	POST MILES TOTAL PROJECT	SHEET No.	TOTAL SHEETS
10	Ama	88	0.0/5.5	103	216

REGISTERED CIVIL ENGINEER 05-15-11 DATE

10-17-11
PLANS APPROVAL DATE

REGISTERED PROFESSIONAL ENGINEER ERIC C-S CHIN No. 71272 Exp. 12-30-11 CIVIL STATE OF CALIFORNIA

THE STATE OF CALIFORNIA OR ITS OFFICERS OR AGENTS SHALL NOT BE RESPONSIBLE FOR THE ACCURACY OR COMPLETENESS OF SCANNED COPIES OF THIS PLAN SHEET.

NOTES:

1. FOR ACCURATE RIGHT OF WAY DATA, CONTACT RIGHT OF WAY ENGINEERING AT THE DISTRICT OFFICE.
2. LOCATIONS OF UTILITY FACILITIES SHOWN ARE APPROXIMATE AND SHALL BE VERIFIED BY THE CONTRACTOR PRIOR TO CONSTRUCTION.

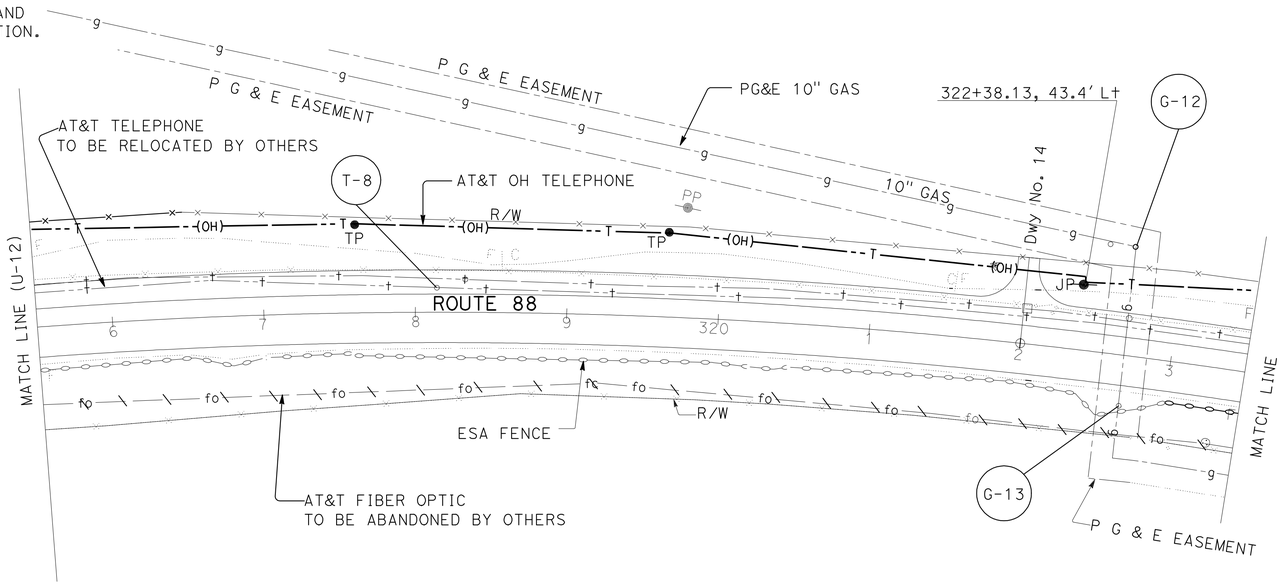

POTHOLE LOCATION TABLE

No.	LOCATION Sta	DISTANCE FROM CENTER LINE	SURFACE Elev	UTILITY Elev	DEPTH
T-8	318+13.95	15.57' Lt	293.639	291.389	2.25'
G-12	322+69.94	72.17' Lt	284.441	280.691	3.75'
G-13	322+69.94	32.34' Rt	289.087	285.837	2.25'
G-14	328+60.92	27.61' Rt	281.148	276.068	5.08'
T-9	330+55.29	26.53' Lt	275.276	272.276	3.00'
G-15	332+13.42	15.75' Lt	276.729	272.979	3.75'
G-16	332+13.42	25.14' Rt	277.370	273.040	4.33'

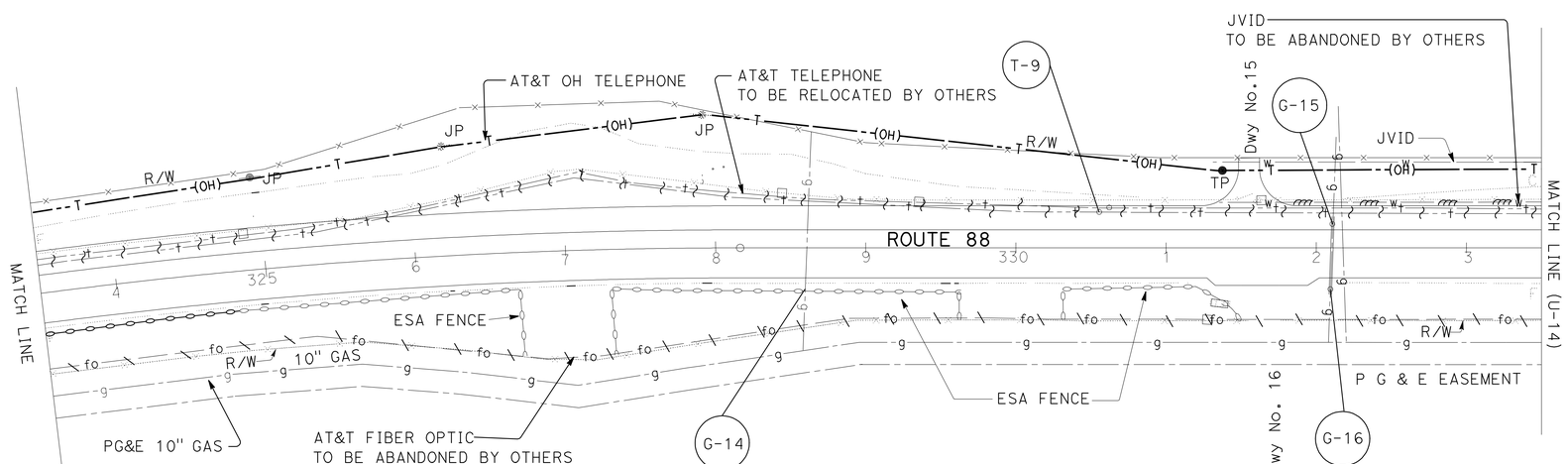

UTILITY PLAN

SCALE: 1" = 50'

U-13

THIS PLAN ACCURATE FOR UTILITY INFORMATION ONLY.

STATE OF CALIFORNIA - DEPARTMENT OF TRANSPORTATION
Caltrans
DESIGN

FUNCTIONAL SUPERVISOR: TERRY OGLE
CALCULATED-DESIGNED BY: ERIC C-S CHIN
CHECKED BY: GABRIEL ELEFANTE
REVISED BY: RS
DATE REVISED: 05-5-11

LAST REVISION 00-00-00
DATE PLOTTED => 19-OCT-2011
TIME PLOTTED => 08:48

Dist	COUNTY	ROUTE	POST MILES TOTAL PROJECT	SHEET No.	TOTAL SHEETS
10	Ama	88	0.0/5.5	104	216

REGISTERED CIVIL ENGINEER 05-15-11 DATE

10-17-11
PLANS APPROVAL DATE

REGISTERED PROFESSIONAL ENGINEER ERIC C-S CHIN No. 71272 Exp. 12-30-11 CIVIL STATE OF CALIFORNIA

THE STATE OF CALIFORNIA OR ITS OFFICERS OR AGENTS SHALL NOT BE RESPONSIBLE FOR THE ACCURACY OR COMPLETENESS OF SCANNED COPIES OF THIS PLAN SHEET.

NOTES:

1. FOR ACCURATE RIGHT OF WAY DATA, CONTACT RIGHT OF WAY ENGINEERING AT THE DISTRICT OFFICE.
2. LOCATIONS OF UTILITY FACILITIES SHOWN ARE APPROXIMATE AND SHALL BE VERIFIED BY THE CONTRACTOR PRIOR TO CONSTRUCTION.

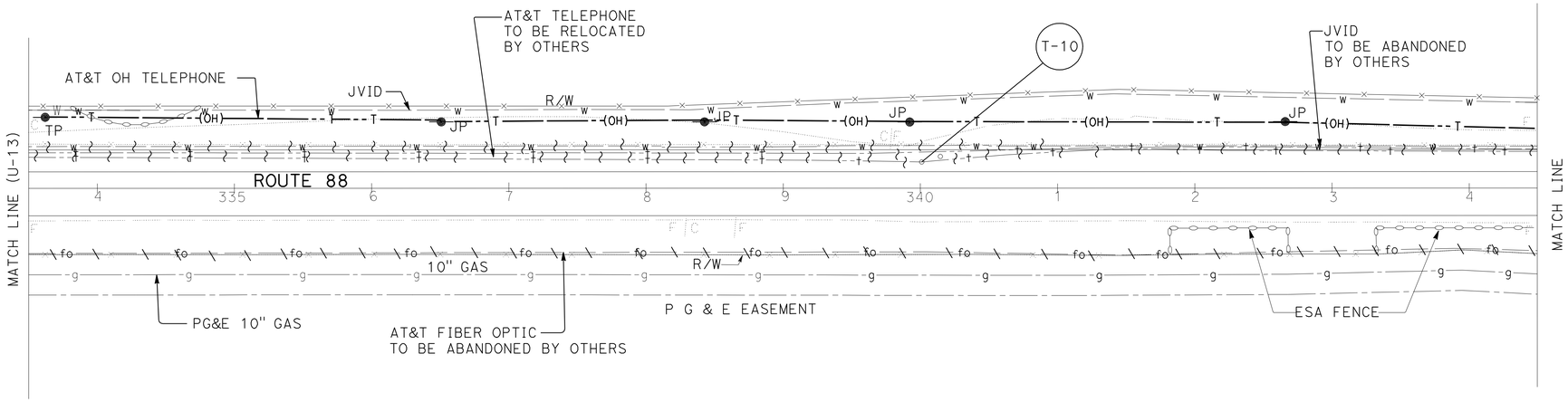

POTHOLE LOCATION TABLE

No.	LOCATION Sta	DISTANCE FROM CENTER LINE	SURFACE Elev	UTILITY Elev	DEPTH
T-10	340+00.90	19.20' Lt	265.200	262.780	2.42'
T-11	348+19.16	26.75' Lt	256.324	253.824	2.50'
G-17	353+42.73	22.75' Lt	261.555	260.135	1.42'

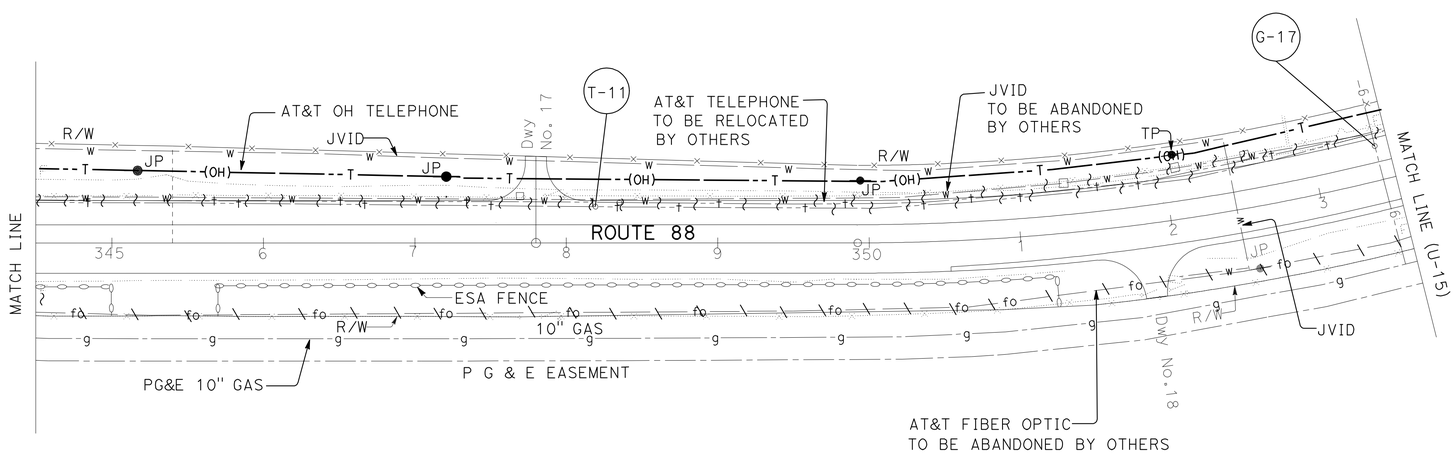

THIS PLAN ACCURATE FOR UTILITY INFORMATION ONLY.

UTILITY PLAN

SCALE: 1" = 50'

U-14

STATE OF CALIFORNIA - DEPARTMENT OF TRANSPORTATION
Caltrans
DESIGN
FUNCTIONAL SUPERVISOR: TERRY OGLE
CALCULATED-DESIGNED BY: ERIC C-S CHIN
CHECKED BY: GABRIEL ELEFANTE
REVISED BY: RS
DATE REVISED: 05-5-11

LAST REVISION 00-00-00
DATE PLOTTED => 19-OCT-2011
TIME PLOTTED => 08:49

Dist	COUNTY	ROUTE	POST MILES TOTAL PROJECT	SHEET No.	TOTAL SHEETS
10	Ama	88	0.0/5.5	105	216

REGISTERED CIVIL ENGINEER DATE 05-15-11

10-17-11
PLANS APPROVAL DATE

REGISTERED PROFESSIONAL ENGINEER
ERIC C-S CHIN
No. 71272
Exp. 12-30-11
CIVIL
STATE OF CALIFORNIA

THE STATE OF CALIFORNIA OR ITS OFFICERS OR AGENTS SHALL NOT BE RESPONSIBLE FOR THE ACCURACY OR COMPLETENESS OF SCANNED COPIES OF THIS PLAN SHEET.

NOTES:

1. FOR ACCURATE RIGHT OF WAY DATA, CONTACT RIGHT OF WAY ENGINEERING AT THE DISTRICT OFFICE.
2. LOCATIONS OF UTILITY FACILITIES SHOWN ARE APPROXIMATE AND SHALL BE VERIFIED BY THE CONTRACTOR PRIOR TO CONSTRUCTION.

POTHOLE LOCATION TABLE

No.	LOCATION Sta	DISTANCE FROM CENTER LINE	SURFACE Elev	UTILITY Elev	DEPTH
F-7	359+81.58	25.13' Rt	268.019	264.019	4.00'

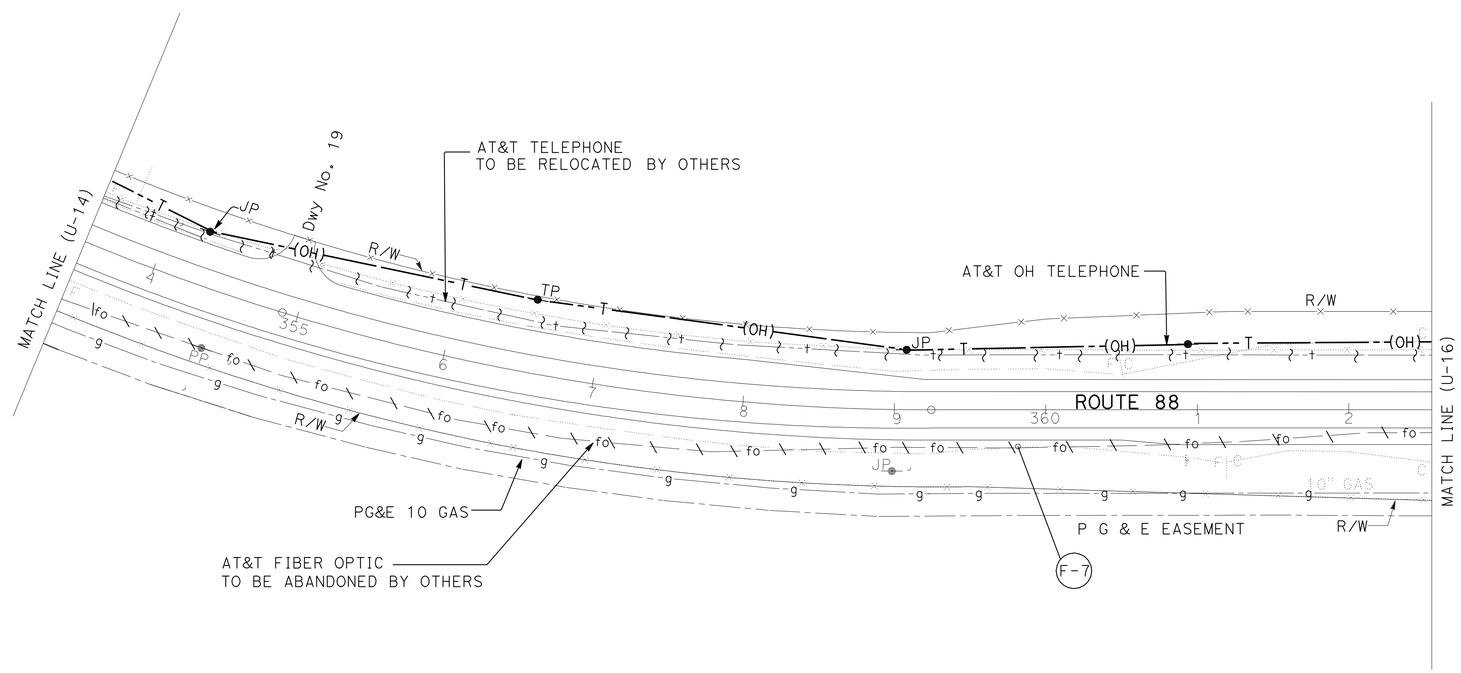

UTILITY PLAN

SCALE: 1" = 50'

U-15

THIS PLAN ACCURATE FOR UTILITY INFORMATION ONLY.

STATE OF CALIFORNIA - DEPARTMENT OF TRANSPORTATION
Caltrans
DESIGN

FUNCTIONAL SUPERVISOR: TERRY OGLE
CALCULATED-DESIGNED BY: ERIC C-S CHIN
CHECKED BY: GABRIEL ELEFANTE
REVISED BY: RS
DATE REVISED: 05-5-11

LAST REVISION
DATE PLOTTED => 20-OCT-2011
TIME PLOTTED => 06:27
00-00-00

Dist	COUNTY	ROUTE	POST MILES TOTAL PROJECT	SHEET No.	TOTAL SHEETS
10	Ama	88	0.0/5.5	106	216

REGISTERED CIVIL ENGINEER 05-15-11 DATE

10-17-11
PLANS APPROVAL DATE

REGISTERED PROFESSIONAL ENGINEER
ERIC C-S CHIN
No. 71272
Exp. 12-30-11
CIVIL
STATE OF CALIFORNIA

THE STATE OF CALIFORNIA OR ITS OFFICERS OR AGENTS SHALL NOT BE RESPONSIBLE FOR THE ACCURACY OR COMPLETENESS OF SCANNED COPIES OF THIS PLAN SHEET.

NOTES:

1. FOR ACCURATE RIGHT OF WAY DATA, CONTACT RIGHT OF WAY ENGINEERING AT THE DISTRICT OFFICE.
2. LOCATIONS OF UTILITY FACILITIES SHOWN ARE APPROXIMATE AND SHALL BE VERIFIED BY THE CONTRACTOR PRIOR TO CONSTRUCTION.

POTHOLE LOCATION TABLE

No.	LOCATION Sta	DISTANCE FROM CENTER LINE	SURFACE Elev	UTILITY Elev	DEPTH
G-18	364+32.79	55.89′ Rt	291.239	286.989	4.25′
G-19	367+57.65	55.68′ Rt	289.554	285.224	4.33′
F-8	369+50.44	33.56′ Rt	272.748	268.668	4.08′
G-20	370+88.58	24.51′ Rt	275.047	270.797	4.25′
G-21	372+00.78	61.43′ Rt	274.128	269.958	4.17′

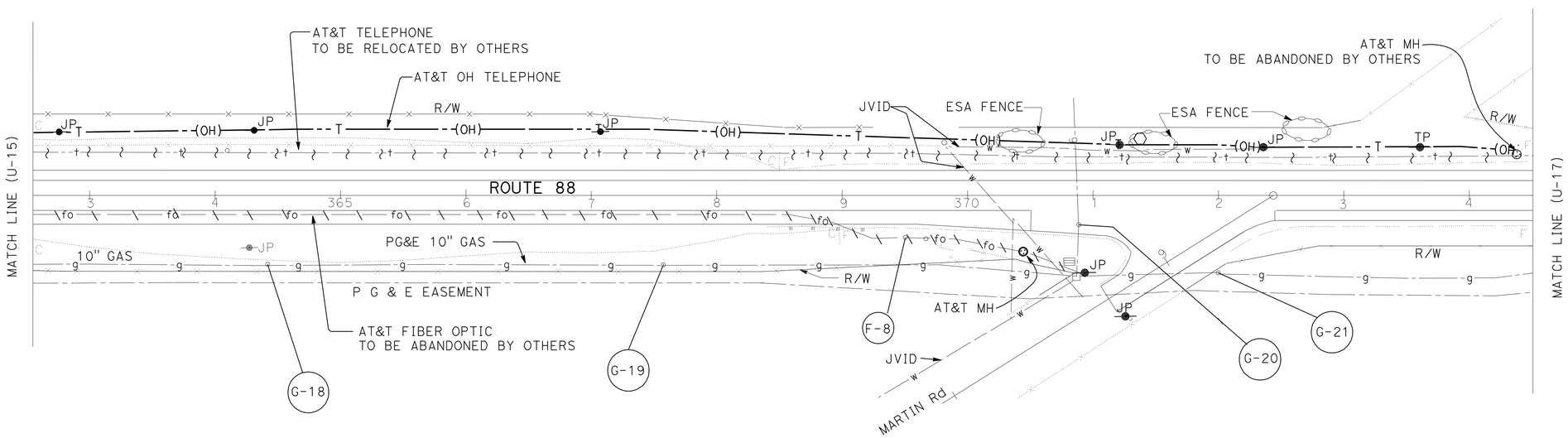

THIS PLAN ACCURATE FOR UTILITY INFORMATION ONLY.

UTILITY PLAN

SCALE: 1" = 50′

U-16

STATE OF CALIFORNIA - DEPARTMENT OF TRANSPORTATION
Caltrans
DESIGN

FUNCTIONAL SUPERVISOR: TERRY OGLE
CALCULATED-DESIGNED BY: ERIC C-S CHIN
CHECKED BY: GABRIEL ELEFANTE
REVISED BY: RS
DATE REVISED: 05-5-11

LAST REVISION 00-00-00
DATE PLOTTED => 20-OCT-2011
TIME PLOTTED => 06:27

Dist	COUNTY	ROUTE	POST MILES TOTAL PROJECT	SHEET No.	TOTAL SHEETS
10	Ama	88	0.0/5.5	107	216

REGISTERED CIVIL ENGINEER 05-15-11 DATE

10-17-11
PLANS APPROVAL DATE

REGISTERED PROFESSIONAL ENGINEER ERIC C-S CHIN No. 71272 Exp. 12-30-11 CIVIL STATE OF CALIFORNIA

THE STATE OF CALIFORNIA OR ITS OFFICERS OR AGENTS SHALL NOT BE RESPONSIBLE FOR THE ACCURACY OR COMPLETENESS OF SCANNED COPIES OF THIS PLAN SHEET.

NOTES:

1. FOR ACCURATE RIGHT OF WAY DATA, CONTACT RIGHT OF WAY ENGINEERING AT THE DISTRICT OFFICE.
2. LOCATIONS OF UTILITY FACILITIES SHOWN ARE APPROXIMATE AND SHALL BE VERIFIED BY THE CONTRACTOR PRIOR TO CONSTRUCTION.

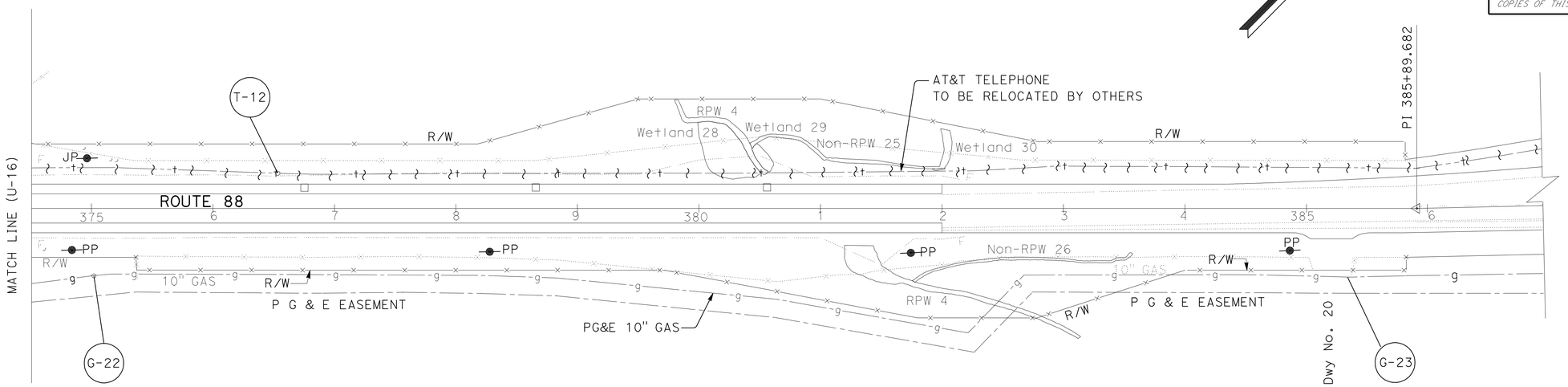

POTHOLE LOCATION TABLE

No.	LOCATION Sta	DISTANCE FROM CENTER LINE	SURFACE Elev	UTILITY Elev	DEPTH
G-22	375+01.44	55.36' Rt	275.919	271.589	4.33'
T-12	376+53.37	28.06' Lt	278.589	275.259	3.33'
G-23	385+33.83	56.51' Rt	284.079	278.749	5.33'

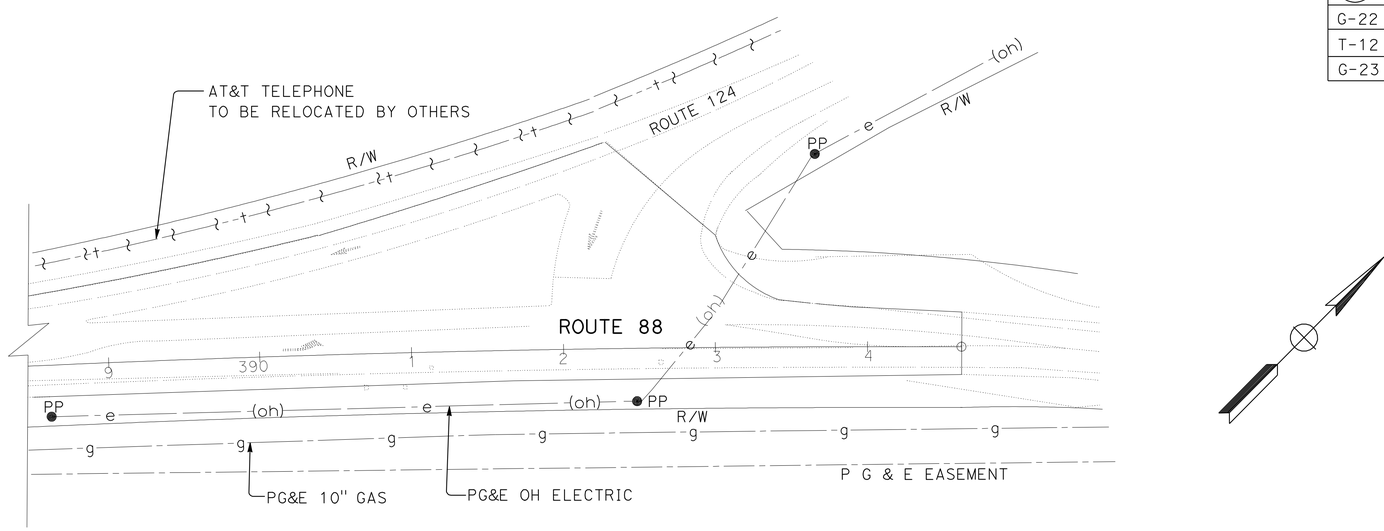

UTILITY PLAN

APPROVED FOR UTILITY WORK ONLY

SCALE: 1" = 50'

U-17

STATE OF CALIFORNIA - DEPARTMENT OF TRANSPORTATION
Caltrans
DESIGN

FUNCTIONAL SUPERVISOR: TERRY OGLE
CALCULATED-DESIGNED BY: ERIC C-S CHIN
CHECKED BY: GABRIEL ELEFANTE
REVISED BY: RS
DATE REVISED: 05-5-11

LAST REVISION 00-00-00
DATE PLOTTED => 20-OCT-2011
TIME PLOTTED => 06:27

Dist	COUNTY	ROUTE	POST MILES TOTAL PROJECT	SHEET No.	TOTAL SHEETS
10	Ama	88	0.0/5.5	108	216

Hassan Taha 05-15-11
REGISTERED CIVIL ENGINEER DATE

10-17-11
PLANS APPROVAL DATE

REGISTERED PROFESSIONAL ENGINEER HASSAN M. TAHA No. 60130 Exp. 6/30/12 CIVIL STATE OF CALIFORNIA

THE STATE OF CALIFORNIA OR ITS OFFICERS OR AGENTS SHALL NOT BE RESPONSIBLE FOR THE ACCURACY OR COMPLETENESS OF SCANNED COPIES OF THIS PLAN SHEET.

NOTES:

1. EXACT SIGN LOCATIONS TO BE DETERMINED BY THE ENGINEER.
2. FOR ADDITIONAL CONSTRUCTION AREA SIGN ITEMS, SEE THQ-1.

STATIONARY MOUNTED CONSTRUCTION AREA SIGN ITEMS

SIGN No. (X)	SIGN CODE	PANEL SIZE	No. OF POSTS AND SIZE	No. OF SIGNS	SIGN MESSAGE
A	G20-1	90" x 48"	2 - 4" x 6"	3	ROAD WORK NEXT 6 MILES
B	G20-2	36" x 18"	1 - 4" x 4"	6	END ROAD WORK
C	W20-1	36" x 36"	1 - 4" x 6"	3	ROAD WORK AHEAD

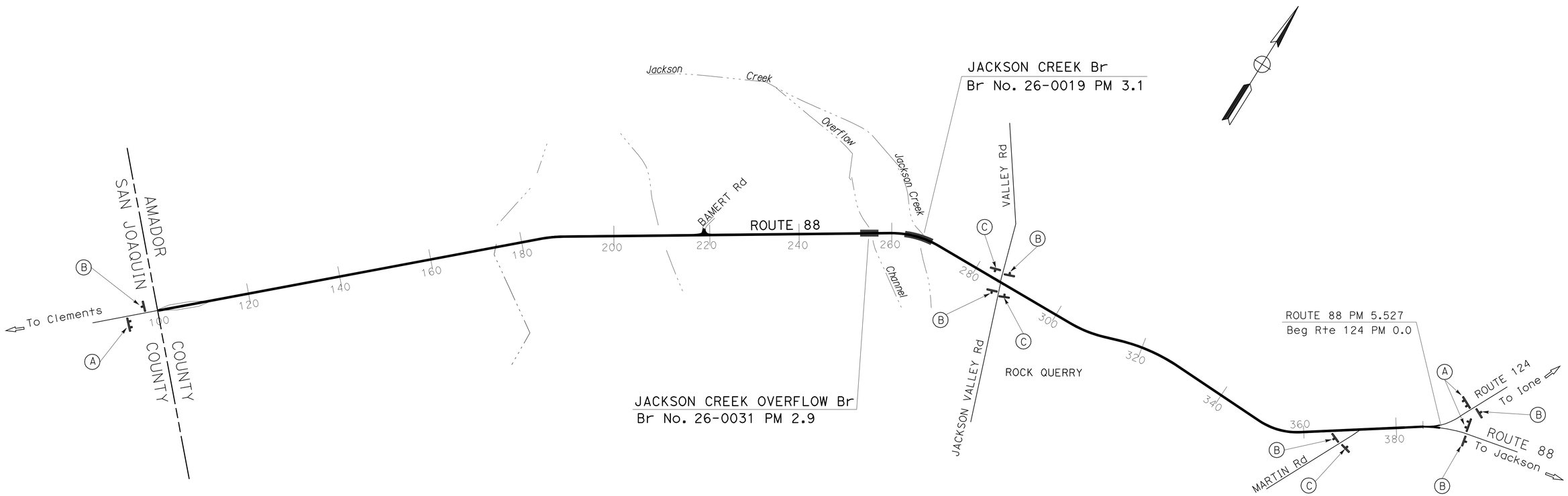

CONSTRUCTION AREA SIGNS

THIS PLAN ACCURATE FOR CONSTRUCTION AREA SIGN WORK ONLY.

NO SCALE

CS-1

STATE OF CALIFORNIA - DEPARTMENT OF TRANSPORTATION
Caltrans TRAFFIC DESIGN

FUNCTIONAL SUPERVISOR: MOHAMMED QATAMI
CALCULATED-DESIGNED BY: CECILE NGUYEN
CHECKED BY: HASSAN TAHA
REVISED BY: RS
DATE REVISED: 05-5-11

LAST REVISION 00-00-00
DATE PLOTTED => 20-OCT-2011
TIME PLOTTED => 06:27

Dist	COUNTY	ROUTE	POST MILES TOTAL PROJECT	SHEET No.	TOTAL SHEETS
10	Ama	88	0.0/5.5	109	216

REGISTERED CIVIL ENGINEER 05-15-11 DATE

10-17-11
PLANS APPROVAL DATE

REGISTERED PROFESSIONAL ENGINEER ERIC C-S CHIN No. 71272 Exp. 12-30-11 CIVIL STATE OF CALIFORNIA

THE STATE OF CALIFORNIA OR ITS OFFICERS OR AGENTS SHALL NOT BE RESPONSIBLE FOR THE ACCURACY OR COMPLETENESS OF SCANNED COPIES OF THIS PLAN SHEET.

LEGEND

- CONSTRUCTION THIS STAGE
- ONE WAY TRAFFIC CONTROL (FLAGGERS)
- TEMPORARY RAILING (TYPE K)
- TEMPORARY CRASH CUSHION (ARRAY TS14 OR TB14)
- DIRECTION OF TRAFFIC
- DEMOLITION THIS STAGE
- CONSTRUCTION STAGE 4 (OBLITERATE SURFACING)
- CHANNELIZER/CONE
- CHANNELIZER (SURFACE MOUNTED)

NOTE:

1. SEE TRAFFIC HANDLING PLAN TH-1.

CONSTRUCTION SEQUENCE

1. RESTRIPE EXISTING LANES TO 11′ AND PLACE TEMPORARY RAILING (TYPE K).
2. WIDEN PAVEMENT, BRIDGE, AND EXTEND CULVERTS (DRAINAGE SYSTEMS 14A, AND 14B)

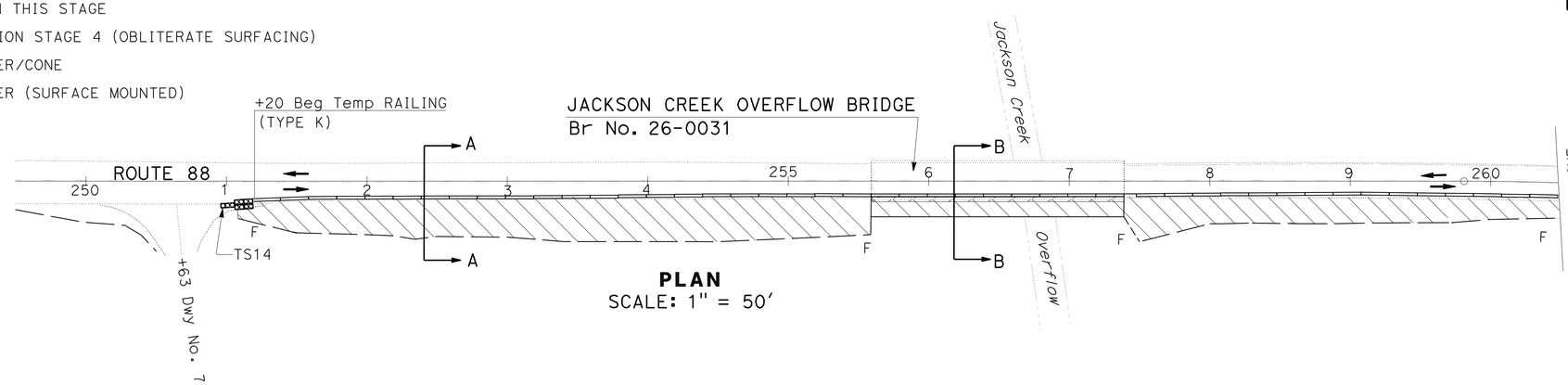

PLAN
SCALE: 1" = 50′

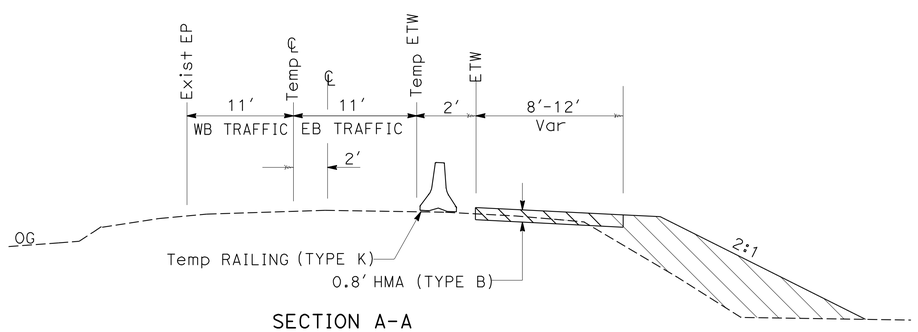

SECTION A-A
NO SCALE

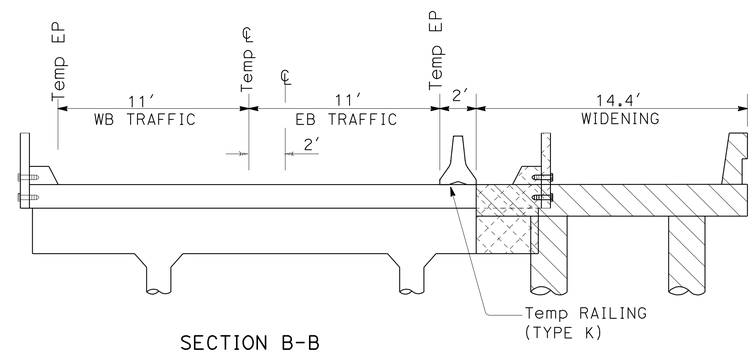

SECTION B-B
JACKSON CREEK OVERFLOW BRIDGE
NO SCALE

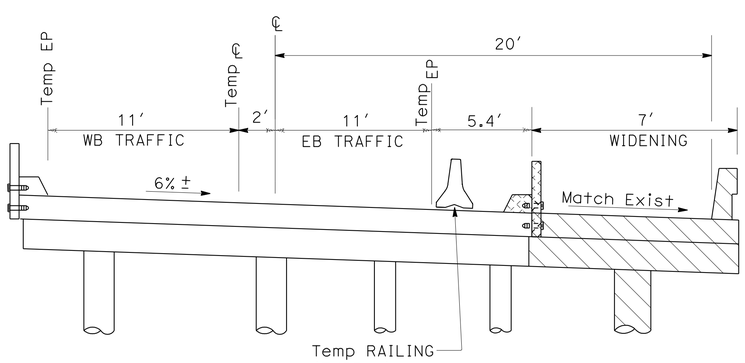

SECTION C-C
JACKSON CREEK BRIDGE
NO SCALE

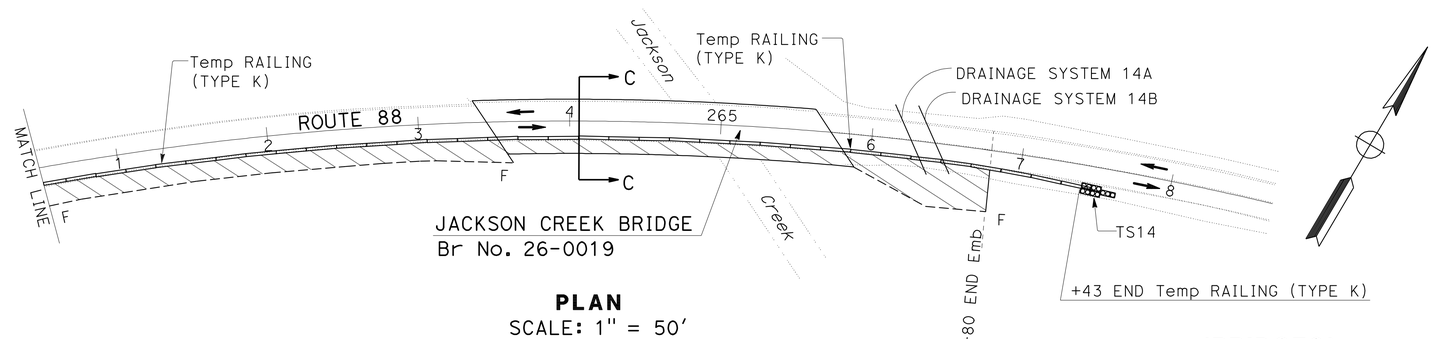

PLAN
SCALE: 1" = 50′

(BRIDGES)
STAGE CONSTRUCTION
(STAGE 1)

THIS PLAN ACCURATE FOR STAGE CONSTRUCTION WORK ONLY.

SCALE AS SHOWN **SC-1**

CALCULATED-DESIGNED BY	ERIC C-S CHIN
CHECKED BY	GABRIEL ELEFANTE
FUNCTIONAL SUPERVISOR	TERRY OGLE
REVISED BY	RS
DATE REVISED	05-5-11

STATE OF CALIFORNIA - DEPARTMENT OF TRANSPORTATION
Caltrans® **DESIGN**

LAST REVISION 00-00-00 | DATE PLOTTED => 20-OCT-2011 | TIME PLOTTED => 06:27

Dist	COUNTY	ROUTE	POST MILES TOTAL PROJECT	SHEET No.	TOTAL SHEETS
10	Ama	88	0.0/5.5	110	216

REGISTERED CIVIL ENGINEER 05-15-11 DATE

10-17-11
PLANS APPROVAL DATE

REGISTERED PROFESSIONAL ENGINEER ERIC C-S CHIN No. 71272 Exp. 12-30-11 CIVIL STATE OF CALIFORNIA

THE STATE OF CALIFORNIA OR ITS OFFICERS OR AGENTS SHALL NOT BE RESPONSIBLE FOR THE ACCURACY OR COMPLETENESS OF SCANNED COPIES OF THIS PLAN SHEET.

NOTE:
1. SEE TRAFFIC HANDLING PLAN TH-2.

CONSTRUCTION SEQUENCE
1. RESTRIPE EXISTING LANES TO 11′, AND PLACE TEMPORARY RAILING (TYPE K).
2. WIDEN PAVEMENT, BRIDGE, AND EXTEND CULVERTS (DRAINAGE SYSTEMS 14A, AND 14B)

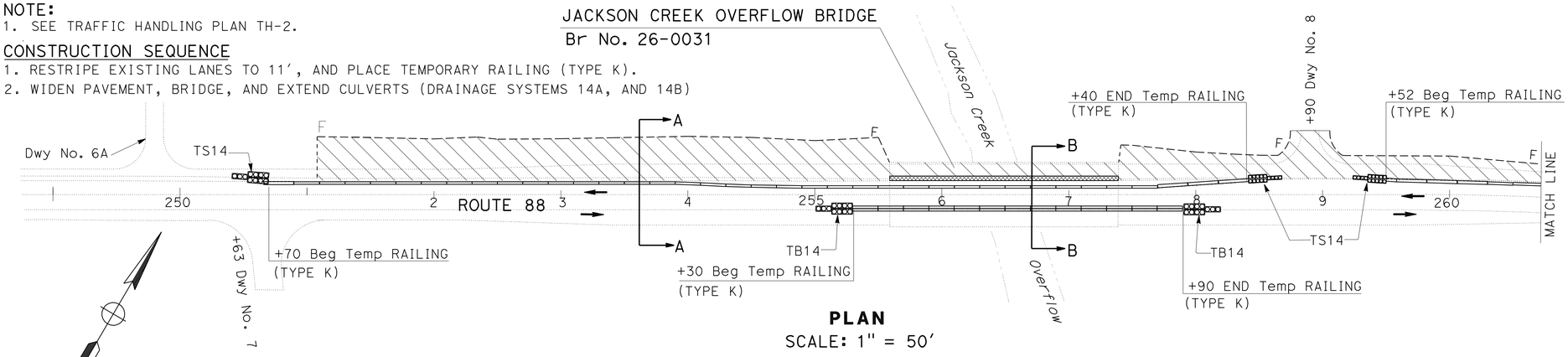

PLAN
SCALE: 1" = 50′

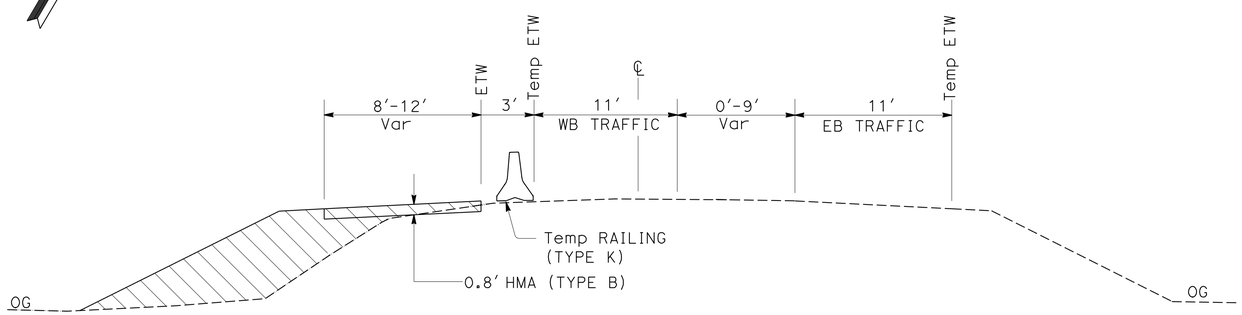

SECTION A-A
NO SCALE

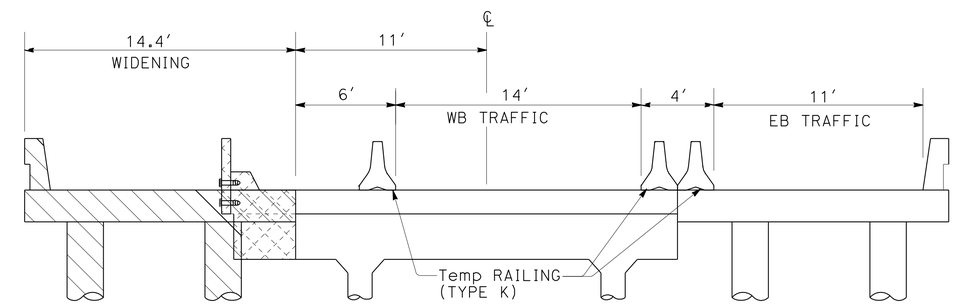

SECTION B-B
JACKSON CREEK OVERFLOW BRIDGE
NO SCALE

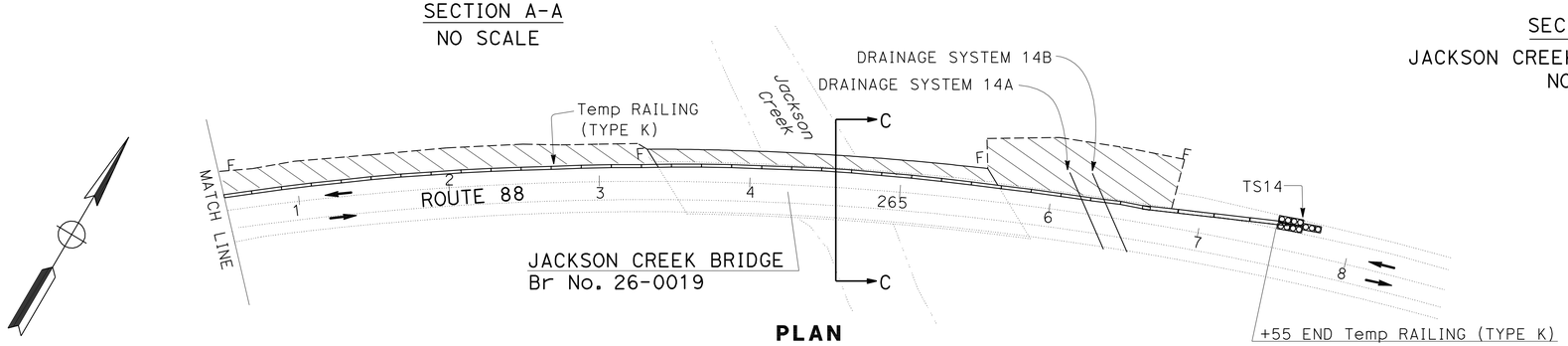

PLAN
SCALE: 1" = 50′

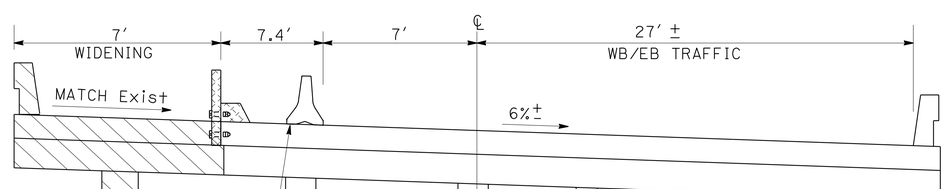

SECTION C-C
JACKSON CREEK BRIDGE
NO SCALE

THIS PLAN ACCURATE FOR STAGE CONSTRUCTION WORK ONLY.

(BRIDGES)
STAGE CONSTRUCTION
(STAGE 2)

SCALE AS SHOWN **SC-2**

STATE OF CALIFORNIA - DEPARTMENT OF TRANSPORTATION
Caltrans®
DESIGN
FUNCTIONAL SUPERVISOR: TERRY OGLE
CALCULATED-DESIGNED BY: ERIC C-S CHIN
CHECKED BY: GABRIEL ELEFANTE
REVISED BY: RS
DATE REVISED: 05-5-11

LAST REVISION 00-00-00
DATE PLOTTED => 20-OCT-2011
TIME PLOTTED => 06:27

Dist	COUNTY	ROUTE	POST MILES TOTAL PROJECT	SHEET No.	TOTAL SHEETS
10	Ama	88	0.0/5.5	111	216

REGISTERED CIVIL ENGINEER 05-15-11 DATE

10-17-11
PLANS APPROVAL DATE

REGISTERED PROFESSIONAL ENGINEER
ERIC C-S CHIN
No. 71272
Exp. 12-30-11
CIVIL
STATE OF CALIFORNIA

THE STATE OF CALIFORNIA OR ITS OFFICERS OR AGENTS SHALL NOT BE RESPONSIBLE FOR THE ACCURACY OR COMPLETENESS OF SCANNED COPIES OF THIS PLAN SHEET.

NOTE:
1. SEE TRAFFIC HANDLING PLAN TH-3.

CONSTRUCTION SEQUENCE
1. RESTRIPE, AND PLACE TEMPOARY RAILING (TYPE K).
2. DEMOLITION, REPLACE MIDDLE OF BRIDGE.

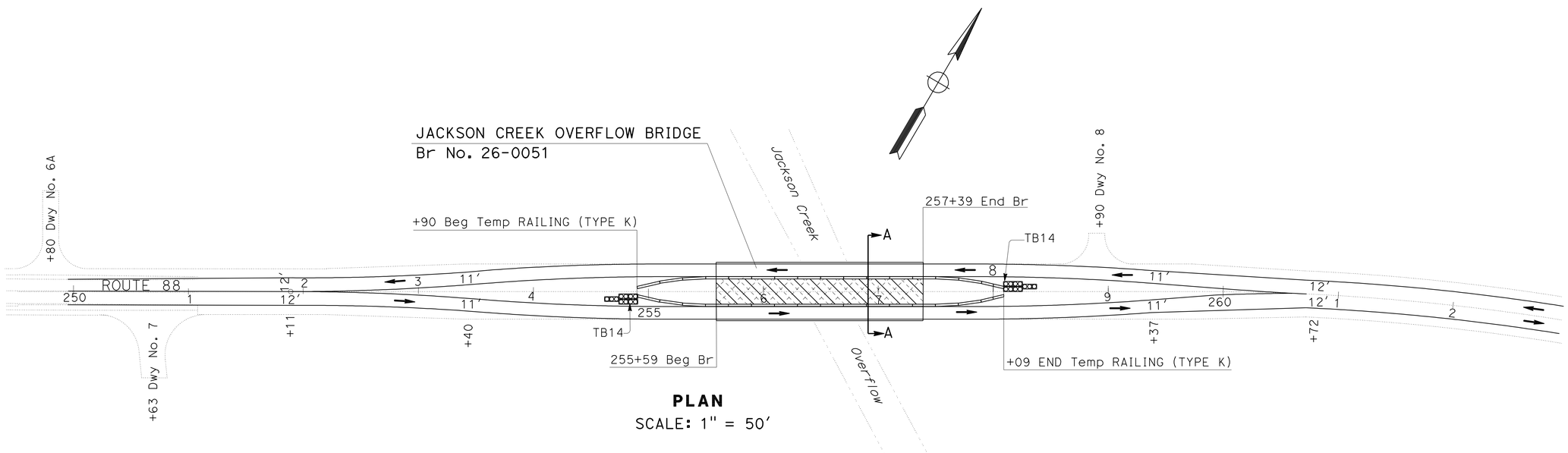

PLAN
SCALE: 1" = 50'

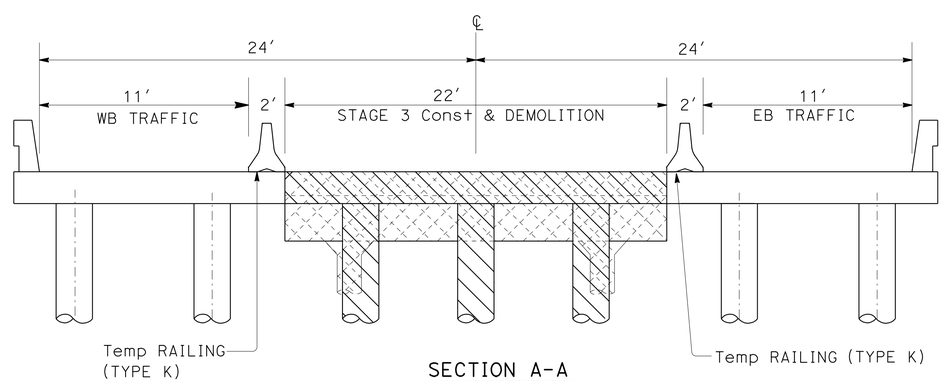

SECTION A-A
JACKSON CREEK OVERFLOW BRIDGE
NO SCALE

THIS PLAN ACCURATE FOR STAGE CONSTRUCTION WORK ONLY.

(BRIDGES)
STAGE CONSTRUCTION
(STAGE 3)

SCALE AS SHOWN **SC-3**

STATE OF CALIFORNIA - DEPARTMENT OF TRANSPORTATION
Caltrans DESIGN
FUNCTIONAL SUPERVISOR TERRY OGLE
CALCULATED-DESIGNED BY ERIC C-S CHIN
CHECKED BY GABRIEL ELEFANTE
REVISED BY RS
DATE REVISED 05-5-11

LAST REVISION 00-00-00 DATE PLOTTED => 20-OCT-2011 TIME PLOTTED => 06:28

Dist	COUNTY	ROUTE	POST MILES TOTAL PROJECT	SHEET No.	TOTAL SHEETS
10	Ama	88	0.0/5.5	112	216

REGISTERED CIVIL ENGINEER DATE 05-15-11

PLANS APPROVAL DATE 10-17-11

REGISTERED PROFESSIONAL ENGINEER ERIC C-S CHIN No. 71272 Exp. 12-30-11 CIVIL STATE OF CALIFORNIA

THE STATE OF CALIFORNIA OR ITS OFFICERS OR AGENTS SHALL NOT BE RESPONSIBLE FOR THE ACCURACY OR COMPLETENESS OF SCANNED COPIES OF THIS PLAN SHEET.

NOTE:
1. SEE TRAFFIC HANDLING PLAN TH-4.

CONSTRUCTION SEQUENCE
1. CUT NORTH SLOPE, WIDEN WB SHOULDER, USE STD PLAN T-13 ONEWAY TRAFFIC CONTROL.
2. RESTRIPE LANES TO 11′, PLACE TEMPORARY RAILING (TYPE K), AND CONSTRUCT RETAINING WALL.

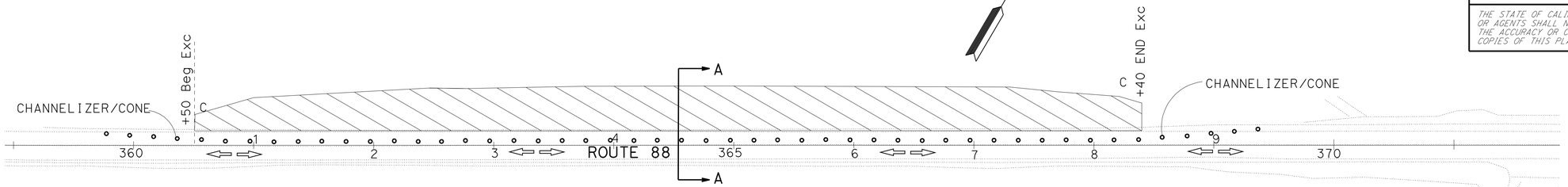

PLAN
SCALE: 1" = 50′

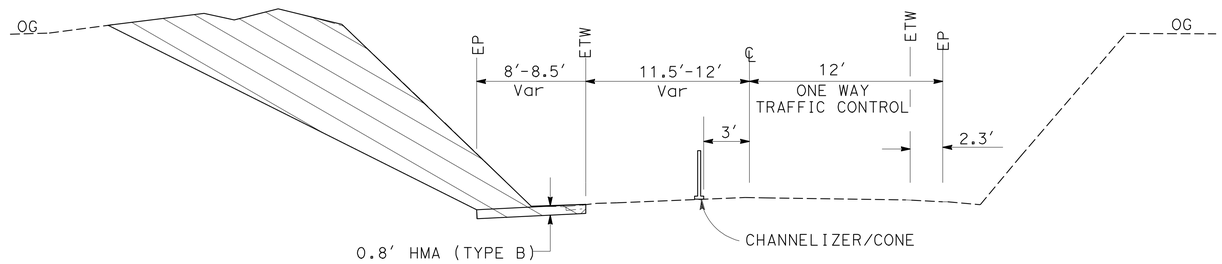

SECTION A-A
NO SCALE
STAGE 1

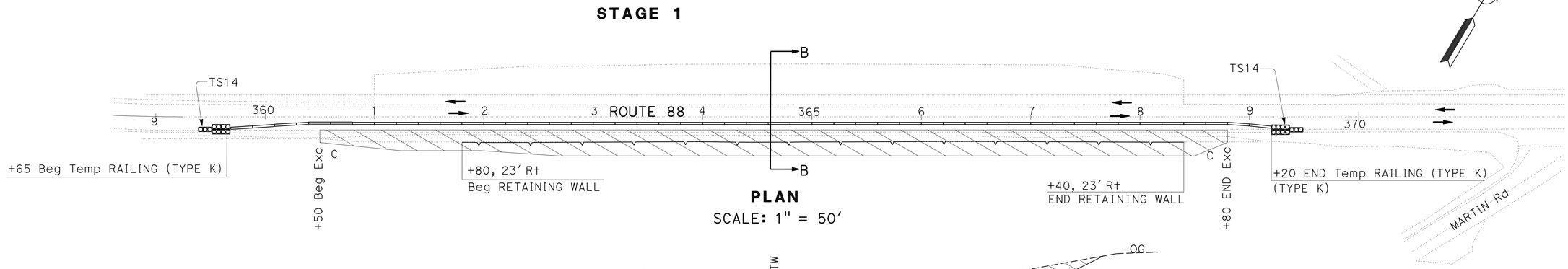

PLAN
SCALE: 1" = 50′

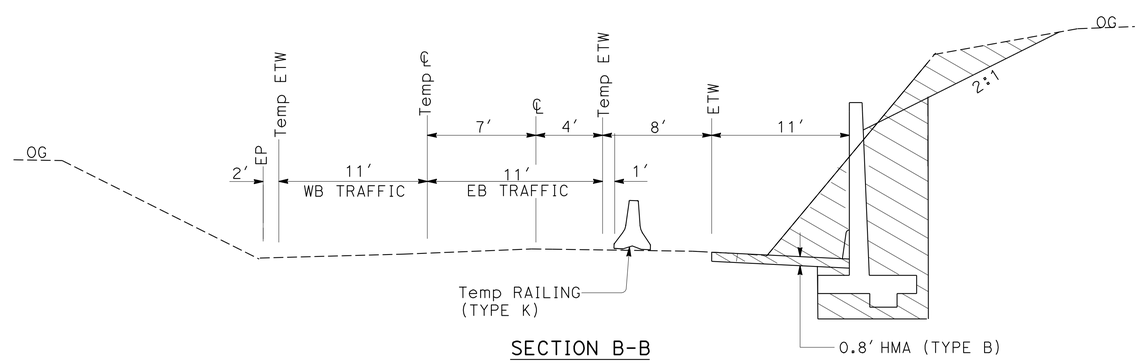

SECTION B-B
NO SCALE
STAGE 2

THIS PLAN ACCURATE FOR STAGE CONSTRUCTION WORK ONLY.

(RETAINING WALL)
STAGE CONSTRUCTION
(STAGES 1 AND 2)

SCALE AS SHOWN

SC-4

STATE OF CALIFORNIA - DEPARTMENT OF TRANSPORTATION
Caltrans®
DESIGN
FUNCTIONAL SUPERVISOR: TERRY OGLE
CALCULATED-DESIGNED BY: ERIC C-S CHIN
CHECKED BY: GABRIEL ELEFANTE
REVISED BY: RS
DATE REVISED: 05-5-11

LAST REVISION 00-00-00
DATE PLOTTED => 20-OCT-2011
TIME PLOTTED => 06:28

Dist	COUNTY	ROUTE	POST MILES TOTAL PROJECT	SHEET No.	TOTAL SHEETS
10	Ama	88	0.0/5.5	113	216

REGISTERED CIVIL ENGINEER DATE 05-15-11

PLANS APPROVAL DATE 10-17-11

REGISTERED PROFESSIONAL ENGINEER ERIC C-S CHIN No. 71272 Exp. 12-30-11 CIVIL STATE OF CALIFORNIA

THE STATE OF CALIFORNIA OR ITS OFFICERS OR AGENTS SHALL NOT BE RESPONSIBLE FOR THE ACCURACY OR COMPLETENESS OF SCANNED COPIES OF THIS PLAN SHEET.

NOTE:
1. SEE TRAFFIC HANDLING PLAN TH-5.

CONSTRUCTION SEQUENCE:
1. RESTRIPE TO 11′ LANES.
2. WIDEN EB/WB SHOULDERS, USE Std PLAN T-13 FOR ONEWAY TRAFFIC CONTROL.

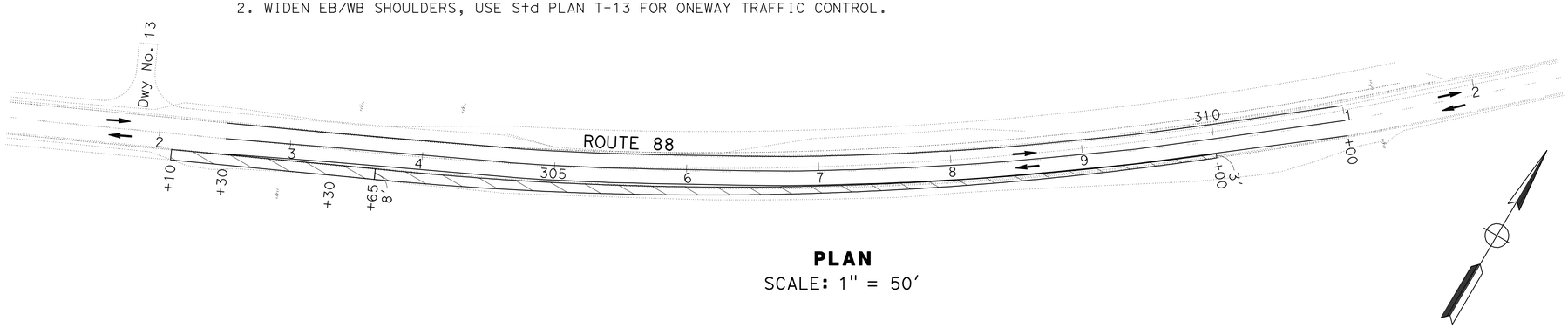

PLAN
SCALE: 1" = 50′

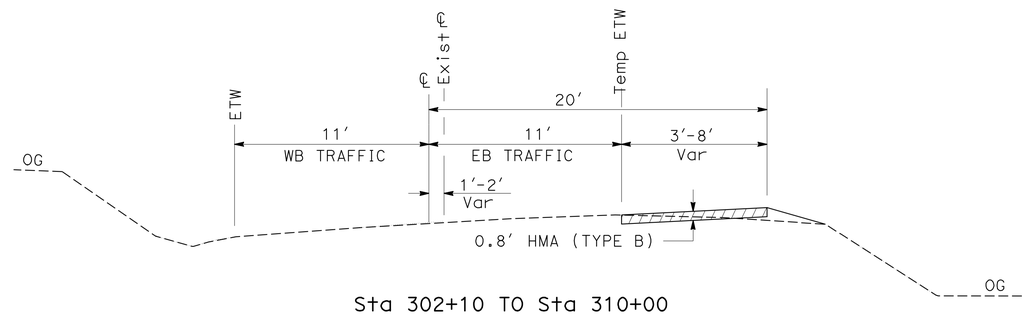

Sta 302+10 TO Sta 310+00
Sta 350+50 TO Sta 360+80
NO SCALE

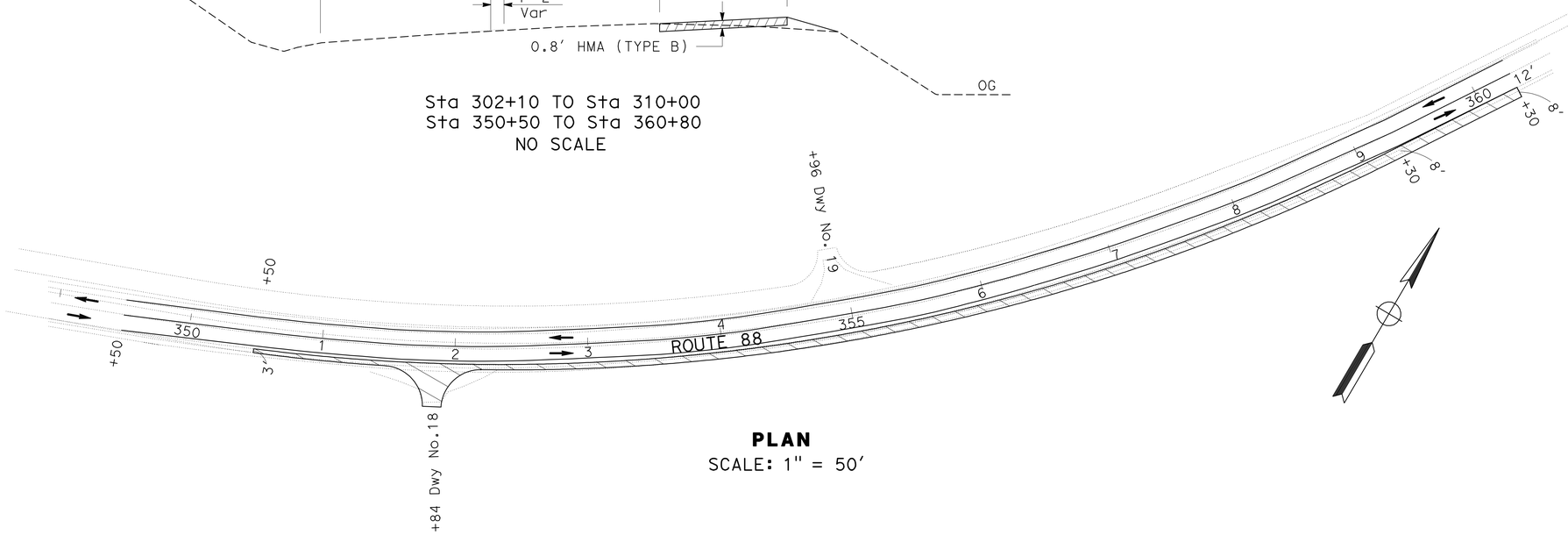

PLAN
SCALE: 1" = 50′

THIS PLAN ACCURATE FOR STAGE CONSTRUCTION WORK ONLY.

(REALIGNMENT)

STAGE CONSTRUCTION

(STAGE 1)

SCALE AS SHOWN

SC-5

STATE OF CALIFORNIA - DEPARTMENT OF TRANSPORTATION
Caltrans®
DESIGN

FUNCTIONAL SUPERVISOR: TERRY OGLE
CALCULATED-DESIGNED BY: ERIC C-S CHIN
CHECKED BY: GABRIEL ELEFANTE
REVISED BY: RS
DATE REVISED: 05-5-11

LAST REVISION 00-00-00
DATE PLOTTED => 20-OCT-2011
TIME PLOTTED => 06:28

Dist	COUNTY	ROUTE	POST MILES TOTAL PROJECT	SHEET No.	TOTAL SHEETS
10	Ama	88	0.0/5.5	114	216

REGISTERED CIVIL ENGINEER 05-15-11 DATE

10-17-11
PLANS APPROVAL DATE

REGISTERED PROFESSIONAL ENGINEER ERIC C-S CHIN No. 71272 Exp. 12-30-11 CIVIL STATE OF CALIFORNIA

THE STATE OF CALIFORNIA OR ITS OFFICERS OR AGENTS SHALL NOT BE RESPONSIBLE FOR THE ACCURACY OR COMPLETENESS OF SCANNED COPIES OF THIS PLAN SHEET.

NOTE:
1. SEE TRAFFIC HANDLING PLAN TH-6.

CONSTRUCTION SEQUENCE:
1. RESTRIPE TO 11' LANES.
2. PLACE Temp RAILING (TYPE K) AT WB ETW.
3. WIDEN WB LANE AND SHOULDER.
4. LEVEL WB LANE (NORTH SIDE) ONE WAY TRAFFIC CONTROL.

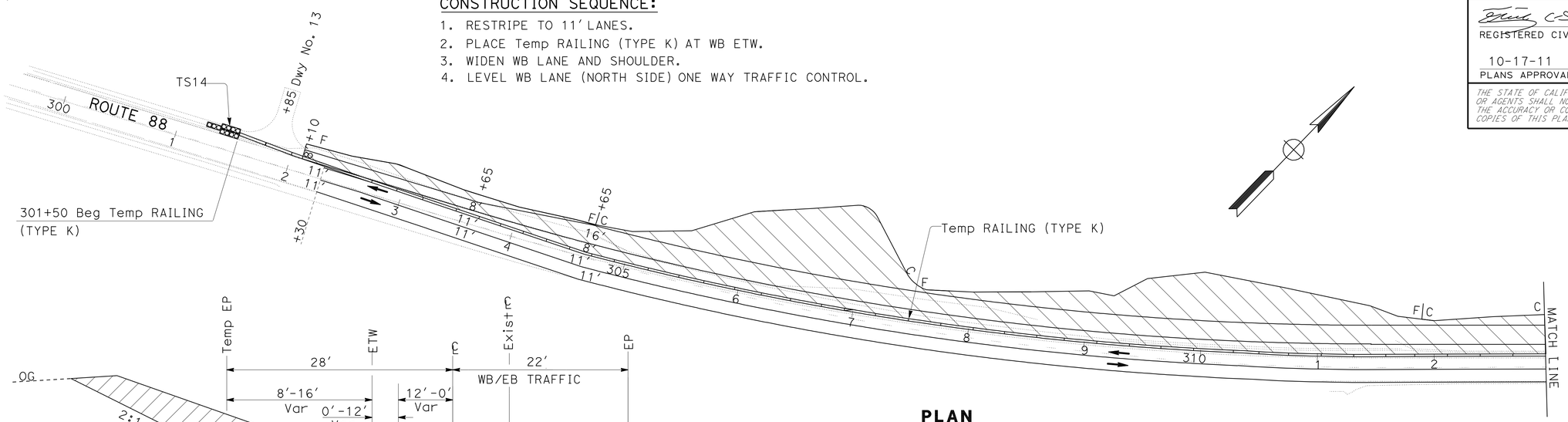

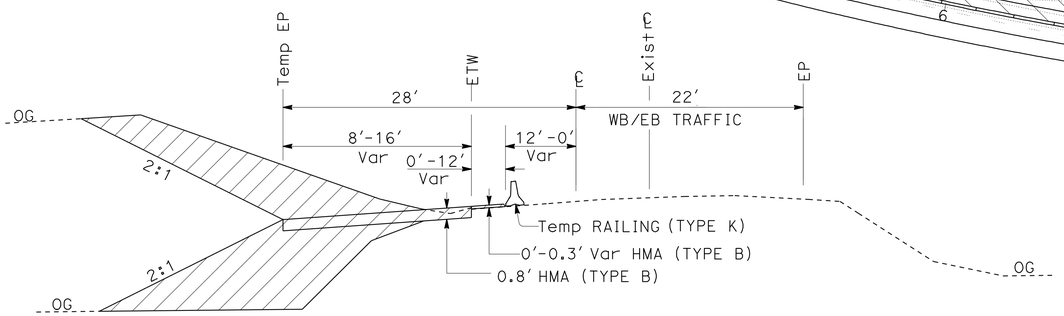

PLAN
SCALE: 1" = 50'

Sta 327+68.6 TO Sta 360+30
Sta 303+10 TO Sta 317+15.7
NO SCALE

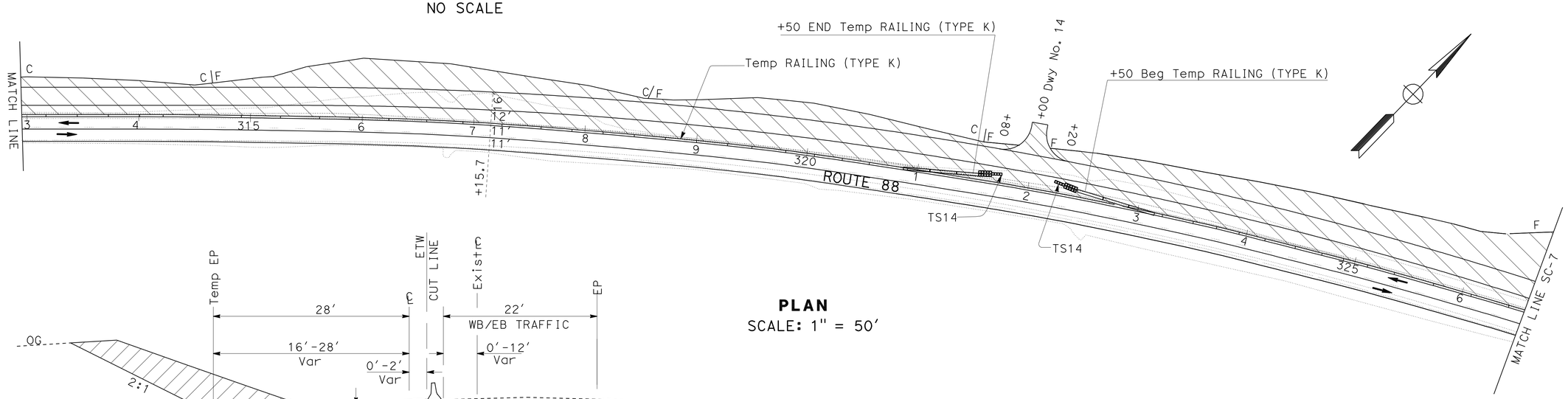

PLAN
SCALE: 1" = 50'

Sta 317+15.7 TO Sta 327+68.6
NO SCALE

THIS PLAN ACCURATE FOR STAGE CONSTRUCTION WORK ONLY.

(REALIGNMENT)
STAGE CONSTRUCTION
(STAGE 2)

SCALE AS SHOWN

SC-6

STATE OF CALIFORNIA - DEPARTMENT OF TRANSPORTATION
DESIGN
FUNCTIONAL SUPERVISOR: TERRY OGLE
CALCULATED-DESIGNED BY: ERIC C-S CHIN
CHECKED BY: GABRIEL ELEFANTE
REVISED BY: RS
DATE REVISED: 05-5-11

LAST REVISION 00-00-00
DATE PLOTTED => 20-OCT-2011
TIME PLOTTED => 06:28

Dist	COUNTY	ROUTE	POST MILES TOTAL PROJECT	SHEET No.	TOTAL SHEETS
10	Ama	88	0.0/5.5	115	216

REGISTERED CIVIL ENGINEER 05-15-11 DATE

10-17-11
PLANS APPROVAL DATE

REGISTERED PROFESSIONAL ENGINEER
ERIC C-S CHIN
No. 71272
Exp. 12-30-11
CIVIL
STATE OF CALIFORNIA

THE STATE OF CALIFORNIA OR ITS OFFICERS OR AGENTS SHALL NOT BE RESPONSIBLE FOR THE ACCURACY OR COMPLETENESS OF SCANNED COPIES OF THIS PLAN SHEET.

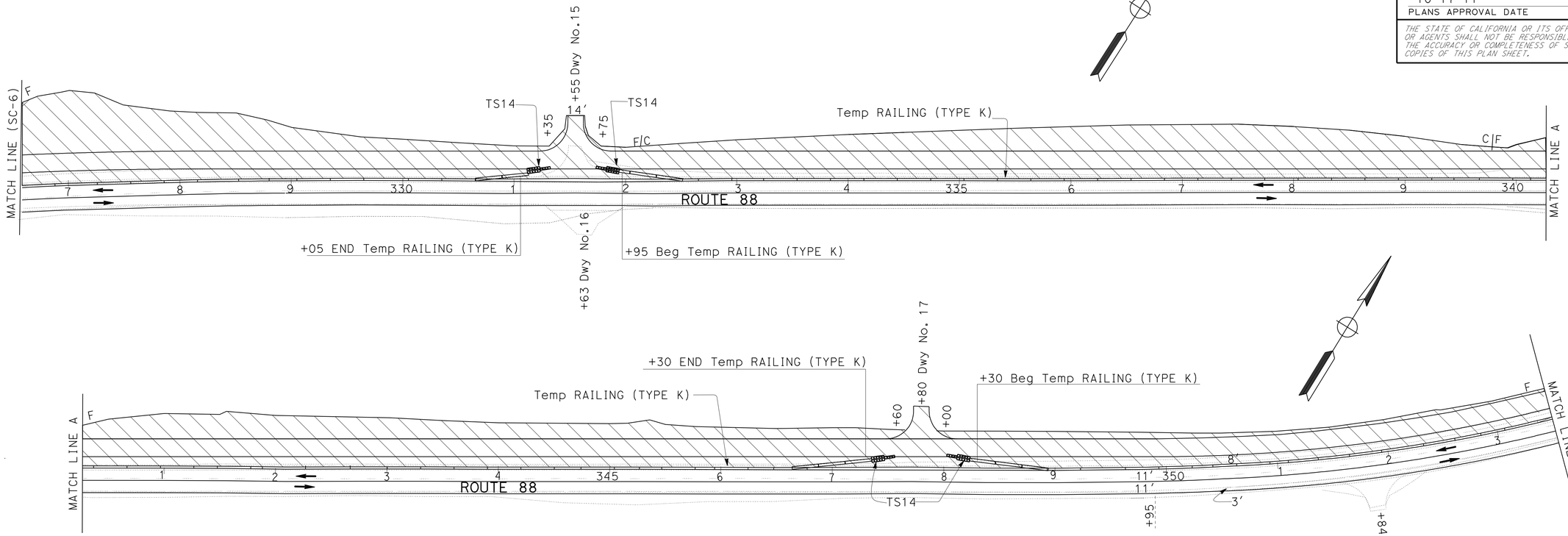

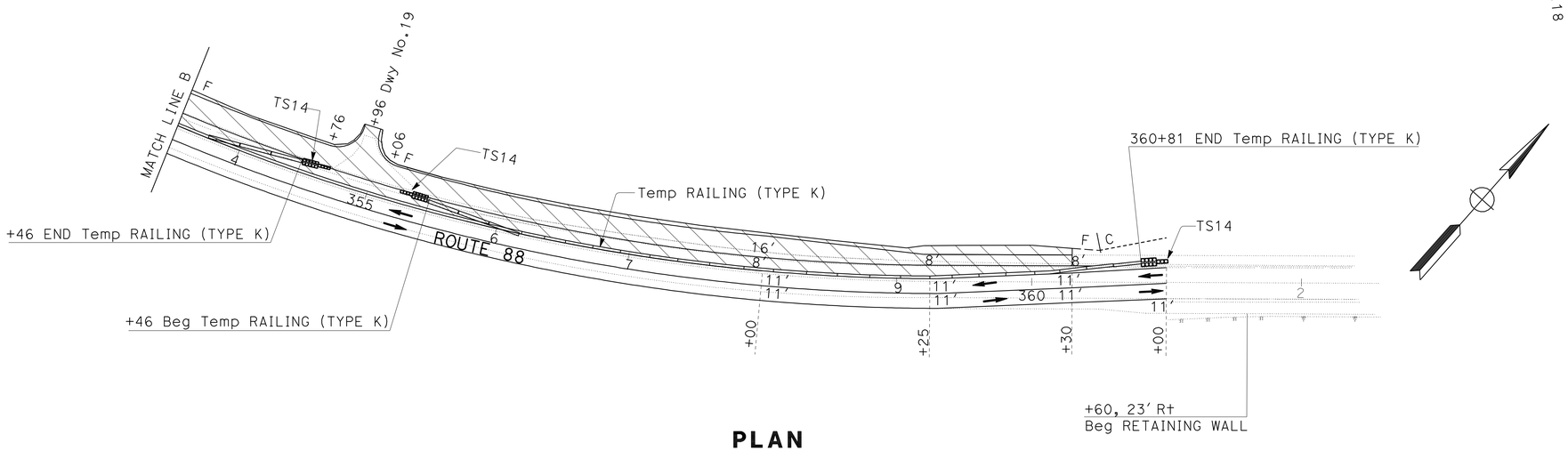

PLAN

(REALIGNMENT)

STAGE CONSTRUCTION

(STAGE 2)

SCALE: 1" = 50'

SC-7

THIS PLAN ACCURATE FOR STAGE CONSTRUCTION WORK ONLY.

REVISED BY	RS
DATE REVISED	05-5-11
CALCULATED-DESIGNED BY	ERIC C-S CHIN
CHECKED BY	GABRIEL ELEFANTE
FUNCTIONAL SUPERVISOR	TERRY OGLE

STATE OF CALIFORNIA - DEPARTMENT OF TRANSPORTATION
Caltrans
DESIGN

LAST REVISION 00-00-00
DATE PLOTTED => 20-OCT-2011
TIME PLOTTED => 06:28

Dist	COUNTY	ROUTE	POST MILES TOTAL PROJECT	SHEET No.	TOTAL SHEETS
10	Ama	88	0.0/5.5	116	216

REGISTERED CIVIL ENGINEER 05-15-11 DATE

10-17-11
PLANS APPROVAL DATE

REGISTERED PROFESSIONAL ENGINEER ERIC C-S CHIN No. 71272 Exp. 12-30-11 CIVIL STATE OF CALIFORNIA

THE STATE OF CALIFORNIA OR ITS OFFICERS OR AGENTS SHALL NOT BE RESPONSIBLE FOR THE ACCURACY OR COMPLETENESS OF SCANNED COPIES OF THIS PLAN SHEET.

NOTE:
1. SEE TRAFFIC HANDLING PLAN TH-8.

CONSTRUCTION SEQUENCE:
1. RESTRIPE TO 11' LANES, PLACE Temp RAILING (TYPE K).
2. DIGOUTS, LEVELING AND HMA OVERLAY.

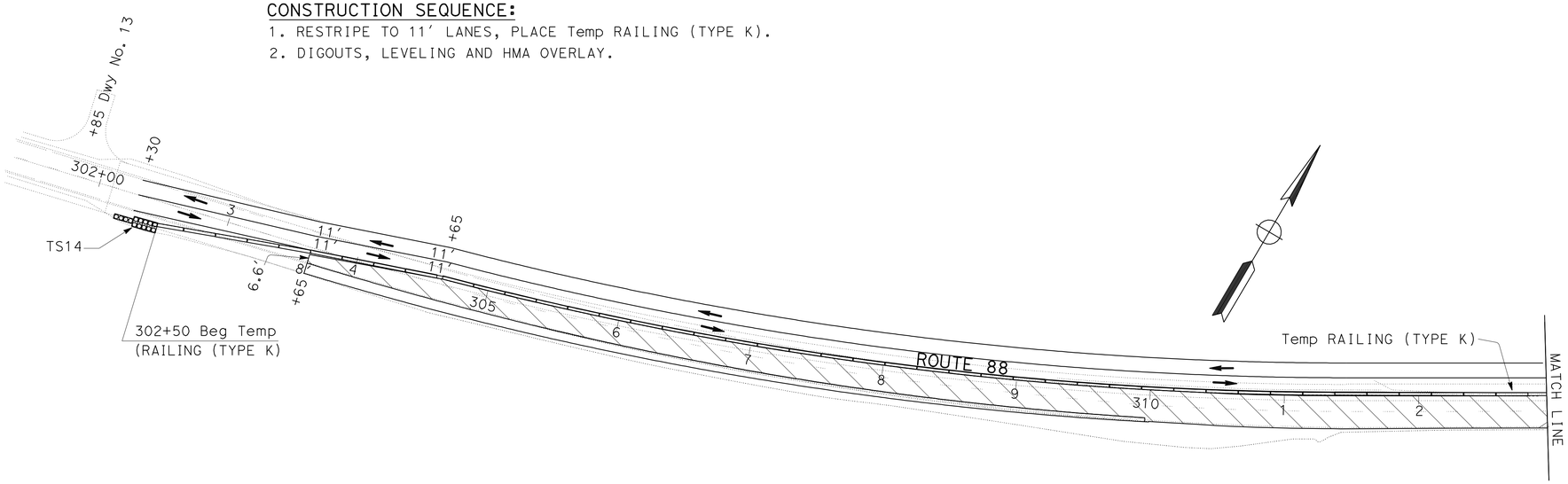

PLAN
SCALE: 1" = 50'

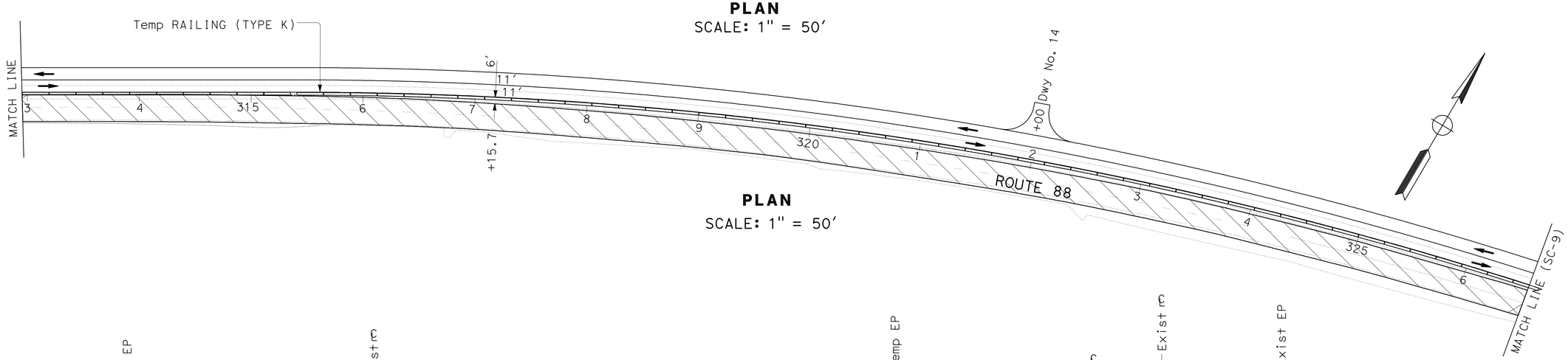

PLAN
SCALE: 1" = 50'

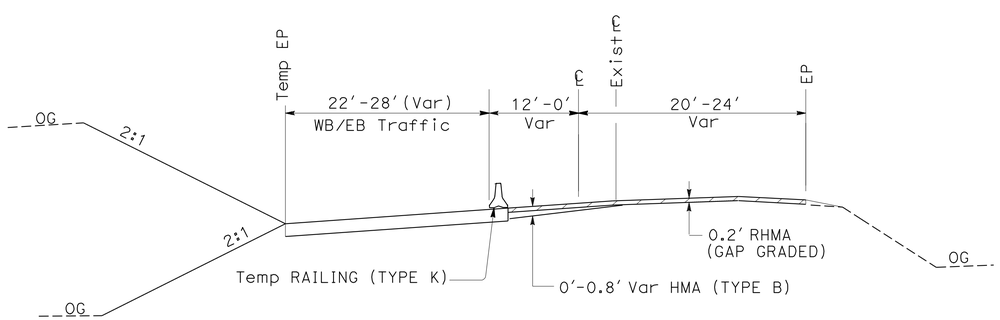

Sta 303+10 TO Sta 317+15.7
Sta 327+68.6 TO Sta 360+30
NO SCALE

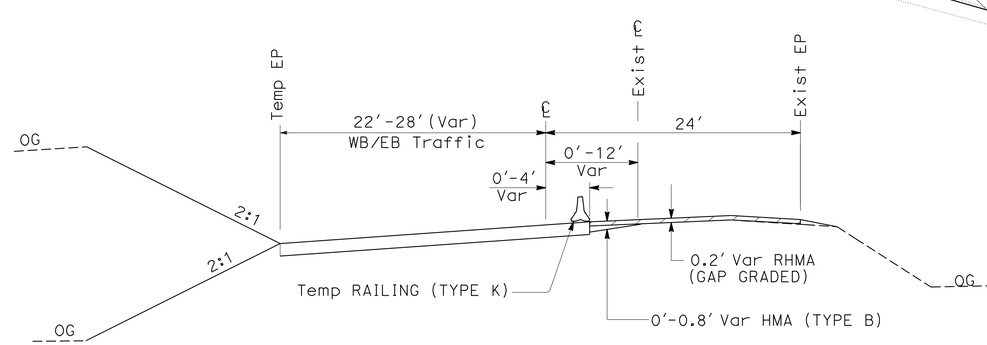

Sta 317+15.7 TO Sta 327+68.6
NO SCALE

(REALIGNMENT)
STAGE CONSTRUCTION
(STAGE 3)

SCALE AS SHOWN

SC-8

THIS PLAN ACCURATE FOR STAGE CONSTRUCTION WORK ONLY.

STATE OF CALIFORNIA - DEPARTMENT OF TRANSPORTATION
Caltrans®
DESIGN

FUNCTIONAL SUPERVISOR: TERRY OGLE
CALCULATED-DESIGNED BY: ERIC C-S CHIN
CHECKED BY: GABRIEL ELEFANTE
REVISED BY: RS
DATE REVISED: 05-5-11

LAST REVISION 00-00-00
DATE PLOTTED => 20-OCT-2011
TIME PLOTTED => 06:28

Dist	COUNTY	ROUTE	POST MILES TOTAL PROJECT	SHEET No.	TOTAL SHEETS
10	Ama	88	0.0/5.5	117	216

REGISTERED CIVIL ENGINEER 05-15-11 DATE

10-17-11
PLANS APPROVAL DATE

REGISTERED PROFESSIONAL ENGINEER
ERIC C-S CHIN
No. 71272
Exp. 12-30-11
CIVIL
STATE OF CALIFORNIA

THE STATE OF CALIFORNIA OR ITS OFFICERS OR AGENTS SHALL NOT BE RESPONSIBLE FOR THE ACCURACY OR COMPLETENESS OF SCANNED COPIES OF THIS PLAN SHEET.

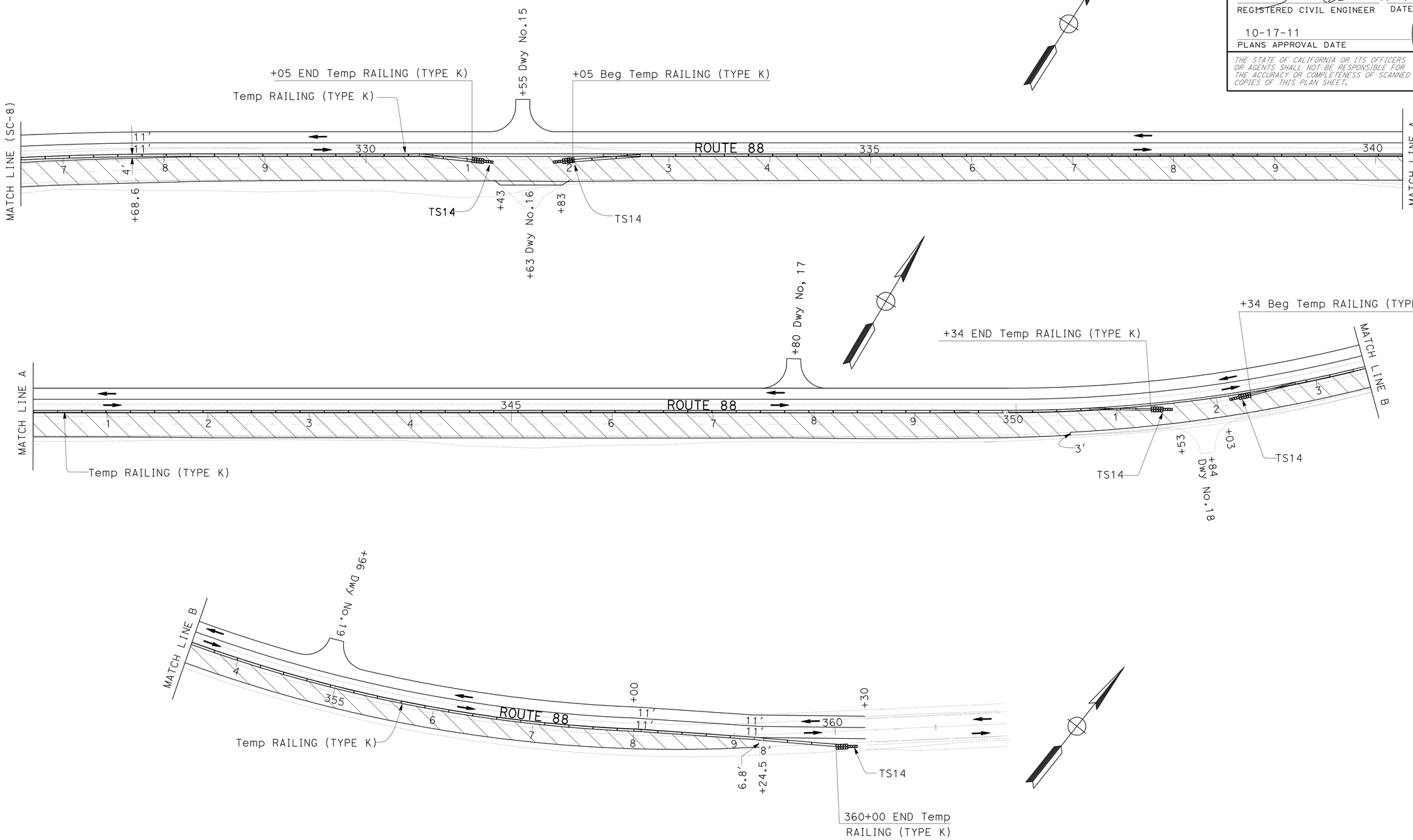

PLAN

THIS PLAN ACCURATE FOR STAGE CONSTRUCTION WORK ONLY.

(REALIGNMENT)

STAGE CONSTRUCTION

(STAGE 3)

SCALE: 1" = 50'

SC-9

CALCULATED-DESIGNED BY	ERIC C-S CHIN
CHECKED BY	GABRIEL ELEFANTE
REVISED BY	RS
DATE REVISED	05-5-11
FUNCTIONAL SUPERVISOR	TERRY OGLE

STATE OF CALIFORNIA - DEPARTMENT OF TRANSPORTATION

Caltrans®

DESIGN

LAST REVISION 00-00-00 | DATE PLOTTED => 20-OCT-2011 | TIME PLOTTED => 06:28

Dist	COUNTY	ROUTE	POST MILES TOTAL PROJECT	SHEET No.	TOTAL SHEETS
10	Ama	88	0.0/5.5	118	216

REGISTERED CIVIL ENGINEER 05-15-11 DATE

10-17-11
PLANS APPROVAL DATE

REGISTERED PROFESSIONAL ENGINEER
ERIC C-S CHIN
No. 71272
Exp. 12-30-11
CIVIL
STATE OF CALIFORNIA

THE STATE OF CALIFORNIA OR ITS OFFICERS OR AGENTS SHALL NOT BE RESPONSIBLE FOR THE ACCURACY OR COMPLETENESS OF SCANNED COPIES OF THIS PLAN SHEET.

CONSTRUCTION SEQUENCE

1. RESTRIPE TRAFFIC LANES, AND PLACE CHANNELIZERS.
2. REMOVE HMA SHOULDER (WB).
3. PLACE IMPORTED BORROW SHOULDER BACKING.

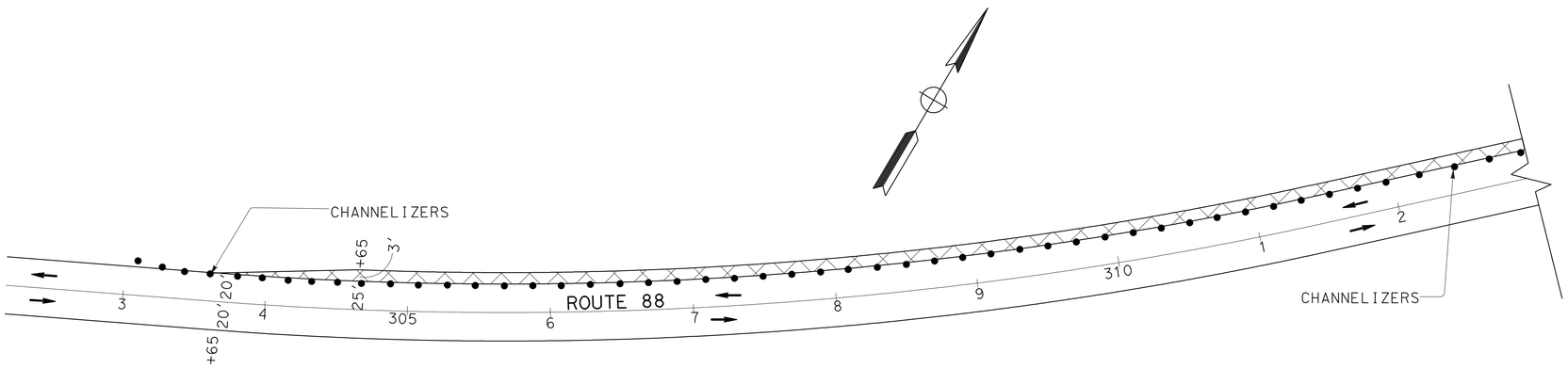

PLAN
SCALE: 1" = 50'

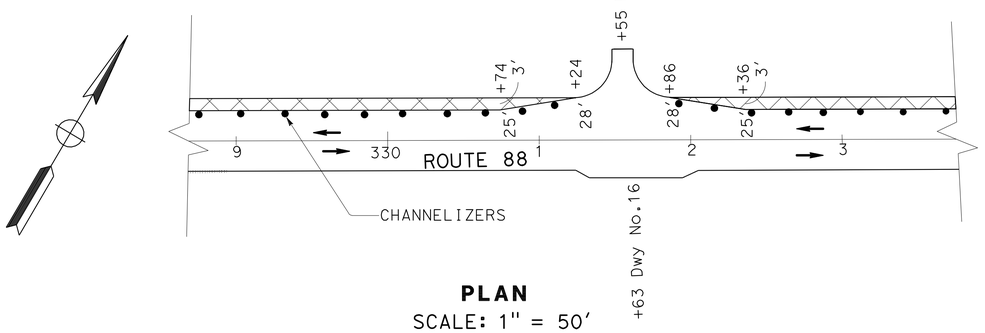

PLAN
SCALE: 1" = 50'

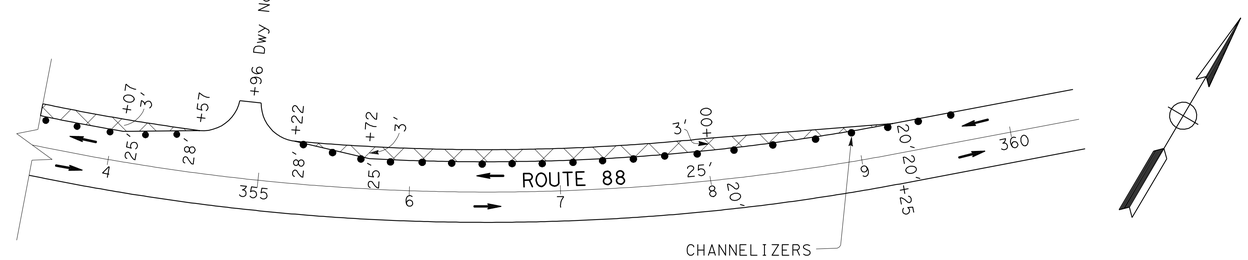

PLAN
SCALE: 1" = 50'

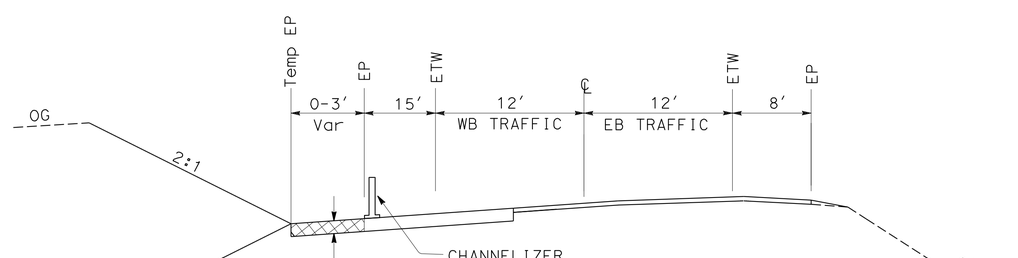

Sta 303+65 TO Sta 359+25
NO SCALE

(REALIGNMENT)
STAGE CONSTRUCTION
(STAGE 4)

SCALE: 1" = 50'

SC-10

THIS PLAN ACCURATE FOR STAGE CONSTRUCTION ONLY.

STATE OF CALIFORNIA - DEPARTMENT OF TRANSPORTATION
Caltrans
DESIGN

FUNCTIONAL SUPERVISOR: TERRY OGLE
CALCULATED-DESIGNED BY: ERIC C-S CHIN
CHECKED BY: GABRIEL ELEFANTE
REVISED BY: RS
DATE REVISED: 05-5-11

LAST REVISION 00-00-00
DATE PLOTTED => 20-OCT-2011
TIME PLOTTED => 06:28

Dist	COUNTY	ROUTE	POST MILES TOTAL PROJECT	SHEET No.	TOTAL SHEETS
10	Ama	88	0.0/5.5	119	216

Hassan Taha 05-15-11
REGISTERED CIVIL ENGINEER DATE

10-17-11
PLANS APPROVAL DATE

REGISTERED PROFESSIONAL ENGINEER HASSAN M. TAHA No. 60130 Exp. 6/30/12 CIVIL STATE OF CALIFORNIA

THE STATE OF CALIFORNIA OR ITS OFFICERS OR AGENTS SHALL NOT BE RESPONSIBLE FOR THE ACCURACY OR COMPLETENESS OF SCANNED COPIES OF THIS PLAN SHEET.

LEGEND

- CONSTRUCTION THIS STAGE
- DEMOLITION THIS STAGE
- STAGE 4 CONSTRUCTION
- ONE WAY TRAFFIC CONTROL (FLAGGERS)
- TEMPORARY RAILING (TYPE K)
- TEMPORARY CRASH CUSHION (ARRAY TB14, TS14)
- DIRECTION OF TRAFFIC
- CHANNELIZER (SURFACE MOUNTED)
- ROADSIDE SIGN ONE POST
- TEMPORARY PAVEMENT MARKING (PAINT)
- TEMPORARY TRAFFIC STRIPE (PAINT)
- REMOVE THERMOPLASTIC TRAFFIC STRIPE
- REMOVE THERMOPLASTIC PAVEMENT MARKING
- TYPE P MARKER
- CHANGE TRAFFIC STRIPE DETAIL

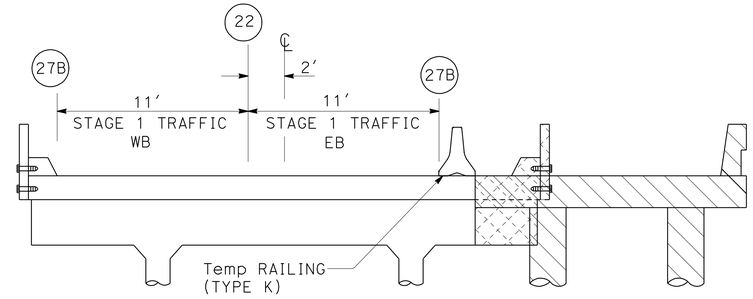

SECTION A-A
JACKSON CREEK OVERFLOW BRIDGE
NO SCALE

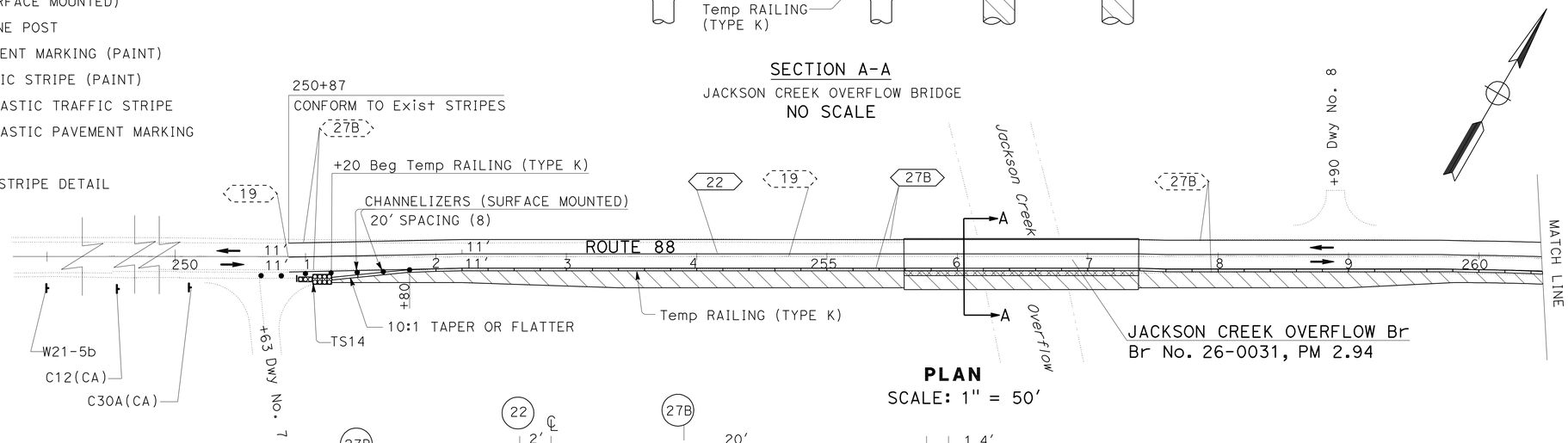

PLAN
SCALE: 1" = 50′

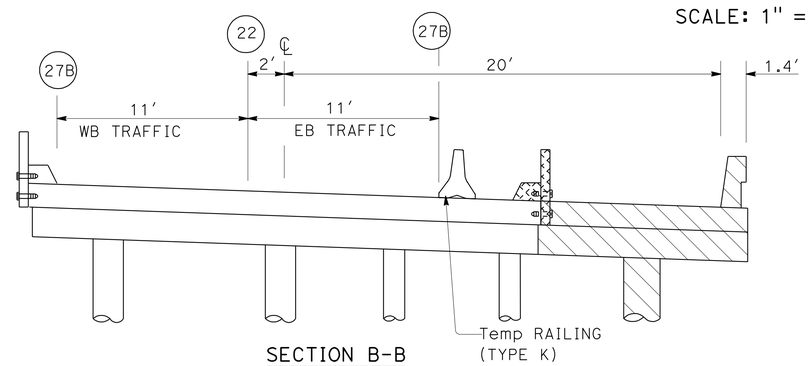

SECTION B-B
JACKSON CREEK BRIDGE
NO SCALE

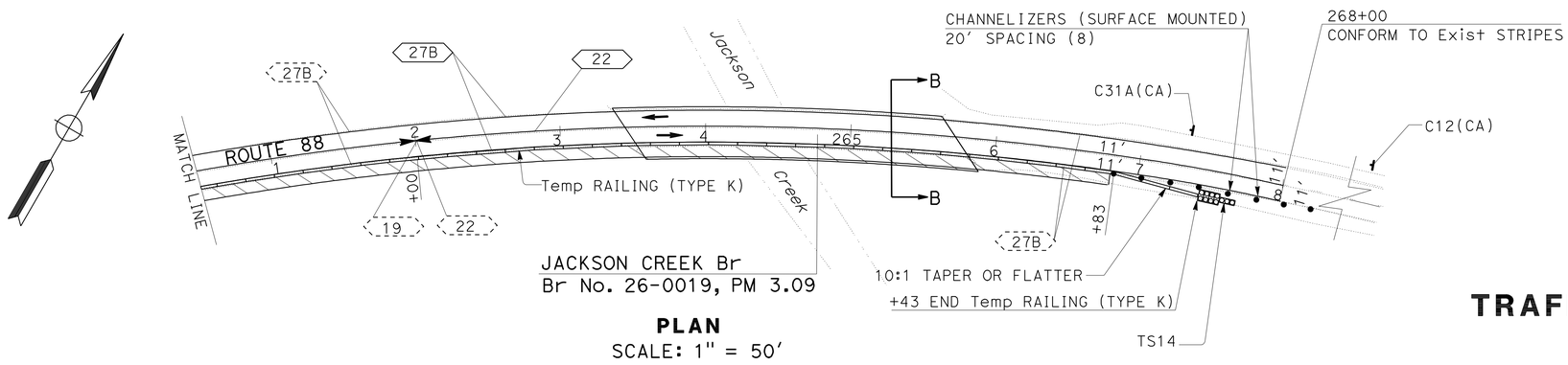

PLAN
SCALE: 1" = 50′

THIS PLAN ACCURATE FOR TRAFFIC HANDLING WORK ONLY.

(BRIDGES)

TRAFFIC HANDLING PLAN

(STAGE 1)

SCALE AS SHOWN **TH-1**

CALCULATED-DESIGNED BY	CECILE NGUYEN	REVISED BY	RS
CHECKED BY	HASSAN TAHA	DATE REVISED	05-5-11
FUNCTIONAL SUPERVISOR	MOHAMMED QATAMI		

STATE OF CALIFORNIA - DEPARTMENT OF TRANSPORTATION
Caltrans® TRAFFIC DESIGN

LAST REVISION 00-00-00 | DATE PLOTTED => 19-OCT-2011 | TIME PLOTTED => 10:18

Dist	COUNTY	ROUTE	POST MILES TOTAL PROJECT	SHEET No.	TOTAL SHEETS
10	Ama	88	0.0/5.5	120	216

Hassan Taha 05-15-11
REGISTERED CIVIL ENGINEER DATE

10-17-11
PLANS APPROVAL DATE

REGISTERED PROFESSIONAL ENGINEER HASSAN M. TAHA No. 60130 Exp. 6/30/12 CIVIL STATE OF CALIFORNIA

THE STATE OF CALIFORNIA OR ITS OFFICERS OR AGENTS SHALL NOT BE RESPONSIBLE FOR THE ACCURACY OR COMPLETENESS OF SCANNED COPIES OF THIS PLAN SHEET.

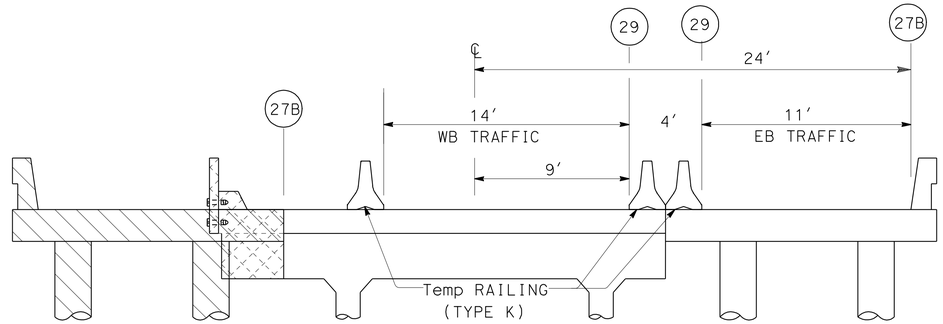

SECTION A-A
JACKSON CREEK OVERFLOW Br
NO SCALE

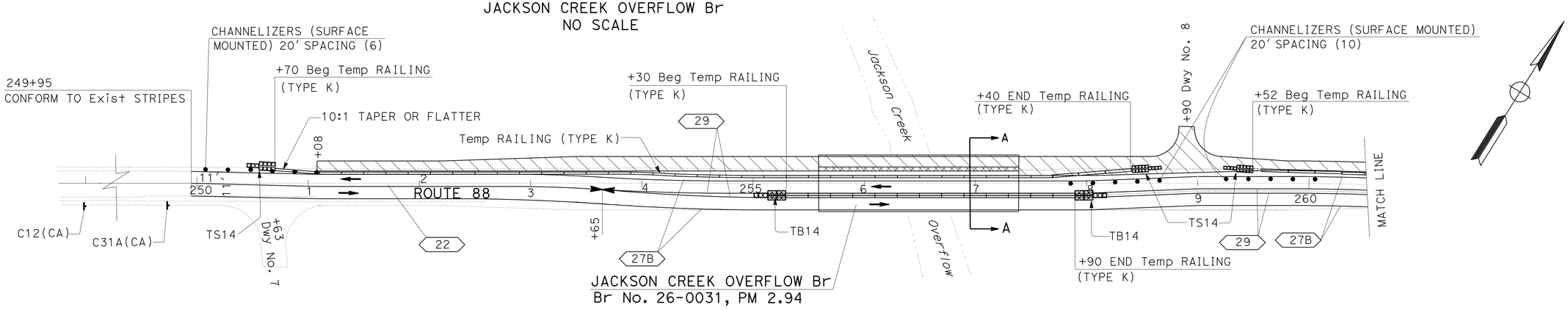

PLAN
SCALE: 1" = 50′

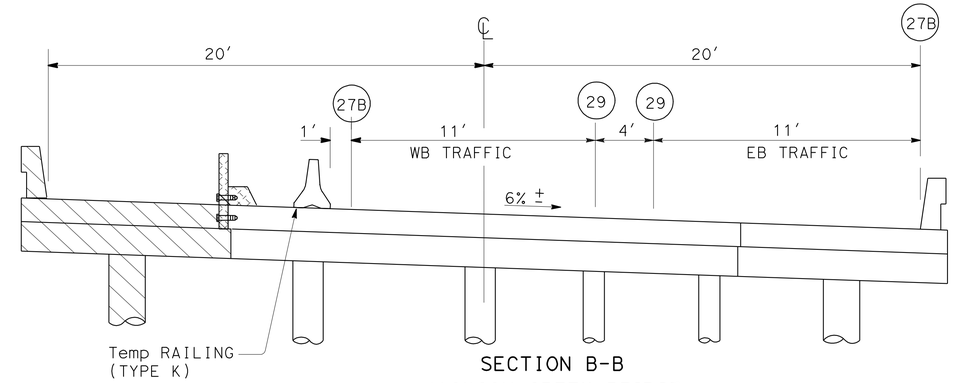

SECTION B-B
JACKSON CREEK BRIDGE
NO SCALE

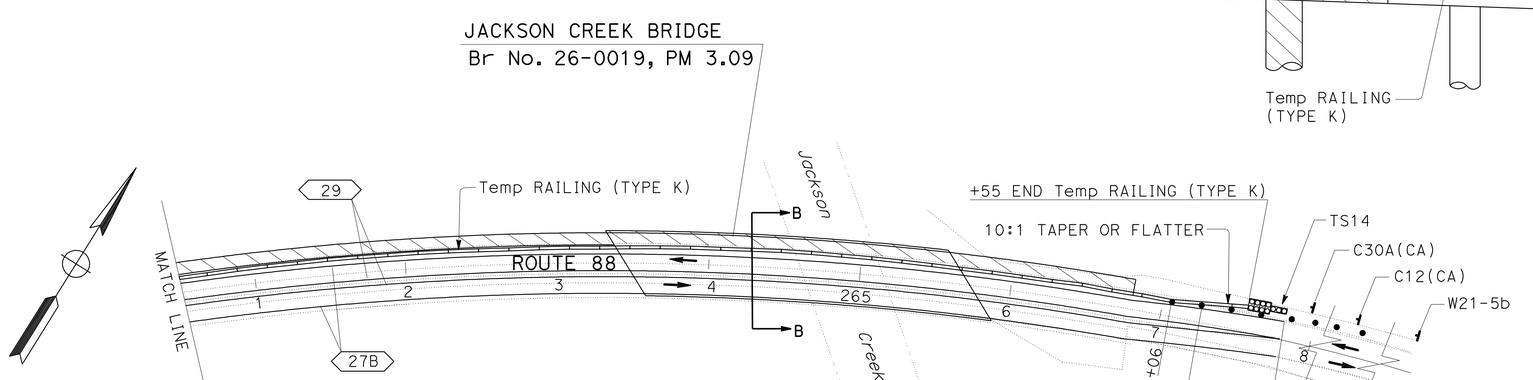

PLAN
SCALE: 1" = 50′

THIS PLAN ACCURATE FOR TRAFFIC HANDLING WORK ONLY.

(BRIDGES)
TRAFFIC HANDLING PLAN
(STAGE 2)

SCALE AS SHOWN **TH-2**

STATE OF CALIFORNIA - DEPARTMENT OF TRANSPORTATION
Caltrans® **TRAFFIC DESIGN**

FUNCTIONAL SUPERVISOR: MOHAMMED QATAMI
CALCULATED-DESIGNED BY: CECILE NGUYEN
CHECKED BY: HASSAN TAHA
REVISED BY: RS
DATE REVISED: 05-5-11

LAST REVISION 00-00-00
DATE PLOTTED => 19-OCT-2011
TIME PLOTTED => 10:18

Dist	COUNTY	ROUTE	POST MILES TOTAL PROJECT	SHEET No.	TOTAL SHEETS
10	Ama	88	0.0/5.5	121	216

Hassan Taha 05-15-11
REGISTERED CIVIL ENGINEER DATE

10-17-11
PLANS APPROVAL DATE

REGISTERED PROFESSIONAL ENGINEER HASSAN M. TAHA No. 60130 Exp 6/30/12 CIVIL STATE OF CALIFORNIA

THE STATE OF CALIFORNIA OR ITS OFFICERS OR AGENTS SHALL NOT BE RESPONSIBLE FOR THE ACCURACY OR COMPLETENESS OF SCANNED COPIES OF THIS PLAN SHEET.

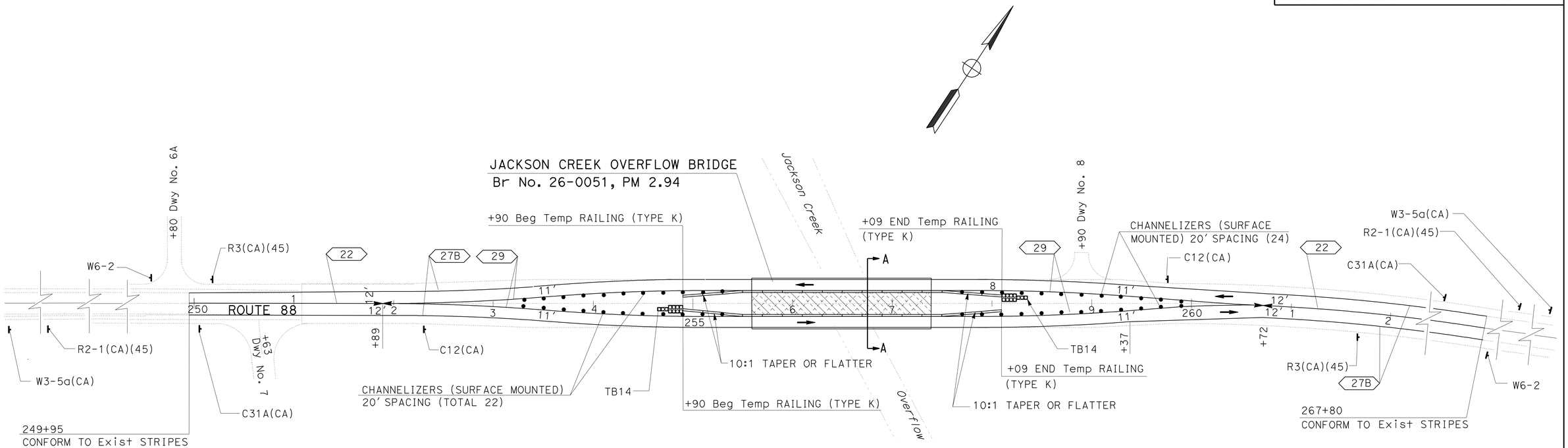

PLAN
SCALE: 1" = 50'

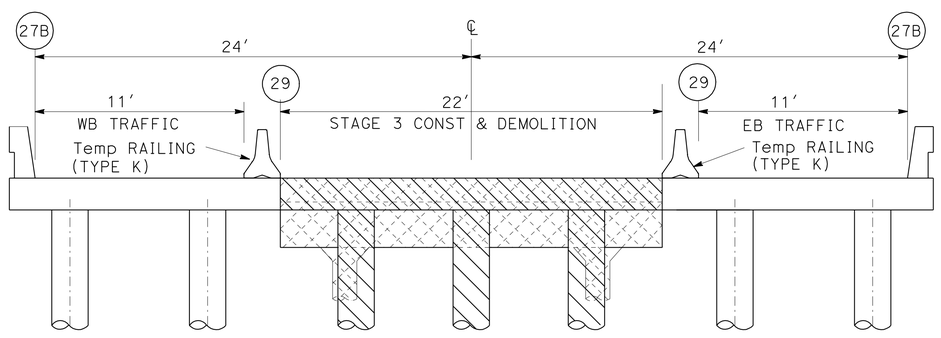

SECTION A-A
JACKSON CREEK OVERFLOW BRIDGE
NO SCALE

THIS PLAN ACCURATE FOR TRAFFIC HANDLING WORK ONLY.

(BRIDGES)
TRAFFIC HANDLING PLAN
(STAGE 3)
SCALE AS SHOWN

TH-3

CALCULATED-DESIGNED BY	CECILE NGUYEN
CHECKED BY	HASSAN TAHA
REVISED BY	RS
DATE REVISED	05-5-11
FUNCTIONAL SUPERVISOR	MOHAMMED QATAMI

STATE OF CALIFORNIA - DEPARTMENT OF TRANSPORTATION
Caltrans® TRAFFIC DESIGN

LAST REVISION 00-00-00 | DATE PLOTTED => 19-OCT-2011 | TIME PLOTTED => 10:18

Dist	COUNTY	ROUTE	POST MILES TOTAL PROJECT	SHEET No.	TOTAL SHEETS
10	Ama	88	0.0/5.5	122	216

Hassan Taha 05-15-11
REGISTERED CIVIL ENGINEER DATE

10-17-11
PLANS APPROVAL DATE

REGISTERED PROFESSIONAL ENGINEER HASSAN M. TAHA No. 60130 Exp 6/30/12 CIVIL STATE OF CALIFORNIA

THE STATE OF CALIFORNIA OR ITS OFFICERS OR AGENTS SHALL NOT BE RESPONSIBLE FOR THE ACCURACY OR COMPLETENESS OF SCANNED COPIES OF THIS PLAN SHEET.

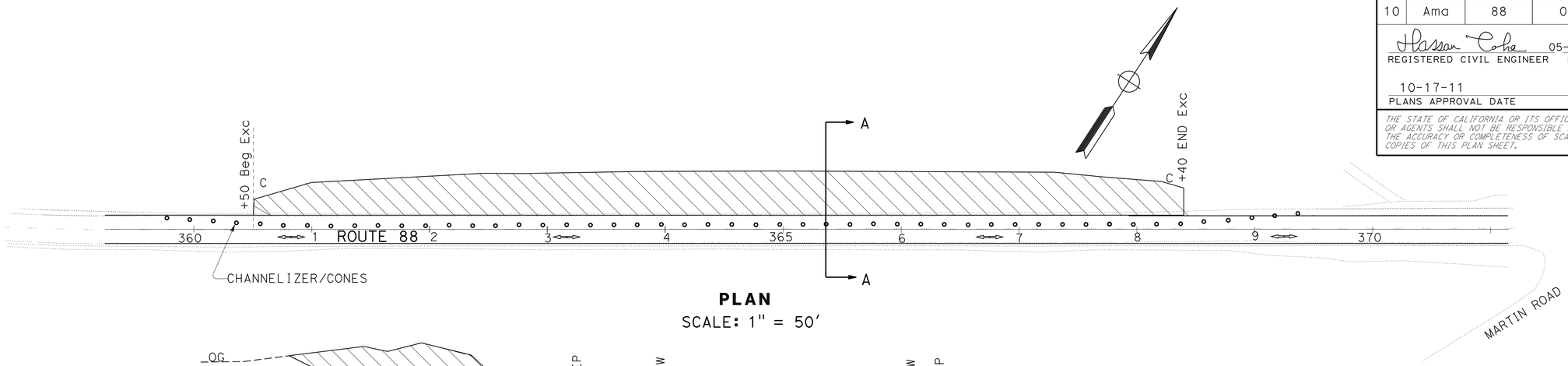

PLAN
SCALE: 1" = 50'

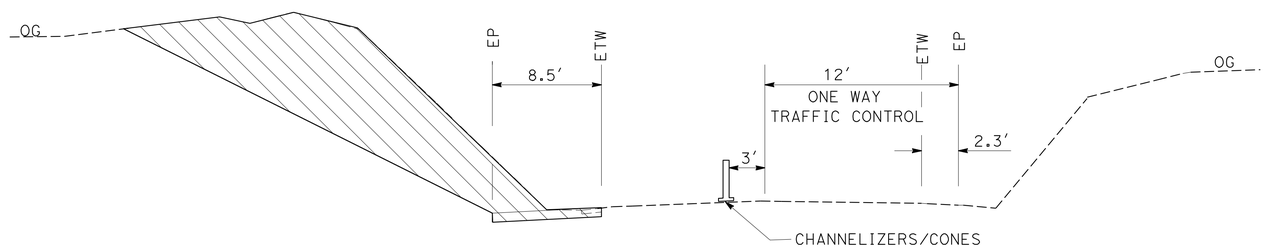

SECTION A-A
STAGE 1
NO SCALE

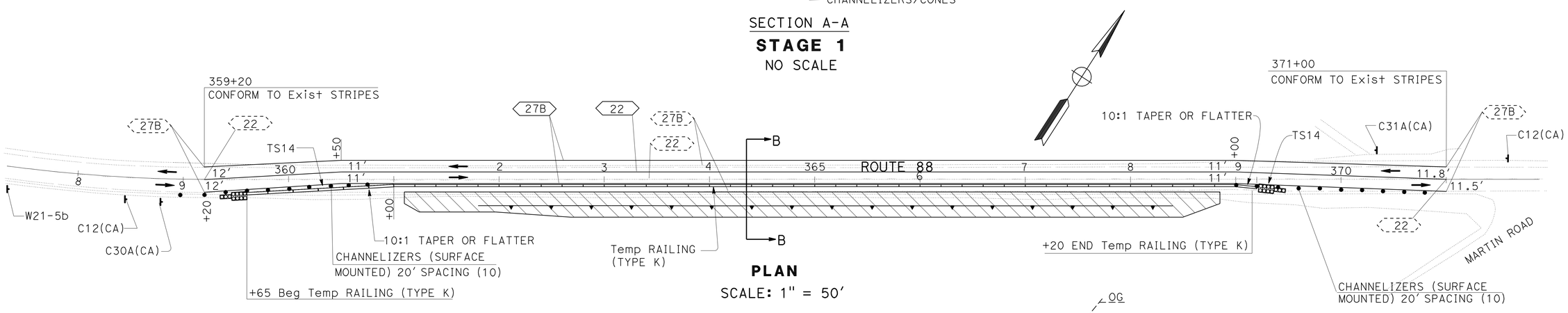

PLAN
SCALE: 1" = 50'

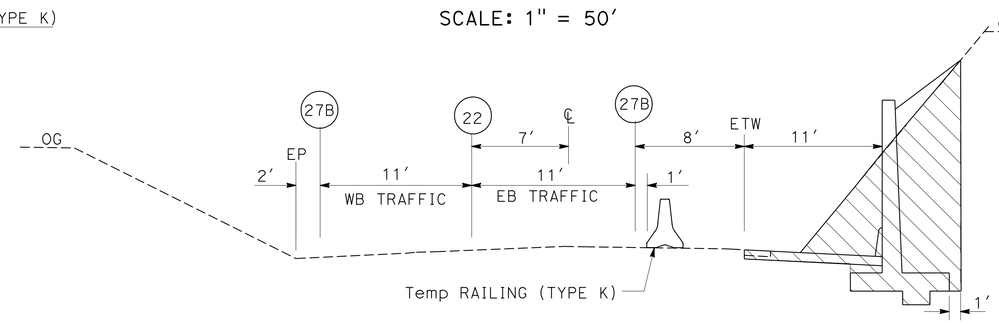

SECTION B-B
STAGE 2
NO SCALE

TRAFFIC HANDLING PLAN
(STAGES 1 AND 2)

SCALE AS SHOWN

TH-4

THIS PLAN ACCURATE FOR TRAFFIC HANDLING WORK ONLY.

STATE OF CALIFORNIA - DEPARTMENT OF TRANSPORTATION
Caltrans® **TRAFFIC DESIGN**

FUNCTIONAL SUPERVISOR: MOHAMMED QATAMI
CALCULATED-DESIGNED BY: CECILE NGUYEN
CHECKED BY: HASSAN TAHA
REVISED BY: RS
DATE REVISED: 05-5-11

LAST REVISION 00-00-00
DATE PLOTTED => 19-OCT-2011
TIME PLOTTED => 10:19

Dist	COUNTY	ROUTE	POST MILES TOTAL PROJECT	SHEET No.	TOTAL SHEETS
10	Ama	88	0.0/5.5	123	216

Hassan Taha 05-15-11
REGISTERED CIVIL ENGINEER DATE

10-17-11
PLANS APPROVAL DATE

REGISTERED PROFESSIONAL ENGINEER HASSAN M. TAHA No. 60130 Exp 6/30/12 CIVIL STATE OF CALIFORNIA

THE STATE OF CALIFORNIA OR ITS OFFICERS OR AGENTS SHALL NOT BE RESPONSIBLE FOR THE ACCURACY OR COMPLETENESS OF SCANNED COPIES OF THIS PLAN SHEET.

NOTE:
USE STD PLAN T-13 ONEWAY TRAFFIC CONTROL.

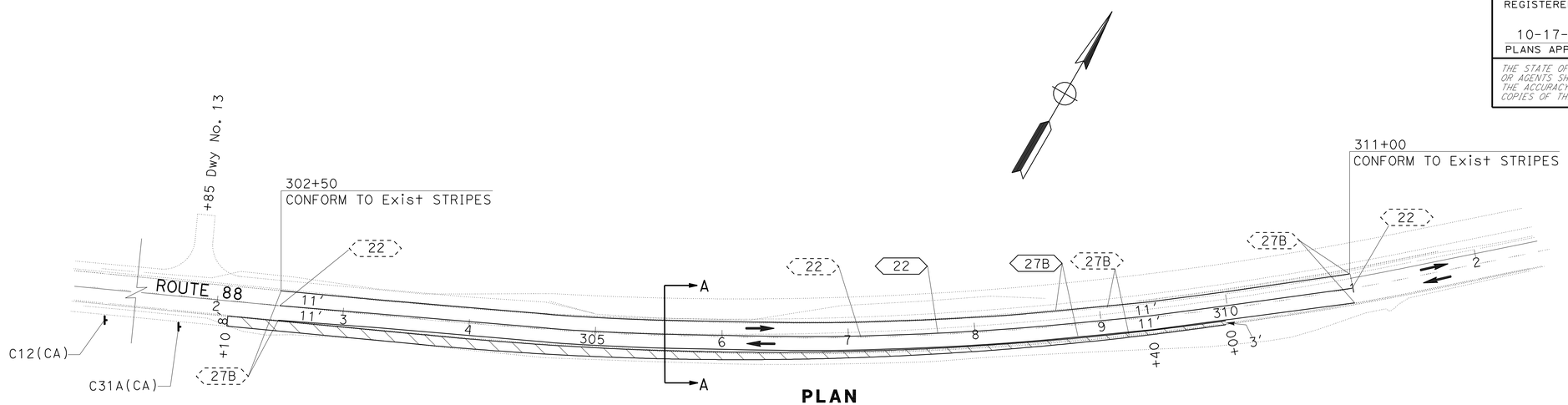

PLAN
SCALE: 1" = 50'

SECTION A-A
Sta 302+10 TO Sta 310+00
Sta 350+50 TO Sta 360+30
NO SCALE

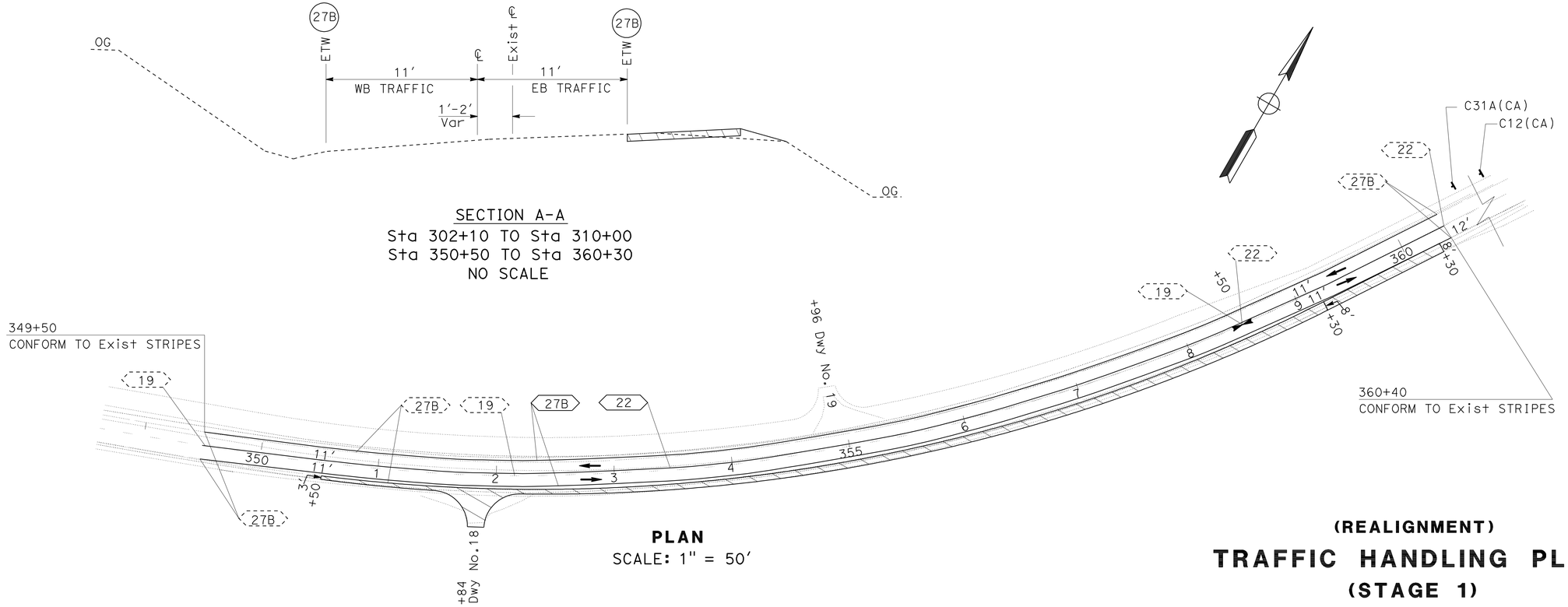

PLAN
SCALE: 1" = 50'

THIS PLAN ACCURATE FOR TRAFFIC HANDLING WORK ONLY.

(REALIGNMENT)

TRAFFIC HANDLING PLAN

(STAGE 1)

SCALE AS SHOWN

TH-5

STATE OF CALIFORNIA - DEPARTMENT OF TRANSPORTATION
Caltrans® **TRAFFIC DESIGN**

FUNCTIONAL SUPERVISOR: MOHAMMED QATAMI
CALCULATED-DESIGNED BY: CECILE NGUYEN
CHECKED BY: HASSAN TAHA
REVISED BY: RS
DATE REVISED: 05-5-11

LAST REVISION: 00-00-00
DATE PLOTTED => 19-OCT-2011
TIME PLOTTED => 10:19

Dist	COUNTY	ROUTE	POST MILES TOTAL PROJECT	SHEET No.	TOTAL SHEETS
10	Ama	88	0.0/5.5	124	216

Hassan Taha 05-15-11
REGISTERED CIVIL ENGINEER DATE

10-17-11
PLANS APPROVAL DATE

REGISTERED PROFESSIONAL ENGINEER HASSAN M. TAHA No. 60130 Exp 6/30/12 CIVIL STATE OF CALIFORNIA

THE STATE OF CALIFORNIA OR ITS OFFICERS OR AGENTS SHALL NOT BE RESPONSIBLE FOR THE ACCURACY OR COMPLETENESS OF SCANNED COPIES OF THIS PLAN SHEET.

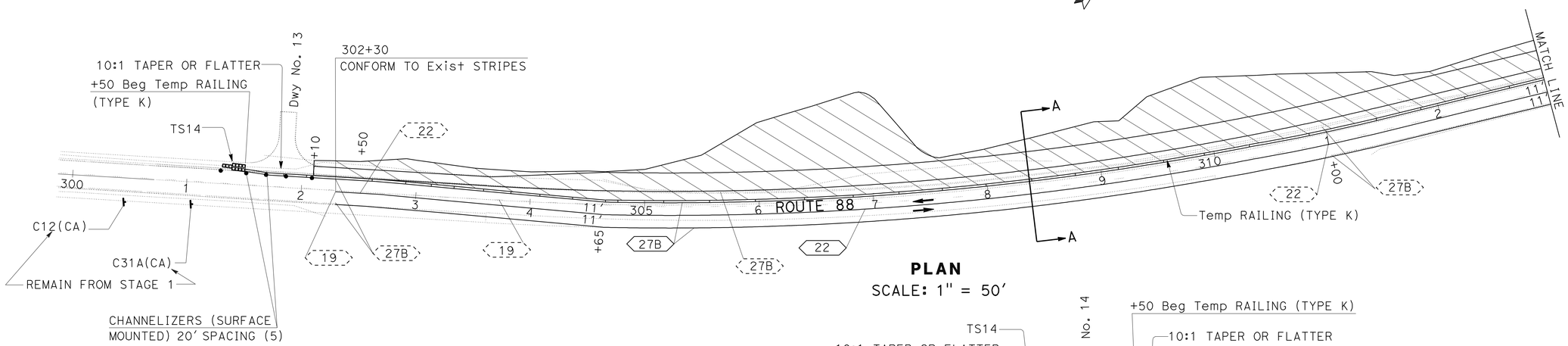

PLAN
SCALE: 1" = 50'

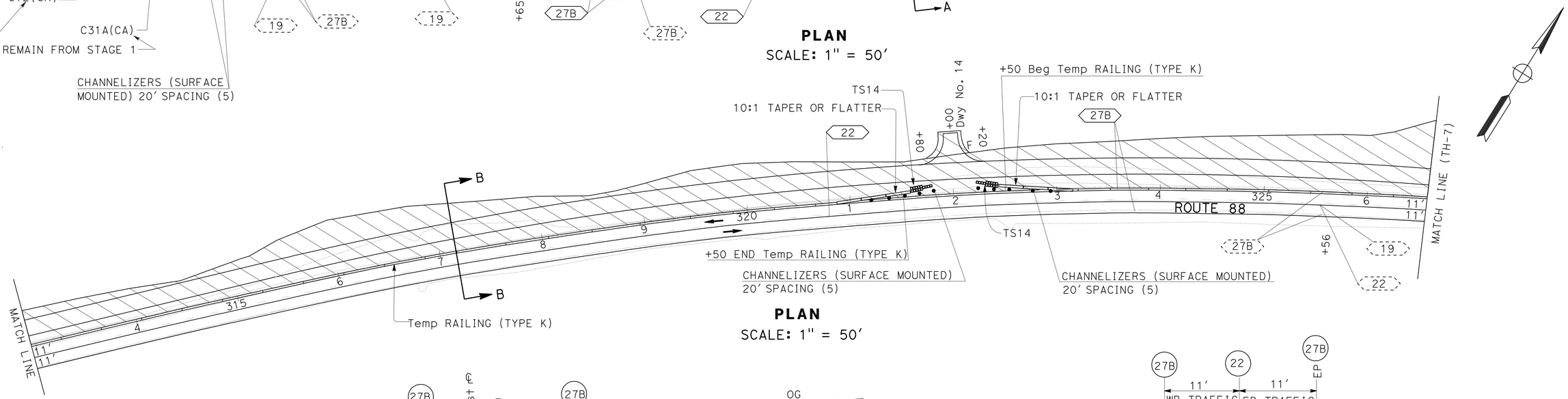

PLAN
SCALE: 1" = 50'

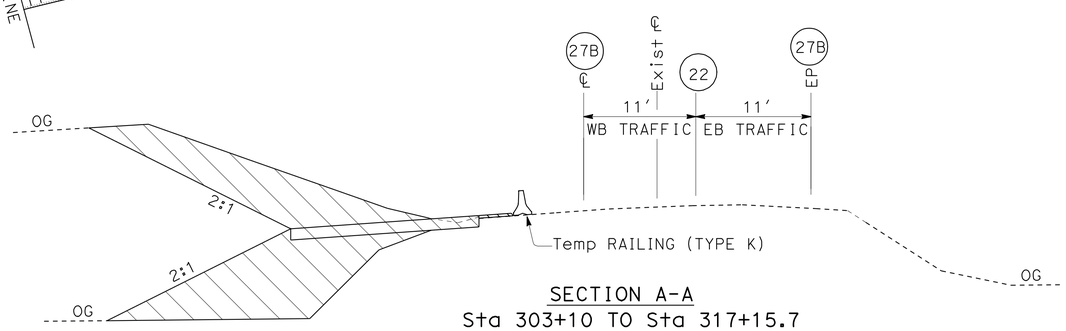

SECTION A-A
Sta 303+10 TO Sta 317+15.7
Sta 327+68.6 TO Sta 360+30
NO SCALE

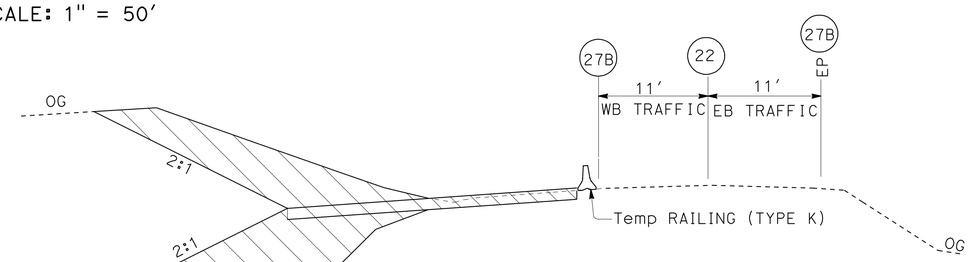

SECTION B-B
Sta 317+15.7 TO Sta 327+68.6
NO SCALE

(REALIGNMENT)

TRAFFIC HANDLING PLAN

(STAGE 2)

SCALE AS SHOWN

TH-6

THIS PLAN ACCURATE FOR TRAFFIC HANDLING WORK ONLY.

STATE OF CALIFORNIA - DEPARTMENT OF TRANSPORTATION
Caltrans® **TRAFFIC DESIGN**

FUNCTIONAL SUPERVISOR: MOHAMMED QATAMI
CALCULATED-DESIGNED BY: CECILE NGUYEN
CHECKED BY: HASSAN TAHA
REVISED BY: RS
DATE REVISED: 05-5-11

LAST REVISION 00-00-00 | DATE PLOTTED => 19-OCT-2011 | TIME PLOTTED => 10:19

Dist	COUNTY	ROUTE	POST MILES TOTAL PROJECT	SHEET No.	TOTAL SHEETS
10	Ama	88	0.0/5.5	125	216

Hassan Taha 05-15-11
REGISTERED CIVIL ENGINEER DATE

10-17-11
PLANS APPROVAL DATE

REGISTERED PROFESSIONAL ENGINEER HASSAN M. TAHA No. 60130 Exp. 6/30/12 CIVIL STATE OF CALIFORNIA

THE STATE OF CALIFORNIA OR ITS OFFICERS OR AGENTS SHALL NOT BE RESPONSIBLE FOR THE ACCURACY OR COMPLETENESS OF SCANNED COPIES OF THIS PLAN SHEET.

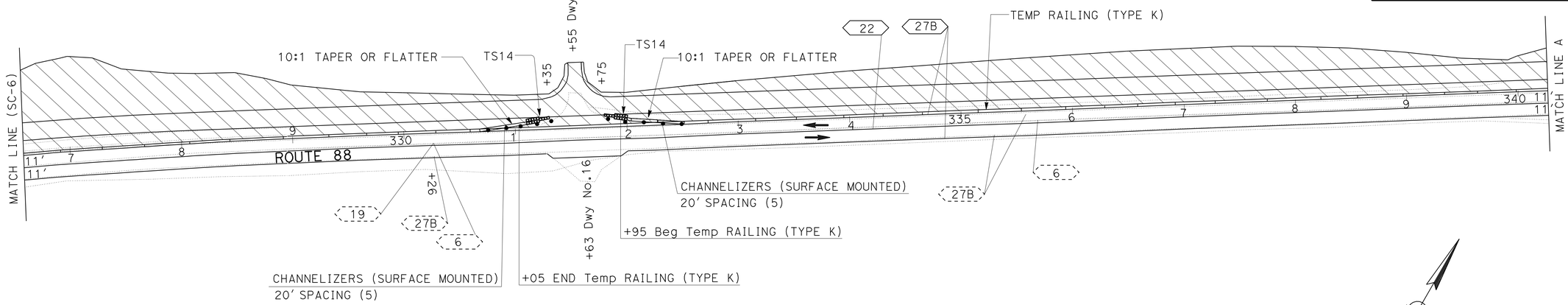

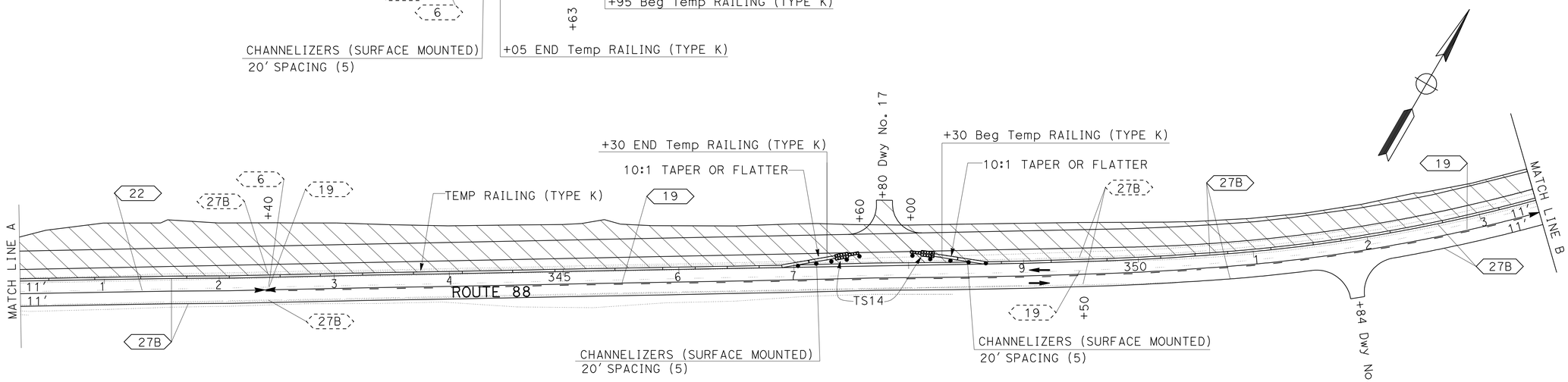

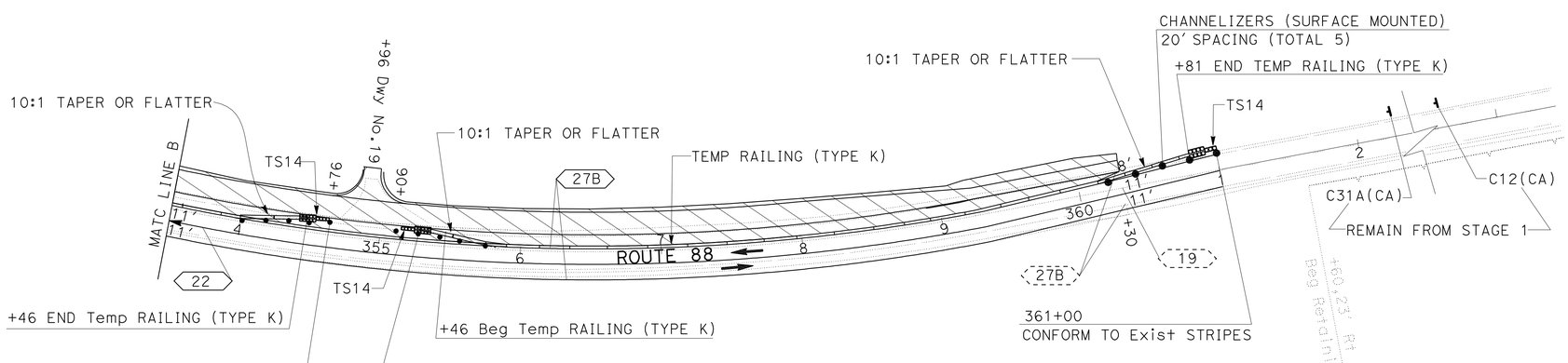

PLAN

(REALIGNMENT)

TRAFFIC HANDLING PLAN

(STAGE 2)

SCALE: 1" = 50'

TH-7

THIS PLAN ACCURATE FOR TRAFFIC HANDLING WORK ONLY.

CALCULATED-DESIGNED BY	CECILE NGUYEN
CHECKED BY	HASSAN TAHA
FUNCTIONAL SUPERVISOR	MOHAMMED QATAMI
REVISED BY	RS
DATE REVISED	05-5-11

STATE OF CALIFORNIA - DEPARTMENT OF TRANSPORTATION
Caltrans® TRAFFIC DESIGN

LAST REVISION 00-00-00 | DATE PLOTTED => 19-OCT-2011 | TIME PLOTTED => 10:19

Dist	COUNTY	ROUTE	POST MILES TOTAL PROJECT	SHEET No.	TOTAL SHEETS
10	Ama	88	0.0/5.5	126	216

Hassan Taha 05-15-11
REGISTERED CIVIL ENGINEER DATE

10-17-11
PLANS APPROVAL DATE

REGISTERED PROFESSIONAL ENGINEER HASSAN M. TAHA No. 60130 Exp 6/30/12 CIVIL STATE OF CALIFORNIA

THE STATE OF CALIFORNIA OR ITS OFFICERS OR AGENTS SHALL NOT BE RESPONSIBLE FOR THE ACCURACY OR COMPLETENESS OF SCANNED COPIES OF THIS PLAN SHEET.

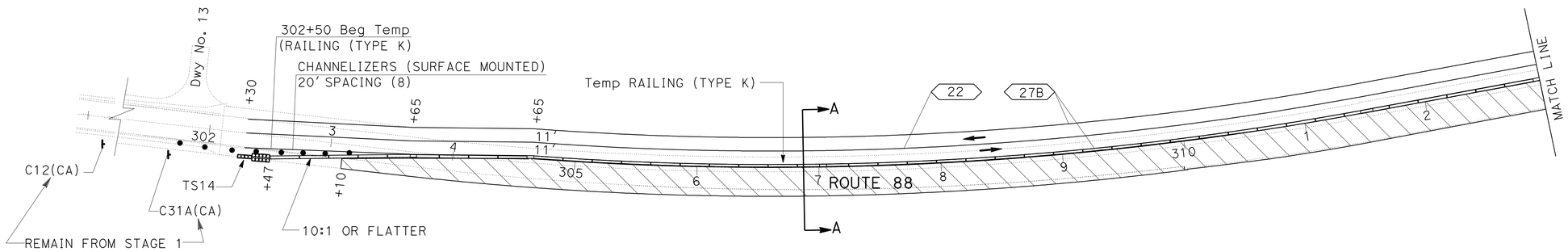

PLAN
SCALE: 1" = 50'

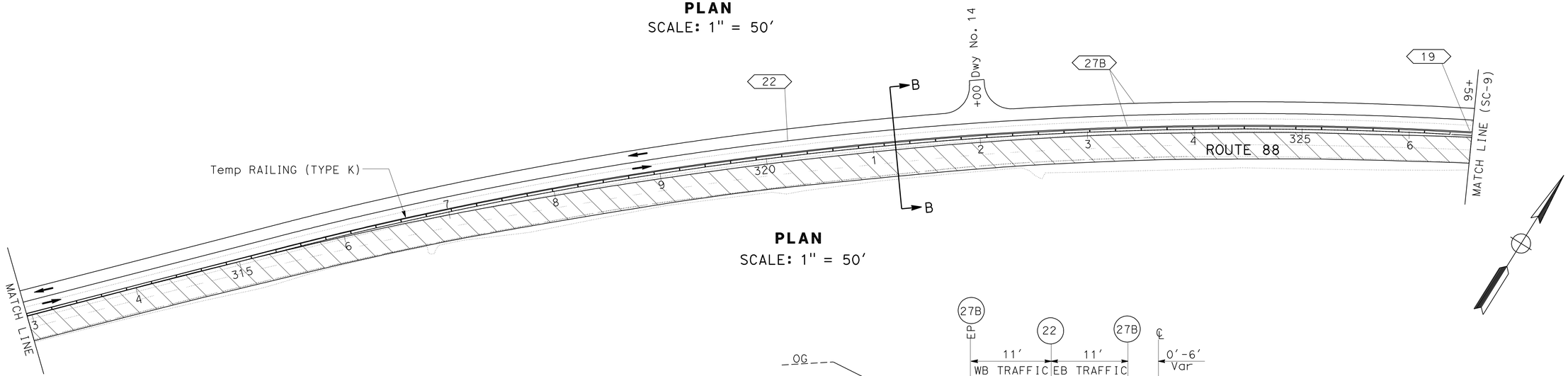

PLAN
SCALE: 1" = 50'

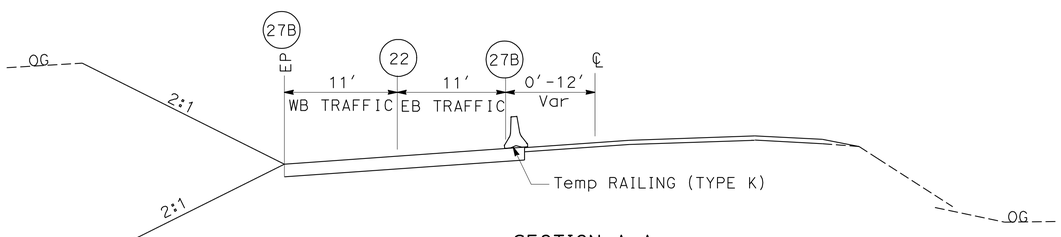

SECTION A-A
Sta 303+10 TO Sta 317+15.7
Sta 327+68.6 TO Sta 360+30
NO SCALE

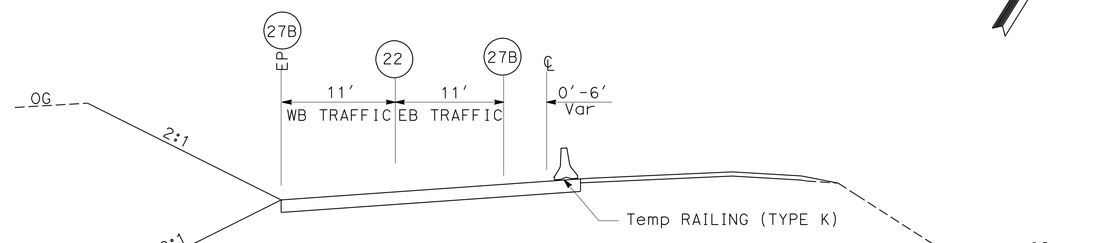

SECTION B-B
Sta 317+15.7 TO Sta 327+68.6
NO SCALE

THIS PLAN ACCURATE FOR TRAFFIC HANDLING WORK ONLY.

(REALIGNMENT)
TRAFFIC HANDLING PLAN
(STAGE 3)

SCALE AS SHOWN **TH-8**

STATE OF CALIFORNIA - DEPARTMENT OF TRANSPORTATION
Caltrans® **TRAFFIC DESIGN**
FUNCTIONAL SUPERVISOR: MOHAMMED QATAMI
CALCULATED-DESIGNED BY: CECILE NGUYEN
CHECKED BY: HASSAN TAHA
REVISED BY: RS
DATE REVISED: 05-5-11

LAST REVISION 00-00-00 | DATE PLOTTED => 19-OCT-2011 | TIME PLOTTED => 10:19

Dist	COUNTY	ROUTE	POST MILES TOTAL PROJECT	SHEET No.	TOTAL SHEETS
10	Ama	88	0.0/5.5	127	216

Hassan Taha 05-15-11
REGISTERED CIVIL ENGINEER DATE

10-17-11
PLANS APPROVAL DATE

REGISTERED PROFESSIONAL ENGINEER HASSAN M. TAHA No. 60130 Exp. 6/30/12 CIVIL STATE OF CALIFORNIA

THE STATE OF CALIFORNIA OR ITS OFFICERS OR AGENTS SHALL NOT BE RESPONSIBLE FOR THE ACCURACY OR COMPLETENESS OF SCANNED COPIES OF THIS PLAN SHEET.

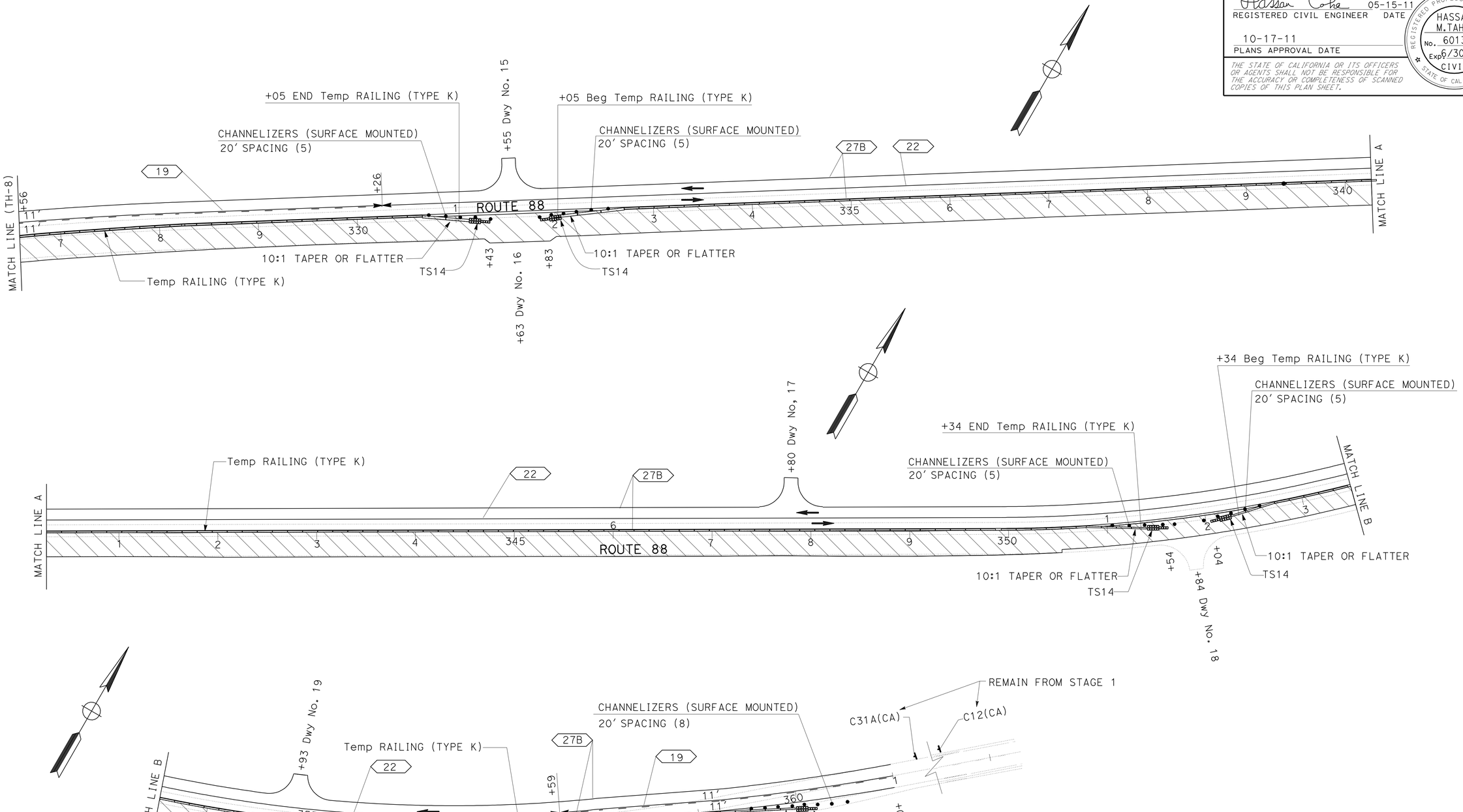

PLAN

THIS PLAN ACCURATE FOR TRAFFIC HANDLING WORK ONLY.

(REALIGNMENT)
TRAFFIC HANDLING PLAN
(STAGE 3)

SCALE: 1" = 50'

TH-9

REVISED BY	DATE REVISED
RS	05-5-11

CALCULATED-DESIGNED BY: CECILE NGUYEN
CHECKED BY: HASSAN TAHA
FUNCTIONAL SUPERVISOR: MOHAMMED QATAMI

STATE OF CALIFORNIA - DEPARTMENT OF TRANSPORTATION
Caltrans® TRAFFIC DESIGN

LAST REVISION 00-00-00 | DATE PLOTTED => 19-OCT-2011 | TIME PLOTTED => 10:19

Dist	COUNTY	ROUTE	POST MILES TOTAL PROJECT	SHEET No.	TOTAL SHEETS
10	Ama	88	0.0/5.5	128	216

Hassan Taha 05-15-11
REGISTERED CIVIL ENGINEER DATE

10-17-11
PLANS APPROVAL DATE

REGISTERED PROFESSIONAL ENGINEER HASSAN M. TAHA No. 60130 Exp 6/30/12 CIVIL STATE OF CALIFORNIA

THE STATE OF CALIFORNIA OR ITS OFFICERS OR AGENTS SHALL NOT BE RESPONSIBLE FOR THE ACCURACY OR COMPLETENESS OF SCANNED COPIES OF THIS PLAN SHEET.

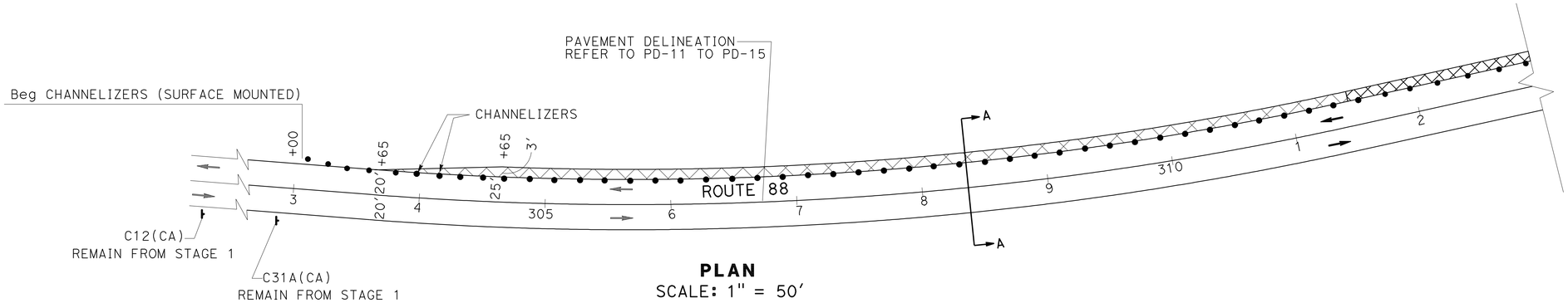

PLAN
SCALE: 1" = 50'

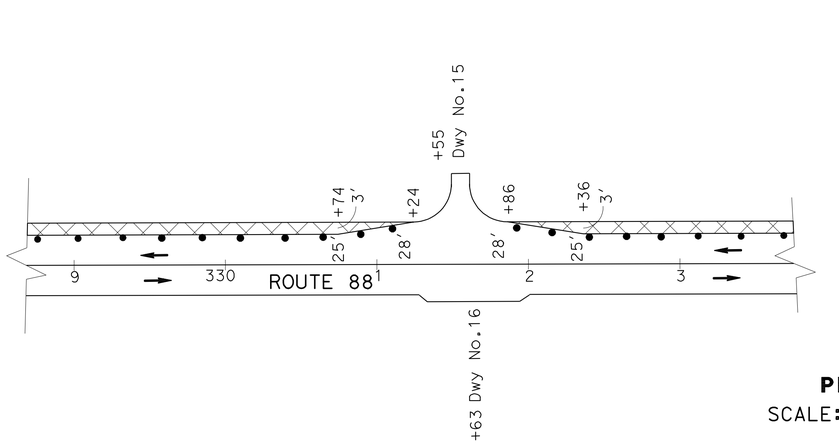

PLAN
SCALE: 1" = 50'

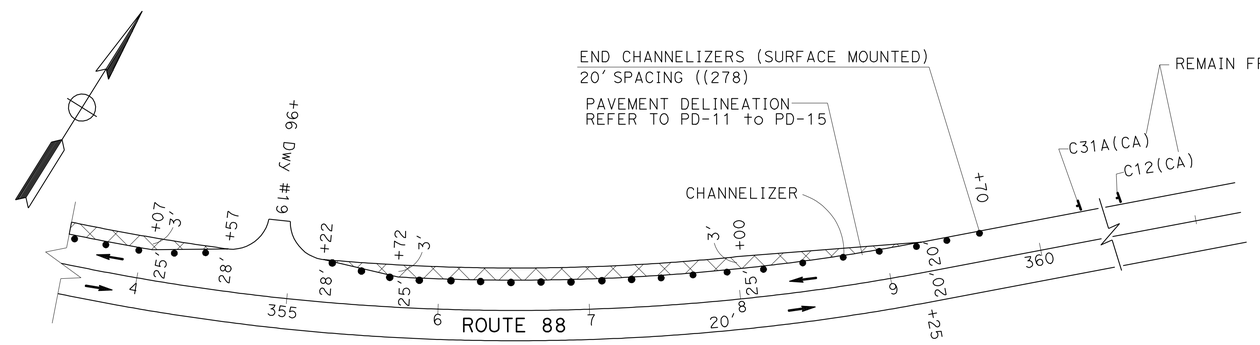

PLAN
SCALE: 1" = 50'

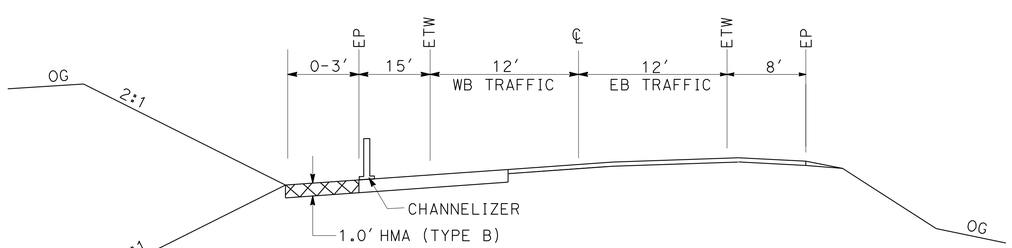

SECTION A-A
Sta 303+65 TO Sta 359+25
NO SCALE

THIS PLAN ACCURATE FOR TRAFFIC HANDLING WORK ONLY.

(REALIGNMENT)

TRAFFIC HANDLING PLAN
(STAGE 4)

SCALE AS SHOWN **TH-10**

STATE OF CALIFORNIA - DEPARTMENT OF TRANSPORTATION
Caltrans® **TRAFFIC DESIGN**

FUNCTIONAL SUPERVISOR: MOHAMMED QATAMI
CALCULATED-DESIGNED BY: CECILE NGUYEN
CHECKED BY: HASSAN TAHA
REVISED BY: RS
DATE REVISED: 05-5-11

LAST REVISION 00-00-00
DATE PLOTTED => 19-OCT-2011
TIME PLOTTED => 10:19

Dist	COUNTY	ROUTE	POST MILES TOTAL PROJECT	SHEET No.	TOTAL SHEETS
10	Ama	88	0.0/5.5	129	216

REGISTERED CIVIL ENGINEER DATE

10-17-11
PLANS APPROVAL DATE

REGISTERED PROFESSIONAL ENGINEER HASSAN M. TAHA No. 60130 Exp. 6/30/12 CIVIL STATE OF CALIFORNIA

THE STATE OF CALIFORNIA OR ITS OFFICERS OR AGENTS SHALL NOT BE RESPONSIBLE FOR THE ACCURACY OR COMPLETENESS OF SCANNED COPIES OF THIS PLAN SHEET.

STATIONARY MOUNTED CONSTRUCTION AREA SIGNS (TRAFFIC HANDLING)

	STAGE No.	SHEET No.	SIGN TYPE	SIGN MESSAGE	SIGN PANEL	No. OF POST AND SIZE	No. OF SIGNS
BRIDGE	STAGE 1	TH-1	W21-5b	RIGHT SHOULDER CLOSED 1000'	48" x 48"	1- 6" x 6"	1
			C12(CA)	NARROW LANE	48" x 48"	1- 6" x 6"	1
			C30A (CA)	SHOULDER CLOSED	48" x 48"	1- 6" x 6"	1
			C12(CA)	NARROW LANE	48" x 48"	1- 6" x 6"	1
			C31A (CA)	NO SHOULDER	48" x 48"	1- 6" x 6"	1
	STAGE 2	TH-2	C12(CA)	NARROW LANE	48" x 48"	1- 6" x 6"	1
			C31A (CA)	NO SHOULDER	48" x 48"	1- 6" x 6"	1
			W21-5b	RIGHT SHOULDER CLOSED 1000'	48" x 48"	1- 6" x 6"	1
			C12(CA)	NARROW LANE	48" x 48"	1- 6" x 6"	1
			C30A (CA)	SHOULDER CLOSED	48" x 48"	1- 6" x 6"	1
	STAGE 3	TH-3	C12(CA)	NARROW LANE	48" x 48"	1- 6" x 6"	2
			C31A (CA)	NO SHOULDER	48" x 48"	1- 6" x 6"	2
			W3-5a	45MPH SPEED ZONE AHEAD	36" x 36"	1- 4" x 4"	2
			R2-1(CA)(45)	SPEED LIMIT 45	36" x 48"	1- 4" x 6"	2
			W6-2	DIVIDED HIGHWAY ENDS	48" x 48"	1- 6" x 6"	2
			R3(CA)(45)	END 45 SPEED LIMIT	36" x 43"	1- 4" x 6"	2
RETAIN-ING WALL	STAGE 1 & 2	TH-4	W21-5b	RIGHT SHOULDER CLOSED 1000'	48" x 48"	1- 6" x 6"	1
			C12(CA)	NARROW LANE	48" x 48"	1- 6" x 6"	1
			C30A (CA)	SHOULDER CLOSED	48" x 48"	1- 6" x 6"	1

NOTES:

1. SIGN LOCATIONS SHOWN ARE APPROXIMATE, EXACT LOCATIONS ARE TO BE DETERMINED BY THE ENGINEER.
2. FOR ADDITIONAL CONSTRUCTION AREA SIGNS, SEE CS-1.

TEMPORARY CRASH CUSHION MODULE

SHEET No.	Temp CRASH CUSHION MODULE ARRAY TS14	Temp CRASH CUSHION MODULE ARRAY TB14	TYPE P MARKER (N)
	EA	EA	EA
TH-1	14		1
	14		
TH-2	28	14	
	28	14	
TH-3		14	1
		14	1
TH-4	14		1
	14		1
TH-6	14		
	28		
TH-7	56		
	42		
TH-8	14		
TH-9	70		
SUBTOTAL	336	56	
TOTAL	392		

(N) NOT A SEPERATE PAY ITEM, FOR INFORMATION ONLY.

TEMPORARY RAILING (TYPE K)

LOCATION Sta - Sta	LF
250+70 - 258+40	770
251+20 - 267+43	1,623
254+90 - 258+09	638
255+30 - 257+90	520
259+52 - 267+55	803
301+50 - 321+50	2,000
302+50 - 331+05	2,855
322+50 - 331+05	855
332+05 - 351+34	1,929
331+95 - 347+30	1,535
348+30 - 354+46	616
352+34 - 360+00	766
355+46 - 360+81	535
359+65 - 369+20	955
TOTAL	16,400

CHANNELIZER (SURFACE MOUNTED)

SHEET No.	EA
TH-1	16
TH-2	24
TH-3	46
TH-4	20
TH-6	15
TH-7	35
TH-8	8
TH-9	28
TH-10	278
TOTAL	470

TRAFFIC HANDLING QUANTITIES

THQ-1

STATE OF CALIFORNIA - DEPARTMENT OF TRANSPORTATION
Caltrans TRAFFIC DESIGN

FUNCTIONAL SUPERVISOR: MOHAMMED QATAMI
CALCULATED-DESIGNED BY: CECILE NGUYEN
CHECKED BY: HASSAN TAHA
REVISED BY: RS
DATE REVISED: 05-5-11

LAST REVISION 00-00-00 | DATE PLOTTED => 19-OCT-2011 | TIME PLOTTED => 10:19

Dist	COUNTY	ROUTE	POST MILES TOTAL PROJECT	SHEET No.	TOTAL SHEETS
10	Ama	88	0.0/5.5	130	216

REGISTERED CIVIL ENGINEER DATE

10-17-11
PLANS APPROVAL DATE

REGISTERED PROFESSIONAL ENGINEER HASSAN M. TAHA No. 60130 Exp 6/30/12 CIVIL STATE OF CALIFORNIA

THE STATE OF CALIFORNIA OR ITS OFFICERS OR AGENTS SHALL NOT BE RESPONSIBLE FOR THE ACCURACY OR COMPLETENESS OF SCANNED COPIES OF THIS PLAN SHEET.

TEMPORARY PAVEMENT DELINEATION ITEMS

	STAGE No.	SHEET No.	LOCATION	DETAIL No.	REMOVE YELLOW THERMOPLASTIC TRAFFIC STRIPE	REMOVE THERMOPLASTIC TRAFFIC STRIPE	TEMPORARY TRAFFIC STRIPE (PAINT)		REMOVE THERMOPLASTIC PAVEMENT MARKING	REMOVE PAVEMENT MARKER	TEMPORARY PAVEMENT MARKER	
							4" SOLID WHITE	4" SOLID YELLOW		(N)	TYPE D	TYPE H
					LF	LF	LF		SQFT	EA	EA	
			Sta - Sta									
BRIDGE	STAGE 1	TH-1	250+80 - 268+00	27B, 22	3,507	3,507	3,440	1,720		123	145	
	STAGE 2	TH-2	249+95 - 253+65	22				370			33	
			253+65 - 267+80	29				2,830			120	
			249+95 - 267+80	27B			3,570					
	STAGE 3	TH-3	249+95 - 251+89	22				194			18	
			251+89 - 260+72	29				1,766			76	
			260+72 - 267+80	22				708			61	
			249+95 - 267+80	27B			3,570					
	STAGE 4	TH-4	359+20 - 371+00	22, 27B	2,360	2,360	2,360	1,180		91	100	
REALIGNMENT	STAGE 1	TH-5	302+50 - 311+00	27B, 22	3,880	1,949	1,700	850		140	73	
			345+50 - 360+40				2,180	1,090			93	
	STAGE 2	TH-6	302+30 - 326+58	22, 27B			4,856	2,428			204	
		TH-7	326+58 - 342+40	22, 27B	6,672	3,930	3,164	1,502		239	134	
			342+40 - 353+49	19, 27B			2,210	1,109			24	47
			353+49 - 361+00	22, 27B			1,502	751			65	
	STAGE 3	TH-8 & 9	302+30 - 326+56	22, 27B			4,852	2,426			204	
			326+56 - 330+26	19, 27B			740	370			9	16
			330+26 - 357+29	22, 27B			5,406	2,703			227	
			357+29 - 361+00	19, 27B			742	371			9	16
	TOTAL PDQ-2					614	40,292	22,368	392			
	TOTAL				16,419	12,360	62,660		392		1,674	

TRAFFIC HANDLING QUANTITIES

THQ-2

STATE OF CALIFORNIA - DEPARTMENT OF TRANSPORTATION
Caltrans® TRAFFIC DESIGN

FUNCTIONAL SUPERVISOR: MOHAMMED QATAMI
CALCULATED-DESIGNED BY: CECILE NGUYEN
CHECKED BY: HASSAN TAHA
REVISED BY: RS
DATE REVISED: 05-5-11

LAST REVISION 00-00-00 | DATE PLOTTED => 19-OCT-2011 | TIME PLOTTED => 10:19

Dist	COUNTY	ROUTE	POST MILES TOTAL PROJECT	SHEET No.	TOTAL SHEETS
10	Ama	88	0.0/5.5	131	216

REGISTERED CIVIL ENGINEER 05-15-11 DATE

10-17-11
PLANS APPROVAL DATE

REGISTERED PROFESSIONAL ENGINEER HASSAN M. TAHA No. 60130 Exp. 6/30/12 CIVIL STATE OF CALIFORNIA

THE STATE OF CALIFORNIA OR ITS OFFICERS OR AGENTS SHALL NOT BE RESPONSIBLE FOR THE ACCURACY OR COMPLETENESS OF SCANNED COPIES OF THIS PLAN SHEET.

NOTE:

SEE CONSTRUCTION DETAIL C-4 FOR MODIFIED DETAIL 22 AND TRANSITION FROM MODIFIED DETAIL 22 TO DETAIL 29.

LEGEND:

- XX — DETAIL No.
- XX — THERMOPLASTIC PAVEMENT MARKINGS
- STRIPE CHANGE LOCATION
- F E — DELINEATOR TYPE F OR E (CLASS 1)
- L — OBJECT MARKER (TYPE L)
- ROADSIDE SIGN
- RELOCATE ROADSIDE SIGN — FROM / TO
- XX — ROADSIDE SIGN No.
- DIRECTION OF TRAFFIC FLOW
- REMOVE MARKER (TYPE P)
- REMOVE ROADSIDE SIGN
- REMOVE THERMOPLASTIC STRIPE
- REMOVE PAVEMENT MARKING

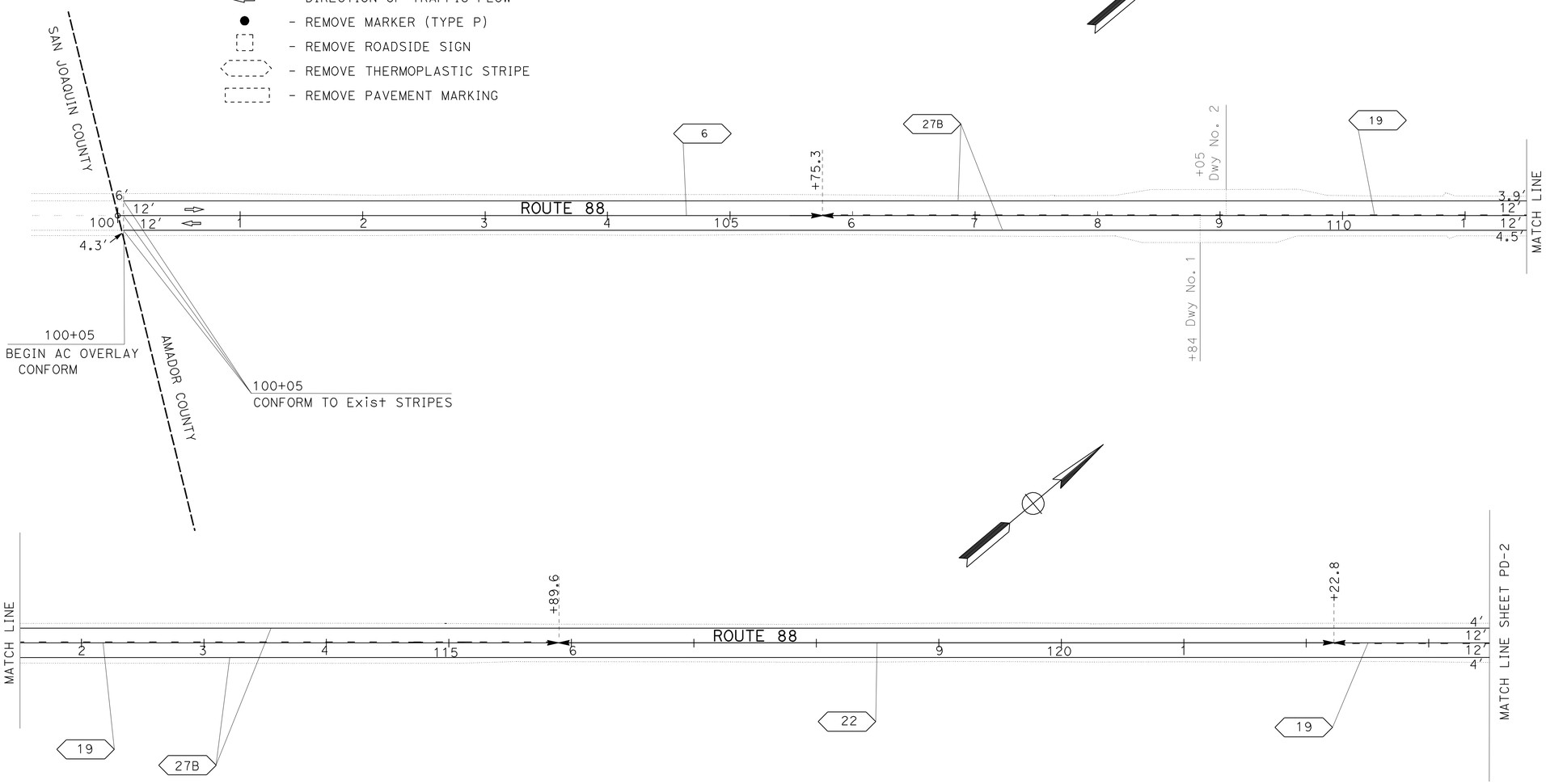

PAVEMENT DELINEATION AND SIGN PLAN

SCALE: 1" = 50′

PD-1

THIS PLAN ACCURATE FOR PAVEMENT DELINEATION AND SIGN WORK ONLY

REVISED BY	DATE REVISED
RS	05-5-11

CALCULATED-DESIGNED BY: CECILE NGUYEN
CHECKED BY: HASSAN TAHA
FUNCTIONAL SUPERVISOR: MOHAMMED QATAMI

STATE OF CALIFORNIA - DEPARTMENT OF TRANSPORTATION
Caltrans® TRAFFIC DESIGN

LAST REVISION 00-00-00 | DATE PLOTTED => 19-OCT-2011 | TIME PLOTTED => 10:20

Dist	COUNTY	ROUTE	POST MILES TOTAL PROJECT	SHEET No.	TOTAL SHEETS
10	Ama	88	0.0/5.5	132	216

Hassan Taha 05-15-11
REGISTERED CIVIL ENGINEER DATE

10-17-11
PLANS APPROVAL DATE

REGISTERED PROFESSIONAL ENGINEER
HASSAN M.TAHA
No. 60130
Exp 6/30/12
CIVIL
STATE OF CALIFORNIA

THE STATE OF CALIFORNIA OR ITS OFFICERS OR AGENTS SHALL NOT BE RESPONSIBLE FOR THE ACCURACY OR COMPLETENESS OF SCANNED COPIES OF THIS PLAN SHEET.

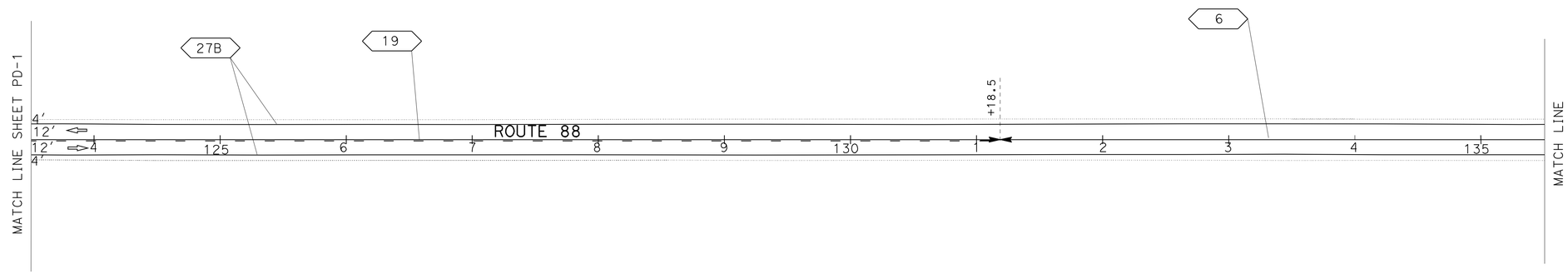

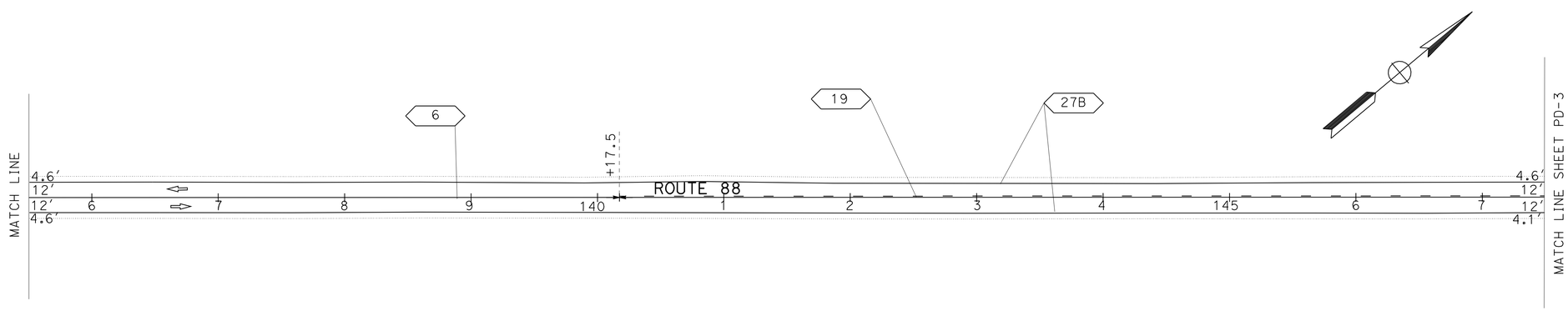

PAVEMENT DELINEATION AND SIGN PLAN

SCALE: 1" = 50'

PD-2

THIS PLAN ACCURATE FOR PAVEMENT DELINEATION AND SIGN WORK ONLY

REVISED BY	RS
DATE REVISED	05-5-11
CECILE NGUYEN	
HASSAN TAHA	
CALCULATED-DESIGNED BY	
CHECKED BY	
FUNCTIONAL SUPERVISOR	
MOHAMMED QATAMI	

STATE OF CALIFORNIA - DEPARTMENT OF TRANSPORTATION
Caltrans®
TRAFFIC DESIGN

LAST REVISION 00-00-00
DATE PLOTTED => 19-OCT-2011
TIME PLOTTED => 10:14

Dist	COUNTY	ROUTE	POST MILES TOTAL PROJECT	SHEET No.	TOTAL SHEETS
10	Ama	88	0.0/5.5	133	216

Hassan Taha 05-15-11
REGISTERED CIVIL ENGINEER DATE

10-17-11
PLANS APPROVAL DATE

REGISTERED PROFESSIONAL ENGINEER
HASSAN M. TAHA
No. 60130
Exp. 6/30/12
CIVIL
STATE OF CALIFORNIA

THE STATE OF CALIFORNIA OR ITS OFFICERS OR AGENTS SHALL NOT BE RESPONSIBLE FOR THE ACCURACY OR COMPLETENESS OF SCANNED COPIES OF THIS PLAN SHEET.

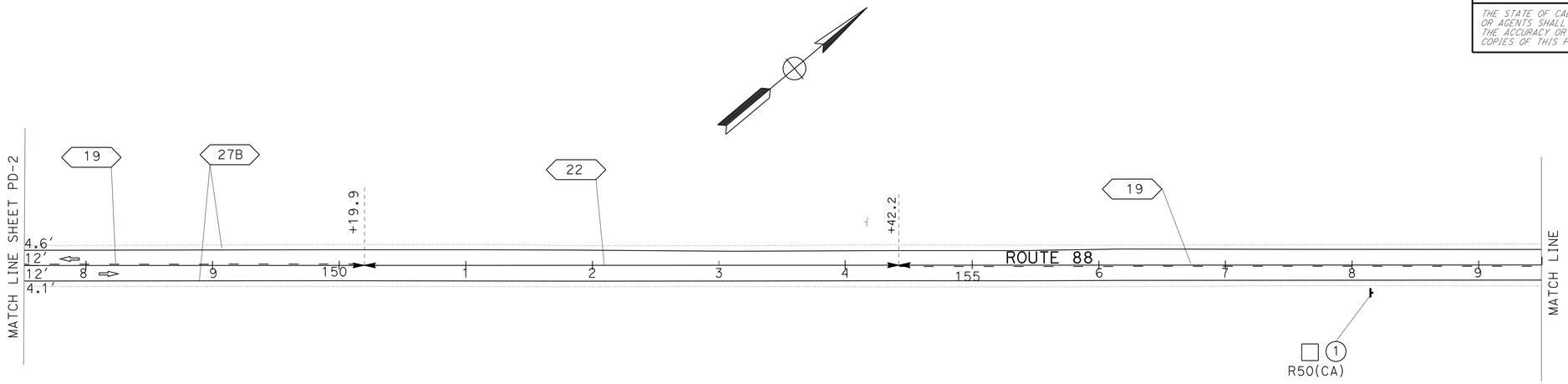

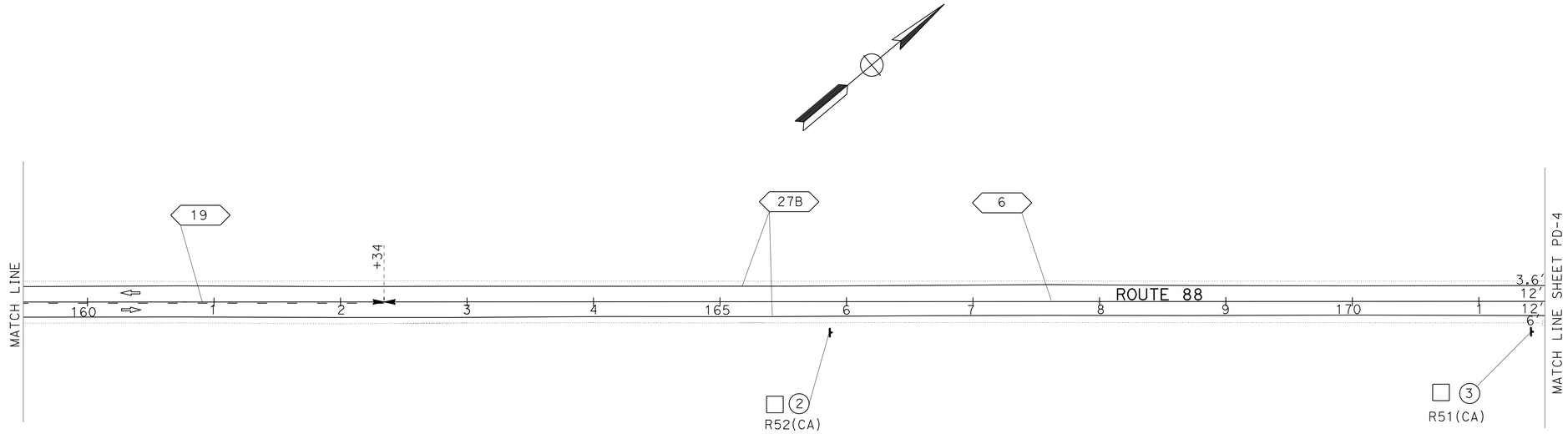

PAVEMENT DELINEATION AND SIGN PLAN

SCALE: 1" = 50'

PD-3

THIS PLAN ACCURATE FOR PAVEMENT DELINEATION AND SIGN WORK ONLY

STATE OF CALIFORNIA - DEPARTMENT OF TRANSPORTATION
Caltrans
TRAFFIC DESIGN

FUNCTIONAL SUPERVISOR: MOHAMMED QATAMI
CALCULATED-DESIGNED BY: CECILE NGUYEN
CHECKED BY: HASSAN TAHA
REVISED BY: RS
DATE REVISED: 05-5-11

LAST REVISION 00-00-00
DATE PLOTTED => 19-OCT-2011
TIME PLOTTED => 10:14

Dist	COUNTY	ROUTE	POST MILES TOTAL PROJECT	SHEET No.	TOTAL SHEETS
10	Ama	88	0.0/5.5	134	216

REGISTERED CIVIL ENGINEER 04-30-10 DATE

10-17-11
PLANS APPROVAL DATE

REGISTERED PROFESSIONAL ENGINEER
HASSAN M. TAHA
No. 60130
Exp. 6/30/10
CIVIL
STATE OF CALIFORNIA

THE STATE OF CALIFORNIA OR ITS OFFICERS OR AGENTS SHALL NOT BE RESPONSIBLE FOR THE ACCURACY OR COMPLETENESS OF SCANNED COPIES OF THIS PLAN SHEET.

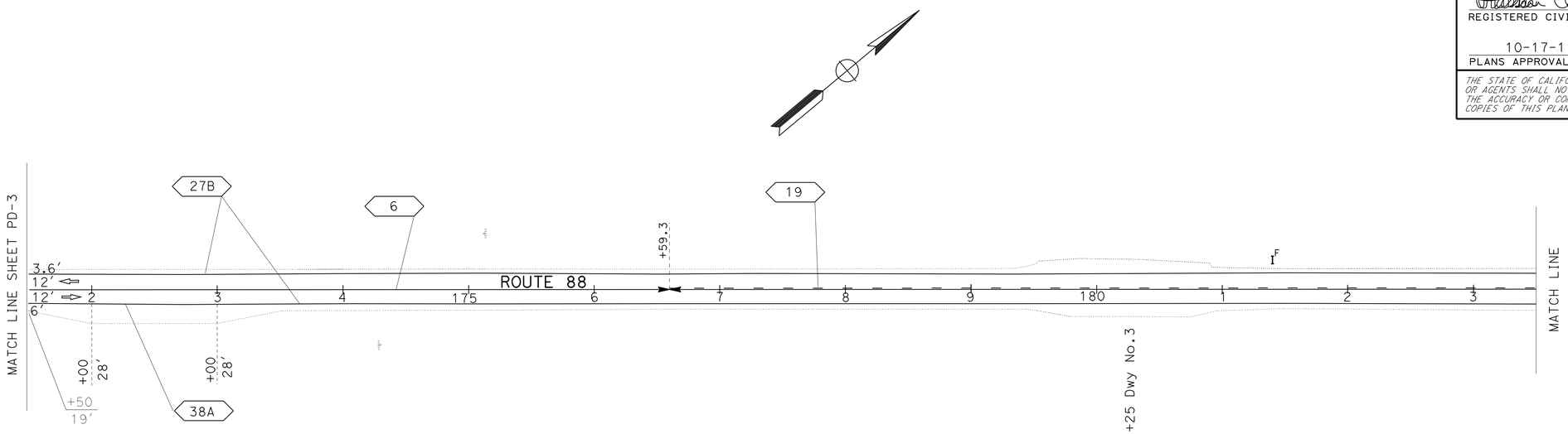

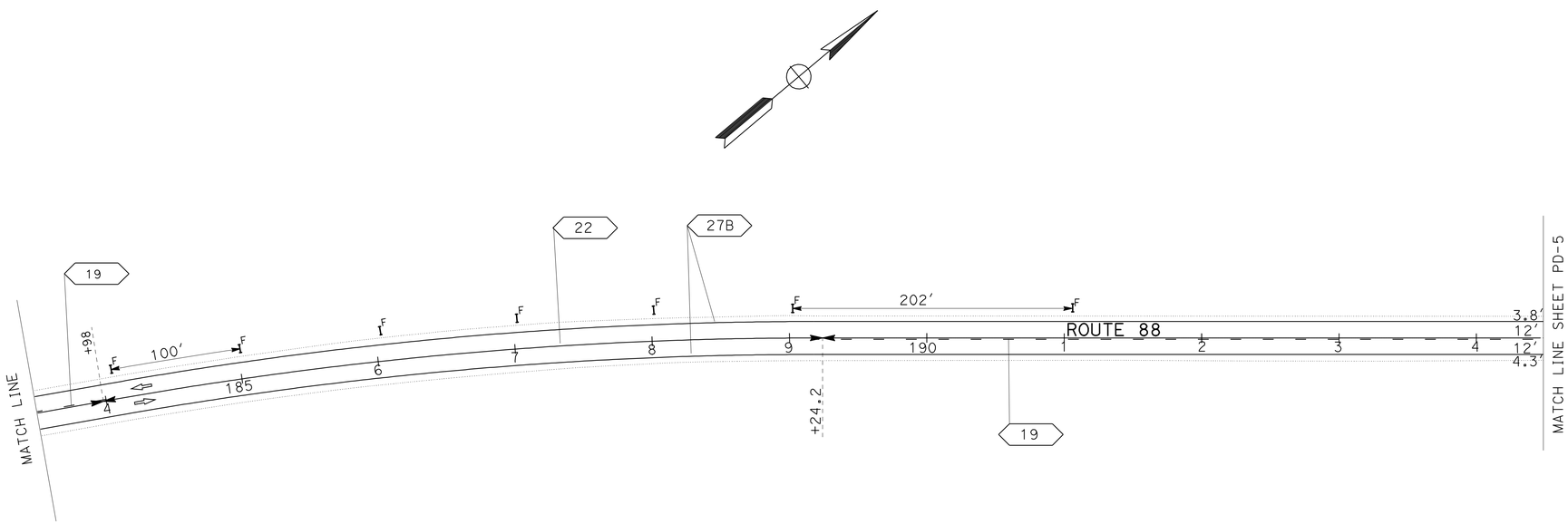

PAVEMENT DELINEATION AND SIGN PLAN

THIS PLAN ACCURATE FOR PAVEMENT DELINEATION AND SIGN WORK ONLY

SCALE: 1" = 50′

PD-4

STATE OF CALIFORNIA - DEPARTMENT OF TRANSPORTATION
Caltrans®
TRAFFIC DESIGN

FUNCTIONAL SUPERVISOR: MOHAMMED QATAMI
CALCULATED-DESIGNED BY: CECILE NGUYEN
CHECKED BY: HASSAN TAHA
REVISED BY: RS
DATE REVISED: 05-5-11

LAST REVISION 00-00-00
DATE PLOTTED => 19-OCT-2011
TIME PLOTTED => 10:14

Dist	COUNTY	ROUTE	POST MILES TOTAL PROJECT	SHEET No.	TOTAL SHEETS
10	Ama	88	0.0/5.5	135	216

Hassan Taha 05-15-11
REGISTERED CIVIL ENGINEER DATE

10-17-11
PLANS APPROVAL DATE

REGISTERED PROFESSIONAL ENGINEER
HASSAN M. TAHA
No. 60130
Exp. 6/30/12
CIVIL
STATE OF CALIFORNIA

THE STATE OF CALIFORNIA OR ITS OFFICERS OR AGENTS SHALL NOT BE RESPONSIBLE FOR THE ACCURACY OR COMPLETENESS OF SCANNED COPIES OF THIS PLAN SHEET.

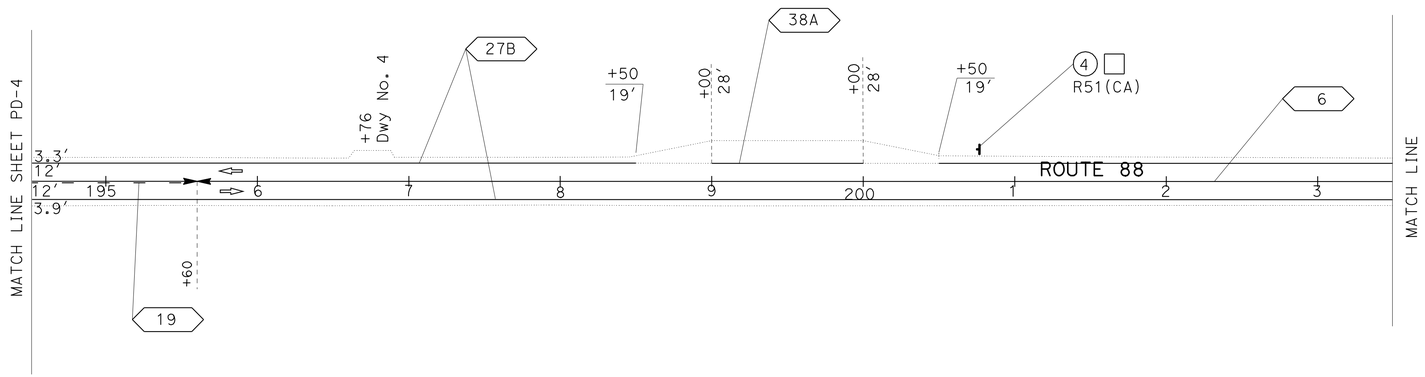

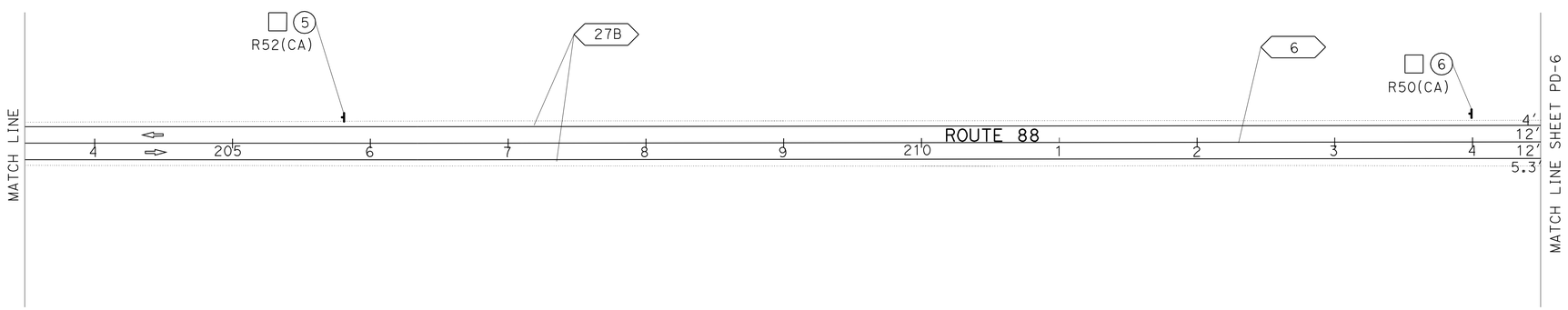

PAVEMENT DELINEATION AND SIGN PLAN

SCALE: 1" = 50'

PD-5

THIS PLAN ACCURATE FOR PAVEMENT DELINEATION AND SIGN WORK ONLY

REVISED BY	RS
DATE REVISED	05-5-11
CALCULATED-DESIGNED BY	CECILE NGUYEN
CHECKED BY	HASSAN TAHA
FUNCTIONAL SUPERVISOR	MOHAMMED QATAMI

STATE OF CALIFORNIA - DEPARTMENT OF TRANSPORTATION
Caltrans
TRAFFIC DESIGN

LAST REVISION 00-00-00
DATE PLOTTED => 19-OCT-2011
TIME PLOTTED => 10:14

Dist	COUNTY	ROUTE	POST MILES TOTAL PROJECT	SHEET No.	TOTAL SHEETS
10	Ama	88	0.0/5.5	136	216

Hassan Taha 05-15-11
REGISTERED CIVIL ENGINEER DATE

10-17-11
PLANS APPROVAL DATE

REGISTERED PROFESSIONAL ENGINEER
HASSAN M.TAHA
No. 60130
Exp. 6/30/12
CIVIL
STATE OF CALIFORNIA

THE STATE OF CALIFORNIA OR ITS OFFICERS OR AGENTS SHALL NOT BE RESPONSIBLE FOR THE ACCURACY OR COMPLETENESS OF SCANNED COPIES OF THIS PLAN SHEET.

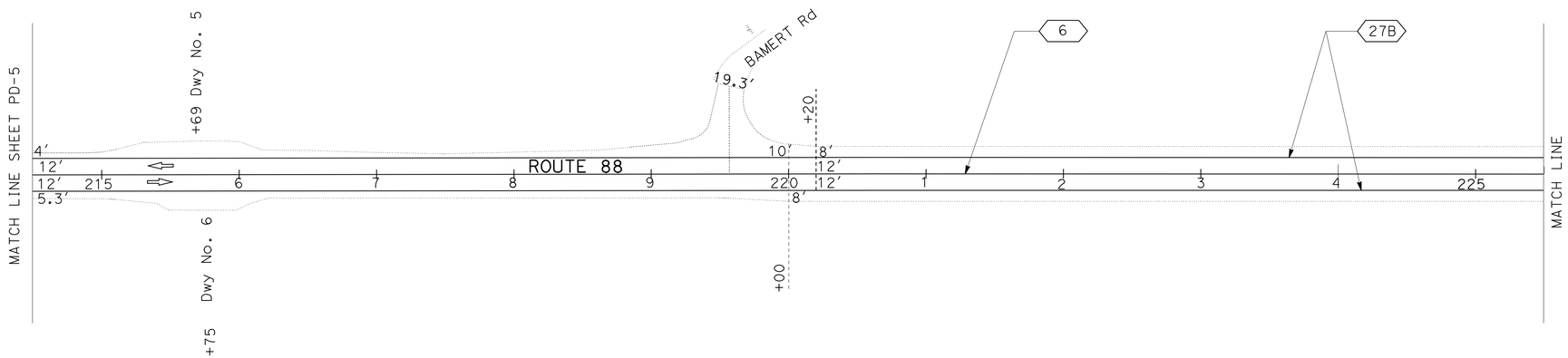

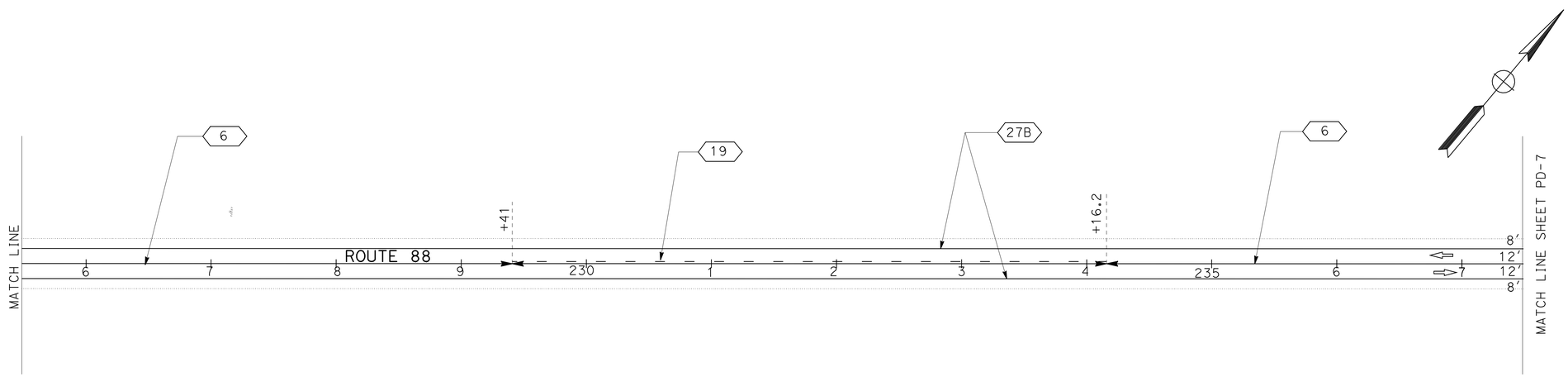

PAVEMENT DELINEATION AND SIGN PLAN

THIS PLAN ACCURATE FOR PAVEMENT DELINEATION AND SIGN WORK ONLY

SCALE: 1" = 50'

PD-6

STATE OF CALIFORNIA - DEPARTMENT OF TRANSPORTATION
Caltrans® TRAFFIC DESIGN

FUNCTIONAL SUPERVISOR: MOHAMMED QATAMI
CALCULATED-DESIGNED BY: CECILE NGUYEN
CHECKED BY: HASSAN TAHA
REVISED BY: RS
DATE REVISED: 05-5-11

LAST REVISION 00-00-00 | DATE PLOTTED => 19-OCT-2011 | TIME PLOTTED => 10:14

Dist	COUNTY	ROUTE	POST MILES TOTAL PROJECT	SHEET No.	TOTAL SHEETS
10	Ama	88	0.0/5.5	137	216

Hassan Taha 05-15-11
REGISTERED CIVIL ENGINEER DATE

10-17-11
PLANS APPROVAL DATE

REGISTERED PROFESSIONAL ENGINEER
HASSAN M. TAHA
No. 60130
Exp. 6/30/12
CIVIL
STATE OF CALIFORNIA

THE STATE OF CALIFORNIA OR ITS OFFICERS OR AGENTS SHALL NOT BE RESPONSIBLE FOR THE ACCURACY OR COMPLETENESS OF SCANNED COPIES OF THIS PLAN SHEET.

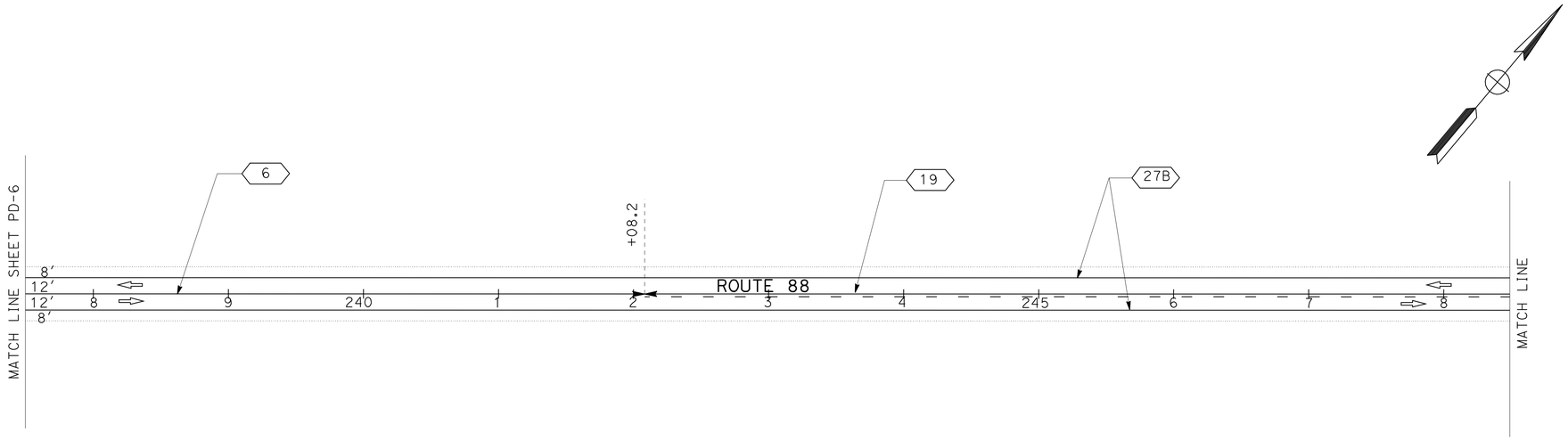

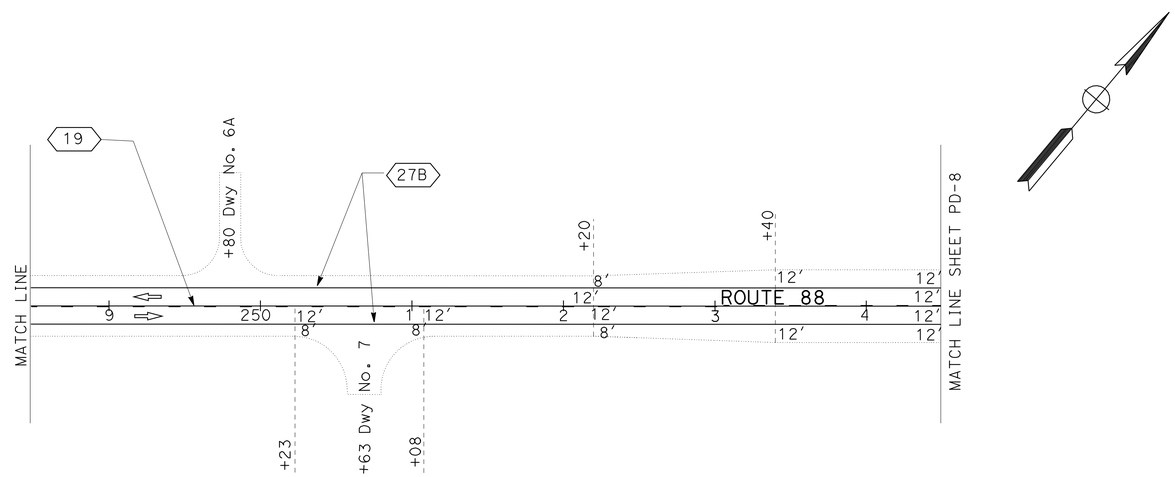

PAVEMENT DELINEATION AND SIGN PLAN

SCALE: 1" = 50'

PD-7

THIS PLAN ACCURATE FOR PAVEMENT DELINEATION AND SIGN WORK ONLY

REVISED BY	RS
DATE REVISED	05-5-11
CECILE NGUYEN	
HASSAN TAHA	
CALCULATED-DESIGNED BY	
CHECKED BY	
FUNCTIONAL SUPERVISOR	
MOHAMMED QATAMI	

STATE OF CALIFORNIA - DEPARTMENT OF TRANSPORTATION
Caltrans
TRAFFIC DESIGN

LAST REVISION 00-00-00
DATE PLOTTED => 19-OCT-2011
TIME PLOTTED => 10:14

Dist	COUNTY	ROUTE	POST MILES TOTAL PROJECT	SHEET No.	TOTAL SHEETS
10	Ama	88	0.0/5.5	138	216

Hassan Taha 05-15-11
REGISTERED CIVIL ENGINEER DATE

10-17-11
PLANS APPROVAL DATE

REGISTERED PROFESSIONAL ENGINEER
HASSAN M. TAHA
No. 60130
Exp. 6/30/12
CIVIL
STATE OF CALIFORNIA

THE STATE OF CALIFORNIA OR ITS OFFICERS OR AGENTS SHALL NOT BE RESPONSIBLE FOR THE ACCURACY OR COMPLETENESS OF SCANNED COPIES OF THIS PLAN SHEET.

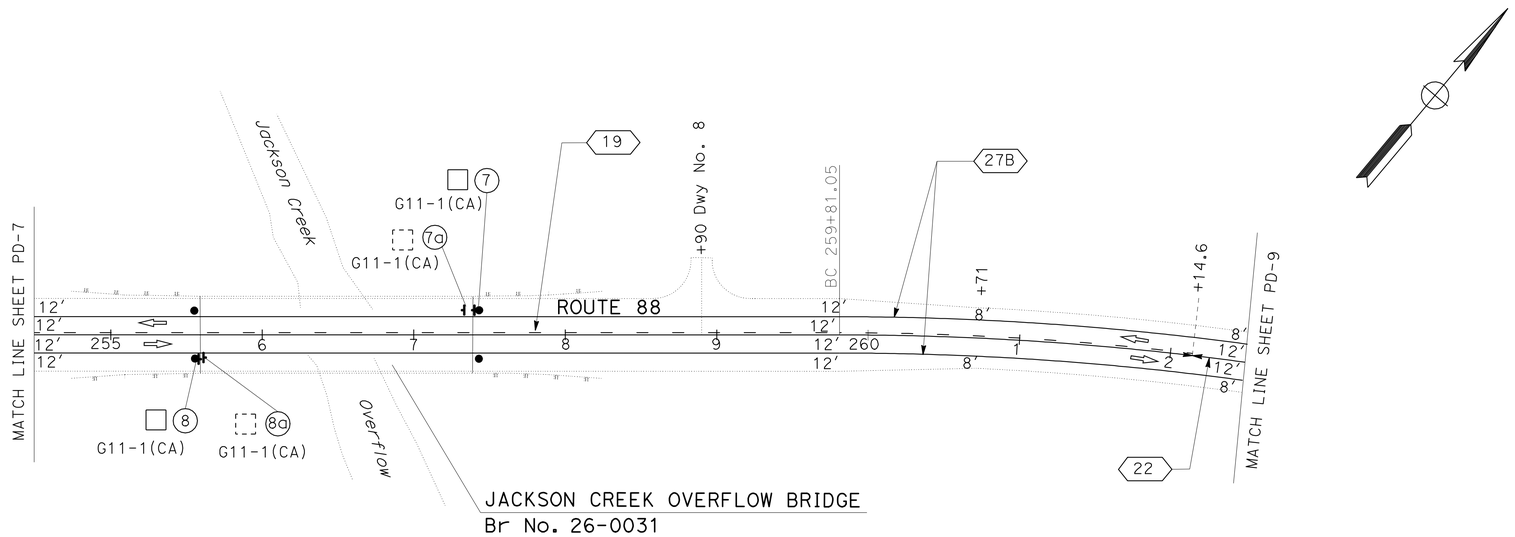

THIS PLAN ACCURATE FOR PAVEMENT DELINEATION AND SIGN WORK ONLY

PAVEMENT DELINEATION AND SIGN PLAN

SCALE: 1" = 50′

PD-8

REVISED BY	RS
DATE REVISED	05-5-11
CALCULATED-DESIGNED BY	CECILE NGUYEN
CHECKED BY	HASSAN TAHA
FUNCTIONAL SUPERVISOR	MOHAMMED QATAMI

STATE OF CALIFORNIA - DEPARTMENT OF TRANSPORTATION
Caltrans® TRAFFIC DESIGN

LAST REVISION 00-00-00 | DATE PLOTTED => 19-OCT-2011 | TIME PLOTTED => 10:14

Dist	COUNTY	ROUTE	POST MILES TOTAL PROJECT	SHEET No.	TOTAL SHEETS
10	Ama	88	0.0/5.5	139	216

Hassan Taha 05-15-11
REGISTERED CIVIL ENGINEER DATE

10-17-11
PLANS APPROVAL DATE

REGISTERED PROFESSIONAL ENGINEER HASSAN M. TAHA No. 60130 Exp. 6/30/12 CIVIL STATE OF CALIFORNIA

THE STATE OF CALIFORNIA OR ITS OFFICERS OR AGENTS SHALL NOT BE RESPONSIBLE FOR THE ACCURACY OR COMPLETENESS OF SCANNED COPIES OF THIS PLAN SHEET.

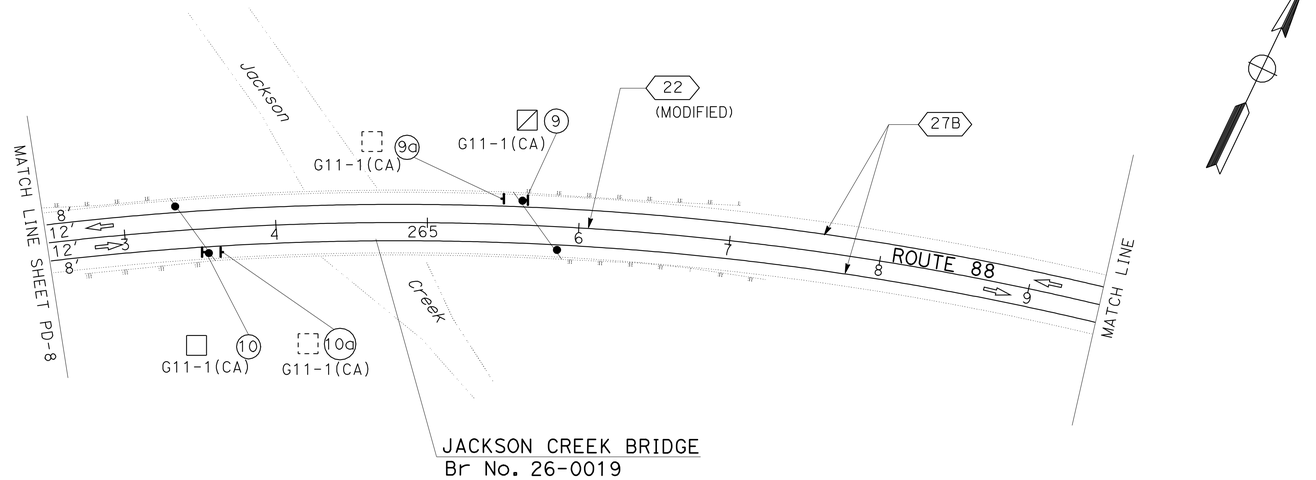

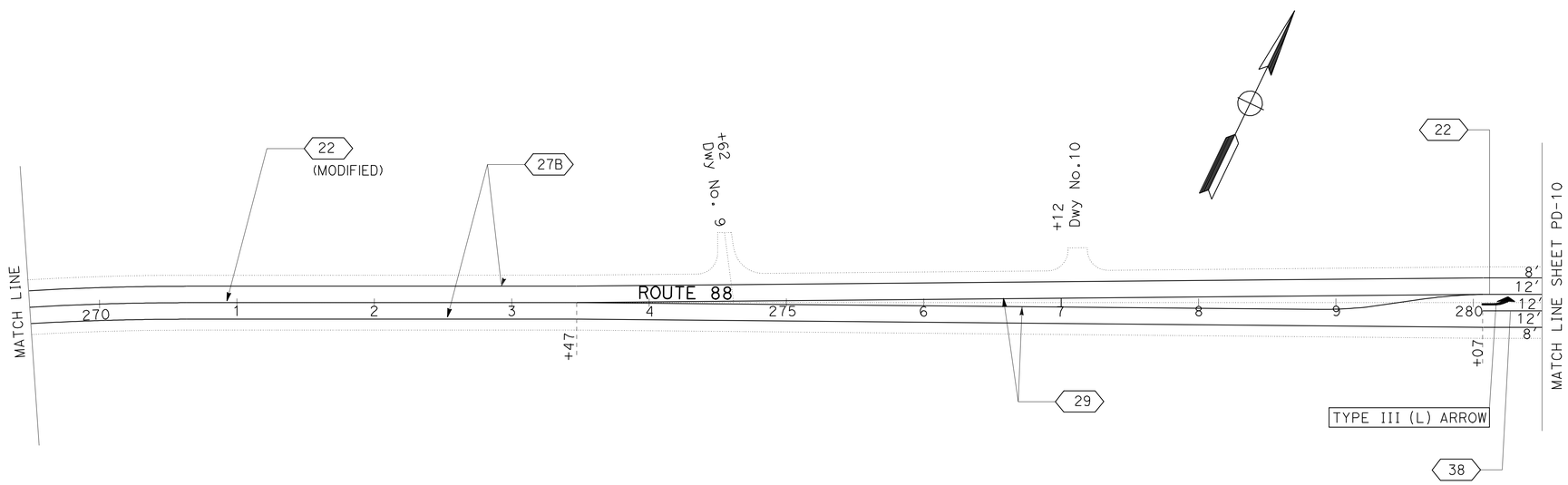

PAVEMENT DELINEATION AND SIGN PLAN

SCALE: 1" = 50'

PD-9

THIS PLAN ACCURATE FOR PAVEMENT DELINEATION AND SIGN WORK ONLY

CALCULATED-DESIGNED BY	CECILE NGUYEN
CHECKED BY	HASSAN TAHA
REVISED BY	RS
DATE REVISED	05-5-11
FUNCTIONAL SUPERVISOR	MOHAMMED QATAMI

STATE OF CALIFORNIA - DEPARTMENT OF TRANSPORTATION
Caltrans TRAFFIC DESIGN

LAST REVISION 00-00-00 | DATE PLOTTED => 19-OCT-2011 | TIME PLOTTED => 10:14

Dist	COUNTY	ROUTE	POST MILES TOTAL PROJECT	SHEET No.	TOTAL SHEETS
10	Ama	88	0.0/5.5	140	216

Hassan Taha 05-15-11
REGISTERED CIVIL ENGINEER DATE

10-17-11
PLANS APPROVAL DATE

REGISTERED PROFESSIONAL ENGINEER
HASSAN M. TAHA
No. 60130
Exp. 6/30/12
CIVIL
STATE OF CALIFORNIA

THE STATE OF CALIFORNIA OR ITS OFFICERS OR AGENTS SHALL NOT BE RESPONSIBLE FOR THE ACCURACY OR COMPLETENESS OF SCANNED COPIES OF THIS PLAN SHEET.

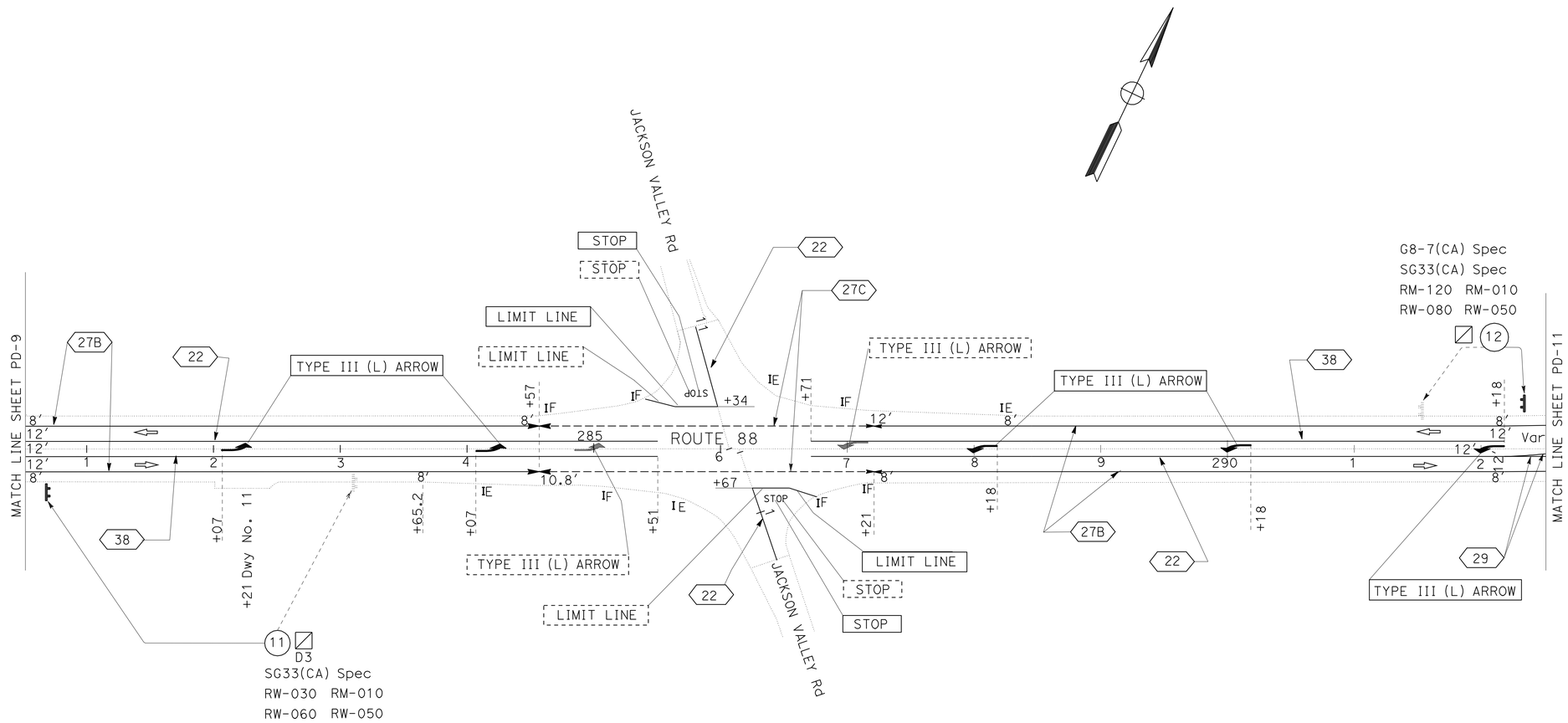

PAVEMENT DELINEATION AND SIGN PLAN

SCALE: 1" = 50'

THIS PLAN ACCURATE FOR PAVEMENT DELINEATION AND SIGN WORK ONLY

PD-10

CALCULATED-DESIGNED BY	CECILE NGUYEN
CHECKED BY	HASSAN TAHA
REVISED BY	RS
DATE REVISED	05-5-11
FUNCTIONAL SUPERVISOR	MOHAMMED QATAMI

STATE OF CALIFORNIA - DEPARTMENT OF TRANSPORTATION
Caltrans® TRAFFIC DESIGN

LAST REVISION 00-00-00 | DATE PLOTTED => 19-OCT-2011 | TIME PLOTTED => 10:14

Dist	COUNTY	ROUTE	POST MILES TOTAL PROJECT	SHEET No.	TOTAL SHEETS
10	Ama	88	0.0/5.5	141	216

Hassan Taha 05-15-11
REGISTERED CIVIL ENGINEER DATE

10-17-11
PLANS APPROVAL DATE

REGISTERED PROFESSIONAL ENGINEER
HASSAN M. TAHA
No. 60130
Exp 6/30/12
CIVIL
STATE OF CALIFORNIA

THE STATE OF CALIFORNIA OR ITS OFFICERS OR AGENTS SHALL NOT BE RESPONSIBLE FOR THE ACCURACY OR COMPLETENESS OF SCANNED COPIES OF THIS PLAN SHEET.

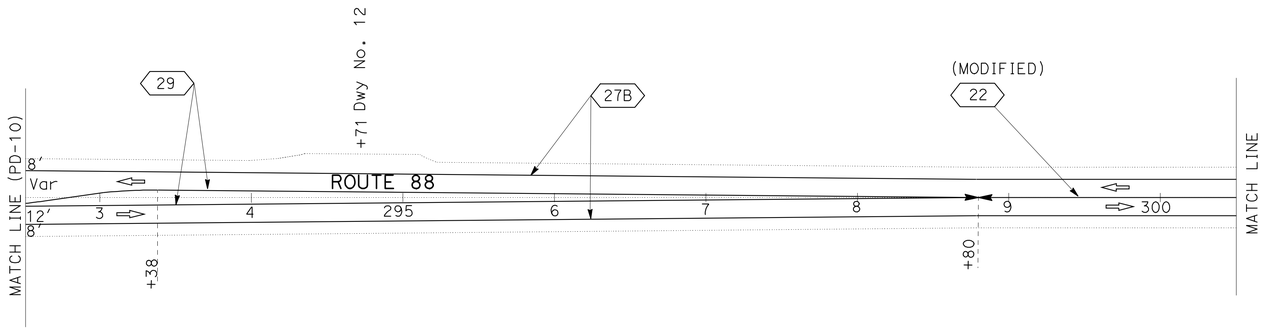

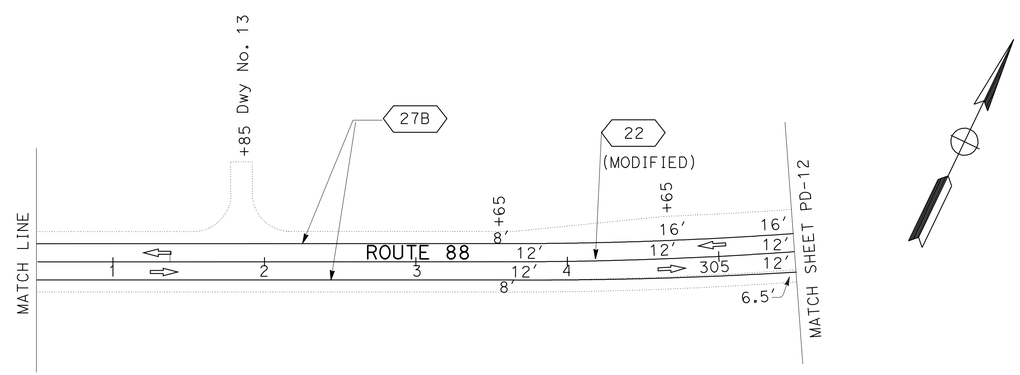

PAVEMENT DELINEATION AND SIGN PLAN

SCALE: 1" = 50'

PD-11

THIS PLAN ACCURATE FOR PAVEMENT DELINEATION AND SIGN WORK ONLY

REVISED BY	RS
DATE REVISED	05-5-11
CECILE NGUYEN	
HASSAN TAHA	
CALCULATED-DESIGNED BY	
CHECKED BY	
FUNCTIONAL SUPERVISOR	
MOHAMMED QATAMI	

STATE OF CALIFORNIA - DEPARTMENT OF TRANSPORTATION
Caltrans
TRAFFIC DESIGN

LAST REVISION 00-00-00
DATE PLOTTED => 19-OCT-2011
TIME PLOTTED => 10:05

Dist	COUNTY	ROUTE	POST MILES TOTAL PROJECT	SHEET No.	TOTAL SHEETS
10	Ama	88	0.0/5.5	142	216

Hassan Taha 05-15-11
REGISTERED CIVIL ENGINEER DATE

10-17-11
PLANS APPROVAL DATE

REGISTERED PROFESSIONAL ENGINEER
HASSAN M. TAHA
No. 60130
Exp 6/30/12
CIVIL
STATE OF CALIFORNIA

THE STATE OF CALIFORNIA OR ITS OFFICERS OR AGENTS SHALL NOT BE RESPONSIBLE FOR THE ACCURACY OR COMPLETENESS OF SCANNED COPIES OF THIS PLAN SHEET.

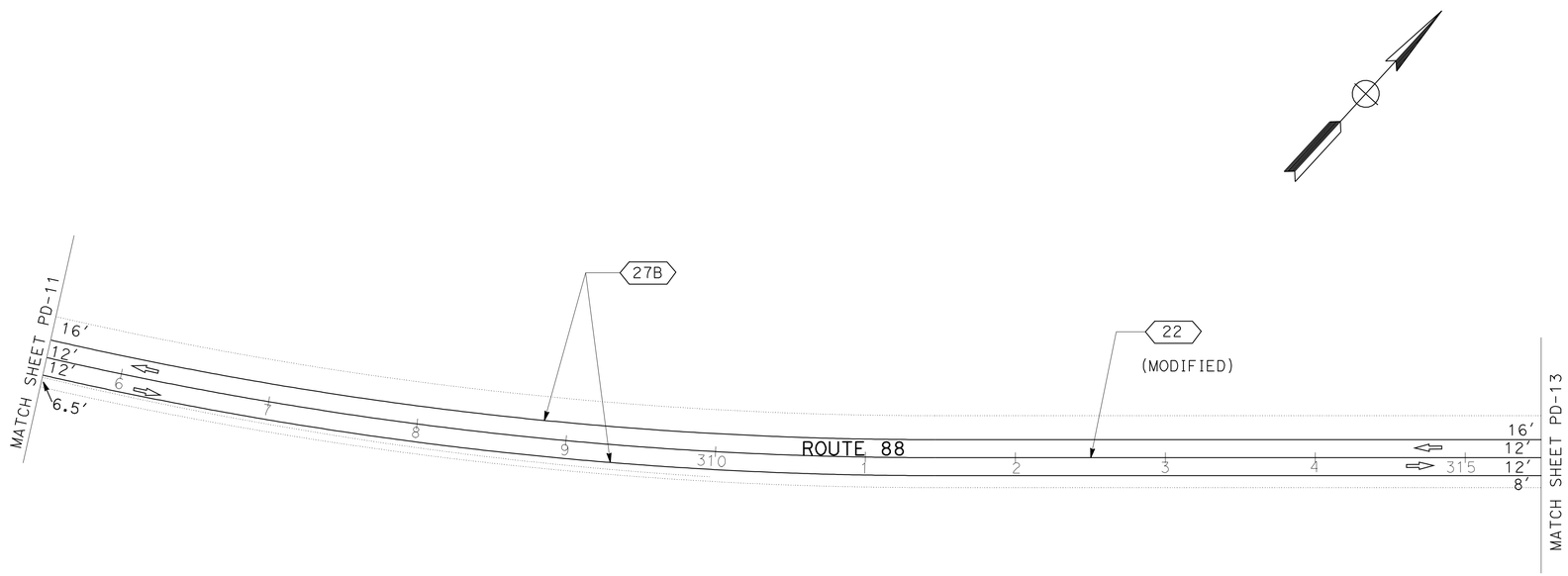

PAVEMENT DELINEATION AND SIGN PLAN

THIS PLAN ACCURATE FOR PAVEMENT DELINEATION AND SIGN WORK ONLY

SCALE: 1" = 50′

PD-12

STATE OF CALIFORNIA - DEPARTMENT OF TRANSPORTATION
Caltrans
TRAFFIC DESIGN

FUNCTIONAL SUPERVISOR: MOHAMMED QATAMI

CALCULATED-DESIGNED BY: CECILE NGUYEN
CHECKED BY: HASSAN TAHA

REVISED BY: RS
DATE REVISED: 05-5-11

LAST REVISION 00-00-00
DATE PLOTTED => 19-OCT-2011
TIME PLOTTED => 10:05

Dist	COUNTY	ROUTE	POST MILES TOTAL PROJECT	SHEET No.	TOTAL SHEETS
10	Ama	88	0.0/5.5	143	216

Hassan Taha 05-15-11
REGISTERED CIVIL ENGINEER DATE

10-17-11
PLANS APPROVAL DATE

REGISTERED PROFESSIONAL ENGINEER
HASSAN M. TAHA
No. 60130
Exp. 6/30/12
CIVIL
STATE OF CALIFORNIA

THE STATE OF CALIFORNIA OR ITS OFFICERS OR AGENTS SHALL NOT BE RESPONSIBLE FOR THE ACCURACY OR COMPLETENESS OF SCANNED COPIES OF THIS PLAN SHEET.

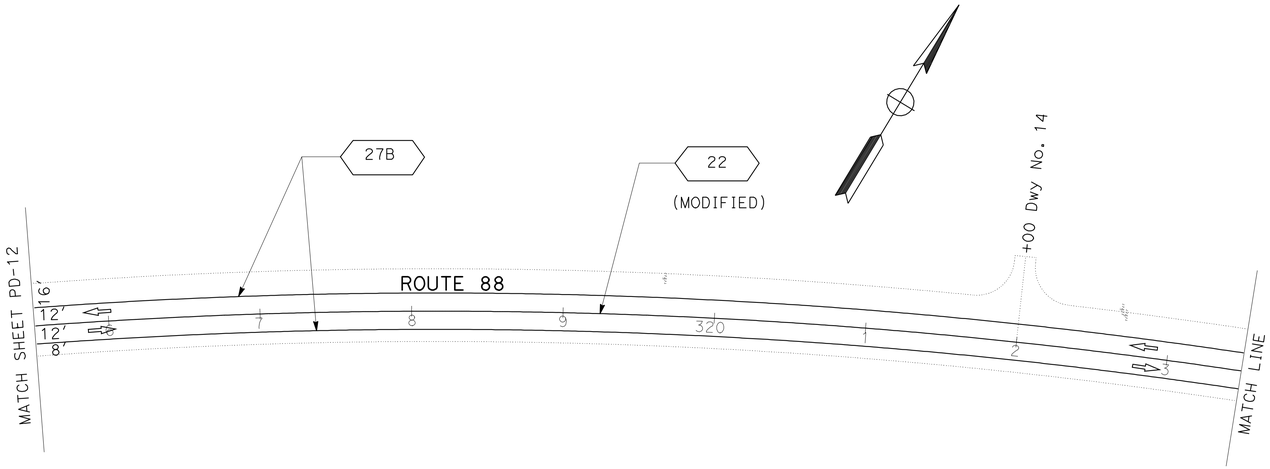

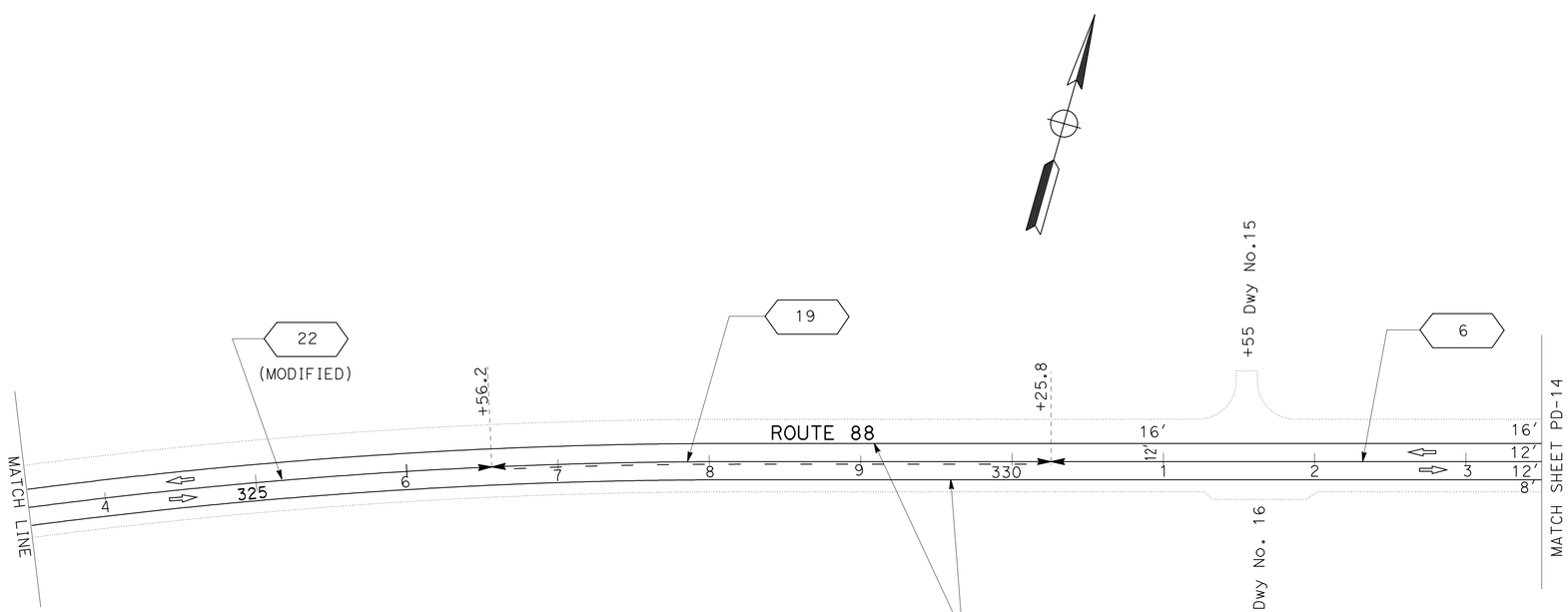

PAVEMENT DELINEATION AND SIGN PLAN

SCALE: 1" = 50'

PD-13

THIS PLAN ACCURATE FOR PAVEMENT DELINEATION AND SIGN WORK ONLY

STATE OF CALIFORNIA - DEPARTMENT OF TRANSPORTATION
Caltrans®
TRAFFIC DESIGN

FUNCTIONAL SUPERVISOR: MOHAMMED QATAMI

CALCULATED-DESIGNED BY: CECILE NGUYEN
CHECKED BY: HASSAN TAHA

REVISED BY: RS
DATE REVISED: 05-5-11

LAST REVISION: 00-00-00
DATE PLOTTED => 19-OCT-2011
TIME PLOTTED => 10:05

Dist	COUNTY	ROUTE	POST MILES TOTAL PROJECT	SHEET No.	TOTAL SHEETS
10	Ama	88	0.0/5.5	144	216

Hassan Taha 05-15-11
REGISTERED CIVIL ENGINEER DATE

10-17-11
PLANS APPROVAL DATE

REGISTERED PROFESSIONAL ENGINEER
HASSAN M. TAHA
No. 60130
Exp 6/30/12
CIVIL
STATE OF CALIFORNIA

THE STATE OF CALIFORNIA OR ITS OFFICERS OR AGENTS SHALL NOT BE RESPONSIBLE FOR THE ACCURACY OR COMPLETENESS OF SCANNED COPIES OF THIS PLAN SHEET.

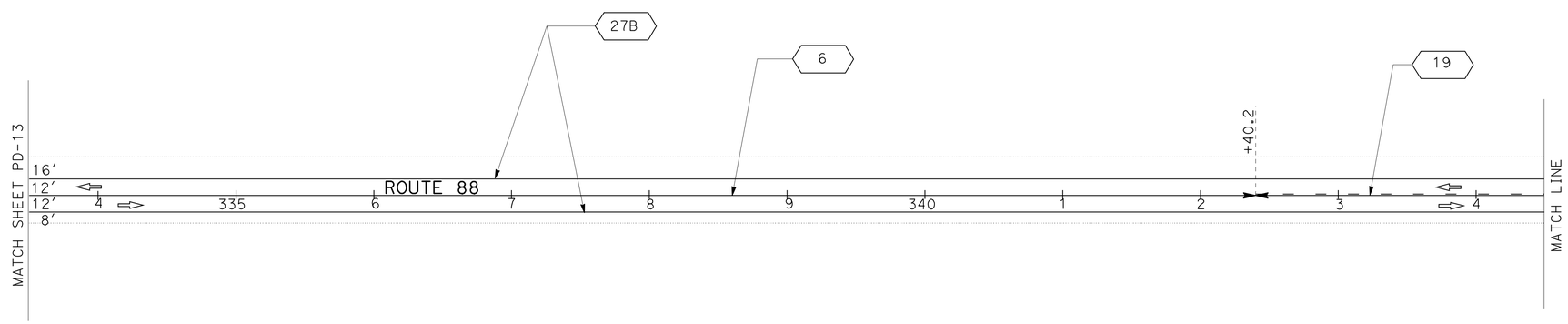

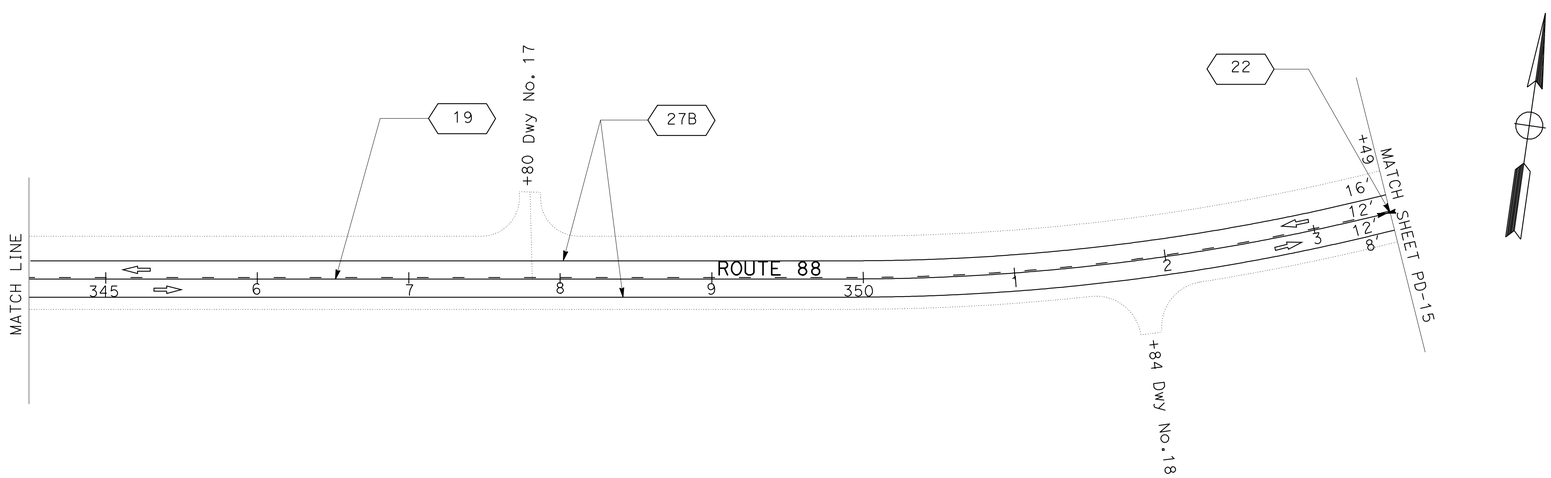

PAVEMENT DELINEATION AND SIGN PLAN

SCALE: 1" = 50'

PD-14

THIS PLAN ACCURATE FOR PAVEMENT DELINEATION AND SIGN WORK ONLY.

REVISED BY	RS
DATE REVISED	05-5-11
CALCULATED-DESIGNED BY	CECILE NGUYEN
CHECKED BY	HASSAN TAHA
FUNCTIONAL SUPERVISOR	MOHAMMED QATAMI

STATE OF CALIFORNIA - DEPARTMENT OF TRANSPORTATION
Caltrans
TRAFFIC DESIGN

LAST REVISION 00-00-00
DATE PLOTTED => 19-OCT-2011
TIME PLOTTED => 10:05

Dist	COUNTY	ROUTE	POST MILES TOTAL PROJECT	SHEET No.	TOTAL SHEETS
10	Ama	88	0.0/5.5	145	216

Hassan Taha 05-15-11
REGISTERED CIVIL ENGINEER DATE

10-17-11
PLANS APPROVAL DATE

REGISTERED PROFESSIONAL ENGINEER
HASSAN M. TAHA
No. 60130
Exp. 6/30/12
CIVIL
STATE OF CALIFORNIA

THE STATE OF CALIFORNIA OR ITS OFFICERS OR AGENTS SHALL NOT BE RESPONSIBLE FOR THE ACCURACY OR COMPLETENESS OF SCANNED COPIES OF THIS PLAN SHEET.

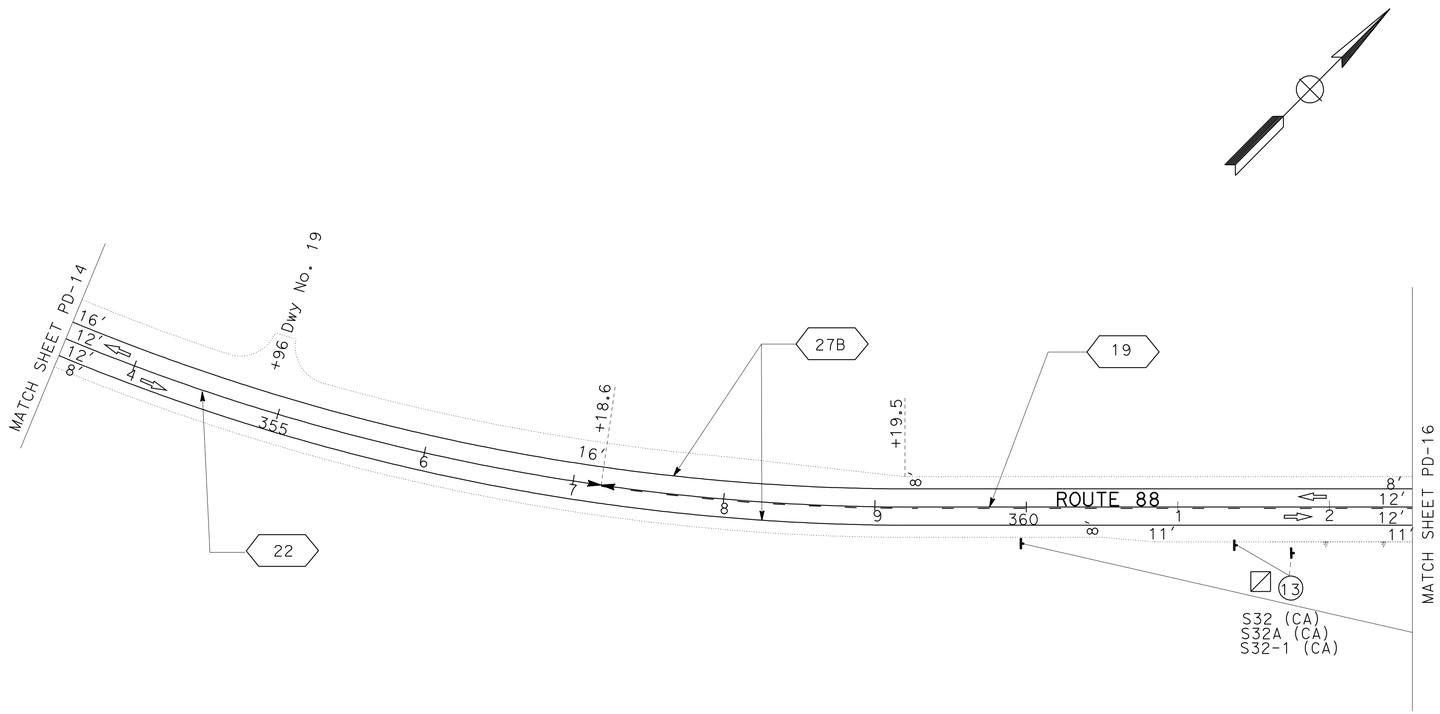

PAVEMENT DELINEATION AND SIGN PLAN

SCALE: 1" = 50'

PD-15

THIS PLAN ACCURATE FOR PAVEMENT DELINEATION AND SIGN WORK ONLY

STATE OF CALIFORNIA - DEPARTMENT OF TRANSPORTATION
Caltrans
TRAFFIC DESIGN

FUNCTIONAL SUPERVISOR: MOHAMMED QATAMI

CALCULATED-DESIGNED BY: CECILE NGUYEN
CHECKED BY: HASSAN TAHA

REVISED BY: RS
DATE REVISED: 05-5-11

LAST REVISION 00-00-00
DATE PLOTTED => 19-OCT-2011
TIME PLOTTED => 10:05

Dist	COUNTY	ROUTE	POST MILES TOTAL PROJECT	SHEET No.	TOTAL SHEETS
10	Ama	88	0.0/5.5	146	216

Hassan Taha 05-15-11
REGISTERED CIVIL ENGINEER DATE

10-17-11
PLANS APPROVAL DATE

REGISTERED PROFESSIONAL ENGINEER
HASSAN M. TAHA
No. 60130
Exp 6/30/12
CIVIL
STATE OF CALIFORNIA

THE STATE OF CALIFORNIA OR ITS OFFICERS OR AGENTS SHALL NOT BE RESPONSIBLE FOR THE ACCURACY OR COMPLETENESS OF SCANNED COPIES OF THIS PLAN SHEET.

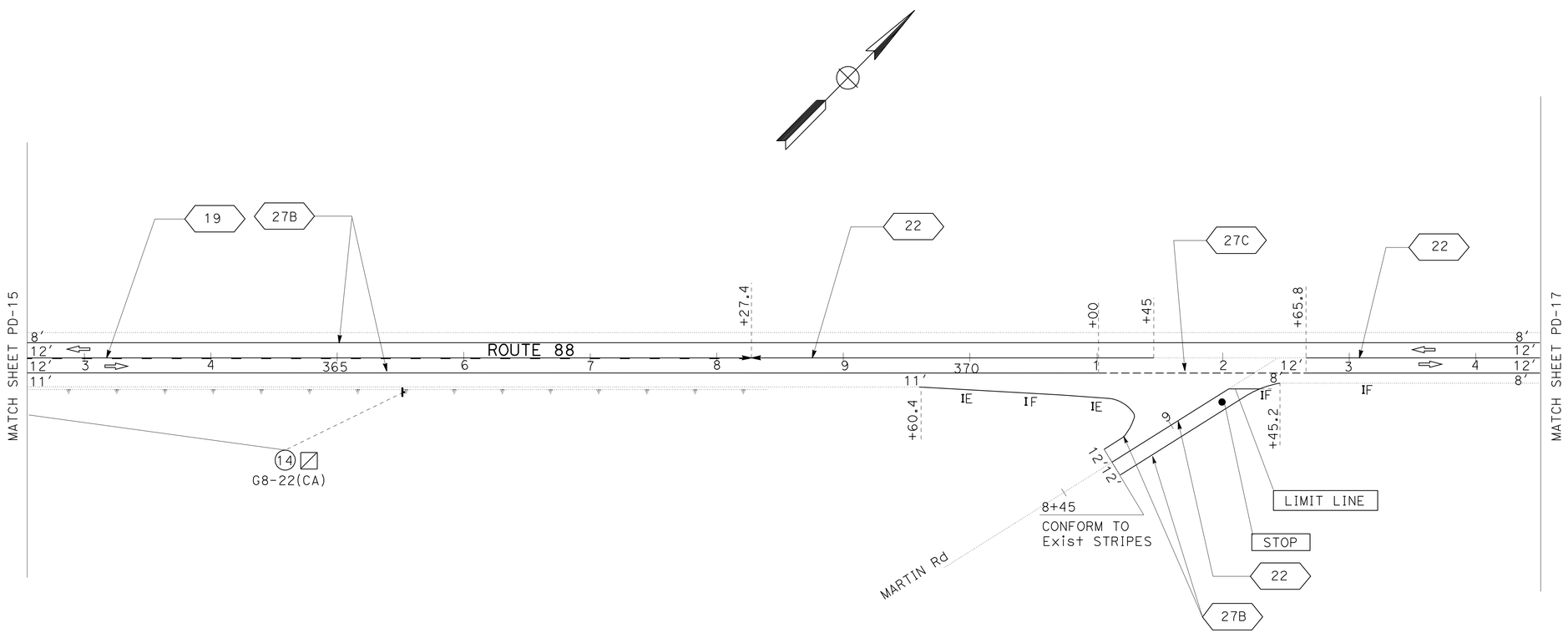

PAVEMENT DELINEATION AND SIGN PLAN

SCALE: 1" = 50'

PD-16

THIS PLAN ACCURATE FOR PAVEMENT DELINEATION AND SIGN WORK ONLY

STATE OF CALIFORNIA - DEPARTMENT OF TRANSPORTATION
Caltrans® TRAFFIC DESIGN

FUNCTIONAL SUPERVISOR: MOHAMMED QATAMI

CALCULATED-DESIGNED BY: CECILE NGUYEN
CHECKED BY: HASSAN TAHA

REVISED BY: RS
DATE REVISED: 05-5-11

LAST REVISION DATE PLOTTED => 19-OCT-2011
TIME PLOTTED => 10:05
00-00-00

Dist	COUNTY	ROUTE	POST MILES TOTAL PROJECT	SHEET No.	TOTAL SHEETS
10	Ama	88	0.0/5.5	147	216

Hassan Taha 05-15-11
REGISTERED CIVIL ENGINEER DATE

10-17-11
PLANS APPROVAL DATE

REGISTERED PROFESSIONAL ENGINEER HASSAN M. TAHA No. 60130 Exp 6/30/12 CIVIL STATE OF CALIFORNIA

THE STATE OF CALIFORNIA OR ITS OFFICERS OR AGENTS SHALL NOT BE RESPONSIBLE FOR THE ACCURACY OR COMPLETENESS OF SCANNED COPIES OF THIS PLAN SHEET.

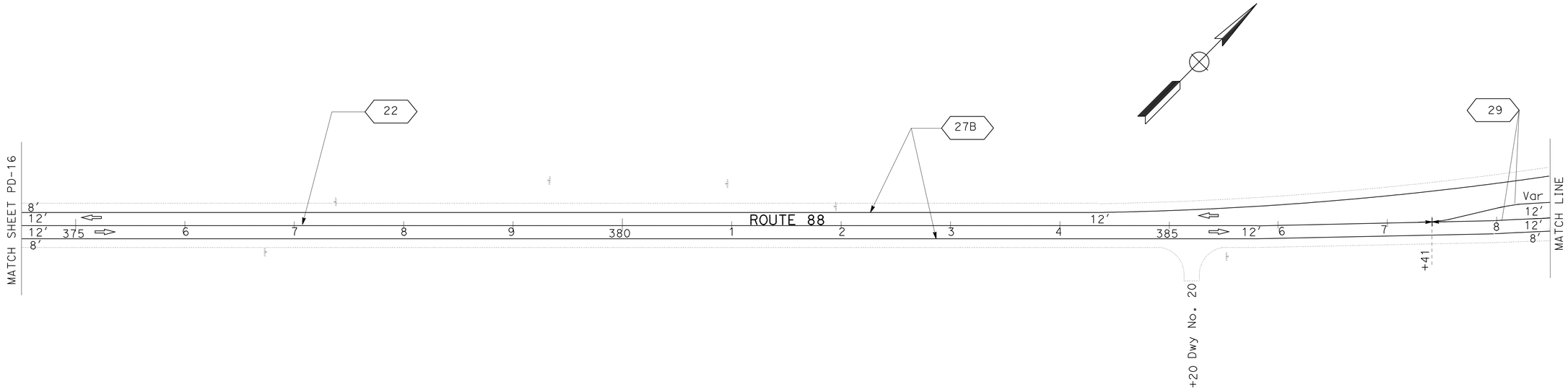

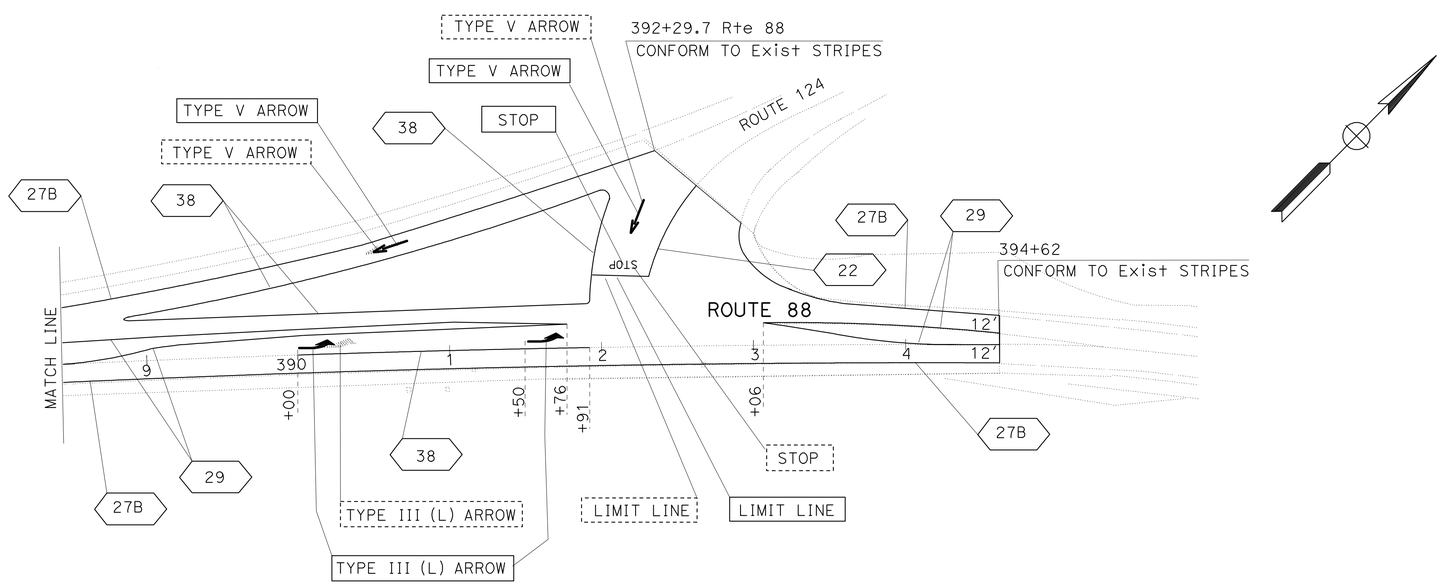

PAVEMENT DELINEATION AND SIGN PLAN

THIS PLAN ACCURATE FOR PAVEMENT DELINEATION AND SIGN WORK ONLY.

SCALE: 1" = 50'

PD-17

STATE OF CALIFORNIA - DEPARTMENT OF TRANSPORTATION
Caltrans® **TRAFFIC DESIGN**

FUNCTIONAL SUPERVISOR: MOHAMMED QATAMI

CALCULATED-DESIGNED BY: CECILE NGUYEN
CHECKED BY: HASSAN TAHA

REVISED BY: RS
DATE REVISED: 05-5-11

LAST REVISION 00-00-00
DATE PLOTTED => 19-OCT-2011
TIME PLOTTED => 10:05

Dist	COUNTY	ROUTE	POST MILES TOTAL PROJECT	SHEET No.	TOTAL SHEETS
10	Ama	88	0.0/5.5	148	216

REGISTERED CIVIL ENGINEER DATE

10-17-11
PLANS APPROVAL DATE

REGISTERED PROFESSIONAL ENGINEER HASSAN M. TAHA No. 60130 Exp 6/30/12 CIVIL STATE OF CALIFORNIA

THE STATE OF CALIFORNIA OR ITS OFFICERS OR AGENTS SHALL NOT BE RESPONSIBLE FOR THE ACCURACY OR COMPLETENESS OF SCANNED COPIES OF THIS PLAN SHEET.

PAVEMENT DELINEATION ITEMS

SHEET No.	LOCATION	REMOVE THERMO-PLASTIC TRAFFIC STRIPE	THERMOPLASTIC TRAFFIC STRIPE (SPRAYABLE)									REMOVE THERMO-PLASTIC PAVEMENT MARKING	THERMOPLASTIC PAVEMENT MARKING				(N) REMOVE PAVEMENT MARKER	PAVEMENT MARKER RETRORELECTIVE			REMOVE MARKER (TYPE P)	DELINEATOR (CLASS 1)	
			BROKEN		SOLID			SOLID & BROKEN		DOUBLE								TYPE				TYPE	
		8" WHITE	4" WHITE	4" YELLOW	4" WHITE	8" WHITE		4" YELLOW		4" YELLOW													
			DETAIL		DETAIL			DETAIL		DETAIL													
								19															
	Sta - Sta	DETAIL 38	27C	6	27B	38A	38	R	L	22	29		LIMIT LINE	STOP	TYPE III (L) ARROW	TYPE V (L) ARROW		D	H	G		F	E
	ROUTE 88	LF		LF	LF			LF		LF		SQFT	SQFT				EA	EA			EA	EA	
PD-1	100+05 - 105+90			585.0	4,688.8													13					
	105+90 - 115+89.6							999.6										22	43				
	115+89.6 - 122+22.8									633.2								55					
	122+22.8 - 123+49.4								126.6									4	6				
PD-2	123+49.4 - 131+18.5				4,800.8				769.1									17	33				
	131+18.5 - 140+17.5			899.0														20					
	140+17.5 - 147+49.8							732.3										16	31				
PD-3	147+49.8 - 150+19.9				4,804.6			270.1									1082	7	12				
	150+19.9 - 154+42.2									422.3								37					
	154+42.2 - 162+34.0								791.8									17	34				
	162+34.0 - 171+52.1			918.1														20					
PD-4	171+52.1 - 176+59.3			507.2	4,493.2													12				8	
	176+59.3 - 183+89.0					100.0		729.7										16	31				
	183+89.0 - 189+24.2									535.2								47					
	189+24.2 - 194+48.7								524.5									12	23				
PD-5	194+48.7 - 195+60.0				3,901.8				111.3									3	6		4		
	195+60.0 - 214+49.6			2,000.9		100.0												43					
PD-6	214+49.6 - 229+41.0			1,491.4	4,200.0													32			4		
	229+41.0 - 234+16.2							475.2										11	21				
	234+16.2 - 237+49.6			133.4														4	7				
PD-7	235+49.6 - 242+08.2			658.6	3,799.5													15					
	242+08.2 - 254+49.4																	27	53				
PD-8	254+49.4 - 262+14.6				1,571.2				1,241.2														
	262+14.6 - 262+35.0							765.2										17	33				
	262+35.0 - 280+49.5									20.4								4					
PD-9	262+35.0 - 273+47.0				3,629.0													95					
	273+47.0 - 280+07.0									1,112.0	1,320.0				42.0			57					
	280+07.0 - 280+49.5									42.5	42.5							3		3			
PD-10	280+49.5 - 285+51.0				2,403.0										210.0			92		92			
	284+57.0 - 287+21.0		528.0																				
	286+71.0 - 292+18.0						1,048.5			1,048.5								5					
	292+18.0 - 292+51.0										66.0												
	NB JACKSON VALLEY Rd								66.0				53.2	22.0				8				3	2
	SB JACKSON VALLEY Rd	422							60.0			238.4	57.2	22.0				7				3	2
	SUBTOTAL	422	528.0	7,193.6	38,291.9	200.0	1,048.5	3,972.1	3,690.5	3,814.1	1,428.5	238.4	110.4	44.0	252.0			738	333	95	8	14	4
	TOTAL 1	422			60,167.2							238.4		406.4				1,166				18	

NOTES:
1. (N) - NOT A SEPARATE PAY ITEM, FOR INFORMATION ONLY.
2. * QUANTITY ADDED TO QUANTITIES ON THQ-2.

PAVEMENT DELINEATION QUANTITIES

PDQ-1

STATE OF CALIFORNIA - DEPARTMENT OF TRANSPORTATION
Caltrans TRAFFIC DESIGN

FUNCTIONAL SUPERVISOR: MOHAMMED QATAMI
CECILE NGUYEN | HASSAN TAHA
REVISED BY: RS | DATE REVISED: 05-5-11
CALCULATED-DESIGNED BY | CHECKED BY

LAST REVISION 00-00-00 | DATE PLOTTED => 19-OCT-2011 | TIME PLOTTED => 10:05

Dist	COUNTY	ROUTE	POST MILES TOTAL PROJECT	SHEET No.	TOTAL SHEETS
10	Ama	88	0.0/5.5	149	216

REGISTERED CIVIL ENGINEER DATE

10-17-11
PLANS APPROVAL DATE

REGISTERED PROFESSIONAL ENGINEER HASSAN M. TAHA No. 60130 Exp 6/30/12 CIVIL STATE OF CALIFORNIA

THE STATE OF CALIFORNIA OR ITS OFFICERS OR AGENTS SHALL NOT BE RESPONSIBLE FOR THE ACCURACY OR COMPLETENESS OF SCANNED COPIES OF THIS PLAN SHEET.

PAVEMENT DELINEATION ITEMS

SHEET No.	LOCATION	REMOVE THERMO-PLASTIC TRAFFIC STRIPE	THERMOPLASTIC TRAFFIC STRIPE (SPRAYABLE)									REMOVE THERMO-PLASTIC PAVEMENT MARKING	THERMOPLASTIC PAVEMENT MARKING				(N) REMOVE PAVEMENT MARKER	PAVEMENT MARKER RETRORELECTIVE			REMOVE MARKER (TYPE P)	DELINEATOR (CLASS 1)	
			BROKEN		SOLID			SOLID & BROKEN		DOUBLE								TYPE				TYPE	
		8" WHITE	4" WHITE	4" YELLOW	4" WHITE	8" WHITE		4" YELLOW		4" YELLOW			LIMIT LINE	STOP	TYPE III (L) ARROW	TYPE V (L) ARROW		D	H	G		F	E
			DETAIL		DETAIL			DETAIL		DETAIL													
		DETAIL 38	27C	6	27B	38A	38	19 R	19 L	22	29												
	Sta - Sta																						
	ROUTE 88	LF	LF		LF			LF		LF		SQFT	SQFT				EA	EA			EA	EA	
PD-11	292+51.0 - 305+50.4				2,598.8					1,299.4								110					
PD-12	305+50.4 - 315+50.3				1,999.8					999.9								85					
PD-13	315+50.3 - 326+56.2									1,105.9								94					
	326+56.2 - 330+25.8				3,599.4				369.6									9	16				
	330+25.8 - 333+50.0			324.2														8					
PD-14	333+50.0 - 342+40.2																	20					
	342+40.2 - 353+49.2			890.2	3,998.4			1,109.0										24	47				
	353+49.2 - 353+51.4									2.4								2					
PD-15	353+51.4 - 357+18.6				1,806.8					367.2								33					
	357+18.6 - 362+54.8								536.2									12	23				
PD-16	362+54.8 - 368+27.4		170.3		2,293.4				572.6									13	25				
	368+27.4 - 374+51.5									624.1								54					
	MARTIN Rd				297.5					143.8		45	23	22				14					
PD-17	374+51.5 - 395+00.0	192			4,095.0		715.0			1,365.5	1,280.0	109	21	22		66		171		31		3	2
	SUBTOTAL	192	170.3	1,214.4	20,689.1		715.0	1,109.0	1,478.4	5,908.2	1,280.0	154	44	44	84	66		649	111	31		5	
	TOTAL 2	192	32,564.4									154	238.0					791				5	
	TOTAL 1	422	60,167.2									238	406.4					1,166			8	18	
	TOTAL	614*	92,731.6									392*	644.4					1,957				23	

(N) REMOVE PAVEMENT MARKER: 680

PAVEMENT DELINEATION QUANTITIES

PDQ-2

REVISED BY	RS	CALCULATED-DESIGNED BY	CECILE NGUYEN
DATE REVISED	05-5-11	CHECKED BY	HASSAN TAHA
FUNCTIONAL SUPERVISOR	MOHAMMED QATAMI		

STATE OF CALIFORNIA - DEPARTMENT OF TRANSPORTATION
Caltrans® TRAFFIC DESIGN

LAST REVISION 00-00-00 | DATE PLOTTED => 19-OCT-2011 | TIME PLOTTED => 10:06

Dist	COUNTY	ROUTE	POST MILES TOTAL PROJECT	SHEET No.	TOTAL SHEETS
10	Ama	88	0.0/5.5	150	216

Hassan Taha 05-15-11
REGISTERED CIVIL ENGINEER DATE

10-17-11
PLANS APPROVAL DATE

REGISTERED PROFESSIONAL ENGINEER HASSAN M. TAHA No. 60130 Exp. 6/30/12 CIVIL STATE OF CALIFORNIA

THE STATE OF CALIFORNIA OR ITS OFFICERS OR AGENTS SHALL NOT BE RESPONSIBLE FOR THE ACCURACY OR COMPLETENESS OF SCANNED COPIES OF THIS PLAN SHEET.

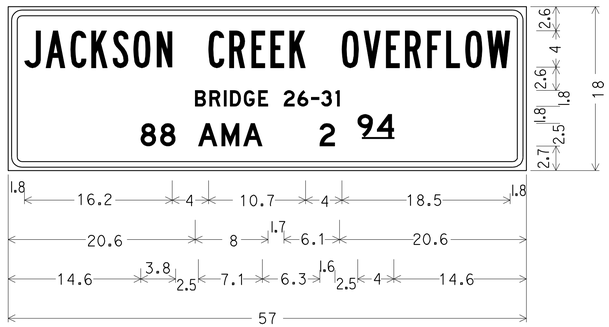

1.5" Radius, 0.6" Border, 0.4" Indent, White on White;
[JACKSON CREEK OVERFLOW] Black B;
[BRIDGE 26-31] Black D; [88 AMA] Black D;
[2 94] Black D;

SIGN No. 7&8

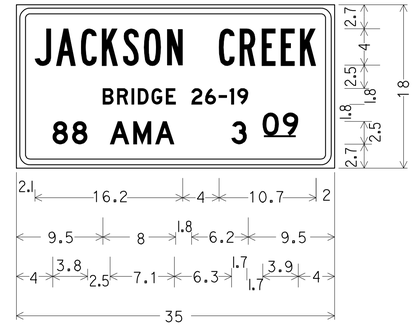

1.5" Radius, 0.6" Border, 0.4" Indent, White on White;
[JACKSON CREEK] Black B;
[BRIDGE 26-19] Black D;
[88 AMA] Black D;
[3] Black D; [09] Black D;

SIGN No. 9&10

SIGN ITEMS

SHEET No.	SIGN No.	SIGN CODE	SIGN MESSAGE	PANEL SIZE (L X D)	POST SIZE	REMOVE ROADSIDE SIGN (EA)	RELOCATE ROADSIDE SIGN (EA)	ROADSIDE SIGN (ONE POST) (EA)	SIGN MATERIALS: FURNISH SINGLE SHEET ALUMINUM SIGN 0.063" - UNFRAMED (SQFT)	FURNISH SINGLE SHEET ALUMINUM SIGN 0.080" - UNFRAMED (SQFT)	SINGLE FACED	BACKGROUND SHEETING COLOR	BACKGROUND RETROFLECTIVE ASTM TYPE	LEGEND SHEETING COLOR	LEGEND RETROFLECTIVE ASTM TYPE	GRAFFITI FILM STANDARD	GRAFFITI FILM PREMIUM
PD-3	1	R50(CA)	TURNOUT 1/4 MILE	30" x 20"	4" x 4"			1	4.3		×	WHITE	III	BLACK			×
	2	R52(CA)	SLOWER TRAFFIC USE TURNOUT	30" x 12"	4" x 4"			1	2.5		×	WHITE	III	BLACK			×
	3	R51(CA)	TURNOUT	36" x 30"	4" x 4"			1	7.5		×	WHITE	III	BLACK			×
	4	R51(CA)	TURNOUT	36" x 30"	4" x 4"			1	7.5		×	WHITE	III	BLACK			×
	5	R52(CA)	SLOWER TRAFFIC USE TURNOUT	30" x 12"	4" x 4"			1	2.5		×	WHITE	III	BLACK			×
	6	R50(CA)	TURNOUT 1/4 MILE	30" x 20"	4" x 4"			1	4.3		×	WHITE	III	BLACK			×
PD-8	7	G11-1(CA)	JACKSON CREEK OVERFLOW	57" x 18"	4" x 4"			1		7.1	×	WHITE	III	BLACK			×
	8							1		7.1	×	WHITE	III	BLACK			×
	7a					1											
	8a					1											
PD-9	9		JACKSON CREEK	35" x 18"	4" x 4"			1	4.5		×	WHITE	III	BLACK			×
	10							1	4.5		×	WHITE	III	BLACK			×
	9a					1											
	10a					1											
PD-10	11	D3					1										
		SG33(CA) Spec															
		RW-030 RM-010															
		RW-060 RW-050															
	12	G8-7(CA) Spec					1										
		SG33(CA) Spec															
		RM-120 RM-010															
		RW-080 RW-050															
PD-15	13	S32 (CA)					1										
		S32A (CA)															
		S32-1 (CA)															
PD-16	14	G8-22(CA)					1										
					TOTAL	4	4	10	37.6	14.2							

NOTE: EXACT SIGN LOCATIONS TO BE DETERMINED BY THE ENGINEER.

SIGN DETAILS AND QUANTITIES

SQ-1

STATE OF CALIFORNIA - DEPARTMENT OF TRANSPORTATION
Caltrans® TRAFFIC DESIGN

FUNCTIONAL SUPERVISOR: MOHAMMED QATAMI
CALCULATED-DESIGNED BY: CECILE NGUYEN
CHECKED BY: HASSAN TAHA
REVISED BY: RS
DATE REVISED: 05-5-11

LAST REVISION 00-00-00
DATE PLOTTED => 19-OCT-2011
TIME PLOTTED => 10:06

Dist	COUNTY	ROUTE	POST MILES TOTAL PROJECT	SHEET No.	TOTAL SHEETS
10	Ama	88	0.0/5.5	151	216

REGISTERED CIVIL ENGINEER 05-15-11 DATE

10-17-11
PLANS APPROVAL DATE

REGISTERED PROFESSIONAL ENGINEER ERIC C-S CHIN No. 71272 Exp. 12-30-11 CIVIL STATE OF CALIFORNIA

THE STATE OF CALIFORNIA OR ITS OFFICERS OR AGENTS SHALL NOT BE RESPONSIBLE FOR THE ACCURACY OR COMPLETENESS OF SCANNED COPIES OF THIS PLAN SHEET.

ROADWAY ITEMS

LOCATION		ROADWAY					EARTHWORK		
		RUBBERIZED HMA (GAP GRADED)	HOT MIX ASPHALT	JACK COAT	IMPORTED MATERIAL (SHOULDER BACKING)	OBLITERATE SURFACING	ROADWAY EXCAVATION	(N) EMBANKMENT	IMPORTED BORROW
	Sta - Sta	TON			CY	SQYD	CY		
ROUTE 88	100+00 - 395+00	18,319	23,106	56	634.5		23,840	27,610	5,908
	303+62 - 359+24					1704			570
JACKSON VALLEY Rd	0+60 - 1+53								
	10+00 - 11+00	187		1.2	7.2				
RETAINING WALL	361+80 - 368+40						460		
MARTIN ROAD		84			4				
DITCH EXCAVATION							1,394.6		
HMA DIKE PAD			973						
HMA DIKE			1,265.1						
DRIVEWAY			207				550		496
Misc AREAS (OVERSIDE DRAIN)			31						
DIGOUTS			5,270.2						
TOTAL		18,590	30,857.3	57.2	645.5	1704	26,244.6		6,974

DITCH EXCAVATION

LOCATION Sta - Sta	SIDE	DITCH EXCAVATION	
		TRAPEZOIDAL DITCH	V-DITCH
ROUTE 88		CY	CY
223+08-225+50	L+/R+	53.8	
229+00-233+00	L+	44.4	
230+00-232+50	R+	27.8	
233+50-242+50	L+		66.7
234+00-242+50	R+		63.0
243+00-246+50	R+	38.9	
243+00-247+00	L+	44.4	
248+00-249+00	R+		7.4
251+00-255+50	L+	50.0	
251+50-255+50	R+	44.4	
266+40-281+50	L+/R+	335.6	
288+00-298+00	R+		74.1
295+50-304+65	L+	101.7	
301+85-307+00	R+	57.2	
309+50-311+69	L+	24.0	
315+00-318+50	L+	38.9	
321+68-331+50	L+	110.0	
339+92-352+55	L+	140.1	
355+30-360+50	L+	72.2	
SUBTOTAL		1,183.4	211.2
TOTAL		1,394.6 *	

WIRE MESH GATE

LOCATION STATION	SIDE	EA
250+63	R+	1
258+90	L+	1
274+62	L+	1
277+12	L+	1
294+71	L+	1
301+85	L+	1
322+15	L+	1
331+55	L+	1
347+80	L+	1
354+96	L+	1
385+20	R+	1
TOTAL		11

OVERSIDE DRAIN

LOCATION Sta	SIDE	PLACE HMA (Misc AREA)		REMOVE OVERSIDE DRAIN
ROUTE 88		SQYD	TON	EA
110+85	L+/R+	11.74	1.96	2
128+58	L+/R+			2
128+58	L+	5.87	0.98	
132+60	L+/R+	11.74	1.98	2
136+60	L+/R+	11.74	1.96	2
143+33	L+/R+			2
143+33	R+	5.87	0.98	
147+80	L+/R+			2
177+30	R+	5.87	0.98	
189+12	R+	5.87	0.98	
193+43	L+			1
198+17	R+	5.87	0.98	
206+00	L+	5.87	0.98	
208+41	L+/R+	11.74	1.96	2
233+40	L+/R+	11.74	1.96	
242+60	L+/R+	11.74	1.96	
250+10	R+	5.87	0.98	
340+00	L+	5.87	0.98	
340+62	R+	5.87	0.98	
360+95	L+	5.87	0.98	
361+80	R+	5.87	0.98	
TOTAL		181.97	30.38	15

FENCE METAL POST

LOCATION Sta - Sta	SIDE	REMOVE FENCE (TYPE WM)	FENCE (TYPE WM, METAL POST)
ROUTE 88		LF	LF
217+69.3 - 256+10	R+	3,840.7	
217+69.3 - 356+00	R+		3,860.7
220+54.8 - 256+10	L+	3,555.2	
220+54.8 - 256+10	L+		3,555.2
256+40 - 259+02	L+		262.0
257+05 - 260+37.7	R+		332.7
257+30 - 260+37.7	R+	307.7	
257+50 - 259+02	L+	152.0	
263+10 - 275+46.5	L+	1,236.5	
264+80 - 275+46.5	L+		1,066.5
265+10 - 276+60	R+		1,150.0
266+73 - 276+60	R+	987.0	
282+50.5 - 284+65	L+	214.5	227.0
294+50 - 308+45	R+	1,395.0	1,395.0
295+25 - 369+30	L+		7,505.0
295+25 - 369+80	L+	7,455.0	
374+50 - 385+80	L+	1,130.0	1,130.0
375+40 - 385+80	R+	1,040.0	1,040.0
TOTAL		21,313.6	21,524.1

COLD PLANE ASPHALT CONCRETE PAVEMENT

LOCATION	Sta - Sta		AREA SQYD
ROUTE 88 (T-1)	100+00 - 100+30		284
	263+15 - 263+45	Beg Br	213
	265+73 - 266+03	END Br	213
	392+00 - 392+30		317
	394+74 - 395+04		137
JACKSON VALLEY Rd	10+70 - 11+00		108
	0+60 - 0+90		107
MARTIN Rd	8+45 - 8+75		80
BAMERT Rd	0+34 - 0+64		78
DIGOUTS			31,621.4
		TOTAL	33,158.4

TEMPORARY CONSTRUCTION ENTRANCE

LOCATION STATION	SIDE	EA
250+70	L+/R+	2
251+20	R+	1
267+25	R+	1
267+45	L+/R+	2
301+70	L+	1
359+68	L+/R+	2
360+60	L+	1
369+20	L+/R+	2
TOTAL		12

RETAINING WALL ITEMS

LOCATION Sta - Sta	STRUCTURE EXCAVATION (RETAINING WALL)	STRUCTURE BACKFILL (RETAINING WALL)	STRUCTURAL CONCRETE (RETAINING WALL)	BAR REINFORCING STEEL (RETAINING WALL)	CL 2 AB	CABLE RAILING	MINOR CONCRETE (GUTTER)	Conc BARRIER (TYPE 60D)
ROUTE 88	CY	CY	CY	LB	CY	LF	CY	LF
361+80 - 368+40 R+	2,151	1,200	560	48,100	391	660	24.4	660

NOTES:

1. (N) - NOT A SEPARATE PAY ITEM, FOR INFORMATION ONLY.
2. * - TOTAL INCLUDED IN ROADWAY ITEM TABLE.
3. * * - TOTAL INCLUDED IN COLD PLANE AC PAVEMENT TABLE.

SUMMARY OF QUANTITIES

Q-1

STATE OF CALIFORNIA - DEPARTMENT OF TRANSPORTATION
Caltrans DESIGN
FUNCTIONAL SUPERVISOR: TERRY OGLE
CALCULATED-DESIGNED BY: ERIC C-S CHIN
CHECKED BY: GABRIEL ELEFANTE
REVISED BY: RS
DATE REVISED: 05-5-11

LAST REVISION 00-00-00
DATE PLOTTED => 21-OCT-2011
TIME PLOTTED => 09:49

Dist	COUNTY	ROUTE	POST MILES TOTAL PROJECT	SHEET No.	TOTAL SHEETS
10	Ama	88	0.0/5.5	152	216

REGISTERED CIVIL ENGINEER 05-15-11 DATE

10-17-11
PLANS APPROVAL DATE

REGISTERED PROFESSIONAL ENGINEER ERIC C-S CHIN No. 71272 Exp. 12-30-11 CIVIL STATE OF CALIFORNIA

THE STATE OF CALIFORNIA OR ITS OFFICERS OR AGENTS SHALL NOT BE RESPONSIBLE FOR THE ACCURACY OR COMPLETENESS OF SCANNED COPIES OF THIS PLAN SHEET.

HMA DIKE (TYPE E)

LOCATION Sta - Sta	SIDE	HMA DIKE (TYPE E)	HMA (TYPE B)
ROUTE 88		LF	TON
109+79 - 139+89	Lt	3,010	78.3
109+60 - 139+78	Rt	3,018	78.5
142+97 - 145+67	Lt	270	7.0
142+93 - 145+44	Rt	251	6.5
147+42 - 150+19	Lt	277	7.2
147+51 - 149+89	Rt	238	6.2
152+10 - 157+00	Lt	490	12.7
163+32 - 179+54	Lt	1,622	42.2
161+33 - 170+04	Rt	871	22.6
175+13 - 177+30	Rt	217	5.6
180+92 - 196+60	Lt	1,568	40.8
180+92 - 198+77	Rt	1,785	46.4
201+82 - 215+10	Lt	1,328	34.5
202+25 - 215+10	Rt	1,285	33.4
220+00 - 220+26	Lt	26	0.7
221+77 - 225+57	Lt	380	9.9
228+70 - 233+11	Lt	441	11.5
220+00 - 225+54	Rt	554	14.4
229+50 - 233+76	Rt	426	11.1
242+91 - 255+40	Lt	1,249	32.5
242+84 - 247+50	Rt	466	12.1
249+50 - 255+40	Rt	590	15.3
257+48 - 262+50	Lt	502	13.1
257+48 - 262+50	Lt	502	13.1
265+58 - 284+60	Lt	1,902	49.5
265+99 - 281+79	Rt	1,580	41.1
282+50 - 284+60	Rt	210	5.5
287+33 - 304+67	Lt	1,734	45.1
287+33 - 290+10	Rt	277	7.2
290+77 - 338+26	Rt	4,749	123.5
338+63 - 361+19	Rt	2,256	58.7
307+50 - 311+90	Lt	440	11.4
314+67 - 318+60	Lt	393	10.2
321+52 - 330+97	Lt	945	24.6
339+78 - 360+51	Lt	2,073	53.9
368+53 - 385+91	Lt	1,738	45.2
368+98 - 385+91	Rt	1,693	44.0
387+90 - 391+70	Rt	380	9.9
TOTAL		41,736	1,084.9 *

EROSION CONTROL (HYDROSEED)

	(N) PURE LIVE SEED	(N) CELLULOSE FIBER	(N) ORGANIC FERTILLIZER	(N) TAKIFIER	POLIMER STABILIZED FIBER MATRIX
	LB	LB	LB	LB	SQFT
EROSION CONTROL (HYDROSEED)	129.2	13,600	2,040	54.4	296,417
TOTAL					296,417

(N) - NOT A SEPARATE PAY ITEM, FOR INFORMATION ONLY.

HMA DIKE (TYPE A)

LOCATION Sta - Sta	SIDE	HMA DIKE (TYPE A)	HMA (TYPE B)
ROUTE 88		LF	TON
220+26 - 221+77	Lt	151	4.1
225+57 - 228+70	Lt	313	8.5
233+11 - 242+91	Lt	980	26.5
225+54 - 229+50	Rt	396	10.7
233+76 - 242+84	Rt	908	24.5
247+50 - 249+50	Rt	200	5.4
281+79 - 282+00	Rt	21	0.6
290+10 - 290+77	Rt	67	1.8
304+67 - 307+50	Lt	283	7.6
311+90 - 314+67	Lt	277	7.5
318+60 - 321+52	Lt	292	7.9
332+18 - 339+78	Lt	760	20.5
338+26 - 338+63	Rt	37	1.0
360+51 - 368+53	Lt	802	21.7
361+19 - 368+98	Rt	779	21.0
TOTAL		6,266	169.2 *

HMA DIKE (TYPE C)

LOCATION	Sta - Sta ROUTE 88	SIDE	HMA DIKE (TYPE C)	HMA (TYPE B)
			LF	TON
JACKSON CREEK OVERFLOW Br	254+71 - 255+09	Rt/Lt	76	0.6
	257+89 - 258+27	Rt/Lt	76	0.6
JACKSON CREEK Br	262+44 - 262+82	Lt	38	0.3
	262+71 - 263+09	Rt	38	0.3
	265+55 - 265+93	Lt	38	0.3
	265+91 - 266+29	Rt	38	0.3
RETAINING WALL	360+92 - 361+30	Rt	38	0.3
	368+40 - 368+78	Rt	38	0.3
TOTAL			380	3.0 *

HMA DIKE (TYPE F)

LOCATION	Sta - Sta ROUTE 88	SIDE	HMA DIKE (TYPE F)	HMA (TYPE B)
			LF	TON
JACKSON CREEK OVERFLOW Br	255+09 - 255+59	Rt/Lt	100	1.3
	257+39 - 257+89	Rt/Lt	100	1.3
JACKSON CREEK Br	262+82 - 263+32	Lt	50	0.7
	263+09 - 263+59	Rt	50	0.7
	265+93 - 266+93	Lt	100	1.3
	266+29 - 267+29	Rt	100	1.3
RETAINING WALL	361+30 - 361+80	Rt	50	0.7
	368+78 - 369+28	Rt	50	0.7
TOTAL			600	8.0 *

RUMBLE STRIP

LOCATION Sta - Sta	CENTERLINE RUMBLE STRIP (ROLLED-IN INDENTATIONS)
ROUTE 88	Sta
265+73 - 273+47	7.74
298+78.4 - 325+56	26.78
TOTAL	34.52

DIGOUTS

LOCATION	LENGTH (N)	WIDTH (N)	COLD PLANE AC PAVEMENT	HMA (TYPE B)
			SQYD	TON
100+00-280+00 EB	17,560	3.3(2)=6.6	12,877	2,146
100+00-280+00 WB	17,560	3.3(2)=6.6	12,877	2,146
280+00-313+00	3,300	6'-12' (Var)	2,566	427
317+50-343+50	2,600	6'-12' (Var)	1,444	240
352+50-385+90	3,340	6'-12' (Var)	1,855	309
TOTAL			31,621 **	5,270 *

NOTE:
SEE CONSTRUCTION DETAIL SHEETS FOR DIGOUT DETAILS.

REMOVE AC DIKE

LOCATION Sta - Sta	SIDE	LF
ROUTE 88		
109+79 - 115+00	Lt	521
109+60 - 115+55	Rt	595
123+75 - 139+89	Lt	1614
123+23 - 139+78	Rt	1655
142+89 - 145+68	Lt	279
142+89 - 145+45	Rt	256
147+42 - 150+19	Lt	277
147+44 - 149+89	Rt	245
163+32 - 179+54	Lt	1622
161+33 - 170+04	Rt	871
189+12 - 193+49	Lt	437
206+00 - 215+10	Lt	910
205+71 - 215+19	Rt	948
309+34 - 311+72	Lt	238
TOTAL		10,468

TEMPORARY FIBER ROLL

LOCATION Sta - Sta	SIDE	LF
222+50-227+85	Lt	445
226+50-223+90	Rt	410
227+05-228+80	Rt	175
230+75-232+65	Lt	190
231+60-242+10	Rt	940
234+60-242+10	Lt	1,065
243+60-247+60	Lt	612
244+10-257+80	Rt	2,087
250+05-258+70	Lt	1,510
264+80-274+25	Lt	1,805
266+15-275+75	Rt	960
295+10-298+20	Rt	415
295+30-298+15	Lt	285
302+60-307+40	Rt	920
302+90-311+65	Lt	1,145
315+00-329+60	Lt	1,525
332+45-347+50	Lt	2,130
352+15-359+50	Rt	735
360+70-368+30	Lt	1,450
362+00-368+70	Rt	1,070
377+30-380+80	Lt	445
TOTAL		20,049

SUMMARY OF QUANTITIES

Q-2

STATE OF CALIFORNIA - DEPARTMENT OF TRANSPORTATION
Caltrans DESIGN

FUNCTIONAL SUPERVISOR: TERRY OGLE
CALCULATED-DESIGNED BY: ERIC C-S CHIN
CHECKED BY: GABRIEL ELEFANTE
REVISED BY: RS
DATE REVISED: 05-5-11

LAST REVISION 00-00-00
DATE PLOTTED => 19-OCT-2011
TIME PLOTTED => 10:56

Dist	COUNTY	ROUTE	POST MILES TOTAL PROJECT	SHEET No.	TOTAL SHEETS
10	Ama	88	0.0/5.5	153	216

REGISTERED CIVIL ENGINEER 05-15-11 DATE

10-17-11
PLANS APPROVAL DATE

REGISTERED PROFESSIONAL ENGINEER ERIC C-S CHIN No. 71272 Exp. 12-30-11 CIVIL STATE OF CALIFORNIA

THE STATE OF CALIFORNIA OR ITS OFFICERS OR AGENTS SHALL NOT BE RESPONSIBLE FOR THE ACCURACY OR COMPLETENESS OF SCANNED COPIES OF THIS PLAN SHEET.

METAL BEAM GUARDRAIL

LAYOUT SHEET No.	LOCATION Sta - Sta	SIDE	REMOVE MBGR	REMOVE TERMINAL SECTION (TYPE C) (N)	REMOVE CAA (N)	MBGR	TRANSITION RAILING (TYPE WB)	ALTERNATIVE FLARED TERMINAL SYSTEM	GUARD RAILING DELINEATORS	OBJECT MARKERS (TYPE L)	OBJECT MARKERS (TYPE F)
			LF	EA	EA	LF	EA	EA	EA	EA	EA
JACKSON CREEK OVERFLOW Br											
L-8	254+71 - 255+59	L+	66	1	1	25	1	1	2	1	1
	254+71 - 255+59	R+	66	1	1	25	1	1	2	1	1
	257+39 - 258+27	L+	66	1	1	25	1	1	2	1	1
	257+39 - 258+27	R+	66	1	1	25	1	1	2	1	1
JACKSON CREEK Br											
L-8′ L-9	262+44 - 263+32	L+	30	1	1	25	1	1	2	1	1
	262+71 - 263+59	R+	66	1	1	25	1	1	2	1	1
L-9	265+55 - 266+93	L+	104	1	1	100	1	1	2	1	1
	265+91 - 267+29	R+	104	1	1	100	1	1	2	1	1
RETAINING WALL											
L-15	360+92 - 361+80	R+				25	1	1	2	1	1
L-16	368+40 - 369+28	R+				25	1	1	2	1	1
TOTAL			568			400	10	10	20	10	10

OBLITERATE SURFACING

LOCATION Sta - Sta	OBLITERATE SURFACING	IMPORTED BORROW
ROUTE 88	SQYD	CY
303+62 - 304+65	17	6
304+65 - 311+46	225	75
311+46 - 315+40	131	44
314+40 - 321+85	203	70
322+45 - 323+52	28	9
232+52 - 328+16	156	52
328+16 - 331+24	95	32
331+86 - 343+47	379	126
343+47 - 354+62	361	120
355+16 - 359+24	109	36
TOTAL	1,704 *	570 *

REMOVE AC OVERSIDE DRAIN

LOCATION Sta	SIDE	EA
ROUTE 88		
115+00	L+	1
115+55	R+	1
123+75	L+	1
165+29	R+	1
168+68	L+	1
173+74	L+	1
211+55	L+/R+	2
TOTAL		8

TEMPORARY FENCE (TYPE ESA)

LOCATION Sta - Sta	SIDE	LENGTH
ROUTE 88		LF
100+00 - 219+50	L+/R+	23,900
219+65 - 220+38	L+/R+	198
229+41- 229+77	L+	80
233+00 - 233+66	L+/R+	90
247+31 - 248+04	R+	85
251+28 - 252+08	R+	96
255+38 - 256+00	L+	68
256+48 - 257+65	L+	70
259+60 - 260+12	L+	85
255+90 - 256+49	R+	60
257+00 - 258+50	R+	180
262+50 - 264+00	L+	225
264+54 - 265+33	L+	84
262+51 - 264+64	R+	215
265+14 - 266+40	R+	126
281+05 - 281+25	L+	60
282+34 - 283+30	L+	100
284+64 - 285+53	L+	187
283+40 - 283+80	R+	40
284+80 - 285+91	R+	144
304+56 - 305+32	L+	107
304+71 - 305+30	R+	71
306+50 - 307+40	L+	110
308+84 - 315+52	R+	700
315+52 - 331+48	R+	1,600
333+80 - 334+75	L+	100
345+70 - 351+20	R+	570
341+80 - 342+70	R+	115
343+30 - 345+00	R+	190
370+41,371+43,372+67	L+	300
TOTAL		29,956

DRIVEWAY SUMMARY

LOCATION	SHEET NUMBER	DRIVE WAY No.	STATION	SIDE	LENGTH (FT)	WIDTH (FT)	RADIUS (FT)	AREA SQFT	HMA TON	IMPORTED BORROW (CY)
ROUTE 88	L -1	1	108+84	R+	5			700	10	
		2	109+05	L+	5			660	10	
	L -4	3	180+25	R+	5			700	10	
	L -5	4	196+76	L+	5			150	2	
	L -6	5	215+69	L+	5			518	9	
		6	215+75	R+	5			470	7	
	L -7	6a	249+80	L+	68	14		1196	11	80
		7	250+63	R+	55	22	35	1800	27	67
	L -8	8	258+90	L+	28	14	25	650	11	53
	L -9	9	274+62	L+	31	14	25	512	11	19
		10	277+12	L+	17	14	15	340	5	13
	L -10	11	282+21	R+	5			250	4	
	L -11	12	294+71	L+	5			500	7	
		13	301+85	L+	46	14	25	940	14	35
	L -13	14	322+00	L+	29	14	25	670	11	50
		15	331+55	L+	32	14	15	705	10	26
		16	331+63	R+	5			380	6	0
	L -14	17	347+80	L+	28	14	15	692	11	77
		18	351+84	R+	30	14	30	800	12	30
	L -15	19	354+96	L+	23	14	25	571	8	21
	L -17	20	385+20	R+	31	14	25	717	11	27
	TOTAL								207 *	496 *

TEMPORARY REINFORCED SILT FENCE

LOCATION Sta - Sta	SIDE	LF
ROUTE 88		
221+37 - 221+85	L+	48
225+50 - 228+70	L+	320
225+50 - 229+40	R+	390
233+15 - 242+90	L+	975
233+70 - 242+85	R+	915
247+40 - 249+55	R+	215
304+70 - 307+45	L+	275
311+90 - 314+70	L+	280
318+55 - 321+50	L+	295
332+00 - 339+80	L+	780
360+51 - 368+50	L+	799
361+19 - 361+57	R+	38
368+42 - 368+97	R+	55
TOTAL		5,385

TEMPORARY CHECK DAM

LOCATION Sta - Sta	SIDE	LF
ROUTE 88		
301+85 - 307+00	R+	135
309+50 - 311+69	L+	55
321+68 - 330+70	L+	230
TOTAL		420

SUMMARY OF QUANTITIES

Q-3

STATE OF CALIFORNIA - DEPARTMENT OF TRANSPORTATION
Caltrans DESIGN

FUNCTIONAL SUPERVISOR: TERRY OGLE
CALCULATED-DESIGNED BY: ERIC C-S CHIN
CHECKED BY: GABRIEL ELEFANTE
REVISED BY: RS
DATE REVISED: 05-5-11

LAST REVISION 00-00-00 | DATE PLOTTED => 21-OCT-2011 | TIME PLOTTED => 09:49

Dist	COUNTY	ROUTE	POST MILES TOTAL PROJECT	SHEET No.	TOTAL SHEETS
10	Ama	88	0.0/5.5	154	216

REGISTERED CIVIL ENGINEER 05-15-11 DATE

10-17-11
PLANS APPROVAL DATE

REGISTERED PROFESSIONAL ENGINEER ERIC C-S CHIN No. 71272 Exp. 12-30-11 CIVIL STATE OF CALIFORNIA

THE STATE OF CALIFORNIA OR ITS OFFICERS OR AGENTS SHALL NOT BE RESPONSIBLE FOR THE ACCURACY OR COMPLETENESS OF SCANNED COPIES OF THIS PLAN SHEET.

NOTE:

FOR ACCURATE RIGHT OF WAY DATA, CONTACT RIGHT OF WAY ENGINEERING AT THE DISTRICT OFFICE.

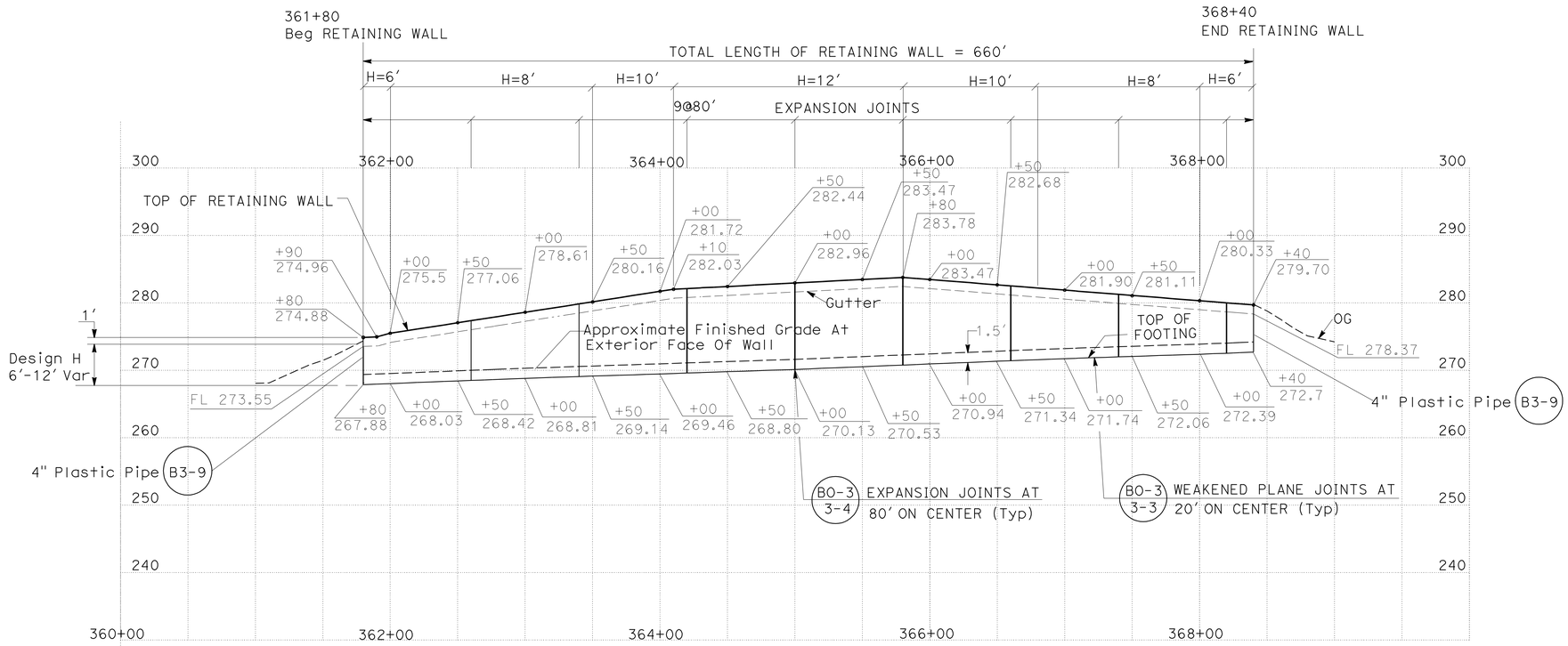

ELEVATION
SCALE: Horiz 1" = 50'
Vert 1" = 10'

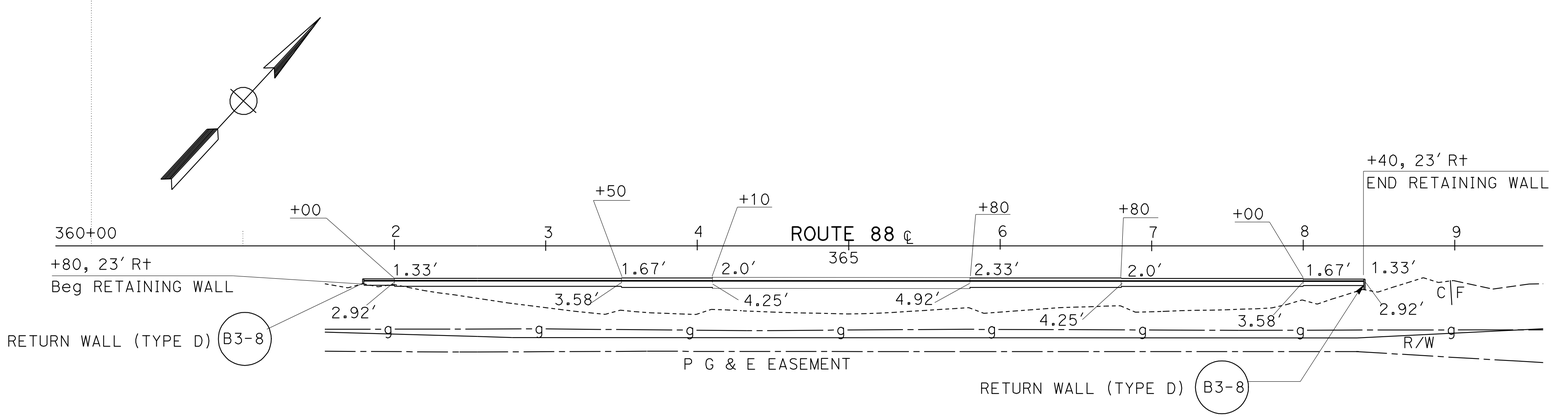

PLAN
SCALE: 1 = 50'

RETAINING WALL

RETAINING WALL PLAN

SCALE AS SHOWN

R-1

STATE OF CALIFORNIA - DEPARTMENT OF TRANSPORTATION
Caltrans
DESIGN

FUNCTIONAL SUPERVISOR: TERRY OGLE

CALCULATED-DESIGNED BY: ERIC C-S CHIN
CHECKED BY: GABRIEL ELEFANTE

REVISED BY: RS
DATE REVISED: 05-5-11

LAST REVISION 00-00-00
DATE PLOTTED => 19-OCT-2011
TIME PLOTTED => 14:33

Dist	COUNTY	ROUTE	POST MILES TOTAL PROJECT	SHEET No.	TOTAL SHEETS
10	Ama	88	0.0/5.5	155	216

REGISTERED CIVIL ENGINEER 05-15-11 DATE

10-17-11
PLANS APPROVAL DATE

REGISTERED PROFESSIONAL ENGINEER
ERIC C-S CHIN
No. 71272
Exp. 12-30-11
CIVIL
STATE OF CALIFORNIA

THE STATE OF CALIFORNIA OR ITS OFFICERS OR AGENTS SHALL NOT BE RESPONSIBLE FOR THE ACCURACY OR COMPLETENESS OF SCANNED COPIES OF THIS PLAN SHEET.

LEGEND

- STRUCTURE EXCAVATION
- STRUCTURE BACKFILL
- ROADWAY EXCAVATION
- CLASS 2 AB

NOTE: SEE BRIDGE CONSTRUCTION DETAIL PLANS.

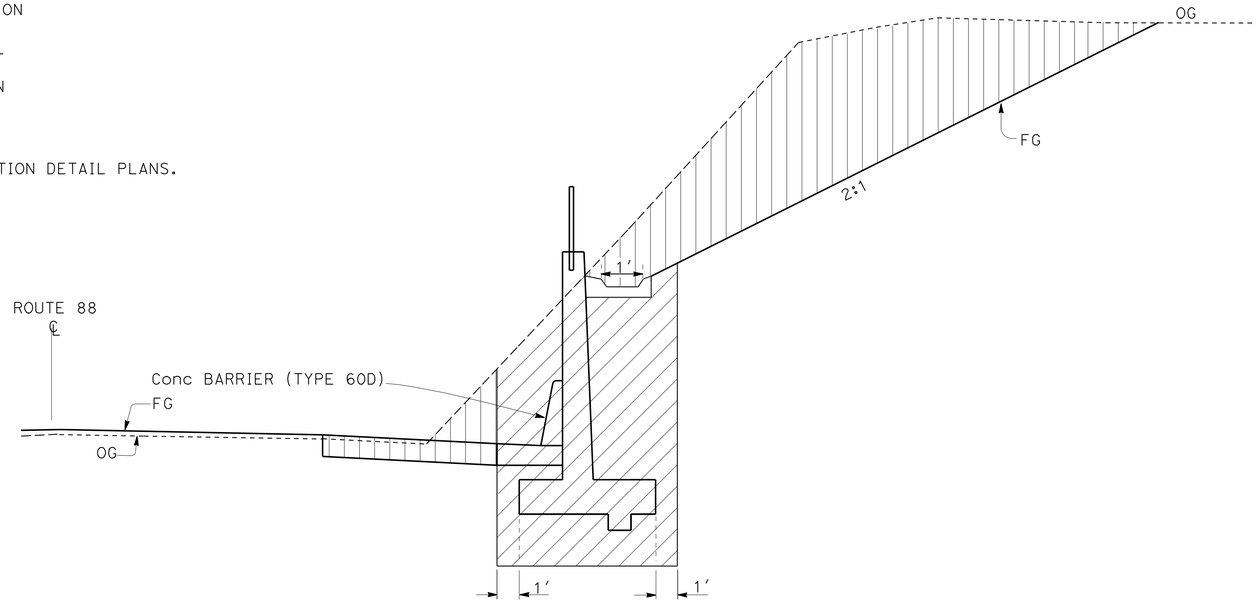

STRUCTURE EXCAVATION

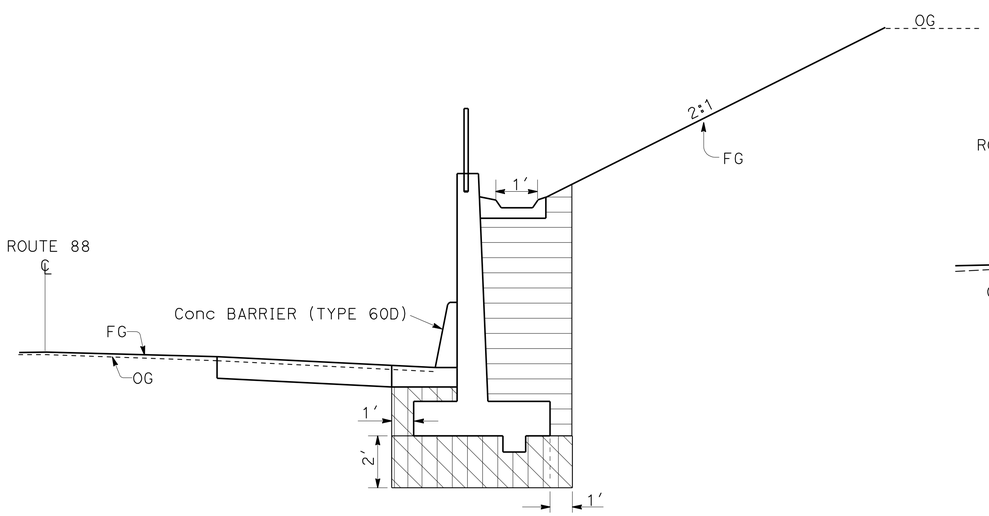

STRUCTURE BACKFILL

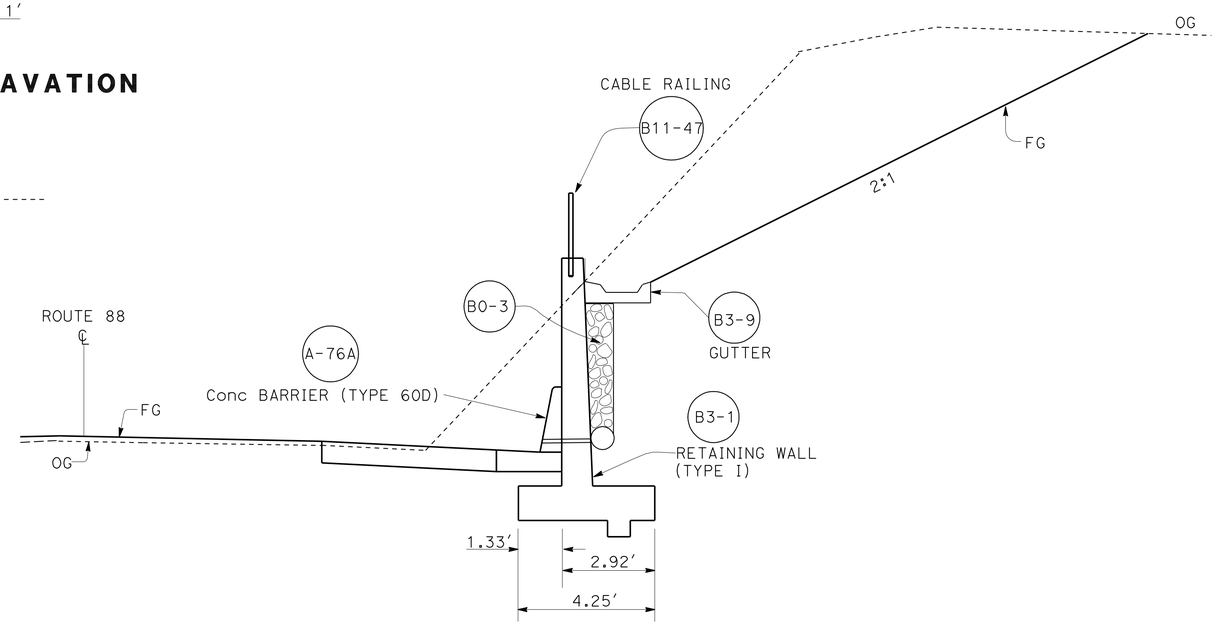

RETAINING WALL
FACE OF WALL OUTLET

NOTE: FOR DETAILS NOT SHOWN SEE BRIDGE CONSTRUCTION PLANS AND STANDARD PLANS.

RETAILING WALL DETAILS

NO SCALE

R-2

REVISED BY	DATE REVISED
RS	05-5-11

CALCULATED-DESIGNED BY: ERIC C-S CHIN
CHECKED BY: GABRIEL ELEFANTE
FUNCTIONAL SUPERVISOR: TERRY OGLE

STATE OF CALIFORNIA - DEPARTMENT OF TRANSPORTATION
Caltrans
DESIGN

LAST REVISION 00-00-00
DATE PLOTTED => 19-OCT-2011
TIME PLOTTED => 10:56

Dist	COUNTY	ROUTE	POST MILES TOTAL PROJECT	SHEET No.	TOTAL SHEETS
10	Ama	88	0.0/5.5	156	216

REGISTERED ELECTRICAL ENGINEER 05-15-11 DATE

10-17-11
PLANS APPROVAL DATE

REGISTERED PROFESSIONAL ENGINEER Jaspal Singh No. E16657 Exp. 6/30/12 ELECTRICAL STATE OF CALIFORNIA

THE STATE OF CALIFORNIA OR ITS OFFICERS OR AGENTS SHALL NOT BE RESPONSIBLE FOR THE ACCURACY OR COMPLETENESS OF SCANNED COPIES OF THIS PLAN SHEET.

NOTES: (FOR SHEETS E-1 AND E-2)

1. Exist 120 V EMS SYSTEM.
2. sp-PG&E. INSTALL TYPE PG&E SERVICE.
3. 120/240 V, 1Ø, 3-WIRE, TYPE A SERVICE ON TYPE 1-B POLE WITH THE FOLLOWING CIRCUITS.

CTID No. 1026088R038700M

AMPERES	VOLTS	POLES	NAMEPLATE	METER	PEC TYPE
60	240	2	MAIN	YES	-
15	120	1	EMS	YES	-
20	120	1	SPARE	YES	-
-	-	1	SPACE	-	-

4. RS Exist MODEL 334 CABINET AND EQUIPMENT.
5. RC Exist WOOD POLE, RS SOLAR PANEL AND BRACKETS.
6. PIEZO AXLE SENSOR AND LOOP DETECTORS. SEE INSTALLATION DETAILS ON SHEET E-2. AB Exist LOOP DETECTORS.
7. Exist MODEL 334 CABINET. INSTALL WIRELESS MODEM AND ATC FOR VCS.
8. FOR ACCURATE RIGHT OF WAY DATA, CONTACT RIGHT OF WAY ENGINEERING AT THE DISTRICT OFFICE.

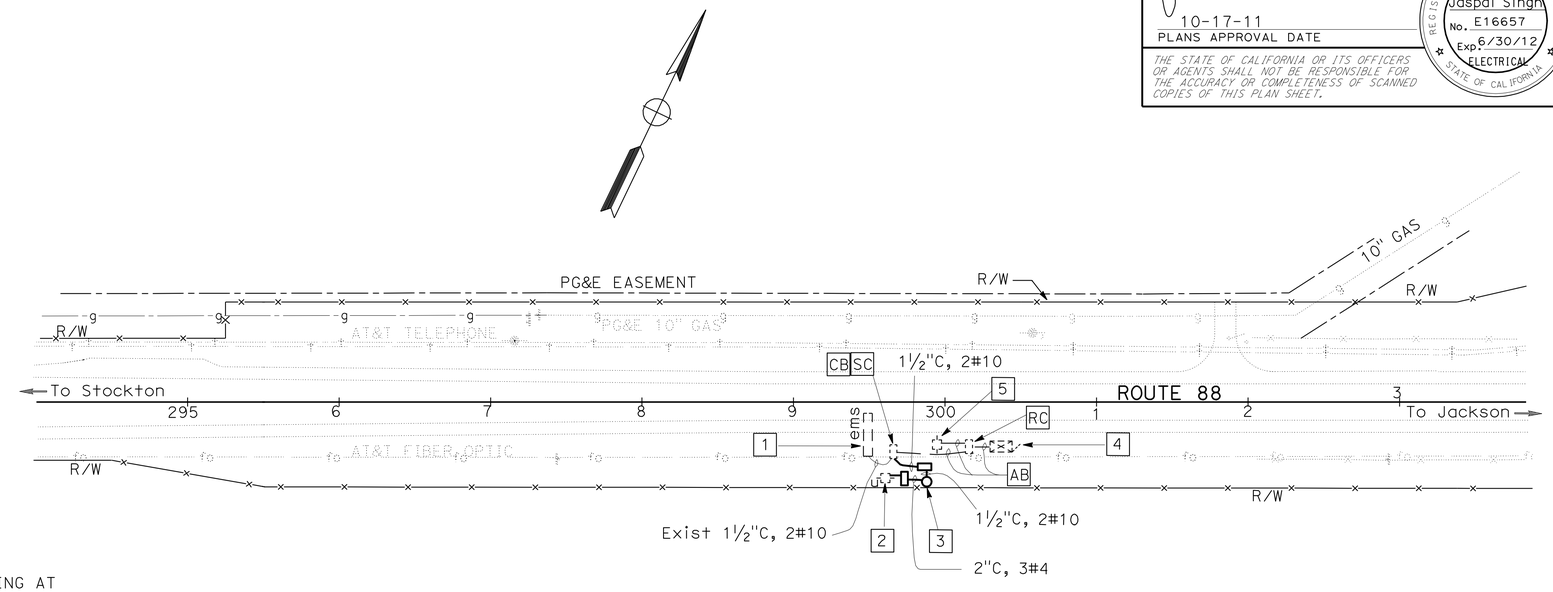

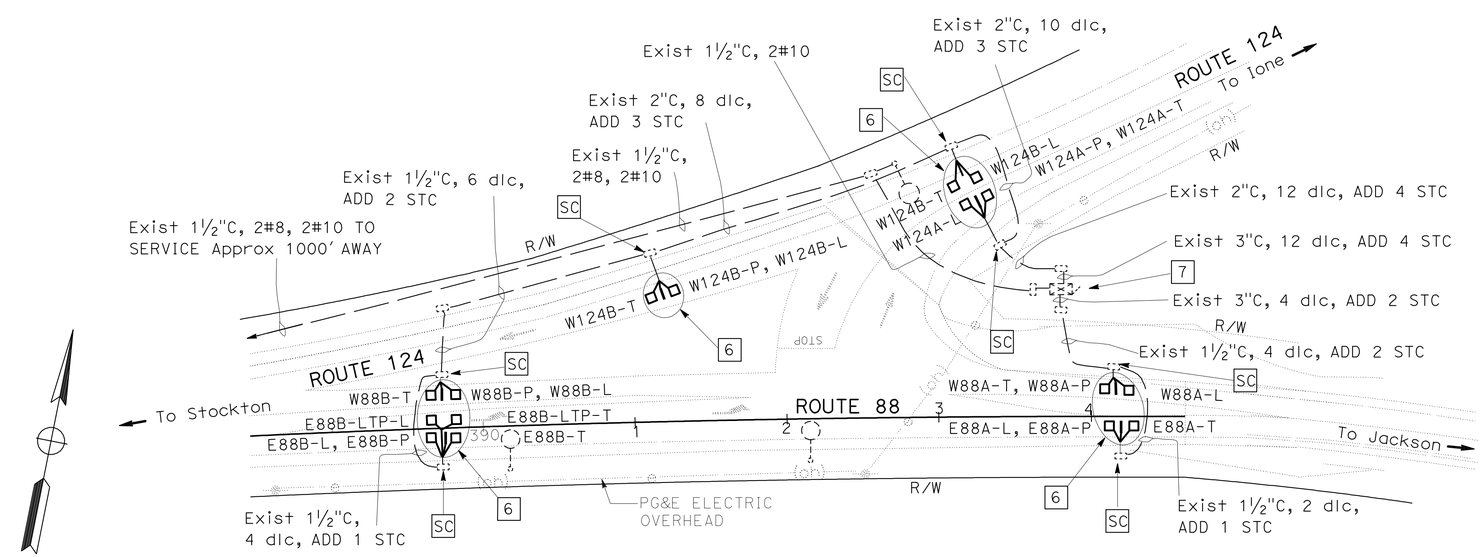

ABBREVIATIONS:

PG&E - PACIFIC GAS AND ELECTRIC COMPANY
CTID - CALTRANS IDENTIFICATION
STC - SCREENED TRANSMISSION CABLE
PAS - PIEZO AXEL SENSOR
ATC - AUTOMATED TRAFFIC COUNTER
VCS - VEHICLE CLASSIFICATION STATION
LTP - LEFT TURN POCKET

THIS PLAN IS ACCURATE FOR ELECTRICAL WORK ONLY.

MODIFY EXTINGUISHABLE MESSAGE SIGN SYSTEM
MODIFY VEHICLE CLASSIFICATION STATION

SCALE: 1" = 50'

E-1

STATE OF CALIFORNIA - DEPARTMENT OF TRANSPORTATION
Caltrans® ELECTRICAL DESIGN

FUNCTIONAL SUPERVISOR: ALI BAKHDOUD
CALCULATED-DESIGNED BY: FRED IYASERE
CHECKED BY: JASPAL SINGH
REVISED BY: JS
DATE REVISED: 4/19/11

LAST REVISION 05-11-11
DATE PLOTTED => 19-OCT-2011
TIME PLOTTED => 10:11

Dist	COUNTY	ROUTE	POST MILES TOTAL PROJECT	SHEET No.	TOTAL SHEETS
10	Ama	88	0.0/5.5	157	216

REGISTERED ELECTRICAL ENGINEER 05-15-11 DATE

10-17-11
PLANS APPROVAL DATE

REGISTERED PROFESSIONAL ENGINEER Jaspal Singh No. E16657 Exp. 6/30/12 ELECTRICAL STATE OF CALIFORNIA

THE STATE OF CALIFORNIA OR ITS OFFICERS OR AGENTS SHALL NOT BE RESPONSIBLE FOR THE ACCURACY OR COMPLETENESS OF SCANNED COPIES OF THIS PLAN SHEET.

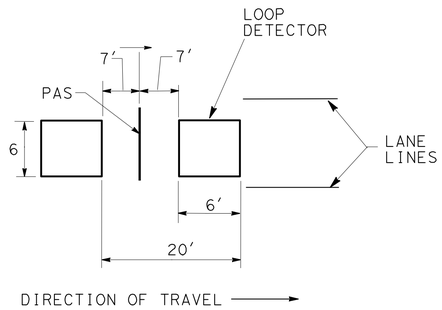

TYPICAL LANE LAYOUT FOR PAS AND LOOP DETECTOR
NO SCALE

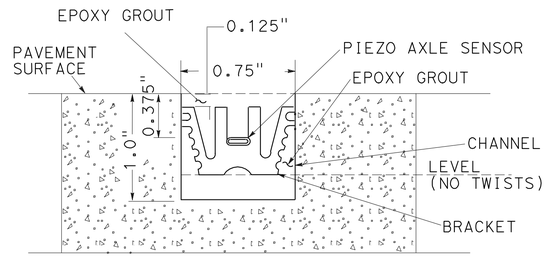

SECTION A-A
NO SCALE

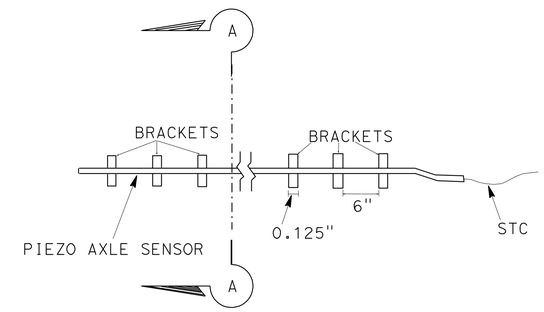

PIEZO AXLE SENSOR INSTALLATION

LOOP DETECTOR DESIGNATION

W R A L
- L = LEADING
- T = TRAILING
- GROUP A OR B
- ROUTE
- E = EASTBOUND
- W = WESTBOUND

PAS DESIGNATION

W R A P
- PAS
- GROUP A OR B
- ROUTE
- E = EASTBOUND
- W = WESTBOUND

THIS PLAN IS ACCURATE FOR ELECTRICAL WORK ONLY.

MODIFY VEHICLE CLASSIFICATION STATION
(INSTALLATION DETAILS)

NO SCALE

E-2

STATE OF CALIFORNIA - DEPARTMENT OF TRANSPORTATION	Caltrans® ELECTRICAL DESIGN
FUNCTIONAL SUPERVISOR	ALI BAKHDOUD
CALCULATED-DESIGNED BY	FRED IYASERE
CHECKED BY	JASPAL SINGH
REVISED BY	JS
DATE REVISED	4/19/11

LAST REVISION 05-17-11 | DATE PLOTTED => 19-OCT-2011 | TIME PLOTTED => 10:11

DIST	COUNTY	ROUTE	POST MILES TOTAL PROJECT	SHEET NO.	TOTAL SHEETS
10	Ama	88	0.0/5.5	158	216

Randell D. Hiatt
REGISTERED CIVIL ENGINEER

June 6, 2008
PLANS APPROVAL DATE

REGISTERED PROFESSIONAL ENGINEER
Randell D. Hiatt
No. C50200
Exp. 6-30-09
CIVIL
STATE OF CALIFORNIA

The State of California or its officers or agents shall not be responsible for the accuracy or completeness of electronic copies of this plan sheet.

To accompany plans dated 10-17-11

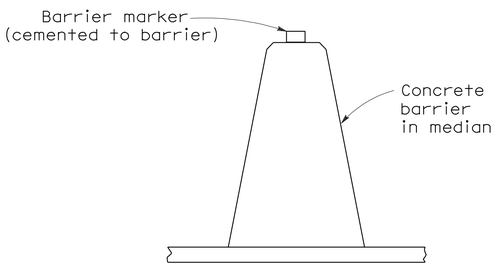

CONCRETE BARRIER TYPE 60 DELINEATION

See Notes 7 and 8

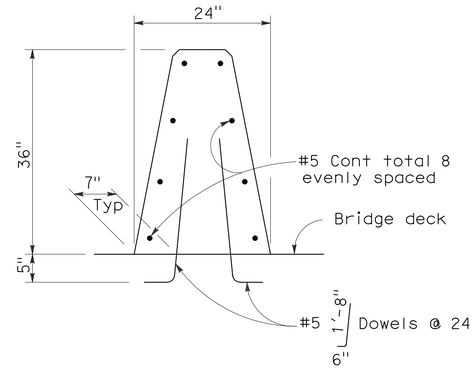

CONCRETE BARRIER TYPE 60A

Details similar to Type 60 except as noted.

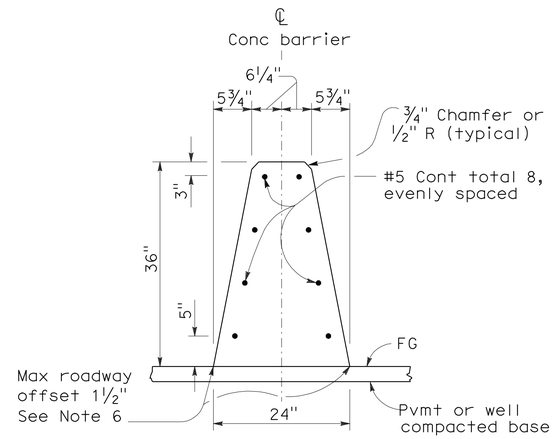

CONCRETE BARRIER TYPE 60

NOTES:

1. See Standard Plan A76B for details of Concrete Barrier Type 60 end anchors, connection to structures and transitions to Concrete Barrier Type 50 and Concrete Barrier Type 60S.
2. See Standard Plan A76C for Concrete Barrier Type 60 transitions at bridge column and sign pedestals.
3. Where glare screen is required on Concrete Barrier Type 60, use Concrete Barrier Type 60G.
4. Where the concrete barrier is added to the face of existing concrete structure, match existing weep holes.
5. Expansion joints in concrete barrier shall be located at all deck, pavement and principal wall joints. Expansion joint filler material shall be the same size as joint or ½" minimum.
6. Where roadway offset is greater than 1½", see Concrete Barrier Type 60C.
7. Barrier delineation to be used when required by the Special Provisions.
8. Spacing of barrier markers to match spacing of raised pavement markers on the adjacent median edgeline pavement delineation.
9. Reinforcing stirrup not required for roadway offsets less than 1'-0".
10. For roadway surfaces offset greater than 1½" to 3", no rebars required. For roadway surfaces offset greater than 3" to 8" use two #4 rebars at 3" above the lower roadway surface. For roadway surfaces offset greater than 8" to 12", use two #4 rebars at 3" above the lower roadway surface and two #4 rebars at 8" above the lower roadway surface. For roadway surfaces offset greater than 12" to 36", use two #4 rebars at 3" above the lower roadway surface and two #4 rebars at every 8" increment vertical spacing above the first two #4 rebars.

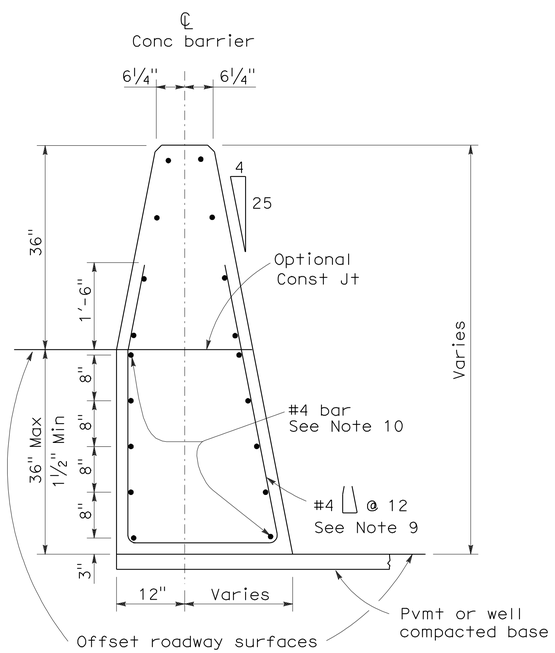

CONCRETE BARRIER TYPE 60C

Details similar to Type 60 except as noted.
Concrete barrier end anchor when necessary.
36" roadway surfaces offset shown.

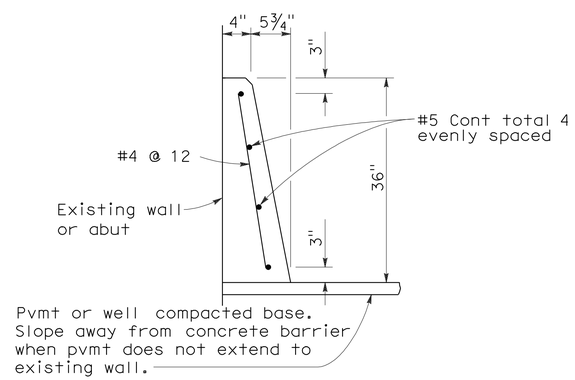

CONCRETE BARRIER TYPE 60D

STATE OF CALIFORNIA
DEPARTMENT OF TRANSPORTATION

CONCRETE BARRIER TYPE 60

NO SCALE

RSP A76A DATED JUNE 6, 2008 SUPERSEDES STANDARD PLAN A76A
DATED MAY 1, 2006 - PAGE 29 OF THE STANDARD PLANS BOOK DATED MAY 2006.

REVISED STANDARD PLAN RSP A76A

2006 REVISED STANDARD PLAN RSP A76A

5-21-08

Dist	COUNTY	ROUTE	POST MILES TOTAL PROJECT	SHEET No.	TOTAL SHEETS
10	Ama	88	0.0/5.5	159	216

Randell D. Hiatt
REGISTERED CIVIL ENGINEER

May 20, 2011
PLANS APPROVAL DATE

REGISTERED PROFESSIONAL ENGINEER
Randell D. Hiatt
No. C50200
Exp. 6-30-11
CIVIL
STATE OF CALIFORNIA

The State of California or its officers or agents shall not be responsible for the accuracy or completeness of electronic copies of this plan sheet.

To accompany plans dated 10-17-11

NOTES:

1. When necessary to place dike in front of face of guard railing, only Type C dike may be used. For dike details, see Standard Plan A87B.
2. For standard railing post embedment, see Standard Plans A77C3.
3. Guard railing delineation to be used where shown on the Project Plans.
4. When dike or curb is placed under guard railing, the maximum height of the dike or curb shall be 4". Mountable dike should not be used. For dike and curb details, see Standard Plans A87A and A87B.
5. For details of typical distance between the face of rail and hinge point, see Standard Plan A77C3.
6. For steel line posts, use 1/4 - 20 self-tapping screws in 0.22" diameter holes or 1/4" bolts in 9/32" diameter holes.

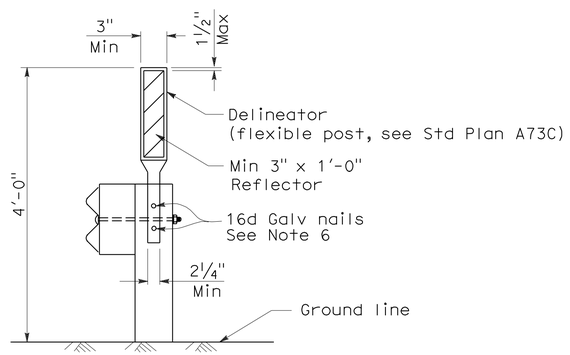

GUARD RAILING DELINEATION

See Note 3

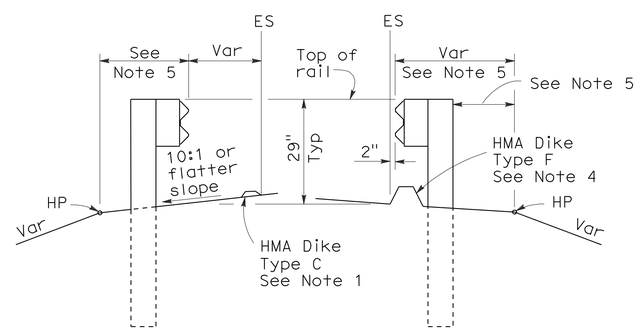

DIKE POSITIONING

See Note 1

STATE OF CALIFORNIA
DEPARTMENT OF TRANSPORTATION

METAL BEAM GUARD RAILING TYPICAL RAILING DELINEATION AND DIKE POSITIONING DETAILS

NO SCALE

RSP A77C4 DATED MAY 20, 2011 SUPERSEDES RSP A77C4 DATED JUNE 6, 2008 AND STANDARD PLAN A77C4 DATED MAY 1, 2006 - PAGE 47 OF THE STANDARD PLANS BOOK DATED MAY 2006.

REVISED STANDARD PLAN RSP A77C4

2006 REVISED STANDARD PLAN RSP A77C4

3-10-11

DIST	COUNTY	ROUTE	POST MILES TOTAL PROJECT	SHEET NO.	TOTAL SHEETS
10	Ama	88	0.0/5.5	160	216

Randell D. Hiatt
REGISTERED CIVIL ENGINEER

June 6, 2008
PLANS APPROVAL DATE

REGISTERED PROFESSIONAL ENGINEER
Randell D. Hiatt
No. C50200
Exp. 6-30-09
CIVIL
STATE OF CALIFORNIA

The State of California or its officers or agents shall not be responsible for the accuracy or completeness of electronic copies of this plan sheet.

To accompany plans dated 10-17-11

2006 REVISED STANDARD PLAN RSP A77E2

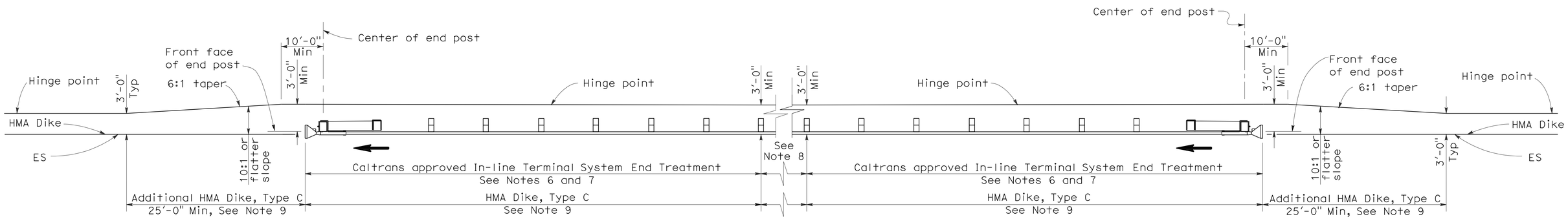

TYPE 11D LAYOUT

(EMBANKMENT GUARD RAILING INSTALLATION WITH
IN-LINE END TREATMENT AT EACH END OF RAILING)
See Note 5

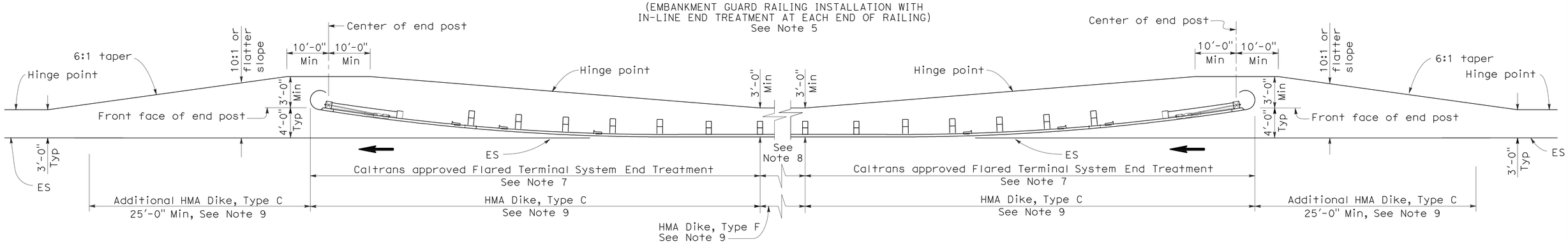

TYPE 11E LAYOUT

(EMBANKMENT GUARD RAILING INSTALLATION WITH
FLARED END TREATMENT AT EACH END OF RAILING)
See Note 5

NOTES:

1. Line post, blocks and hardware to be used are shown on Standard Plans A77A1, A77A2, A77B1, A77C1 and A77C2.
2. Guard rail post spacing to be 6'-3" center to center, except as otherwise noted.
3. Except as noted, line posts are 6" x 8" x 6'-0" wood with 6" x 8" x 1'-2" wood blocks, W6 x 9 steel posts, 6'-0" in length, with 6" x 8" x 1'-2" notched wood blocks or plastic blocks may be used for 6" x 8" x 6'-0" wood post with 6" x 8" x 1'-2" wood blocks where applicable and when specified.
4. Direction of adjacent traffic indicated by ⟶.
5. Layout Types 11D through 11L, shown on the A77E Series of Revised Standard Plans, are typically used where guard railing is recommended to shield embankment slopes and a crashworthy end treatment is required for both directions of traffic.
6. In-line Terminal System End Treatments are used where site conditions will not accommodate a flared end treatment.
7. The type of terminal system end treatment to be used will be shown on the Project Plans.
8. Dependent on site conditions (embankment height and side slope), construction of additional guard railing (length equal to multiples of 12'-6" with 6'-3" post spacing) may be advisable.
9. Where placement of dike is required with guard railing installations, see Revised Standard Plan RSP A77C4 for dike positioning details.

STATE OF CALIFORNIA
DEPARTMENT OF TRANSPORTATION

METAL BEAM GUARD RAILING TYPICAL LAYOUTS FOR EMBANKMENTS

NO SCALE

RSP A77E2 DATED JUNE 6, 2008 SUPERSEDES STANDARD PLAN A77E2
DATED MAY 1, 2006 - PAGE 49 OF THE STANDARD PLANS BOOK DATED MAY 2006.

REVISED STANDARD PLAN RSP A77E2

DIST	COUNTY	ROUTE	POST MILES TOTAL PROJECT	SHEET NO.	TOTAL SHEETS
10	Ama	88	0.0/5.5	161	216

Randell D. Hiatt
REGISTERED CIVIL ENGINEER

June 6, 2008
PLANS APPROVAL DATE

REGISTERED PROFESSIONAL ENGINEER
Randell D. Hiatt
No. C50200
Exp. 6-30-09
CIVIL
STATE OF CALIFORNIA

The State of California or its officers or agents shall not be responsible for the accuracy or completeness of electronic copies of this plan sheet.

To accompany plans dated 10-17-11

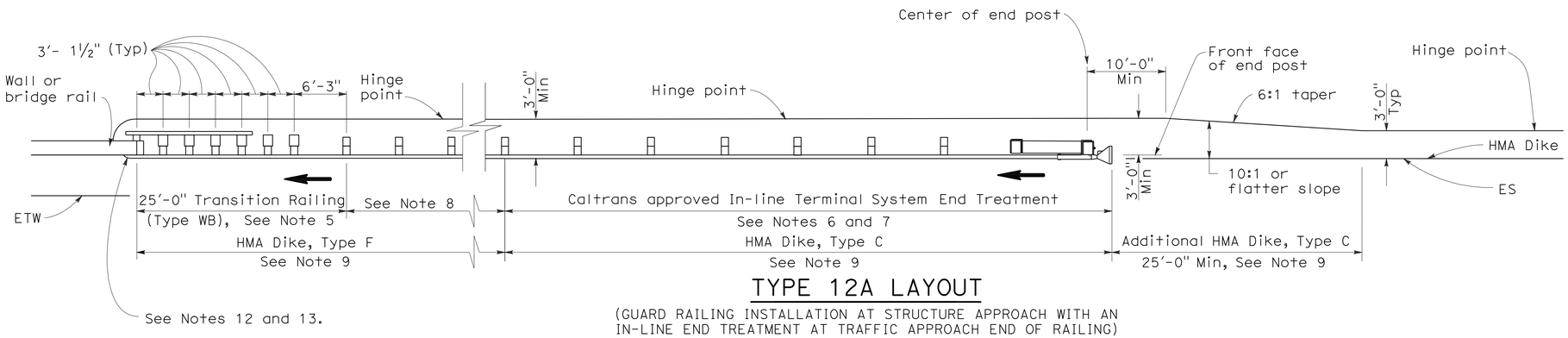

TYPE 12A LAYOUT

(GUARD RAILING INSTALLATION AT STRUCTURE APPROACH WITH AN IN-LINE END TREATMENT AT TRAFFIC APPROACH END OF RAILING)
See Notes 10

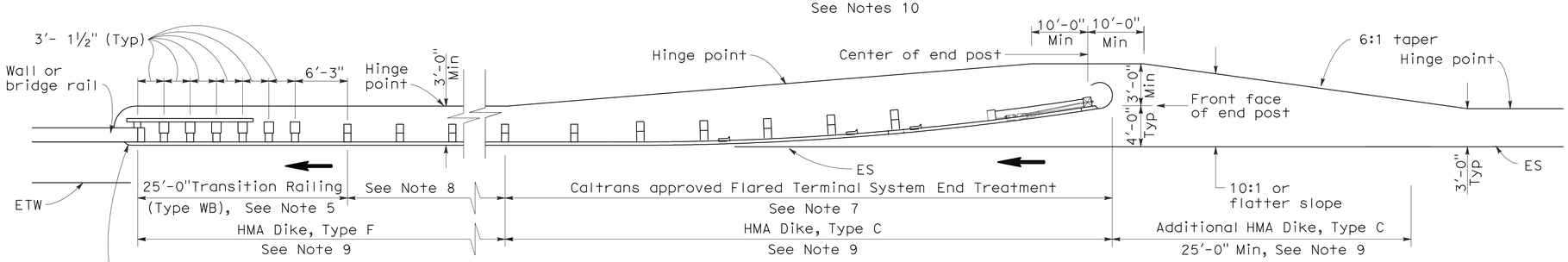

TYPE 12B LAYOUT

(GUARD RAILING INSTALLATION AT STRUCTURE APPROACH WITH A FLARED END TREATMENT AT TRAFFIC APPROACH END OF RAILING)
See Notes 10

NOTES:

1. Line post, blocks and hardware to be used are shown on Standard Plans A77A1, A77A2, A77B1, A77C1 and A77C2.
2. Guard rail post spacing to be 6'-3" center to center, except as otherwise noted.
3. Except as noted, line posts are 6" x 8" x 6'-0" wood with 6" x 8" x 1'-2" wood blocks. W6 x 9 steel posts, 6'-0" in length, with 6" x 8" x 1'-2" notched wood blocks or plastic blocks may be used for 6" x 8" x 6'-0" wood posts with 6" x 8" x 1'-2" wood blocks where applicable and when specified.
4. Direction of adjacent traffic indicated by ➡.
5. For Transition Railing (Type WB) details for Types 12A and 12B Layouts, see Standard Plan A77J4.
6. In-line Terminal System End Treatments are used where site conditions will not accommodate a flared end treatment.
7. The type of terminal system end treatment to be used will be shown on the Project Plans.
8. Dependent on site conditions (embankment height, side slopes, or other fixed objects), it may be advisable to construct additional guard railing (a length equal to multiples of 12'-6" with 6'-3" post spacing) between the transition railing and end treatment.
9. Where placement of dike is required with guard railing installations, see Revised Standard Plan RSP A77C4 for dike positioning details.
10. Type 12A or Type 12B Layouts are typically used:
    a. To the right of approaching traffic, at the end of a structure, on two-lane conventional highway where the roadbed width across the structure is less than 40 feet.
    b. To the left of approaching traffic, at the end of a structure, on two-lane conventional highway where the roadbed width across the structure is less than 40 feet.
    c. To the right of approaching traffic at the end of each structure on multilane freeways or expressways with separate adjacent or parallel bridges.
    d. To the right of approaching traffic at the end of the structure on multilane freeways or expressways with decked median on the bridge.
11. See Revised Standard Plan RSP A77F3 for typical layout used left of approaching traffic at the ends of each structure on multilane freeways or expressways with separate adjacent or parallel bridges.
12. For additional details of typical connections to bridge rail, see Connection Detail AA on Revised Standard Plans RSP A77J1 and RSP A77J2 and Connection Detail FF on Standard Plans A77K1 and A77K2.
13. For additional details of a typical connection to walls or abutments, see Standard Plan A77J3.

STATE OF CALIFORNIA
DEPARTMENT OF TRANSPORTATION

METAL BEAM GUARD RAILING TYPICAL LAYOUTS FOR STRUCTURE APPROACH

NO SCALE

RSP A77F1 DATED JUNE 6, 2008 SUPERSEDES STANDARD PLAN A77F1
DATED MAY 1, 2006 - PAGE 54 OF THE STANDARD PLANS BOOK DATED MAY 2006.

REVISED STANDARD PLAN RSP A77F1

2006 REVISED STANDARD PLAN RSP A77F1

DIST	COUNTY	ROUTE	POST MILES TOTAL PROJECT	SHEET NO.	TOTAL SHEETS
10	Ama	88	0.0/5.5	162	216

Randell D. Hiatt
REGISTERED CIVIL ENGINEER

June 6, 2008
PLANS APPROVAL DATE

REGISTERED PROFESSIONAL ENGINEER
Randell D. Hiatt
No. C50200
Exp. 6-30-09
CIVIL
STATE OF CALIFORNIA

The State of California or its officers or agents shall not be responsible for the accuracy or completeness of electronic copies of this plan sheet.

To accompany plans dated 10-17-11

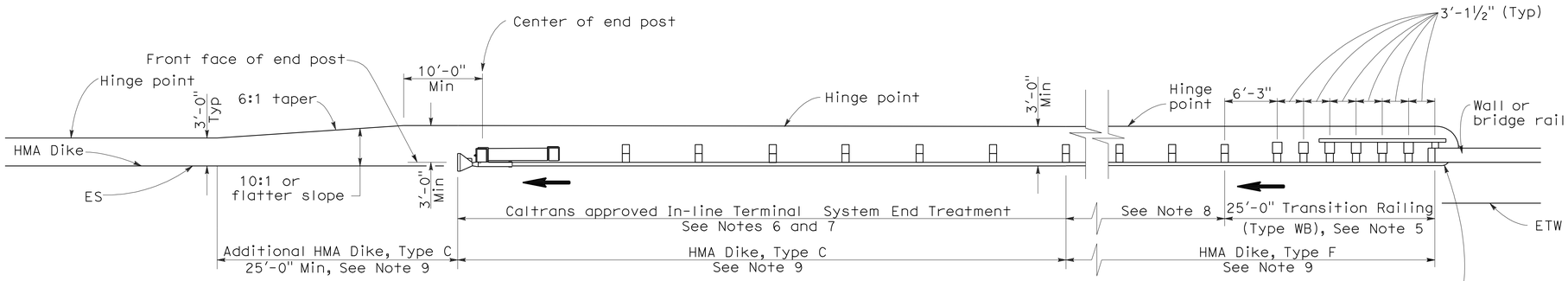

TYPE 12AA LAYOUT

(GUARD RAILING INSTALLATION AT STRUCTURE DEPARTURE WITH AN IN-LINE END TREATMENT AT TRAILING END OF RAILING)
See Notes 9 and 10

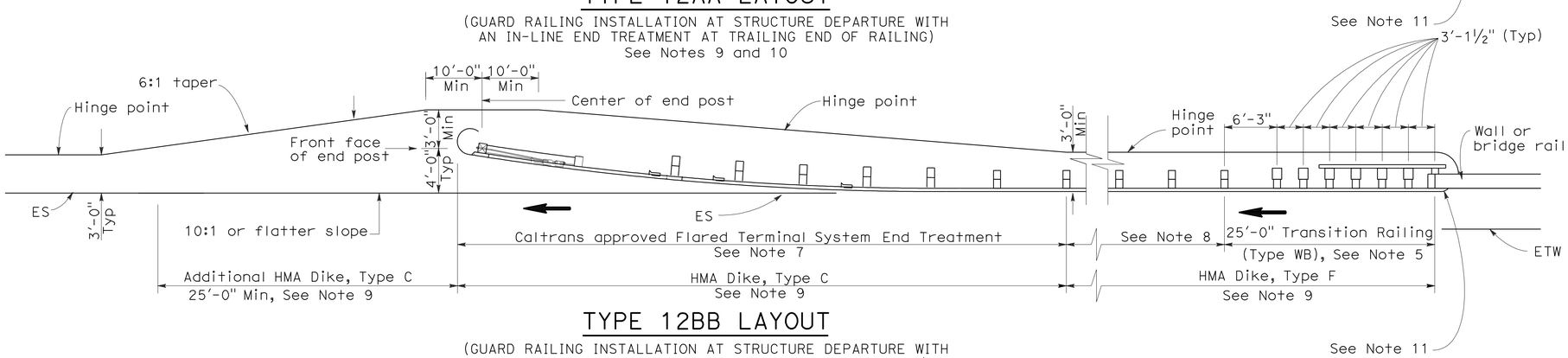

TYPE 12BB LAYOUT

(GUARD RAILING INSTALLATION AT STRUCTURE DEPARTURE WITH A FLARED END TREATMENT AT TRAILING END OF RAILING)
See Notes 9 and 10

NOTES:

1. Line post, blocks and hardware to be used are shown on Standard Plans A77A1, A77A2, A77B1, A77C1 and A77C2.
2. Guard rail post spacing to be 6'-3" center to center, except as otherwise noted.
3. Except as noted, line posts are 6" x 8" x 6'-0" wood with 6" x 8" x 1'-2" wood blocks. W6 x 9 steel posts, 6'-0" in length, with 6" x 8" x 1-2" notched wood blocks or notched recycled plastic blocks may be used for 6" x 8" x 6'-0" wood posts with 6" x 8" x 1'-2" wood blocks where applicable and when specified.
4. Direction of adjacent traffic indicated by ⟶.
5. For Transition Railing (Type WB) details for Types 12AA and 12BB Layouts, see Standard Plan A77J4.
6. In-line Terminal System Treatments are used where site conditions will not accommodate a flared end treatment.
7. The type of terminal system to be used will be shown on the Project Plans.
8. Dependent on site conditions (embankment height, side slopes, other fixed objects), it may be advisable to construct additional guard railing (a length equal to multiples of 12'-6" with 6'-3" post spacing) between the transition railing and end treatments.
9. Where placement of dike is required with guard railing installations, see Revised Standard Plan RSP A77C4 for dike positioning details.
10. Type 12AA or Type 12BB Layouts are typically used to the right of traffic departing a structure on two-way conventional highways where the roadbed width across the structure is less than 40 feet.
11. For additional details of typical connections to bridge rail, see Connection Detail CC on Revised Standard Plan RSP A77J2 and Connection Detail HH on Standard Plans A77k2.

STATE OF CALIFORNIA
DEPARTMENT OF TRANSPORTATION

METAL BEAM GUARD RAILING TYPICAL LAYOUTS FOR STRUCTURE DEPARTURE

NO SCALE

RSP A77F4 DATED JUNE 6, 2008 SUPERSEDES STANDARD PLAN A77F4
DATED MAY 1, 2006 - PAGE 57 OF THE STANDARD PLANS BOOK DATED MAY 2006.

REVISED STANDARD PLAN RSP A77F4

2006 REVISED STANDARD PLAN RSP A77F4

12-10-07

Dist	COUNTY	ROUTE	POST MILES TOTAL PROJECT	SHEET No.	TOTAL SHEETS
10	Ama	88	0.0/5.5	163	216

Randell D. Hiatt
REGISTERED CIVIL ENGINEER

May 20, 2011
PLANS APPROVAL DATE

REGISTERED PROFESSIONAL ENGINEER Randell D. Hiatt No. C50200 Exp. 6-30-11 CIVIL STATE OF CALIFORNIA

To accompany plans dated 10-17-11

The State of California or its officers or agents shall not be responsible for the accuracy or completeness of electronic copies of this plan sheet.

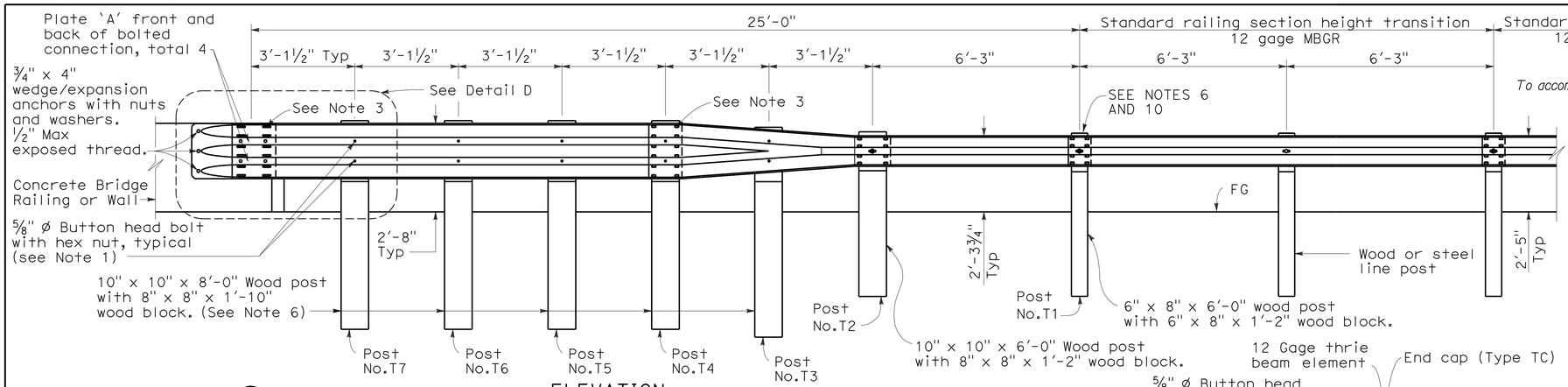

ELEVATION

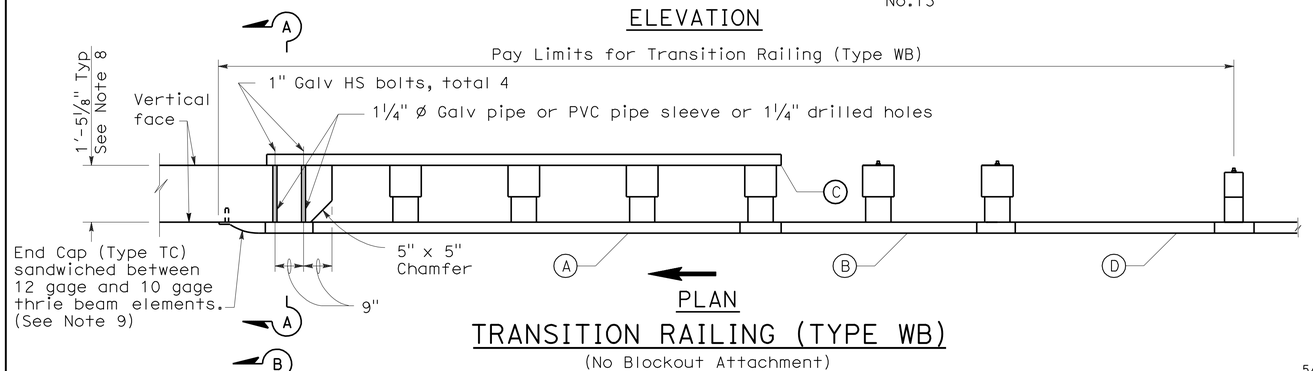

PLAN

TRANSITION RAILING (TYPE WB)

(No Blockout Attachment)

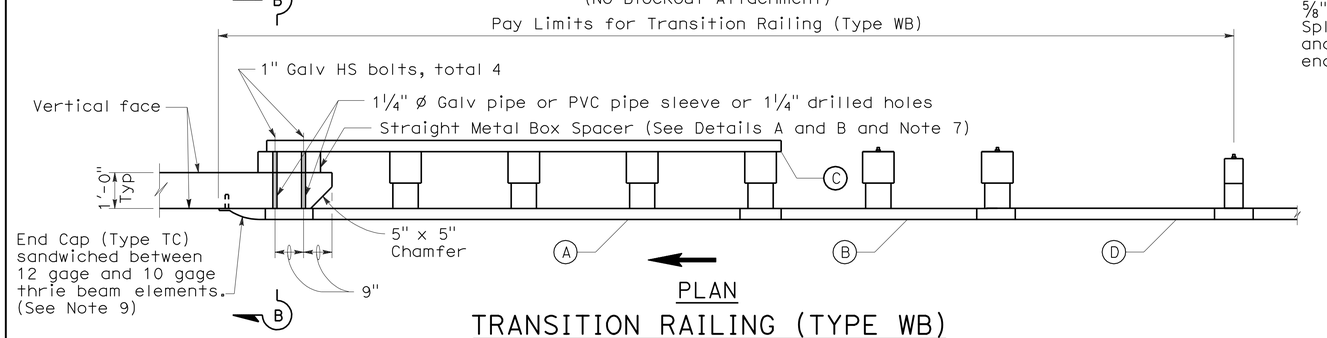

PLAN

TRANSITION RAILING (TYPE WB)

(Blockout Attachment)

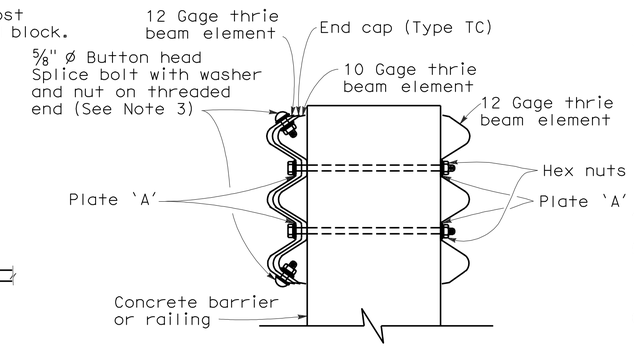

SECTION A-A

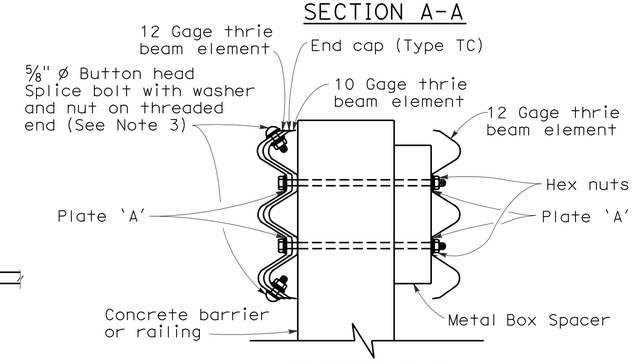

SECTION B-B

NOTES:

1. Use ⅝" ø Button head bolts and hex nuts for connections to posts. No washer on rail face for bolted connections to post.
2. The nested rail elements, end cap, and 'W' beam to thrie beam element may be spliced together prior to bolting the elements to the wood post and concrete barrier or railing.
3. Exterior splice bolt holes for rail element splices at Post No. T4 and the connection to the concrete barrier or railing shall be the standard 29/32" x 1⅛" slot size. Interior splice bolt holes at these locations may be increased up to 1¼" ø. Only the top 2 and the bottom 2 splice bolts with washers and nuts are required for rail splices at Post No. T4 and the connection to the concrete barrier or railing.
4. Direction of adjacent traffic indicated by ➡.
5. The top elevation of Posts No. T2 through No. T7 shall not project more than 1" above the top elevation of the rail element.
6. Typically, the railing connected to Transition Railing (Type WB) will be either standard railing section of metal beam guard railing with height transition ratio of 120:1 or an approved Caltrans end treatment attached to Post No. T1.
7. The depth of the metal box spacer varies from the 5⅛" to 1½" and is dependent on the width of the concrete railing or wall. The combined dimension for the depth of the metal box spacer plus the width of railing or wall is typically 17⅛". Where the space between the backside of the concrete railing or wall and the rear thrie beam element is less than 1½", metal plates similar to Plate 'A' are to be used as spacers.
8. Where the width of the concrete railing or wall is greater than 17⅛", wood blocks are to be used to fill the space created between the backside of Posts No. T4 through No. T7 and the rear thrie beam element. These wood blocks shall be 8" in width and 1'-2" in length. The dimension between the front thrie beam element and the rear thrie beam element is to match the width of the concrete railing or wall.
9. End cap may be installed over 12 gage and 10 gage thrie beam elements where transition railing is installed on the departure end of bridge railing.
10. Conform standard railing section height to 2'-3¾" at Post No. T1 using height transition ratio of 120:1.

LEGEND

(A) Nested thrie beam elements (one 12 gage element nested over one 10 gage element).

(B) One 10 gage "W" beam to thrie beam element.

(C) One 12 gage thrie beam element.

(D) One 10 gage "W" beam rail element (7'-3½" length)

10 gage = 0.135" thick

12 gage = 0.108" thick

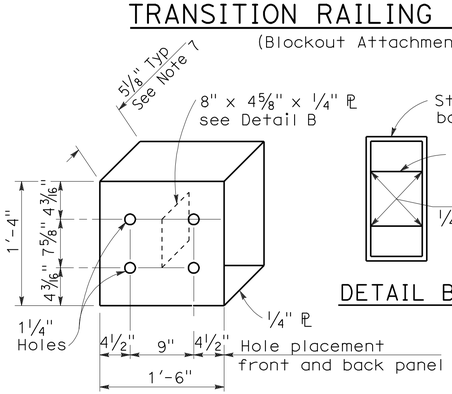

DETAIL A

STRAIGHT METAL BOX SPACER

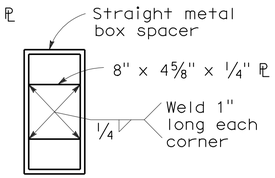

DETAIL B

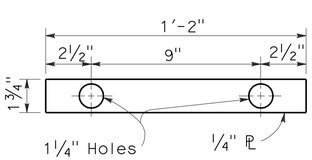

DETAIL C

PLATE 'A'

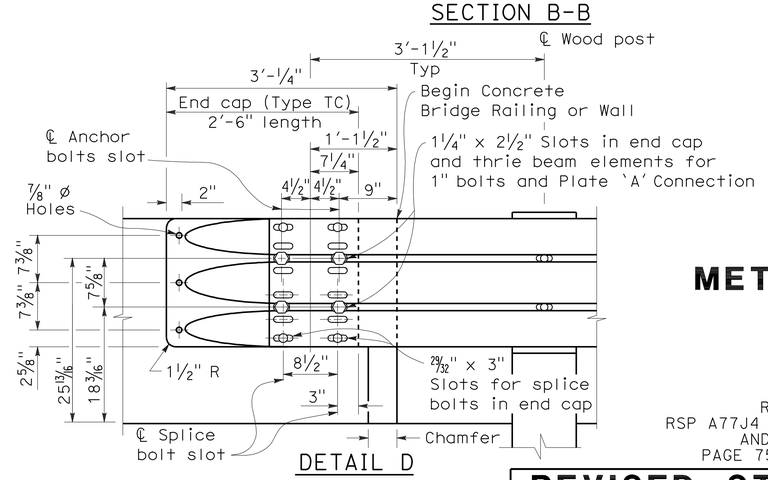

DETAIL D

STATE OF CALIFORNIA
DEPARTMENT OF TRANSPORTATION

METAL BEAM GUARD RAILING TRANSITION RAILING (TYPE WB)

NO SCALE

RSP A77J4 DATED MAY 20, 2011 SUPERSEDES
RSP A77J4 DATED JUNE 5, 2009, RSP A77J4 DATED JUNE 6, 2008
AND STANDARD PLAN A77J4 DATED MAY 1, 2006 -
PAGE 75 OF THE STANDARD PLANS BOOK DATED MAY 2006.

REVISED STANDARD PLAN RSP A77J4

2006 REVISED STANDARD PLAN RSP A77J4

5-14-09

DIST	COUNTY	ROUTE	POST MILES TOTAL PROJECT	SHEET NO.	TOTAL SHEETS
10	Ama	88	0.0/5.5	164	216

Randell D. Hiatt
REGISTERED CIVIL ENGINEER

June 6, 2008
PLANS APPROVAL DATE

REGISTERED PROFESSIONAL ENGINEER
Randell D. Hiatt
No. C50200
Exp. 6-30-09
CIVIL
STATE OF CALIFORNIA

The State of California or its officers or agents shall not be responsible for the accuracy or completeness of electronic copies of this plan sheet.

To accompany plans dated 10-17-11

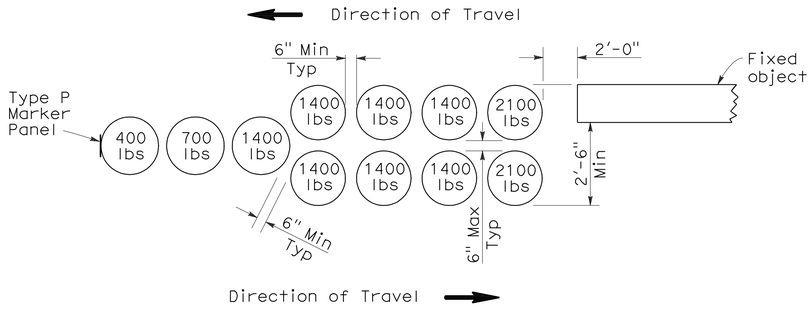

ARRAY 'B11'

Approach speed less than 45 mph

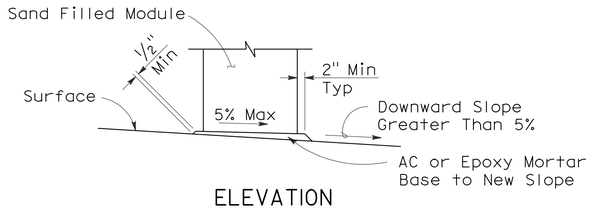

ELEVATION

SLOPED SEAT DETAIL

(See Note 5)

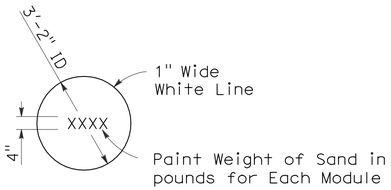

PAINTING DETAIL

(See Note 6)

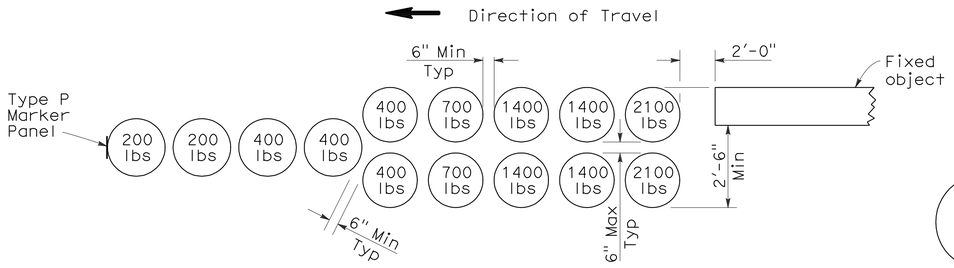

ARRAY 'B14'

Approach speed 45 mph or more

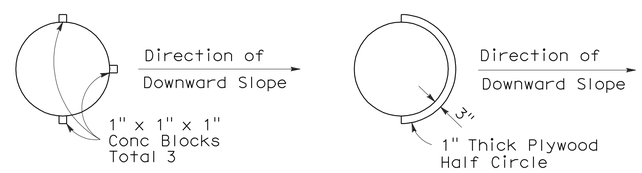

ALTERNATIVE 1

ALTERNATIVE 2

PLAN

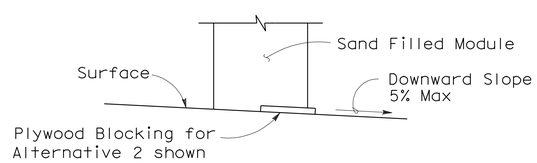

ELEVATION

BRIDGE DECK MODULE BLOCKING DETAILS

(See Note 7)

NOTES:

1. (XXX) Indicates module location and weight of sand in pounds for each module. Module spacing is based on the greater diameter of the module.
2. All sand weights are nominal.
3. Each module is to contain amount of sand indicated, supported according to the manufacturer's instructions.
4. Bidirectional crash cushion arrays may be angled toward approaching traffic. Amount of angle not to exceed 10 degrees.
5. Modules shall be placed on asphalt concrete, epoxy mortar or concrete surface. Modules to be placed on surfacing with greater than 5% downward slope shall be seated as shown.
6. Mass of sand and outline of each module shall be painted on the surface at each module location.
7. Module blocking, epoxied to the deck surface, is required for all modules placed on bridge decks. Two acceptable alternatives are shown. Other alternatives recommended by the manufacturer and approved by the Engineer will be accepted.
8. Place the Type P marker panel so that the bottom of the panel is at the bottom of the module.
9. Approach speeds indicated conform to NCHRP Report criteria.

STATE OF CALIFORNIA
DEPARTMENT OF TRANSPORTATION

CRASH CUSHION, SAND FILLED (BIDIRECTIONAL)

NO SCALE

RSP A81C DATED JUNE 6, 2008 SUPERSEDES STANDARD PLAN A81C
DATED MAY 1, 2006 - PAGE 101 OF THE STANDARD PLANS BOOK DATED MAY 2006.

REVISED STANDARD PLAN RSP A81C

2006 REVISED STANDARD PLAN RSP A81C

5-15-08

DIST	COUNTY	ROUTE	POST MILES TOTAL PROJECT	SHEET NO.	TOTAL SHEETS
10	Ama	88	0.0/5.5	165	216

REGISTERED CIVIL ENGINEER

June 5, 2009
PLANS APPROVAL DATE

REGISTERED PROFESSIONAL ENGINEER Glenn DeCou No. C34547 Exp. 9-30-09 CIVIL STATE OF CALIFORNIA

The State of California or its officers or agents shall not be responsible for the accuracy or completeness of electronic copies of this plan sheet.

To accompany plans dated 10-17-11

NOTES:

1. Offset to be 2'-0" at monument locations, measured at right angles to R/W lines. Taper to achieve offset to be at least 20'-0" long.
2. Line post spacing for wood post equals 12'-0" maximum. Line post spacing for metal post equals 10'-0" maximum.
3. See Standard Plan A86 for Barbed Wire and Wire Mesh dimensions and for steel post and wood post dimensions and weight.
4. Use wood posts when specified in the Special Provisions or shown on the Project Plans.

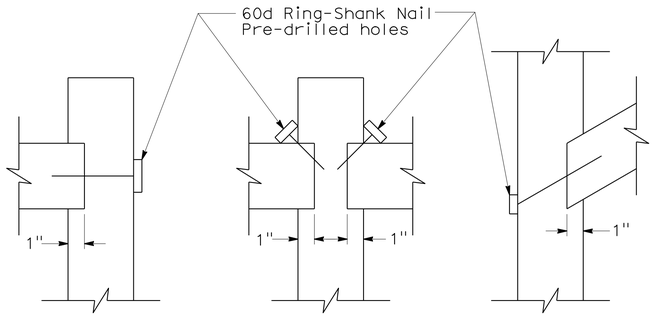

WOOD MORTISE DETAIL

See Note 4

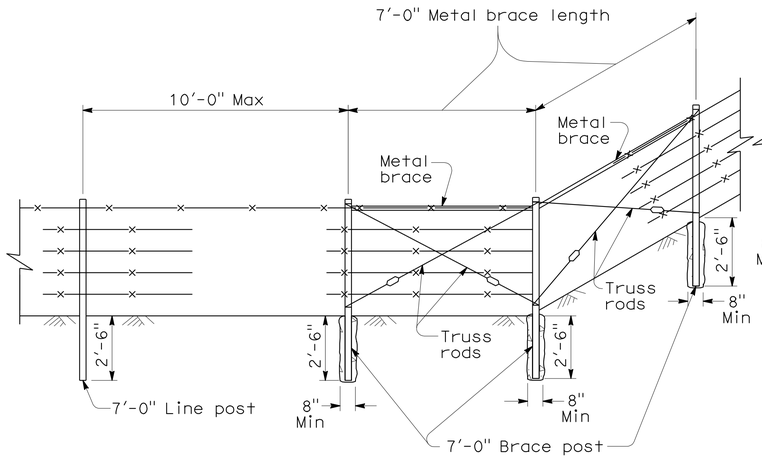

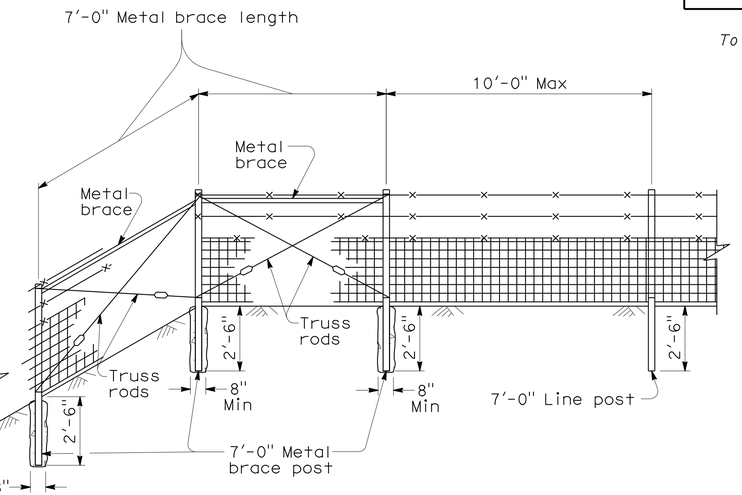

METAL POST

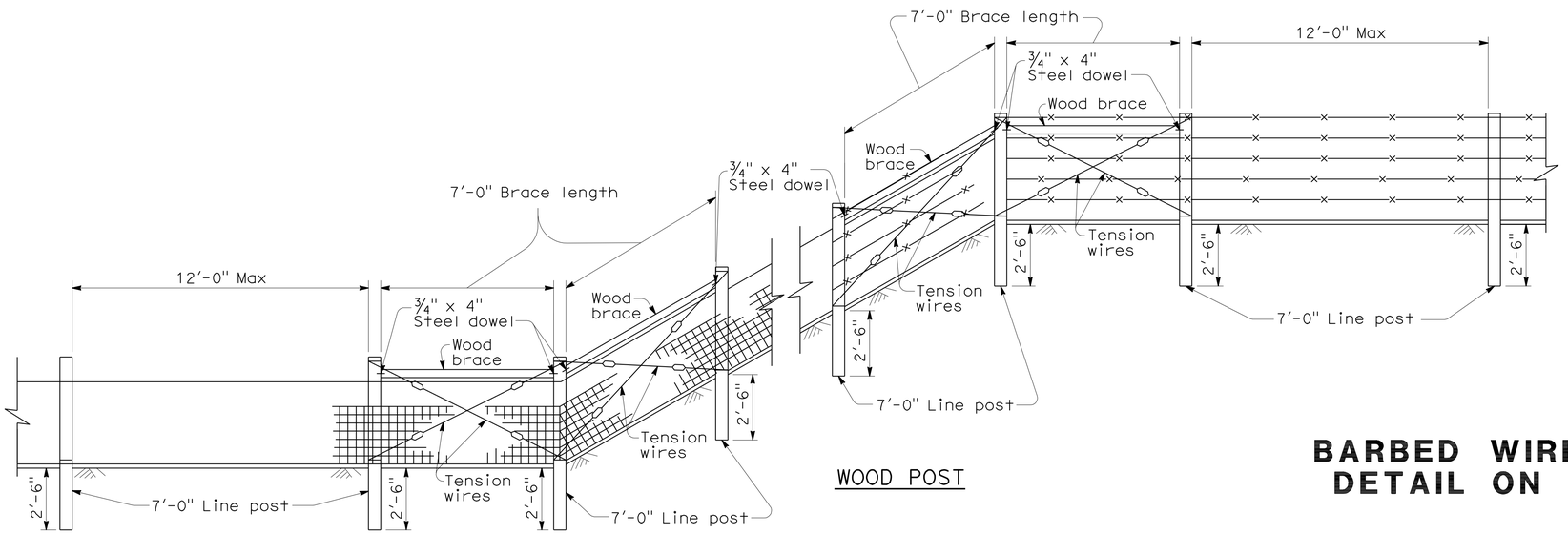

WOOD POST

FENCE ON SHARP BREAK IN GRADE

LEGEND

Wire Mesh fencing

Barbed Wire fencing

STATE OF CALIFORNIA
DEPARTMENT OF TRANSPORTATION

BARBED WIRE AND WIRE MESH FENCE DETAIL ON SHARP BREAK IN GRADE

NO SCALE

NSP A86A DATED JUNE 5, 2009 SUPPLEMENTS THE STANDARD PLANS BOOK DATED MAY 2006.

NEW STANDARD PLAN NSP A86A

2006 NEW STANDARD PLAN NSP A86A

5-12-09

DIST	COUNTY	ROUTE	POST MILES TOTAL PROJECT	SHEET NO.	TOTAL SHEETS
10	Ama	88	0.0/5.5	166	216

REGISTERED CIVIL ENGINEER

June 5, 2009
PLANS APPROVAL DATE

REGISTERED PROFESSIONAL ENGINEER Glenn DeCou No. C34547 Exp. 9-30-09 CIVIL STATE OF CALIFORNIA

The State of California or its officers or agents shall not be responsible for the accuracy or completeness of electronic copies of this plan sheet.

To accompany plans dated 10-17-11

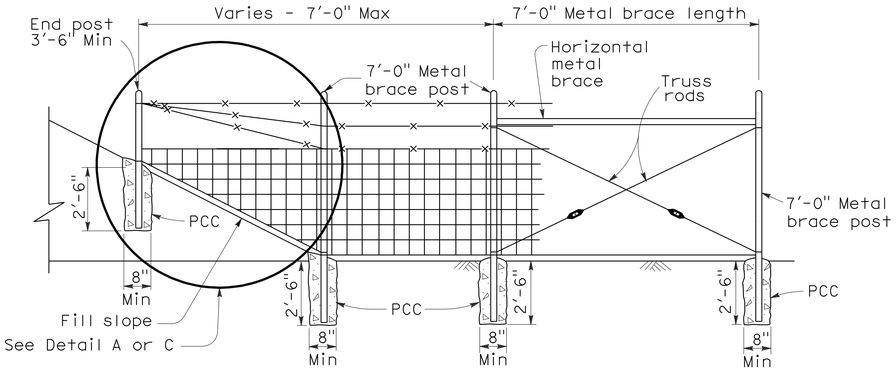

METAL POST

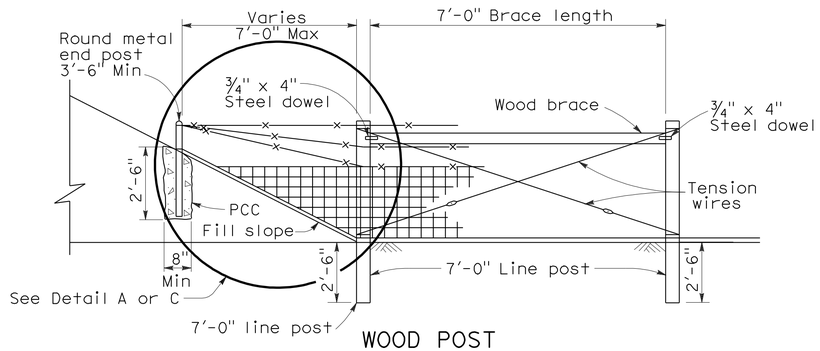

WOOD POST

METHOD OF ERECTING FENCE FOR FILL SLOPE

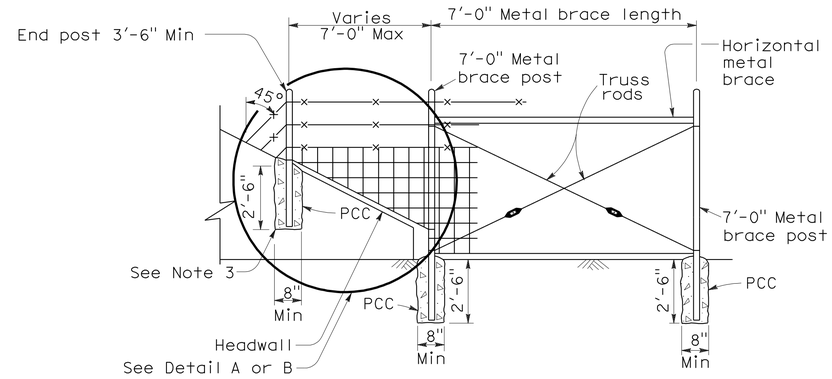

METAL POST

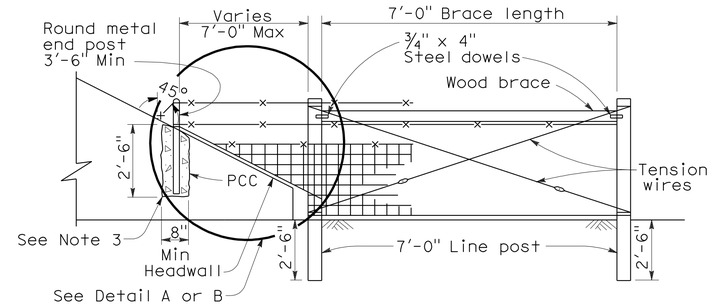

WOOD POST

METHOD OF TYING FENCE TO HEADWALL

NOTES:

1. Wire Mesh fencing shown, can also use Barbed Wire fencing.
2. See Standard Plan A86 for Wire Mesh and Barbed Wire fence dimensions.
3. See Standard Plan B11-7 Alternative Anchorage Detail for connection at headwall. Round metal post to be used for all fence types.

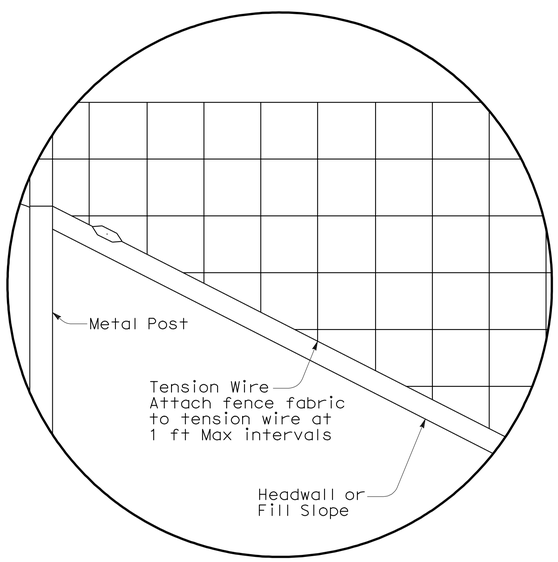

DETAIL A

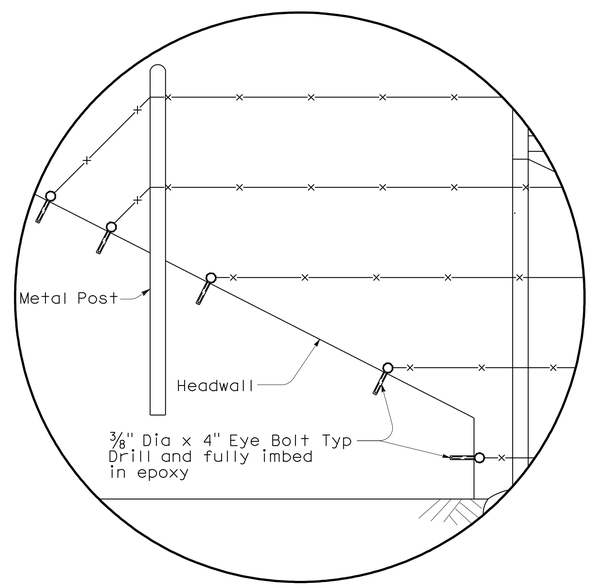

DETAIL B

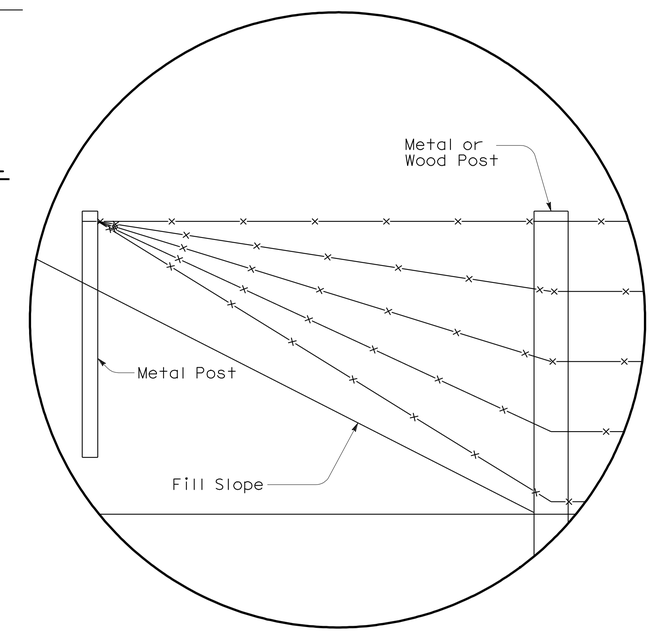

DETAIL C

STATE OF CALIFORNIA
DEPARTMENT OF TRANSPORTATION

BARBED WIRE AND WIRE MESH FENCE DETAILS

NSP A86B DATED JUNE 5, 2009 SUPPLEMENTS THE STANDARD PLANS BOOK DATED MAY 2006.

NEW STANDARD PLAN NSP A86B

2006 NEW STANDARD PLAN NSP A86B

5-12-09

DIST	COUNTY	ROUTE	POST MILES TOTAL PROJECT	SHEET NO.	TOTAL SHEETS
10	Ama	88	0.0/5.5	167	216

REGISTERED CIVIL ENGINEER

June 5, 2009
PLANS APPROVAL DATE

REGISTERED PROFESSIONAL ENGINEER
Glenn DeCou
No. C34547
Exp. 9-30-09
CIVIL
STATE OF CALIFORNIA

The State of California or its officers or agents shall not be responsible for the accuracy or completeness of electronic copies of this plan sheet.

To accompany plans dated 10-17-11

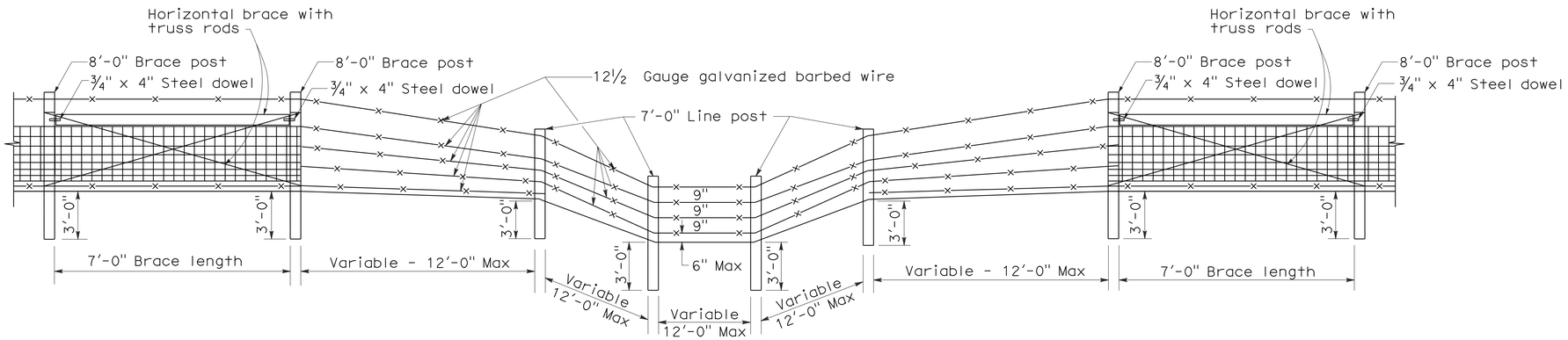

TYPE I

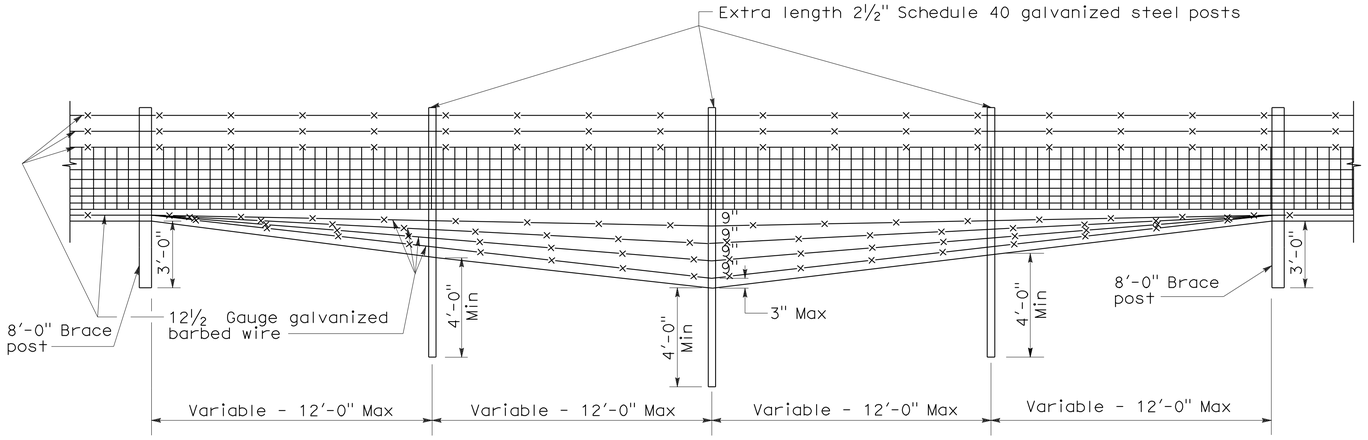

TYPE II

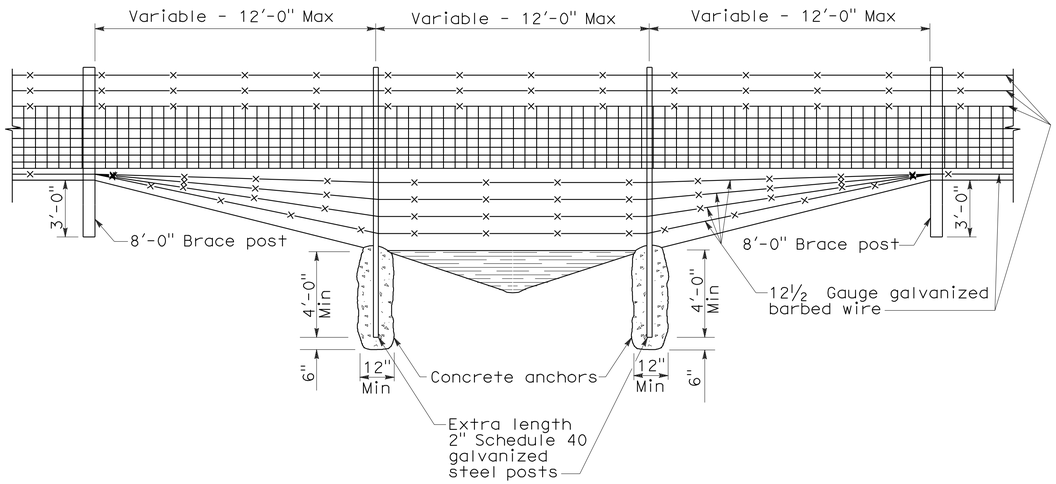

TYPE III

DITCH CROSSINGS

NOTES:

1. Type I Ditch Crossing shows wood posts. Steel posts may be used in place of wood.
2. Ditch crossing show Wire Mesh fencing. Barbed Wire fencing may be used in place of Wire Mesh.
3. See Standard Plan A86 for Wire Mesh and Barbed Wire fence dimensions.
4. See Standard Plan A86 for steel post installation.

STATE OF CALIFORNIA
DEPARTMENT OF TRANSPORTATION

BARBED WIRE AND WIRE MESH FENCE DETAILS AT DITCH CROSSING

NO SCALE

NSP A86C DATED JUNE 5, 2009 SUPPLEMENTS THE STANDARD PLANS BOOK DATED MAY 2006.

NEW STANDARD PLAN NSP A86C

2006 NEW STANDARD PLAN NSP A86C

5-12-09

DIST	COUNTY	ROUTE	POST MILES TOTAL PROJECT	SHEET NO.	TOTAL SHEETS
10	Ama	88	0.0/5.5	168	216

Randell D. Hiatt
REGISTERED CIVIL ENGINEER

June 6, 2008
PLANS APPROVAL DATE

REGISTERED PROFESSIONAL ENGINEER
Randell D. Hiatt
No. C50200
Exp. 6-30-09
CIVIL
STATE OF CALIFORNIA

The State of California or its officers or agents shall not be responsible for the accuracy or completeness of electronic copies of this plan sheet.

To accompany plans dated 10-17-11

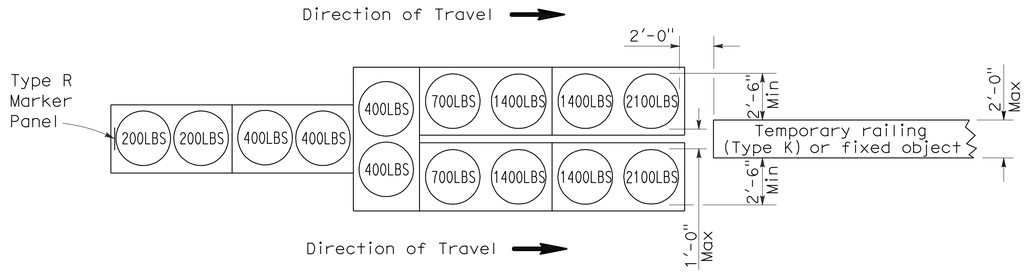

ARRAY 'TU14'

Approach speed 45 mph or more

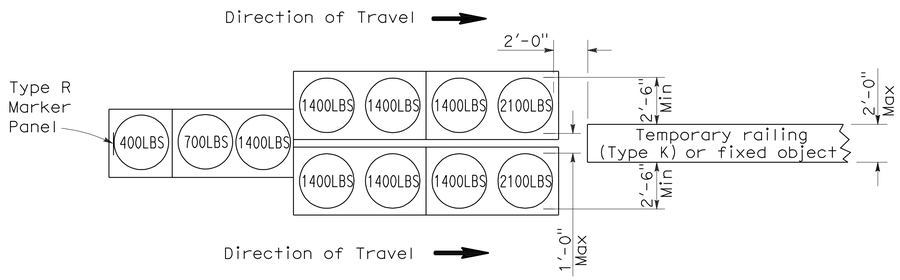

ARRAY 'TU11'

Approach speed less than 45 mph

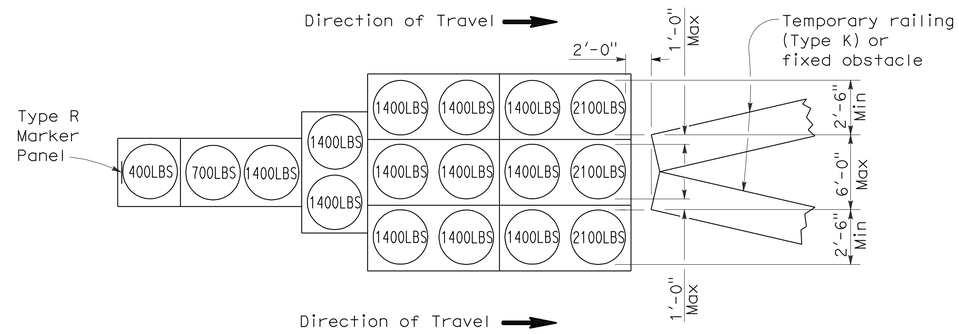

ARRAY 'TU17'

Approach speed less than 45 mph

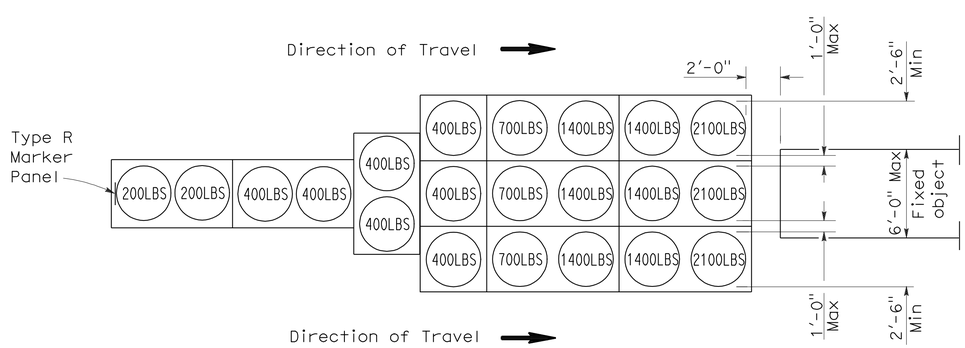

ARRAY 'TU21'

Approach speed 45 mph or more

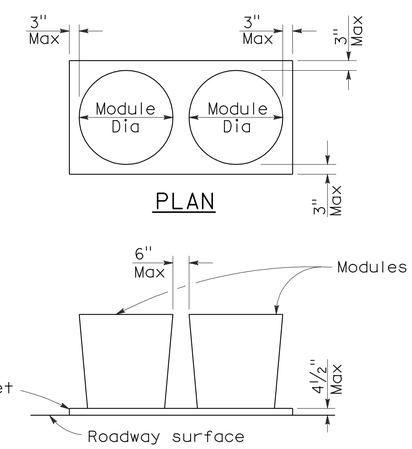

PLAN

ELEVATION

CRASH CUSHION PALLET DETAIL

See Note 7

NOTES:

1. (XXX) Indicates sand filled module location and weight of sand in pounds for each module. Module spacing is based on the greater diameter of the module.
2. All sand weights are nominal.
3. Temporary crash cushion arrays shall not encroach on the traveled way.
4. Place the top of Type R marker panel 1" below the module lid.
5. Refer to Standard Plan A73B for marker details.
6. Approach speeds indicated conform to NCHRP 350 Report criteria.
7. Use of pallets is optional.

STATE OF CALIFORNIA
DEPARTMENT OF TRANSPORTATION

TEMPORARY CRASH CUSHION, SAND FILLED (UNIDIRECTIONAL)

NO SCALE

RSP T1A DATED JUNE 6, 2008 SUPERSEDES STANDARD PLAN T1A
DATED MAY 1, 2006 - PAGE 211 OF THE STANDARD PLANS BOOK DATED MAY 2006.

REVISED STANDARD PLAN RSP T1A

2006 REVISED STANDARD PLAN RSP T1A

DIST	COUNTY	ROUTE	POST MILES TOTAL PROJECT	SHEET NO.	TOTAL SHEETS
10	Ama	88	0.0/5.5	169	216

Randell D. Hiatt
REGISTERED CIVIL ENGINEER

June 6, 2008
PLANS APPROVAL DATE

REGISTERED PROFESSIONAL ENGINEER
Randell D. Hiatt
No. C50200
Exp. 6-30-09
CIVIL
STATE OF CALIFORNIA

The State of California or its officers or agents shall not be responsible for the accuracy or completeness of electronic copies of this plan sheet.

To accompany plans dated 10-17-11

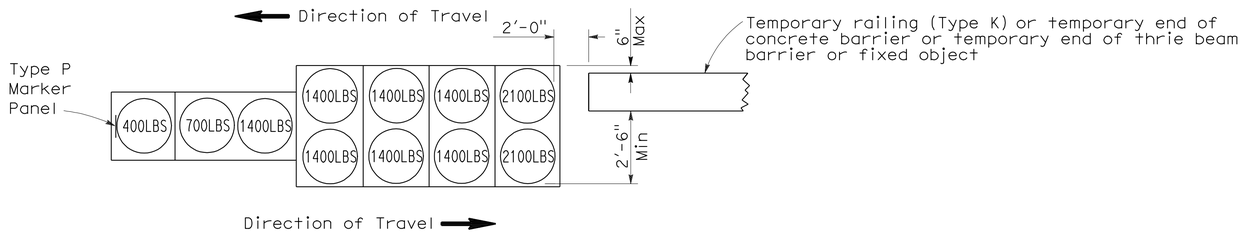

ARRAY 'TB11'

Approach speed less than 45 mph

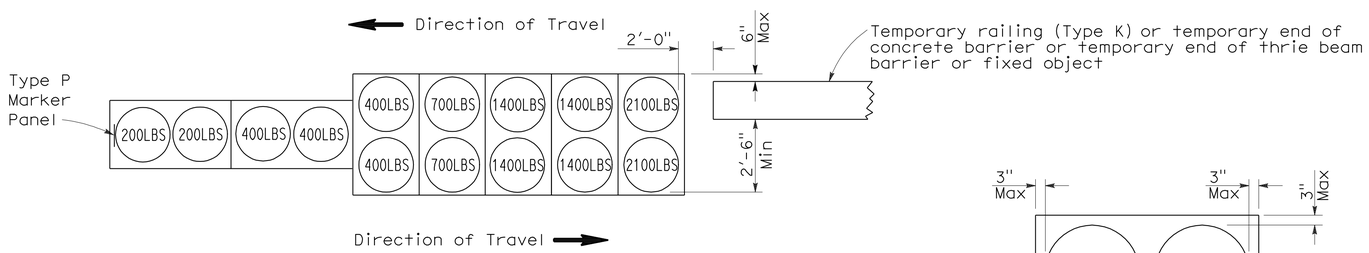

ARRAY 'TB14'

Approach speed 45 mph or more

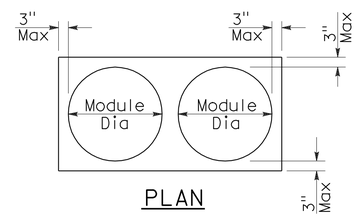

PLAN

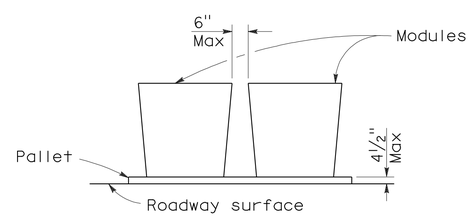

ELEVATION

CRASH CUSHION PALLET DETAIL

See Note 7

NOTES:

1. (XXX) Indicates sand filled module location and weight of sand in pounds for each module. Module spacing is based on the greater diameter of the module.
2. All sand weights are nominal.
3. Temporary crash cushion arrays shall not encroach on the traveled way.
4. Place the Type P marker panel so that the bottom of the panel rests upon the pallet.
5. Refer to Standard Plan A73B for marker details.
6. Approach speeds indicated conform to NCHRP 350 Report criteria.
7. Use of pallets is optional.

STATE OF CALIFORNIA
DEPARTMENT OF TRANSPORTATION

TEMPORARY CRASH CUSHION, SAND FILLED (BIDIRECTIONAL)

NO SCALE

RSP T1B DATED JUNE 6, 2008 SUPERSEDES STANDARD PLAN T1B
DATED MAY 1, 2006 - PAGE 212 OF THE STANDARD PLANS BOOK DATED MAY 2006.

REVISED STANDARD PLAN RSP T1B

2006 REVISED STANDARD PLAN RSP T1B

5-15-08

DIST	COUNTY	ROUTE	POST MILES TOTAL PROJECT	SHEET NO.	TOTAL SHEETS
10	Ama	88	0.0/5.5	170	216

Randell D. Hiatt
REGISTERED CIVIL ENGINEER

June 6, 2008
PLANS APPROVAL DATE

REGISTERED PROFESSIONAL ENGINEER
Randell D. Hiatt
No. C50200
Exp. 6-30-09
CIVIL
STATE OF CALIFORNIA

The State of California or its officers or agents shall not be responsible for the accuracy or completeness of electronic copies of this plan sheet.

To accompany plans dated 10-17-11

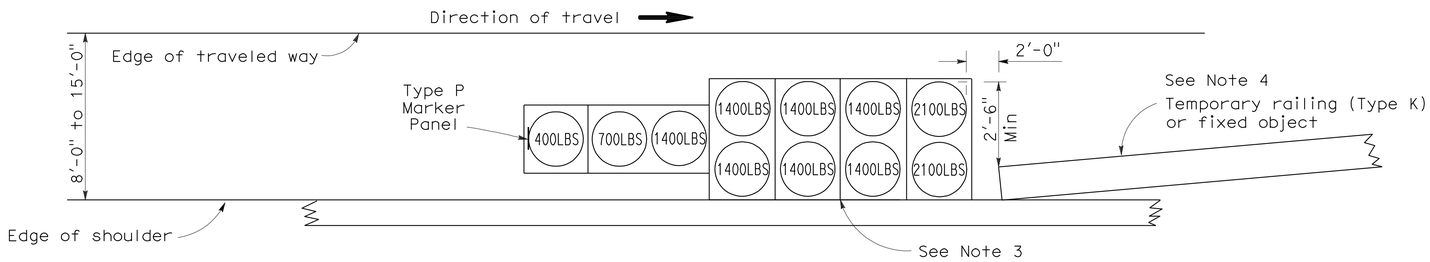

ARRAY 'TS11'

Approach speed less than 45 mph
See Note 9

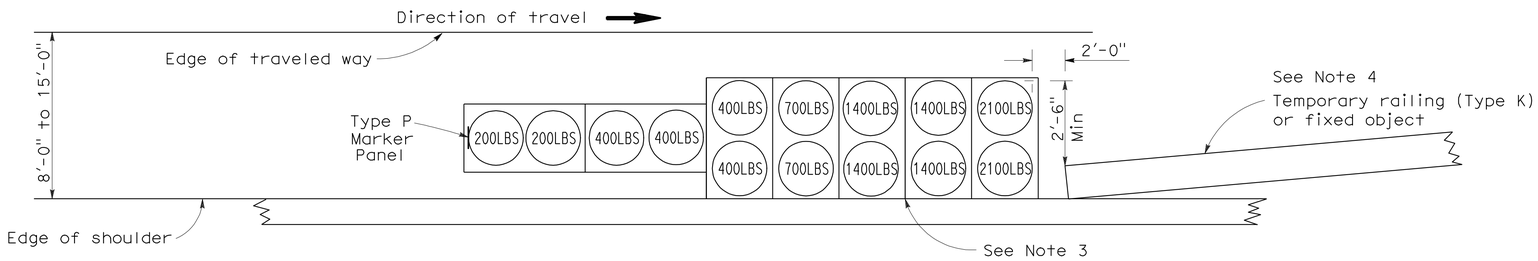

ARRAY 'TS14'

Approach speed 45 mph or more
See Note 9

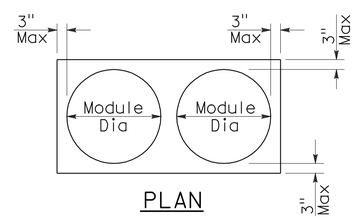

PLAN

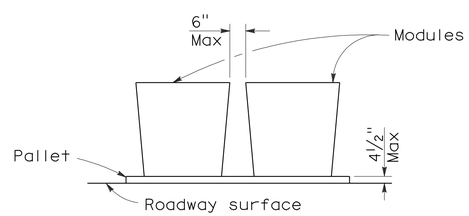

ELEVATION

CRASH CUSHION PALLET DETAIL

See Note 11

NOTES:

1. (XXX) Indicates sand filled module location and weight of sand in pounds for each module. Module spacing is based on the greater diameter of the module.
2. All sand weights are nominal.
3. The temporary crash cushion arrays shown on this plan shall be used only in locations where there will be traffic on one side of the temporary crash cushion array.
4. If the fixed object or approach end of the temporary railing is less than 15'-0" from the edge of traveled way, a temporary crash cushion is required in a construction or work zone.
5. Temporary crash cushion arrays shall not encroach on the traveled way.
6. Arrays for median shoulders shall conform to details shown on this plan for outside shoulders.
7. Place the Type P marker panel so that the bottom of the panel rests upon the pallet and faces traffic.
8. Refer to Standard Plan A73B for marker details.
9. For shoulder widths less than 8'-0", appropriate approved crash cushion protection, other than sand filled modules, shall be provided at fixed objects and at approach ends of temporary railing. The specific type of crash cushion shall be as shown on the project plans or as specified in the Special Provisions, or if not shown on the project plans or specified in the Special Provisions, shall be as approved by the Engineer.
10. Approach speeds indicated conform to NCHRP 350 Report criteria.
11. Use of pallets is optional.

STATE OF CALIFORNIA
DEPARTMENT OF TRANSPORTATION

TEMPORARY CRASH CUSHION, SAND FILLED (SHOULDER INSTALLATIONS)

NO SCALE

RSP T2 DATED JUNE 6, 2008 SUPERSEDES STANDARD PLAN T2
DATED MAY 1, 2006 - PAGE 213 OF THE STANDARD PLANS BOOK DATED MAY 2006.

REVISED STANDARD PLAN RSP T2

2006 REVISED STANDARD PLAN RSP T2

5-15-08

DIST	COUNTY	ROUTE	POST MILES TOTAL PROJECT	SHEET NO.	TOTAL SHEETS
10	Ama	88	0.0/5.5	171	216

REGISTERED CIVIL ENGINEER

November 17, 2006
PLANS APPROVAL DATE

REGISTERED PROFESSIONAL ENGINEER
Greg W. Edwards
No. C36386
Exp. 6-30-08
CIVIL
STATE OF CALIFORNIA

The State of California or its officers or agents shall not be responsible for the accuracy or completeness of electronic copies of this plan sheet.

To accompany plans dated 10-17-11

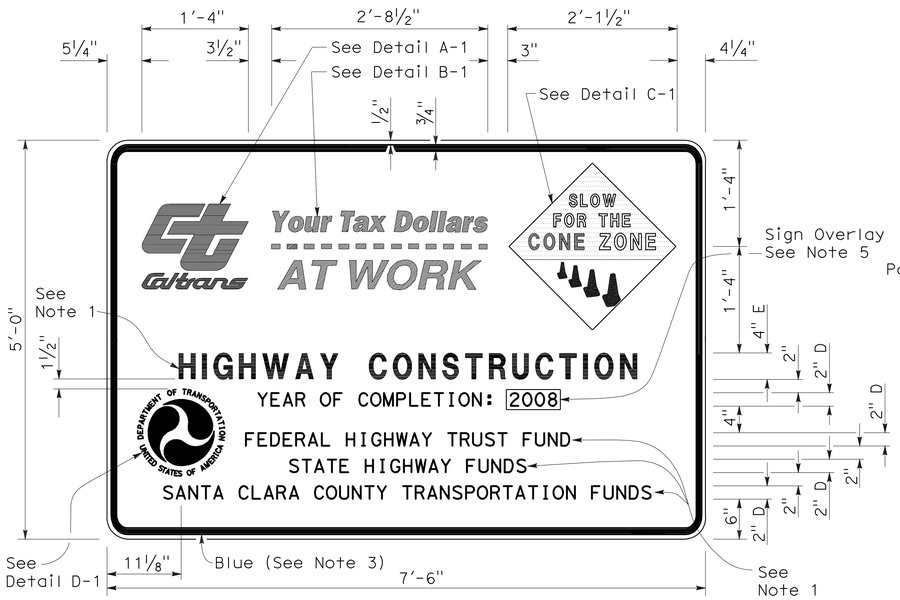

TYPE 1

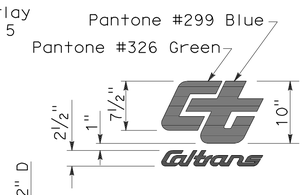

DETAIL A-1

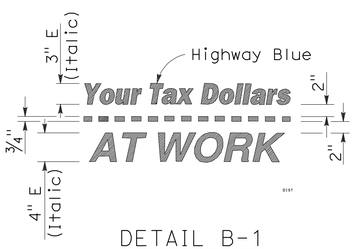

DETAIL B-1
(See Note 3)

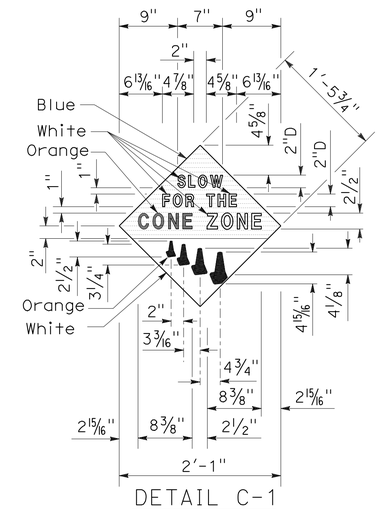

DETAIL C-1
(See Note 4)

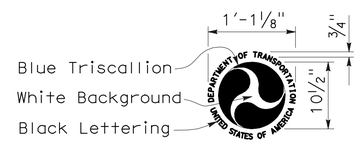

DETAIL D-1
(See Note 6)

NOTES:

1. The sign messages shown for type of project and fund types are examples only. See the Special Provisions for the applicable type of project and fund type messages to be used.
2. Except as otherwise shown, the legend of sign shall be black on a white background (non-reflective).
3. The border of the signs and details "B-1" and "B-2" shall be blue (non-reflective).
4. The diamond in details "C-1" and "C-2" shall be blue for the background of message, " SLOW FOR THE CONE ZONE", and white background for the orange cones. The color and type of font for the "SLOW FOR THE CONE ZONE" message shall be: "SLOW" white D; "FOR THE" white D; "CONE" orange Arial font; "ZONE" white Arial font.
5. Year of completion of project construction shown on the overlay is an example only. See the Special Provisions.
6. Use when the Project involves Federal Highway Trust Fund.

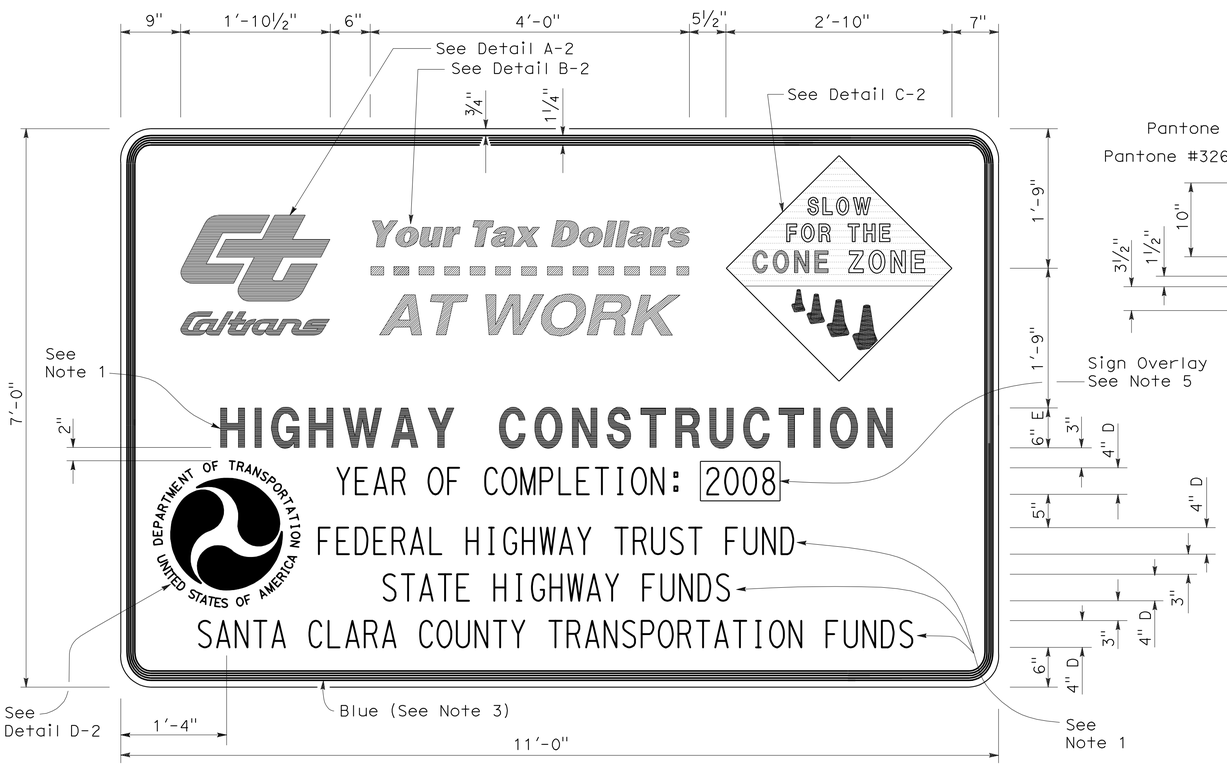

TYPE 2

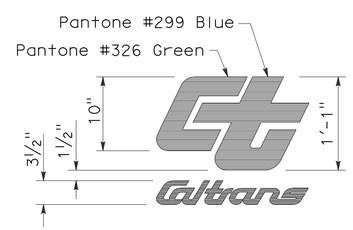

DETAIL A-2

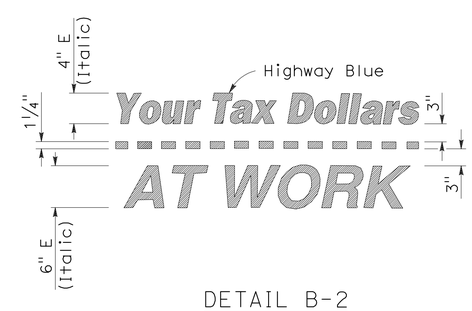

DETAIL B-2
(See Note 3)

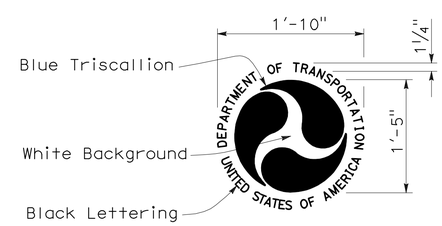

DETAIL D-2
(See Note 6)

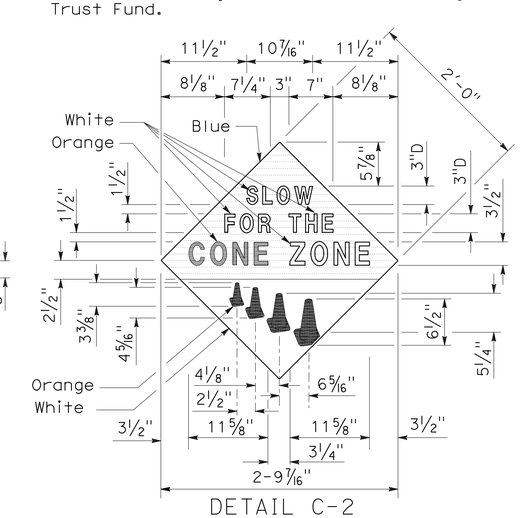

DETAIL C-2
(See Note 4)

STATE OF CALIFORNIA
DEPARTMENT OF TRANSPORTATION

CONSTRUCTION PROJECT FUNDING IDENTIFICATION SIGNS

NO SCALE

RSP T7 DATED NOVEMBER 17, 2006 SUPERSEDES STANDARD PLAN T7
DATED MAY 1, 2006 - PAGE 217 OF THE STANDARD PLANS BOOK DATED MAY 2006.

REVISED STANDARD PLAN RSP T7

2006 REVISED STANDARD PLAN RSP T7

9-7-06

DIST	COUNTY	ROUTE	POST MILES TOTAL PROJECT	SHEET NO.	TOTAL SHEETS
10	Ama	88	0.0/5.5	172	216

Robert B Schott
LICENSED LANDSCAPE ARCHITECT

April 3, 2009
PLANS APPROVAL DATE

LICENSED LANDSCAPE ARCHITECT
Robert B. Schott 3025
Robert B Schott
Signature
11-30-10
Renewal Date
2-25-09
Date
STATE OF CALIFORNIA

The State of California or its officers or agents shall not be responsible for the accuracy or completeness of electronic copies of this plan sheet.

To accompany plans dated 10-17-11

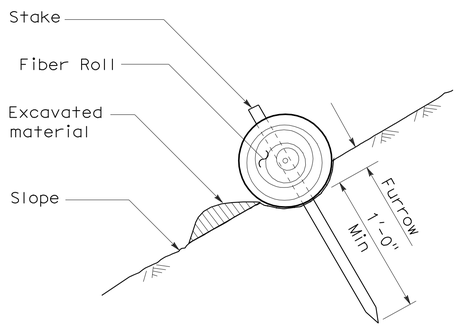

SECTION

TEMPORARY FIBER ROLL (TYPE 1)

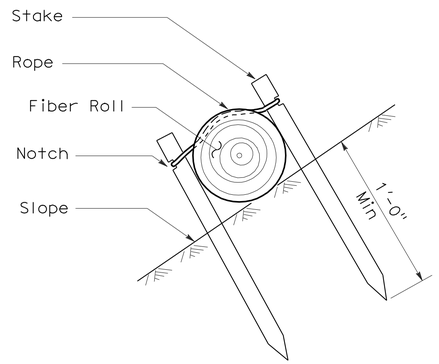

SECTION

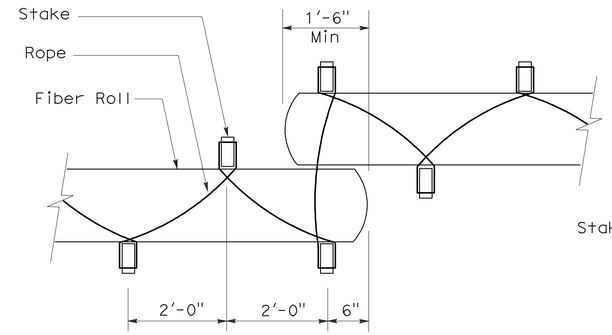

PLAN

TEMPORARY FIBER ROLL (TYPE 2)

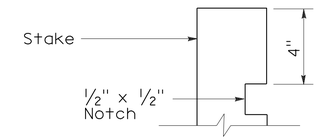

ELEVATION

STAKE NOTCH DETAIL

NOTES:

1. Temporary fiber roll spacing varies depending upon slope inclination.
2. Installations shown in the perspectives are for slope inclination of 10:1 and steeper.

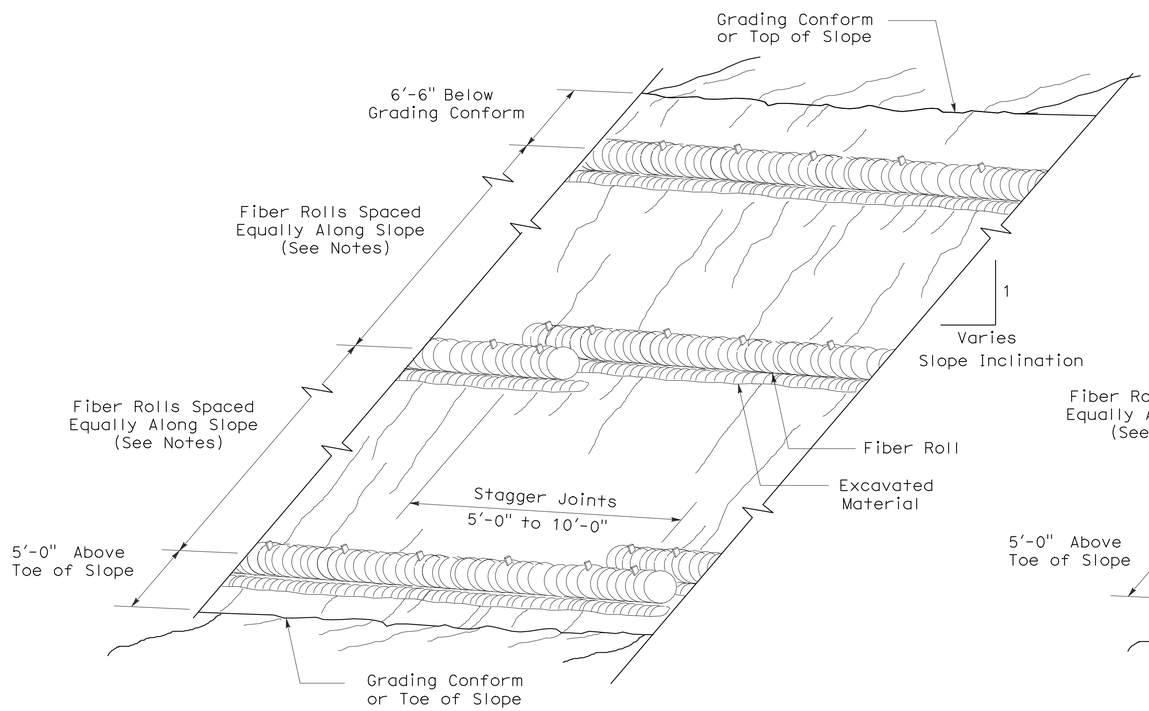

PERSPECTIVE

TEMPORARY FIBER ROLL (TYPE 1)

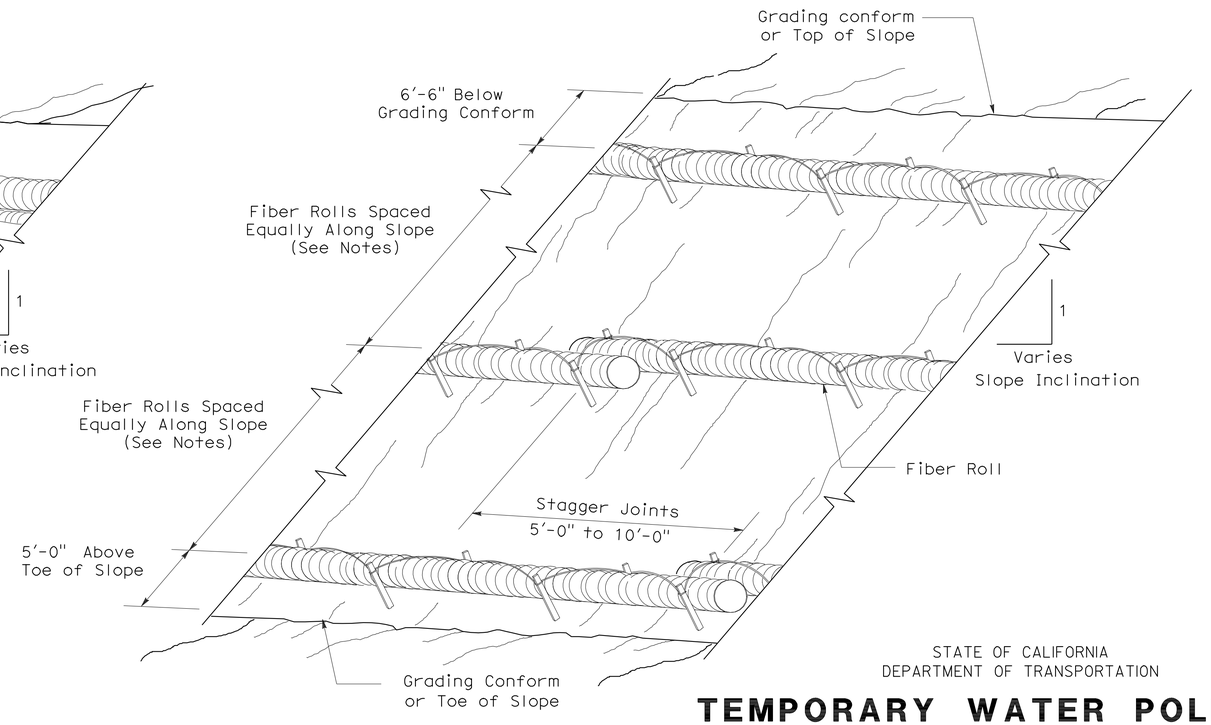

PERSPECTIVE

TEMPORARY FIBER ROLL (TYPE 2)

STATE OF CALIFORNIA
DEPARTMENT OF TRANSPORTATION

TEMPORARY WATER POLLUTION CONTROL DETAILS (TEMPORARY FIBER ROLL)

NO SCALE

RSP T56 DATED APRIL 3, 2009 SUPERSEDES STANDARD PLAN T56
DATED MAY 1, 2006 - PAGE 232 OF THE STANDARD PLANS BOOK DATED MAY 2006.

REVISED STANDARD PLAN RSP T56

2006 REVISED STANDARD PLAN RSP T56

2-23-09

DIST	COUNTY	ROUTE	POST MILES TOTAL PROJECT	SHEET NO.	TOTAL SHEETS
10	Ama	88	0.0/5.5	173	216

Robert B Schott
LICENSED LANDSCAPE ARCHITECT

April 3, 2009
PLANS APPROVAL DATE

LICENSED LANDSCAPE ARCHITECT
Robert B. Schott 3025
Robert B Schott
Signature
11-30-10
Renewal Date
2-25-09
Date
STATE OF CALIFORNIA

The State of California or its officers or agents shall not be responsible for the accuracy or completeness of electronic copies of this plan sheet.

To accompany plans dated 10-17-11

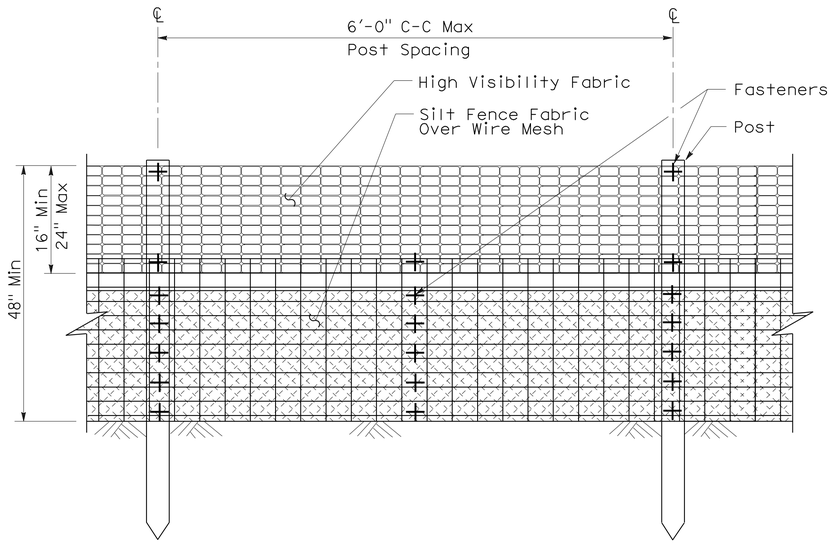

ELEVATION

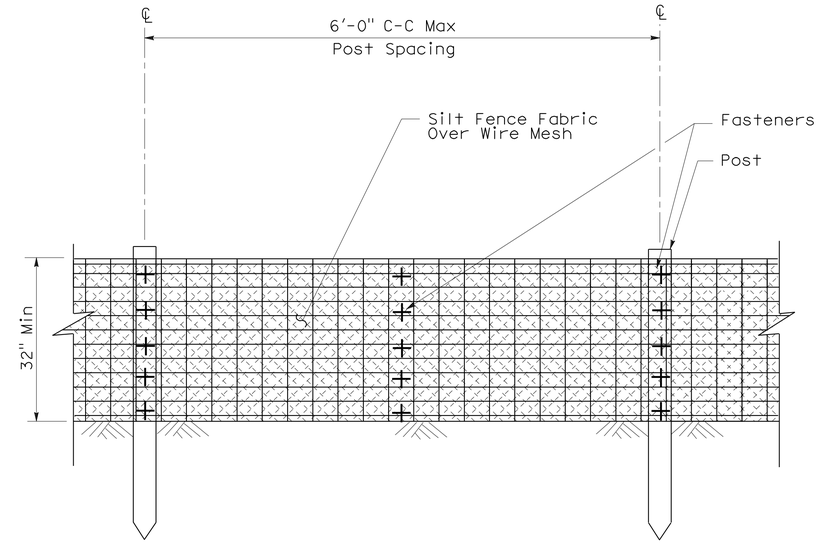

ELEVATION

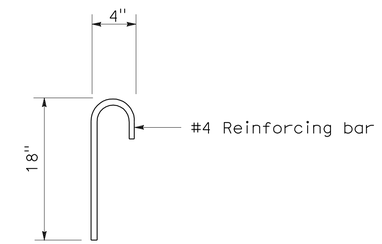

ANCHOR

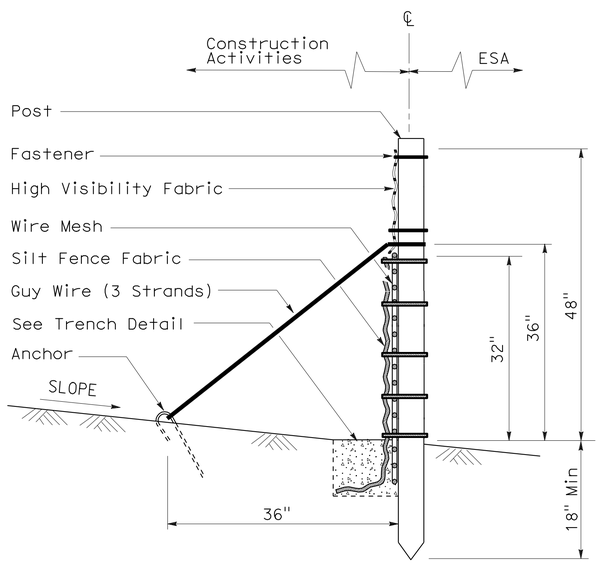

SECTION

TEMPORARY REINFORCED SILT FENCE (TYPE 1)

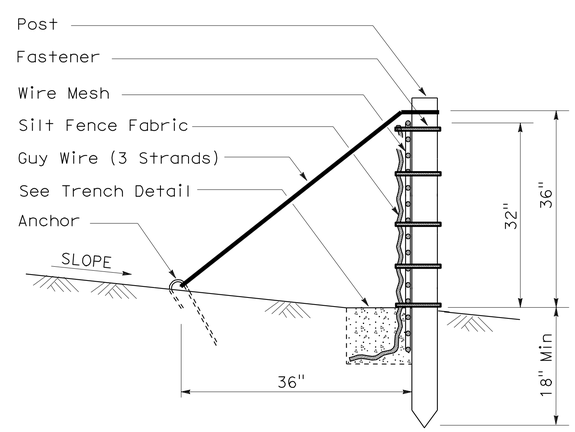

SECTION

TEMPORARY REINFORCED SILT FENCE (TYPE 2)

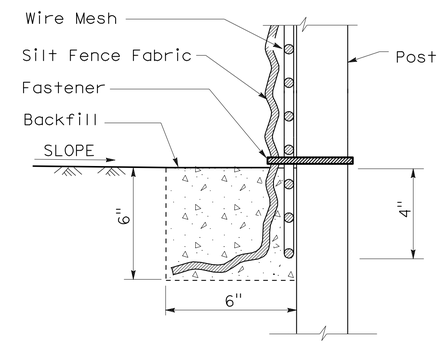

SECTION

TRENCH DETAIL

STATE OF CALIFORNIA
DEPARTMENT OF TRANSPORTATION

TEMPORARY WATER POLLUTION CONTROL DETAILS (TEMPORARY REINFORCED SILT FENCE)

NO SCALE

NSP T60 DATED APRIL 3, 2009 SUPPLEMENTS
THE STANDARD PLANS BOOK DATED MAY 2006.

NEW STANDARD PLAN NSP T60

2006 NEW STANDARD PLAN NSP T60

1-7-09

DIST	COUNTY	ROUTE	POST MILES TOTAL PROJECT	SHEET NO.	TOTAL SHEETS
10	Ama	88	0.0/5.5	174	216

LICENSED LANDSCAPE ARCHITECT

August 15, 2008
PLANS Approval DATE

LICENSED LANDSCAPE ARCHITECT
Robert B. Schott 3625
Signature
11-04-08
Renewal Date
08-11-08
Date
STATE OF CALIFORNIA

The State of California or its officers or agents shall not be responsible for the accuracy or completeness of electronic copies of this plan sheet.

To accompany plans dated 10-17-11

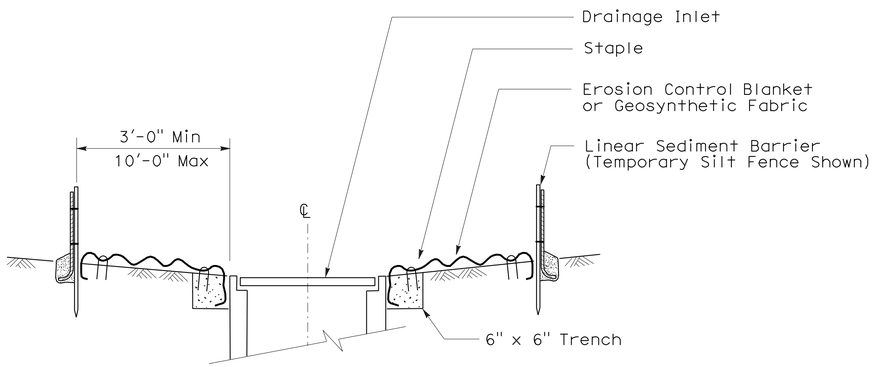

SECTION A-A

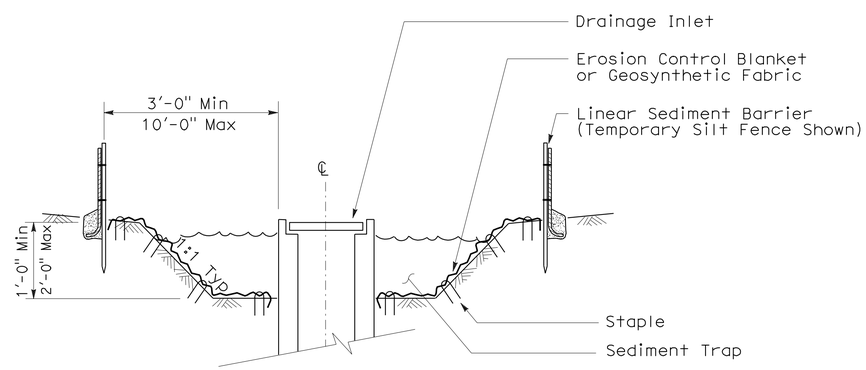

SECTION B-B

NOTES:

1. See Standard Plan T51 for Temporary Silt Fence.
2. Dimensions may vary to fit field conditions.

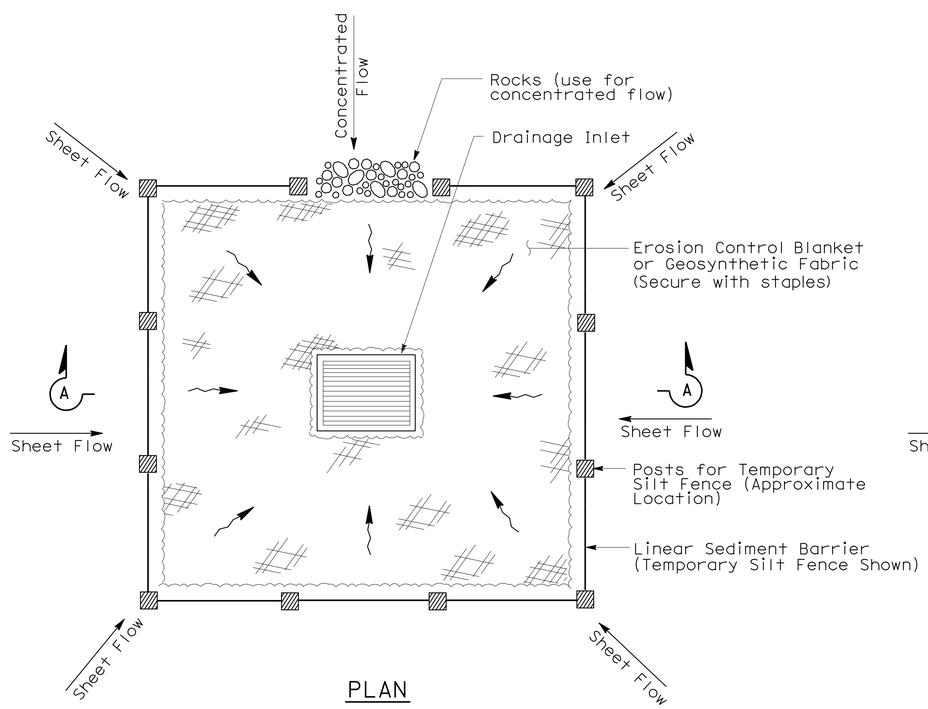

PLAN

TEMPORARY DRAINAGE INLET PROTECTION (TYPE 1)

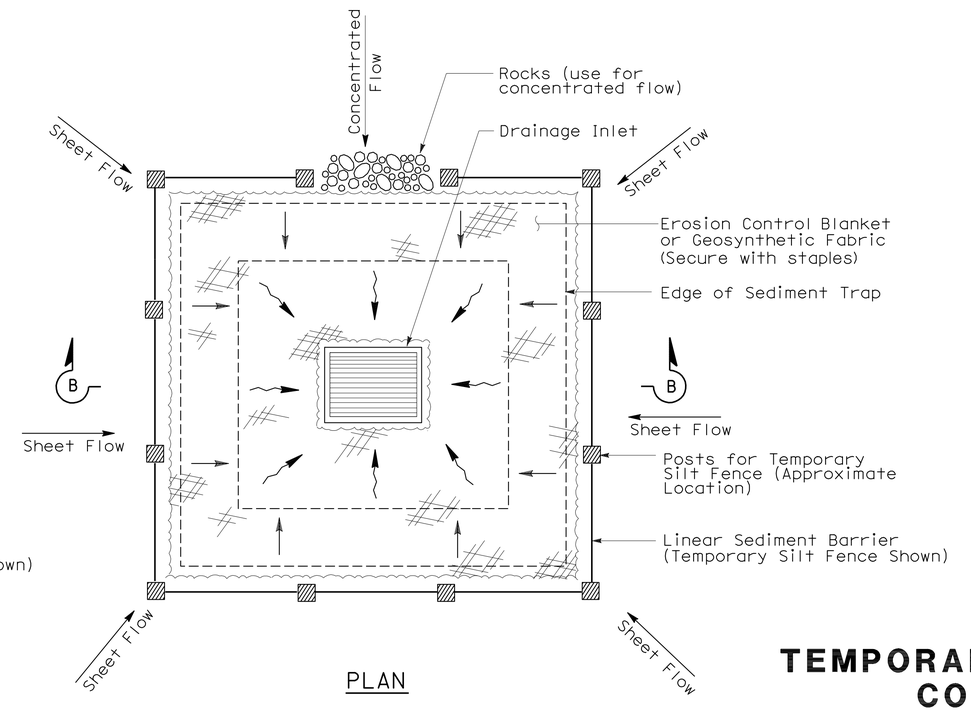

PLAN

TEMPORARY DRAINAGE INLET PROTECTION (TYPE 2) (EXCAVATED SEDIMENT TRAP)

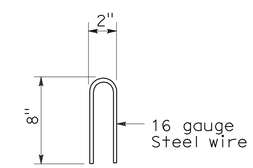

STAPLE DETAIL

STATE OF CALIFORNIA
DEPARTMENT OF TRANSPORTATION

TEMPORARY WATER POLLUTION CONTROL DETAILS (TEMPORARY DRAINAGE INLET PROTECTION)

NO SCALE

NSP T61 DATED AUGUST 15, 2008 SUPPLEMENTS THE STANDARD PLANS BOOK DATED MAY 2006.

NEW STANDARD PLAN NSP T61

2006 NEW STANDARD PLAN NSP T61

7-11-08

DIST	COUNTY	ROUTE	POST MILES TOTAL PROJECT	SHEET NO.	TOTAL SHEETS
10	Ama	88	0.0/5.5	175	216

LICENSED LANDSCAPE ARCHITECT

August 15, 2008
PLANS APPROVAL DATE

LICENSED LANDSCAPE ARCHITECT — Robert B. Schott — Signature — 11-04-08 Renewal Date — 08-11-08 Date — STATE OF CALIFORNIA

The State of California or its officers or agents shall not be responsible for the accuracy or completeness of electronic copies of this plan sheet.

To accompany plans dated 10-17-11

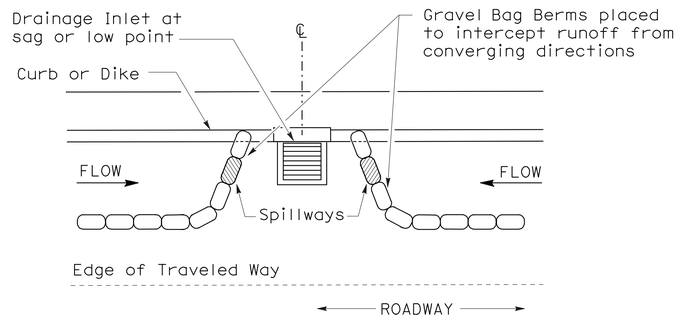

PLAN

CONFIGURATION FOR SAG POINT INLET (GRAVEL BAG BERM)

GRAVEL BAG BERM (TYPE 3A) SPACING TABLE

SLOPE OF ROADWAY (PERCENT)	1 to 3.9	4 to 5.9	6 to 7.9	8 to 10	10+
INTERVAL BETWEEN BERM	100′	75′	50′	25′	12′

For slope of less than 1%, install barriers only if erosion/sediment is prevalent

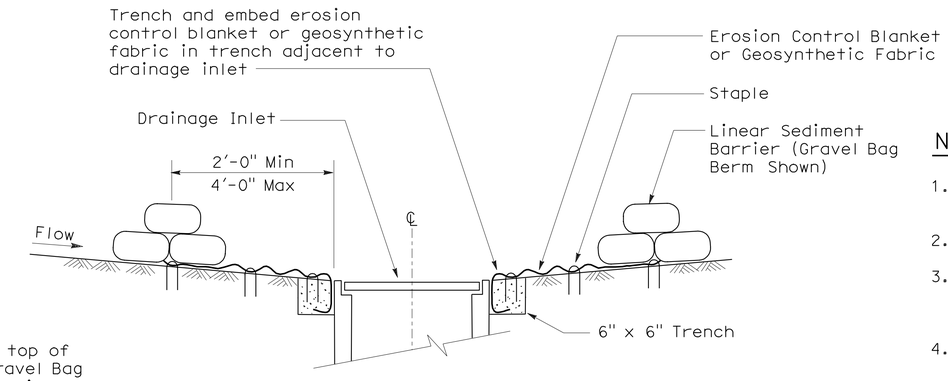

SECTION A-A

NOTES:

1. Place safety cones adjacent to drainage inlet protection.
2. Dimensions may vary to fit field conditions.
3. Install a minimum of 3 gravel bag berms upstream of each drainage inlet to be protected.
4. Position erosion control blanket or geosynthetic fabric at edge of concrete apron and secure in trench.
5. Erosion control blanket or geosynthetic fabric is not required if the area adjacent to the drainage inlet is vegetated or paved.

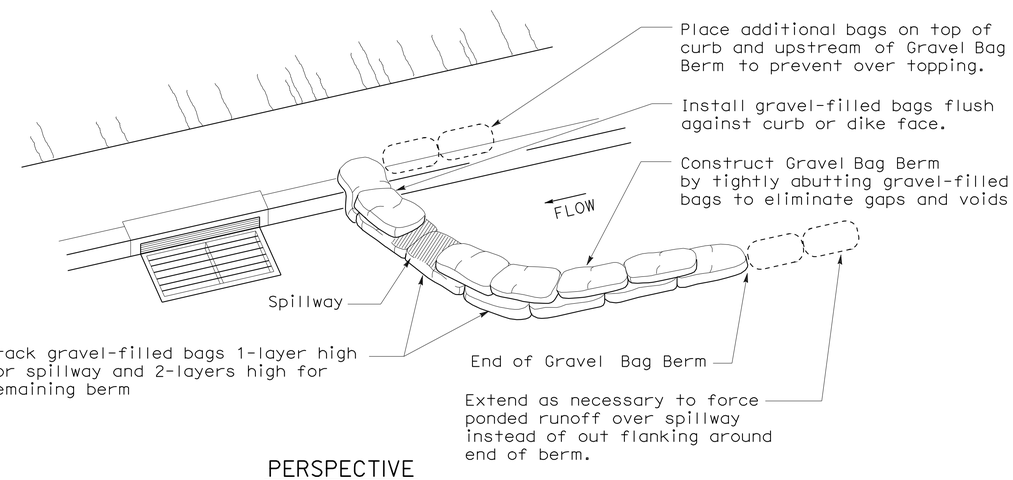

PERSPECTIVE

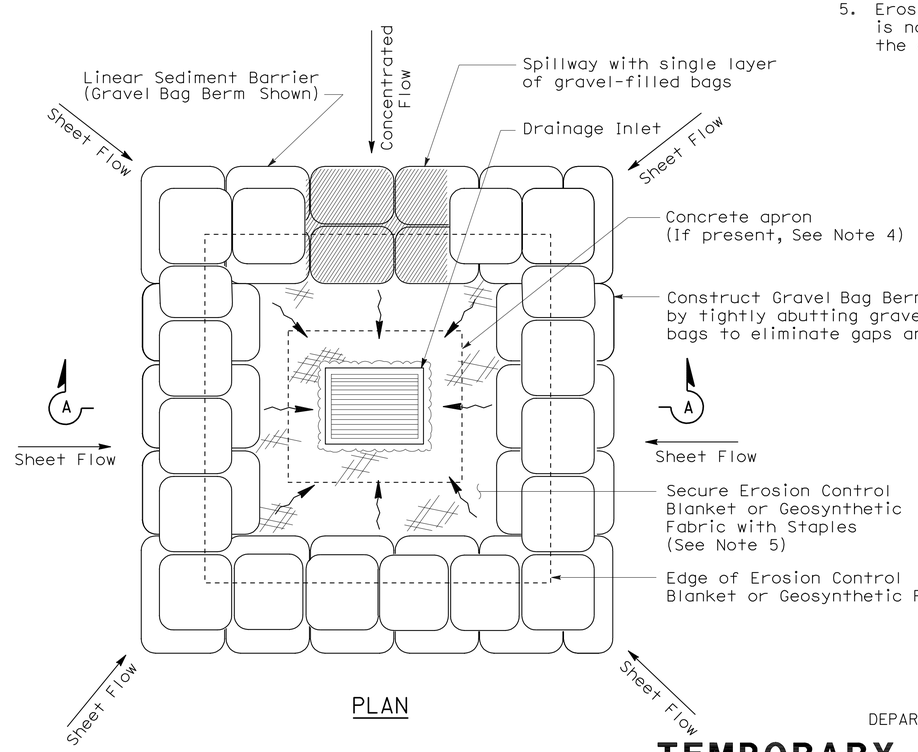

PLAN

TEMPORARY DRAINAGE INLET PROTECTION (TYPE 3B)

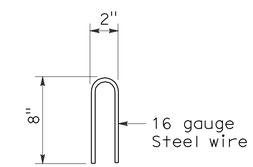

STAPLE DETAIL

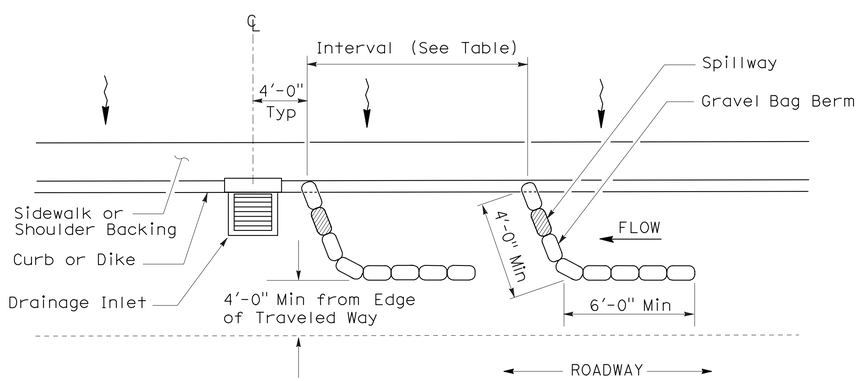

PLAN

TEMPORARY DRAINAGE INLET PROTECTION (TYPE 3A) (GRAVEL BAG BERM)

STATE OF CALIFORNIA
DEPARTMENT OF TRANSPORTATION

TEMPORARY WATER POLLUTION CONTROL DETAILS (TEMPORARY DRAINAGE INLET PROTECTION)

NO SCALE

NSP T62 DATED AUGUST 15, 2008 SUPPLEMENTS THE STANDARD PLANS BOOK DATED MAY 2006.

NEW STANDARD PLAN NSP T62

2006 NEW STANDARD PLAN NSP T62

7-11-08

DIST	COUNTY	ROUTE	POST MILES TOTAL PROJECT	SHEET NO.	TOTAL SHEETS
10	Ama	88	0.0/5.5	176	216

Robert B Schott
LICENSED LANDSCAPE ARCHITECT

August 15, 2008
PLANS APPROVAL DATE

The State of California or its officers or agents shall not be responsible for the accuracy or completeness of electronic copies of this plan sheet.

LICENSED LANDSCAPE ARCHITECT Robert B. Schott 3625 Signature 11-04-08 Renewal Date 08-11-08 Date STATE OF CALIFORNIA

To accompany plans dated 10-17-11

FLEXIBLE SEDIMENT BARRIER SPACING TABLE

SLOPE OF ROADWAY (PERCENT)	0 to 0.9	1 to 1.9	2 to 2.9	3 to 4	5+
INTERVAL BETWEEN BARRIERS	50′	35′	30′	25′	20′
ANGLE FROM FACE OF CURB	70°	70°	70°	45°	45°
SUGGESTED BARRIER LENGTH	6′	6′	6′	6′	6′

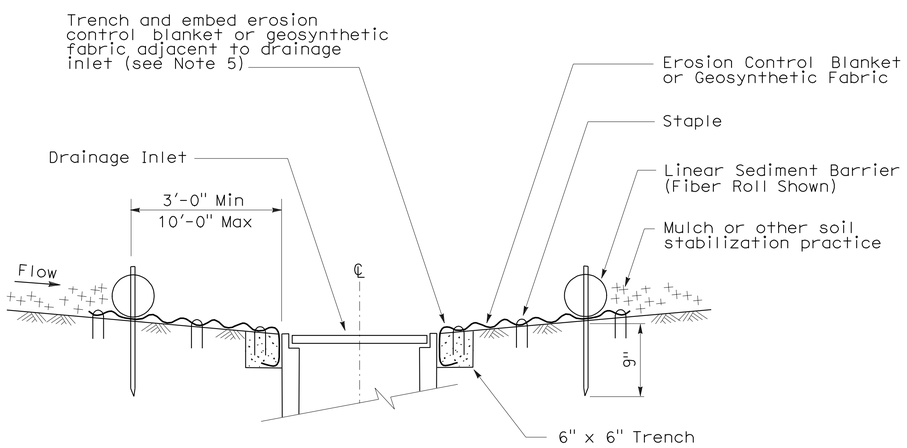

SECTION A-A

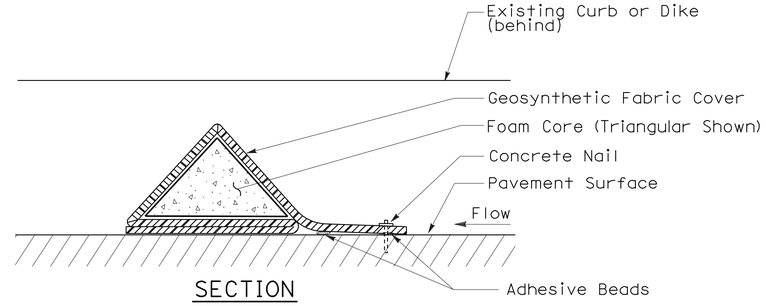

SECTION

FLEXIBLE SEDIMENT BARRIER DETAIL (FOAM BARRIER SHOWN)

NOTES:

1. See Standard Plan T51 for Temporary Silt Fence.
2. Dimensions may vary to fit field conditions.
3. Install a minimum of 3 flexible sediment barriers upstream of each drainage inlet to be protected.
4. Position erosion control blanket or geosynthetic fabric at edge of concrete apron and secure in trench.
5. Erosion control blanket or geosynthetic fabric is not required if the area adjacent to the drainage inlet is vegetated.

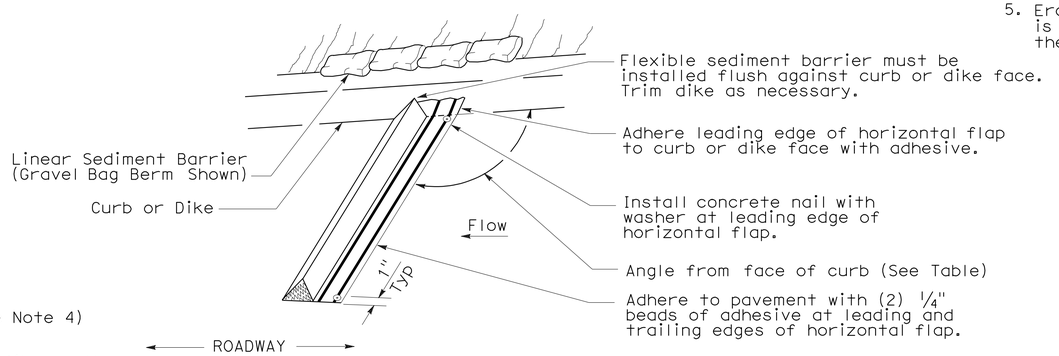

PERSPECTIVE

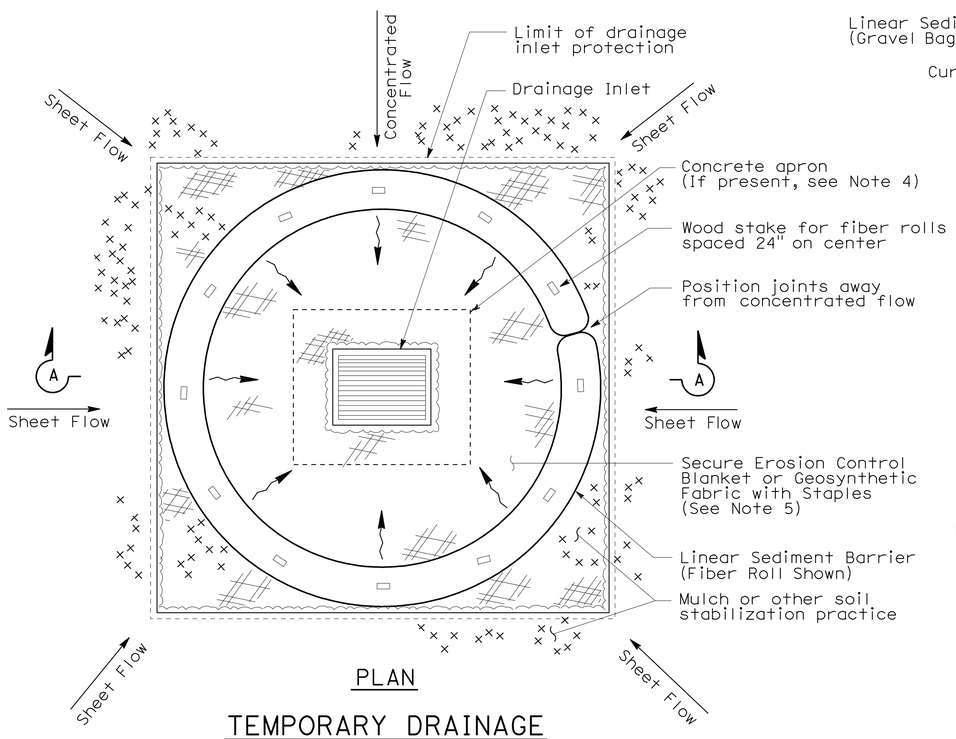

PLAN

TEMPORARY DRAINAGE INLET PROTECTION (TYPE 4A)

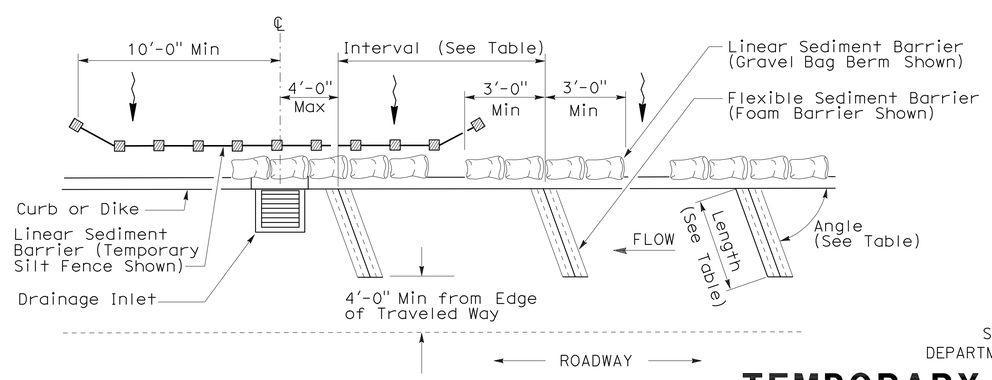

PLAN

TEMPORARY DRAINAGE INLET PROTECTION (TYPE 4B) FLEXIBLE SEDIMENT BARRIER

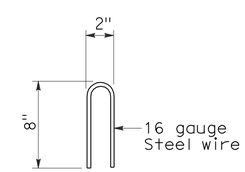

STAPLE DETAIL

STATE OF CALIFORNIA
DEPARTMENT OF TRANSPORTATION

TEMPORARY WATER POLLUTION CONTROL DETAILS (TEMPORARY DRAINAGE INLET PROTECTION)

NO SCALE

NSP T63 DATED AUGUST 15, 2008 SUPPLEMENTS THE STANDARD PLANS BOOK DATED MAY 2006.

NEW STANDARD PLAN NSP T63

2006 NEW STANDARD PLAN NSP T63

7-11-08

DIST	COUNTY	ROUTE	POST MILES TOTAL PROJECT	SHEET NO.	TOTAL SHEETS
10	Ama	88	0.0/5.5	177	216

LICENSED LANDSCAPE ARCHITECT

August 15, 2008
PLANS APPROVAL DATE

LICENSED LANDSCAPE ARCHITECT
Robert B. Schott 3625
Signature
11-04-08
Renewal Date
08-11-08
Date
STATE OF CALIFORNIA

The State of California or its officers or agents shall not be responsible for the accuracy or completeness of electronic copies of this plan sheet.

To accompany plans dated 10-17-11

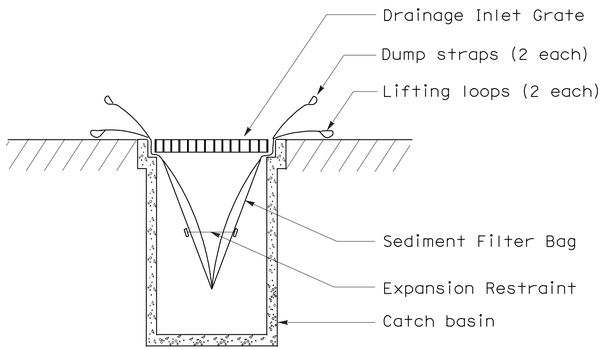

SECTION B-B

SEDIMENT FILTER BAG DETAIL

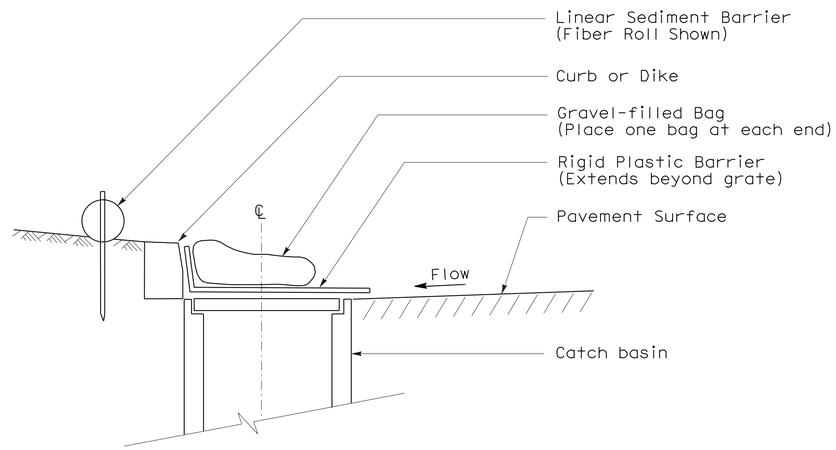

SECTION

TEMPORARY DRAINAGE INLET PROTECTION (TYPE 6A) (CATCH BASIN WITH GRATE)

NOTES:

1. See Standard Plan T51 for Temporary Silt Fence.
2. Dimensions may vary to fit field conditions.

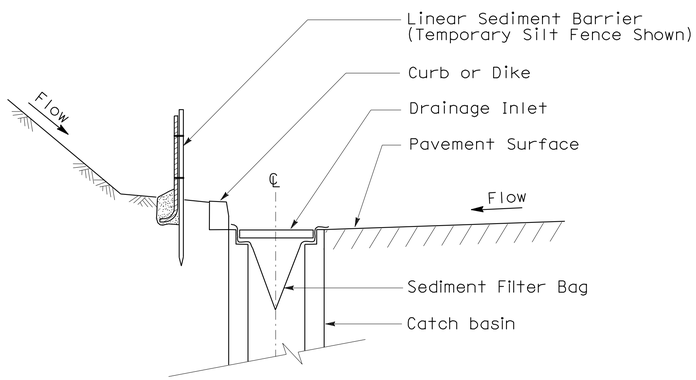

SECTION A-A

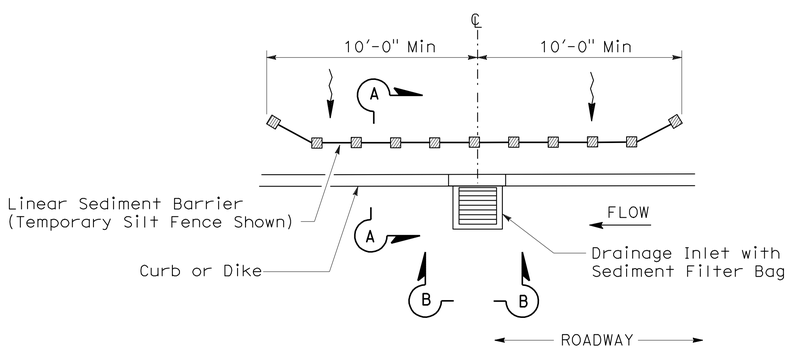

PLAN

TEMPORARY DRAINAGE INLET PROTECTION (TYPE 5) (SEDIMENT FILTER BAG)

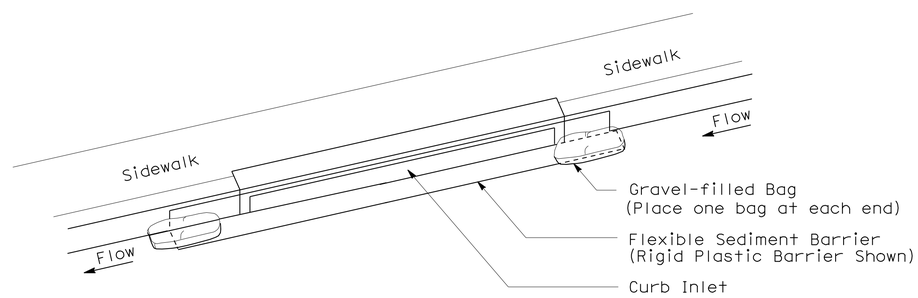

PERSPECTIVE

TEMPORARY DRAINAGE INLET PROTECTION (TYPE 6B) (CURB INLET WITHOUT GRATE)

STATE OF CALIFORNIA
DEPARTMENT OF TRANSPORTATION

TEMPORARY WATER POLLUTION CONTROL DETAILS (TEMPORARY DRAINAGE INLET PROTECTION)

NO SCALE

NSP T64 DATED AUGUST 15, 2008 SUPPLEMENTS
THE STANDARD PLANS BOOK DATED MAY 2006.

NEW STANDARD PLAN NSP T64

2006 NEW STANDARD PLAN NSP T64

7-11-08

DIST	COUNTY	ROUTE	POST MILES TOTAL PROJECT	SHEET NO.	TOTAL SHEETS
10	Ama	88	0.0/5.5	178	216

LICENSED LANDSCAPE ARCHITECT

April 3, 2009
PLANS APPROVAL DATE

The State of California or its officers or agents shall not be responsible for the accuracy or completeness of electronic copies of this plan sheet.

LICENSED LANDSCAPE ARCHITECT — Robert B. Schott — 3025 — Signature — 11-30-10 Renewal Date — 2-25-09 Date — STATE OF CALIFORNIA

To accompany plans dated 10-17-11

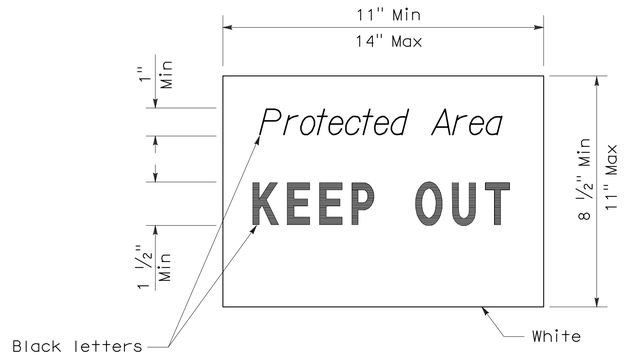

SIGN DETAIL

NOTE:

1. Temporary silt fence and temporary straw bale barrier shown for reference purposes only.

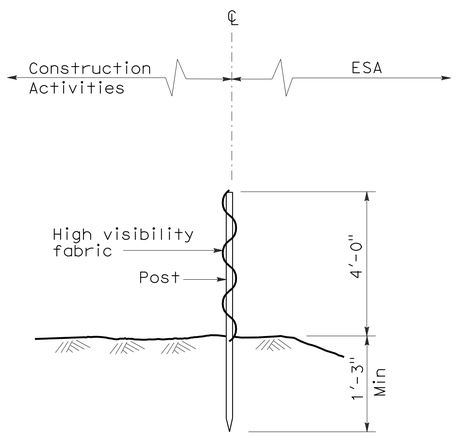

SECTION
TEMPORARY FENCE (TYPE ESA)

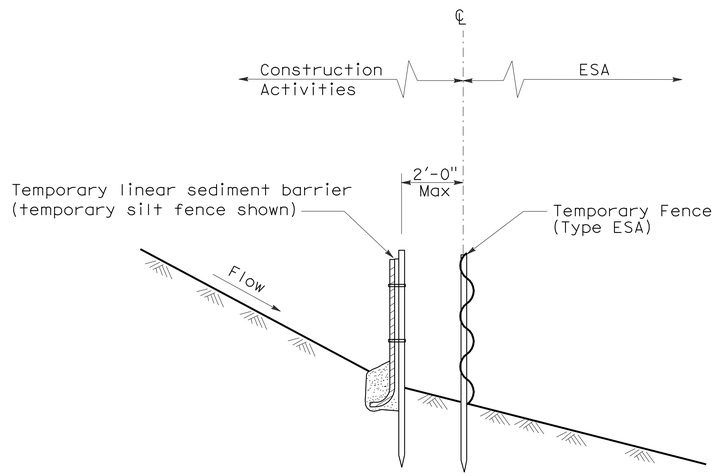

SECTION
PLACEMENT DETAIL
FOR TEMPORARY LINEAR SEDIMENT BARRIER
USED WITH TEMPORARY
FENCE (TYPE ESA)
(See Note 1)

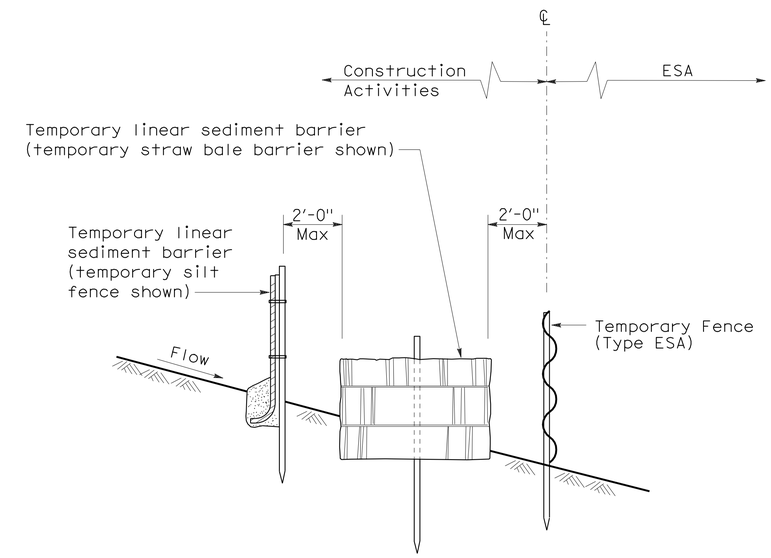

SECTION
PLACEMENT DETAIL
FOR TEMPORARY SILT FENCE
AND TEMPORARY STRAW BALE BARRIER
USED WITH TEMPORARY FENCE (TYPE ESA)
(See Note 1)

STATE OF CALIFORNIA
DEPARTMENT OF TRANSPORTATION

TEMPORARY WATER POLLUTION CONTROL DETAILS [TEMPORARY FENCE (TYPE ESA)]

NO SCALE

NSP T65 DATED APRIL 3, 2009 SUPPLEMENTS
THE STANDARD PLANS BOOK DATED MAY 2006.

NEW STANDARD PLAN NSP T65

2006 NEW STANDARD PLAN NSP T65

DIST	COUNTY	ROUTE	POST MILES TOTAL PROJECT	SHEET NO.	TOTAL SHEETS
10	Ama	88	0.0/5.5	179	216

REGISTERED CIVIL ENGINEER

October 5, 2007
PLANS APPROVAL DATE

REGISTERED PROFESSIONAL ENGINEER Efthymios Delis No. C51434 Exp. 6-30-08 CIVIL STATE OF CALIFORNIA

The State of California or its officers or agents shall not be responsible for the accuracy or completeness of electronic copies of this plan sheet.

To accompany plans dated 10-17-11

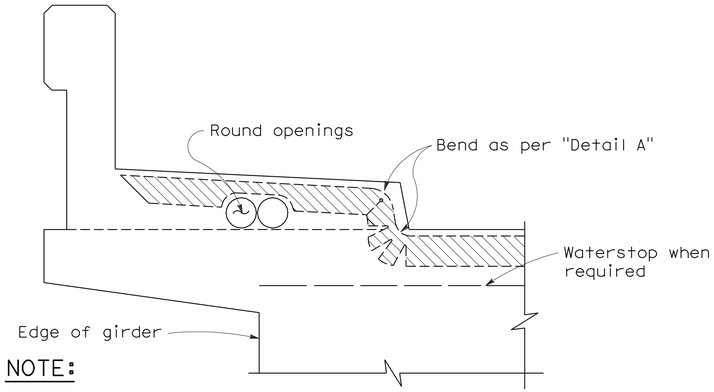

NOTE:

Type "B" seal shown. Type "A" seals to comform to the general path of seal shown, cuts for bending not required. Bend Type "A" seals 3" up into curb or barrier rail on only the low end of the seal.

CONCRETE BARRIER AND SIDEWALK

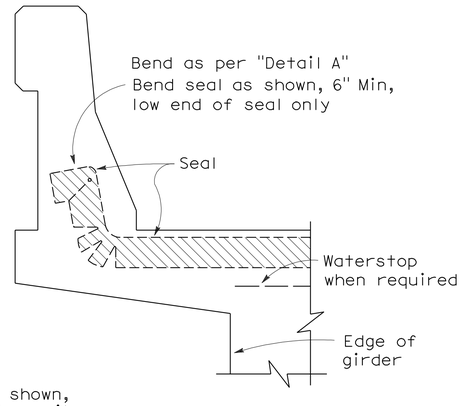

CONCRETE BARRIER

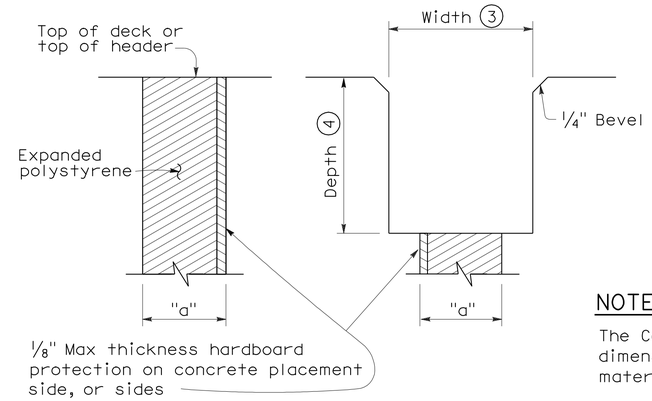

FORMING DETAIL SAWCUT DETAIL

NOTE:

The Contractor shall verify all controlling field dimensions before ordering or fabricatiing any material.

JOINT SEALS DETAILS

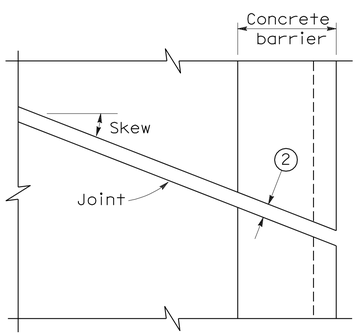

PLAN OF JOINT (SKEW ≤ 20°)

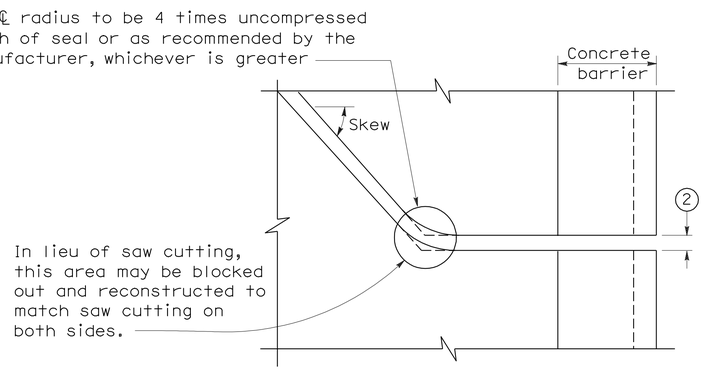

PLAN OF JOINT (SKEW > 20°)

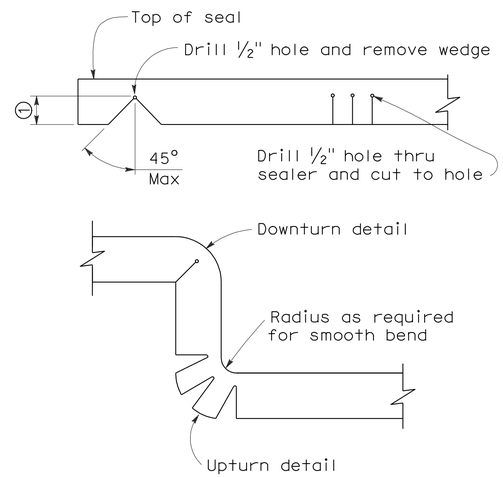

DETAIL A

NOTES:

1. Make smooth cuts from the bottom of seal to 1½" clear of top leaving at least one complete cell between the top of the cut and top of the seal. When necessary cut back of seal to clear conduit and round openings.
2. Opening in barrier to match width of sawn deck joint.
3. Sawcut groove widths shall be as ordered by the Engineer.
4. Depth of sawcut: Type A - Depth to be 2" minimum.
   Type B - Depth to be equal to or greater than the depth of seal measured along the contact surface, when compressed to minimum width position (W_2) plus dimensions shown.
5. MR (movement rating) as shown on other plan sheets.
6. Other depths must be approved by the Engineer.

DIMENSIONS "a" OF JOINT REQUIRED

Movement Rating (MR) (5)	Bridge Type	"a" Dimension Deck Concrete Placed		
		Winter	Fall-Spring	Summer
2"	All except CIP/PS	1½"	1¼"	¾"
	CIP/PS	1¼"	1"	½"
1½"	All except CIP/PS	1¼"	1"	½"
	CIP/PS	1"	¾"	½"
1"	All except CIP/PS	1"	¾"	½"
	CIP/PS	¾"	½"	½"
½"	All except CIP/PS	¾"	¾"	½"
	CIP/PS	½"	½"	½"

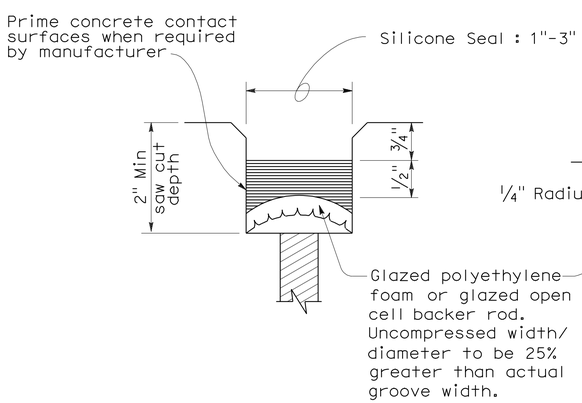

TYPE A SEAL

Movement rating : Silicone = 1" Max

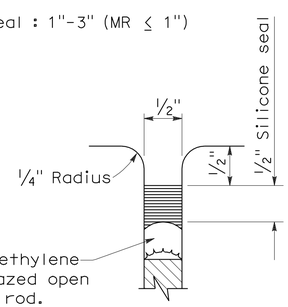

TYPE AL SEAL

Longitudinal joints only

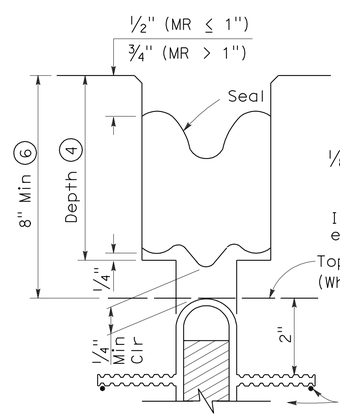

TYPE B JOINT SEAL IN MINIMUM WIDTH POSITION (W_2)

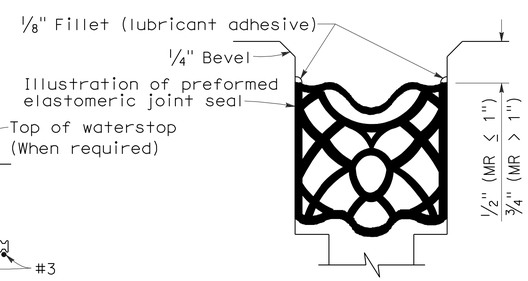

TYPE B SEAL

Movement Rating ≤ 2"

STATE OF CALIFORNIA
DEPARTMENT OF TRANSPORTATION

JOINT SEALS (MAXIMUM MOVEMENT RATING = 2")

NO SCALE

RSP B6-21 DATED OCTOBER 5, 2007 SUPERSEDES STANDARD PLAN B6-21 DATED MAY 1, 2006 - PAGE 258 OF THE STANDARD PLANS BOOK DATED MAY 2006.

REVISED STANDARD PLAN RSP B6-21

2006 REVISED STANDARD PLAN RSP B6-21

5-8-07

DIST	COUNTY	ROUTE	POST MILES TOTAL PROJECT	SHEET NO.	TOTAL SHEETS
10	Ama	88	0.0/5.5	180	216

REGISTERED ELECTRICAL ENGINEER

October 5, 2007
PLANS APPROVAL DATE

REGISTERED PROFESSIONAL ENGINEER Jeffery G. McRae No. E14512 Exp. 6-30-08 ELECTRICAL STATE OF CALIFORNIA

The State of California or its officers or agents shall not be responsible for the accuracy or completeness of electronic copies of this plan sheet.

To accompany plans dated 10-17-11

2006 REVISED STANDARD PLAN RSP ES-1A

ELECTROLIERS

STANDARD TYPES
15, 15D
15 STRUCTURE
21, 21D STRUCTURE
30
31
32
35
36-20A

High mast light pole

Double Arm lighting standard

Existing electrolier

Electrolier foundation (Future installation)

NOTES:

1. Luminaires shall be 310 W HPS when installed on Type 21, 21D, 30, 31, 32, 35 and 36-20A Standards, unless otherwise specified. Luminaires shall be 200 W HPS when installed on other type standards or poles, unless otherwise specified.
2. Luminaires shall be the cutoff type, ANSI Type Ⅲ medium cutoff lighting distribution, unless otherwise specified.
3. Variations noted adjacent to symbol on project plans.

Electrolier (see project notes or project plans)

Luminaire on wood pole

STANDARD NOTES:

- AB — Abandon. If applied to conduit, remove conductors.
- BC — Install pull box in existing conduit run.
- BP — Pedestrian barricade, type as indicated on plan.
- CB — Install conduit into existing pull box.
- CC — Connect new and existing conduit. Remove existing conductors and install conductors as indicated.
- CF — Conduit to remain for future use. Remove conductors. Install pull wire or rope.
- DH — Detector handhole.
- FA — Foundation to be abandoned.
- IS — Install sign on signal mast arm.
- NS — No slip base on standard.
- PEC — Photoelectric control.
- PEU — Photoelectric unit.
- RC — Equipment or material to be removed and become the property of the Contractor.
- RE — Remove electrolier, fuses and ballast. Tape ends of conductors.
- RL — Relocate equipment.
- RR — Remove and reuse equipment.
- RS — Remove and salvage equipment.
- SC — Splice new to existing conductors.
- SD — Service disconnect.
- SF — Standard to remain for future use. Remove luminaire, pole conductors, fuses and ballast.
- TSP — Telephone service point.

ABBREVIATIONS AND EQUIPMENT DESIGNATIONS

PROPOSED	EXISTING	
BBS	bbs	Battery backup system
BC	bc	Bolt circle
C	C	Conduit
CCTV	cctv	Closed circuit television
CKT	ckt	Circuit
CMS	cms	Changeable message sign
DLC	dlc	Loop detector lead-in cable
EMS	ems	Extinguishable message sign
EVC	evc	Emergency vehicle cable
EVD	evd	Emergency vehicle detector
FB	fb	Flashing beacon
FBCA	fbca	Flashing beacon control assembly
FBS	fbs	Flashing beacon with slip base
FO	fo	Fiber optic
G	G	Ground (Equipment Grounding Conductor)
GFCI	GFCI	Ground fault circuit interrupt
HAR	har	Highway advisory radio
HEX	hex	Hexagonal
HPS	hps	High pressure sodium
IISNS	iisns	Internally illuminated street name sign
ISL	isl	Induction sign lighting
LED	led	Light emitting diode
LMA	lma	Luminaire mast arm
LPS	lps	Low pressure sodium
LTG	ltg	Lighting
LUM	lum	Luminaire
MAT	mat	Mast arm mounting vehicle signal faces, top attachment
MAS	mas	Mast arm mounting vehicle signal faces, side attachment
MAS-4A	mas-4A	Mast arm mounting vehicle signal faces, side attachment - 4 signal section
MAS-4B	mas-4B	
MAS-4C	mas-4C	
MAS-5A	mas-5A	Mast arm mounting vehicle signal faces, side attachment - 5 signal section
MAS-5B	mas-5B	
MC	mc	Mercury contactor
M/M	m/m	Multiple to multiple transformer
MT	mt	Conduit with pull wire or rope only
MTG	mtg	Mounting
	mv	Mercury vapor lighting fixture
N	N	Neutral (Grounded Conductor)
NC	NC	Normally closed
NO	NO	Normally open
PB	pb	Pull box
PEC	pec	Photoelectric control (Type Ⅰ, Ⅱ, Ⅲ, Ⅳ or Ⅴ as shown)
PED	ped	Pedestrian
PEU	peu	Photoelectric unit
PPB	ppb	Pedestrian push button
RL		Relocated equipment
RM	rm	Ramp metering
SB	sb	Slip base
SIC	sic	Signal interconnect cable
SIG	sig	Signal
SMA	sma	Signal mast arm
SNS	sns	Street name sign
SP	sp	Service point
TDC	tdc	Telephone demarcation cabinet
TMS	tms	Traffic monitoring station
TOS	tos	Traffic Operations System
VEH	veh	Vehicle
XFMR	xfmr	Transformer
COMM	comm	Communication
RWIS	rwis	Roadway weather information system

SOFFIT AND WALL MOUNTED LUMINAIRES

Pendant, 70 W HPS unless otherwise specified.

Flush, 70 W HPS unless otherwise specified.

Wall surface, 70 W HPS unless otherwise specified.

Existing soffit or wall luminaire to remain unmodified.

Existing soffit or wall luminaire to be modified as specified.

NOTE:

Arrow indicates "street side" of luminaire.

STATE OF CALIFORNIA
DEPARTMENT OF TRANSPORTATION

ELECTRICAL SYSTEMS (SYMBOLS AND ABBREVIATIONS)

NO SCALE

RSP ES-1A DATED OCTOBER 5, 2007 SUPERSEDES STANDARD PLAN ES-1A DATED MAY 1, 2006 - PAGE 400 OF THE STANDARD PLANS BOOK DATED MAY 2006.

REVISED STANDARD PLAN RSP ES-1A

DIST	COUNTY	ROUTE	POST MILES TOTAL PROJECT	SHEET NO.	TOTAL SHEETS
10	Ama	88	0.0/5.5	181	216

REGISTERED ELECTRICAL ENGINEER

October 5, 2007
PLANS APPROVAL DATE

REGISTERED PROFESSIONAL ENGINEER Jeffery G. McRae No. E14512 Exp. 6-30-08 ELECTRICAL STATE OF CALIFORNIA

The State of California or its officers or agents shall not be responsible for the accuracy or completeness of electronic copies of this plan sheet.

To accompany plans dated 10-17-11

CONDUIT

PROPOSED	EXISTING	
		Lighting Conduit, unless otherwise indicated or noted
		Traffic signal conduit
C	c	Communication conduit
T	t	Telephone conduit
F	f	Fire alarm conduit
FO	fo	Fiber optic conduit
		Conduit termination (RSP ES-9A C)
R	r	Conduit riser in/on structure or service pole

SERVICE EQUIPMENT

PROPOSED	EXISTING	
OH	oh	Overhead lines
U	U	Wood pole "U" indicates utility owned
		Pole guy with anchor
		Utility transformer - ground mounted
III		Service equipment enclosure type
		Service equipment enclosure door indicates front of enclosure
T	t	Telephone demarcation cabinet

POLE-MOUNTED SERVICE DESIGNATION

Type of installation

TYPE H SERVICE - 28'-10" ← Pole height above grade

ILLUMINATED OVERHEAD SIGN

PROPOSED	EXISTING	
		Overhead sign - Single post
		Overhead sign - Two post
		Overhead sign - Mounted on structure
		Overhead sign with electrolier

SIGNAL EQUIPMENT

PROPOSED	EXISTING	
		Pedestrian signal face
		Pedestrian push button post
		Pedestrian barricade
		Vehicle signal face (with backplate, 3-Section: red, yellow and green)
		Vehicle signal face with angle visors
PV	PV	Modifications of basic symbols: "L" indicates all non-arrow sections louvered "LG" indicates louvered green section only "PV" indicates 12" programmed visibility sections "8" indicates all 8" sections (only when specified)
		Type 15TS and Vehicle signal face
		Vehicle signal face with red, yellow and green left arrow sections
		Vehicle signal face with red and yellow sections and up green arrow
		Vehicle signal face (5 Section) with red, yellow and green sections and yellow and green right arrows
		Type 1 Standard and attached vehicle signal faces
		Standard with signal mast arm only and attached vehicle signal faces and internally illuminated street name sign
		Type 33 Standard, Left-turn vehicle signal face and sign
		Standard with luminaire and signal mast arms and attached vehicle signal faces
		Cantilever flashing beacon Type 9 Frame, with a sign unless otherwise specified or indicated
		Type 15-FBS Standard with two vehicle signal face sections with lens, backplate and visor with a sign
R	Y	Flashing beacon. One vehicle signal face section with lens, backplate and visor. "R" indicates red indication, "Y" indicates yellow indication
		Controller assembly. Door indicates front of cabinet

SIGNAL EQUIPMENT Cont

PROPOSED	EXISTING	
		Guard post
		Type 1 Standard with "Meter On" sign
		Emergency Vehicle detector

NOTES:

1. All signal sections shall be 12" unless shown otherwise.
2. Signal heads shall be provided with backplates unless shown otherwise.
3. Signal indication shall be LED.

STATE OF CALIFORNIA
DEPARTMENT OF TRANSPORTATION

ELECTRICAL SYSTEMS (SYMBOLS AND ABBREVIATIONS)

NO SCALE

RSP ES-1B DATED OCTOBER 5, 2007 SUPERCEDES STANDARD PLAN ES-1B DATED MAY 1, 2006 - PAGE 401 OF THE STANDARD PLANS BOOK DATED MAY 2006.

REVISED STANDARD PLAN RSP ES-1B

2006 REVISED STANDARD PLAN RSP ES-1B

DIST	COUNTY	ROUTE	POST MILES TOTAL PROJECT	SHEET NO.	TOTAL SHEETS
10	Ama	88	0.0/5.5	182	216

REGISTERED ELECTRICAL ENGINEER

October 5, 2007
PLANS APPROVAL DATE

REGISTERED PROFESSIONAL ENGINEER Jeffery G. McRae No. E14512 Exp. 6-30-08 ELECTRICAL STATE OF CALIFORNIA

The State of California or its officers or agents shall not be responsible for the accuracy or completeness of electronic copies of this plan sheet.

To accompany plans dated 10-17-11

EQUIPMENT IDENTIFICATION

ILLUMINATED SIGN IDENTIFICATION NUMBER:

Sign No. 12345

10 ISL SCI 1.0

- Sign number - Place on post or structure
- Transformer rating (kVA)
- Lighting control type
- Number and type of fixtures

Do NOT place on standard or structure

ELECTROLIER OR EQUIPMENT IDENTIFICATION NUMBER:

12345 - 15'-0"

- Mast arm length, if shown. Do not place on standard or structure.
- Equipment number - Place on standard or structure. Existing equipment numbers are shown in parenthesis

CONDUIT AND CONDUCTOR IDENTIFICATION:

1½"C, 2#10, 15#14, 2 DLC

- Number and size of conductors and cables
- Size of conduit in inches

Ø1, Ø2, Ø2P, etc.	Traffic phase identification for signal faces, detectors and phase diagrams
1 2 3	Project note numbers
A B C	Equipment description, installation or item numbers
1 2 3	Conduit run numbers

SIGNAL AND LIGHTING STANDARD (TYPICAL DESIGNATION):

19A - 3 - 100

- Wind velocity = 100 mph
- Case 3 arm loading
- Standard type
- Standard Plan sheet number
- Detail number or letter

MISCELLANEOUS EQUIPMENT

PROPOSED	EXISTING	
CMS	cms	Changeable message sign
		Closed circuit television camera
		Highway advisory radio pole and antenna
EMS	ems	Extinguishable message sign
M V	m v	Detection device M = Microwave sensor V = Video image sensor

WIRING DIAGRAM LEGEND

P	Pole
CB	Circuit breaker
A	Ampere
V	Volt
M	Metered
UM	Unmetered
NB	Neutral bus
GB	Ground bus
G	Equipment grounding conductor
N	Grounded conductor (Neutral)

- External conductor
- Conductor or bus
- Tie point
- Contactor coil
- Contactor, Contact NO
- Terminal blocks
- Contactor, Contact NC
- Enclosure bond
- Grounding electrode
- Circuit breaker
- Receptacle

PULL BOXES

PROPOSED EXISTING

Pull box-No. 5 unless otherwise indicated or noted.

3 9A(21)

Pull box-Additional designations or descriptions

3	= No. 3½ pull box
5	= No. 5 pull box
6	= No. 6 pull box
7	= No. 7 (Ceiling pull box)
8	= No. 8 (Pendant soffit pull box)
9	= No. 9 pull box
9A	= No. 9A pull box

(C)	= Communications pull box
(E)	= Pull box with extension
(S)	= Sprinkler control pull box
(21)	= Anchor bolts and conduit for future installation of Type 21 Standard
(T)	= Traffic pull box

VEHICLE DETECTORS

5 J 9 U

- Vehicle detector designation
- U = Upper
  L = Lower
- Slot number in input file
- Input file (I or J)
- Phase

PROPOSED EXISTING

	Type A detector loop. Outline of sawcut shown.
	Type B detector loop. Outline of sawcut shown.
	Type C detector loop. Outline of sawcut shown.
	Type D detector loop. Outline of sawcut shown.
	Type E detector loop. Outline of sawcut shown.
	Type Q detector loop. Outline of sawcut shown.
	Magnetic detector
DH dh	Detector handhole
	Microwave or video detection zone

STATE OF CALIFORNIA
DEPARTMENT OF TRANSPORTATION

ELECTRICAL SYSTEMS (SYMBOLS AND ABBREVIATIONS)

NO SCALE

RSP ES-1C DATED OCTOBER 5, 2007 SUPERCEDES STANDARD PLAN ES-1C DATED MAY 1, 2006 - PAGE 402 OF THE STANDARD PLANS BOOK DATED MAY 2006.

REVISED STANDARD PLAN RSP ES-1C

2006 REVISED STANDARD PLAN RSP ES-1C

7-10-07

DIST	COUNTY	ROUTE	POST MILES TOTAL PROJECT	SHEET NO.	TOTAL SHEETS
10	Ama	88	0.0/5.5	183	216

REGISTERED ELECTRICAL ENGINEER

October 5, 2007
PLANS APPROVAL DATE

REGISTERED PROFESSIONAL ENGINEER Jeffery G. McRae No. E14512 Exp. 6-30-08 ELECTRICAL STATE OF CALIFORNIA

The State of California or its officers or agents shall not be responsible for the accuracy or completeness of electronic copies of this plan sheet.

To accompany plans dated 10-17-11

2006 REVISED STANDARD PLAN RSP ES-5A

LOOP INSTALLATION PROCEDURE

1. Loops shall be centered in lanes.
2. Saw slots in pavement for loop conductors as shown in details.
3. Distance between side of loop and a lead-in saw cut from adjacent detectors shall be 2'-0" minimum. Distance between lead-in saw cuts shall be 6" minimum.
4. Bottom of saw slot shall be smooth with no sharp edges.
5. Slots shall be washed until clean, blown out and thoroughly dried before installing loop conductors.
6. Adjacent loops on the same sensor unit channel shall be wound in opposite directions.
7. Identify and tag loop circuit pairs in the pull box with loop number, start (S) and finish (F) of conductor. Identify and tag lead-in-cable with sensor number and phase.
8. Install loop conductor in slot using a 3/16" to 1/4" thick wood paddle. Hold loop conductors with wood paddles (at the bottom of the sawed slot) during sealant placement.
9. No more than 2 twisted pairs shall be installed in one sawed slot.
10. Allow additional 5'-0" of slack length of conductor for the lead-in run to pull box.
11. The additional length of each conductor for each loop shall be twisted together into a pair (6 turns per 3'-4" minimum) before being placed in the slot and conduit leading to pull box.
12. Test each loop circuit for continuity, circuit resistance and insulation resistance at the pull box before filling slots.
13. Fill slots as shown in details.
14. Splice loop conductors to lead-in-cable. Splices shall be soldered.
15. End of lead-in-cable and Type 2 loop conductor shall be waterproofed prior to installing in conduit to prevent moisture from entering the cable.
16. Lead-in-cable shall not be spliced between the pull box and the controller cabinet terminals.
17. Test each loop circuit for continuity, circuit resistance and insulation resistance at the controller cabinet location.
18. Where loop conductors are not to be spliced to a lead-in-cable, the ends of the conductors shall be taped and waterproofed with electrical insulating coating.

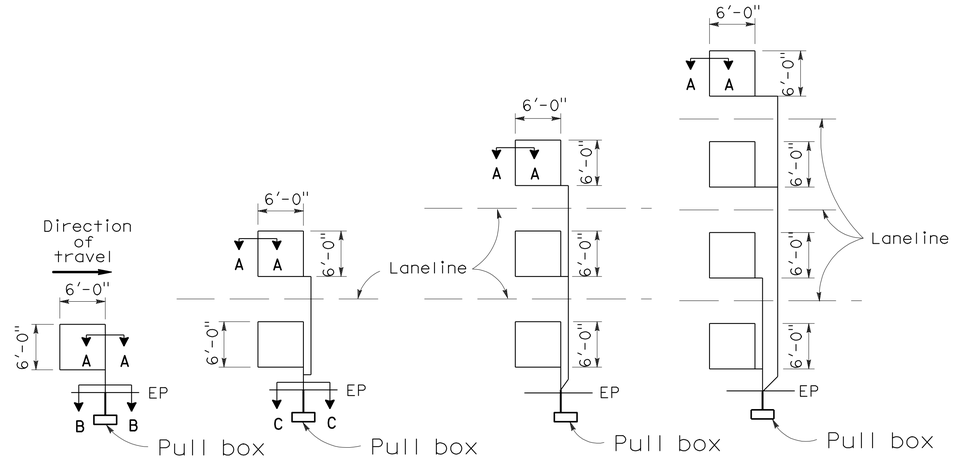

TYPE 1A INSTALLATION | TYPE 2A INSTALLATION | TYPE 3A INSTALLATION | TYPE 4A INSTALLATION

SAWCUT DETAILS

(Type A loop detector configurations illustrated)

1. 1A thru 4A = 1 Type A loop configuration in each lane.
2. 1B thru 4B = 1 Type B loop configuration in each lane.
3. 1C = 1 Type C loop configuration entering lanes as required.
4. 1D thru 4D = 1 Type D loop configuration in each lane.
5. 1E thru 4E = 1 Type E loop configuration in each lane.
6. 1Q thru 4Q = 1 Type Q loop configuration in each lane. (Use Type A, B, C, D, E or Q loop detector configurations only when specified or shown on plans)

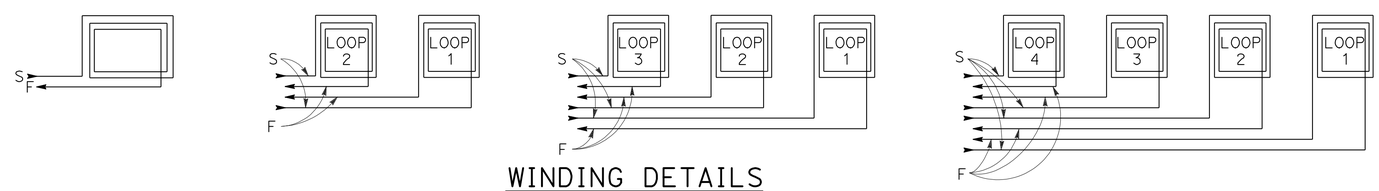

WINDING DETAILS

See Notes 6 and 7

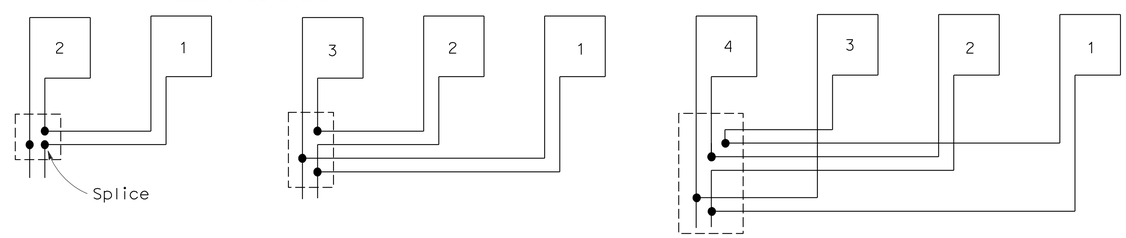

TYPICAL LOOP CONNECTIONS

(Dashed lines represent the pull box)

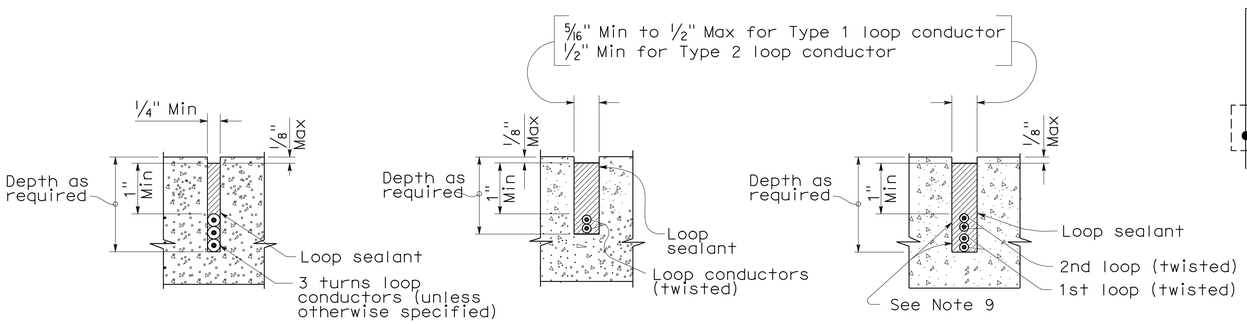

SECTION A-A | SECTION B-B | SECTION C-C

SLOT DETAILS - TYPE 1 AND TYPE 2 LOOP CONDUCTOR

STATE OF CALIFORNIA
DEPARTMENT OF TRANSPORTATION

ELECTRICAL SYSTEMS (DETECTORS)

NO SCALE

RSP ES-5A DATED OCTOBER 5, 2007 SUPERCEDES STANDARD PLAN ES-5A DATED MAY 1, 2006 - PAGE 423 OF THE STANDARD PLANS BOOK DATED MAY 2006.

REVISED STANDARD PLAN RSP ES-5A

DIST	COUNTY	ROUTE	POST MILES TOTAL PROJECT	SHEET NO.	TOTAL SHEETS
10	Ama	88	0.0/5.5	184	216

REGISTERED CIVIL ENGINEER

October 5, 2007
PLANS APPROVAL DATE

REGISTERED PROFESSIONAL ENGINEER
Stanley P. Johnson
No. C57793
Exp. 3-31-08
CIVIL
STATE OF CALIFORNIA

The State of California or its officers or agents shall not be responsible for the accuracy or completeness of electronic copies of this plan sheet.

To accompany plans dated 10-17-11

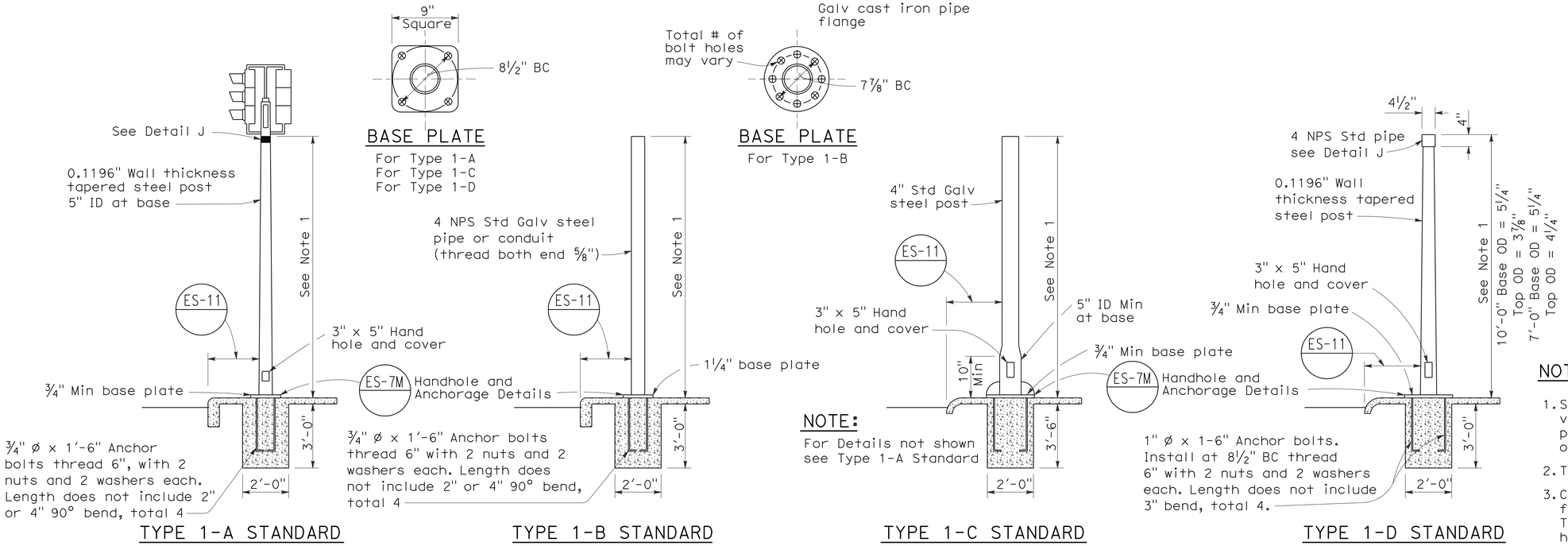

TYPE 1 SIGNAL STANDARDS

NOTES:

1. Standards shall be 10'-0" ± 2" for vehicle signals and 7'-0" ± 2" for pedestrian signals unless otherwise noted on plans.
2. Top of standards shall be 4½" OD.
3. Conduits shall extend 2" maximum above finished surface of foundation and for Types 1-A, 1-C and 1-D shall be sloped toward handhole.
4. Anchor bolts shall be bonded to conduit or grounding conductor.
5. Conduit between standard and adjacent pull box shall be 2" minimum.
6. Paint numbers on roadway side facing traffic when electrolier or post is left of direction of traffic.

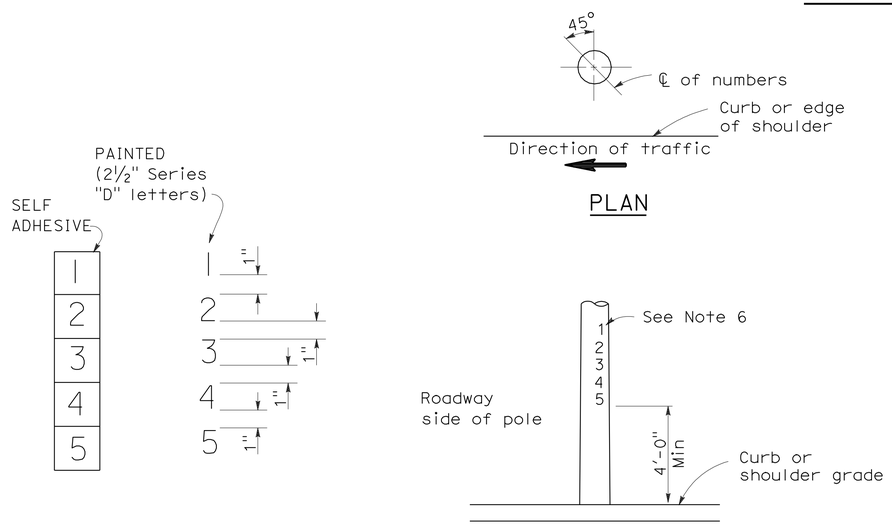

NUMBER DETAIL

TYPICAL NUMBER FORMAT

LOCATION OF EQUIPMENT NUMBERS ON STANDARDS AND POSTS

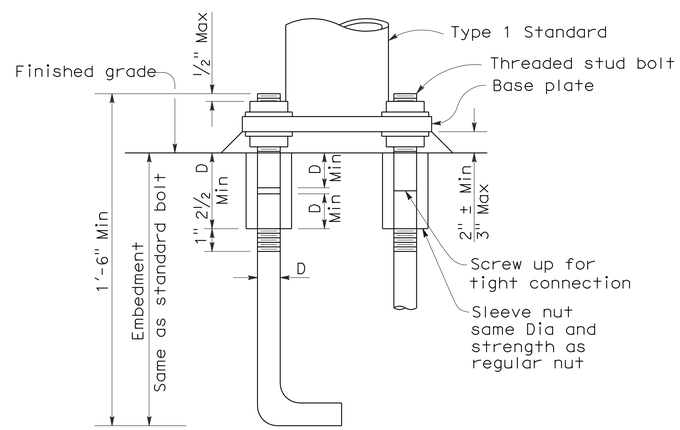

ANCHOR BOLTS WITH SLEEVE NUTS

Sleeve nuts to be used only when shown or specified on Project Plans

D = Diameter of anchor bolt

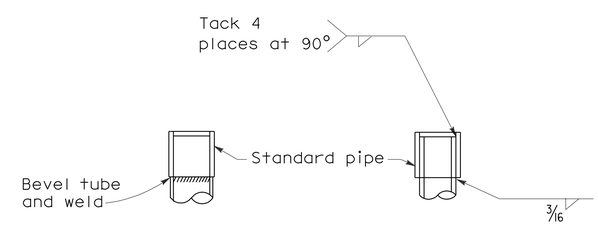

DETAIL J

Tube may be inserted into pipe or butted as required

STATE OF CALIFORNIA
DEPARTMENT OF TRANSPORTATION

ELECTRICAL SYSTEMS (SIGNAL AND LIGHTING STANDARD TYPE 1 STANDARD AND EQUIPMENT NUMBERING)

NO SCALE

RSP ES-7B DATED OCTOBER 5, 2007 SUPERCEDES STANDARD PLAN ES-7B DATED MAY 1, 2006 - PAGE 438 OF THE STANDARD PLANS BOOK DATED MAY 2006.

REVISED STANDARD PLAN RSP ES-7B

2006 REVISED STANDARD PLAN RSP ES-7B

7-10-07

DIST	COUNTY	ROUTE	POST MILES TOTAL PROJECT	SHEET NO.	TOTAL SHEETS
10	Ama	88	0.0/5.5	185	216

REGISTERED ELECTRICAL ENGINEER

October 5, 2007
PLANS APPROVAL DATE

REGISTERED PROFESSIONAL ENGINEER
Jeffery G. McRae
No. E14512
Exp. 6-30-08
ELECTRICAL
STATE OF CALIFORNIA

The State of California or its officers or agents shall not be responsible for the accuracy or completeness of electronic copies of this plan sheet.

To accompany plans dated 10-17-11

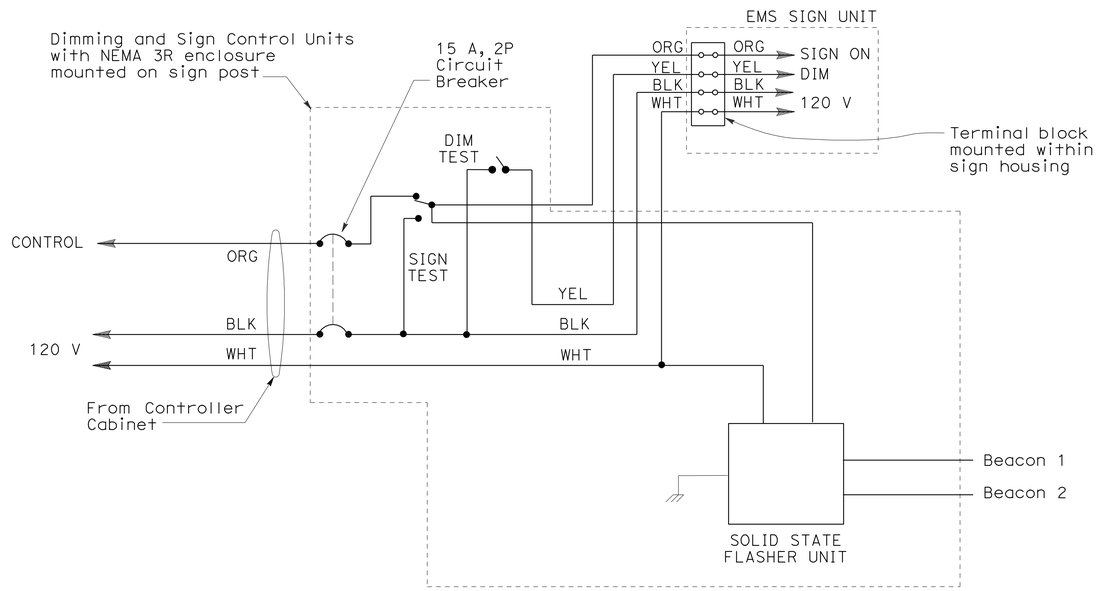

STATE OF CALIFORNIA
DEPARTMENT OF TRANSPORTATION

ELECTRICAL SYSTEMS (LED EXTINGUISHABLE MESSAGE SIGN WIRING DIAGRAM)

NO SCALE

RSP ES-14B DATED OCTOBER 5, 2007 SUPERCEDES STANDARD PLAN ES-14B DATED MAY 1, 2006 - PAGE 467 OF THE STANDARD PLANS BOOK DATED MAY 2006.

REVISED STANDARD PLAN RSP ES-14B

2006 REVISED STANDARD PLAN RSP ES-14B

7-10-07

DIST	COUNTY	ROUTE	POST MILES TOTAL PROJECT	SHEET No	TOTAL SHEETS
10	Ama	88	0.0/5.5	186	216

REGISTERED CIVIL ENGINEER — DATE 3-21-11

10-17-11
PLANS APPROVAL DATE

REGISTERED PROFESSIONAL ENGINEER — M. Guadamuz — No. 57992 — Exp. 6-30-12 — CIVIL — STATE OF CALIFORNIA

The State of California or its officers or agents shall not be responsible for the accuracy or completeness of electronic copies of this plan sheet.

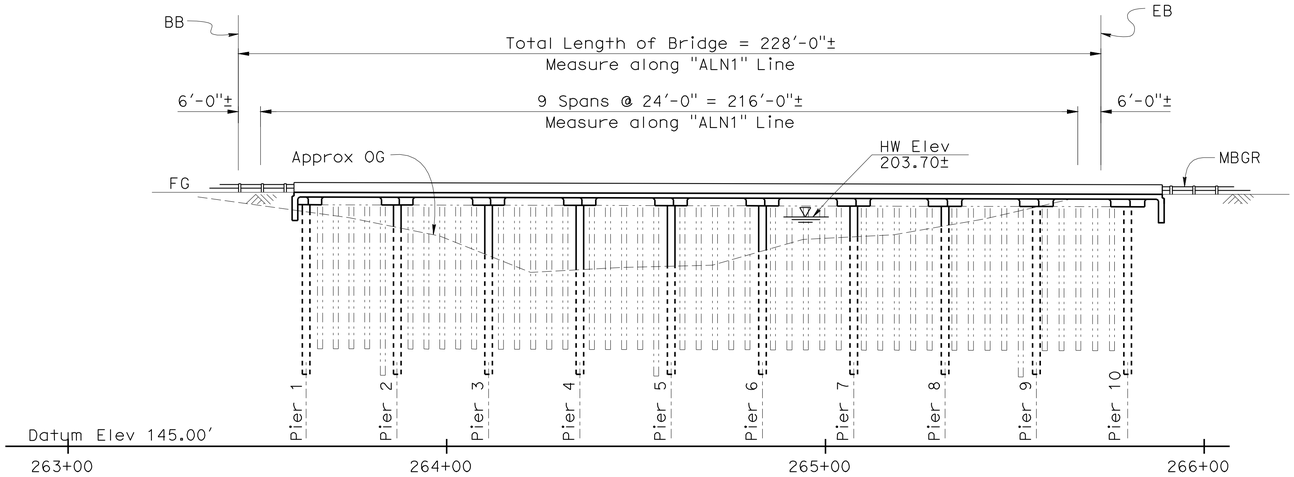

ELEVATION

1" = 20'-0"

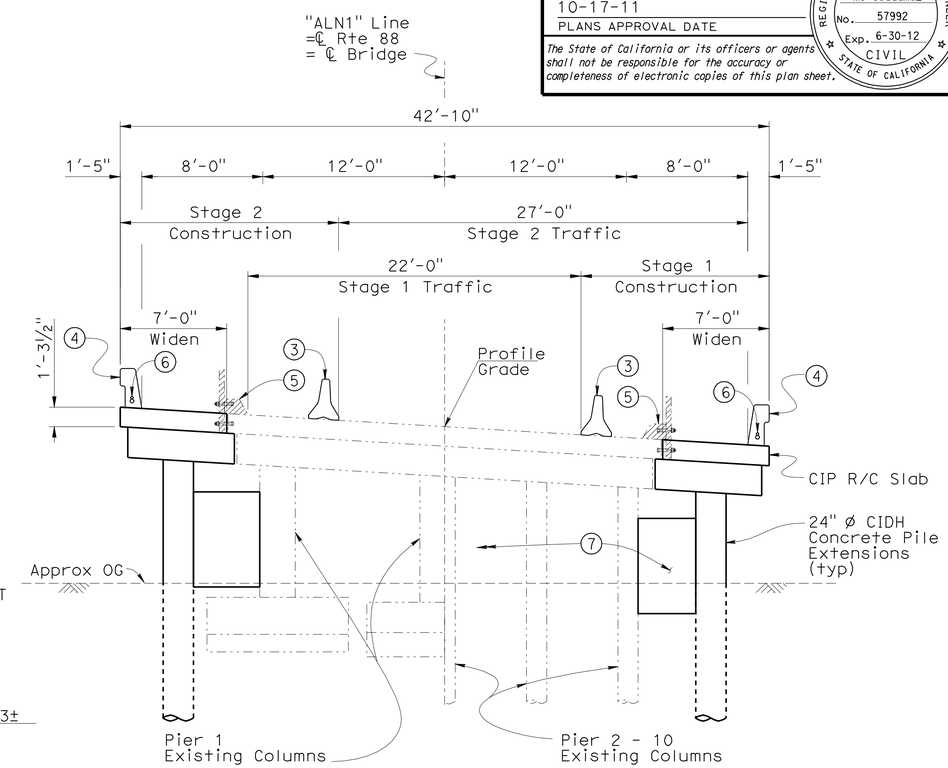

TYPICAL SECTION

1" = 5'-0"

QUANTITIES

	LUMP SUM	
BRIDGE REMOVAL (PORTION)		
STRUCTURE EXCAVATION (BRIDGE)	17	CY
STRUCTURE BACKFILL (BRIDGE)	40	CY
24" CAST-IN-DRILLED-HOLE CONCRETE PILING	856	LF
STRUCTURAL CONCRETE, BRIDGE	244	CY
DRILL AND BOND DOWEL	388	LF
REFINISH BRIDGE DECK	912	SQFT
JOINT SEAL (MR½")	40	LF
BAR REINFORCING STEEL (BRIDGE)	120,550	LB
MISCELLANEOUS METAL (BRIDGE)	213	LB
CONCRETE BARRIER (TYPE 732)	456	LF

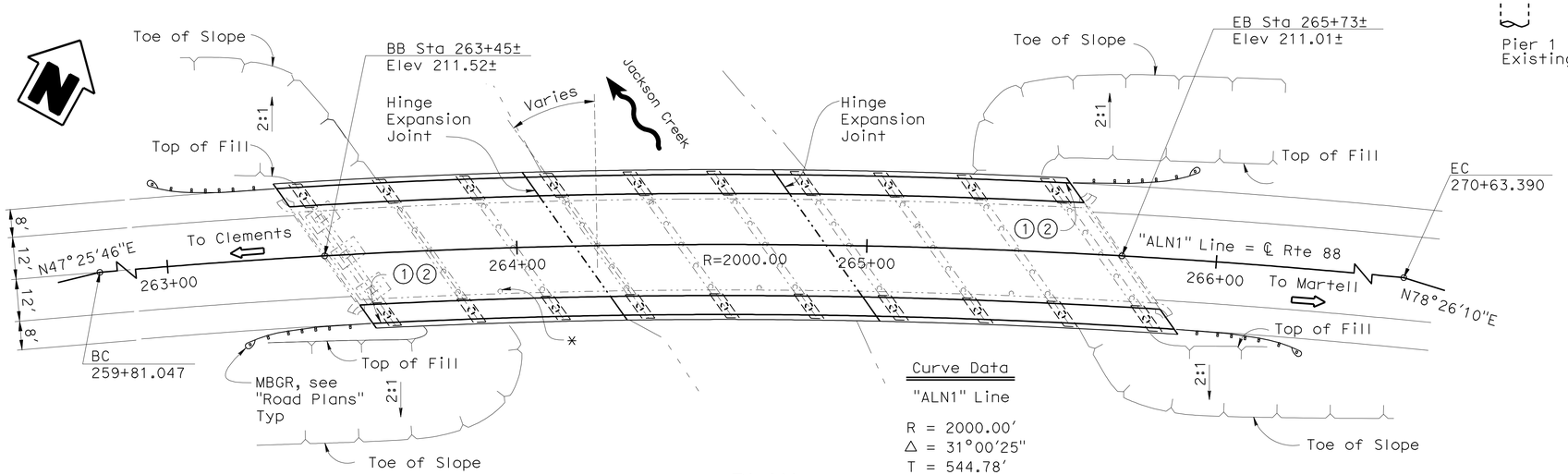

PLAN

1" = 20'-0"

Curve Data

"ALN1" Line

R = 2000.00'
Δ = 31°00'25"
T = 544.78'
L = 1082.34'

✱ Existing Drainage to be Filled with Concrete.

Indicate Portion of Existing structure to be removed.

Indicate Existing Structure.

Notes:

1. Paint Bridge name: Jackson Creek Bridge.
2. Paint Bridge Number: 26-0019.
3. Temporary Railing (Type K), See Road Plans.
4. Concrete Barrier Type 732.
5. Remove Exist Curb and Timber Railing.
6. 1 - 3" ø and 1 - 2" ø Conduits.
7. Infill Wall at Pier 2 thru 9 Stage 1 and Stage 2.

NOTE:
THE CONTRACTOR SHALL VERIFY ALL CONTROLLING FIELD DIMENSIONS BEFORE ORDERING OR FABRICATING ANY MATERIAL.

X
DESIGN ENGINEER

	BY	CHECKED			
DESIGN	M. Guadamuz	M. Cullen	LOAD FACTOR DESIGN	LIVE LOADING: HS20-44 AND ALTERNATIVE MP PERMIT DESIGN LOAD	
DETAILS	A. Chen/S. Jiang	M. Cullen	LAYOUT	M. Guadamuz	M. Cullen
QUANTITIES	T. Pinell	M. Quach	SPECIFICATIONS	M. Kopsa	PLANS AND SPECS COMPARED M. Kopsa

STATE OF CALIFORNIA
DEPARTMENT OF TRANSPORTATION

DIVISION OF ENGINEERING SERVICES
STRUCTURE DESIGN
DESIGN BRANCH 5

BRIDGE NO. 26-0019
POST MILE 3.09

JACKSON CREEK BRIDGE (WIDEN)
GENERAL PLAN

ORIGINAL SCALE IN INCHES FOR REDUCED PLANS 0 1 2 3

CU 10
EA 264441

DISREGARD PRINTS BEARING EARLIER REVISION DATES

REVISION DATES: 10-30-08, 12-23-08, 4-2-09, 10-01-09, 12-22-10, 4-21-11

SHEET 1 OF 15

STRUCTURES DESIGN GENERAL PLAN SHEET (ENGLISH) (REV.07-24-06)

FILE => 26-0019-a-gp.dgn

USERNAME => s6114937 DATE PLOTTED => 19-OCT-2011 TIME PLOTTED => 10:17

DIST	COUNTY	ROUTE	POST MILES TOTAL PROJECT	SHEET No	TOTAL SHEETS
10	Ama	88	0.0/5.5	187	216

REGISTERED CIVIL ENGINEER 3-21-11 DATE

10-17-11
PLANS APPROVAL DATE

REGISTERED PROFESSIONAL ENGINEER M. Guadamuz No. 57992 Exp. 6-30-12 CIVIL STATE OF CALIFORNIA

The State of California or its officers or agents shall not be responsible for the accuracy or completeness of electronic copies of this plan sheet.

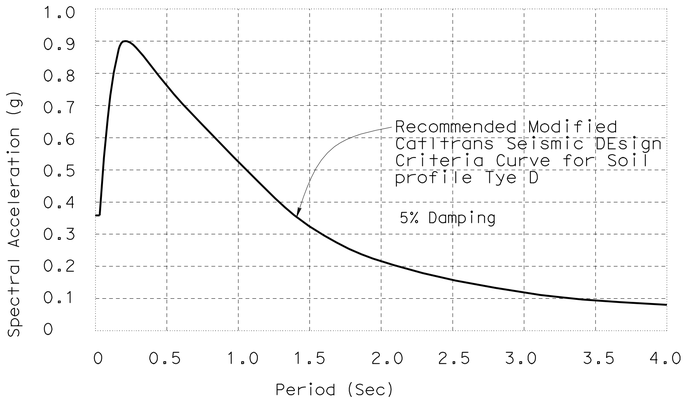

SOIL PROFILE TYPE D: Mw = 6.5, PBA = 0.3g

No Scale

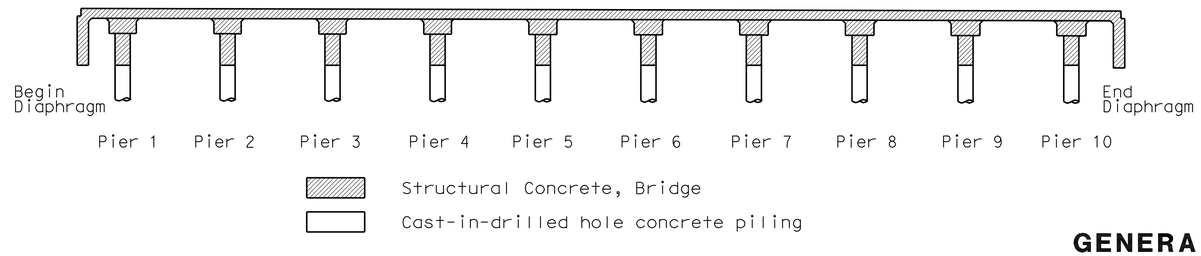

CONCRETE STRENGTH AND TYPE LIMITS

No Scale

GENERAL NOTES
LOAD FACTOR DESIGN

DESIGN:

Caltrans Bridge Design Specifications, April 2000 (LFD)
1996 AASHTO with Interims and Revisions by Caltrans.

SEISMIC DESIGN:

Caltrans Seismic Design Criteria (SDC)
Version 1.4, July, 2006

DEAD LOAD:

Includes 35 Psf for future wearing surface.

LIVE LOADING:

HS20-44 and alternative permit design load.

SEISMIC LOADING:

Site Specific See ARS Curve.

REINFORCED CONCRETE:

f_y = 60 000 psi
f'_c = 3600 psi
n = 8

QUANTITIES

PILE DATA TABLE

Location		Pile Type	Design Loading (kips)	Nominal Resistance Compression (kips)	Nominal Resistance Tension (kips)	Cut-off Elevations (ft)	(1) (2) Design Tip Elevations (ft)	Specified Tip Elevations (ft)
Pier 1	Left	24 Inch CIDH	N/A	240	N/A	208.8	170.4 (c)	170.4
	Right					203.4	165.2 (c)	165.2
Pier 2	Left	24 Inch CIDH	N/A	240	N/A	202.9	162.6 (c)	162.6
	Right					201.2	162.4 (c)	162.4
Pier 3	Left	24 Inch CIDH	N/A	240	N/A	197.0	159.5 (a)	159.5
	Right					197.3	159.4 (a)	159.4
Pier 4	Left	24 Inch CIDH	N/A	240	N/A	193.0	152.7 (a)	152.7
	Right					193.3	151.7 (a)	151.7
Pier 5	Left	24 Inch CIDH	N/A	240	N/A	192.9	150.8 (a)	150.8
	Right					193.3	151.8 (a)	151.8
Pier 6	Left	24 Inch CIDH	N/A	240	N/A	192.8	151.7 (a)	151.7
	Right					193.4	150.1 (a)	150.1
Pier 7	Left	24 Inch CIDH	N/A	240	N/A	192.6	150.0 (a)	150.0
	Right					198.0	149.7 (a)	149.7
Pier 8	Left	24 Inch CIDH	N/A	240	N/A	195.5	154.4 (a)	154.4
	Right					197.0	154.0 (a)	154.0
Pier 9	Left	24 Inch CIDH	N/A	240	N/A	202.9	153.2 (a)	153.2
	Right					199.5	154.1 (b)	154.1
Pier 10	Left	24 Inch CIDH	N/A	240	N/A	205.5	153.6 (b)	153.6
	Right					206.2	152.8 (b)	152.8

Notes: Pile tip elevations are controlled by Compression;
(a) Scour (b) Liquefaction (c) Compression only.

INDEX TO PLANS

1. GENERAL PLAN
2. INDEX TO PLANS
3. FOUNDATION PLAN
4. PIER 1 DETAILS
5. PIER LAYOUT & DETAILS
6. TYPICAL SECTION
7. TOP OF SLAB MAIN REINFORCEMENT
8. BOTTOM OF SLAB MAIN REINFORCEMENT
9. SLAB REINFORCEMENT DETAILS
10. SLAB HINGE DETAILS
11. MISCELLANEOUS DETAILS
12. LOG OF TEST BORINGS 1 OF 4
13. LOG OF TEST BORINGS 2 OF 4
14. LOG OF TEST BORINGS 3 OF 4
15. LOG OF TEST BORINGS 4 OF 4

STANDARD PLANS DATED MAY 2006

	A10A	ACRONYMS AND ABBREVIATIONS (A-L)
	A10B	ACRONYMS AND ABBREVIATIONS (M-Z)
	A10C	SYMBOLS (SHEET 1 OF 2)
	A10D	SYMBOLS (SHEET 2 OF 2)
	A62C	LIMITS OF PAYMENT FOR EXCAVATION AND BACKFILL-BRIDGE
	BO-1	BRIDGE DETAILS
	BO-3	BRIDGE DETAILS
RSP	B6-21	JOINT SEALS (MAXIMUM MOVEMENT RATING = 2")
	B11-55	CONCRETE BARRIER TYPE 732
	B14-3	COMMUNICATION AND SPRINKLER CONTROL CONDUITS (CONDUIT LESS THAN 4")

STANDARD PLAN SHEET NO.

DETAIL NO.

DESIGN	BY M. Cullen	CHECKED M. Guadamuz
DETAILS	BY A. Chen/S. Jiang	CHECKED M. Guadamuz
QUANTITIES	BY T. Pinell	CHECKED M. Quach

STATE OF CALIFORNIA
DEPARTMENT OF TRANSPORTATION

DIVISION OF ENGINEERING SERVICES
STRUCTURE DESIGN
DESIGN BRANCH 5

BRIDGE NO. 26-0019
POST MILE 3.09

JACKSON CREEK BRIDGE (WIDEN)
INDEX TO PLANS

ORIGINAL SCALE IN INCHES FOR REDUCED PLANS 0 1 2 3

CU 10
EA 264441

DISREGARD PRINTS BEARING EARLIER REVISION DATES

REVISION DATES: 3-12-09 4-8-09 12-11-09 4-21-11

SHEET 2 OF 15

STRUCTURES DESIGN DETAIL SHEET (ENGLISH) (REV. 10/25/05)

FILE => 26-0019-a-itp.dgn

USERNAME => s123631 DATE PLOTTED => 19-OCT-2011 TIME PLOTTED => 10:24

DIST	COUNTY	ROUTE	POST MILES TOTAL PROJECT	SHEET No	TOTAL SHEETS
10	Ama	88	0.0/5.5	188	216

REGISTERED CIVIL ENGINEER — DATE 3-21-11

10-17-11
PLANS APPROVAL DATE

REGISTERED PROFESSIONAL ENGINEER — M. Guadamuz — No. 57992 — Exp. 6-30-12 — CIVIL — STATE OF CALIFORNIA

The State of California or its officers or agents shall not be responsible for the accuracy or completeness of electronic copies of this plan sheet.

CURVE DATA

No.	R	Δ	T	L
Ⓐ	2000.00	31°0'25"	554.78	1082.34

Note 1: ○ - Indicates 2'Ø CIDH Pile.
℄ CIDH Piles to be in Line with
℄ Existing Pier and Offset 17'-11"
normal from "ALN1" Line.

SURVEY CONTROL

PRHV14
Fnd 1"IP w/ Red Plug
31.50 FT Lt. ℄ Rte 88
Sta. 263+32.04
N 1,875,307.85
E 6,854,916.01
Elev. = 212.38

PRHV15 (Not Shown on Plan)
Fnd 1" IP w/ Red Plug
17.10 FT Lt. ℄ Rte 88
Sta. 272+54.97
N 1,875,609.36
E 6,855,791.34
Elev. = 209.19

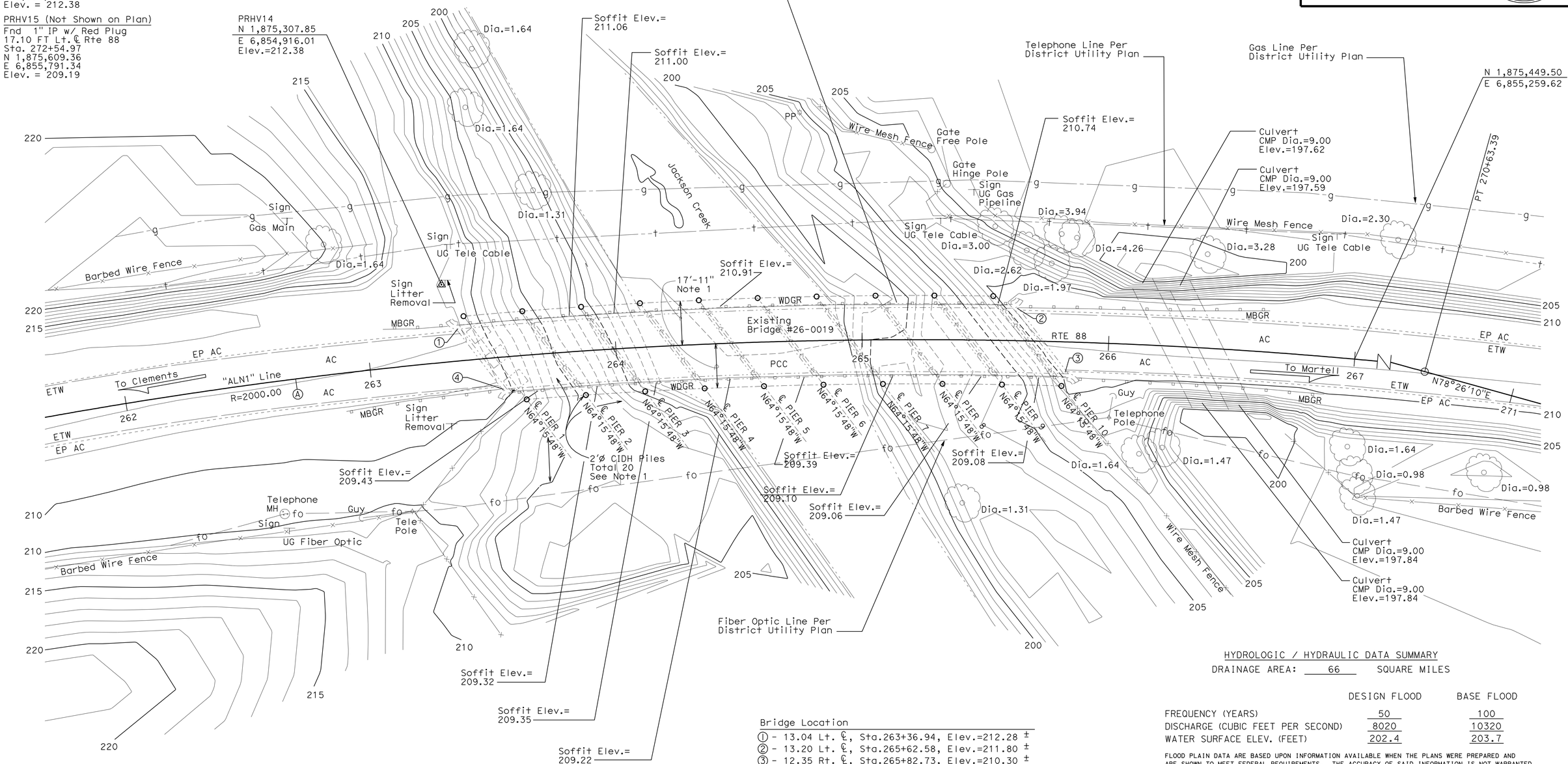

HYDROLOGIC / HYDRAULIC DATA SUMMARY

DRAINAGE AREA: 66 SQUARE MILES

	DESIGN FLOOD	BASE FLOOD
FREQUENCY (YEARS)	50	100
DISCHARGE (CUBIC FEET PER SECOND)	8020	10320
WATER SURFACE ELEV. (FEET)	202.4	203.7

FLOOD PLAIN DATA ARE BASED UPON INFORMATION AVAILABLE WHEN THE PLANS WERE PREPARED AND ARE SHOWN TO MEET FEDERAL REQUIREMENTS. THE ACCURACY OF SAID INFORMATION IS NOT WARRANTED BY THE STATE AND INTERESTED OR AFFECTED PARTIES SHOULD MAKE THEIR OWN INVESTIGATIONS.

Bridge Location
① - 13.04 Lt. ℄, Sta.263+36.94, Elev.=212.28 ±
② - 13.20 Lt. ℄, Sta.265+62.58, Elev.=211.80 ±
③ - 12.35 Rt. ℄, Sta.265+82.73, Elev.=210.30 ±
④ - 13.10 Rt. ℄, Sta.263+53.32, Elev.=210.73 ±

PRELIMINARY INVESTIGATION SECTION

SCALE	VERT.DATUM NGVD29	PHOTOGRAMMETRY AS OF: X			
1"=20'	HORZ.DATUM NAD83 (1991.35)	SURVEYED	BY District/J.Borden	CHECKED	BY J.Borden 08/2008
ALIGNMENT TIES Dist.Traverse Sheet		DRAFTED	BY T.Zolnikova 08/2008	CHECKED	BY L.Lew 08/2008

DESIGN	BY M. J. Cullen	CHECKED M. Guadamuz
DETAILS	BY G. M. Souza \ A. Chen	CHECKED M. Guadamuz
QUANTITIES	BY T. Pinell	CHECKED M. Guadamuz

STATE OF CALIFORNIA
DEPARTMENT OF TRANSPORTATION

DIVISION OF ENGINEERING SERVICES
STRUCTURE DESIGN
DESIGN BRANCH 5

BRIDGE NO. 26-0019
POST MILE 3.09

JACKSON CREEK BRIDGE (WIDEN)
FOUNDATION PLAN

STRUCTURES FOUNDATION PLAN SHEET (ENGLISH) (REV. 10/25/05)

ORIGINAL SCALE IN INCHES FOR REDUCED PLANS 0 1 2 3

CU 10
EA 264441

DISREGARD PRINTS BEARING EARLIER REVISION DATES — REVISION DATES 08/13/08 04/02/09

SHEET 3 OF 15

FILE => 26-0019-e-fp101.dgn

USERNAME => s123631 DATE PLOTTED => 19-OCT-2011 TIME PLOTTED => 10:24

DIST	COUNTY	ROUTE	POST MILES TOTAL PROJECT	SHEET No	TOTAL SHEETS
10	Ama	88	0.0/5.5	189	216

REGISTERED CIVIL ENGINEER 3-21-11 DATE

10-17-11
PLANS APPROVAL DATE

REGISTERED PROFESSIONAL ENGINEER M. Guadamuz No. 57992 Exp. 6-30-12 CIVIL STATE OF CALIFORNIA

The State of California or its officers or agents shall not be responsible for the accuracy or completeness of electronic copies of this plan sheet.

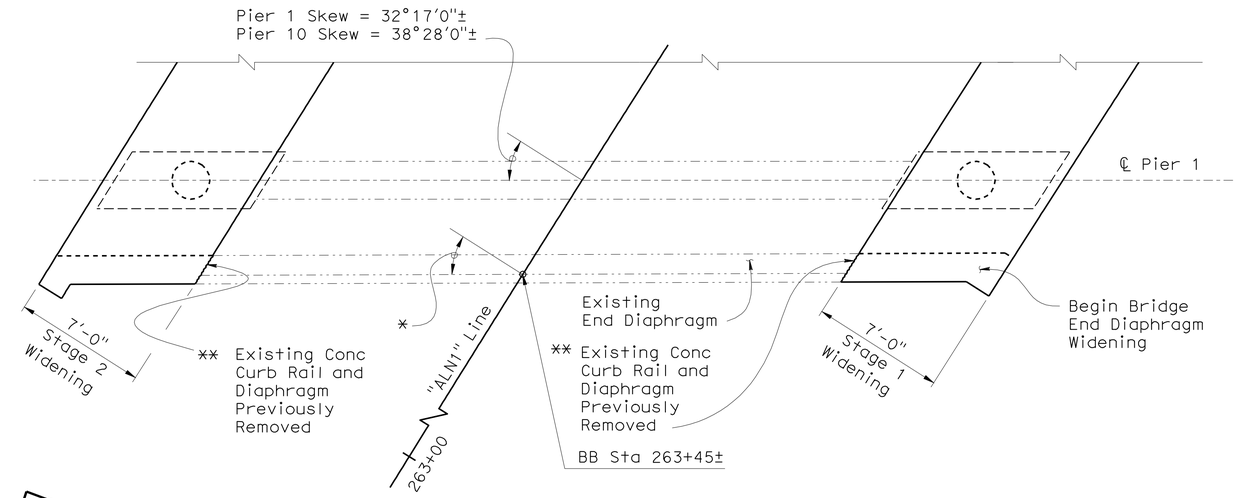

* Begin Bridge End Diaphragm Skew = 32°17'0"±
End Bridge End Diaphragm Skew = 38°39'0"±

** For Removal Details See "Miscellaneous Details" Sheet

PLAN PIER 1
1/4" = 1'-0"

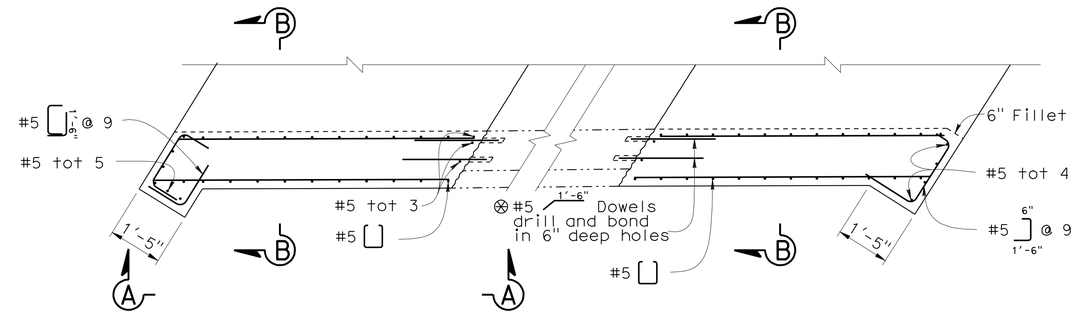

⊗ For Dowel Layout, See Dowel Layout Detail

END DIAPHRAGM PART PLAN
1/2" = 1'-0"

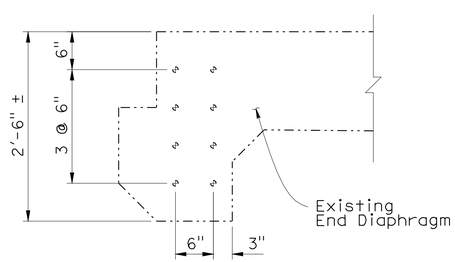

END DIAPHRAGM DOWEL LAYOUT
1 " = 1'-0"

Note: Begin Bridge End Diaphragm Shown,
End Bridge End Diaphragm Similar.

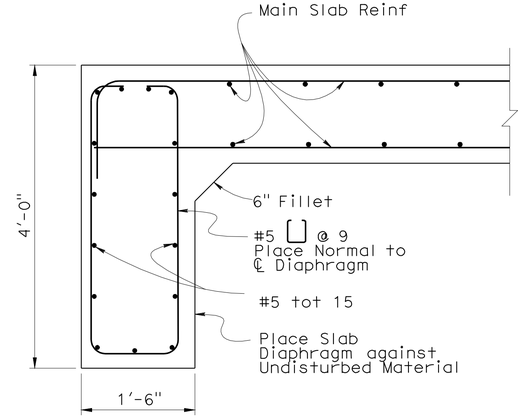

SECTION B-B
1 " = 1'-0"

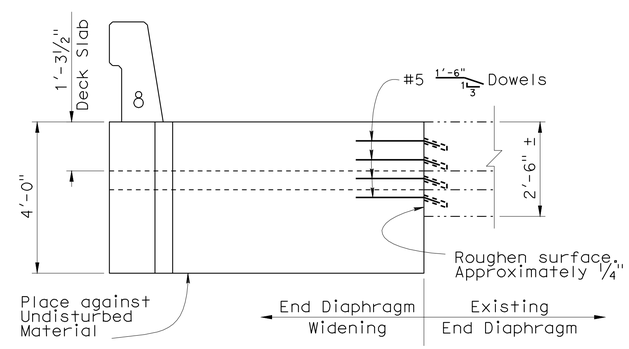

VIEW A-A
1/2" = 1'-0"

NOTE:
THE CONTRACTOR SHALL VERIFY ALL CONTROLLING FIELD DIMENSIONS BEFORE ORDERING OR FABRICATING ANY MATERIAL.

	BY	CHECKED
DESIGN	M. Cullen	C. Siegenthaler
DETAILS	A. Chen	C. Siegenthaler
QUANTITIES	T. Pinell	M. Quach

ORIGINAL SCALE IN INCHES FOR REDUCED PLANS 0 1 2 3

STATE OF CALIFORNIA
DEPARTMENT OF TRANSPORTATION

DIVISION OF ENGINEERING SERVICES
STRUCTURE DESIGN
DESIGN BRANCH 5

CU 10
EA 264441

BRIDGE NO. 26-0019
POST MILE 3.09

JACKSON CREEK BRIDGE (WIDEN)
PIER 1 DETAILS

DISREGARD PRINTS BEARING EARLIER REVISION DATES

REVISION DATES: 3-12-09 4-1-09 1-11-10 12-20-10

SHEET 4 OF 15

STRUCTURES DESIGN DETAIL SHEET (ENGLISH) (REV. 10/25/05)

FILE => 26-0019-i-pier1dt.dgn

USERNAME => s123631 DATE PLOTTED => 19-OCT-2011 TIME PLOTTED => 10:24

DIST	COUNTY	ROUTE	POST MILES TOTAL PROJECT	SHEET No	TOTAL SHEETS
10	Ama	88	0.0/5.5	190	216

REGISTERED CIVIL ENGINEER — DATE 3-21-11

10-17-11
PLANS APPROVAL DATE

REGISTERED PROFESSIONAL ENGINEER — M. Guadamuz — No. 57992 — Exp. 6-30-12 — CIVIL — STATE OF CALIFORNIA

The State of California or its officers or agents shall not be responsible for the accuracy or completeness of electronic copies of this plan sheet.

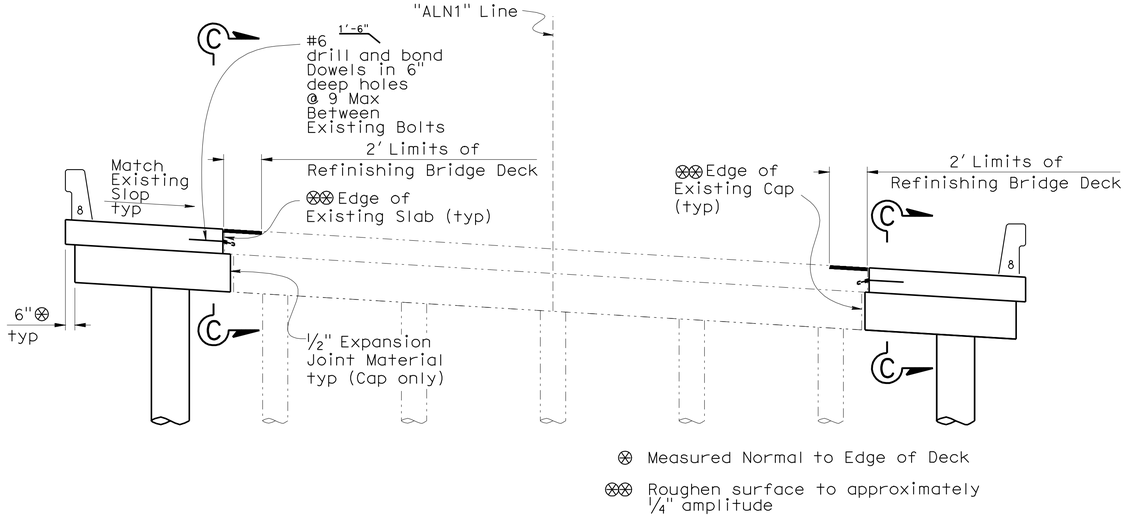

PIER CAP ELEVATION

¼" = 1'-0"

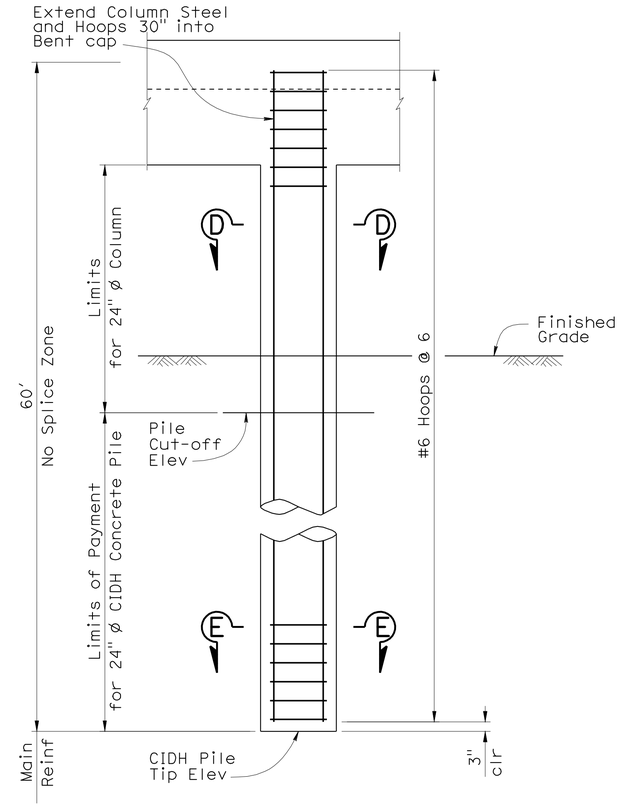

CIDH PILE ELEVATION

½" = 1'-0"

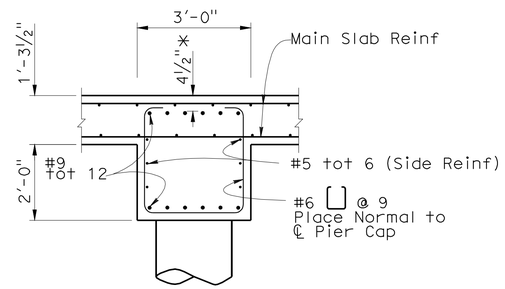

✳ Clearance to Main Cap Reinf

SECTION C-C

½" = 1'-0"

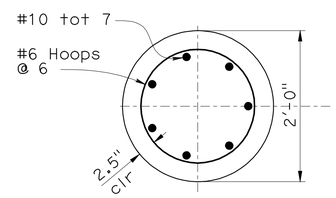

SECTION D-D

1" = 1'-0"

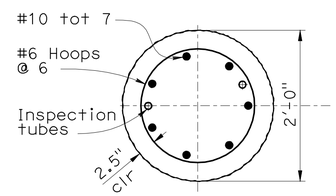

SECTION E-E

1" = 1'-0"

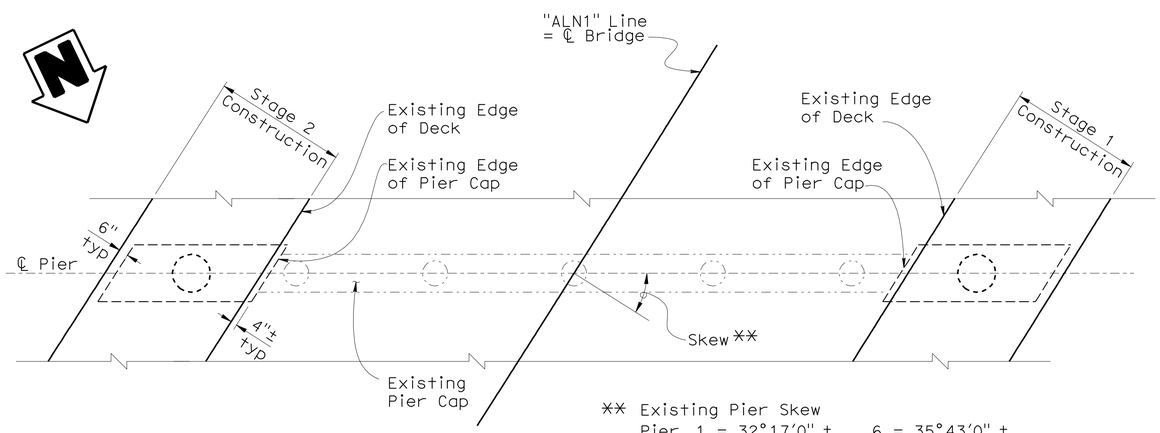

✳✳ Existing Pier Skew

Pier 1	= 32°17'0" ±	6	= 35°43'0" ±
2	= 32°58'0" ±	7	= 36°24'0" ±
3	= 33°39'0" ±	8	= 37°06'0" ±
4	= 34°21'0" ±	9	= 37°47'0" ±
5	= 35°02'0" ±	10	= 38°28'0" ±

PIER CAP PLAN

¼" = 1'-0"

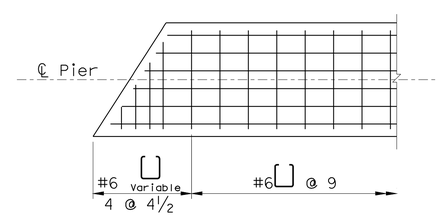

TYPICAL BENT CAP CORNER REINFORCEMENT

½" = 1'-0"

Note: Left end shown, right end similar.

NOTE:
THE CONTRACTOR SHALL VERIFY ALL CONTROLLING FIELD DIMENSIONS BEFORE ORDERING OR FABRICATING ANY MATERIAL.

	BY	CHECKED
DESIGN	M. Cullen	C. Siegenthaler
DETAILS	A. Chen/S. Jiang	C. Siegenthaler
QUANTITIES	T. Pinell	M. Quach

ORIGINAL SCALE IN INCHES FOR REDUCED PLANS 0 1 2 3

STATE OF CALIFORNIA
DEPARTMENT OF TRANSPORTATION

DIVISION OF ENGINEERING SERVICES
STRUCTURE DESIGN
DESIGN BRANCH 5

CU 10
EA 264441

BRIDGE NO. 26-0019
POST MILE 3.09

JACKSON CREEK BRIDGE (WIDEN)
PIER LAYOUT & DETAILS

DISREGARD PRINTS BEARING EARLIER REVISION DATES

REVISION DATES: 3-8-09, 4-6-09, 6-19-09, 10-06-09, 1-28-10, 12-20-10, 4-21-11

SHEET 5 OF 15

STRUCTURES DESIGN DETAIL SHEET (ENGLISH) (REV. 10/25/05)

FILE => 26-0019-i-pierlo.dgn

USERNAME => s123631 DATE PLOTTED => 19-OCT-2011 TIME PLOTTED => 10:24

DIST	COUNTY	ROUTE	POST MILES TOTAL PROJECT	SHEET No	TOTAL SHEETS
10	Ama	88	0.0/5.5	191	216

REGISTERED CIVIL ENGINEER — DATE 3-21-11

10-17-11
PLANS APPROVAL DATE

REGISTERED PROFESSIONAL ENGINEER — M. Guadamuz — No. 57992 — Exp. 6-30-12 — CIVIL — STATE OF CALIFORNIA

The State of California or its officers or agents shall not be responsible for the accuracy or completeness of electronic copies of this plan sheet.

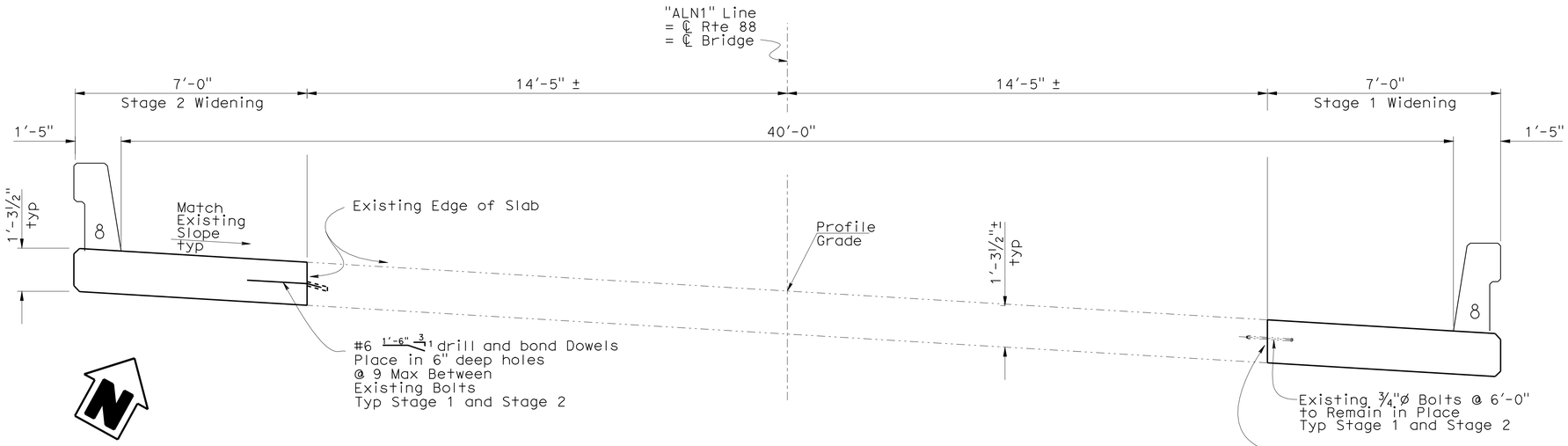

TYPICAL SECTION

½" = 1'-0"

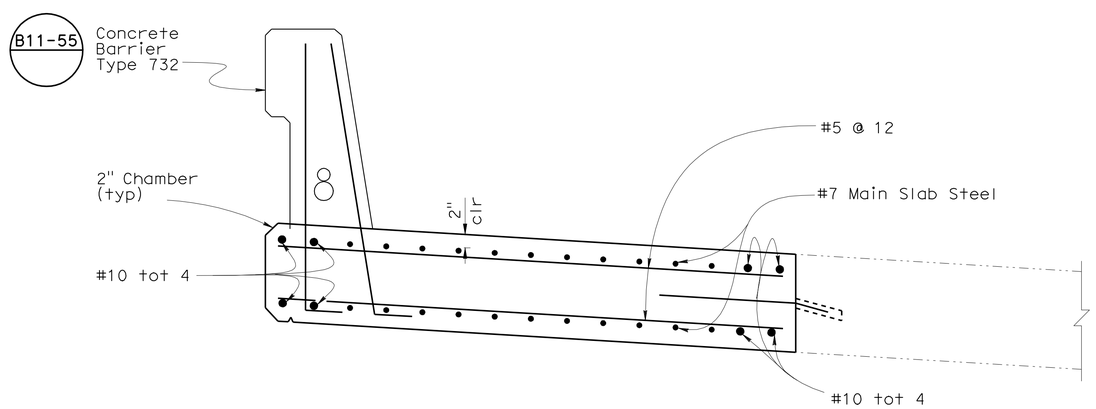

PART TYPICAL SECTION

1 " = 1'-0"

NOTE:
THE CONTRACTOR SHALL VERIFY ALL CONTROLLING FIELD DIMENSIONS BEFORE ORDERING OR FABRICATING ANY MATERIAL.

	BY	CHECKED
DESIGN	M. Cullen	M. Guadamuz
DETAILS	A. Chen/S. Jiang	M. Guadamuz
QUANTITIES	T. Pinell	M. Quach

ORIGINAL SCALE IN INCHES FOR REDUCED PLANS 0 1 2 3

STATE OF CALIFORNIA
DEPARTMENT OF TRANSPORTATION

DIVISION OF ENGINEERING SERVICES
STRUCTURE DESIGN
DESIGN BRANCH 5

CU 10
EA 264441

BRIDGE NO. 26-0019
POST MILE 3.09

JACKSON CREEK BRIDGE (WIDEN)
TYPICAL SECTION

DISREGARD PRINTS BEARING EARLIER REVISION DATES

REVISION DATES: 3-2-09, 4-5-09, 10-06-09, 1-11-10, 12-20-10

SHEET 6 OF 15

USERNAME => s123631 DATE PLOTTED => 19-OCT-2011 TIME PLOTTED => 10:24

STRUCTURES DESIGN DETAIL SHEET (ENGLISH) (REV. 10/25/05)

FILE => 26-0019-k-ts.dgn

DIST	COUNTY	ROUTE	POST MILES TOTAL PROJECT	SHEET No	TOTAL SHEETS
10	Ama	88	0.0/5.5	192	216

REGISTERED CIVIL ENGINEER 3-21-11 DATE

10-17-11
PLANS APPROVAL DATE

REGISTERED PROFESSIONAL ENGINEER M. Guadamuz No. 57992 Exp. 6-30-12 CIVIL STATE OF CALIFORNIA

The State of California or its officers or agents shall not be responsible for the accuracy or completeness of electronic copies of this plan sheet.

Notes:

1. Right Widening Shown, Left Widening Similar.
2. All Reinforcement #7 Bars unless otherwise Called out.

⊗ Top Slab Continuous Reinforcement may be service spliced at midspan.

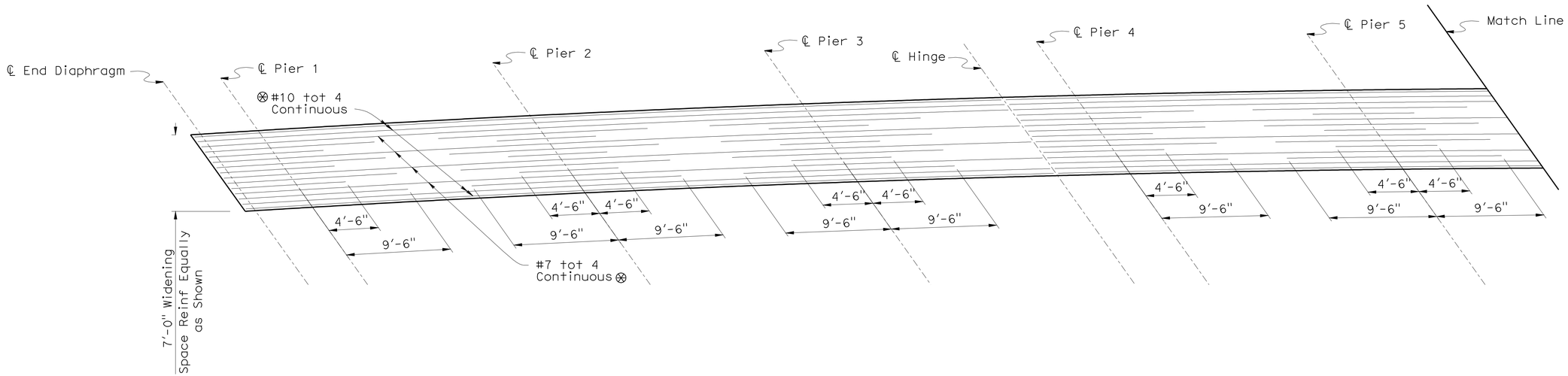

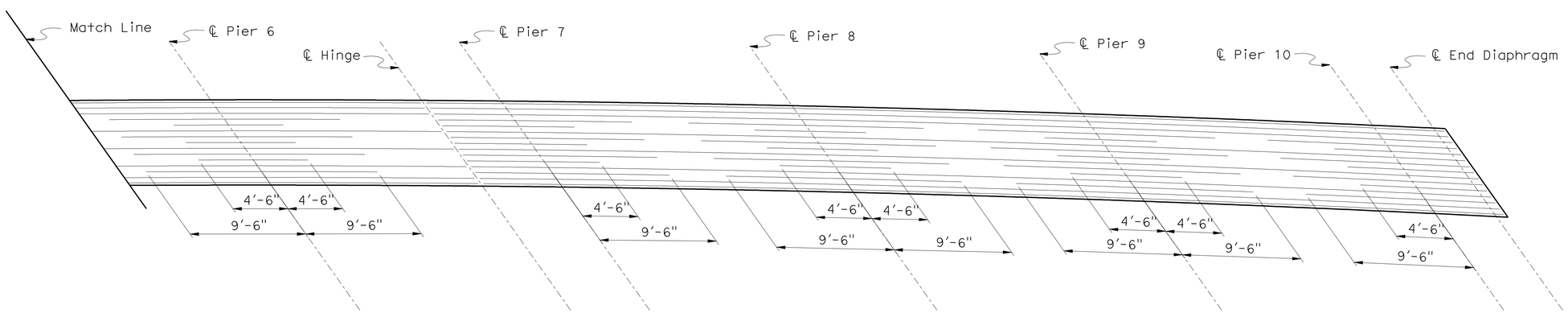

MAIN REINFORCEMENT - TOP OF SLAB

1" = 5'-0"

DESIGN	BY M. Cullen	CHECKED M. Guadamuz	
DETAILS	BY A. Chen	CHECKED M. Guadamuz	
QUANTITIES	BY T. Pinell	CHECKED M. Quach	

ORIGINAL SCALE IN INCHES FOR REDUCED PLANS 0 1 2 3

STATE OF CALIFORNIA DEPARTMENT OF TRANSPORTATION

DIVISION OF ENGINEERING SERVICES STRUCTURE DESIGN DESIGN BRANCH 5

CU 10
EA 264441

BRIDGE NO. 26-0019
POST MILE 3.09

JACKSON CREEK BRIDGE (WIDEN)
TOP OF SLAB MAIN REINFORCEMENT

DISREGARD PRINTS BEARING EARLIER REVISION DATES

REVISION DATES: 3-5-09, 4-3-09

SHEET 7 OF 15

USERNAME => s123631 DATE PLOTTED => 19-OCT-2011 TIME PLOTTED => 10:24

STRUCTURES DESIGN DETAIL SHEET (ENGLISH) (REV. 10/25/05)

FILE => 26-0019-1-slabreinf_01.dgn

DIST	COUNTY	ROUTE	POST MILES TOTAL PROJECT	SHEET No	TOTAL SHEETS
10	Ama	88	0.0/5.5	193	216

REGISTERED CIVIL ENGINEER 3-21-11 DATE

10-17-11
PLANS APPROVAL DATE

REGISTERED PROFESSIONAL ENGINEER M. Guadamuz No. 57992 Exp. 6-30-12 CIVIL STATE OF CALIFORNIA

The State of California or its officers or agents shall not be responsible for the accuracy or completeness of electronic copies of this plan sheet.

Notes:

1. Right Widening Shown, Left Widening Similar.
2. All Reinforcement #7 Bars unless otherwise Called out.

⊗⊗ Bottom Slab Continuous Reinforcement may be service spliced 6 ft from ℄ Pier

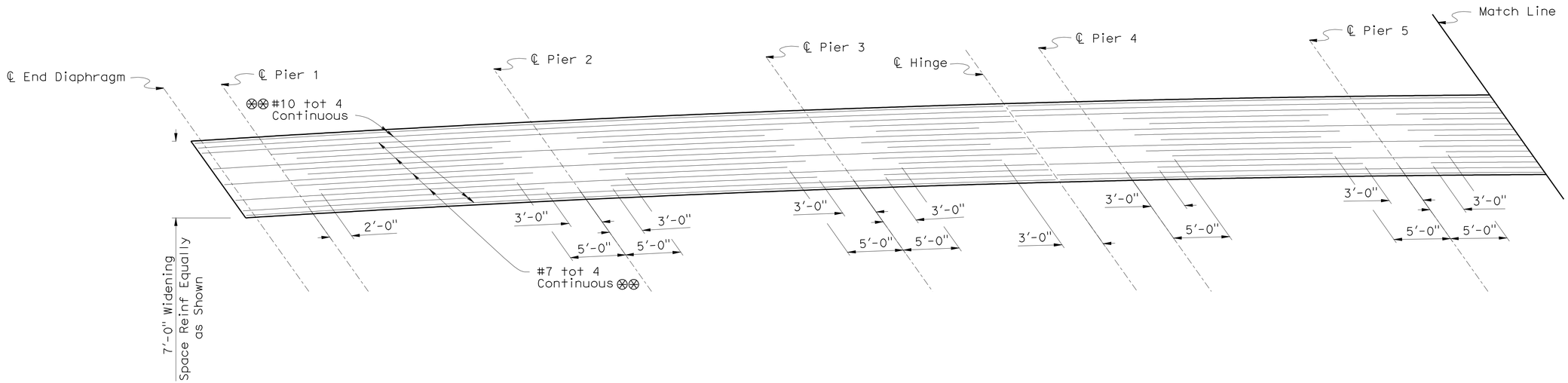

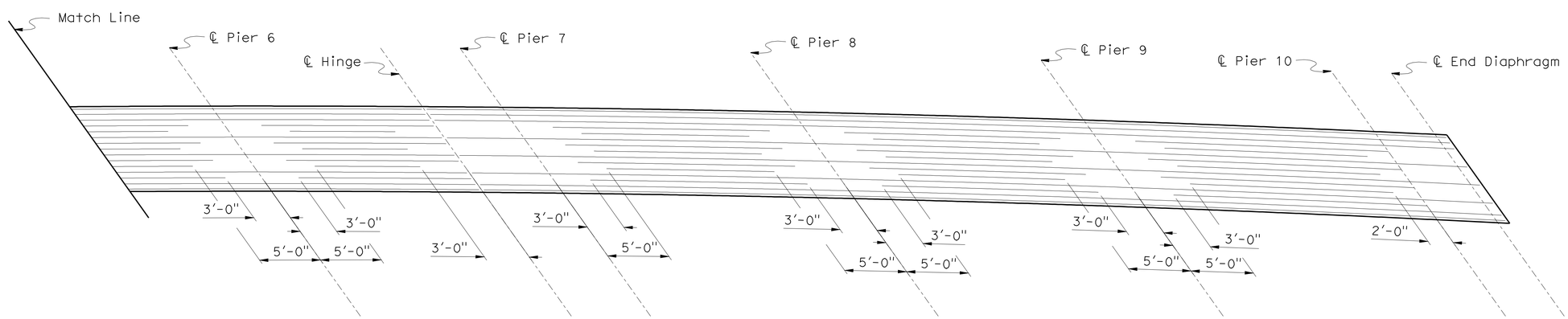

MAIN REINFORCEMENT - BOTTOM OF SLAB

1" = 5'-0"

DESIGN	BY M. Cullen	CHECKED M. Guadamuz	
DETAILS	BY A. Chen	CHECKED M. Guadamuz	
QUANTITIES	BY T. Pinell	CHECKED M. Quach	

ORIGINAL SCALE IN INCHES FOR REDUCED PLANS 0 1 2 3

STATE OF CALIFORNIA
DEPARTMENT OF TRANSPORTATION

DIVISION OF ENGINEERING SERVICES
STRUCTURE DESIGN
DESIGN BRANCH 5

CU 10
EA 264441

BRIDGE NO. 26-0019
POST MILE 3.09

JACKSON CREEK BRIDGE (WIDEN)
BOTTOM OF SLAB MAIN REINFORCEMENT

DISREGARD PRINTS BEARING EARLIER REVISION DATES

REVISION DATES: ~~3-9-09~~ 4-3-09

SHEET 8 OF 15

STRUCTURES DESIGN DETAIL SHEET (ENGLISH) (REV. 10/25/05)

FILE => 26-0019-1-slabreinf_02.dgn

USERNAME => s123631 DATE PLOTTED => 19-OCT-2011 TIME PLOTTED => 10:25

DIST	COUNTY	ROUTE	POST MILES TOTAL PROJECT	SHEET No	TOTAL SHEETS
10	Ama	88	0.0/5.5	194	216

REGISTERED CIVIL ENGINEER 3-21-11 DATE

10-17-11
PLANS APPROVAL DATE

REGISTERED PROFESSIONAL ENGINEER M. Guadamuz No. 57992 Exp. 6-30-12 CIVIL STATE OF CALIFORNIA

The State of California or its officers or agents shall not be responsible for the accuracy or completeness of electronic copies of this plan sheet.

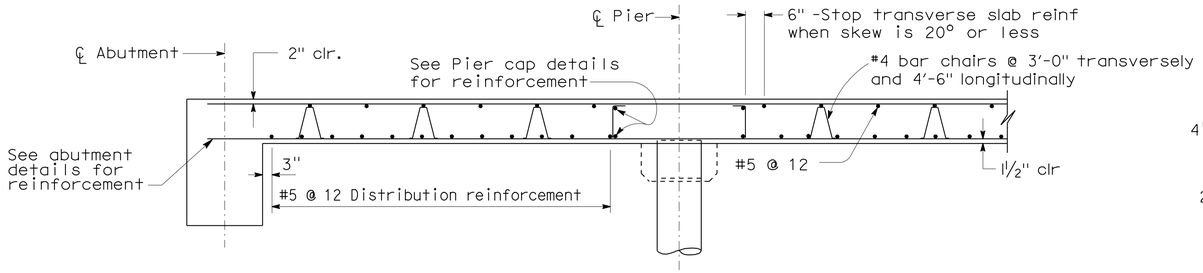

LONGITUDINAL SECTION

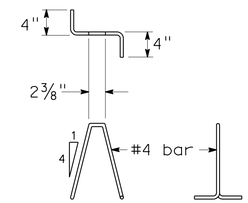

BAR CHAIR DETAIL

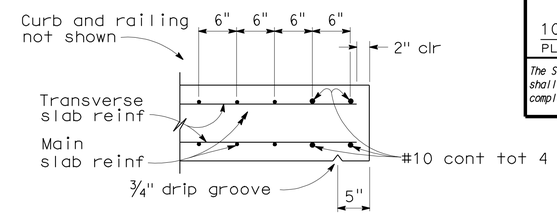

EDGE OF SLAB DETAILS

BAR SPLICE LENGTH								
Bar size	#4	#5	#6	#7	#8	#9	#10	#11
All bars, except top bars in spans over 23'	23	28	34	39	45	68	76	85
Top bars in spans over 23'	23	28	34	53	60	77	97	120

REINFORCEMENT NOTES:

Splices in top main bars to be located near center of span.
Splices in bottom main bars to be located near Pier.
Spacing of all transverse bars is measured along ℄ roadway.
Skew 0° to 20°: Place all transverse bars parallel to Pier.
Skew over 20°: Place transverse slab bars perpendicular to ℄ bridge. See details at right and below.

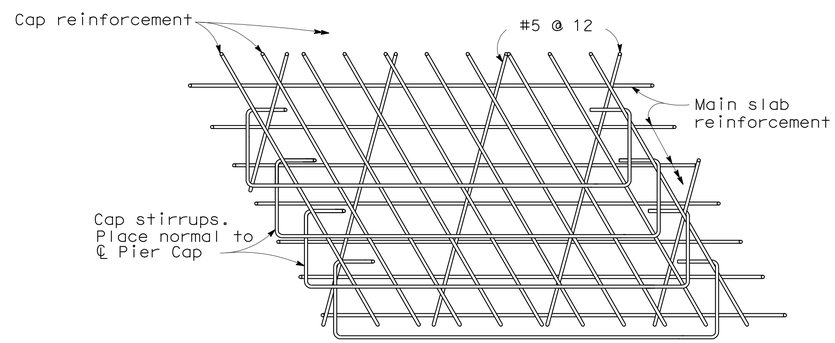

TOP SLAB REINFORCEMENT AT PIER

Note: View for main span over 23'.
Bar placement similar for spans under 23'.

SPECIAL DETAILS
NO SCALE

DESIGN	BY M. Cullen	CHECKED C. Siegenthaler	
DETAILS	BY A. Chen	CHECKED C. Siegenthaler	
QUANTITIES	BY T. Pinell	CHECKED M. Quach	

ORIGINAL SCALE IN INCHES FOR REDUCED PLANS 0 1 2 3

STATE OF CALIFORNIA
DEPARTMENT OF TRANSPORTATION

DIVISION OF ENGINEERING SERVICES
STRUCTURE DESIGN
DESIGN BRANCH 5

CU 10
EA 264441

BRIDGE NO. 26-0019
POST MILE 3.09

JACKSON CREEK BRIDGE (WIDEN)
SLAB REINFORCEMENT DETAILS

DISREGARD PRINTS BEARING EARLIER REVISION DATES 3-5-09

REVISION DATES

SHEET 9 OF 15

USERNAME => s123631 DATE PLOTTED => 19-OCT-2011 TIME PLOTTED => 10:25

STRUCTURES DESIGN DETAIL SHEET (ENGLISH) (REV. 10/25/05)

FILE => 26-0019-m-slabrfdt.dgn

DIST	COUNTY	ROUTE	POST MILES TOTAL PROJECT	SHEET No	TOTAL SHEETS
10	Ama	88	0.0/5.5	195	216

REGISTERED CIVIL ENGINEER 3-21-11 DATE

10-17-11
PLANS APPROVAL DATE

REGISTERED PROFESSIONAL ENGINEER M. Guadamuz No. 57992 Exp. 6-30-12 CIVIL STATE OF CALIFORNIA

The State of California or its officers or agents shall not be responsible for the accuracy or completeness of electronic copies of this plan sheet.

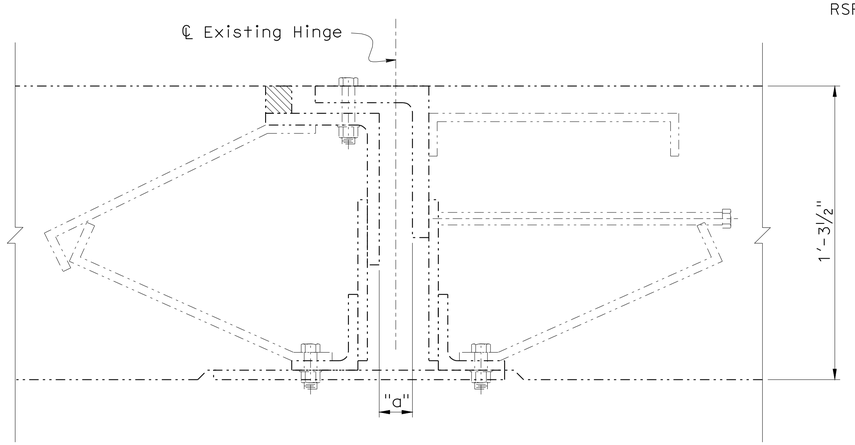

SECTION A-A

3" = 1'-0"

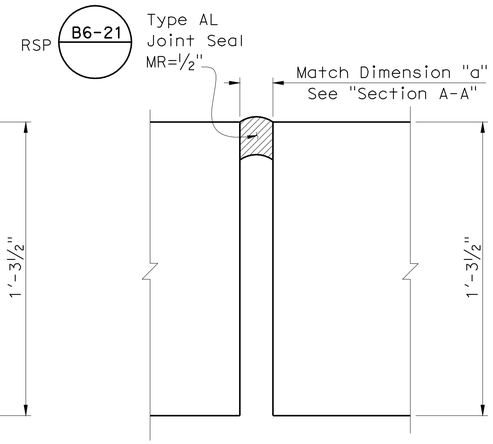

SECTION B-B

3" = 1'-0"

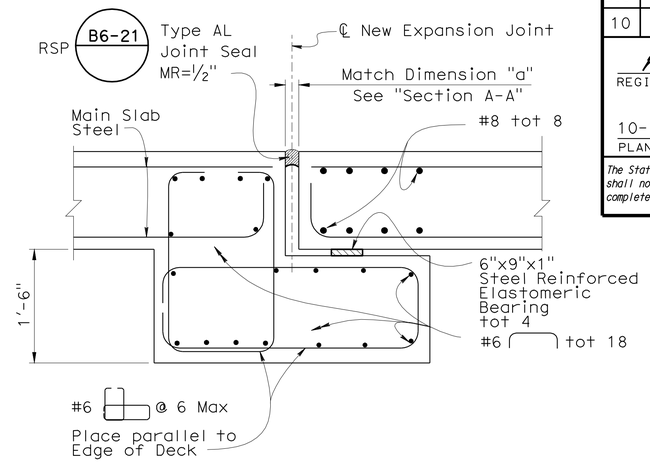

SECTION C-C

1" = 1'-0"

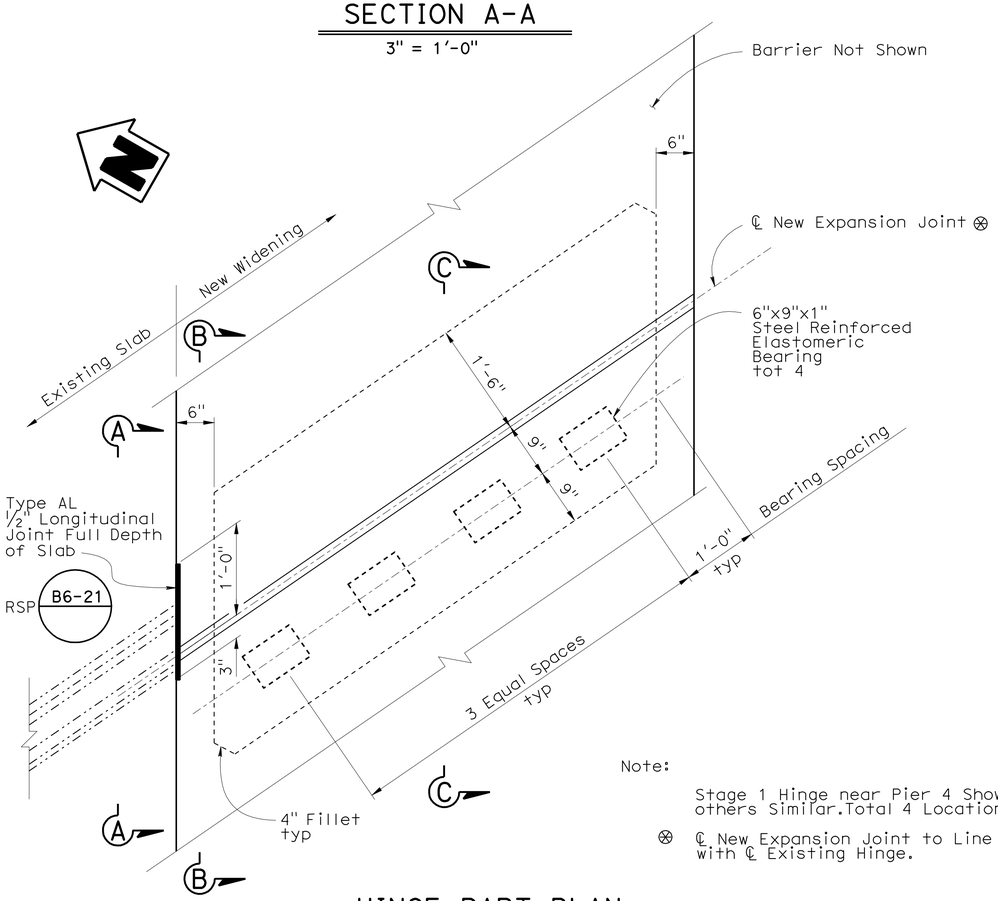

Note:

Stage 1 Hinge near Pier 4 Shown, others Similar.Total 4 Locations.

⊗ ℄ New Expansion Joint to Line up with ℄ Existing Hinge.

HINGE PART PLAN

1" = 1'-0"

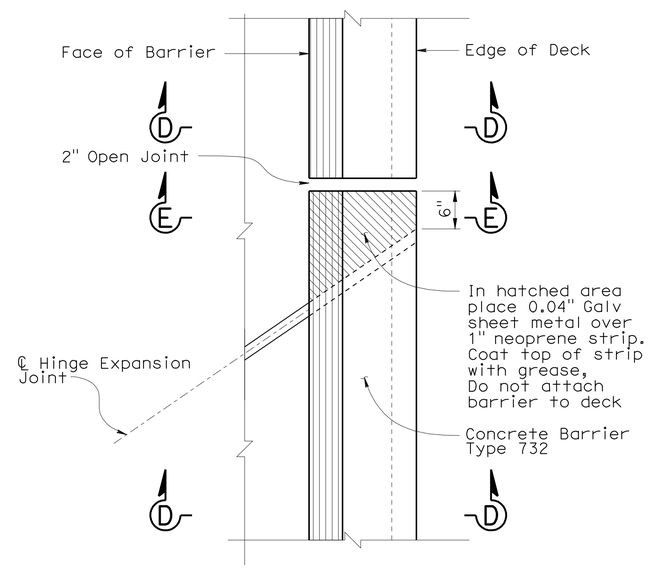

PART PLAN

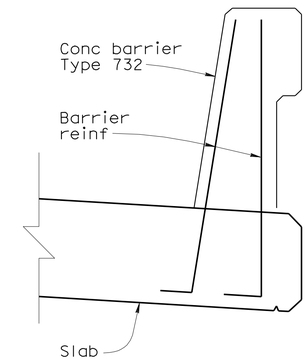

SECTION D-D

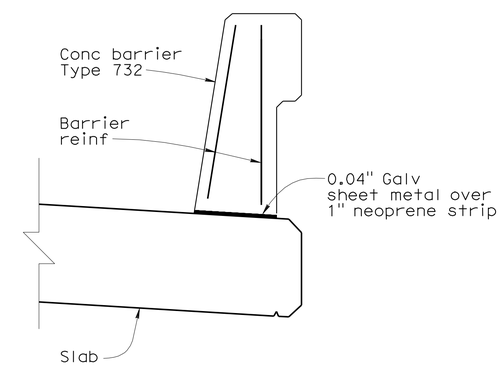

SECTION E-E

BARRIER TYPE 732 MODIFICATIONS AT HINGE EXPANSION JOINT

1" = 1'-0"

DESIGN	BY M. Cullen	CHECKED M. Guadamuz	
DETAILS	BY A. Chen/S. Jiang	CHECKED M. Guadamuz	
QUANTITIES	BY T. Pinell	CHECKED M. Quach	

ORIGINAL SCALE IN INCHES FOR REDUCED PLANS 0 1 2 3

STATE OF CALIFORNIA DEPARTMENT OF TRANSPORTATION

DIVISION OF ENGINEERING SERVICES STRUCTURE DESIGN DESIGN BRANCH 5

CU 10
EA 264441

BRIDGE NO. 26-0019
POST MILE 3.09

JACKSON CREEK BRIDGE (WIDEN)

SLAB HINGE DETAILS

DISREGARD PRINTS BEARING EARLIER REVISION DATES

REVISION DATES: 3-25-09, 4-1-09, 10-06-09, 1-28-10, 12-20-10, 4-21-11

SHEET 10 OF 15

USERNAME => s123631 DATE PLOTTED => 19-OCT-2011 TIME PLOTTED => 10:25

STRUCTURES DESIGN DETAIL SHEET (ENGLISH) (REV. 10/25/05)

FILE => 26-0019-n-hingedt.dgn

DIST	COUNTY	ROUTE	POST MILES TOTAL PROJECT	SHEET No	TOTAL SHEETS
10	Ama	88	0.0/5.5	196	216

REGISTERED CIVIL ENGINEER 3-21-11 DATE

10-17-11
PLANS APPROVAL DATE

REGISTERED PROFESSIONAL ENGINEER M. Guadamuz No. 57992 Exp. 6-30-12 CIVIL STATE OF CALIFORNIA

The State of California or its officers or agents shall not be responsible for the accuracy or completeness of electronic copies of this plan sheet.

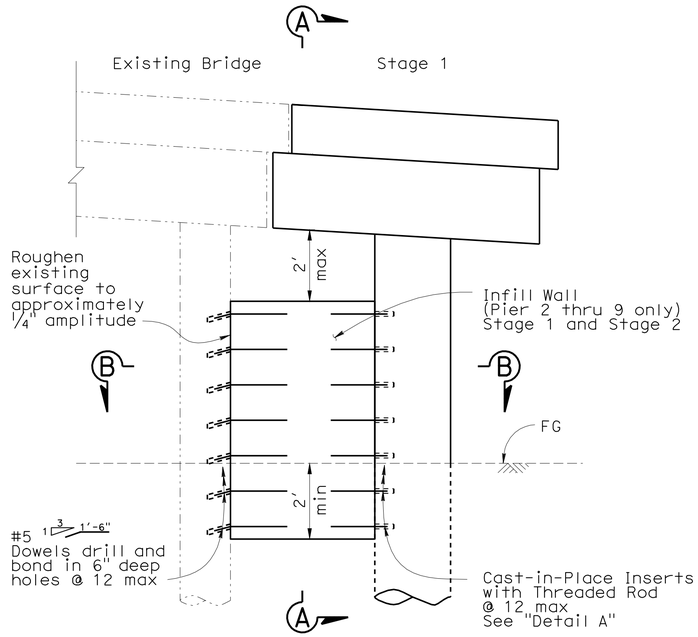

INFILL WALL ELEVATION

1/2" = 1'-0"

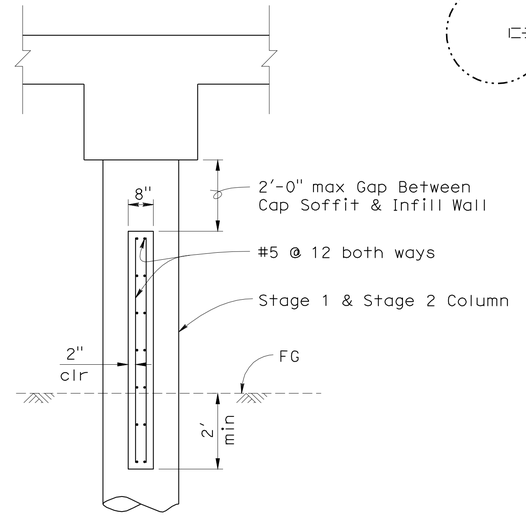

SECTION A-A

1/2" = 1'-0"

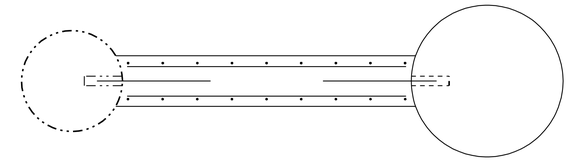

SECTION B-B

1" = 1'-0"

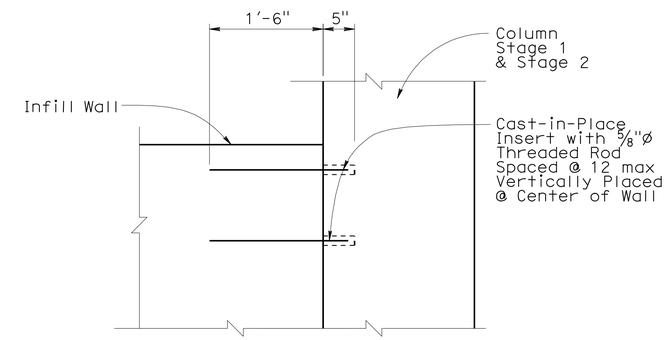

DETAIL A

1 " = 1'-0"

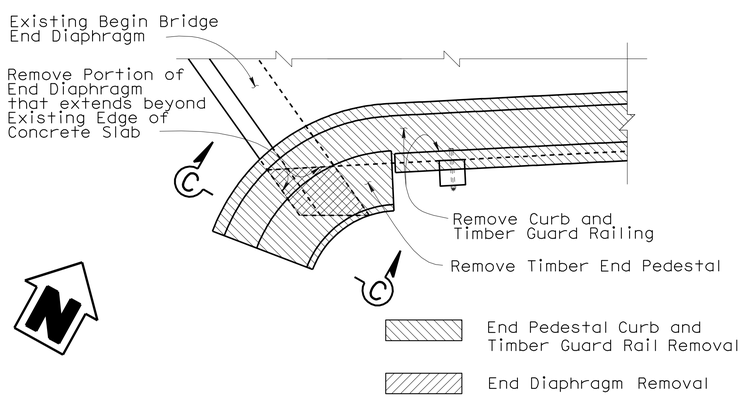

BEGIN BRIDGE & END BRIDGE REMOVAL DETAILS PARTIAL PLAN

1/2" = 1'-0"

Begin Bridge Right Side shown, Others similar

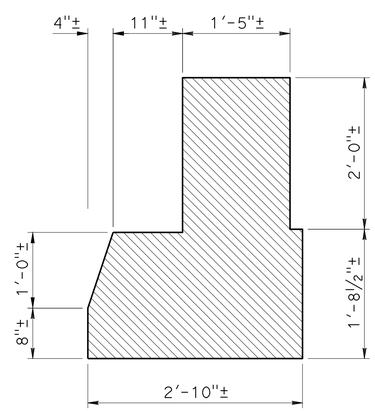

SECTION C-C END PEDESTAL

1 " = 1'-0"

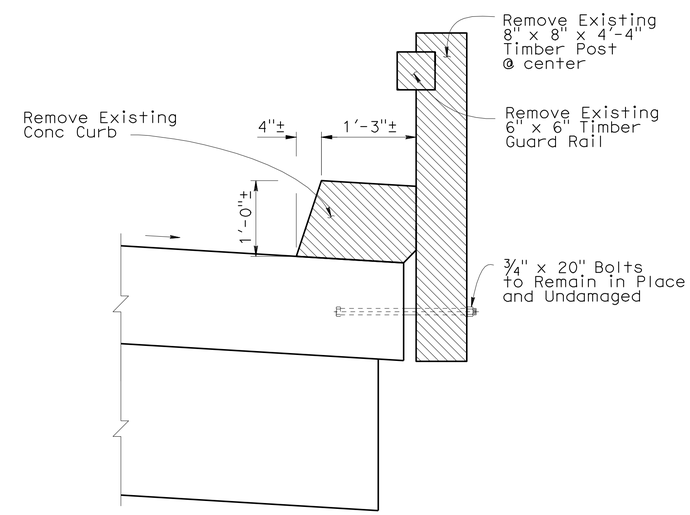

EXISTING BARRIER & CURB REMOVAL

1 " = 1'-0"

Stage 1 shown, Stage 2 similar

NOTE:
THE CONTRACTOR SHALL VERIFY ALL CONTROLLING FIELD DIMENSIONS BEFORE ORDERING OR FABRICATING ANY MATERIAL.

	BY	CHECKED
DESIGN	M. Cullen	C. Siegenthaler
DETAILS	A. Chen/S. Jiang	C. Siegenthaler
QUANTITIES	T. Pinell	M. Quach

ORIGINAL SCALE IN INCHES FOR REDUCED PLANS 0 1 2 3

STATE OF CALIFORNIA DEPARTMENT OF TRANSPORTATION

DIVISION OF ENGINEERING SERVICES STRUCTURE DESIGN
DESIGN BRANCH 5

CU 10
EA 264441

BRIDGE NO. 26-0019
POST MILE 3.09

JACKSON CREEK BRIDGE (WIDEN)
MISCELLANEOUS DETAILS

DISREGARD PRINTS BEARING EARLIER REVISION DATES

REVISION DATES: 3-18-09 4-3-09 10-06-09 12-11-09 12-09-10 4-21-11

SHEET 11 OF 15

DIST	COUNTY	ROUTE	POST MILES TOTAL PROJECT	SHEET No	TOTAL SHEETS
10	Ama	88	0.0/5.5	197	216

REGISTERED CIVIL ENGINEER 5-25-10

10-17-11
PLANS APPROVAL DATE

The State of California or its officers or agents shall not be responsible for the accuracy or completeness of electronic copies of this plan sheet.

REGISTERED PROFESSIONAL ENGINEER Qiang Huang No. C055671 Exp. 12-31-10 CIVIL STATE OF CALIFORNIA

This LOTB sheet was prepared in accordance with the Caltrans Soil & Rock Logging, Classification, & Presentation Manual (June 2007).

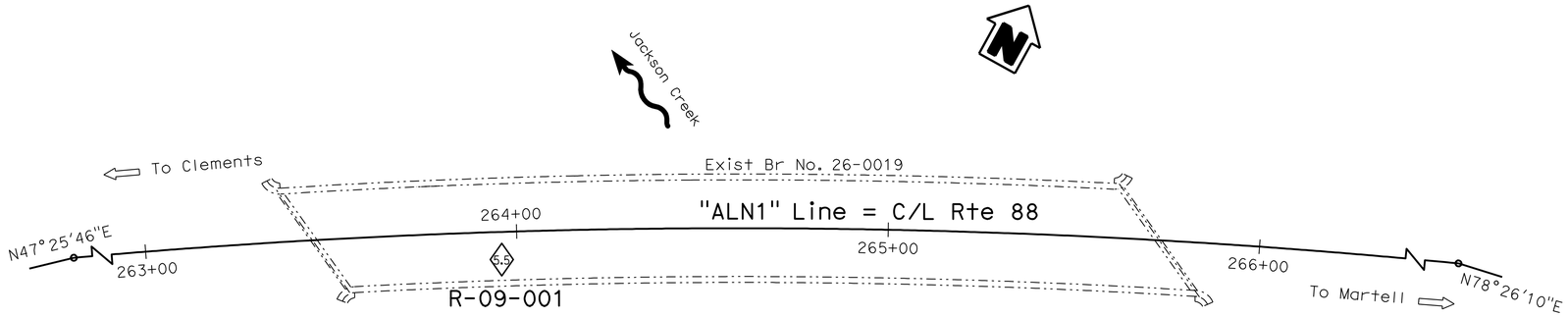

BENCH MARK

Northwest of southwest corner
of bridge abutment (ABI).
Fnd 1" IP w/Red Plug
31.50' Lt C/L Rte 88
Sta 263+32.04
Elev 212.38'
Vert Datum NGVD29
Horiz Datum NAD83 (1991.85)

PLAN

1" = 20'

Notes :

Groundwater was not encountered in the borings. However there was water flowing in Jackson Creek and standing water under the Overflow Bridge (BR. No. 26-0019) observed during the field investigation.

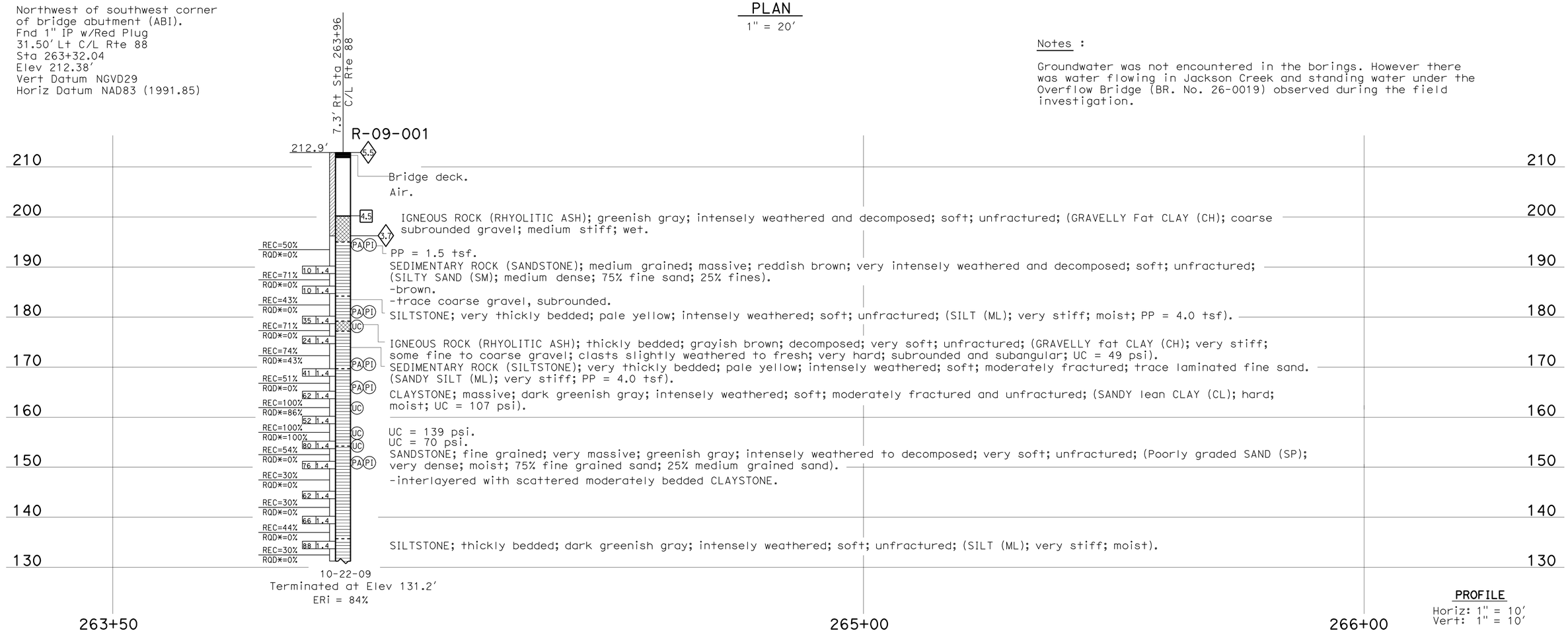

PROFILE
Horiz: 1" = 10'
Vert: 1" = 10'

ENGINEERING SERVICES	GEOTECHNICAL SERVICES	STATE OF CALIFORNIA DEPARTMENT OF TRANSPORTATION	DIVISION OF ENGINEERING SERVICES STRUCTURE DESIGN DESIGN BRANCH	BRIDGE NO. 26-0019 POST MILES 3.09	JACKSON CREEK BRIDGE (WIDEN) LOG OF TEST BORINGS 1 OF 4
FUNCTIONAL SUPERVISOR NAME: Q. Huang	DRAWN BY: W. Tang 02/10 CHECKED BY: C. Koepke	FIELD INVESTIGATION BY: W. Bertucci, J. Klamecki			

OGS CIVIL LOG OF TEST BORINGS SHEET

ORIGINAL SCALE IN INCHES FOR REDUCED PLANS 0 1 2 3

CU 10
EA 264441

DISREGARD PRINTS BEARING EARLIER REVISION DATES

REVISION DATES: 03-16-10 04-19-10 05-03-10 05-19-10 05-24-10

SHEET 12 OF 15

FILE => 26-0019-z-ltb1of4.dgn

USERNAME => s109858 DATE PLOTTED => 19-OCT-2011 TIME PLOTTED => 10:34

DIST	COUNTY	ROUTE	POST MILES TOTAL PROJECT	SHEET No	TOTAL SHEETS
10	Ama	88	0.0/5.5	198	216

REGISTERED CIVIL ENGINEER 5-25-10

10-17-11
PLANS APPROVAL DATE

REGISTERED PROFESSIONAL ENGINEER Qiang Huang No. C055671 Exp. 12-31-10 CIVIL STATE OF CALIFORNIA

The State of California or its officers or agents shall not be responsible for the accuracy or completeness of electronic copies of this plan sheet.

REFERENCE: CALTRANS SOIL & ROCK LOGGING, CLASSIFICATION, AND PRESENTATION MANUAL (JUNE 2007)

CEMENTATION

Description	Criteria
Weak	Crumbles or breaks with handling or little finger pressure.
Moderate	Crumbles or breaks with considerable finger pressure.
Strong	Will not crumble or break with finger pressure.

CONSISTENCY OF COHESIVE SOILS

Description	Unconfined Compressive Strength (tsf)	Pocket Penetrometer Measurement (tsf)	Torvane Measurement (tsf)	Field Approximation
Very Soft	< 0.25	< 0.25	< 0.12	Easily penetrated several inches by fist
Soft	0.25 to 0.50	0.25 to 0.50	0.12 to 0.25	Easily penetrated several inches by thumb
Medium Stiff	0.50 to 1.0	0.50 to 1.0	0.25 to 0.50	Penetrated several inches by thumb with moderate effort
Stiff	1 to 2	1 to 2	0.50 to 1.0	Readily indented by thumb but penetrated only with great effort
Very Stiff	2 to 4	2 to 4	1.0 to 2.0	Readily indented by thumbnail
Hard	> 4.0	> 4.0	> 2.0	Indented by thumbnail with difficulty

BOREHOLE IDENTIFICATION

Symbol	Hole Type	Description
Size	A	Auger Boring
Size	R P	Rotary drilled boring Rotary percussion boring (air)
Size	R	Rotary drilled diamond core
Size	HD HA	Hand driven (1-inch soil tube) Hand Auger
●	D	Dynamic Cone Penetration Boring
▲	CPT	Cone Penetration Test (ASTM D 5778-95)
⬚	O	Other

Note: Size in inches.

PLASTICITY OF FINE-GRAINED SOILS

Description	Criteria
Nonplastic	A 1/8-inch thread cannot be rolled at any water content.
Low	The thread can barely be rolled and the lump cannot be formed when drier than the plastic limit.
Medium	The thread is easy to roll and not much time is required to reach the plastic limit. The thread cannot be rerolled after reaching the plastic limit. The lump crumbles when drier than the plastic limit.
High	It takes considerable time rolling and kneading to reach the plastic limit. The thread can be rerolled several times after reaching the plastic limit. The lump can be formed without crumbling when drier than the plastic limit.

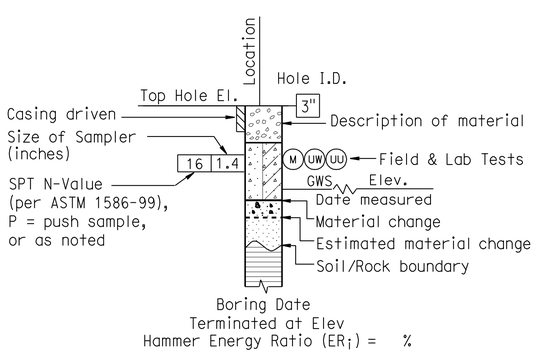

ROTARY BORING

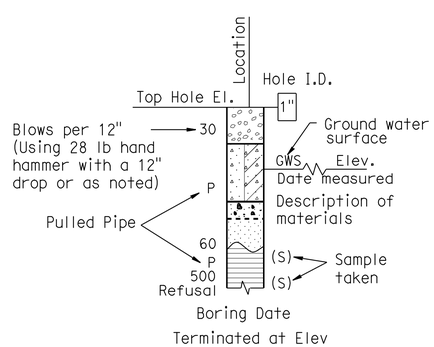

HAND BORING

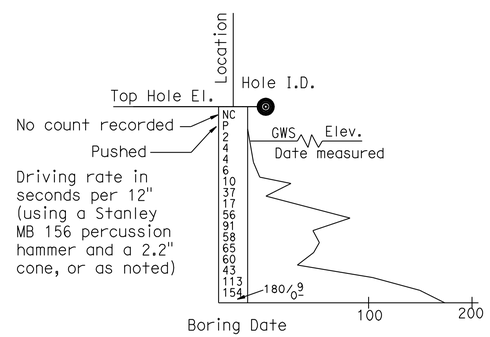

DYNAMIC CONE PENETRATION BORING

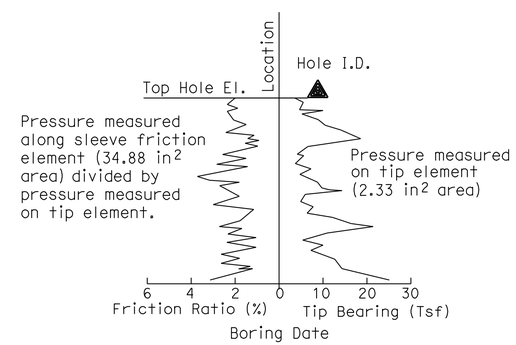

CONE PENETRATION TEST (CPT) SOUNDING

ENGINEERING SERVICES	GEOTECHNICAL SERVICES	STATE OF CALIFORNIA DEPARTMENT OF TRANSPORTATION	DIVISION OF ENGINEERING SERVICES STRUCTURE DESIGN DESIGN BRANCH	BRIDGE NO. 26-0019 POST MILE 3.09	JACKSON CREEK BRIDGE (WIDEN) LOG OF TEST BORINGS 2 OF 4
	PREPARED BY: W. Tang 2/10				

GS LOTB SOIL LEGEND

ORIGINAL SCALE IN INCHES FOR REDUCED PLANS 0 1 2 3

CU 10
EA 264441

DISREGARD PRINTS BEARING EARLIER REVISION DATES

REVISION DATES

SHEET 13 OF 15

FILE => 26-0019-z-ltb2of4.dgn

USERNAME => s109838 DATE PLOTTED => 19-OCT-2011 TIME PLOTTED => 10:34

REFERENCE: CALTRANS SOIL & ROCK LOGGING, CLASSIFICATION, AND PRESENTATION MANUAL (JUNE 2007)

DIST	COUNTY	ROUTE	POST MILES TOTAL PROJECT	SHEET No	TOTAL SHEETS
10	Ama	88	0.0/5.5	199	216

REGISTERED CIVIL ENGINEER 5-25-10

10-17-11
PLANS APPROVAL DATE

REGISTERED PROFESSIONAL ENGINEER Qiang Huang No. C055671 Exp. 12-31-10 CIVIL STATE OF CALIFORNIA

The State of California or its officers or agents shall not be responsible for the accuracy or completeness of electronic copies of this plan sheet.

GROUP SYMBOLS AND NAMES

Graphic/Symbol	Group Names	Graphic/Symbol	Group Names
GW	Well-graded GRAVEL Well-graded GRAVEL with SAND	CL	Lean CLAY Lean CLAY with SAND Lean CLAY with GRAVEL SANDY lean CLAY SANDY lean CLAY with GRAVEL GRAVELLY lean CLAY GRAVELLY lean CLAY with SAND
GP	Poorly graded GRAVEL Poorly graded GRAVEL with SAND		
GW-GM	Well-graded GRAVEL with SILT Well-graded GRAVEL with SILT and SAND	CL-ML	SILTY CLAY SILTY CLAY with SAND SILTY CLAY with GRAVEL SANDY SILTY CLAY SANDY SILTY CLAY with GRAVEL GRAVELLY SILTY CLAY GRAVELLY SILTY CLAY with SAND
GW-GC	Well-graded GRAVEL with CLAY (or SILTY CLAY) Well-graded GRAVEL with CLAY and SAND (or SILTY CLAY and SAND)		
GP-GM	Poorly graded GRAVEL with SILT Poorly graded GRAVEL with SILT and SAND	ML	SILT SILT with SAND SILT with GRAVEL SANDY SILT SANDY SILT with GRAVEL GRAVELLY SILT GRAVELLY SILT with SAND
GP-GC	Poorly graded GRAVEL with CLAY (or SILTY CLAY) Poorly graded GRAVEL with CLAY and SAND (or SILTY CLAY and SAND)		
GM	SILTY GRAVEL SILTY GRAVEL with SAND	OL	ORGANIC lean CLAY ORGANIC lean CLAY with SAND ORGANIC lean CLAY with GRAVEL SANDY ORGANIC lean CLAY SANDY ORGANIC lean CLAY with GRAVEL GRAVELLY ORGANIC lean CLAY GRAVELLY ORGANIC lean CLAY with SAND
GC	CLAYEY GRAVEL CLAYEY GRAVEL with SAND		
GC-GM	SILTY, CLAYEY GRAVEL SILTY, CLAYEY GRAVEL with SAND	OL	ORGANIC SILT ORGANIC SILT with SAND ORGANIC SILT with GRAVEL SANDY ORGANIC SILT SANDY ORGANIC SILT with GRAVEL GRAVELLY ORGANIC SILT GRAVELLY ORGANIC SILT with SAND
SW	Well-graded SAND Well-graded SAND with GRAVEL		
SP	Poorly graded SAND Poorly graded SAND with GRAVEL	CH	Fat CLAY Fat CLAY with SAND Fat CLAY with GRAVEL SANDY fat CLAY SANDY fat CLAY with GRAVEL GRAVELLY fat CLAY GRAVELLY fat CLAY with SAND
SW-SM	Well-graded SAND with SILT Well-graded SAND with SILT and GRAVEL		
SW-SC	Well-graded SAND with CLAY (or SILTY CLAY) Well-graded SAND with CLAY and GRAVEL (or SILTY CLAY and GRAVEL)	MH	Elastic SILT Elastic SILT with SAND Elastic SILT with GRAVEL SANDY elastic SILT SANDY elastic SILT with GRAVEL GRAVELLY elastic SILT GRAVELLY elastic SILT with SAND
SP-SM	Poorly graded SAND with SILT Poorly graded SAND with SILT and GRAVEL		
SP-SC	Poorly graded SAND with CLAY (or SILTY CLAY) Poorly graded SAND with CLAY and GRAVEL (or SILTY CLAY and GRAVEL)	OH	ORGANIC fat CLAY ORGANIC fat CLAY with SAND ORGANIC fat CLAY with GRAVEL SANDY ORGANIC fat CLAY SANDY ORGANIC fat CLAY with GRAVEL GRAVELLY ORGANIC fat CLAY GRAVELLY ORGANIC fat CLAY with SAND
SM	SILTY SAND SILTY SAND with GRAVEL		
SC	CLAYEY SAND CLAYEY SAND with GRAVEL	OH	ORGANIC elastic SILT ORGANIC elastic SILT with SAND ORGANIC elastic SILT with GRAVEL SANDY ORGANIC elastic SILT SANDY ORGANIC elastic SILT with GRAVEL GRAVELLY ORGANIC elastic SILT GRAVELLY ORGANIC elastic SILT with SAND
SC-SM	SILTY, CLAYEY SAND SILTY, CLAYEY SAND with GRAVEL		
PT	PEAT	OL/OH	ORGANIC SOIL ORGANIC SOIL with SAND ORGANIC SOIL with GRAVEL SANDY ORGANIC SOIL SANDY ORGANIC SOIL with GRAVEL GRAVELLY ORGANIC SOIL GRAVELLY ORGANIC SOIL with SAND
	COBBLES COBBLES and BOULDERS BOULDERS		

FIELD AND LABORATORY TESTING

- (C) Consolidation (ASTM D 2435)
- (CL) Collapse Potential (ASTM D 5333)
- (CP) Compaction Curve (CTM 216)
- (CR) Corrosivity Testing (CTM 643, CTM 422, CTM 417)
- (CU) Consolidated Undrained Triaxial (ASTM D 4767)
- (DS) Direct Shear (ASTM D 3080)
- (EI) Expansion Index (ASTM D 4829)
- (M) Moisture Content (ASTM D 2216)
- (OC) Organic Content-% (ASTM D 2974)
- (P) Permeability (CTM 220)
- (PA) Particle Size Analysis (ASTM D 422)
- (PI) Plasticity Index (AASHTO T 90) Liquid Limit (AASHTO T 89)
- (PL) Point Load Index (ASTM D 5731)
- (PM) Pressure Meter
- (PP) Pocket Penetrometer
- (R) R-Value (CTM 301)
- (SE) Sand Equivalent (CTM 217)
- (SG) Specific Gravity (AASHTO T 100)
- (SL) Shrinkage Limit (ASTM D 427)
- (SW) Swell Potential (ASTM D 4546)
- (TV) Pocket Torvane
- (UC) Unconfined Compression-Soil (ASTM D 2166) Unconfined Compression-Rock (ASTM D 2938)
- (UU) Unconsolidated Undrained Triaxial (ASTM D 2850)
- (UW) Unit Weight (ASTM D 4767)
- (VS) Vane Shear (AASHTO T 223)

APPARENT DENSITY OF COHESIONLESS SOILS

Description	SPT N_{60} (Blows / 12 inches)
Very loose	0 - 4
Loose	5 - 10
Medium Dense	11 - 30
Dense	31 - 50
Very Dense	> 50

MOISTURE

Description	Criteria
Dry	Absence of moisture, dusty, dry to the touch
Moist	Damp but no visible water
Wet	Visible free water, usually soil is below water table

PERCENT OR PROPORTION OF SOILS

Description	Criteria
Trace	Particles are present but estimated to be less than 5%
Few	5 to 10%
Little	15 to 25%
Some	30 to 45%
Mostly	50 to 100%

PARTICLE SIZE

Description		Size
Boulder		> 12"
Cobble		3" to 12"
Gravel	Coarse	3/4" to 3"
	Fine	No. 4 to 3/4"
Sand	Coarse	No. 10 to No. 4
	Medium	No. 40 to No. 10
	Fine	No. 200 to No. 40

ENGINEERING SERVICES

GEOTECHNICAL SERVICES
PREPARED BY: W. Tang 02/10

STATE OF CALIFORNIA DEPARTMENT OF TRANSPORTATION

DIVISION OF ENGINEERING SERVICES STRUCTURE DESIGN
DESIGN BRANCH

BRIDGE NO. 26-0019
POST MILE 3.09

JACKSON CREEK BRIDGE (WIDEN)
LOG OF TEST BORINGS 3 OF 4

GS LOTB SOIL LEGEND

ORIGINAL SCALE IN INCHES FOR REDUCED PLANS 0 1 2 3

CU 10
EA 264441

DISREGARD PRINTS BEARING EARLIER REVISION DATES

REVISION DATES

SHEET 14 OF 15

FILE => 26-0019-z-ltb3of4.dgn

USERNAME => s103858 DATE PLOTTED => 19-OCT-2011 TIME PLOTTED => 10:29

DIST	COUNTY	ROUTE	POST MILES TOTAL PROJECT	SHEET No	TOTAL SHEETS
10	Ama	88	0.0/5.5	200	216

REGISTERED CIVIL ENGINEER 5-25-10

10-17-11
PLANS APPROVAL DATE

REGISTERED PROFESSIONAL ENGINEER Qiang Huang No. C055671 Exp. 12-31-10 CIVIL STATE OF CALIFORNIA

The State of California or its officers or agents shall not be responsible for the accuracy or completeness of electronic copies of this plan sheet.

REFERENCE: CALTRANS SOIL & ROCK LOGGING, CLASSIFICATION, AND PRESENTATION MANUAL (JUNE 2007)

PERCENT CORE RECOVERY (REC) & ROCK QUALITY DESIGNATION (RQD)

$$REC = \frac{\sum \text{Length of the recovered core pieces (inches)}}{\text{Total length of core run (inches)}} \times 100\%$$

$$RQD = \frac{\sum \text{Length of intact core pieces} \geq 4''}{\text{Total length of core run (inches)}} \times 100\%$$

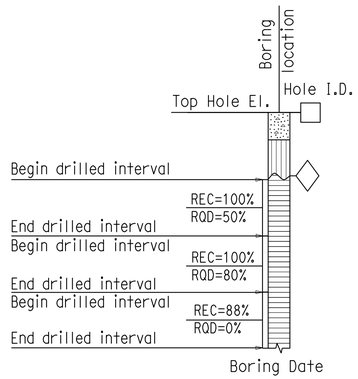

RELATIVE STRENGTH OF INTACT ROCK

Term	Uniaxial Compressive Strength (PSI)
Extremely Strong	> 30,000
Very Strong	14,500 - 30,000
Strong	7,000 - 14,500
Medium Strong	3,500 - 7,000
Weak	700 - 3,500
Very Weak	150 - 700
Extremely Weak	< 150

BEDDING SPACING

Description	Thickness / Spacing
Massive	Greater than 10 ft
Very thickly bedded	3 to 10 ft
Thickly bedded	1 to 3 ft
Moderately bedded	3-5/8" to 1 ft
Thinly bedded	1-1/4" to 3-5/8"
Very thinly bedded	3/8" to 1-1/4"
Laminated	Less than 3/8"

LEGEND OF ROCK MATERIALS

- IGNEOUS ROCK
- SEDIMENTARY ROCK
- METAMORPHIC ROCK

ROCK HARDNESS

Description	Criteria
Extremely Hard	Specimen cannot be scratched with a pocket knife or sharp pick; can only be chipped with repeated heavy hammer blows.
Very Hard	Specimen cannot be scratched with a pocket knife or sharp pick. Breaks with repeated heavy hammer blows.
Hard	Specimen can be scratched with a pocket knife or sharp pick with difficulty (heavy pressure). Heavy hammer blows required to break specimen.
Moderately Hard	Specimen can be scratched with pocket knife or sharp pick with light or moderate pressure. Core breaks with moderate hammer blows.
Moderately Soft	Specimen can be grooved 1/6" deep with a pocket knife or sharp pick with moderate or heavy pressure. Breaks with light hammer blow or heavy manual pressure.
Soft	Specimen can be grooved or gouged easily by a pocket knife or sharp pick with light pressure, can be scratched with fingernail. Breaks with light to moderate manual pressure.
Very Soft	Specimen can be readily indented, grooved or gouged with fingernail, or carved with a pocket knife. Breaks with light manual pressure.

FRACTURE DENSITY

Description	Observed Fracture Density
Unfractured	No fractures.
Very slightly fractured	Lengths greater than 3 feet.
Slightly fractured	Lengths from 1 to 3 feet with few lengths less than 1 foot or greater than 3 feet.
Moderately fractured	Lengths mostly in 4" to 1 foot range with most lengths about 8"
Intensely fractured	Lengths average from 1 to 4" with scattered fragmented intervals with lengths less than 4"
Very intensely fractured	Mostly chips and fragments with a few scattered short core lengths.

Combination descriptors (such as "Very intensely to intensely fractured") are used where equal distribution of both fracture density characteristics is present over a significant interval or exposure, or where characteristics are "in between" the descriptor definitions. Only two adjacent descriptors may be combined.

WEATHERING DESCRIPTORS FOR INTACT ROCK

Description	Diagnostic features					General Characteristics
	Chemical Weathering-Discoloration and/or oxidation		Mechanical Weathering-Grain boundary conditions (disaggregation) primarily for granitics and some coarse-grained sediments	Texture and Solutioning		
	Body of Rock	Fracture Surfaces		Texture	Solutioning	
Fresh	No discoloration, not oxidized.	No discoloration or oxidation.	No separation, intact (tight).	No change.	No solutioning.	Hammer rings when crystalline rocks are struck.
Slightly Weathered	Discoloration or oxidation is limited to surface of, or short distance from, fractures; some feldspar crystals are dull.	Minor to complete discoloration or oxidation of most surfaces.	No visible separation, intact (tight).	Preserved.	Minor leaching of some soluble minerals may be noted.	Hammer rings when crystalline rocks are struck. Body of rock not weakened.
Moderately Weathered	Discoloration or oxidation extends from fractures usually throughout; Fe-Mg minerals are "rusty," feldspar crystals are "cloudy."	All fracture surfaces are discolored or oxidized.	Partial separation of boundaries visible.	Generally preserved.	Soluble minerals may be mostly leached.	Hammer does not ring when rock is struck. Body of rock is slightly weakened.
Intensely Weathered	Discoloration or oxidation throughout; all feldspars and Fe-Mg minerals are altered to clay to some extent; or chemical alteration produces in-situ disaggregation, see grain boundary conditions.	All fracture surfaces are discolored or oxidized, surfaces friable.	Partial separation, rock is friable; in semiarid conditions granitics are disaggregated.	Texture altered by chemical disintegration (hydration, argillation).	Leaching of soluble minerals may be complete.	Dull sound when struck with hammer, usually can be broken with moderate to heavy manual pressure or by light hammer blow without reference to planes of weakness such as incipient or hairline fractures, or veinlets. Rock is significantly weakened.
Decomposed	Discolored or oxidized throughout, but resistant minerals such as quartz may be unaltered; all feldspars and Fe-Mg minerals are completely altered to clay.		Complete separation of grain boundaries (disaggregated).	Resembles a soil, partial or complete remnant rock structure may be preserved; leaching of soluble minerals usually complete.		Can be granulated by hand. Resistant minerals such as quartz may be present as "stringers" or "dikes."

Combination descriptors (such as "slightly weathered to fresh") are permissible where equal distribution of both weathering characteristics is present over significant intervals or where characteristics present are "in between" the diagnostic feature. However, combination descriptors should not be used where significant, identifiable zones can be delineated. Only two adjacent descriptors may be combined. "Very intensely weathered" is the combination descriptor for "intensely weathered to decomposed."

ENGINEERING SERVICES	GEOTECHNICAL SERVICES	STATE OF CALIFORNIA DEPARTMENT OF TRANSPORTATION	DIVISION OF ENGINEERING SERVICES STRUCTURE DESIGN DESIGN BRANCH	BRIDGE NO. 26-0019 POST MILE 3.09	JACKSON CREEK BRIDGE (WIDEN) LOG OF TEST BORINGS 4 OF 4
	PREPARED BY: W. Tang 02/10				

GS LOTB ROCK LEGEND

ORIGINAL SCALE IN INCHES FOR REDUCED PLANS 0 1 2 3

CU 10
EA 264441

DISREGARD PRINTS BEARING EARLIER REVISION DATES

REVISION DATES

SHEET 15 OF 15

FILE => 26-0019-z-ltb4of4.dgn

USERNAME => s109858 DATE PLOTTED => 19-OCT-2011 TIME PLOTTED => 10:30