Dist	COUNTY	ROUTE	POST MILES TOTAL PROJECT	SHEET No.	TOTAL SHEETS
10	SJ	4	R16.6/R17.4	1	34

STATE OF CALIFORNIA

DEPARTMENT OF TRANSPORTATION

ACNHP-P004(151)E

PROJECT PLANS FOR CONSTRUCTION ON

STATE HIGHWAY

IN SAN JOAQUIN COUNTY
IN STOCKTON
FROM CENTER STREET TO UNION STREET

TO BE SUPPLEMENTED BY STANDARD PLANS DATED 2010

INDEX OF PLANS

SHEET NO.	DESCRIPTION
1	TITLE AND LOCATION MAP
2	CONSTRUCTION AREA SIGNS
3-4	TRAFFIC HANDLING PLANS
5	SUMMARY OF QUANTITIES
6-10	REVISED STANDARD PLANS
STRUCTURE PLANS	
11-34	CROSSTOWN FREEWAY VIADUCT

THE STANDARD PLANS LIST APPLICABLE TO THIS CONTRACT IS INCLUDED IN THE NOTICE TO BIDDERS AND SPECIAL PROVISIONS BOOK.

LOCATION MAP

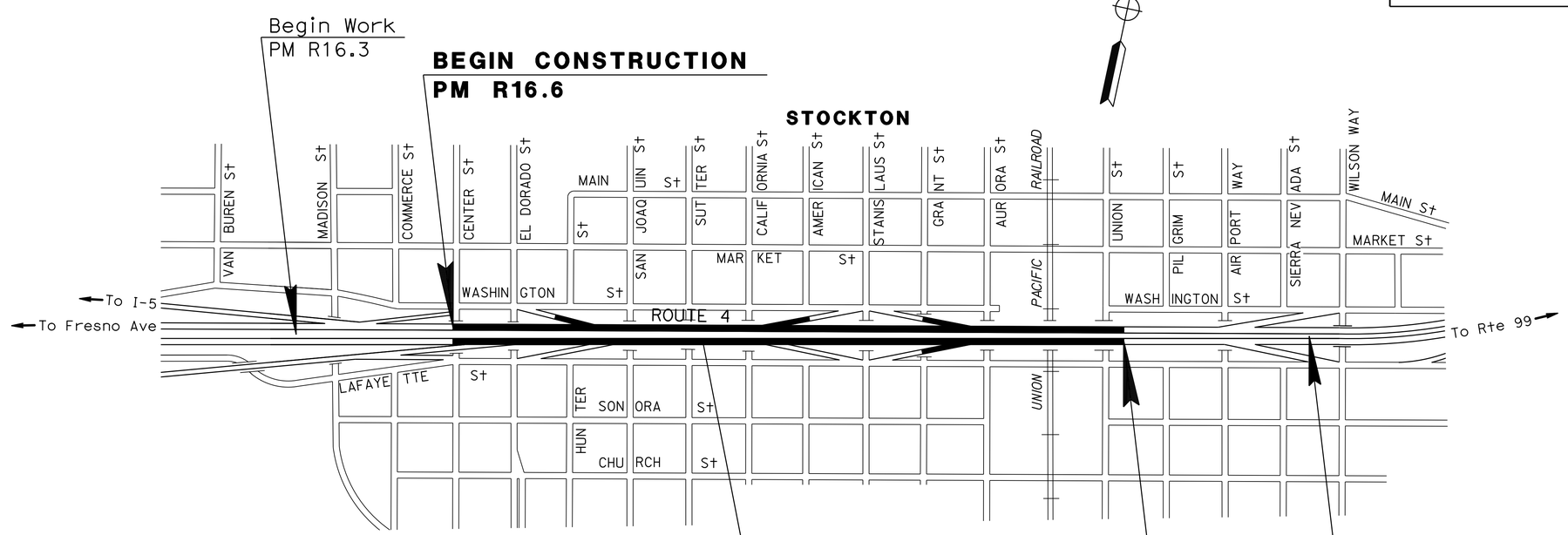

PROJECT MANAGER: MICHAEL COOK

DESIGN MANAGER: ALVIN MANGINDIN

Rhodel De Claro 02/25/15
PROJECT ENGINEER REGISTERED CIVIL ENGINEER — DATE

REGISTERED PROFESSIONAL ENGINEER — RHODEL De CLARO — No. 74058 — Exp. 06/30/15 — CIVIL — STATE OF CALIFORNIA

March 9, 2015
PLANS APPROVAL DATE

THE STATE OF CALIFORNIA OR ITS OFFICERS OR AGENTS SHALL NOT BE RESPONSIBLE FOR THE ACCURACY OR COMPLETENESS OF SCANNED COPIES OF THIS PLAN SHEET.

THE CONTRACTOR SHALL POSSESS THE CLASS (OR CLASSES) OF LICENSE AS SPECIFIED IN THE "NOTICE TO BIDDERS."

NO SCALE

CONTRACT No.	10-1C0904
PROJECT ID	1014000133

LAST REVISION 02-25-15 — DATE PLOTTED => 01-MAY-2015 — TIME PLOTTED => 12:40

Dist	COUNTY	ROUTE	POST MILES TOTAL PROJECT	SHEET No.	TOTAL SHEETS
10	SJ	4	R16.6/R17.4	2	34

Rhodel De Claro 02/25/15
REGISTERED CIVIL ENGINEER DATE

3-9-15
PLANS APPROVAL DATE

REGISTERED PROFESSIONAL ENGINEER RHODEL De CLARO No. 74058 Exp. 6/30/15 CIVIL STATE OF CALIFORNIA

THE STATE OF CALIFORNIA OR ITS OFFICERS OR AGENTS SHALL NOT BE RESPONSIBLE FOR THE ACCURACY OR COMPLETENESS OF SCANNED COPIES OF THIS PLAN SHEET.

NOTES:

1. EXACT SIGN LOCATIONS TO BE DETERMINED BY THE ENGINEER.
2. SEE TRAFFIC HANDLING PLAN FOR ADDITIONAL CONSTRUCTION AREA SIGNS.

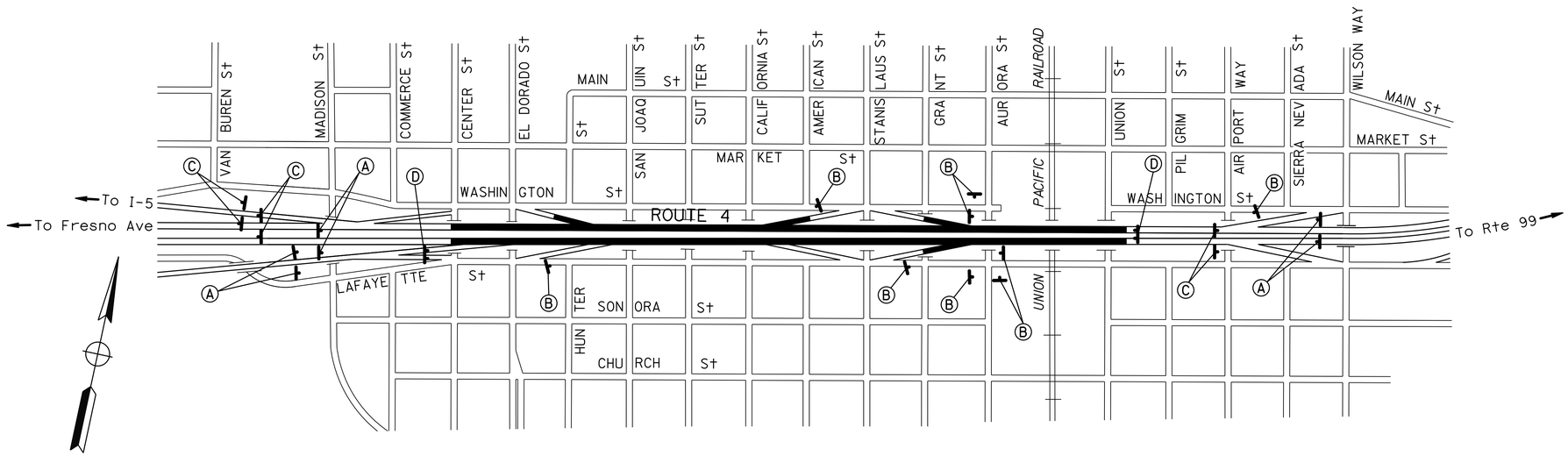

STATIONARY MOUNTED CONSTRUCTION AREA SIGNS

ROUTE	SIGN No.	SIGN CODE FEDERAL	SIGN CODE CALIFORNIA	PANEL SIZE	SIGN MESSAGE	No. OF POSTS AND SIZE	No. OF SIGNS	REMARKS
4	A	W20-1		48" x 48"	ROAD WORK AHEAD	1 - 6" x 6"	6	MAINLINE, 4 SIGNS EB, 2 SIGNS WB
	B	W20-1		36" x 36"	ROAD WORK AHEAD	1 - 4" x 6"	9	4 SIGNS ON-RAMPS, 5 SIGNS LOCAL ROADS
	C	G20-2		36" x 18"	END ROAD WORK	1 - 4" x 4"	6	MAINLINE, 2 SIGNS EB, 4 SIGNS WB
	D		CPFIS	132" x 84"	CONSTRUCTION PROJECT FUNDING IDENTIFICATION SIGNS	2 - 6" x 8"	2	MAINLINE, 1 SIGN EACH DIRECTION

APPROVED FOR CONSTRUCTION AREA SIGN WORK ONLY

CONSTRUCTION AREA SIGNS

NO SCALE

CS-1

STATE OF CALIFORNIA - DEPARTMENT OF TRANSPORTATION
Caltrans
MAINTENANCE

FUNCTIONAL SUPERVISOR: ALVIN MANGINDIN
CALCULATED-DESIGNED BY: RHODEL DE CLARO
CHECKED BY: BRUCE SUMIDA
REVISED BY: RDC
DATE REVISED: 02-25-15

LAST REVISION 02-25-15
DATE PLOTTED => 10-MAR-2015
TIME PLOTTED => 12:26

Dist	COUNTY	ROUTE	POST MILES TOTAL PROJECT	SHEET No.	TOTAL SHEETS
10	SJ	4	R16.6/R17.4	3	34

Rhodel DeClaro 02/25/15
REGISTERED CIVIL ENGINEER DATE

3-9-15
PLANS APPROVAL DATE

REGISTERED PROFESSIONAL ENGINEER RHODEL De CLARO No. 74058 Exp. 6/30/15 CIVIL STATE OF CALIFORNIA

THE STATE OF CALIFORNIA OR ITS OFFICERS OR AGENTS SHALL NOT BE RESPONSIBLE FOR THE ACCURACY OR COMPLETENESS OF SCANNED COPIES OF THIS PLAN SHEET.

NOTES:

1. PARKING LOT CLOSURE (SHEET TH-1) WILL BE SUPPLEMENTED WITH R11-2 SIGN.
2. SIDEWALK CLOSURE (SHEET TH-2) WILL BE SUPPLEMENTED WITH R9-9 AND R9-11A SIGNS.
3. SEE CONSTRUCTION AREAS SIGNS SHEET FOR ADDITIONAL CONSTRUCTION AREA SIGNS.

LEGEND:

- WORK AREA
- CHANNELIZER (SURFACE MOUNTED)

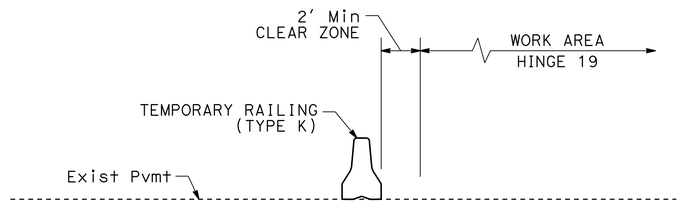

SECTION A-A

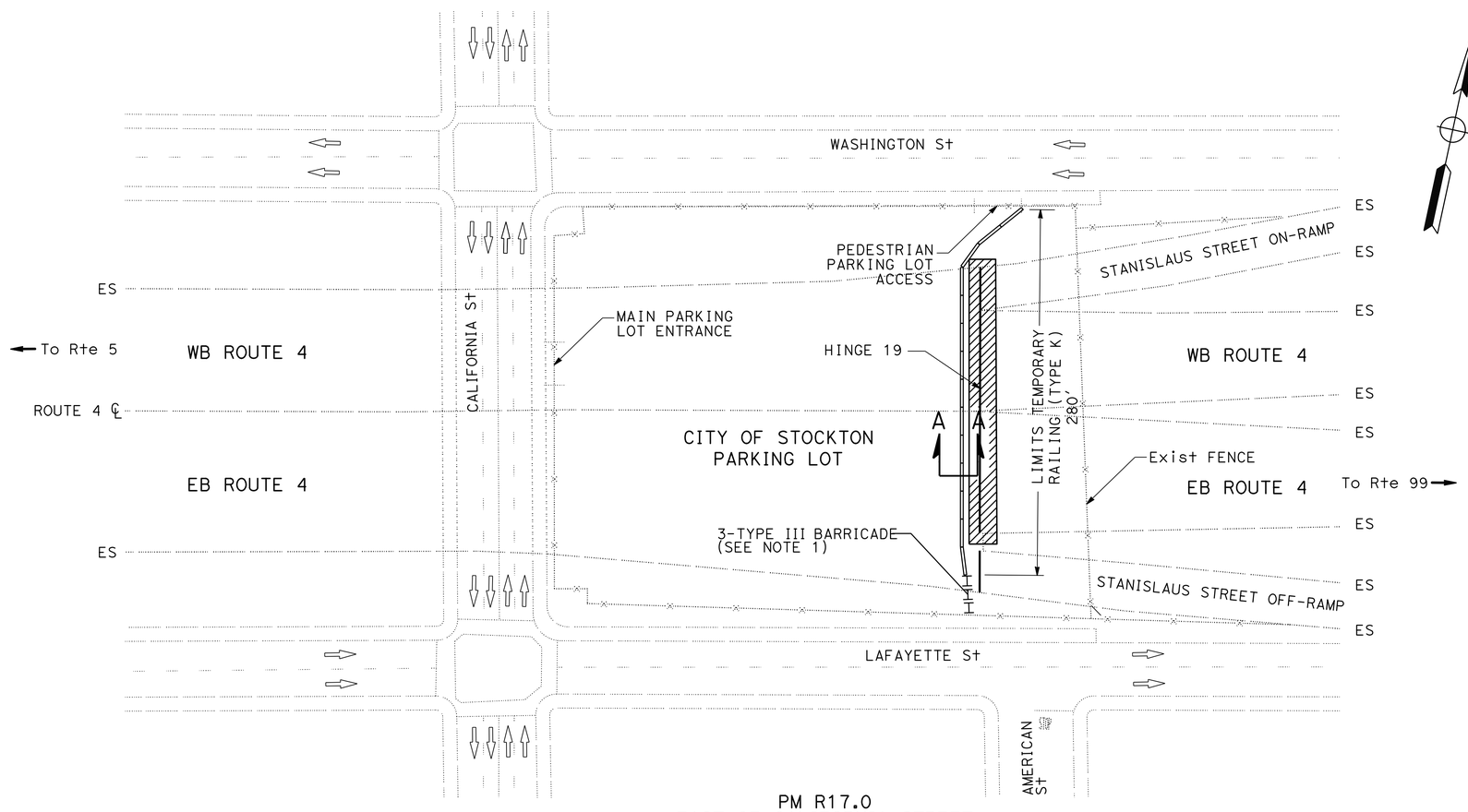

PM R17.0
EAST OF CALIFORNIA STREET
(HINGE 19)

TEMPORARY RAILING (TYPE K) LAYOUT

CONSTRUCTION AREA SIGNS (PORTABLE)

SIGN CODE		No. OF SIGNS	SIGN MESSAGE
FEDERAL	STATE		
R9-9		2	SIDEWALK CLOSED
R9-11A		2	SIDEWALK CLOSED CROSS HERE
R11-2		1	ROAD CLOSED

TRAFFIC HANDLING PLAN

NO SCALE

TH-1

STATE OF CALIFORNIA - DEPARTMENT OF TRANSPORTATION
Caltrans®
MAINTENANCE

FUNCTIONAL SUPERVISOR: ALVIN MANGINDIN
CALCULATED-DESIGNED BY: RHODEL DE CLARO
CHECKED BY: BRUCE SUMIDA
REVISED BY: RDC
DATE REVISED: 02-25-15

LAST REVISION 02-25-15
DATE PLOTTED => 10-MAR-2015
TIME PLOTTED => 12:26

Dist	COUNTY	ROUTE	POST MILES TOTAL PROJECT	SHEET No.	TOTAL SHEETS
10	SJ	4	R16.6/R17.4	4	34

Rhodel De Claro 02/25/15
REGISTERED CIVIL ENGINEER DATE

3-9-15
PLANS APPROVAL DATE

REGISTERED PROFESSIONAL ENGINEER
RHODEL De CLARO
No. 74058
Exp. 6/30/15
CIVIL
STATE OF CALIFORNIA

THE STATE OF CALIFORNIA OR ITS OFFICERS OR AGENTS SHALL NOT BE RESPONSIBLE FOR THE ACCURACY OR COMPLETENESS OF SCANNED COPIES OF THIS PLAN SHEET.

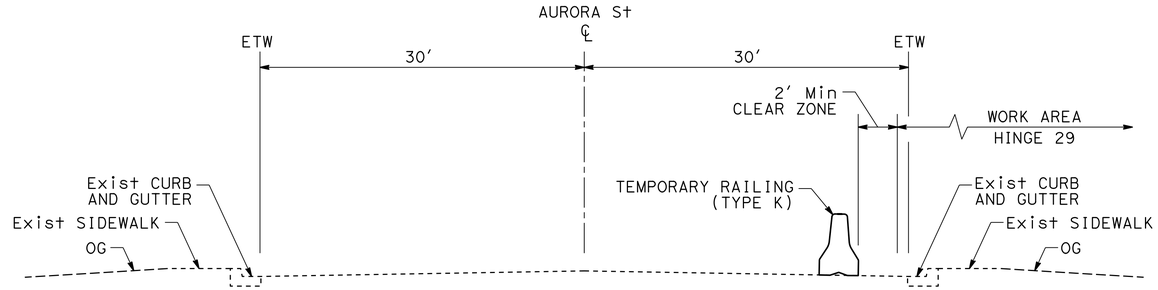

SECTION A-A

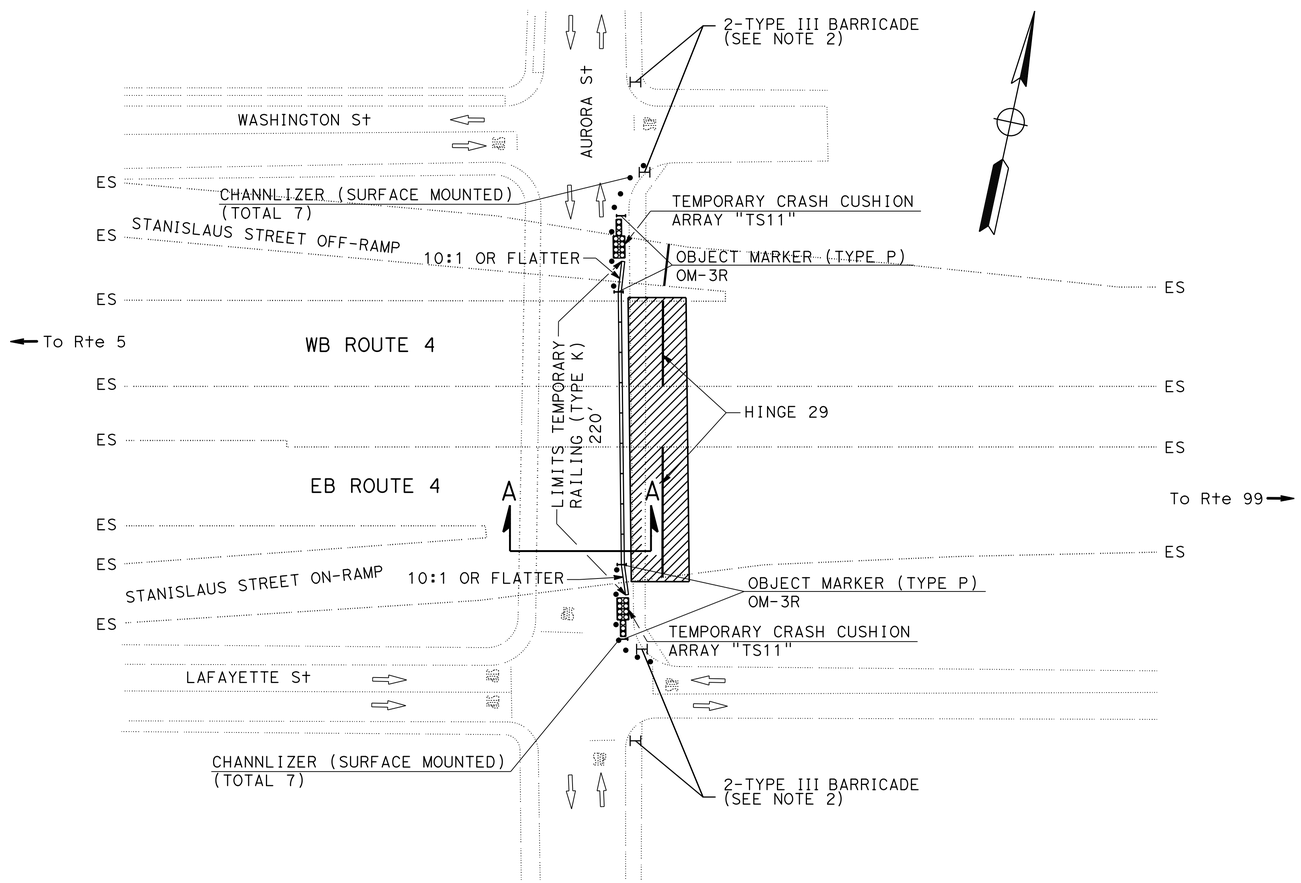

PM R17.3
AURORA STREET
(HINGE 29)

TEMPORARY RAILING (TYPE K) LAYOUT

TRAFFIC HANDLING PLAN
NO SCALE

TH-2

RDC	02-25-15
REVISED BY	DATE REVISED
RHODEL DE CLARO	BRUCE SUMIDA
CALCULATED-DESIGNED BY	CHECKED BY
FUNCTIONAL SUPERVISOR	ALVIN MANGINDIN

STATE OF CALIFORNIA - DEPARTMENT OF TRANSPORTATION
Caltrans
MAINTENANCE

LAST REVISION 02-25-15 | DATE PLOTTED => 10-MAR-2015 | TIME PLOTTED => 12:26

Dist	COUNTY	ROUTE	POST MILES TOTAL PROJECT	SHEET No.	TOTAL SHEETS
10	SJ	4	R16.6/R17.4	5	34

Rhodel DeClaro 02/25/15
REGISTERED CIVIL ENGINEER DATE

3-9-15
PLANS APPROVAL DATE

REGISTERED PROFESSIONAL ENGINEER RHODEL De CLARO No. 74058 Exp. 6/30/15 CIVIL STATE OF CALIFORNIA

THE STATE OF CALIFORNIA OR ITS OFFICERS OR AGENTS SHALL NOT BE RESPONSIBLE FOR THE ACCURACY OR COMPLETENESS OF SCANNED COPIES OF THIS PLAN SHEET.

NOTES:

1. TMS ELEMENT LOCATIONS ARE APPROXIMATE.
2. RESET SOFFIT LIGHT LOCATIONS ARE APPROXIMATE. SEE STRUCTURE PLANS.
3. (N) - NOT A SEPARATE PAY ITEM, FOR INFORMATION ONLY.

ABBREVIATION:

TMS - TRAFFIC MANAGEMENT SYSTEM

CHANNLEZIER (SURFACE MOUNTED)

PM	LOCATION	EA
17.3	AURORA STREET (SHEET TH-2)	14

TYPE III BARRICADE

PM	LOCATION	EA
17.0	CALIFORNIA STREET (SHEET TH-1)	3
17.3	AURORA STREET (SHEET TH-2)	4
	TOTAL	7

RESET SOFFIT LIGHT

BENT	LOCATION	EA
19	STANISLAUS STREET RAMPS (TEMPORARY SUPPORT DETAILS No. 1)	9
22	STANISLAUS STREET (TEMPORARY SUPPORT DETAILS No. 2)	4
29	AURORA STREET (TEMPORARY SUPPORT DETAILS No. 4)	3
	TOTAL	16

TEMPORARY RAILING (TYPE K) AND TEMPORARY CRASH CUSHION

PM	LOCATION	OBJECT MARKER (TYPE P) (N)	TEMPORARY RAILING (TYPE K)	TEMPORARY CRASH CUSHION MODULE
		EA	LF	EA
17.0	CALIFORNIA STREET (SHEET TH-1)		280	
17.3	AURORA STREET (SHEET TH-2)	4	220	22
		TOTAL	500	22

TRAFFIC MANAGEMENT SYSTEM ELEMENTS (EXISTING)

PM	Dir	LOCATION	TYPE
R16.50	EB/WB	EAST OF I-5	TRAFFIC MONITORING STATION
R16.63		WASHINGTON STREET & CENTER STREET	SIGNAL
R16.64		LAFAYETTE STREET & CENTER STREET	SIGNAL
R16.70		WASHINGTON STREET & EL DORADO STREET	SIGNAL
R16.71		LAFAYETTE STREET & EL DORADO STREET	SIGNAL

SUMMARY OF QUANTITIES
Q-1

REVISED BY	DATE REVISED	CALCULATED-DESIGNED BY	CHECKED BY	FUNCTIONAL SUPERVISOR
RDC	02-25-15	RHODEL DE CLARO	BRUCE SUMIDA	ALVIN MANGINDIN

STATE OF CALIFORNIA - DEPARTMENT OF TRANSPORTATION
Caltrans MAINTENANCE

LAST REVISION 02-25-15 | DATE PLOTTED => 10-MAR-2015 TIME PLOTTED => 12:26

M

Maint	MAINTENANCE
Max	MAXIMUM
MB	METAL BEAM
MBB	METAL BEAM BARRIER
MBGR	METAL BEAM GUARD RAILING
Med	MEDIAN
MGS	MIDWEST GUARDRAIL SYSTEM
MH	MANHOLE
Min	MINIMUM
Misc	MISCELLANEOUS
Misc I & S	MISCELLANEOUS IRON AND STEEL
Mkr	MARKER
Mod	MODIFIED,
	MODIFY
Mon	MONUMENT
MP	METAL PLATE
MPGR	METAL PLATE GUARD RAILING
MR	MOVEMENT RATING
MSE	MECHANICALLY STABILIZED EMBANKMENT
Mt	MOUNTAIN, MOUNT
Mtl	MATERIAL
MVP	MAINTENANCE VEHICLE PULLOUT

N

N	NORTH
NB	NORTHBOUND
No.	NUMBER (MUST HAVE PERIOD)
Nos.	NUMBERS (MUST HAVE PERIOD)
NPS	NOMINAL PIPE SIZE
NS	NEAR SIDE
NSP	NEW STANDARD PLAN
NTS	NOT TO SCALE

O

Oblr	OBLITERATE
OC	OVERCROSSING
OD	OUTSIDE DIAMETER
OF	OUTSIDE FACE
OG	ORIGINAL GROUND
OGAC	OPEN GRADED ASPHALT CONCRETE
OGFC	OPEN GRADED FRICTION COURSE
OH	OVERHEAD
OHWM	ORDINARY HIGH WATER MARK
O-O	OUT TO OUT
Opp	OPPOSITE
OSD	OVERSIDE DRAIN

P

P	PAGE
PAP	PERFORATED ALUMINUM PIPE
PB	PULL BOX
PC	POINT OF CURVATURE,
	PRECAST
PCC	POINT OF COMPOUND CURVE,
	PORTLAND CEMENT CONCRETE
PCMS	PORTABLE CHANGEABLE MESSAGE SIGN
PCP	PERFORATED CONCRETE PIPE,
	PRESTRESSED CONCRETE PIPE
PCVC	POINT OF COMPOUND VERTICAL CURVE
PEC	PERMIT TO ENTER AND CONSTRUCT
Ped	PEDESTRIAN
Ped OC	PEDESTRIAN OVERCROSSING
Ped UC	PEDESTRIAN UNDERCROSSING
Perm Mtl	PERMEABLE MATERIAL

P continued

PG	PROFILE GRADE
PI	POINT OF INTERSECTION
PJP	PARTIAL JOINT PENETRATION
Pkwy	PARKWAY
ℙ,PL	PLATE
P/L	PROPERTY LINE
PM	POST MILE,
	TIME FROM NOON TO MIDNIGHT
PN	PAVING NOTCH
POC	POINT OF HORIZONTAL CURVE
POT	POINT OF TANGENT
POVC	POINT OF VERTICAL CURVE
PP	PIPE PILE,
	PLASTIC PIPE,
	POWER POLE
PPL	PREFORMED PERMEABLE LINER
PPP	PERFORATED PLASTIC PIPE
PRC	POINT OF REVERSE CURVE
PRF	PAVEMENT REINFORCING FABRIC
PRVC	POINT OF REVERSE VERTICAL CURVE
PS&E	PLANS, SPECIFICATIONS AND ESTIMATES
PS, P/S	PRESTRESSED
PSP	PERFORATED STEEL PIPE
PT	POINT OF TANGENCY
PVC	POLYVINYL CHLORIDE
Pvmt	PAVEMENT

Q

Qty	QUANTITY

R

R	RADIUS
R & D	REMOVE AND DISPOSE
R & S	REMOVE AND SALVAGE
R/C	RATE OF CHANGE
RCA	REINFORCED CONCRETE ARCH
RCB	REINFORCED CONCRETE BOX
RCP	REINFORCED CONCRETE PIPE
RCPA	REINFORCED CONCRETE PIPE ARCH
Rd	ROAD
Reinf	REINFORCED,
	REINFORCEMENT,
	REINFORCING
Rel	RELOCATE
Repl	REPLACEMENT
Ret	RETAINING
Rev	REVISED, REVISION
Rdwy	ROADWAY
RHMA	RUBBERIZED HOT MIX ASPHALT
Riv	RIVER
RM	ROAD-MIXED
RP	RADIUS POINT,
	REFERENCE POINT
RR	RAILROAD
RSP	ROCK SLOPE PROTECTION,
	REVISED STANDARD PLAN
Rt	RIGHT
Rte	ROUTE
RW	REDWOOD,
	RETAINING WALL
R/W	RIGHT OF WAY
Rwy	RAILWAY

S

S	SOUTH,
	SUPPLEMENT
SAE	STRUCTURE APPROACH EMBANKMENT
Salv	SALVAGE
SAPP	STRUCTURAL ALUMINUM PLATE PIPE
SB	SOUTHBOUND
SC	SAND CUSHION
SCSP	SLOTTED CORRUGATED STEEL PIPE
SD	STORM DRAIN
Sec	SECOND,
	SECTION
Sep	SEPARATION
SG	SUBGRADE
Shld	SHOULDER
Sht	SHEET
Sim	SIMILAR
℄	STATION LINE
SM	SELECTED MATERIAL
Spec	SPECIAL,
	SPECIFICATIONS
SPP	SLOTTED PLASTIC PIPE
SS	SLOPE STAKE
SSBM	STRAP AND SADDLE BRACKET METHOD
SSD	STRUCTURAL SECTION DRAIN
SSPA	STRUCTURAL STEEL PLATE ARCH
SSPP	STRUCTURAL STEEL PLATE PIPE
SSPPA	STRUCTURAL STEEL PLATE PIPE ARCH
SSRP	STEEL SPIRAL RIB PIPE
St	STREET
Sta	STATION
STBB	SINGLE THRIE BEAM BARRIER
Std	STANDARD
Str	STRUCTURE
Surf	SURFACING
SW	SIDEWALK,
	SOUND WALL
Swr	SEWER
Sym	SYMMETRICAL
S4S	SURFACE 4 SIDES

T

T	SEMI-TANGENT
Tan	TANGENT
TBB	THRIE BEAM BARRIER
Tbr	TIMBER
TC	TOP OF CURB
TCB	TRAFFIC CONTROL BOX
TCE	TEMPORARY CONSTRUCTION EASEMENT
Tel	TELEPHONE
Temp	TEMPORARY
TG	TOP OF GRADE
Tot	TOTAL
TP	TELEPHONE POLE
TPB	TREATED PERMEABLE BASE
TPM	TREATED PERMEABLE MATERIAL
Trans	TRANSITION

T continued

TS	TRANSVERSE,
	TRAFFIC SIGNAL,
	TUBULAR STEEL
Typ	TYPICAL

U

UC	UNDERCROSSING
UD	UNDERDRAIN
UG	UNDERGROUND
UON	UNLESS OTHERWISE NOTED
UP	UNDERPASS

V

V	VALVE,
	DESIGN SPEED
Var	VARIABLE,
	VARIES
VC	VERTICAL CURVE
VCP	VITRIFIED CLAY PIPE
Vert	VERTICAL
Via	VIADUCT
Vol	VOLUME

W

W	WEST,
	WIDTH
WB	WESTBOUND
WH	WEEP HOLE
WM	WIRE MESH
WS	WATER SURFACE
WSP	WELDED STEEL PIPE
Wt	WEIGHT
WV	WATER VALVE
WW	WINGWALL
WWLOL	WINGWALL LAYOUT LINE

X

X Sec	CROSS SECTION
Xing	CROSSING

Y

Yr	YEAR
Yrs	YEARS

Dist	COUNTY	ROUTE	POST MILES TOTAL PROJECT	SHEET No.	TOTAL SHEETS
10	SJ	4	R16.6/R17.4	6	34

Grace M. Tsushima
REGISTERED CIVIL ENGINEER

July 19, 2013
PLANS APPROVAL DATE

REGISTERED PROFESSIONAL ENGINEER Grace M. Tsushima No. C49814 Exp. 9-30-14 CIVIL STATE OF CALIFORNIA

THE STATE OF CALIFORNIA OR ITS OFFICERS OR AGENTS SHALL NOT BE RESPONSIBLE FOR THE ACCURACY OR COMPLETENESS OF SCANNED COPIES OF THIS PLAN SHEET.

TO ACCOMPANY PLANS DATED 3-9-15

UNIT OF MEASUREMENT SYMBOLS:

Some of the symbols used in the project plan quantity tables and in the Bid Item List are:

TABLE A

SYMBOL USED	DEFINITIONS
ACRE	ACRE
CF	CUBIC FOOT
CY	CUBIC YARD
EA	EACH
GAL	GALLON
LB	POUND
LF	LINEAR FOOT
SQFT	SQUARE FOOT
SQYD	SQUARE YARD
STA	100 FEET
TAB	TABLET
TON	2,000 POUNDS

Some of the symbols used in the plans other than in the project plan quantity tables are:

TABLE B

SYMBOL USED	DEFINITIONS
ksi	KIPS PER SQUARE INCH
ksf	KIPS PER SQUARE FOOT
psi	POUNDS PER SQUARE INCH
psf	POUNDS PER SQUARE FOOT
lb/ft^3, pcf	POUNDS PER CUBIC FOOT
tsf	TONS PER SQUARE FOOT
mph, MPH *	MILES PER HOUR
ø	NOMINAL DIAMETER
oz	OUNCE
lb	POUND
kip	1,000 POUNDS
cal	CALORIE
ft	FOOT OR FEET
gal	GALLON

* For use on a sign panel only

STATE OF CALIFORNIA
DEPARTMENT OF TRANSPORTATION

ABBREVIATIONS (SHEET 2 OF 2)

NO SCALE

RSP A10B DATED JULY 19, 2013 SUPERSEDES STANDARD PLAN A10B DATED MAY 20, 2011 - PAGE 2 OF THE STANDARD PLANS BOOK DATED 2010.

REVISED STANDARD PLAN RSP A10B

2010 REVISED STANDARD PLAN RSP A10B

6-7-13

Dist	COUNTY	ROUTE	POST MILES TOTAL PROJECT	SHEET No.	TOTAL SHEETS
10	SJ	4	R16.6/R17.4	7	34

REGISTERED CIVIL ENGINEER

July 19, 2013
PLANS APPROVAL DATE

REGISTERED PROFESSIONAL ENGINEER
Gurinderpal Bhullar
No. C48815
Exp. 9-30-14
CIVIL
STATE OF CALIFORNIA

THE STATE OF CALIFORNIA OR ITS OFFICERS OR AGENTS SHALL NOT BE RESPONSIBLE FOR THE ACCURACY OR COMPLETENESS OF SCANNED COPIES OF THIS PLAN SHEET.

TO ACCOMPANY PLANS DATED 3-9-15

2010 REVISED STANDARD PLAN RSP T9

TABLE 1

TAPER LENGTH CRITERIA AND CHANNELIZING DEVICE SPACING

SPEED (S)	MINIMUM TAPER LENGTH * FOR WIDTH OF OFFSET 12 FEET (W)				MAXIMUM CHANNELIZING DEVICE SPACING		
					X	Y	Z **
	TANGENT 2L	MERGING L	SHIFTING L/2	SHOULDER L/3	TAPER	TANGENT	CONFLICT
mph	ft	ft	ft	ft	ft	ft	ft
20	160	80	40	27	20	40	10
25	250	125	63	42	25	50	12
30	360	180	90	60	30	60	15
35	490	245	123	82	35	70	17
40	640	320	160	107	40	80	20
45	1080	540	270	180	45	90	22
50	1200	600	300	200	50	100	25
55	1320	660	330	220	55	110	27
60	1440	720	360	240	60	120	30
65	1560	780	390	260	65	130	32
70	1680	840	420	280	70	140	35

* - For other offsets, use the following merging taper length formula for L:
For speed of 40 mph or less, $L = WS^2/60$
For speed of 45 mph or more, $L = WS$

Where: L = Taper length in feet
W = Width of offset in feet
S = Posted speed limit, off-peak 85th-percentile speed prior to work starting, or the anticipated operating speed in mph

** - Use for taper and tangent sections where there are no pavement markings or where there is a conflict between existing pavement markings and channelizers (CA).

TABLE 2

LONGITUDINAL BUFFER SPACE AND FLAGGER STATION SPACING

SPEED *	Min D **	DOWNGRADE Min D ***		
		-3%	-6%	-9%
mph	ft	ft	ft	ft
20	115	116	120	126
25	155	158	165	173
30	200	205	215	227
35	250	257	271	287
40	305	315	333	354
45	360	378	400	427
50	425	446	474	507
55	495	520	553	593
60	570	598	638	686
65	645	682	728	785
70	730	771	825	891

* - Speed is posted speed limit, off-peak 85th-percentile speed prior to work starting, or the anticipated operating speed in mph

** - Longitudinal buffer space or flagger station spacing

*** - Use on sustained downgrade steeper than -3 percent and longer than 1 mile.

TABLE 3

ADVANCE WARNING SIGN SPACING

ROAD TYPE	DISTANCE BETWEEN SIGNS *		
	A	B	C
	ft	ft	ft
URBAN - 25 mph OR LESS	100	100	100
URBAN - MORE THAN 25 mph TO 40 mph	250	250	250
URBAN - MORE THAN 40 mph	350	350	350
RURAL	500	500	500
EXPRESSWAY / FREEWAY	1000	1500	2640

* - The distances are approximate, are intended for guidance purposes only, and should be applied with engineering judgment. These distances should be adjusted by the Engineer for field conditions, if necessary, by increasing or decreasing the recommmended distances.

STATE OF CALIFORNIA
DEPARTMENT OF TRANSPORTATION

TRAFFIC CONTROL SYSTEM TABLES FOR LANE AND RAMP CLOSURES

NO SCALE

RSP T9 DATED JULY 19, 2013 SUPERSEDES RSP T9 DATED APRIL 19, 2013 THAT SUPPLEMENTS THE STANDARD PLANS BOOK DATED 2010.

REVISED STANDARD PLAN RSP T9

TO ACCOMPANY PLANS DATED 3-9-15

Dist	COUNTY	ROUTE	POST MILES TOTAL PROJECT	SHEET No.	TOTAL SHEETS
10	SJ	4	R16.6/R17.4	8	34

REGISTERED CIVIL ENGINEER

April 19, 2013
PLANS APPROVAL DATE

REGISTERED PROFESSIONAL ENGINEER Gurinderpal Bhullar No. C48815 Exp. 9-30-14 CIVIL STATE OF CALIFORNIA

THE STATE OF CALIFORNIA OR ITS OFFICERS OR AGENTS SHALL NOT BE RESPONSIBLE FOR THE ACCURACY OR COMPLETENESS OF SCANNED COPIES OF THIS PLAN SHEET.

NOTES:

See Revised Standard Plan RSP T9 for tables.

Use cone spacing X for taper segment, Y for tangent segment or Z for conflict situations, as approriate, per Table 1, unless X, Y, or Z cone spacing is shown on this sheet.

Unless otherwise specified in the special provisions, all temporary warning signs shall have black legend on fluorescent orange background.

California codes are designated by (CA). Otherwise, Federal (MUTCD) codes are shown.

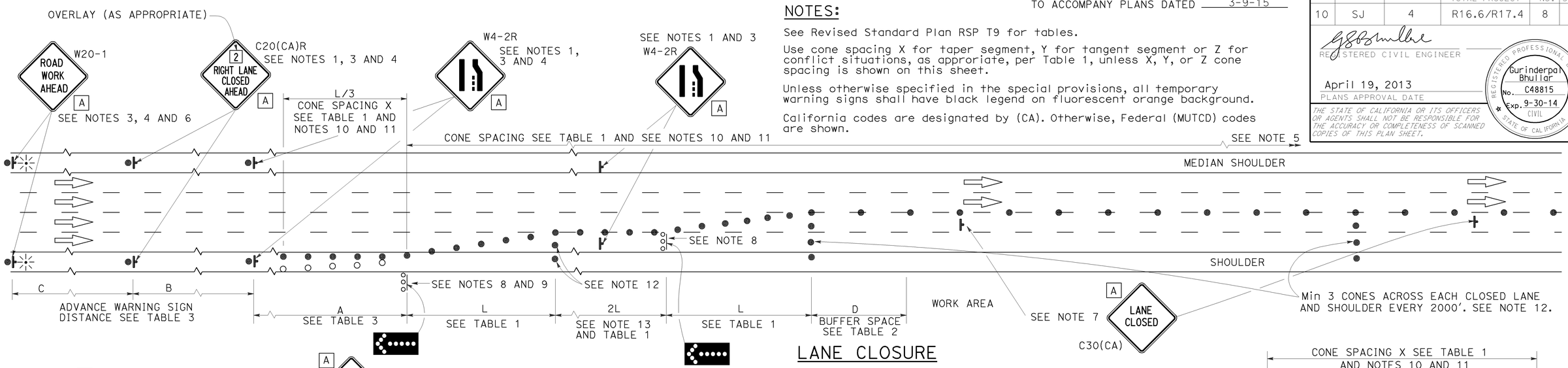

LANE CLOSURE

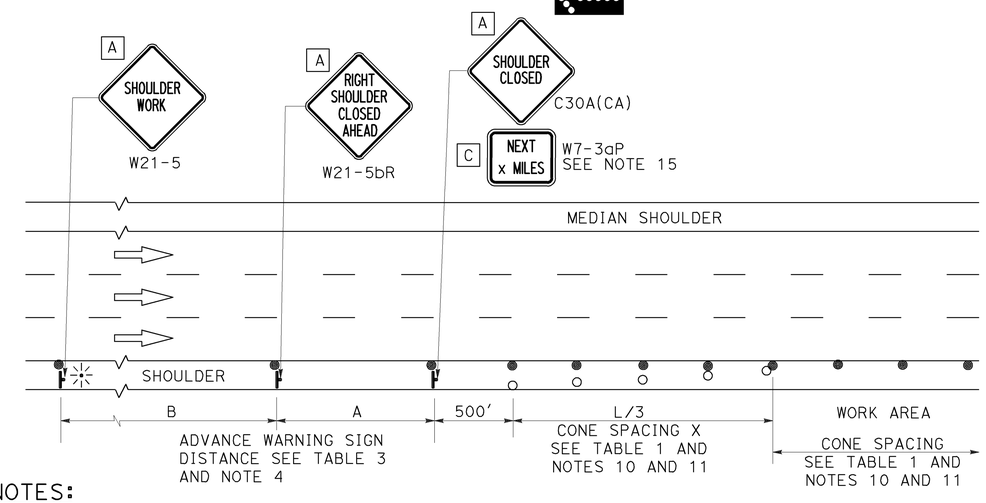

SHOULDER CLOSURE

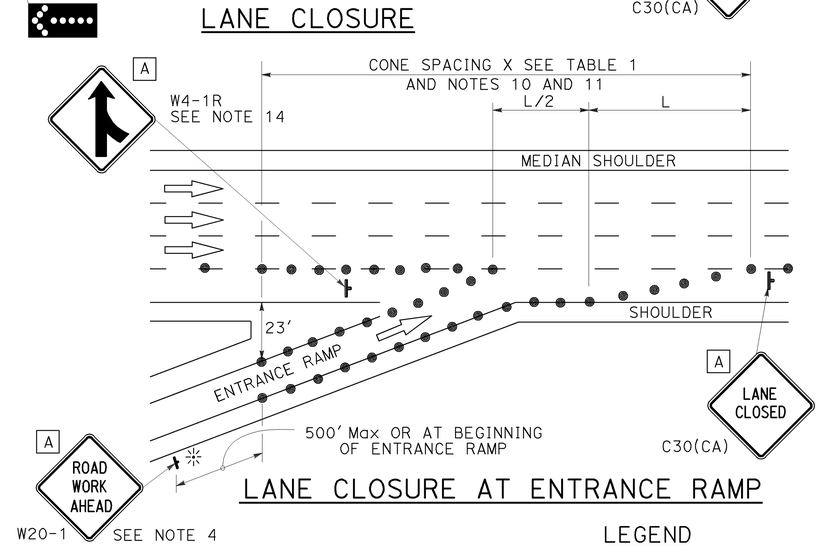

LANE CLOSURE AT ENTRANCE RAMP

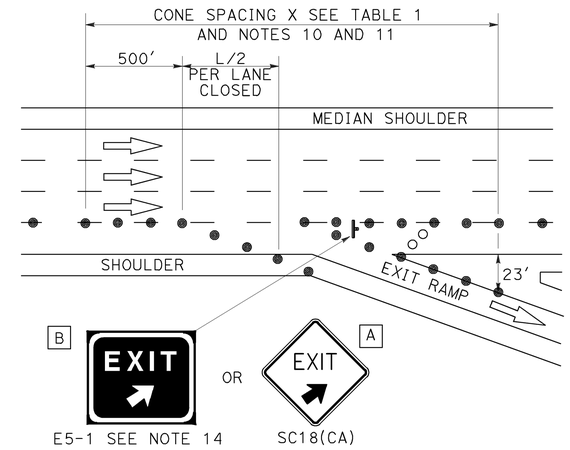

LANE CLOSURE AT EXIT RAMP

NOTES:

1. Median lane closures shall conform to the details as shown except that C20(CA)L and W4-2L signs shall be used.
2. At least one person shall be assigned to provide full time maintenance of traffic control devices for lane closures.
3. Duplicate sign installations are not required:
   a) On opposite shoulder if at least one-half of the available lanes remain open to traffic.
   b) In the median if the width of the median shoulder is less than 8' and the outside lanes are to be closed.
4. Each advance warning sign on each side of the roadway shall be equipped with at least two flags for daytime closure. Each flag shall be at least 16" x 16" in size and shall be orange or fluorescent red-orange in color. Flashing beacons shall be placed at the locations indicated for lane closure during hours of darkness.
5. A G20-2 "END ROAD WORK" sign, with minimum size of 48" x 24" as appropriate, shall be placed at the end of the lane closure unless the end of work area is obvious or ends within a larger project's limits.
6. If the W20-1 sign would follow within 2000' of a stationary W20-1 or G20-1 "ROAD WORK NEXT _____ MILES", use a C20(CA) sign for the first advance warning sign.
7. Place a C30(CA) sign every 2000' throughout length of lane closure.
8. One flashing arrow sign for each lane closed. The flashing arrow signs shall be Type I.
9. A minimum 1500' of sight distance shall be provided where possible for vehicles approaching the first flashing arrow sign. Lane closures shall not begin at top of crest vertical curve or on a horizontal curve.
10. All cones used for lane closures during the hours of darkness shall be fitted with retroreflective bands (or sleeves) as specified in the specifications.
11. Portable delineators, placed at one-half the spacing indicated for traffic cones may be used instead of cones for daytime closures only.
12. Unless otherwise specified in the special provisions, a minimum of 3 cones shall be placed transversely across each closed lane and shoulder at each location where a taper across a traffic lane ends and every 2000' as shown on the "Lane Closure" detail. Two Type II barricades may be used instead of the 3 cones. The transverse alignment of the cones or barricades on the closed shoulder may be shifted from the transverse alignment to provide access to the work.
13. Unless otherwise specified in the special provisions, the 2L tangent shown along lane lines shall be used between the L tapers required for each closed traffic lane.
14. Unless otherwise specified in the special provisions, the E5-1 or SC18(CA) and W4-1 signs shall be used as shown.
15. A W7-3aP "NEXT____ MILES" plaque must be used if theshoulder closure extends beyond the distance that can be perceived by road users.

LEGEND

- TRAFFIC CONE
- TRAFFIC CONE (OPTIONAL TAPER)
- TEMPORARY TRAFFIC CONTROL SIGN
- FLASHING ARROW SIGN (FAS)
- FAS SUPPORT OR TRAILER
- PORTABLE FLASHING BEACON

SIGN PANEL SIZE (Min)

A	48" x 48"
B	72" x 60"
C	36" x 30"

STATE OF CALIFORNIA
DEPARTMENT OF TRANSPORTATION

TRAFFIC CONTROL SYSTEM FOR LANE CLOSURE ON FREEWAYS AND EXPRESSWAYS

NO SCALE

RSP T10 DATED APRIL 19, 2013 SUPERSEDES STANDARD PLAN T10 DATED MAY 20, 2011 - PAGE 237 OF THE STANDARD PLANS BOOK DATED 2010.

REVISED STANDARD PLAN RSP T10

2010 REVISED STANDARD PLAN RSP T10

12-18-12

Dist	COUNTY	ROUTE	POST MILES TOTAL PROJECT	SHEET No.	TOTAL SHEETS
10	SJ	4	R16.6/R17.4	9	34

Devinder Singh
REGISTERED CIVIL ENGINEER

October 17, 2014
PLANS APPROVAL DATE

REGISTERED PROFESSIONAL ENGINEER Devinder Singh No. C50470 Exp. 6-30-15 CIVIL STATE OF CALIFORNIA

THE STATE OF CALIFORNIA OR ITS OFFICERS OR AGENTS SHALL NOT BE RESPONSIBLE FOR THE ACCURACY OR COMPLETENESS OF SCANNED COPIES OF THIS PLAN SHEET.

TO ACCOMPANY PLANS DATED 3-9-15

NOTES:

See Revised Standard Plan RSP T9 for tables.

Use cone spacing X for taper segment, Y for tangent segment or Z for conflict situations, as approriate, per Table 1, unless X, Y, or Z cone spacing is shown on this sheet.

Unless otherwise specified in the special provisions, all temporary warning signs shall have black legend on fluorescent orange background.

California codes are designated by (CA). Otherwise, Federal (MUTCD) codes are shown.

TYPICAL LANE CLOSURE WITH REVERSIBLE CONTROL

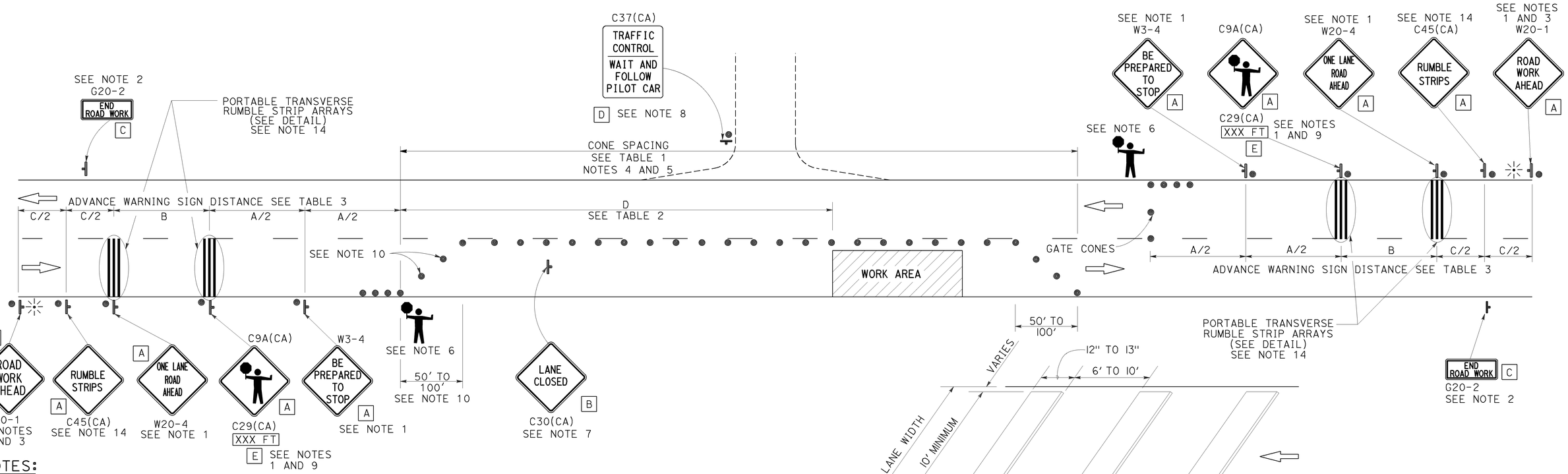

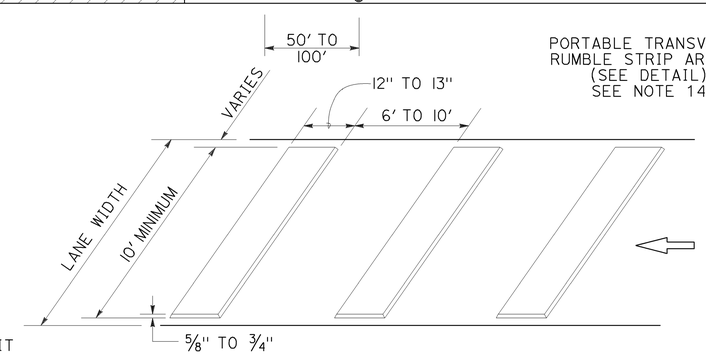

PORTABLE TRANSVERSE RUMBLE STRIP ARRAY DETAIL

NOTES:

1. Each advance warning sign in each direction of travel shall be equipped with at least two flags for daytime closure. Each flag shall be at least 16" x 16" in size and shall be orange or fluorescent red-orange in color. Flashing beacons shall be placed at the locations indicated for lane closure during hours of darkness.
2. A G20-2 "END ROAD WORK" sign, as appropriate, shall be placed at the end of the lane control unless the end of work area is obvious, or ends within a larger project's limits.
3. If the W20-1 sign would follow within 2000' of a stationary W20-1 or G20-1 "ROAD WORK NEXT _____ MILES", use a W20-4 sign for the first advance warning sign.
4. All cones used for lane closures during the hours of darkness shall be fitted with retroreflective bands (or sleeves) as specified in the specifications.
5. Portable delineators, placed at one-half the spacing indicated for traffic cones, may be used instead of cones for daytime closures only.
6. Additional advance flaggers may be required. Flagger should stand in a conspicuous place, be visible to approaching traffic as well as approaching vehicles after the first vehicle has stopped. During the hours of darkness, the flagging-station and flagger shall be illuminated and clearly visible to approaching traffic. The illumination footprint of the lighting on the ground shall be at least 20' in diameter. Place a minimum of four cones at 50' intervals in advance of flagger station as shown.
7. Place C30(CA) "LANE CLOSED" sign at 500' to 1000' intervals throughout extended work areas. They are optional if the work area is visible from the flagger station.
8. When a pilot car is used, place a C37(CA) "TRAFFIC CONTROL-WAIT AND FOLLOW PILOT CAR" sign with black legend on white background at all intersections, driveways and alleys without a flagger within traffic control area. Signs shall be clean and visible at all times. Where traffic can not be effectively self-regulated, at least one flagger shall be used at each intersection within traffic control area.
9. An optional C29(CA) sign may be placed below the C9A(CA) sign.
10. Either traffic cones or barricades shall be placed on the taper. Barricades shall be Type I, II, or III.
11. The color of the portable transverse rumble strips shall be black or orange. Use 2 arrays, each array shall consist of 3 rumble strips.
12. Portable transverse rumble strips shall not be placed on sharp horizontal or vertical curves nor shall they be placed through pedestrian crossings.
13. If the portable transverse rumble strips become out of alignment (skewed) by more than 6 inches, measured from one end to the other, they shall be readjusted to bring the placement back to the original location.
14. Portable transverse rumble strips are not required if any one of the following conditions is satisfied:
    A. Work duration occupies a location for four hours or less
    B. Posted speed limit is below 45 MPH
    C. Work is of emergency nature
    D. Work zone is in snow or icy weather conditions

LEGEND

- TRAFFIC CONE
- TEMPORARY TRAFFIC CONTROL SIGN
- PORTABLE FLASHING BEACON
- FLAGGER

SIGN PANEL SIZE (Min)

A	48" x 48"
B	30" x 30"
C	36" x 18"
D	36" x 42"
E	20" x 7"

STATE OF CALIFORNIA
DEPARTMENT OF TRANSPORTATION

TRAFFIC CONTROL SYSTEM FOR LANE CLOSURE ON TWO LANE CONVENTIONAL HIGHWAYS

NO SCALE

RSP T13 DATED OCTOBER 17, 2014 SUPERSEDES RSP T13 DATED JULY 18, 2014 AND RSP T13 DATED APRIL 19, 2013 AND STANDARD PLAN T13 DATED MAY 20, 2011 - PAGE 241 OF THE STANDARD PLANS BOOK DATED 2010.

REVISED STANDARD PLAN RSP T13

2010 REVISED STANDARD PLAN RSP T13

9-26-14

Dist	COUNTY	ROUTE	POST MILES TOTAL PROJECT	SHEET No.	TOTAL SHEETS
10	SJ	4	R16.6/R17.4	10	34

REGISTERED CIVIL ENGINEER

April 19, 2013
PLANS APPROVAL DATE

REGISTERED PROFESSIONAL ENGINEER Gurinderpal Bhullar No. C48815 Exp. 9-30-14 CIVIL STATE OF CALIFORNIA

THE STATE OF CALIFORNIA OR ITS OFFICERS OR AGENTS SHALL NOT BE RESPONSIBLE FOR THE ACCURACY OR COMPLETENESS OF SCANNED COPIES OF THIS PLAN SHEET.

TO ACCOMPANY PLANS DATED 3-9-15

TYPICAL RAMP CLOSURES

SIGN PANEL SIZE (Min)

- A 48" × 48"
- B 48" × 30"
- C 36" × 36"
- D 48" × 36"

LEGEND

- TRAFFIC CONE
- TEMPORARY TRAFFIC CONTROL SIGN
- BARRICADES
- PORTABLE FLASHING BEACON

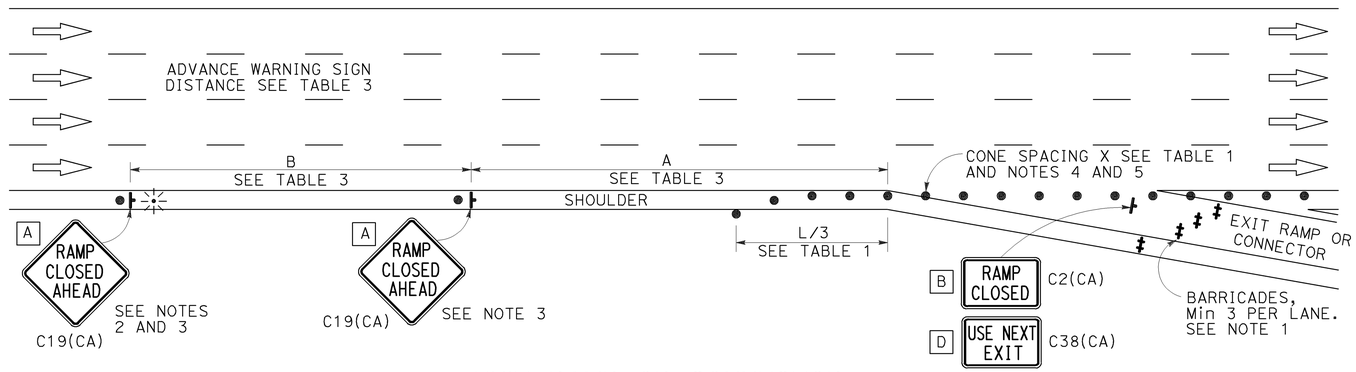

EXIT RAMP OR CONNECTOR

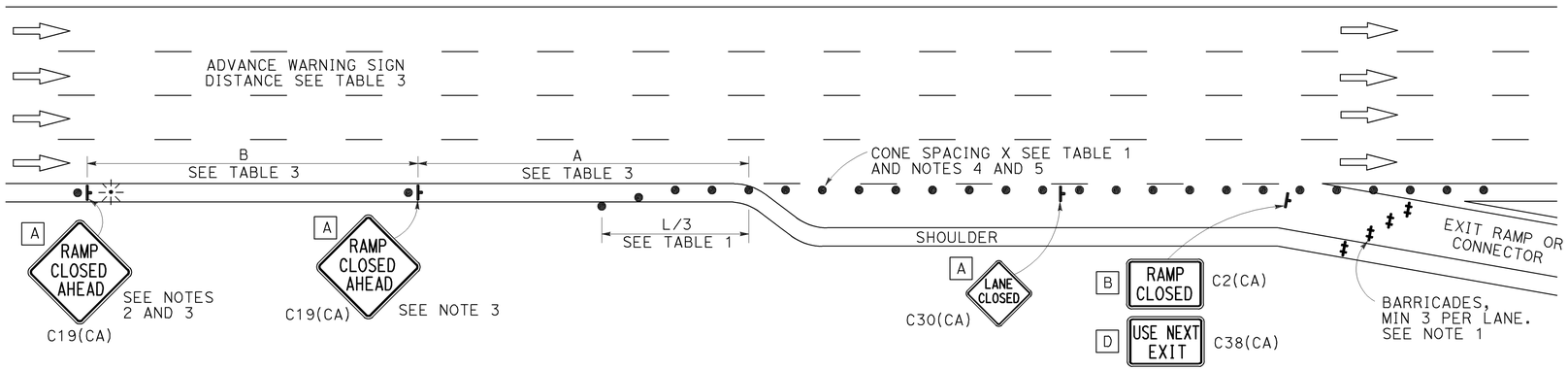

EXIT RAMP OR CONNECTOR WITH ADDITIONAL LANE

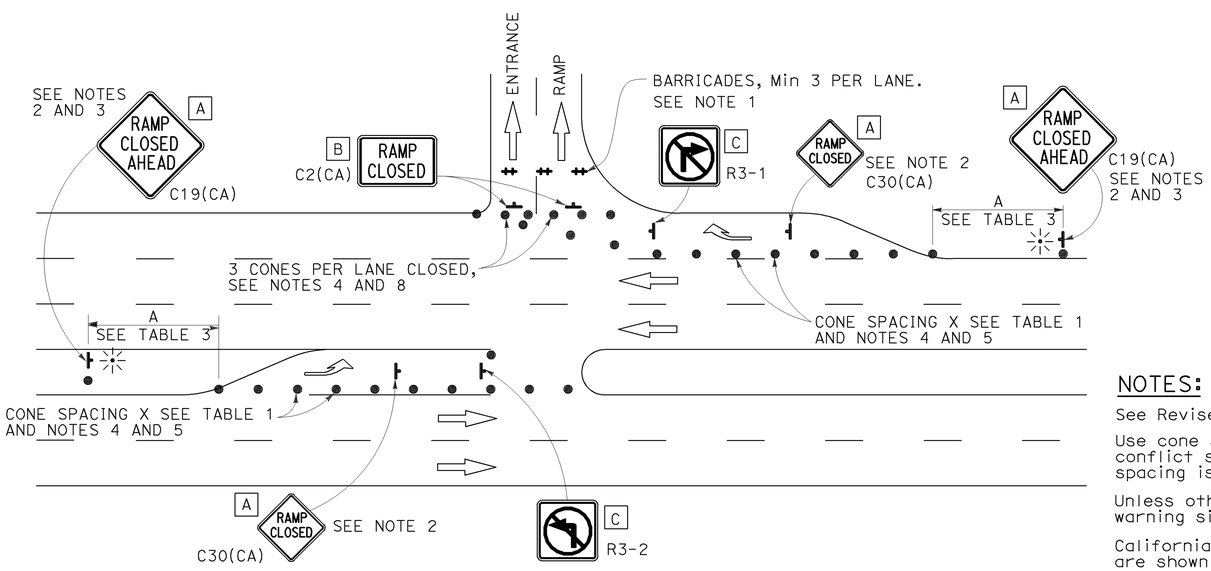

ENTRANCE RAMP WITH TURNING POCKETS

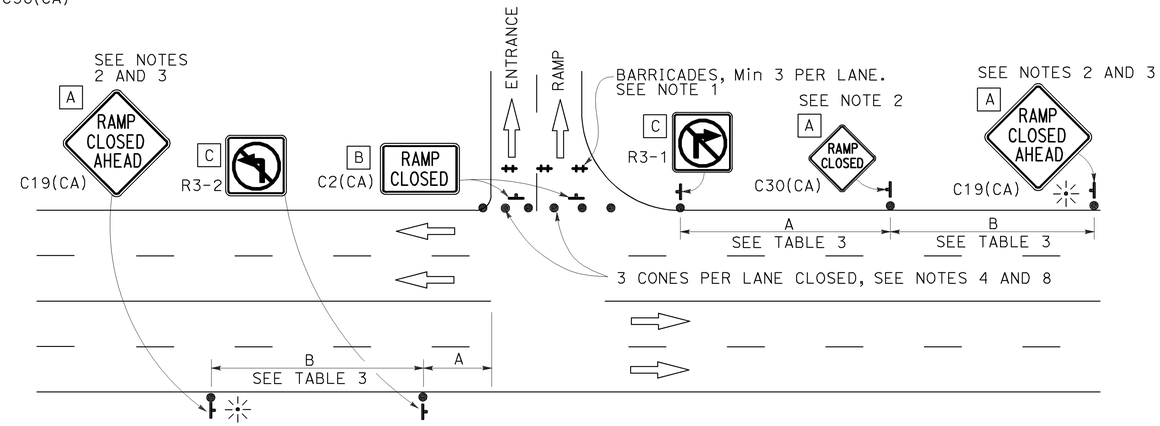

ENTRANCE RAMP WITHOUT TURNING POCKETS

NOTES:

1. Barricades shall be Type I, II, or III for closures lasting one week or less and Type III for closures lasting longer than one week.
2. In addition to placing the C19(CA) "RAMP CLOSED AHEAD" and C30(CA) "RAMP CLOSED" signs, black on orange overlay plates with the word "CLOSED" may be mounted, as directed by the Engineer, on all guide signs that refer to the closed ramp. The letter size on the overlay shall be the same as the guide sign.
3. Each advance C19(CA) "RAMP CLOSED AHEAD" sign shall be equipped with at least two flags for daytime closure. Each flag shall be at least 16" × 16" in size and shall be orange or fluorescent red-orange in color. A flashing beacon shall be placed on top of the first C19(CA) sign during hours of darkness.
4. All cones used for ramp closures during the hours of darkness shall be fitted with retroreflective bands (or sleeves) as specified in the specifications.
5. Portable delineators, placed at one-half the spacing indicated for traffic cones, may be used instead of cones for daytime ramp closures only.
6. At least one person shall be assigned to provide full time maintenance of traffic control devices, unless otherwise directed by the Engineer.
7. The existing "EXIT" signs shall be covered during ramp closures.
8. A minimum of 3 cones shall be placed transversely across each closed lane and shoulder.

NOTES:

See Revised Standard Plan RSP T9 for tables.

Use cone spacing X for taper segment, Y for tangent segment or Z for conflict situations, as approriate, per Table 1, unless X, Y, or Z cone spacing is shown on this sheet.

Unless otherwise specified in the special provisions, all temporary warning signs shall have black legend on fluorescent orange background.

California codes are designated by (CA). Otherwise, Federal (MUTCD) codes are shown.

STATE OF CALIFORNIA
DEPARTMENT OF TRANSPORTATION

TRAFFIC CONTROL SYSTEM FOR RAMP CLOSURE

NO SCALE

RSP T14 DATED APRIL 19, 2013 SUPERSEDES STANDARD PLAN T14 DATED MAY 20, 2011 - PAGE 242 OF THE STANDARD PLANS BOOK DATED 2010.

REVISED STANDARD PLAN RSP T14

2010 REVISED STANDARD PLAN RSP T14

12-18-12

DIST	COUNTY	ROUTE	POST MILES TOTAL PROJECT	SHEET NO.	TOTAL SHEETS
10	SJ	4	R16.6/R17.4	11	34

Charles R. Hutchinson 2-06-15
REGISTERED CIVIL ENGINEER DATE

3-9-15
PLANS APPROVAL DATE

REGISTERED PROFESSIONAL ENGINEER CHARLES R. HUTCHINSON No. C 54226 Exp. 12-31-15 CIVIL STATE OF CALIFORNIA

THE STATE OF CALIFORNIA OR ITS OFFICERS OR AGENTS SHALL NOT BE RESPONSIBLE FOR THE ACCURACY OR COMPLETENESS OF ELECTRONIC COPIES OF THIS PLAN SHEET.

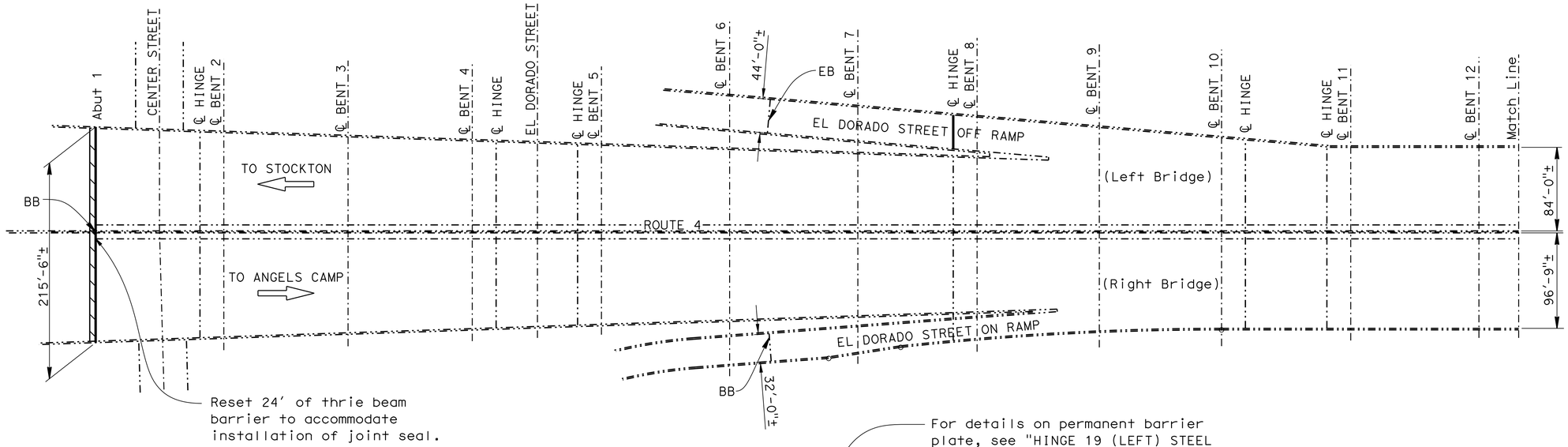

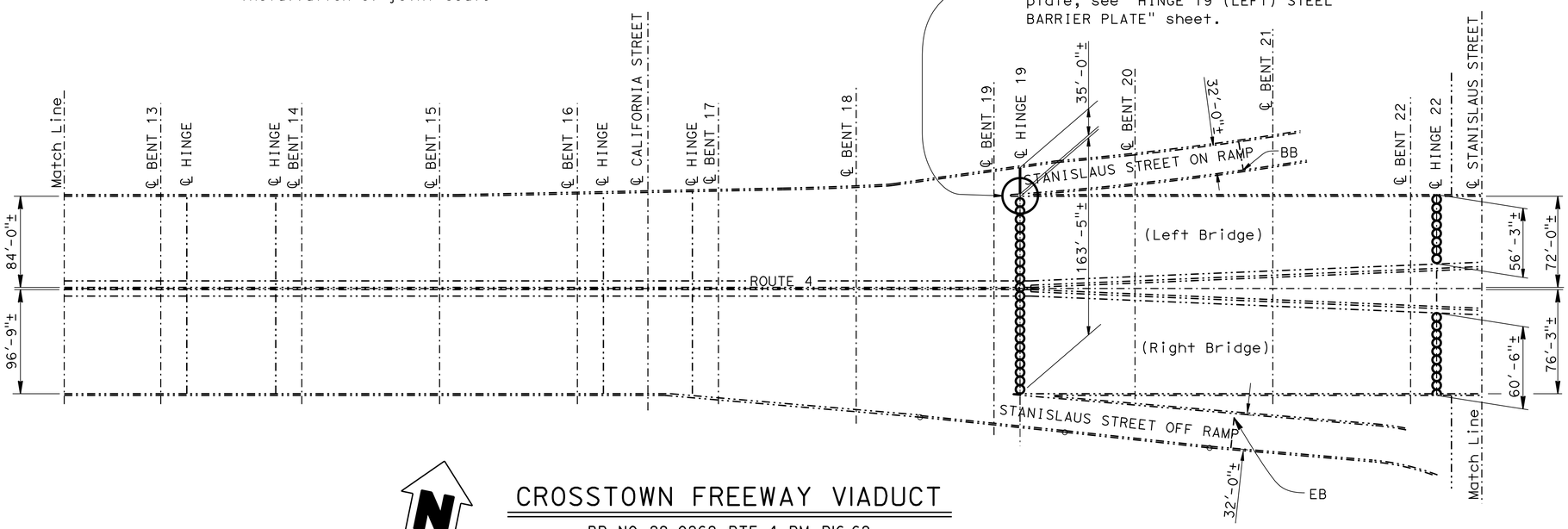

CROSSTOWN FREEWAY VIADUCT

BR NO. 29-0269, RTE 4, PM R16.62
1" = 60'

Notes:

Indicates existing structure.

Indicates remove existing joint seal and place new Joint Seal or remove and replace gland. For details, see "JOINT SEAL DETAILS NO. 1" sheet.

Replace Elastomeric Bearing Pads, Joint Seals, Joint Seal Assembly, reconstruct Hinge and replace longitudinal seismic restrainers. Reconstruct equalization bolts.

Indicates location of remove concrete along edge of approach slab. Place structural concrete to reconstruct joint. See JOINT RECONSTRUCTION DETAIL on "MISCELLANEOUS DETAILS" sheet.

INDEX TO PLANS

SHEET NO.	TITLE
1	GENERAL PLAN NO. 1
2	GENERAL PLAN NO. 2
3	TEMPORARY SUPPORT DETAILS NO. 1
4	TEMPORARY SUPPORT DETAILS NO. 2
5	TEMPORARY SUPPORT DETAILS NO. 3
6	TEMPORARY SUPPORT DETAILS NO. 4
7	JOINT SEAL DETAILS NO. 1
8	JOINT SEAL DETAILS NO. 2
9	HINGE DETAILS NO. 1
10	HINGE DETAILS NO. 2
11	HINGE DETAILS NO. 3
12	HINGE DETAILS NO. 4
13	HINGE DETAILS NO. 5
14	HINGE DETAILS NO. 6
15	BARRIER DETAILS
16	MISCELLANEOUS DETAILS
17	TEMPORARY DECK DETAILS
18	CABLE RESTRAINER DETAILS NO. 1
19	CABLE RESTRAINER DETAILS NO. 2
20	SOFFIT OPENINGS DETAILS
21	STRIP JOINT SEAL ASSEMBLY (MAXIMUM MOVEMENT RATING = 4")
22	HINGE 19 (LEFT) STEEL BARRIER PLATE
23	NOSE DETAIL
24	CONCRETE BARRIER TYPE 25

STANDARD PLANS DATED MAY 2010

SHEET NO.	TITLE
A10A	ABBREVIATIONS (SHEET 1 OF 2)
RSP A10B	ABBREVIATIONS (SHEET 2 OF 2)
B6-21	JOINT SEAL ASSEMBLY (MAXIMUM MOVEMENT RATING = 2")

NOTE:
VERIFY ALL CONTROLLING FIELD DIMENSIONS BEFORE ORDERING OR FABRICATING ANY MATERIAL.

Standard Plan Sheet No.
Detail No.

Michael J. Lee 2-06-15
DESIGN ENGINEER

	BY	CHECKED
DESIGN	Charles Hutchinson	Khanh Truong
DETAILS	Trung Lam	Khanh Truong
QUANTITIES	Charles Hutchinson	Khanh Truong
LAYOUT	Trung Lam	Charles Hutchinson
SPECIFICATIONS	Tina Chen	PLANS AND SPECIFICATIONS COMPARED: Tina Chen

STATE OF CALIFORNIA
DEPARTMENT OF TRANSPORTATION

DIVISION OF MAINTENANCE
STRUCTURE MAINTENANCE DESIGN

BRIDGE NO. 29-0269
POST MILE R16.62

CROSSTOWN FREEWAY VIADUCT
GENERAL PLAN NO. 1

STRUCTURES MAINTENANCE GENERAL PLAN & DETAIL SHEET (ENGLISH) (REV. 10/17/07)

ORIGINAL SCALE IN INCHES FOR REDUCED PLANS 0 1 2 3

UNIT: 3488
PROJECT NUMBER & PHASE: 1014000133 1
CONTRACT NUMBER: 10-1C0901

DISREGARD PRINTS BEARING EARLIER REVISION DATES
REVISION DATES: 1-23-15 2-06-15 3-05-15 12-16-14
SHEET 1 OF 24

FILE => 10-1c0901_01_gp1.dgn

USERNAME => s120300 DATE PLOTTED => 10-MAR-2015 TIME PLOTTED => 12:08

DIST	COUNTY	ROUTE	POST MILES TOTAL PROJECT	SHEET NO.	TOTAL SHEETS
10	SJ	4	R16.6/R17.4	12	34

Charles R Hutchinson 2-06-15
REGISTERED CIVIL ENGINEER DATE

3-9-15
PLANS APPROVAL DATE

REGISTERED PROFESSIONAL ENGINEER CHARLES R. HUTCHINSON No. C 54226 Exp. 12-31-15 CIVIL STATE OF CALIFORNIA

THE STATE OF CALIFORNIA OR ITS OFFICERS OR AGENTS SHALL NOT BE RESPONSIBLE FOR THE ACCURACY OR COMPLETENESS OF ELECTRONIC COPIES OF THIS PLAN SHEET.

CROSSTOWN FREEWAY VIADUCT BRIDGE NO. 29-0269

QUANTITIES

RECONSTRUCT EQUALIZING BOLTS	59	EA
RESET THRIE BEAM BARRIER	24	LF
ACCESS OPENING, SOFFIT	2	EA
BRIDGE REMOVAL (PORTION)	LUMP	SUM
TEMPORARY SUPPORT	LUMP	SUM
TEMPORARY DECKING	LUMP	SUM
STRUCTURAL CONCRETE, BRIDGE	265	CY
ELASTOMERIC BEARING PAD	80	EA
JOINT SEAL (MR 1½")	112	LF
JOINT SEAL ASSEMBLY (MR 2½")	422	LF
JOINT SEAL (MR 2")	464	LF
REPLACE NEOPRENE STRIP SEAL GLAND (MR 2")	112	LF
BAR REINFORCING STEEL (BRIDGE)	53,006	LB
MISCELLANEOUS METAL (RESTRAINER - CABLE TYPE)	20,853	LB
CONCRETE BARRIER (TYPE 25)	47	LF
CONCRETE BARRIER (TYPE 25 MODIFIED)	47	LF
CONCRETE BARRIER (TYPE 50A MODIFIED)	5	LF

Notes:

Indicates existing structure.

Indicates remove existing joint seal, clean expansion joint and place new Joint Seal or remove and replace gland. For details, see "JOINT SEAL DETAILS NO. 1" sheet.

Replace Elastomeric Bearing Pads, Joint Seals, Joint Seal Assembly, reconstruct Hinge and replace longitudinal seismic restrainers. Reconstruct equalization bolts.

Indicates location of remove concrete along edge of approach slab & retain existing steel. Place structural concrete to reconstruct joint. See JOINT RECONSTRUCTION DETAIL on "MISCELLANEOUS DETAILS" sheet.

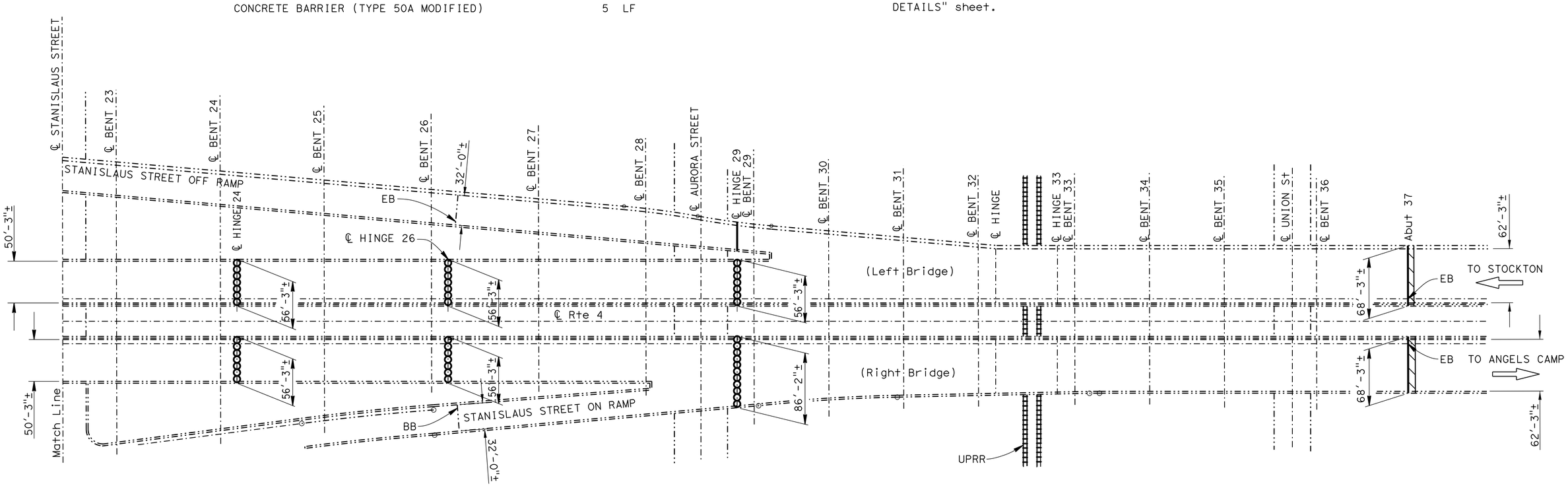

CROSSTOWN FREEWAY VIADUCT

BR NO. 29-0269, RTE 4, PM R16.62
1" = 60'

NOTE:
VERIFY ALL CONTROLLING FIELD DIMENSIONS BEFORE ORDERING OR FABRICATING ANY MATERIAL.

Michael J. Lee 2-06-15
DESIGN ENGINEER

	BY	CHECKED
DESIGN	Charles Hutchinson	Khanh Truong
DETAILS	Trung Lam	Khanh Truong
QUANTITIES	Charles Hutchinson	Khanh Truong
LAYOUT	Trung Lam	Charles Hutchinson
SPECIFICATIONS	Tina Chen	PLANS AND SPECIFICATIONS COMPARED: Tina Chen

STATE OF CALIFORNIA
DEPARTMENT OF TRANSPORTATION

DIVISION OF MAINTENANCE
STRUCTURE MAINTENANCE DESIGN

BRIDGE NO. 29-0269
POST MILE R16.62

CROSSTOWN FREEWAY VIADUCT
GENERAL PLAN NO. 2

STRUCTURES MAINTENANCE GENERAL PLAN & DETAIL SHEET (ENGLISH) (REV. 10/17/07)

ORIGINAL SCALE IN INCHES FOR REDUCED PLANS 0 1 2 3

UNIT: 3488
PROJECT NUMBER & PHASE: 1014000133 1
CONTRACT NUMBER: 10-1C0901

DISREGARD PRINTS BEARING EARLIER REVISION DATES
REVISION DATES: 1-23-15 2-06-15 2-23-15 12-16-14
SHEET 2 OF 24

FILE => 10-1c0901_02_gp2.dgn

USERNAME => s120300 DATE PLOTTED => 10-MAR-2015 TIME PLOTTED => 12:08

DIST	COUNTY	ROUTE	POST MILES TOTAL PROJECT	SHEET NO.	TOTAL SHEETS
10	SJ	4	R16.6/R17.4	13	34

Charles R Hutchinson 2-06-15
REGISTERED CIVIL ENGINEER DATE

3-9-15
PLANS APPROVAL DATE

REGISTERED PROFESSIONAL ENGINEER CHARLES R. HUTCHINSON No. C 54226 Exp. 12-31-15 CIVIL STATE OF CALIFORNIA

THE STATE OF CALIFORNIA OR ITS OFFICERS OR AGENTS SHALL NOT BE RESPONSIBLE FOR THE ACCURACY OR COMPLETENESS OF ELECTRONIC COPIES OF THIS PLAN SHEET.

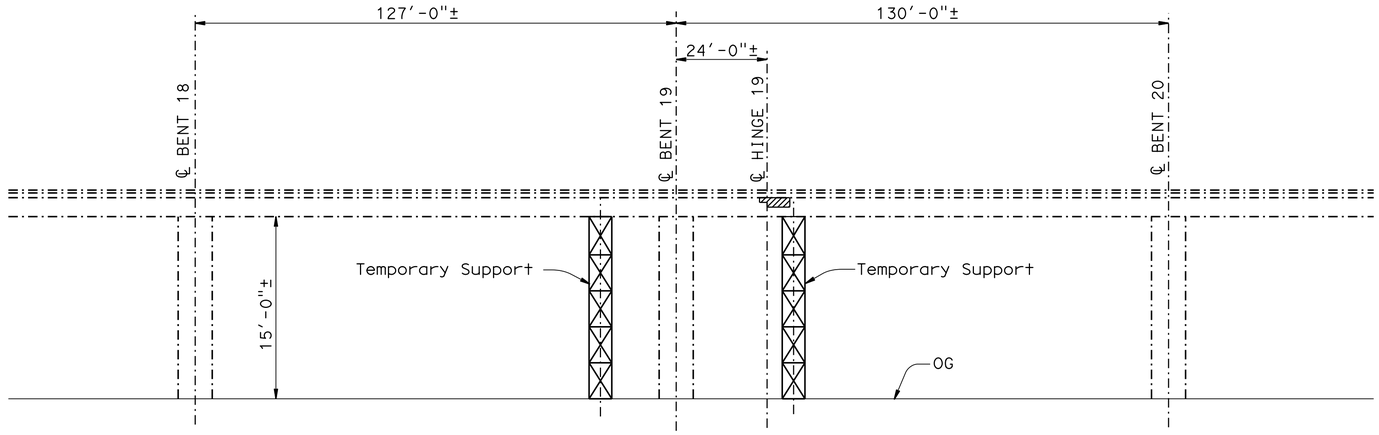

ELEVATION

NO SCALE

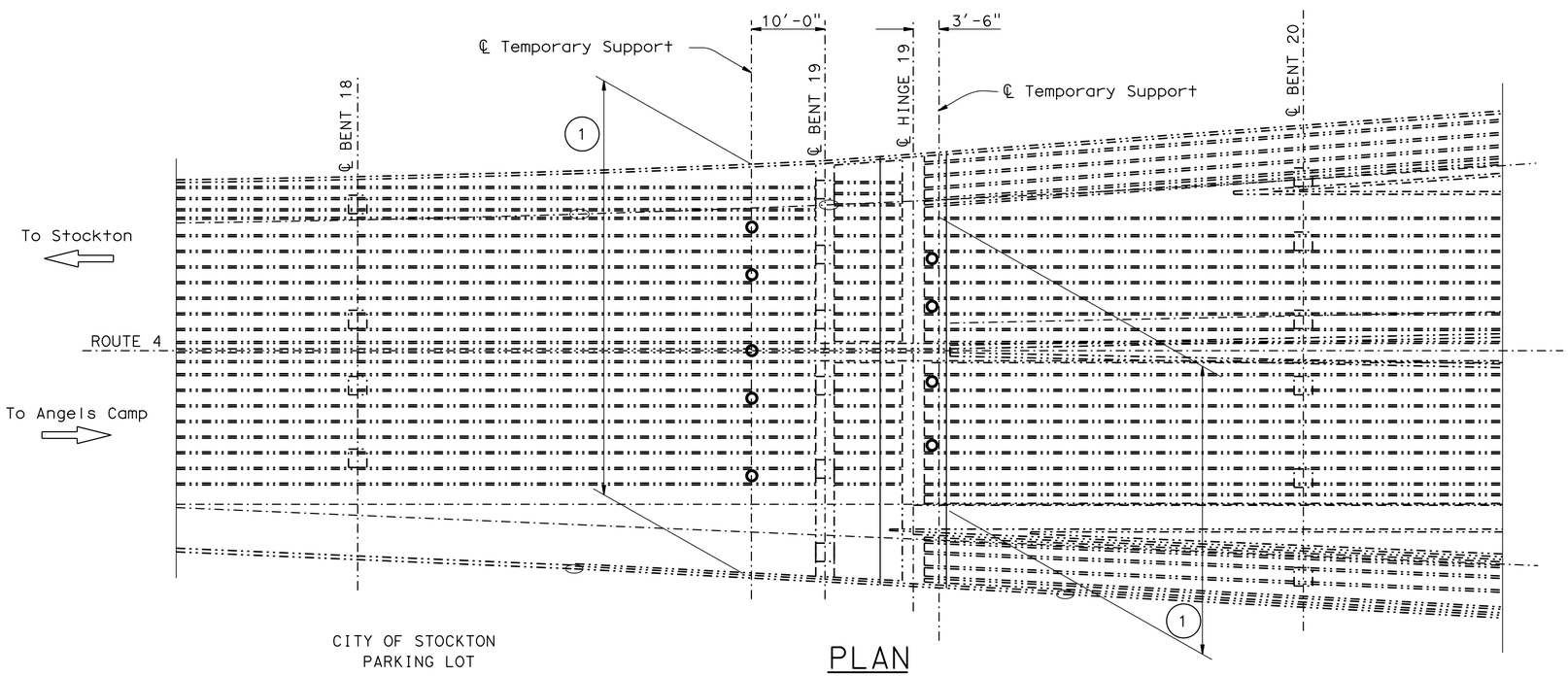

PLAN

BENT 19

NO SCALE

NOTE:
VERIFY ALL CONTROLLING FIELD DIMENSIONS BEFORE ORDERING OR FABRICATING ANY MATERIAL.

NOTES:

-·-·- Indicates existing structure.

▨ Indicates limits of bearing pad replacement work.

TEMPORARY SUPPORT NOTES: (Apply to "Temporary Support Details No. 1 & 2" sheets only)

All footings for temporary supports shall not exceed a soil bearing pressure of 3,000 psf on roadway, sidewalk, curb and gutter. All other location not to exceed 3,500 psf.

The maximum allowable transverse displacement of the superstructure measured at the bottom of soffit relative to the base of the temporary support is 1". The differential vertical lift between jacks shall not exceed 1/16". The temporary support shall be jacked to provide a snug fit with the bridge girders.

Temporary supports contact points shall be centered under the girders.

(1) Limits of temporary supports.

○ Existing soffits lights to be temporarily removed, stored and re-installed. See District Plans.

TEMPORARY SUPPORT TABLE

LOCATION	DEAD LOAD REACTION (K)	INITIAL JACKING LOAD[1] (K)	LL + I REACTION (K)	MINIMUM LATERAL TEMPORARY SUPPORT DESIGN FORCE (K)
SPAN 18		2,484	7,186	248
SPAN 19	1,651		3,733	248
SPAN 21L		1,192	3,348	119
SPAN 22L	592		1,277	89
SPAN 21R		1,192	3,348	119
SPAN 22R	592		1,277	89
SPAN 23L		1,002	2,097	100
SPAN 24L	582		1,279	87
SPAN 23R		1,002	2,097	100
SPAN 24R	582		1,279	87
SPAN 25L		1,065	2,209	106
SPAN 26L	605		1,297	91
SPAN 25R		1,065	2,209	106
SPAN 26R	600		1,447	90
SPAN 28L	612		1,303	92
SPAN 29L		556	1,270	56
SPAN 28R	1,089		2,370	163
SPAN 29R		860	2,040	86

[1] Loads shown are unfactored.

DESIGN	BY Charles Hutchinson	CHECKED Khanh Truong	
DETAILS	BY Trung Lam	CHECKED Khanh Truong	
QUANTITIES	BY Charles Hutchinson	CHECKED Khanh Truong	

STATE OF CALIFORNIA
DEPARTMENT OF TRANSPORTATION

DIVISION OF MAINTENANCE
STRUCTURE MAINTENANCE DESIGN

BRIDGE NO. 29-0269
POST MILE R16.62

CROSSTOWN FREEWAY VIADUCT

TEMPORARY SUPPORT DETAILS NO. 1

STRUCTURES MAINTENANCE GENERAL PLAN & DETAIL SHEET (ENGLISH) (REV. 10/17/07)

ORIGINAL SCALE IN INCHES FOR REDUCED PLANS 0 1 2 3

UNIT: 3488
PROJECT NUMBER & PHASE: 1014000133 1
CONTRACT NUMBER: 10-1C0901

DISREGARD PRINTS BEARING EARLIER REVISION DATES

REVISION DATES: 2-06-15 3-04-15 12-16-14 1-23-15

SHEET 3 OF 24

FILE => 10-1c0901_03_temp_supp_dets1.dgn

USERNAME => s120300 DATE PLOTTED => 10-MAR-2015 TIME PLOTTED => 12:08

DIST	COUNTY	ROUTE	POST MILES TOTAL PROJECT	SHEET NO.	TOTAL SHEETS
10	SJ	4	R16.6/R17.4	14	34

Charles R Hutchinson 2-06-15
REGISTERED CIVIL ENGINEER DATE

3-9-15
PLANS APPROVAL DATE

REGISTERED PROFESSIONAL ENGINEER CHARLES R. HUTCHINSON No. C 54226 Exp. 12-31-15 CIVIL STATE OF CALIFORNIA

THE STATE OF CALIFORNIA OR ITS OFFICERS OR AGENTS SHALL NOT BE RESPONSIBLE FOR THE ACCURACY OR COMPLETENESS OF ELECTRONIC COPIES OF THIS PLAN SHEET.

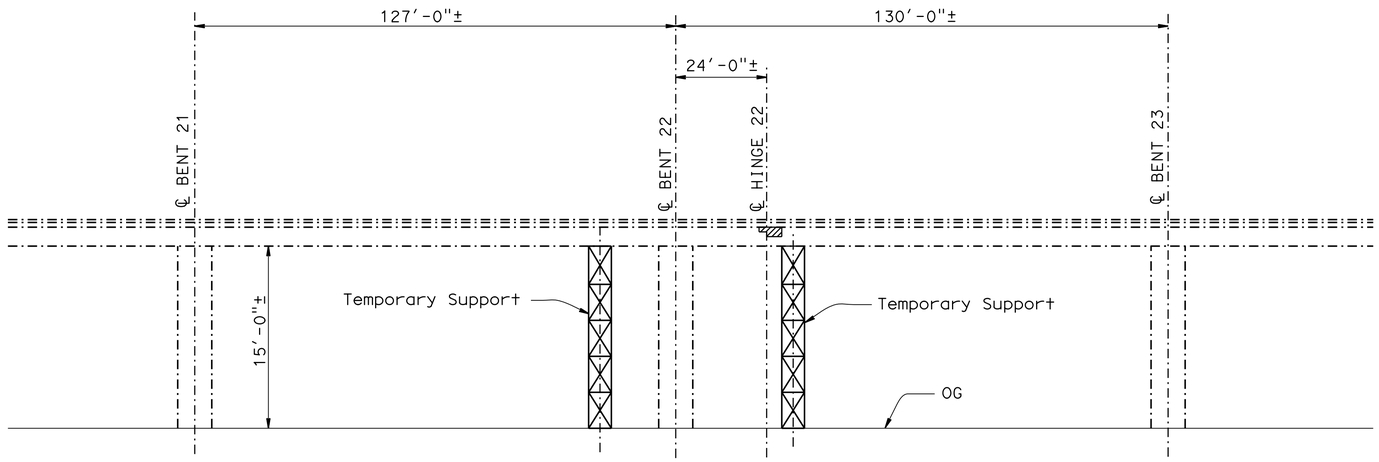

ELEVATION

NO SCALE

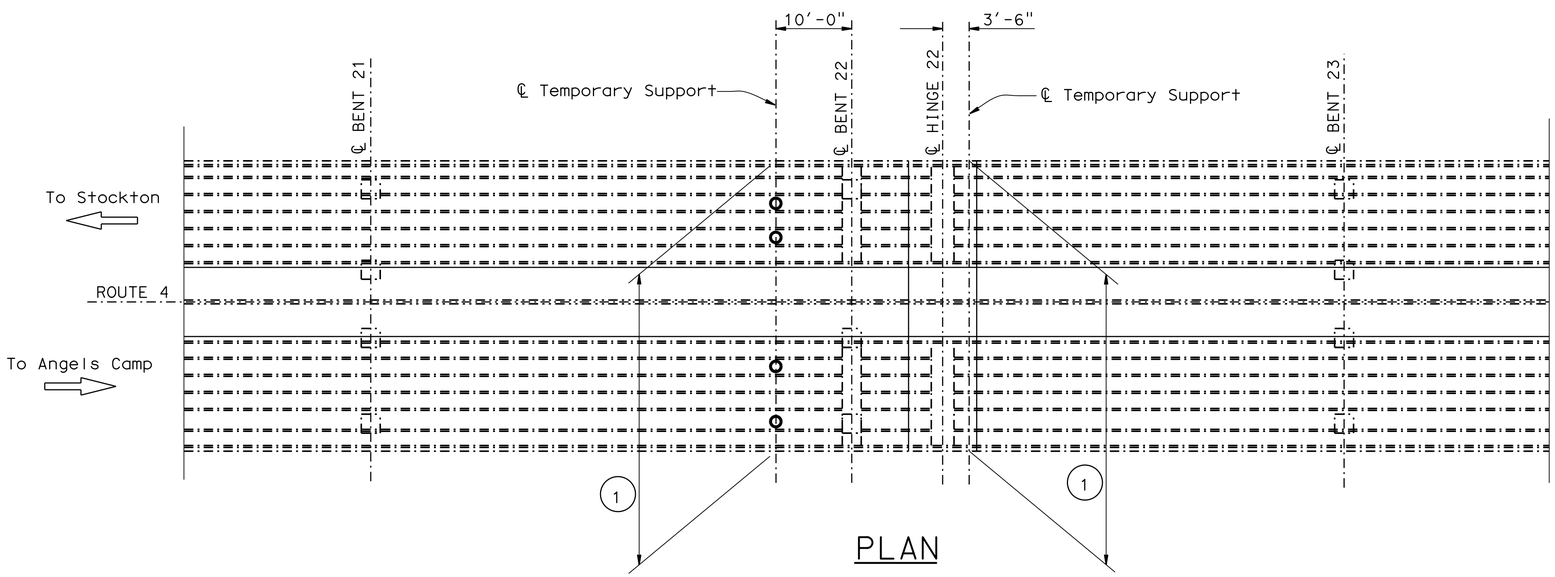

PLAN

BENT 22

NO SCALE

Notes:

-·-·- Indicates existing structure.

Indicates limits of bearing pad replacement work. See "TEMPORARY SUPPORT DETAILS NO. 1" sheet for "TEMPORARY SUPPORT TABLE" and "TEMPORARY SUPPORT NOTES".

Distance between ℄ of hinge and adjacent bents varies for hinges 24, 26, and 29. See "HINGE DETAILS NO. 3, 4 and 5" sheets.

(1) Limits of temporary supports.

o Existing soffits lights to be temporarily removed, stored and re-installed. See District Plans.

NOTE:
VERIFY ALL CONTROLLING FIELD DIMENSIONS BEFORE ORDERING OR FABRICATING ANY MATERIAL.

DESIGN	BY Charles Hutchinson	CHECKED Khanh Truong	
DETAILS	BY Trung Lam	CHECKED Khanh Truong	
QUANTITIES	BY Charles Hutchinson	CHECKED Khanh Truong	

STATE OF CALIFORNIA
DEPARTMENT OF TRANSPORTATION

DIVISION OF MAINTENANCE
STRUCTURE MAINTENANCE DESIGN

BRIDGE NO. 29-0269
POST MILE R16.62

CROSSTOWN FREEWAY VIADUCT

TEMPORARY SUPPORT DETAILS NO. 2

STRUCTURES MAINTENANCE GENERAL PLAN & DETAIL SHEET (ENGLISH) (REV. 10/17/07)

ORIGINAL SCALE IN INCHES FOR REDUCED PLANS 0 1 2 3

UNIT: 3488
PROJECT NUMBER & PHASE: 1014000133 1
CONTRACT NUMBER: 10-1C0901

DISREGARD PRINTS BEARING EARLIER REVISION DATES → 8-22-14 2-06-15 3-04-15 1-23-15

REVISION DATES | SHEET 4 | OF 24

FILE => 10-1c0901_04_temp_supp_dets2.dgn

USERNAME => s120300 DATE PLOTTED => 10-MAR-2015 TIME PLOTTED => 12:08

DIST	COUNTY	ROUTE	POST MILES TOTAL PROJECT	SHEET NO.	TOTAL SHEETS
10	SJ	4	R16.6/R17.4	15	34

Charles R Hutchinson 2-06-15
REGISTERED CIVIL ENGINEER DATE

3-9-15
PLANS APPROVAL DATE

REGISTERED PROFESSIONAL ENGINEER CHARLES R. HUTCHINSON No. C 54226 Exp. 12-31-15 CIVIL STATE OF CALIFORNIA

THE STATE OF CALIFORNIA OR ITS OFFICERS OR AGENTS SHALL NOT BE RESPONSIBLE FOR THE ACCURACY OR COMPLETENESS OF ELECTRONIC COPIES OF THIS PLAN SHEET.

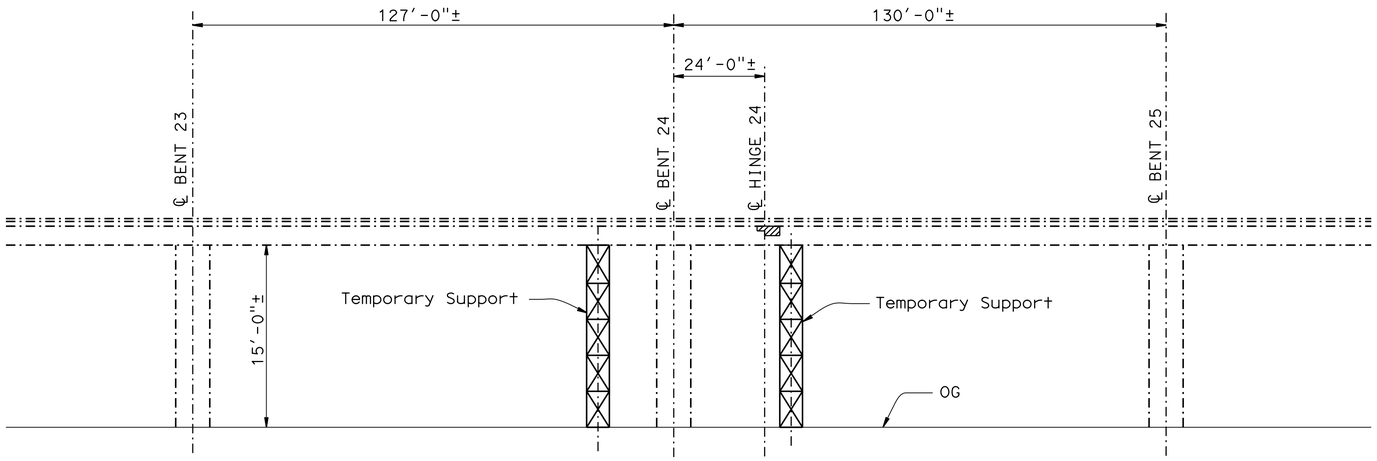

ELEVATION

NO SCALE

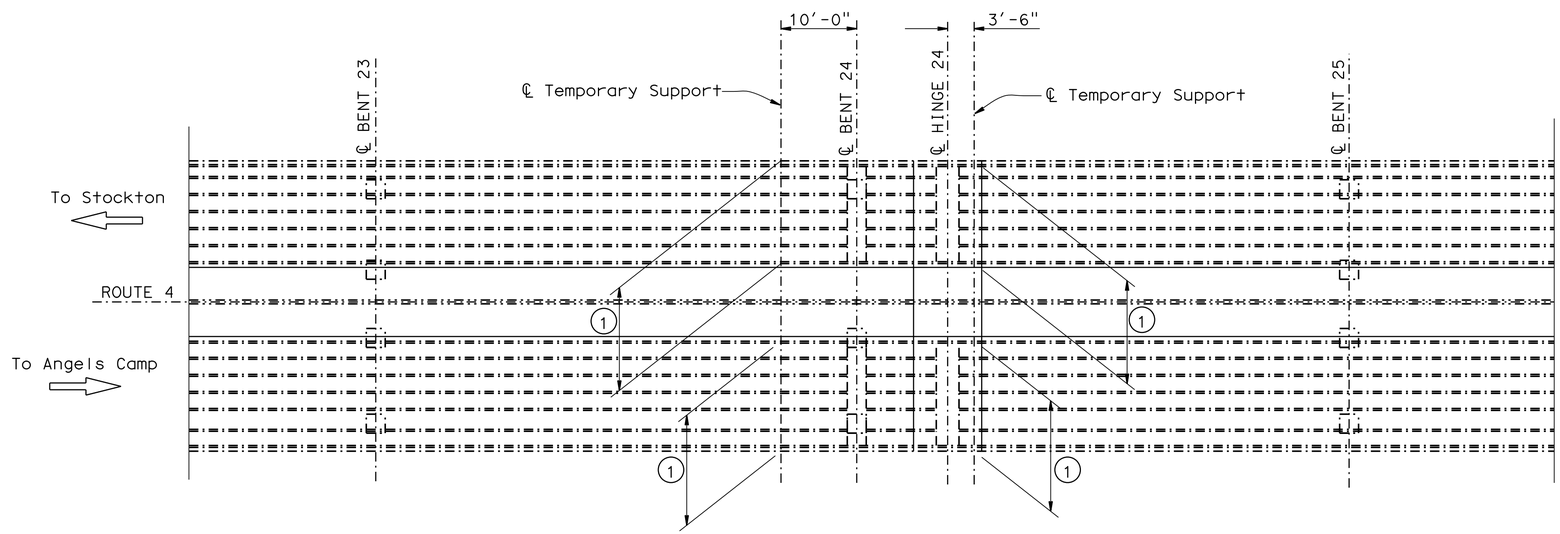

PLAN

BENT 24

NO SCALE

(BENT 24 SHOWN, BENT 26 IS SIMILAR)

Notes:

-·-·-·- Indicates existing structure.

Indicates limits of bearing pad replacement work. See "TEMPORARY SUPPORT DETAILS NO. 1" sheet for "TEMPORARY SUPPORT TABLE" and "TEMPORARY SUPPORT NOTES".

Distance between ℄ of hinge and adjacent bents varies for hinges 24, 26, and 29. See "HINGE DETAILS NO. 3, 4 and 5" sheets.

(1) Limits of temporary supports.

NOTE:
VERIFY ALL CONTROLLING FIELD DIMENSIONS BEFORE ORDERING OR FABRICATING ANY MATERIAL.

	BY	CHECKED
DESIGN	Charles Hutchinson	Khanh Truong
DETAILS	Trung Lam	Khanh Truong
QUANTITIES	Charles Hutchinson	Khanh Truong

STATE OF CALIFORNIA
DEPARTMENT OF TRANSPORTATION

DIVISION OF MAINTENANCE
STRUCTURE MAINTENANCE DESIGN

BRIDGE NO. 29-0269
POST MILE R16.62

CROSSTOWN FREEWAY VIADUCT

TEMPORARY SUPPORT DETAILS NO. 3

STRUCTURES MAINTENANCE GENERAL PLAN & DETAIL SHEET (ENGLISH) (REV. 10/17/07)

ORIGINAL SCALE IN INCHES FOR REDUCED PLANS 0 1 2 3

UNIT: 3488
PROJECT NUMBER & PHASE: 1014000133 1
CONTRACT NUMBER: 10-1C0901

DISREGARD PRINTS BEARING EARLIER REVISION DATES → 3-04-15

REVISION DATES

SHEET 5 OF 24

FILE => 10-1c0901_05_temp_supp_dets3.dgn

USERNAME => s120300 DATE PLOTTED => 10-MAR-2015 TIME PLOTTED => 12:08

DIST	COUNTY	ROUTE	POST MILES TOTAL PROJECT	SHEET NO.	TOTAL SHEETS
10	SJ	4	R16.6/R17.4	16	34

Charles R Hutchinson 2-06-15
REGISTERED CIVIL ENGINEER DATE

3-9-15
PLANS APPROVAL DATE

REGISTERED PROFESSIONAL ENGINEER CHARLES R. HUTCHINSON No. C 54226 Exp. 12-31-15 CIVIL STATE OF CALIFORNIA

THE STATE OF CALIFORNIA OR ITS OFFICERS OR AGENTS SHALL NOT BE RESPONSIBLE FOR THE ACCURACY OR COMPLETENESS OF ELECTRONIC COPIES OF THIS PLAN SHEET.

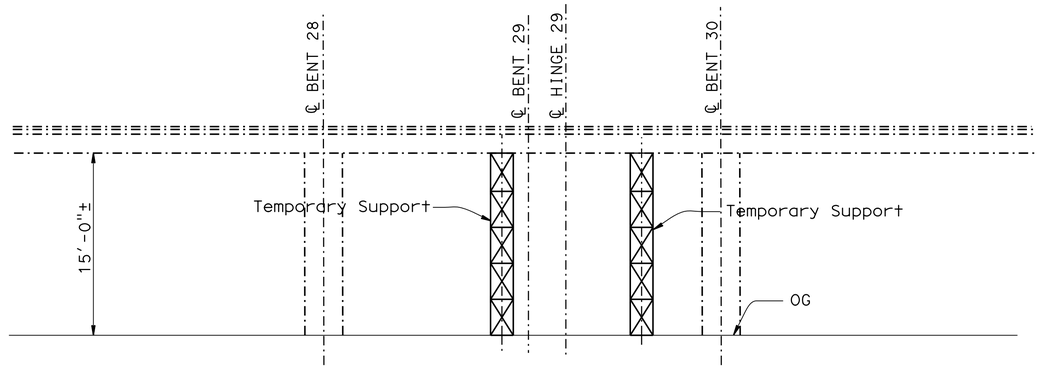

ELEVATION

NO SCALE

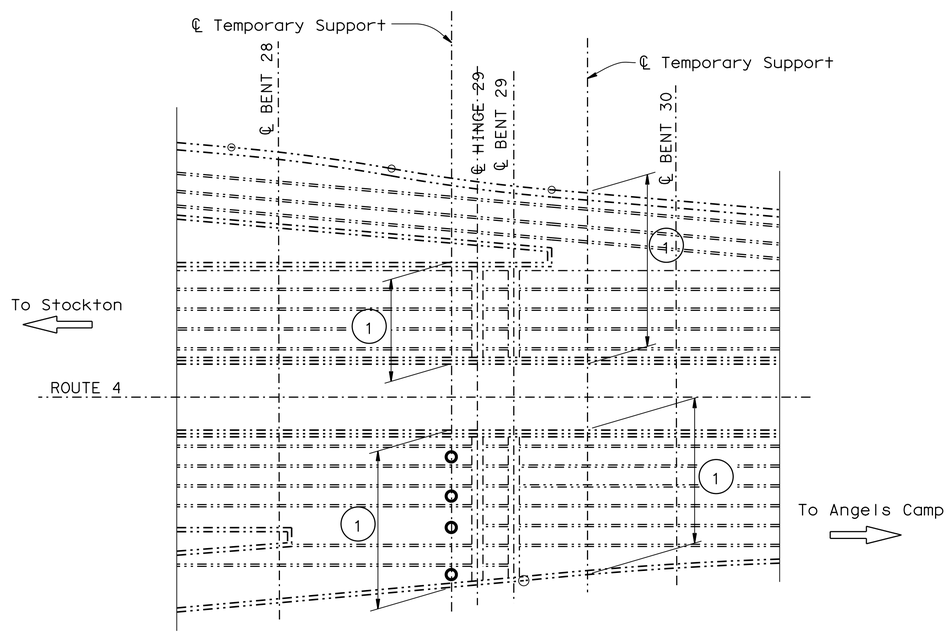

PLAN

BENT 29

NO SCALE

Notes:

-·-·-·- Indicates existing structure.

(1) Limits of temporary supports.

o Existing soffits lights to be temporarily removed, stored and re-installed. See District Plans.

NOTE:
VERIFY ALL CONTROLLING FIELD DIMENSIONS BEFORE ORDERING OR FABRICATING ANY MATERIAL.

DESIGN	BY Charles Hutchinson	CHECKED Khanh Truong	
DETAILS	BY Trung Lam	CHECKED Khanh Truong	
QUANTITIES	BY Charles Hutchinson	CHECKED Khanh Truong	

STATE OF CALIFORNIA
DEPARTMENT OF TRANSPORTATION

DIVISION OF MAINTENANCE
STRUCTURE MAINTENANCE DESIGN

BRIDGE NO. 29-0269
POST MILE R16.62

CROSSTOWN FREEWAY VIADUCT

TEMPORARY SUPPORT DETAILS NO. 4

STRUCTURES MAINTENANCE GENERAL PLAN & DETAIL SHEET (ENGLISH) (REV. 10/17/07)

ORIGINAL SCALE IN INCHES FOR REDUCED PLANS 0 1 2 3

UNIT: 3488
PROJECT NUMBER & PHASE: 1014000133 1 CONTRACT NUMBER: 10-1C0901

DISREGARD PRINTS BEARING EARLIER REVISION DATES → 3-04-15

REVISION DATES | SHEET 6 | OF 24

FILE => 10-1c0901_06_temp_supp_dets4.dgn

USERNAME => s120300 DATE PLOTTED => 10-MAR-2015 TIME PLOTTED => 12:08

DIST	COUNTY	ROUTE	POST MILES TOTAL PROJECT	SHEET NO.	TOTAL SHEETS
10	SJ	4	R16.6/R17.4	17	34

Charles R Hutchinson 2-06-15
REGISTERED CIVIL ENGINEER DATE

3-9-15
PLANS APPROVAL DATE

REGISTERED PROFESSIONAL ENGINEER CHARLES R. HUTCHINSON No. C 54226 Exp. 12-31-15 CIVIL STATE OF CALIFORNIA

THE STATE OF CALIFORNIA OR ITS OFFICERS OR AGENTS SHALL NOT BE RESPONSIBLE FOR THE ACCURACY OR COMPLETENESS OF ELECTRONIC COPIES OF THIS PLAN SHEET.

JOINT SEAL TABLE

BRIDGE NAME	BRIDGE NUMBER	LOCATION		MINIMUM "MR" (inches)	APPROXIMATE LENGTH (feet)	EXISTING WATERSTOP
CROSSTOWN FREEWAY VIADUCT	29-0269	Abut 1	BB	2	216	-
		Hinge 19	H	2½*	163	-
		Hinge 22L	H	2½*	56	-
		Hinge 22R	H	2½*	61	-
		Hinge 24L	H	2	56	-
		Hinge 24R	H	2	56	-
		Hinge 26L	H	1½	56	-
		Hinge 26R	H	1½	56	-
		Hinge 29L	H	2½*	56	-
		Hinge 29R	H	2½*	86	-
		Abut 37L	EB	2	68	-
		Abut 37R	EB	2	68	-
		El Dorado Street Off-ramp	H	2 **	44	-
		Stanislaus Street On-ramp	H	2 **	35	-
		Stanislaus Street Off-ramp	H	2 **	32	-

LEGEND:

BB = Paving notch at beginning of bridge
EB = Paving notch at end of bridge
H = Hinge joint
* = Joint Seal Assembly
** = Replace neopren strip seal gland, (Steelflex Strip Seal A2R-400 gland)

The following notes apply to JOINT SEAL TYPE B:

1) Seal must satisfy both minimum Movement Rating (MR) and minimum W1 requirements.

2) Minimum W1 is the calculated maximum width of the joint based on field measurements. After the joints have been cleaned, minimum W1 is to be calculated by the Engineer.

3) W1 shall be the smaller of the values determined as follows:

   A) 0.85 times the manufacturer's designed minimum uncompressed width of the seal.

   B) The width of the seal on the third successive test cycle of the pressure deflection test, when compressed to an average pressure of 3 psi.

4) Bend Type B joint seal 6" up into curb or rail on the low side of the deck where deck joint matches curb or rail joint.

5) For details not shown see B6-21

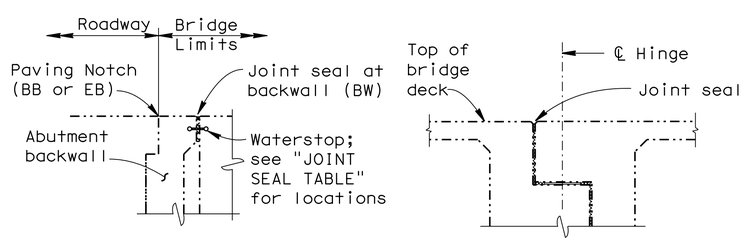

SEAT ABUTMENT HINGE

JOINT SEAL LOCATION

NO SCALE

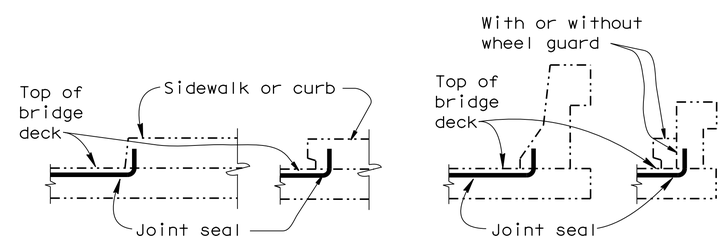

SIDEWALK OR CURB BARRIER RAIL

JOINT SEAL AT LOW SIDE OF DECK

Notes: Details shown for illustration purposes only.

For use only where deck joint matches the sidewalk, curb or barrier rail joint.

NO SCALE

NOTE:
VERIFY ALL CONTROLLING FIELD DIMENSIONS BEFORE ORDERING OR FABRICATING ANY MATERIAL.

	BY	CHECKED
DESIGN	Charles Hutchinson	Khanh Truong
DETAILS	Trung Lam	Khanh Truong
QUANTITIES	Charles Hutchinson	Khanh Truong

STATE OF CALIFORNIA DEPARTMENT OF TRANSPORTATION

DIVISION OF MAINTENANCE STRUCTURE MAINTENANCE DESIGN

BRIDGE NO. 29-0269
POST MILE R16.62

CROSSTOWN FREEWAY VIADUCT

JOINT SEAL DETAILS NO. 1

STRUCTURES MAINTENANCE GENERAL PLAN & DETAIL SHEET (ENGLISH) (REV. 10/17/07)

ORIGINAL SCALE IN INCHES FOR REDUCED PLANS 0 1 2 3

UNIT: 3488
PROJECT NUMBER & PHASE: 1014000133 1
CONTRACT NUMBER: 10-1C0901

DISREGARD PRINTS BEARING EARLIER REVISION DATES → 1-23-15 2-06-15 9-23-14 12-16-14

REVISION DATES

SHEET 7 OF 24

FILE => 10-1c0901_07_joint_seal_dets1.dgn

USERNAME => s120300 DATE PLOTTED => 10-MAR-2015 TIME PLOTTED => 12:08

DIST	COUNTY	ROUTE	POST MILES TOTAL PROJECT	SHEET NO.	TOTAL SHEETS
10	SJ	4	R16.6/R17.4	18	34

Charles R Hutchinson 2-06-15
REGISTERED CIVIL ENGINEER DATE

3-9-15
PLANS APPROVAL DATE

REGISTERED PROFESSIONAL ENGINEER CHARLES R HUTCHINSON No. C 54226 Exp. 12-31-15 CIVIL STATE OF CALIFORNIA

THE STATE OF CALIFORNIA OR ITS OFFICERS OR AGENTS SHALL NOT BE RESPONSIBLE FOR THE ACCURACY OR COMPLETENESS OF ELECTRONIC COPIES OF THIS PLAN SHEET.

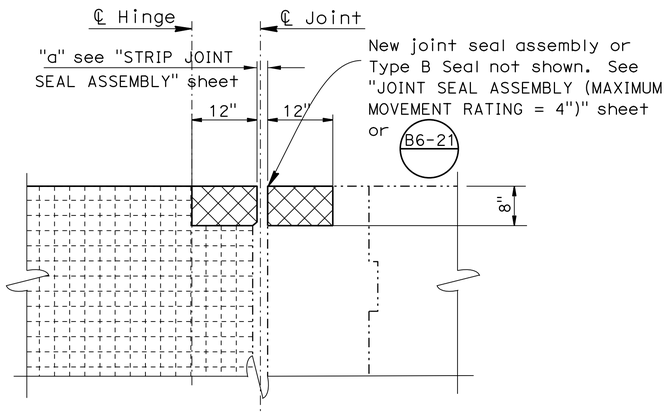

RECONSTRUCTION

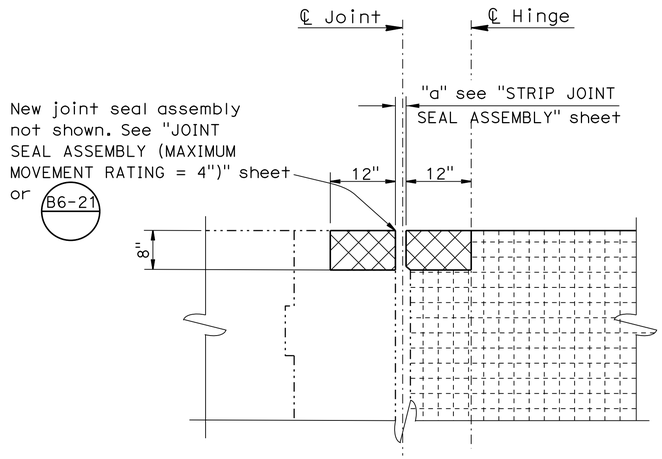

RECONSTRUCTION

Notes:

Indicates existing structure.

Indicates limits of Bridge Removal (Portion) for placement of new bearing pads. For details, see "HINGE DETAILS NO. 5" and "HINGE DETAILS NO. 6" sheets.

Indicates limits of new concrete to match existing concrete after installation of new bearing pads. For details, see "HINGE DETAILS NO. 5" and "HINGE DETAILS NO. 6" sheets.

Indicates limits of Bridge Removal (Portion). Remove concrete and joint seal or joint seal assembly. Retain existing bar reinforcing.

Indicates location of new joint seal or joint seal assembly and placement of portland cement concrete.

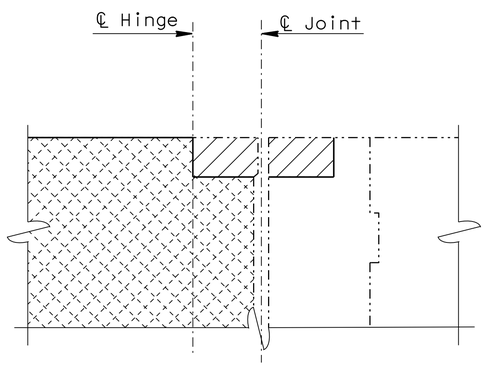

EXISTING

HINGES 19, 22, 24, 26

NO SCALE

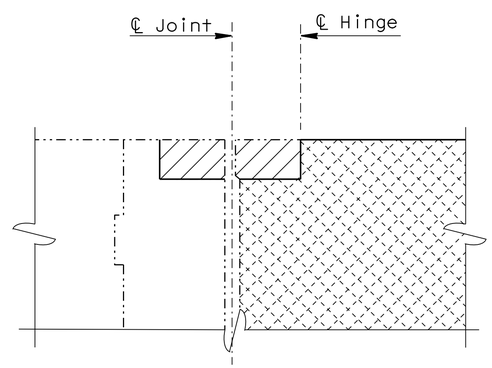

EXISTING

HINGE 29

NO SCALE

NOTE:
VERIFY ALL CONTROLLING FIELD DIMENSIONS BEFORE ORDERING OR FABRICATING ANY MATERIAL.

DESIGN	BY Charles Hutchinson	CHECKED Khanh Truong	
DETAILS	BY Trung Lam	CHECKED Khanh Truong	
QUANTITIES	BY Charles Hutchinson	CHECKED Khanh Truong	

STATE OF CALIFORNIA
DEPARTMENT OF TRANSPORTATION

DIVISION OF MAINTENANCE
STRUCTURE MAINTENANCE DESIGN

BRIDGE NO. 29-0269
POST MILE R16.62

CROSSTOWN FREEWAY VIADUCT
JOINT SEAL DETAILS NO. 2

STRUCTURES MAINTENANCE GENERAL PLAN & DETAIL SHEET (ENGLISH) (REV. 10/17/07)

ORIGINAL SCALE IN INCHES FOR REDUCED PLANS 0 1 2 3

UNIT: 3488
PROJECT NUMBER & PHASE: 1014000133 1
CONTRACT NUMBER: 10-1C0901

DISREGARD PRINTS BEARING EARLIER REVISION DATES
REVISION DATES: 1-23-15 2-06-15 9-23-14 12-04-14

SHEET 8 OF 24

FILE => 10-1c0901_08_joint_seal_dets2.dgn

USERNAME => s120300 DATE PLOTTED => 10-MAR-2015 TIME PLOTTED => 12:08

DIST	COUNTY	ROUTE	POST MILES TOTAL PROJECT	SHEET NO.	TOTAL SHEETS
10	SJ	4	R16.6/R17.4	19	34

Charles R Hutchinson 2-06-15
REGISTERED CIVIL ENGINEER DATE

3-9-15
PLANS APPROVAL DATE

REGISTERED PROFESSIONAL ENGINEER CHARLES R HUTCHINSON No. C 54226 Exp. 12-31-15 CIVIL STATE OF CALIFORNIA

THE STATE OF CALIFORNIA OR ITS OFFICERS OR AGENTS SHALL NOT BE RESPONSIBLE FOR THE ACCURACY OR COMPLETENESS OF ELECTRONIC COPIES OF THIS PLAN SHEET.

NOTE:
VERIFY ALL CONTROLLING FIELD DIMENSIONS BEFORE ORDERING OR FABRICATING ANY MATERIAL.

Notes:

Indicates existing structure.

Indicates limits of Bridge Removal (Portion). Place new concrete and barriers after placement of new bearing pads. For details, see "HINGE DETAILS NO. 5" sheet.

Match existing precast concrete surface texture on outside face of concrete barrier Type 25 MOD.

Deck tining along longitudinal axis of structure.

Protect existing conduit in barrier rails.

☆ Remove concrete barrier and place temporary barrier to facilitate joint seal assembly and bearing pad installation. See "BARRIER DETAILS" sheet.

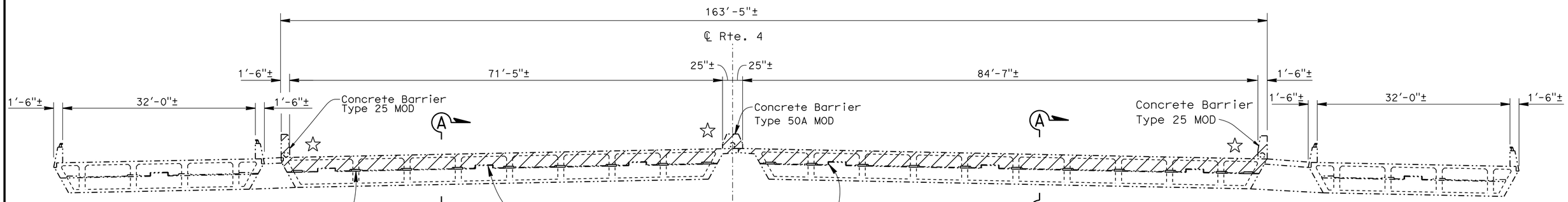

Note: For Section A-A, see "HINGE DETAILS NO. 5" sheet.

HINGE 19 SECTION

NO SCALE

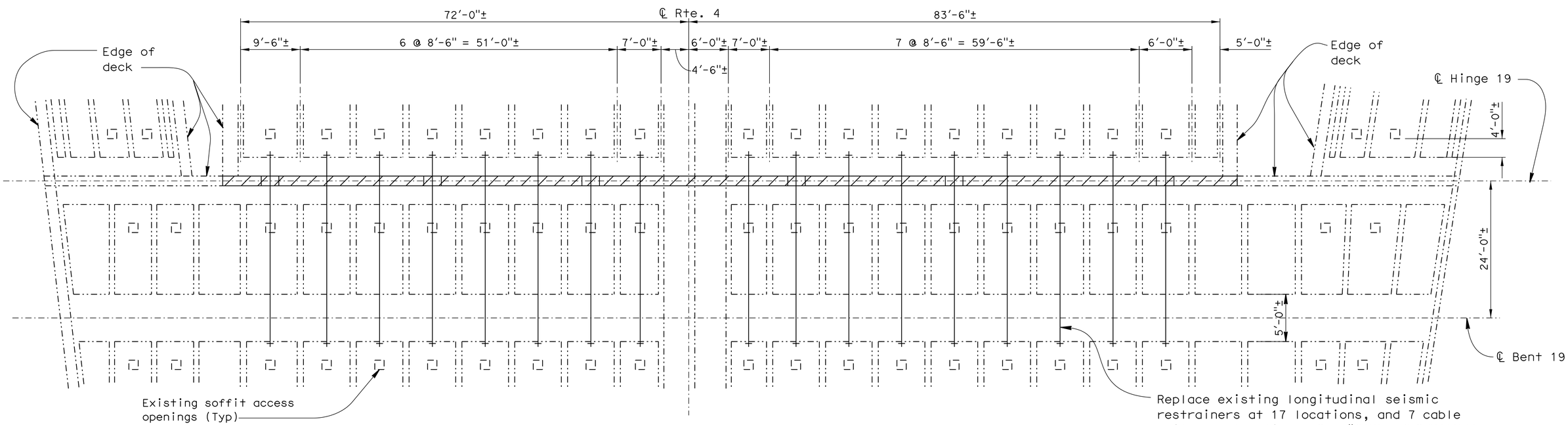

GIRDER LAYOUT AT HINGE 19

NO SCALE

DESIGN	BY Charles Hutchinson	CHECKED Khanh Truong	
DETAILS	BY Trung Lam	CHECKED Khanh Truong	
QUANTITIES	BY Charles Hutchinson	CHECKED Khanh Truong	

STATE OF CALIFORNIA
DEPARTMENT OF TRANSPORTATION

DIVISION OF MAINTENANCE
STRUCTURE MAINTENANCE DESIGN

BRIDGE NO. 29-0269
POST MILE R16.62

CROSSTOWN FREEWAY VIADUCT

HINGE DETAILS NO. 1

STRUCTURES MAINTENANCE GENERAL PLAN & DETAIL SHEET (ENGLISH) (REV. 10/17/07)

ORIGINAL SCALE IN INCHES FOR REDUCED PLANS 0 1 2 3

UNIT: 3488
PROJECT NUMBER & PHASE: 1014000133 1
CONTRACT NUMBER: 10-1C0901

DISREGARD PRINTS BEARING EARLIER REVISION DATES

REVISION DATES: 1-30-15 2-06-15 12-16-14 1-23-15

SHEET 9 OF 24

FILE => 10-1c0901_09_hinge_dets1.dgn

USERNAME => s120300 DATE PLOTTED => 10-MAR-2015 TIME PLOTTED => 12:08

DIST	COUNTY	ROUTE	POST MILES TOTAL PROJECT	SHEET NO.	TOTAL SHEETS
10	SJ	4	R16.6/R17.4	20	34

Charles R Hutchinson 2-06-15
REGISTERED CIVIL ENGINEER DATE

3-9-15
PLANS APPROVAL DATE

REGISTERED PROFESSIONAL ENGINEER CHARLES R. HUTCHINSON No. C 54226 Exp. 12-31-15 CIVIL STATE OF CALIFORNIA

THE STATE OF CALIFORNIA OR ITS OFFICERS OR AGENTS SHALL NOT BE RESPONSIBLE FOR THE ACCURACY OR COMPLETENESS OF ELECTRONIC COPIES OF THIS PLAN SHEET.

Notes:

Indicates existing structure.

Indicates limits of Bridge Removal (Portion). Place new concrete and barriers after placement of new bearing pads. For details, see "HINGE DETAILS NO. 6" sheet.

Match existing precast concrete surface texture on outside face of concrete barrier Type 25 MOD.

Deck tining along longitudinal axis of structure.

Protect existing conduit in barrier rails.

Remove concrete barrier and place temporary barrier to facilitate joint seal assembly and bearing pad installation. See "BARRIER DETAILS" sheet.

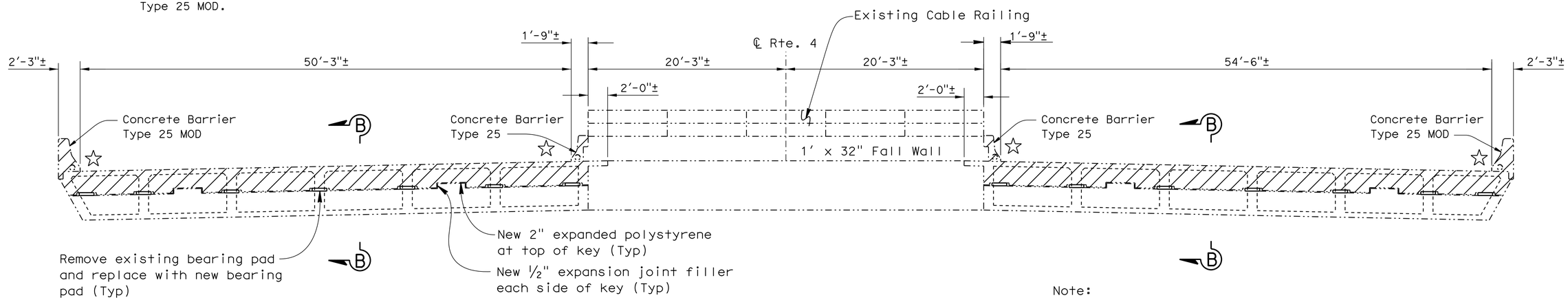

HINGE 22 SECTION

NO SCALE

Note:

For Section B-B, see "HINGE DETAILS NO. 6" sheet.

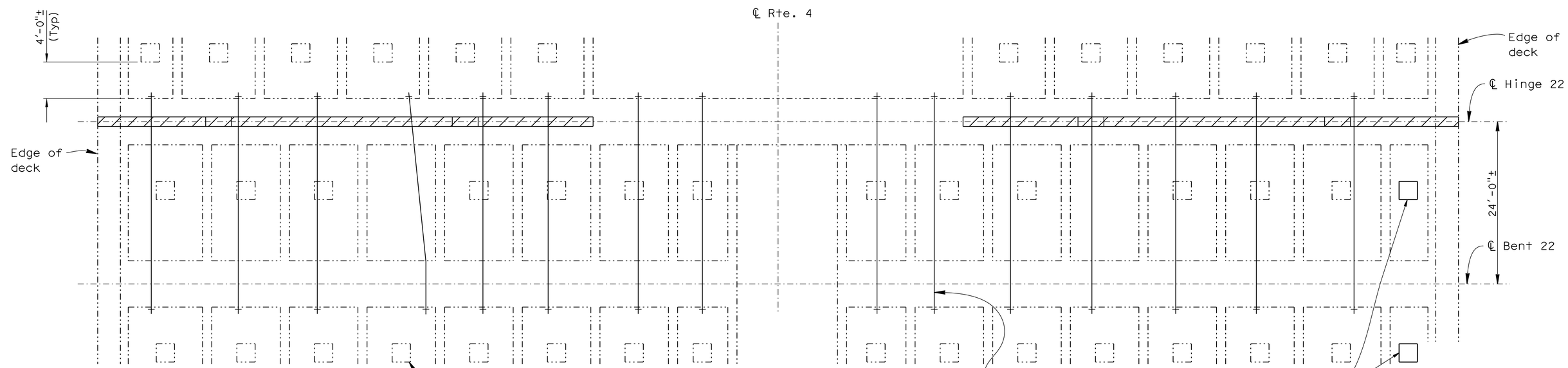

NOTE:
VERIFY ALL CONTROLLING FIELD DIMENSIONS BEFORE ORDERING OR FABRICATING ANY MATERIAL.

GIRDER LAYOUT AT HINGE 22

NO SCALE

DESIGN	BY Charles Hutchinson	CHECKED Khanh Truong	
DETAILS	BY Trung Lam	CHECKED Khanh Truong	
QUANTITIES	BY Charles Hutchinson	CHECKED Khanh Truong	

STATE OF CALIFORNIA
DEPARTMENT OF TRANSPORTATION

DIVISION OF MAINTENANCE
STRUCTURE MAINTENANCE DESIGN

BRIDGE NO. 29-0269
POST MILE R16.62

CROSSTOWN FREEWAY VIADUCT

HINGE DETAILS NO. 2

STRUCTURES MAINTENANCE GENERAL PLAN & DETAIL SHEET (ENGLISH) (REV. 10/17/07)

ORIGINAL SCALE IN INCHES FOR REDUCED PLANS 0 1 2 3

UNIT: 3488
PROJECT NUMBER & PHASE: 1014000133 1
CONTRACT NUMBER: 10-1C0901

DISREGARD PRINTS BEARING EARLIER REVISION DATES → REVISION DATES ~~1-23-15~~ ~~1-30-15~~ 2-06-15 ~~12-16-14~~

SHEET 10 OF 24

FILE => 10-1c0901_10_hinge_dets2.dgn

USERNAME => s120300 DATE PLOTTED => 10-MAR-2015 TIME PLOTTED => 12:08

DIST	COUNTY	ROUTE	POST MILES TOTAL PROJECT	SHEET NO.	TOTAL SHEETS
10	SJ	4	R16.6/R17.4	21	34

Charles R Hutchinson 2-06-15
REGISTERED CIVIL ENGINEER DATE

3-9-15
PLANS APPROVAL DATE

REGISTERED PROFESSIONAL ENGINEER CHARLES R. HUTCHINSON No. C 54226 Exp. 12-31-15 CIVIL STATE OF CALIFORNIA

THE STATE OF CALIFORNIA OR ITS OFFICERS OR AGENTS SHALL NOT BE RESPONSIBLE FOR THE ACCURACY OR COMPLETENESS OF ELECTRONIC COPIES OF THIS PLAN SHEET.

Indicates existing structure.

Indicates limits of Bridge Removal (Portion). Place new concrete and barriers after placement of new bearing pads. For details, see "HINGE DETAILS NO. 6" sheet.

Match existing precast concrete surface texture on outside face of concrete barrier Type 25 MOD.

Deck tining along longitudinal axis of structure.

Protect existing conduit in barrier rails.

Remove concrete barrier and place temporary barrier to facilitate joint seal assembly and bearing pad installation. See "BARRIER DETAILS" sheet.

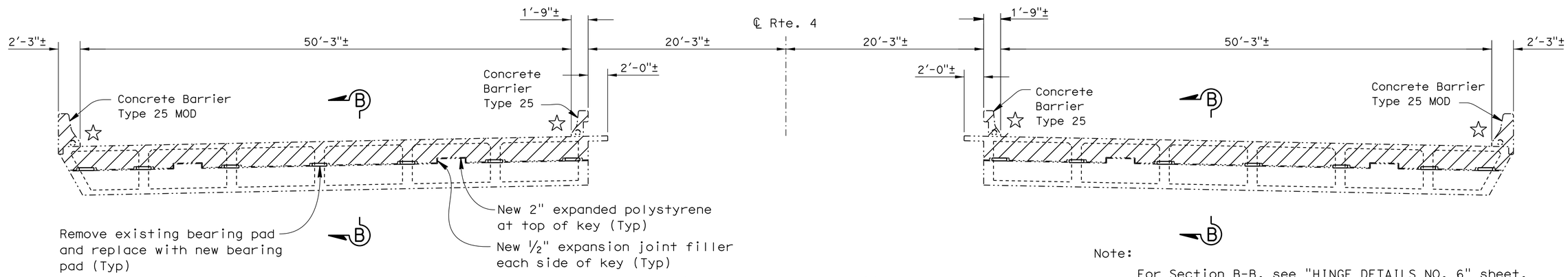

HINGE 24 & 26 SECTION

NO SCALE

Note:

For Section B-B, see "HINGE DETAILS NO. 6" sheet.

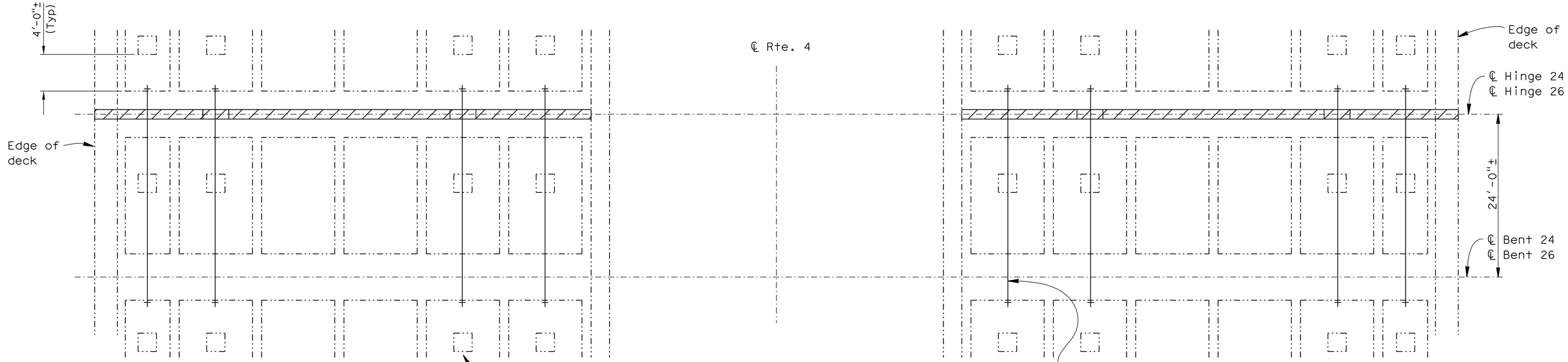

NOTE:
VERIFY ALL CONTROLLING FIELD DIMENSIONS BEFORE ORDERING OR FABRICATING ANY MATERIAL.

GIRDER LAYOUT AT HINGE 24 & 26

NO SCALE

DESIGN	BY Charles Hutchinson	CHECKED Khanh Truong	
DETAILS	BY Trung Lam	CHECKED Khanh Truong	
QUANTITIES	BY Charles Hutchinson	CHECKED Khanh Truong	

STATE OF CALIFORNIA
DEPARTMENT OF TRANSPORTATION

DIVISION OF MAINTENANCE
STRUCTURE MAINTENANCE DESIGN

BRIDGE NO. 29-0269
POST MILE R16.62

CROSSTOWN FREEWAY VIADUCT

HINGE DETAILS NO. 3

STRUCTURES MAINTENANCE GENERAL PLAN & DETAIL SHEET (ENGLISH) (REV. 10/17/07)

ORIGINAL SCALE IN INCHES FOR REDUCED PLANS 0 1 2 3

UNIT: 3488
PROJECT NUMBER & PHASE: 1014000133 1
CONTRACT NUMBER: 10-1C0901

DISREGARD PRINTS BEARING EARLIER REVISION DATES

REVISION DATES: 1-23-15 1-30-15 2-06-15 12-18-14

SHEET 11 OF 24

FILE => 10-1c0901_11_hinge_dets3.dgn

USERNAME => s120300 DATE PLOTTED => 10-MAR-2015 TIME PLOTTED => 12:08

DIST	COUNTY	ROUTE	POST MILES TOTAL PROJECT	SHEET NO.	TOTAL SHEETS
10	SJ	4	R16.6/R17.4	22	34

Charles R Hutchinson 2-06-15
REGISTERED CIVIL ENGINEER DATE

3-9-15
PLANS APPROVAL DATE

REGISTERED PROFESSIONAL ENGINEER CHARLES R. HUTCHINSON No. C 54226 Exp. 12-31-15 CIVIL STATE OF CALIFORNIA

THE STATE OF CALIFORNIA OR ITS OFFICERS OR AGENTS SHALL NOT BE RESPONSIBLE FOR THE ACCURACY OR COMPLETENESS OF ELECTRONIC COPIES OF THIS PLAN SHEET.

Notes:

Indicates existing structure.

Indicates limits of Bridge Removal (Portion). Place new concrete and barriers after placement of new bearing pads. For details, see "HINGE DETAILS NO. 6" sheet.

Match existing precast concrete surface texture on outside face of concrete barrier Type 25 MOD.

Deck tining along longitudinal axis of structure.

Protect existing conduit in barrier rails.

Remove concrete barrier and place temporary barrier to facilitate joint seal assembly and bearing pad installation. See "BARRIER DETAILS" sheet.

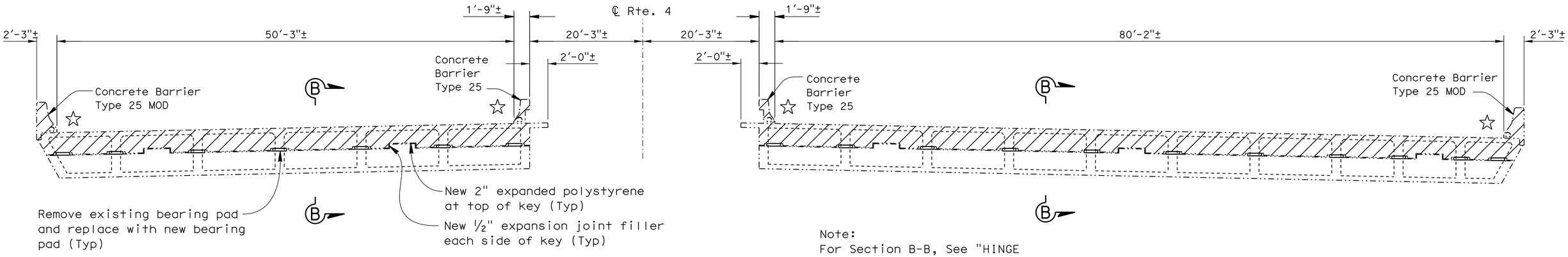

HINGE 29 SECTION

NO SCALE

Note:
For Section B-B, See "HINGE DETAILS NO. 6" sheet.

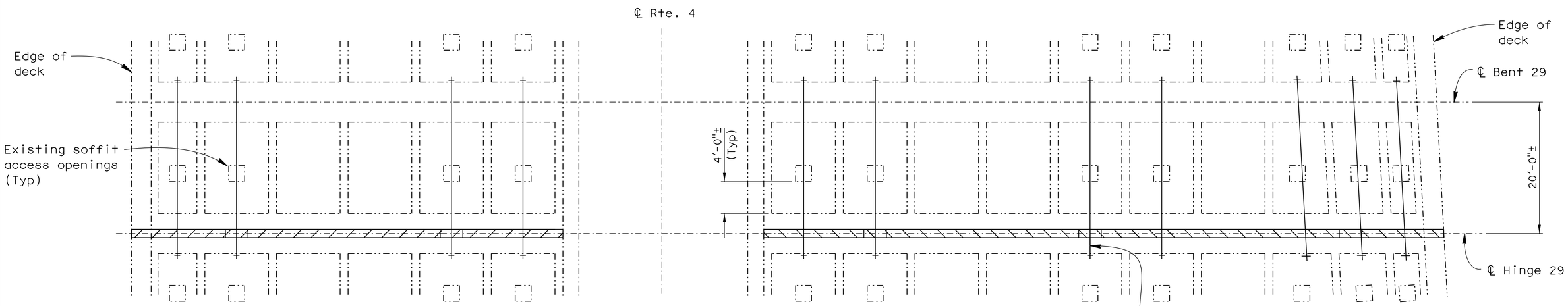

NOTE:
VERIFY ALL CONTROLLING FIELD DIMENSIONS BEFORE ORDERING OR FABRICATING ANY MATERIAL.

GIRDER LAYOUT AT HINGE 29

NO SCALE

	BY	CHECKED
DESIGN	Charles Hutchinson	Khanh Truong
DETAILS	Trung Lam	Khanh Truong
QUANTITIES	Charles Hutchinson	Khanh Truong

STATE OF CALIFORNIA
DEPARTMENT OF TRANSPORTATION

DIVISION OF MAINTENANCE
STRUCTURE MAINTENANCE DESIGN

BRIDGE NO. 29-0269
POST MILE R16.62

CROSSTOWN FREEWAY VIADUCT

HINGE DETAILS NO. 4

STRUCTURES MAINTENANCE GENERAL PLAN & DETAIL SHEET (ENGLISH) (REV. 10/17/07)

ORIGINAL SCALE IN INCHES FOR REDUCED PLANS 0 1 2 3

UNIT: 3488
PROJECT NUMBER & PHASE: 1014000133 1
CONTRACT NUMBER: 10-1C0901

DISREGARD PRINTS BEARING EARLIER REVISION DATES

REVISION DATES: 1-23-15 1-30-15 2-06-15 12-16-14

SHEET 12 OF 24

FILE => 10-1c0901_12_hinge_dets4.dgn

USERNAME => s120300 DATE PLOTTED => 10-MAR-2015 TIME PLOTTED => 12:08

DIST	COUNTY	ROUTE	POST MILES TOTAL PROJECT	SHEET NO.	TOTAL SHEETS
10	SJ	4	R16.6/R17.4	23	34

Charles R Hutchinson 2-06-15
REGISTERED CIVIL ENGINEER DATE

3-9-15
PLANS APPROVAL DATE

REGISTERED PROFESSIONAL ENGINEER CHARLES R HUTCHINSON No. C 54226 Exp. 12-31-15 CIVIL STATE OF CALIFORNIA

THE STATE OF CALIFORNIA OR ITS OFFICERS OR AGENTS SHALL NOT BE RESPONSIBLE FOR THE ACCURACY OR COMPLETENESS OF ELECTRONIC COPIES OF THIS PLAN SHEET.

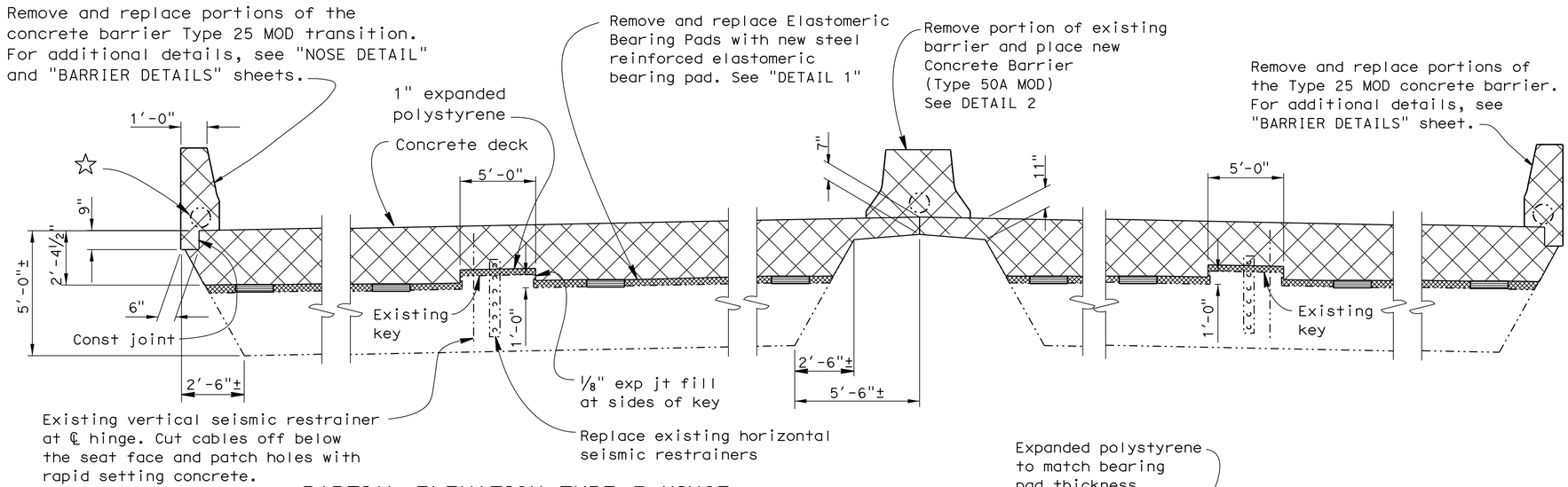

PARTIAL ELEVATION TYPE 3 HINGE ✳

(HINGE 19)

NO SCALE

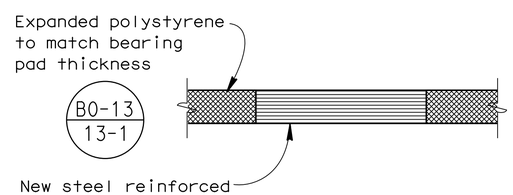

DETAIL 1

NO SCALE

For bearing pad size, see "BEARING PAD TABLE" on "BARRIER DETAILS" sheet.

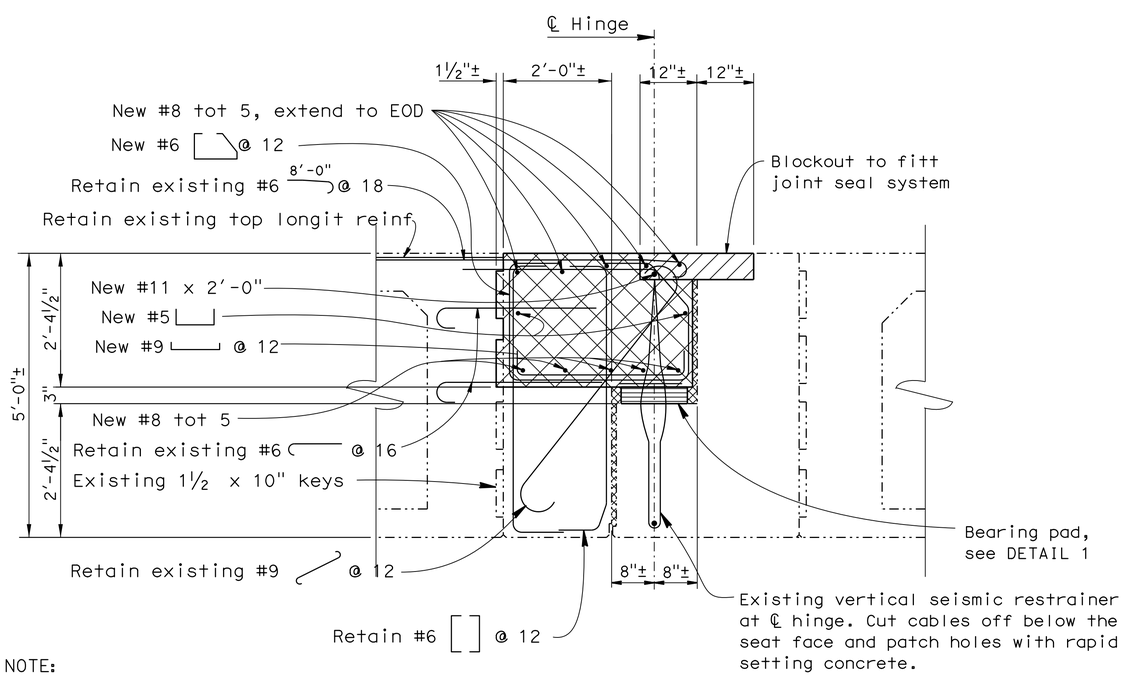

SECTION A-A

¾" = 1'-0"

Reconstruct equalization bolts not shown for clarity of detail. For details, see "MISCELLANEOUS DETAILS" sheet.

NOTE:
VERIFY ALL CONTROLLING FIELD DIMENSIONS BEFORE ORDERING OR FABRICATING ANY MATERIAL.

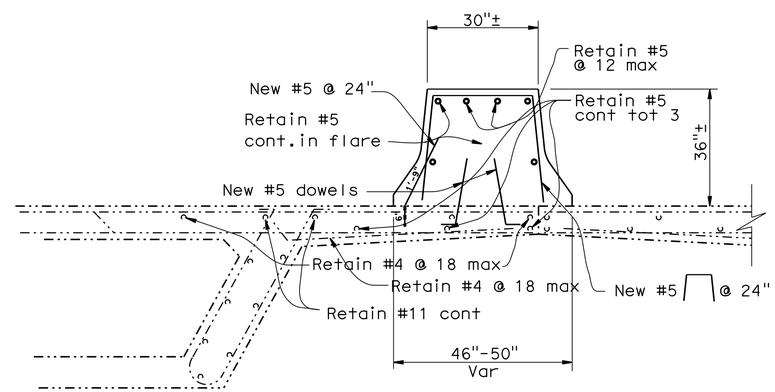

DETAIL 2

NO SCALE

Notes:

-·-·-·- Indicates existing structure.

Indicates limits of Bridge Removal (Portion). Remove concrete hinge and barrier rail for placement of new bearing pads. Place new concrete to match existing concrete after installation of new bearing pads. Roughen new concrete to ¼" amplitude on horizontal surfaces and 1½" on vertical surfaces.

Indicates Bridge Removal (Portion). Remove existing concrete and joint seal system. See "JOINT SEAL DETAILS NO. 2" sheet.

Indicates location of elastomeric bearing pads to be replaced with new steel reinforced elastomeric pad.

Indicates remove existing expanded polystyrene and place new expanded polystyrene (typ).

Retain all existing reinforcing steel which remains bonded to concrete and protect existing conduits.

Completely unbonded reinforcing steel shall be removed and replaced.

For Temporary Support information, see "TEMPORARY SUPPORT DETAILS NO. 1 & 2" sheets.

☆ Match existing precast concrete surface texture panel on new barriers.

For temporary barrier at hinge, see "BARRIER DETAILS" sheet.

For shear key details, see "MISCELLANEOUS DETAILS" sheet.

(·) Protect existing conduit in barrier rails.

✳ See "HINGE DETAILS NO. 1" sheet.

DESIGN	BY Charles Hutchinson	CHECKED Khanh Truong	
DETAILS	BY Trung Lam	CHECKED Khanh Truong	
QUANTITIES	BY Charles Hutchinson	CHECKED Khanh Truong	

STATE OF CALIFORNIA
DEPARTMENT OF TRANSPORTATION

DIVISION OF MAINTENANCE
STRUCTURE MAINTENANCE DESIGN

BRIDGE NO. 29-0269
POST MILE R16.62

CROSSTOWN FREEWAY VIADUCT

HINGE DETAILS NO. 5

STRUCTURES MAINTENANCE GENERAL PLAN & DETAIL SHEET (ENGLISH) (REV. 10/17/07)

ORIGINAL SCALE IN INCHES FOR REDUCED PLANS 0 1 2 3

UNIT: 3488
PROJECT NUMBER & PHASE: 1014000133 1
CONTRACT NUMBER: 10-1C0901

DISREGARD PRINTS BEARING EARLIER REVISION DATES

REVISION DATES: 1-23-15 2-06-15 2-23-15 12-18-14

SHEET 13 OF 24

FILE => 10-1c0901_13_hinge_dets5.dgn

USERNAME => s120300 DATE PLOTTED => 10-MAR-2015 TIME PLOTTED => 12:08

DIST	COUNTY	ROUTE	POST MILES TOTAL PROJECT	SHEET NO.	TOTAL SHEETS
10	SJ	4	R16.6/R17.4	24	34

Charles R Hutchinson 2-06-15
REGISTERED CIVIL ENGINEER DATE

3-9-15
PLANS APPROVAL DATE

REGISTERED PROFESSIONAL ENGINEER CHARLES R. HUTCHINSON No. C 54226 Exp. 12-31-15 CIVIL STATE OF CALIFORNIA

THE STATE OF CALIFORNIA OR ITS OFFICERS OR AGENTS SHALL NOT BE RESPONSIBLE FOR THE ACCURACY OR COMPLETENESS OF ELECTRONIC COPIES OF THIS PLAN SHEET.

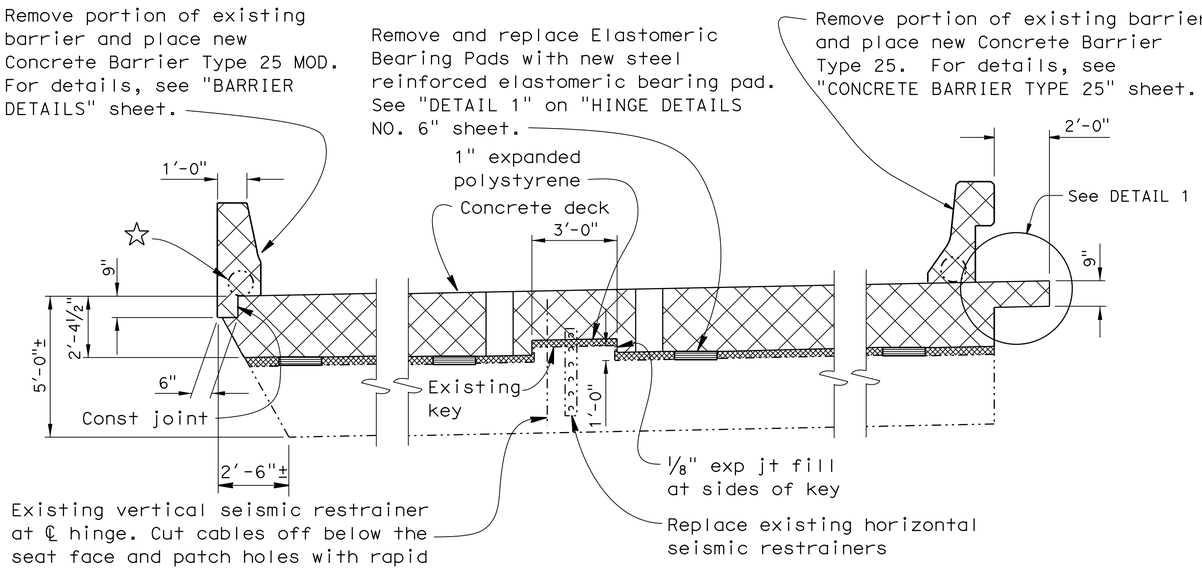

PARTIAL ELEVATION TYPE 1 HINGE ✳

(HINGES 22, 24, 26, & 29)

NO SCALE

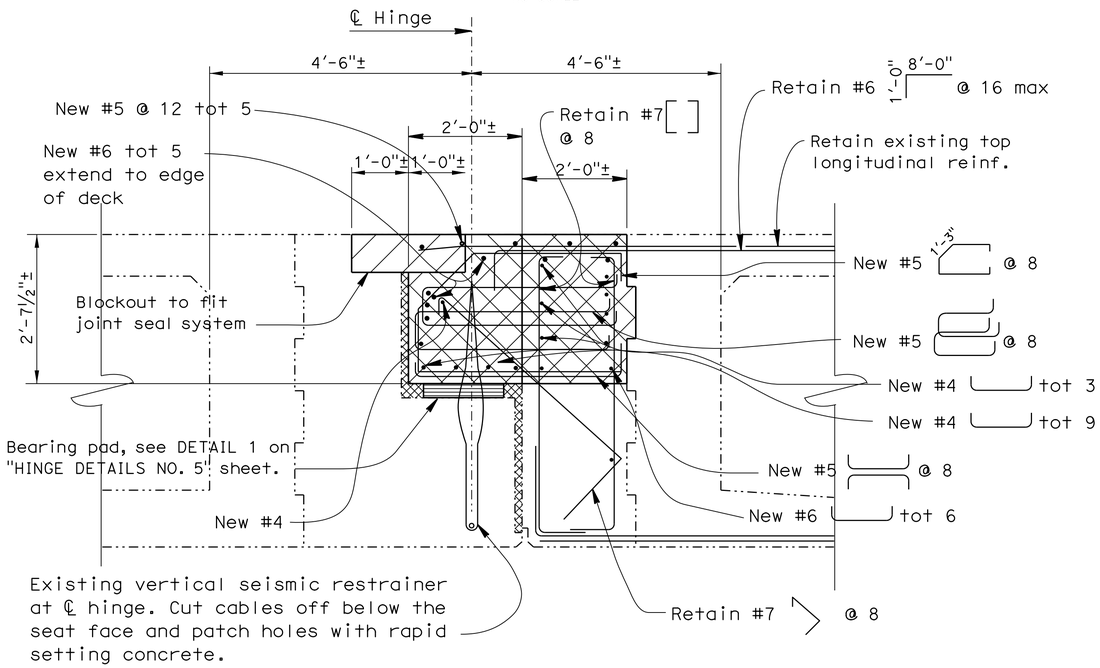

SECTION B-B

¾" = 1'-0"

Reconstruct equalization bolts not shown for clarity of detail. For details, see "MISCELLANEOUS DETAILS" sheet.

NOTE:
VERIFY ALL CONTROLLING FIELD DIMENSIONS BEFORE ORDERING OR FABRICATING ANY MATERIAL.

JACKING NOTES:

1. Jacking operation shall not exceed the maximum upward deflection of ¼".
2. The jacking force shall be applied to all jacks simultaneously across the entire width of the superstructure. The total vertical lift shall be enough to release existing bearing pads and install new bearing pads, but no greater than ¼" above final grade. The differential lift between jacks shall not exceed ⅛".
3. Vertical deflection shall be maintained during repair operations.
4. Jacking load to be placed 3' from ℄ Hinge. The temporary support shall be jacked to provide a snug fit with the bridge girders.

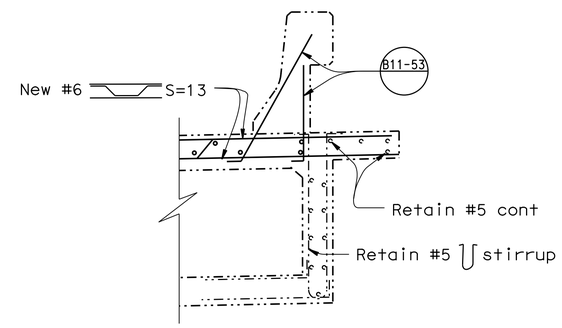

DETAIL 1

NO SCALE

GENERAL NOTES
LOAD FACTOR DESIGN

DESIGN:	BRIDGE DESIGN SPECIFICATIONS (1983 AASHTO with Interims and Revisions by CALTRANS)
LIVE LOADING:	HS20-44 and Alternative.
REINFORCED CONCRETE:	fy = 60,000 psi f'c = 3,600 psi n = 9
	Transverse Deck Slab (Working Stress Design)
	fs = 20,000 psi fc = 1,200 psi n = 8

Notes:

-·-·-·- Indicates existing structure.

Indicates limits of Bridge Removal (Portion). Remove concrete hinge and barrier rail for placement of new bearing pads. Place new concrete to match existing concrete after installation of new bearing pads. Roughen new concrete to ¼" amplitude on horizontal surfaces and 1½" on vertical surfaces.

Indicates bridge removal (Portion). Remove existing concrete and joint seal system. See "JOINT SEAL DETAILS NO. 2" sheet.

Indicates location of elastomeric bearing pads to be replaced with new steel reinforced elastomeric pad.

Indicates remove existing expanded polystyrene and place new expanded polystyrene (typ).

Retain all existing reinforcing steel which remains bonded to concrete and protect existing conduit.

Completely unbonded reinforcing steel shall be removed and replaced.

For temporary support information, see "TEMPORARY SUPPORT DETAILS NO. 1 & 2" sheets.

☆ Match existing precast concrete surface texture panel on new barriers.

For temporary barrier at hinge, see "BARRIER DETAILS" sheet.

For shear key details, see "MISCELLANEOUS DETAILS" sheet.

Protect existing conduit in barrier rails.

✳ See "HINGE DETAILS NO. 2, 3 and 4" sheets.

DESIGN	BY Charles Hutchinson	CHECKED Khanh Truong	
DETAILS	BY Trung Lam	CHECKED Khanh Truong	
QUANTITIES	BY Charles Hutchinson	CHECKED Khanh Truong	

STATE OF CALIFORNIA DEPARTMENT OF TRANSPORTATION

DIVISION OF MAINTENANCE
STRUCTURE MAINTENANCE DESIGN

BRIDGE NO. 29-0269
POST MILE R16.62

CROSSTOWN FREEWAY VIADUCT
HINGE DETAILS NO. 6

STRUCTURES MAINTENANCE GENERAL PLAN & DETAIL SHEET (ENGLISH) (REV. 10/17/07)

ORIGINAL SCALE IN INCHES FOR REDUCED PLANS 0 1 2 3

UNIT: 3488
PROJECT NUMBER & PHASE: 1014000133 1
CONTRACT NUMBER: 10-1C0901

DISREGARD PRINTS BEARING EARLIER REVISION DATES
REVISION DATES: 1-23-15 1-30-15 2-06-15 2-23-15

SHEET 14 OF 24

FILE => 10-1c0901_14_hinge_dets6.dgn

USERNAME => s120300 DATE PLOTTED => 10-MAR-2015 TIME PLOTTED => 12:09

DIST	COUNTY	ROUTE	POST MILES TOTAL PROJECT	SHEET NO.	TOTAL SHEETS
10	SJ	4	R16.6/R17.4	25	34

Charles R Hutchinson 2-06-15
REGISTERED CIVIL ENGINEER DATE

3-9-15
PLANS APPROVAL DATE

REGISTERED PROFESSIONAL ENGINEER CHARLES R. HUTCHINSON No. C 54226 Exp. 12-31-15 CIVIL STATE OF CALIFORNIA

THE STATE OF CALIFORNIA OR ITS OFFICERS OR AGENTS SHALL NOT BE RESPONSIBLE FOR THE ACCURACY OR COMPLETENESS OF ELECTRONIC COPIES OF THIS PLAN SHEET.

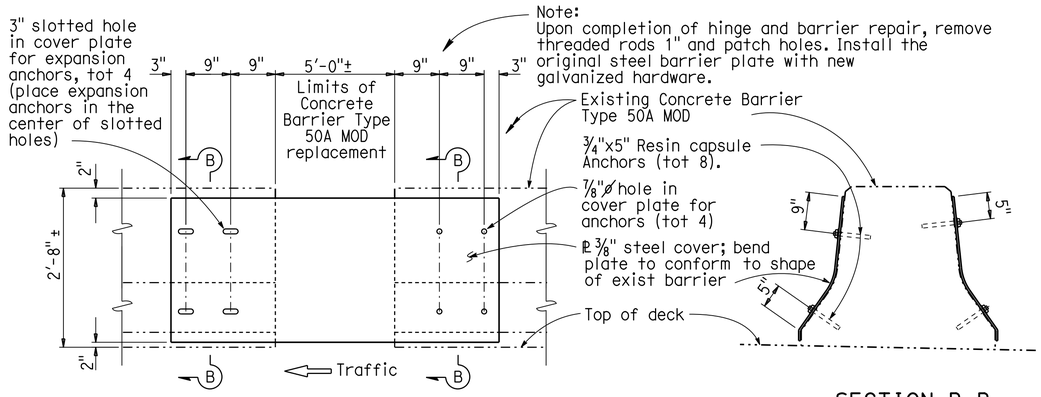

ELEVATION

SECTION B-B

TYPE 50A MOD TEMPORARY BARRIER AT HINGE 19

NO SCALE

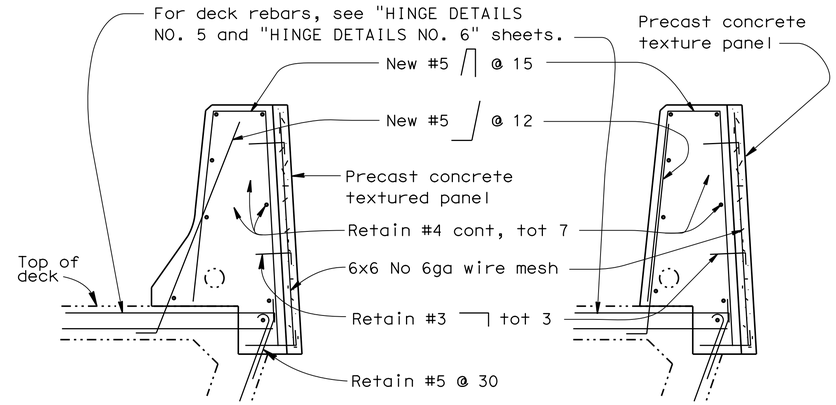

TYPE 25 MOD AND TRANSITION BARRIER DETAIL

NO SCALE

Notes:

-·-·-·- Indicates existing structure.

Installation of Temporary Barrier will be at Hinges 19, 22, 24, 26, and 29.

Existing conduit.

For Hinge 19 (left), heat-bend temporary plate to snug fit to face of barrier.

BEARING PAD TABLE		
LOCATION	No. of Bearing Pads	Size
Hinge 19	20	20 x 12 x 3
Hinge 22L	7	18 x 14 x 3
Hinge 22R	7	18 x 14 x 3
Hinge 24L	7	20 x 14 x 3½
Hinge 24R	7	20 x 14 x 3½
Hinge 26L	7	20 x 14 x 3½
Hinge 26R	7	20 x 14 x 3½
Hinge 29L	7	20 x 14 x 3½
Hinge 29R	11	20 x 14 x 3½

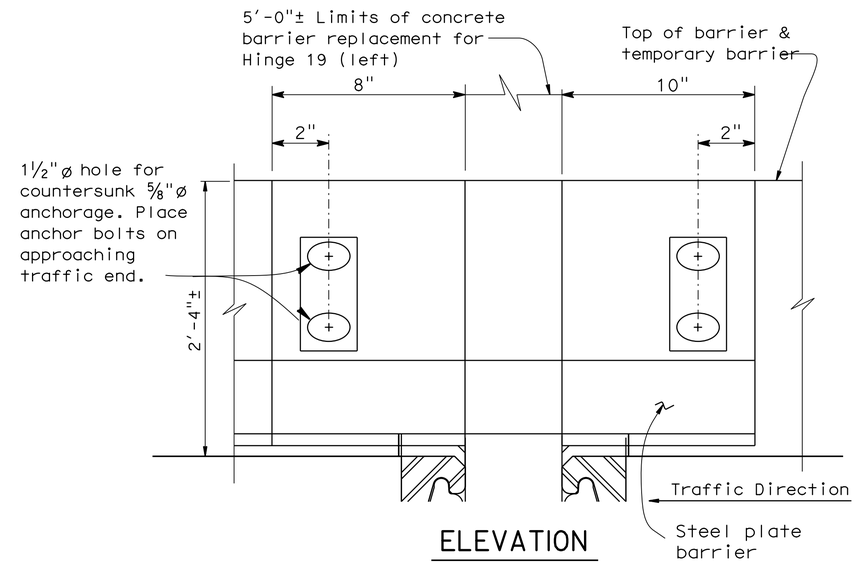

ELEVATION

No scale

PLAN

No scale

HINGE 19 (LEFT) TEMPORARY BARRIER

No scale

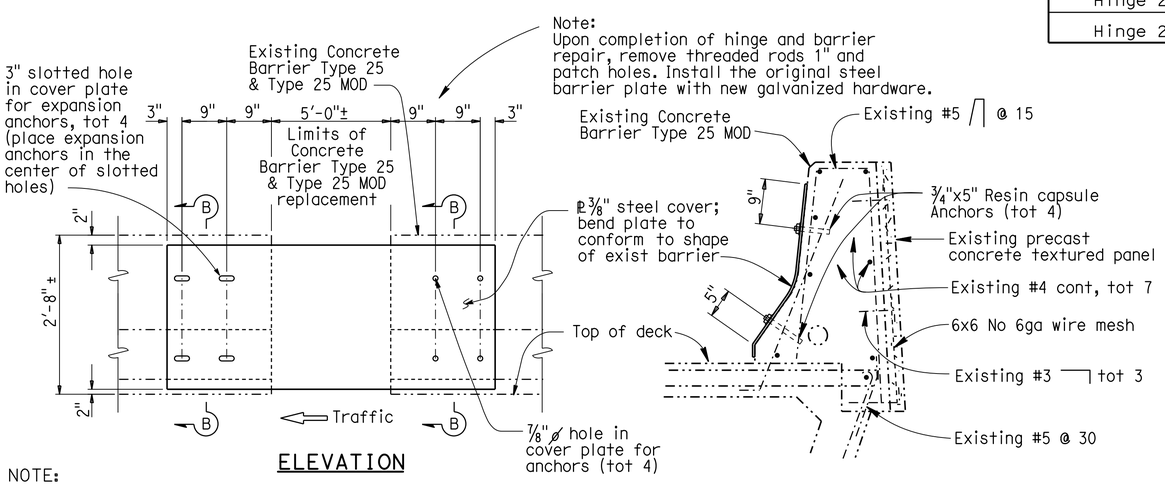

ELEVATION

NOTE:
VERIFY ALL CONTROLLING FIELD DIMENSIONS BEFORE ORDERING OR FABRICATING ANY MATERIAL.

TYPE 25 AND TYPE 25 MOD TEMP BARRIER DETAIL

NO SCALE

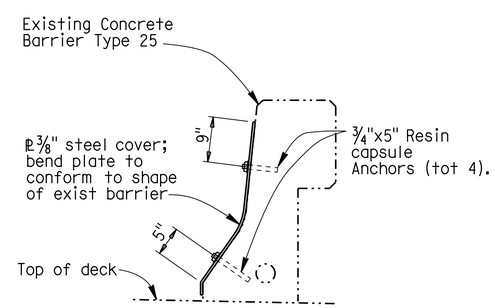

CUSTOM STEEL ℞ BARRIER FOR TYPE 25 MOD TO FACE

See "STRIP JOINT SEAL ASSEMBLY (MAXIMUM MOVEMENT RATING = 4")" sheet for permanent plate on low side barrier details.

	BY	CHECKED
DESIGN	Charles Hutchinson	Khanh Truong
DETAILS	Trung Lam	Khanh Truong
QUANTITIES	Charles Hutchinson	Khanh Truong

STATE OF CALIFORNIA
DEPARTMENT OF TRANSPORTATION

DIVISION OF MAINTENANCE
STRUCTURE MAINTENANCE DESIGN

BRIDGE NO. 29-0269
POST MILE R16.62

CROSSTOWN FREEWAY VIADUCT

BARRIER DETAILS

STRUCTURES MAINTENANCE GENERAL PLAN & DETAIL SHEET (ENGLISH) (REV. 10/17/07)

ORIGINAL SCALE IN INCHES FOR REDUCED PLANS 0 1 2 3

UNIT: 3488
PROJECT NUMBER & PHASE: 1014000133 1
CONTRACT NUMBER: 10-1C0901

DISREGARD PRINTS BEARING EARLIER REVISION DATES
REVISION DATES 1-23-15 1-30-15 2-06-15 12-16-14

SHEET 15 OF 24

FILE => 10-1c0901_15_barrier_dets.dgn

USERNAME => s120300 DATE PLOTTED => 10-MAR-2015 TIME PLOTTED => 12:09

DIST	COUNTY	ROUTE	POST MILES TOTAL PROJECT	SHEET NO.	TOTAL SHEETS
10	SJ	4	R16.6/R17.4	26	34

Charles R Hutchinson 2-06-15
REGISTERED CIVIL ENGINEER DATE

3-9-15
PLANS APPROVAL DATE

REGISTERED PROFESSIONAL ENGINEER CHARLES R. HUTCHINSON No. C 54226 Exp. 12-31-15 CIVIL STATE OF CALIFORNIA

THE STATE OF CALIFORNIA OR ITS OFFICERS OR AGENTS SHALL NOT BE RESPONSIBLE FOR THE ACCURACY OR COMPLETENESS OF ELECTRONIC COPIES OF THIS PLAN SHEET.

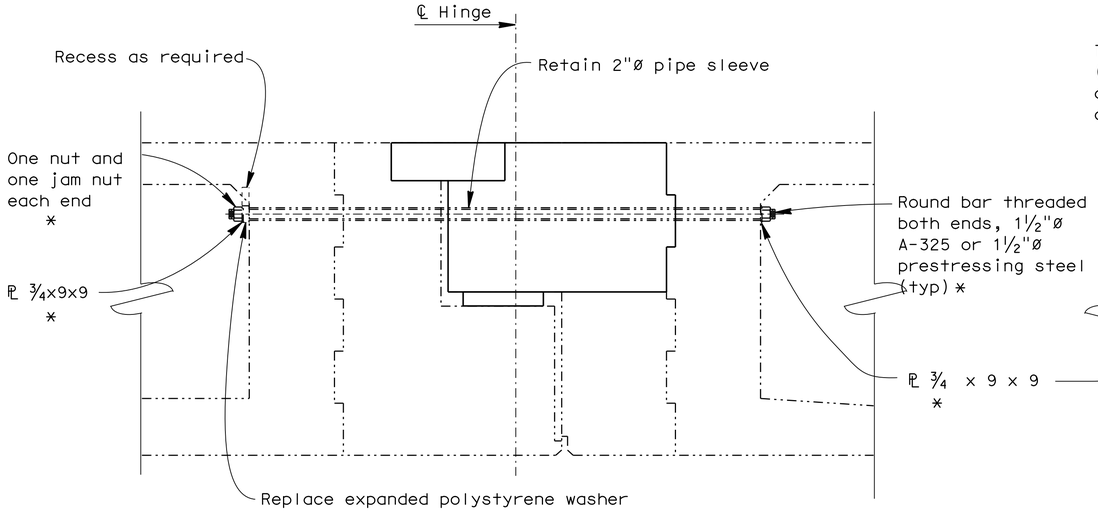

RECONSTRUCT EQUALIZING BOLT IN TYPE 1 HINGE

NO SCALE

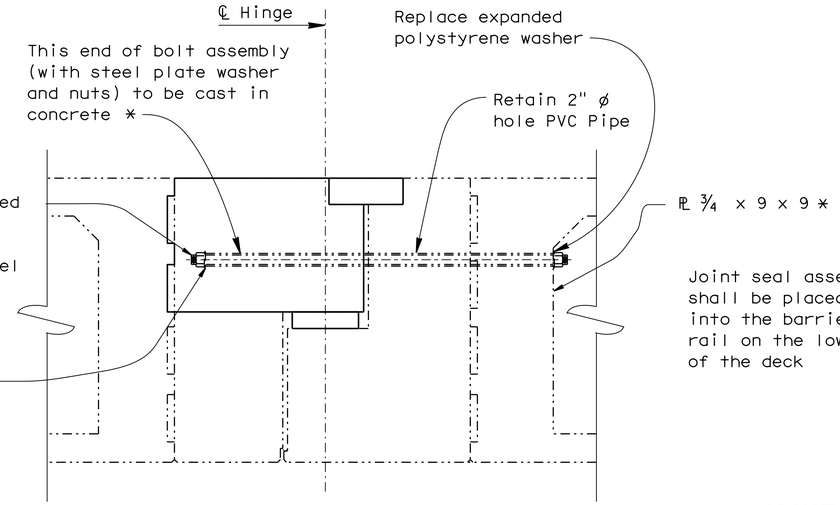

RECONSTRUCT EQUALIZING BOLT IN TYPE 3 HINGE

NO SCALE
(HINGE 19)

Hinge at Bent	Number of equalizing bolts	
	Left Bridge	Right Bridge
19	8	9
22	8	7
24	4	4
26	4	4
29	4	7

Hinge Type	Thickness of Polystyrene Washer (b)		
	Equalizing Bolt installed in		
	Winter	Fall/Spring	Summer
1	38	57	76
3	44	63	82

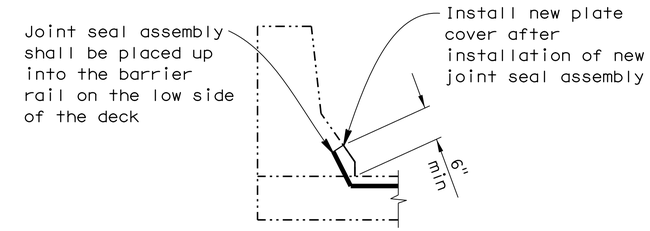

JOINT SEAL ASSEMBLY PLACEMENT AT CONCRETE BARRIER

(Concrete removal will be required to place the new joint seal assembly. See other sheets for details)
NO SCALE

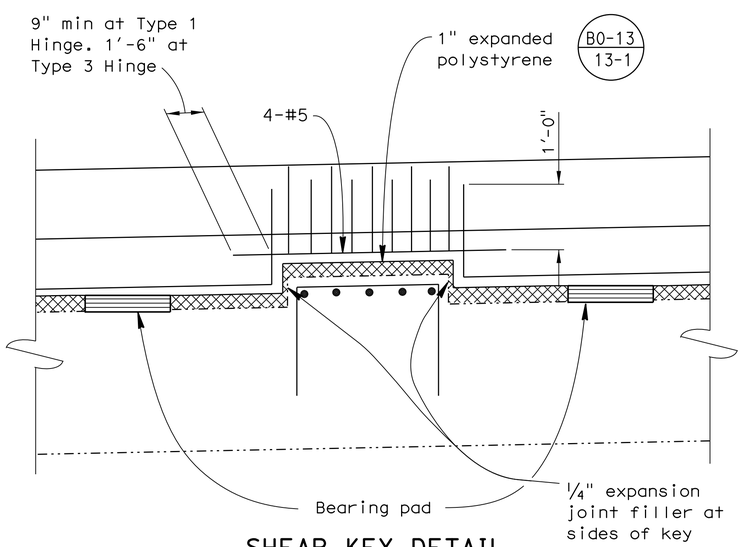

SHEAR KEY DETAIL

NO SCALE

NOTE:
VERIFY ALL CONTROLLING FIELD DIMENSIONS BEFORE ORDERING OR FABRICATING ANY MATERIAL.

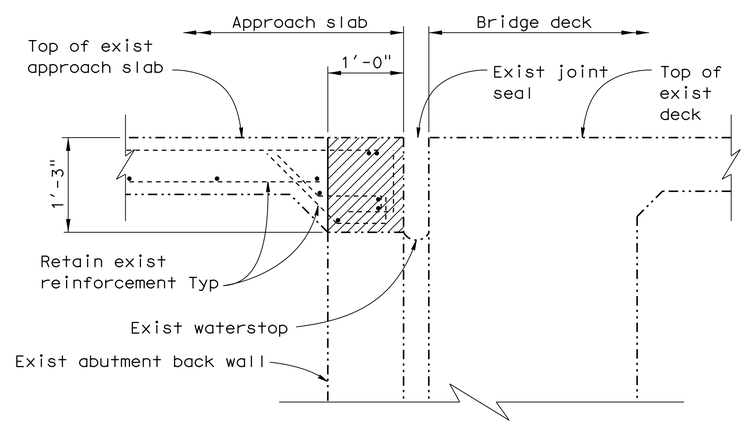

EXISTING

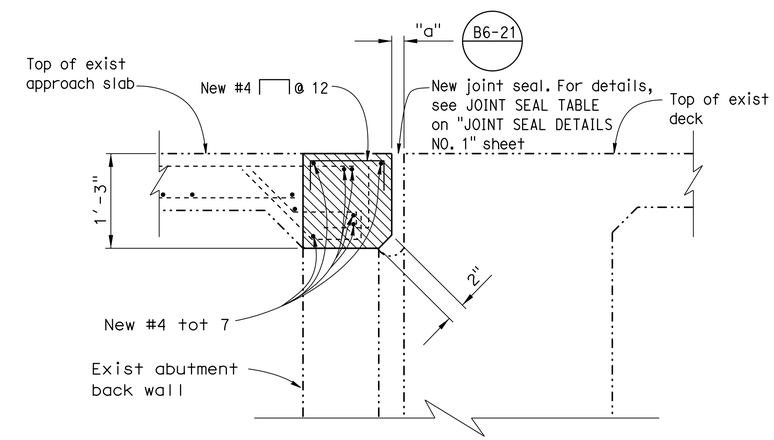

RECONSTRUCTION

Notes:

-·-·-·- Indicates existing structure.

Indicates limits of Bridge Removal (Portion).

Indicates limits of new concrete.

"a" Reconstruct gap width as determinded by the Engineer.

* Remove and reinstall.

JOINT RECONSTRUCTION DETAIL

1" = 1'-0"
(ABUTMENT 1 & 37)

DESIGN	BY Charles Hutchinson	CHECKED Khanh Truong	
DETAILS	BY Trung Lam	CHECKED Khanh Truong	
QUANTITIES	BY Charles Hutchinson	CHECKED Khanh Truong	

STATE OF CALIFORNIA
DEPARTMENT OF TRANSPORTATION

DIVISION OF MAINTENANCE
STRUCTURE MAINTENANCE DESIGN

BRIDGE NO. 29-0269
POST MILE R16.62

CROSSTOWN FREEWAY VIADUCT
MISCELLANEOUS DETAILS

STRUCTURES MAINTENANCE GENERAL PLAN & DETAIL SHEET (ENGLISH) (REV. 10/17/07)

ORIGINAL SCALE IN INCHES FOR REDUCED PLANS 0 1 2 3

UNIT: 3488
PROJECT NUMBER & PHASE: 1014000133 1
CONTRACT NUMBER: 10-1C0901

DISREGARD PRINTS BEARING EARLIER REVISION DATES
REVISION DATES: 1-30-15 2-06-15 12-16-14 1-23-15

SHEET 16 OF 24

FILE => 10-1c0901_16_misc-dets.dgn

USERNAME => s120300 DATE PLOTTED => 10-MAR-2015 TIME PLOTTED => 12:09

DIST	COUNTY	ROUTE	POST MILES TOTAL PROJECT	SHEET No.	TOTAL SHEETS
10	SJ	4	R16.6/R17.4	27	34

Charles R Hutchinson 2-06-15
REGISTERED CIVIL ENGINEER DATE

3-9-15
PLANS APPROVAL DATE

REGISTERED PROFESSIONAL ENGINEER CHARLES R. HUTCHINSON No. C 54226 Exp. 12-31-15 CIVIL STATE OF CALIFORNIA

The State of California or its officers or agents shall not be responsible for the accuracy or completeness of electronic copies of this plan sheet.

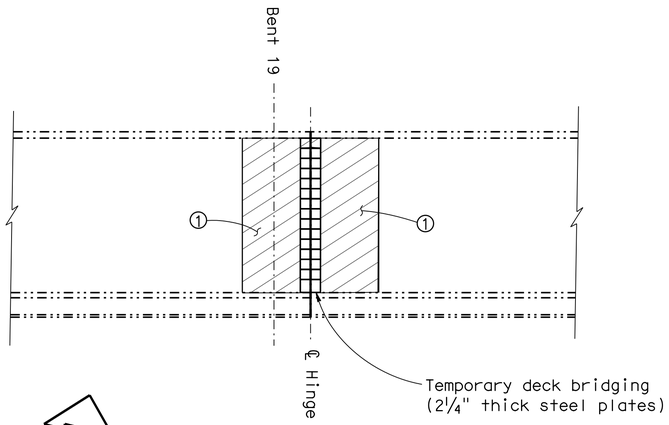

TAPER DETAIL

Hinge 19 shown, other hinges similar

Note:

① Place tapered 200:1 (leading / trailing edge = ½" thick Max) polyester concrete material at approach and departure of construction.

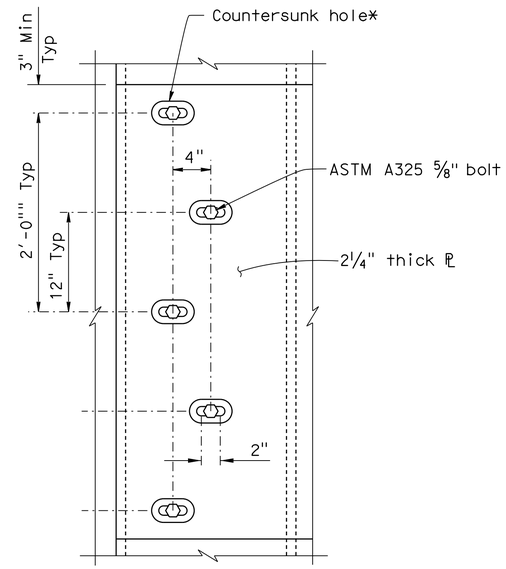

BOLT STAGGER DETAIL

1½" = 1'-0"

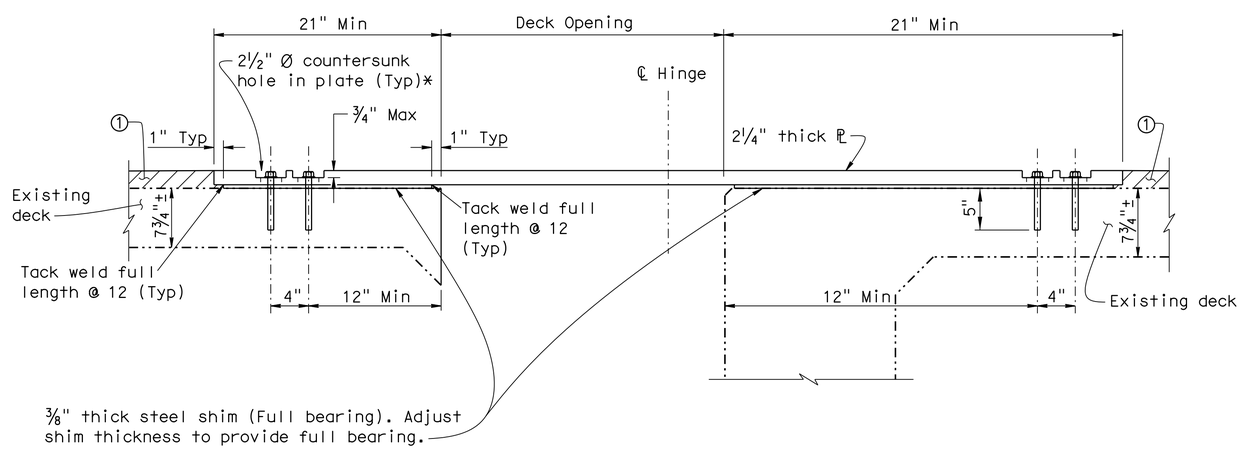

TEMPORARY DECK PLATE CONNECTION

BR. NO. 29-0101
NO SCALE

NOTE:
VERIFY ALL CONTROLLING FIELD DIMENSIONS BEFORE ORDERING OR FABRICATING ANY MATERIAL.

	BY	CHECKED
DESIGN	Charles Hutchinson	Khanh Truong
DETAILS	Trung Lam	Khanh Truong
QUANTITIES	Charles Hutchinson	Khanh Truong

STATE OF CALIFORNIA
DEPARTMENT OF TRANSPORTATION

DIVISION OF MAINTENANCE
STRUCTURE MAINTENANCE DESIGN

BRIDGE NO. 29-0269
POST MILE R16.62

CROSSTOWN FREEWAY VIADUCT
TEMPORARY DECK DETAILS

STRUCTURES MAINTENANCE DETAIL SHEET (ENGLISH) (REV. 09-01-10)

ORIGINAL SCALE IN INCHES FOR REDUCED PLANS 0 1 2 3

UNIT: 3488
PROJECT NUMBER & PHASE: 1014000133 1 CONTRACT NO.: 10-1C0901

DISREGARD PRINTS BEARING EARLIER REVISION DATES

REVISION DATES: 1-23-15 2-09-15 2-23-15

SHEET 17 OF 24

FILE => 10-1c0901_17_temp_deck_dets.dgn

USERNAME => s120300 DATE PLOTTED => 10-MAR-2015 TIME PLOTTED => 12:09

DIST	COUNTY	ROUTE	POST MILES TOTAL PROJECT	SHEET No.	TOTAL SHEETS
10	SJ	4	R16.6/R17.4	28	34

Charles R Hutchinson 2-06-15
REGISTERED CIVIL ENGINEER DATE

3-9-15
PLANS APPROVAL DATE

REGISTERED PROFESSIONAL ENGINEER CHARLES R. HUTCHINSON No. C 54226 Exp. 12-31-15 CIVIL STATE OF CALIFORNIA

The State of California or its officers or agents shall not be responsible for the accuracy or completeness of electronic copies of this plan sheet.

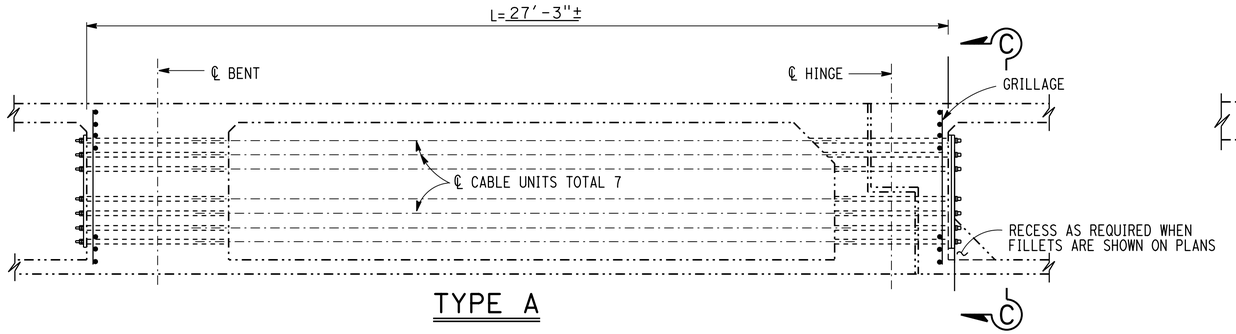

TYPE A

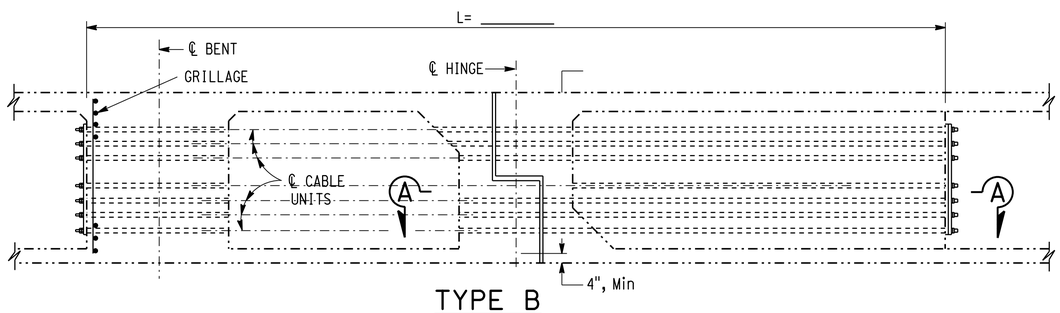

TYPE B

LONGITUDINAL HINGE RESTRAINER

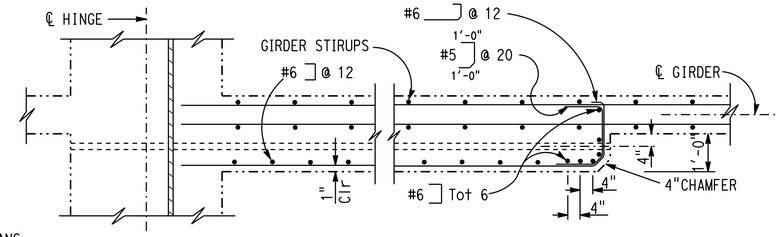

SECTION A-A

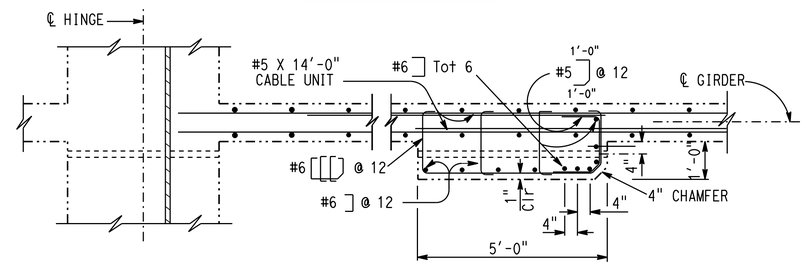

SECTION A-A (ALTERNATIVE)

(FOR INFORMATION ONLY)

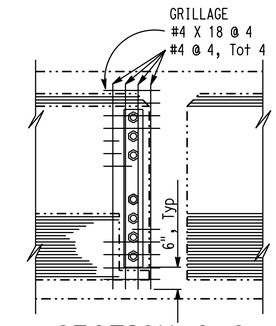

SECTION C-C

NOTE: SLOPE TO MATCH SLOPING EXTERIOR GIRDERS

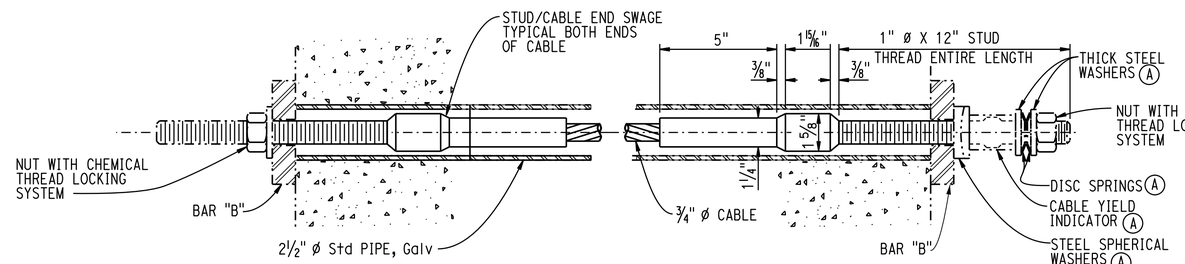

FIXED END

SWAGE STUD DETAIL

ADJUSTMENT END

(A) FOR DIMENSIONS AND INSTALLATION PROCEDURE, SEE "CABLE RESTRAINER ADJUSTMENT HARDWARE" SHEET xs7-090

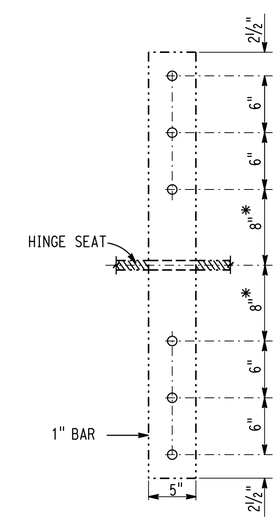

DETAIL - BAR B

* DIMENSION MAY BE ADJUSTED TO CLEAR REINFORCEMENT

NOTES:

1. Restrainer units to be on tangent alignment
2. Anchor nuts shall not be set until 30 days following completion of prestressing for CIP prestressed bridges
3. See other sheets for location and number of longitudinal and vertical hinge restrainers, and table of joint openings
4. Contractor may install restrainers in horizontal arrangement with approval of the Engineer. The location shall be in the middle 1/2 depth of the structure
5. An alternative is to place restrainers in two horizontal layers, equally located above and below the mid structure depth. The number of restrainers in each layer shall not differ by more than one
6. The ends of pipe shall be covered or capped to prevent concrete and debris from entering the pipe until hinge concrete is placed
7. Care should be taken to align the pipes on each side of the hinge
8. All ends of pipes must be flush with or slightly recessed from the concrete. The inside edges of the pipes must be smooth to prevent fraying of cables

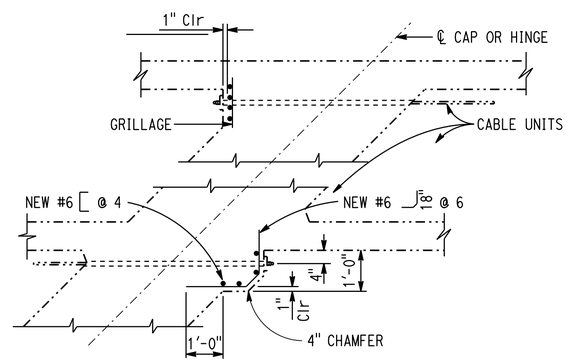

END ANCHORAGE DETAILS AT HINGE OR CAP PART PLAN

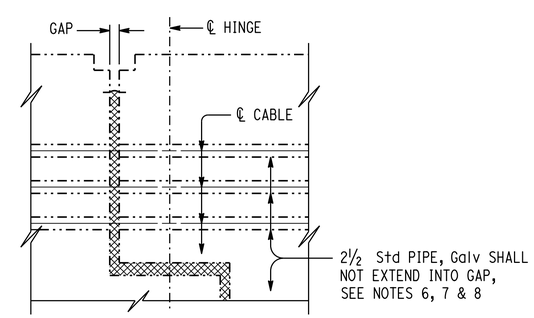

HINGE DETAIL

NOTE:
VERIFY ALL CONTROLLING FIELD DIMENSIONS BEFORE ORDERING OR FABRICATING ANY MATERIAL.

STANDARD DRAWING

FILE NO. xs7-050 APPROVAL DATE January 2012

STATE OF CALIFORNIA DEPARTMENT OF TRANSPORTATION

DIVISION OF ENGINEERING SERVICES

BRIDGE NO. 29-0269 POST MILE R16.62

CROSSTOWN FREEWAY VIADUCT

CABLE RESTRAINER DETAILS NO. 1

DS OSD 2147A (ENGLISH STANDARD DRAWING "XS" BORDER REV. (02-02-11)

ORIGINAL SCALE IN INCHES FOR REDUCED PLANS 0 1 2 3

UNIT: 3488
PROJECT NUMBER & PHASE: 1014000133 1 CONTRACT NO.: 10-1C0901

DISREGARD PRINTS BEARING EARLIER REVISION DATES

REVISION DATES 1-23-15 2-06-15 12-16-14 SHEET 18 OF 24

FILE => 10-1c0901_18_cable_restrainer_dets1.dgn

USERNAME => s120300 DATE PLOTTED => 10-MAR-2015 TIME PLOTTED => 12:09

DIST	COUNTY	ROUTE	POST MILES TOTAL PROJECT	SHEET No.	TOTAL SHEETS
10	SJ	4	R16.6/R17.4	29	34

Charles R. Hutchinson 2-06-15
REGISTERED CIVIL ENGINEER DATE

3-9-15
PLANS APPROVAL DATE

REGISTERED PROFESSIONAL ENGINEER CHARLES R. HUTCHINSON No. C 54226 Exp. 12-31-15 CIVIL STATE OF CALIFORNIA

The State of California or its officers or agents shall not be responsible for the accuracy or completeness of electronic copies of this plan sheet.

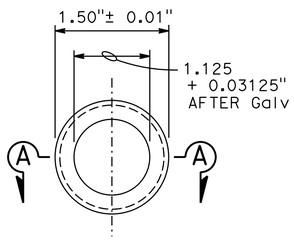

END VIEW

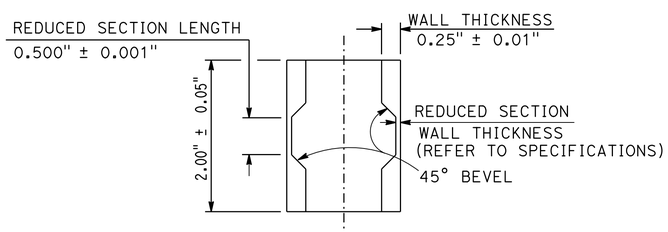

SECTION A-A

"ALL DIMENSIONS ARE BEFORE GALVANIZING EXCEPT AS NOTED"

CABLE YIELD INDICATOR

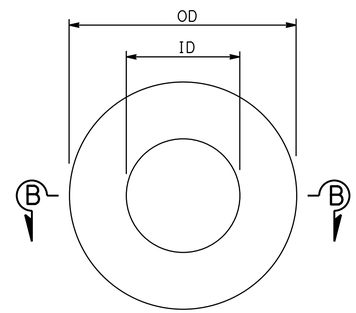

PLAN

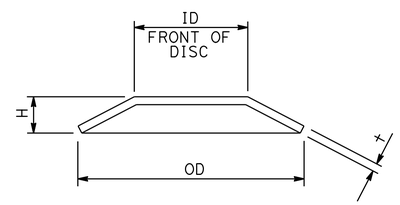

SECTION B-B
(SINGLE SPRING)

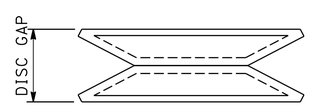

AS INSTALLED ON STUD

NOTE: FOR DIMENSIONS NOT SHOWN, SEE TABLE

DISC SPRING

DISC SPRINGS AND WASHERS

ALL DIMENSIONS IN INCHES, EXCEPT AS NOTED

	DISC SPRING					STEEL SPHERICAL WASHER			THICK WASHER		
L*	ID	OD	†	H	COLOR CODE	ID	OD	NOMINAL THICKNESS	ID	OD	†**
00.0 - 25.0	1.00	2.00	0.065	0.130	WHITE	1.19	2.25	0.50	1.03	2.00	0.25
25.1 - 31.9	1.00	2.00	0.084	0.136	RED	1.19	2.25	0.50	1.03	2.00	0.25
32.0 - 37.9	1.00	2.00	0.097	0.145	BLUE	1.19	2.25	0.50	1.03	2.00	0.25
38.0 - 45.0	1.25	2.50	0.120	0.180	YELLOW	1.31	2.50	0.50	1.16	2.00	0.25

* For limits of length L (ft), use effective length of cable, from face-to-face outer surfaces of anchorage plate or bearing bar. Refer to Bridge detail sheets for approximate length required.

** MINIMUM VALUE

NOTE: All OD and ID dimensions for washers and disc springs shall meet the dimensional tolerances for hardened steel washers, ASTM F436

RESTRAINER UNIT INSTALLATION PROCEDURE

1a. For typical 'girder to opposite girder' or 'bent cap to girder' restrainers with one adjustment end:

Place nut, washer and Thread Locking System on fixed end stud prior to tightening the cable

The adjustment end shall be at the same end of the cable for all restrainers at a specific hinge or bent

Tighten the nuts on the cable from the Adjustment End of restrainer until the disc springs collapse and there is no disc gap remaining between the discs

1b. For typical "U" or "V" shaped restrainers units with two adjustment ends: Install Cable Yield Indicator, spherical washers, disc springs, washers and nuts on both adjustment ends of cable type restrainers

The ends of the cable must be adjusted simultaneously.
Tighten the nuts on the cable from the adjustment ends of restrainer until the disc springs collapse and there is no disc gap remaining between the discs on either end of the cable

2. Place thread locking system on adjustment end(s) after tightening the cable but before backing off the nut(s)

Back off the nut(s) at the adjustable anchorage(s) a distance equal to the maximum additional amount that the hinge is expected to open, relative to existing ambient conditions, as shown on the plans for movement rating

NOTE:
VERIFY ALL CONTROLLING FIELD DIMENSIONS BEFORE ORDERING OR FABRICATING ANY MATERIAL.

STANDARD DRAWING
FILE NO. xs7-090
APPROVAL DATE July 2011

STATE OF CALIFORNIA
DEPARTMENT OF TRANSPORTATION

DIVISION OF ENGINEERING SERVICES

BRIDGE NO. 29-0269
POST MILE R16.62

CROSSTOWN FREEWAY VIADUCT
CABLE RESTRAINER DETAILS NO. 2

DS OSD 2147A (ENGLISH STANDARD DRAWING "XS" BORDER REV. (02-02-11)

ORIGINAL SCALE IN INCHES FOR REDUCED PLANS 0 1 2 3

UNIT: 3488
PROJECT NUMBER & PHASE: 1014000133 1
CONTRACT NO.: 10-1C6901

DISREGARD PRINTS BEARING EARLIER REVISION DATES

REVISION DATES: ~~1-23-15~~ 2-06-15 ~~12-16-14~~
SHEET 19 OF 24

FILE => 10-1c0901_19_cable_restrainer_dets2.dgn

USERNAME => s120300 DATE PLOTTED => 10-MAR-2015 TIME PLOTTED => 12:09

DIST	COUNTY	ROUTE	POST MILES TOTAL PROJECT	SHEET NO.	TOTAL SHEETS
10	SJ	4	R16.6/R17.4	30	34

Charles R Hutchinson 2-06-15
REGISTERED CIVIL ENGINEER DATE

3-9-15
PLANS APPROVAL DATE

REGISTERED PROFESSIONAL ENGINEER CHARLES R. HUTCHINSON No. C 54226 Exp. 12-31-15 CIVIL STATE OF CALIFORNIA

THE STATE OF CALIFORNIA OR ITS OFFICERS OR AGENTS SHALL NOT BE RESPONSIBLE FOR THE ACCURACY OR COMPLETENESS OF ELECTRONIC COPIES OF THIS PLAN SHEET.

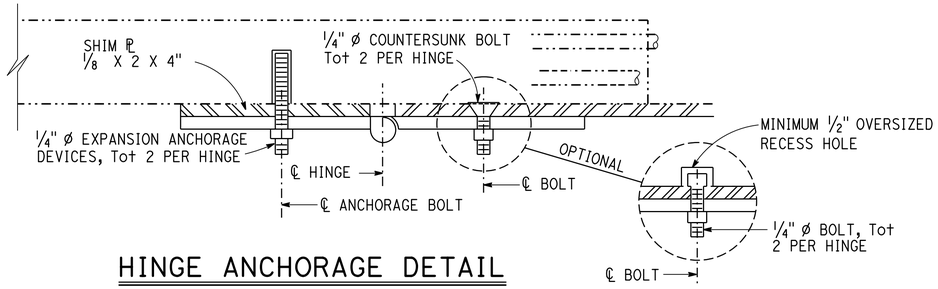

HINGE ANCHORAGE DETAIL

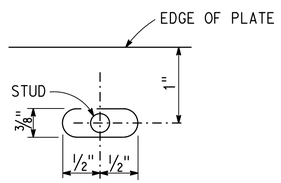

DETAIL A

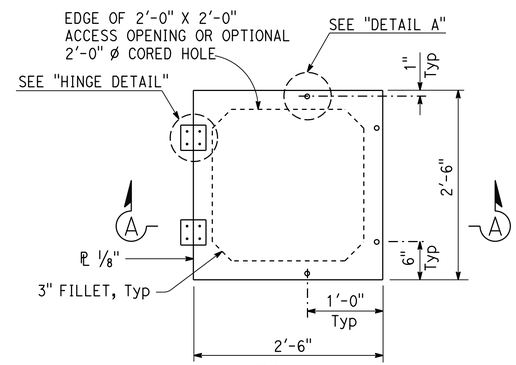

PLAN

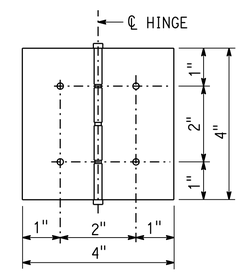

HINGE DETAIL

SOFFIT ACCESS DOOR ASSEMBLY

NOTE: SOFFIT ACCESS DOOR OPENING DIRECTION
TO BE DETERMINED BY THE ENGINEER

NOTES:

1. Non-removable pin in hinge
2. Hinge assembly to be galvanized, brass or stainless steel
3. Use thread locking system for all hinge nuts
4. Hinge assembly to be minimum 1/8" Thick

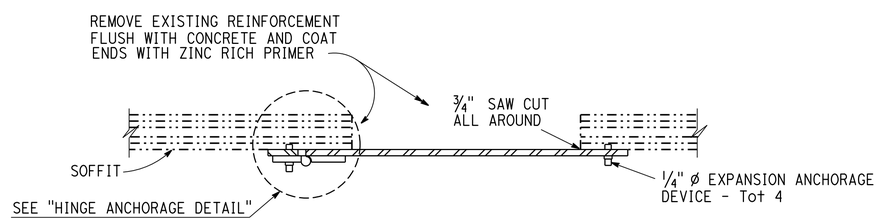

SECTION A-A

NOTE:
VERIFY ALL CONTROLLING FIELD DIMENSIONS BEFORE ORDERING OR FABRICATING ANY MATERIAL.

DESIGN	BY Charles Hutchinson	CHECKED Khanh Truong	
DETAILS	BY Trung Lam	CHECKED Khanh Truong	
QUANTITIES	BY Charles Hutchinson	CHECKED Khanh Truong	

STATE OF CALIFORNIA
DEPARTMENT OF TRANSPORTATION

DIVISION OF MAINTENANCE
STRUCTURE MAINTENANCE DESIGN

BRIDGE NO. 29-0269
POST MILE R16.62

CROSSTOWN FREEWAY VIADUCT
SOFFIT OPENINGS DETAILS

STRUCTURES MAINTENANCE GENERAL PLAN & DETAIL SHEET (ENGLISH) (REV. 10/17/07)

ORIGINAL SCALE IN INCHES FOR REDUCED PLANS 0 1 2 3

UNIT: 3488
PROJECT NUMBER & PHASE: 1014000133 1
CONTRACT NUMBER: 10-1C0901

DISREGARD PRINTS BEARING EARLIER REVISION DATES

REVISION DATES					SHEET	OF
9-23-14	12-16-14	1-23-15	2-06-15		20	24

FILE => 10-1c0901_20_soffit_openings.dgn

USERNAME => s120300 DATE PLOTTED => 10-MAR-2015 TIME PLOTTED => 12:09

DIST	COUNTY	ROUTE	POST MILES TOTAL PROJECT	SHEET No.	TOTAL SHEETS
10	SJ	4	R16.6/R17.4	31	34

Charles R Hutchinson 2-06-15
REGISTERED CIVIL ENGINEER DATE

3-9-15
PLANS APPROVAL DATE

REGISTERED PROFESSIONAL ENGINEER CHARLES R. HUTCHINSON No. C 54226 Exp. 12-31-15 CIVIL STATE OF CALIFORNIA

The State of California or its officers or agents shall not be responsible for the accuracy or completeness of scanned copies of this plan sheet.

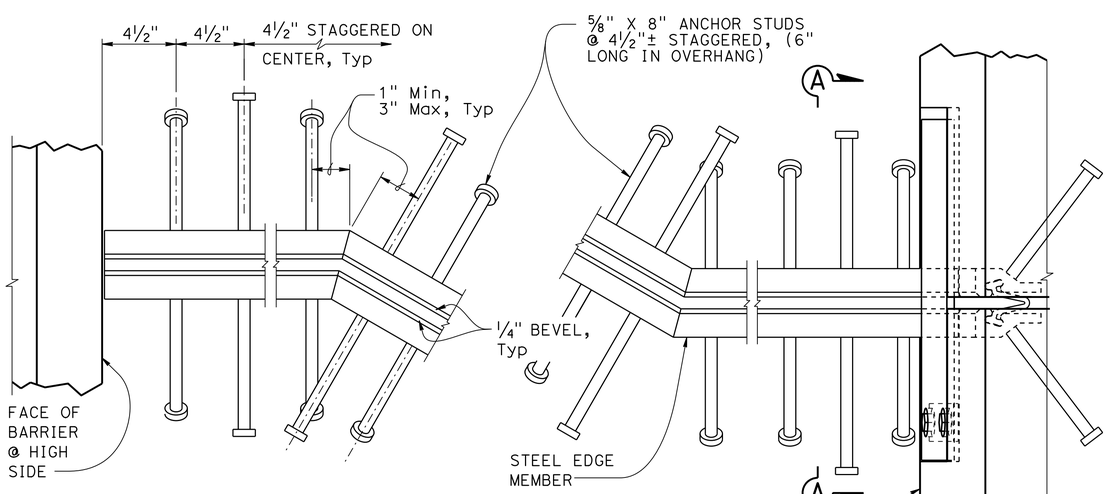

PLAN
SKEW > 20°

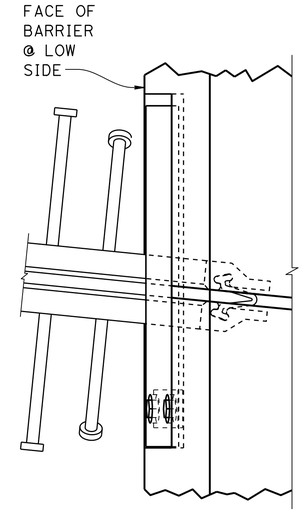

PLAN
SKEW ≤ 20°

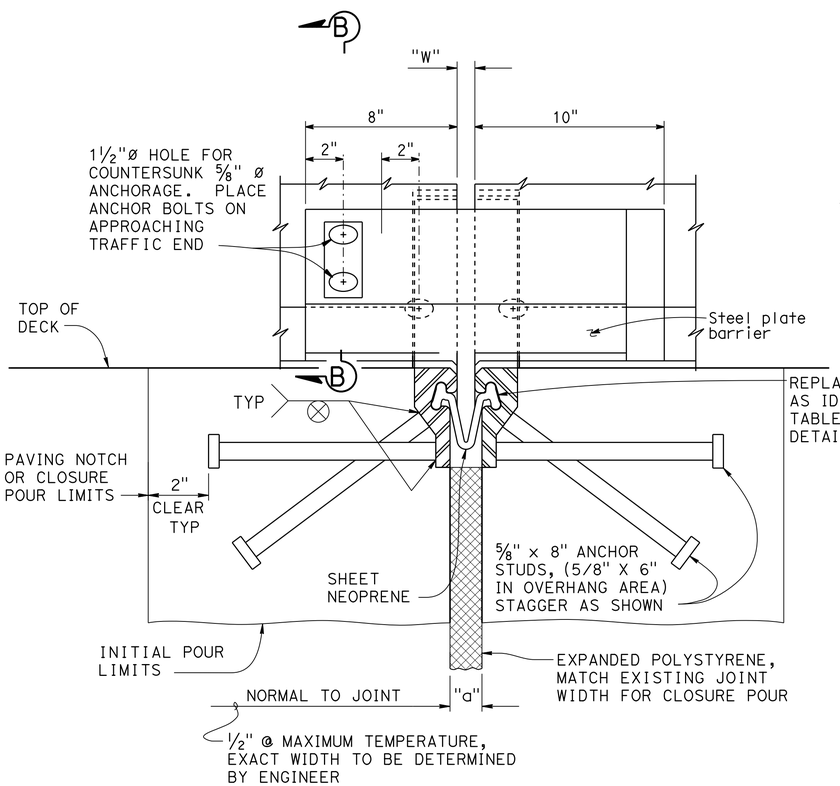

SECTION A-A

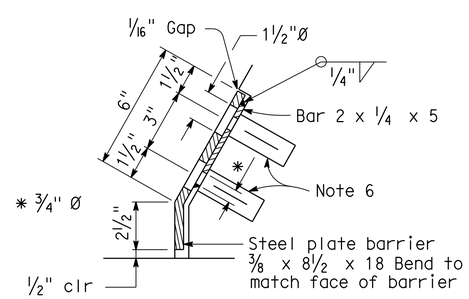

SECTION B-B *

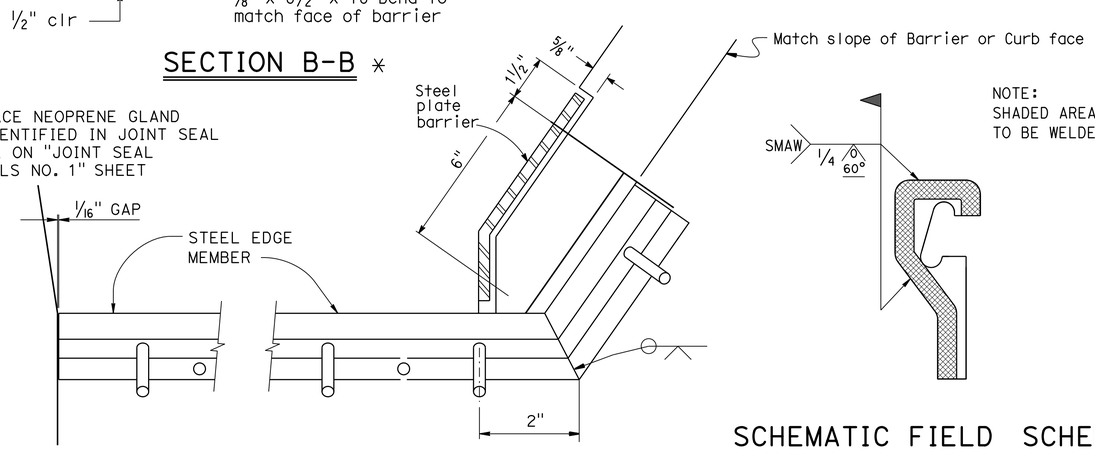

BARRIER DETAIL HIGH SIDE

BARRIER DETAIL LOW SIDE

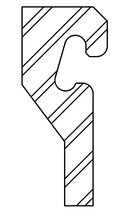

SCHEMATIC STEEL EDGE MEMBER

NOTES:

1. Alternatively, fillet or complete penetration welds may be used at anchor studs.
2. Alternate types of anchor studs may be permitted subject to the authorization by the Engineer.
3. Joint seal assembly to be used in conjunction with closure pour. (See other sheets for limits). Closure pour shall not be placed until final deck surface is within the tolerances specified.
4. Use joint at crown of roadway, at any change in traverse slope in deck and at changes in horizontal direction. Place other joints at or near lanes. All metal parts to be painted or galvanized after fabrication.
5. Sheet Neoprene shall be fabricated in one continuous piece and shall be fabricated to bend around corners. Field splices of the neoprene are not allowed.
6. Insert assembly or expansion anchorage for ⅝" x 1¾" bolts. Use installation bolts extended ½" minimum past nut and coat with bond breaker, after concrete has cured, remove installation bolts, install HS bolts and sheet neoprene.

   Sidewalk Detail similar to Barrier Detail on low side at both sides if the roadway is crowned or if the difference in elevation between the ends of the seal is 0.5′ or less.

   Anchor studs shall conform to ASTM 108.

* For steel barrier plate details at Hing 19, see "HINGE 19 (LEFT) STEEL PLATE BARRIER" sheet.

SCHEMATIC FIELD WELD DETAIL

NOTE:
SHADED AREAS TO BE WELDED

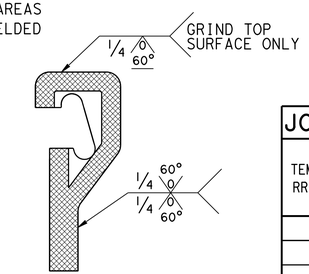

SCHEMATIC SHOP WELD DETAIL

JOINT OPENING	
TEMPERATURE RRANGE (°F)	"a" DIMENSION (in)
	MR=2½
17	2½
40	2⅜
64	1⅝
87	1
110	½

NO SCALE

DESIGN	BY Charles Hutchinson	CHECKED Khanh Truong	
DETAILS	BY Trung Lam	CHECKED Khanh Truong	
QUANTITIES	BY Charles Hutchinson	CHECKED Khanh Truong	

STATE OF CALIFORNIA
DEPARTMENT OF TRANSPORTATION

DIVISION OF MAINTENANCE
STRUCTURE MAINTENANCE DESIGN

BRIDGE NO. 29-0269
POST MILE R16.62

CROSSTOWN FREEWAY VIADUCT
STRIP JOINT SEAL ASSEMBLY
(MAXIMUM MOVEMENT RATING = 4")

STRUCTURES MAINTENANCE GENERAL PLAN SHEET (ENGLISH) (REV. 09-01-10)

ORIGINAL SCALE IN INCHES FOR REDUCED PLANS 0 1 2 3

UNIT: 3488
PROJECT NUMBER & PHASE: 1014000133
CONTRACT NO.: 10-1C0901

DISREGARD PRINTS BEARING EARLIER REVISION DATES

REVISION DATES 12-16-14 1-23-15 1-30-15 2-06-15

SHEET 21 OF 24

FILE => 10-1c0901_21_strip_joint_seal_ass.dgn

USERNAME => s120300 DATE PLOTTED => 10-MAR-2015 TIME PLOTTED => 12:09

DIST	COUNTY	ROUTE	POST MILES TOTAL PROJECT	SHEET No.	TOTAL SHEETS
10	SJ	4	R16.6/R17.4	32	34

Charles R Hutchinson 2-06-15
REGISTERED CIVIL ENGINEER DATE

3-9-15
PLANS APPROVAL DATE

REGISTERED PROFESSIONAL ENGINEER CHARLES R. HUTCHINSON No. C 54226 Exp. 12-31-15 CIVIL STATE OF CALIFORNIA

The State of California or its officers or agents shall not be responsible for the accuracy or completeness of scanned copies of this plan sheet.

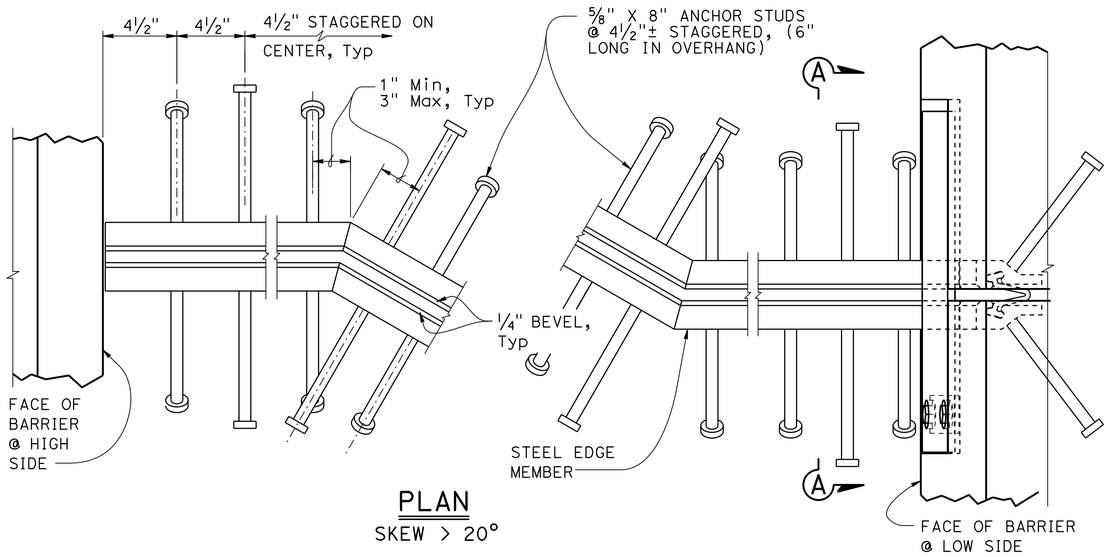

PLAN
SKEW > 20°

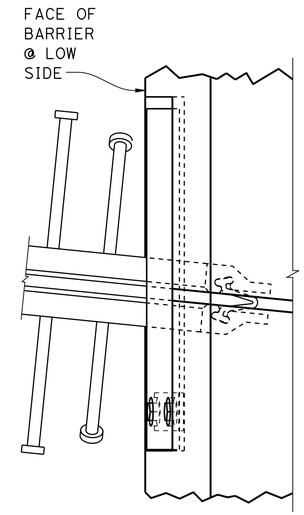

PLAN
SKEW ≤ 20°

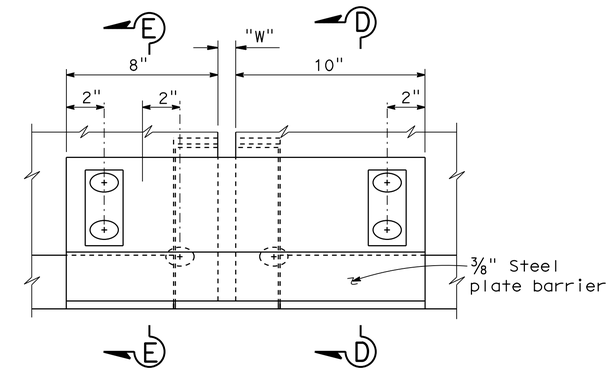

HINGE 19 (LEFT) STEEL BARRIER PLATE
NO SCALE

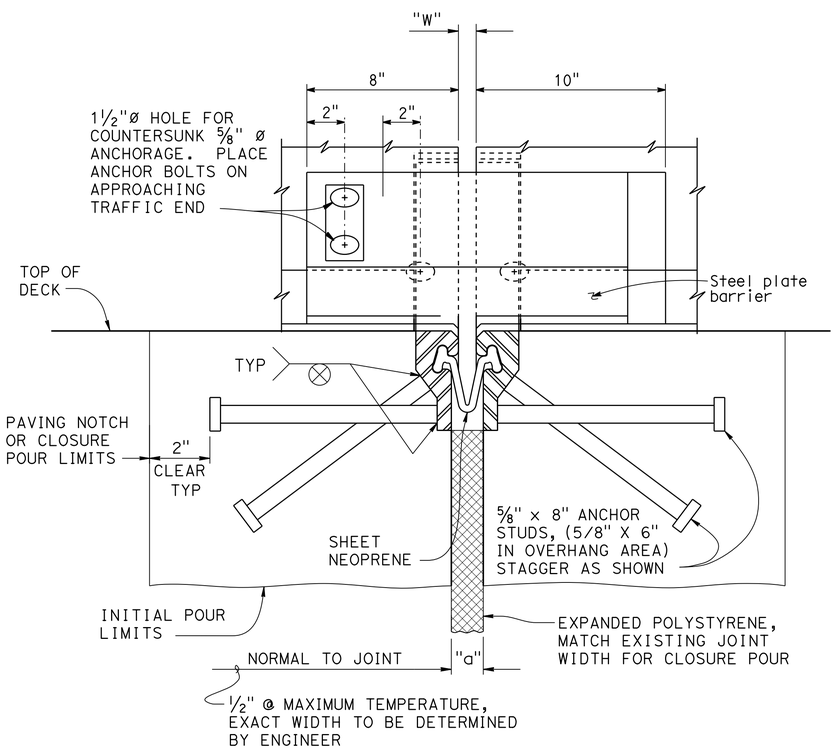

SECTION A-A
NO SCALE

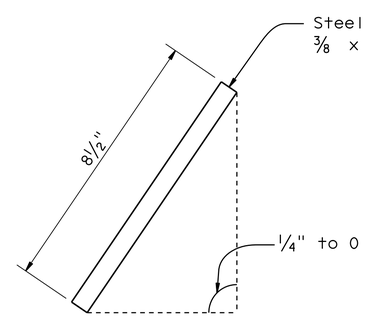

(HINGE 19 LEFT ONLY) CANTILEVER SIDE

SECTION D-D
NO SCALE

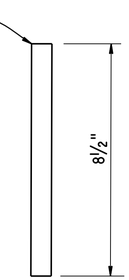

(HINGE 19 LEFT ONLY) SUPPORT SIDE

SECTION E-E
NO SCALE

DESIGN	BY Charles Hutchinson	CHECKED Khanh Truong	
DETAILS	BY Trung Lam	CHECKED Khanh Truong	
QUANTITIES	BY Charles Hutchinson	CHECKED Khanh Truong	

STATE OF CALIFORNIA
DEPARTMENT OF TRANSPORTATION

DIVISION OF MAINTENANCE
STRUCTURE MAINTENANCE DESIGN

BRIDGE NO. 29-0269
POST MILE R16.62

CROSSTOWN FREEWAY VIADUCT
HINGE 19 (LEFT) STEEL BARRIER PLATE

STRUCTURES MAINTENANCE GENERAL PLAN SHEET (ENGLISH) (REV. 09-01-10)

ORIGINAL SCALE IN INCHES FOR REDUCED PLANS 0 1 2 3

UNIT: 3488
PROJECT NUMBER & PHASE: 1014000133
CONTRACT NO.: 10-1C0901

DISREGARD PRINTS BEARING EARLIER REVISION DATES

REVISION DATES: 1-23-15 2-06-15

SHEET 22 OF 24

FILE => 10-1c0901_22_hinge19_left_steel_barrier_plate.dgn

USERNAME => s120300 DATE PLOTTED => 10-MAR-2015 TIME PLOTTED => 12:09

DIST	COUNTY	ROUTE	POST MILES TOTAL PROJECT	SHEET No.	TOTAL SHEETS
10	SJ	4	R16.6/R17.4	33	34

REGISTERED CIVIL ENGINEER 2-06-15 DATE

3-9-15
PLANS APPROVAL DATE

REGISTERED PROFESSIONAL ENGINEER CHARLES R. HUTCHINSON No. C 54226 Exp. 12-31-15 CIVIL STATE OF CALIFORNIA

The State of California or its officers or agents shall not be responsible for the accuracy or completeness of scanned copies of this plan sheet.

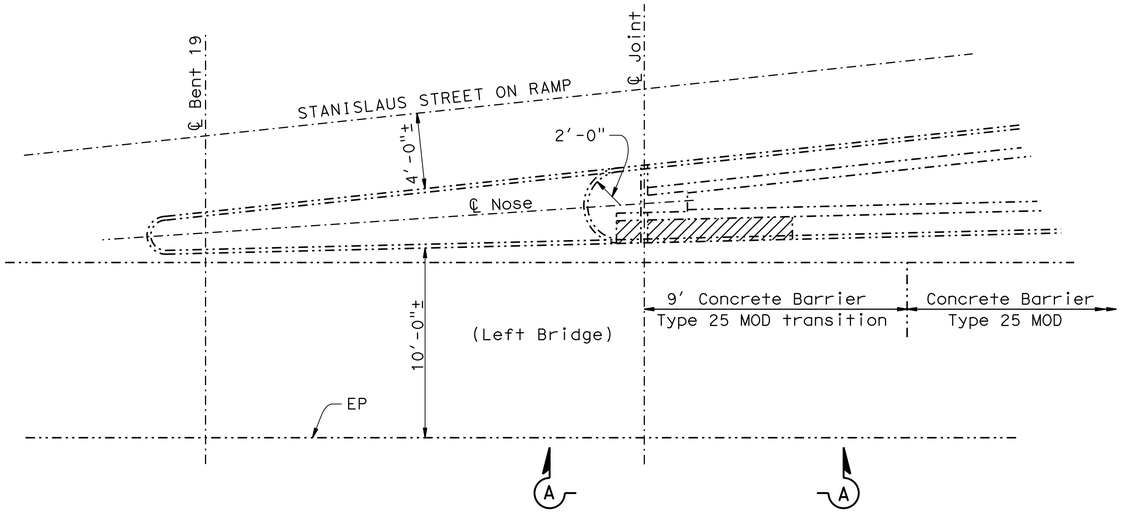

PLAN AT STANISLAUS STREET ON RAMP

NO SCALE

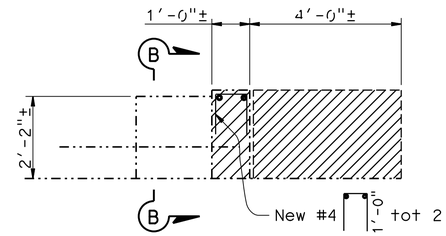

ELEVATION A-A

NO SCALE

Note:

Indicates limits of remove and replace portions of the concrete barrier Type 25 MOD transition.

For reinforcement details not shown, see "BARRIER DETAILS" sheet.

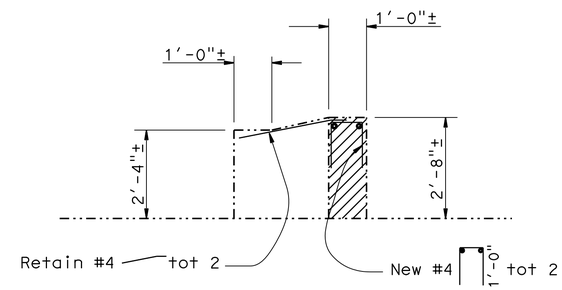

SECTION B-B

NO SCALE

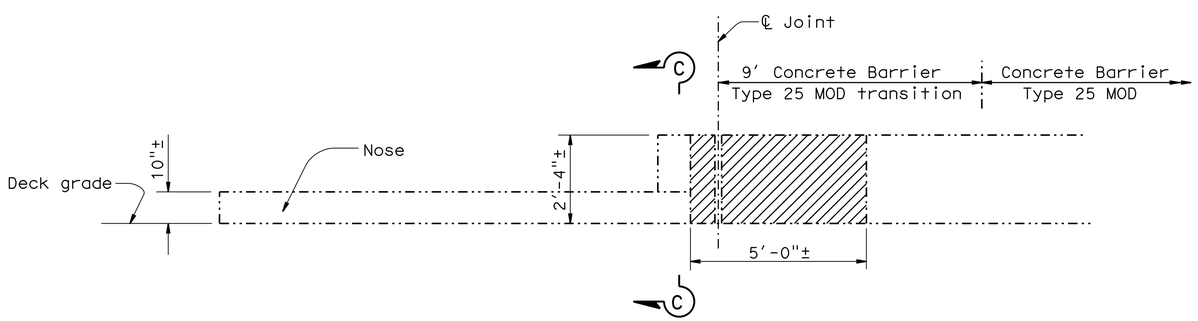

ELEVATION AT STANISLAUS STREET ON RAMP

NO SCALE

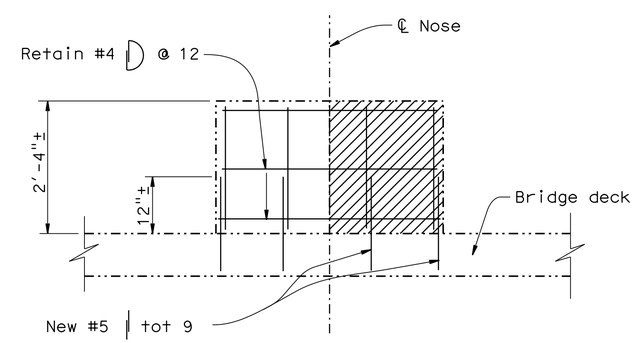

SECTION C-C

NO SCALE

NOTE:

VERIFY ALL CONTROLLING FIELD DIMENSIONS BEFORE ORDERING OR FABRICATING ANY MATERIAL.

	BY	CHECKED
DESIGN	Charles Hutchinson	Khanh Truong
DETAILS	Trung Lam	Khanh Truong
QUANTITIES	Charles Hutchinson	Khanh Truong

STATE OF CALIFORNIA
DEPARTMENT OF TRANSPORTATION

DIVISION OF MAINTENANCE
STRUCTURE MAINTENANCE DESIGN

BRIDGE NO. 29-0269
POST MILE R16.62

CROSSTOWN FREEWAY VIADUCT

NOSE DETAIL

STRUCTURES MAINTENANCE GENERAL PLAN SHEET (ENGLISH) (REV. 09-01-10)

ORIGINAL SCALE IN INCHES FOR REDUCED PLANS 0 1 2 3

UNIT: 3488
PROJECT NUMBER & PHASE: 1014000133
CONTRACT NO.: 10-1C0901

DISREGARD PRINTS BEARING EARLIER REVISION DATES

REVISION DATES 2-02-15 2-06-15

SHEET 23 OF 24

FILE => 10-1c0901_23_nose_detail.dgn

USERNAME => s120300 DATE PLOTTED => 10-MAR-2015 TIME PLOTTED => 12:09

DIST	COUNTY	ROUTE	POST MILES TOTAL PROJECT	SHEET No.	TOTAL SHEETS
10	SJ	4	R16.6/R17.4	34	34

Charles R. Hutchinson 2-06-15
REGISTERED CIVIL ENGINEER DATE

3-9-15
PLANS APPROVAL DATE

REGISTERED PROFESSIONAL ENGINEER CHARLES R. HUTCHINSON No. C 54226 Exp. 12-31-15 CIVIL STATE OF CALIFORNIA

The State of California or its officers or agents shall not be responsible for the accuracy or completeness of scanned copies of this plan sheet.

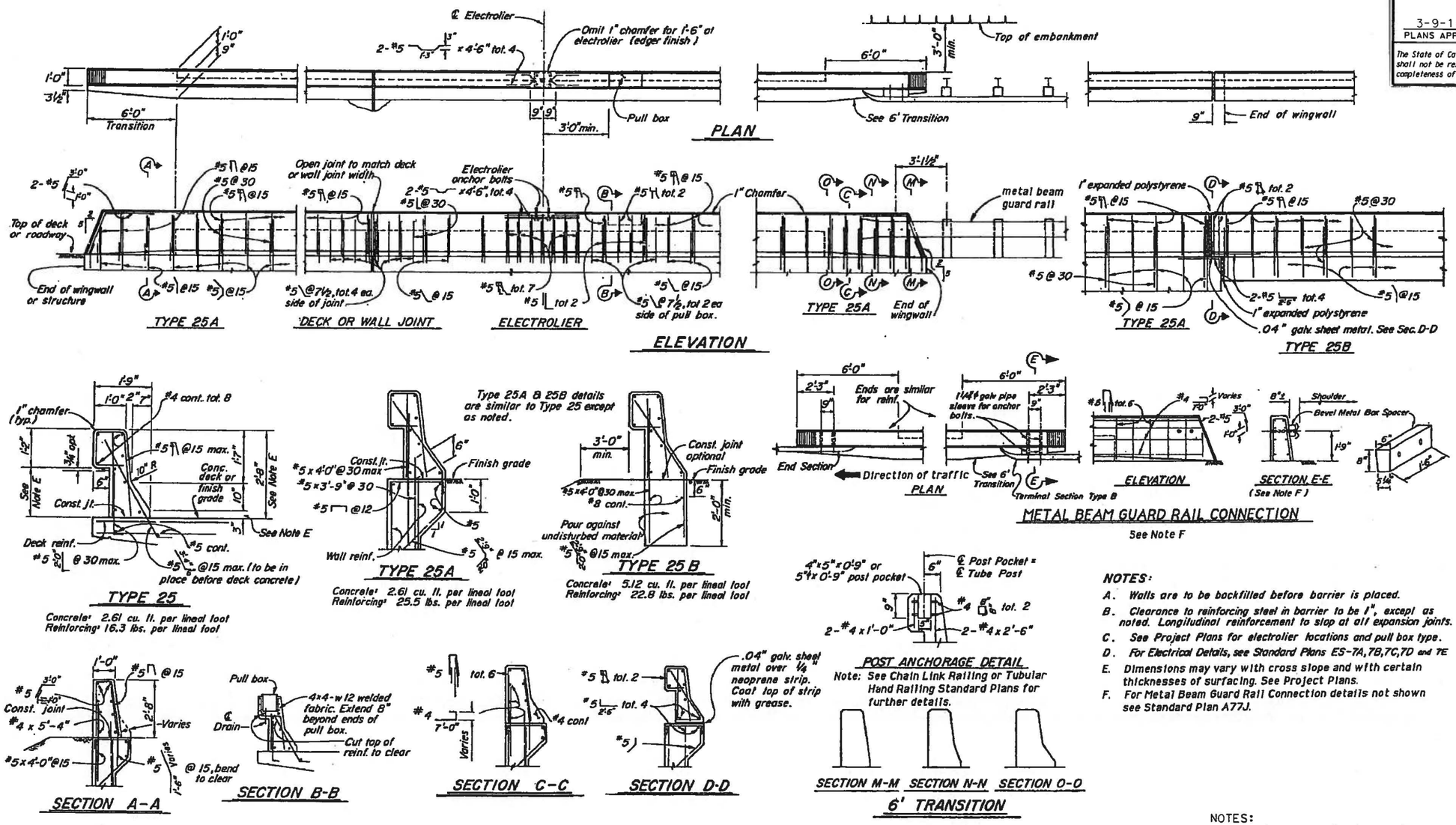

NOTES:

A. Walls are to be backfilled before barrier is placed.

B. Clearance to reinforcing steel in barrier to be 1", except as noted. Longitudinal reinforcement to stop at all expansion joints.

C. See Project Plans for electrolier locations and pull box type.

D. For Electrical Details, see Standard Plans ES-7A, 7B, 7C, 7D and 7E

E. Dimensions may vary with cross slope and with certain thicknesses of surfacing. See Project Plans.

F. For Metal Beam Guard Rail Connection details not shown see Standard Plan A77J.

NOTES:

1. Retain all existing reinforcement during demolition.
2. See other plan sheets for existing conduits to be protected.
3. See other plan sheets for joint seal assembly blockouts in barrier and blockout cover plates.
4. Plan Details taken from 1992 Standard Plan B11-53. Use applicable details.

	BY	CHECKED
DESIGN	Charles Hutchinson	Khanh Truong
DETAILS	Trung Lam	Khanh Truong
QUANTITIES	Charles Hutchinson	Khanh Truong

STATE OF CALIFORNIA
DEPARTMENT OF TRANSPORTATION

DIVISION OF MAINTENANCE
STRUCTURE MAINTENANCE DESIGN

BRIDGE NO. 29-0269
POST MILE R16.62

CROSSTOWN FREEWAY VIADUCT
CONCRETE BARRIER TYPE 25

STRUCTURES MAINTENANCE GENERAL PLAN SHEET (ENGLISH) (REV. 09-01-10)

ORIGINAL SCALE IN INCHES FOR REDUCED PLANS 0 1 2 3

UNIT: 3488
PROJECT NUMBER & PHASE: 1014000133
CONTRACT NO.: 10-1C0901

DISREGARD PRINTS BEARING EARLIER REVISION DATES 2-03-15

REVISION DATES | SHEET 24 OF 24

FILE => 10-1c0901_24_concrete_barrier.dgn

USERNAME => s121289 DATE PLOTTED => 05-MAR-2015 TIME PLOTTED => 16:21