Dist	COUNTY	ROUTE	POST MILES TOTAL PROJECT	SHEET No.	TOTAL SHEETS
10	SJ	120	6.7/16.7	1	33

ACNHP-P120(059)E

STATE OF CALIFORNIA
DEPARTMENT OF TRANSPORTATION

PROJECT PLANS FOR CONSTRUCTION ON
STATE HIGHWAY

IN SAN JOAQUIN COUNTY
IN AND NEAR MANTECA
FROM 0.1 MILE WEST OF AUSTIN ROAD TO
0.1 MILE WEST OF ESCALON BELLOTA ROAD/MCHENRY AVENUE

TO BE SUPPLEMENTED BY STANDARD PLANS DATED 2010

INDEX OF PLANS

SHEET NO.	DESCRIPTION
1	TITLE AND LOCATION MAP
2	TYPICAL CROSS SECTIONS
3-11	CONSTRUCTION DETAILS
12	CONSTRUCTION AREA SIGNS
13	PAVEMENT DELINEATION AND SIGN DETAILS
14	SIGN QUANTITIES
15-18	SUMMARY OF QUANTITIES
19-21	ELECTRICAL PLANS
22-33	REVISED STANDARD PLANS

THE STANDARD PLANS LIST APPLICABLE TO THIS CONTRACT IS INCLUDED IN THE NOTICE TO BIDDERS AND SPECIAL PROVISIONS BOOK.

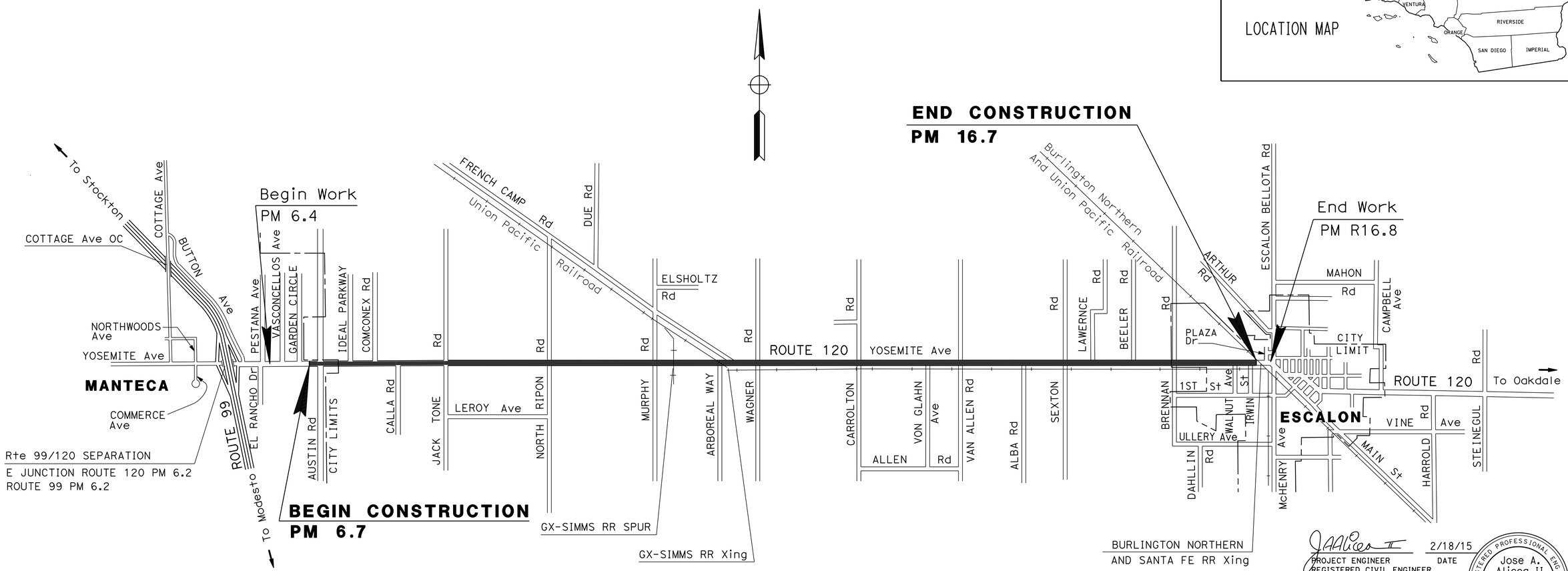

NO SCALE

THE CONTRACTOR SHALL POSSESS THE CLASS (OR CLASSES) OF LICENSE AS SPECIFIED IN THE "NOTICE TO BIDDERS."

PROJECT MANAGER: MICHAEL COOK
DESIGN MANAGER: ALVIN MANGINDIN

PROJECT ENGINEER REGISTERED CIVIL ENGINEER — DATE 2/18/15

REGISTERED PROFESSIONAL ENGINEER — Jose A. Alicea II — No. 64817 — Exp. 6/30/15 — CIVIL — STATE OF CALIFORNIA

May 18, 2015
PLANS APPROVAL DATE

THE STATE OF CALIFORNIA OR ITS OFFICERS OR AGENTS SHALL NOT BE RESPONSIBLE FOR THE ACCURACY OR COMPLETENESS OF SCANNED COPIES OF THIS PLAN SHEET.

CONTRACT No.	10-0Y9504
PROJECT ID	1014000070

LAST REVISION 2-18-15
DATE PLOTTED => 04-SEP-2015
TIME PLOTTED => 10:42

Dist	COUNTY	ROUTE	POST MILES TOTAL PROJECT	SHEET No.	TOTAL SHEETS
10	SJ	120	6.7/16.7	2	33

REGISTERED CIVIL ENGINEER 2/18/15 DATE

5-18-15
PLANS APPROVAL DATE

REGISTERED PROFESSIONAL ENGINEER JOSE A. ALICEA II No. 64817 Exp. 6/30/15 CIVIL STATE OF CALIFORNIA

THE STATE OF CALIFORNIA OR ITS OFFICERS OR AGENTS SHALL NOT BE RESPONSIBLE FOR THE ACCURACY OR COMPLETENESS OF SCANNED COPIES OF THIS PLAN SHEET.

NOTES:

1. DIMENSIONS OF THE PAVEMENT STRUCTURES (STRUCTURAL SECTIONS) ARE SUBJECT TO TOLERANCES SPECIFIED IN THE STANDARD SPECIFICATIONS.
2. FOR ACCURATE RIGHT OF WAY DATA, CONTACT RIGHT OF WAY ENGINEERS AT THE DISTRICT OFFICE.
3. EXISTING UTILITY FACILITIES HAVE NOT BEEN PLOTTED ON THESE PLANS
4. FOR COLD PLANE AC PAVEMENT DIMENSIONS AND LOCATIONS, SEE SUMMARY OF QUANTITIES SHEET.
5. FOR HMA DIKE AND CURB AND GUTTER LOCATIONS, SEE SUMMARY OF QUANTITIES SHEET.
6. ENVIRONMENTALLY SENSITIVE AREA (ESA), ALL WORK TO BE PERFORMED ON EXISTING PAVEMENT. NO SHOULDER BACKING WILL BE PLACED WITHIN ESA.

ABBREVIATION:

RHMA-G - RUBBERIZED HOT MIX ASPHALT (GAP GRADED)

PAVEMENT CLIMATE REGION

INLAND VALLEY

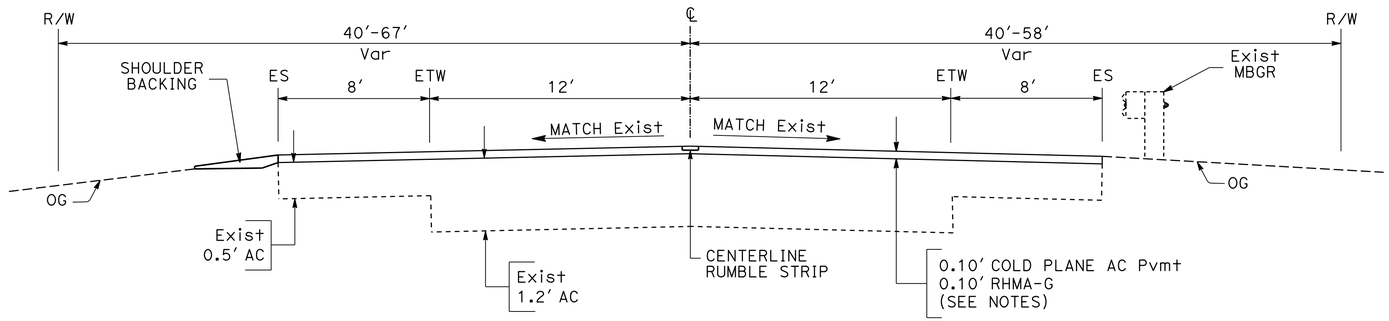

(FOR MBGR LOCATIONS, SEE SUMMARY OF QUANTITIES SHEET)

MBGR LOCATIONS

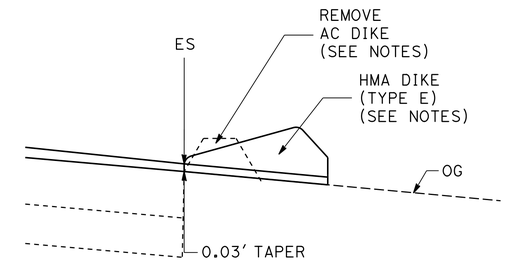

PLACE HMA DIKE

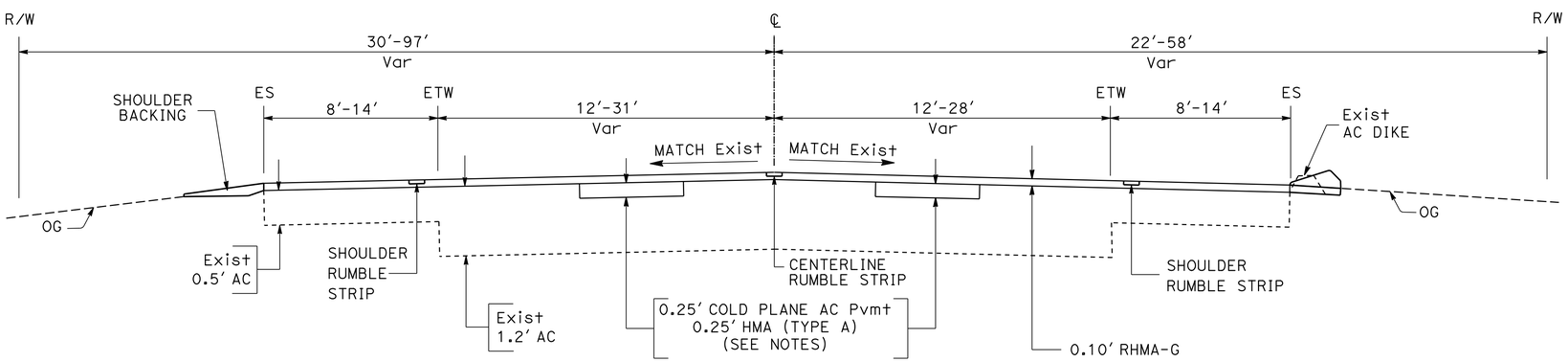

PM 6.9/16.6

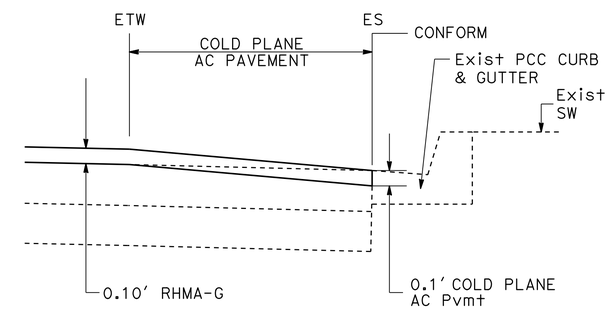

CONFORM TAPER AT CURB & GUTTER

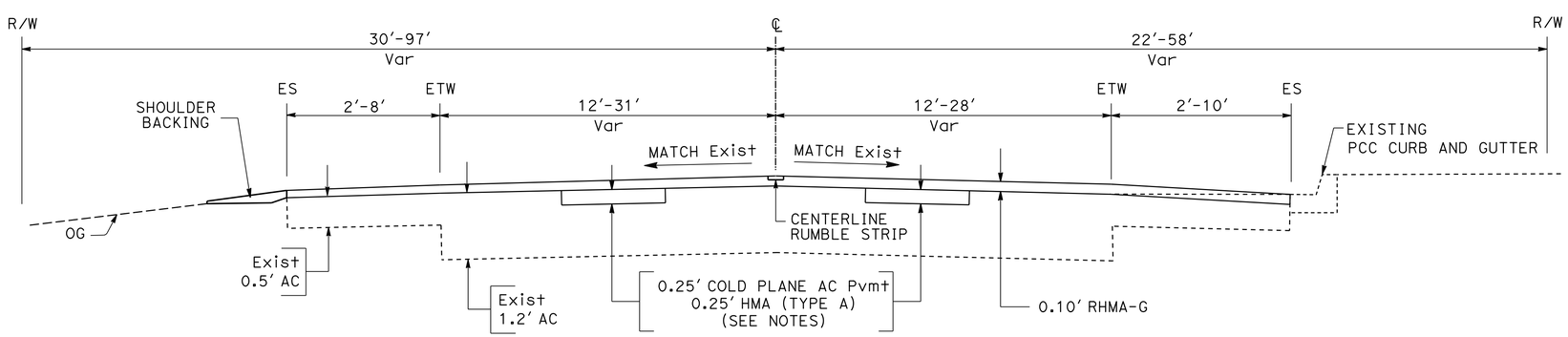

PM 6.7/6.9
PM 16.6/16.7

ROUTE 120

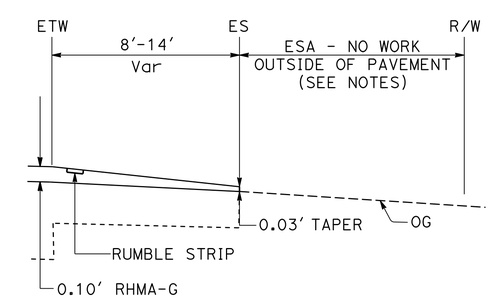

PM 9.29/9.37 (EB)

ESA LOCATION

TYPICAL CROSS SECTIONS

NO SCALE

X-1

STATE OF CALIFORNIA - DEPARTMENT OF TRANSPORTATION
Caltrans® MAINTENANCE

FUNCTIONAL SUPERVISOR: ALVIN MANGINDIN
CALCULATED-DESIGNED BY: THOA TABADA
CHECKED BY: JOSE ALICEA
REVISED BY: JA
DATE REVISED: 12-08-14

LAST REVISION 12-8-14
DATE PLOTTED => 27-MAY-2015
TIME PLOTTED => 15:06

Dist	COUNTY	ROUTE	POST MILES TOTAL PROJECT	SHEET No.	TOTAL SHEETS
10	SJ	120	6.7/16.7	3	33

REGISTERED CIVIL ENGINEER 2/18/15 DATE

5-18-15
PLANS APPROVAL DATE

REGISTERED PROFESSIONAL ENGINEER JOSE A. ALICEA II No. 64817 Exp. 6/30/15 CIVIL STATE OF CALIFORNIA

THE STATE OF CALIFORNIA OR ITS OFFICERS OR AGENTS SHALL NOT BE RESPONSIBLE FOR THE ACCURACY OR COMPLETENESS OF SCANNED COPIES OF THIS PLAN SHEET.

LEGEND:

- COLD PLANE AC PAVEMENT RHMA-G
- COLD PLANE AC PAVEMENT HMA (TYPE A)
- HMA (TYPE A)

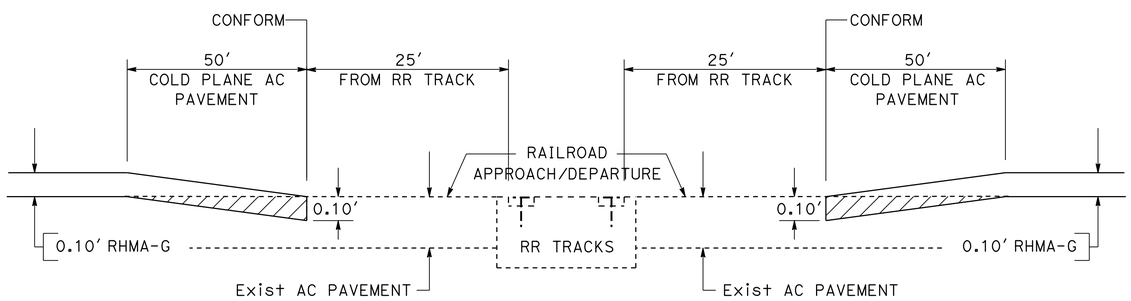

SIMMS RAILROAD SPUR - PM 11.3
SIMMS RAILROAD Xing - PM 11.6
BURLINGTON NORTHERN/UNION PACIFIC RAILROAD Xing - PM 16.7

CONFORM TAPER AT RAILROAD APPROACH/DEPARTURE

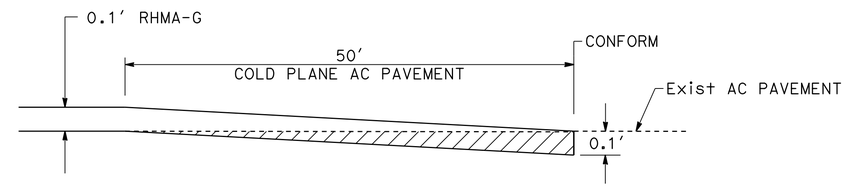

SEE SUMMARY OF QUANTITIES (LONGITUDINAL CONFORM TABLE)

LONGITUDINAL CONFORM TAPER AT EXISTING AC PAVEMENT

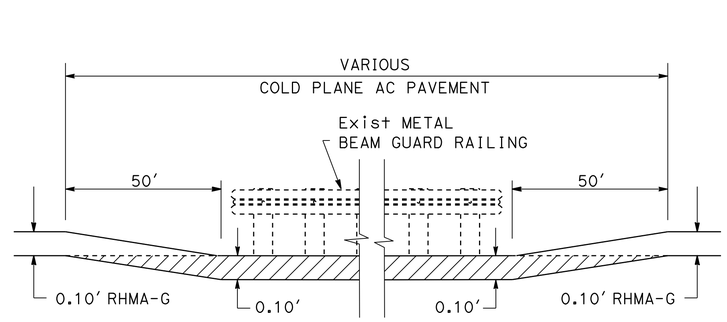

SEE SUMMARY OF QUANTITIES (CONFORM TAPERS AT MBGR TABLE)

CONFORM TAPER AT METAL BEAM GUARD RAIL

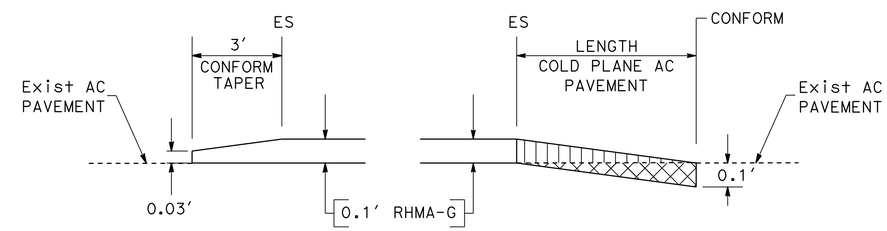

PRIVATE DRIVEWAY CONFORM TAPER

PUBLIC ROAD CONFORM TAPER

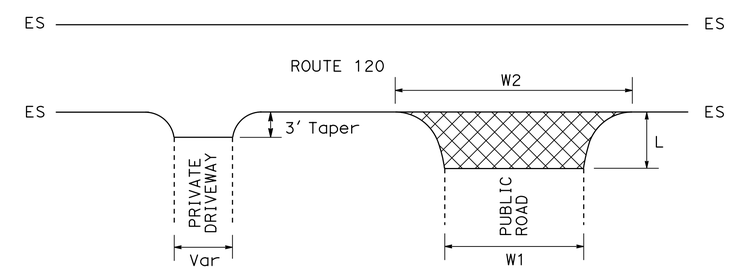

SEE PUBLIC AND PRIVATE ROAD INTERSECTIONS TABLES

PAVING LIMITS AT PRIVATE DRIVEWAYS AND PUBLIC ROAD INTERSECTIONS

CONSTRUCTION DETAILS

NO SCALE

C-1

REVISED BY	DATE REVISED	CALCULATED-DESIGNED BY	CHECKED BY	FUNCTIONAL SUPERVISOR
JA	12-04-14	THOA TABADA	JOSE ALICEA	ALVIN MANGINDIN

STATE OF CALIFORNIA - DEPARTMENT OF TRANSPORTATION
Caltrans® MAINTENANCE

LAST REVISION 12-04-14 | DATE PLOTTED => 27-MAY-2015 TIME PLOTTED => 15:06

Dist	COUNTY	ROUTE	POST MILES TOTAL PROJECT	SHEET No.	TOTAL SHEETS
10	SJ	120	6.7/16.7	4	33

REGISTERED CIVIL ENGINEER 2/18/15 DATE

5-18-15
PLANS APPROVAL DATE

REGISTERED PROFESSIONAL ENGINEER JOSE A. ALICEA II No. 64817 Exp. 6/30/15 CIVIL STATE OF CALIFORNIA

THE STATE OF CALIFORNIA OR ITS OFFICERS OR AGENTS SHALL NOT BE RESPONSIBLE FOR THE ACCURACY OR COMPLETENESS OF SCANNED COPIES OF THIS PLAN SHEET.

PUBLIC ROAD INTERSECTIONS

PM	SIDE	ROAD NAME	LENGTH	W1	W2
6.8	L+	AUSTIN ROAD	120′	40′	150′
6.8	R+	AUSTIN ROAD	70′	40′	150′
7.2	L+	IDEAL PARKWAY	30′	48′	100′
7.5	L+	COMCONEX ROAD	40′	40′	90′
8.8	L+	JACK TONE ROAD	160′	44′	110′
8.8	R+	JACK TONE ROAD	80′	44′	110′
9.8	L+	NORTH RIPON ROAD	170′	20′	176′
9.8	R+	NORTH RIPON ROAD	130′	30′	180′
11.2	L+	MURPHY ROAD	140′	22′	130′
11.2	R+	MURPHY ROAD	150′	20′	140′
11.5	R+	ARBOREAL WAY	50′	20′	40′
11.6	L+	FRENCH CAMP ROAD	440′	34′	230′
11.8	L+	WAGNER ROAD	140′	20′	200′
11.8	R+	WAGNER ROAD	5′	44′	58′
12.8	L+	CARROLTON ROAD	122′	20′	140′
12.8	R+	CARROLTON ROAD	5′	32′	60′
13.5	R+	VON GLAHN AVENUE	5′	35′	50′
13.8	L+	VAN ALLEN ROAD	140′	20′	124′
13.8	R+	VAN ALLEN ROAD	5′	44′	54′
14.3	R+	ALBA ROAD	5′	40′	50′
14.8	L+	SEXTON ROAD	130′	20′	140′
14.8	R+	SEXTON ROAD	5′	38′	46′
15.1	L+	LAWRENCE ROAD	140′	20′	154′
15.5	L+	BEELER ROAD	150′	18′	150′
15.9	L+	BRENNAN AVENUE	180′	20′	170′
15.9	R+	BRENNAN AVENUE	5′	38′	44′
16.4	R+	WALNUT AVENUE	5′	42′	54′
16.5	R+	IRWIN STREET	5′	55′	65′

TABLE OF RAILROADS

LOCATION	RAILROAD
PM 11.3	UNION PACIFIC RAILROAD Xing
PM 11.6	UNION PACIFIC RAILROAD Xing
PM 16.7	BURLINGTON NORTHERN/UNION PACIFIC RAILROAD Xing

PRIVATE DRIVEWAY INTERSECTIONS

PM	SIDE	PM	SIDE	PM	SIDE	PM	SIDE	PM	SIDE	PM	SIDE
6.95	L+	8.47	R+	9.85	R+	11.30	L+	12.62	L+	14.15	L+
7.00	R+	8.48	R+	10.00	R+	11.45	L+	12.64	L+	14.32	L+
7.06	R+	8.51	R+	10.02	R+	11.47	L+	12.66	L+	14.32	R+
7.09	R+	8.55	R+	10.03	R+	11.47	R+	12.66	R+	14.42	L+
7.13	L+	8.55	L+	10.07	R+	11.48	R+	12.68	L+	14.46	L+
7.15	L+	8.57	L+	10.07	L+	11.48	L+	12.69	L+	14.52	L+
7.18	L+	8.64	R+	10.15	L+	11.49	R+	12.70	L+	14.56	L+
7.25	R+	8.74	R+	10.15	R+	11.50	L+	12.73	L+	14.64	L+
7.32	L+	8.74	L+	10.24	L+	11.51	R+	12.76	L+	14.72	L+
7.33	L+	8.82	R+	10.25	L+	11.53	L+	12.99	L+	14.79	L+
7.33	R+	9.11	L+	10.32	L+	11.53	R+	13.00	L+	14.80	L+
7.41	R+	9.21	L+	10.35	L+	11.69	L+	13.01	R+	15.10	R+
7.41	L+	9.22	L+	10.35	R+	11.70	L+	13.08	R+	15.19	L+
7.58	R+	9.23	L+	10.38	L+	11.93	L+	13.11	L+	15.38	R+
7.87	L+	9.26	L+	10.43	R+	11.95	L+	13.25	L+	15.45	L+
7.87	R+	9.28	R+	10.46	L+	11.96	L+	13.30	L+	15.53	L+
7.89	R+	9.38	L+	10.62	L+	12.10	L+	13.33	L+	15.58	R+
8.08	L+	9.56	L+	10.87	L+	12.18	R+	13.45	L+	15.62	R+
8.23	L+	9.57	L+	11.13	L+	12.22	L+	13.54	L+	15.75	L+
8.33	L+	9.77	L+	11.15	L+	12.32	L+	13.60	L+	15.78	L+
8.37	L+	9.79	L+	11.18	R+	12.35	L+	13.66	R+	15.80	L+
8.40	R+	9.85	L+	11.24	R+	12.58	L+	14.11	L+	15.84	L+

* PRIVATE DRIVEWAY LOCATIONS ARE APPROXIMATE. ACTUAL LOCATIONS AND WIDTHS SHALL BE DETERMINED BY THE ENGINEER.

CONSTRUCTION DETAILS

NO SCALE

C-2

REVISED BY	DATE REVISED
JA	11-14-14

CALCULATED-DESIGNED BY	CHECKED BY
THOA TABADA	JOSE ALICEA

FUNCTIONAL SUPERVISOR: ALVIN MANGINDIN

STATE OF CALIFORNIA - DEPARTMENT OF TRANSPORTATION
Caltrans® MAINTENANCE

LAST REVISION 11-14-14 | DATE PLOTTED => 27-MAY-2015 | TIME PLOTTED => 15:06

Dist	COUNTY	ROUTE	POST MILES TOTAL PROJECT	SHEET No.	TOTAL SHEETS
10	SJ	120	6.7/16.7	5	33

REGISTERED CIVIL ENGINEER 2/18/15 DATE

5-18-15
PLANS APPROVAL DATE

REGISTERED PROFESSIONAL ENGINEER JOSE A. ALICEA II No. 64817 Exp. 6/30/15 CIVIL STATE OF CALIFORNIA

THE STATE OF CALIFORNIA OR ITS OFFICERS OR AGENTS SHALL NOT BE RESPONSIBLE FOR THE ACCURACY OR COMPLETENESS OF SCANNED COPIES OF THIS PLAN SHEET.

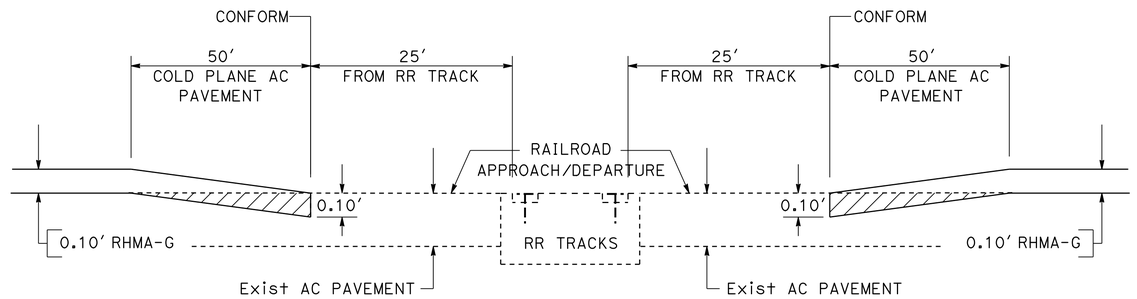

SECTION A-A

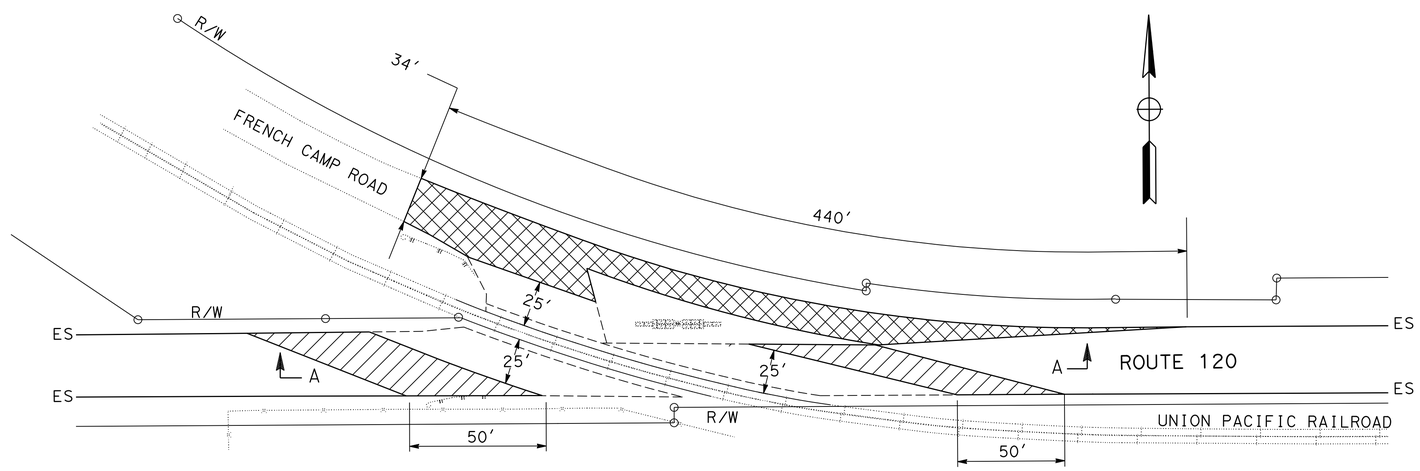

PM 11.64

DIGOUT DETAIL AT UNION PACIFIC RR COMPANY XING

STATE OF CALIFORNIA - DEPARTMENT OF TRANSPORTATION
Caltrans MAINTENANCE

FUNCTIONAL SUPERVISOR: ALVIN MANGINDIN
CALCULATED-DESIGNED BY: THOA TABADA
CHECKED BY: JOSE ALICEA
REVISED BY: JA
DATE REVISED: 11-14-14

CONSTRUCTION DETAILS

NO SCALE **C-3**

LAST REVISION 11-14-14 | DATE PLOTTED => 27-MAY-2015 | TIME PLOTTED => 15:06

Dist	COUNTY	ROUTE	POST MILES TOTAL PROJECT	SHEET No.	TOTAL SHEETS
10	SJ	120	6.7/16.7	6	33

REGISTERED CIVIL ENGINEER DATE 2/18/15

5-18-15
PLANS APPROVAL DATE

REGISTERED PROFESSIONAL ENGINEER JOSE A. ALICEA II No. 64817 Exp. 6/30/15 CIVIL STATE OF CALIFORNIA

THE STATE OF CALIFORNIA OR ITS OFFICERS OR AGENTS SHALL NOT BE RESPONSIBLE FOR THE ACCURACY OR COMPLETENESS OF SCANNED COPIES OF THIS PLAN SHEET.

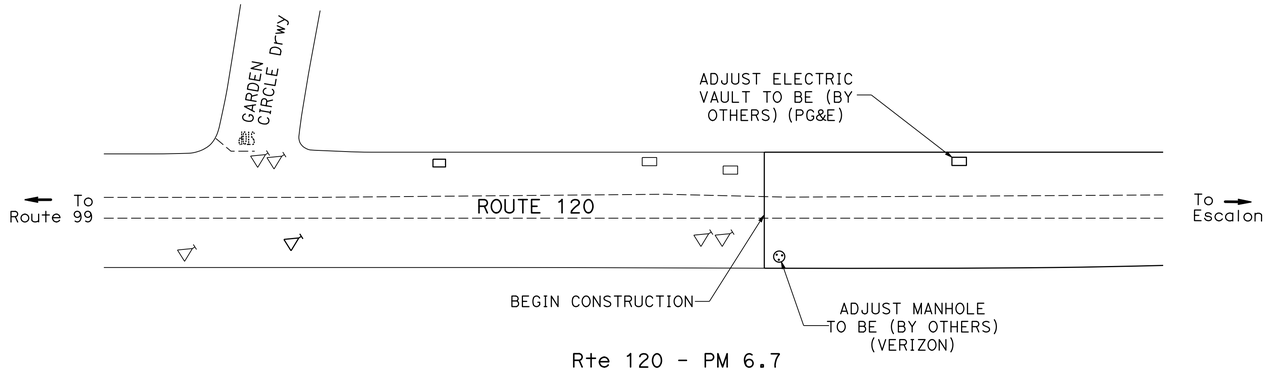

Rte 120 - PM 6.7
BEGIN CONSTRUCTION

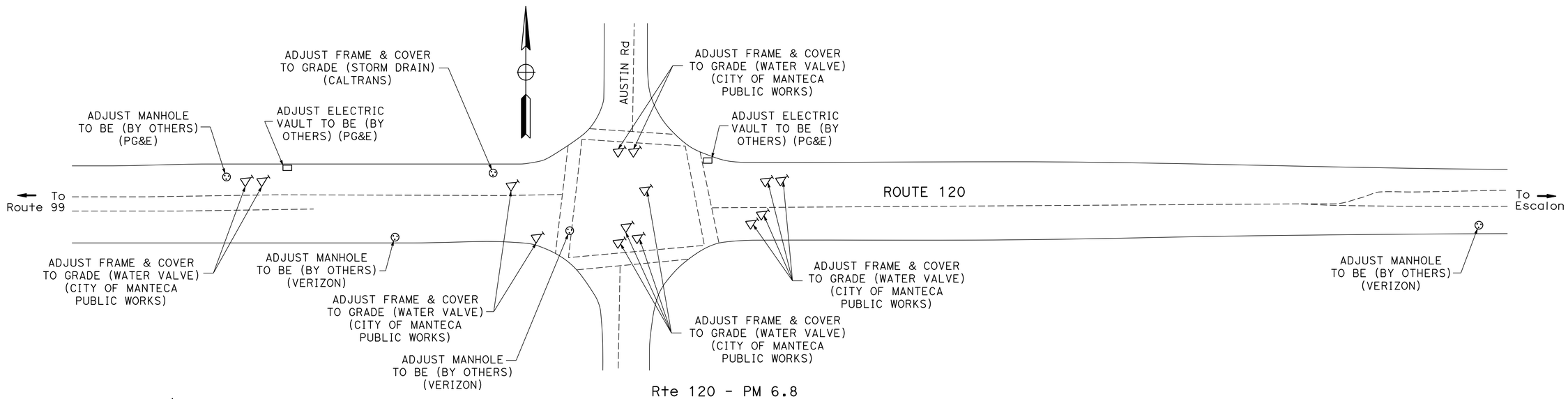

Rte 120 - PM 6.8
AUSTIN ROAD

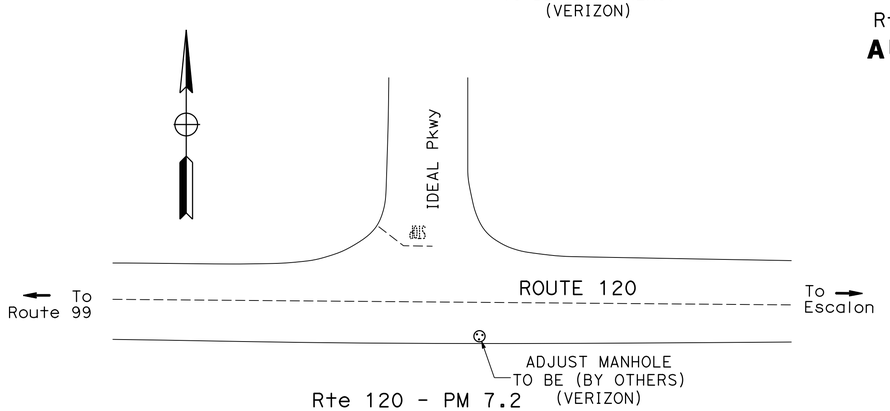

Rte 120 - PM 7.2
IDEAL PARKWAY

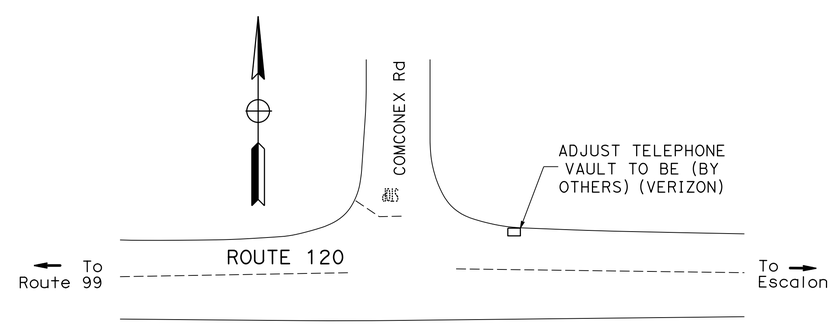

Rte 120 - PM 7.5
COMCONEX ROAD

ADJUST FRAME AND COVER TO GRADE LOCATIONS

CONSTRUCTION DETAILS

NO SCALE

C-4

THOA TABADA	JA	12-01-14	
JOSE ALICEA	REVISED BY	DATE REVISED	
CALCULATED-DESIGNED BY	CHECKED BY	FUNCTIONAL SUPERVISOR	ALVIN MANGINDIN

STATE OF CALIFORNIA - DEPARTMENT OF TRANSPORTATION
Caltrans® **MAINTENANCE**

LAST REVISION 00-00-00 | DATE PLOTTED => 27-MAY-2015 | TIME PLOTTED => 15:06

Dist	COUNTY	ROUTE	POST MILES TOTAL PROJECT	SHEET No.	TOTAL SHEETS
10	SJ	120	6.7/16.7	7	33

REGISTERED CIVIL ENGINEER 2/18/15 DATE

5-18-15
PLANS APPROVAL DATE

REGISTERED PROFESSIONAL ENGINEER JOSE A. ALICEA II No. 64817 Exp. 6/30/15 CIVIL STATE OF CALIFORNIA

THE STATE OF CALIFORNIA OR ITS OFFICERS OR AGENTS SHALL NOT BE RESPONSIBLE FOR THE ACCURACY OR COMPLETENESS OF SCANNED COPIES OF THIS PLAN SHEET.

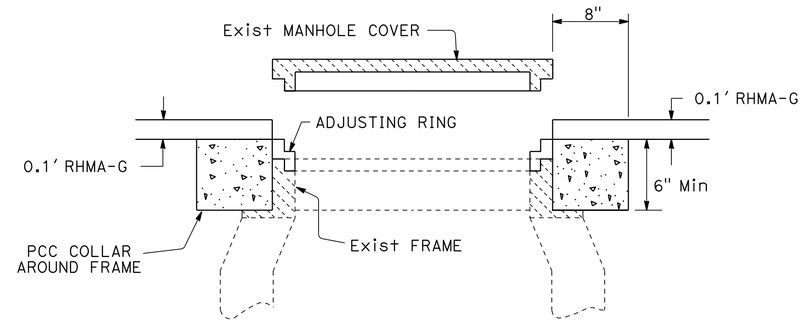

MANHOLES

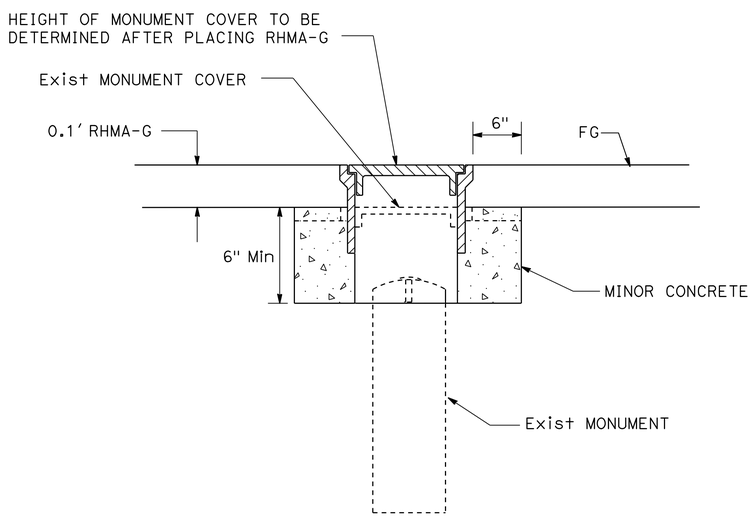

SEE SUMMARY OF QUANTITIES (ADJUST MONUMENT TO GRADE)

SURVEY MONUMENT

ADJUST MONUMENT TO GRADE

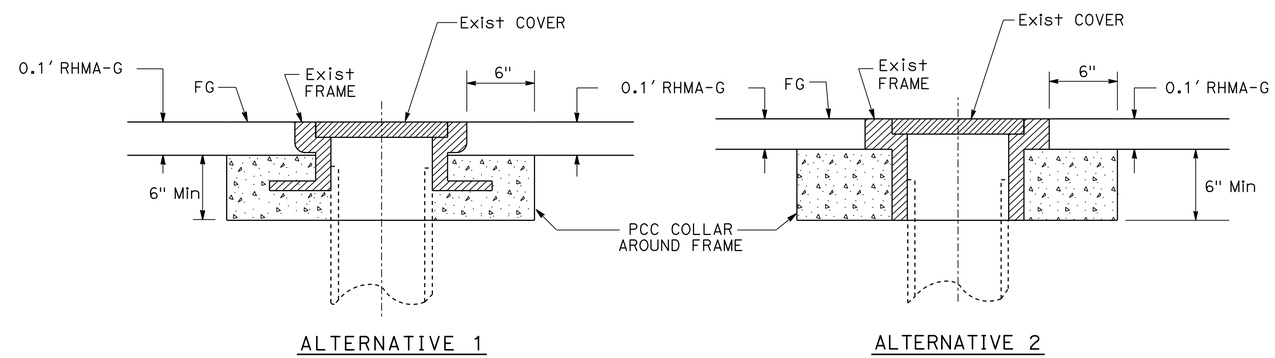

WATER VALVE

ADJUST FRAME AND COVER TO GRADE

CONSTRUCTION DETAILS

NO SCALE

C-5

REVISED BY	JA
DATE REVISED	11-14-14
THOA TABADA	
JOSE ALICEA	
CALCULATED-DESIGNED BY	
CHECKED BY	
FUNCTIONAL SUPERVISOR	
ALVIN MANGINDIN	

STATE OF CALIFORNIA - DEPARTMENT OF TRANSPORTATION
Caltrans® **MAINTENANCE**

LAST REVISION 11-14-14 | DATE PLOTTED => 27-MAY-2015 | TIME PLOTTED => 15:06

Dist	COUNTY	ROUTE	POST MILES TOTAL PROJECT	SHEET No.	TOTAL SHEETS
10	SJ	120	6.7/16.7	8	33

REGISTERED CIVIL ENGINEER 2/18/15 DATE

5-18-15
PLANS APPROVAL DATE

REGISTERED PROFESSIONAL ENGINEER JOSE A. ALICEA II No. 64817 Exp. 6/30/15 CIVIL STATE OF CALIFORNIA

THE STATE OF CALIFORNIA OR ITS OFFICERS OR AGENTS SHALL NOT BE RESPONSIBLE FOR THE ACCURACY OR COMPLETENESS OF SCANNED COPIES OF THIS PLAN SHEET.

NOTES (THIS SHEET ONLY):

1. TRAFFIC CONES TO BE USED FOR ESA LIMIT.
2. SHOULDER CLOSURE PER STANDARD PLAN T10.
3. NO GROUND DISTURBANCE SHALL OCCUR WITHIN ESA.
4. IF A MESSAGE CONSISTS OF MORE THAN ONE WORD, IT SHOULD READ "UP", I.E., THE FIRST WORD SHOULD BE NEAREST THE DRIVER.

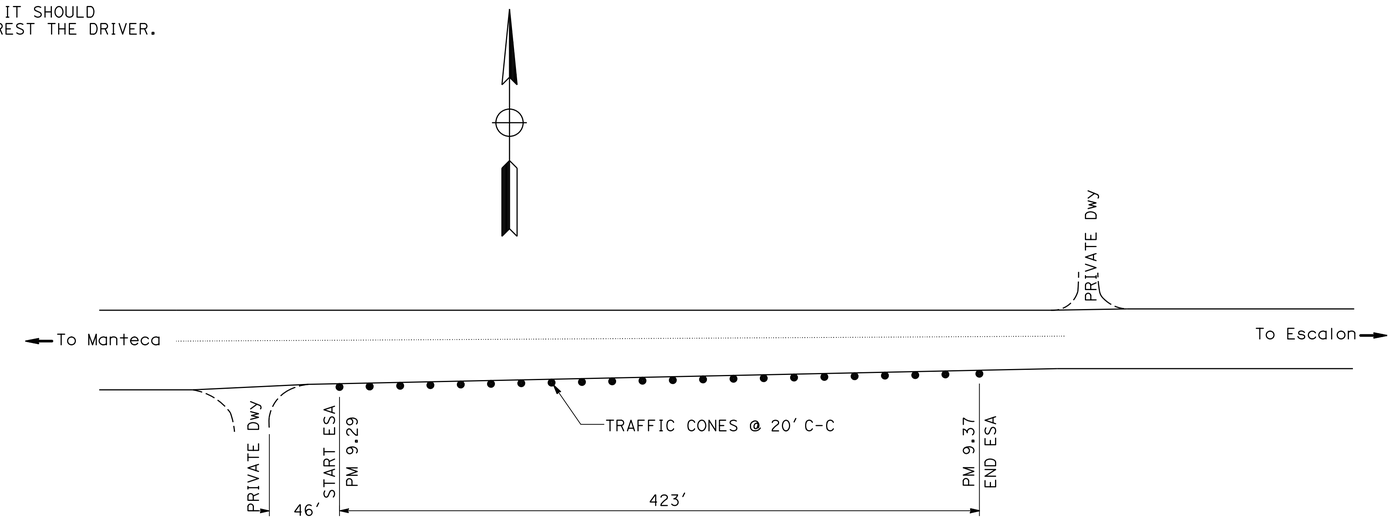

Rte 120 - PM 9.29/9.37 (EB)

ESA LIMIT

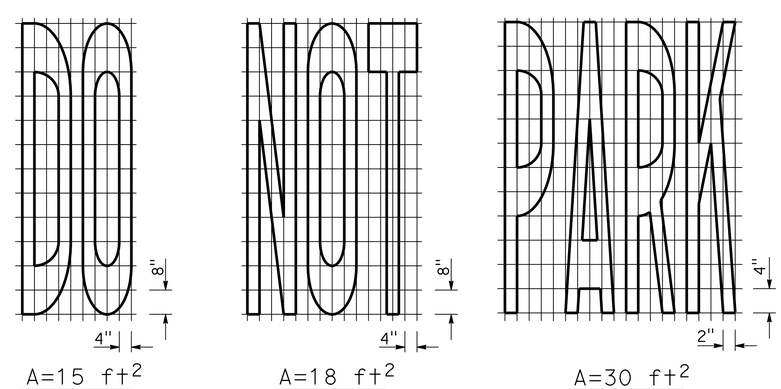

Rte 120 - PM 8.80 (EB)

PAVEMENT MARKINGS
WORDS

CONSTRUCTION DETAILS

NO SCALE

C-6

STATE OF CALIFORNIA - DEPARTMENT OF TRANSPORTATION
Caltrans
MAINTENANCE

FUNCTIONAL SUPERVISOR: ALVIN MANGINDIN

CALCULATED-DESIGNED BY: JHOANNA OAMILDA
CHECKED BY: JOSE ALICEA

REVISED BY: JA
DATE REVISED: 11-14-14

LAST REVISION 11-14-14
DATE PLOTTED => 27-MAY-2015
TIME PLOTTED => 15:06

Dist	COUNTY	ROUTE	POST MILES TOTAL PROJECT	SHEET No.	TOTAL SHEETS
10	SJ	120	6.7/16.7	9	33

REGISTERED CIVIL ENGINEER 2/18/15 DATE

5-18-15
PLANS APPROVAL DATE

REGISTERED PROFESSIONAL ENGINEER JOSE A. ALICEA II No. 64817 Exp. 6/30/15 CIVIL STATE OF CALIFORNIA

THE STATE OF CALIFORNIA OR ITS OFFICERS OR AGENTS SHALL NOT BE RESPONSIBLE FOR THE ACCURACY OR COMPLETENESS OF SCANNED COPIES OF THIS PLAN SHEET.

LEGEND (SHEET C-7 AND C-8 ONLY):

- 4" THERMOPLASTIC WHITE STRIPE
- 4" THERMOPLASTIC YELLOW STRIPE
- TYPE D TWO-WAY YELLOW RETROREFLECTIVE PAVEMENT MARKER
- TYPE H ONE-WAY YELLOW RETROREFLECTIVE PAVEMENT MARKER
- RUMBLE STRIPS

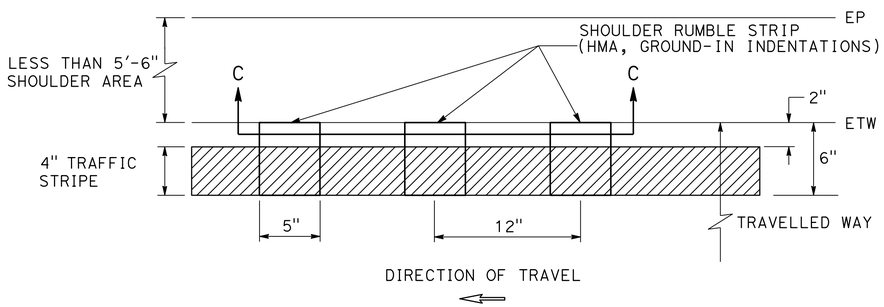

PLAN VIEW

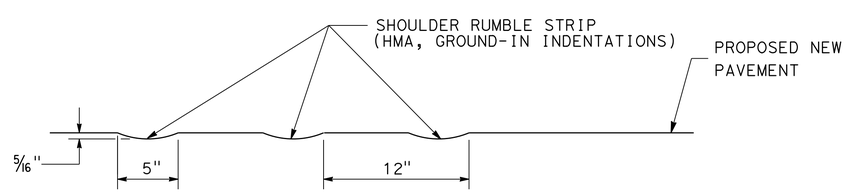

SECTION C-C

ELEVATION VIEW

6" SHOULDER RUMBLE STRIP (HMA, GROUND-IN INDENTATIONS) WITH DETAIL 27 THERMOPLASTIC TRAFFIC STRIPE

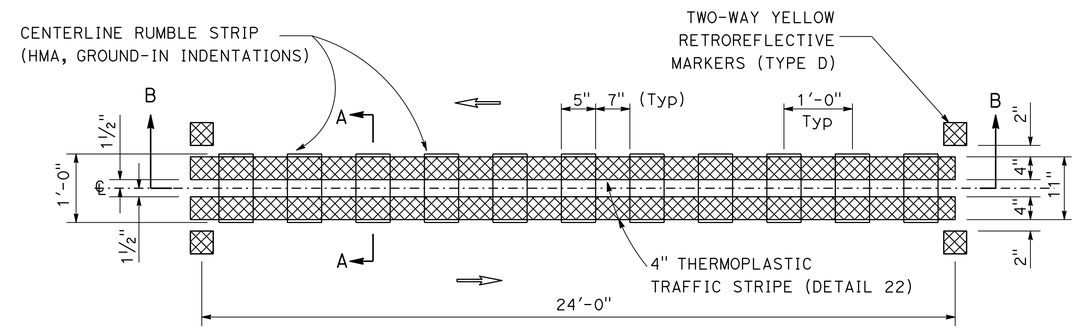

PLAN VIEW

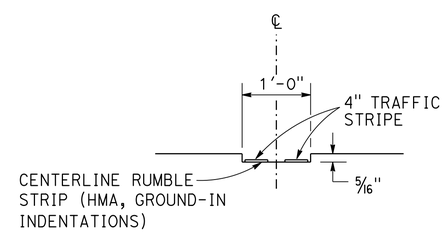

SECTION A-A

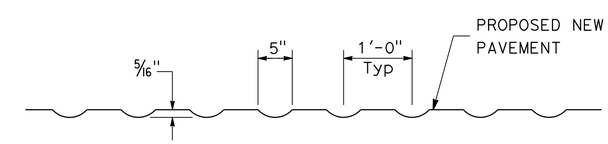

SECTION B-B

ELEVATION VIEW

CENTERLINE RUMBLE STRIP (HMA, GROUND-IN INDENTATIONS) WITH DETAIL 22 THERMOPLASTIC TRAFFIC STRIPE

CONSTRUCTION DETAILS

NO SCALE

C-7

REVISED BY	DATE REVISED
JA	02-06-15

JHOANNA OAMILDA — JOSE ALICEA — CALCULATED-DESIGNED BY — CHECKED BY

FUNCTIONAL SUPERVISOR: ALVIN MANGINDIN

STATE OF CALIFORNIA - DEPARTMENT OF TRANSPORTATION — MAINTENANCE — Caltrans

LAST REVISION 2-6-15 — DATE PLOTTED => 27-MAY-2015 — TIME PLOTTED => 15:06

Dist	COUNTY	ROUTE	POST MILES TOTAL PROJECT	SHEET No.	TOTAL SHEETS
10	SJ	120	6.7/16.7	10	33

REGISTERED CIVIL ENGINEER 2/18/15 DATE

5-18-15
PLANS APPROVAL DATE

REGISTERED PROFESSIONAL ENGINEER JOSE A. ALICEA II No. 64817 Exp. 6/30/15 CIVIL STATE OF CALIFORNIA

THE STATE OF CALIFORNIA OR ITS OFFICERS OR AGENTS SHALL NOT BE RESPONSIBLE FOR THE ACCURACY OR COMPLETENESS OF SCANNED COPIES OF THIS PLAN SHEET.

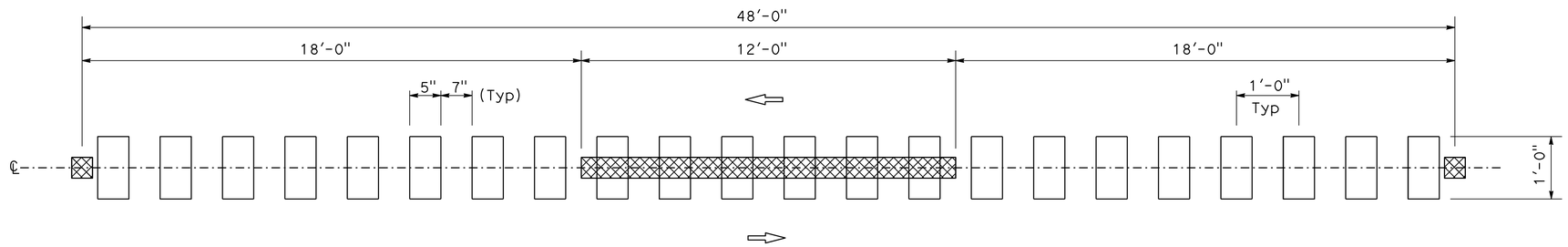

PLAN VIEW

CENTERLINE RUMBLE STRIP (HMA, GROUND-IN INDENTATIONS)
WITH DETAIL 6 THERMOPLASTIC TRAFFIC STRIPE

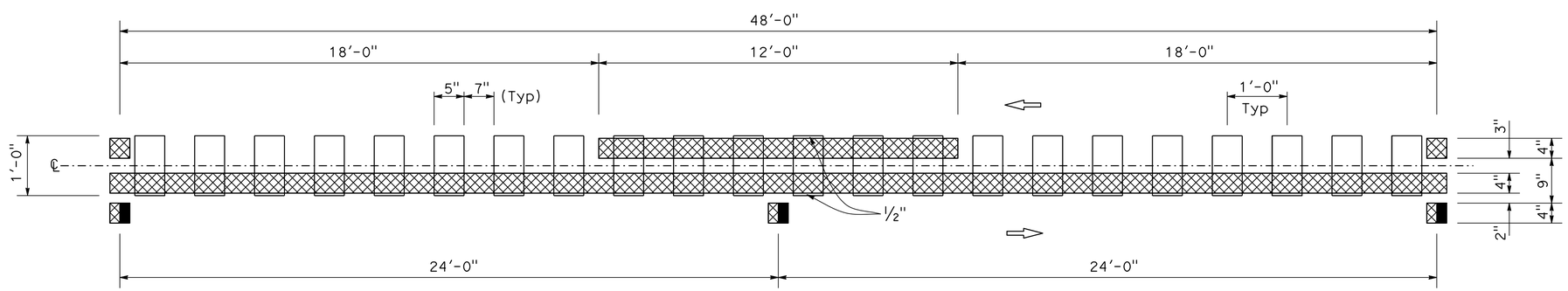

PLAN VIEW

CENTERLINE RUMBLE STRIP (HMA, GROUND-IN INDENTATIONS)
WITH DETAIL 19 THERMOPLASTIC TRAFFIC STRIPE

JA	02-06-15
REVISED BY	DATE REVISED
JHOANNA OAMILDA	JOSE ALICEA
CALCULATED-DESIGNED BY	CHECKED BY
FUNCTIONAL SUPERVISOR	ALVIN MANGINDIN

STATE OF CALIFORNIA - DEPARTMENT OF TRANSPORTATION
Caltrans
MAINTENANCE

CONSTRUCTION DETAILS

NO SCALE

C-8

LAST REVISION 2-6-15
DATE PLOTTED => 27-MAY-2015
TIME PLOTTED => 15:06

Dist	COUNTY	ROUTE	POST MILES TOTAL PROJECT	SHEET No.	TOTAL SHEETS
10	SJ	120	6.7/16.7	11	33

REGISTERED CIVIL ENGINEER 2/18/15 DATE

5-18-15
PLANS APPROVAL DATE

REGISTERED PROFESSIONAL ENGINEER JOSE A. ALICEA II No. 64817 Exp. 6/30/15 CIVIL STATE OF CALIFORNIA

THE STATE OF CALIFORNIA OR ITS OFFICERS OR AGENTS SHALL NOT BE RESPONSIBLE FOR THE ACCURACY OR COMPLETENESS OF SCANNED COPIES OF THIS PLAN SHEET.

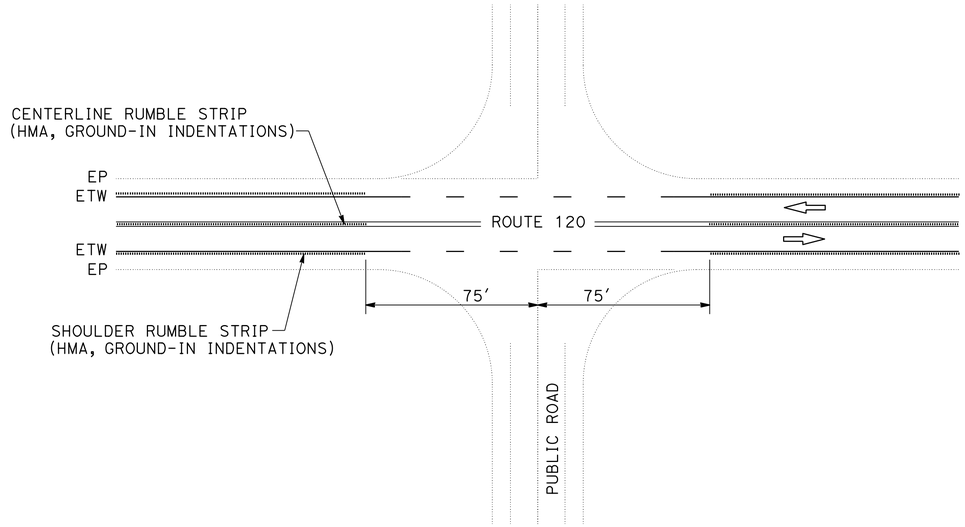

SEE PUBLIC ROAD INTERSECTIONS TABLE

RUMBLE STRIP DETAILS AT PUBLIC ROAD INTERSECTIONS

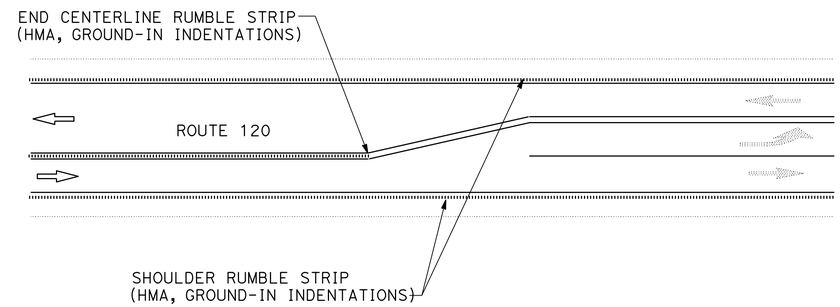

RUMBLE STRIP DETAILS AT LEFT TURN POCKETS

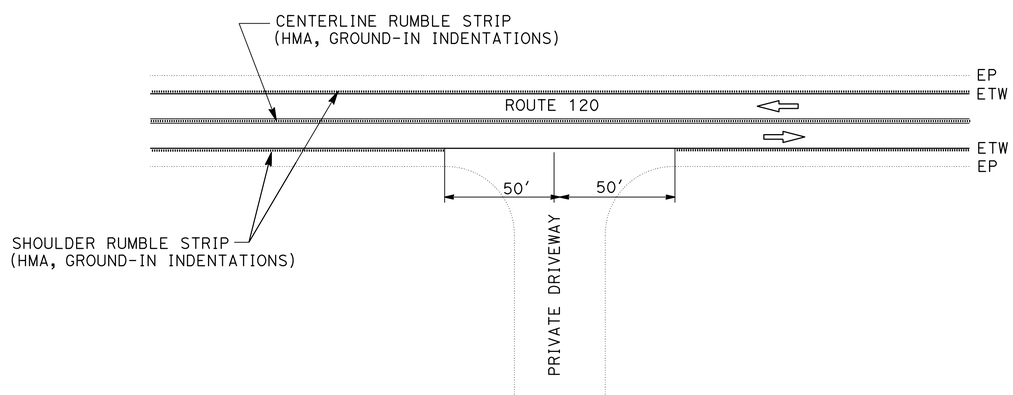

SEE PRIVATE DRIVEWAY INTERSECTIONS TABLE

RUMBLE STRIP DETAILS AT PRIVATE DRIVEWAYS

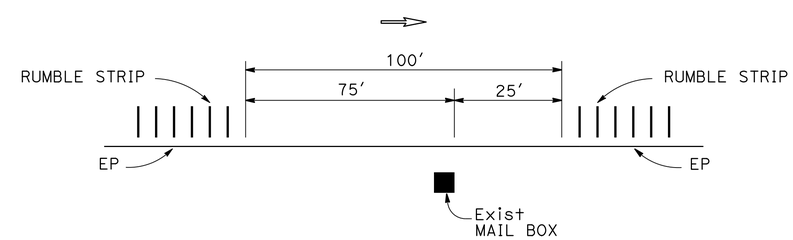

RUMBLE STRIP GAP AT MAIL BOX TYPICAL DETAIL

CONSTRUCTION DETAILS

NO SCALE

C-9

STATE OF CALIFORNIA - DEPARTMENT OF TRANSPORTATION	FUNCTIONAL SUPERVISOR	REVISED BY	DATE REVISED
Caltrans® MAINTENANCE	ALVIN MANGINDIN	JHOANNA OAMILDA	02-06-15
		JOSE ALICEA	
	CALCULATED-DESIGNED BY	CHECKED BY	

LAST REVISION 2-6-15
DATE PLOTTED => 27-MAY-2015
TIME PLOTTED => 15:06

Dist	COUNTY	ROUTE	POST MILES TOTAL PROJECT	SHEET No.	TOTAL SHEETS
10	SJ	120	6.7/16.7	12	33

REGISTERED CIVIL ENGINEER 2/18/15 DATE

5-18-15
PLANS APPROVAL DATE

REGISTERED PROFESSIONAL ENGINEER JOSE A. ALICEA II No. 64817 Exp. 6/30/15 CIVIL STATE OF CALIFORNIA

THE STATE OF CALIFORNIA OR ITS OFFICERS OR AGENTS SHALL NOT BE RESPONSIBLE FOR THE ACCURACY OR COMPLETENESS OF SCANNED COPIES OF THIS PLAN SHEET.

STATIONARY MOUNTED CONSTRUCTION AREA SIGNS

SIGN	SIGN CODE	PANEL SIZE	No. OF POSTS AND SIZE	No. OF SIGNS	SIGN MESSAGE
A	G20-1	60" x 36"	2 - 4" x 6"	2	ROAD WORK NEXT 11 MILES
B	W20-1	30" x 30"	1 - 4" x 4"	32	ROAD WORK AHEAD
C	G20-2	36" x 18"	1 - 4" x 4"	2	END ROAD WORK

NOTE: EXACT SIGN LOCATIONS TO BE DETERMINED BY THE ENGINEER.

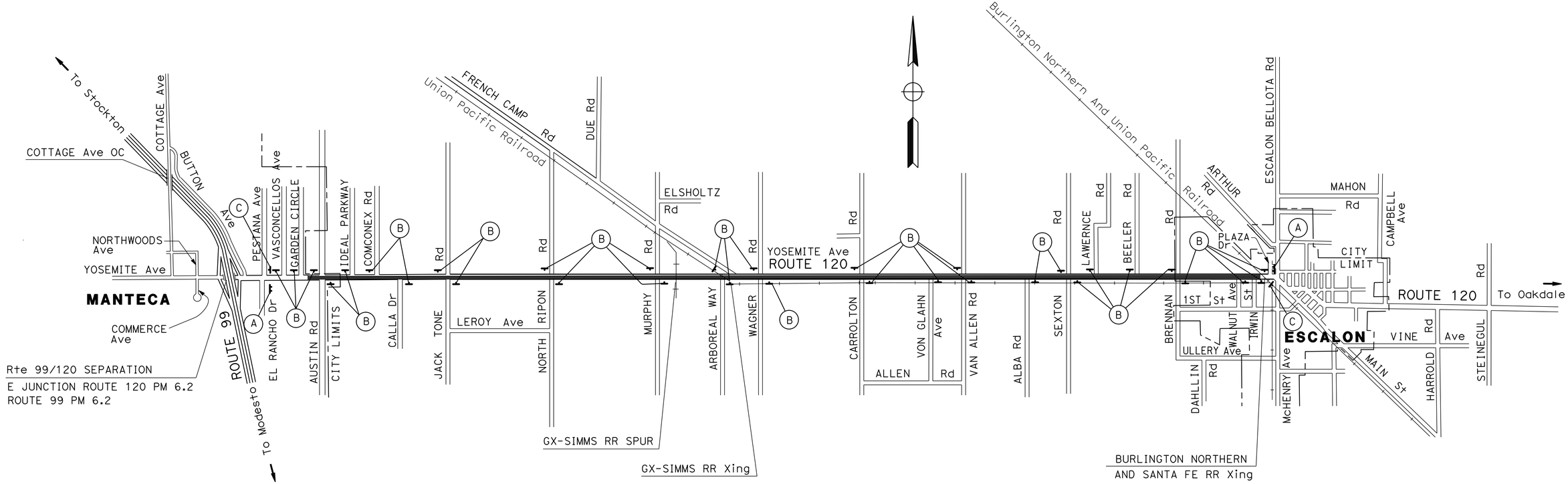

APPROVED FOR CONSTRUCTION AREA SIGN WORK ONLY

CONSTRUCTION AREA SIGNS

NO SCALE

CS-1

THOA TABADA	JA
JOSE ALICEA	11-14-14
CALCULATED-DESIGNED BY	REVISED BY
CHECKED BY	DATE REVISED
FUNCTIONAL SUPERVISOR	
ALVIN MANGINDIN	

STATE OF CALIFORNIA - DEPARTMENT OF TRANSPORTATION
Caltrans® **MAINTENANCE**

LAST REVISION 11-14-14
DATE PLOTTED => 27-MAY-2015
TIME PLOTTED => 15:06

Dist	COUNTY	ROUTE	POST MILES TOTAL PROJECT	SHEET No.	TOTAL SHEETS
10	SJ	120	6.7/16.7	13	33

REGISTERED CIVIL ENGINEER 2/18/15 DATE

5-18-15
PLANS APPROVAL DATE

REGISTERED PROFESSIONAL ENGINEER JOSE A. ALICEA II No. 64817 Exp. 6/30/15 CIVIL STATE OF CALIFORNIA

THE STATE OF CALIFORNIA OR ITS OFFICERS OR AGENTS SHALL NOT BE RESPONSIBLE FOR THE ACCURACY OR COMPLETENESS OF SCANNED COPIES OF THIS PLAN SHEET.

NOTES:

1. A W9-1 SIGN SHOULD BE USED IN CONJUNCTION WITH THE W4-2 SIGN.
2. LANE REDUCTION ARROWS ARE PLACED IN GROUPS OF THREE.
3. EXACT SIGN LOCATIONS TO BE DETERMINED BY THE ENGINEER.
4. DELINEATORS SHOULD BE SPACED APPROXIMATELY 200 FEET APART. THERE SHOULD BE A MINIMUM OF 3 DELINEATORS THROUGH THE LENGTH OF A LANE REDUCTION TRANSITION.

LEGEND:

- REMOVE ROADSIDE SIGN (WOOD POST)

- DELINEATORS (TYPE F)

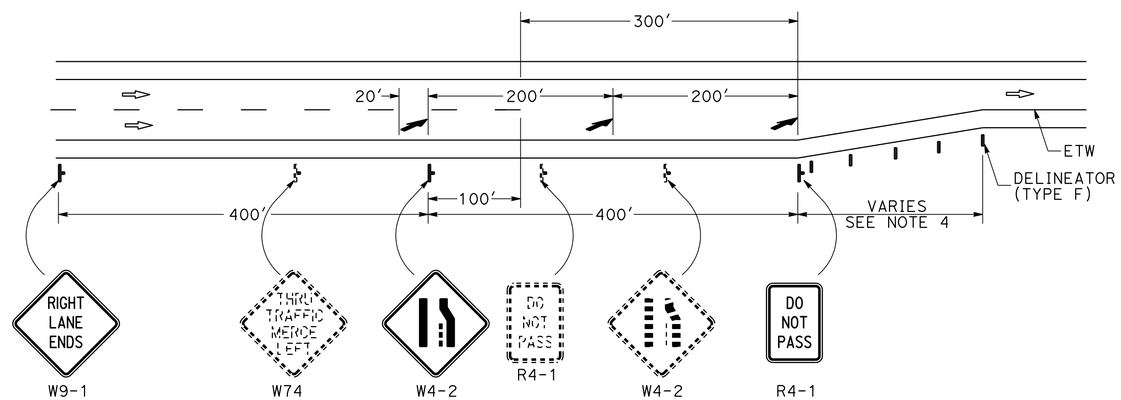

PM 8.48 TO 8.57 (WB)
PM 9.03 TO 9.11 (EB)

LANE-REDUCTION TRANSITION DETAIL

PAVEMENT DELINEATION AND SIGN DETAILS

NO SCALE

APPROVED FOR PAVEMENT DELINEATION AND SIGN WORK ONLY

NO SCALE **PDD-1**

REVISED BY	DATE REVISED
JA	11-14-14

CALCULATED-DESIGNED BY: THOA TABADA
CHECKED BY: JOSE ALICEA
FUNCTIONAL SUPERVISOR: ALVIN MANGINDIN

STATE OF CALIFORNIA - DEPARTMENT OF TRANSPORTATION
Caltrans® MAINTENANCE

LAST REVISION 11-14-14
DATE PLOTTED => 27-MAY-2015
TIME PLOTTED => 15:06

Dist	COUNTY	ROUTE	POST MILES TOTAL PROJECT	SHEET No.	TOTAL SHEETS
10	SJ	120	6.7/16.7	14	33

REGISTERED CIVIL ENGINEER 2/18/15 DATE

5-18-15
PLANS APPROVAL DATE

REGISTERED PROFESSIONAL ENGINEER JOSE A. ALICEA II No. 64817 Exp. 6/30/15 CIVIL STATE OF CALIFORNIA

THE STATE OF CALIFORNIA OR ITS OFFICERS OR AGENTS SHALL NOT BE RESPONSIBLE FOR THE ACCURACY OR COMPLETENESS OF SCANNED COPIES OF THIS PLAN SHEET.

NOTES:

1. EXACT LOCATION AND POSITION OF ROADSIDE SIGNS TO BE DETERMINED BY THE ENGINEER.
2. (POST LENGTHS GIVEN ARE APPROXIMATE.
3. "C" DIM = VERTICAL CLEARANCE TO BOTTOM OF SIGN PANEL.

ROADSIDE SIGN QUANTITIES

LOCATION		SIGN CODE	SIGN PANEL SIZE	SINGLE FACED	BACKGROUND		LEGEND		PROTECTIVE FILM		FURNISH SINGLE SHEET ALUMINUM SIGN (0.063"- UNFRAMED)	FURNISH SINGLE SHEET ALUMINUM SIGN (0.063"- UNFRAMED) FOR RETROREFLECTIVE SHEETING (TYPE XI)	RETROREFLECTIVE SHEETING (TYPE XI)	"C" DIM	WOOD POST LENGTH	ROADSIDE SIGN	DELINEATOR (CLASS 2)	REMOVE ROADSIDE SIGN (WOOD POST)	TREATED WOOD WASTE	RESET ROADSIDE SIGN	DESCRIPTION
					SHEETING COLOR	RETROREFLECTIVE ASTM TYPE	SHEETING COLOR	RETROREFLECTIVE ASTM TYPE								ONE POST	TYPE F				
PM TO PM	SIDE	FEDERAL	INCHES						STANDARD	PREMIUM	SQFT	SQFT	SQFT	FT	4" X 6"	EACH	EACH	EACH	LB	EACH	
8.48 TO 8.57	WB	W9-1R	36 x 36	X	YELLOW	XI	BLACK	NONE		X		9	9	5	16′	1					RIGHT LANE ENDS
8.48 TO 8.57	WB	W4-2	30 x 30	X	YELLOW	XI	BLACK	NONE		X		6.3	6.3	5	14′	1		1	45		LANE ENDS SYMBOL
8.48 TO 8.57	WB	R4-1	24 x 30	X	WHITE	IX	BLACK	NONE	X		5			5	14′	1	5	1	45		DO NOT PASS
9.03 TO 9.11	EB	W9-1R	36 x 36	X	YELLOW	XI	BLACK	NONE		X		9	9	5	16′	1					RIGHT LANE ENDS
9.03 TO 9.11	EB	W4-2	30 x 30	X	YELLOW	XI	BLACK	NONE		X		6.3	6.3	5	14′	1		1	45		LANE ENDS SYMBOL
9.03 TO 9.11	EB	R4-1	24 x 30	X	WHITE	IX	BLACK	NONE	X		5			5	14′	1	5	1	45		DO NOT PASS
8.48 TO 8.57	WB	W4-7	36 x 36	X														1	45		THRU TRAFFIC MERGE LEFT
9.03 TO 9.11	EB	W4-7	36 x 36	X														1	45		THRU TRAFFIC MERGE LEFT
9.82 TO 9.82	EB/WB	R1-1																		2	STOP
10.82 TO 10.82	EB/WB	R1-1																		2	STOP
11.83 TO 11.83	WB	R1-1																		1	STOP
12.83 TO 12.83	WB	R1-1																		1	STOP
13.83 TO 13.83	WB	R1-1																		1	STOP
14.83 TO 14.83	WB	R1-1																		1	STOP
15.48 TO 15.48	WB	R1-1																		1	STOP
15.86 TO 15.86	WB	R1-1																		1	STOP
										TOTAL	10	30.6	30.6			6	10	6	270	10	

CALCULATED-DESIGNED BY THOA TABADA
CHECKED BY JOSE ALICEA
REVISED BY JA
DATE REVISED 11-14-14
FUNCTIONAL SUPERVISOR ALVIN MANGINDIN

STATE OF CALIFORNIA - DEPARTMENT OF TRANSPORTATION
Caltrans MAINTENANCE

SIGN QUANTITIES
SQ-1

LAST REVISION 11-14-14
DATE PLOTTED => 27-MAY-2015
TIME PLOTTED => 15:06

Dist	COUNTY	ROUTE	POST MILES TOTAL PROJECT	SHEET No.	TOTAL SHEETS
10	SJ	120	6.7/16.7	15	33

REGISTERED CIVIL ENGINEER 2/18/15 DATE

5-18-15
PLANS APPROVAL DATE

REGISTERED PROFESSIONAL ENGINEER JOSE A. ALICEA II No. 64817 Exp. 6/30/15 CIVIL STATE OF CALIFORNIA

THE STATE OF CALIFORNIA OR ITS OFFICERS OR AGENTS SHALL NOT BE RESPONSIBLE FOR THE ACCURACY OR COMPLETENESS OF SCANNED COPIES OF THIS PLAN SHEET.

NOTES:

1. * - TOTAL INCLUDED IN ROADWAY ITEMS TABLE.
2. (N) - NOT A SEPARATE PAY ITEM, FOR INFORMATION ONLY.
3. TRAFFIC MANAGEMENT SYSTEM ELEMENTS LOCATIONS ARE APPROXIMATE.

ABBREVIATION:

RHMA-G - RUBBERIZED HOT MIX ASPHALT (GAP GRADED)

CONFORM TAPERS AT INTERSECTIONS

LOCATION			LENGTH	W1	W2	COLD PLANE AC Pvmt	HMA (TYPE A)
PM	SIDE	DESCRIPTION				SQYD	TON
6.8	Lt	AUSTIN ROAD	120'	40'	150'	775	53
6.8	Rt	AUSTIN ROAD	70'	40'	150'	489	33
7.2	Lt	IDEAL PARKWAY	30'	48'	100'	245	17
7.5	Lt	COMCONEX ROAD	40'	40'	90'	245	17
8.8	Lt	JACK TONE ROAD	160'	44'	110'	1017	69
8.8	Rt	JACK TONE ROAD	80'	44'	110'	582	40
9.8	Lt	NORTH RIPON ROAD	170'	20'	176'	1017	69
9.8	Rt	NORTH RIPON ROAD	130'	30'	180'	920	63
11.2	Lt	MURPHY ROAD	140'	22'	130'	920	63
11.2	Rt	MURPHY ROAD	150'	20'	140'	920	63
11.5	Rt	ARBOREAL WAY	50'	20'	40'	98	7
11.6	Lt	FRENCH CAMP ROAD	440'	34'	230'	2034	138
11.8	Lt	WAGNER ROAD	140'	20'	200'	824	56
11.8	Rt	WAGNER ROAD	5'	44'	58'	49	4
12.8	Lt	CARROLTON ROAD	122'	20'	140'	824	56
12.8	Rt	CARROLTON ROAD	5'	32'	60'	49	4
13.5	Rt	VON GLAHN AVENUE	5'	35'	50'	49	4
13.8	Lt	VAN ALLEN ROAD	140'	20'	124'	920	63
13.8	Rt	VAN ALLEN ROAD	5'	44'	54'	49	4
14.3	Rt	ALBA ROAD	5'	40'	50'	49	4
14.8	Lt	SEXTON ROAD	130'	20'	140'	824	56
14.8	Rt	SEXTON ROAD	5'	38'	46'	26	2
15.1	Lt	LAWRENCE ROAD	140'	20'	154'	873	59
15.5	Lt	BEELER ROAD	150'	18'	150'	824	56
15.9	Lt	BRENNAN AVENUE	180'	20'	170'	1017	69
15.9	Rt	BRENNAN AVENUE	5'	38'	44'	49	4
16.4	Rt	WALNUT AVENUE	5'	42'	54'	49	4
16.5	Rt	IRWIN STREET	5'	55'	65'	49	4
					TOTAL	15,786*	1081 *

CONFORM TAPERS AT MBGR

LOCATION	SIDE	LENGTH	WIDTH	COLD PLANE AC Pvmt	RHMA-G
PM/PM				SQYD	TON
7.60 / 7.62	Rt	206'	40'	916	61
8.02 / 8.06	BOTH	312'	40'	1387	93
11.25 / 11.27	Lt	206'	52'	1191	80
11.59 / 11.61	Rt	206'	40'	916	61
			TOTAL	4410*	295*

CONFORM TAPERS AT CURB AND GUTTER

LOCATION	SIDE	LENGTH	WIDTH	COLD PLANE AC Pvmt	RHMA-G
PM/PM				SQYD	TON
6.70 / 6.82	Rt	634'	4'	282	19
6.70 / 6.80	Lt	518'	4'	231	16
6.82 / 6.85	Lt	191'	8'	170	12
6.84 / 6.89	Rt	264'	8'	235	16
16.64/16.70	Rt	317'	8'	282	19
			TOTAL	1200*	82 *

LONGITUDINAL CONFORM TAPERS

LOCATION		LENGTH	WIDTH	COLD PLANE AC Pvmt	RHMA-G
PM	DESCRIPTION			SQYD	TON
6.7	Rte 120 (BEGIN CONSTRUCTION)	50	70	389	26
11.2	Rte 120 (RAILROAD X-ING)	50	52	289	20
11.6	Rte 120 (RAILROAD X-ING)	50	40	667	45
11.6	Rte 120 (RAILROAD X-ING)	50	40	473	32
16.7	Rte 120 (END CONSTRUCTION)	50	64	356	24
			TOTAL	2174*	147*

SUMMARY OF QUANTITIES

Q-1

REVISED BY	DATE REVISED
JA	11-14-14

THOA TABADA — JOSE ALICEA

CALCULATED-DESIGNED BY — CHECKED BY

FUNCTIONAL SUPERVISOR — ALVIN MANGINDIN

STATE OF CALIFORNIA - DEPARTMENT OF TRANSPORTATION — Caltrans® MAINTENANCE

LAST REVISION 11-14-14 | DATE PLOTTED => 27-MAY-2015 | TIME PLOTTED => 15:06

Dist	COUNTY	ROUTE	POST MILES TOTAL PROJECT	SHEET No.	TOTAL SHEETS
10	SJ	120	6.7/16.7	16	33

REGISTERED CIVIL ENGINEER 2/18/15 DATE

5-18-15
PLANS APPROVAL DATE

REGISTERED PROFESSIONAL ENGINEER JOSE A. ALICEA II No. 64817 Exp. 6/30/15 CIVIL STATE OF CALIFORNIA

THE STATE OF CALIFORNIA OR ITS OFFICERS OR AGENTS SHALL NOT BE RESPONSIBLE FOR THE ACCURACY OR COMPLETENESS OF SCANNED COPIES OF THIS PLAN SHEET.

DIKE ITEMS

LOCATION		REMOVE AC DIKE	PLACE HMA DIKE (TYPE E)	HMA (TYPE A)
PM/PM	SIDE	LF	LF	TON
6.89/6.96	EB	370	370	10
6.85/6.92	WB	333	333	9
	TOTAL	703	703	19*

CENTERLINE RUMBLE STRIP (HMA, GROUND-IN INDENTATIONS)

LOCATION PM/PM	STATION	DESCRIPTION
7.25/8.35	58	CENTERLINE RUMBLE STRIP
9.36/10.70	71	CENTERLINE RUMBLE STRIP
11.33/16.55	276	CENTERLINE RUMBLE STRIP
TOTAL	405	

SHOULDER RUMBLE STRIP (HMA, GROUND-IN INDENTATIONS)

LOCATION		STATION	DESCRIPTION
PM/PM	SIDE		
7.25/8.35	R†	58	RIGHT EDGE LINE RUMBLE STRIP
7.25/8.35	L†	58	RIGHT EDGE LINE RUMBLE STRIP
	TOTAL	116	

REPAIR FAILED AREAS

LOCATION		LENGTH	WIDTH	COLD PLANE AC Pvm†	HMA (TYPE A)
PM/PM	SIDE			SQYD	TON
8.00/9.00	EB	350′	12′	467	79
8.00/9.00	EB	350′	12′	467	79
8.00/9.00	EB	550′	12′	734	124
8.00/9.00	EB	1000′	12′	1,334	225
9.00/10.00	EB	550′	6′	734	124
8.00/9.00	WB	750′	12′	1,000	169
8.00/9.00	WB	750′	12′	1,000	169
9.00/10.00	WB	232′	12′	310	53
9.00/10.00	WB	2400′	12′	3,200	540
9.00/10.00	WB	750′	12′	1,000	169
			TOTAL	10,246*	1731*

ACTUAL LOCATIONS AND DIMENSIONS OF DIGOUTS MAY VARY IN THE FIELD AND WILL BE DETERMINED BY THE ENGINEER.

ROADWAY ITEMS

LOCATION	COLD PLANE AC PAVEMENT	RUBBERIZED HOT MIX ASPHALT (GAP GRADED)	HOT MIX ASPHALT (TYPE A)	TACK COAT	SHOULDER BACKING
	SQYD	TON	TON	TON	TON
6.5/16.7 (TRAVEL LANES)		20,800		64	2290
LONGITUDINAL CONFORM TAPERS	2174	147		1	
CONFORM TAPERS AT MBGR	4410	295		1	
CONFORM TAPERS AT CURB AND GUTTER	1200	82		1	
CONFORM TAPERS AT INTERSECTIONS	15,786		1081	4	
CONFORM TAPERS AT PRIVATE ROADS		200		1	
REPAIR FAILED AREAS	10,246		1731	3	
DIKE			19	1	
TOTAL	33,816	21,524	2831	76	2290

TRAFFIC MANAGEMENT SYSTEM ELEMENTS (EXISTING)

PM	LOCATION	SIDE	TYPE
6.83	AUSTIN ROAD		SIGNAL
7.61	CALLA ROAD (MANTECA)	EB	CHANGABLE MESSAGE SIGN
8.86	JACK TONE ROAD		SIGNAL
11.50	E/O FRENCH CAMP ROAD	BOTH	2 LOOPS PER LANE TERMINATED IN PULL BOX
11.75	W/O FRENCH CAMP ROAD	BOTH	2 LOOPS PER LANE TERMINATED IN PULL BOX
16.25	E/O WALNUT DRIVE	BOTH	2 LOOPS PER LANE TERMINATED IN PULL BOX
16.40	W/O WALNUT DRIVE	BOTH	2 LOOPS PER LANE TERMINATED IN PULL BOX

SUMMARY OF QUANTITIES

Q-2

REVISED BY	JA
DATE REVISED	02-06-15
THOA TABADA	
JOSE ALICEA	
CALCULATED-DESIGNED BY	
CHECKED BY	
FUNCTIONAL SUPERVISOR	
ALVIN MANGINDIN	

STATE OF CALIFORNIA - DEPARTMENT OF TRANSPORTATION
Caltrans® MAINTENANCE

LAST REVISION 2-6-15
DATE PLOTTED => 27-MAY-2015
TIME PLOTTED => 15:06

Dist	COUNTY	ROUTE	POST MILES TOTAL PROJECT	SHEET No.	TOTAL SHEETS
10	SJ	120	6.7/16.7	17	33

REGISTERED CIVIL ENGINEER 2/18/15 DATE

5-18-15
PLANS APPROVAL DATE

REGISTERED PROFESSIONAL ENGINEER JOSE A. ALICEA II No. 64817 Exp. 6/30/15 CIVIL STATE OF CALIFORNIA

THE STATE OF CALIFORNIA OR ITS OFFICERS OR AGENTS SHALL NOT BE RESPONSIBLE FOR THE ACCURACY OR COMPLETENESS OF SCANNED COPIES OF THIS PLAN SHEET.

ADJUST FRAME AND COVER TO GRADE LOCATIONS

PM**	DESCRIPTION	EA
6.8	STORM DRAIN - SOUTH SAN JOAQUIN IRRIGATION DISTRICT	1
	WATER - CITY OF MANTECA PUBLIC WORKS	14
	TOTAL	15

**SEE CONSTRUCTION DETAILS SHEETS FOR LOCATIONS

ADJUST MONUMENT TO GRADE

PM	LOCATION DESCRIPTION	TYPE	EA
6.33	APPROXIMATELY AT THE SIGN BRIDGE BY EL POLLO LOCO	MONUMENT WELL	1
6.59	CENTERLINE OF VASCONCELLOS Ave	MONUMENT WELL	1
6.83	CENTERLINE OF AUSTIN Rd	MONUMENT WELL	1
7.34	CENTERLINE OF HART Ln	MONUMENT WELL	1
7.84	1 MILE EAST OF AUSTIN Rd	MONUMENT WELL	1
8.34	½ MILE WEST OF JACK TONE Rd	MONUMENT WELL	1
8.84	CENTERLINE OF JACK TONE Rd	MONUMENT WELL	1
9.82	CENTERLINE OF NORTH RIPON Rd	MONUMENT WELL	1
10.82	42′ SW OF CENTERLINE INTERSECTION	MONUMENT WELL	1
10.82	CENTERLINE OF MURPHY Rd	MONUMENT WELL	1
11.45	CENTERLINE OF ARBOREAL Wy	MONUMENT WELL	1
11.83	CENTERLINE OF WAGNER Rd	MONUMENT WELL	1
12.83	CENTERLINE OF CARROLTON Rd	MONUMENT WELL	1
12.83	30′ N OF CENTERLINE OF Rte 120 & 20 Ft W OF THE CENTERLINE OF CARROLTON Rd	MONUMENT WELL	1
13.83	CENTERLINE OF VAN ALLEN Rd	MONUMENT WELL	1
14.28	2375′ EAST OF VAN ALLEN Rd	MONUMENT WELL	1
14.83	CENTERLINE OF SEXTON Rd	MONUMENT WELL	1
15.36	½ MILE EAST OF SEXTON Rd	MONUMENT WELL	1
15.86	CENTERLINE OF BRENNAN Ave	MONUMENT WELL	1
		TOTAL	19

SURVEY MONUMENT (TYPE D)

PM	LOCATION DESCRIPTION	TYPE	EA
6.44	CENTERLINE OF PESTANA Ave, 40′ N OF THE CENTERLINE OF Rte 120	MONUMENT WELL	1
6.44	CENTERLINE OF PESTANA Ave, 50′ N OF THE CENTERLINE OF Rte 120	MONUMENT WELL	1
6.67	AT GARDEN CIRCLE Dr WEST, 30′ N OF THE CENTERLINE OF Rte 120	MONUMENT WELL	1
6.77	278′ W OF AUSTIN, 25′ N OF THE CENTERLINE OF Rte 120	MONUMENT WELL	1
6.80	139′ W OF AUSTIN, 25′ N OF THE CENTERLINE OF Rte 120	MONUMENT WELL	1
6.82	68′ W OF AUSTIN, 25′ N OF THE CENTERLINE OF Rte 120	MONUMENT WELL	1
7.46	WEST SIDE OF CALLA Dr, ON THE CENTERLINE OF Rte 120	MONUMENT WELL	1
8.09	½ MILE E OF CALLA Dr, ON THE CENTERLINE OF Rte 1201	MONUMENT WELL	1
9.33	½ MILE E OF JACK TONE Rd, ON THE CENTERLINE OF Rte 120	MONUMENT WELL	1
9.82	CENTERLINE OF NORTH RIPON Rd, 20′ N OF THE CENTERLINE OF Rte 120	MONUMENT WELL	1
10.82	CENTERLINE OF MURPHY Rd, 20′ N OF THE CENTERLINE OF Rte 120	MONUMENT WELL	1
11.07	¼ MILE E OF MURPHY Rd, ON THE CENTERLINE OF Rte 120	MONUMENT WELL	1
11.32	½ MILE E OF MURPHY Rd, IN THE CENTERLINE OF Rte 120	MONUMENT WELL	1
11.45	CENTERLINE OF ARBOREAL WAY, 25′ S OF THE CENTERLINE OF Rte 120	MONUMENT WELL	1
11.45	CENTERLINE OF ARBOREAL WAY, 30′ S OF THE CENTERLINE OF Rte 120	MONUMENT WELL	1
11.57	JUST W OF FRENCH CAMP Rd, ON THE CENTERLINE OF Rte 120	MONUMENT WELL	1
11.70	JUST E OF FRENCH CAMP Rd, ON THE CENTERLINE OF Rte 120	MONUMENT WELL	1
12.08	½ MILE E OF WAGNER Rd, ON THE CENTERLINE OF Rte 120	MONUMENT WELL	1
12.33	½ MILE E OF WAGNER Rd, ON THE CENTERLINE OF Rte 120	MONUMENT WELL	1
12.58	¼ MILE W OF CARROLTON Rd, ON THE CENTERLINE OF Rte 120	MONUMENT WELL	1
13.08	¼ MILE E OF CARROLTON Rd, ON THE CENTERLINE OF Rte 120	MONUMENT WELL	1
13.32	½MILE E OF CARROLTON Rd, ON THE CENTERLINE OF Rte 120	MONUMENT WELL	1
13.50	1760′ W OF VAN ALLEN Rd, ON THE CENTERLINE OF Rte 120	MONUMENT WELL	1
13.83	5.5′ S OF CENTERLINE INTERSECTION WITH VAN ALLEN Rd	MONUMENT WELL	1
14.33	CENTERLINE OF ALBA Rd, ON CENTERLINE OF Rte 120	MONUMENT WELL	1
16.38	CENTERLINE OF WALNUT Ave	MONUMENT WELL	1
		TOTAL	26

SUMMARY OF QUANTITIES

Q-3

REVISED BY	DATE REVISED
JA	11-14-14

THOA TABADA — JOSE ALICEA
CALCULATED-DESIGNED BY — CHECKED BY
FUNCTIONAL SUPERVISOR — ALVIN MANGINDIN

STATE OF CALIFORNIA - DEPARTMENT OF TRANSPORTATION
Caltrans® MAINTENANCE

LAST REVISION 00-00-00 | DATE PLOTTED => 27-MAY-2015 | TIME PLOTTED => 15:06

Dist	COUNTY	ROUTE	POST MILES TOTAL PROJECT	SHEET No.	TOTAL SHEETS
10	SJ	120	6.7/16.7	18	33

REGISTERED CIVIL ENGINEER 2/18/15 DATE

5-18-15
PLANS APPROVAL DATE

REGISTERED PROFESSIONAL ENGINEER JOSE A. ALICEA II No. 64817 Exp. 6/30/15 CIVIL STATE OF CALIFORNIA

THE STATE OF CALIFORNIA OR ITS OFFICERS OR AGENTS SHALL NOT BE RESPONSIBLE FOR THE ACCURACY OR COMPLETENESS OF SCANNED COPIES OF THIS PLAN SHEET.

REMOVE PAVEMENT DELINEATION ITEMS

LOCATION	REMOVE YELLOW THERMOPLASTIC TRAFFIC STRIPE (HAZARDOUS WASTE)				REMOVE THERMOPLASTIC TRAFFIC STRIPE		REMOVE PAVEMENT MARKER (N)	REMOVE YELLOW THERMOPLASTIC PAVEMENT MARKING (HAZARDOUS WASTE) (N)				REMOVE THERMOPLASTIC PAVEMENT MARKING													
	DETAIL 19	DETAIL 22	DETAIL 29	DETAIL 32	DETAIL 37B	DETAIL 38		CROSSWALK (YELLOW)	SLOW	SCHOOL	XING	STOP	SIGNAL	AHEAD	LIMIT LINE	TYPE II (R) ARROW	TYPE III (L) ARROW	TYPE III (R) ARROW	TYPE V ARROW	TYPE VI ARROW	CROSSWALK (WHITE)	DO	NOT	PARK	RAILROAD XING
	LF				LF		EA	SQFT				SQFT													
PM 6.5/16.7	13,095	44,166	10,207	28,301	1,056	17,716	4592	1525	69	140	63	748	224	217	830	90	3486	84	99	386	770	14	18	30	350
TOTAL	95,769				18,772			1797				7346													

PAVEMENT DELINEATION ITEMS (TRAFFIC STRIPE)

LOCATION	THERMOPLASTIC TRAFFIC STRIPE (SPRAYABLE)										PAVEMENT MARKER (RETROREFLECTIVE)								
	4" WHITE			8" WHITE		4" YELLOW					4" YELLOW					4" WHITE	8" WHITE		4" YELLOW
											TYPE D					TYPE G	TYPE G		TYPE H
	DETAIL 12	DETAIL 27B	DETAIL 27C	DETAIL 37B	DETAIL 38	DETAIL 6	DETAIL 19	DETAIL 22	DETAIL 29	DETAIL 32	DETAIL 6	DETAIL 19	DETAIL 22	DETAIL 29	DETAIL 32	DETAIL 12	DETAIL 37B	DETAIL 38	DETAIL 19
	LF										EA								
PM 6.5/16.7	7,075	103,047	4,965	528	10,294	13,094	6,547	24,000	5,103	14,150	290	164	2118	248	770	162	40	494	306
TOTAL	188,804										4592								

PAVEMENT DELINEATION ITEMS (PAVEMENT MARKING)

LOCATION	THERMOPLASTIC PAVEMENT MARKING																	
	STOP	SIGNAL	AHEAD	LIMIT LINE	TYPE II (R) ARROW	TYPE III (L) ARROW	TYPE III (R) ARROW	TYPE V ARROW	TYPE VI ARROW	CROSSWALK (YELLOW)	CROSSWALK (WHITE)	SLOW	SCHOOL	XING	DO	NOT	PARK	RAILROAD XING
	SQFT																	
PM 6.5/16.7	748	224	217	830	90	3486	84	99	386	1525	770	69	140	63	14	18	30	350
TOTAL	9143																	

SUMMARY OF QUANTITIES

Q-4

REVISED BY	DATE REVISED
JA	11-14-14

THOA TABADA — JOSE ALICEA

CALCULATED-DESIGNED BY — CHECKED BY

FUNCTIONAL SUPERVISOR — ALVIN MANGINDIN

STATE OF CALIFORNIA - DEPARTMENT OF TRANSPORTATION — Caltrans — MAINTENANCE

LAST REVISION 11-14-14 | DATE PLOTTED => 27-MAY-2015 | TIME PLOTTED => 15:06

Dist	COUNTY	ROUTE	POST MILES TOTAL PROJECT	SHEET No.	TOTAL SHEETS
10	SJ	120	6.7/16.7	19	33

REGISTERED ELECTRICAL ENGINEER 2/18/15 DATE

5-18-15
PLANS APPROVAL DATE

REGISTERED PROFESSIONAL ENGINEER JASPAL SINGH No. 16657 Exp. 6/30/16 ELECTRICAL STATE OF CALIFORNIA

THE STATE OF CALIFORNIA OR ITS OFFICERS OR AGENTS SHALL NOT BE RESPONSIBLE FOR THE ACCURACY OR COMPLETENESS OF SCANNED COPIES OF THIS PLAN SHEET.

LEGEND:

1. SPLICE Exist TYPE A LOOP DETECTORS AND PROPOSED TYPE D LOOP DETECTOR IN PB AS SHOWN IN DETAIL A.
2. SPLICE LOOP DETECTORS AS SHOWN IN DETAIL A.
3. INTERCEPT Exist CONDUIT FOR LOOP WIRE TERMINATION.

NOTES:

1. AB Exist LOOP DETECTORS AND INSTALL AS SHOWN.
2. Exist SIGNAL AND LIGHTING DETAILS NOT SHOWN.
3. FOR ACCURATE RIGHT OF WAY DATA, CONTACT RIGHT OF WAY ENGINEERING AT THE DISTRICT OFFICE.

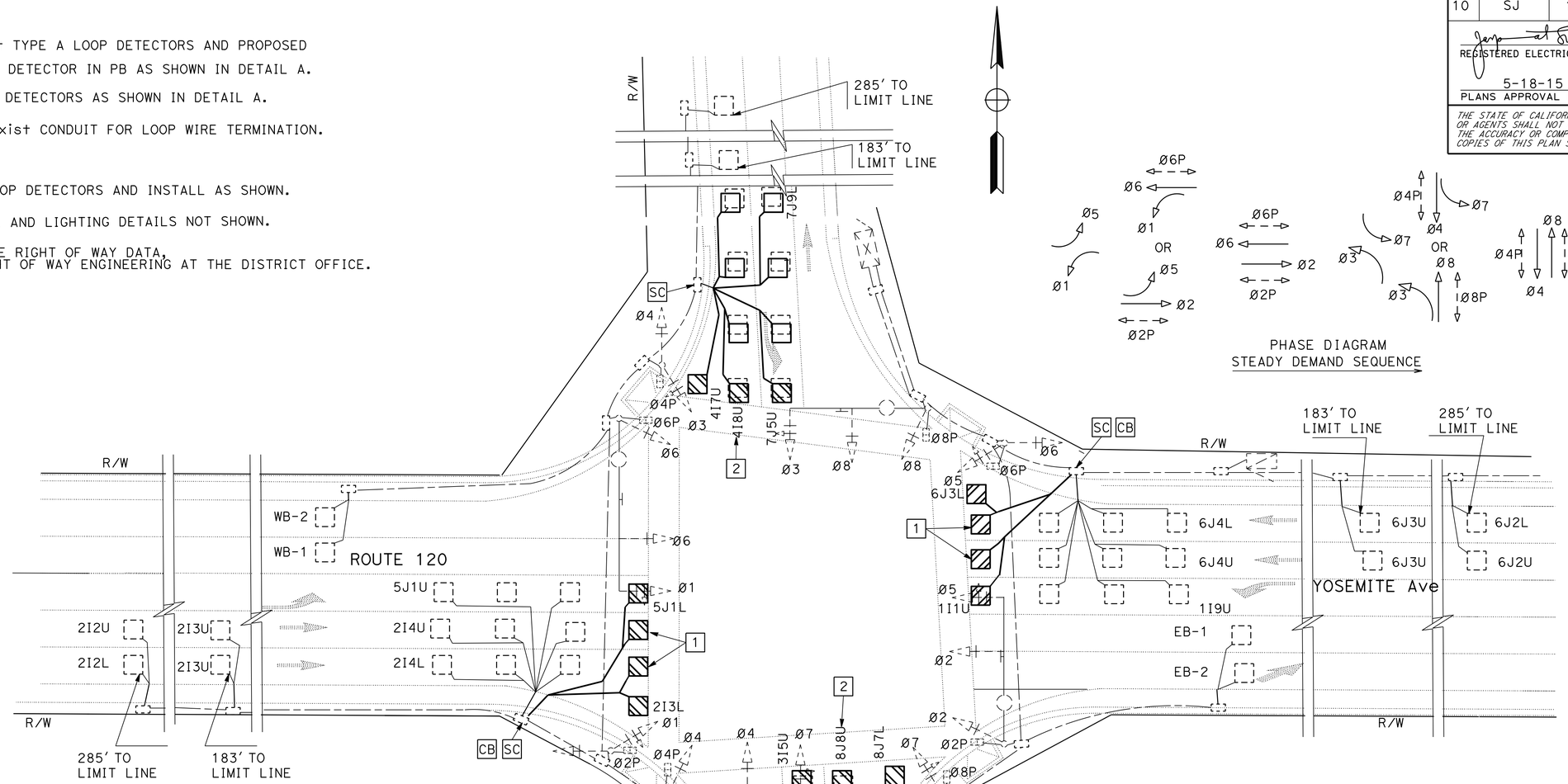

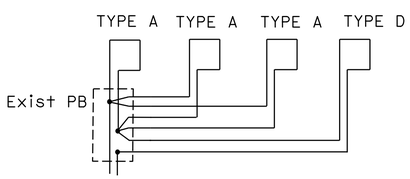

DETAIL A
TYPICAL LOOP CONNECTIONS

PM 6.8

APPROVED FOR ELECTRICAL WORK ONLY

MODIFY SIGNAL

SCALE: 1"=50'

E-1

REVISED BY	DATE REVISED
JS	02-18-15

CALCULATED- DESIGNED BY: JASPAL SINGH
CHECKED BY: JORGE RAMIREZ
FUNCTIONAL SUPERVISOR: ALI BAKHDOUD

STATE OF CALIFORNIA - DEPARTMENT OF TRANSPORTATION
Caltrans® **ELECTRICAL DESIGN**

LAST REVISION 2-18-15 | DATE PLOTTED => 27-MAY-2015 | TIME PLOTTED => 15:06

Dist	COUNTY	ROUTE	POST MILES TOTAL PROJECT	SHEET No.	TOTAL SHEETS
10	SJ	120	6.7/16.7	20	33

REGISTERED ELECTRICAL ENGINEER 2/18/15 DATE

5-18-15
PLANS APPROVAL DATE

REGISTERED PROFESSIONAL ENGINEER JASPAL SINGH No. 16657 Exp. 6/30/16 ELECTRICAL STATE OF CALIFORNIA

THE STATE OF CALIFORNIA OR ITS OFFICERS OR AGENTS SHALL NOT BE RESPONSIBLE FOR THE ACCURACY OR COMPLETENESS OF SCANNED COPIES OF THIS PLAN SHEET.

NOTE:

FOR ACCURATE RIGHT OF WAY DATA,
CONTACT RIGHT OF WAY ENGINEERING AT THE DISTRICT OFFICE.

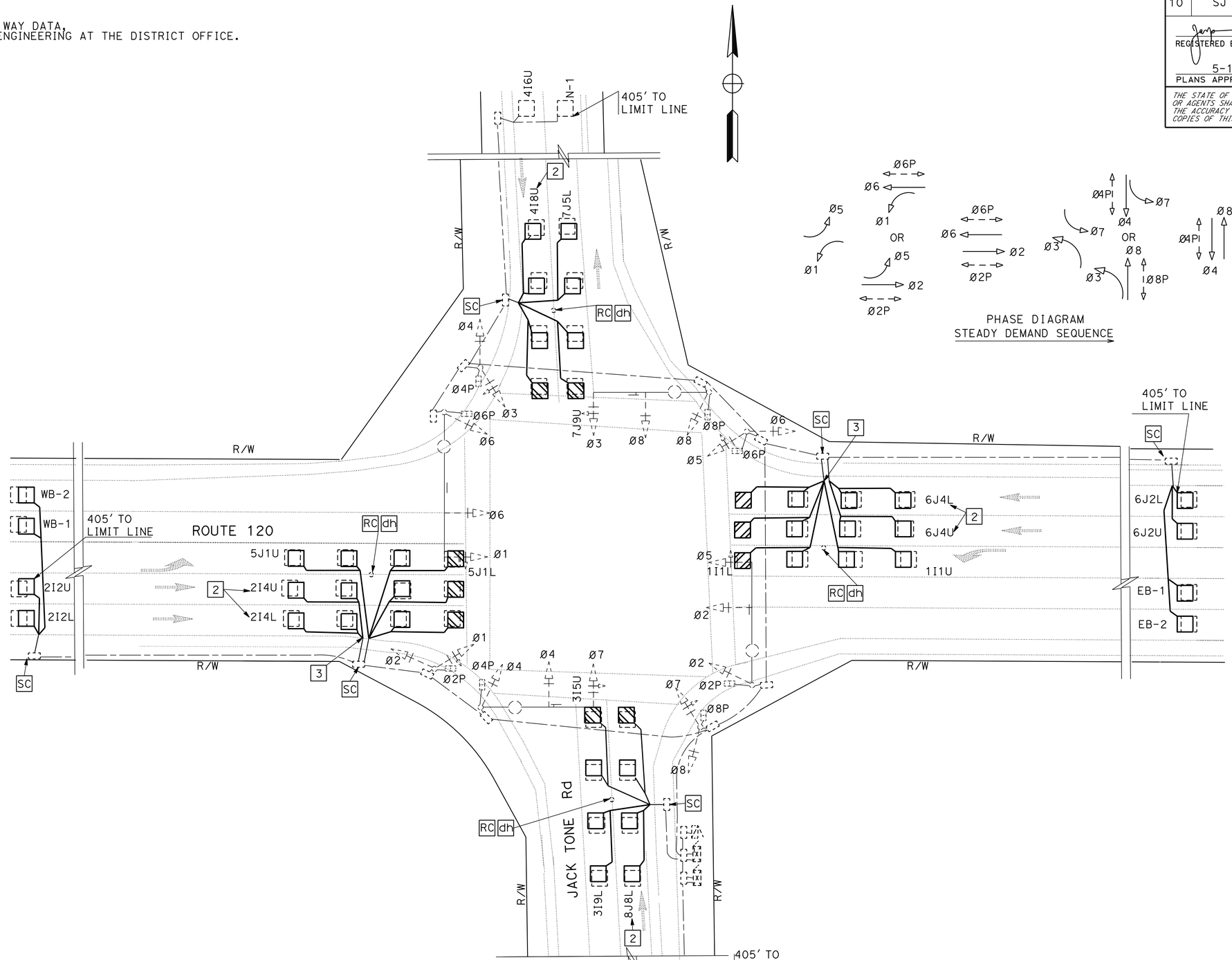

PM 8.8

APPROVED FOR ELECTRICAL WORK ONLY

MODIFY SIGNAL

SCALE: 1"=50'

E-2

REVISED BY	JS
DATE REVISED	02-18-15
JASPAL SINGH	JORGE RAMIREZ
CALCULATED-DESIGNED BY	CHECKED BY
FUNCTIONAL SUPERVISOR	ALI BAKHDOUD

STATE OF CALIFORNIA - DEPARTMENT OF TRANSPORTATION
Caltrans® **ELECTRICAL DESIGN**

LAST REVISION 2-18-15
DATE PLOTTED => 27-MAY-2015
TIME PLOTTED => 15:06

Dist	COUNTY	ROUTE	POST MILES TOTAL PROJECT	SHEET No.	TOTAL SHEETS
10	SJ	120	6.7/16.7	21	33

REGISTERED ELECTRICAL ENGINEER 2/18/15 DATE

5-18-15
PLANS APPROVAL DATE

REGISTERED PROFESSIONAL ENGINEER JASPAL SINGH No. 16657 Exp. 6/30/16 ELECTRICAL STATE OF CALIFORNIA

THE STATE OF CALIFORNIA OR ITS OFFICERS OR AGENTS SHALL NOT BE RESPONSIBLE FOR THE ACCURACY OR COMPLETENESS OF SCANNED COPIES OF THIS PLAN SHEET.

NOTE:

THE QUANTITIES SHOWN IN THE TABLE ARE NOT SEPARATE PAY ITEMS, FOR INFORMATION ONLY.
FOR COMPLETE ELECTRICAL WORK, SEE ELECTRICAL PLAN SHEETS.

MODIFY SIGNAL

SHEET No.	TYPE A LOOP DETECTORS	TYPE D LOOP DETECTORS	1½"C TYPE 3
	EA		LF
E-1	12	14	20
E-2	38	10	-

ELECTRICAL QUANTITIES

E-3

STATE OF CALIFORNIA - DEPARTMENT OF TRANSPORTATION
Caltrans® ELECTRICAL DESIGN

FUNCTIONAL SUPERVISOR: ALI BAKHDOUD
CALCULATED-DESIGNED BY: JASPAL SINGH
CHECKED BY: FRED IYASERE
REVISED BY: JS
DATE REVISED: 02-18-15

LAST REVISION 2-18-15
DATE PLOTTED => 27-MAY-2015
TIME PLOTTED => 15:06

M

Maint	MAINTENANCE
Max	MAXIMUM
MB	METAL BEAM
MBB	METAL BEAM BARRIER
MBGR	METAL BEAM GUARD RAILING
Med	MEDIAN
MGS	MIDWEST GUARDRAIL SYSTEM
MH	MANHOLE
Min	MINIMUM
Misc	MISCELLANEOUS
Misc I & S	MISCELLANEOUS IRON AND STEEL
Mkr	MARKER
Mod	MODIFIED, MODIFY
Mon	MONUMENT
MP	METAL PLATE
MPGR	METAL PLATE GUARD RAILING
MR	MOVEMENT RATING
MSE	MECHANICALLY STABILIZED EMBANKMENT
Mt	MOUNTAIN, MOUNT
Mtl	MATERIAL
MVP	MAINTENANCE VEHICLE PULLOUT

N

N	NORTH
NB	NORTHBOUND
No.	NUMBER (MUST HAVE PERIOD)
Nos.	NUMBERS (MUST HAVE PERIOD)
NPS	NOMINAL PIPE SIZE
NS	NEAR SIDE
NSP	NEW STANDARD PLAN
NTS	NOT TO SCALE

O

Oblr	OBLITERATE
OC	OVERCROSSING
OD	OUTSIDE DIAMETER
OF	OUTSIDE FACE
OG	ORIGINAL GROUND
OGAC	OPEN GRADED ASPHALT CONCRETE
OGFC	OPEN GRADED FRICTION COURSE
OH	OVERHEAD
OHWM	ORDINARY HIGH WATER MARK
O-O	OUT TO OUT
Opp	OPPOSITE
OSD	OVERSIDE DRAIN

P

P	PAGE
PAP	PERFORATED ALUMINUM PIPE
PB	PULL BOX
PC	POINT OF CURVATURE, PRECAST
PCC	POINT OF COMPOUND CURVE, PORTLAND CEMENT CONCRETE
PCMS	PORTABLE CHANGEABLE MESSAGE SIGN
PCP	PERFORATED CONCRETE PIPE, PRESTRESSED CONCRETE PIPE
PCVC	POINT OF COMPOUND VERTICAL CURVE
PEC	PERMIT TO ENTER AND CONSTRUCT
Ped	PEDESTRIAN
Ped OC	PEDESTRIAN OVERCROSSING
Ped UC	PEDESTRIAN UNDERCROSSING
Perm Mtl	PERMEABLE MATERIAL

P continued

PG	PROFILE GRADE
PI	POINT OF INTERSECTION
PJP	PARTIAL JOINT PENETRATION
Pkwy	PARKWAY
ℙ,PL	PLATE
P/L	PROPERTY LINE
PM	POST MILE, TIME FROM NOON TO MIDNIGHT
PN	PAVING NOTCH
POC	POINT OF HORIZONTAL CURVE
POT	POINT OF TANGENT
POVC	POINT OF VERTICAL CURVE
PP	PIPE PILE, PLASTIC PIPE, POWER POLE
PPL	PREFORMED PERMEABLE LINER
PPP	PERFORATED PLASTIC PIPE
PRC	POINT OF REVERSE CURVE
PRF	PAVEMENT REINFORCING FABRIC
PRVC	POINT OF REVERSE VERTICAL CURVE
PS&E	PLANS, SPECIFICATIONS AND ESTIMATES
PS, P/S	PRESTRESSED
PSP	PERFORATED STEEL PIPE
PT	POINT OF TANGENCY
PVC	POLYVINYL CHLORIDE
Pvmt	PAVEMENT

Q

Qty	QUANTITY

R

R	RADIUS
R & D	REMOVE AND DISPOSE
R & S	REMOVE AND SALVAGE
R/C	RATE OF CHANGE
RCA	REINFORCED CONCRETE ARCH
RCB	REINFORCED CONCRETE BOX
RCP	REINFORCED CONCRETE PIPE
RCPA	REINFORCED CONCRETE PIPE ARCH
Rd	ROAD
Reinf	REINFORCED, REINFORCEMENT, REINFORCING
Rel	RELOCATE
Repl	REPLACEMENT
Ret	RETAINING
Rev	REVISED, REVISION
Rdwy	ROADWAY
RHMA	RUBBERIZED HOT MIX ASPHALT
Riv	RIVER
RM	ROAD-MIXED
RP	RADIUS POINT, REFERENCE POINT
RR	RAILROAD
RSP	ROCK SLOPE PROTECTION, REVISED STANDARD PLAN
Rt	RIGHT
Rte	ROUTE
RW	REDWOOD, RETAINING WALL
R/W	RIGHT OF WAY
Rwy	RAILWAY

S

S	SOUTH, SUPPLEMENT
SAE	STRUCTURE APPROACH EMBANKMENT
Salv	SALVAGE
SAPP	STRUCTURAL ALUMINUM PLATE PIPE
SB	SOUTHBOUND
SC	SAND CUSHION
SCSP	SLOTTED CORRUGATED STEEL PIPE
SD	STORM DRAIN
Sec	SECOND, SECTION
Sep	SEPARATION
SG	SUBGRADE
Shld	SHOULDER
Sht	SHEET
Sim	SIMILAR
₤	STATION LINE
SM	SELECTED MATERIAL
Spec	SPECIAL, SPECIFICATIONS
SPP	SLOTTED PLASTIC PIPE
SS	SLOPE STAKE
SSBM	STRAP AND SADDLE BRACKET METHOD
SSD	STRUCTURAL SECTION DRAIN
SSPA	STRUCTURAL STEEL PLATE ARCH
SSPP	STRUCTURAL STEEL PLATE PIPE
SSPPA	STRUCTURAL STEEL PLATE PIPE ARCH
SSRP	STEEL SPIRAL RIB PIPE
St	STREET
Sta	STATION
STBB	SINGLE THRIE BEAM BARRIER
Std	STANDARD
Str	STRUCTURE
Surf	SURFACING
SW	SIDEWALK, SOUND WALL
Swr	SEWER
Sym	SYMMETRICAL
S4S	SURFACE 4 SIDES

T

T	SEMI-TANGENT
Tan	TANGENT
TBB	THRIE BEAM BARRIER
Tbr	TIMBER
TC	TOP OF CURB
TCB	TRAFFIC CONTROL BOX
TCE	TEMPORARY CONSTRUCTION EASEMENT
Tel	TELEPHONE
Temp	TEMPORARY
TG	TOP OF GRADE
Tot	TOTAL
TP	TELEPHONE POLE
TPB	TREATED PERMEABLE BASE
TPM	TREATED PERMEABLE MATERIAL
Trans	TRANSITION

T continued

TS	TRANSVERSE, TRAFFIC SIGNAL, TUBULAR STEEL
Typ	TYPICAL

U

UC	UNDERCROSSING
UD	UNDERDRAIN
UG	UNDERGROUND
UON	UNLESS OTHERWISE NOTED
UP	UNDERPASS

V

V	VALVE, DESIGN SPEED
Var	VARIABLE, VARIES
VC	VERTICAL CURVE
VCP	VITRIFIED CLAY PIPE
Vert	VERTICAL
Via	VIADUCT
Vol	VOLUME

W

W	WEST, WIDTH
WB	WESTBOUND
WH	WEEP HOLE
WM	WIRE MESH
WS	WATER SURFACE
WSP	WELDED STEEL PIPE
Wt	WEIGHT
WV	WATER VALVE
WW	WINGWALL
WWLOL	WINGWALL LAYOUT LINE

X

X Sec	CROSS SECTION
Xing	CROSSING

Y

Yr	YEAR
Yrs	YEARS

Dist	COUNTY	ROUTE	POST MILES TOTAL PROJECT	SHEET No.	TOTAL SHEETS
10	SJ	120	6.7/16.7	22	33

Grace M. Tsushima
REGISTERED CIVIL ENGINEER

July 19, 2013
PLANS APPROVAL DATE

REGISTERED PROFESSIONAL ENGINEER
Grace M. Tsushima
No. C49814
Exp. 9-30-14
CIVIL
STATE OF CALIFORNIA

THE STATE OF CALIFORNIA OR ITS OFFICERS OR AGENTS SHALL NOT BE RESPONSIBLE FOR THE ACCURACY OR COMPLETENESS OF SCANNED COPIES OF THIS PLAN SHEET.

TO ACCOMPANY PLANS DATED 5-18-15

UNIT OF MEASUREMENT SYMBOLS:

Some of the symbols used in the project plan quantity tables and in the Bid Item List are:

TABLE A

SYMBOL USED	DEFINITIONS
ACRE	ACRE
CF	CUBIC FOOT
CY	CUBIC YARD
EA	EACH
GAL	GALLON
LB	POUND
LF	LINEAR FOOT
SQFT	SQUARE FOOT
SQYD	SQUARE YARD
STA	100 FEET
TAB	TABLET
TON	2,000 POUNDS

Some of the symbols used in the plans other than in the project plan quantity tables are:

TABLE B

SYMBOL USED	DEFINITIONS
ksi	KIPS PER SQUARE INCH
ksf	KIPS PER SQUARE FOOT
psi	POUNDS PER SQUARE INCH
psf	POUNDS PER SQUARE FOOT
lb/ft^3, pcf	POUNDS PER CUBIC FOOT
tsf	TONS PER SQUARE FOOT
mph, MPH *	MILES PER HOUR
ø	NOMINAL DIAMETER
oz	OUNCE
lb	POUND
kip	1,000 POUNDS
cal	CALORIE
ft	FOOT OR FEET
gal	GALLON

* For use on a sign panel only

STATE OF CALIFORNIA
DEPARTMENT OF TRANSPORTATION

ABBREVIATIONS (SHEET 2 OF 2)

NO SCALE

RSP A10B DATED JULY 19, 2013 SUPERSEDES STANDARD PLAN A10B DATED MAY 20, 2011 - PAGE 2 OF THE STANDARD PLANS BOOK DATED 2010.

REVISED STANDARD PLAN RSP A10B

2010 REVISED STANDARD PLAN RSP A10B

6-7-13

Dist	COUNTY	ROUTE	POST MILES TOTAL PROJECT	SHEET No.	TOTAL SHEETS
10	SJ	120	6.7/16.7	23	33

REGISTERED CIVIL ENGINEER

April 20, 2012
PLANS APPROVAL DATE

REGISTERED PROFESSIONAL ENGINEER
Roberta L. McLaughlin
No. C40375
Exp. 3-31-13
CIVIL
STATE OF CALIFORNIA

THE STATE OF CALIFORNIA OR ITS OFFICERS OR AGENTS SHALL NOT BE RESPONSIBLE FOR THE ACCURACY OR COMPLETENESS OF SCANNED COPIES OF THIS PLAN SHEET.

TO ACCOMPANY PLANS DATED 5-18-15

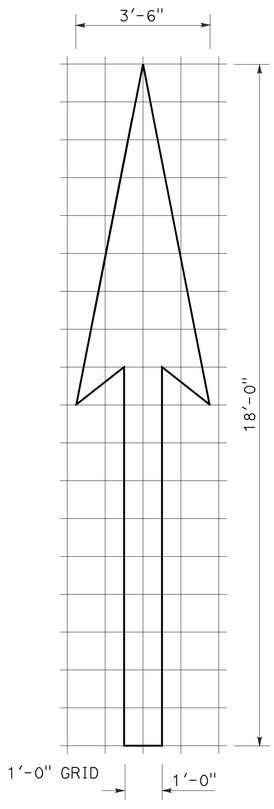

A=25 ft^2

TYPE I 18'-0" ARROW

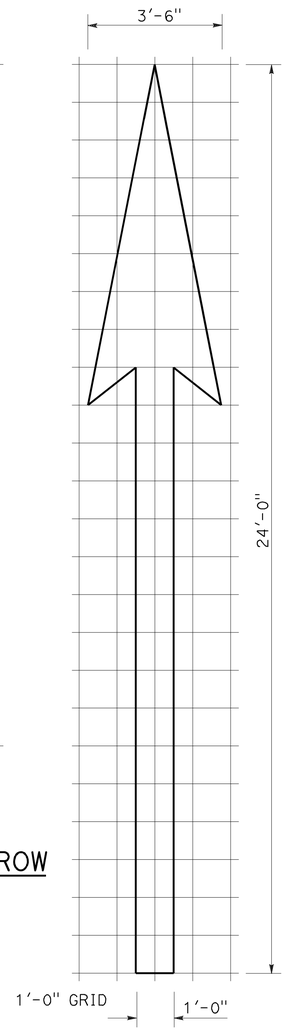

A=31 ft^2

TYPE I 24'-0" ARROW

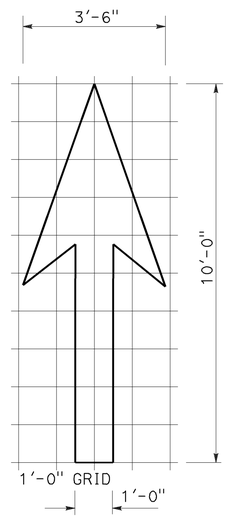

A=14 ft^2

TYPE I 10'-0" ARROW

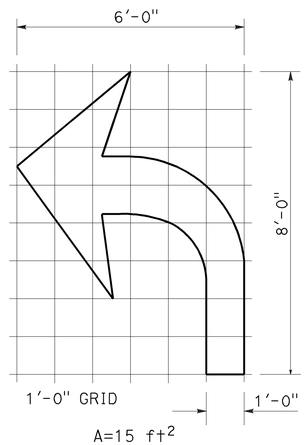

A=15 ft^2

TYPE IV (L) ARROW

(For Type IV (R) arrow, use mirror image)

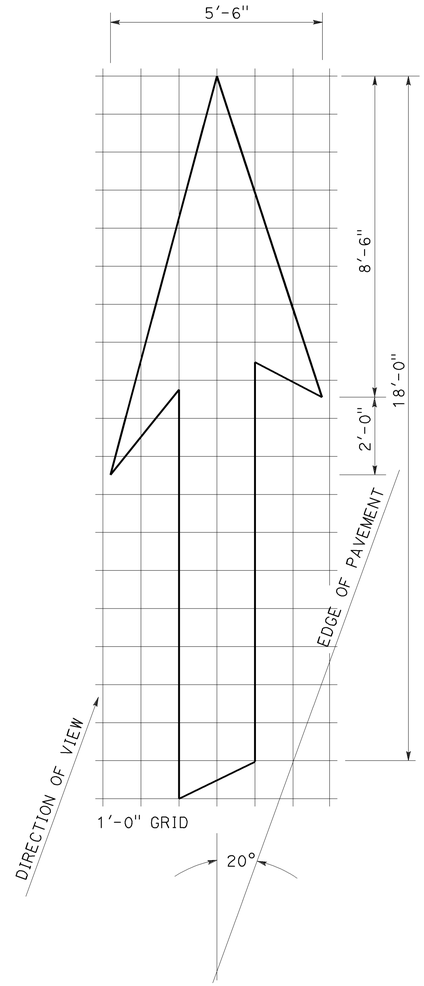

A=42 ft^2

TYPE VI ARROW

Right lane drop arrow
(For left lane, use mirror image)

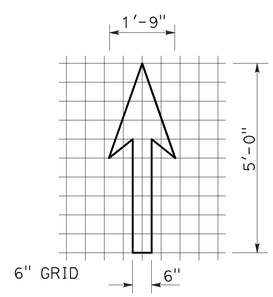

A=3.5 ft^2

BIKE LANE ARROW

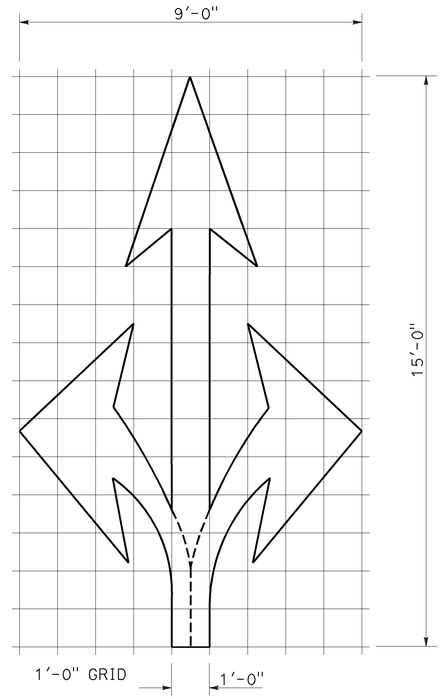

A=36 ft^2

TYPE VIII ARROW

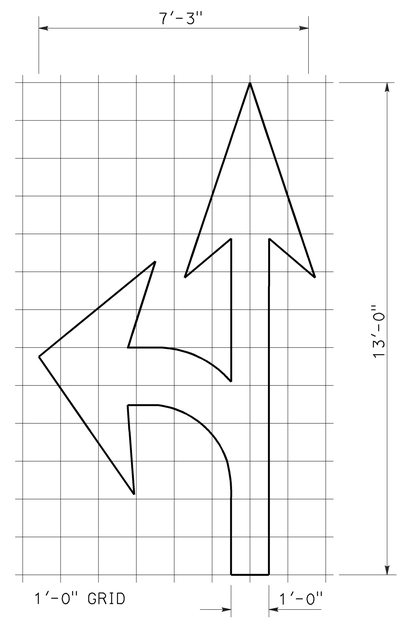

A=27 ft^2

TYPE VII (L) ARROW

(For Type VII (R) arrow, use mirror image)

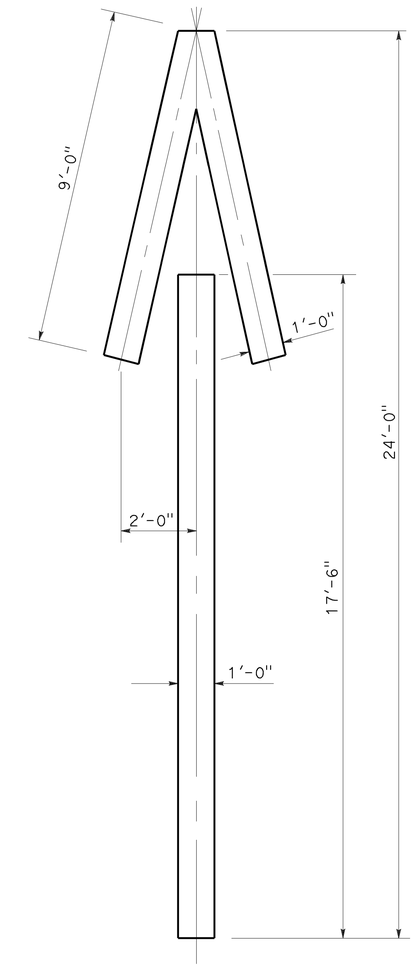

A=33 ft^2

TYPE V ARROW

NOTE:
Minor variations in dimensions may be accepted by the Engineer.

STATE OF CALIFORNIA
DEPARTMENT OF TRANSPORTATION

PAVEMENT MARKINGS ARROWS

NO SCALE

RSP A24A DATED APRIL 20, 2012 SUPERSEDES STANDARD PLAN A24A DATED MAY 20, 2011 - PAGE 13 OF THE STANDARD PLANS BOOK DATED 2010.

REVISED STANDARD PLAN RSP A24A

2010 REVISED STANDARD PLAN RSP A24A

3-14-12

Dist	COUNTY	ROUTE	POST MILES TOTAL PROJECT	SHEET No.	TOTAL SHEETS
10	SJ	120	6.7/16.7	24	33

REGISTERED CIVIL ENGINEER

July 20, 2012
PLANS APPROVAL DATE

REGISTERED PROFESSIONAL ENGINEER
Roberta L. McLaughlin
No. C40375
Exp. 3-31-13
CIVIL
STATE OF CALIFORNIA

THE STATE OF CALIFORNIA OR ITS OFFICERS OR AGENTS SHALL NOT BE RESPONSIBLE FOR THE ACCURACY OR COMPLETENESS OF SCANNED COPIES OF THIS PLAN SHEET.

TO ACCOMPANY PLANS DATED 5-18-15

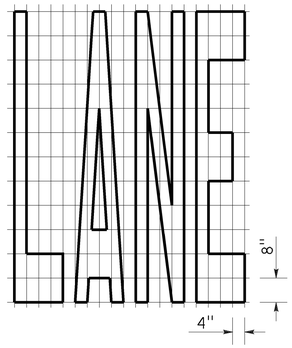

A=24 ft²

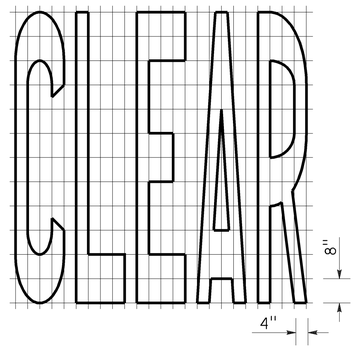

A=27 ft²

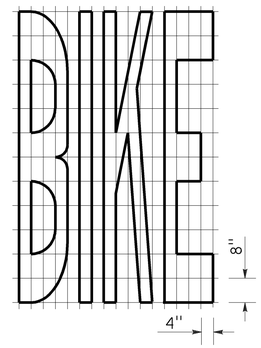

A=21 ft²

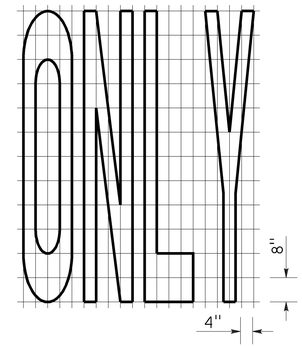

A=22 ft²

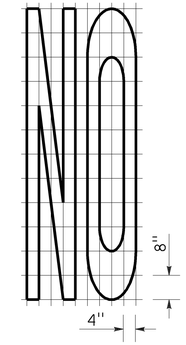

A=14 ft²

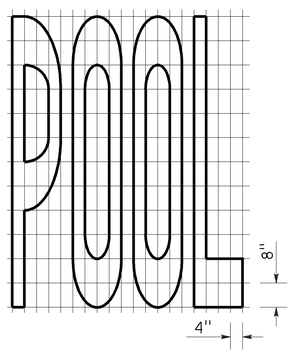

A=23 ft²

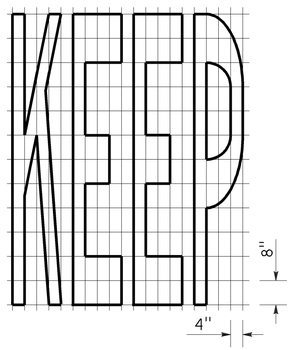

A=24 ft²

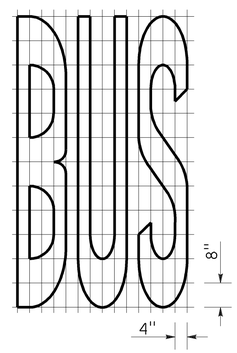

A=20 ft²

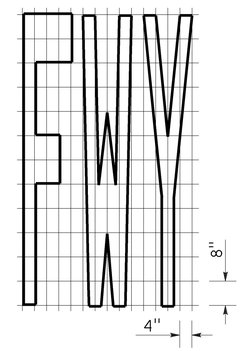

A=16 ft²

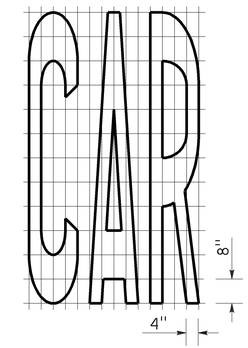

A=17 ft²

WORD MARKINGS			
ITEM	ft²	ITEM	ft²
LANE	24	NO	14
POOL	23	BIKE	21
CAR	17	BUS	20
CLEAR	27	ONLY	22
KEEP	24	FWY	16

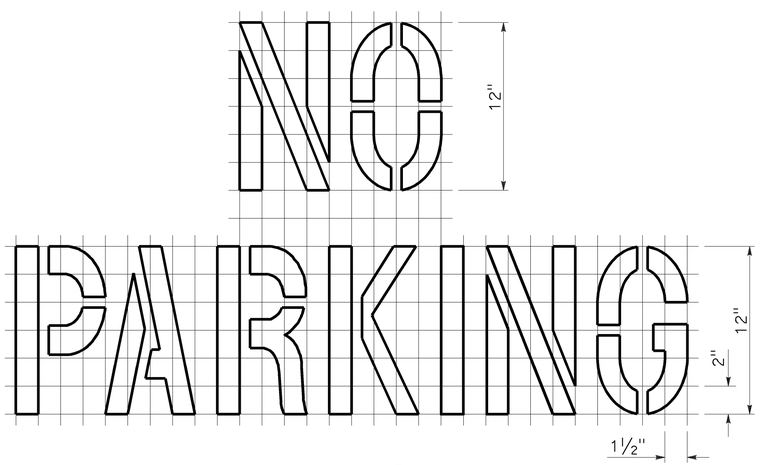

A=2 ft²
See Notes 6 and 7

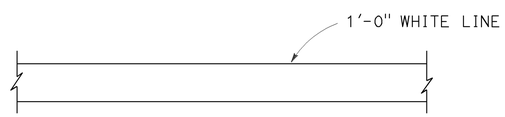

LIMIT LINE (STOP LINE)

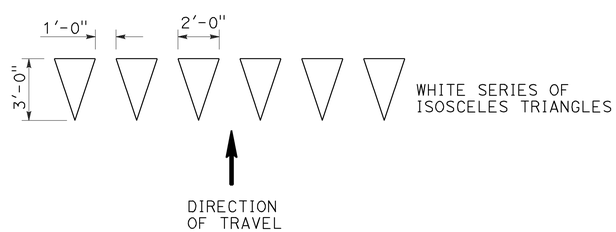

YIELD LINE

NOTES:

1. If a message consists of more than one word, it should read "UP", i.e., the first word should be nearest the driver.
2. The space between words should be at least four times the height of the characters for low speed roads, but not more than ten times the height of the characters. The space may be reduced appropriately where there is limited space because of local conditions.
3. Minor variations in dimensions may be accepted by the Engineer.
4. Portions of a letter, number or symbol may be separated by connecting segments not to exceed 2" in width.
5. The words "NO PARKING" pavement marking is to be used for parking facilities. For typical locations of markings, see Standard Plans A90A and A90B.
6. The words "NO PARKING", shall be painted in white letters no less than 1'-0" high on a contrasting background and located so that it is visible to traffic enforcement officials.

STATE OF CALIFORNIA
DEPARTMENT OF TRANSPORTATION

PAVEMENT MARKINGS WORDS, LIMIT AND YIELD LINES

NO SCALE

RSP A24E DATED JULY 20, 2012 SUPERSEDES STANDARD PLAN A24E
DATED MAY 20, 2011 - PAGE 17 OF THE STANDARD PLANS BOOK DATED 2010.

REVISED STANDARD PLAN RSP A24E

2010 REVISED STANDARD PLAN RSP A24E

6-12-12

Dist	COUNTY	ROUTE	POST MILES TOTAL PROJECT	SHEET No.	TOTAL SHEETS
10	SJ	120	6.7/16.7	25	33

REGISTERED CIVIL ENGINEER

July 20, 2012
PLANS APPROVAL DATE

REGISTERED PROFESSIONAL ENGINEER
Roberta L. McLaughlin
No. C40375
Exp. 3-31-13
CIVIL
STATE OF CALIFORNIA

THE STATE OF CALIFORNIA OR ITS OFFICERS OR AGENTS SHALL NOT BE RESPONSIBLE FOR THE ACCURACY OR COMPLETENESS OF SCANNED COPIES OF THIS PLAN SHEET.

TO ACCOMPANY PLANS DATED 5-18-15

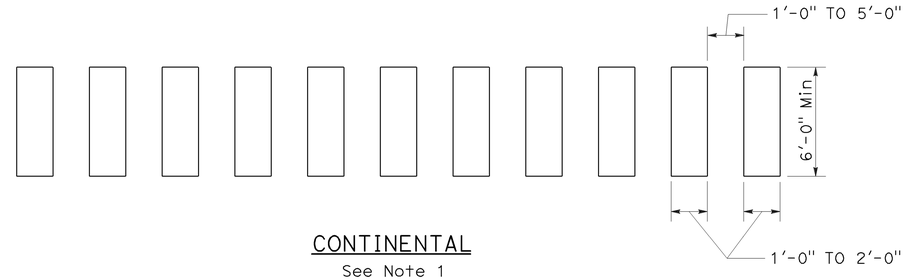

CONTINENTAL
See Note 1

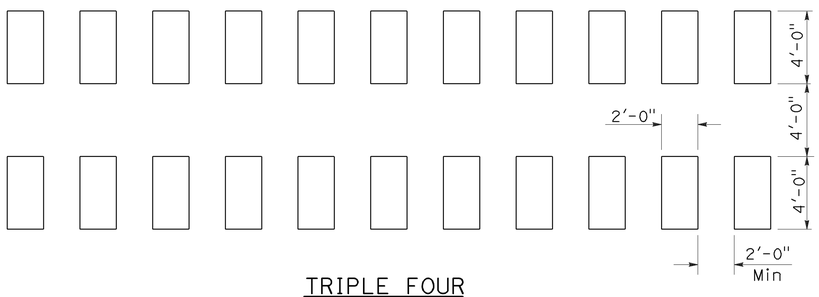

TRIPLE FOUR
See Note 1

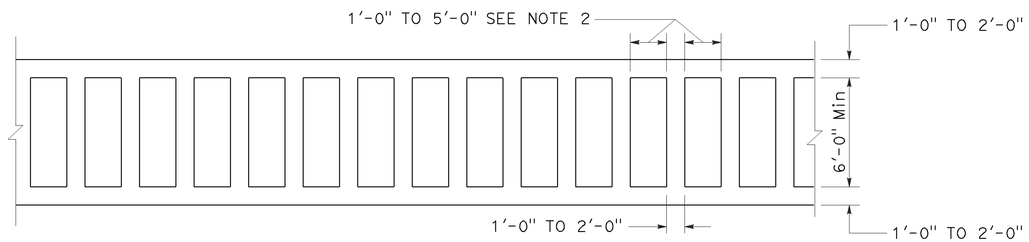

LADDER

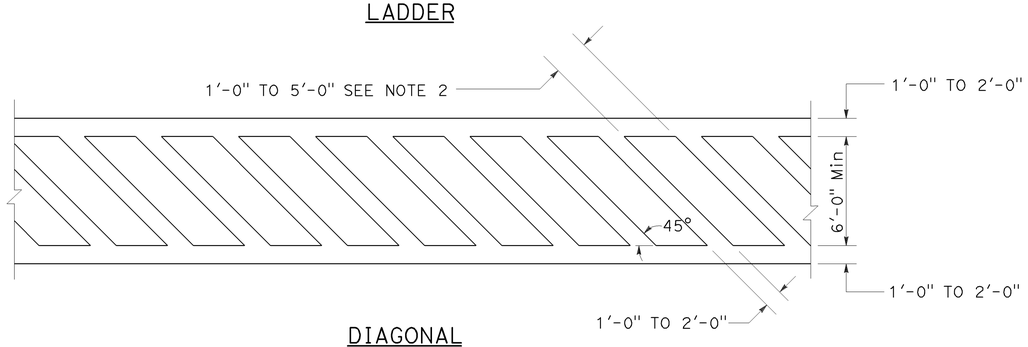

DIAGONAL

HIGHER VISIBILITY CROSSWALKS

NOTES:

1. Spaces between markings should be placed in wheel tracks of each lane.
2. Spacings not to exceed 2.5 times width of longitudinal line.
3. All crosswalk markings must be white except for those near schools must be yellow.

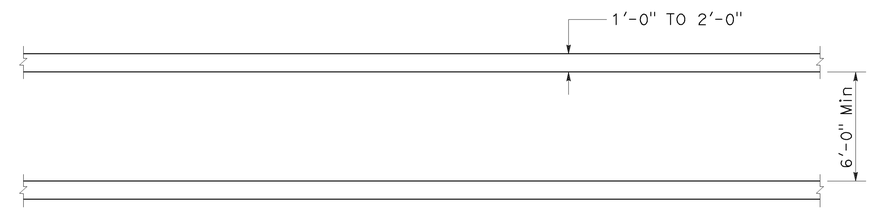

BASIC

STATE OF CALIFORNIA
DEPARTMENT OF TRANSPORTATION

PAVEMENT MARKINGS CROSSWALKS

NO SCALE

RSP A24F DATED JULY 20, 2012 SUPPLEMENTS THE STANDARD PLANS BOOK DATED 2010.

REVISED STANDARD PLAN RSP A24F

2010 REVISED STANDARD PLAN RSP A24F

6-28-12

Dist	COUNTY	ROUTE	POST MILES TOTAL PROJECT	SHEET No.	TOTAL SHEETS
10	SJ	120	6.7/16.7	26	33

REGISTERED CIVIL ENGINEER

July 19, 2013
PLANS APPROVAL DATE

REGISTERED PROFESSIONAL ENGINEER
Gurinderpal Bhullar
No. C48815
Exp. 9-30-14
CIVIL
STATE OF CALIFORNIA

THE STATE OF CALIFORNIA OR ITS OFFICERS OR AGENTS SHALL NOT BE RESPONSIBLE FOR THE ACCURACY OR COMPLETENESS OF SCANNED COPIES OF THIS PLAN SHEET.

TO ACCOMPANY PLANS DATED 5-18-15

2010 REVISED STANDARD PLAN RSP T9

TABLE 1

TAPER LENGTH CRITERIA AND CHANNELIZING DEVICE SPACING

SPEED (S)	MINIMUM TAPER LENGTH * FOR WIDTH OF OFFSET 12 FEET (W)				MAXIMUM CHANNELIZING DEVICE SPACING		
					X	Y	Z **
	TANGENT 2L	MERGING L	SHIFTING L/2	SHOULDER L/3	TAPER	TANGENT	CONFLICT
mph	ft	ft	ft	ft	ft	ft	ft
20	160	80	40	27	20	40	10
25	250	125	63	42	25	50	12
30	360	180	90	60	30	60	15
35	490	245	123	82	35	70	17
40	640	320	160	107	40	80	20
45	1080	540	270	180	45	90	22
50	1200	600	300	200	50	100	25
55	1320	660	330	220	55	110	27
60	1440	720	360	240	60	120	30
65	1560	780	390	260	65	130	32
70	1680	840	420	280	70	140	35

* - For other offsets, use the following merging taper length formula for L:
For speed of 40 mph or less, $L = WS^2/60$
For speed of 45 mph or more, $L = WS$

Where: L = Taper length in feet
W = Width of offset in feet
S = Posted speed limit, off-peak 85th-percentile speed prior to work starting, or the anticipated operating speed in mph

** - Use for taper and tangent sections where there are no pavement markings or where there is a conflict between existing pavement markings and channelizers (CA).

TABLE 2

LONGITUDINAL BUFFER SPACE AND FLAGGER STATION SPACING

SPEED *	Min D **	DOWNGRADE Min D ***		
		-3%	-6%	-9%
mph	ft	ft	ft	ft
20	115	116	120	126
25	155	158	165	173
30	200	205	215	227
35	250	257	271	287
40	305	315	333	354
45	360	378	400	427
50	425	446	474	507
55	495	520	553	593
60	570	598	638	686
65	645	682	728	785
70	730	771	825	891

* - Speed is posted speed limit, off-peak 85th-percentile speed prior to work starting, or the anticipated operating speed in mph

** - Longitudinal buffer space or flagger station spacing

*** - Use on sustained downgrade steeper than -3 percent and longer than 1 mile.

TABLE 3

ADVANCE WARNING SIGN SPACING

ROAD TYPE	DISTANCE BETWEEN SIGNS *		
	A	B	C
	ft	ft	ft
URBAN - 25 mph OR LESS	100	100	100
URBAN - MORE THAN 25 mph TO 40 mph	250	250	250
URBAN - MORE THAN 40 mph	350	350	350
RURAL	500	500	500
EXPRESSWAY / FREEWAY	1000	1500	2640

* - The distances are approximate, are intended for guidance purposes only, and should be applied with engineering judgment. These distances should be adjusted by the Engineer for field conditions, if necessary, by increasing or decreasing the recommmended distances.

STATE OF CALIFORNIA
DEPARTMENT OF TRANSPORTATION

TRAFFIC CONTROL SYSTEM TABLES FOR LANE AND RAMP CLOSURES

NO SCALE

RSP T9 DATED JULY 19, 2013 SUPERSEDES RSP T9 DATED APRIL 19, 2013 THAT SUPPLEMENTS THE STANDARD PLANS BOOK DATED 2010.

REVISED STANDARD PLAN RSP T9

4-30-13

Dist	COUNTY	ROUTE	POST MILES TOTAL PROJECT	SHEET No.	TOTAL SHEETS
10	SJ	120	6.7/16.7	27	33

Devinder Singh
REGISTERED CIVIL ENGINEER

October 17, 2014
PLANS APPROVAL DATE

REGISTERED PROFESSIONAL ENGINEER
Devinder Singh
No. C50470
Exp. 6-30-15
CIVIL
STATE OF CALIFORNIA

THE STATE OF CALIFORNIA OR ITS OFFICERS OR AGENTS SHALL NOT BE RESPONSIBLE FOR THE ACCURACY OR COMPLETENESS OF SCANNED COPIES OF THIS PLAN SHEET.

TO ACCOMPANY PLANS DATED 5-18-15

NOTES:

See Revised Standard Plan RSP T9 for tables.

Use cone spacing X for taper segment, Y for tangent segment or Z for conflict situations, as approriate, per Table 1, unless X, Y, or Z cone spacing is shown on this sheet.

Unless otherwise specified in the special provisions, all temporary warning signs shall have black legend on fluorescent orange background.

California codes are designated by (CA). Otherwise, Federal (MUTCD) codes are shown.

TYPICAL LANE CLOSURE WITH REVERSIBLE CONTROL

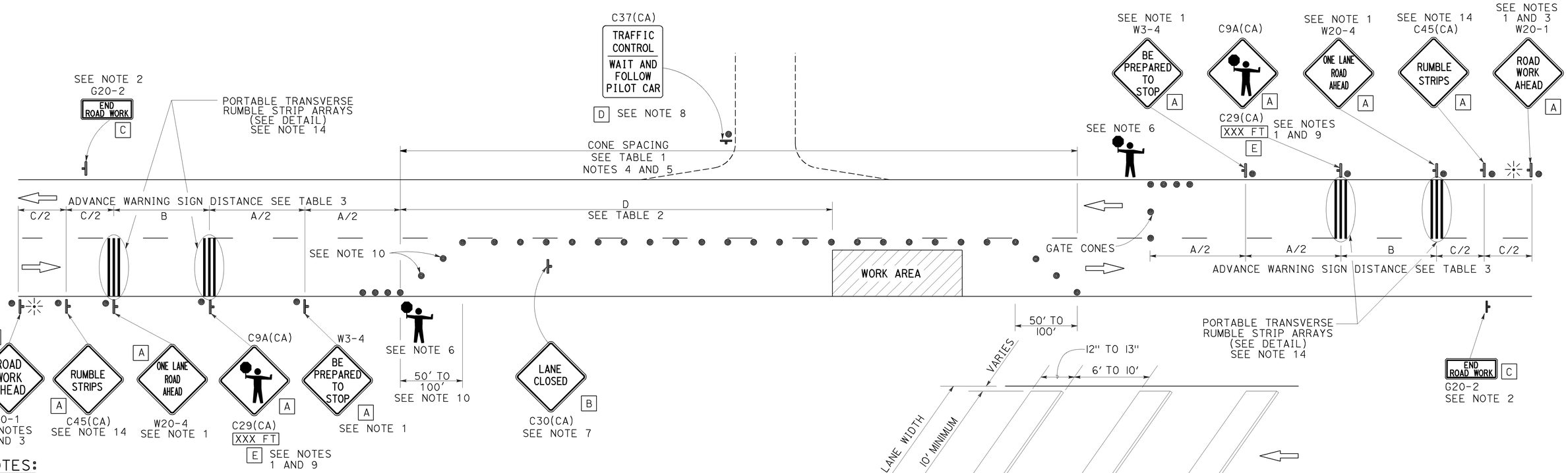

NOTES:

1. Each advance warning sign in each direction of travel shall be equipped with at least two flags for daytime closure. Each flag shall be at least 16" x 16" in size and shall be orange or fluorescent red-orange in color. Flashing beacons shall be placed at the locations indicated for lane closure during hours of darkness.
2. A G20-2 "END ROAD WORK" sign, as appropriate, shall be placed at the end of the lane control unless the end of work area is obvious, or ends within a larger project's limits.
3. If the W20-1 sign would follow within 2000' of a stationary W20-1 or G20-1 "ROAD WORK NEXT _____ MILES", use a W20-4 sign for the first advance warning sign.
4. All cones used for lane closures during the hours of darkness shall be fitted with retroreflective bands (or sleeves) as specified in the specifications.
5. Portable delineators, placed at one-half the spacing indicated for traffic cones, may be used instead of cones for daytime closures only.
6. Additional advance flaggers may be required. Flagger should stand in a conspicuous place, be visible to approaching traffic as well as approaching vehicles after the first vehicle has stopped. During the hours of darkness, the flagging-station and flagger shall be illuminated and clearly visible to approaching traffic. The illumination footprint of the lighting on the ground shall be at least 20' in diameter. Place a minimum of four cones at 50' intervals in advance of flagger station as shown.
7. Place C30(CA) "LANE CLOSED" sign at 500' to 1000' intervals throughout extended work areas. They are optional if the work area is visible from the flagger station.
8. When a pilot car is used, place a C37(CA) "TRAFFIC CONTROL-WAIT AND FOLLOW PILOT CAR" sign with black legend on white background at all intersections, driveways and alleys without a flagger within traffic control area. Signs shall be clean and visible at all times. Where traffic can not be effectively self-regulated, at least one flagger shall be used at each intersection within traffic control area.
9. An optional C29(CA) sign may be placed below the C9A(CA) sign.
10. Either traffic cones or barricades shall be placed on the taper. Barricades shall be Type I, II, or III.
11. The color of the portable transverse rumble strips shall be black or orange. Use 2 arrays, each array shall consist of 3 rumble strips.
12. Portable transverse rumble strips shall not be placed on sharp horizontal or vertical curves nor shall they be placed through pedestrian crossings.
13. If the portable transverse rumble strips become out of alignment (skewed) by more than 6 inches, measured from one end to the other, they shall be readjusted to bring the placement back to the original location.
14. Portable transverse rumble strips are not required if any one of the following conditions is satisfied:
    A. Work duration occupies a location for four hours or less
    B. Posted speed limit is below 45 MPH
    C. Work is of emergency nature
    D. Work zone is in snow or icy weather conditions

PORTABLE TRANSVERSE RUMBLE STRIP ARRAY DETAIL

LEGEND

- TRAFFIC CONE
- TEMPORARY TRAFFIC CONTROL SIGN
- PORTABLE FLASHING BEACON
- FLAGGER

SIGN PANEL SIZE (Min)

A	48" x 48"
B	30" x 30"
C	36" x 18"
D	36" x 42"
E	20" x 7"

STATE OF CALIFORNIA
DEPARTMENT OF TRANSPORTATION

TRAFFIC CONTROL SYSTEM FOR LANE CLOSURE ON TWO LANE CONVENTIONAL HIGHWAYS

NO SCALE

RSP T13 DATED OCTOBER 17, 2014 SUPERSEDES RSP T13 DATED JULY 18, 2014 AND RSP T13 DATED APRIL 19, 2013 AND STANDARD PLAN T13 DATED MAY 20, 2011 - PAGE 241 OF THE STANDARD PLANS BOOK DATED 2010.

REVISED STANDARD PLAN RSP T13

2010 REVISED STANDARD PLAN RSP T13

9-26-14

Dist	COUNTY	ROUTE	POST MILES TOTAL PROJECT	SHEET No.	TOTAL SHEETS
10	SJ	120	6.7/16.7	28	33

REGISTERED CIVIL ENGINEER

April 19, 2013
PLANS APPROVAL DATE

REGISTERED PROFESSIONAL ENGINEER
Gurinderpal Bhullar
No. C48815
Exp. 9-30-14
CIVIL
STATE OF CALIFORNIA

THE STATE OF CALIFORNIA OR ITS OFFICERS OR AGENTS SHALL NOT BE RESPONSIBLE FOR THE ACCURACY OR COMPLETENESS OF SCANNED COPIES OF THIS PLAN SHEET.

TO ACCOMPANY PLANS DATED 5-18-15

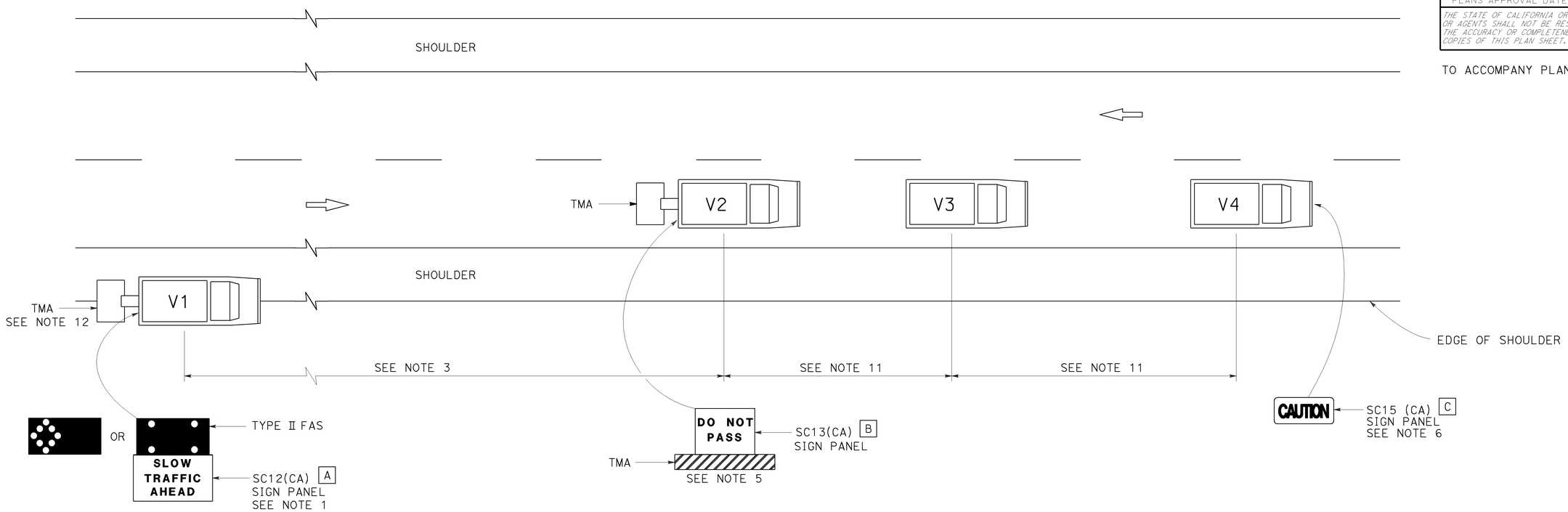

LEGEND

V1	SIGN VEHICLE
V2	SHADOW VEHICLE
V3	WORK/APPLICATION VEHICLE
V4	SIGN VEHICLE
TMA	TRUCK-MOUNTED ATTENUATOR
	FLASHING ARROW SIGN (FAS) IN FLASHING CAUTION MODE
	FLASHING ARROW SIGN (FAS) IN ALTERNATING DIAMOND CAUTION

SIGN PANEL SIZE (Min)

A	72" x 42"
B	54" x 42"
C	54" x 24"

NOTES:

1. Either a changeable message sign or a SC12(CA) "SLOW TRAFFIC AHEAD" sign shall be mounted on the rear of sign vehicle V1. The changeable message sign shall be sequenced to show the "CAUTION" message first, follow by the "SLOW TRAFFIC AHEAD" message. A Type II flashing arrow sign may be used with the SC12(CA) sign panel.
2. Sign vehicle V1 should be positioned where highly visible when shoulders are not available.
3. If traffic queues develop, sign vehicle V1 should be positioned upstream from the end of queue.
4. Vehicle-mounted sign panels shall have Type III or above retroreflective sheeting, black on white, or black on fluorescent orange, with 6" minimum series D letters per Caltrans sign specifications.
5. Shadow vehicle shall be equipped with a truck-mounted attenuator. The sign panel shown shall be mounted on the rear of shadow vehicle V2. The message "LANE CLOSED" may be used in place of the "DO NOT PASS" message.
6. The sign panel shown shall be mounted on the front of sign vehicle V4, facing opposing traffic.
7. All vehicles shall be equipped with flashing or rotating amber lights.
8. Sign vehicle V4 will not be required when the work and vehicles V2 and V3 are 2′ or more from the centerline of the highway during the work or application operations.
9. All vehicles used for lane closures shall be equipped with two-way radios and the vehicle operators shall maintain communication during the work or application operation.
10. This plan shall not be used where workers would be on foot in the work area. Use a stationary type lane closure (Revised Standard Plan T13) for this condition.
11. Minimize spacing between vehicles V2 and V3 and vehicles V3 and V4 to deter road users from driving in between them.
12. If sign vehicle V1 encroaches into the traffic lane due to insufficient shoulder width, sign vehicle V1 shall be equipped with a truck-mounted attenuator. Sign vehicle V1 shall stay as close to the edge of shoulder as practicable.

STATE OF CALIFORNIA
DEPARTMENT OF TRANSPORTATION

TRAFFIC CONTROL SYSTEM FOR MOVING LANE CLOSURE ON TWO LANE HIGHWAYS

NO SCALE

RSP T17 DATED APRIL 19, 2013 SUPERSEDES STANDARD PLAN T17
DATED MAY 20, 2011 - PAGE 245 OF THE STANDARD PLANS BOOK DATED 2010.

REVISED STANDARD PLAN RSP T17

2010 REVISED STANDARD PLAN RSP T17

12-18-12

Dist	COUNTY	ROUTE	POST MILES TOTAL PROJECT	SHEET No.	TOTAL SHEETS
10	SJ	120	6.7/16.7	29	33

Theresa Gabriel
REGISTERED ELECTRICAL ENGINEER

July 19, 2013
PLANS APPROVAL DATE

REGISTERED PROFESSIONAL ENGINEER
Theresa Aziz Gabriel
No. E15129
Exp. 6-30-14
ELECTRICAL
STATE OF CALIFORNIA

THE STATE OF CALIFORNIA OR ITS OFFICERS OR AGENTS SHALL NOT BE RESPONSIBLE FOR THE ACCURACY OR COMPLETENESS OF SCANNED COPIES OF THIS PLAN SHEET.

TO ACCOMPANY PLANS DATED 5-18-15

LEGEND:

AB	ABANDON. IF APPLIED TO CONDUIT, REMOVE CONDUCTORS
BC	INSTALL PULL BOX IN EXISTING CONDUIT RUN
BP	PEDESTRIAN BARRICADE, TYPE AS INDICATED ON PLAN
CB	INSTALL CONDUIT INTO EXISTING PULL BOX
CC	CONNECT NEW AND EXISTING CONDUIT. REMOVE EXISTING CONDUCTORS AND INSTALL CONDUCTORS AS INDICATED
CF	CONDUIT TO REMAIN FOR FUTURE USE. REMOVE CONDUCTORS. INSTALL PULL TAPE
DH	DETECTOR HANDHOLE
FA	FOUNDATION TO BE ABANDONED
IS	INSTALL SIGN ON SIGNAL MAST ARM
NS	NO SLIP BASE ON STANDARD
PEC	PHOTOELECTRIC CONTROL
PEU	PHOTOELECTRIC UNIT
RC	EQUIPMENT OR MATERIAL TO BE REMOVED AND BECOME THE PROPERTY OF THE CONTRACTOR
RE	REMOVE ELECTROLIER, FUSES AND BALLAST. TAPE ENDS OF CONDUCTORS
RL	RELOCATE EQUIPMENT
RR	REMOVE AND REUSE EQUIPMENT
RS	REMOVE AND SALVAGE EQUIPMENT
SC	SPLICE NEW TO EXISTING CONDUCTORS
SD	SERVICE DISCONNECT
TSP	TELEPHONE SERVICE POINT

ABBREVIATIONS

APS	ACCESSIBLE PEDESTRIAN SIGNAL
BBS	BATTERY BACKUP SYSTEM
BC	BOLT CIRCLE
BPB	BICYCLE PUSH BUTTON
C	CONDUIT
CB	CIRCUIT BREAKER
CCTV	CLOSED CIRCUIT TELEVISION
Ckt	CIRCUIT
CMS	CHANGEABLE MESSAGE SIGN
Ctid	CALTRANS IDENTIFICATION
Comm	COMMUNICATION
DLC	LOOP DETECTOR LEAD-IN CABLE
EMS	EXTINGUISHABLE MESSAGE SIGN
EVUC	EMERGENCY VEHICLE UNIT CABLE
EVUD	EMERGENCY VEHICLE UNIT DETECTOR
FB	FLASHING BEACON
FBCA	FLASHING BEACON CONTROL ASSEMBLY
FBS	FLASHING BEACON WITH SLIP BASE
FO	FIBER OPTIC
G	EQUIPMENT GROUNDING CONDUCTOR
GB	GROUND BUS
GFCI	GROUND FAULT CIRCUIT INTERRUPTER
HAR	HIGHWAY ADVISORY RADIO
Hex	HEXAGONAL
HPS	HIGH PRESSURE SODIUM
IISNS	INTERNALLY ILLUMINATED STREET NAME SIGN
ISL	INDUCTION SIGN LIGHTING
LED	LIGHT EMITTING DIODE
LMA	LUMINAIRE MAST ARM
LPS	LOW PRESSURE SODIUM
Ltg	LIGHTING
Lum	LUMINAIRE
M	METERED
MAT	MAST ARM MOUNTING TOP ATTACHMENT
MAS	MAST ARM MOUNTING SIDE ATTACHMENT
M/M	MULTIPLE TO MULTIPLE TRANSFORMER
Mtg	MOUNTING
MV	MERCURY VAPOR LIGHTING FIXTURE
MVDS	MICROWAVE VEHICLE DETECTION SYSTEM
N	NEUTRAL (GROUNDED CONDUCTOR)
NB	NEUTRAL BUS
NC	NORMALLY CLOSE
NO	NORMALLY OPEN
P	CIRCUIT BREAKER'S POLE
PB	PULL BOX
PBA	PUSH BUTTON ASSEMBLY
PEC	PHOTOELECTRIC CONTROL
Ped	PEDESTRIAN
PEU	PHOTOELECTRIC UNIT
PT	CONDUIT WITH PULL TAPE
RE	RELOCATED EQUIPMENT
RM	RAMP METERING
RWIS	ROADSIDE WEATHER INFORMATION SYSTEM
SB	SLIP BASE
SIC	SIGNAL INTERCONNECT CABLE
Sig	SIGNAL
SMA	SIGNAL MAST ARM
SNS	STREET NAME SIGN
SP	SERVICE POINT
TDC	TELEPHONE DEMARCATION CABINET
TMS	TRAFFIC MONITORING STATION
TOS	TRAFFIC OPERATIONS SYSTEM
Veh	VEHICLE
VIVDS	VIDEO IMAGE VEHICLE DETECTION SYSTEM
WIM	WEIGH-IN-MOTION
Xfmr	TRANSFORMER

SOFFIT AND WALL MOUNTED LUMINAIRES

PENDANT, 70 W HPS UNLESS OTHERWISE SPECIFIED

FLUSH, 70 W HPS UNLESS OTHERWISE SPECIFIED

WALL SURFACE, 70 W HPS UNLESS OTHERWISE SPECIFIED

EXISTING SOFFIT OR WALL LUMINAIRE TO REMAIN UNMODIFIED

EXISTING SOFFIT OR WALL LUMINAIRE TO BE MODIFIED AS SPECIFIED

NOTE:

Arrow indicates "street side" of luminaire.

COMMONLY USED SYMBOLS FOR UNITED STATES CUSTOMARY UNITS OF MEASUREMENT:

SYMBOL USED	DEFINITIONS
Ω	OHMS
min	MINUTE
s	SECOND
bps	BITS PER SECOND
Bps	BYTES PER SECOND
A	AMPERE
V	VOLT
V(dc)	VOLT (DIRECT CURRENT)
V(ac)	VOLT (ALTERNATING CURRENT)
FC	FOOT - CANDLE
W	WATTS
VA	VOLT-AMPERE
M	MEGA
k	KILO
m	MILLI
μ	MICRO
P	PICO
Hz	HERTZ

MISCELLANEOUS ELECTROLIERS

NEW	EXISTING	
		LUMINAIRE ON WOOD POLE
		NON-STANDARD ELECTROLIER (SEE PROJECT NOTES OR PROJECT PLANS)
		CITY ELECTROLIER
		ELECTROLIER FOUNDATION (FUTURE INSTALLATION)

NOTES:

1. HPS luminaires shall be 310 W HPS when installed on Type 21, 21D, 30, 31 and 32 Standards, unless otherwise specified. HPS luminaires shall be 200 W when installed on other type standards or poles, unless otherwise specified.
2. LED luminaires shall be 235 W when installed on Type 21, 21D, 30, 31 and 32 Standards, unless otherwise specified. LED luminaires shall be 165 W when installed on other type standards or poles, unless otherwise specified.
3. Luminaires shall be the cutoff type, ANSI Type III medium cutoff lighting distribution, unless otherwise specified.

STANDARD ELECTROLIER

NEW	EXISTING	STANDARD TYPE
		15
		15D
		15 STRUCTURE
		15D STRUCTURE
		21
		21D
		21 STRUCTURE
		21D STRUCTURE
		30
		31
		32

STATE OF CALIFORNIA
DEPARTMENT OF TRANSPORTATION

ELECTRICAL SYSTEMS (LEGEND AND ABBREVIATIONS)

NO SCALE

RSP ES-1A DATED JULY 19, 2013 SUPERSEDES STANDARD PLAN ES-1A DATED MAY 20, 2011 - PAGE 425 OF THE STANDARD PLANS BOOK DATED 2010.

REVISED STANDARD PLAN RSP ES-1A

2010 REVISED STANDARD PLAN RSP ES-1A

Dist	COUNTY	ROUTE	POST MILES TOTAL PROJECT	SHEET No.	TOTAL SHEETS
10	SJ	120	6.7/16.7	30	33

Theresa Gabriel
REGISTERED ELECTRICAL ENGINEER

July 19, 2013
PLANS APPROVAL DATE

REGISTERED PROFESSIONAL ENGINEER
Theresa Aziz Gabriel
No. E15129
Exp. 6-30-14
ELECTRICAL
STATE OF CALIFORNIA

THE STATE OF CALIFORNIA OR ITS OFFICERS OR AGENTS SHALL NOT BE RESPONSIBLE FOR THE ACCURACY OR COMPLETENESS OF SCANNED COPIES OF THIS PLAN SHEET.

TO ACCOMPANY PLANS DATED 5-18-15

CONDUIT

NEW	EXISTING	
		LIGHTING CONDUIT, UNLESS OTHERWISE INDICATED OR NOTED
		TRAFFIC SIGNAL CONDUIT
C	c	COMMUNICATION CONDUIT
T	t	TELEPHONE CONDUIT
F	f	FIRE ALARM CONDUIT
FO	fo	FIBER OPTIC CONDUIT
		CONDUIT TERMINATION
R	r	CONDUIT RISER ATTACHED TO THE STRUCTURE OR SERVICE POLE

SERVICE EQUIPMENT

NEW	EXISTING	
OH	oh	OVERHEAD LINES
U	U	WOOD POLE, "U" INDICATES UTILITY OWNED
		POLE GUY WITH ANCHOR
		UTILITY TRANSFORMER - GROUND MOUNTED
III	III	SERVICE EQUIPMENT ENCLOSURE TYPE. DOOR INDICATES FRONT OF ENCLOSURE
T	t	TELEPHONE DEMARCATION CABINET

POLE-MOUNTED SERVICE DESIGNATION

TYPE H SERVICE, 28'-10" — TYPE OF INSTALLATION AND POLE HEIGHT ABOVE GRADE

FLASHING BEACON

NEW	EXISTING	
R	R	FLASHING BEACON (ONE VEHICLE SIGNAL HEAD WITH BACKPLATE AND VISOR) "R" INDICATES RED INDICATION, "Y" INDICATES YELLOW INDICATION
Y Y	Y Y	FLASHING BEACON WITH TYPE 15-FBS STANDARD AND A SIGN.
R R	R R	FLASHING BEACON WITH TYPES 9, 9A OR 9B SIGN UNLESS OTHERWISE SPECIFIED OR INDICATED

SIGNAL EQUIPMENT

NEW	EXISTING	
C	C	PEDESTRIAN SIGNAL HEAD "C" INDICATES COUNTDOWN PEDESTRIAN HEAD
		PUSH BUTTON ASSEMBLY POST
		PEDESTRIAN BARRICADE
		VEHICLE SIGNAL HEAD (WITH BACKPLATE AND 3-SECTIONS: RED, YELLOW AND GREEN)
		VEHICLE SIGNAL HEAD WITH ANGLE VISOR
PV	PV	MODIFICATIONS OF BASIC SYMBOL: "L" INDICATES ALL NON-ARROW SECTIONS LOUVERED "LG" INDICATES LOUVERED GREEN SECTION ONLY "PV" INDICATES ALL 12" SECTIONS PROGRAMMED VISIBILITY "8" INDICATES ALL 8" SECTIONS (ONLY WHEN SPECIFIED)
		VEHICLE SIGNAL HEAD CONSISTING OF RED, YELLOW AND GREEN LEFT ARROW SECTIONS
		VEHICLE SIGNAL HEAD CONSISTING OF RED AND YELLOW SECTIONS WITH AN UP GREEN ARROW SECTION
		VEHICLE SIGNAL HEAD (5 SECTION) CONSISTING OF RED, YELLOW AND GREEN SECTIONS WITH YELLOW AND GREEN RIGHT ARROW SECTIONS
		TYPE 15TS STANDARD WITH VEHICLE SIGNAL HEAD AND LUMINAIRE
		TYPE 21TS STANDARD WITH VEHICLE SIGNAL HEAD AND LUMINAIRE
		STANDARD WITH LUMINAIRE AND SIGNAL MAST ARMS AND ATTACHED VEHICLE SIGNAL HEADS
		TYPE 1 STANDARD WITH ATTACHED VEHICLE SIGNAL HEADS
		STANDARD WITH A SIGNAL MAST ARM, ATTACHED VEHICLE SIGNAL HEADS AND INTERNALLY ILLUMINATED STREET NAME SIGN
		CONTROLLER ASSEMBLY. DOOR INDICATES FRONT OF CABINET

SIGNAL EQUIPMENT Cont

NEW	EXISTING	
		GUARD POST
		TYPE 1 STANDARD WITH RAMP METERING SIGN
		OPTICAL DETECTOR FOR THE EMERGENCY VEHICLE DETECTION SYSTEM

NOTES:

1. All signal sections shall be 12" unless shown otherwise.
2. Signal heads shall be provided with backplates unless shown otherwise.

ILLUMINATED OVERHEAD SIGN

NEW	EXISTING	
		SINGLE POST, SINGLE ILLUMINATED SIGN, BALANCED BUTTERFLY
		SINGLE POST, DOUBLE ILLUMINATED SIGN, BALANCED BUTTERFLY
		SINGLE POST, SINGLE ILLUMINATED SIGN, FULL CANTILEVER
		DOUBLE POST, SINGLE ILLUMINATED SIGN
		SINGLE ILLUMINATED SIGN MOUNTED ON STRUCTURE
		DOUBLE POST, SINGLE ILLUMINATED SIGN WITH ELECTROLIER

STATE OF CALIFORNIA
DEPARTMENT OF TRANSPORTATION

ELECTRICAL SYSTEMS (LEGEND AND ABBREVIATIONS)

NO SCALE

RSP ES-1B DATED JULY 19, 2013 SUPERSEDES STANDARD PLAN ES-1B DATED MAY 20, 2011 - PAGE 426 OF THE STANDARD PLANS BOOK DATED 2010.

REVISED STANDARD PLAN RSP ES-1B

2010 REVISED STANDARD PLAN RSP ES-1B

7-15-13

Dist	COUNTY	ROUTE	POST MILES TOTAL PROJECT	SHEET No.	TOTAL SHEETS
10	SJ	120	6.7/16.7	31	33

Theresa Gabriel
REGISTERED ELECTRICAL ENGINEER

July 19, 2013
PLANS APPROVAL DATE

REGISTERED PROFESSIONAL ENGINEER
Theresa Aziz Gabriel
No. E15129
Exp. 6-30-14
ELECTRICAL
STATE OF CALIFORNIA

THE STATE OF CALIFORNIA OR ITS OFFICERS OR AGENTS SHALL NOT BE RESPONSIBLE FOR THE ACCURACY OR COMPLETENESS OF SCANNED COPIES OF THIS PLAN SHEET.

TO ACCOMPANY PLANS DATED 5-18-15

EQUIPMENT IDENTIFICATION

ILLUMINATED SIGN IDENTIFICATION NUMBER:

SIGN No. 12345
10 ISL SCI 1.0

- SIGN NUMBER - PLACE ON POST OR STRUCTURE
- TRANSFORMER RATING (kVA)
- LIGHTING CONTROL TYPE
- NUMBER AND TYPE OF FIXTURES

DO NOT PLACE ON STANDARD OR STRUCTURE

ELECTROLIER OR EQUIPMENT IDENTIFICATION NUMBER:

12345 - 15'-0"

- MAST ARM LENGTH, IF SHOWN. DO NOT PLACE ON STANDARD OR STRUCTURE
- EQUIPMENT NUMBER - PLACE ON STANDARD OR STRUCTURE. EXISTING EQUIPMENT NUMBERS ARE SHOWN IN PARENTHESIS

CONDUIT AND CONDUCTOR IDENTIFICATION:

1½"C, 2#10, 15#14, 2 DLC, 12P#18

- PAIR
- NUMBER AND SIZE OF CONDUCTORS AND CABLES
- SIZE OF CONDUIT IN INCHES

ø1, ø2, ø2P, etc.	TRAFFIC PHASE IDENTIFICATION FOR SIGNAL FACES, DETECTORS AND PHASE DIAGRAMS
1 2 3	LEGEND NUMBERS
A B C	EQUIPMENT, SIGNAL POLES, INSTALLATION OR ITEMS
1 2 3	CONDUIT RUN NUMBERS

SIGNAL AND LIGHTING STANDARD (TYPICAL DESIGNATION):

19A - 3 - 100

- WIND VELOCITY = 100 mph
- CASE 3 ARM LOADING
- STANDARD TYPE
- STANDARD PLAN SHEET NUMBER
- DETAIL, NUMBER, SECTION, TYPE OR ELEVATION

MISCELLANEOUS EQUIPMENT

NEW	EXISTING	
CMS	cms	CHANGEABLE MESSAGE SIGN
		CLOSED CIRCUIT TELEVISION CAMERA
		HIGHWAY ADVISORY RADIO POLE AND ANTENNA
EMS	ems	EXTINGUISHABLE MESSAGE SIGN
M V	m v	DETECTION DEVICE M = MICROWAVE SENSOR V = VIDEO IMAGE SENSOR

WIRING DIAGRAM LEGEND

- EXTERNAL CONDUCTOR
- CONDUCTOR OR BUS
- TIE POINT
- CONTACTOR COIL
- CONTACTOR, NO CONTACT
- TERMINAL BLOCKS
- CONTACTOR, NC CONTACT
- ENCLOSURE BOND
- GROUNDING ELECTRODE
- CIRCUIT BREAKER
- RECEPTACLE

PULL BOXES

NEW	EXISTING	
		PULL BOX, No. 5 UNLESS OTHERWISE INDICATED OR NOTED
3	9A(21)	PULL BOX, ADDITIONAL DESIGNATIONS OR DESCRIPTIONS

3 No. 3½ PULL BOX
5 No. 5 PULL BOX
6 No. 6 PULL BOX
7 No. 7 (CEILING PULL BOX)
8 No. 8 (PENDANT SOFFIT PULL BOX)
9 No. 9 PULL BOX
9A No. 9A PULL BOX

(C) COMMUNICATIONS PULL BOX
(E) PULL BOX WITH EXTENSION
(S) SPRINKLER CONTROL PULL BOX
(21) ANCHOR BOLTS AND CONDUIT FOR FUTURE INSTALLATION OF TYPE 21 STANDARD
(T) TRAFFIC PULL BOX

VEHICLE DETECTORS

5 J 9 U

- VEHICLE DETECTOR DESIGNATION
- U = UPPER
  L = LOWER
- SLOT NUMBER IN INPUT FILE
- INPUT FILE (I OR J)
- PHASE

NEW	EXISTING	
		TYPE A DETECTOR LOOP. OUTLINE OF SAWCUT SHOWN
		TYPE B DETECTOR LOOP. OUTLINE OF SAWCUT SHOWN
		TYPE C DETECTOR LOOP. OUTLINE OF SAWCUT SHOWN
		TYPE D DETECTOR LOOP. OUTLINE OF SAWCUT SHOWN
		TYPE E DETECTOR LOOP. OUTLINE OF SAWCUT SHOWN
		TYPE Q DETECTOR LOOP. OUTLINE OF SAWCUT SHOWN
		MAGNETIC DETECTOR
DH	dh	DETECTOR HANDHOLE
		MICROWAVE OR VIDEO DETECTION ZONE

STATE OF CALIFORNIA
DEPARTMENT OF TRANSPORTATION

ELECTRICAL SYSTEMS (LEGEND AND ABBREVIATIONS)

NO SCALE

RSP ES-1C DATED JULY 19, 2013 SUPERSEDES STANDARD PLAN ES-1C DATED MAY 20, 2011 - PAGE 427 OF THE STANDARD PLANS BOOK DATED 2010.

REVISED STANDARD PLAN RSP ES-1C

2010 REVISED STANDARD PLAN RSP ES-1C

7-11-13

Dist	COUNTY	ROUTE	POST MILES TOTAL PROJECT	SHEET No.	TOTAL SHEETS
10	SJ	120	6.7/16.7	32	33

Theresa Gabriel
REGISTERED ELECTRICAL ENGINEER

July 19, 2013
PLANS APPROVAL DATE

REGISTERED PROFESSIONAL ENGINEER
Theresa Aziz Gabriel
No. E15129
Exp. 6-30-14
ELECTRICAL
STATE OF CALIFORNIA

THE STATE OF CALIFORNIA OR ITS OFFICERS OR AGENTS SHALL NOT BE RESPONSIBLE FOR THE ACCURACY OR COMPLETENESS OF SCANNED COPIES OF THIS PLAN SHEET.

TO ACCOMPANY PLANS DATED 5-18-15

2010 REVISED STANDARD PLAN RSP ES-5B

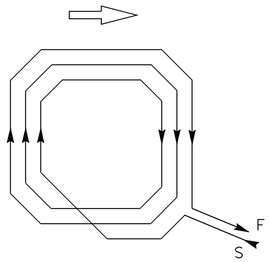

WINDING DETAIL

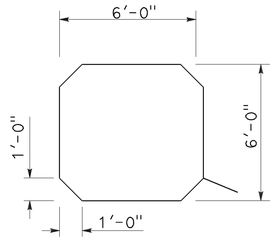

SAWCUT DETAIL

TYPE A LOOP DETECTOR CONFIGURATION

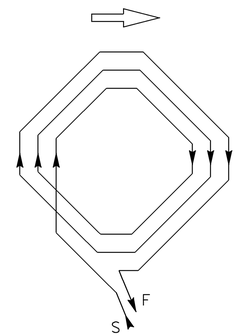

WINDING DETAIL

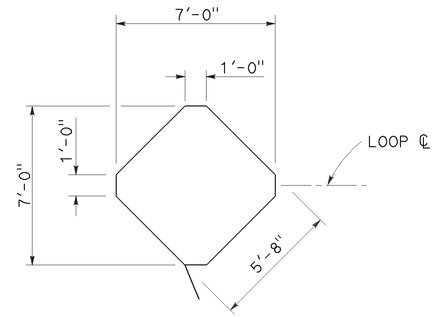

SAWCUT DETAIL

TYPE B LOOP DETECTOR CONFIGURATION

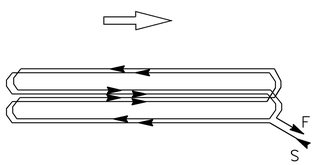

WINDING DETAIL

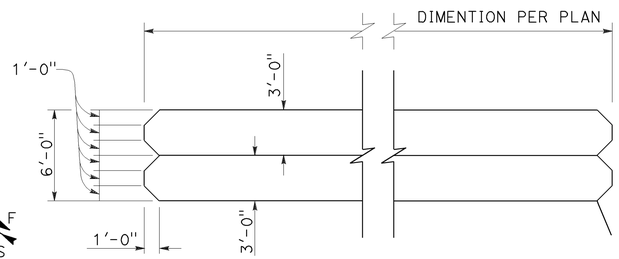

SAWCUT DETAIL

TYPE C LOOP DETECTOR CONFIGURATION

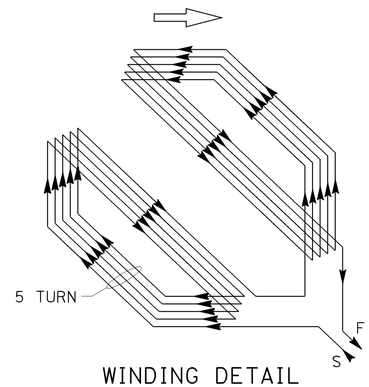

WINDING DETAIL

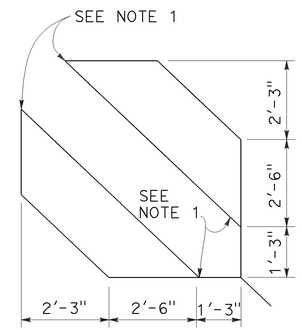

SAWCUT DETAIL

TYPE D LOOP DETECTOR CONFIGURATION

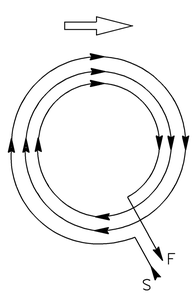

WINDING DETAIL

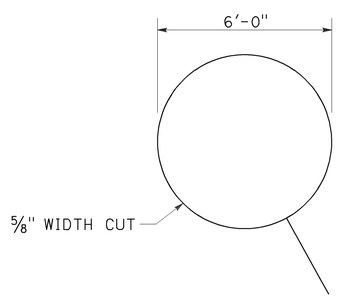

SAWCUT DETAIL

TYPE E LOOP DETECTOR CONFIGURATION

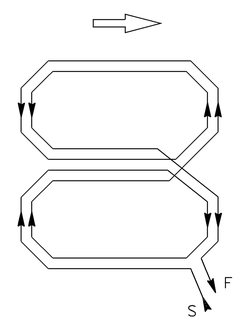

WINDING DETAIL

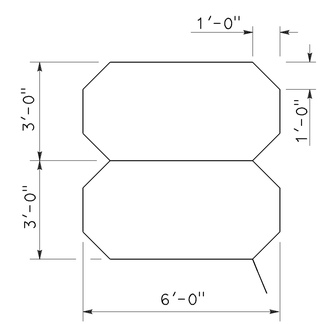

SAWCUT DETAIL

TYPE Q LOOP DETECTOR CONFIGURATION

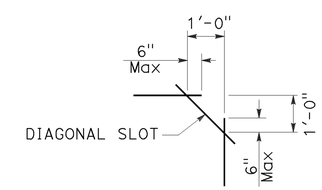

PLAN VIEW OF DIAGONAL SLOT AT CORNERS

NOTES:

1. Round corners of acute angle sawcuts to prevent damage to conductors.
2. Typical distance separating loops from edge to edge is 10' for Type A, B, D and E installation in single lane.

STATE OF CALIFORNIA
DEPARTMENT OF TRANSPORTATION

ELECTRICAL SYSTEMS (DETECTORS)

NO SCALE

RSP ES-5B DATED JULY 19, 2013 SUPERSEDES STANDARD PLAN ES-5B DATED MAY 20, 2011 - PAGE 449 OF THE STANDARD PLANS BOOK DATED 2010.

REVISED STANDARD PLAN RSP ES-5B

7-9-13

Dist	COUNTY	ROUTE	POST MILES TOTAL PROJECT	SHEET No.	TOTAL SHEETS
10	SJ	120	6.7/16.7	33	33

Theresa Gabriel
REGISTERED ELECTRICAL ENGINEER

July 19, 2013
PLANS APPROVAL DATE

REGISTERED PROFESSIONAL ENGINEER
Theresa Aziz Gabriel
No. E15129
Exp. 6-30-14
ELECTRICAL
STATE OF CALIFORNIA

THE STATE OF CALIFORNIA OR ITS OFFICERS OR AGENTS SHALL NOT BE RESPONSIBLE FOR THE ACCURACY OR COMPLETENESS OF SCANNED COPIES OF THIS PLAN SHEET.

TO ACCOMPANY PLANS DATED 5-18-15

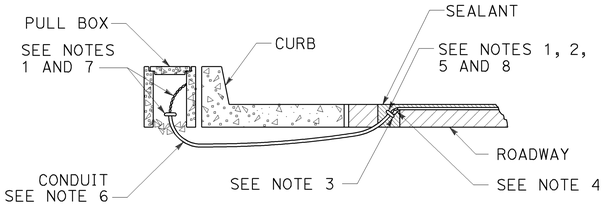

TYPE A
CURB TERMINATION DETAIL

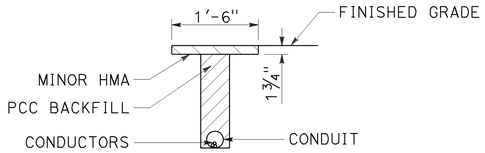

"T" TRENCH
DETAIL T

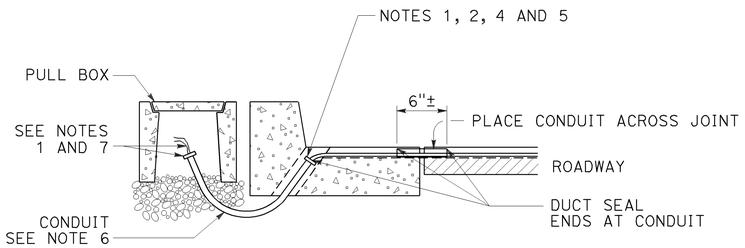

CROSS SECTION

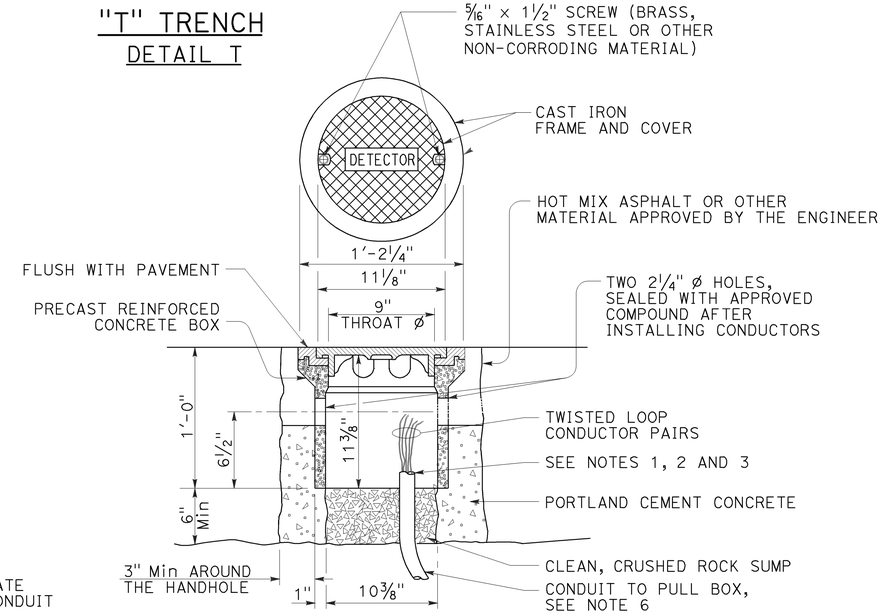

DETECTOR HANDHOLE DETAIL

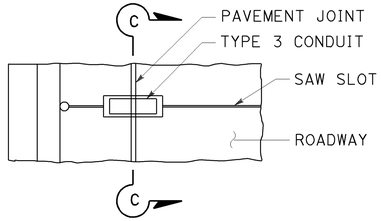

PLAN VIEW

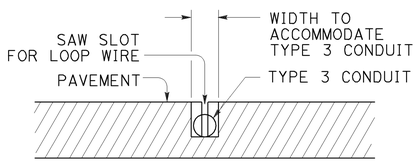

SECTION C-C

TYPE B
CURB TERMINATION DETAIL

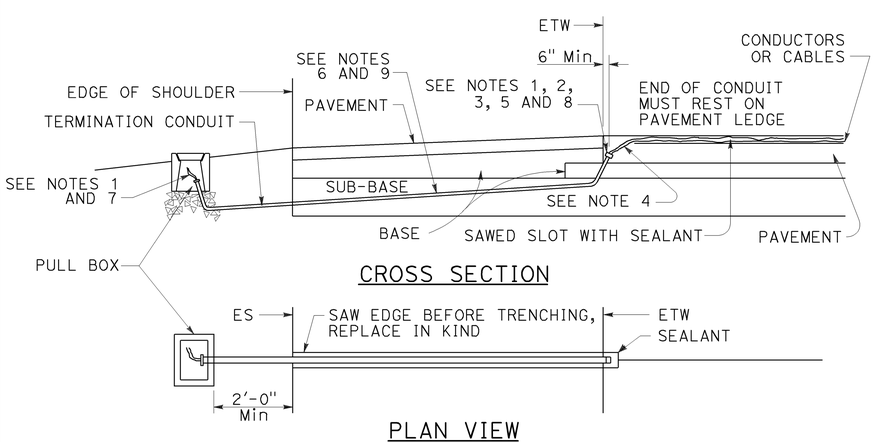

CROSS SECTION

PLAN VIEW

SHOULDER TERMINATION DETAILS

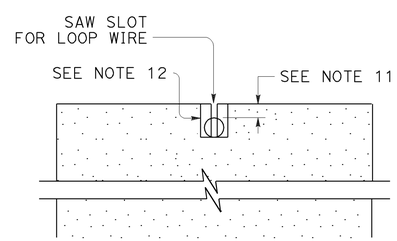

SECTION A-A

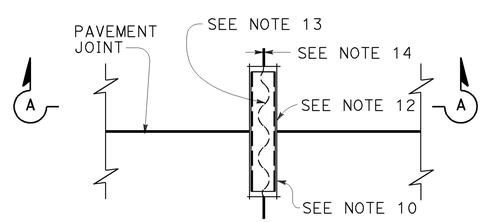

PLAN VIEW

TYPICAL LOOP LEAD-IN DETAIL
AT PAVEMENT JOINT

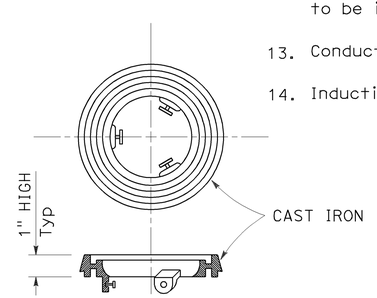

LOCKING GRADE RING

NOTES:

1. Bushing shall be used at end of conduit.
2. Tape detector conductors or cables 3" each side of bushings.
3. Install duct seal compound to each end of termination conduit before installing sealant.
4. Round all sharp edges where detector conductors or cables have to pass.
5. End of conduit shall be 3⅛" below roadway surface.
6.

Conduit size	Loop conductors
1"C minimum	1 to 2 pairs
1½"C minimum	3 to 4 pairs
2"C minimum	5 or more pairs

7. Splice detector conductors or cables to detector lead-in-cable.
8. Location of detector handhole when shown on plans.
9. When the shoulder and traveled way are paved with the same material and there is no joint between them, the conduit shall extend only 2'-0" into the shoulder pavement.
10. ¾"C, Type 3 conduit 6" long minimum, plug both ends with duct compound to keep out sealant.
11. ½" Minimum between top of conduit and pavement surface.
12. Sawcut shall not exceed 1" in width and ⅛" longer than conduit to be installed.
13. Conductors with ½" minimum slack inside conduit.
14. Inductive loop detector saw slot.

STATE OF CALIFORNIA
DEPARTMENT OF TRANSPORTATION

ELECTRICAL SYSTEMS (CURB TERMINATION AND HANDHOLE)

NO SCALE

RSP ES-5D DATED JULY 19, 2013 SUPERSEDES STANDARD PLAN ES-5D
DATED MAY 20, 2011 - PAGE 451 OF THE STANDARD PLANS BOOK DATED 2010.

REVISED STANDARD PLAN RSP ES-5D

2010 REVISED STANDARD PLAN RSP ES-5D

7-9-13