Dist	COUNTY	ROUTE	POST MILES TOTAL PROJECT	SHEET No.	TOTAL SHEETS
10	Mer	99	23.7/R30.4	1	29

STATE OF CALIFORNIA **ACHSNHPG-P099(595)E**

DEPARTMENT OF TRANSPORTATION

PROJECT PLANS FOR CONSTRUCTION ON

STATE HIGHWAY

IN MERCED COUNTY
IN AND NEAR LIVINGSTON
FROM 0.2 MILE NORTH OF WEST ATWATER OVERHEAD TO WINTON PARKWAY OVERCROSSING

TO BE SUPPLEMENTED BY STANDARD PLANS DATED 2010

INDEX OF PLANS

SHEET No.	DESCRIPTION
1	TITLE AND LOCATION MAP
2	TYPICAL CROSS SECTIONS
3-11	CONSTRUCTION DETAILS
12-16	UTILITY PLAN
17	CONSTRUCTION AREA SIGNS
18-19	SUMMARY OF QUANTITIES
20	EROSION CONTROL LEGEND AND QUANTITIES
21-29	REVISED STANDARD PLANS

THE STANDARD PLANS LIST APPLICABLE TO THIS CONTRACT IS INCLUDED IN THE NOTICE TO BIDDERS AND SPECIAL PROVISIONS BOOK.

LOCATION MAP

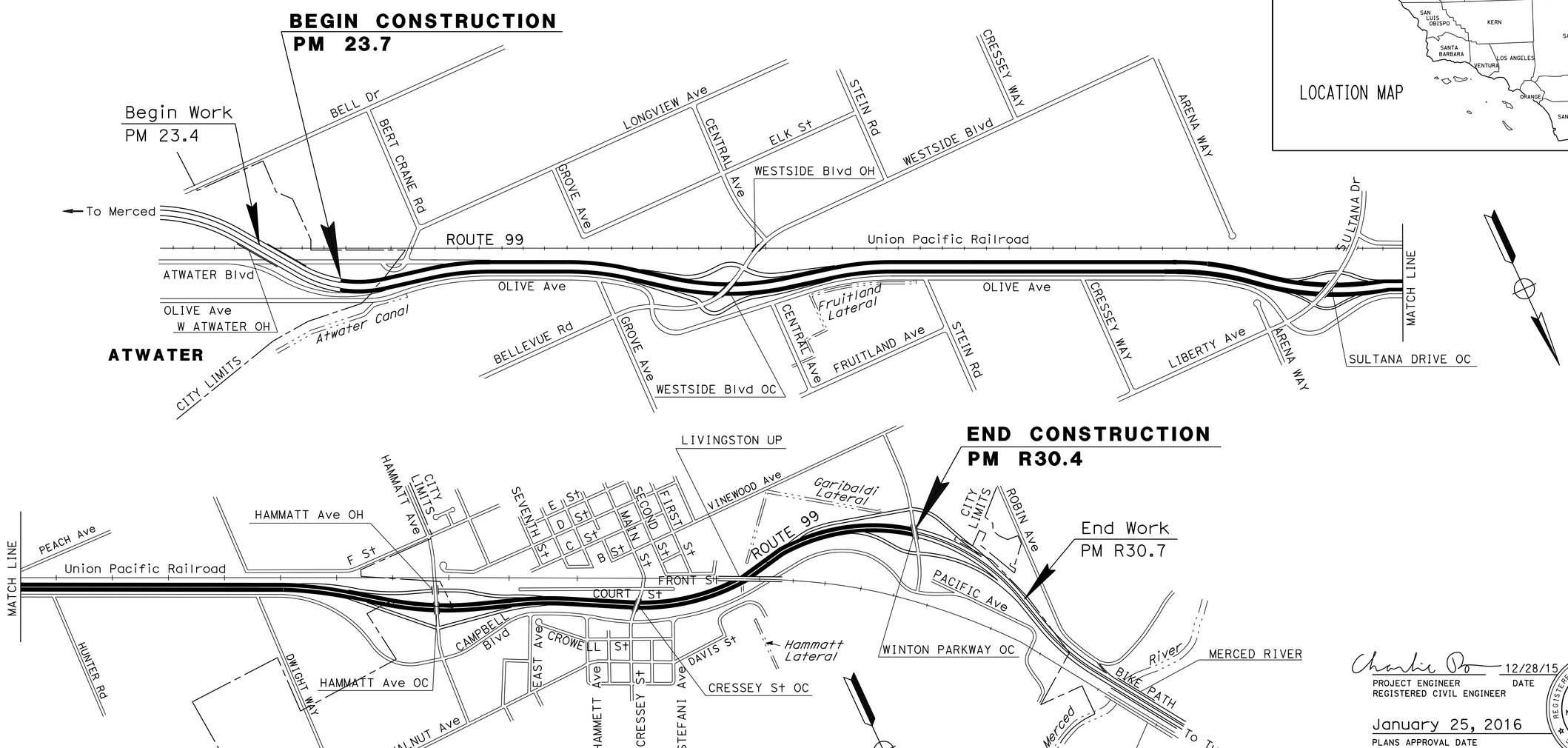

NO SCALE

THE CONTRACTOR SHALL POSSESS THE CLASS (OR CLASSES) OF LICENSE AS SPECIFIED IN THE "NOTICE TO BIDDERS."

PROJECT MANAGER: SINAREN PHENG

DESIGN ENGINEER: JOSE HUERTA

Charlie Do 12/28/15
PROJECT ENGINEER DATE
REGISTERED CIVIL ENGINEER

January 25, 2016
PLANS APPROVAL DATE

REGISTERED PROFESSIONAL ENGINEER CHARLIE DO No. C77668 Exp. 6/30/17 CIVIL STATE OF CALIFORNIA

THE STATE OF CALIFORNIA OR ITS OFFICERS OR AGENTS SHALL NOT BE RESPONSIBLE FOR THE ACCURACY OR COMPLETENESS OF SCANNED COPIES OF THIS PLAN SHEET.

CONTRACT No.	10-0Y6304
PROJECT ID	1013000269

LAST REVISION 11-10-15

DATE PLOTTED => 08-MAR-2016
TIME PLOTTED => 10:37

Dist	COUNTY	ROUTE	POST MILES TOTAL PROJECT	SHEET No.	TOTAL SHEETS
10	Mer	99	23.7/R30.4	2	29

REGISTERED CIVIL ENGINEER DATE 12/28/15

1-25-16
PLANS APPROVAL DATE

REGISTERED PROFESSIONAL ENGINEER CHARLIE DO No. C77668 Exp. 6/30/17 CIVIL STATE OF CALIFORNIA

THE STATE OF CALIFORNIA OR ITS OFFICERS OR AGENTS SHALL NOT BE RESPONSIBLE FOR THE ACCURACY OR COMPLETENESS OF SCANNED COPIES OF THIS PLAN SHEET.

NOTES:

1. FOR ACCURATE RIGHT OF WAY DATA, CONTACT RIGHT OF WAY ENGINEERING AT THE DISTRICT OFFICE.
2. SEE SUMMARY OF QUANTITIES SHEETS FOR LIMITS OF DOUBLE THRIE BEAM BARRIER AND VEGETATION CONTROL (MINOR CONCRETE).

DESIGN DESIGNATION (ROUTE 99)

2014	ADT=54,600	D=58%
2036	ADT=83,500	T=20%
	DHV=8,350	V=65 mph

PAVEMENT CLIMATE REGION

INLAND VALLEY

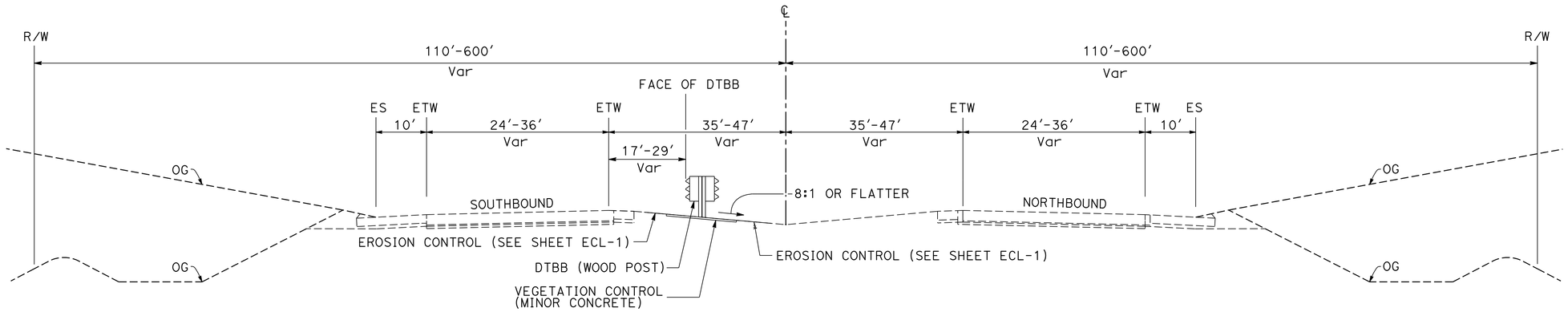

PM 25.0 TO PM R30.4

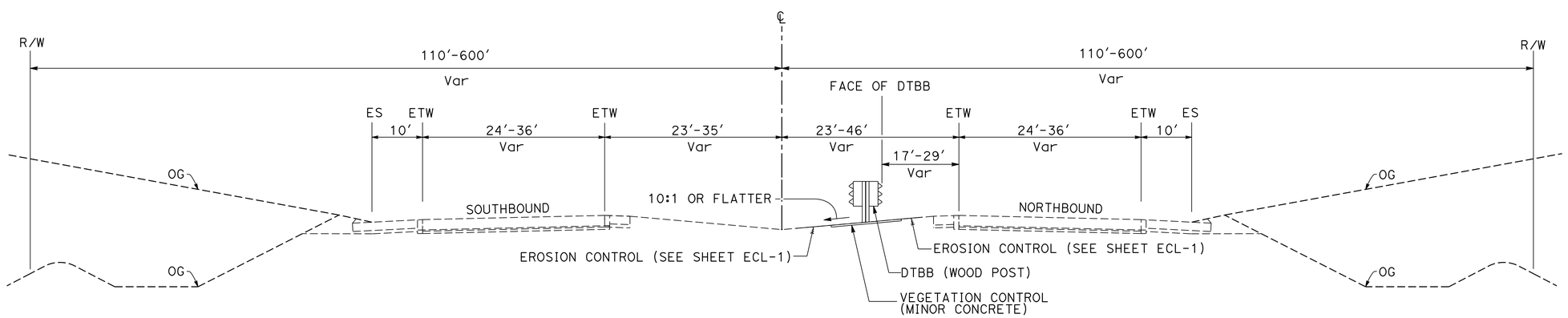

PM 23.7 TO PM 25.0

ROUTE 99

TYPICAL CROSS SECTIONS

NO SCALE

X-1

STATE OF CALIFORNIA - DEPARTMENT OF TRANSPORTATION

Caltrans® **DESIGN**

FUNCTIONAL SUPERVISOR: JOSE HUERTA

CALCULATED-DESIGNED BY: KENNY HOANG

CHECKED BY: CHARLIE V. DO

REVISED BY: KH

DATE REVISED: 11/10/15

LAST REVISION 04-13-15

DATE PLOTTED => 08-MAR-2016
TIME PLOTTED => 10:37

Dist	COUNTY	ROUTE	POST MILES TOTAL PROJECT	SHEET No.	TOTAL SHEETS
10	Mer	99	23.7/R30.4	3	29

REGISTERED CIVIL ENGINEER DATE 12/28/15

1-25-16
PLANS APPROVAL DATE

REGISTERED PROFESSIONAL ENGINEER CHARLIE DO No. C77668 Exp. 6/30/17 CIVIL STATE OF CALIFORNIA

THE STATE OF CALIFORNIA OR ITS OFFICERS OR AGENTS SHALL NOT BE RESPONSIBLE FOR THE ACCURACY OR COMPLETENESS OF SCANNED COPIES OF THIS PLAN SHEET.

NOTES:

1. FOR DOUBLE THRIE BEAM BARRIER LOCATIONS AND LENGTHS, SEE SUMMARY OF QUANTITIES.
2. TRANSITION TAPER BEGINNING AND ENDING LOCATIONS MUST BE VERIFIED IN FIELD.

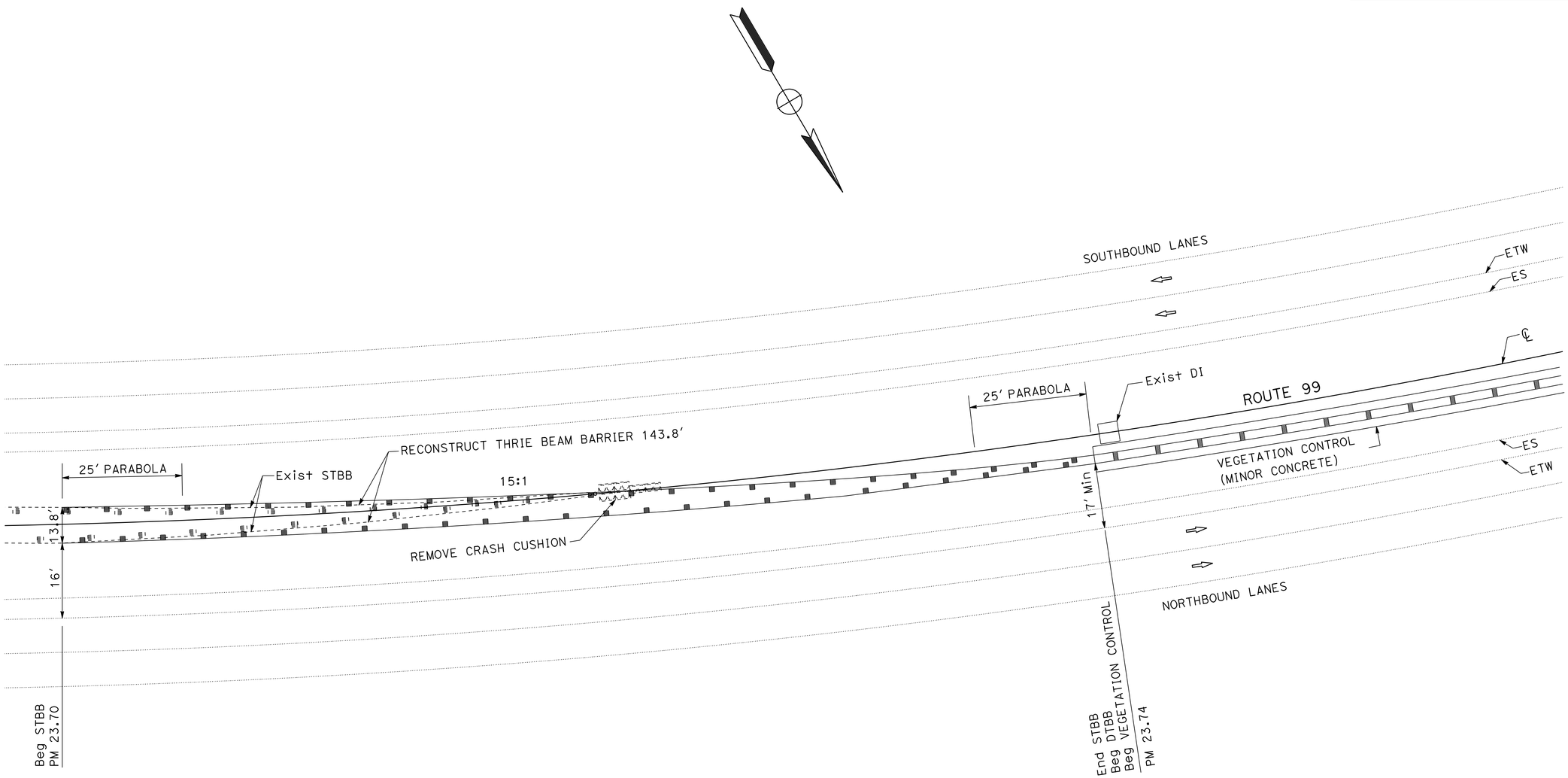

DOUBLE THRIE BEAM BARRIER AT PM 23.7

CONSTRUCTION DETAILS

NO SCALE

C-1

CALCULATED-DESIGNED BY	KENNY HOANG
CHECKED BY	CHARLIE V. DO
REVISED BY	KH
DATE REVISED	11/10/15
FUNCTIONAL SUPERVISOR	JOSE HUERTA

STATE OF CALIFORNIA - DEPARTMENT OF TRANSPORTATION

Caltrans

DESIGN

LAST REVISION 04-13-15 | DATE PLOTTED => 08-MAR-2016 | TIME PLOTTED => 10:37

Dist	COUNTY	ROUTE	POST MILES TOTAL PROJECT	SHEET No.	TOTAL SHEETS
10	Mer	99	23.7/R30.4	4	29

REGISTERED CIVIL ENGINEER DATE 12/28/15

1-25-16
PLANS APPROVAL DATE

REGISTERED PROFESSIONAL ENGINEER CHARLIE DO No. C77668 Exp. 6/30/17 CIVIL STATE OF CALIFORNIA

THE STATE OF CALIFORNIA OR ITS OFFICERS OR AGENTS SHALL NOT BE RESPONSIBLE FOR THE ACCURACY OR COMPLETENESS OF SCANNED COPIES OF THIS PLAN SHEET.

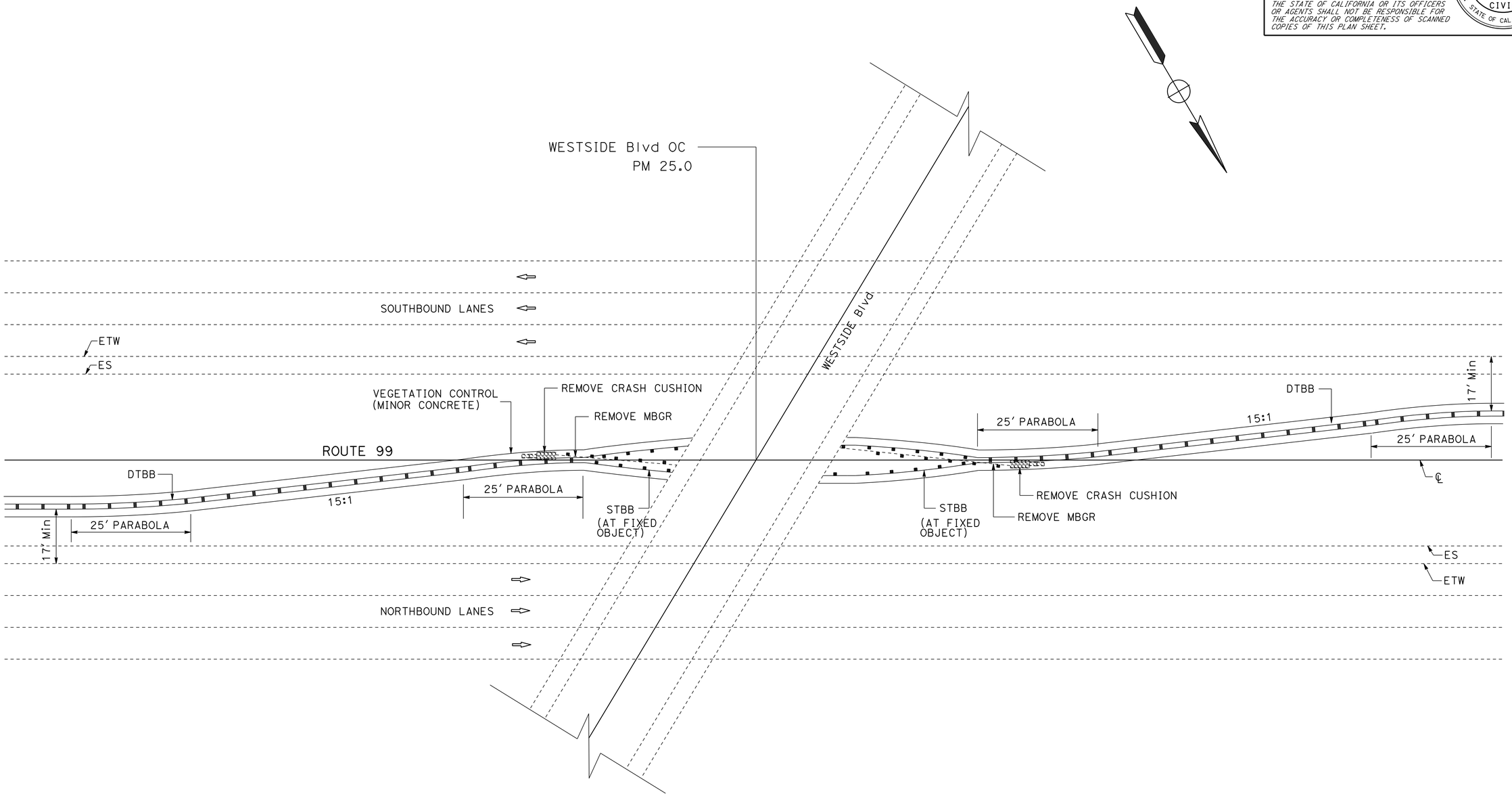

DOUBLE THRIE BEAM BARRIER AT PM 25.0

CONSTRUCTION DETAILS

NO SCALE

C-2

STATE OF CALIFORNIA - DEPARTMENT OF TRANSPORTATION
Caltrans® **DESIGN**

FUNCTIONAL SUPERVISOR: JOSE HUERTA

CALCULATED-DESIGNED BY: KENNY HOANG
CHECKED BY: CHARLIE V. DO

REVISED BY: KH
DATE REVISED: 11/10/15

LAST REVISION 04-13-15
DATE PLOTTED => 08-MAR-2016
TIME PLOTTED => 10:37

Dist	COUNTY	ROUTE	POST MILES TOTAL PROJECT	SHEET No.	TOTAL SHEETS
10	Mer	99	23.7/R30.4	5	29

REGISTERED CIVIL ENGINEER DATE 12/28/15

1-25-16
PLANS APPROVAL DATE

REGISTERED PROFESSIONAL ENGINEER CHARLIE DO No. C77668 Exp. 6/30/17 CIVIL STATE OF CALIFORNIA

THE STATE OF CALIFORNIA OR ITS OFFICERS OR AGENTS SHALL NOT BE RESPONSIBLE FOR THE ACCURACY OR COMPLETENESS OF SCANNED COPIES OF THIS PLAN SHEET.

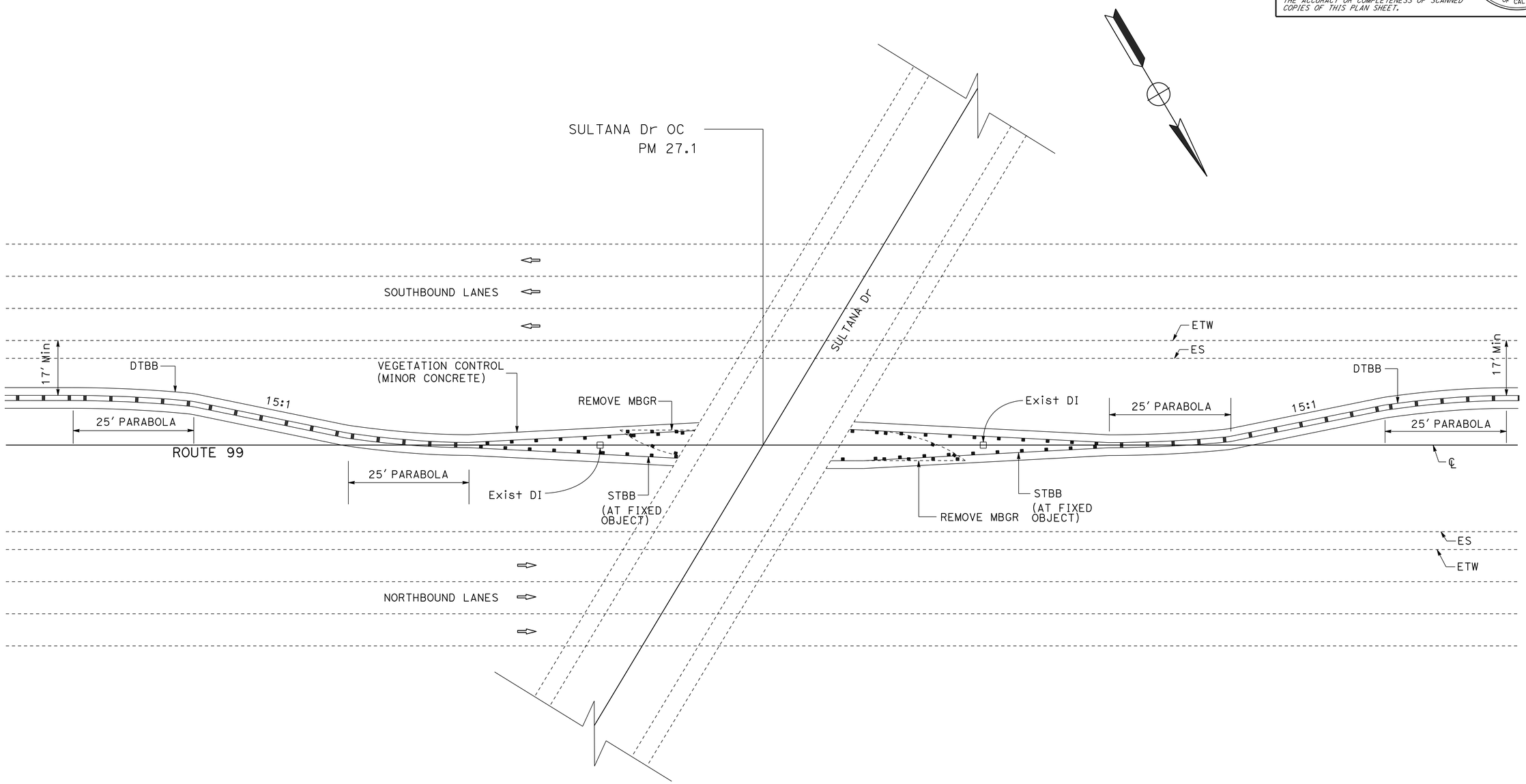

DOUBLE THRIE BEAM BARRIER AT PM 27.1

CONSTRUCTION DETAILS

NO SCALE

C-3

STATE OF CALIFORNIA - DEPARTMENT OF TRANSPORTATION
Caltrans® **DESIGN**

FUNCTIONAL SUPERVISOR: JOSE HUERTA

CALCULATED-DESIGNED BY: KENNY HOANG
CHECKED BY: CHARLIE V. DO

REVISED BY: KH
DATE REVISED: 11/10/15

LAST REVISION 04-13-15
DATE PLOTTED => 08-MAR-2016
TIME PLOTTED => 10:37

Dist	COUNTY	ROUTE	POST MILES TOTAL PROJECT	SHEET No.	TOTAL SHEETS
10	Mer	99	23.7/R30.4	6	29

REGISTERED CIVIL ENGINEER DATE 12/28/15

1-25-16
PLANS APPROVAL DATE

REGISTERED PROFESSIONAL ENGINEER CHARLIE DO No. C77668 Exp. 6/30/17 CIVIL STATE OF CALIFORNIA

THE STATE OF CALIFORNIA OR ITS OFFICERS OR AGENTS SHALL NOT BE RESPONSIBLE FOR THE ACCURACY OR COMPLETENESS OF SCANNED COPIES OF THIS PLAN SHEET.

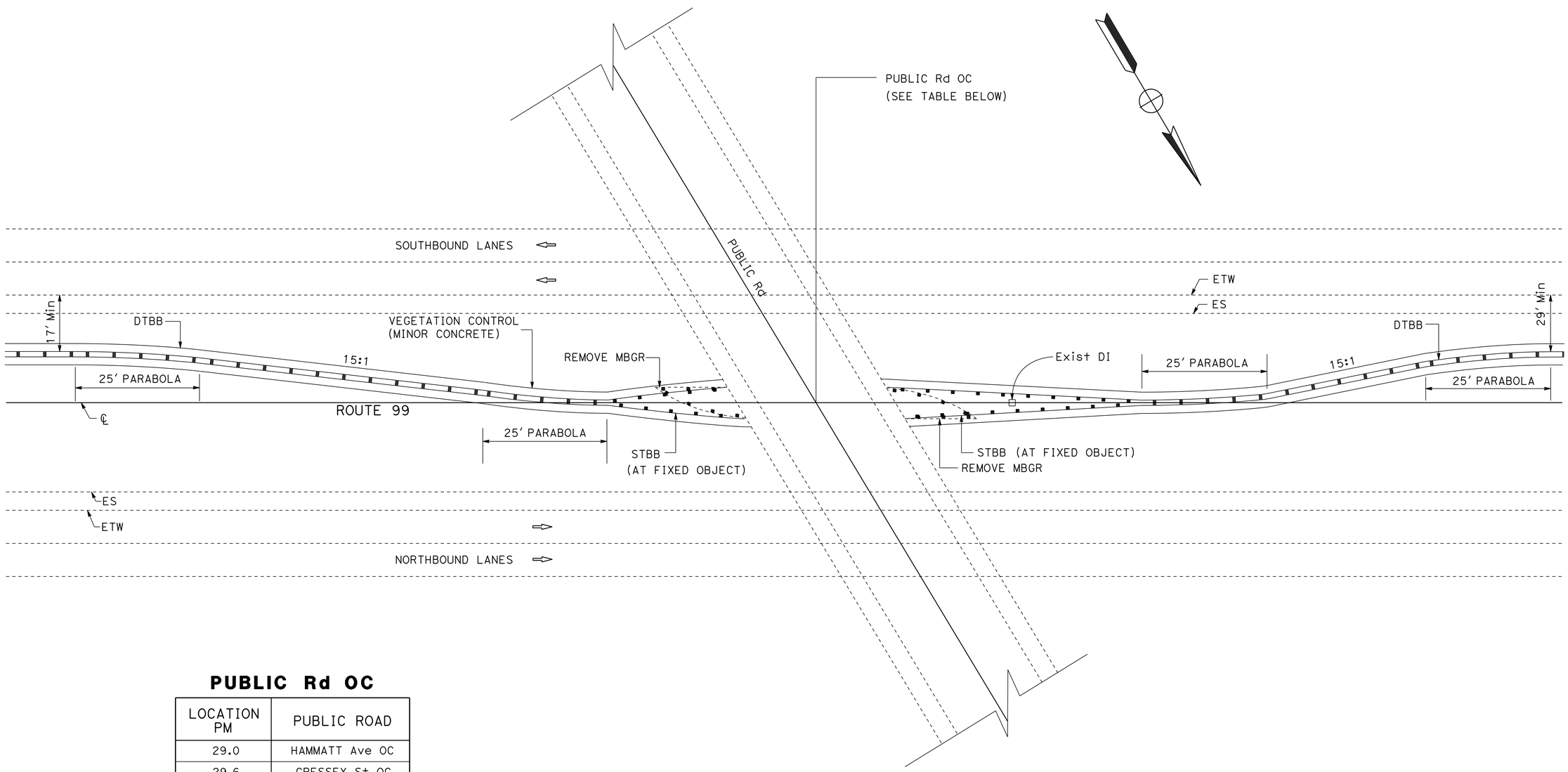

PUBLIC Rd OC

LOCATION PM	PUBLIC ROAD
29.0	HAMMATT Ave OC
29.6	CRESSEY St OC

DOUBLE THRIE BEAM BARRIER AT OVERCROSSINGS

CONSTRUCTION DETAILS

NO SCALE

C-4

STATE OF CALIFORNIA - DEPARTMENT OF TRANSPORTATION
DESIGN
FUNCTIONAL SUPERVISOR: JOSE HUERTA
CALCULATED-DESIGNED BY: KENNY HOANG
CHECKED BY: CHARLIE V. DO
REVISED BY: KH
DATE REVISED: 11/10/15

LAST REVISION 04-13-15
DATE PLOTTED => 08-MAR-2016
TIME PLOTTED => 10:37

Dist	COUNTY	ROUTE	POST MILES TOTAL PROJECT	SHEET No.	TOTAL SHEETS
10	Mer	99	23.7/R30.4	7	29

REGISTERED CIVIL ENGINEER DATE 12/28/15

1-25-16
PLANS APPROVAL DATE

REGISTERED PROFESSIONAL ENGINEER CHARLIE DO No. C77668 Exp. 6/30/17 CIVIL STATE OF CALIFORNIA

THE STATE OF CALIFORNIA OR ITS OFFICERS OR AGENTS SHALL NOT BE RESPONSIBLE FOR THE ACCURACY OR COMPLETENESS OF SCANNED COPIES OF THIS PLAN SHEET.

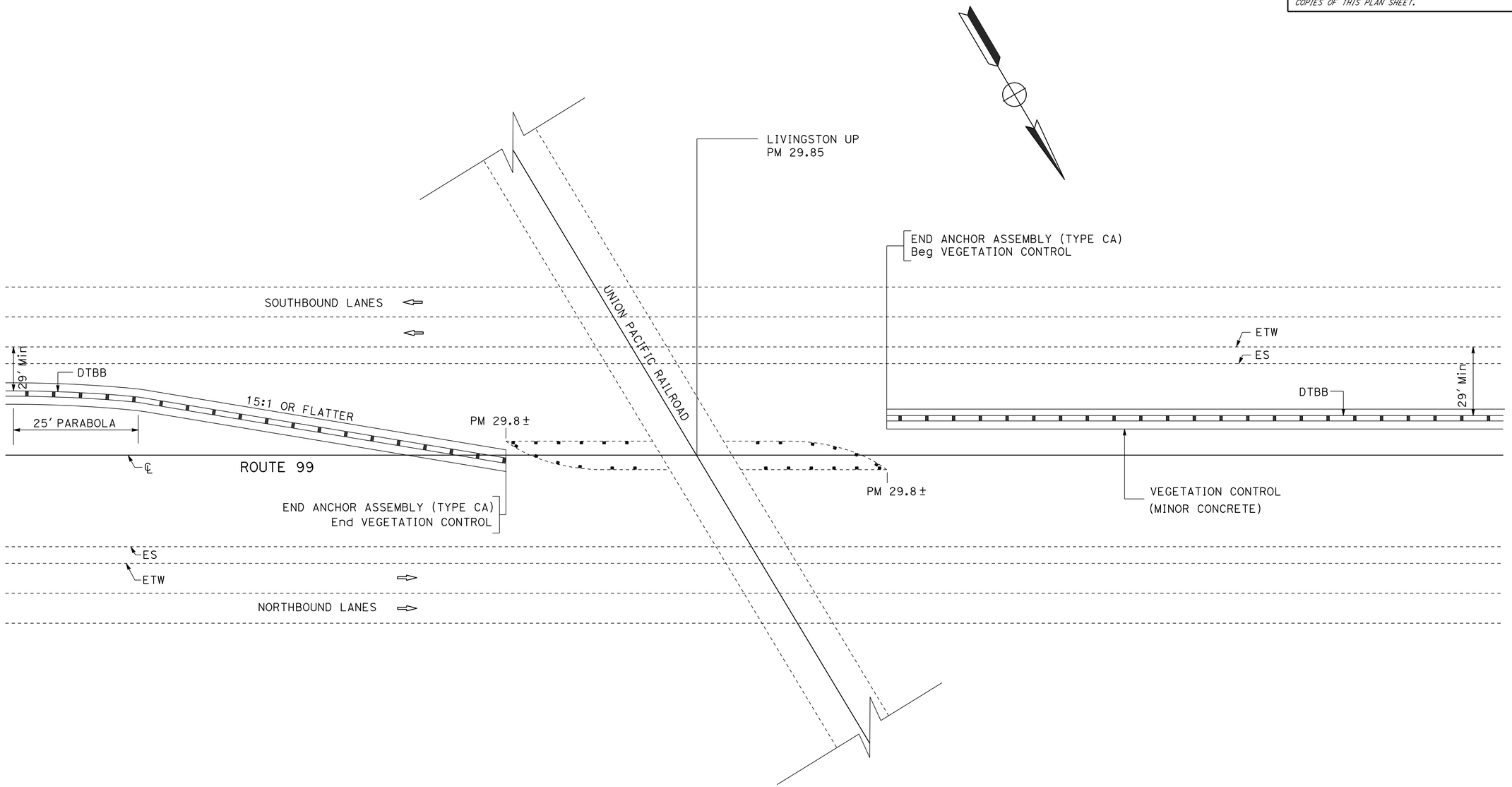

DOUBLE THRIE BEAM BARRIER AT LIVINGSTON UNDERPASS AT PM 29.8

CONSTRUCTION DETAILS

NO SCALE

C-5

STATE OF CALIFORNIA - DEPARTMENT OF TRANSPORTATION

Caltrans® **DESIGN**

FUNCTIONAL SUPERVISOR: JOSE HUERTA

CALCULATED-DESIGNED BY: KENNY HOANG

CHECKED BY: CHARLIE V. DO

REVISED BY: KH

DATE REVISED: 11/10/15

LAST REVISION 04-13-15

DATE PLOTTED => 08-MAR-2016
TIME PLOTTED => 10:37

Dist	COUNTY	ROUTE	POST MILES TOTAL PROJECT	SHEET No.	TOTAL SHEETS
10	Mer	99	23.7/R30.4	8	29

REGISTERED CIVIL ENGINEER DATE 12/28/15

1-25-16
PLANS APPROVAL DATE

REGISTERED PROFESSIONAL ENGINEER CHARLIE DO No. C77668 Exp. 6/30/17 CIVIL STATE OF CALIFORNIA

THE STATE OF CALIFORNIA OR ITS OFFICERS OR AGENTS SHALL NOT BE RESPONSIBLE FOR THE ACCURACY OR COMPLETENESS OF SCANNED COPIES OF THIS PLAN SHEET.

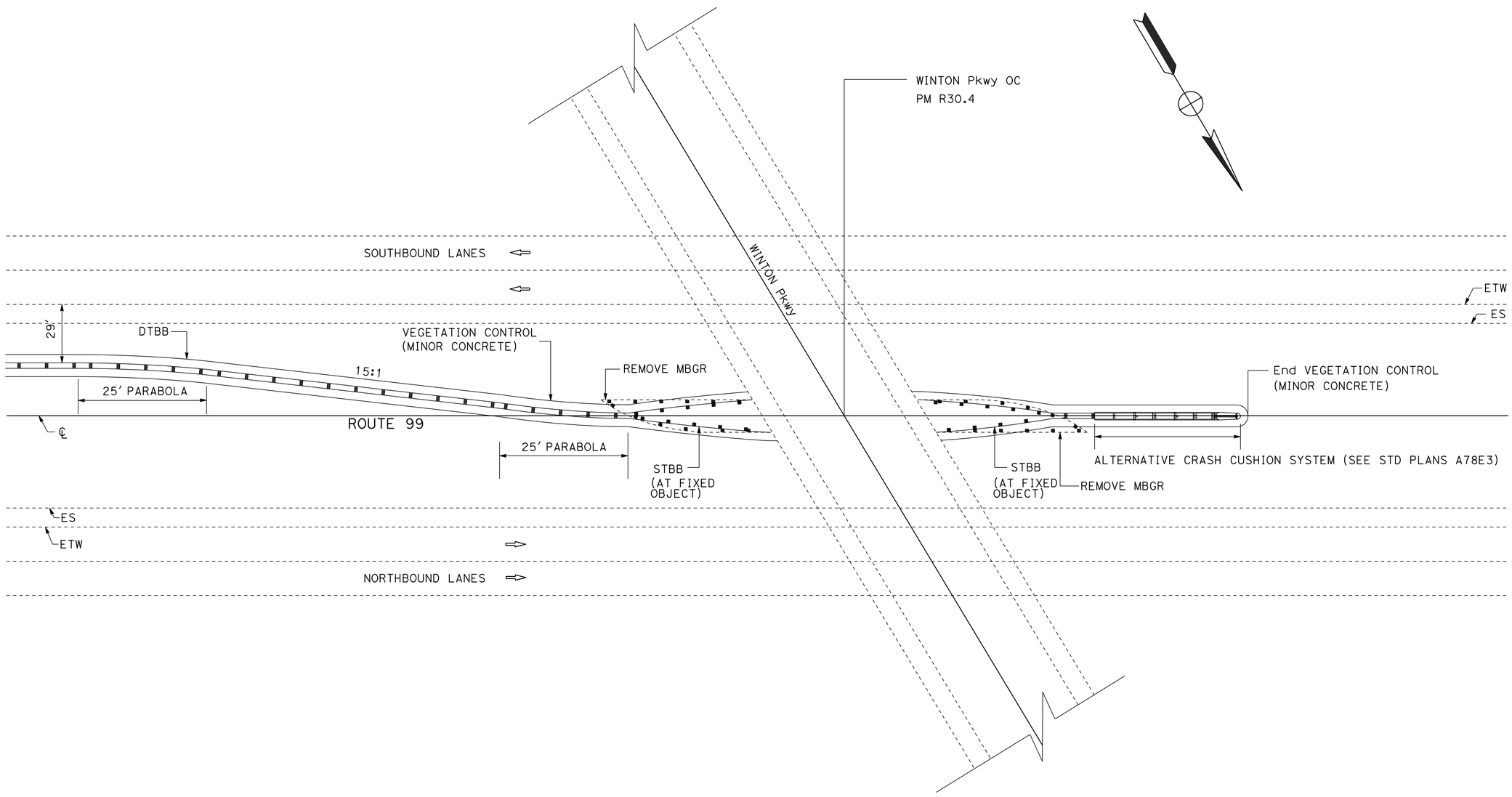

DOUBLE THRIE BEAM BARRIER AT PM R30.4

CONSTRUCTION DETAILS

NO SCALE

C-6

KENNY HOANG	KH
CHARLIE V. DO	11/10/15
CALCULATED-DESIGNED BY	REVISED BY
CHECKED BY	DATE REVISED
FUNCTIONAL SUPERVISOR	
JOSE HUERTA	

STATE OF CALIFORNIA - DEPARTMENT OF TRANSPORTATION

Caltrans

DESIGN

LAST REVISION 04-13-15 | DATE PLOTTED => 08-MAR-2016 | TIME PLOTTED => 10:37

Dist	COUNTY	ROUTE	POST MILES TOTAL PROJECT	SHEET No.	TOTAL SHEETS
10	Mer	99	23.7/R30.4	9	29

Charlie Do 12/28/15
REGISTERED CIVIL ENGINEER DATE

1-25-16
PLANS APPROVAL DATE

REGISTERED PROFESSIONAL ENGINEER CHARLIE DO No. C77668 Exp. 6/30/17 CIVIL STATE OF CALIFORNIA

THE STATE OF CALIFORNIA OR ITS OFFICERS OR AGENTS SHALL NOT BE RESPONSIBLE FOR THE ACCURACY OR COMPLETENESS OF SCANNED COPIES OF THIS PLAN SHEET.

NOTES (SHEET C-7 & C-8 ONLY):

1. NESTED THRIE BEAM BARRIER DETAILS SHALL BE USED WHERE ONE POST CANNOT BE PLACED AT THE STANDARD SPACING DUE TO A CONFLICTING HIGHWAY FACILITY.
2. ALL RAIL ELEMENTS ARE 13'-6.5" LONG
3. SEE STANDARD PLANS FOR DETAILS NOT SHOWN.
4. SEE SECTION VIEW ON SHEET C-8.

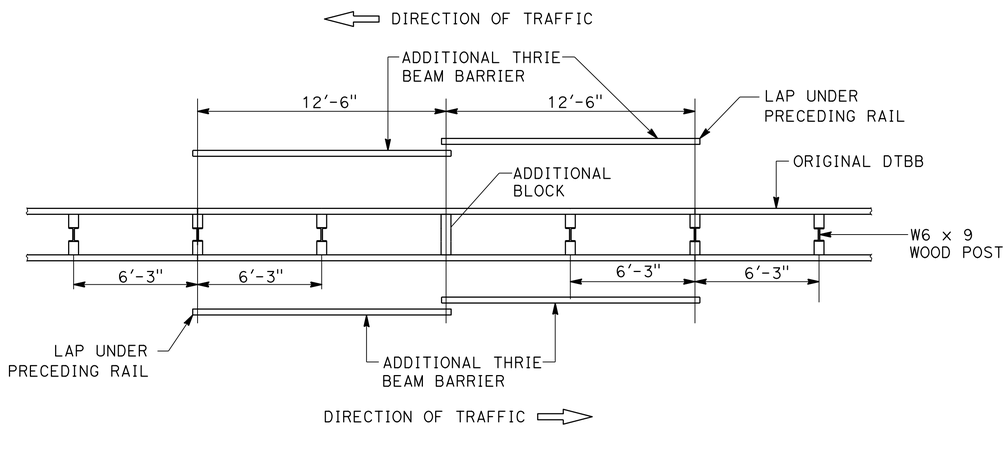

PLAN

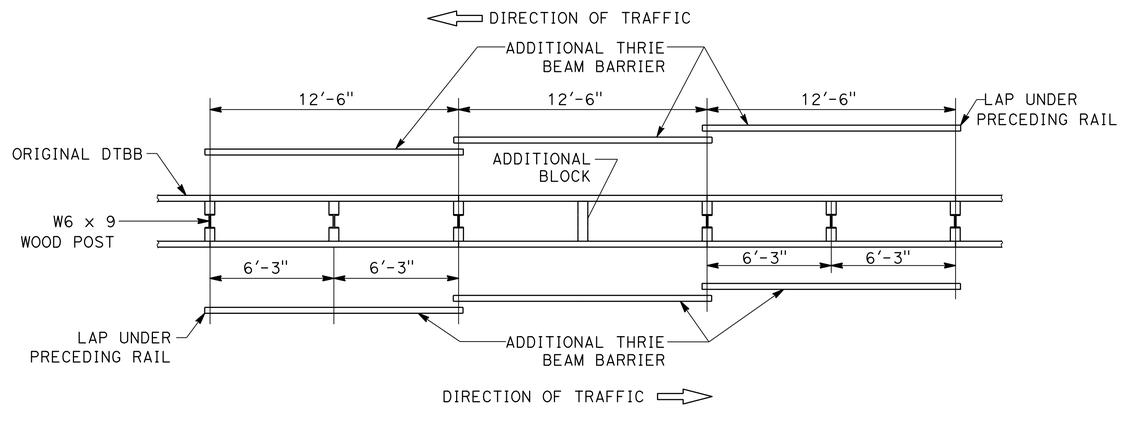

PLAN

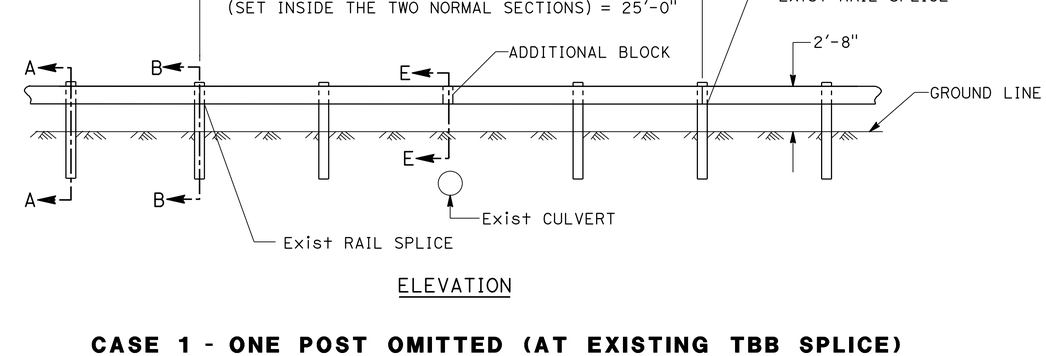

ELEVATION

CASE 1 - ONE POST OMITTED (AT EXISTING TBB SPLICE)

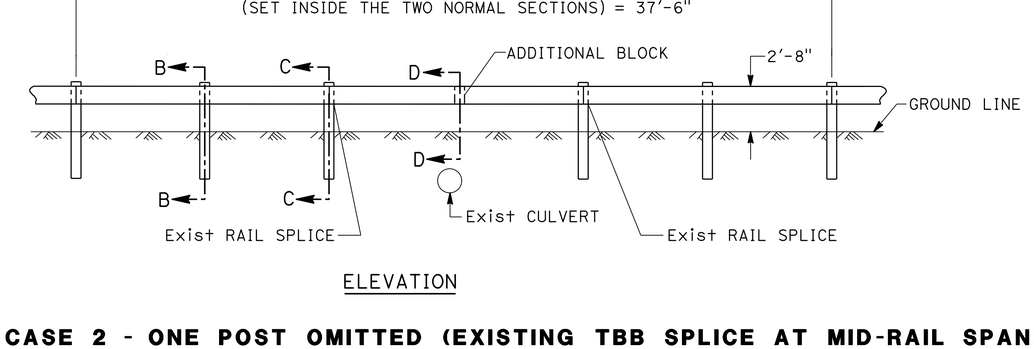

ELEVATION

CASE 2 - ONE POST OMITTED (EXISTING TBB SPLICE AT MID-RAIL SPAN)

LONG SPAN NESTED DOUBLE THRIE BEAM BARRIER

CONSTRUCTION DETAILS

NO SCALE

C-7

REVISED BY	KH
DATE REVISED	11/10/15
CALCULATED-DESIGNED BY	KENNY HOANG
CHECKED BY	CHARLIE V. DO
FUNCTIONAL SUPERVISOR	JOSE HUERTA

STATE OF CALIFORNIA - DEPARTMENT OF TRANSPORTATION
Caltrans® **DESIGN**

LAST REVISION 04-13-15 | DATE PLOTTED => 08-MAR-2016 | TIME PLOTTED => 10:37

Dist	COUNTY	ROUTE	POST MILES TOTAL PROJECT	SHEET No.	TOTAL SHEETS
10	Mer	99	23.7/R30.4	10	29

REGISTERED CIVIL ENGINEER DATE 12/28/15

1-25-16
PLANS APPROVAL DATE

REGISTERED PROFESSIONAL ENGINEER CHARLIE DO No. C77668 Exp. 6/30/17 CIVIL STATE OF CALIFORNIA

THE STATE OF CALIFORNIA OR ITS OFFICERS OR AGENTS SHALL NOT BE RESPONSIBLE FOR THE ACCURACY OR COMPLETENESS OF SCANNED COPIES OF THIS PLAN SHEET.

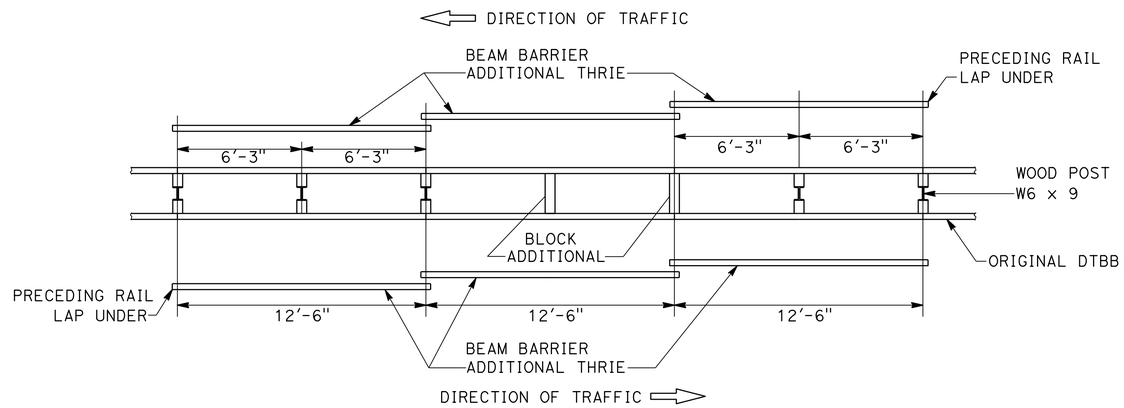

PLAN

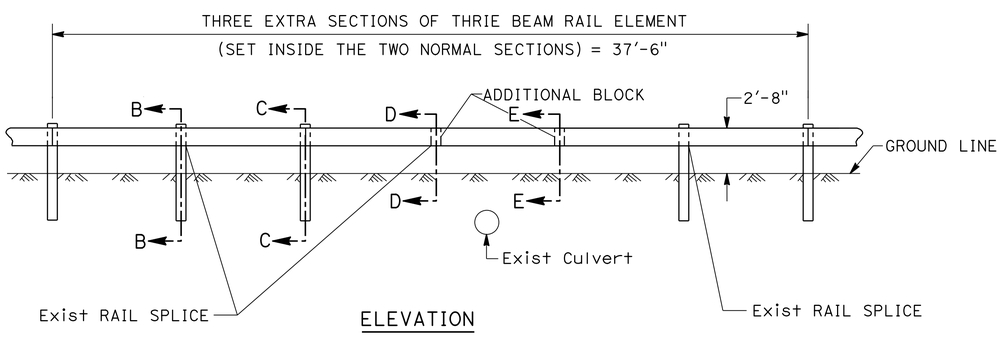

ELEVATION

CASE 3 - TWO POST OMITTED

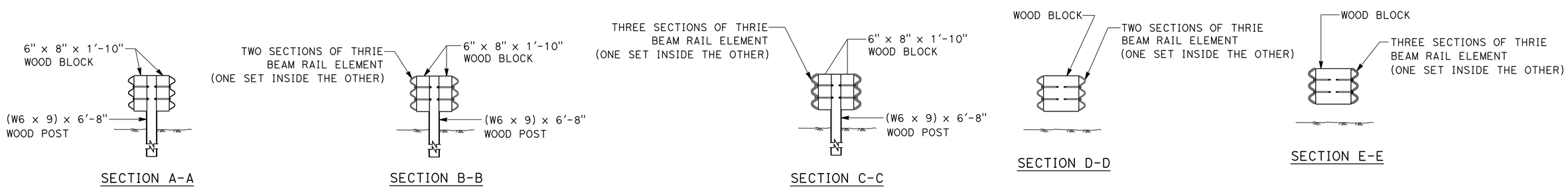

SECTION A-A SECTION B-B SECTION C-C SECTION D-D SECTION E-E

LONG SPAN NESTED DOUBLE THRIE BEAM BARRIER

CONSTRUCTION DETAILS

NO SCALE

C-8

REVISED BY	DATE REVISED
KH	11/10/15

CALCULATED-DESIGNED BY: KENNY HOANG
CHECKED BY: CHARLIE V. DO
FUNCTIONAL SUPERVISOR: JOSE HUERTA

STATE OF CALIFORNIA - DEPARTMENT OF TRANSPORTATION
Caltrans
DESIGN

LAST REVISION 04-13-15 | DATE PLOTTED => 08-MAR-2016 | TIME PLOTTED => 10:37

Dist	COUNTY	ROUTE	POST MILES TOTAL PROJECT	SHEET No.	TOTAL SHEETS
10	Mer	99	23.7/R30.4	11	29

Charlie Do 12/28/15
REGISTERED CIVIL ENGINEER DATE

1-25-16
PLANS APPROVAL DATE

REGISTERED PROFESSIONAL ENGINEER CHARLIE DO No. C77668 Exp. 6/30/17 CIVIL STATE OF CALIFORNIA

THE STATE OF CALIFORNIA OR ITS OFFICERS OR AGENTS SHALL NOT BE RESPONSIBLE FOR THE ACCURACY OR COMPLETENESS OF SCANNED COPIES OF THIS PLAN SHEET.

EXISTING MEDIAN CROSS DRAIN

LOCATION	ITEM	DESCRIPTION	SIDE	DEPTH
PM 23.803	CROSS CULVERT	24" CMP	R†	1.12′
PM 23.915	CROSS CULVERT	24" CMP	R†	2.23′
PM 24.362	CROSS CULVERT	24" CMP	R†	2.19′
PM 24.910	CROSS CULVERT	24" CMP	R†	2.25′
PM 25.145	CROSS CULVERT	24" CMP	L†	2.20′
PM 25.369	CROSS CULVERT	24" CMP	L†	1.29′
PM 25.431	CROSS CULVERT	24" CMP	L†	2.24′
PM 25.484	CROSS CULVERT	24" CMP	L†	2.21′
PM 26.121	CROSS CULVERT	24" CMP	L†	1.28′
PM 26.506	CROSS CULVERT	24" CMP	L†	1.28′
PM 26.577	CROSS CULVERT	24" CMP	L†	2.27′
PM 26.635	CROSS CULVERT	24" CMP	L†	2.27′
PM 26.697	CROSS CULVERT	24" CMP	L†	2.27′
PM 26.759	CROSS CULVERT	24" CMP	L†	2.27′
PM 26.821	CROSS CULVERT	24" CMP	L†	2.27′
PM 26.877	CROSS CULVERT	24" CMP	L†	2.27′
PM 26.933	CROSS CULVERT	24" CMP	L†	2.27′
PM 27.067	CROSS CULVERT	24" CMP	L†	2.27′
PM 27.256	CROSS CULVERT	24" CMP	L†	2.27′
PM 27.318	CROSS CULVERT	24" CMP	L†	2.27′
PM 27.380	CROSS CULVERT	24" CMP	L†	2.27′
PM 27.455	CROSS CULVERT	24" CMP	L†	2.27′
PM 27.517	CROSS CULVERT	24" CMP	L†	2.27′
PM 27.579	CROSS CULVERT	24" CMP	L†	2.27′
PM 27.629	CROSS CULVERT	24" CMP	L†	1.28′
PM 27.666	CROSS CULVERT	24" CMP	L†	2.27′
PM 28.524	CROSS CULVERT	24" CMP	L†	1.28′
PM 28.586	CROSS CULVERT	24" CMP	L†	2.27′
PM 28.648	CROSS CULVERT	24" CMP	L†	2.27′
PM 28.710	CROSS CULVERT	24" CMP	L†	2.27′
PM 29.125	CROSS CULVERT	18" ACP	L†/R†	3.41′
PM 29.220	CROSS CULVERT	18" ACP	L†/R†	2.30′
PM 29.315	CROSS CULVERT	18" ACP	L†/R†	2.39′
PM 29.410	CROSS CULVERT	24" CMP	L†/R†	2.57′
PM 29.500	CROSS CULVERT	18" ACP	L†/R†	2.99′
PM 29.807	CROSS CULVERT	18" ACP	MEDIAN	2.40′
PM 30.091	CROSS CULVERT	18" ACP	L†	2.07′

CONSTRUCTION DETAILS

NO SCALE

C-9

STATE OF CALIFORNIA - DEPARTMENT OF TRANSPORTATION
Caltrans® DESIGN

FUNCTIONAL SUPERVISOR: JOSE HUERTA
CALCULATED-DESIGNED BY: KENNY HOANG
CHECKED BY: CHARLIE V. DO
REVISED BY: KH
DATE REVISED: 11/10/15

LAST REVISION 04-13-15
DATE PLOTTED => 08-MAR-2016
TIME PLOTTED => 10:37

Dist	COUNTY	ROUTE	POST MILES TOTAL PROJECT	SHEET No.	TOTAL SHEETS
10	Mer	99	23.7/R30.4	12	29

REGISTERED CIVIL ENGINEER DATE 12/28/15

1-25-16
PLANS APPROVAL DATE

REGISTERED PROFESSIONAL ENGINEER CHARLIE DO No. C77668 Exp. 6/30/17 CIVIL STATE OF CALIFORNIA

THE STATE OF CALIFORNIA OR ITS OFFICERS OR AGENTS SHALL NOT BE RESPONSIBLE FOR THE ACCURACY OR COMPLETENESS OF SCANNED COPIES OF THIS PLAN SHEET.

NOTES:

1. FOR ACCURATE RIGHT OF WAY DATA, CONTACT RIGHT OF WAY ENGINEERING AT THE DISTRICT OFFICE.
2. EXISTING UTILITY FACILITY INFORMATION IS INCOMPLETE. LOCATIONS OF WORKS ARE FLEXIBLE AND MAY BE ADJUSTED TO MITIGATE ANY CONFLICTS WITH EXISTING UTILITY FACILITIES.

ABBREVIATIONS

PG&E - PACIFIC GAS & ELECTRIC
MID - MERCED IRIGATION DISTRICT
HP- HIGH PRESSURE

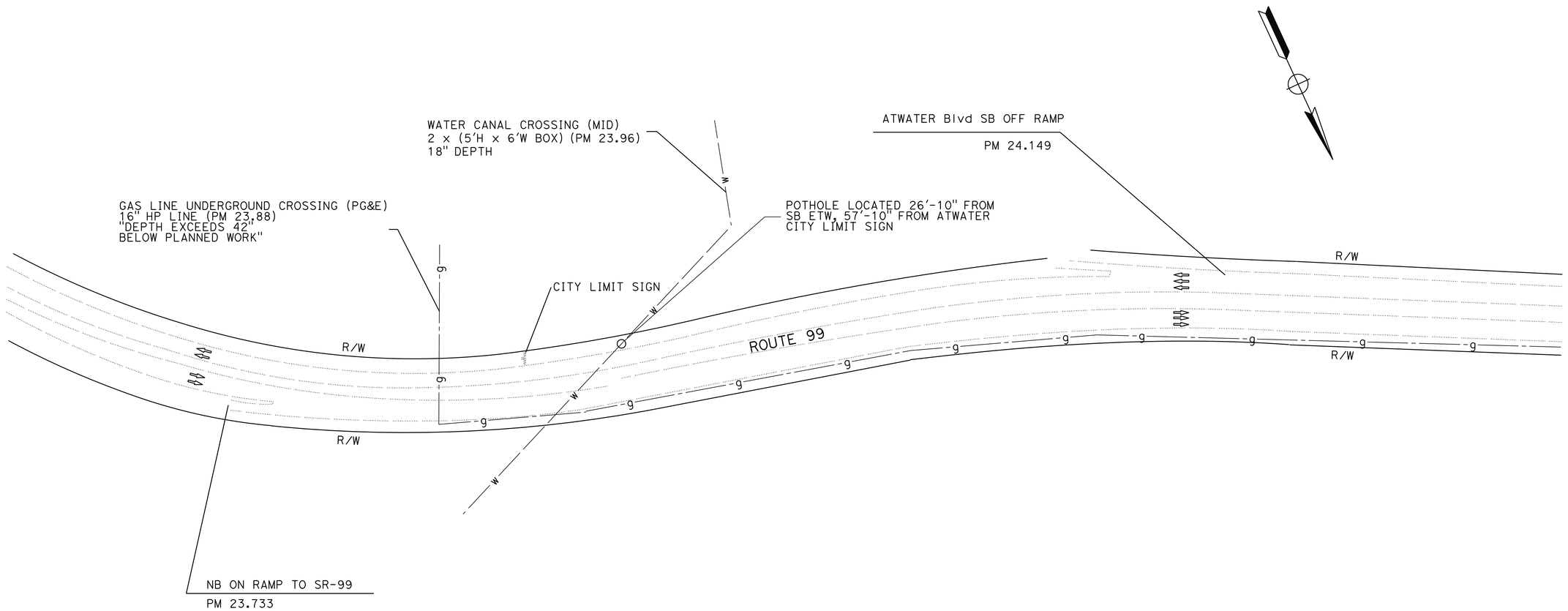

APPROVED FOR UTILITY INFORMATION ONLY

UTILITY PLAN
NO SCALE

U-1

STATE OF CALIFORNIA - DEPARTMENT OF TRANSPORTATION
Caltrans® **DESIGN**

FUNCTIONAL SUPERVISOR: JOSE HUERTA
CALCULATED-DESIGNED BY: KENNY HOANG
CHECKED BY: CHARLIE V. DO
REVISED BY: KH
DATE REVISED: 11/10/15

LAST REVISION 11-10-15
DATE PLOTTED => 08-MAR-2016
TIME PLOTTED => 10:37

Dist	COUNTY	ROUTE	POST MILES TOTAL PROJECT	SHEET No.	TOTAL SHEETS
10	Mer	99	23.7/R30.4	13	29

Charlie Do 12/28/15
REGISTERED CIVIL ENGINEER DATE

1-25-16
PLANS APPROVAL DATE

REGISTERED PROFESSIONAL ENGINEER
CHARLIE DO
No. C77668
Exp. 6/30/17
CIVIL
STATE OF CALIFORNIA

THE STATE OF CALIFORNIA OR ITS OFFICERS OR AGENTS SHALL NOT BE RESPONSIBLE FOR THE ACCURACY OR COMPLETENESS OF SCANNED COPIES OF THIS PLAN SHEET.

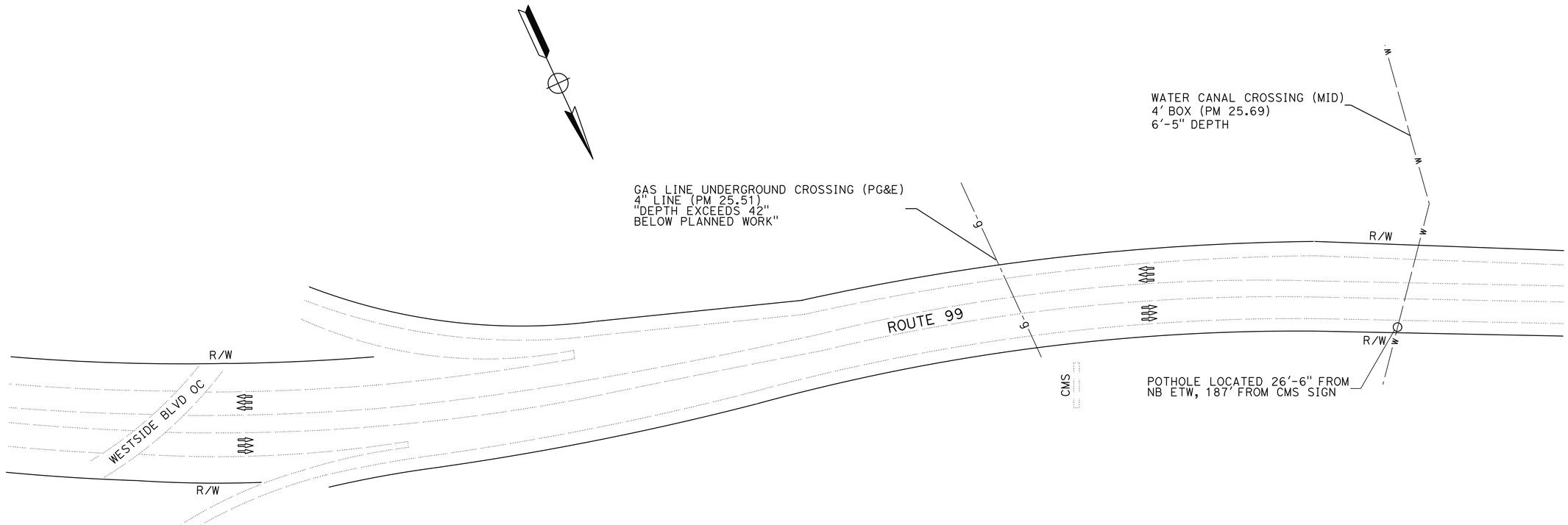

APPROVED FOR UTILITY INFORMATION ONLY

UTILITY PLAN

NO SCALE

U-2

STATE OF CALIFORNIA - DEPARTMENT OF TRANSPORTATION
Caltrans® **DESIGN**

FUNCTIONAL SUPERVISOR: JOSE HUERTA

CALCULATED-DESIGNED BY: KENNY HOANG
CHECKED BY: CHARLIE V. DO

REVISED BY: KH
DATE REVISED: 11/10/15

LAST REVISION 11-10-15
DATE PLOTTED => 08-MAR-2016
TIME PLOTTED => 10:37

Dist	COUNTY	ROUTE	POST MILES TOTAL PROJECT	SHEET No.	TOTAL SHEETS
10	Mer	99	23.7/R30.4	14	29

Charlie Do 12/28/15
REGISTERED CIVIL ENGINEER DATE

1-25-16
PLANS APPROVAL DATE

REGISTERED PROFESSIONAL ENGINEER
CHARLIE DO
No. C77668
Exp. 6/30/17
CIVIL
STATE OF CALIFORNIA

THE STATE OF CALIFORNIA OR ITS OFFICERS OR AGENTS SHALL NOT BE RESPONSIBLE FOR THE ACCURACY OR COMPLETENESS OF SCANNED COPIES OF THIS PLAN SHEET.

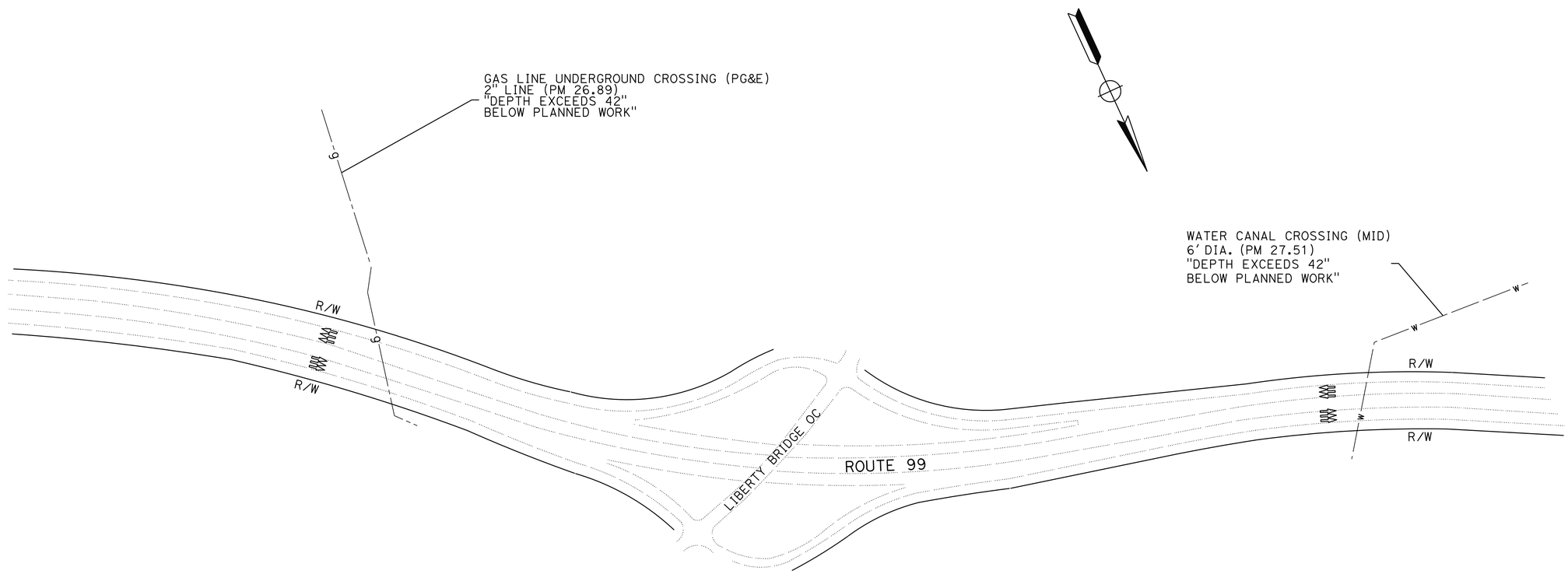

APPROVED FOR UTILITY INFORMATION ONLY

UTILITY PLAN

NO SCALE

U-3

REVISED BY	KH
DATE REVISED	11/10/15
CALCULATED-DESIGNED BY	KENNY HOANG
CHECKED BY	CHARLIE V. DO
FUNCTIONAL SUPERVISOR	JOSE HUERTA

STATE OF CALIFORNIA - DEPARTMENT OF TRANSPORTATION
Caltrans
DESIGN

LAST REVISION 11-10-15
DATE PLOTTED => 08-MAR-2016
TIME PLOTTED => 10:37

Dist	COUNTY	ROUTE	POST MILES TOTAL PROJECT	SHEET No.	TOTAL SHEETS
10	Mer	99	23.7/R30.4	15	29

Charlie Do 12/28/15
REGISTERED CIVIL ENGINEER DATE

1-25-16
PLANS APPROVAL DATE

REGISTERED PROFESSIONAL ENGINEER
CHARLIE DO
No. C77668
Exp. 6/30/17
CIVIL
STATE OF CALIFORNIA

THE STATE OF CALIFORNIA OR ITS OFFICERS OR AGENTS SHALL NOT BE RESPONSIBLE FOR THE ACCURACY OR COMPLETENESS OF SCANNED COPIES OF THIS PLAN SHEET.

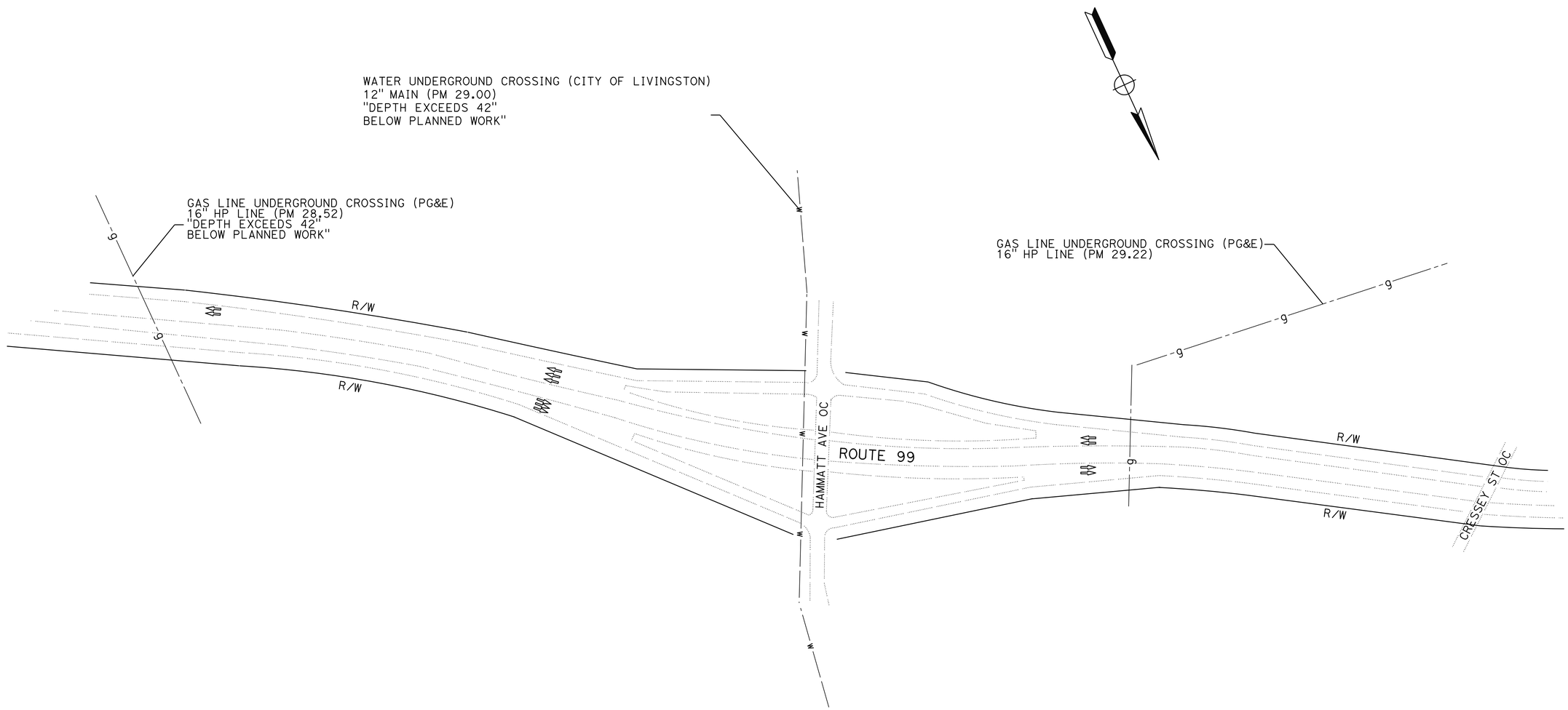

APPROVED FOR UTILITY INFORMATION ONLY

UTILITY PLAN

NO SCALE

U-4

STATE OF CALIFORNIA - DEPARTMENT OF TRANSPORTATION
Caltrans
DESIGN

FUNCTIONAL SUPERVISOR: JOSE HUERTA
CALCULATED-DESIGNED BY: KENNY HOANG
CHECKED BY: CHARLIE V. DO
REVISED BY: KH
DATE REVISED: 11/10/15

LAST REVISION 11-10-15
DATE PLOTTED => 08-MAR-2016
TIME PLOTTED => 10:37

Dist	COUNTY	ROUTE	POST MILES TOTAL PROJECT	SHEET No.	TOTAL SHEETS
10	Mer	99	23.7/R30.4	16	29

12/28/15
REGISTERED CIVIL ENGINEER DATE

1-25-16
PLANS APPROVAL DATE

REGISTERED PROFESSIONAL ENGINEER
CHARLIE DO
No. C77668
Exp. 6/30/17
CIVIL
STATE OF CALIFORNIA

THE STATE OF CALIFORNIA OR ITS OFFICERS OR AGENTS SHALL NOT BE RESPONSIBLE FOR THE ACCURACY OR COMPLETENESS OF SCANNED COPIES OF THIS PLAN SHEET.

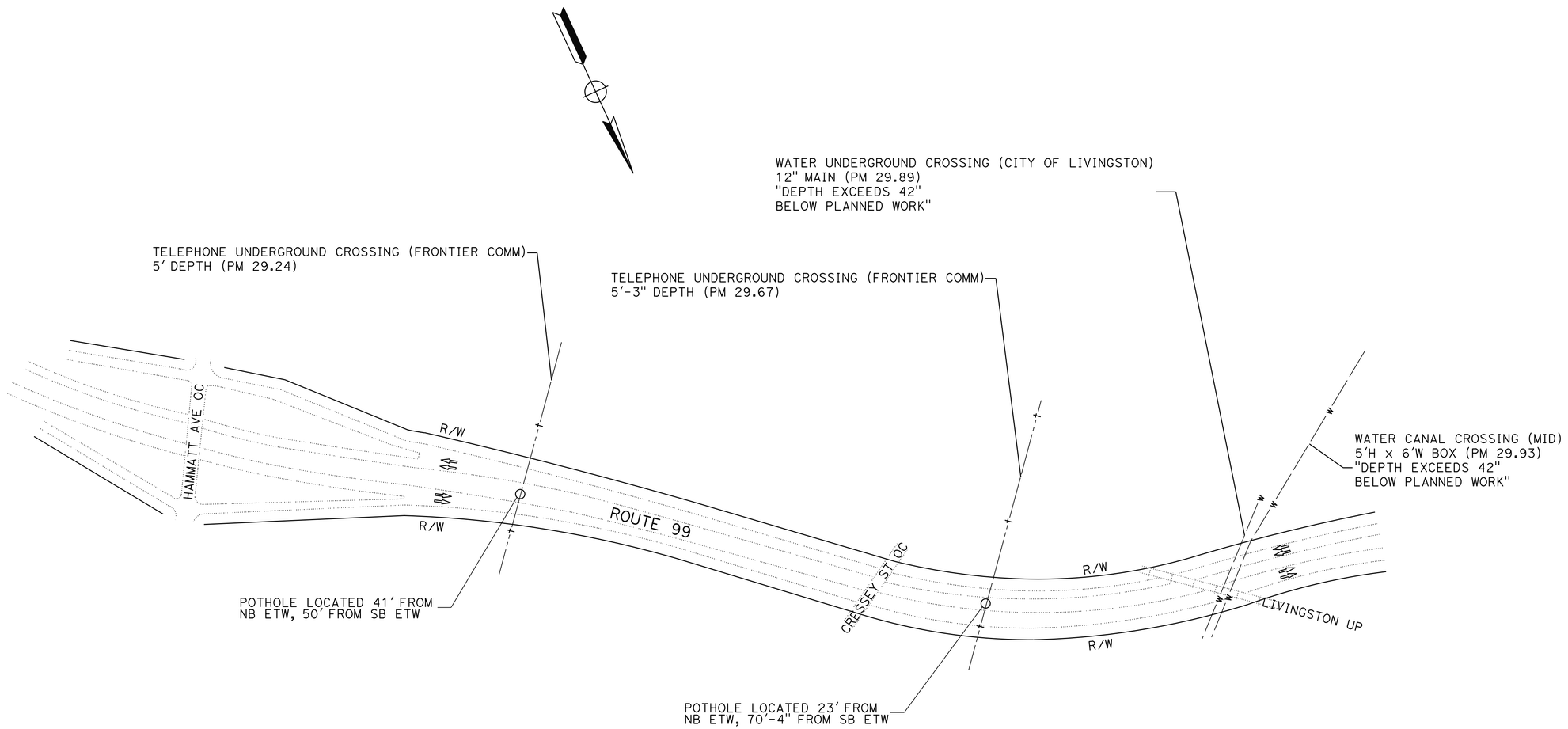

UTILITY PLAN

NO SCALE

U-5

APPROVED FOR UTILITY INFORMATION ONLY

STATE OF CALIFORNIA - DEPARTMENT OF TRANSPORTATION
Caltrans®
DESIGN

FUNCTIONAL SUPERVISOR: JOSE HUERTA

CALCULATED-DESIGNED BY: KENNY HOANG
CHECKED BY: CHARLIE V. DO

REVISED BY: KH
DATE REVISED: 11/10/15

LAST REVISION: 11-10-15
DATE PLOTTED => 08-MAR-2016
TIME PLOTTED => 10:37

Dist	COUNTY	LOCATION CODE	POST MILES TOTAL PROJECT	SHEET No.	TOTAL SHEETS
10	Mer	99	23.7/R30.4	17	29

REGISTERED CIVIL ENGINEER 12/28/15 DATE

1-25-16
PLANS APPROVAL DATE

REGISTERED PROFESSIONAL ENGINEER HUE NGUYEN No. 74484 Exp. 12/31/15 CIVIL STATE OF CALIFORNIA

THE STATE OF CALIFORNIA OR ITS OFFICERS OR AGENTS SHALL NOT BE RESPONSIBLE FOR THE ACCURACY OR COMPLETENESS OF SCANNED COPIES OF THIS PLAN SHEET.

STATIONARY MOUNTED CONSTRUCTION AREA SIGNS

SIGN No.	SIGN CODE FEDERAL	SIGN CODE CALIFORNIA	PANEL SIZE	No. OF POST AND SIZE	QUANTITY	SIGN MESSAGE
A	W20-1		48" x 48"	1 - 6" x 6"	4	ROAD WORK AHEAD
B	W20-1		36" x 36"	1 - 4" x 6"	7	ROAD WORK AHEAD
C	G20-2		36" x 18"	1 - 4" x 4"	2	END ROAD WORK
D		C40	108" x 42"	2 - 4" x 6"	2	TRAFFIC FINES DOUBLED IN CONSTRUCTION ZONES
E		CPFIS	132" x 84"	2 - 6" x 6"	2	CONSTRUCTION PROJECT FUNDING IDENTIFICATION SIGNS

LOCATION OF CONSTRUCTION AREA SIGNS ARE APPROXIMATE. EXACT LOCATIONS WILL BE DETERMINED BY THE ENGINEER.

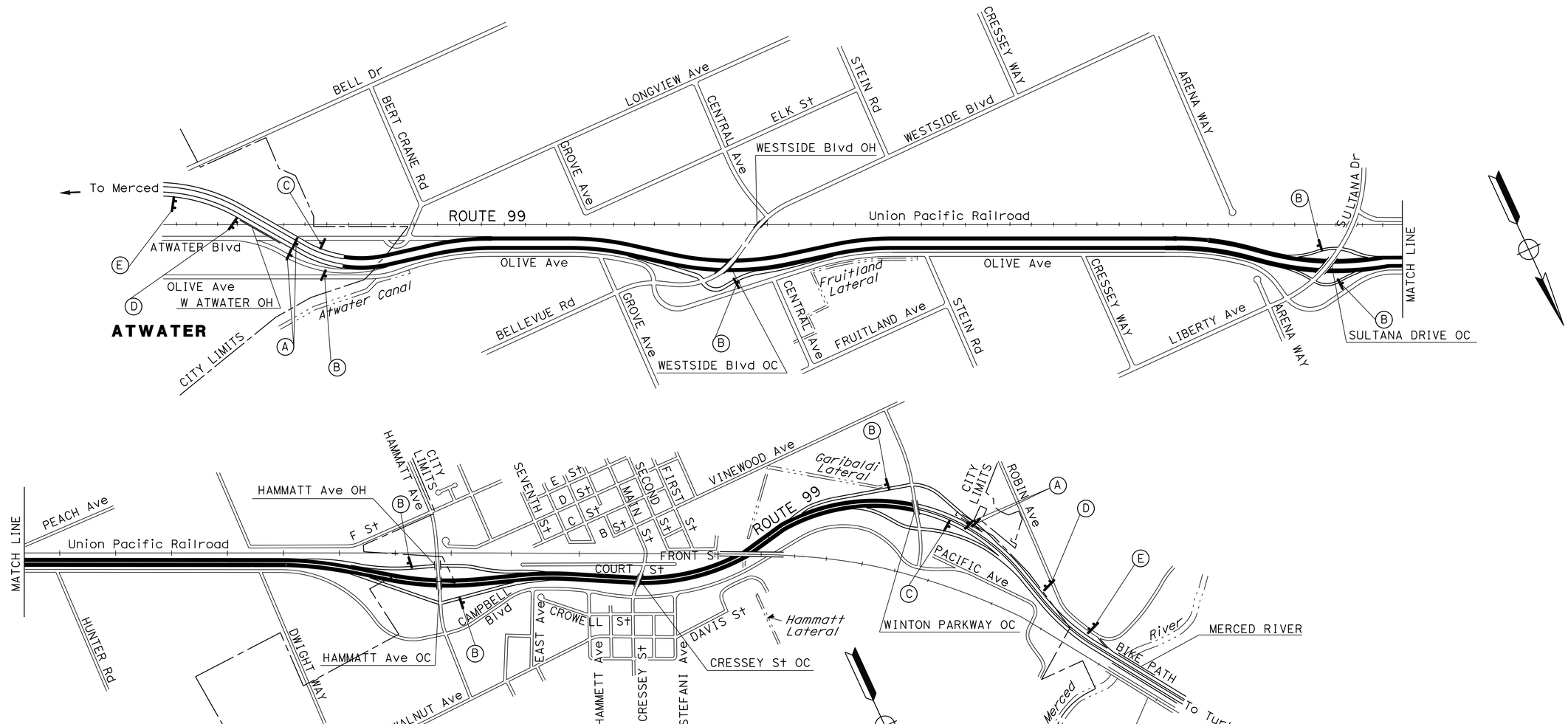

APPROVED FOR CONSTRUCTION AREA SIGN WORK ONLY

NO SCALE

CONSTRUCTION AREA SIGNS

CS-1

STATE OF CALIFORNIA - DEPARTMENT OF TRANSPORTATION
Caltrans TRAFFIC DESIGN

FUNCTIONAL SUPERVISOR: MOHAMMED QATAMI
CALCULATED-DESIGNED BY: FERNANDO LOPEZ
CHECKED BY: HUE NGUYEN
REVISED BY: KH
DATE REVISED: 10/29/15

LAST REVISION 10-29-15
DATE PLOTTED => 08-MAR-2016
TIME PLOTTED => 10:37

Dist	COUNTY	ROUTE	POST MILES TOTAL PROJECT	SHEET No.	TOTAL SHEETS
10	Mer	99	23.7/R30.4	18	29

Charlie Do 12/28/15
REGISTERED CIVIL ENGINEER DATE

1-25-16
PLANS APPROVAL DATE

REGISTERED PROFESSIONAL ENGINEER CHARLIE DO No. C77668 Exp. 6/30/17 CIVIL STATE OF CALIFORNIA

THE STATE OF CALIFORNIA OR ITS OFFICERS OR AGENTS SHALL NOT BE RESPONSIBLE FOR THE ACCURACY OR COMPLETENESS OF SCANNED COPIES OF THIS PLAN SHEET.

ABBREVIATIONS

TMS - TRAFFIC MONITORING STATION
CCTV - CLOSED CIRCUIT TELEVISION CAMERA
RWIS - ROADSIDE WEATHER INFORMATION SYSTEM
N/O - NORTH OF
S/O - SOUTH OF

DOUBLE THRIE BEAM BARRIER

LOCATION * PM TO PM	DOUBLE THRIE BEAM BARRIER (WOOD POST)	SINGLE THRIE BEAM BARRIER (WOOD POST)	RECONSTRUCT THRIE BEAM BARRIER	ALTERNATIVE CRASH CUSHION SYSTEM	REMOVE CRASH CUSHION (SAND FILLED)	END CAP (TYPE TC)	REMOVE END CAP (N)	END ANCHOR ASSEMBLY (TYPE CA)
	LF	LF	LF	EA	EA	EA	EA	EA
23.7 TO 25.0 (PM 23.7 TO WESTSIDE Blvd OC)	6514	700	144		1			
25.0 TO 27.1 (WESTSIDE Blvd OC TO LIBERTY Ave OC)	10,788	600			1			
27.1 TO 29.0 (LIBERTY Ave OC TO HAMMATT Ave OC)	9707	550						
29.0 TO 29.6 (HAMMATT Ave OC TO CRESSEY Ave OC)	2843	550						
29.6 TO 29.85 (CRESSEY Ave OC TO LIVINGSTON UP)	1320						1	2
29.85 TO 30.4 (LIVINGSTON UP TO WINTON Pkwy OC)	2579	550		1		1	1	
TOTAL	33,751	2950	144	1	2	1		2

* SEE CONTRUCTION DETAIL SHEETS FOR MORE INFORMATION ON BEGIN AND END OF DOUBLE THRIE BEAM BARRIER AND ALTERNATIVE CRASH CUSHION SYSTEM.
(N) NOT SEPARATE PAY ITEM, FOR INFORMATION ONLY

METAL BEAM GUARD RAILING

LOCATION PM	REMOVE MBGR	TREATED WOOD WASTE
	LF	LB
25.0 (WESTSIDE Blvd OC)	250	354
27.1 (LIBERTY Ave OC)	250	562
29.0 (HAMMATT Ave OC)	200	2651
29.6 (CRESSEY Ave OC)	220	2980
30.4 (WINTON Pkwy OC)	220	2980
TOTAL	1140	9527

VEGETATION CONTROL (MINOR CONCRETE)

LOCATION PM TO PM	SQYD
23.7 TO 25.0 (PM 23.7 TO WESTSIDE BLVD OC)	5,180
25.0 TO 27.1 (WESTSIDE Blvd OC TO LIBERTY Ave OC)	8,134
27.1 TO 29.0 (LIBERTY Ave OC TO HAMMATT Ave OC)	7,359
29.0 TO 29.6 (HAMMATT Ave OC TO CRESSEY Ave OC)	2,274
29.6 TO 29.85 (CRESSEY Ave OC TO LIVINGSTON UP)	607
29.85 TO 30.4 (LIVINGSTON UP TO WINTON Pkwy OC)	2,079
TOTAL	25,633

SEE TYPICAL CROSS SECTIONS AND CONTRUCTION DETAILS FOR MORE INFORMATION ON VEGETATION CONTROL (MINOR CONCRETE).

SUMMARY OF QUANTITIES

Q-1

STATE OF CALIFORNIA - DEPARTMENT OF TRANSPORTATION
Caltrans DESIGN
FUNCTIONAL SUPERVISOR: JOSE HUERTA
CALCULATED-DESIGNED BY: KENNY HOANG
CHECKED BY: CHARLIE V. DO
REVISED BY: KH
DATE REVISED: 11/10/15

LAST REVISION 04-13-15
DATE PLOTTED => 08-MAR-2016
TIME PLOTTED => 10:37

Dist	COUNTY	ROUTE	POST MILES TOTAL PROJECT	SHEET No.	TOTAL SHEETS
10	Mer	99	23.7/R30.4	19	29

Charlie Do 12/28/15
REGISTERED CIVIL ENGINEER DATE

1-25-16
PLANS APPROVAL DATE

REGISTERED PROFESSIONAL ENGINEER CHARLIE DO No. C77668 Exp. 6/30/17 CIVIL STATE OF CALIFORNIA

THE STATE OF CALIFORNIA OR ITS OFFICERS OR AGENTS SHALL NOT BE RESPONSIBLE FOR THE ACCURACY OR COMPLETENESS OF SCANNED COPIES OF THIS PLAN SHEET.

TRAFFIC MANAGEMENT SYSTEM ELEMENTS (EXISTING)

DIRECTION	PM	LOCATION	ELEMENT
NB	23.85	NORTH OF ON RAMP FROM ATWATER Blvd	TMS
SB	24.24	NORTH OF ON RAMP TO ATWATER Blvd	TMS
SB	24.24	OFF RAMP TO ATWATER Blvd	TMS
SB	24.68	SOUTH OF WESTSIDE Blvd	TMS
SB	24.68	ON FROM WESTSIDE Blvd	TMS
NB	25.35	WESTSIDE Blvd	CCTV
	25.35	WESTSIDE Blvd	RWIS
SB	25.36	NORTH OF WESTSIDE Blvd	TMS
SB	25.36	OFF TO WESTSIDE Blvd	TMS
NB	25.36	NORTH OF WESTSIDE Blvd	TMS
NB	25.36	ON FROM WESTSIDE Blvd	TMS
NB	25.64	NORTH OF WESTSIDE Blvd	CMS
SB	25.89	NORTH OF WESTSIDE Blvd	CCTV
SB	25.89	NORTH OF WESTSIDE Blvd	CMS
NB	26.00	SOUTH OF SULTANA Dr	CCTV
NB	26.92	SOUTH OF SULTANA Dr/LIBERTY Ave OC	TMS
NB	27.05	SOUTH OF SULTANA Dr/LIBERTY Ave OC	TMS
SB	27.29	LIVINGSTON	CCTV
	27.29	LIVINGSTON	RWIS
NB	27.29	N/O SULTANA Dr/LIBERTY Ave ON RAMP	TMS
SB	27.48	SULTANA Dr	TMS
NB	27.55	NORTH OF SULTANA Dr/LIBERTY Ave OC	TMS
SB	27.66	NORTH OF SULTANA Dr	TMS
SB	27.91	HUNTER Rd	TMS
SB	28.16	NORTH OF HUNTER Rd	TMS
SB	28.40	SOUTH OF HAMMATT Ave	CMS
SB	28.66	S/O ON RAMP FROM HAMMATT Ave	TMS
NB	28.81	S/O OFF RAMP TO HAMMATT Ave	TMS
NB	28.81	OFF RAMP TO HAMMATT Ave	TMS
SB	29.25	N/O OFF RAMP TO HAMMATT Ave	TMS
SB	29.25	OFF RAMP TO HAMMATT Ave	TMS
NB	29.35	N/O ON RAMP FROM HAMMATT Ave	TMS
NB	29.35	ON RAMP FROM HAMMATT Ave	TMS
SB	30.07	S/O ON RAMP FROM WINTON Pkwy	TMS
SB	30.07	ON RAMP FROM WINTON Pkwy	TMS
NB	30.16	S/O OFF RAMP TO WINTON Pkwy	TMS
NB	30.16	OFF RAMP TO WINTON Pkwy	TMS
SB	27.29	N/O OFF RAMP TO WINTON Pkwy	TMS
SB	27.29	OFF RAMP TO WINTON Pkwy	TMS

TRAFFIC MANAGEMENT SYSTEM ELEMENTS LOCATIONS ARE APPROXIMATE

TEMPORARY WATER POLLUTION CONTROL

LOCATION PM	TEMPORARY DRAINAGE INLET PROTECTION EA	LOCATION PM	TEMPORARY DRAINAGE INLET PROTECTION EA
24.18	1	27.81	1
24.23	1	27.88	1
24.28	1	27.94	1
24.34	1	28.00	1
24.44	1	28.05	1
24.50	1	28.09	1
24.55	1	28.14	1
24.69	1	28.20	1
24.80	1	28.25	1
24.91	1	28.26	1
24.97	1	28.27	1
25.03	1	28.31	1
25.09	1	28.37	1
25.18	1	28.43	1
25.29	1	28.49	1
25.35	1	28.55	1
25.37	1	28.61	1
25.39	1	28.67	1
25.51	1	28.73	1
25.58	1	28.78	1
25.63	1	28.83	1
25.80	1	28.88	1
25.86	1	28.92	1
25.91	1	28.98	1
25.98	1	29.04	1
26.05	1	29.08	1
26.17	1	29.09	1
26.28	1	29.10	1
26.32	1	29.20	1
26.34	1	29.29	1
26.44	1	29.37	1
26.55	1	29.54	1
26.74	1	29.63	1
26.85	1	29.72	1
26.94	1	29.81	1
27.01	1	29.92	1
26.96	1	30.11	1
27.07	1	30.17	1
27.13	1	30.21	1
27.19	1	30.24	1
27.25	1	30.26	1
27.31	1	30.27	1
27.37	1	30.31	1
27.42	1	30.36	1
27.50	1	30.45	1
27.53	1	30.51	1
27.56	1	30.55	1
27.62	1	30.64	1
27.69	1	30.73	1
27.75	1		
		TOTAL	99

ELECTRICAL CONDUITS CROSSING (EXISTING)

PM	LOCATION	DEPTH
24.26	Rte 99 CROSSING	30"
24.89	Rte 99 CROSSING	30"
25.31	Rte 99 CROSSING	30"
25.44	Rte 99 CROSSING	30"
25.73	Rte 99 CROSSING	30"
25.86	Rte 99 CROSSING	30"
26.56	Rte 99 CROSSING	30"
26.85	Rte 99 CROSSING	30"
26.86	Rte 99 CROSSING	30"
27.78	Rte 99 CROSSING	30"
28.26	Rte 99 CROSSING	30"
28.34	Rte 99 CROSSING	30"
28.73	Rte 99 CROSSING	30"
28.83	Rte 99 CROSSING	30"
29.03	Rte 99 CROSSING	30"
29.28	Rte 99 CROSSING	30"
30.14	Rte 99 CROSSING	30"
30.62	Rte 99 CROSSING	30"

SUMMARY OF QUANTITIES

Q-2

STATE OF CALIFORNIA - DEPARTMENT OF TRANSPORTATION
Caltrans DESIGN

FUNCTIONAL SUPERVISOR: JOSE HUERTA
CALCULATED-DESIGNED BY: KENNY HOANG
CHECKED BY: CHARLIE V. DO
REVISED BY: KH
DATE REVISED: 11/10/15

LAST REVISION 04-13-15
DATE PLOTTED => 08-MAR-2016
TIME PLOTTED => 10:37

Dist	COUNTY	ROUTE	POST MILES TOTAL PROJECT	SHEET No.	TOTAL SHEETS
10	Mer	99	23.7/R30.4	20	29

Agustin Escutia
LICENSED LANDSCAPE ARCHITECT

1-25-16
PLANS APPROVAL DATE

LICENSED LANDSCAPE ARCHITECT
AGUSTIN ESCUTIA 5543
Agustin Escutia
Signature
5/31/16
Renewal Date
11/09/15
Date
STATE OF CALIFORNIA

THE STATE OF CALIFORNIA OR ITS OFFICERS OR AGENTS SHALL NOT BE RESPONSIBLE FOR THE ACCURACY OR COMPLETENESS OF SCANNED COPIES OF THIS PLAN SHEET.

EROSION CONTROL

SEQUENCE	ITEM	MATERIAL DESCRIPTION	MATERIAL TYPE	APPLICATION RATE	REMARKS
STEP 1	COMPOST	COMPOST	MEDIUM	135 CY/ACRE	PLACE ON DISTURBED SOIL AREAS, APPROX. 7 FEET ON EACH SIDE OF VEGETATION CONTROL (MINOR CONCRETE)
STEP 2	HYDROSEED	SEED	MIX	34.4 LB/ACRE	
		FIBER	CELLULOSE	1,000 LB/ACRE	
STEP 3	HYDROMULCH	FIBER	CELLULOSE	1,000 LB/ACRE	
		TACKIFIER	PSYLLIUM	100 LB/ACRE	

SEED MIX

BOTANICAL NAME (COMMON NAME)	PERCENT GERMINATION (MINIMUM)	POUNDS PURE LIVE SEED PER ACRE (SLOPE MEASUREMENT)
BROMUS CARINATUS (CALIFORNIA BROME)	80	8
ELYMUS GLAUCUS (BLUE WILDRYE)	80	12
ESCHSCHOLZIA CALIFORNICA (CALIFORNIA POPPY)	70	1
HORDEUM BRACHYANTHERUM CALIFORNICUM (CALIFORNIA BARLEY)	80	6
LUPINUS BICOLOR (MINIATURE LUPINE)	80	5
VULPIA MICROSTACHYS (SMALL FESCUE)	70	2
VULPIA OCTOFLORA (SIX WEEKS FESCUE)	70	.4

EROSION CONTROL QUANTITIES

LOCATION PM TO PM	DESCRIPTION	COMPOST SQFT	HYDROSEED SQFT	HYDROMULCH SQFT
23.7 TO 25.0 (PM 23.7 TO WESTSIDE Blvd OC)	EROSION CONTROL	96,096	6,864	6,864
25.0 TO 27.1 (WESTSIDE Blvd OC TO LIBERTY Ave OC)	EROSION CONTROL	155,232	11,088	11,088
27.1 TO 29.0 (LIBERTY Ave OC TO HAMMATT Ave OC)	EROSION CONTROL	140,448	10,032	10,032
29.0 TO 29.6 (HAMMATT Ave OC TO CRESSEY Ave OC)	EROSION CONTROL	44,352	3,168	3,168
29.6 TO 29.85 (CRESSEY Ave OC TO LIVINGSTON UP)	EROSION CONTROL	18,480	1,320	1,320
29.85 TO 30.4 (LIVINGSTON UP TO WINTON Pkwy OC)	EROSION CONTROL	40,656	2,904	2,904
	TOTAL	495,264	495,264	495,264

EROSION CONTROL LEGEND AND QUANTITIES

ECL-1

STATE OF CALIFORNIA - DEPARTMENT OF TRANSPORTATION
Caltrans® LANDSCAPE ARCHITECTURE

SENIOR LANDSCAPE ARCHITECT: BRAD COLE
CALCULATED-DESIGNED BY: GUS ESCUTIA
CHECKED BY: ROBYN FONG
REVISED BY: G.E.
DATE REVISED: 11-09-15

LAST REVISION 11-09-15
DATE PLOTTED => 08-MAR-2016
TIME PLOTTED => 10:37

M

Maint	MAINTENANCE
Max	MAXIMUM
MB	METAL BEAM
MBB	METAL BEAM BARRIER
MBGR	METAL BEAM GUARD RAILING
Med	MEDIAN
MGS	MIDWEST GUARDRAIL SYSTEM
MH	MANHOLE
Min	MINIMUM
Misc	MISCELLANEOUS
Misc I & S	MISCELLANEOUS IRON AND STEEL
Mkr	MARKER
Mod	MODIFIED,
	MODIFY
Mon	MONUMENT
MP	METAL PLATE
MPGR	METAL PLATE GUARD RAILING
MR	MOVEMENT RATING
MSE	MECHANICALLY STABILIZED EMBANKMENT
Mt	MOUNTAIN, MOUNT
Mtl	MATERIAL
MVP	MAINTENANCE VEHICLE PULLOUT

N

N	NORTH
NB	NORTHBOUND
No.	NUMBER (MUST HAVE PERIOD)
Nos.	NUMBERS (MUST HAVE PERIOD)
NPS	NOMINAL PIPE SIZE
NS	NEAR SIDE
NSP	NEW STANDARD PLAN
NTS	NOT TO SCALE

O

Oblr	OBLITERATE
OC	OVERCROSSING
OD	OUTSIDE DIAMETER
OF	OUTSIDE FACE
OG	ORIGINAL GROUND
OGAC	OPEN GRADED ASPHALT CONCRETE
OGFC	OPEN GRADED FRICTION COURSE
OH	OVERHEAD
OHWM	ORDINARY HIGH WATER MARK
O-O	OUT TO OUT
Opp	OPPOSITE
OSD	OVERSIDE DRAIN

P

P	PAGE
PAP	PERFORATED ALUMINUM PIPE
PB	PULL BOX
PC	POINT OF CURVATURE,
	PRECAST
PCC	POINT OF COMPOUND CURVE,
	PORTLAND CEMENT CONCRETE
PCMS	PORTABLE CHANGEABLE MESSAGE SIGN
PCP	PERFORATED CONCRETE PIPE,
	PRESTRESSED CONCRETE PIPE
PCVC	POINT OF COMPOUND VERTICAL CURVE
PEC	PERMIT TO ENTER AND CONSTRUCT
Ped	PEDESTRIAN
Ped OC	PEDESTRIAN OVERCROSSING
Ped UC	PEDESTRIAN UNDERCROSSING
Perm Mtl	PERMEABLE MATERIAL

P continued

PG	PROFILE GRADE
PI	POINT OF INTERSECTION
PJP	PARTIAL JOINT PENETRATION
Pkwy	PARKWAY
ℙ,PL	PLATE
P/L	PROPERTY LINE
PM	POST MILE,
	TIME FROM NOON TO MIDNIGHT
PN	PAVING NOTCH
POC	POINT OF HORIZONTAL CURVE
POT	POINT OF TANGENT
POVC	POINT OF VERTICAL CURVE
PP	PIPE PILE,
	PLASTIC PIPE,
	POWER POLE
PPL	PREFORMED PERMEABLE LINER
PPP	PERFORATED PLASTIC PIPE
PRC	POINT OF REVERSE CURVE
PRF	PAVEMENT REINFORCING FABRIC
PRVC	POINT OF REVERSE VERTICAL CURVE
PS&E	PLANS, SPECIFICATIONS AND ESTIMATES
PS, P/S	PRESTRESSED
PSP	PERFORATED STEEL PIPE
PT	POINT OF TANGENCY
PVC	POLYVINYL CHLORIDE
Pvmt	PAVEMENT

Q

Qty	QUANTITY

R

R	RADIUS
R & D	REMOVE AND DISPOSE
R & S	REMOVE AND SALVAGE
R/C	RATE OF CHANGE
RCA	REINFORCED CONCRETE ARCH
RCB	REINFORCED CONCRETE BOX
RCP	REINFORCED CONCRETE PIPE
RCPA	REINFORCED CONCRETE PIPE ARCH
Rd	ROAD
Reinf	REINFORCED,
	REINFORCEMENT,
	REINFORCING
Rel	RELOCATE
Repl	REPLACEMENT
Ret	RETAINING
Rev	REVISED, REVISION
Rdwy	ROADWAY
RHMA	RUBBERIZED HOT MIX ASPHALT
Riv	RIVER
RM	ROAD-MIXED
RP	RADIUS POINT,
	REFERENCE POINT
RR	RAILROAD
RSP	ROCK SLOPE PROTECTION,
	REVISED STANDARD PLAN
Rt	RIGHT
Rte	ROUTE
RW	REDWOOD,
	RETAINING WALL
R/W	RIGHT OF WAY
Rwy	RAILWAY

S

S	SOUTH,
	SUPPLEMENT
SAE	STRUCTURE APPROACH EMBANKMENT
Salv	SALVAGE
SAPP	STRUCTURAL ALUMINUM PLATE PIPE
SB	SOUTHBOUND
SC	SAND CUSHION
SCSP	SLOTTED CORRUGATED STEEL PIPE
SD	STORM DRAIN
Sec	SECOND,
	SECTION
Sep	SEPARATION
SG	SUBGRADE
Shld	SHOULDER
Sht	SHEET
Sim	SIMILAR
℄	STATION LINE
SM	SELECTED MATERIAL
Spec	SPECIAL,
	SPECIFICATIONS
SPP	SLOTTED PLASTIC PIPE
SS	SLOPE STAKE
SSBM	STRAP AND SADDLE BRACKET METHOD
SSD	STRUCTURAL SECTION DRAIN
SSPA	STRUCTURAL STEEL PLATE ARCH
SSPP	STRUCTURAL STEEL PLATE PIPE
SSPPA	STRUCTURAL STEEL PLATE PIPE ARCH
SSRP	STEEL SPIRAL RIB PIPE
St	STREET
Sta	STATION
STBB	SINGLE THRIE BEAM BARRIER
Std	STANDARD
Str	STRUCTURE
Surf	SURFACING
SW	SIDEWALK,
	SOUND WALL
Swr	SEWER
Sym	SYMMETRICAL
S4S	SURFACE 4 SIDES

T

T	SEMI-TANGENT
Tan	TANGENT
TBB	THRIE BEAM BARRIER
Tbr	TIMBER
TC	TOP OF CURB
TCB	TRAFFIC CONTROL BOX
TCE	TEMPORARY CONSTRUCTION EASEMENT
Tel	TELEPHONE
Temp	TEMPORARY
TG	TOP OF GRADE
Tot	TOTAL
TP	TELEPHONE POLE
TPB	TREATED PERMEABLE BASE
TPM	TREATED PERMEABLE MATERIAL
Trans	TRANSITION

T continued

TS	TRANSVERSE,
	TRAFFIC SIGNAL,
	TUBULAR STEEL
Typ	TYPICAL

U

UC	UNDERCROSSING
UD	UNDERDRAIN
UG	UNDERGROUND
UON	UNLESS OTHERWISE NOTED
UP	UNDERPASS

V

V	VALVE,
	DESIGN SPEED
Var	VARIABLE,
	VARIES
VC	VERTICAL CURVE
VCP	VITRIFIED CLAY PIPE
Vert	VERTICAL
Via	VIADUCT
Vol	VOLUME

W

W	WEST,
	WIDTH
WB	WESTBOUND
WH	WEEP HOLE
WM	WIRE MESH
WS	WATER SURFACE
WSP	WELDED STEEL PIPE
Wt	WEIGHT
WV	WATER VALVE
WW	WINGWALL
WWLOL	WINGWALL LAYOUT LINE

X

X Sec	CROSS SECTION
Xing	CROSSING

Y

Yr	YEAR
Yrs	YEARS

Dist	COUNTY	ROUTE	POST MILES TOTAL PROJECT	SHEET No.	TOTAL SHEETS
10	Mer	99	23.7/R30.4	21	29

Grace M. Tsushima
REGISTERED CIVIL ENGINEER

July 19, 2013
PLANS APPROVAL DATE

REGISTERED PROFESSIONAL ENGINEER Grace M. Tsushima No. C49814 Exp. 9-30-14 CIVIL STATE OF CALIFORNIA

THE STATE OF CALIFORNIA OR ITS OFFICERS OR AGENTS SHALL NOT BE RESPONSIBLE FOR THE ACCURACY OR COMPLETENESS OF SCANNED COPIES OF THIS PLAN SHEET.

TO ACCOMPANY PLANS DATED 1-25-16

2010 REVISED STANDARD PLAN RSP A10B

UNIT OF MEASUREMENT SYMBOLS:

Some of the symbols used in the project plan quantity tables and in the Bid Item List are:

TABLE A

SYMBOL USED	DEFINITIONS
ACRE	ACRE
CF	CUBIC FOOT
CY	CUBIC YARD
EA	EACH
GAL	GALLON
LB	POUND
LF	LINEAR FOOT
SQFT	SQUARE FOOT
SQYD	SQUARE YARD
STA	100 FEET
TAB	TABLET
TON	2,000 POUNDS

Some of the symbols used in the plans other than in the project plan quantity tables are:

TABLE B

SYMBOL USED	DEFINITIONS
ksi	KIPS PER SQUARE INCH
ksf	KIPS PER SQUARE FOOT
psi	POUNDS PER SQUARE INCH
psf	POUNDS PER SQUARE FOOT
lb/ft^3, pcf	POUNDS PER CUBIC FOOT
tsf	TONS PER SQUARE FOOT
mph, MPH *	MILES PER HOUR
ø	NOMINAL DIAMETER
oz	OUNCE
lb	POUND
kip	1,000 POUNDS
cal	CALORIE
ft	FOOT OR FEET
gal	GALLON

* For use on a sign panel only

STATE OF CALIFORNIA
DEPARTMENT OF TRANSPORTATION

ABBREVIATIONS (SHEET 2 OF 2)

NO SCALE

RSP A10B DATED JULY 19, 2013 SUPERSEDES STANDARD PLAN A10B DATED MAY 20, 2011 - PAGE 2 OF THE STANDARD PLANS BOOK DATED 2010.

REVISED STANDARD PLAN RSP A10B

6-7-13

Dist	COUNTY	ROUTE	POST MILES TOTAL PROJECT	SHEET No.	TOTAL SHEETS
10	Mer	99	23.7/R30.4	22	29

Randell D. Hiatt
REGISTERED CIVIL ENGINEER

November 15, 2013
PLANS APPROVAL DATE

REGISTERED PROFESSIONAL ENGINEER
Randell D. Hiatt
No. C50200
Exp. 6-30-15
CIVIL
STATE OF CALIFORNIA

THE STATE OF CALIFORNIA OR ITS OFFICERS OR AGENTS SHALL NOT BE RESPONSIBLE FOR THE ACCURACY OR COMPLETENESS OF SCANNED COPIES OF THIS PLAN SHEET.

TO ACCOMPANY PLANS DATED 1-25-16

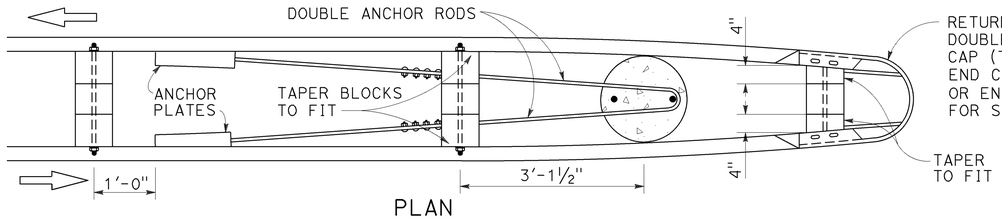

PLAN
See Note 4

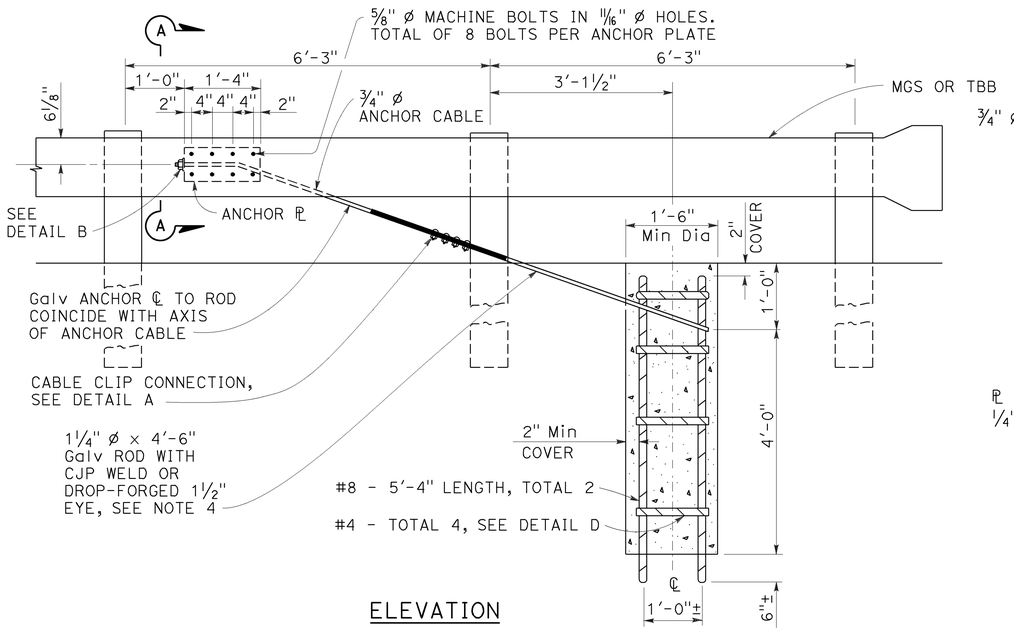

ELEVATION
END ANCHOR ASSEMBLY
(TYPE CA)
(Wood post, MGS shown, details similar for Thrie Beam Barrier.)

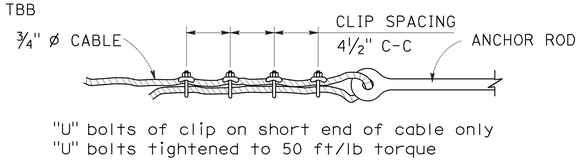

DETAIL A
CABLE CLIP CONNECTION

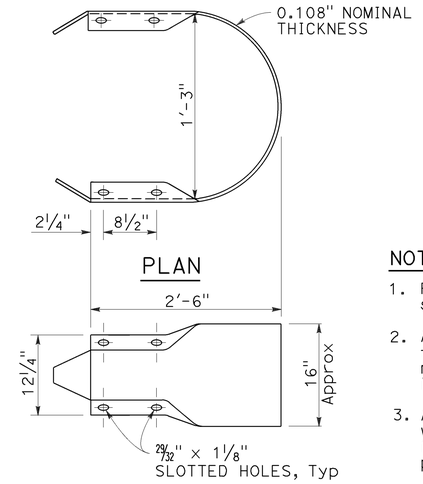

PLAN
ELEVATION
RETURN CAP
(TYPE A)

NOTES:

1. For typical use of this type of end anchor, see Revised Standard Plan RSP A78E2.
2. Anchor cable to be parallel to railing for straight runs of rail. Anchor cable may have angle point at anchor plate if railing is curved.
3. Anchor rod hooks to be in contact with anchor reinforcement when concrete is placed. Wire ties may be used to position anchor rods.
4. Single sided railing installations require only one anchor plate, anchor rod and anchor cable. Single sided railing will not have a rail element or blockouts on backside of line posts as shown in the plan view.

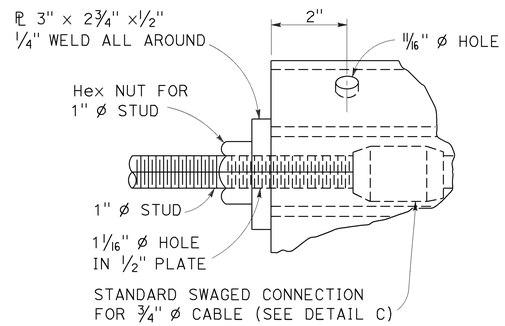

DETAIL B

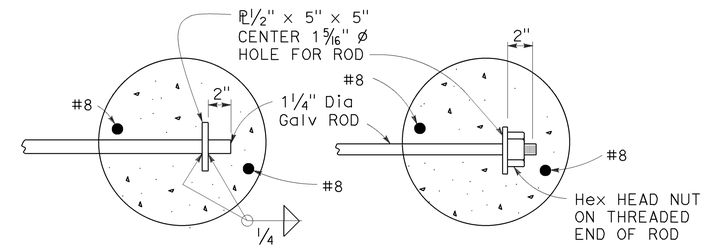

OPTIONAL ENDS ON SINGLE ANCHOR ROD
(Not to be used for double anchors)

NOTE:
Use two 1¼" Ø Galv rods with hook and eye for double MGS anchor.

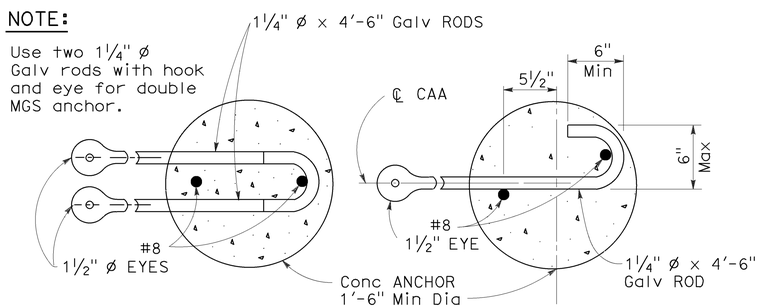

DOUBLE ANCHOR
SINGLE ANCHOR
ANCHOR RODS

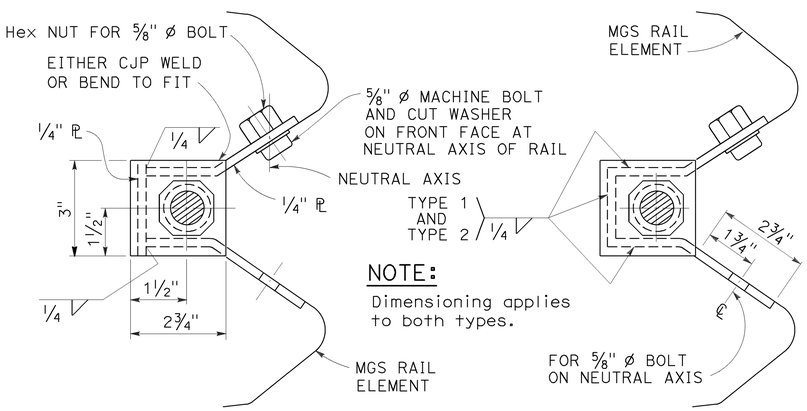

NOTE:
Dimensioning applies to both types.

SECTION A-A
(Alternative Type 1)

SECTION A-A
(Alternative Type 2)

ANCHOR PLATE DETAILS

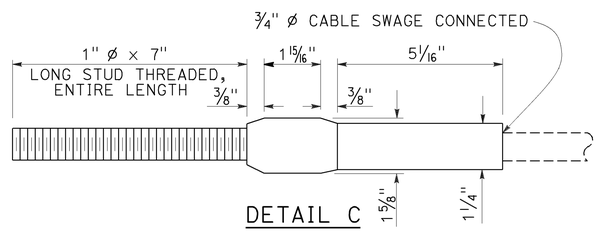

DETAIL C

ANCHOR CABLE WITH
SWAGED FITTING AND STUD

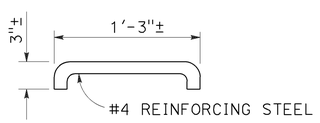

DETAIL D

STATE OF CALIFORNIA
DEPARTMENT OF TRANSPORTATION

METAL RAILING END ANCHOR ASSEMBLY (TYPE CA)

NO SCALE

RSP A77T1 DATED NOVEMBER 15, 2013 SUPERSEDES RSP A77T1 DATED JULY 19, 2013 THAT SUPPLEMENTS THE STANDARD PLANS BOOK DATED 2010.

REVISED STANDARD PLAN RSP A77T1

2010 REVISED STANDARD PLAN RSP A77T1

10-22-13

Dist	COUNTY	ROUTE	POST MILES TOTAL PROJECT	SHEET No.	TOTAL SHEETS
10	Mer	99	23.7/R30.4	23	29

Randell D. Hiatt
REGISTERED CIVIL ENGINEER

October 30, 2015
PLANS APPROVAL DATE

REGISTERED PROFESSIONAL ENGINEER Randell D. Hiatt No. C50200 Exp. 6-30-17 CIVIL STATE OF CALIFORNIA

THE STATE OF CALIFORNIA OR ITS OFFICERS OR AGENTS SHALL NOT BE RESPONSIBLE FOR THE ACCURACY OR COMPLETENESS OF SCANNED COPIES OF THIS PLAN SHEET.

TO ACCOMPANY PLANS DATED 1-25-16

2010 REVISED STANDARD PLAN RSP A78A

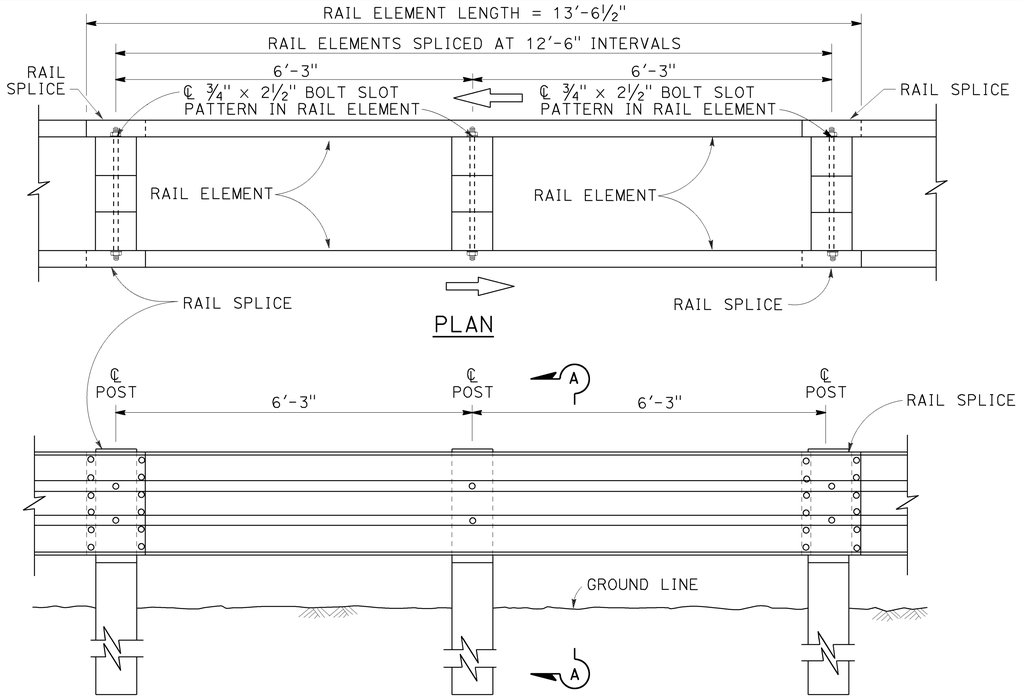

ELEVATION

DOUBLE THRIE BEAM BARRIER

(Wood post and blocks)
See Note 1

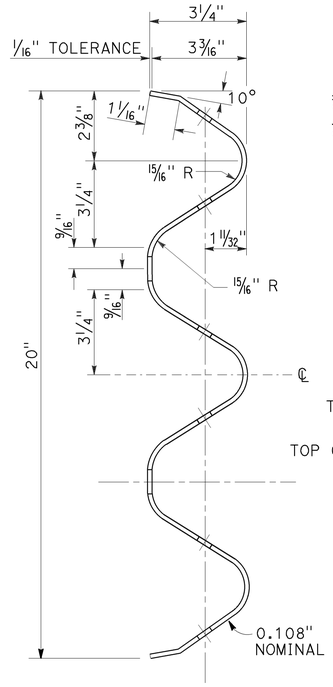

SECTION THRU RAIL ELEMENT

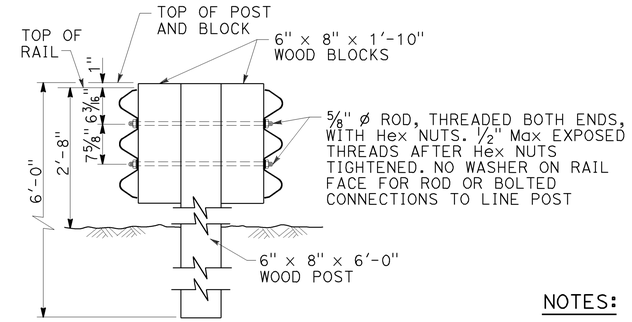

SECTION A-A

TYPICAL WOOD LINE POST INSTALLATION

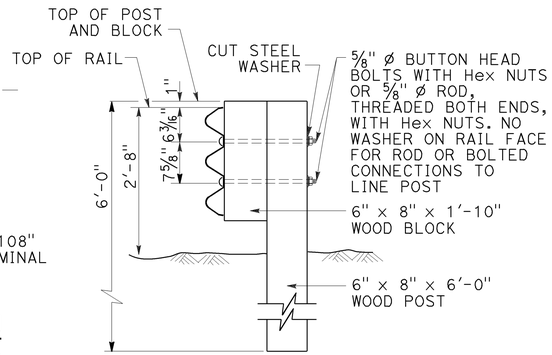

Where bolts are used, install so that the threaded end of the bolts and nuts are placed away from traffic side of rail.

SECTION B-B

TYPICAL WOOD LINE POST INSTALLATION

NOTES:

1. For details of steel post thrie beam barrier, see Standard Plan A78B.
2. For details of standard hardware, posts and blocks used to construct thrie beam barrier, see Standard Plan A78C1 and Revised Standard Plan RSP A78C2.
3. Thrie beam barrier post spacing to be 6'-3" center to center, except as otherwise noted.
4. Top of barrier rail to be 2'-8" above ground line or shoulder surfacing under the rail element.
5. For barrier end treatments and barrier connections, see Standard Plans A78E3 and A78G, and Revised Standard Plans RSP A78E1, RSP A78E2 RSP A77Q1, RSP A77Q2 and RSP A78H.
6. For connection to Concrete Barrier (Type 60), see Standard Plans A78I.
7. For details of thrie beam barrier on bridge see Standard Plan A78D2. For details of thrie beam barrier at fixed object, see Revised Standard Plan RSP A78D1.
8. See Project Plans for barrier delineation locations. Spacing of barrier markers to match spacing of raised pavement markers on adjacent median edgeline pavement delineation.
9. Install posts in soil.

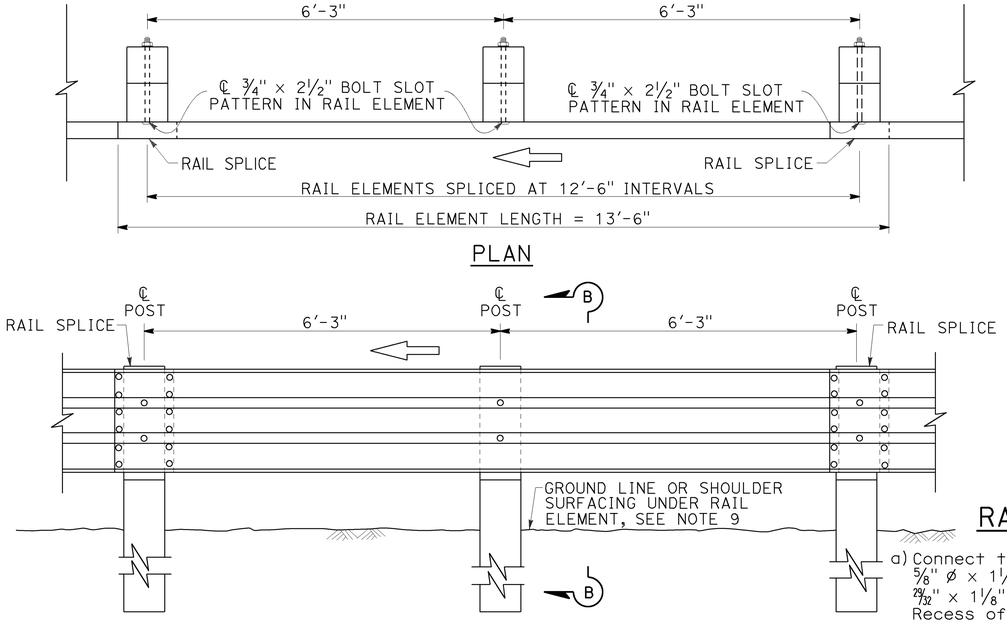

ELEVATION

SINGLE THRIE BEAM BARRIER

(Wood post and blocks)
See Note 1

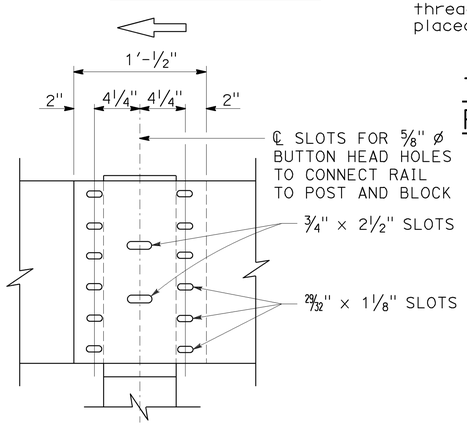

ELEVATION

RAIL ELEMENT SPLICE DETAIL

a) Connect the overlapped ends of the thrie beam rail elements with ⅝" ø x 1¼" button head oval shoulder bolts inserted into the 29/32" x 1⅛" slots and bolted together with ⅝" ø recessed hex nuts. Recess of hex nut points toward rail element. A total of 12 bolts and nuts are to be used at each rail splice connection.

b) The ends of the rail elements are to be overlapped in the direction of traffic (see details).

c) Where end cap is to be attached to the end of a rail element, a total of 4 of the above described splice bolts and nuts are to be used. Where a return cap is to be attached to the ends of rail elements, a total of 8 of the above described splice bolts and nuts are to be used.

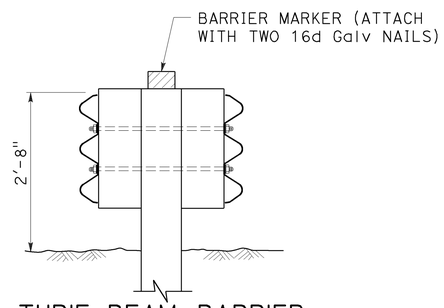

THRIE BEAM BARRIER DELINEATION

See Note 8

STATE OF CALIFORNIA
DEPARTMENT OF TRANSPORTATION

THRIE BEAM BARRIER STANDARD BARRIER RAILING SECTION (WOOD POST WITH WOOD BLOCK)

NO SCALE

RSP A78A DATED OCTOBER 30, 2015 SUPERSEDES RSP A78A DATED JULY 19, 2013 AND STANDARD PLAN A78A DATED MAY 20, 2011 - PAGE 89 OF THE STANDARD PLANS BOOK DATED 2010.

REVISED STANDARD PLAN RSP A78A

9-28-15

Dist	COUNTY	ROUTE	POST MILES TOTAL PROJECT	SHEET No.	TOTAL SHEETS
10	Mer	99	23.7/R30.4	24	29

Randell D. Hiatt
REGISTERED CIVIL ENGINEER

July 19, 2013
PLANS APPROVAL DATE

REGISTERED PROFESSIONAL ENGINEER
Randell D. Hiatt
No. C50200
Exp. 6-30-15
CIVIL
STATE OF CALIFORNIA

THE STATE OF CALIFORNIA OR ITS OFFICERS OR AGENTS SHALL NOT BE RESPONSIBLE FOR THE ACCURACY OR COMPLETENESS OF SCANNED COPIES OF THIS PLAN SHEET.

TO ACCOMPANY PLANS DATED 1-25-16

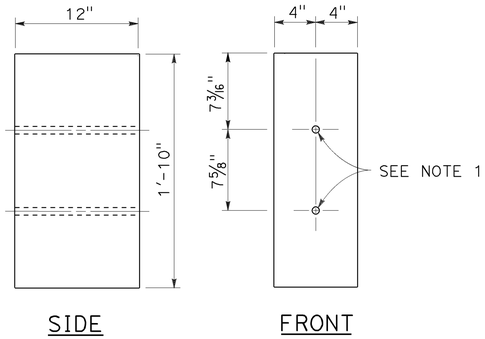

8" x 12"
WOOD BLOCK

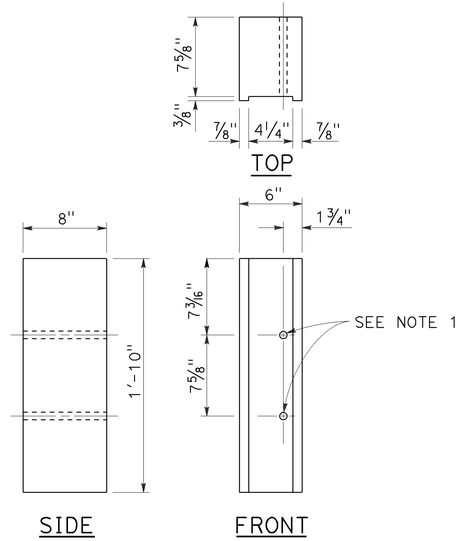

6" x 8"
NOTCHED WOOD BLOCK
See Notes 3 and 5

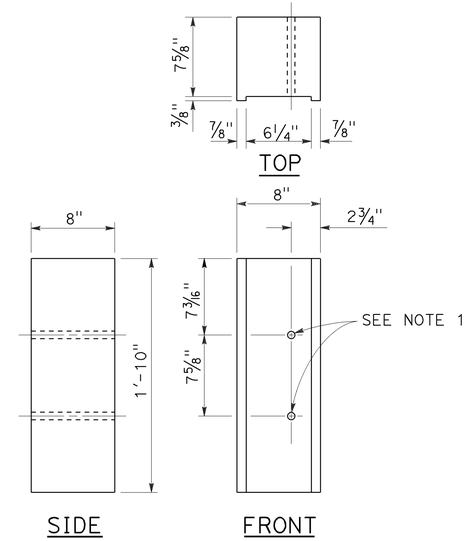

8" x 8"
NOTCHED WOOD BLOCK
See Notes 4 and 5

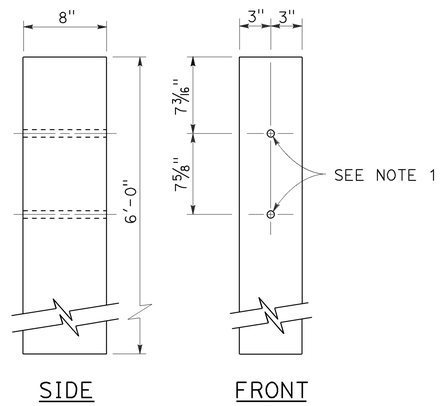

6" x 8"
WOOD POST

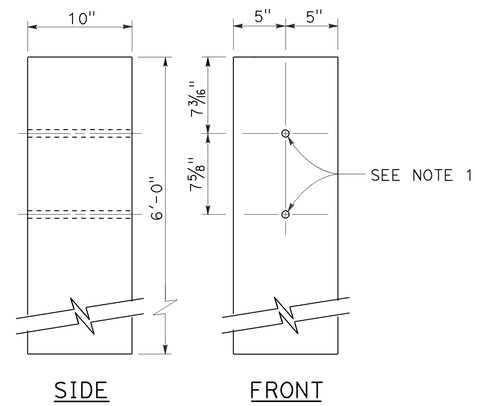

10" x 10"
WOOD POST

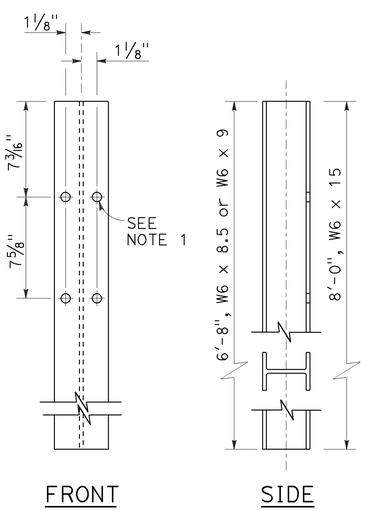

STEEL POST
W6 x 9 or W6 x 8.5 and W6 x 15

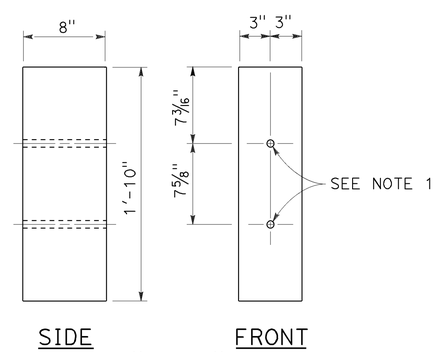

6" x 8"
WOOD BLOCK

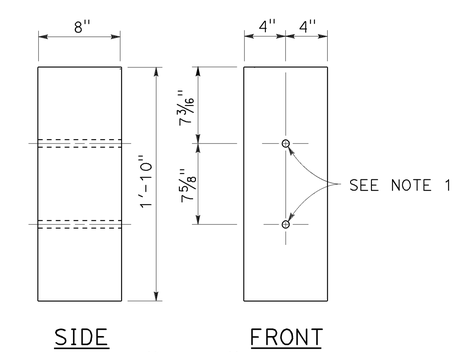

8" x 8"
WOOD BLOCK

NOTES:

1. All holes in steel post to be 13/16" Dia maximum. Holes in wood posts and wood blocks to be 3/4" Dia ±1/16".
2. Dimensions shown for wood post are nominal.
3. For use with W6 x 8.5 or W6 x 9 steel post.
4. For use with W6 x 15 steel post.
5. Notched face of block faces steel post.

STATE OF CALIFORNIA
DEPARTMENT OF TRANSPORTATION

THRIE BEAM BARRIER POST AND BLOCK DETAILS

NO SCALE

RSP A78C2 DATED JULY 19, 2013 SUPERSEDES STANDARD PLAN A78C2 DATED MAY 20, 2011 - PAGE 92 OF THE STANDARD PLANS BOOK DATED 2010.

REVISED STANDARD PLAN RSP A78C2

2010 REVISED STANDARD PLAN RSP A78C2

7-3-13

Dist	COUNTY	ROUTE	POST MILES TOTAL PROJECT	SHEET No.	TOTAL SHEETS
10	Mer	99	23.7/R30.4	25	29

Randell D. Hiatt
REGISTERED CIVIL ENGINEER

October 19, 2012
PLANS APPROVAL DATE

REGISTERED PROFESSIONAL ENGINEER
Randell D. Hiatt
No. C50200
Exp. 6-30-13
CIVIL
STATE OF CALIFORNIA

THE STATE OF CALIFORNIA OR ITS OFFICERS OR AGENTS SHALL NOT BE RESPONSIBLE FOR THE ACCURACY OR COMPLETENESS OF SCANNED COPIES OF THIS PLAN SHEET.

TO ACCOMPANY PLANS DATED 1-25-16

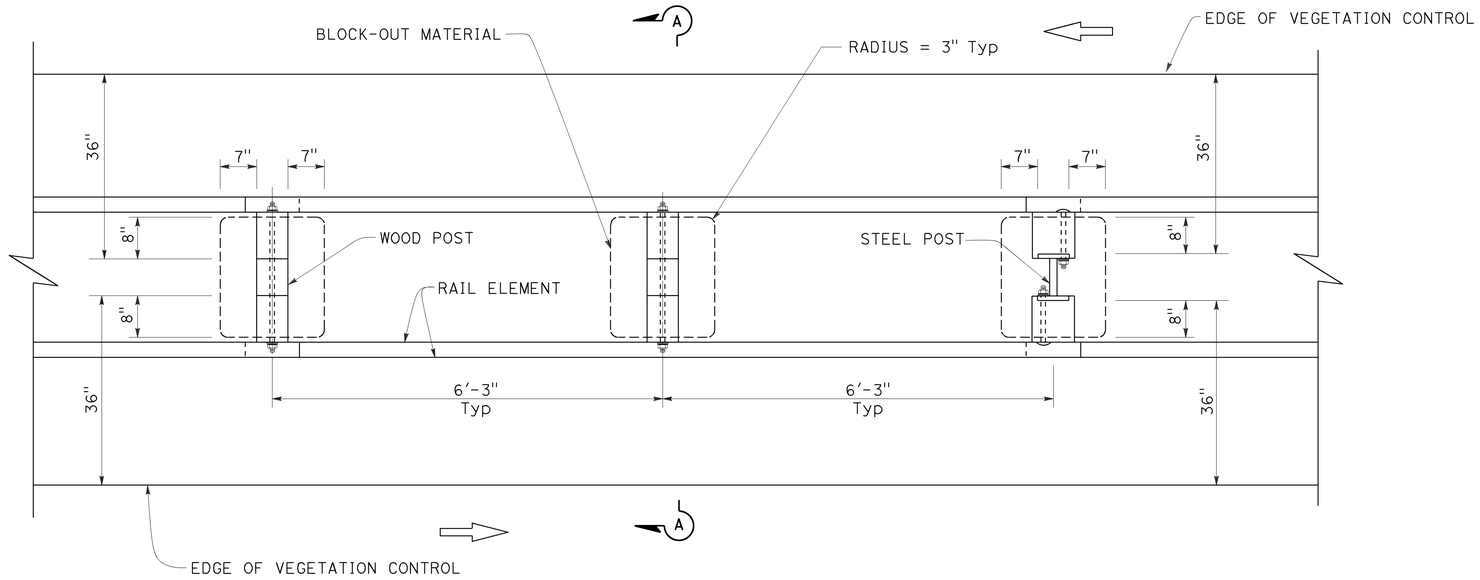

PLAN

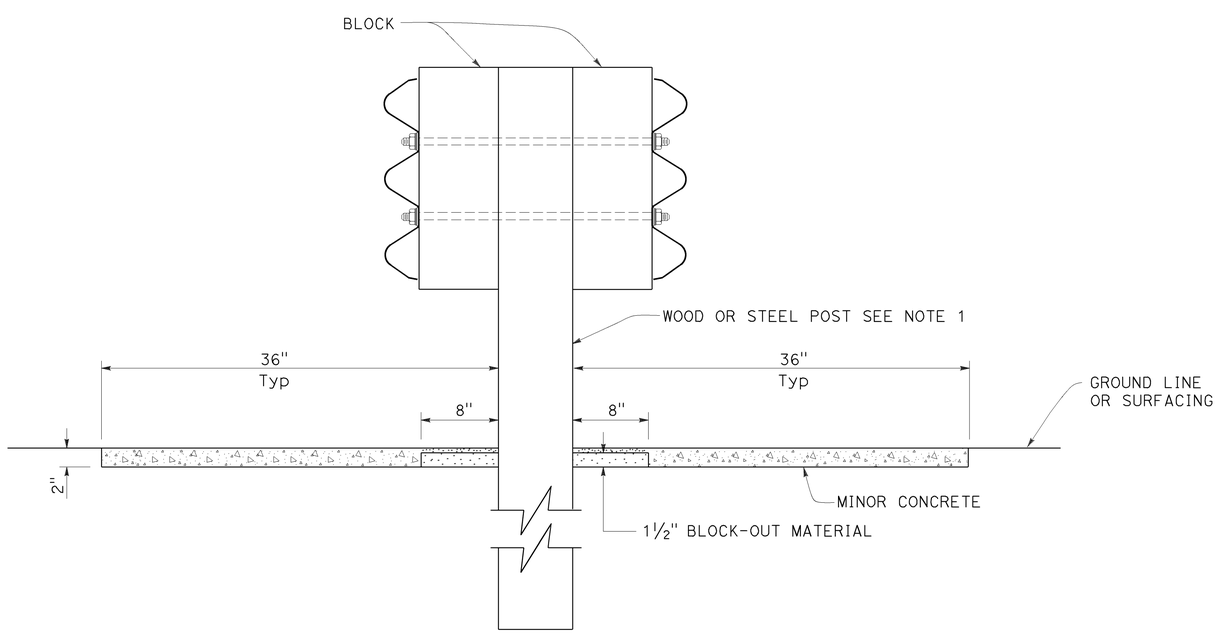

SECTION A-A

NOTES:

1. For wood and steel post sizes, see Standard Plan A78C2.
2. For details not shown, see Standard Plans A78A and A78B.

STATE OF CALIFORNIA
DEPARTMENT OF TRANSPORTATION

DOUBLE THRIE BEAM BARRIER TYPICAL VEGETATION CONTROL STANDARD BARRIER RAILING SECTION

NO SCALE

RSP A78C4 DATED OCTOBER 19, 2012 SUPERSEDES STANDARD PLAN A78C4
DATED MAY 20, 2011 - PAGE 94 OF THE STANDARD PLANS BOOK DATED 2010.

REVISED STANDARD PLAN RSP A78C4

2010 REVISED STANDARD PLAN RSP A78C4

9-26-12

Dist	COUNTY	ROUTE	POST MILES TOTAL PROJECT	SHEET No.	TOTAL SHEETS
10	Mer	99	23.7/R30.4	26	29

Randell D. Hiatt
REGISTERED CIVIL ENGINEER

October 19, 2012
PLANS APPROVAL DATE

REGISTERED PROFESSIONAL ENGINEER
Randell D. Hiatt
No. C50200
Exp. 6-30-13
CIVIL
STATE OF CALIFORNIA

THE STATE OF CALIFORNIA OR ITS OFFICERS OR AGENTS SHALL NOT BE RESPONSIBLE FOR THE ACCURACY OR COMPLETENESS OF SCANNED COPIES OF THIS PLAN SHEET.

TO ACCOMPANY PLANS DATED 1-25-16

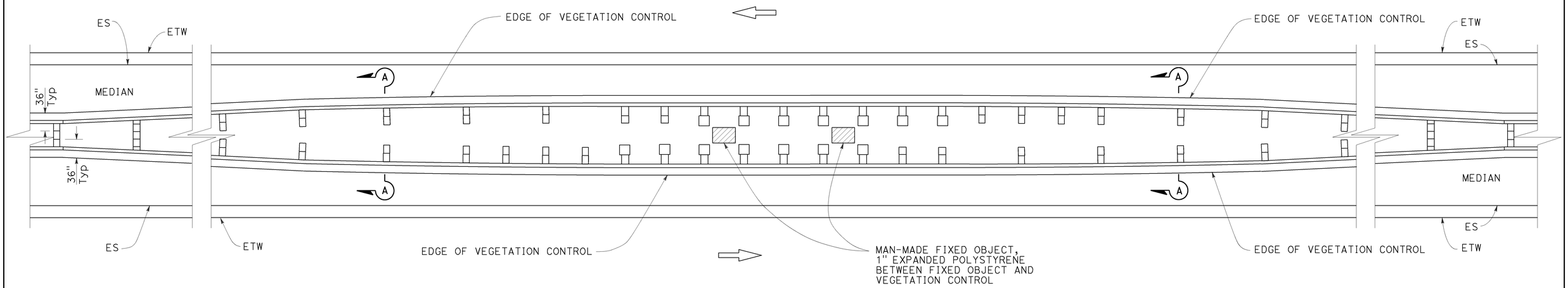

PLAN

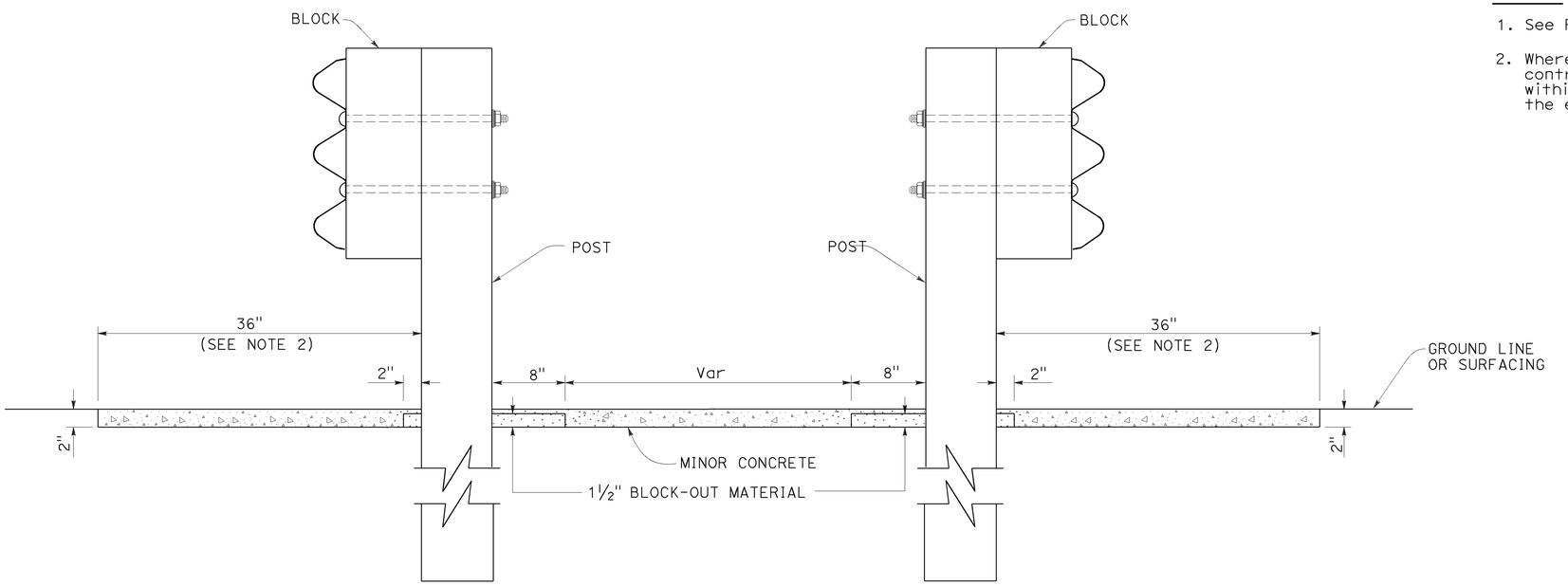

SECTION A-A

NOTES:

1. See Revised Standard Plan RSP A78C3 for additional vegetation control.
2. Where dike is constructed under barrier, construct vegetation control to back edge of dike. Where paved shoulder is constructed within 36" in front of the post, construct vegetation control to the edge of paved shoulder.

STATE OF CALIFORNIA
DEPARTMENT OF TRANSPORTATION

THRIE BEAM BARRIER TYPICAL VEGETATION CONTROL AT FIXED OBJECTS IN MEDIAN

NO SCALE

RSP A78C5 DATED OCTOBER 19, 2012 SUPERSEDES STANDARD PLAN A78C5 DATED MAY 20, 2011 - PAGE 95 OF THE STANDARD PLANS BOOK DATED 2010.

REVISED STANDARD PLAN RSP A78C5

2010 REVISED STANDARD PLAN RSP A78C5

9-26-12

Dist	COUNTY	ROUTE	POST MILES TOTAL PROJECT	SHEET No.	TOTAL SHEETS
10	Mer	99	23.7/R30.4	27	29

Randell D. Hiatt
REGISTERED CIVIL ENGINEER

July 19, 2013
PLANS APPROVAL DATE

REGISTERED PROFESSIONAL ENGINEER
Randell D. Hiatt
No. C50200
Exp. 6-30-15
CIVIL
STATE OF CALIFORNIA

THE STATE OF CALIFORNIA OR ITS OFFICERS OR AGENTS SHALL NOT BE RESPONSIBLE FOR THE ACCURACY OR COMPLETENESS OF SCANNED COPIES OF THIS PLAN SHEET.

TO ACCOMPANY PLANS DATED 1-25-16

2010 REVISED STANDARD PLAN RSP A78D1

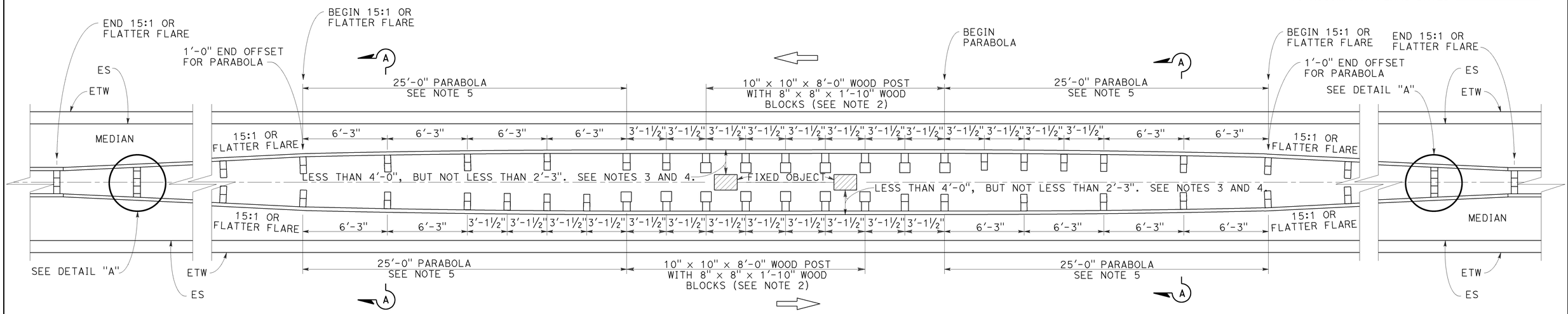

PLAN

THRIE BEAM BARRIER AT FIXED OBJECTS

(Wood post and block shown)
See Notes 1, 2 and 3.

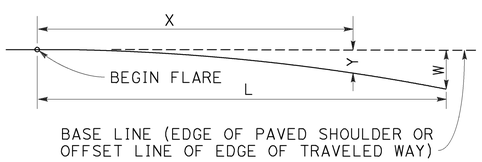

$$Y = \frac{WX^2}{L^2}$$

Y = OFFSET FROM BASE LINE
W = MAXIMUM OFFSET
X = DISTANCE ALONG BASE LINE
L = LENGTH OF FLARE

PARABOLIC FLARE OFFSETS

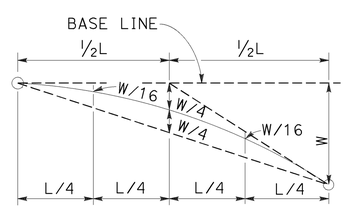

TYPICAL PARABOLIC LAYOUT

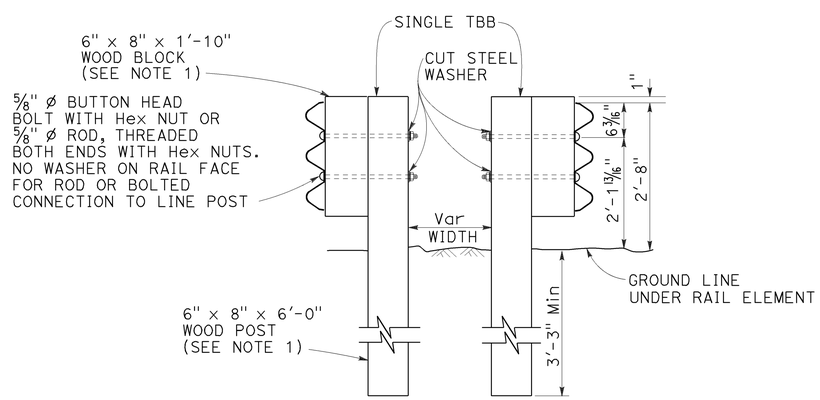

SECTION A-A

Wood post with wood block shown
See Note 1

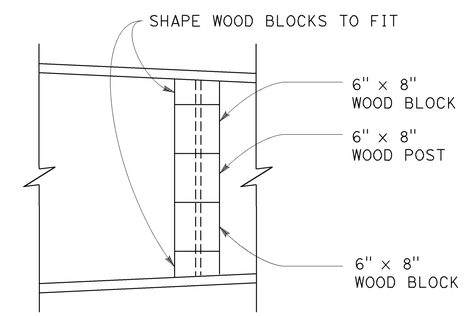

DETAIL "A"

NOTES:

1. Where applicable and when specified, (W6 x 8.5 or W6 x 9) x 6'-8" steel post with 6" x 8" x 1'-10" notched wood blocks or notched recycled plastic blocks may be used for 6" x 8" x 6'-0" wood post with 6" x 8" x 1'-10" wood block.
2. Where applicable and when specified, (W6 x 15) x 8'-0" steel post with 8" x 8" x 1'-10" notched wood blocks or notched recycled plastic blocks may be used for the 10" x 10" x 8'-0" wood post with 8" x 8" x 1'-10" wood blocks shown at 3'-1½" center to center spacing.
3. Where a minimum clearance of 4'-0" or more can be obtained between the face of the thrie beam rail and the face of the fixed object(s), the following substitutions may be made:
   a) 6" x 8" x 6'-0" wood posts with 6" x 8" x 1'-10" wood blocks for the 10" x 10" x 8'-0" wood post with 8" x 8" x 1'-10" wood blocks shown.
   b) 6'-3" post spacing for the 3'-1½" spacing shown.
4. Where the clearance between the face of the railing and the face of a fixed object is less than 2'-3", a concrete barrier should be constructed to shield the fixed object(s).
5. For typical flare offsets for 25'-0" length parabola with maximum offset of 1'-0", see Revised Standard Plan RSP A77P1.

STATE OF CALIFORNIA
DEPARTMENT OF TRANSPORTATION

THRIE BEAM BARRIER AT FIXED OBJECTS IN MEDIAN

NO SCALE

RSP A78D1 DATED JULY 19, 2013 SUPERSEDES STANDARD PLAN A78D1
DATED MAY 20, 2011 - PAGE 97 OF THE STANDARD PLANS BOOK DATED 2010.

REVISED STANDARD PLAN RSP A78D1

7-18-13

Dist	COUNTY	ROUTE	POST MILES TOTAL PROJECT	SHEET No.	TOTAL SHEETS
10	Mer	99	23.7/R30.4	28	29

REGISTERED CIVIL ENGINEER

July 19, 2013
PLANS APPROVAL DATE

REGISTERED PROFESSIONAL ENGINEER
Gurinderpal Bhullar
No. C48815
Exp. 9-30-14
CIVIL
STATE OF CALIFORNIA

THE STATE OF CALIFORNIA OR ITS OFFICERS OR AGENTS SHALL NOT BE RESPONSIBLE FOR THE ACCURACY OR COMPLETENESS OF SCANNED COPIES OF THIS PLAN SHEET.

TO ACCOMPANY PLANS DATED 1-25-16

2010 REVISED STANDARD PLAN RSP T9

TABLE 1

TAPER LENGTH CRITERIA AND CHANNELIZING DEVICE SPACING

SPEED (S)	MINIMUM TAPER LENGTH * FOR WIDTH OF OFFSET 12 FEET (W)				MAXIMUM CHANNELIZING DEVICE SPACING		
					X	Y	Z **
	TANGENT 2L	MERGING L	SHIFTING L/2	SHOULDER L/3	TAPER	TANGENT	CONFLICT
mph	ft	ft	ft	ft	ft	ft	ft
20	160	80	40	27	20	40	10
25	250	125	63	42	25	50	12
30	360	180	90	60	30	60	15
35	490	245	123	82	35	70	17
40	640	320	160	107	40	80	20
45	1080	540	270	180	45	90	22
50	1200	600	300	200	50	100	25
55	1320	660	330	220	55	110	27
60	1440	720	360	240	60	120	30
65	1560	780	390	260	65	130	32
70	1680	840	420	280	70	140	35

* - For other offsets, use the following merging taper length formula for L:
For speed of 40 mph or less, $L = WS^2/60$
For speed of 45 mph or more, $L = WS$

Where: L = Taper length in feet
W = Width of offset in feet
S = Posted speed limit, off-peak 85th-percentile speed prior to work starting, or the anticipated operating speed in mph

** - Use for taper and tangent sections where there are no pavement markings or where there is a conflict between existing pavement markings and channelizers (CA).

TABLE 2

LONGITUDINAL BUFFER SPACE AND FLAGGER STATION SPACING

SPEED *	Min D **	DOWNGRADE Min D ***		
		-3%	-6%	-9%
mph	ft	ft	ft	ft
20	115	116	120	126
25	155	158	165	173
30	200	205	215	227
35	250	257	271	287
40	305	315	333	354
45	360	378	400	427
50	425	446	474	507
55	495	520	553	593
60	570	598	638	686
65	645	682	728	785
70	730	771	825	891

* - Speed is posted speed limit, off-peak 85th-percentile speed prior to work starting, or the anticipated operating speed in mph

** - Longitudinal buffer space or flagger station spacing

*** - Use on sustained downgrade steeper than -3 percent and longer than 1 mile.

TABLE 3

ADVANCE WARNING SIGN SPACING

ROAD TYPE	DISTANCE BETWEEN SIGNS *		
	A	B	C
	ft	ft	ft
URBAN - 25 mph OR LESS	100	100	100
URBAN - MORE THAN 25 mph TO 40 mph	250	250	250
URBAN - MORE THAN 40 mph	350	350	350
RURAL	500	500	500
EXPRESSWAY / FREEWAY	1000	1500	2640

* - The distances are approximate, are intended for guidance purposes only, and should be applied with engineering judgment. These distances should be adjusted by the Engineer for field conditions, if necessary, by increasing or decreasing the recommmended distances.

STATE OF CALIFORNIA
DEPARTMENT OF TRANSPORTATION

TRAFFIC CONTROL SYSTEM TABLES FOR LANE AND RAMP CLOSURES

NO SCALE

RSP T9 DATED JULY 19, 2013 SUPERSEDES RSP T9 DATED APRIL 19, 2013 THAT SUPPLEMENTS THE STANDARD PLANS BOOK DATED 2010.

REVISED STANDARD PLAN RSP T9

4-30-13

TO ACCOMPANY PLANS DATED 1-25-16

Dist	COUNTY	ROUTE	POST MILES TOTAL PROJECT	SHEET No.	TOTAL SHEETS
10	Mer	99	23.7/R30.4	29	29

REGISTERED CIVIL ENGINEER

April 19, 2013
PLANS APPROVAL DATE

REGISTERED PROFESSIONAL ENGINEER Gurinderpal Bhullar No. C48815 Exp. 9-30-14 CIVIL STATE OF CALIFORNIA

THE STATE OF CALIFORNIA OR ITS OFFICERS OR AGENTS SHALL NOT BE RESPONSIBLE FOR THE ACCURACY OR COMPLETENESS OF SCANNED COPIES OF THIS PLAN SHEET.

NOTES:

See Revised Standard Plan RSP T9 for tables.

Use cone spacing X for taper segment, Y for tangent segment or Z for conflict situations, as approriate, per Table 1, unless X, Y, or Z cone spacing is shown on this sheet.

Unless otherwise specified in the special provisions, all temporary warning signs shall have black legend on fluorescent orange background.

California codes are designated by (CA). Otherwise, Federal (MUTCD) codes are shown.

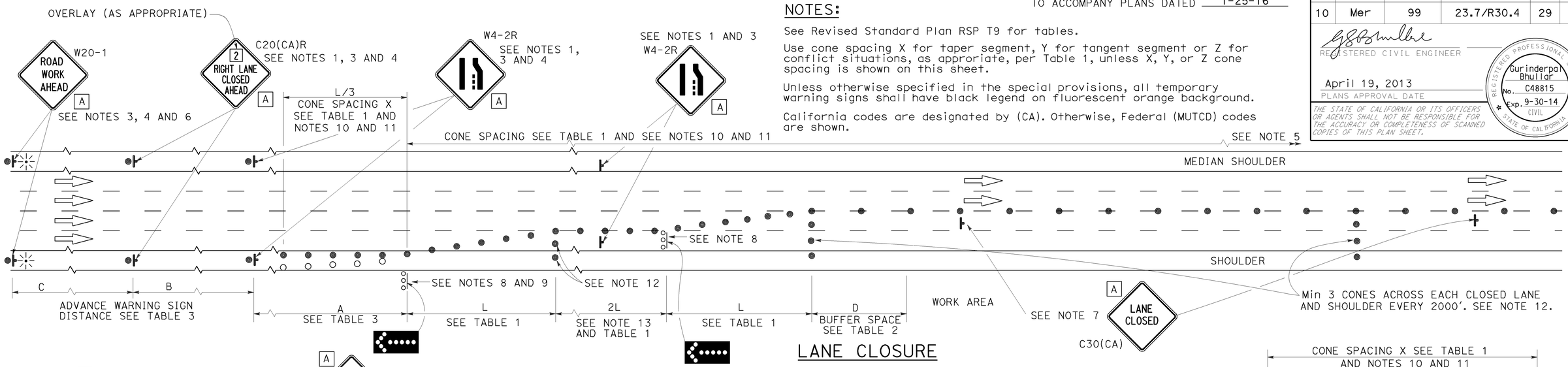

LANE CLOSURE

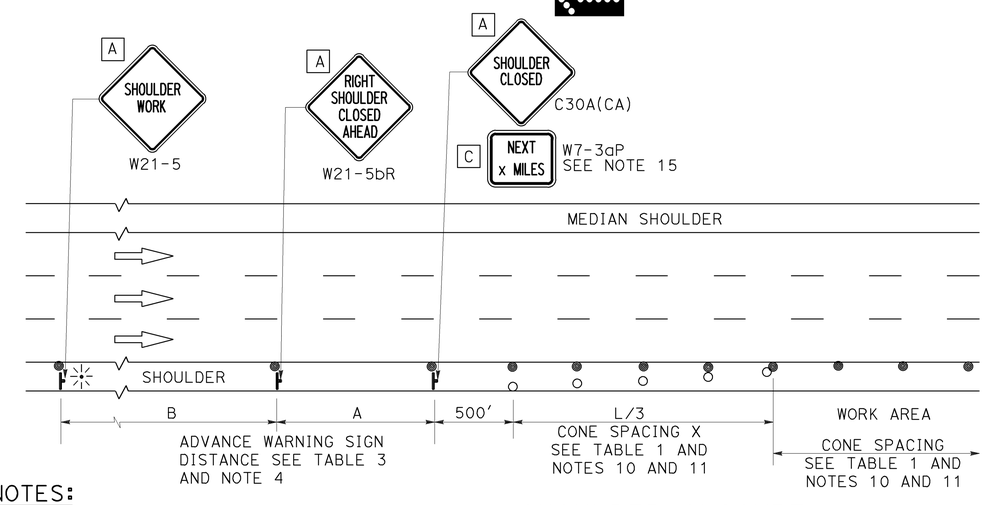

SHOULDER CLOSURE

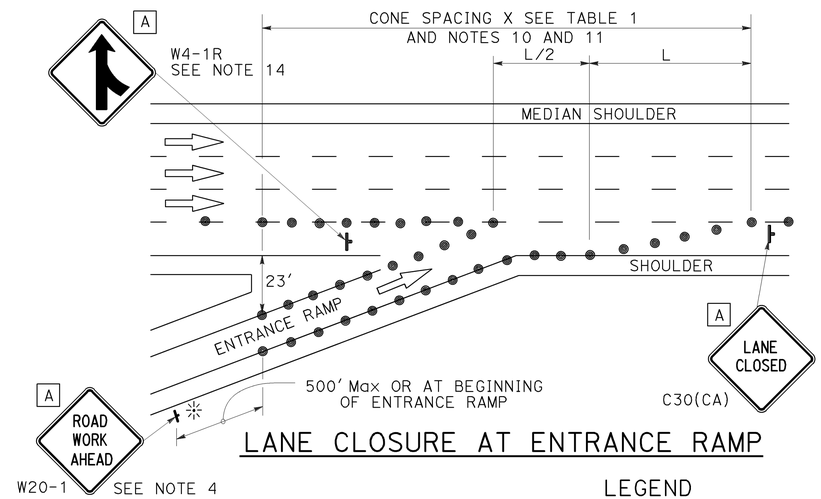

LANE CLOSURE AT ENTRANCE RAMP

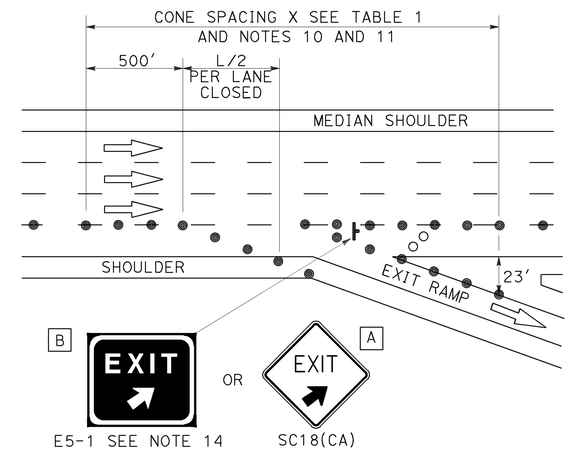

LANE CLOSURE AT EXIT RAMP

NOTES:

1. Median lane closures shall conform to the details as shown except that C20(CA)L and W4-2L signs shall be used.
2. At least one person shall be assigned to provide full time maintenance of traffic control devices for lane closures.
3. Duplicate sign installations are not required:
   a) On opposite shoulder if at least one-half of the available lanes remain open to traffic.
   b) In the median if the width of the median shoulder is less than 8' and the outside lanes are to be closed.
4. Each advance warning sign on each side of the roadway shall be equipped with at least two flags for daytime closure. Each flag shall be at least 16" x 16" in size and shall be orange or fluorescent red-orange in color. Flashing beacons shall be placed at the locations indicated for lane closure during hours of darkness.
5. A G20-2 "END ROAD WORK" sign, with minimum size of 48" x 24" as appropriate, shall be placed at the end of the lane closure unless the end of work area is obvious or ends within a larger project's limits.
6. If the W20-1 sign would follow within 2000' of a stationary W20-1 or G20-1 "ROAD WORK NEXT _____ MILES", use a C20(CA) sign for the first advance warning sign.
7. Place a C30(CA) sign every 2000' throughout length of lane closure.
8. One flashing arrow sign for each lane closed. The flashing arrow signs shall be Type I.
9. A minimum 1500' of sight distance shall be provided where possible for vehicles approaching the first flashing arrow sign. Lane closures shall not begin at top of crest vertical curve or on a horizontal curve.
10. All cones used for lane closures during the hours of darkness shall be fitted with retroreflective bands (or sleeves) as specified in the specifications.
11. Portable delineators, placed at one-half the spacing indicated for traffic cones may be used instead of cones for daytime closures only.
12. Unless otherwise specified in the special provisions, a minimum of 3 cones shall be placed transversely across each closed lane and shoulder at each location where a taper across a traffic lane ends and every 2000' as shown on the "Lane Closure" detail. Two Type II barricades may be used instead of the 3 cones. The transverse alignment of the cones or barricades on the closed shoulder may be shifted from the transverse alignment to provide access to the work.
13. Unless otherwise specified in the special provisions, the 2L tangent shown along lane lines shall be used between the L tapers required for each closed traffic lane.
14. Unless otherwise specified in the special provisions, the E5-1 or SC18(CA) and W4-1 signs shall be used as shown.
15. A W7-3aP "NEXT____ MILES" plaque must be used if theshoulder closure extends beyond the distance that can be perceived by road users.

LEGEND

- TRAFFIC CONE
- TRAFFIC CONE (OPTIONAL TAPER)
- TEMPORARY TRAFFIC CONTROL SIGN
- FLASHING ARROW SIGN (FAS)
- FAS SUPPORT OR TRAILER
- PORTABLE FLASHING BEACON

SIGN PANEL SIZE (Min)

A	48" x 48"
B	72" x 60"
C	36" x 30"

STATE OF CALIFORNIA
DEPARTMENT OF TRANSPORTATION

TRAFFIC CONTROL SYSTEM FOR LANE CLOSURE ON FREEWAYS AND EXPRESSWAYS

NO SCALE

RSP T10 DATED APRIL 19, 2013 SUPERSEDES STANDARD PLAN T10 DATED MAY 20, 2011 - PAGE 237 OF THE STANDARD PLANS BOOK DATED 2010.

REVISED STANDARD PLAN RSP T10

2010 REVISED STANDARD PLAN RSP T10

12-18-12