INFORMATION HANDOUT

For Contract No. 10-0Y2204
At 10-Tuo-49,108-various

Identified by
Project ID 1013000196

MATERIALS INFORMATION

Water Source Information

Existing traffic management system elements

Alternative flared end system

Alternative in line terminal system.

Dahir, Khalid@DOT

From: Leyew, Lakachew@DOT
Sent: Monday, May 09, 2016 2:02 PM
To: Dahir, Khalid@DOT
Subject: FW: December water source

Good Afternoon Khalid!

FYI

LL

From: Elaine Wolfgang [mailto:elainew@tuolumneutilities.com]
Sent: Wednesday, April 27, 2016 9:17 AM
To: Leyew, Lakachew@DOT <lakachew.leyew@dot.ca.gov>
Cc: Eric Hall <ehall@tuolumneutilities.com>
Subject: December water source

Good morning,

I spoke with our Water Master, Eric Hall, to confirm your request for about 14,000 gallons of water to be used as dust control for the Cal Trans Washington/Hwy 108 guard rail work in December of this year. He said that it does not appear at this time that it would be a problem and to call us 3-4 weeks in advance to get your account set up and find out where the closest source would be located for your project.

If you have any questions you can reach me at the number listed below. Thank you.

Elaine
Customer Service
Tuolumne Utilities District
(209) 532-5536, Ext. 506

Existing TMS

CO	RTE	PREFIX	POSTMILE	DIR	LOCATION	ELEMENT	DETECTION TYPE
TUO	49		013.000	S	E/O High School Rd	FB	N/A
TUO	49		014.750		Rawhide Road	Signal	Loops
TUO	49		017.940		Stockton Street / No.Washington Street	Signal	Loops
TUO	108	R	000.000	E	Sonora, Jct Rte 49	TMS	Loops
TUO	108	R	000.000	W	Sonora, Jct Rte 49	TMS	Loops
TUO	108	L	000.900		N/O E Jct Rte 120	HAR	N/A
TUO	108	R	000.910		Lime Kiln Road	Signal	Loops
TUO	108	R	002.180		Mono Way WB On-Off Ramps	Signal	Loops
TUO	108	R	002.360		Mono Way EB On-Off Ramps	Signal	Loops
TUO	108	R	003.510		Hess Ave EB On-Off Ramps	Signal	Loops
TUO	108	R	004.078	E	Sonora Bypass	TMS	Loops
TUO	108	R	004.078	W	Sonora Bypass	TMS	Loops
TUO	108	T	004.271	E	W/O Peaceful Oak Rd	TMS	Loops
TUO	108	T	004.271	E	Off Ramp to Peaceful Oak Rd	TMS	Loops
TUO	108	T	004.271	W	W/O Peaceful Oak Rd	TMS	Loops
TUO	108	T	004.271	W	On Ramp from Peaceful Oak Rd	TMS	Loops
TUO	108		004.330		Route 108 (Peaceful Oak) @ Standard	Signal	Loops
TUO	108	R	004.590		Peaceful Oak (End of bypass)	Signal	Loops
TUO	108		004.684	E	W/O Seaborn Rd	TMS	Loops
TUO	108		004.684	W	W/O Seaborn Rd	TMS	Loops
TUO	108	R	005.210		Bergel WB On-Off Ramps	Signal	Loops
TUO	108	R	005.480		Mono Way - Upper	Signal	Loops
TUO	108		005.567	W	W/O Via Este Rd	TMS	Loops
TUO	108		005.567	E	W/O Via Este Rd	TMS	Loops
TUO	108		006.960	E	Sunshine Drive	EMS	N/A
TUO	108		007.000	E	Soulsbyville Rd	CMS	N/A
TUO	108		007.510		Soulsbyville Road	Signal	Loops
TUO	108		007.600		Soulsbyville Rd	HAR	N/A
TUO	108		009.400	W	Twain Hart	EMS	N/A
TUO	108	R	009.413	E	W/O Twain Harte Rd	TMS	Loops
TUO	108	R	009.413	W	W/O Twain Harte Rd	TMS	Loops

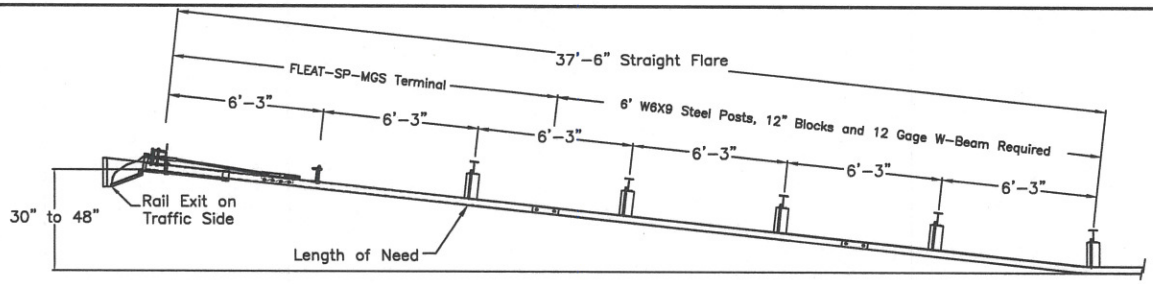

PLAN

TRAFFIC

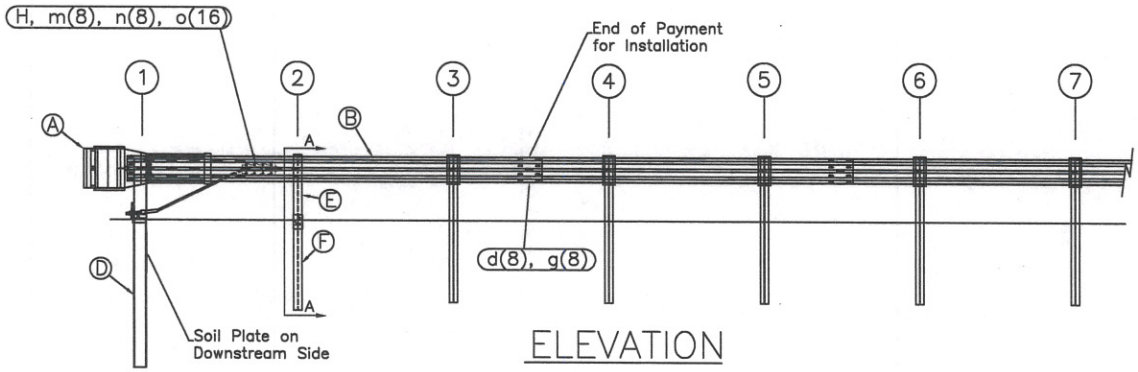

ELEVATION

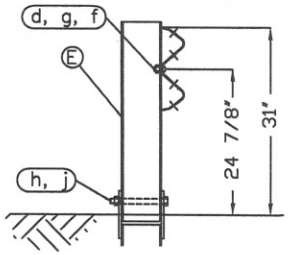

SECTION A-A
Post #2

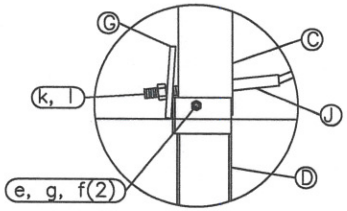

Post #1 Connection Detail

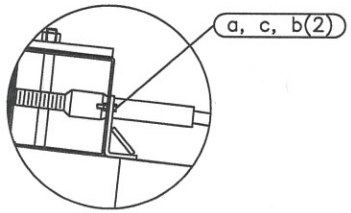

Impact Head Connection Detail

ITEM	QTY	BILL OF MATERIALS	ITEM NO.
A	1	IMPACT HEAD	F3000
B	1	W-BEAM GUARDRAIL END SECTION, 12 Ga.	MGS-SF1303
C	1	FIRST POST TOP (6X6X⅛" Tube)	TPHP1A
D	1	FIRST POST BOTTOM (6' W6X15)	TPHP1B
E	1	SECOND POST ASSEMBLY TOP	UHP2A
F	1	SECOND POST ASSEMBLY BOTTOM	HP3B
G	1	BEARING PLATE	E750
H	1	CABLE ANCHOR BOX	S760
J	1	BCT CABLE ANCHOR ASSEMBLY	E770
		HARDWARE (ALL DIMENSIONS IN INCHES)	
a	2	5/16 x 1 HEX BOLT GRD 5	B5160104A
b	4	5/16 WASHER	W0516
c	2	5/16 HEX NUT	N0516
d	9	5/8 Dia. x 1 1/4 SPLICE BOLT (POST #2)	B580122
e	1	5/8 Dia. x 9 HEX BOLT GRD 5	B580904A
f	3	5/8 WASHER	W050
g	10	5/8 Dia. H.G.R NUT	N050
h	1	3/4 Dia. x 8 1/2 HEX BOLT GRD A449	B340854A
j	1	3/4 Dia. HEX NUT	N030
k	2	1 ANCHOR CABLE HEX NUT	N100
l	2	1 ANCHOR CABLE WASHER	W100
m	8	CABLE ANCHOR BOX SHOULDER BOLT	SB58A
n	8	1/2 A325 STRUCTURAL NUT	N055A
o	16	1 1/16 OD x 9/16 ID A325 STR. WASHER	W050A

GENERAL NOTES:
1. All bolts, nuts, cable assemblies, cable anchors and bearing plates shall be galvanized.
2. The lower sections of the Posts 1&2 shall not protrude more than 4 in above the ground (measured along a 5' cord). Site grading may be necessary to meet this requirement.
3. The lower sections of the hinged posts should not be driven with the upper post attached. If the post is placed in a drilled hole, the backfill material must be satisfactorily compacted to prevent settlement.
4. When competent rock is encountered, a 12" Ø post hole, 20 in. deep cored into the rock surface may be used if approved by the engineer for post 1. Granular material will be placed in the bottom of the hole, approximately 2.5" deep to provide drainage. The first post can be field cut to length, placed in the hole and backfilled with suitable backfill. The soil plate may be trimmed if required.
5. The breakaway cable assembly must be taut. A locking device (vice grips or channel lock pliers) should be used to prevent the cable from twisting when tightening nuts.

RSI
Road Systems, Inc.
Big Spring, TX
Phone: 432-263-2435
or Phone: 330-346-0721

FLEAT-SP-MGS Terminal
Midwest Guardrail System
31" Top of Rail

Sheet: 1
Date: 02/24/10
By: JRR
Drawing Name: FLT-SP-S-MGS
Scale: None
Rev: 0

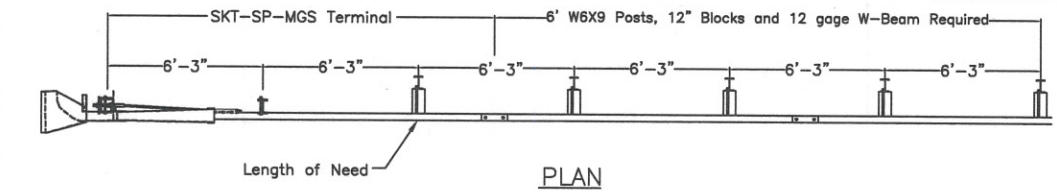

PLAN

TRAFFIC

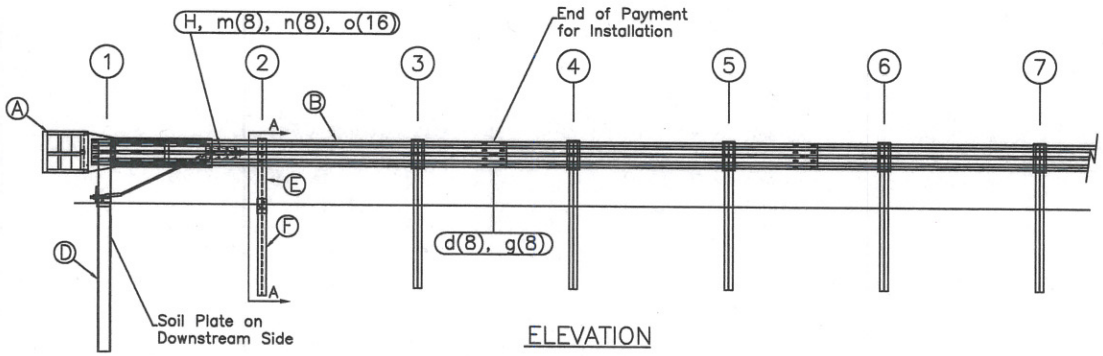

ELEVATION

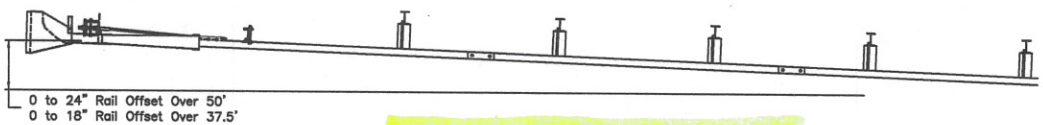

OPTIONAL FLARED INSTALLATION

25:1 maximum flare rate

ITEM	QTY	BILL OF MATERIALS	ITEM NO.
A	1	IMPACT HEAD	S3000
B	1	W-BEAM GUARDRAIL END SECTION, 12 Ga.	MGS-SF1303
C	1	FIRST POST TOP (6X6X¼" Tube)	TPHP1A
D	1	FIRST POST BOTTOM (6' W6X15)	TPHP1B
E	1	SECOND POST ASSEMBLY TOP	UHP2A
F	1	SECOND POST ASSEMBLY BOTTOM	HP3B
G	1	BEARING PLATE	E750
H	1	CABLE ANCHOR BOX	S760
J	1	BCT CABLE ANCHOR ASSEMBLY	E770
		HARDWARE (ALL DIMENSIONS IN INCHES)	
a	2	5/16 x 1 HEX BOLT GRD 5	B5160104A
b	4	5/16 WASHER	W0516
c	2	5/16 HEX NUT	N0516
d	9	5/8 Dia. x 1 1/4 SPLICE BOLT (POST #2)	B580122
e	1	5/8 Dia. x 9 HEX BOLT GRD 5	B580904A
f	3	5/8 WASHER	W050
g	10	5/8 Dia. H.G.R NUT	N050
h	1	3/4 Dia. x 8 1/2 HEX BOLT GRD A449	B340854A
j	1	3/4 Dia. HEX NUT	N030
k	2	1 ANCHOR CABLE HEX NUT	N100
l	2	1 ANCHOR CABLE WASHER	W100
m	8	CABLE ANCHOR BOX SHOULDER BOLT	SB58A
n	8	1/2 A325 STRUCTURAL NUT	N055A
o	16	1 1/16 OD x 9/16 ID A325 STR. WASHER	W050A

GENERAL NOTES:

1. All bolts, nuts, cable assemblies, cable anchors and bearing plates shall be galvanized.
2. The lower sections of the Posts 1&2 shall not protrude more than 4 in above the ground (measured along a 5' cord). Site grading may be necessary to meet this requirement.
3. The lower sections of the hinged posts should not be driven with the upper post attached. If the post is placed in a drilled hole, the backfill material must be satisfactorily compacted to prevent settlement.
4. When competent rock is encountered, a 12" Ø post hole, 20 in. deep cored into the rock surface may be used if approved by the engineer for post 1. Granular material will be placed in the bottom of the hole, approximately 2.5" deep to provide drainage. The first post can be field cut to length, placed in the hole and backfilled with suitable backfill. The soil plate may be trimmed if required.
5. A site evaluation should be considered if there is less than 25' between the outlet side of the terminal and any adjacent driving lane.
6. The breakaway cable assembly must be taut. A locking device (vice grips or channel lock pliers) should be used to prevent the cable from twisting when tightening nuts.

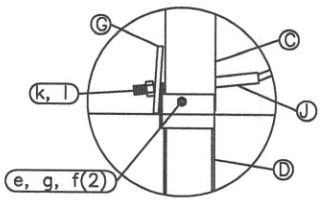

Post #1 Connection Detail

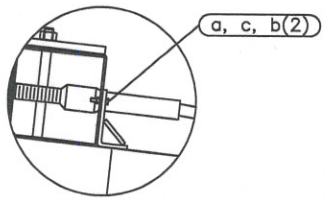

Impact Head Connection Detail

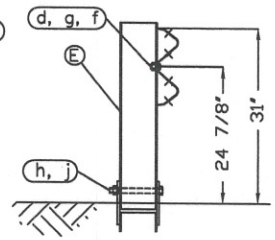

SECTION A-A
Post #2

RSI
Road Systems, Inc.
Big Spring, TX
Phone: 432-263-2435
or Phone: 330-346-0721

SKT-SP-MGS Terminal
Midwest Guardrail System
31" Top of Rail

Sheet:	Date:	By:
1	02/24/10	JRR

Drawing Name:	Scale:	Rev:
SKT-SP-S-MGS	None	0

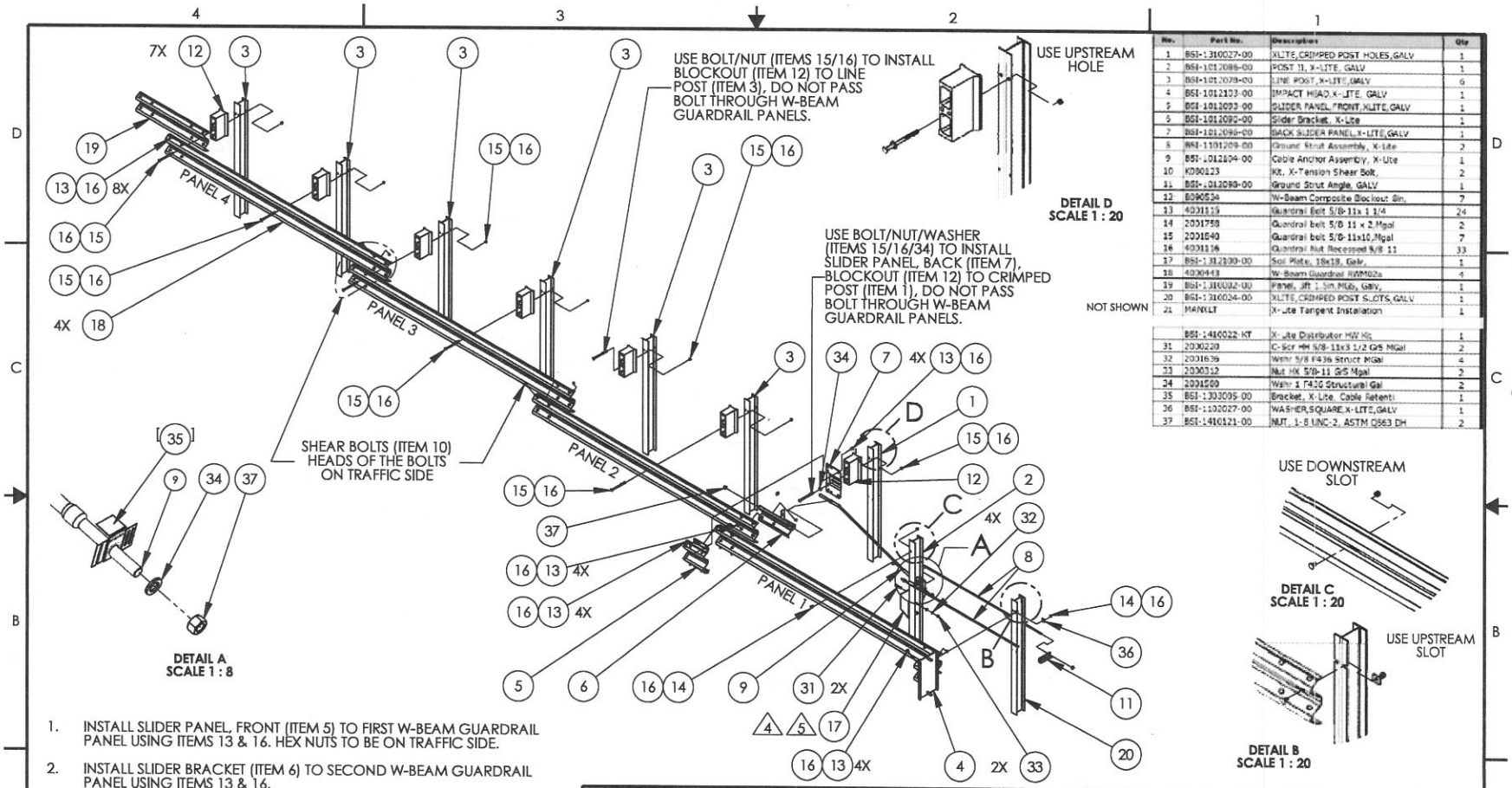

No.	Part No.	Description	Qty
1	BSI-1310027-00	XLTE,CRIMPED POST HOLES,GALV	1
2	BSI-1012086-00	POST 11, X-LITE, GALV	1
3	BSI-1012078-00	LINE POST,X-LITE,GALV	6
4	BSI-1012103-00	IMPACT HEAD,X-LITE, GALV	1
5	BSI-1012093-00	SLIDER PANEL,FRONT,XLITE,GALV	1
6	BSI-1012092-00	Slider Bracket, X-Lite	1
7	BSI-1012096-00	BACK SLIDER PANEL,X-LITE,GALV	1
8	BSI-1101209-00	Ground Strut Assembly, X-Lite	2
9	BSI-1012104-00	Cable Anchor Assembly, X-Lite	1
10	K080123	Kit, X-Tension Shear Bolt,	2
11	BSI-1012098-00	Ground Strut Angle, GALV	1
12	B090534	W-Beam Composite Blockout Sin,	7
13	4001119	Guardrail Bolt 5/8-11x 1 1/4	24
14	2001758	Guardrail bolt 5/8 11 x 2 Mgal	2
15	2001640	Guardrail bolt 5/8-11x10,Mgal	7
16	4001136	Guardrail Nut Recessed 5/8 11	33
17	BSI-1312030-00	Soil Plate, 18x18, Galv,	1
18	4000443	W-Beam Guardrail RWM02a	4
19	BSI-1310002-00	Panel, 3ft : 3in MGb, Galv,	1
20	BSI-1310024-00	XLTE,CRIMPED POST SLOTS,GALV	1
NOT SHOWN 21	MANXLT	X-Lite Tangent Installation	1
	BSI-1410022-KT	X-Lite Distributor MW Kit	1
31	2000220	C-Scr HH 5/8-11x3 1/2 GrS MGal	2
32	2001639	Washr 5/8 F436 Struct MGal	4
33	2000312	Nut HX 5/8-11 GrS Mgal	2
34	2001500	Washr 1 F436 Structural Gal	2
35	BSI-1303095-00	Bracket, X-Lite, Cable Retenti	1
36	BSI-1102027-00	WASHER,SQUARE,X-LITE,GALV	1
37	BSI-1410121-00	NUT, 1-8 UNC-2, ASTM D563 DH	2

1. INSTALL SLIDER PANEL, FRONT (ITEM 5) TO FIRST W-BEAM GUARDRAIL PANEL USING ITEMS 13 & 16. HEX NUTS TO BE ON TRAFFIC SIDE.
2. INSTALL SLIDER BRACKET (ITEM 6) TO SECOND W-BEAM GUARDRAIL PANEL USING ITEMS 13 & 16.
3. AFTER STEPS 1 & 2 SECURE FIRST AND SECOND W-BEAM GUARDRAIL PANEL USING ITEMS 7, 13 & 16. HEX NUTS TO BE ON TRAFFIC SIDE.
4. IF ROCK OR STIFF SOIL IS ENCOUNTERED, THE POST AND SOIL PLATE MAY BE INSTALLED BY AUGERING AND BACKFILLING THE HOLE. EXTRA CARE MUST BE TAKEN TO PREVENT SETTLEMENT OR LATERAL DISPLACEMENT OF THE POST. BACKFILL MATERIAL SHALL BE COMPACTED TO OPTIMUM COMPACTION.
5. IF ROCK IS ENCOUNTERED, THE SOIL PLATE MAY BE MODIFIED IF APPROVED BY THE PROJECT ENGINEER.

© 2010 BARRIER SYSTEMS INC. THE INFORMATION CONTAINED IN THIS DRAWING IS THE SOLE PROPERTY OF BARRIER SYSTEMS INC. ANY REPRODUCTION IN PART OR WHOLE WITHOUT THE WRITTEN PERMISSION OF BARRIER SYSTEMS INC. IS PROHIBITED.

APPROVALS

DRAWN BY:	JMT
DRAWN DATE:	09/25/14
APPR'D BY:	JAF
APPR'D DATE:	09/29/14

UNLESS OTHERWISE SPECIFIED DIMENSIONS ARE IN INCHES. TOLERANCES ARE: FRACTIONS ±1/16 DECIMAL .XX = ±.03 .XXX = ±.010 ANGLES ±1/2°

INTERPRET DIMENSIONS AND TOLERANCES PER ASME Y14.5-1994

THIRD ANGLE PROJECTION

DO NOT SCALE DRAWING

REV	ECN#	DATE
B	2540	12/08/14
A	2444	09/25/14

LINDSAY TRANSPORTATION SOLUTIONS

BARRIER SYSTEMS
180 River Road
Rio Vista, CA 94571
Tel: 888-800-3691
www.barriersystemsinc.com

TITLE: **X-LITE TANGENT, 50 FT TRANSITION TO MGS WITH 37 1/2" PANEL**

SIZE: B | DWG NO.: XLTSUS-MGS50S | REV.: B

SCALE: 1:48 | SHEET: 1 OF 2

Doc. B100108

Appendix A - System Configuration, 37' 6" MGS

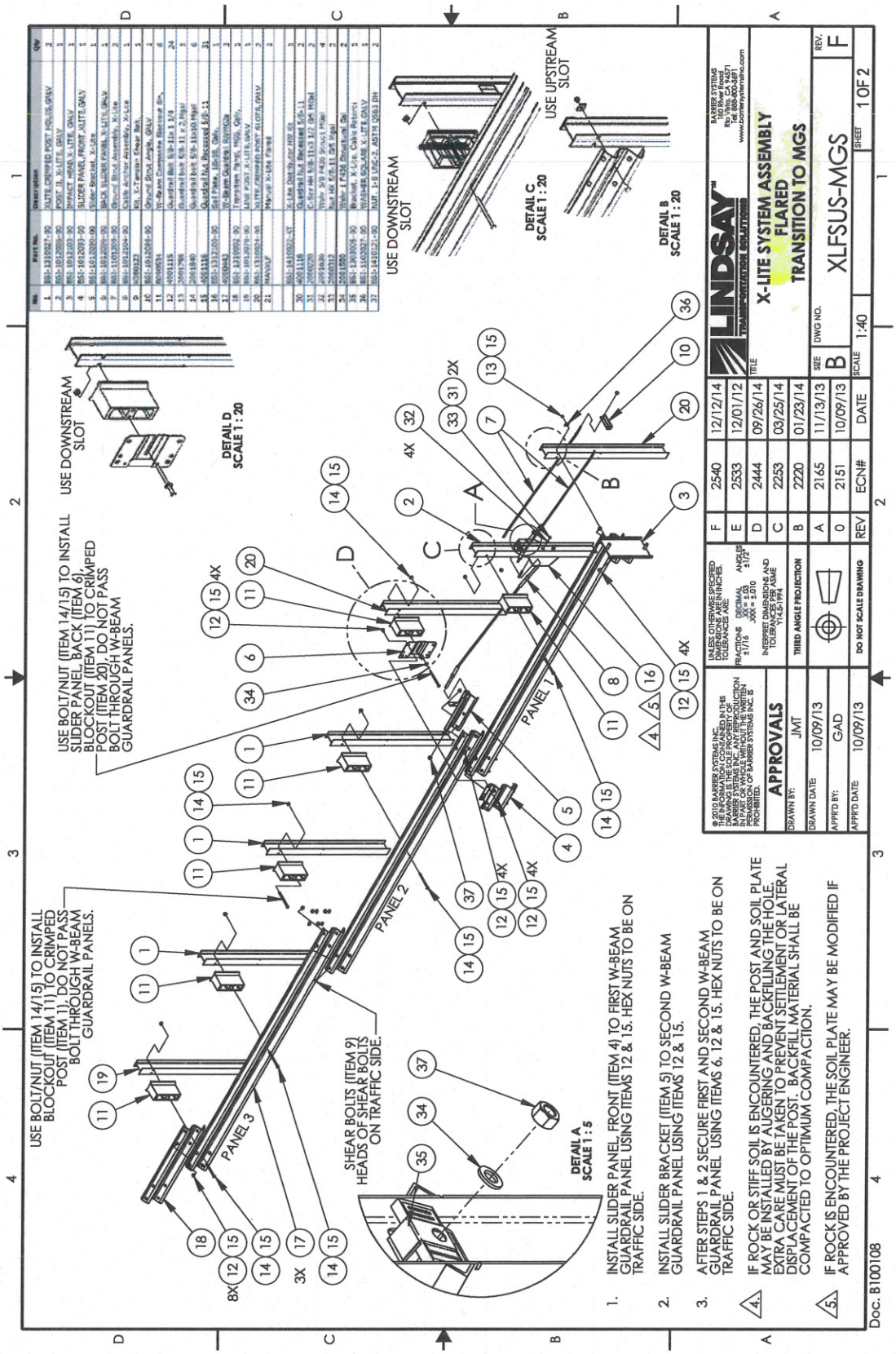

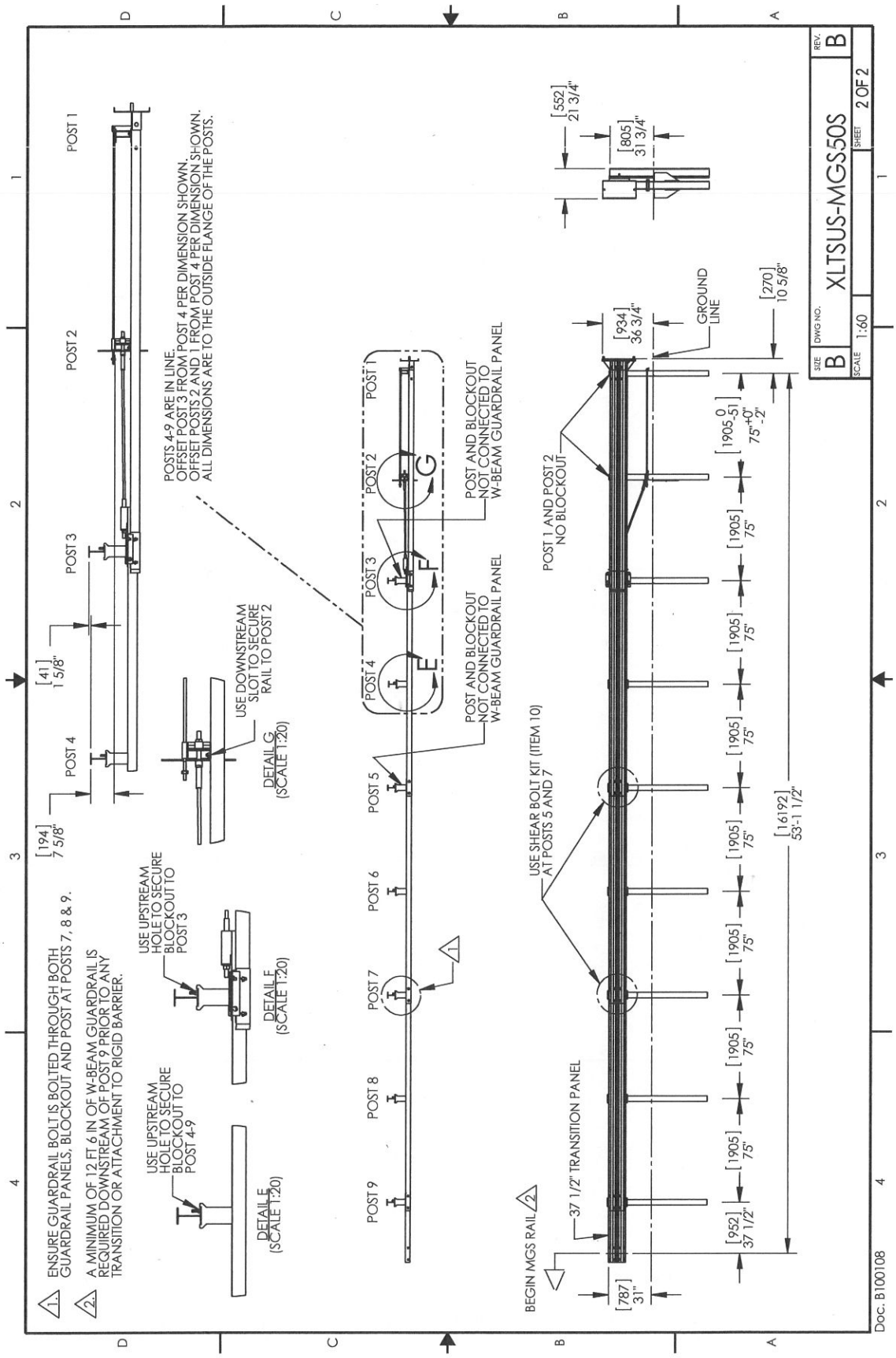
1. ENSURE GUARDRAIL BOLT IS BOLTED THROUGH BOTH GUARDRAIL PANELS, BLOCKOUT AND POST AT POSTS 7, 8 & 9.
2. A MINIMUM OF 12 FT 6 IN OF W-BEAM GUARDRAIL IS REQUIRED DOWNSTREAM OF POST 9 PRIOR TO ANY TRANSITION OR ATTACHMENT TO RIGID BARRIER.
POST 1
POST 2
POST 3
POST 4
[194] 7 5/8"
[41] 1 5/8"
POSTS 4-9 ARE IN LINE.
OFFSET POST 3 FROM POST 4 PER DIMENSION SHOWN.
OFFSET POSTS 2 AND 1 FROM POST 4 PER DIMENSION SHOWN.
ALL DIMENSIONS ARE TO THE OUTSIDE FLANGE OF THE POSTS.
USE DOWNSTREAM SLOT TO SECURE RAIL TO POST 2
DETAIL G (SCALE 1:20)
USE UPSTREAM HOLE TO SECURE BLOCKOUT TO POST 3
DETAIL F (SCALE 1:20)
USE UPSTREAM HOLE TO SECURE BLOCKOUT TO POST 4-9
DETAIL E (SCALE 1:20)
POST 5
POST 6
POST 7
POST 8
POST 9
POST AND BLOCKOUT NOT CONNECTED TO W-BEAM GUARDRAIL PANEL
POST AND BLOCKOUT NOT CONNECTED TO W-BEAM GUARDRAIL PANEL
[552] 21 3/4"
[805] 31 3/4"
[934] 36 3/4"
GROUND LINE
[270] 10 5/8"
POST 1 AND POST 2 NO BLOCKOUT
[1905 0 -51] 75" +0" -2"
[1905] 75"
USE SHEAR BOLT KIT (ITEM 10) AT POSTS 5 AND 7
[16192] 53'-1 1/2"
37 1/2" TRANSITION PANEL
BEGIN MGS RAIL
[787] 31"
[952] 37 1/2"
SIZE B
DWG NO. XLTSUS-MGS50S
REV. B
SCALE 1:60
SHEET 2 OF 2
Doc. B100108

Appendix A - System Configuration, 37' 6" MGS

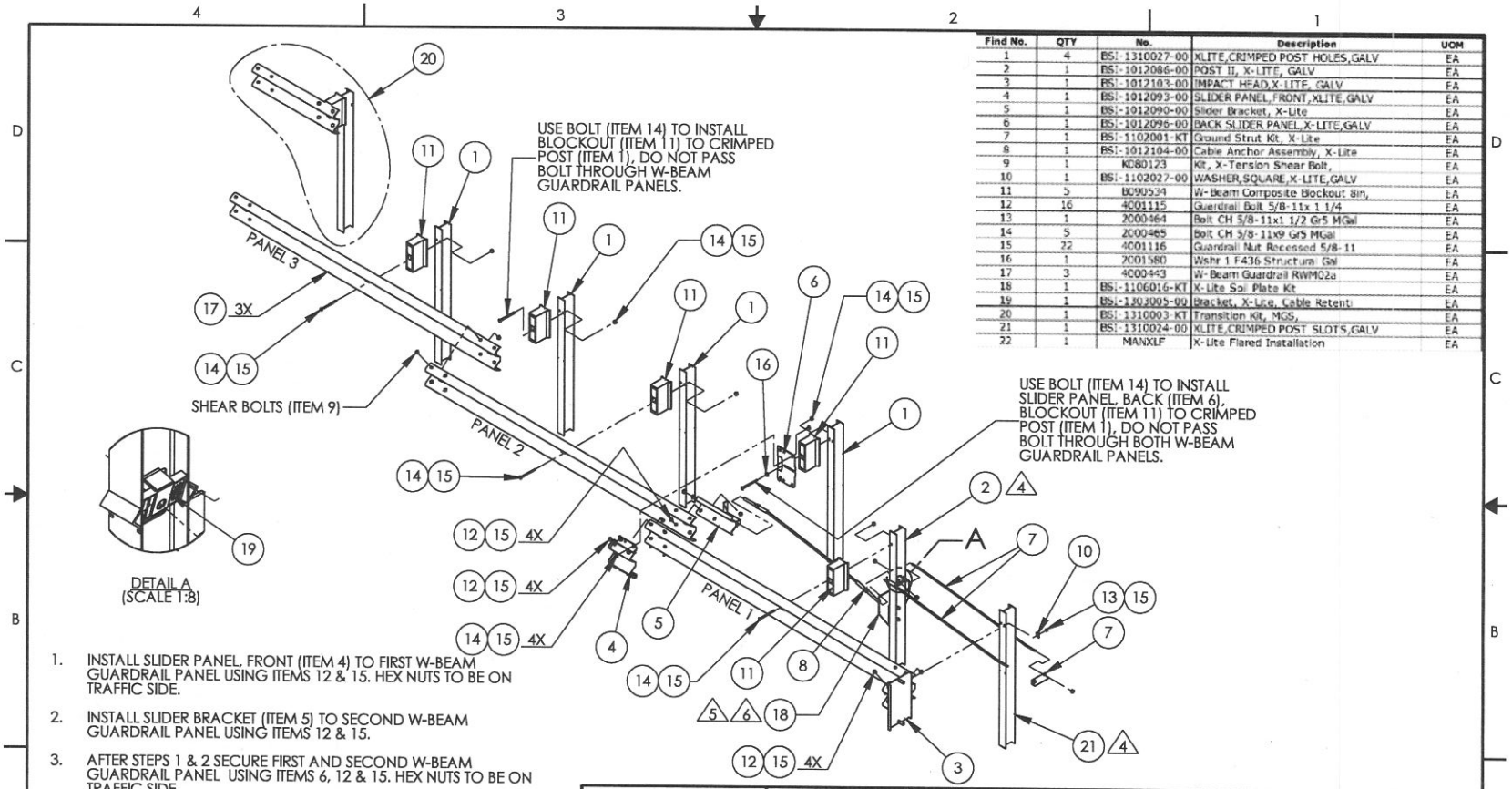

Find No.	QTY	No.	Description	UOM
1	4	BSI-1310027-00	XLITE,CRIMPED POST HOLES,GALV	EA
2	1	BSI-1012086-00	POST II, X-LITE, GALV	EA
3	1	BSI-1012103-00	IMPACT HEAD,X-LITE, GALV	EA
4	1	BSI-1012093-00	SLIDER PANEL,FRONT,XLITE,GALV	EA
5	1	BSI-1012090-00	Slider Bracket, X-Lite	EA
6	1	BSI-1012096-00	BACK SLIDER PANEL,X-LITE,GALV	EA
7	1	BSI-1102001-KT	Ground Strut Kit, X-Lite	EA
8	1	BSI-1012104-00	Cable Anchor Assembly, X-Lite	EA
9	1	K080123	Kit, X-Tension Shear Bolt,	EA
10	1	BSI-1102027-00	WASHER,SQUARE,X-LITE,GALV	EA
11	5	B090534	W-Beam Composite Blockout 8in,	EA
12	16	4001115	Guardrail Bolt 5/8-11x 1 1/4	EA
13	1	2000464	Bolt CH 5/8-11x1 1/2 Gr5 MGal	EA
14	5	2000465	Bolt CH 5/8-11x9 Gr5 MGal	EA
15	22	4001116	Guardrail Nut Recessed 5/8-11	EA
16	1	2001580	Wshr 1 F436 Structural Gal	EA
17	3	4000443	W-Beam Guardrail RWM02a	EA
18	1	BSI-1106016-KT	X-Lite Soil Plate Kit	EA
19	1	BSI-1303005-00	Bracket, X-Lite, Cable Retenti	EA
20	1	BSI-1310003-KT	Transition Kit, MGS,	EA
21	1	BSI-1310024-00	XLITE,CRIMPED POST SLOTS,GALV	EA
22	1	MANXLF	X-Lite Flared Installation	EA

1. INSTALL SLIDER PANEL, FRONT (ITEM 4) TO FIRST W-BEAM GUARDRAIL PANEL USING ITEMS 12 & 15. HEX NUTS TO BE ON TRAFFIC SIDE.
2. INSTALL SLIDER BRACKET (ITEM 5) TO SECOND W-BEAM GUARDRAIL PANEL USING ITEMS 12 & 15.
3. AFTER STEPS 1 & 2 SECURE FIRST AND SECOND W-BEAM GUARDRAIL PANEL USING ITEMS 6, 12 & 15. HEX NUTS TO BE ON TRAFFIC SIDE.

4. SLOTS ON POSTS 1 AND 2 TO FACE GUARDRAIL PANEL.

5. IF ROCK OR STIFF SOIL IS ENCOUNTERED, THE POST AND SOIL PLATE MAY BE INSTALLED BY AUGERING AND BACKFILLING THE HOLE. EXTRA CARE MUST BE TAKEN TO PREVENT SETTLEMENT OR LATERAL DISPLACEMENT OF THE POST. BACKFILL MATERIAL SHALL BE COMPACTED TO OPTIMUM COMPACTION.

6. IF ROCK IS ENCOUNTERED, THE SOIL PLATE MAY BE MODIFIED IF APPROVED BY THE PROJECT ENGINEER.

© 2010 BARRIER SYSTEMS INC. THE INFORMATION CONTAINED IN THIS DRAWING IS THE SOLE PROPERTY OF BARRIER SYSTEMS INC. ANY REPRODUCTION IN PART OR WHOLE WITHOUT THE WRITTEN PERMISSION OF BARRIER SYSTEMS INC. IS PROHIBITED.

APPROVALS

DRAWN BY:	JMT
DRAWN DATE:	10/09/2013
APPR'D BY:	GAD
APPR'D DATE:	10/09/13

UNLESS OTHERWISE SPECIFIED DIMENSIONS ARE IN INCHES. TOLERANCES ARE:
FRACTIONS ±1/16 DECIMAL .XX= ±.03 .XXX= ±.010 ANGLES ±1/2°
INTERPRET DIMENSIONS AND TOLERANCES PER ASME Y14.5-1994

THIRD ANGLE PROJECTION

DO NOT SCALE DRAWING

REV	ECN#	DATE
B	2220	01/23/14
A	2165	11/13/13
0	2151	10/09/13

BARRIER SYSTEMS — A LINDSAY TRANSPORTATION SOLUTIONS COMPANY

3333 Vaca Valley Parkway Ste 800
Vacaville, CA 95688
Tel: 888-800-3691
www.barriersystemsinc.com

TITLE: **X-LITE SYSTEM ASSEMBLY FLARED TRANSITION TO MGS**

SIZE: B | DWG NO.: XLFSUS-MGS | REV.: B

SCALE: 1:40 | SHEET: 1 OF 2

Doc. B100108

Appendix A - System Configuration, 37' 6" MGS

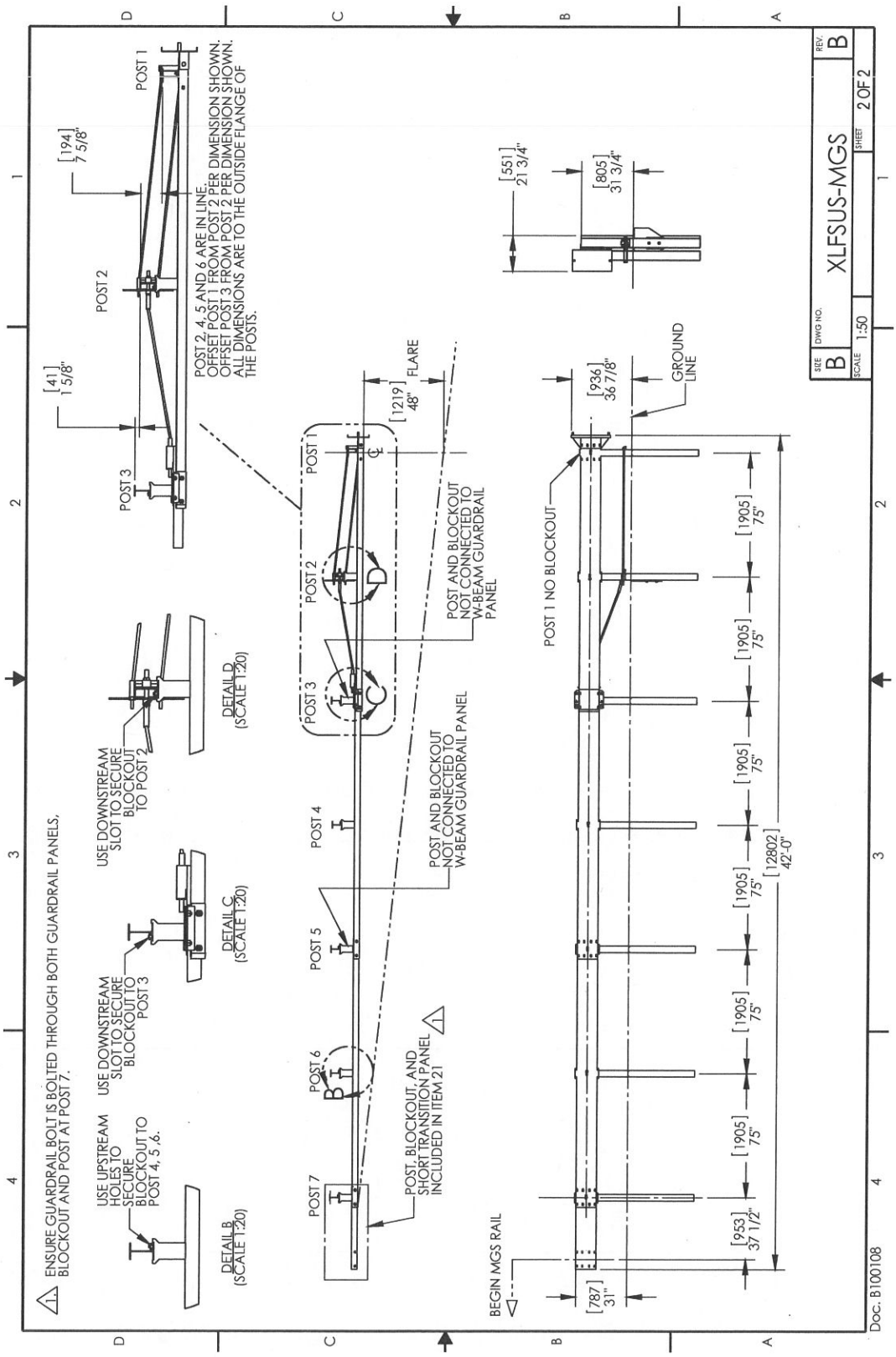

Appendix A - System Configuration, 37' 6" MGS

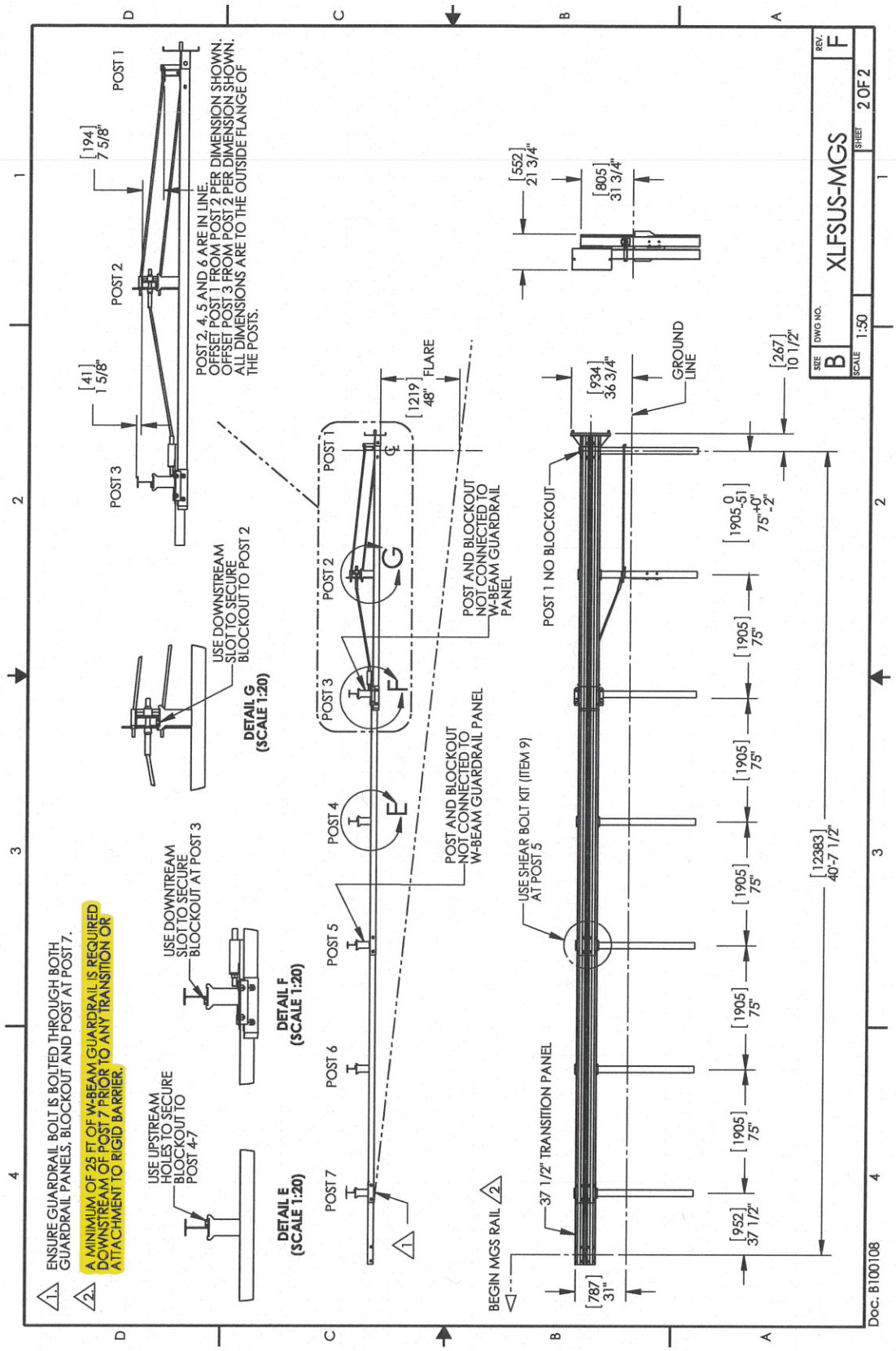

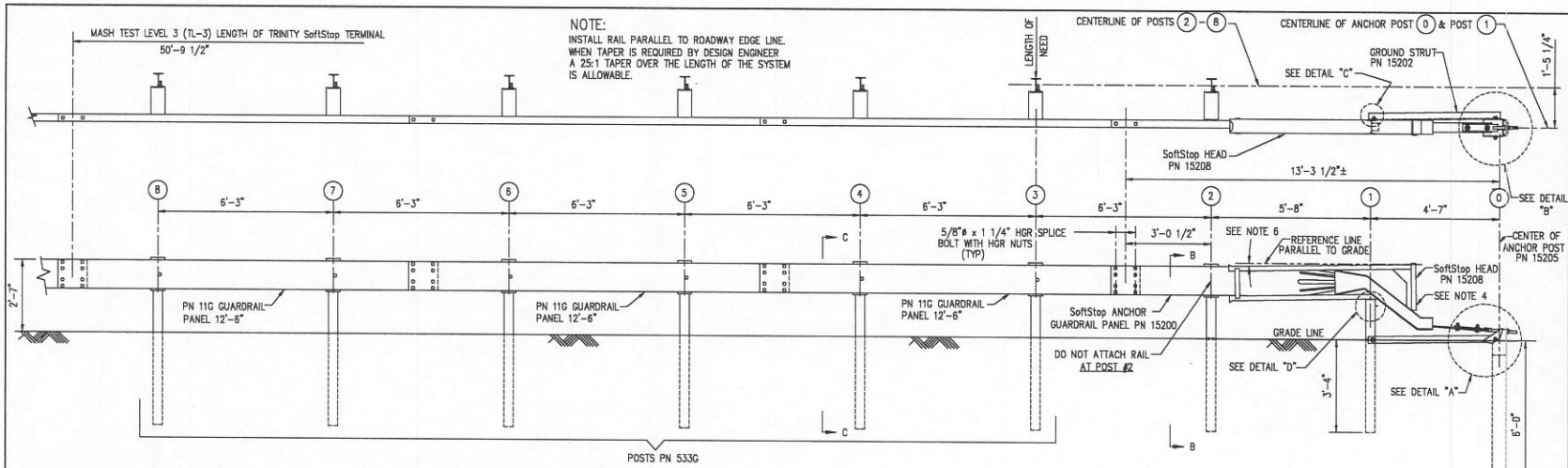

NOTE:
INSTALL RAIL PARALLEL TO ROADWAY EDGE LINE. WHEN TAPER IS REQUIRED BY DESIGN ENGINEER A 25:1 TAPER OVER THE LENGTH OF THE SYSTEM IS ALLOWABLE.

BILL OF MATERIAL			
PART NUMBER	QTY	DESCRIPTION	
11G	3	12/12'6/3'1.5/S GUARDRAIL (12GA)	
15200G	1	SoftStop ANCHOR GUARDRAIL (12GA)	
15208A	1	SoftStop HEAD	
15203G	1	POST #1 4'-9 1/2" (SYTP)	
15000G	1	POST #2 6'-0" (SYTP)	
6100B	7	OFFSET BLOCK 6 x 12 x 14	
54471G	1	GUARDRAIL ANCHOR PLATE	
15205A	1	ANCHOR POST #0	
15201G	2	ANCHOR POST ANGLE 10" LG	
15207G	1	ANCHOR KEEPER PLATE (24 GA)	
15206G	1	ANCHOR PLATE WASHER (1/2"THK)	
15202G	1	GROUND STRUT x 4'-8 1/4"	
533G	6	POST #3-#8 6'-0"	
HARDWARE			GR
4902G	1	1" WASHER	F-436
3908G	1	1" HEX NUT	A563 DH
3717G	2	3/4"ø x 2 1/2" HEX HD BOLT	A-325
3701G	4	3/4" WASHER	F-436
3704G	2	3/4" HEX NUT	A563 DH
3360G	32	5/8"ø x 1 1/4" HGR SPLICE BOLT	A-307
3540G	7	5/8"ø x 14" HGR POST BOLT	A-307
3391G	1	5/8"ø x 1 3/4" HEX HD BOLT	A-325
4489G	1	5/8"ø x 9" HEX HD BOLT	A-325
4372G	4	5/8" WASHER	F-436
3340G	41	5/8" HGR HEX NUT	A563 A
105285G	2	5/16"ø x 2 1/2" HEX HD BOLT	GR-5
105286G	1	5/16"ø x 1 1/2" HEX HD BOLT	GR-5
118352G	1	1"ø x 12" ALL THREAD ROD	A193 B7
3240G	6	5/16" WASHER	
3245G	3	5/16" HEX NUT	A563 A

NOTES:
1) REFER TO SoftStop ASSEMBLY MANUAL.
2) SoftStop IS A MASH TEST LEVEL 3 (TL-3) END TREATMENT.
3) 12" NOMINAL DEEP PLASTIC OFFSET BLOCKS (ROUTED) ARE ACCEPTABLE ALTERNATES.
4) MANUFACTURER SUGGESTS CUSTOMER TO PROVIDE REFLECTORIZATION OF THE TERMINAL.
5) 25' GUARDRAIL PANELS (12GA) ARE AN ACCEPTABLE ALTERNATE TO SHOWN 12'-6" PANELS.
6) IT IS ACCEPTABLE TO INSTALL THE SoftStop HEAD PARALLEL TO THE GRADE LINE OR WITH AN UPWARD TILT. SEE SoftStop ASSEMBLY MANUAL FOR SPECIFIC DETAILS.

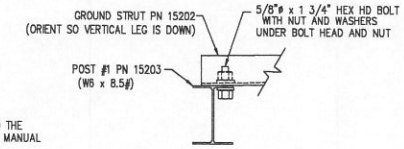

DETAIL "C"
(POST #1, SHOWN NEAR GROUND)

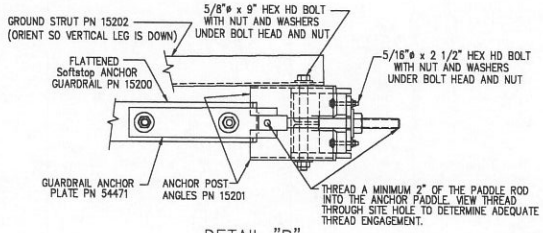

DETAIL "B"
(AT ANCHOR POST #0)

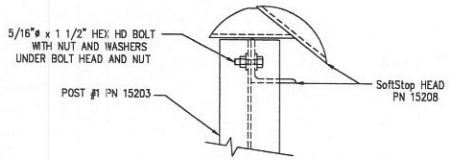

DETAIL "D"
(POST #1)

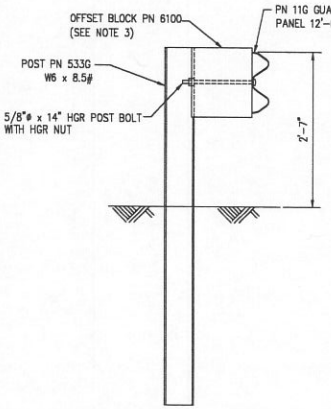

SECTION "C-C"
(POSTS #3 -#8)

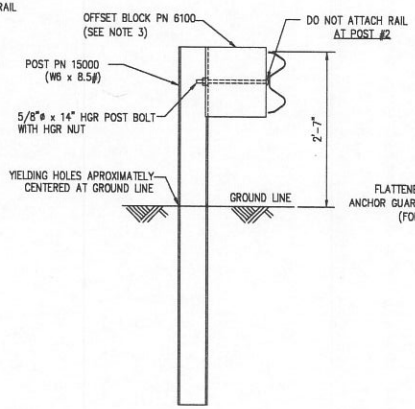

SECTION "B-B"
(POST #2)

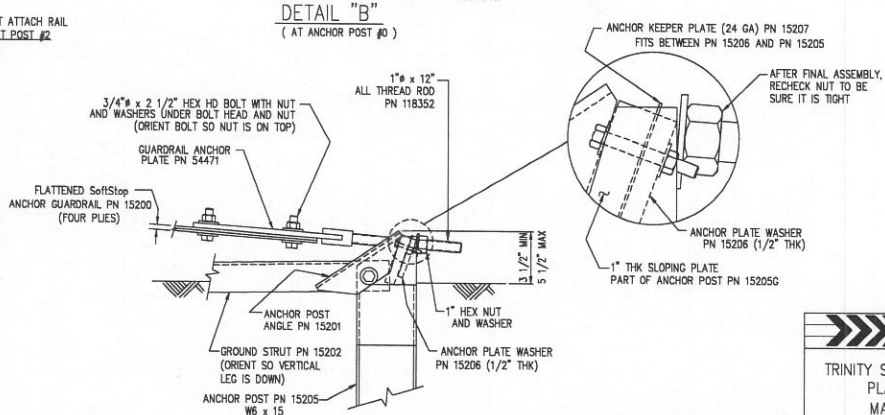

DETAIL "A"
(AT ANCHOR POST #0)

The drawings and the information shown thereon are copyrighted by Trinity Highway Products (2012) and the sole property of Trinity Highway Products. Neither the drawings nor such information is to be used for any purpose other than that which it was specifically furnished from Trinity Highway Products LLC, nor is any reproduction authorized without written permission.

SoftStop

TRINITY SoftStop TERMINAL (12" BLOCKS)
PLAN, ELEVATION & SECTION
MASH TEST LEVEL 3 (TL-3)

TRINITY HIGHWAY PRODUCTS, LLC.
2525 STEMMONS FREEWAY
DALLAS, TX 75207

DRAWN	BT
CHECKED	BS
SCALE	N.T.S.
DATE	01/10/12
ENG. FILE #	SS 645-01EM
SHT.No.	E1 OF 1
DRAWING NO.	SS 645