Dist	COUNTY	ROUTE	POST MILES TOTAL PROJECT	SHEET No.	TOTAL SHEETS
10	Sta	99	R11.7/R15.0	18	60

REGISTERED ELECTRICAL ENGINEER 9/30/15 DATE

10-5-15
PLANS APPROVAL DATE

REGISTERED PROFESSIONAL ENGINEER JASPAL SINGH No. 16657 Exp. 6/30/16 ELECTRICAL STATE OF CALIFORNIA

THE STATE OF CALIFORNIA OR ITS OFFICERS OR AGENTS SHALL NOT BE RESPONSIBLE FOR THE ACCURACY OR COMPLETENESS OF SCANNED COPIES OF THIS PLAN SHEET.

LEGEND:

1 RS Exist 120/240 V, 1Ø, 3-WIRE, TYPE III-AF SERVICE EQUIPMENT ENCLOSURE.

2 120/240 V, 1Ø, 3-WIRE, TYPE III-AF SERVICE EQUIPMENT ENCLOSURE WITH THE FOLLOWING CIRCUIT BREAKERS:

Ctid No. AS SHOWN ON THE PLAN

AMPERES	VOLTS	POLES	NAMEPLATE	METER	PHOTOELECTRIC CONTROL TYPE
100	240	2	MAIN BREAKER	YES	-
30	240	2	LIGHTING (Ckt-1)	YES	- 24
20	240	2	LIGHTING (Ckt-2)	YES	- 24
15	120	1	LIGHTING CONTROL	YES	V
20	240	2	LIGHTING (RAMP)	YES	-
15	120	1	LIGHTING CONTROL	YES	V
			2-SPACE	YES	-

USE Exist FOUNDATION FOR INSTALLATION OF NEW SERVICE EQUIPMENT ENCLOSURE.

3 120/240 V, 1Ø, 3-WIRE, TYPE III-AF SERVICE EQUIPMENT ENCLOSURE WITH THE FOLLOWING CIRCUIT BREAKERS:

Ctid No. AS SHOWN ON THE PLAN

AMPERES	VOLTS	POLES	NAMEPLATE	METER	PHOTOELECTRIC CONTROL TYPE
100	240	2	MAIN BREAKER	YES	-
20	240	2	LIGHTING (Ckt -1)	YES	- 24
20	240	2	LIGHTING (Ckt-2)	YES	- 24
15	120	1	LIGHTING CONTROL	YES	V
30	240	2	SPARE	YES	-
			4-SPACE	YES	-

4 Exist 120/240 V, 1Ø, 3-WIRE, TYPE III-AF SERVICE EQUIPMENT ENCLOSURE WITH THE FOLLOWING CIRCUIT BREAKERS:

Ctid No. 1038099X013741L

AMPERES	VOLTS	POLES	NAMEPLATE	METER	PHOTOELECTRIC CONTROL TYPE
100	240	2	MAIN BREAKER	YES	-
20	240	2	LIGHTING	YES	- 20 24
20	240	2	FUTURE LIGHTING	YES	- 21 24
15	120	1	LIGHTING CONTROL	YES	V
15	120	1	TMS	YES	-
15	120	1	SPARE	YES	-
15	120	1	SPARE	YES	-

5 120/240 V, 1Ø, 3-WIRE, TYPE III-DF SERVICE EQUIPMENT ENCLOSURE WITH THE FOLLOWING CIRCUIT BREAKERS:

Ctid No. AS SHOWN ON THE PLAN

AMPERES	VOLTS	POLES	NAMEPLATE	METER	PHOTOELECTRIC CONTROL TYPE
100	240	2	MAIN BREAKER	YES	-
60	240	2	TRANSFORMER PRIMARY	YES	-
30	480	2	TRANSFORMER SECONDARY	YES	-
20	480	2	LIGHTING (Ckt-1)	YES	-
15	240	2	LIGHTING CONTROL	YES	V
20	240	2	LIGHTING (RAMP)	YES	-
15	120	1	LIGHTING CONTROL	YES	V
			2-SPACE	YES	-

6 RC Exist TYPE III PEU INSTALLATION.

7 RS Exist TYPE A SERVICE INSTALLATION.

8 Exist 2"C, 2#8, RC 2#8 ADD 2#1/0, 1#4(G) (Ltg Ckt-1), 2#2, 1#6 (G) (Ltg Ckt-2), 2#6 (Ltg RAMP)

9 3"C, 2#1/0, 1#4(G) (Ltg Ckt-1), 2#2, 1#6 (G) (Ltg Ckt-2)

10 2"C, 2#1/0, 1#4(G) (Ltg Ckt-1)

11 2"C, 2#2, 1#6(G) (Ltg Ckt-2)

12 2"C, 4#4 (TO TRANSFORMER Pri/ Sec), 1#6(G)

13 INSTALL 40' WOOD POLE WITH TYPE H SERVICE PER TID REQUIREMENTS.

14 3"C, 4#2 (Ltg Ckt-1&2), 1#6 (G)

15 2"C, 2#2 (Ltg Ckt-1), 1#6 (G)

16 2"C, 2#2 (Ltg Ckt-2), 1#6 (G)

17 2"C, 3#1/0.

18 COIL 40' OF CONDUCTORS IN THE PB.

19 Exist 2"C, 2#8 (TMS), 2#8 (Ltg), RC 2#8 (Ltg), INSTALL 4#2 (Ltg Ckt-1&2), 1#6 (G)

20 RC Exist NAME PLATE, INSTALL "LIGHTING Ckt-1" NAME PLATE.

21 RC Exist NAME PLATE, INSTALL "LIGHTING Ckt-2" NAME PLATE.

1 22 INSTALL TYPE 15D STRUCTURE STANDARD ON THE MODIFIED CONCRETE BARRIER WiTH 12' LMA AND 235 W LED LUMINAIRES. SEE CONSTRUCTION DETAILS ON SHEETS C-1 AND C-2 AND TYPICAL CROSS SECTION ON SHEET X-1.

23 INSTALL TYPE 21D STANDARD WITH 12' LMA AND 235 W LED LUMINAIRES. SEE TYPICAL CROSS SECTION ON SHEET X-1 AND X-2.

24 LIGHTING Ckt 1&2 MUST HAVE SEPARATE 30 A CONTACTOR WIRED TO COMMON PEU.

25 10 kVA, 240/480 V, SINGLE PHASE, 60 HZ, GENERAL PURPOSE, PAD MOUNTED, OUTDOOR TYPE TRANSFORMER IN NEMA 3R ENCLOSURE. THE BASE DIMENSION FOR NEMA 3R ENCLOSURE FOR THE TRANSFORMER MUST BE PER MANUFACTURER'S DESIGN.

26 COORDINATE WITH TID FOR ALL UTILITY SERVICE CONNECTION REQUIREMENTS.

27 3"C, 2#2 (Ltg Ckt-1), 1#6 (G)

28 RC Exist TYPE A SERVICE INSTALLATION.
INSTALL 1"C, RISER WITH WEATHER HEAD AT 25' TO SERVE Exist LUMINAIRE.

29 Exist 2"C, 2#8 (Ltg RAMP)

30 Exist 1½"C, 2#8 (Ltg RAMP)

31 Exist 1"C, 2#8 (SOFFIT Ltg)

32 Exist 1½"C, (CONDUIT IN Br BARRIER)

33 3"C, 2#2 (Ltg Ckt-1), 2#6 (Ltg RAMP),1#6 (G)

34 EXPOSE THE Exist COMMUNICATION CONDUIT UNDERNEATH THE BARRIER AND CC TO NEW COMMUNICATION CONDUIT, SWEEP ANGLE MUST NOT BE LESS THEN 145 DEGREE.

35 COMMUNICATION CONDUIT, 4"C, (PT) HDPE TYPE. SEE INSTALLATION DETAIL A ON E-15.

36 2"C, 2#6 (Ltg Ckt-2), 1#8 (G)

ABBREVIATIONS:

TID - TURLOCK IRRIGATION DISTRICT
VCS - VEHICLE CLASSIFICATION STATION
HDPE - HIGH DENSITY POLYETHYLENE

SYMBOL:

STEP UP TRANSFORMER

1 **REPLACED PER ADDENDUM No. 1 DATED DECEMBER 30, 2015**

LEGEND, SYMBOLS AND ABBREVIATIONS

E-1

STATE OF CALIFORNIA - DEPARTMENT OF TRANSPORTATION
Caltrans ELECTRICAL DESIGN

FUNCTIONAL SUPERVISOR: ALI BAKHDOUD
CALCULATED-DESIGNED BY: JASPAL SINGH
CHECKED BY: PAUL MATOS
REVISED BY: JS
DATE REVISED: 09/01/15

LAST REVISION 9-1-15
DATE PLOTTED => 23-DEC-2015
TIME PLOTTED => 11:18

Dist	COUNTY	ROUTE	POST MILES TOTAL PROJECT	SHEET No.	TOTAL SHEETS
10	Sta	99	R11.7/R15.0	19	60

REGISTERED ELECTRICAL ENGINEER 9/30/15 DATE

10-5-15
PLANS APPROVAL DATE

REGISTERED PROFESSIONAL ENGINEER JASPAL SINGH No. 16657 Exp. 6/30/16 ELECTRICAL STATE OF CALIFORNIA

THE STATE OF CALIFORNIA OR ITS OFFICERS OR AGENTS SHALL NOT BE RESPONSIBLE FOR THE ACCURACY OR COMPLETENESS OF SCANNED COPIES OF THIS PLAN SHEET.

NOTES (FOR THIS SHEET ONLY):

1. SPACE TYPE 15D STRUCTURE STANDARDS 190 FEET APART.
   SEE CONSTRUCTION DETAIL SHEETS FOR STANDARD INSTALLATION.
2. ALL PULL BOXES MUST BE No. 5(T) UNLESS OTHERWISE NOTED.
3. FOR ACCURATE RIGHT OF WAY DATA, CONTACT RIGHT OF WAY ENGINEERING AT THE DISTRICT OFFICE.
4. THE LOCATIONS OF WORK ARE FLEXIBLE AND MAY BE ADJUSTED TO MITIGATE ANY CONFLICTS WITH EXISTING UTILITY FACILITIES. UTILITY INFORMATION IS INCOMPLETE.

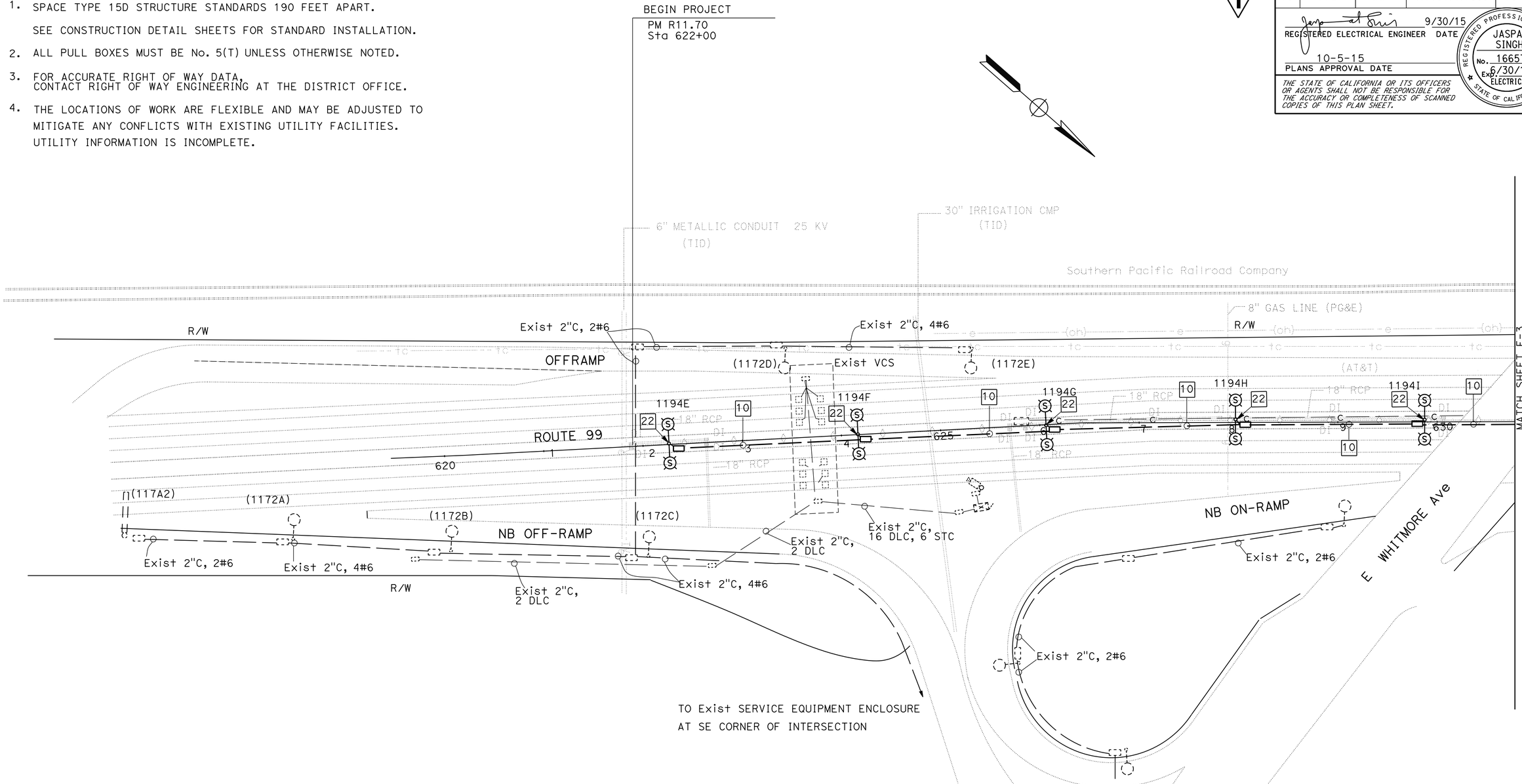

1 REPLACED PER ADDENDUM No. 1 DATED DECEMBER 30, 2015

APPROVED FOR ELECTRICAL WORK ONLY

LIGHTING

SCALE: 1" = 50'

E-2

STATE OF CALIFORNIA - DEPARTMENT OF TRANSPORTATION
Caltrans® **ELECTRICAL DESIGN**

FUNCTIONAL SUPERVISOR: ALI BAKHDOUD
CALCULATED-DESIGNED BY: JASPAL SINGH
CHECKED BY: PAUL MATOS
REVISED BY: JS
DATE REVISED: 09/16/15

LAST REVISION 9-16-15
DATE PLOTTED => 23-DEC-2015
TIME PLOTTED => 11:18

Dist	COUNTY	ROUTE	POST MILES TOTAL PROJECT	SHEET No.	TOTAL SHEETS
10	Sta	99	R11.7/R15.0	20	60

REGISTERED ELECTRICAL ENGINEER 9/30/15 DATE

10-5-15
PLANS APPROVAL DATE

REGISTERED PROFESSIONAL ENGINEER JASPAL SINGH No. 16657 Exp. 6/30/16 ELECTRICAL STATE OF CALIFORNIA

THE STATE OF CALIFORNIA OR ITS OFFICERS OR AGENTS SHALL NOT BE RESPONSIBLE FOR THE ACCURACY OR COMPLETENESS OF SCANNED COPIES OF THIS PLAN SHEET.

1

NOTES (FOR THIS SHEET ONLY):

1. SPACE TYPE 15D STRUCTURE STANDARDS 190 FEET APART. SEE CONSTRUCTION DETAIL SHEETS FOR STANDARD INSTALLATION.
2. ALL PULL BOXES MUST BE No. 5(T) UNLESS OTHERWISE NOTED.
3. FOR ACCURATE RIGHT OF WAY DATA, CONTACT RIGHT OF WAY ENGINEERING AT THE DISTRICT OFFICE.
4. THE LOCATIONS OF WORK ARE FLEXIBLE AND MAY BE ADJUSTED TO MITIGATE ANY CONFLICTS WITH EXISTING UTILITY FACILITIES. UTILITY INFORMATION IS INCOMPLETE.

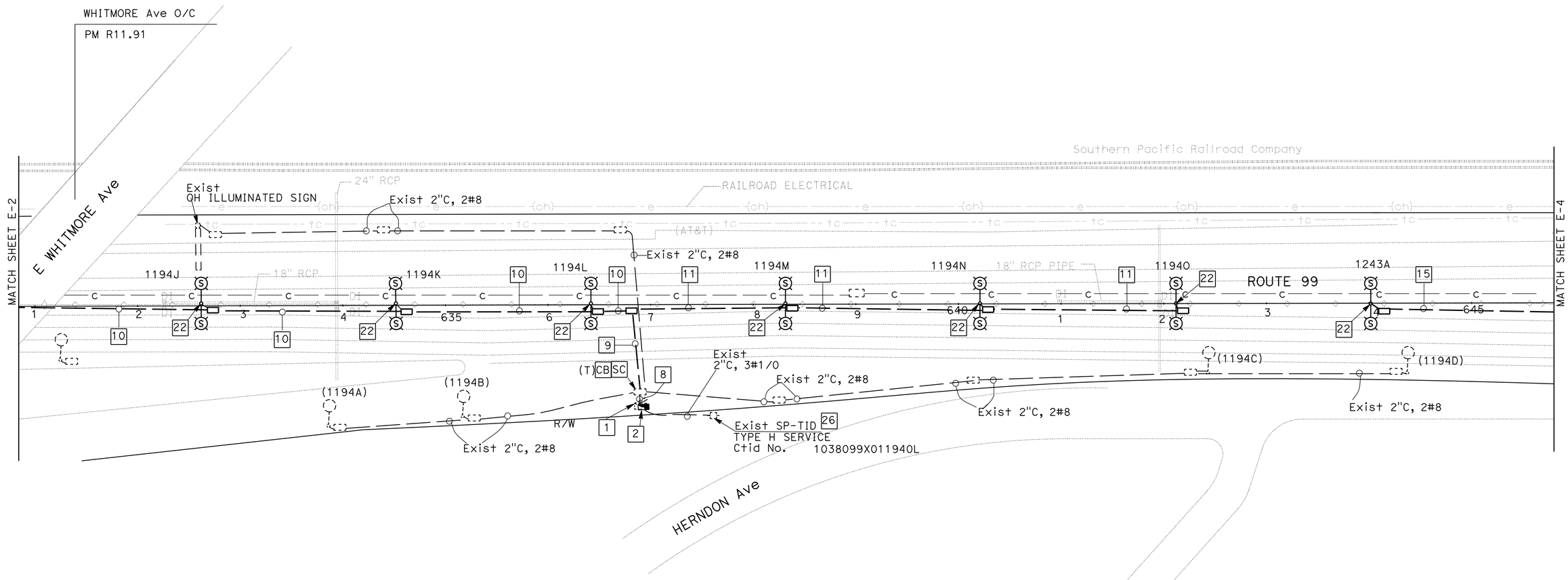

1 **REPLACED PER ADDENDUM No. 1 DATED DECEMBER 30, 2015**

APPROVED FOR ELECTRICAL WORK ONLY

LIGHTING

SCALE: 1" = 50'

E-3

REVISED BY	DATE REVISED
JS	09/16/15

JASPAL SINGH — JORGE RAMIREZ — CALCULATED-DESIGNED BY — CHECKED BY

FUNCTIONAL SUPERVISOR: ALI BAKHDOUD

STATE OF CALIFORNIA - DEPARTMENT OF TRANSPORTATION

Caltrans® **ELECTRICAL DESIGN**

LAST REVISION 9-16-15 — DATE PLOTTED => 23-DEC-2015 — TIME PLOTTED => 11:18

Dist	COUNTY	ROUTE	POST MILES TOTAL PROJECT	SHEET No.	TOTAL SHEETS
10	Sta	99	R11.7/R15.0	21	60

REGISTERED ELECTRICAL ENGINEER DATE 9/30/15

PLANS APPROVAL DATE 10-5-15

REGISTERED PROFESSIONAL ENGINEER JASPAL SINGH No. 16657 Exp. 6/30/16 ELECTRICAL STATE OF CALIFORNIA

THE STATE OF CALIFORNIA OR ITS OFFICERS OR AGENTS SHALL NOT BE RESPONSIBLE FOR THE ACCURACY OR COMPLETENESS OF SCANNED COPIES OF THIS PLAN SHEET.

NOTES (FOR THIS SHEET ONLY):

1. SPACE TYPE 21D STANDARDS AND 15D STRUCTURE STANDARDS 190 FEET APART. (1)
   SEE CONSTRUCTION DETAIL SHEETS FOR STANDARD INSTALLATION
2. ALL PULL BOXES MUST BE No. 5(T) UNLESS OTHERWISE NOTED.
3. FOR ACCURATE RIGHT OF WAY DATA, CONTACT RIGHT OF WAY ENGINEERING AT THE DISTRICT OFFICE.
4. THE LOCATIONS OF WORK ARE FLEXIBLE AND MAY BE ADJUSTED TO MITIGATE ANY CONFLICTS WITH EXISTING UTILITY FACILITIES. UTILITY INFORMATION IS INCOMPLETE.

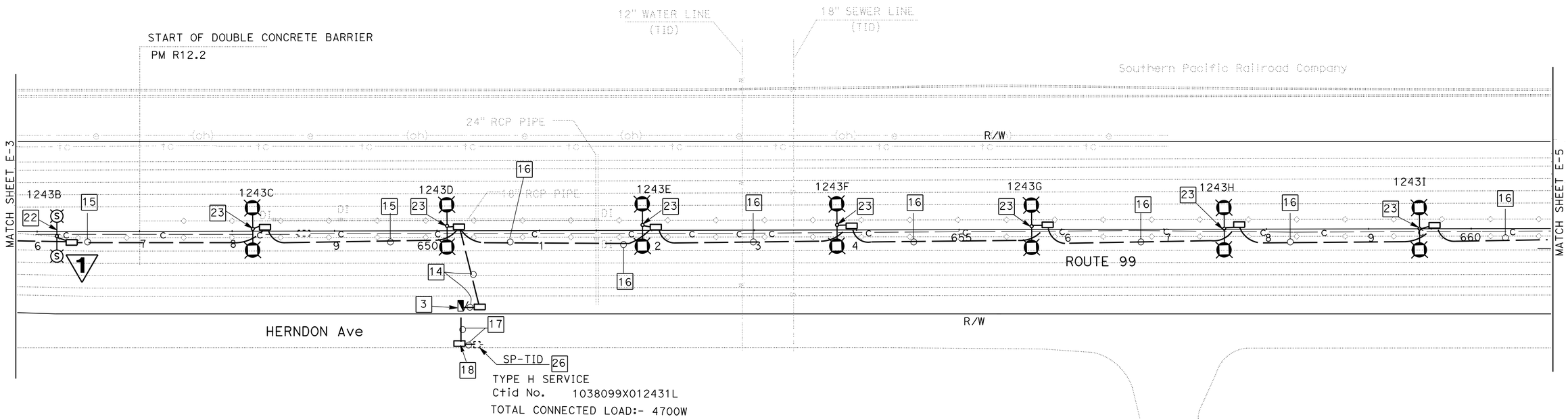

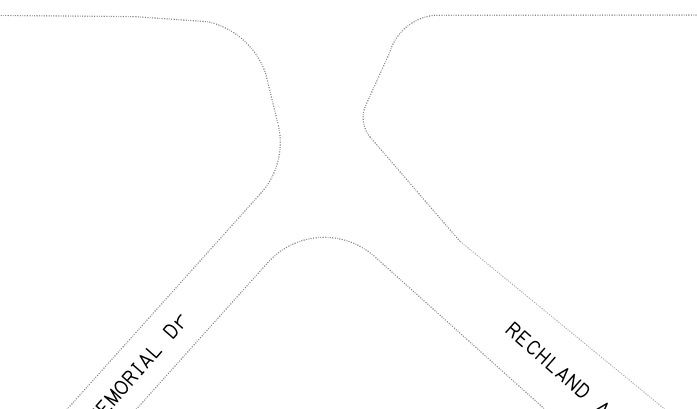

(1) **REPLACED PER ADDENDUM No. 1 DATED DECEMBER 30, 2015**

APPROVED FOR ELECTRICAL WORK ONLY

LIGHTING

SCALE: 1" = 50'

E-4

STATE OF CALIFORNIA - DEPARTMENT OF TRANSPORTATION

Caltrans® **ELECTRICAL DESIGN**

FUNCTIONAL SUPERVISOR: ALI BAKHDOUD

CALCULATED-DESIGNED BY: JASPAL SINGH

CHECKED BY: PAUL MATOS

REVISED BY: JS

DATE REVISED: 09/16/15

LAST REVISION 9-16-15

DATE PLOTTED => 23-DEC-2015

TIME PLOTTED => 11:18

Dist	COUNTY	ROUTE	POST MILES TOTAL PROJECT	SHEET No.	TOTAL SHEETS
10	Sta	99	R11.7/R15.0	34	60

REGISTERED ELECTRICAL ENGINEER 9/30/15 DATE

10-5-15
PLANS APPROVAL DATE

REGISTERED PROFESSIONAL ENGINEER JASPAL SINGH No. 16657 Exp. 6/30/16 ELECTRICAL STATE OF CALIFORNIA

THE STATE OF CALIFORNIA OR ITS OFFICERS OR AGENTS SHALL NOT BE RESPONSIBLE FOR THE ACCURACY OR COMPLETENESS OF SCANNED COPIES OF THIS PLAN SHEET.

NOTE:

THE QUANTITIES SHOWN IN THE TABLES ARE NOT SEPARATE PAY ITEMS, FOR INFORMATION ONLY.
FOR COMPLETE ELECTRICAL WORK, SEE ELECTRICAL PLANS.

1

LIGHTING

SHEET No.	No. 5 (T) PB	40' WOOD POLE	TYPE III-AF SERVICE EQUIPMENT ENCLOSURE	TYPE III-AF SERVICE EQUIPMENT ENCLOSURE FOUNDATION	TYPE III-DF SERVICE EQUIPMENT ENCLOSURE	TYPE III-DF SERVICE EQUIPMENT ENCLOSURE FOUNDATION	10kVA TRANSFORMER AND FOUNDATION	TYPE 15D STRUCTURE LIGHTING STANDARD	TYPE 21D LIGHTING STANDARD	TYPE 21D LIGHTING STANDARD FOUNDATION	235 W LED LUMINAIRE	2"C, TYPE 1	1½"C, TYPE 1	2"C, TYPE 3	3"C, TYPE 3	No. 1/0 CONDUCTOR (AL)	No. 2 CONDUCTOR (AL)	No. 4 CONDUCTOR (AL)	No. 6 CONDUCTOR (AL)	No. 4 (G) CONDUCTOR	No. 6 (G) CONDUCTOR	No. 8 (G) CONDUCTOR
	EA											LF										
E-2	5	-	-	-	-	-	-	5	-	-	10	-	50	900	-	1900	-	-		900	-	
E-3	8	-	1	-	-	-	-	7	-	-	14	10	70	1550	160	3500	-	-		1600	-	
E-4	10	-	1	1	-	-	-	1	7	7	16	50	80	1600	70	3300	-	-			1600	
E-5	10	-	1	1	-	-	-	-	8	8	16	50	80	1600	70	3300	-	-			1600	
E-6	11	-	1	1	-	-	-	-	8	8	16	100	80	1600	70	3500	-	-			1680	
E-7	7	-	-	-	-	-	-	-	7	7	14	-	80	2010	-	-	3000	-	1200		1500	580
E-8	12	1	1	1	-	-	-	-	8	8	16	-	80	1600	-	200	3300	-			1650	
E-9	9	-	-	-	-	-	-	-	8	8	16	-	80	1500	-	-	3200	-			1600	
E-10	6	-	-	-	-	-	-	-	3	3	6	-	20	740	-	-	-	1530			770	
E-11	9	-	-	-	-	-	-	-	6	6	12	-	60	1230	470	-	-	3500			1750	
E-12	13	2	1	1	1	1	1	-	8	8	16	70	80	1500	710	200	2200	2100			2000	
E-13	7	-	-	-	-	-	-	-	7	7	14	-	70	1300	-	-	2800	-			1400	

MODIFY COMMUNICATION CONDUIT

SHEET No.	3"C HDPE	PULL ROPE
	LF	
E-14	860	860
E-15	1470	1470
E-16	275	275

1 REPLACED PER ADDENDUM No. 1 DATED DECEMBER 30, 2015

ELECTRICAL QUANTITIES

E-17

STATE OF CALIFORNIA - DEPARTMENT OF TRANSPORTATION
Caltrans ELECTRICAL DESIGN

FUNCTIONAL SUPERVISOR: ALI BAKHDOUD
CALCULATED-DESIGNED BY: JASPAL SINGH
CHECKED BY: JORGE RAMIREZ
REVISED BY: JS
DATE REVISED: 09/11/15

LAST REVISION 9-11-15 | DATE PLOTTED => 23-DEC-2015 | TIME PLOTTED => 11:18

1 ADDED PER ADDENDUM No. 1 DATED DECEMBER 30, 2015

Dist	COUNTY	ROUTE	POST MILES TOTAL PROJECT	SHEET No.	TOTAL SHEETS
10	Sta	99	R11.7/R15.0	49A	60

1

Theresa Gabriel
REGISTERED ELECTRICAL ENGINEER

October 30, 2015
PLANS APPROVAL DATE

REGISTERED PROFESSIONAL ENGINEER Theresa Aziz Gabriel No. E15129 Exp. 6-30-16 ELECTRICAL STATE OF CALIFORNIA

THE STATE OF CALIFORNIA OR ITS OFFICERS OR AGENTS SHALL NOT BE RESPONSIBLE FOR THE ACCURACY OR COMPLETENESS OF SCANNED COPIES OF THIS PLAN SHEET.

TO ACCOMPANY PLANS DATED 10-5-15

2010 REVISED STANDARD PLAN RSP ES-2A

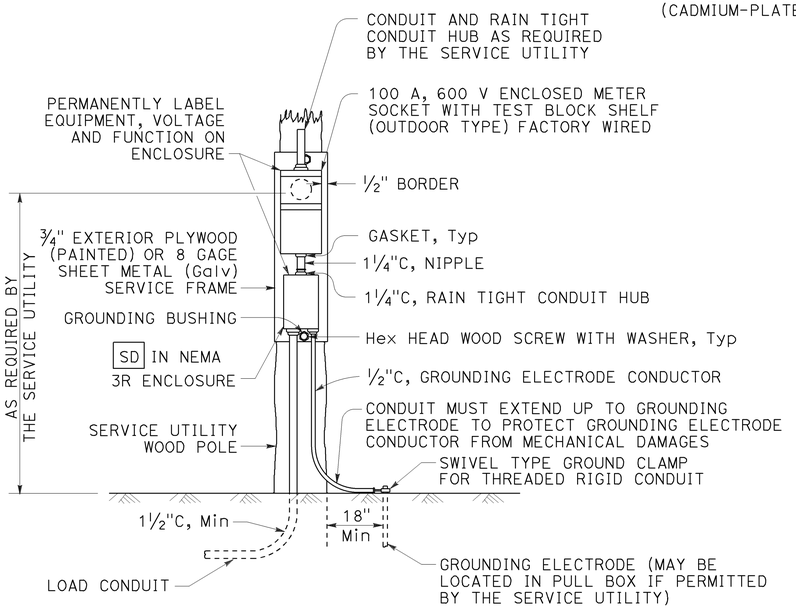

TYPE SCE-1
DETAIL A

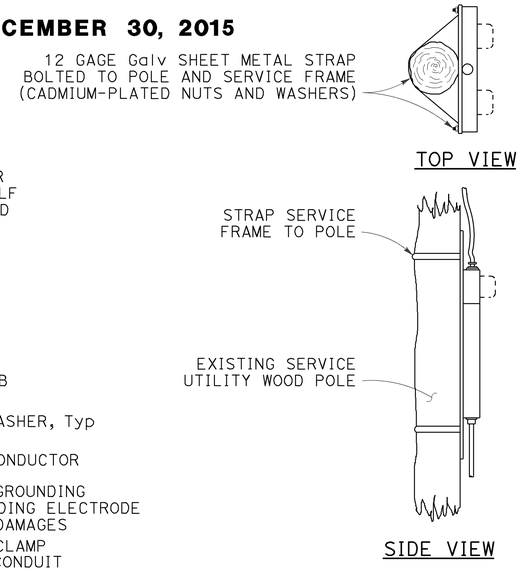

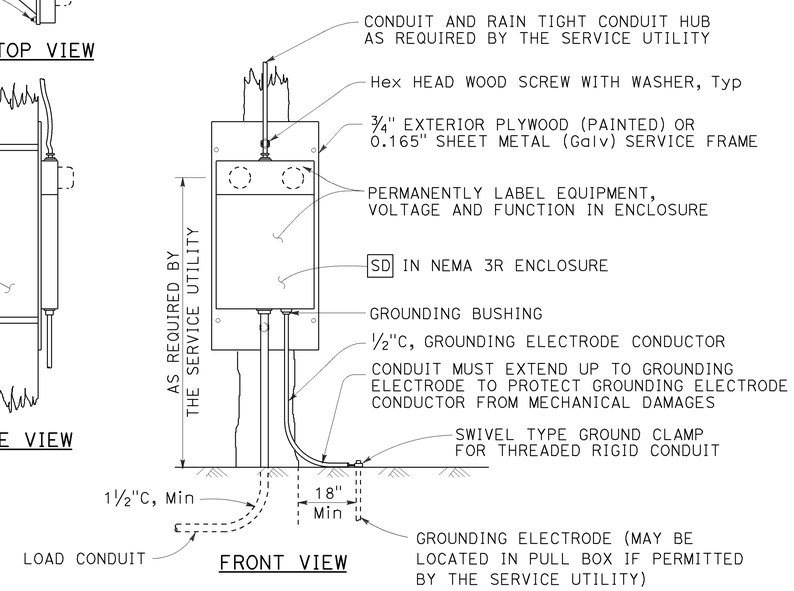

TYPE SCE-2
DETAIL B

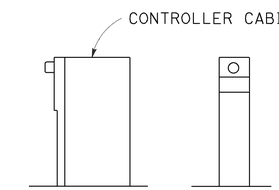

TYPE OF SERVICE (TYPICAL)
DETAIL C
See Notes 1 and 2

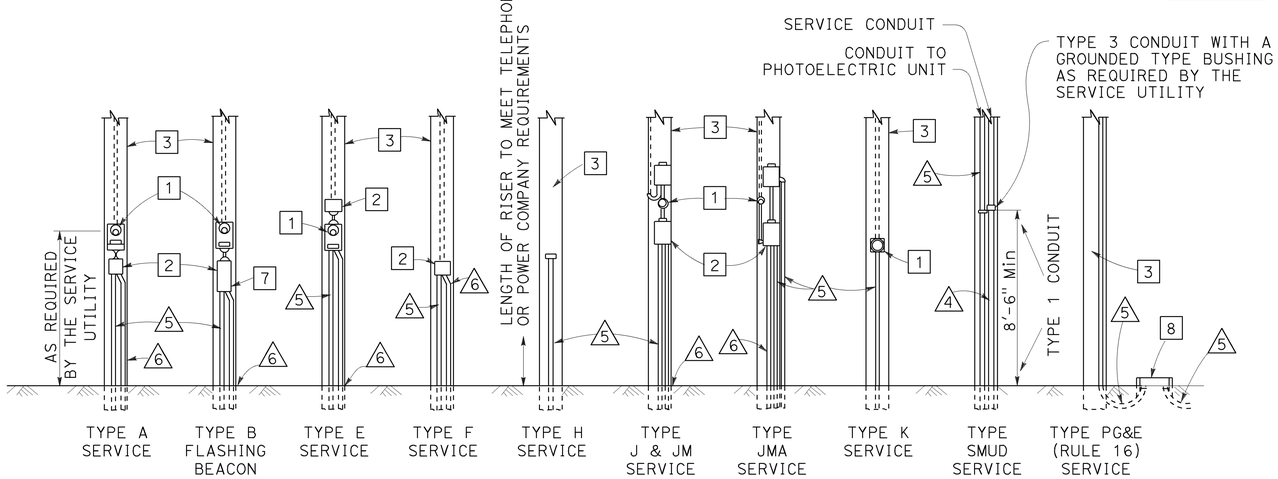

POLE MOUNTED SERVICE INSTALLATIONS
DETAIL D

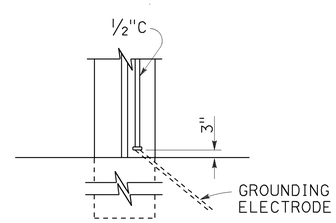

TYPE A
See Note 3

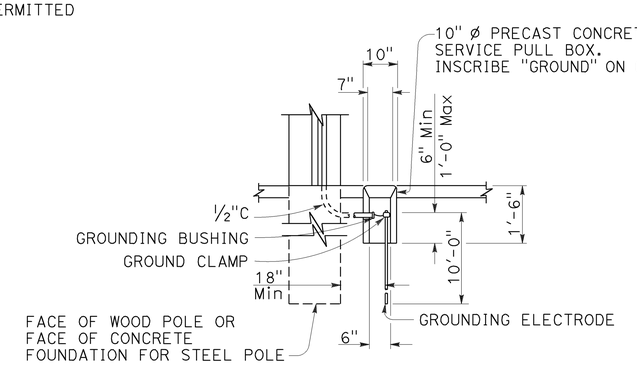

TYPE B
See Note 4

SERVICE GROUNDING
DETAIL E

LEGEND:

1. METER SOCKET.
2. SERVICE ENCLOSURE WITH A MINIMUM 60 A RATED MAIN CIRCUIT BREAKER, UNLESS OTHERWISE SHOWN.
3. A. UTILITY OWNED POLE. THE SERVICE UTILITY WILL FURNISH AND INSTALL REQUIRED SERVICE RISER, PEU WITH CONDUCTORS AND OTHER EQUIPMENT AS NEEDED.
   B. STATE OWNED POLE. THE CONTRACTOR SHALL FURNISH AND INSTALL REQUIRED SERVICE RISER AND EQUIPMENT.
4. 2"C, SERVICE CONDUIT MUST HAVE A GROUNDED TYPE BUSHING INSTALLED AT UPPER END OF THE METALLIC POLE RISER CONDUIT. A GROUNDING CONDUCTOR MUST BE ATTACHED TO THE BUSHING, CARRIED THROUGH THE CONDUIT RUN AND ATTACHED TO THE SERVICE EQUIPMENT ENCLOSURE'S GROUNDING ELECTRODE.
5. CONDUIT, LENGTH AND SIZE AS REQUIRED.
6. ½"C, 1#6. SEE DETAIL E.
7. FLASHING BEACON CONTROL ASSEMBLY.
8. SERVICE PULL BOX, No. 5 UNLESS OTHERWISE NOTED, FURNISHED AND INSTALLED BY THE CONTRACTOR. SERVICE UTILITY SHALL DETERMINE THE EXACT LOCATION.

NOTES:

1. Type II service equipment enclosure mounted on the side of a controller cabinet.
2. Type III complete free-standing service equipment enclosure.
3. Ground clamp and required fittings must be accessible. Conduit must extend to protect grounding electrode conductor from mechanical damage.
4. Use where service utility requires 18" clearance between grounding electrode and the pole or service equipment enclosure. Installation shown is for sidewalk or paved areas. In unpaved areas, omit special service pull box and locate ground clamp above ground or locate ground clamp in nearest pull box.

STATE OF CALIFORNIA
DEPARTMENT OF TRANSPORTATION

ELECTRICAL SYSTEMS (SERVICE EQUIPMENT)

NO SCALE

RSP ES-2A DATED OCTOBER 30, 2015 SUPERSEDES STANDARD PLAN ES-2A DATED MAY 20, 2011 - PAGE 428 OF THE STANDARD PLANS BOOK DATED 2010.

REVISED STANDARD PLAN RSP ES-2A

8-20-15