Dist	COUNTY	ROUTE	POST MILES TOTAL PROJECT	SHEET No.	TOTAL SHEETS
10	Mer	99	15.1/16.0	1	79

STATE OF CALIFORNIA
DEPARTMENT OF TRANSPORTATION

ACNHP-P099(596)E

PROJECT PLANS FOR CONSTRUCTION ON
STATE HIGHWAY

IN MERCED COUNTY
IN MERCED
FROM 0 STREET UNDERCROSSING TO 0.2 MILES NORTH OF ROUTE 99/59 SEPARATION

TO BE SUPPLEMENTED BY STANDARD PLANS DATED 2010

INDEX OF PLANS

SHEET No.	DESCRIPTION
1	TITLE AND LOCATION MAP
2-4	TYPICAL CROSS SECTIONS
5-6	LAYOUTS
7-9	CONSTRUCTION DETAILS
10-13	WATER POLLUTION CONTROL PLANS AND QUANTITIES
14-21	DRAINAGE PLANS, DETAILS AND QUANTITIES
22	CONSTRUCTION AREA SIGNS
23-26	TRAFFIC HANDLING PLAN AND QUANTITIES
27-29	PAVEMENT DELINEATION AND SIGN PLAN
30-31	SUMMARY OF QUANTITIES
32-43	PLANTING AND IRRIGATION PLANS
44-74	REVISED STANDARD PLANS

STRUCTURE PLANS

75-79	MERCED 99 ROADSIDE IMPROVEMENTS

THE STANDARD PLAN LIST APPLICABLE TO THIS CONTRACT IS INCLUDED IN THE NOTICE TO BIDDERS AND SPECIAL PROVISIONS BOOK.

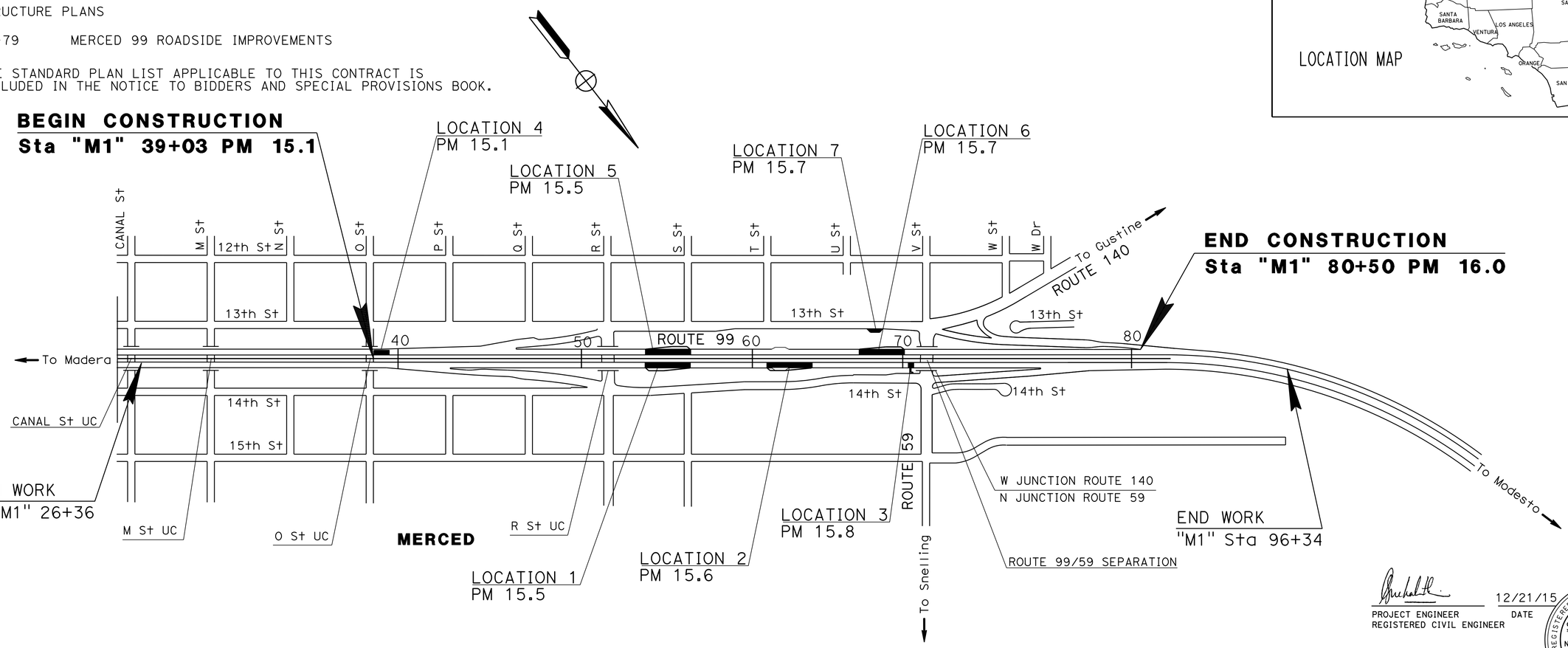

NO SCALE

LOCATION MAP

12/21/15
PROJECT ENGINEER
REGISTERED CIVIL ENGINEER
DATE

REGISTERED PROFESSIONAL ENGINEER
SNEHALATHA PAVULURI
No. 78187
Exp. 09/30/17
CIVIL
STATE OF CALIFORNIA

December 28, 2015
PLANS APPROVAL DATE

THE STATE OF CALIFORNIA OR ITS OFFICERS OR AGENTS SHALL NOT BE RESPONSIBLE FOR THE ACCURACY OR COMPLETENESS OF SCANNED COPIES OF THIS PLAN SHEET.

T.Y.LIN INTERNATIONAL
2010 CROW CANYON PLACE, SUITE 350
SAN RAMON, CA 94583

CONTRACT No.	10-0X6304
PROJECT ID	1013000093

THE CONTRACTOR SHALL POSSESS THE CLASS (OR CLASSES) OF LICENSE AS SPECIFIED IN THE "NOTICE TO BIDDERS."

APPROVED AS TO IMPACT ON STATE FACILITIES AND CONFORMANCE WITH APPLICABLE STATE STANDARDS AND PRACTICES AND THAT TECHNICAL OVERSIGHT WAS PERFORMED.

CONSULTANT DESIGN MANAGER	CALTRANS DESIGN OVERSIGHT APPROVAL	REGISTRATION No.	LICENSE Exp DATE	DATE SIGNED
BRIAN KRCELIC	CAROLINE REYES	66004	06-30-2016	

LAST REVISION 12-21-15
DATE PLOTTED => 17-FEB-2016
TIME PLOTTED => 11:40

Dist	COUNTY	ROUTE	POST MILES TOTAL PROJECT	SHEET No.	TOTAL SHEETS
10	Mer	99	15.1/16.0	2	79

REGISTERED CIVIL ENGINEER 12/21/15 DATE

12-28-15
PLANS APPROVAL DATE

REGISTERED PROFESSIONAL ENGINEER Snehalatha Pavuluri No. 78187 Exp 09/30/17 CIVIL STATE OF CALIFORNIA

THE STATE OF CALIFORNIA OR ITS OFFICERS OR AGENTS SHALL NOT BE RESPONSIBLE FOR THE ACCURACY OR COMPLETENESS OF SCANNED COPIES OF THIS PLAN SHEET.

T.Y.LIN INTERNATIONAL
2010 CROW CANYON PLACE,
SUITE 225
SAN RAMON, CA 94583

NOTES:

1. DIMENSIONS OF THE PAVEMENT STRUCTURES (STRUCTURAL SECTIONS) ARE SUBJECT TO TOLERANCES SPECIFIED IN THE Std SPECIFICATIONS.
2. FOR LOCATION, LIMITS OF MVP, SEE LAYOUTS AND SUMMARY OF QUANTITIES.
3. FOR ACCURATE RIGHT OF WAY DATA, CONTACT RIGHT OF WAY ENGINEERING AT THE DISTRICT OFFICE.

PAVEMENT STRUCTURAL SECTIONS:

[1] 0.40' HMA (TYPE A)
0.50' CLASS 2 AB

[2] 0.90' HMA (TYPE A)

[3] 0.25' VEGETATION CONTROL (MINOR CONCRETE)

[4] 0.40' PCC
0.50' CLASS 2 AB

PAVEMENT CLIMATE REGION

INLAND VALLEY

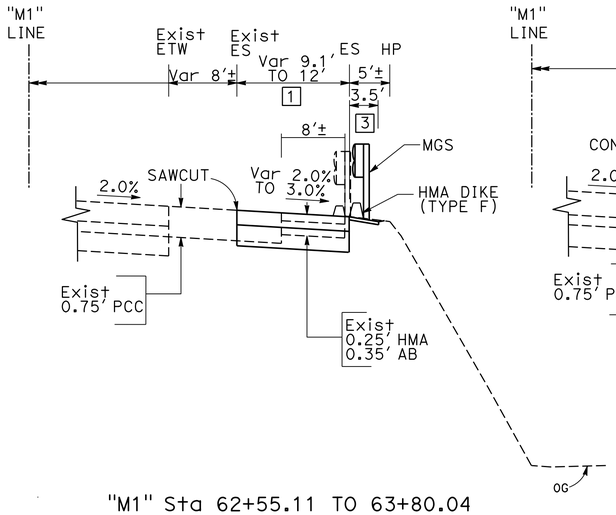

"M1" Sta 62+55.11 TO 63+80.04

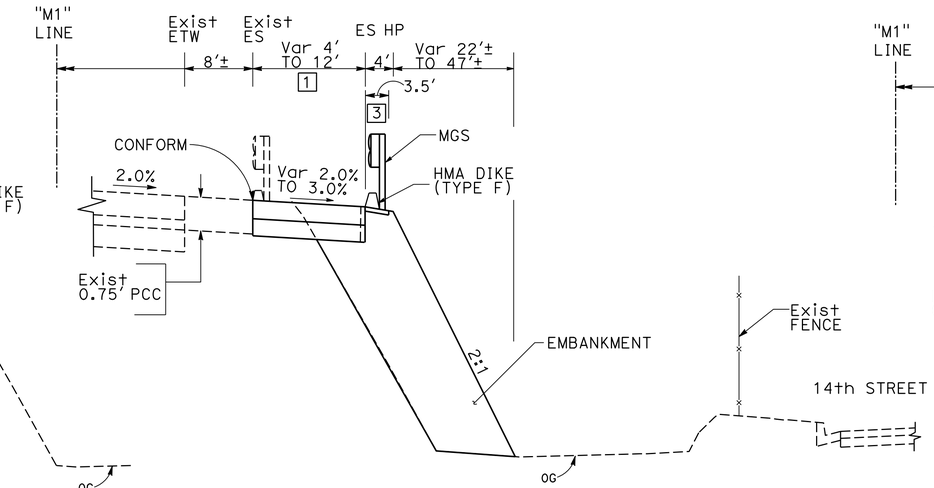

"M1" Sta 62+24.32 TO 62+55.11
"M1" Sta 63+80.04 TO 64+56.58

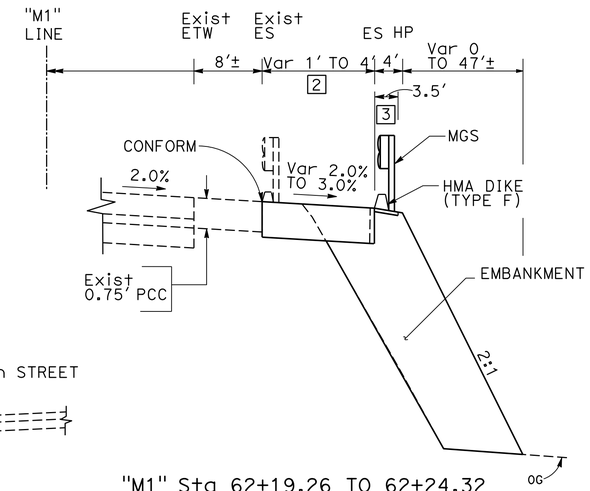

"M1" Sta 62+19.26 TO 62+24.32
"M1" Sta 64+56.58 TO 65+02.32

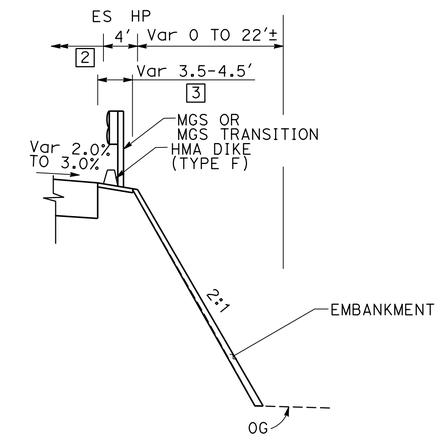

"M1" Sta 61+89.45 TO 62+19.26
"M1" Sta 65+02.32 TO 65+45.70

NORTHBOUND
LOCATION 2 - MVP

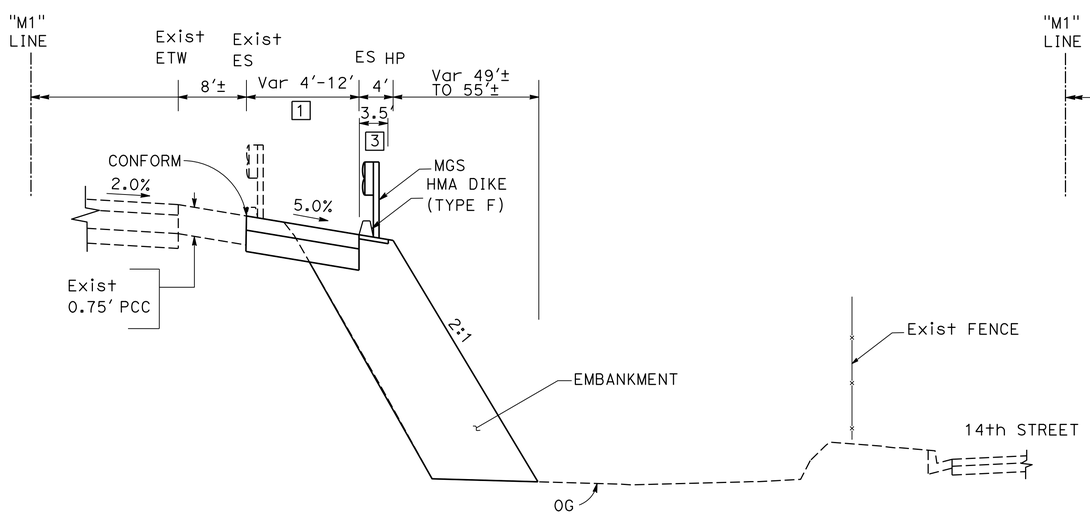

"M1" Sta 55+31.65 TO 57+65.41

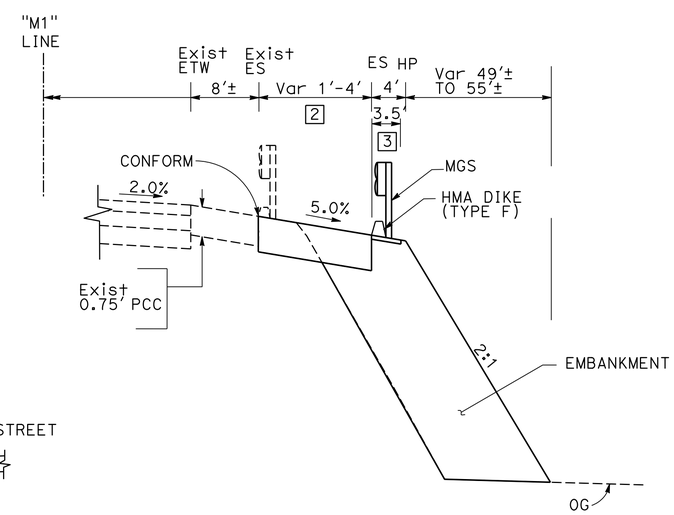

"M1" Sta 55+26.67 TO 55+31.66
"M1" Sta 57+65.41 TO 58+10.10

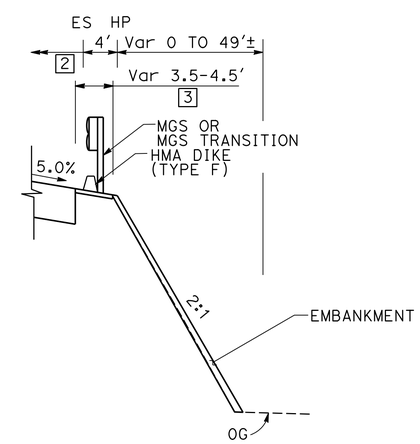

"M1" Sta 54+96.88 TO 55+26.67
"M1" Sta 58+10.10 TO 58+53.13

NORTHBOUND
LOCATION 1 - MVP

ROUTE 99

TYPICAL CROSS SECTIONS

NO SCALE

X-1

REVISED BY	DATE REVISED
SP	12/21/15

SNEHA PAVULURI — CALCULATED-DESIGNED BY
NABAZ SAIEED — CHECKED BY
BRIAN KRCELIC — CONSULTANT FUNCTIONAL SUPERVISOR

STATE OF CALIFORNIA - DEPARTMENT OF TRANSPORTATION
Caltrans

LAST REVISION 12-21-15 | DATE PLOTTED => 30-DEC-2015 | TIME PLOTTED => 17:13

Dist	COUNTY	ROUTE	POST MILES TOTAL PROJECT	SHEET No.	TOTAL SHEETS
10	Mer	99	15.1/16.0	3	79

REGISTERED CIVIL ENGINEER 12/21/15 DATE

12-28-15
PLANS APPROVAL DATE

REGISTERED PROFESSIONAL ENGINEER Snehalatha Pavuluri No. 78187 Exp 09/30/17 CIVIL STATE OF CALIFORNIA

THE STATE OF CALIFORNIA OR ITS OFFICERS OR AGENTS SHALL NOT BE RESPONSIBLE FOR THE ACCURACY OR COMPLETENESS OF SCANNED COPIES OF THIS PLAN SHEET.

T.Y.LIN INTERNATIONAL
2010 CROW CANYON PLACE,
SUITE 225
SAN RAMON, CA 94583

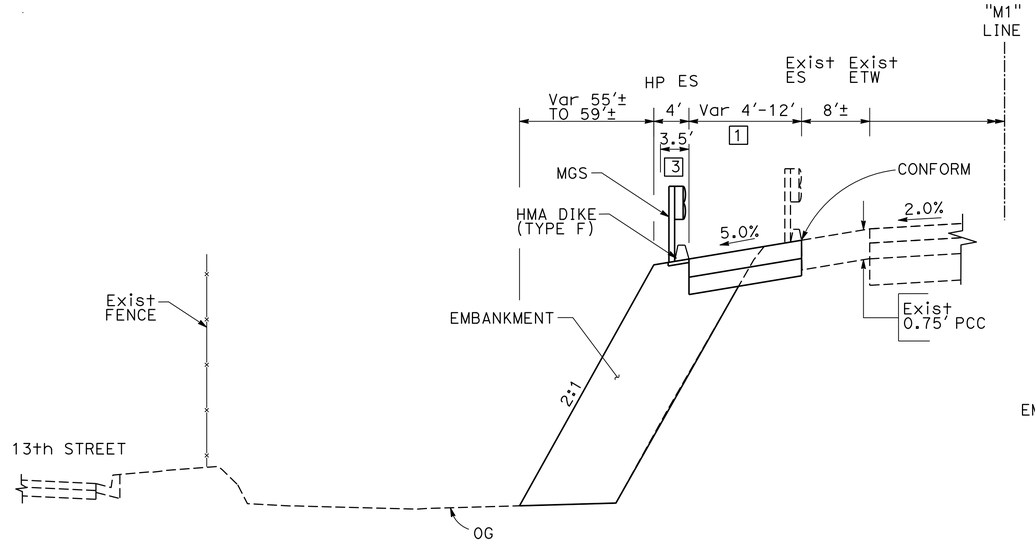

"M1" Sta 55+40.13 TO 57+73.31

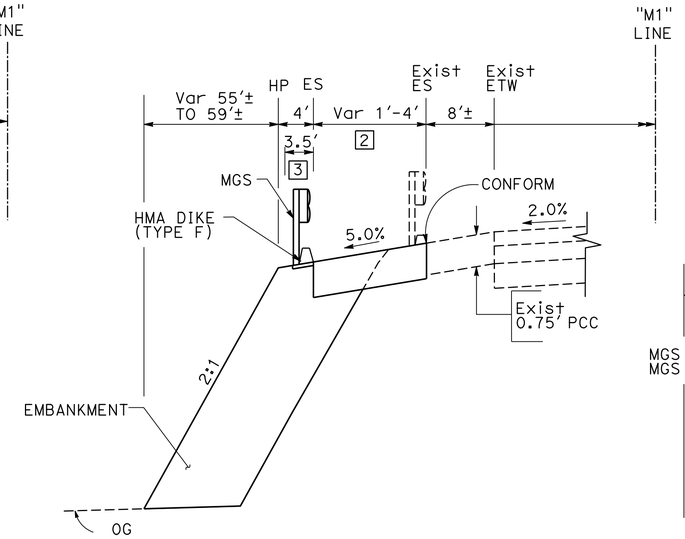

"M1" Sta 54+95.03 TO 55+40.13
"M1" Sta 57+73.31 TO 57+78.33

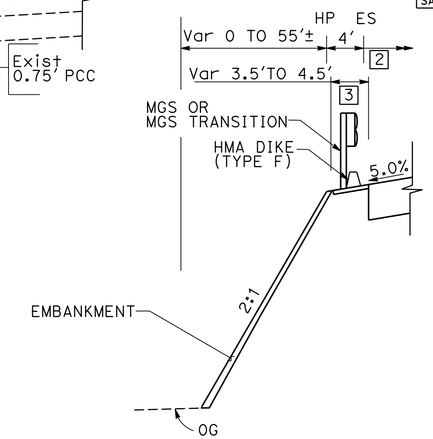

"M1" Sta 54+51.88 TO 54+95.03
"M1" Sta 57+78.33 TO 58+08.13

SOUTHBOUND

LOCATION 5 - MVP

ROUTE 99

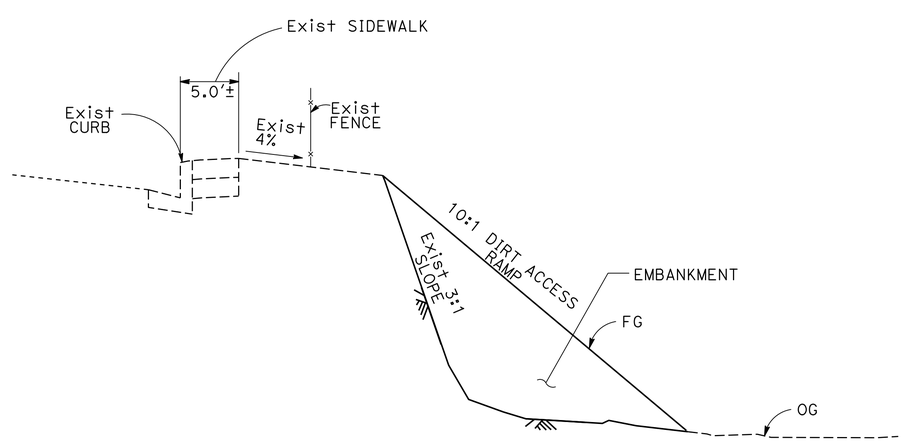

"M1" Sta 39+03.87 TO 39+94.34

LOCATION 4 - ACCESS ROAD GRADING

O STREET

TYPICAL CROSS SECTIONS

NO SCALE

X-2

STATE OF CALIFORNIA - DEPARTMENT OF TRANSPORTATION
Caltrans

CONSULTANT FUNCTIONAL SUPERVISOR: BRIAN KRCELIC

CALCULATED-DESIGNED BY: SNEHA PAVULURI
CHECKED BY: NABAZ SAIEED

REVISED BY: SP
DATE REVISED: 12/21/15

LAST REVISION 12-21-15
DATE PLOTTED => 30-DEC-2015
TIME PLOTTED => 17:13

Dist	COUNTY	ROUTE	POST MILES TOTAL PROJECT	SHEET No.	TOTAL SHEETS
10	Mer	99	15.1/16.0	4	79

REGISTERED CIVIL ENGINEER 12/21/15 DATE

12-28-15
PLANS APPROVAL DATE

REGISTERED PROFESSIONAL ENGINEER Snehalatha Pavuluri No. 78187 Exp 09/30/17 CIVIL STATE OF CALIFORNIA

THE STATE OF CALIFORNIA OR ITS OFFICERS OR AGENTS SHALL NOT BE RESPONSIBLE FOR THE ACCURACY OR COMPLETENESS OF SCANNED COPIES OF THIS PLAN SHEET.

T.Y.LIN INTERNATIONAL
2010 CROW CANYON PLACE,
SUITE 225
SAN RAMON, CA 94583

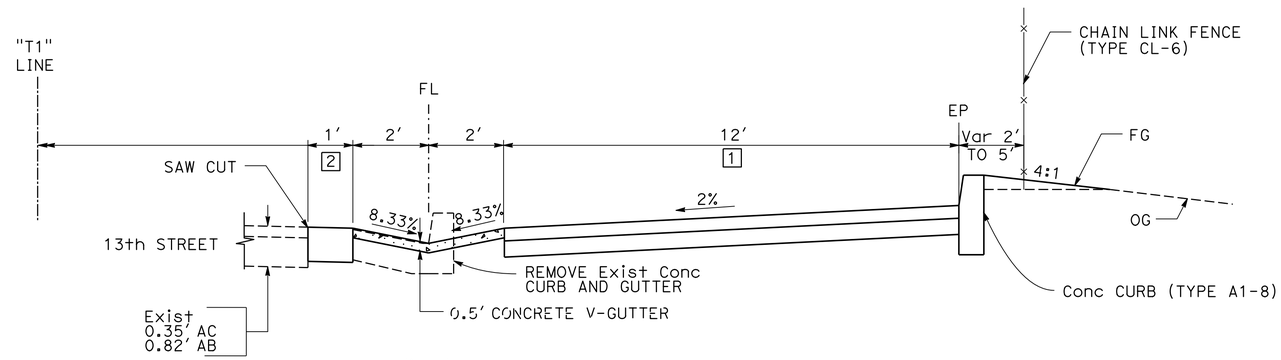

"T1" Sta 76+68.46 TO 77+65.00

SOUTHBOUND
LOCATION 7 - MVP

13TH STREET

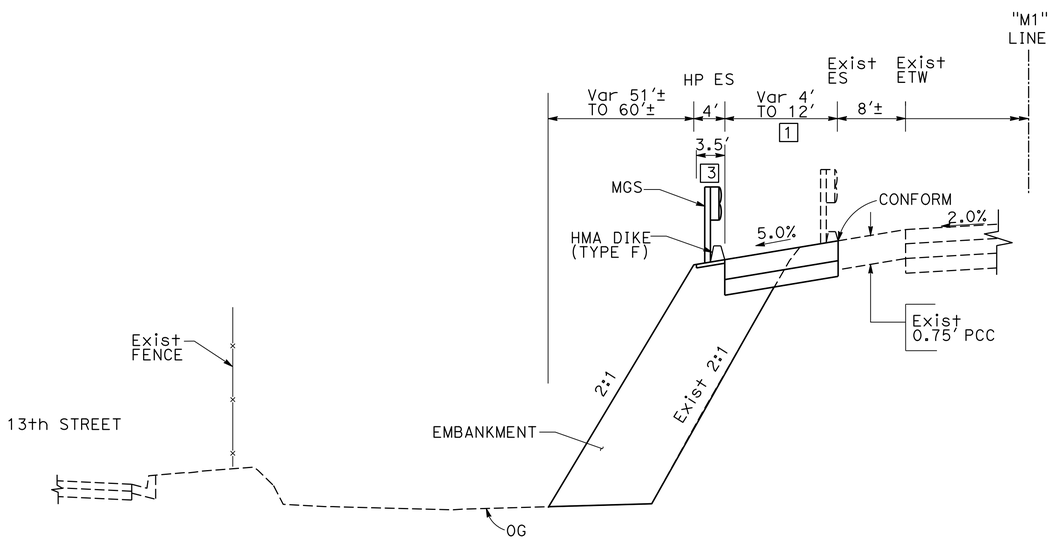

"M1" Sta 67+60.36 TO 69+93.33

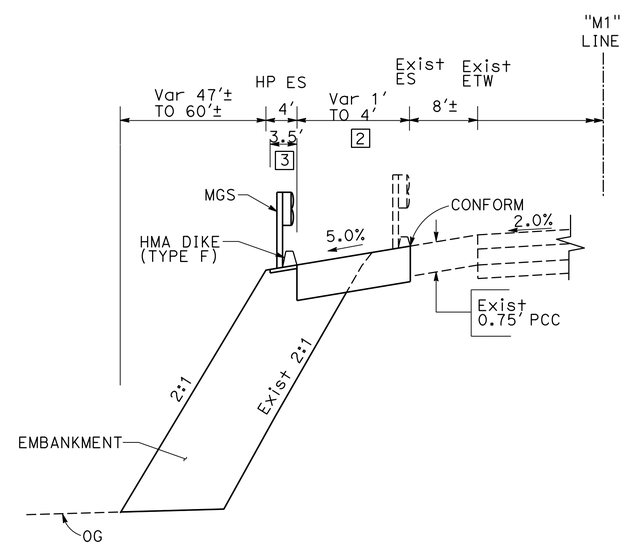

"M1" Sta 67+15.09 TO 67+60.36
"M1" Sta 69+93.33 TO 69+98.33

T.Y.LIN INTERNATIONAL
2010 CROW CANYON PLACE,
SUITE 225
SAN RAMON, CA 94583

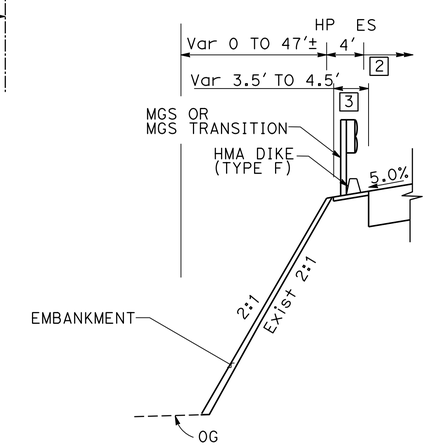

"M1" Sta 66+71.88 TO 67+15.09
"M1" Sta 69+98.33 TO 70+28.13

SOUTHBOUND
LOCATION 6 - MVP

ROUTE 99

TYPICAL CROSS SECTIONS

NO SCALE

X-3

REVISED BY	DATE REVISED
SP	12/21/15

SNEHA PAVULURI — CALCULATED-DESIGNED BY
NABAZ SAIEED — CHECKED BY
BRIAN KRCELIC — CONSULTANT FUNCTIONAL SUPERVISOR

STATE OF CALIFORNIA - DEPARTMENT OF TRANSPORTATION
Caltrans

LAST REVISION 12-21-15 | DATE PLOTTED => 30-DEC-2015 | TIME PLOTTED => 17:13

Dist	COUNTY	ROUTE	POST MILES TOTAL PROJECT	SHEET No.	TOTAL SHEETS
10	Mer	99	15.1/16.0	5	79

REGISTERED CIVIL ENGINEER 12/21/15 DATE

12-28-15
PLANS APPROVAL DATE

REGISTERED PROFESSIONAL ENGINEER Snehalatha Pavuluri No. 78187 Exp 09/30/17 CIVIL STATE OF CALIFORNIA

THE STATE OF CALIFORNIA OR ITS OFFICERS OR AGENTS SHALL NOT BE RESPONSIBLE FOR THE ACCURACY OR COMPLETENESS OF SCANNED COPIES OF THIS PLAN SHEET.

T.Y.LIN INTERNATIONAL
2010 CROW CANYON PLACE,
SUITE 225
SAN RAMON, CA 94583

NOTES:

1. FOR ACCURATE RIGHT OF WAY DATA, CONTACT RIGHT OF WAY ENGINEERING AT THE DISTRICT OFFICE.
2. SEE CONSTRUCTION DETAILS FOR MVP DETAILS.
3. SEE STRUCTURE PLANS FOR STAIRWAY DETAILS.
4. UTILITY OWNERSHIP:
   ELECTRIC - PG&E
   GAS - PG&E
   TELEPHONE - PACIFIC BELL
   WATER - COM
   SEWER - COM
   TELEVISION CABLE - AT&T.
5. FOR MGS TO MBGR TRANSITION, SEE REVISED STANDARD PLAN RSP A77U5.
6. SEE IRRIGATION PLANS FOR IRRIGATION CONDUIT DETAILS.
7. SEE PLANT REMOVAL PLANS FOR TEMPORARY FENCE (TYPE ESA) LOCATIONS.

ABBREVIATIONS:

AT&T AMERICAN TELEPHONE AND TELEGRAPH
COM CITY OF MERCED
PG&E PACIFIC GAS AND ELECTRIC COMPANY

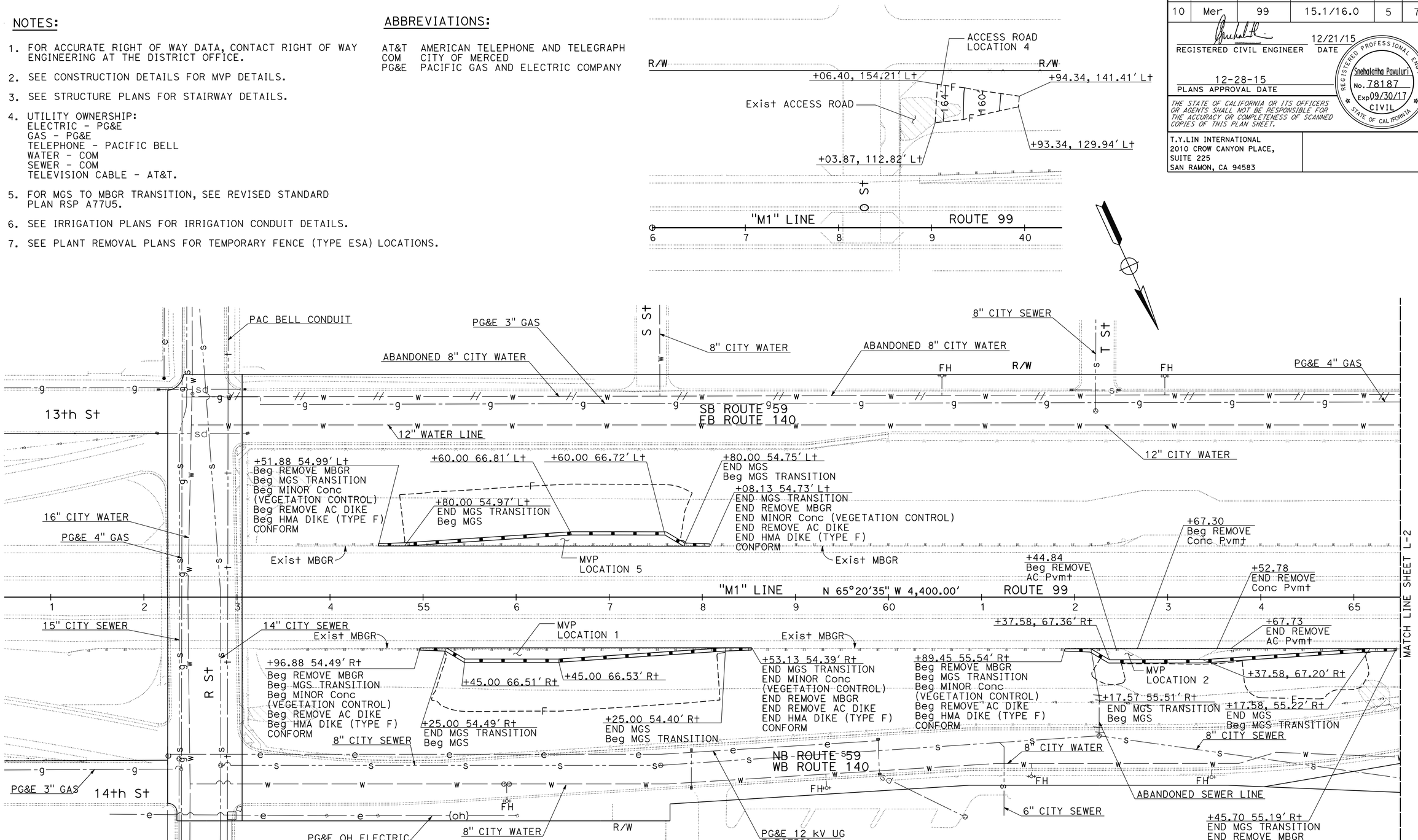

LAYOUT

SCALE: 1" = 50'

L-1

REVISED BY	DATE REVISED
SP	12/21/15

SNEHA PAVULURI — NABAZ SAIEED — CALCULATED-DESIGNED BY — CHECKED BY

CONSULTANT FUNCTIONAL SUPERVISOR: BRIAN KRCELIC

STATE OF CALIFORNIA - DEPARTMENT OF TRANSPORTATION — Caltrans

LAST REVISION 12-21-15 | DATE PLOTTED => 30-DEC-2015 | TIME PLOTTED => 17:13

Dist	COUNTY	ROUTE	POST MILES TOTAL PROJECT	SHEET No.	TOTAL SHEETS
10	Mer	99	15.1/16.0	6	79

REGISTERED CIVIL ENGINEER 12/21/15 DATE

12-28-15
PLANS APPROVAL DATE

REGISTERED PROFESSIONAL ENGINEER Snehalatha Pavuluri No. 78187 Exp 09/30/17 CIVIL STATE OF CALIFORNIA

THE STATE OF CALIFORNIA OR ITS OFFICERS OR AGENTS SHALL NOT BE RESPONSIBLE FOR THE ACCURACY OR COMPLETENESS OF SCANNED COPIES OF THIS PLAN SHEET.

T.Y.LIN INTERNATIONAL
2010 CROW CANYON PLACE,
SUITE 225
SAN RAMON, CA 94583

NOTE:

FOR ACCURATE RIGHT OF WAY DATA, CONTACT RIGHT OF WAY ENGINEERING AT THE DISTRICT OFFICE.

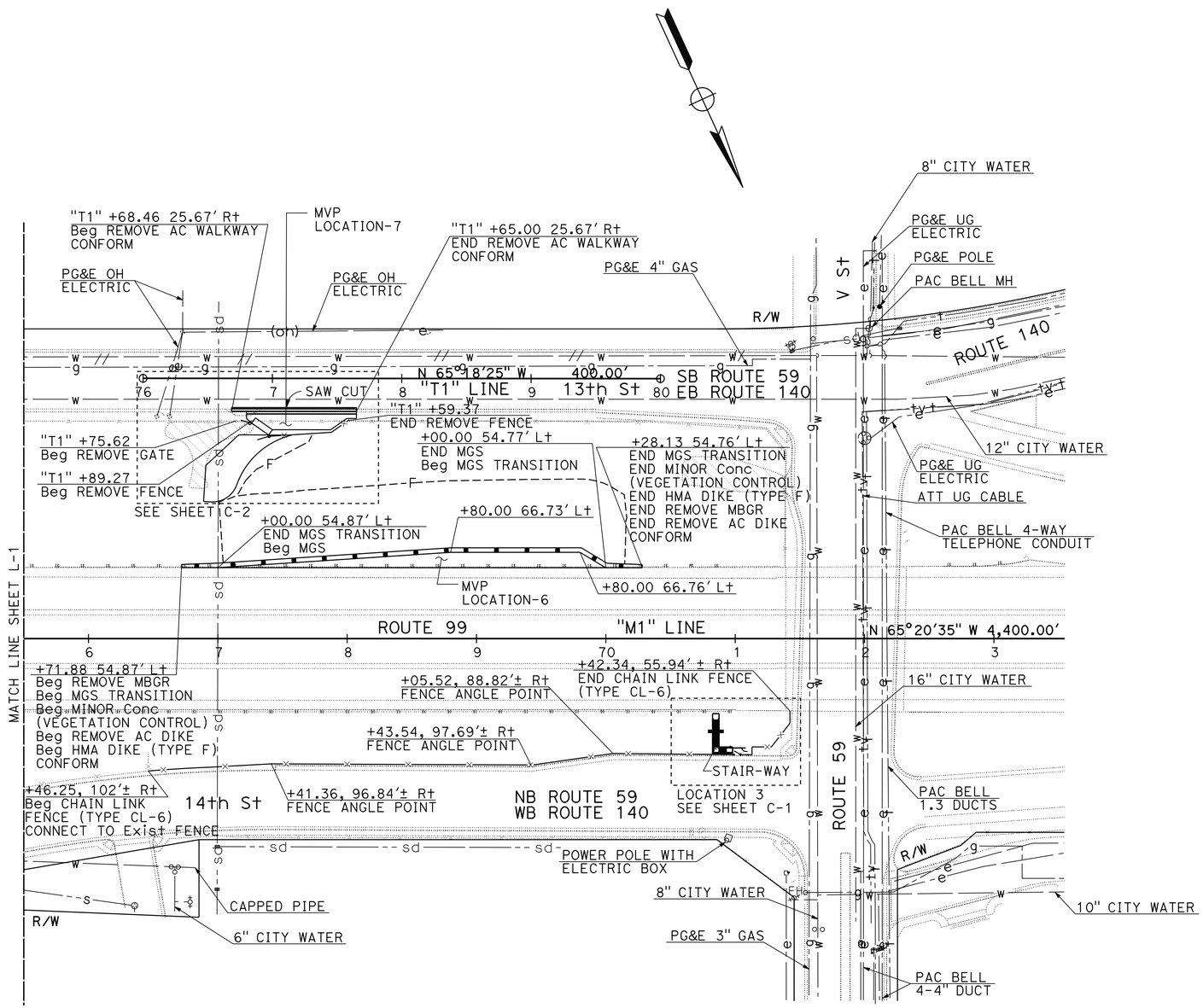

LAYOUT
SCALE: 1" = 50'

L-2

STATE OF CALIFORNIA - DEPARTMENT OF TRANSPORTATION	CONSULTANT FUNCTIONAL SUPERVISOR	CALCULATED-DESIGNED BY	REVISED BY
Caltrans	BRIAN KRCELIC	CHECKED BY	DATE REVISED
		SNEHA PAVULURI	SP
		NABAZ SAIEED	12/21/15

LAST REVISION 12-21-15 | DATE PLOTTED => 30-DEC-2015 | TIME PLOTTED => 17:13

Dist	COUNTY	ROUTE	POST MILES TOTAL PROJECT	SHEET No.	TOTAL SHEETS
10	Mer	99	15.1/16.0	7	79

REGISTERED CIVIL ENGINEER 12/21/15 DATE

12-28-15
PLANS APPROVAL DATE

REGISTERED PROFESSIONAL ENGINEER Snehalatha Pavuluri No. 78187 Exp 09/30/17 CIVIL STATE OF CALIFORNIA

THE STATE OF CALIFORNIA OR ITS OFFICERS OR AGENTS SHALL NOT BE RESPONSIBLE FOR THE ACCURACY OR COMPLETENESS OF SCANNED COPIES OF THIS PLAN SHEET.

T.Y.LIN INTERNATIONAL
2010 CROW CANYON PLACE,
SUITE 225
SAN RAMON, CA 94583

NOTES:

1. SEE STRUCTURES PLANS FOR CONCRETE STAIRWAY DETAILS AND RETAINING WALL DETAILS.
2. SEE CALTRANS STANDARD PLAN B3-6 FOR GUTTER DETAILS.
3. SEE IRRIGATION PLANS FOR IRRIGATION CONDUIT DETAILS.

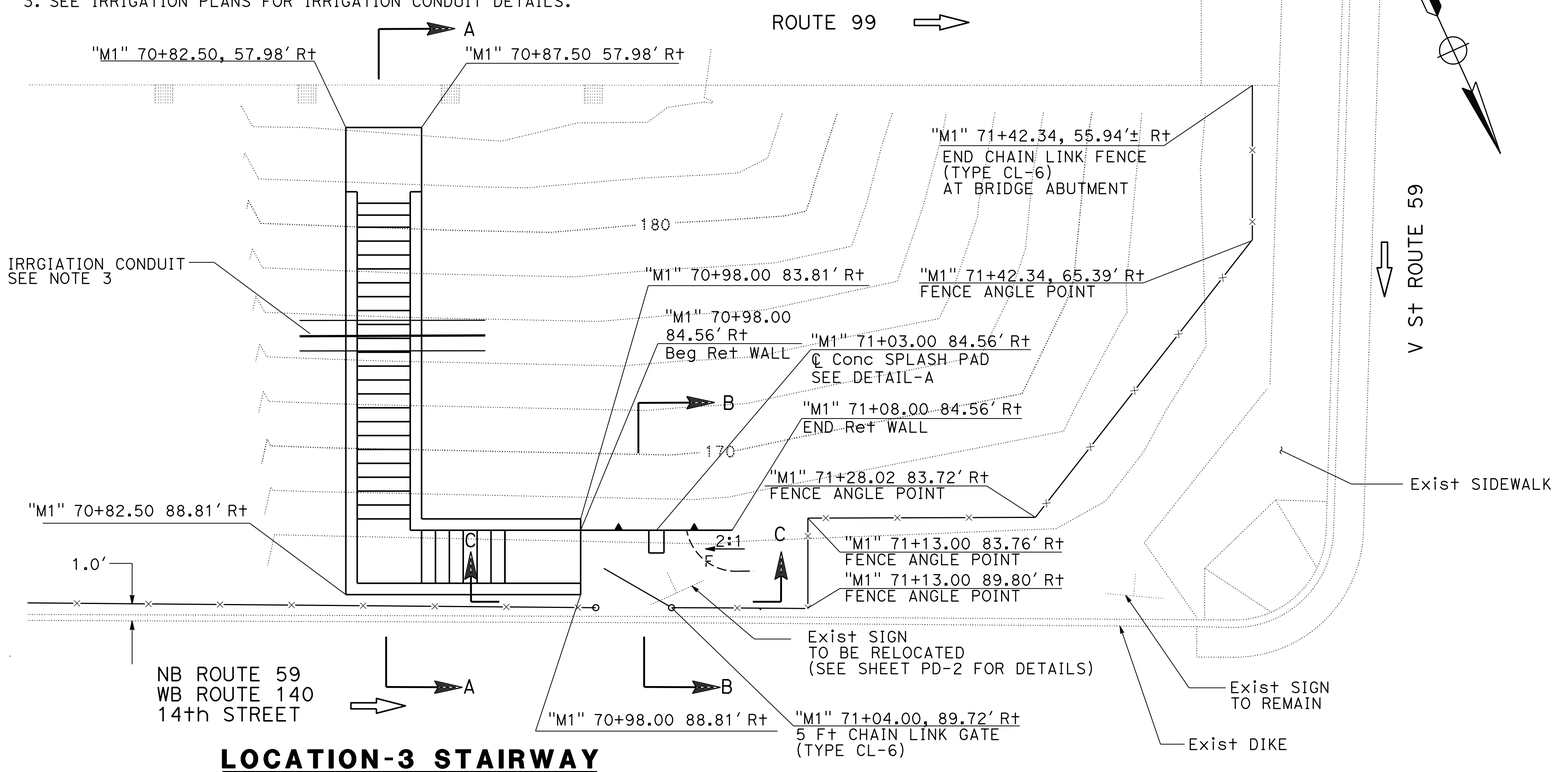

LOCATION-3 STAIRWAY

SCALE: 1" = 5'

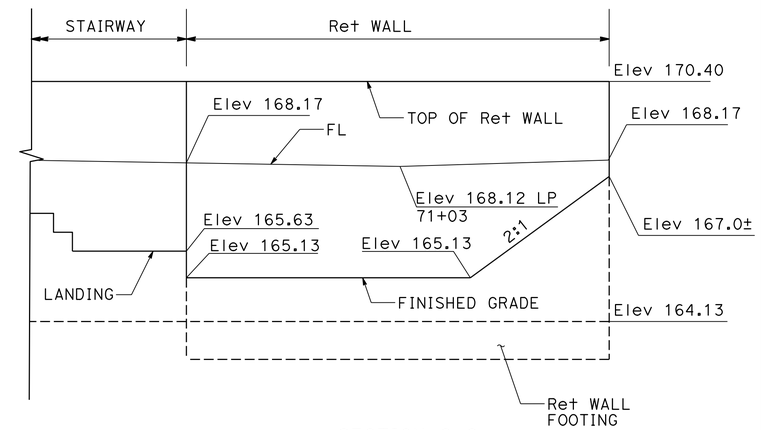

SECTION C-C

NO SCALE

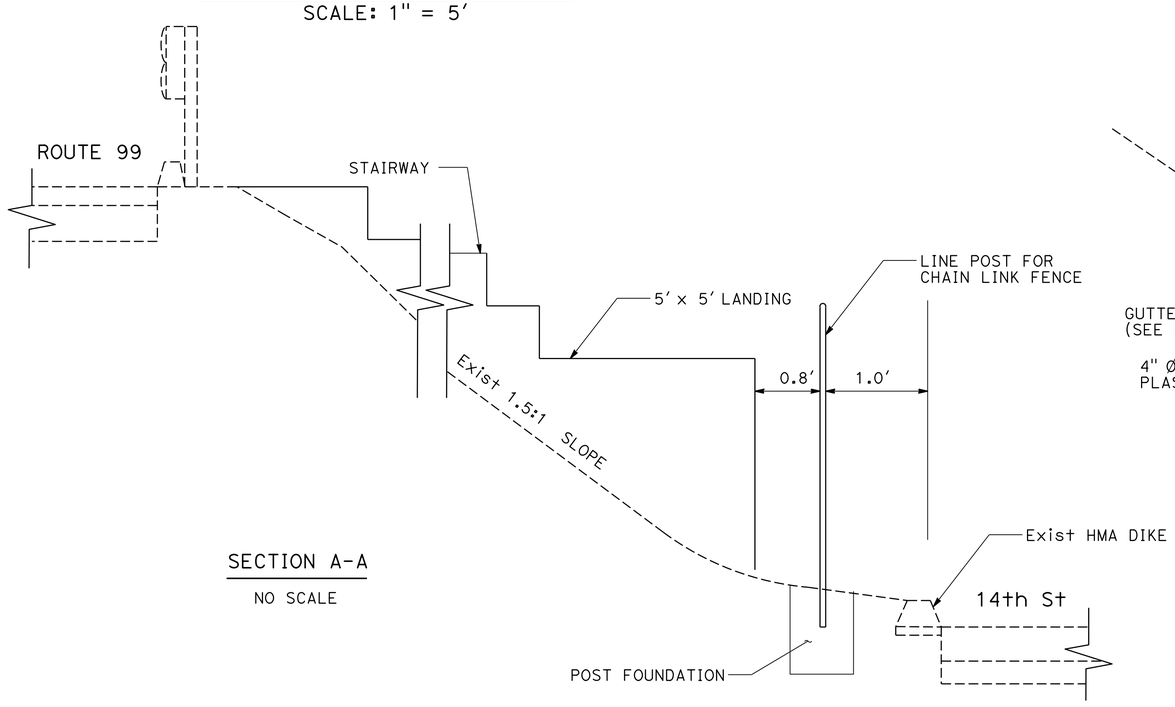

SECTION A-A

NO SCALE

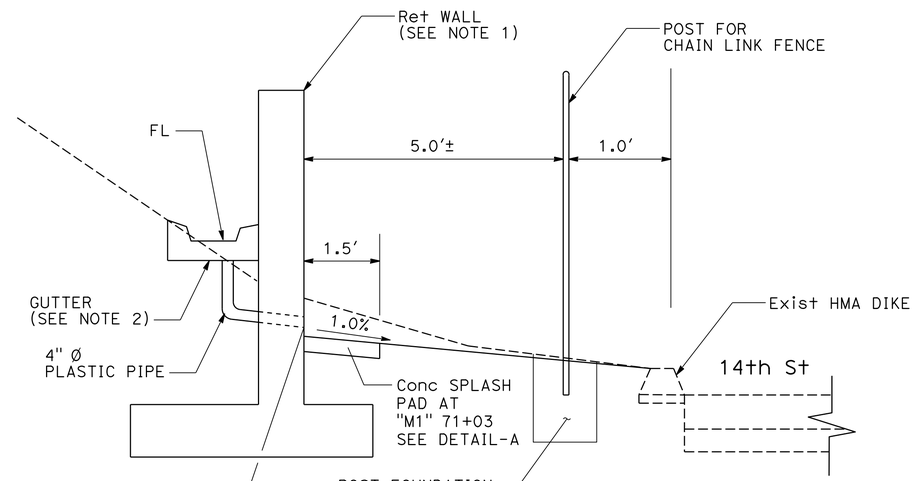

SECTION B-B

NO SCALE

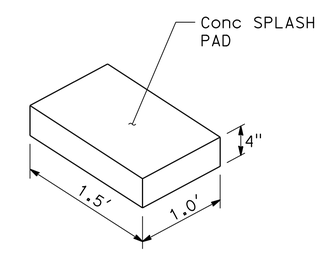

DETAIL-A

NO SCALE

CONSTRUCTION DETAILS

SCALE: AS SHOWN

C-1

REVISED BY	DATE REVISED
SP	12/21/15

SNEHA PAVULURI — NABAZ SAIEED

CALCULATED-DESIGNED BY — CHECKED BY

CONSULTANT FUNCTIONAL SUPERVISOR — BRIAN KRCELIC

STATE OF CALIFORNIA - DEPARTMENT OF TRANSPORTATION

Caltrans

LAST REVISION 12-21-15 — DATE PLOTTED => 30-DEC-2015 — TIME PLOTTED => 17:13

Dist	COUNTY	ROUTE	POST MILES TOTAL PROJECT	SHEET No.	TOTAL SHEETS
10	Mer	99	15.1/16.0	8	79

REGISTERED CIVIL ENGINEER 12/21/15 DATE

12-28-15
PLANS APPROVAL DATE

REGISTERED PROFESSIONAL ENGINEER Snehalatha Pavuluri No. 78187 Exp 09/30/17 CIVIL STATE OF CALIFORNIA

THE STATE OF CALIFORNIA OR ITS OFFICERS OR AGENTS SHALL NOT BE RESPONSIBLE FOR THE ACCURACY OR COMPLETENESS OF SCANNED COPIES OF THIS PLAN SHEET.

T.Y.LIN INTERNATIONAL
2010 CROW CANYON PLACE,
SUITE 225
SAN RAMON, CA 94583

NOTES:

FOR ACCURATE RIGHT OF WAY DATA, CONTACT RIGHT OF WAY ENGINEERING AT THE DISTRICT OFFICE.

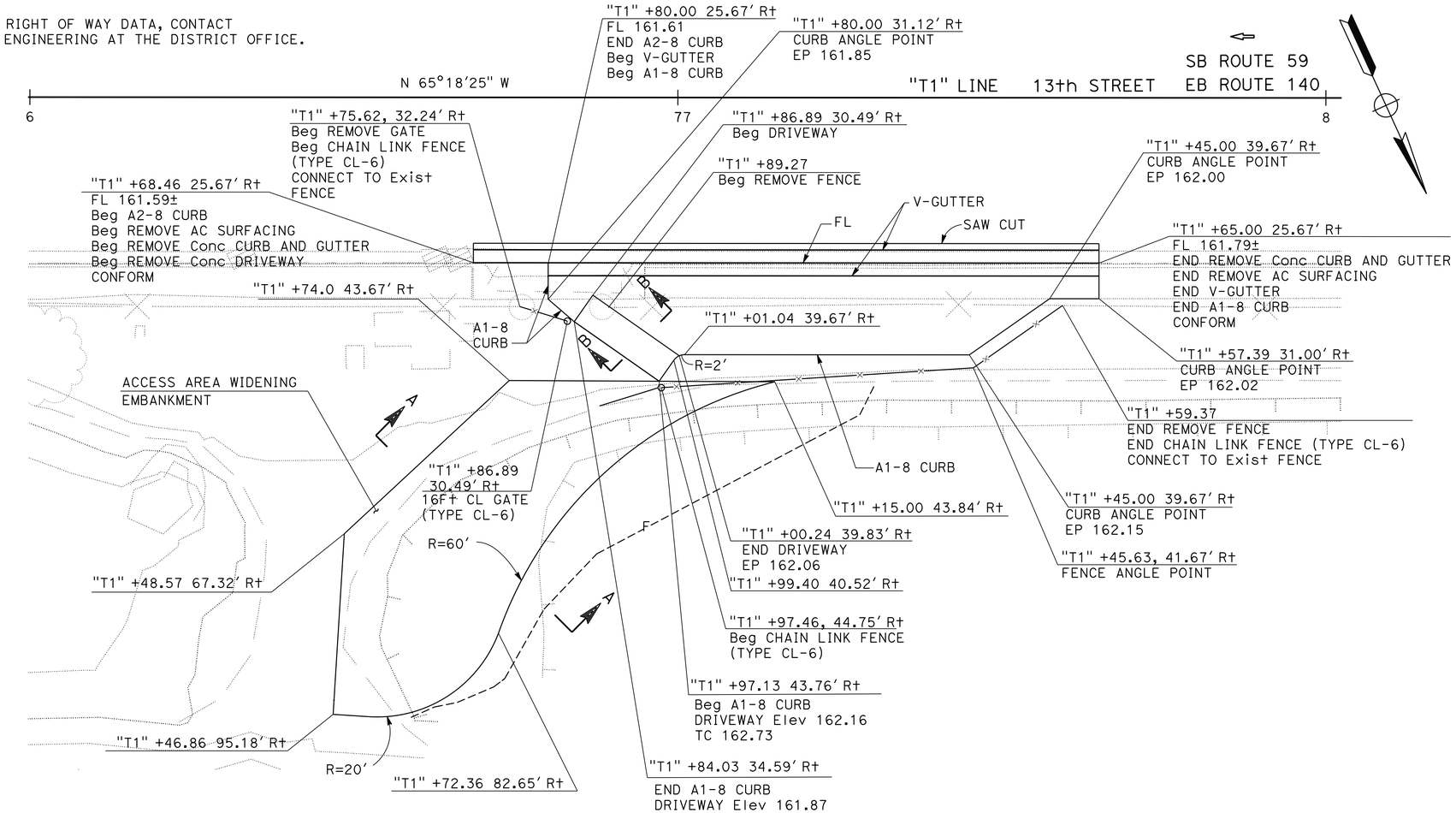

LOCATION 7 - MAINTENANCE VEHICLE PULLOUT

Sta "T1" 76+68 TO 77+65

SCALE 1"=10'

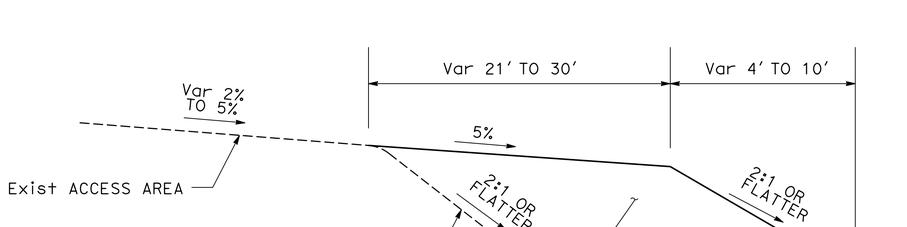

SECTION A-A

NO SCALE

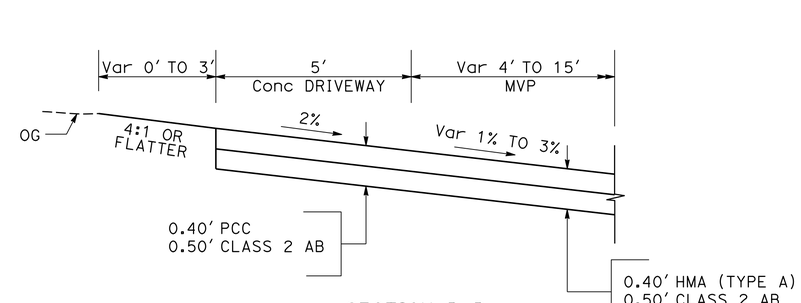

SECTION B-B

NO SCALE

CONSTRUCTION DETAILS

SCALE: AS SHOWN

C-2

STATE OF CALIFORNIA - DEPARTMENT OF TRANSPORTATION

Caltrans

CONSULTANT FUNCTIONAL SUPERVISOR: BRIAN KRCELIC

CALCULATED-DESIGNED BY: SNEHA PAVULURI

CHECKED BY: NABAZ SAIEED

REVISED BY: SP

DATE REVISED: 12/21/15

LAST REVISION 12-21-15

DATE PLOTTED => 30-DEC-2015
TIME PLOTTED => 17:13

Dist	COUNTY	ROUTE	POST MILES TOTAL PROJECT	SHEET No.	TOTAL SHEETS
10	Mer	99	15.1/16.0	9	79

REGISTERED CIVIL ENGINEER 12/27/15 DATE

12-28-15
PLANS APPROVAL DATE

REGISTERED PROFESSIONAL ENGINEER
Snehalatha Pavuluri
No. 78187
Exp 09/30/17
CIVIL
STATE OF CALIFORNIA

THE STATE OF CALIFORNIA OR ITS OFFICERS OR AGENTS SHALL NOT BE RESPONSIBLE FOR THE ACCURACY OR COMPLETENESS OF SCANNED COPIES OF THIS PLAN SHEET.

T.Y.LIN INTERNATIONAL
2010 CROW CANYON PLACE,
SUITE 225
SAN RAMON, CA 94583

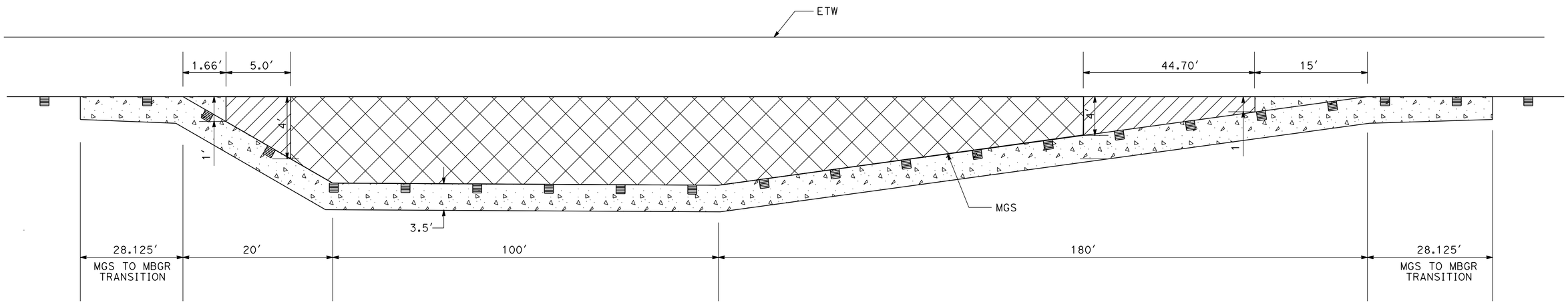

LEGEND (THIS SHEET ONLY):

- HMA (TYPE A) AND CLASS 2 AB
- MINOR CONCRETE (VEGETATION CONTROL)
- FULL DEPTH HMA (TYPE A)

MAINTENANCE VEHICLE PULLOUT TYPICAL PAVING DETAIL

CONSTRUCTION DETAILS

NO SCALE

C-3

STATE OF CALIFORNIA - DEPARTMENT OF TRANSPORTATION
Caltrans

CONSULTANT FUNCTIONAL SUPERVISOR: BRIAN KRCELIC

CALCULATED-DESIGNED BY: SNEHA PAVULURI
CHECKED BY: NABAZ SAIEED

REVISED BY: SP
DATE REVISED: 12/21/15

LAST REVISION 12-21-15
DATE PLOTTED => 30-DEC-2015
TIME PLOTTED => 17:13

Dist	COUNTY	ROUTE	POST MILES TOTAL PROJECT	SHEET No.	TOTAL SHEETS
10	Mer	99	15.1/16.0	10	79

REGISTERED CIVIL ENGINEER 12/21/15 DATE

12-28-15
PLANS APPROVAL DATE

REGISTERED PROFESSIONAL ENGINEER CHRISTOPHER SEWELL No. 64807 Exp. 6/30/17 CIVIL STATE OF CALIFORNIA

THE STATE OF CALIFORNIA OR ITS OFFICERS OR AGENTS SHALL NOT BE RESPONSIBLE FOR THE ACCURACY OR COMPLETENESS OF SCANNED COPIES OF THIS PLAN SHEET.

WRECO
1243 ALPINE ROAD
SUITE 108
WALNUT CREEK, CA 94596

NOTE:

FOR ACCURATE RIGHT OF WAY DATA, CONTACT RIGHT OF WAY ENGINEERING AT THE DISTRICT OFFICE.

ABBREVIATION:

THM(BFM)-TEMPORARY HYDRAULIC MULCH (BONDED FIBER MATRIX)

LEGEND:

TEMPORARY HYDRAULIC MULCH (BONDED FIBER MATRIX)

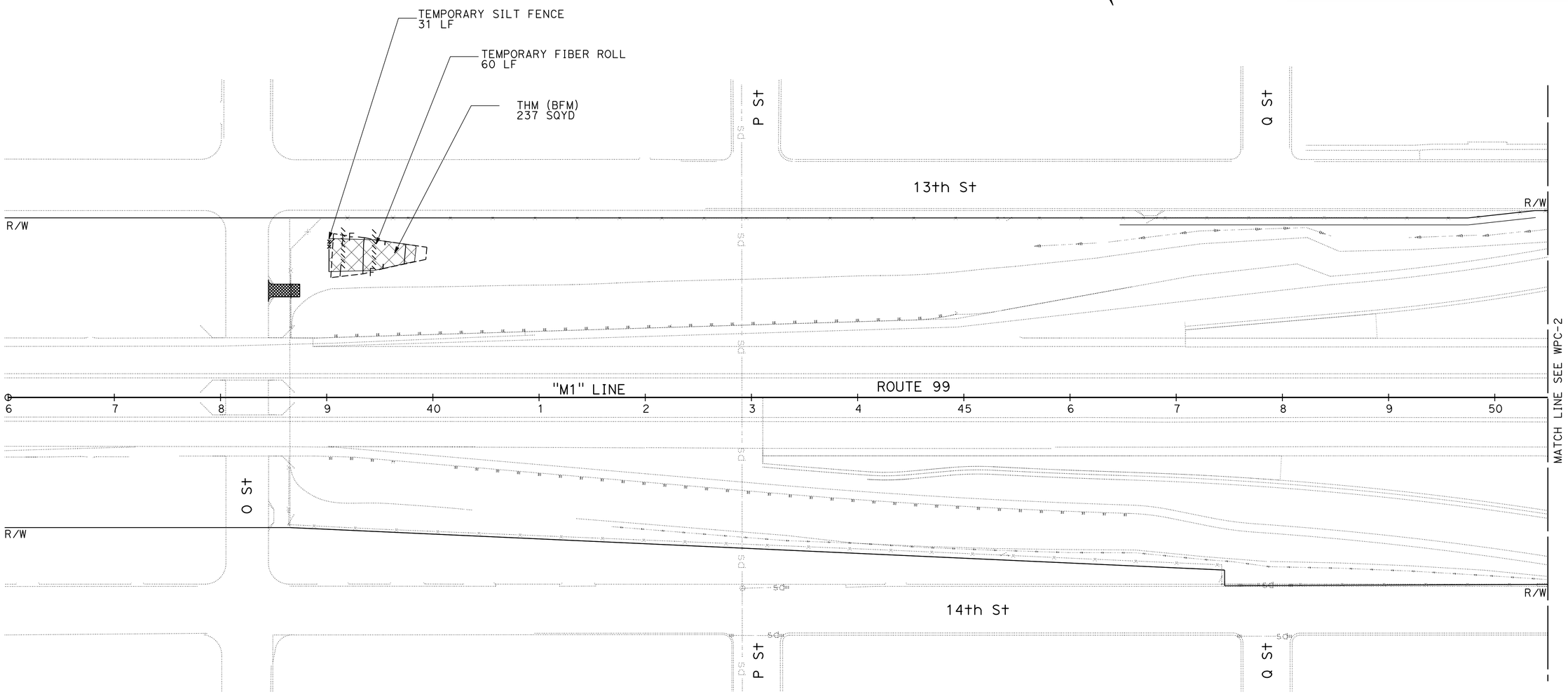

TEMPORARY WATER POLLUTION CONTROL PLAN

SCALE: 1" = 50'

WPC-1

APPROVED FOR TEMPORARY WATER POLLUTION CONTROL WORK ONLY

REVISED BY	RP
DATE REVISED	12/21/15
CALCULATED-DESIGNED BY	EMAN BIDOKHTI
CHECKED BY	CHRIS SEWELL
FUNCTIONAL SUPERVISOR	HAN-BIN LIANG

STATE OF CALIFORNIA - DEPARTMENT OF TRANSPORTATION

Caltrans

LAST REVISION 12-21-15 | DATE PLOTTED => 30-DEC-2015 TIME PLOTTED => 17:13

Dist	COUNTY	ROUTE	POST MILES TOTAL PROJECT	SHEET No.	TOTAL SHEETS
10	Mer	99	15.1/16.0	11	79

REGISTERED CIVIL ENGINEER 12/21/15 DATE

12-28-15
PLANS APPROVAL DATE

REGISTERED PROFESSIONAL ENGINEER CHRISTOPHER SEWELL No. 64807 Exp. 6/30/17 CIVIL STATE OF CALIFORNIA

THE STATE OF CALIFORNIA OR ITS OFFICERS OR AGENTS SHALL NOT BE RESPONSIBLE FOR THE ACCURACY OR COMPLETENESS OF SCANNED COPIES OF THIS PLAN SHEET.

WRECO
1243 ALPINE ROAD
SUITE 108
WALNUT CREEK, CA 94596

NOTE:

FOR ACCURATE RIGHT OF WAY DATA, CONTACT RIGHT OF WAY ENGINEERING AT THE DISTRICT OFFICE.

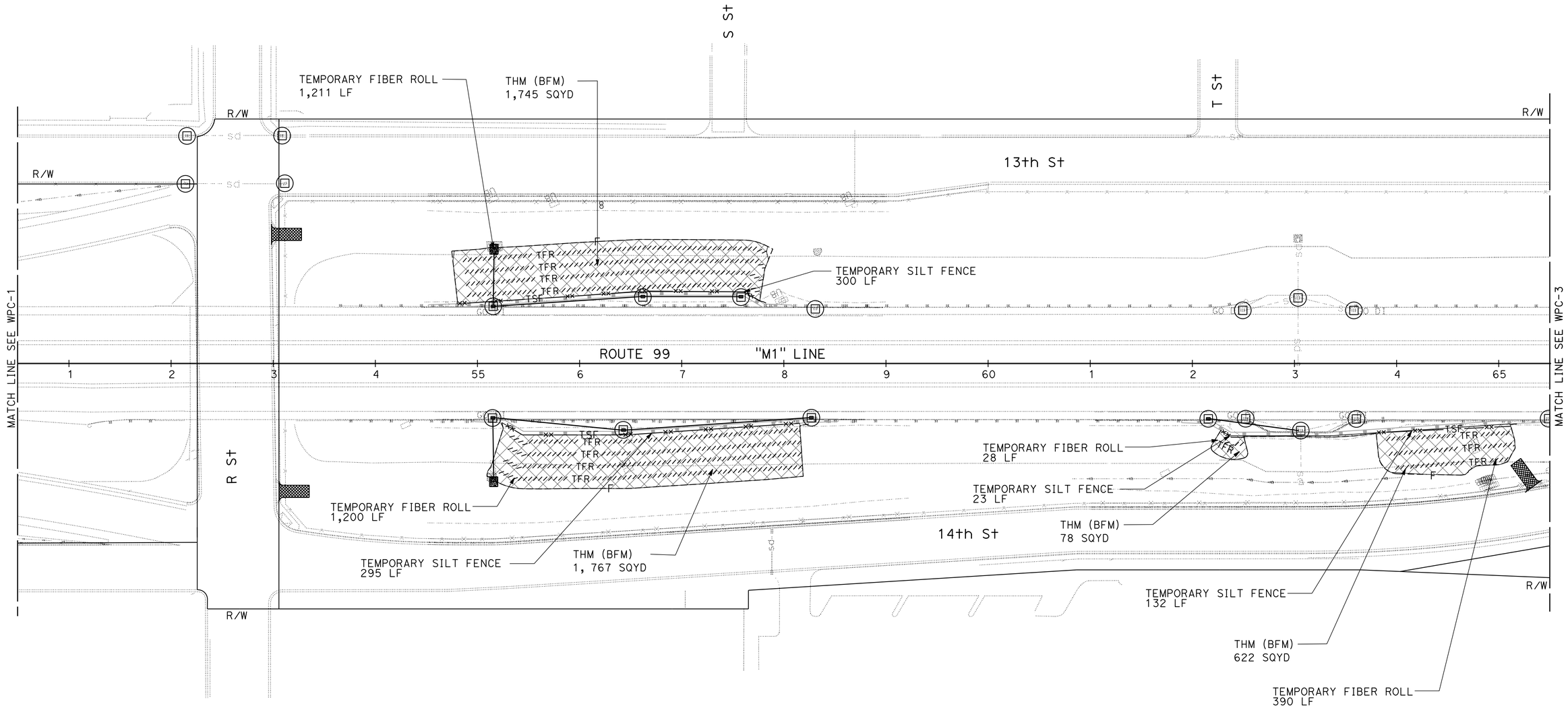

TEMPORARY WATER POLLUTION CONTROL PLAN

SCALE: 1" = 50'

WPC-2

APPROVED FOR TEMPORARY WATER POLLUTION CONTROL WORK ONLY

REVISED BY	DATE REVISED
RP	12/21/15

EMAN BIDOKHTI — CHRIS SEWELL — CALCULATED-DESIGNED BY — CHECKED BY

FUNCTIONAL SUPERVISOR: HAN-BIN LIANG

STATE OF CALIFORNIA - DEPARTMENT OF TRANSPORTATION

Caltrans

LAST REVISION 12-21-15 — DATE PLOTTED => 30-DEC-2015 — TIME PLOTTED => 17:13

Dist	COUNTY	ROUTE	POST MILES TOTAL PROJECT	SHEET No.	TOTAL SHEETS
10	Mer	99	15.1/16.0	12	79

REGISTERED CIVIL ENGINEER 12/21/15 DATE

12-28-15
PLANS APPROVAL DATE

REGISTERED PROFESSIONAL ENGINEER
CHRISTOPHER SEWELL
No. 64807
Exp. 6/30/17
CIVIL
STATE OF CALIFORNIA

THE STATE OF CALIFORNIA OR ITS OFFICERS OR AGENTS SHALL NOT BE RESPONSIBLE FOR THE ACCURACY OR COMPLETENESS OF SCANNED COPIES OF THIS PLAN SHEET.

WRECO
1243 ALPINE ROAD
SUITE 108
WALNUT CREEK, CA 94596

NOTE:

FOR ACCURATE RIGHT OF WAY DATA, CONTACT RIGHT OF WAY ENGINEERING AT THE DISTRICT OFFICE.

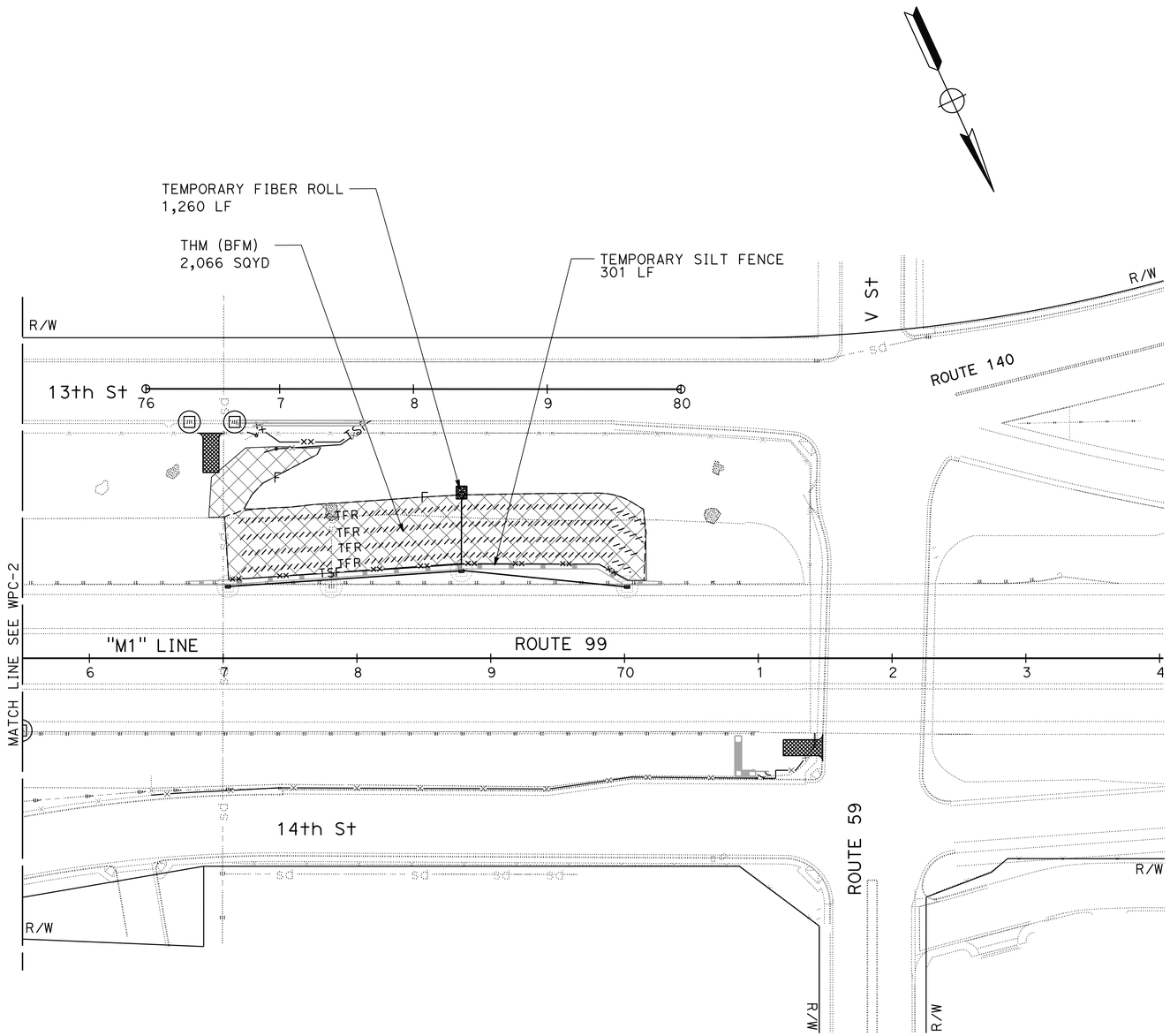

APPROVED FOR TEMPORARY WATER POLLUTION CONTROL WORK ONLY

TEMPORARY WATER POLLUTION CONTROL PLAN

SCALE: 1" = 50'

WPC-3

REVISED BY	RP
DATE REVISED	12/21/15
CALCULATED-DESIGNED BY	EMAN BIDOKHTI
CHECKED BY	CHRIS SEWELL
FUNCTIONAL SUPERVISOR	HAN-BIN LIANG

STATE OF CALIFORNIA - DEPARTMENT OF TRANSPORTATION

Caltrans

LAST REVISION 12-21-15
DATE PLOTTED => 30-DEC-2015
TIME PLOTTED => 17:13

Dist	COUNTY	ROUTE	POST MILES TOTAL PROJECT	SHEET No.	TOTAL SHEETS
10	Mer	99	15.1/16.0	13	79

REGISTERED CIVIL ENGINEER 12/21/15 DATE

12-28-15
PLANS APPROVAL DATE

REGISTERED PROFESSIONAL ENGINEER
CHRISTOPHER SEWELL
No. 64807
Exp. 6/30/17
CIVIL
STATE OF CALIFORNIA

THE STATE OF CALIFORNIA OR ITS OFFICERS OR AGENTS SHALL NOT BE RESPONSIBLE FOR THE ACCURACY OR COMPLETENESS OF SCANNED COPIES OF THIS PLAN SHEET.

WRECO
1243 ALPINE ROAD
SUITE 108
WALNUT CREEK, CA 94596

TEMPORARY WATER POLLUTION CONTROL QUANTITIES

PLAN No.	TEMPORARY FIBER ROLLS	TEMPORARY SILT FENCE	Temp HYDRAULIC MULCH (BONDED FIBER MATRIX)	Temp CONSTRUCTION ENTRANCE	TEMPORARY DRAINAGE INLET PROTECTION
	(LF)	(LF)	(SQYD)	(EA)	(EA)
WPC-1	60	31	237	1	
WPC-2	2,829	750	4,212	3	19
WPC-3	1,260	301	2,066	2	6
TOTAL	4,149	1,082	6,515	6	25

TEMPORARY WATER POLLUTION CONTROL QUANTITIES

WPCQ-1

REVISED BY	DATE REVISED
RP	12/21/15

EMAN BIDOKHTI
CHRIS SEWELL

CALCULATED-DESIGNED BY
CHECKED BY

FUNCTIONAL SUPERVISOR
HAN-BIN LIANG

STATE OF CALIFORNIA - DEPARTMENT OF TRANSPORTATION
Caltrans

LAST REVISION 12-21-15
DATE PLOTTED => 30-DEC-2015
TIME PLOTTED => 17:20

Dist	COUNTY	ROUTE	POST MILES TOTAL PROJECT	SHEET No.	TOTAL SHEETS
10	Mer	99	15.1/16.0	14	79

REGISTERED CIVIL ENGINEER 12/21/15 DATE

12-28-15
PLANS APPROVAL DATE

REGISTERED PROFESSIONAL ENGINEER CHRISTOPHER SEWELL No. 64807 Exp. 6/30/17 CIVIL STATE OF CALIFORNIA

THE STATE OF CALIFORNIA OR ITS OFFICERS OR AGENTS SHALL NOT BE RESPONSIBLE FOR THE ACCURACY OR COMPLETENESS OF SCANNED COPIES OF THIS PLAN SHEET.

WRECO
1243 ALPINE ROAD
SUITE 108
WALNUT CREEK, CA 94596

NOTE:

FOR ACCURATE RIGHT OF WAY DATA, CONTACT RIGHT OF WAY ENGINEERING AT THE DISTRICT OFFICE.

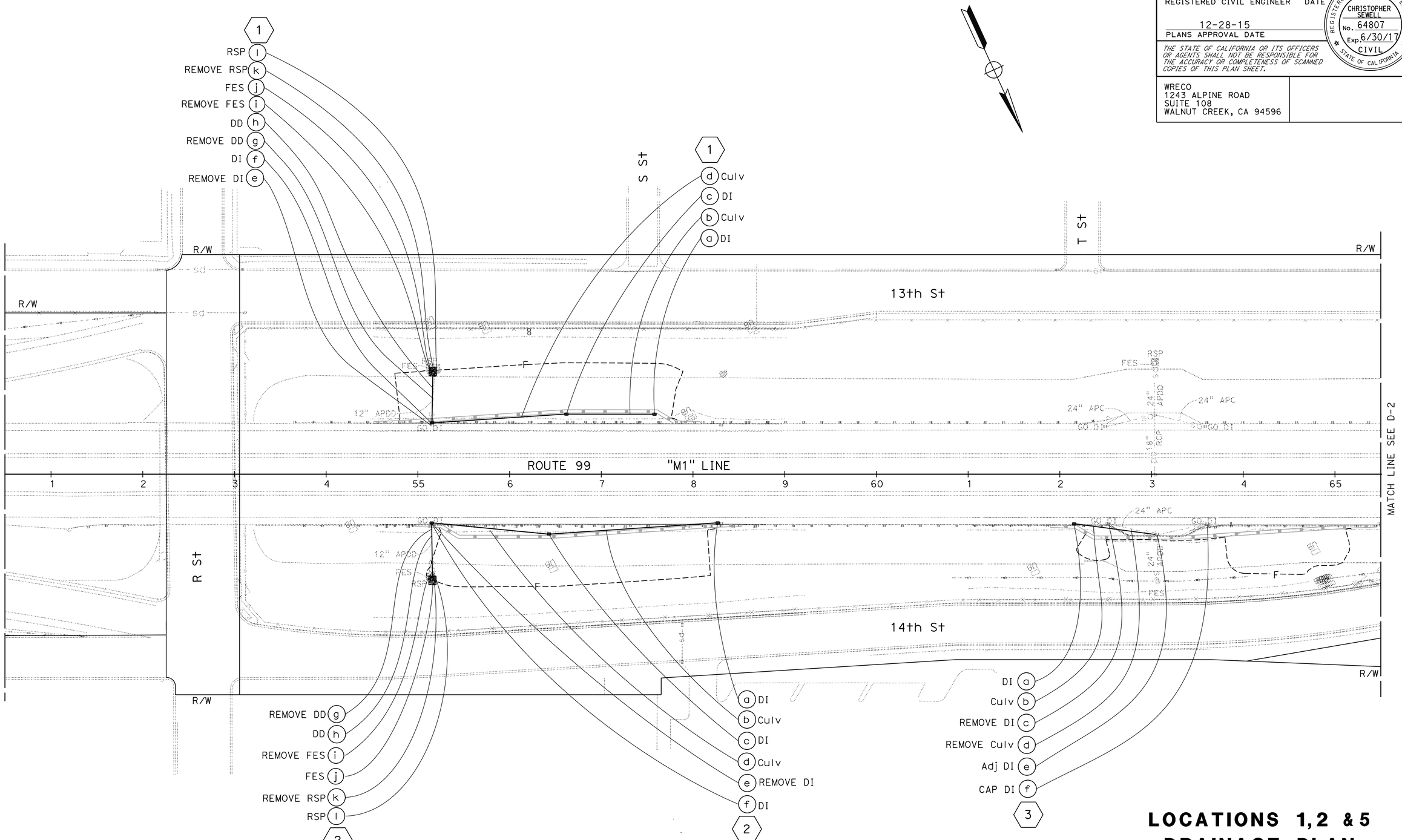

LOCATIONS 1,2 & 5 DRAINAGE PLAN

SCALE: 1" = 50'

APPROVED FOR DRAINAGE WORK ONLY

D-1

REVISED BY	DATE REVISED
RP	12/21/15

CALCULATED-DESIGNED BY: EMAN BIDOKHTI
CHECKED BY: CHRIS SEWELL
FUNCTIONAL SUPERVISOR: HAN-BIN LIANG

STATE OF CALIFORNIA - DEPARTMENT OF TRANSPORTATION
Caltrans

LAST REVISION 12-21-15 | DATE PLOTTED => 30-DEC-2015 | TIME PLOTTED => 17:13

Dist	COUNTY	ROUTE	POST MILES TOTAL PROJECT	SHEET No.	TOTAL SHEETS
10	Mer	99	15.1/16.0	15	79

REGISTERED CIVIL ENGINEER 12/21/15 DATE

12-28-15
PLANS APPROVAL DATE

REGISTERED PROFESSIONAL ENGINEER CHRISTOPHER SEWELL No. 64807 Exp. 6/30/17 CIVIL STATE OF CALIFORNIA

THE STATE OF CALIFORNIA OR ITS OFFICERS OR AGENTS SHALL NOT BE RESPONSIBLE FOR THE ACCURACY OR COMPLETENESS OF SCANNED COPIES OF THIS PLAN SHEET.

WRECO
1243 ALPINE ROAD
SUITE 108
WALNUT CREEK, CA 94596

NOTE:

FOR ACCURATE RIGHT OF WAY DATA, CONTACT RIGHT OF WAY ENGINEERING AT THE DISTRICT OFFICE.

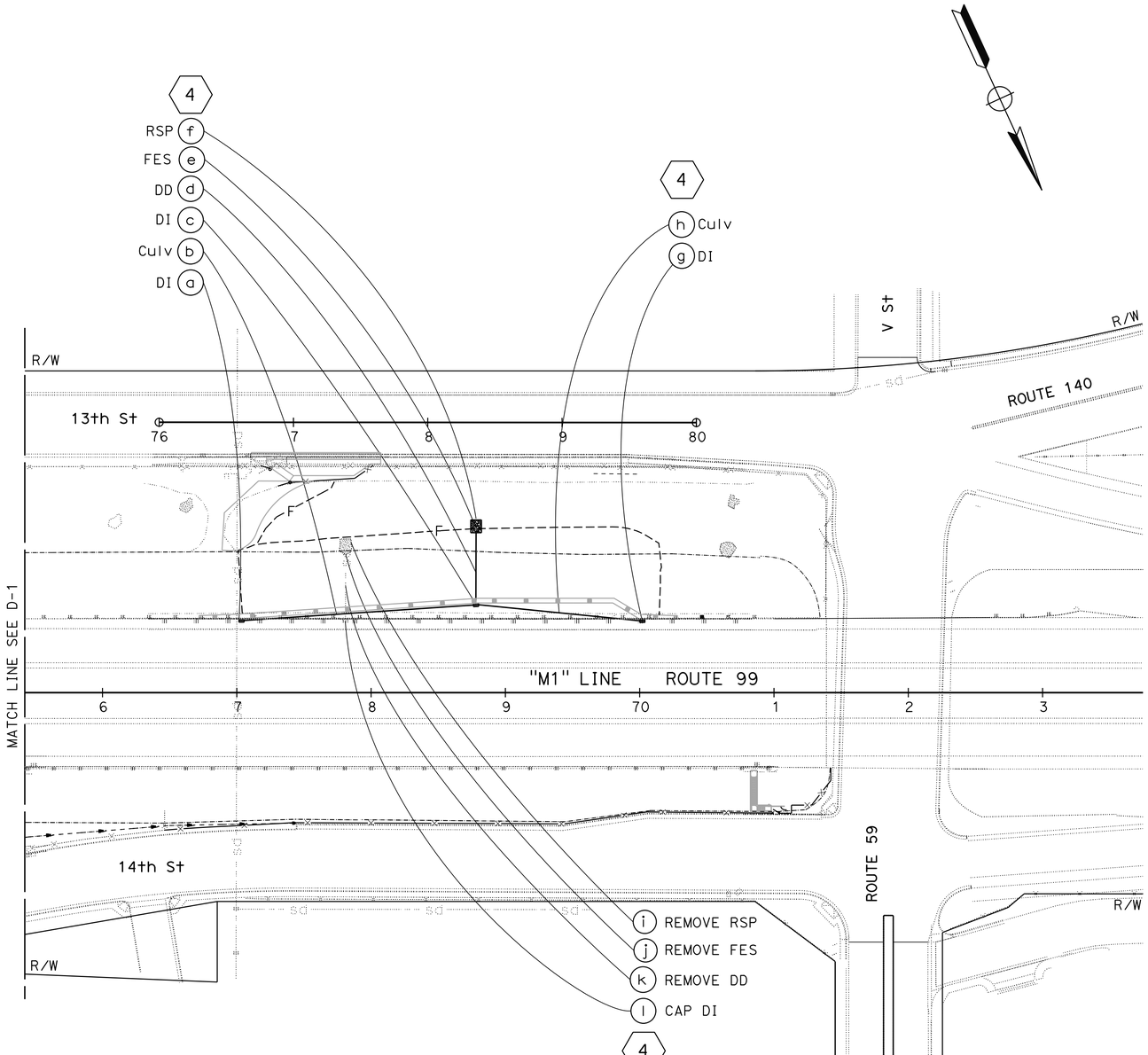

APPROVED FOR DRAINAGE WORK ONLY

LOCATION 6
DRAINAGE PLAN

SCALE: 1" = 50'

D-2

REVISED BY	RP
DATE REVISED	12/21/15
CALCULATED-DESIGNED BY	EMAN BIDOKHTI
CHECKED BY	CHRIS SEWELL
FUNCTIONAL SUPERVISOR	HAN-BIN LIANG

STATE OF CALIFORNIA - DEPARTMENT OF TRANSPORTATION

Caltrans

LAST REVISION 12-21-15 | DATE PLOTTED => 30-DEC-2015 | TIME PLOTTED => 17:13

Dist	COUNTY	ROUTE	POST MILES TOTAL PROJECT	SHEET No.	TOTAL SHEETS
10	Mer	99	15.1/16.0	16	79

REGISTERED CIVIL ENGINEER 12/21/15 DATE

12-28-15
PLANS APPROVAL DATE

REGISTERED PROFESSIONAL ENGINEER CHRISTOPHER SEWELL No. 64807 Exp. 6/30/17 CIVIL STATE OF CALIFORNIA

THE STATE OF CALIFORNIA OR ITS OFFICERS OR AGENTS SHALL NOT BE RESPONSIBLE FOR THE ACCURACY OR COMPLETENESS OF SCANNED COPIES OF THIS PLAN SHEET.

WRECO
1243 ALPINE ROAD
SUITE 108
WALNUT CREEK, CA 94596

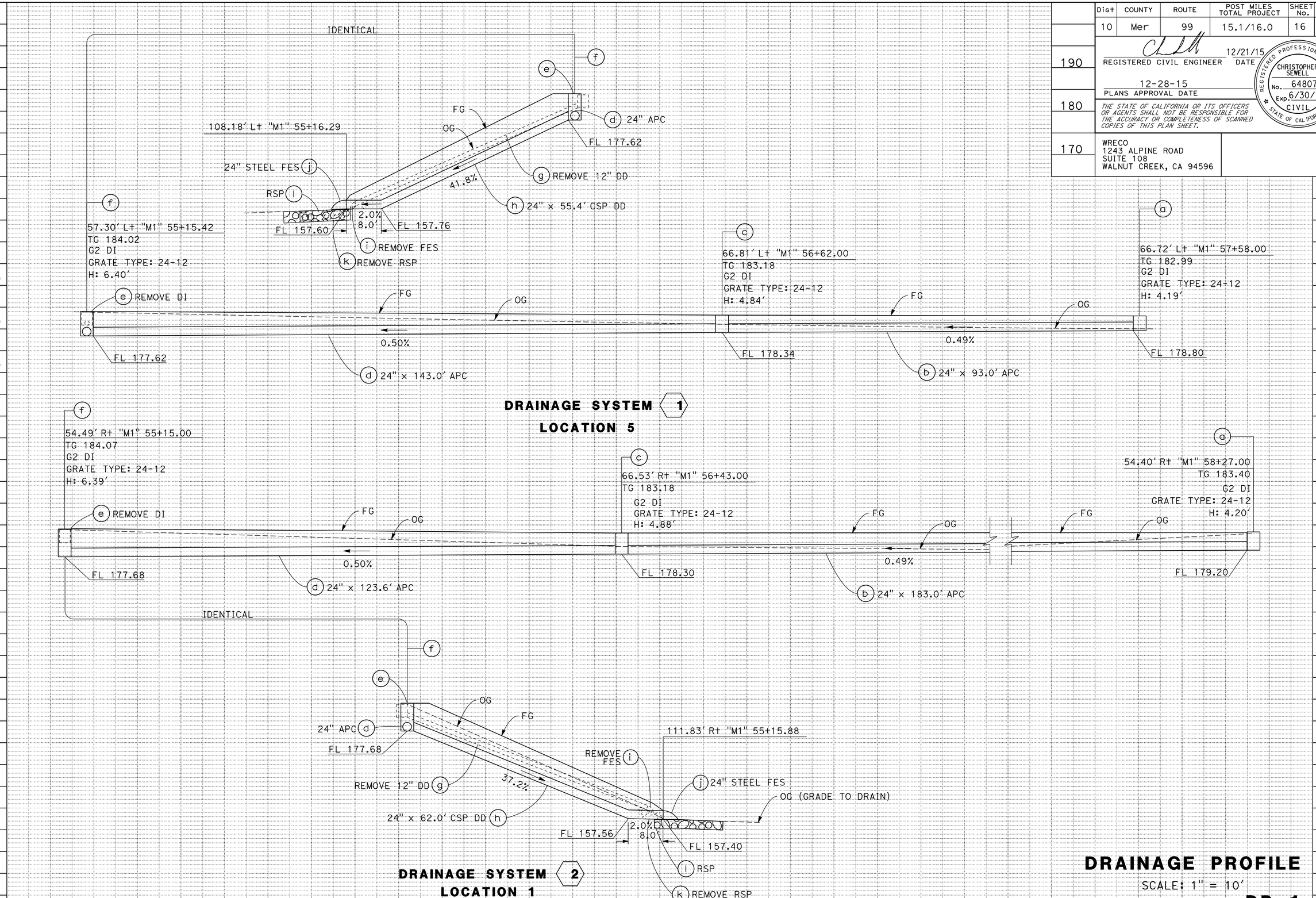

DRAINAGE PROFILE

SCALE: 1" = 10'

DP-1

REVISED BY	DATE REVISED
RP	12/21/15

CALCULATED-DESIGNED BY: EMAN BIDOKHTI
CHECKED BY: CHRIS SEWELL
FUNCTIONAL SUPERVISOR: HAN-BIN LIANG

STATE OF CALIFORNIA - DEPARTMENT OF TRANSPORTATION
Caltrans

LAST REVISION 12-21-15
DATE PLOTTED => 30-DEC-2015
TIME PLOTTED => 17:13

Dist	COUNTY	ROUTE	POST MILES TOTAL PROJECT	SHEET No.	TOTAL SHEETS
10	Mer	99	15.1/16.0	17	79

REGISTERED CIVIL ENGINEER 12/21/15 DATE

12-28-15
PLANS APPROVAL DATE

REGISTERED PROFESSIONAL ENGINEER CHRISTOPHER SEWELL No. 64807 Exp. 6/30/17 CIVIL STATE OF CALIFORNIA

THE STATE OF CALIFORNIA OR ITS OFFICERS OR AGENTS SHALL NOT BE RESPONSIBLE FOR THE ACCURACY OR COMPLETENESS OF SCANNED COPIES OF THIS PLAN SHEET.

WRECO
1243 ALPINE ROAD
SUITE 108
WALNUT CREEK, CA 94596

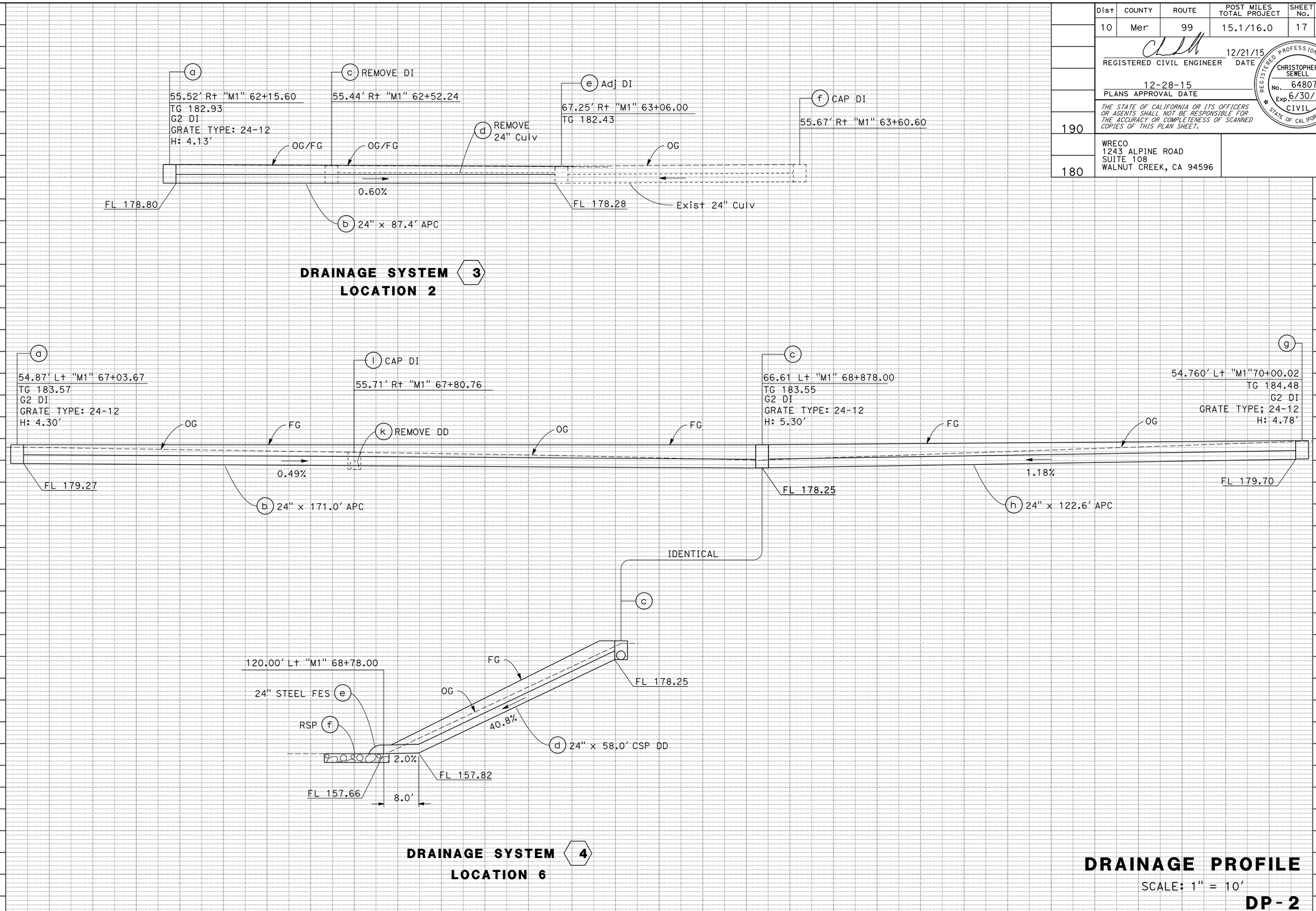

DRAINAGE PROFILE

SCALE: 1" = 10'

DP-2

REVISED BY	RP
DATE REVISED	12/21/15
CALCULATED-DESIGNED BY	EMAN BIDOKHTI
CHECKED BY	CHRIS SEWELL
FUNCTIONAL SUPERVISOR	HAN-BIN LIANG

STATE OF CALIFORNIA - DEPARTMENT OF TRANSPORTATION

Caltrans

LAST REVISION 12-21-15 | DATE PLOTTED => 30-DEC-2015 | TIME PLOTTED => 17:13

Dist	COUNTY	ROUTE	POST MILES TOTAL PROJECT	SHEET No.	TOTAL SHEETS
10	Mer	99	15.1/16.0	18	79

REGISTERED CIVIL ENGINEER 12/21/15 DATE

12-28-15
PLANS APPROVAL DATE

REGISTERED PROFESSIONAL ENGINEER CHRISTOPHER SEWELL No. 64807 Exp. 6/30/17 CIVIL STATE OF CALIFORNIA

THE STATE OF CALIFORNIA OR ITS OFFICERS OR AGENTS SHALL NOT BE RESPONSIBLE FOR THE ACCURACY OR COMPLETENESS OF SCANNED COPIES OF THIS PLAN SHEET.

WRECO
1243 ALPINE ROAD
SUITE 108
WALNUT CREEK, CA 94596

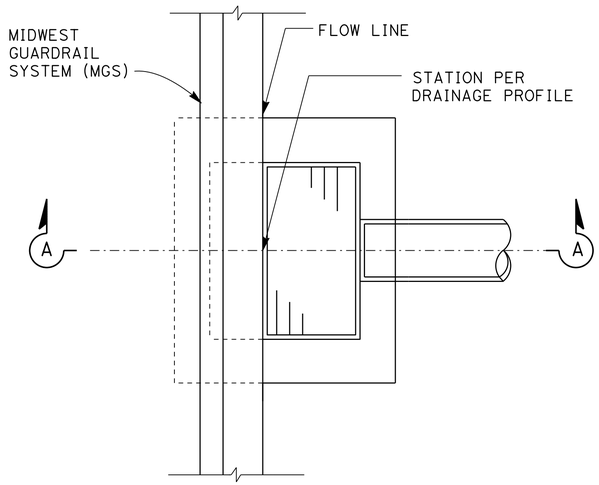

PLAN

INLET ADJACENT TO AC DIKE OR MIDWEST GUARDRAIL SYSTEM

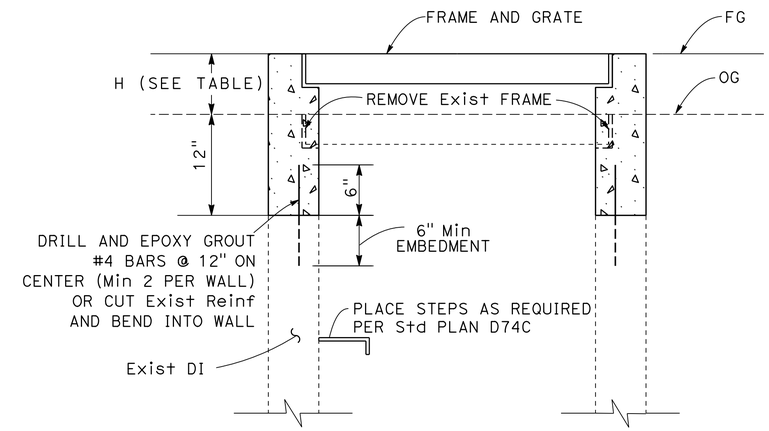

SECTIONAL VIEW

NOTES:

1. REMOVE 12" Min OF EXISTING WALL FOR SPLICING, ON ALL Adj DI.
2. H IS EQUAL TO THE HEIGHT OF ADJUSTMENT TO CONFORM TO FG.

ADJUST INLET TO GRADE

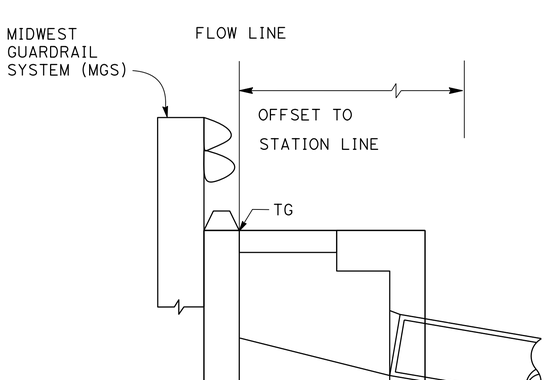

SECTION A-A

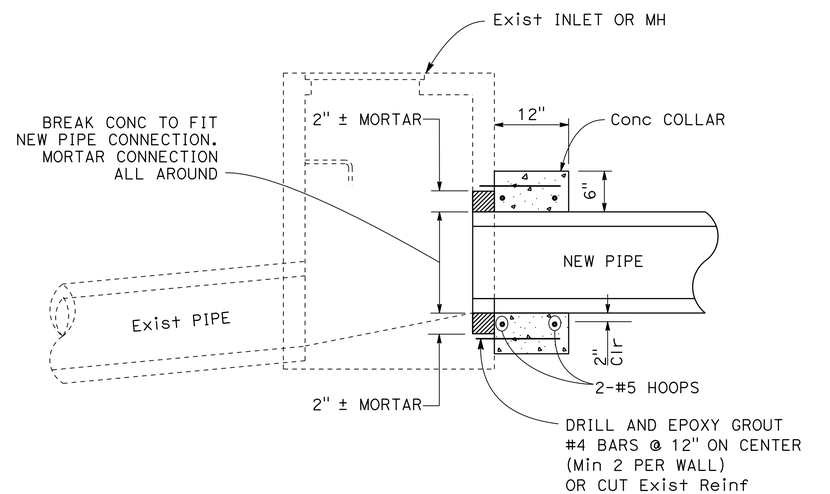

PIPE CONNECTION TO EXISTING DRAINAGE STRUCTURE

3 b

LOCATIONS

DRAINAGE SYSTEM	APPROXIMATE PM / STA	Adj DI (EA)	H (FT)
3 e	67.25' Rt "M1" 63+06	1	0.15
TOTAL		1	

DRAINAGE DETAILS

DD-1

APPROVED FOR DRAINAGE WORK ONLY

REVISED BY	RP
DATE REVISED	12/21/15
EMAN BIDOKHTI	
CHRIS SEWELL	
CALCULATED-DESIGNED BY	
CHECKED BY	
FUNCTIONAL SUPERVISOR	HAN-BIN LIANG

STATE OF CALIFORNIA - DEPARTMENT OF TRANSPORTATION

LAST REVISION 12-21-15 | DATE PLOTTED => 30-DEC-2015 | TIME PLOTTED => 17:13

Dist	COUNTY	ROUTE	POST MILES TOTAL PROJECT	SHEET No.	TOTAL SHEETS
10	Mer	99	15.1/16.0	19	79

REGISTERED CIVIL ENGINEER 12/21/15 DATE

12-28-15
PLANS APPROVAL DATE

REGISTERED PROFESSIONAL ENGINEER CHRISTOPHER SEWELL No. 64807 Exp. 6/30/17 CIVIL STATE OF CALIFORNIA

THE STATE OF CALIFORNIA OR ITS OFFICERS OR AGENTS SHALL NOT BE RESPONSIBLE FOR THE ACCURACY OR COMPLETENESS OF SCANNED COPIES OF THIS PLAN SHEET.

WRECO
1243 ALPINE ROAD
SUITE 108
WALNUT CREEK, CA 94596

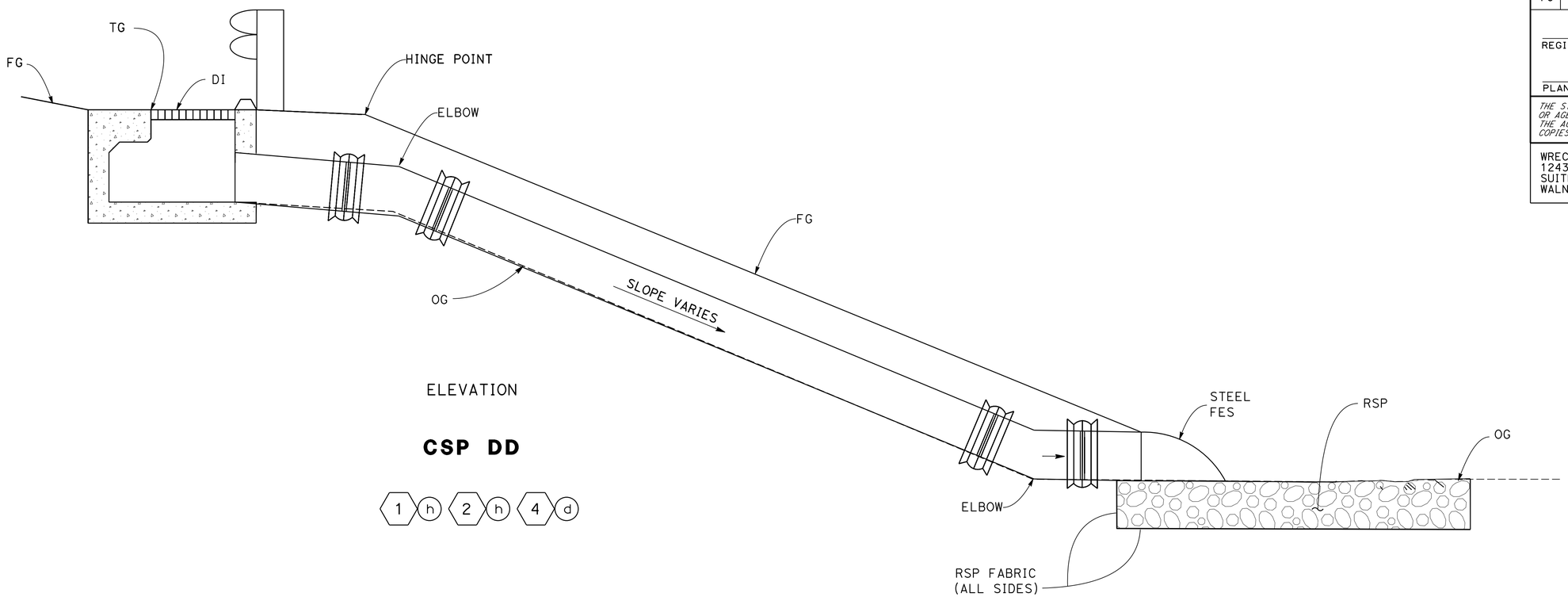

ELEVATION

CSP DD

1 h 2 h 4 d

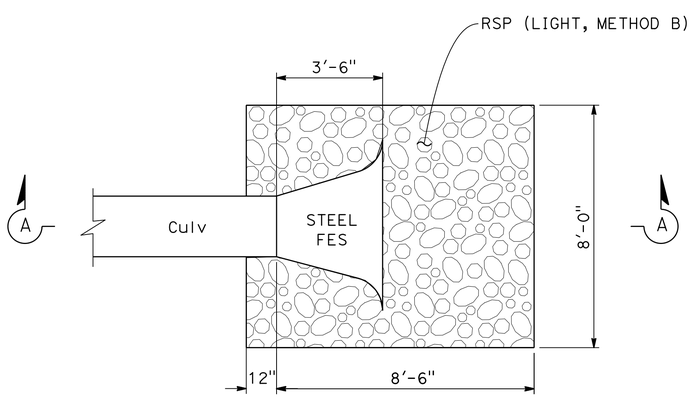

PLAN VIEW

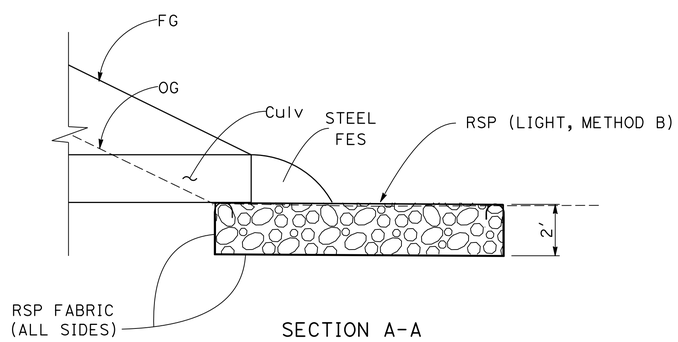

SECTION A-A

RSP AT FES

1 i 2 i 4 f

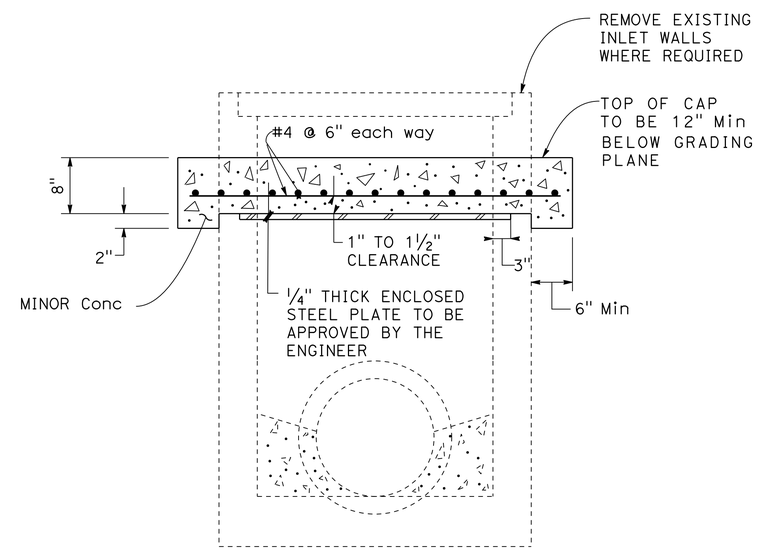

CAP INLET (DI)

3 f 4 i

DRAINAGE DETAILS

DD-2

APPROVED FOR DRAINAGE WORK ONLY

REVISED BY	RP
DATE REVISED	12/21/15
CALCULATED-DESIGNED BY	EMAN BIDOKHTI
CHECKED BY	CHRIS SEWELL
FUNCTIONAL SUPERVISOR	HAN-BIN LIANG

STATE OF CALIFORNIA - DEPARTMENT OF TRANSPORTATION

Caltrans

LAST REVISION 12-21-15 | DATE PLOTTED => 30-DEC-2015 | TIME PLOTTED => 17:13

Dist	COUNTY	ROUTE	POST MILES TOTAL PROJECT	SHEET No.	TOTAL SHEETS
10	Mer	99	15.1/16.0	20	79

REGISTERED CIVIL ENGINEER 12/21/15 DATE

12-28-15
PLANS APPROVAL DATE

REGISTERED PROFESSIONAL ENGINEER CHRISTOPHER SEWELL No. 64807 Exp. 6/30/17 CIVIL STATE OF CALIFORNIA

THE STATE OF CALIFORNIA OR ITS OFFICERS OR AGENTS SHALL NOT BE RESPONSIBLE FOR THE ACCURACY OR COMPLETENESS OF SCANNED COPIES OF THIS PLAN SHEET.

WRECO
1243 ALPINE ROAD
SUITE 108
WALNUT CREEK, CA 94596

NOTES:

1. (N)= NOT A SEPERATE PAY ITEM, FOR INFORMATION ONLY.
2. * QUANTITY INCLUDED IN EARTHWORK QUANTITIES TABLE IN SUMMARY OF QUANTITIES

ABBREVIATIONS:

SJ= STANDARD JOINT
DDJ= DOWNDRAIN JOINT

APC ALLOWABLE PIPE MATERIAL AND PROTECTION

DESIGNATION	RCP	CSP	SSRP	PLASTIC PIPE
		Min PIPE THICKNESS (in)	Min PIPE THICKNESS (in)	SMOOTH INTERIOR
24" APC	YES	0.064"	0.064"	YES

DRAINAGE QUANTITIES

DRAINAGE SYSTEM No. ⬡	DRAINAGE UNIT ◯	REMOVE DD (EA)	REMOVE CULVERT (LF)	REMOVE FES (EA)	REMOVE RSP* (CY)	REMOVE INLET (EA)	ADJUST INLET (EA)	CAP INLET (EA)	MINOR CONCRETE (MINOR STRUCTURE) (CY)	MISC IRON AND STEEL (LB)	RSP (LIGHT, METHOD B) (CY)	RSP FABRIC (CLASS 8) (SQYD)	INLET FRAME AND GRATE TYPE (24-12) (N) (EA)	HEIGHT OF INLET (N) (FT)	24" CSP DD (.109" THICK) (LF)	24" APC (LF)	PIPE JOINT CLASSIFICATION (N)	24" STEEL FES (EA)	DESCRIPTION	STATION LIMITS	DRAINAGE SYSTEM No. ⬡	DRAINAGE UNIT ◯	DRAINAGE PLAN No.
1	a								1.6	326			1	4.2					G2 DI	66.72′ L+ "M1" 57+58.00	1	a	D-1
	b															93.0	SJ		24" APC	66.72′ L+ "M1" 57+58.00 TO 66.81′ L+ "M1" 56+62.00		b	
	c								1.8	326			1	4.8					G2 DI	66.81′ L+ "M1" 56+62.00		c	
	d															143.0	SJ		24" APC	66.81′ L+ "M1" 56+62.00 TO 55.30′ L+ "M1" 55+15.42		d	
	e					1													REMOVE DI	53.96′ L+ "M1" 55+15.09		e	
	f								2.2	326			1	6.4					G2 DI	57.30′ L+ "M1" 55+15.42		f	
	g	1																	REMOVE 12" DD	55.31′ L+ "M1" 55+15.13 TO 106.26′ L+ "M1" 55+17.80		g	
	h														55.4		DDJ		24" CSP DD	57.30′ L+ "M1" 55+15.42 TO 108.18′ L+ "M1" 55+16.29		h	
	i			1															REMOVE FES	108.56′ L+ "M1" 55+18.02		i	
	j																	1	24" STEEL FES	108.18′ L+ "M1" 55+16.29		j	
	k				7.9														REMOVE RSP	112.19′ L+ "M1" 55+16.26		k	
	l										5.6	12.8							RSP	112.19′ L+ "M1" 55+16.26		l	
2	a								1.6	326			1	4.2					G2 DI	54.40′ R+ "M1" 58+27.00	2	a	D-1
	b															183.0	SJ		24" APC	54.40′ R+ "M1" 58+27.00 TO 66.53′ R+ "M1" 56+45.00		b	
	c								1.8	326			1	4.9					G2 DI	66.53′ R+ "M1" 56+43.00		c	
	d															123.6	SJ		24" APC	66.53′ R+ "M1" 56+43.00 TO 54.49′ R+ "M1" 55+15.00		d	
	e					1													REMOVE DI	54.49′ R+ "M1" 55+15.00		e	
	f								2.2	326			1	6.4					G2 DI	54.49′ R+ "M1" 55+15.00		f	
	g	1																	REMOVE 12" DD	55.33′ R+ "M1" 55+15.12 TO 107.09′ R+ "M1" 55+16.35		g	
	h														62.0		DDJ		24" CSP DD	54.49′ R+ "M1" 55+15.00 TO 111.83′ R+ "M1" 55+15.88		h	
	i			1															REMOVE FES	109.21′ R+ "M1" 55+15.74		i	
	j																	1	24" STEEL FES	111.83′ R+ "M1" 55+15.88		j	
	k				3.5														REMOVE RSP	111.83′ R+ "M1" 55+18.11		k	
	l										5.6	12.8							RSP	115.56′ R+ "M1" 55+14.86		l	
3	a								1.6	326			1	4.1					G2 DI	55.52′ R+ "M1" 62+15.60	3	a	D-1
	b															87.4	SJ		24" APC	55.52′ R+ "M1" 62+15.60 TO 67.25′ R+ "M1" 63+06.00		b	
	c					1													REMOVE DI	55.44′ R+ "M1" 62+52.24		c	
	d		51.0																REMOVE 24" PIPE	54.21′ R+ "M1" 62+54.28 TO 67.24′ R+ "M1" 63+06.00		d	
	e						1												ADJ DI	67.25′ R+ "M1" 63+06.00		e	
	f							1											CAP DI	55.67′ R+ "M1" 63+60.60		f	
4	a								1.6	326			1	4.3					G2 DI	54.87′ L+ "M1" 67+03.67	4	a	D-2
	b															171.0	SJ		24" APC	54.87′ L+ "M1" 67+03.67 TO 66.61′ L+ "M1" 68+78.00		b	
	c								1.9	326			1	5.3					G2 DI	66.61′ L+ "M1" 68+78.00		c	
	d														58.0		DDJ		24" CSP DD	66.61′ L+ "M1" 68+78.00 TO 120.00′ L+ "M1" 68+78.00		d	
	e																	1	24" STEEL FES	120.00′ L+ "M1" 68+78.00		e	
SUBTOTAL DQ-1		2	51.0	2	11.4	3	1	1	16.3	2,934	11.2	25.6			175.4	801.0		3					

DRAINAGE QUANTITIES

DQ-1

REVISED BY	DATE REVISED
RP	12/21/15

EMAN BIDOKHTI — CHRIS SEWELL — CALCULATED-DESIGNED BY — CHECKED BY — FUNCTIONAL SUPERVISOR: HAN-BIN LIANG

STATE OF CALIFORNIA - DEPARTMENT OF TRANSPORTATION

Caltrans

LAST REVISION 12-21-15 — DATE PLOTTED => 30-DEC-2015 — TIME PLOTTED => 11:13

Dist	COUNTY	ROUTE	POST MILES TOTAL PROJECT	SHEET No.	TOTAL SHEETS
10	Mer	99	15.1/16.0	21	79

REGISTERED CIVIL ENGINEER 12/21/15 DATE

12-28-15
PLANS APPROVAL DATE

REGISTERED PROFESSIONAL ENGINEER CHRISTOPHER SEWELL No. 64807 Exp. 6/30/17 CIVIL STATE OF CALIFORNIA

THE STATE OF CALIFORNIA OR ITS OFFICERS OR AGENTS SHALL NOT BE RESPONSIBLE FOR THE ACCURACY OR COMPLETENESS OF SCANNED COPIES OF THIS PLAN SHEET.

WRECO
1243 ALPINE ROAD
SUITE 108
WALNUT CREEK, CA 94596

DRAINAGE QUANTITIES

DRAINAGE SYSTEM No. ⬡	DRAINAGE UNIT ◯	REMOVE DD (EA)	REMOVE Culv (LF)	REMOVE FES (EA)	REMOVE RSP* (CY)	REMOVE INLET (EA)	ADJUST INLET (EA)	CAP INLET (EA)	MINOR CONCRETE (MINOR STRUCTURE) (CY)	MISC IRON AND STEEL (LB)	RSP (LIGHT, METHOD B) (CY)	RSP FABRIC (CLASS 8) (SQYD)	INLET FRAME AND GRATE TYPE (24-12) (N) (EA)	HEIGHT OF INLET (N) (FT)	24" CSP DD (.109" THICK) (LF)	24" APC (LF)	PIPE JOINT CLASSIFICATION (N)	24" STEEL FES (EA)	DESCRIPTION	STATION LIMITS	DRAINAGE SYSTEM No. ⬡	DRAINAGE UNIT ◯	DRAINAGE PLAN No.
4	f										5.6	12.8							RSP	125.98′ Lt "M1" 68+78.27	4	f	D-2
	g								1.8	326			1	4.8					G2 DI	54.76′ Lt "M1" 70+02.00		g	
	h															122.6	SJ		24" APC	66.60′ Lt "M1" 68+78.00 TO 54.76′ Lt "M1" 70+02.00		h	
	i				4.6														REMOVE RSP	108.70′ Lt "M1" 67+80.63		i	
	j			1															REMOVE FES	106.42′ Lt "M1" 67+80.63		j	
	k	1																	REMOVE 24" PIPE	106.42′ Lt "M1" 67+81.48 TO 54.80′ Lt "M1" 67+80.76		k	
	l							1											CAP DI	54.71′ Lt "M1" 67+80.76		l	
SUBTOTAL DQ-2		1		1	4.6	0	0	1	1.8	326	5.6	12.8	1		0	122.6		0					
FROM STRUCTURES									23.0														
SUBTOTAL DQ-1		2	51.0	2	11.4	3	1	1	16.3	2,934	11.2	25.6			175.4	801.0		3					
GRAND TOTAL		3	51.0	3	16.0	3	1	2	41.1	3,260	16.8	38.4			175.4	923.6		3					

CALCULATED-DESIGNED BY	EMAN BIDOKHTI	REVISED BY	RP
CHECKED BY	CHRIS SEWELL	DATE REVISED	12/21/15
FUNCTIONAL SUPERVISOR	HAN-BIN LIANG		

STATE OF CALIFORNIA - DEPARTMENT OF TRANSPORTATION

Caltrans

DRAINAGE QUANTITIES

DQ-2

LAST REVISION 12-21-15 | DATE PLOTTED => 30-DEC-2015 | TIME PLOTTED => 17:13

Dist	COUNTY	ROUTE	POST MILES TOTAL PROJECT	SHEET No.	TOTAL SHEETS
10	Mer	99	15.1/16.0	22	79

REGISTERED CIVIL ENGINEER 12/18/15 DATE

12-28-15
PLANS APPROVAL DATE

REGISTERED PROFESSIONAL ENGINEER HUE NGUYEN No. 74484 Exp 12/31/17 CIVIL STATE OF CALIFORNIA

THE STATE OF CALIFORNIA OR ITS OFFICERS OR AGENTS SHALL NOT BE RESPONSIBLE FOR THE ACCURACY OR COMPLETENESS OF SCANNED COPIES OF THIS PLAN SHEET.

STATIONARY MOUNTED CONSTRUCTION AREA SIGNS

SIGN	SIGN CODE FEDERAL	SIGN CODE CALIFORNIA	PANEL SIZE	SIGN MESSAGE	No. OF POST AND POST SIZE	No. OF SIGNS EA
A	W20-1		48" x 48"	ROAD WORK AHEAD	1 - 6" x 6"	4
B	G20-2		36" x 18"	END ROAD WORK	1 - 4" x 4"	3
C	W20-1		36" x 36"	ROAD WORK AHEAD	1 - 4" x 4"	5
D		CPFIS	90" x 60"	CONSTRUCTION PROJECT FUNDING IDENTIFICATION SIGNS	2 - 6" x 6"	2

NOTES:

1. SIGN LOCATIONS SHOWN ARE APPROXIMATE, EXACT LOCATIONS WILL BE DETERMINED BY THE ENGINEER.
2. FOR ADDITIONAL CONSTRUCTION AREA SIGNS, SEE TH SHEETS.

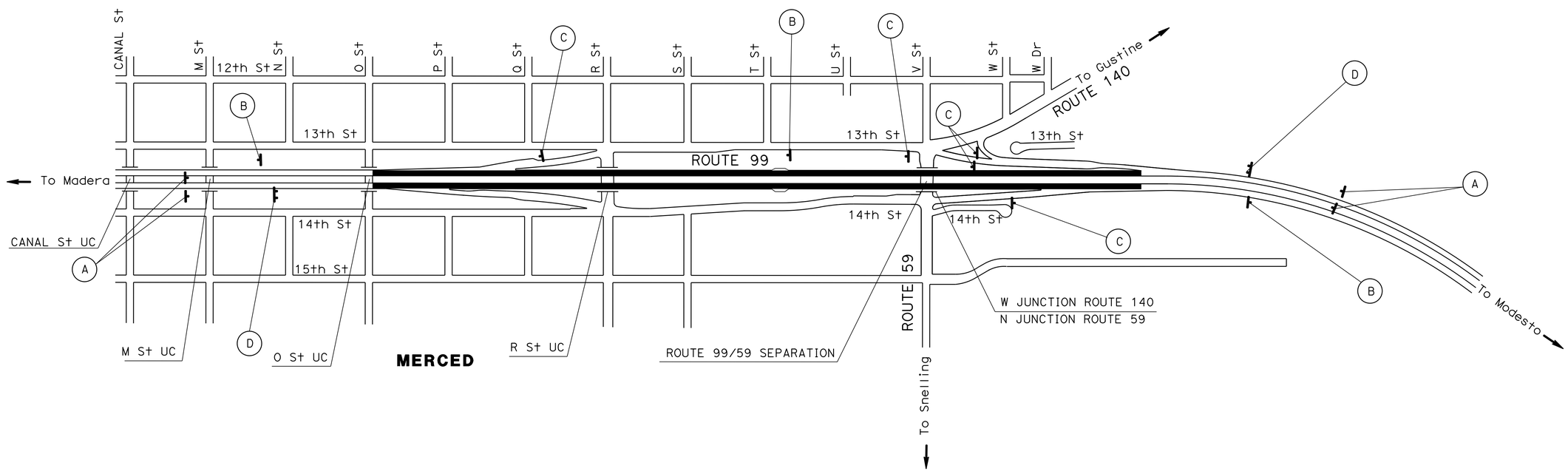

APPROVED FOR CONSTRUCTION AREA SIGN WORK ONLY

CONSTRUCTION AREA SIGNS

NO SCALE

CS-1

STATE OF CALIFORNIA - DEPARTMENT OF TRANSPORTATION
Caltrans® **TRAFFIC DESIGN**

FUNCTIONAL SUPERVISOR: MOHAMMED QATAMI
CALCULATED-DESIGNED BY: HUE NGUYEN
CHECKED BY: RAJINI TEKALKOTE
REVISED BY: HN
DATE REVISED: 12-18-15

LAST REVISION 08-25-15
DATE PLOTTED => 30-DEC-2015
TIME PLOTTED => 17:13

Dist	COUNTY	ROUTE	POST MILES TOTAL PROJECT	SHEET No.	TOTAL SHEETS
10	Mer	99	15.1/16.0	23	79

REGISTERED ~~CIVIL~~ ENGINEER 12/18/15 DATE

12-28-15
PLANS APPROVAL DATE

REGISTERED PROFESSIONAL ENGINEER HUE NGUYEN No. 74484 Exp 12/31/17 CIVIL STATE OF CALIFORNIA

THE STATE OF CALIFORNIA OR ITS OFFICERS OR AGENTS SHALL NOT BE RESPONSIBLE FOR THE ACCURACY OR COMPLETENESS OF SCANNED COPIES OF THIS PLAN SHEET.

LEGEND:

- TEMPORARY RAILING (TYPE K)
- CHANNELIZER (SURFACE MOUNTED)
- CONSTRUCTION AREA SIGN No.
- TEMPORARY CRASH CUSHION (ARRAY 'TS14')
- OBJECT MARKER (TYPE P)
- PORTABLE DRUM
- FLASHING ARROW SIGN (FAS)
- REMOVE THERMOPLASTIC TRAFFIC STRIPE
- TEMPORARY TRAFFIC STRIPE (TAPE)

NOTES:

1. EXACT SIGN LOCATIONS AND POSITIONS WILL BE DETERMINED BY THE ENGINEER.
2. FOR ACCURATE RIGHT OF WAY DATA, CONTACT RIGHT OF WAY ENGINEERING AT THE DISTRICT OFFICE.
3. FOR ADDITIONAL CONSTRUCTION AREA SIGNS, SEE SHEET CS-1.

ABBREVIATION:

FAS - FLASHING ARROW SIGN

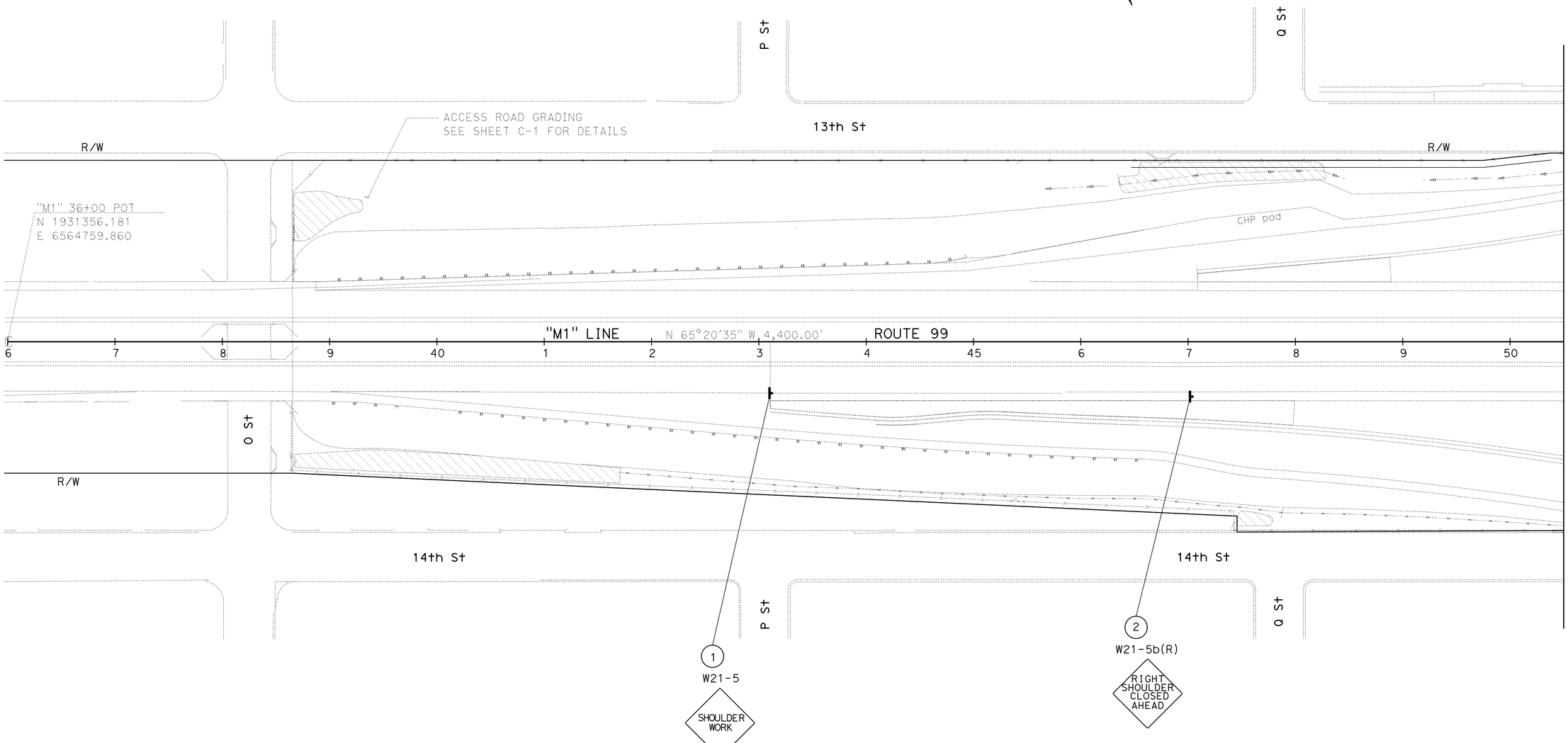

APPROVED FOR TRAFFIC HANDLING WORK ONLY

TRAFFIC HANDLING PLAN

SCALE: 1" = 50'

TH-1

STATE OF CALIFORNIA - DEPARTMENT OF TRANSPORTATION
Caltrans
TRAFFIC DESIGN

FUNCTIONAL SUPERVISOR: MOHAMMED QATAMI
CALCULATED-DESIGNED BY: RAJINI TEKALKOTE
CHECKED BY: HUE NGUYEN
REVISED BY: HN
DATE REVISED: 12-18-15

LAST REVISION 08-25-15
DATE PLOTTED => 30-DEC-2015
TIME PLOTTED => 17:13

Dist	COUNTY	ROUTE	POST MILES TOTAL PROJECT	SHEET No.	TOTAL SHEETS
10	Mer	99	15.1/16.0	24	79

REGISTERED CIVIL ENGINEER 12/18/15 DATE

12-28-15
PLANS APPROVAL DATE

REGISTERED PROFESSIONAL ENGINEER HUE NGUYEN No. 74484 Exp 12/31/17 CIVIL STATE OF CALIFORNIA

THE STATE OF CALIFORNIA OR ITS OFFICERS OR AGENTS SHALL NOT BE RESPONSIBLE FOR THE ACCURACY OR COMPLETENESS OF SCANNED COPIES OF THIS PLAN SHEET.

NOTE:

1. FOR ACCURATE RIGHT OF WAY DATA, CONTACT RIGHT OF WAY ENGINEERING AT THE DISTRICT OFFICE.

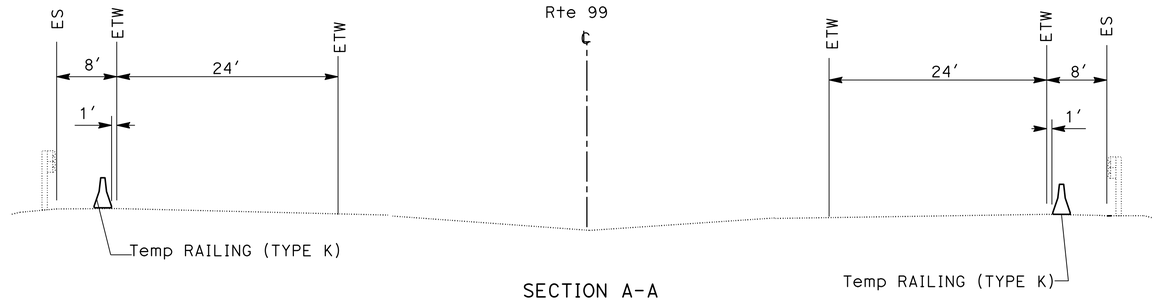

SECTION A-A
NO SCALE

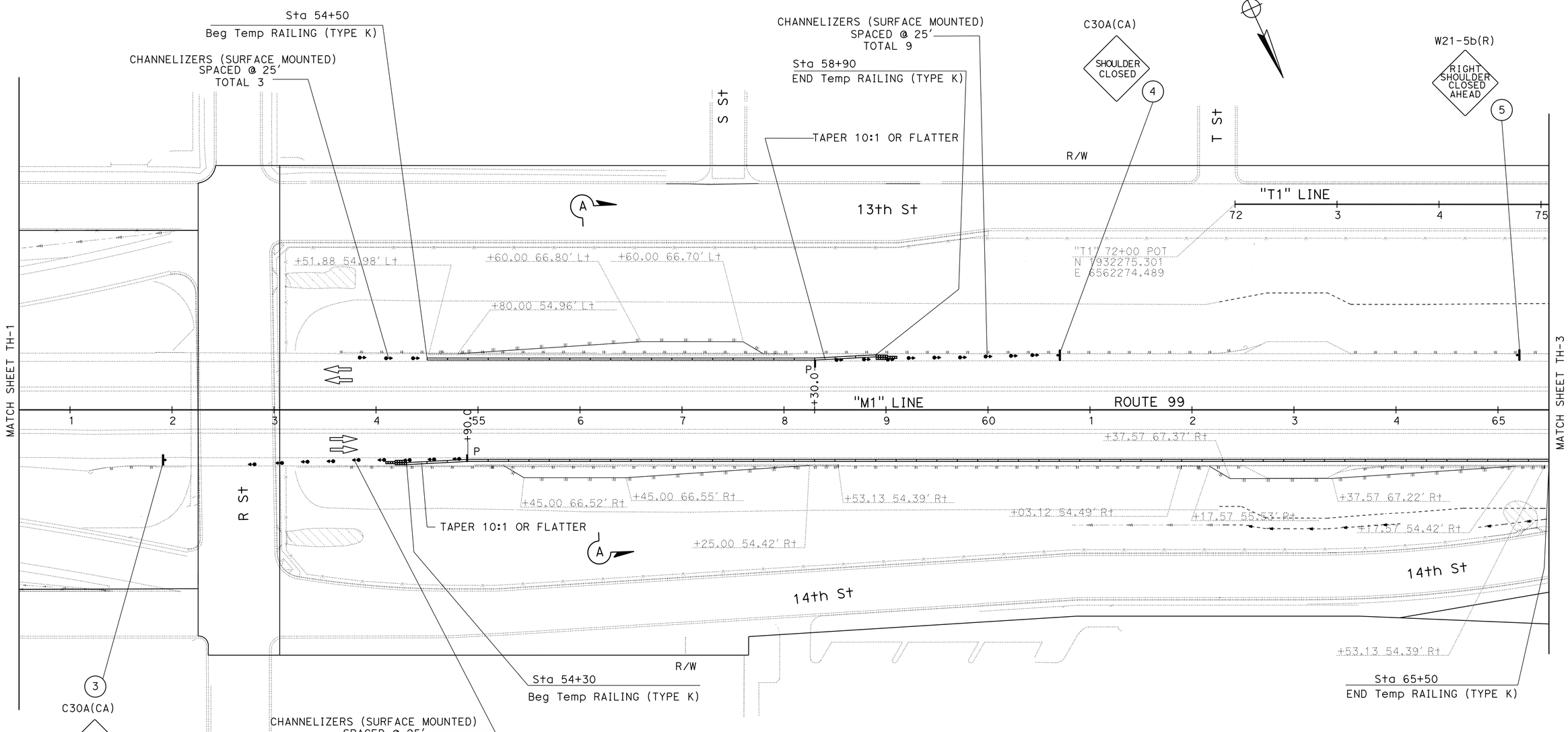

TRAFFIC HANDLING PLAN

SCALE: 1" = 50'

TH-2

APPROVED FOR TRAFFIC HANDLING WORK ONLY

REVISED BY	DATE REVISED
HN	12-18-15

CALCULATED-DESIGNED BY	CHECKED BY
HUE NGUYEN	RAJINI TEKALKOTE

FUNCTIONAL SUPERVISOR: MOHAMMED QATAMI

STATE OF CALIFORNIA - DEPARTMENT OF TRANSPORTATION
Caltrans
TRAFFIC DESIGN

LAST REVISION 08-25-15 | DATE PLOTTED => 30-DEC-2015 | TIME PLOTTED => 17:13

Dist	COUNTY	ROUTE	POST MILES TOTAL PROJECT	SHEET No.	TOTAL SHEETS
10	Mer	99	15.1/16.0	25	79

REGISTERED CIVIL ENGINEER 12/18/15 DATE

12-28-15
PLANS APPROVAL DATE

REGISTERED PROFESSIONAL ENGINEER HUE NGUYEN No. 74484 Exp 12/31/17 CIVIL STATE OF CALIFORNIA

THE STATE OF CALIFORNIA OR ITS OFFICERS OR AGENTS SHALL NOT BE RESPONSIBLE FOR THE ACCURACY OR COMPLETENESS OF SCANNED COPIES OF THIS PLAN SHEET.

NOTE:

FOR ACCURATE RIGHT OF WAY DATA, CONTACT RIGHT OF WAY ENGINEERING AT THE DISTRICT OFFICE.

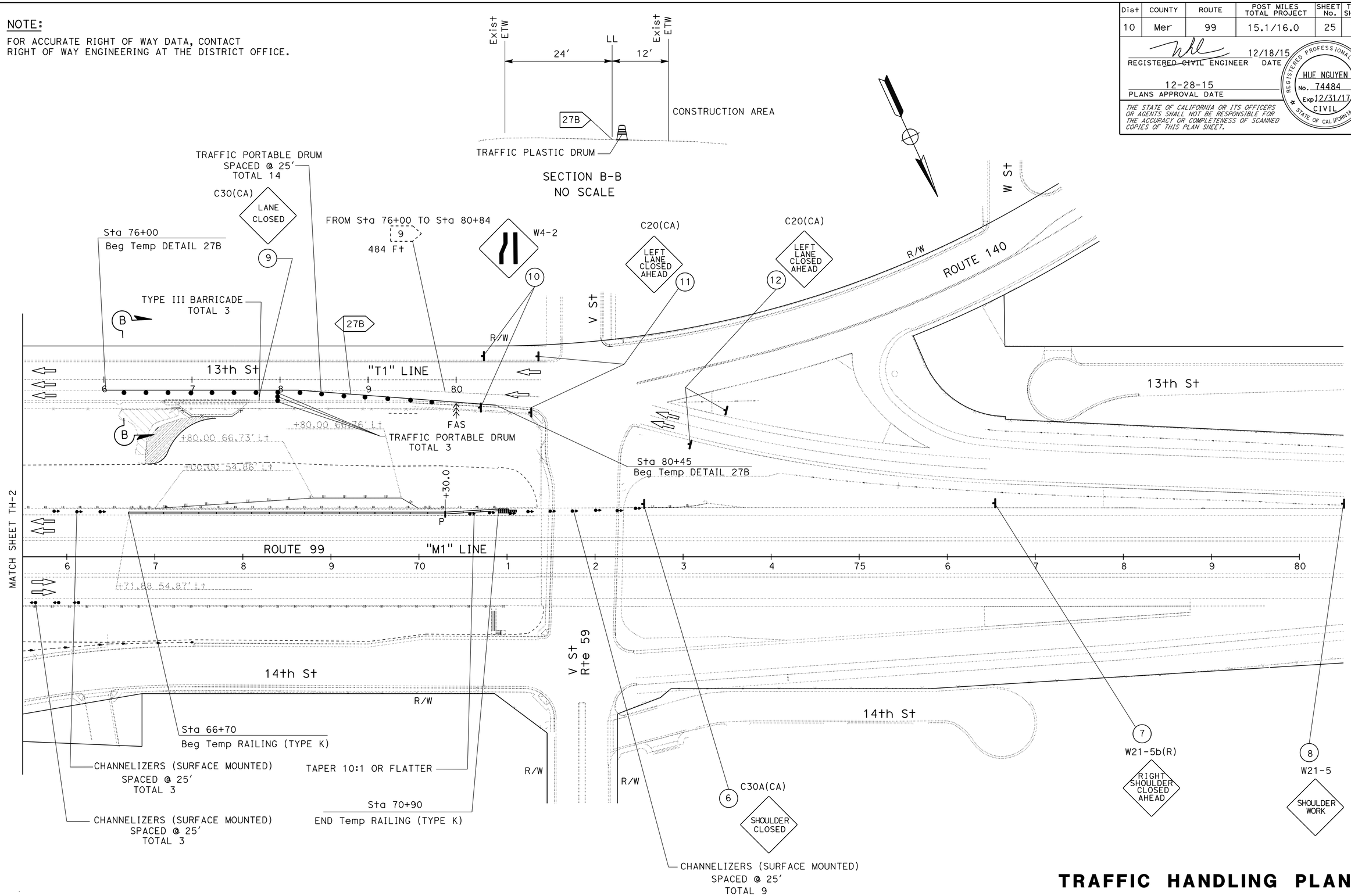

TRAFFIC HANDLING PLAN

SCALE: 1" = 50'

TH-3

APPROVED FOR TRAFFIC HANDLING WORK ONLY

CALCULATED-DESIGNED BY	HUE NGUYEN	REVISED BY	HN
CHECKED BY	RAJINI TEKALKOTE	DATE REVISED	12-18-15
FUNCTIONAL SUPERVISOR	MOHAMMED QATAMI		

STATE OF CALIFORNIA - DEPARTMENT OF TRANSPORTATION

Caltrans® **TRAFFIC DESIGN**

LAST REVISION 08-25-15 | DATE PLOTTED => 30-DEC-2015 | TIME PLOTTED => 17:13

Dist	COUNTY	ROUTE	POST MILES TOTAL PROJECT	SHEET No.	TOTAL SHEETS
10	Mer	99	15.1/16.0	26	79

REGISTERED CIVIL ENGINEER 12/18/15 DATE

12-28-15
PLANS APPROVAL DATE

REGISTERED PROFESSIONAL ENGINEER HUE NGUYEN No. 74484 Exp. 12/31/17 CIVIL STATE OF CALIFORNIA

THE STATE OF CALIFORNIA OR ITS OFFICERS OR AGENTS SHALL NOT BE RESPONSIBLE FOR THE ACCURACY OR COMPLETENESS OF SCANNED COPIES OF THIS PLAN SHEET.

NOTES:

1. SEE CONSTRUCTION AREA SIGNS SHEET FOR ADDITIONAL CONSTRUCTION AREA SIGNS.
2. (N) - NOT A SEPARATE PAY ITEM, FOR INFORMATION ONLY.

STATIONARY MOUNTED CONSTRUCTION AREA SIGNS

SHEET No.	SIGN No.	SIGN CODE FEDERAL	SIGN CODE CALIFORNIA	SIGN MESSAGE	PANEL SIZE	No. POST AND SIZE	No. OF SIGNS EA	REMARKS
TH-1	1	W21-5		SHOULDER WORK	48" x 48"	1 - 6" x 6"	1	
	2	W21-5b(R)		RIGHT SHOULDER CLOSED 1000 FT	48" x 48"	1 - 6" x 6"	1	
TH-2	3		C30A(CA)	SHOULDER CLOSED	48" x 48"	1 - 6" x 6"	1	
	4		C30A(CA)	SHOULDER CLOSED	48" x 48"	1 - 6" x 6"	1	
	5	W21-5b(R)		RIGHT SHOULDER CLOSED 1000 FT	48" x 48"	1 - 6" x 6"	1	
TH-3	6		C30A(CA)	SHOULDER CLOSED	48" x 48"	1 - 6" x 6"	1	
	7	W21-5b(R)		RIGHT SHOULDER CLOSED 1000 FT	48" x 48"	1 - 6" x 6"	1	
	8	W21-5		SHOULDER WORK	48" x 48"	1 - 6" x 6"	1	
	9		C30(CA)	LANE CLOSED	36" x 36"		1	SIGNS MOUNTED ON BARRICADE
	10	W4-2		LANE ENDS	36" x 36"	1 - 4" x 4"	2	
	11		C20(CA)	LEFT LANE CLOSED AHEAD	36" x 36"	1 - 4" x 4"	2	
	12		C20(CA)	LEFT LANE CLOSED AHEAD	36" x 36"	1 - 4" x 4"	2	

TRAFFIC HANDLING DELINEATION QUANTITIES

SHEET No.	LOCATION/STATION	DIRECTION	TEMPORARY RAILING (TYPE K)	TEMPORARY CRASH CUSHION MODULE ARRAY 'TS14'	CHANNELIZER (SURFACE MOUNTED)	OBJECT MARKER (TYPE P) (N)	TRAFFIC PLASTIC DRUM	Temp TRAFFIC STRIPE (TAPE)	REMOVE THERMOPLASTIC TRAFFIC STRIPE	TYPE III BARRICADE
			LF	EA	EA	EA	EA	LF	LF	EA
TH-2	Sta 54+30 TO Sta 65+50	NB	1120	14	9	1				
	Sta 54+50 TO Sta 58+90	SB	440	14	12	1				
TH-3	Sta 65+50 TO Sta 67+00	NB			3					
	Sta 66+70 TO Sta 70+90	SB	420	14	12	1				3
	13 th St	SB					17	445	484	
TOTAL			1980	42	36		17	445	484	3

TRAFFIC HANDLING QUANTITIES
THQ-1

REVISED BY	DATE REVISED
HN	12-18-15

CALCULATED-DESIGNED BY: HUE NGUYEN
CHECKED BY: RAJINI TEKALKOTE
FUNCTIONAL SUPERVISOR: MOHAMMED QATAMI

STATE OF CALIFORNIA - DEPARTMENT OF TRANSPORTATION
Caltrans® TRAFFIC DESIGN

LAST REVISION 08-25-15
DATE PLOTTED => 30-DEC-2015
TIME PLOTTED => 17:13

Dist	COUNTY	ROUTE	POST MILES TOTAL PROJECT	SHEET No.	TOTAL SHEETS
10	Mer	99	15.1/16.0	27	79

REGISTERED ~~CIVIL~~ ENGINEER 12/18/15 DATE

12-28-15
PLANS APPROVAL DATE

REGISTERED PROFESSIONAL ENGINEER
HUE NGUYEN
No. 74484
Exp 12/31/17
CIVIL
STATE OF CALIFORNIA

THE STATE OF CALIFORNIA OR ITS OFFICERS OR AGENTS SHALL NOT BE RESPONSIBLE FOR THE ACCURACY OR COMPLETENESS OF SCANNED COPIES OF THIS PLAN SHEET.

NOTE:

FOR ACCURATE RIGHT OF WAY DATA, CONTACT RIGHT OF WAY ENGINEERING AT THE DISTRICT OFFICE.

LEGEND

GF - GUARD RAILING DELINEATOR (TYPE F)

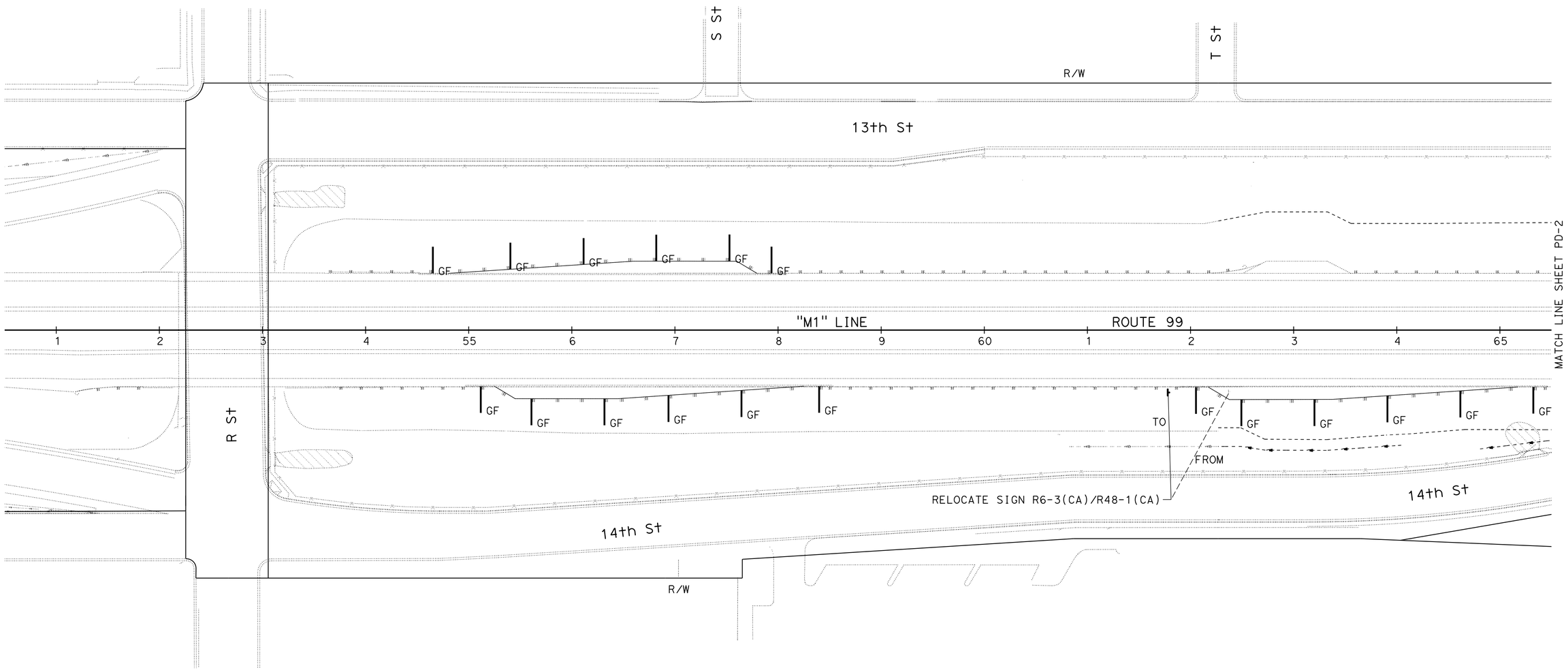

PAVEMENT DELINEATION AND SIGN PLAN

SCALE: 1" = 50'

PD-1

APPROVED FOR PAVEMENT DELINEATION AND SIGN WORK ONLY

STATE OF CALIFORNIA - DEPARTMENT OF TRANSPORTATION

Caltrans®

TRAFFIC DESIGN

FUNCTIONAL SUPERVISOR: MOHAMMED QATAMI

CALCULATED-DESIGNED BY: HUE NGUYEN

CHECKED BY: RAJINI TEKALKOTE

REVISED BY: HN

DATE REVISED: 12-18-15

LAST REVISION 08-25-15

DATE PLOTTED => 30-DEC-2015
TIME PLOTTED => 17:13

Dist	COUNTY	ROUTE	POST MILES TOTAL PROJECT	SHEET No.	TOTAL SHEETS
10	Mer	99	15.1/16.0	28	79

REGISTERED ~~CIVIL~~ ENGINEER 12/18/15 DATE

12-28-15
PLANS APPROVAL DATE

REGISTERED PROFESSIONAL ENGINEER
HUE NGUYEN
No. 74484
Exp 12/31/17
CIVIL
STATE OF CALIFORNIA

THE STATE OF CALIFORNIA OR ITS OFFICERS OR AGENTS SHALL NOT BE RESPONSIBLE FOR THE ACCURACY OR COMPLETENESS OF SCANNED COPIES OF THIS PLAN SHEET.

NOTE:

FOR ACCURATE RIGHT OF WAY DATA, CONTACT
RIGHT OF WAY ENGINEERING AT THE DISTRICT OFFICE.

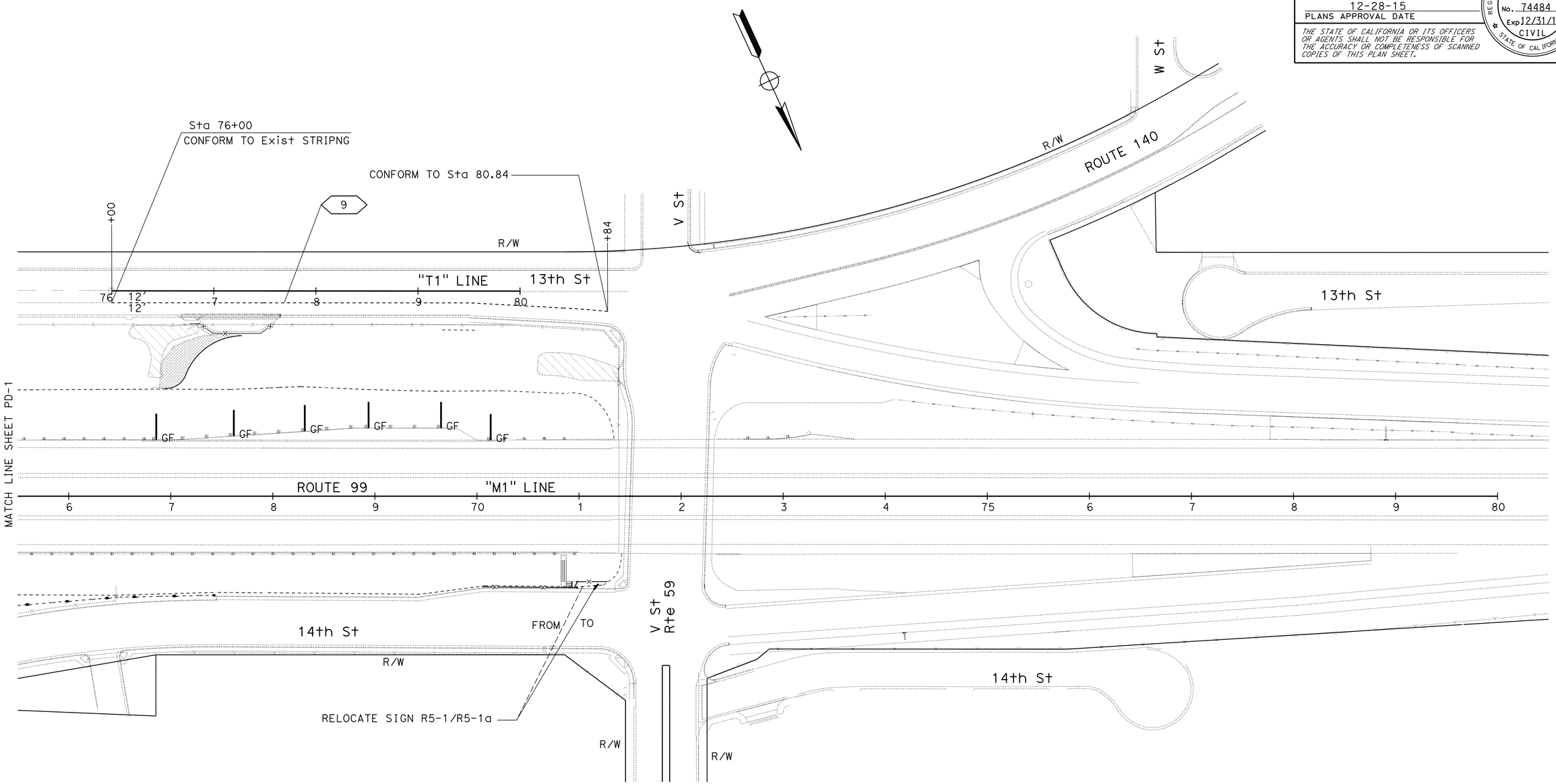

APPROVED FOR PAVEMENT DELINEATION AND SIGN WORK ONLY

PAVEMENT DELINEATION AND SIGN PLAN

SCALE: 1" = 50'

PD-2

STATE OF CALIFORNIA - DEPARTMENT OF TRANSPORTATION	Caltrans	TRAFFIC DESIGN	
FUNCTIONAL SUPERVISOR	MOHAMMED QATAMI		
CALCULATED-DESIGNED BY	HUE NGUYEN		
CHECKED BY	RAJINI TEKALKOTE		
REVISED BY	HN		
DATE REVISED	12-18-15		

LAST REVISION 08-25-15
DATE PLOTTED => 30-DEC-2015
TIME PLOTTED => 17:13

Dist	COUNTY	ROUTE	POST MILES TOTAL PROJECT	SHEET No.	TOTAL SHEETS
10	Mer	99	15.1/16.0	29	79

REGISTERED CIVIL ENGINEER 12/18/15 DATE

12-28-15
PLANS APPROVAL DATE

REGISTERED PROFESSIONAL ENGINEER
HUE NGUYEN
No. 74484
Exp 12/31/17
CIVIL
STATE OF CALIFORNIA

THE STATE OF CALIFORNIA OR ITS OFFICERS OR AGENTS SHALL NOT BE RESPONSIBLE FOR THE ACCURACY OR COMPLETENESS OF SCANNED COPIES OF THIS PLAN SHEET.

PAVEMENT DELINEATION ITEMS

SHEET No.	LOCATION	STATION LIMIT	THERMOPLASTIC TRAFFIC STRIPE (SPRAYABLE)	PAVEMENT MARKER (RETROREFLECTIVE)	GUARD RAILING DELINEATOR
			DETAIL 9	(TYPE G)	(TYPE F)
			LF	EA	EA
PD-1	Rte 99	50+50 - 65+50			18
PD-2	13 th St	76+00 - 80+84	484	11	
	Rte 99	65+50 - 80+00			6
TOTAL			484	11	24

SIGN ITEMS

SHEET No.	LOCATION	SIGN CODE	RELOCATE ROADSIDE SIGN
			EA
PD-1	Rte 99	R6-3(CA) R48-1(CA)	1
PD-2	14 th St	R5-1 R5-1a	1
TOTAL			2

PAVEMENT DELINEATION AND SIGN QUANTITIES

PDQ-1

STATE OF CALIFORNIA - DEPARTMENT OF TRANSPORTATION
Caltrans® **TRAFFIC DESIGN**

FUNCTIONAL SUPERVISOR: MOHAMMED QATAMI
CALCULATED-DESIGNED BY: HUE NGUYEN
CHECKED BY: RAJINI TEKALKOTE
REVISED BY: HN
DATE REVISED: 12-18-15

LAST REVISION 08-25-15
DATE PLOTTED => 30-DEC-2015
TIME PLOTTED => 17:13

Dist	COUNTY	ROUTE	POST MILES TOTAL PROJECT	SHEET No.	TOTAL SHEETS
10	Mer	99	15.1/16.0	30	79

REGISTERED CIVIL ENGINEER 12/21/15 DATE

12-28-15
PLANS APPROVAL DATE

REGISTERED PROFESSIONAL ENGINEER Snehalatha Pavuluri No. 78187 Exp 09/30/17 CIVIL STATE OF CALIFORNIA

THE STATE OF CALIFORNIA OR ITS OFFICERS OR AGENTS SHALL NOT BE RESPONSIBLE FOR THE ACCURACY OR COMPLETENESS OF SCANNED COPIES OF THIS PLAN SHEET.

T.Y.LIN INTERNATIONAL
2010 CROW CANYON PLACE,
SUITE 225
SAN RAMON, CA 94583

ROADWAY QUANTITIES

LOCATION	STATION	DIRECTION	HMA (TYPE A)	CLASS 2 AB	TACK COAT
			TON	CY	TON
1	M1 55+25.00 TO 58+25.00	NB	76.80	42.23	0.06
2	M1 62+17.56 TO 65+17.56	NB	75.44	41.27	0.06
5	M1 54+80.00 TO 57+80.00	SB	76.38	41.93	0.06
6	M1 67+00.00 TO 70+00.00	SB	76.14	41.76	0.06
7	T1 76+68.46 TO 77+65.00	SB	30.83	15.01	0.03
7	T1 76+86.89 TO 77+00.00	SB		1.48	
	HMA DIKE	NB & SB	19.24		
TOTAL			354.83	183.68	0.27

EARTHWORK QUANTITIES

LOCATION	STATION	DIRECTION	ROADWAY EXCAVATION	EMBANKMENT (N)	IMPORT BORROW
			CY	CY	CY
1	M1 54+96.88 TO 58+53.13	NB	40.88	2,383.00	2,342.12
2	M1 61+89.45 TO 65+45.70	NB	7.65	226.16	218.51
4	M1 39+02.00 TO 39+93.00	SB		241.87	241.87
5	M1 54+51.88 TO 58+08.13	SB	45.34	2,370.45	2,325.11
6	M1 66+71.88 TO 70+28.12	SB	47.96	2,299.34	2,251.38
7	T1 76+46.86 TO 77+30.50	NB	30.87	104.72	73.85
	REMOVE RSP (SHEET DQ-2)		16.00		
TOTAL			188.70		7,452.84

(N) - NOT A SEPERATE PAY ITEM

REMOVE ASPHALT CONCRETE DIKE

LOCATION	STATION	DIRECTION	LF
1	M1 54+96.88 TO 58+53.13	NB	359.99
2	M1 61+89.45 TO 65+45.70	NB	359.89
5	M1 54+51.88 TO 58+08.13	SB	359.95
6	M1 66+71.88 TO 70+28.12	SB	359.96
TOTAL			1,439.79

REMOVE CONCRETE (CURB AND GUTTER)

LOCATION	STATION	DIRECTION	LF
7	T1 76+68.46 TO 77+65.00	SB	96.53

REMOVE CONCRETE (MISCELLANEOUS)

LOCATION	STATION	DIRECTION	SQFT
7	T1 76+68.46 TO 76+94.92 (DRIVEWAY)	SB	147.18

REMOVE CONCRETE PAVEMENT

LOCATION	STATION	DIRECTION	SQYD
2	M1 62+67.30 TO 63+52.78	NB	41.18

REMOVE FENCE

LOCATION	STATION	DIRECTION	LF
7	T1 76+89.27 TO 77+59.37	SB	74.47

REMOVE GATE

LOCATION	STATION	DIRECTION	EA
7	T1 76+76.06	SB	1

REMOVE GUARDRAIL

LOCATION	STATION	DIRECTION	REMOVE GUARDRAIL	TREATED WOOD WASTE
			LF	LB
1	M1 54+96.88 TO 58+53.13	NB	356.25	5,053.55
2	M1 61+89.45 TO 65+45.70	NB	256.25	3,635.01
5	M1 54+51.88 TO 58+08.13	SB	356.25	5,053.55
6	M1 66+71.88 TO 70+28.12	SB	356.25	5,053.55
TOTAL			1,325.00	18,795.68

REMOVE ASPHALT CONCRETE SURFACING

LOCATION	STATION	DIRECTION	SQFT
7	T1 76+68.46 TO 77+65.01	SB	380.87

REMOVE ASPHALT CONCRETE PAVEMENT

LOCATION	STATION	DIRECTION	SQFT
2	M1 62+44.84 TO 63+67.73	NB	624.62
7	T1 76+46.86 TO 77+30.50	SB	96.50
TOTAL			721.12

SUMMARY OF QUANTITIES

Q-1

REVISED BY	DATE REVISED
SP	12/21/15

SNEHA PAVULURI — NABAZ SAIEED — CALCULATED-DESIGNED BY — CHECKED BY

CONSULTANT FUNCTIONAL SUPERVISOR: BRIAN KRCELIC

STATE OF CALIFORNIA - DEPARTMENT OF TRANSPORTATION — Caltrans

LAST REVISION 12-21-15 | DATE PLOTTED => 30-DEC-2015 | TIME PLOTTED => 17:13

Dist	COUNTY	ROUTE	POST MILES TOTAL PROJECT	SHEET No.	TOTAL SHEETS
10	Mer	99	15.1/16.0	31	79

REGISTERED CIVIL ENGINEER 12/21/15 DATE

12-28-15
PLANS APPROVAL DATE

REGISTERED PROFESSIONAL ENGINEER Snehalatha Pavuluri No. 78187 Exp 09/30/17 CIVIL STATE OF CALIFORNIA

THE STATE OF CALIFORNIA OR ITS OFFICERS OR AGENTS SHALL NOT BE RESPONSIBLE FOR THE ACCURACY OR COMPLETENESS OF SCANNED COPIES OF THIS PLAN SHEET.

T.Y.LIN INTERNATIONAL
2010 CROW CANYON PLACE,
SUITE 225
SAN RAMON, CA 94583

MINOR CONCRETE

LOCATION	STATION	DIRECTION	VEGETATION CONTROL	CURB & GUTTER	CURB	GUTTER	DRIVEWAY	MISCELLANEOUS CONSTRUCTION
				TYPE A2-8	TYPE A1-8	V-GUTTER		
			SQYD	CY	LF	CY	CY	CY
1	M1 54+96.88 TO 58+53.13	NB	137.84					
2	M1 61+89.45 TO 65+45.70	NB	137.84					
3	M1 71+03 (Conc SPLASH PAD)	NB						0.5
5	M1 54+51.88 TO 58+08.13	SB	137.84					
6	M1 66+71.88 TO 70+28.12	SB	137.84					
7	T1 76+68.46 TO 76+80.00	SB		0.73				
7	T1 76+68.46 TO 76+80.00	SB			86.8			
7	T1 76+68.46 TO 76+80.00	SB				6.30		
7	T1 76+86.89 TO 77+00.00	SB					1.19	
TOTAL			551.36	0.73	86.8	6.30	1.19	0.5

FENCE & GATES

LOCATION	STATION	DIRECTION	CHAIN LINK FENCE (TYPE CL-6)	16 FT CHAIN LINK GATE (TYPE CL-6)	5 FT CHAIN LINK GATE (TYPE CL-6)
			LF	EA	EA
3	M1 66+46.25 TO 71+42.34	NB	516		1
7	T1 76+75.62 TO 77+59.37	SB	65	1	
TOTAL			581	1	1

HMA DIKE

LOCATION	STATION	DIRECTION	PLACE HMA DIKE (TYPE F)	HMA	
			LF	CY (N)	TONS *
1	M1 54+96.88 TO 58+53.13	NB	359.99	2.38	4.81
2	M1 61+89.45 TO 65+45.70	NB	359.89	2.38	4.81
5	M1 54+51.88 TO 58+08.13	SB	359.95	2.38	4.81
6	M1 66+71.88 TO 70+28.12	SB	359.96	2.38	4.81
TOTAL			1,439.79		19.24

(N) = NOT A SEPERATE PAY ITEM
* SEE ROADWAY QUANTITIES FOR GRAND TOTAL

TRAFFIC MANAGEMENT SYSTEM ELEMENTS (EXISTING)

PM	DIRECTION	LOCATION	TYPE
15.10	SB	KING Jr. Blvd	CLOSED CIRCUIT TELEVISION
15.24	NB	SOUTH OF OFF-RAMP TO R St	TRAFFIC MONITORING STATION
15.24	NB	OFF-RAMP TO R St	TRAFFIC MONITORING STATION
15.27	SB	NORTH OF OFF-RAMP TO 59/J St	TRAFFIC MONITORING STATION
15.27	SB	OFF-RAMP TO 59/J St	TRAFFIC MONITORING STATION
15.44	SB	13th St & R St	SIGNAL LOOPS
15.45	NB	14th St & R St	SIGNAL LOOPS
15.93	SB	SOUTH OF ON-RAMP FROM R St	TRAFFIC MONITORING STATION
15.93	SB	ON-RAMP FROM R St	TRAFFIC MONITORING STATION

TEMPORARY FENCE (TYPE ESA)

LOCATION		QUANTITY (LF)
SHEET No.	DIRECTION	
PR-1	NB	140
		420
		150
		470
	SB	150
		430
		150
PR-2	NB	20
		115
		65
	SB	70
		205
		370
		225
	TOTAL	2,980

SEE PLANT REMOVAL PLANS FOR TEMPORARY FENCE (TYPE ESA)

MIDWEST GUARDRAIL SYSTEM (WOOD POST)

LOCATION	STATION	DIRECTION	LF
1	M1 54+96.88 TO 58+53.13	NB	359.99
2	M1 61+89.45 TO 65+45.70	NB	359.89
5	M1 54+51.88 TO 58+08.13	SB	359.95
6	M1 66+71.88 TO 70+28.12	SB	359.96
TOTAL			1,439.79

SUMMARY OF QUANTITIES

Q-2

STATE OF CALIFORNIA - DEPARTMENT OF TRANSPORTATION
Caltrans

CONSULTANT FUNCTIONAL SUPERVISOR: BRIAN KRCELIC
CALCULATED-DESIGNED BY: SNEHA PAVULURI
CHECKED BY: NABAZ SAIEED
REVISED BY: SP
DATE REVISED: 12/21/15

LAST REVISION 12-21-15
DATE PLOTTED => 30-DEC-2015
TIME PLOTTED => 17:13

Dist	COUNTY	ROUTE	POST MILES TOTAL PROJECT	SHEET No.	TOTAL SHEETS
10	Mer	99	15.1/16.0	32	79

Edward A. Hibbs
LICENSED LANDSCAPE ARCHITECT

12-28-15
PLANS APPROVAL DATE

LICENSED LANDSCAPE ARCHITECT
EDWARD A. HIBBS No. 2480
Edward A. Hibbs
Signature
2/29/16
Renewal Date
12/18/15
Date
STATE OF CALIFORNIA

THE STATE OF CALIFORNIA OR ITS OFFICERS OR AGENTS SHALL NOT BE RESPONSIBLE FOR THE ACCURACY OR COMPLETENESS OF SCANNED COPIES OF THIS PLAN SHEET.

NOTE:

FOR ACCURATE RIGHT OF WAY DATA, CONTACT
RIGHT OF WAY ENGINEERING AT THE DISTRICT OFFICE.

LEGEND:

////////////////////////// EXISTING PLANTS TO BE REMOVED (CLEARING AND GRUBBING)

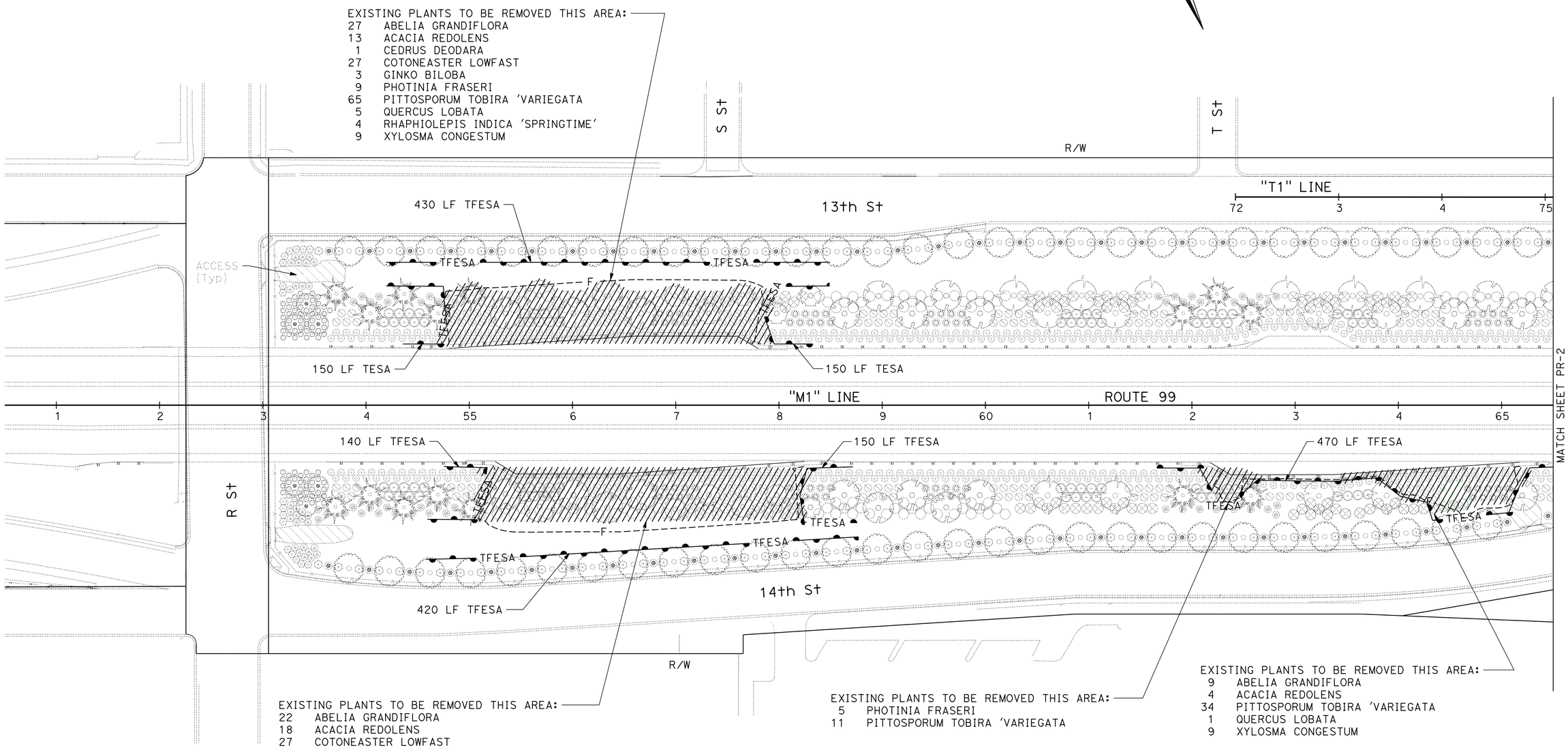

APPROVED FOR PLANTING WORK ONLY

PLANT REMOVAL PLAN

SCALE: 1" = 50'

PR-1

ED HIBBS	12-18-15
REVISED BY	DATE REVISED
ED HIBBS	KEVIN GALLO
CALCULATED-DESIGNED BY	CHECKED BY
SENIOR LANDSCAPE ARCHITECT	BRAD COLE

STATE OF CALIFORNIA - DEPARTMENT OF TRANSPORTATION
Caltrans® LANDSCAPE ARCHITECTURE

LAST REVISION 12-18-15 | DATE PLOTTED => 30-DEC-2015 | TIME PLOTTED => 17:13

Dist	COUNTY	ROUTE	POST MILES TOTAL PROJECT	SHEET No.	TOTAL SHEETS
10	Mer	99	15.1/16.0	33	79

Edward A. Hibbs
LICENSED LANDSCAPE ARCHITECT

12-28-15
PLANS APPROVAL DATE

LICENSED LANDSCAPE ARCHITECT
Edward A. Hibbs No. 2480
Signature
2/29/16
Renewal Date
12/18/15
Date
STATE OF CALIFORNIA

THE STATE OF CALIFORNIA OR ITS OFFICERS OR AGENTS SHALL NOT BE RESPONSIBLE FOR THE ACCURACY OR COMPLETENESS OF SCANNED COPIES OF THIS PLAN SHEET.

NOTE:

FOR ACCURATE RIGHT OF WAY DATA, CONTACT RIGHT OF WAY ENGINEERING AT THE DISTRICT OFFICE.

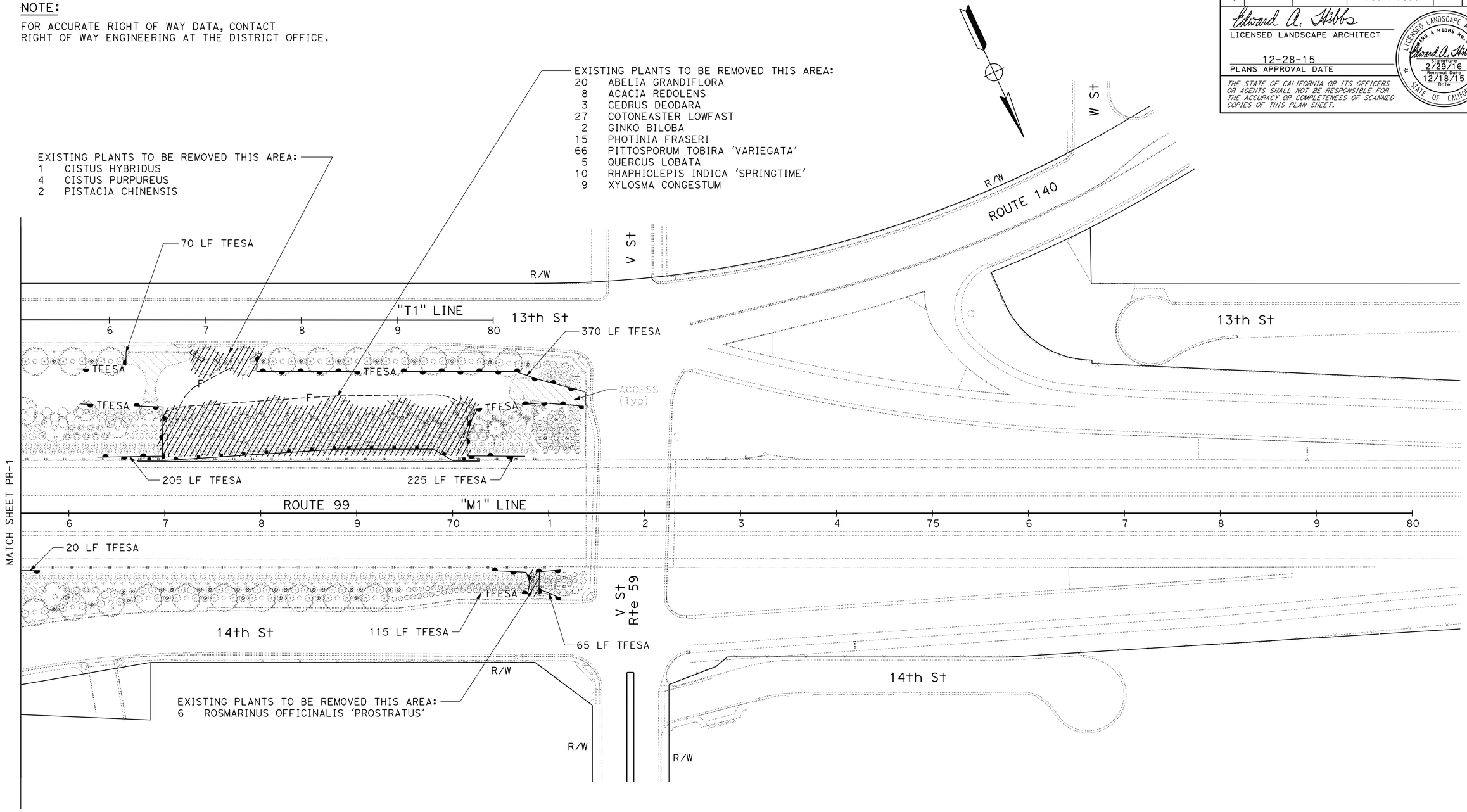

APPROVED FOR PLANTING WORK ONLY

PLANT REMOVAL PLAN

SCALE: 1" = 50'

PR-2

REVISED BY	ED HIBBS
DATE REVISED	12-18-15
CALCULATED-DESIGNED BY	ED HIBBS
CHECKED BY	KEVIN GALLO
SENIOR LANDSCAPE ARCHITECT	BRAD COLE

STATE OF CALIFORNIA - DEPARTMENT OF TRANSPORTATION
Caltrans® LANDSCAPE ARCHITECTURE

LAST REVISION 12-18-15
DATE PLOTTED => 30-DEC-2015
TIME PLOTTED => 17:13

Dist	COUNTY	ROUTE	POST MILES TOTAL PROJECT	SHEET No.	TOTAL SHEETS
10	Mer	99	15.1/16.0	34	79

Edward A. Hibbs
LICENSED LANDSCAPE ARCHITECT

12-28-15
PLANS APPROVAL DATE

LICENSED LANDSCAPE ARCHITECT
EDWARD A. HIBBS No. 2480
Signature
2/29/16
Renewal Date
12/18/15
Date
STATE OF CALIFORNIA

THE STATE OF CALIFORNIA OR ITS OFFICERS OR AGENTS SHALL NOT BE RESPONSIBLE FOR THE ACCURACY OR COMPLETENESS OF SCANNED COPIES OF THIS PLAN SHEET.

IRRIGATION SPRINKLER SCHEDULE

SYMBOL	DESCRIPTION	SPRAY PATTERN	OPERATING PRESSURE (psi)	PRESSURE COMPENSATING	PLUS/MINUS 5% ② DISCHARGE: GALLONS PER MINUTE (GPM)	DISCHARGE: GALLONS PER HOUR (GPH)	RADIUS (ft)	WIDTH x LENGTH (ft)	FLOW SHUTOFF DEVICE	SPRINKLER ASSEMBLY: RISER: TYPE	RISER: MATERIAL: PLASTIC	RISER: MATERIAL: GALVANIZED	RISER: SIZE (IPS INCH)	RISER: HEIGHT (INCH)	RISER: SWING JOINT (TYPE)	POP-UP: TYPE	POP-UP: INLET CONNECTION (NPT INCH)	POP-UP: SPRINKLER PROTECTOR (TYPE)	TREE WELL: HEIGHT (INCH)	REMARKS
●	RISER SPRINKLER ASSEMBLY	Q	30	X	0.25	—	8	—	—	II	X	—	½	12	I	—	—	—	—	

X IN BOX DENOTES REQUIREMENT

APPLICABLE WHEN CIRCLED BELOW:

1 - SEE SPECIAL PROVISIONS.
② - IF A PRESSURE COMPENSATING DEVICE IS SPECIFIED, THE DISCHARGE AND RADII SHOWN REFLECT ITS USE.
3 - VINYL-COATED CAST IRON HOUSING.
4 - SWING JOINTS REQUIRED ADJACENT TO SHOULDERS, CURBS, SIDEWALKS, AND DIKES.
5 - UNLESS OTHERWISE SHOWN ON PLANS.

LATERAL PIPE SIZING CHART

GALLONS PER MINUTE	PIPE SIZE (*)
≤ 8	¾"
≤ 12	1"
≤ 22	1¼"
≤ 30	1½"
≤ 50	2"

(*) UNLESS DESIGNATED OTHERWISE ON PLANS

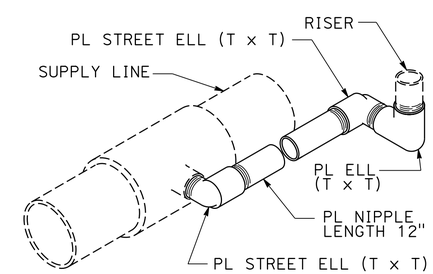

ISOMETRIC

RISER SPRINKLER ASSEMBLY SWING JOINT TYPE I

IRRIGATION SPRINKLER SCHEDULE
ISS-1

REVISED BY	DATE REVISED
ED HIBBS	12-18-15

CALCULATED-DESIGNED BY	CHECKED BY
ED HIBBS	KEVIN GALLO

SENIOR LANDSCAPE ARCHITECT: BRAD COLE

STATE OF CALIFORNIA - DEPARTMENT OF TRANSPORTATION
Caltrans® LANDSCAPE ARCHITECTURE

LAST REVISION 12-18-15 | DATE PLOTTED => 30-DEC-2015 | TIME PLOTTED => 17:13

Dist	COUNTY	ROUTE	POST MILES TOTAL PROJECT	SHEET No.	TOTAL SHEETS
10	Mer	99	15.1/16.0	35	79

Edward A. Hibbs
LICENSED LANDSCAPE ARCHITECT

12-28-15
PLANS APPROVAL DATE

LICENSED LANDSCAPE ARCHITECT
EDWARD A. HIBBS No. 2480
Edward A. Hibbs
Signature
2/29/16
Renewal Date
12/18/15
Date
STATE OF CALIFORNIA

THE STATE OF CALIFORNIA OR ITS OFFICERS OR AGENTS SHALL NOT BE RESPONSIBLE FOR THE ACCURACY OR COMPLETENESS OF SCANNED COPIES OF THIS PLAN SHEET.

NOTES:

1. FOR ACCURATE RIGHT OF WAY DATA, CONTACT RIGHT OF WAY ENGINEERING AT THE DISTRICT OFFICE.
2. FOR Exist UTILITIES SEE LAYOUT SHEETS.
3. SEE IRRIGATION QUANTITIES FOR SALVAGE IRRIGATION FACILITY.

LEGEND:

CHECK AND TEST EXISTING IRRIGATION FACILITIES
OPERATE EXISTING IRRIGATION FACILITIES

REMOVE IRRIGATION FACILITY

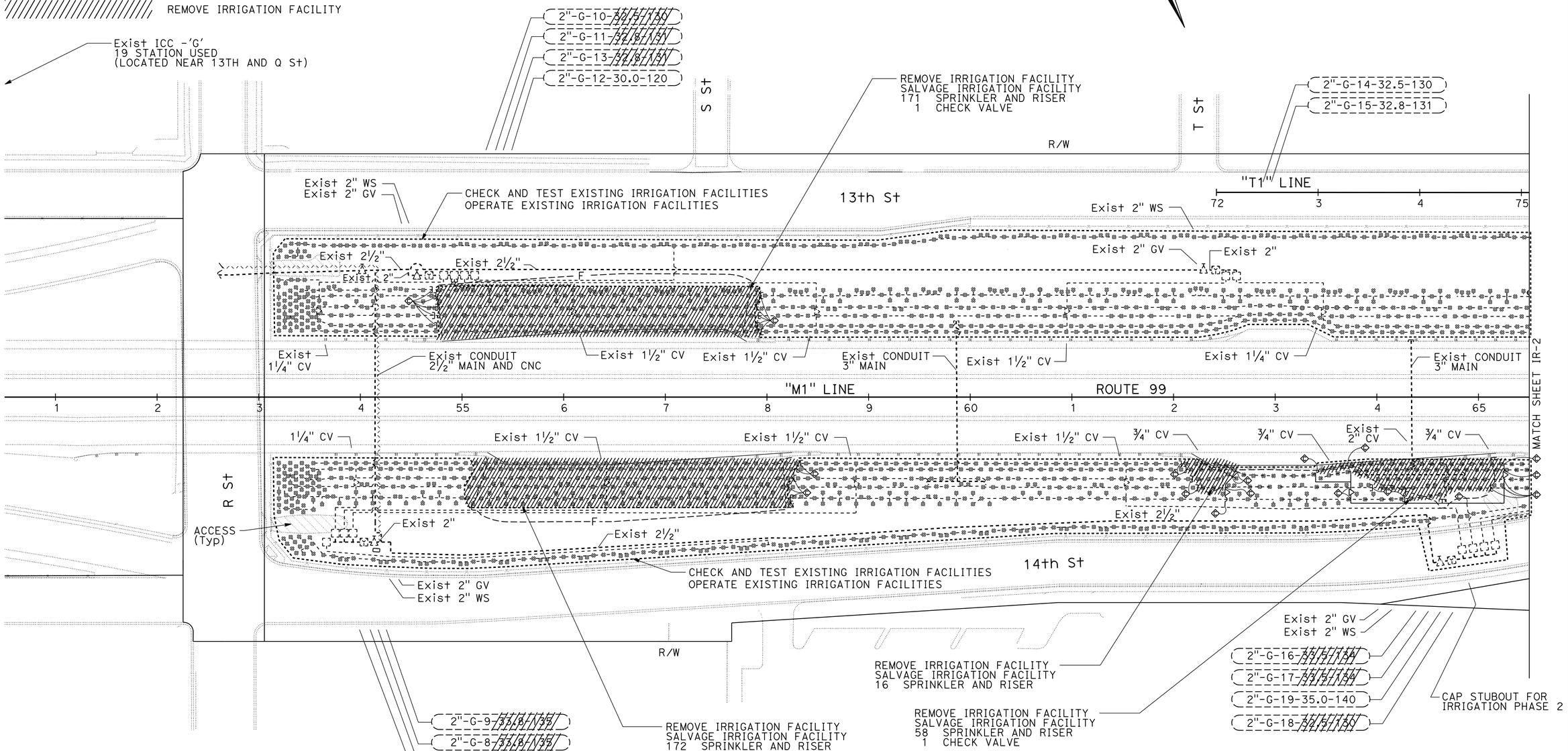

IRRIGATION REMOVAL PLAN AND IRRIGATION PLAN (PHASE 1)

SCALE: 1" = 50'

IR-1

APPROVED FOR IRRIGATION WORK ONLY

REVISED BY	DATE REVISED
ED HIBBS	12-18-15

CALCULATED-DESIGNED BY: ED HIBBS
CHECKED BY: KEVIN GALLO
SENIOR LANDSCAPE ARCHITECT: BRAD COLE

STATE OF CALIFORNIA - DEPARTMENT OF TRANSPORTATION
Caltrans® LANDSCAPE ARCHITECTURE

LAST REVISION 12-18-15
DATE PLOTTED => 30-DEC-2015
TIME PLOTTED => 17:13

Dist	COUNTY	ROUTE	POST MILES TOTAL PROJECT	SHEET No.	TOTAL SHEETS
10	Mer	99	15.1/16.0	36	79

Edward A. Hibbs
LICENSED LANDSCAPE ARCHITECT

12-28-15
PLANS APPROVAL DATE

LICENSED LANDSCAPE ARCHITECT
EDWARD A. HIBBS No. 2480
Signature
2/29/16
Renewal Date
12/18/15
Date
STATE OF CALIFORNIA

THE STATE OF CALIFORNIA OR ITS OFFICERS OR AGENTS SHALL NOT BE RESPONSIBLE FOR THE ACCURACY OR COMPLETENESS OF SCANNED COPIES OF THIS PLAN SHEET.

NOTE:

FOR ACCURATE RIGHT OF WAY DATA, CONTACT RIGHT OF WAY ENGINEERING AT THE DISTRICT OFFICE.

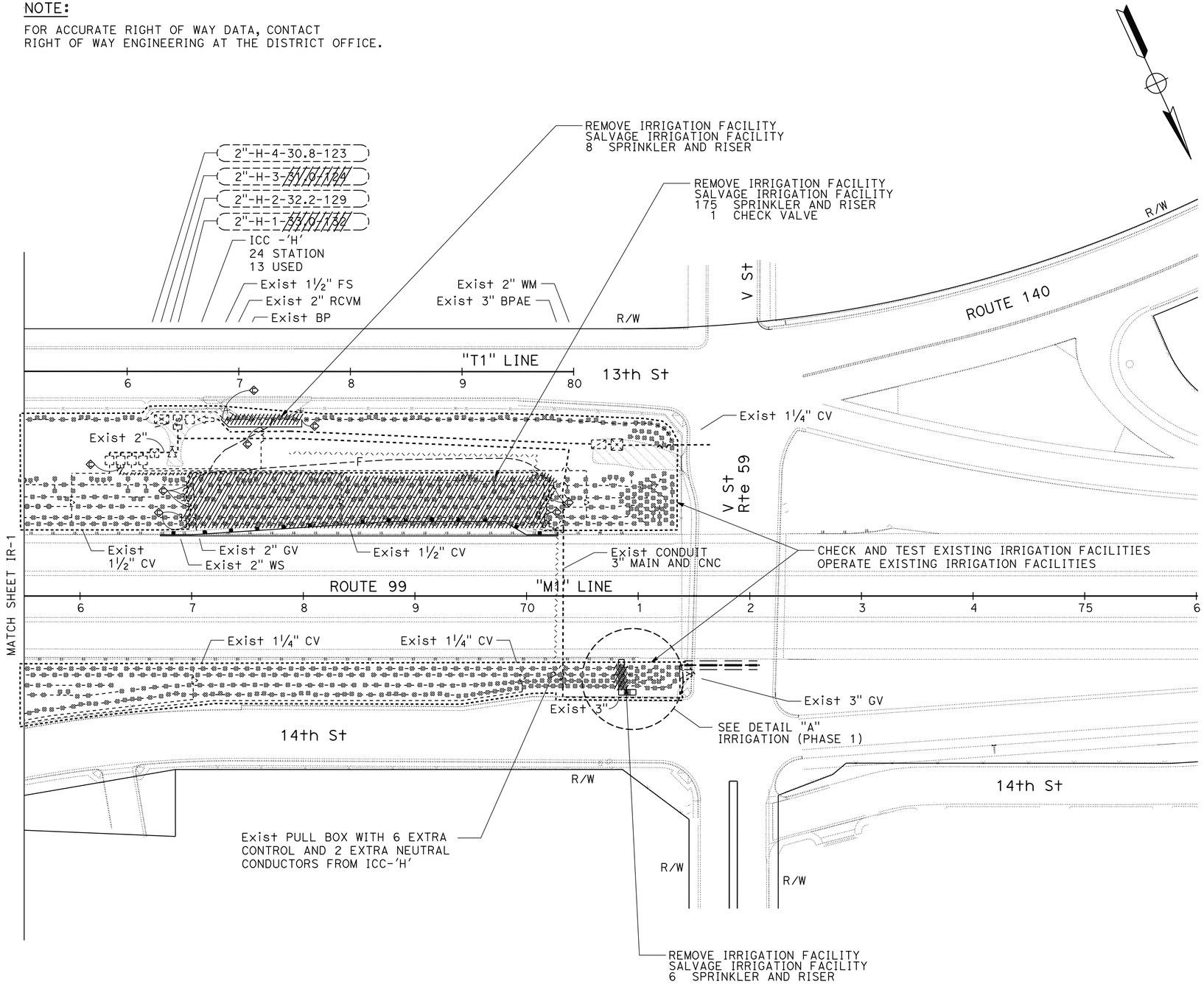

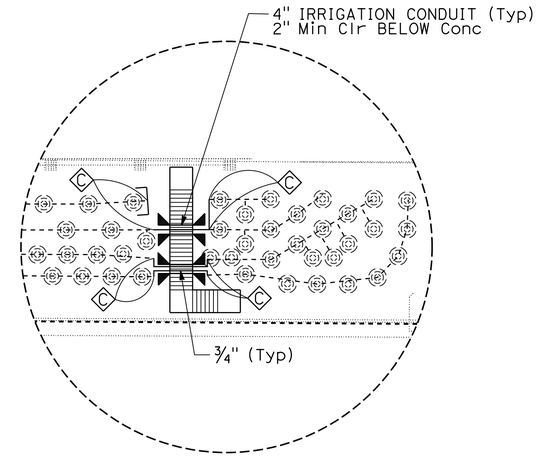

DETAIL "A"

IRRIGATION (PHASE 1)

APPROVED FOR IRRIGATION WORK ONLY

IRRIGATION REMOVAL PLAN AND IRRIGATION PLAN (PHASE 1)

SCALE: 1" = 50'

IR-2

REVISED BY	DATE REVISED
ED HIBBS	12-18-15

CALCULATED-DESIGNED BY: ED HIBBS
CHECKED BY: KEVIN GALLO
SENIOR LANDSCAPE ARCHITECT: BRAD COLE

STATE OF CALIFORNIA - DEPARTMENT OF TRANSPORTATION
Caltrans® LANDSCAPE ARCHITECTURE

LAST REVISION 12-18-15
DATE PLOTTED => 30-DEC-2015
TIME PLOTTED => 17:13

Dist	COUNTY	ROUTE	POST MILES TOTAL PROJECT	SHEET No.	TOTAL SHEETS
10	Mer	99	15.1/16.0	37	79

Edward A. Hibbs
LICENSED LANDSCAPE ARCHITECT

12-28-15
PLANS APPROVAL DATE

LICENSED LANDSCAPE ARCHITECT
EDWARD A. HIBBS No. 2480
Edward A. Hibbs
Signature
2/29/16
Renewal Date
12/18/15
Date
STATE OF CALIFORNIA

THE STATE OF CALIFORNIA OR ITS OFFICERS OR AGENTS SHALL NOT BE RESPONSIBLE FOR THE ACCURACY OR COMPLETENESS OF SCANNED COPIES OF THIS PLAN SHEET.

I HAVE COMPLIED WITH THE CRITERIA OF THE ORDINANCE AND APPLIED THEM FOR THE EFFICIENT USE OF WATER IN THE IRRIGATION DESIGN PLAN.

NOTES:

1. FOR ACCURATE RIGHT OF WAY DATA, CONTACT RIGHT OF WAY ENGINEERING AT THE DISTRICT OFFICE.
2. FOR Exist UTILITIES SEE LAYOUT SHEETS.

LEGEND:

OPERATE EXISTING IRRIGATION FACILITIES

REVISED VALVE CODE:

(E) RCV SIZE
(E) IRRIGATION CONTROLLER
(E) CONTROLLER STATION
REVISED GPM
REVISED QUANTITY OF SPRINKLERS

2"-G-10-30.8-123

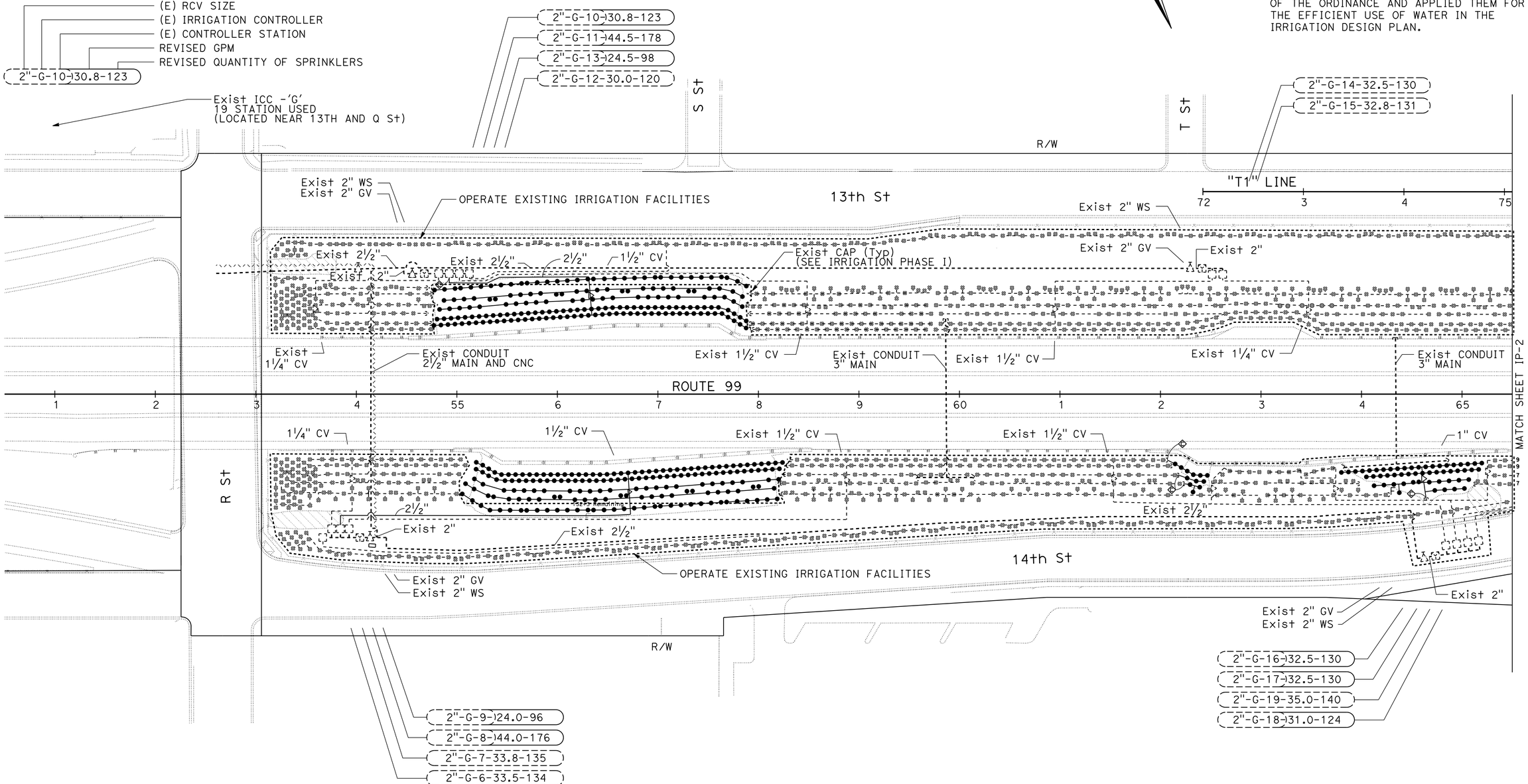

APPROVED FOR IRRIGATION WORK ONLY

IRRIGATION PLAN (PHASE 2)

SCALE: 1" = 50'

IP-1

ED HIBBS	12-18-15
REVISED BY	DATE REVISED
ED HIBBS	KEVIN GALLO
CALCULATED-DESIGNED BY	CHECKED BY
SENIOR LANDSCAPE ARCHITECT	BRAD COLE

STATE OF CALIFORNIA - DEPARTMENT OF TRANSPORTATION
Caltrans® LANDSCAPE ARCHITECTURE

LAST REVISION 12-18-15
DATE PLOTTED => 30-DEC-2015
TIME PLOTTED => 17:13

Dist	COUNTY	ROUTE	POST MILES TOTAL PROJECT	SHEET No.	TOTAL SHEETS
10	Mer	99	15.1/16.0	38	79

Edward A. Hibbs
LICENSED LANDSCAPE ARCHITECT

12-28-15
PLANS APPROVAL DATE

LICENSED LANDSCAPE ARCHITECT
EDWARD A. HIBBS No. 2480
Signature 2/29/16
Renewal Date 12/18/15
Date
STATE OF CALIFORNIA

THE STATE OF CALIFORNIA OR ITS OFFICERS OR AGENTS SHALL NOT BE RESPONSIBLE FOR THE ACCURACY OR COMPLETENESS OF SCANNED COPIES OF THIS PLAN SHEET.

I HAVE COMPLIED WITH THE CRITERIA OF THE ORDINANCE AND APPLIED THEM FOR THE EFFICIENT USE OF WATER IN THE IRRIGATION DESIGN PLAN.

NOTE:

FOR ACCURATE RIGHT OF WAY DATA, CONTACT RIGHT OF WAY ENGINEERING AT THE DISTRICT OFFICE.

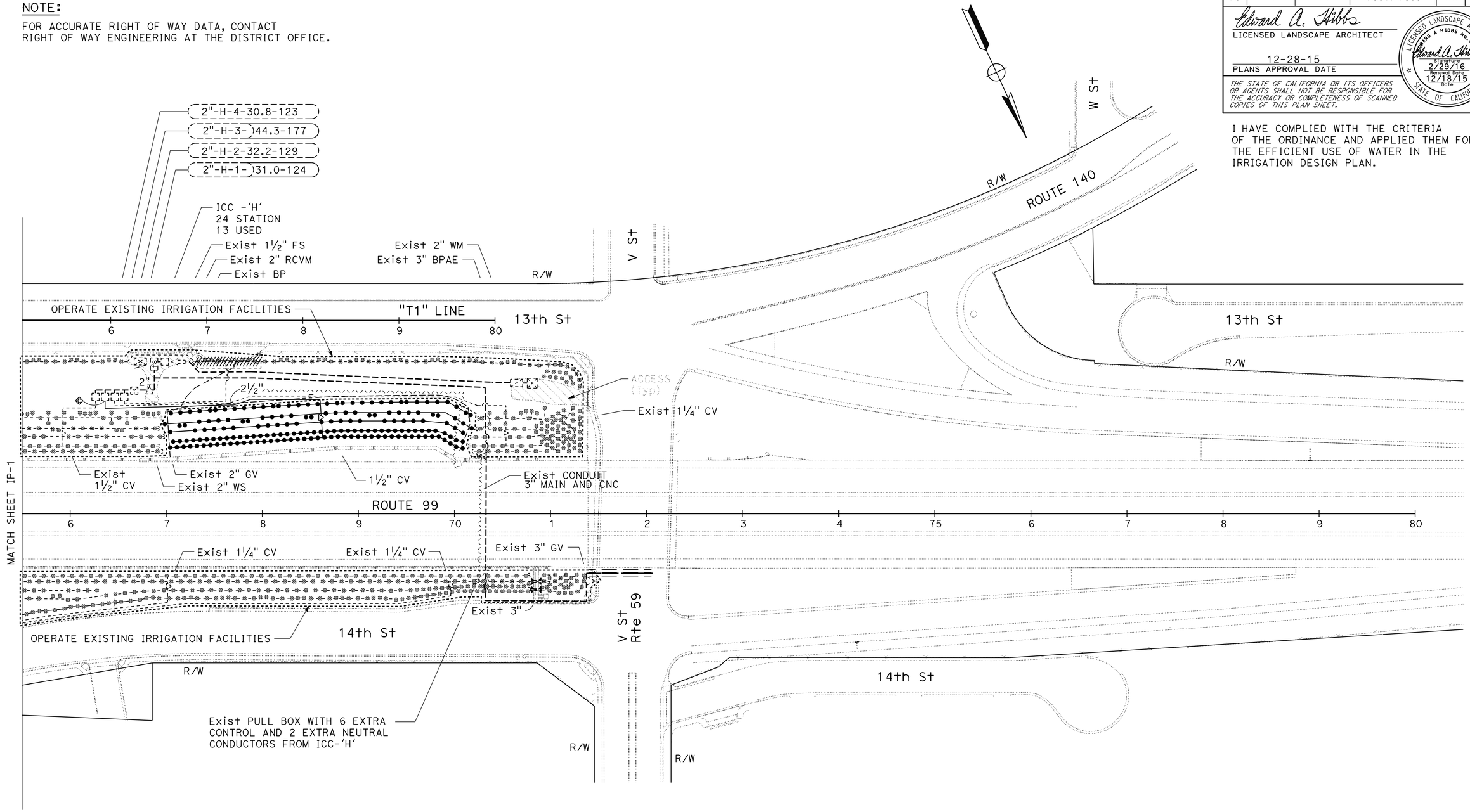

APPROVED FOR IRRIGATION WORK ONLY

IRRIGATION PLAN (PHASE 2)

SCALE: 1" = 50'

IP-2

REVISED BY	DATE REVISED
ED HIBBS	12-18-15

CALCULATED-DESIGNED BY	CHECKED BY
ED HIBBS	KEVIN GALLO

SENIOR LANDSCAPE ARCHITECT: BRAD COLE

STATE OF CALIFORNIA - DEPARTMENT OF TRANSPORTATION
Caltrans® LANDSCAPE ARCHITECTURE

LAST REVISION 12-18-15 | DATE PLOTTED => 30-DEC-2015 | TIME PLOTTED => 17:13

Dist	COUNTY	ROUTE	POST MILES TOTAL PROJECT	SHEET No.	TOTAL SHEETS
10	Mer	99	15.1/16.0	39	79

Edward A. Hibbs
LICENSED LANDSCAPE ARCHITECT

12-28-15
PLANS APPROVAL DATE

LICENSED LANDSCAPE ARCHITECT — EDWARD A. HIBBS No. 2480 — Signature — Renewal Date 2/29/16 — Date 12/18/15 — STATE OF CALIFORNIA

THE STATE OF CALIFORNIA OR ITS OFFICERS OR AGENTS SHALL NOT BE RESPONSIBLE FOR THE ACCURACY OR COMPLETENESS OF SCANNED COPIES OF THIS PLAN SHEET.

IRRIGATION QUANTITIES

	CONTROLLER LETTER	VALVE NUMBER	PLASTIC PIPE (SCHEDULE 40) (SUPPLY LINE) ¾"	1"	1¼"	1½"	PLASTIC PIPE (CLASS 315) (SUPPLY LINE) 2"	2½"	CV ¾"	1"	1½"	RISER SPRINKLER ASSEMBLY
			LF	LF	LF	LF	LF	LF	EA	EA	EA	EA
SUBTOTALS PER VALVE ON LATERAL SUPPLY SIDE OF CONTROL VALVE	G	1										
		2										
		3										
		4										
		5										
		6										
		7										
		8	1,573	7	-	19	11	304	-	-	1	176
		9	-	-	-	-	-	-	-	-	-	-
		10	-	-	-	-	-	-	-	-	-	-
		11	1,567	7	-	19	12	148	-	-	1	178
		12										
		13	-	-	-	-	-	-	-	-	-	-
		14										
		15										
		16	135	-	-	-	-	-	1	-	-	12
		17	489	168	43	-	-	-	2	1	-	54
		18	50	-	-	-	-	-	-	-	-	-
		19										
	H	1	-	-	84	-	-	-	-	-	-	-
		2										
		3	1,594	7	20	10	238	-	-	-	1	177
		4										
		5										
		6										
		7										
		8										
		9										
		10										
		11										
		12										
		13										
TOTAL			5,408	189	147	48	261	452	3	1	3	597

SALVAGE IRRIGATION FACILITY

LOCATION SHEET No.	DIRECTION	SPRINKLER AND RISER EA	CHECK VALVE EA
IR-1	NORTH BOUND	172	1
		16	-
		58	1
	SOUTH BOUND	171	1
IR-2	NORTH BOUND	6	-
	SOUTH BOUND	175	1
		8	-
TOTAL		606*	4*

* FOR INFORMATION ONLY

IRRIGATION CONDUIT

SHEET No.	IRRIGATION CONDUIT No.	LOCATION LINE	LOCATION STATION	SCHEDULE 40 PVC PIPE CONDUIT Dia (INCH) 4" LENGTH (LF)
IR-2	1	M1	70+85	10
	2			10
			TOTAL	20

IRRIGATION QUANTITIES
IQ-1

STATE OF CALIFORNIA - DEPARTMENT OF TRANSPORTATION
Caltrans® LANDSCAPE ARCHITECTURE

SENIOR LANDSCAPE ARCHITECT: BRAD COLE
CALCULATED-DESIGNED BY: KEVIN GALLO
CHECKED BY: ED HIBBS
REVISED BY: ED HIBBS
DATE REVISED: 12-18-15

LAST REVISION 12-18-15
DATE PLOTTED => 30-DEC-2015
TIME PLOTTED => 17:13

Dist	COUNTY	ROUTE	POST MILES TOTAL PROJECT	SHEET No.	TOTAL SHEETS
10	Mer	99	15.1/16.0	40	79

Edward A. Hibbs
LICENSED LANDSCAPE ARCHITECT

12-28-15
PLANS APPROVAL DATE

LICENSED LANDSCAPE ARCHITECT
EDWARD A. HIBBS No. 2480
Edward A. Hibbs
Signature
2/29/16
Renewal Date
12/18/15
Date
STATE OF CALIFORNIA

THE STATE OF CALIFORNIA OR ITS OFFICERS OR AGENTS SHALL NOT BE RESPONSIBLE FOR THE ACCURACY OR COMPLETENESS OF SCANNED COPIES OF THIS PLAN SHEET.

LEGEND:

- WOOD MULCH (538 CY PER ACRE/4" THICK)
- PLANT ESTABLISHMENT LIMITS
- MAINTAIN EXISTING PLANTED AREAS

PLANT LIST

PLANT GROUP	PLANT No.	SYMBOL	BOTANICAL NAME	COMMON NAME	SIZE	QUANTITY EACH	HOLE SIZE (INCH)		BASIN TYPE	SOIL AMENDMENT ①		FERTILIZER ①				BASIN MULCH ②		STAKING	PLANTING LIMITS							REMARKS
												PLANTING		PLT ESTB					MINIMUM DISTANCE (ft) FROM						ON CENTER (ft)	
							Dia	DEPTH		TYPE	RATE	TYPE	RATE	TYPE	RATE	TYPE	CY		ETW	Pvmt	FENCE	WALL	PAVED DITCH	EARTH DITCH		
A	1	⊕	BACCHARIS PILULARIS 'PIGEON POINT'	DWARF COYOTE BRUSH	No. 1	73	⑨	③	II	N	1/4 CF	Pkt	1	SL	1/4 LB	SB	.04	—	—	10	8	8	8	8	10	SHRUB
	2	◎	CISTUS HYBRIDUS	WHITE ROCKROSE	No. 1	316	⑨	③	II	N	1/4 CF	Pkt	1	SL	1/4 LB	SB	.04	—	—	6	6	6	6	6	7	SHRUB
	3	✪	FREMONTODENDRON 'CALIFORNIA GLORY'	FLANNEL BUSH	No. 1	16	⑨	③	II	N	1/4 CF	Pkt	1	SL	1/4 LB	SB	.04	—	—	15	10	10	10	12	⑦	SHRUB
	4	○	LEUCOPHYLLUM FRUTESCENS	TEXAS RANGER	No. 1	133	⑨	③	II	N	1/4 CF	Pkt	1	SL	1/4 LB	SB	.04	—	—	8	6	6	6	8	10	SHRUB
B	5	✇	CHILOPSIS LINEARIS 'TIMELESS BEAUTY'	DESERT WILLOW	No. 5	14	⑨	③	II	N	1 CF	Pkt	3	SL	3/8 LB	SB	.06	—	—	15	15	15	15	15	⑦	SHRUB; SEEDLESS
	6	✿	QUERCUS LOBATA	VALLEY OAK	No. 5	15	⑨	③	II	N	1 CF	Pkt	3	SL	3/8 LB	SB	.06	④	30	—	20	20	20	22	⑦	TREE

APPLICABLE WHEN CIRCLED:

1 - QUANTITIES SHOWN ARE "PER PLANT" UNLESS SHOWN AS SQFT OR SQYD APPLICATION RATES
2 - BASIN MULCH IS INCLUDED WITH MULCH QUANTITIES SHOWN ON PLANTING PLAN
3 - SUFFICIENT TO RECEIVE ROOT BALL AND AMENDMENTS IF REQUIRED
4 - SEE DETAIL
5 - SEE SPECIAL PROVISIONS
6 - SEE STANDARD SPECIFICATIONS
7 - AS SHOWN ON PLANS
8 - UNLESS OTHERWISE SHOWN ON PLANS
9 - TWICE THE ROOTBALL DIAMETER
10 - ROOT PROTECTOR REQUIRED

ABBREVIATIONS:

SOIL AMENDMENT TYPE:
S - SPHAGNUM PEAT MOSS
N - NITROLIZED FIR BARK
V - VERMICULITE
P - PERLITE
TB - TREE BARK
WC - WOOD CHIP
SB - SHREDDED BARK
TT - TREE TRIMMING
IS - IRON SULFATE

FERTILIZER TYPE:
O - ORGANIC
SL - SLOW RELEASE
Pkt - PACKET

NOTE:
UNDERLINED PORTIONS OF BOTANICAL NAME INDICATE ABBREVIATIONS USED ON PLANTING PLANS.

PLANT LIST
PL-1

REVISED BY: ED HIBBS — DATE REVISED: 12-18-15
CALCULATED-DESIGNED BY: ED HIBBS — CHECKED BY: KEVIN GALLO
SENIOR LANDSCAPE ARCHITECT: BRAD COLE

STATE OF CALIFORNIA - DEPARTMENT OF TRANSPORTATION
Caltrans® LANDSCAPE ARCHITECTURE

LAST REVISION 12-18-15
DATE PLOTTED => 30-DEC-2015
TIME PLOTTED => 17:13

Dist	COUNTY	ROUTE	POST MILES TOTAL PROJECT	SHEET No.	TOTAL SHEETS
10	Mer	99	15.1/16.0	41	79

Edward A. Hibbs
LICENSED LANDSCAPE ARCHITECT

12-28-15
PLANS APPROVAL DATE

LICENSED LANDSCAPE ARCHITECT
EDWARD A. HIBBS No. 2480
Edward A. Hibbs
Signature
2/29/16
Renewal Date
12/18/15
Date
STATE OF CALIFORNIA

THE STATE OF CALIFORNIA OR ITS OFFICERS OR AGENTS SHALL NOT BE RESPONSIBLE FOR THE ACCURACY OR COMPLETENESS OF SCANNED COPIES OF THIS PLAN SHEET.

I HAVE COMPLIED WITH THE CRITERIA OF THE ORDINANCE AND APPLIED THEM FOR THE EFFICIENT USE OF WATER IN THE LANDSCAPE DESIGN PLAN.

NOTE:

FOR ACCURATE RIGHT OF WAY DATA, CONTACT RIGHT OF WAY ENGINEERING AT THE DISTRICT OFFICE.

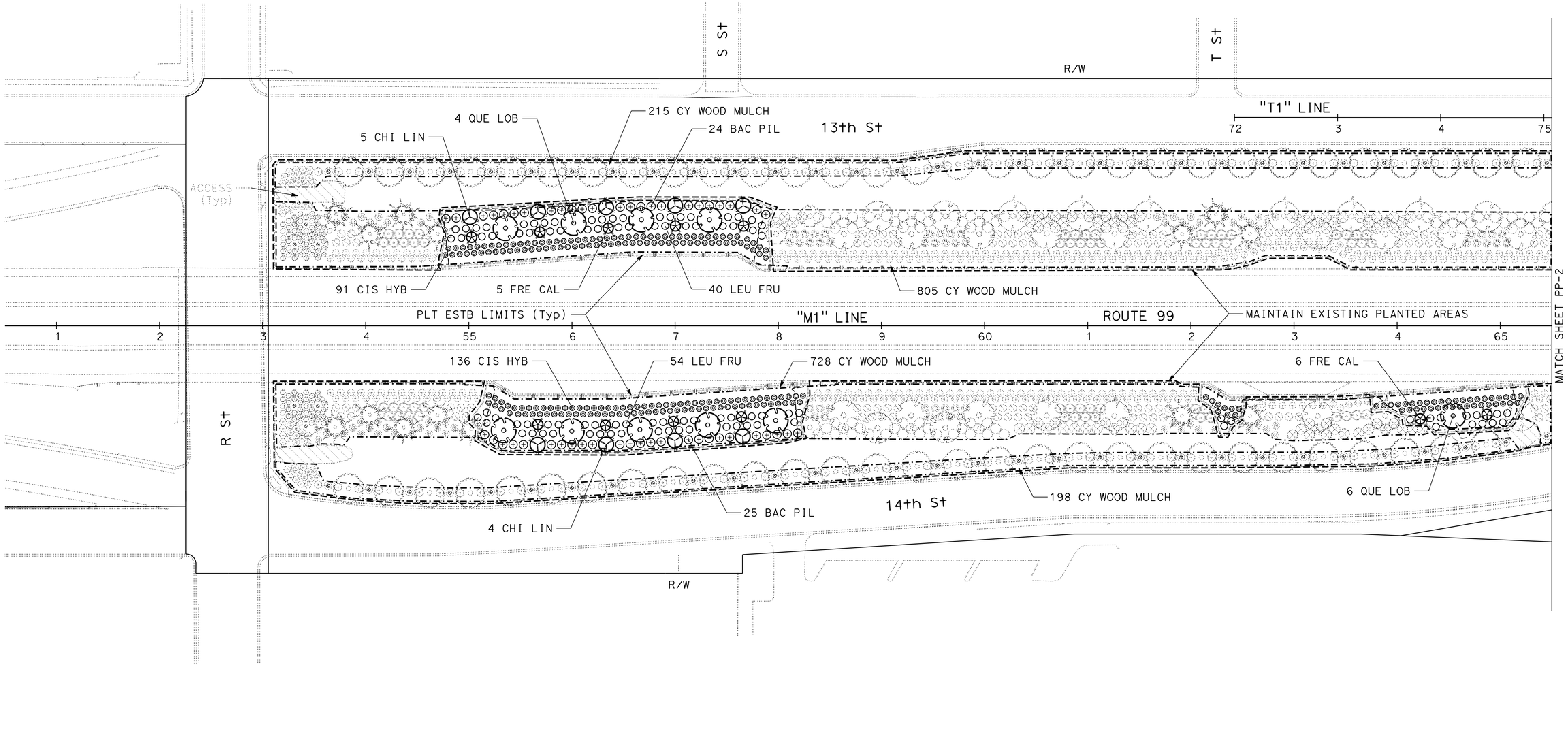

APPROVED FOR PLANTING WORK ONLY

PLANTING PLAN

SCALE: 1" = 50'

PP-1

REVISED BY	ED HIBBS
DATE REVISED	12-18-15
CALCULATED-DESIGNED BY	ED HIBBS
CHECKED BY	KEVIN GALLO
SENIOR LANDSCAPE ARCHITECT	BRAD COLE

STATE OF CALIFORNIA - DEPARTMENT OF TRANSPORTATION
Caltrans® LANDSCAPE ARCHITECTURE

LAST REVISION 12-18-15
DATE PLOTTED => 30-DEC-2015
TIME PLOTTED => 17:13

Dist	COUNTY	ROUTE	POST MILES TOTAL PROJECT	SHEET No.	TOTAL SHEETS
10	Mer	99	15.1/16.0	42	79

Edward A. Hibbs
LICENSED LANDSCAPE ARCHITECT

12-28-15
PLANS APPROVAL DATE

LICENSED LANDSCAPE ARCHITECT
EDWARD A. HIBBS No. 2480
Edward A. Hibbs
Signature
2/29/16
Renewal Date
12/18/15
Date
STATE OF CALIFORNIA

THE STATE OF CALIFORNIA OR ITS OFFICERS OR AGENTS SHALL NOT BE RESPONSIBLE FOR THE ACCURACY OR COMPLETENESS OF SCANNED COPIES OF THIS PLAN SHEET.

I HAVE COMPLIED WITH THE CRITERIA OF THE ORDINANCE AND APPLIED THEM FOR THE EFFICIENT USE OF WATER IN THE LANDSCAPE DESIGN PLAN.

NOTE:

FOR ACCURATE RIGHT OF WAY DATA, CONTACT RIGHT OF WAY ENGINEERING AT THE DISTRICT OFFICE.

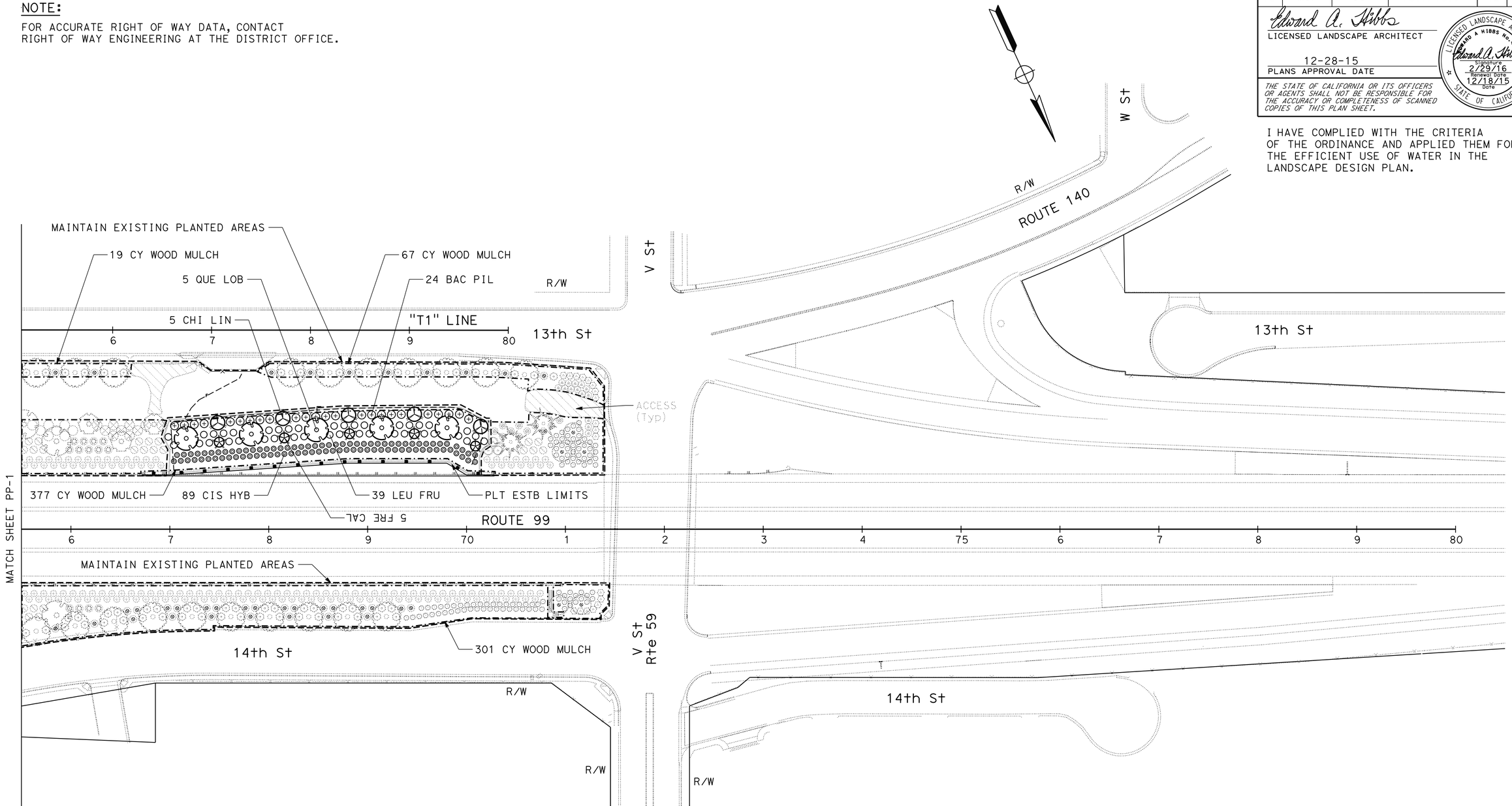

APPROVED FOR PLANTING WORK ONLY

PLANTING PLAN

SCALE: 1" = 50'

PP-2

STATE OF CALIFORNIA - DEPARTMENT OF TRANSPORTATION
Caltrans® LANDSCAPE ARCHITECTURE

SENIOR LANDSCAPE ARCHITECT: BRAD COLE
CALCULATED-DESIGNED BY: ED HIBBS
CHECKED BY: KEVIN GALLO
REVISED BY: ED HIBBS
DATE REVISED: 12-18-15

LAST REVISION 12-18-15
DATE PLOTTED => 30-DEC-2015
TIME PLOTTED => 17:13

Dist	COUNTY	ROUTE	POST MILES TOTAL PROJECT	SHEET No.	TOTAL SHEETS
10	Mer	99	15.1/16.0	43	79

Edward A. Hibbs
LICENSED LANDSCAPE ARCHITECT

12-28-15
PLANS APPROVAL DATE

LICENSED LANDSCAPE ARCHITECT
EDWARD A. HIBBS No. 2480
Signature
2/29/16
Renewal Date
12/18/15
Date
STATE OF CALIFORNIA

THE STATE OF CALIFORNIA OR ITS OFFICERS OR AGENTS SHALL NOT BE RESPONSIBLE FOR THE ACCURACY OR COMPLETENESS OF SCANNED COPIES OF THIS PLAN SHEET.

HIGHWAY PLANTING QUANTITIES

SHEET	PLANT (GROUP A)	PLANT (GROUP B)	SOIL AMENDMENT	FERTILIZER		WOOD MULCH
				PACKET	SLOW RELEASE (N)	SHREDDED BARK
	EA	EA	CY	EA	LB	CY
PP-1	381	19	4.3	438	103	1946
PP-2	157	10	1.8	187	43	764
TOTAL	538	29	6.1	625	146	2710

(N) - NOT A SEPARATE PAY ITEM, FOR INFORMATION ONLY

EXISTING PLANTS TO BE REMOVED (N)

BOTANICAL NAME	QUANTITY (EA)*	REMARKS
ABELIA GRANDIFLORA	78	SHRUB
ACACIA REDOLENS	43	GROUND COVER SHRUB
CEDRUS DEODARA	4	TREE
CISTUS HYBRIDUS	1	SHRUB
CISTUS PURPUREUS	4	SHRUB
COTONEASTER LOWFAST	81	GROUND COVER SHRUB
GINKO BILOBA	9	TREE
PHOTINIA FRASERI	38	SHRUB
PISTACIA CHINENSIS	2	TREE
PITTOSPORUM TOBIRA 'VARIEGATA'	241	SHRUB
QUERCUS LOBATA	16	TREE
RHAPHIOLEPIS INDICA 'SPRINGTIME'	14	SHRUB
ROSMARINUS OFFICINALIS 'PROSTRATUS'	6	GROUND COVER SHRUB
XYLOSMA CONGESTUM	39	SHRUB
TOTAL	576	

(N) - NOT A SEPARATE PAY ITEM, FOR INFORMATION ONLY
* - APPROXIMATE

LANDSCAPE QUANTITIES
LQ-1

REVISED BY	DATE REVISED
ED HIBBS	01-06-16
ED HIBBS	12-18-15

ED HIBBS — KEVIN GALLO
CALCULATED-DESIGNED BY / CHECKED BY
SENIOR LANDSCAPE ARCHITECT — BRAD COLE

STATE OF CALIFORNIA - DEPARTMENT OF TRANSPORTATION
Caltrans® LANDSCAPE ARCHITECTURE

LAST REVISION 12-18-15
DATE PLOTTED => 07-JAN-2016
TIME PLOTTED => 13:25

M

Maint	MAINTENANCE
Max	MAXIMUM
MB	METAL BEAM
MBB	METAL BEAM BARRIER
MBGR	METAL BEAM GUARD RAILING
Med	MEDIAN
MGS	MIDWEST GUARDRAIL SYSTEM
MH	MANHOLE
Min	MINIMUM
Misc	MISCELLANEOUS
Misc I & S	MISCELLANEOUS IRON AND STEEL
Mkr	MARKER
Mod	MODIFIED,
	MODIFY
Mon	MONUMENT
MP	METAL PLATE
MPGR	METAL PLATE GUARD RAILING
MR	MOVEMENT RATING
MSE	MECHANICALLY STABILIZED EMBANKMENT
Mt	MOUNTAIN, MOUNT
Mtl	MATERIAL
MVP	MAINTENANCE VEHICLE PULLOUT

N

N	NORTH
NB	NORTHBOUND
No.	NUMBER (MUST HAVE PERIOD)
Nos.	NUMBERS (MUST HAVE PERIOD)
NPS	NOMINAL PIPE SIZE
NS	NEAR SIDE
NSP	NEW STANDARD PLAN
NTS	NOT TO SCALE

O

Oblr	OBLITERATE
OC	OVERCROSSING
OD	OUTSIDE DIAMETER
OF	OUTSIDE FACE
OG	ORIGINAL GROUND
OGAC	OPEN GRADED ASPHALT CONCRETE
OGFC	OPEN GRADED FRICTION COURSE
OH	OVERHEAD
OHWM	ORDINARY HIGH WATER MARK
O-O	OUT TO OUT
Opp	OPPOSITE
OSD	OVERSIDE DRAIN

P

P	PAGE
PAP	PERFORATED ALUMINUM PIPE
PB	PULL BOX
PC	POINT OF CURVATURE,
	PRECAST
PCC	POINT OF COMPOUND CURVE,
	PORTLAND CEMENT CONCRETE
PCMS	PORTABLE CHANGEABLE MESSAGE SIGN
PCP	PERFORATED CONCRETE PIPE,
	PRESTRESSED CONCRETE PIPE
PCVC	POINT OF COMPOUND VERTICAL CURVE
PEC	PERMIT TO ENTER AND CONSTRUCT
Ped	PEDESTRIAN
Ped OC	PEDESTRIAN OVERCROSSING
Ped UC	PEDESTRIAN UNDERCROSSING
Perm Mtl	PERMEABLE MATERIAL

P continued

PG	PROFILE GRADE
PI	POINT OF INTERSECTION
PJP	PARTIAL JOINT PENETRATION
Pkwy	PARKWAY
ℙ,PL	PLATE
P/L	PROPERTY LINE
PM	POST MILE,
	TIME FROM NOON TO MIDNIGHT
PN	PAVING NOTCH
POC	POINT OF HORIZONTAL CURVE
POT	POINT OF TANGENT
POVC	POINT OF VERTICAL CURVE
PP	PIPE PILE,
	PLASTIC PIPE,
	POWER POLE
PPL	PREFORMED PERMEABLE LINER
PPP	PERFORATED PLASTIC PIPE
PRC	POINT OF REVERSE CURVE
PRF	PAVEMENT REINFORCING FABRIC
PRVC	POINT OF REVERSE VERTICAL CURVE
PS&E	PLANS, SPECIFICATIONS AND ESTIMATES
PS, P/S	PRESTRESSED
PSP	PERFORATED STEEL PIPE
PT	POINT OF TANGENCY
PVC	POLYVINYL CHLORIDE
Pvmt	PAVEMENT

Q

Qty	QUANTITY

R

R	RADIUS
R & D	REMOVE AND DISPOSE
R & S	REMOVE AND SALVAGE
R/C	RATE OF CHANGE
RCA	REINFORCED CONCRETE ARCH
RCB	REINFORCED CONCRETE BOX
RCP	REINFORCED CONCRETE PIPE
RCPA	REINFORCED CONCRETE PIPE ARCH
Rd	ROAD
Reinf	REINFORCED,
	REINFORCEMENT,
	REINFORCING
Rel	RELOCATE
Repl	REPLACEMENT
Ret	RETAINING
Rev	REVISED, REVISION
Rdwy	ROADWAY
RHMA	RUBBERIZED HOT MIX ASPHALT
Riv	RIVER
RM	ROAD-MIXED
RP	RADIUS POINT,
	REFERENCE POINT
RR	RAILROAD
RSP	ROCK SLOPE PROTECTION,
	REVISED STANDARD PLAN
Rt	RIGHT
Rte	ROUTE
RW	REDWOOD,
	RETAINING WALL
R/W	RIGHT OF WAY
Rwy	RAILWAY

S

S	SOUTH,
	SUPPLEMENT
SAE	STRUCTURE APPROACH EMBANKMENT
Salv	SALVAGE
SAPP	STRUCTURAL ALUMINUM PLATE PIPE
SB	SOUTHBOUND
SC	SAND CUSHION
SCSP	SLOTTED CORRUGATED STEEL PIPE
SD	STORM DRAIN
Sec	SECOND,
	SECTION
Sep	SEPARATION
SG	SUBGRADE
Shld	SHOULDER
Sht	SHEET
Sim	SIMILAR
℄	STATION LINE
SM	SELECTED MATERIAL
Spec	SPECIAL,
	SPECIFICATIONS
SPP	SLOTTED PLASTIC PIPE
SS	SLOPE STAKE
SSBM	STRAP AND SADDLE BRACKET METHOD
SSD	STRUCTURAL SECTION DRAIN
SSPA	STRUCTURAL STEEL PLATE ARCH
SSPP	STRUCTURAL STEEL PLATE PIPE
SSPPA	STRUCTURAL STEEL PLATE PIPE ARCH
SSRP	STEEL SPIRAL RIB PIPE
St	STREET
Sta	STATION
STBB	SINGLE THRIE BEAM BARRIER
Std	STANDARD
Str	STRUCTURE
Surf	SURFACING
SW	SIDEWALK,
	SOUND WALL
Swr	SEWER
Sym	SYMMETRICAL
S4S	SURFACE 4 SIDES

T

T	SEMI-TANGENT
Tan	TANGENT
TBB	THRIE BEAM BARRIER
Tbr	TIMBER
TC	TOP OF CURB
TCB	TRAFFIC CONTROL BOX
TCE	TEMPORARY CONSTRUCTION EASEMENT
Tel	TELEPHONE
Temp	TEMPORARY
TG	TOP OF GRADE
Tot	TOTAL
TP	TELEPHONE POLE
TPB	TREATED PERMEABLE BASE
TPM	TREATED PERMEABLE MATERIAL
Trans	TRANSITION

T continued

TS	TRANSVERSE,
	TRAFFIC SIGNAL,
	TUBULAR STEEL
Typ	TYPICAL

U

UC	UNDERCROSSING
UD	UNDERDRAIN
UG	UNDERGROUND
UON	UNLESS OTHERWISE NOTED
UP	UNDERPASS

V

V	VALVE,
	DESIGN SPEED
Var	VARIABLE,
	VARIES
VC	VERTICAL CURVE
VCP	VITRIFIED CLAY PIPE
Vert	VERTICAL
Via	VIADUCT
Vol	VOLUME

W

W	WEST,
	WIDTH
WB	WESTBOUND
WH	WEEP HOLE
WM	WIRE MESH
WS	WATER SURFACE
WSP	WELDED STEEL PIPE
Wt	WEIGHT
WV	WATER VALVE
WW	WINGWALL
WWLOL	WINGWALL LAYOUT LINE

X

X Sec	CROSS SECTION
Xing	CROSSING

Y

Yr	YEAR
Yrs	YEARS

Dist	COUNTY	ROUTE	POST MILES TOTAL PROJECT	SHEET No.	TOTAL SHEETS
10	Mer	99	15.1/16.0	44	79

Grace M. Tsushima
REGISTERED CIVIL ENGINEER

July 19, 2013
PLANS APPROVAL DATE

REGISTERED PROFESSIONAL ENGINEER
Grace M. Tsushima
No. C49814
Exp. 9-30-14
CIVIL
STATE OF CALIFORNIA

THE STATE OF CALIFORNIA OR ITS OFFICERS OR AGENTS SHALL NOT BE RESPONSIBLE FOR THE ACCURACY OR COMPLETENESS OF SCANNED COPIES OF THIS PLAN SHEET.

TO ACCOMPANY PLANS DATED 12-28-15

UNIT OF MEASUREMENT SYMBOLS:

Some of the symbols used in the project plan quantity tables and in the Bid Item List are:

TABLE A

SYMBOL USED	DEFINITIONS
ACRE	ACRE
CF	CUBIC FOOT
CY	CUBIC YARD
EA	EACH
GAL	GALLON
LB	POUND
LF	LINEAR FOOT
SQFT	SQUARE FOOT
SQYD	SQUARE YARD
STA	100 FEET
TAB	TABLET
TON	2,000 POUNDS

Some of the symbols used in the plans other than in the project plan quantity tables are:

TABLE B

SYMBOL USED	DEFINITIONS
ksi	KIPS PER SQUARE INCH
ksf	KIPS PER SQUARE FOOT
psi	POUNDS PER SQUARE INCH
psf	POUNDS PER SQUARE FOOT
lb/ft^3, pcf	POUNDS PER CUBIC FOOT
tsf	TONS PER SQUARE FOOT
mph, MPH *	MILES PER HOUR
ø	NOMINAL DIAMETER
oz	OUNCE
lb	POUND
kip	1,000 POUNDS
cal	CALORIE
ft	FOOT OR FEET
gal	GALLON

* For use on a sign panel only

STATE OF CALIFORNIA
DEPARTMENT OF TRANSPORTATION

ABBREVIATIONS (SHEET 2 OF 2)

NO SCALE

RSP A10B DATED JULY 19, 2013 SUPERSEDES STANDARD PLAN A10B DATED MAY 20, 2011 - PAGE 2 OF THE STANDARD PLANS BOOK DATED 2010.

REVISED STANDARD PLAN RSP A10B

2010 REVISED STANDARD PLAN RSP A10B

6-7-13

Dist	COUNTY	ROUTE	POST MILES TOTAL PROJECT	SHEET No.	TOTAL SHEETS
10	Mer	99	15.1/16.0	45	79

REGISTERED CIVIL ENGINEER

October 30, 2015
PLANS APPROVAL DATE

REGISTERED PROFESSIONAL ENGINEER
Carl M. Duan
No. C59976
Exp. 6-30-16
CIVIL
STATE OF CALIFORNIA

THE STATE OF CALIFORNIA OR ITS OFFICERS OR AGENTS SHALL NOT BE RESPONSIBLE FOR THE ACCURACY OR COMPLETENESS OF SCANNED COPIES OF THIS PLAN SHEET.

TO ACCOMPANY PLANS DATED 12-28-15

2010 REVISED STANDARD PLAN RSP A62F

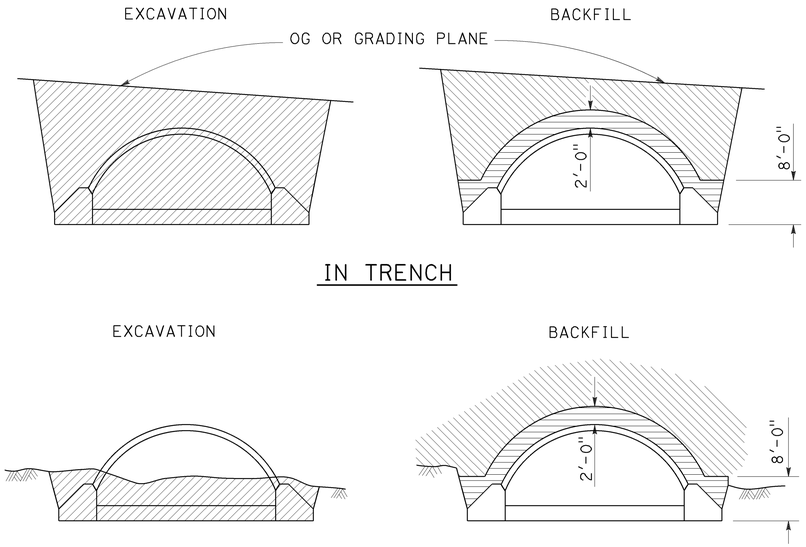

STRUCTURAL STEEL PLATE ARCHES

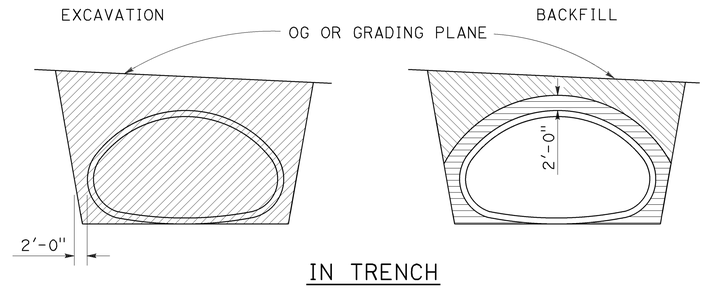

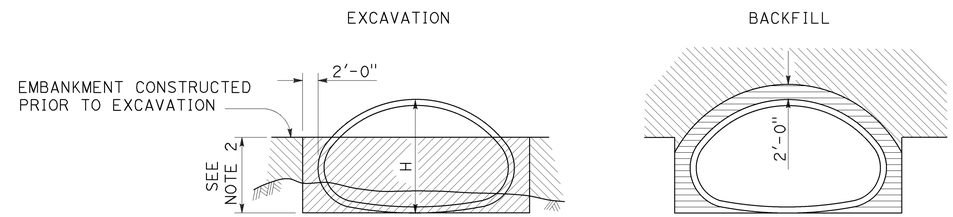

STRUCTURAL STEEL PLATE PIPE ARCHES AND VEHICULAR UNDERCROSSING

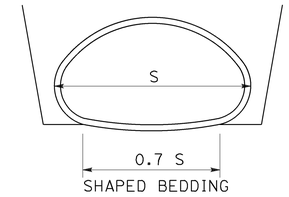

SHAPED BEDDING

S = Larger than 84"

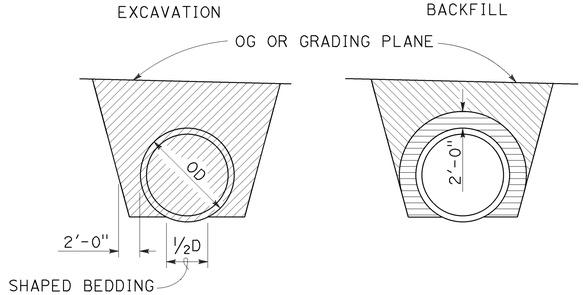

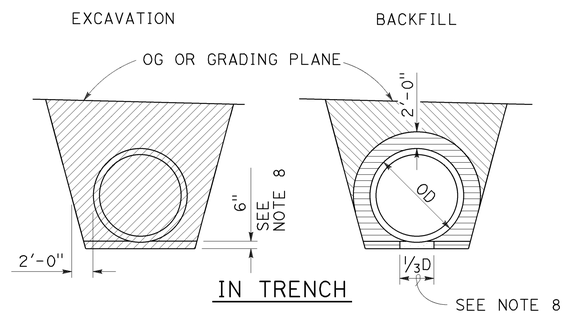

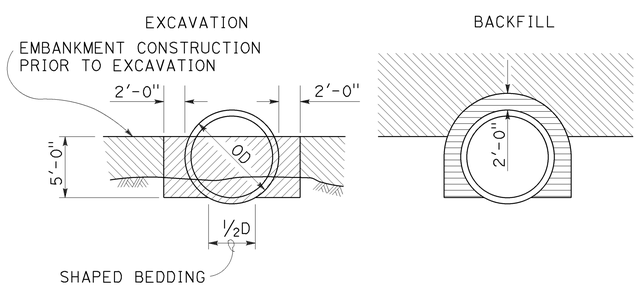

PIPES

Larger than 84"

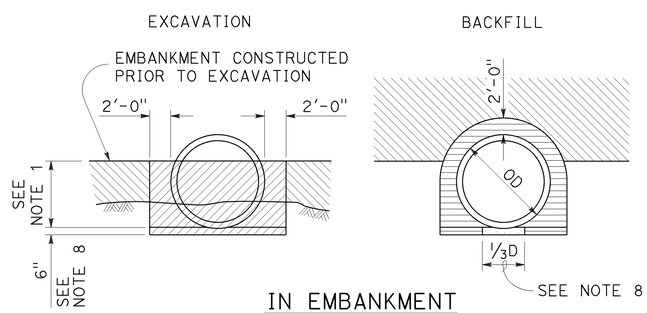

METAL AND PLASTIC PIPES AND CORRUGATED METAL PIPE ARCHES

84" or Smaller

NOTES:

1. PIPES: 30" minimum for diameters up to and including 42" then ⅔ diameter but no more than 60" required. CORRUGATED METAL PIPE ARCHES: 30" maximum.
2. ⅔ H up to 60" maximum.
3. Slope or shore excavation sides as necessary.
4. Backfill shall be placed full width of excavation except as noted.
5. Diagrams do not apply to overside drains.
6. Dimensions shown are minimum.
7. Construction strutting of structural steel plate pipe, arches and vehicular undercrossing to be used when shown on the project plans. When shown, see Standard Plan D88A for strutting requirements.
8. Excavation below pipe and 80% relative compaction requirements for plastic pipes only.
9. D is the inside diameter (ID) of the pipe.

LEGEND

- STRUCTURE EXCAVATION (CULVERT)
- ROADWAY EMBANKMENT
- STRUCTURE BACKFILL (CULVERT) 95% RELATIVE COMPACTION
- STRUCTURE BACKFILL (CULVERT) 80% RELATIVE COMPACTION

STATE OF CALIFORNIA
DEPARTMENT OF TRANSPORTATION

EXCAVATION AND BACKFILL METAL AND PLASTIC CULVERTS

NO SCALE

RSP A62F DATED OCTOBER 30, 2015 SUPERSEDES STANDARD PLAN A62F DATED MAY 20, 2011 - PAGE 26 OF THE STANDARD PLANS BOOK DATED 2010.

REVISED STANDARD PLAN RSP A62F

10-13-15

Dist	COUNTY	ROUTE	POST MILES TOTAL PROJECT	SHEET No.	TOTAL SHEETS
10	Mer	99	15.1/16.0	46	79

Randell D. Hiatt
REGISTERED CIVIL ENGINEER

July 19, 2013
PLANS APPROVAL DATE

REGISTERED PROFESSIONAL ENGINEER
Randell D. Hiatt
No. C50200
Exp. 6-30-15
CIVIL
STATE OF CALIFORNIA

THE STATE OF CALIFORNIA OR ITS OFFICERS OR AGENTS SHALL NOT BE RESPONSIBLE FOR THE ACCURACY OR COMPLETENESS OF SCANNED COPIES OF THIS PLAN SHEET.

TO ACCOMPANY PLANS DATED 12-28-15

2010 REVISED STANDARD PLAN RSP A77L1

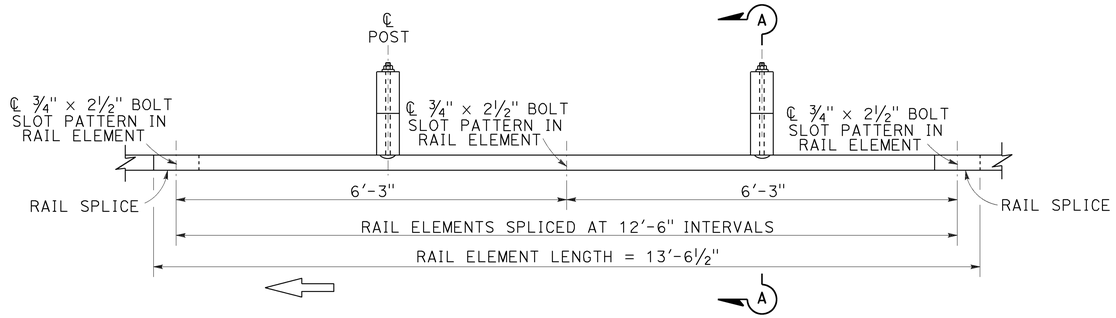

PLAN

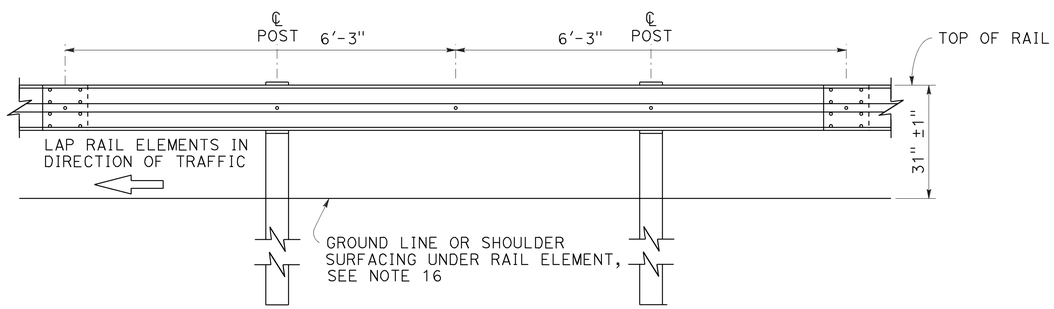

ELEVATION

MIDWEST GUARDRAIL SYSTEM WITH WOOD POST AND BLOCKS

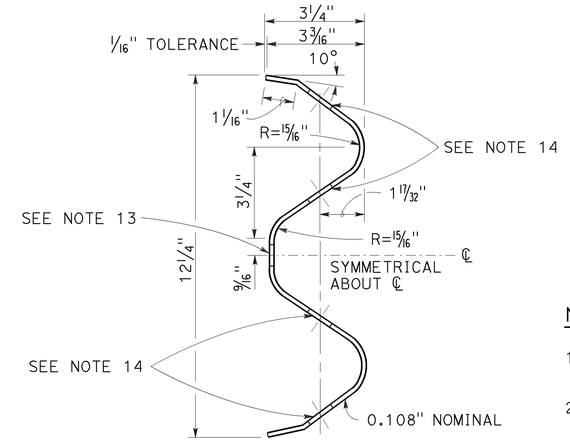

SECTION THRU RAIL ELEMENT

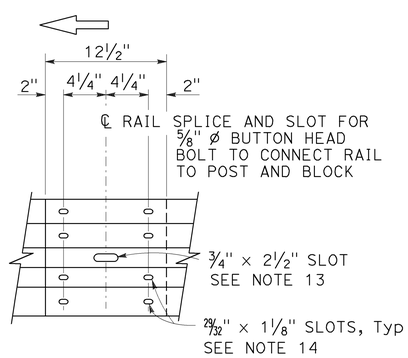

ELEVATION

RAIL ELEMENT SPLICE DETAIL

a) Connect the over lapped end of the rail elements with ⅝" ø × 1⅜" button head oval shoulder splice bolts inserted into the 29/32" × 1⅛" slots and bolted together with ⅝" ø recessed hex nuts. Recess of hex nut points toward rail element. A total of 8 bolts and nuts are to be used at each rail splice connection.

b) The ends of the rail elements are to be overlapped in the direction of traffic (see details).

c) Where end cap is to be attached to the end of a rail element, a total of 4 of the above described splice bolts and nuts are to be used.

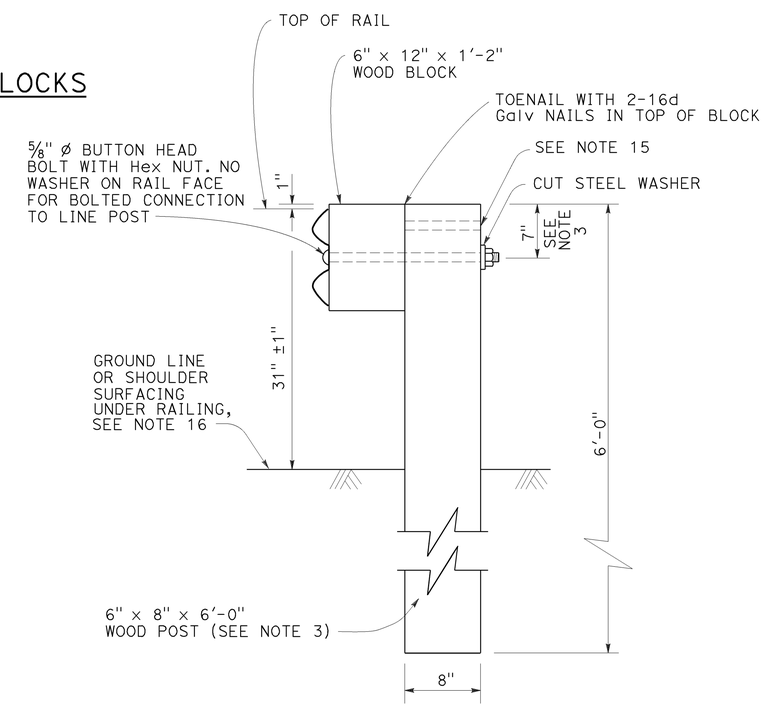

SECTION A-A

TYPICAL WOOD LINE POST INSTALLATION

See Note 4

NOTES:

1. For details of steel post installations, see Revised Standard Plan RSP A77L2.
2. For details of standard hardware used to construct MGS, see Revised Standard Plan RSP A77M1.
3. For details of wood posts and wood blocks used to construct MGS, see Revised Standard Plan RSP A77N1.
4. For additional installation details, see Revised Standard Plan RSP A77N3.
5. MGS post spacing to be 6'-3" center to center, except as otherwise noted.
6. For MGS typical layouts, see the A77P, A77Q and A77R Series of Standard Plans.
7. If railing is connected to terminal system end treatment, use 31" height terminal system end treatment.
8. For MGS end anchor details, see Revised Standard Plans RSP A77S1 and RSP A77T2.
9. For details of MGS transition to bridge railing, see Revised Standard Plan RSP A77U4.
10. For additional details of MSG connection to bridge railing, see Revised Standard Plans RSP A77U1, RSP A77U2 and RSP A77V1.
11. For MGS connection details to abutments and walls, see Revised Standard Plan RSP A77U3.
12. For typical MGS delineation and dike positioning details, see Revised Standard Plan RSP A77N4.
13. Slotted hole for bolted connection of rail element to block and post. See "Section Thru Rail Element".
14. Slotted holes for splice bolts to overlap ends of rail element. See "Section Thru Rail Element".
15. Additional hole in uppermost portion of line post is for potential future adjustments of railing height. See Revised Standard Plan RSP A77N1.
16. Install posts in soil.

STATE OF CALIFORNIA
DEPARTMENT OF TRANSPORTATION

MIDWEST GUARDRAIL SYSTEM STANDARD RAILING SECTION (WOOD POST WITH WOOD BLOCK)

NO SCALE

RSP A77L1 DATED JULY 19, 2013 SUPPLEMENTS STANDARD PLANS BOOK DATED 2010.

REVISED STANDARD PLAN RSP A77L1

Dist	COUNTY	ROUTE	POST MILES TOTAL PROJECT	SHEET No.	TOTAL SHEETS
10	Mer	99	15.1/16.0	47	79

Randell D. Hiatt
REGISTERED CIVIL ENGINEER

July 19, 2013
PLANS APPROVAL DATE

REGISTERED PROFESSIONAL ENGINEER
Randell D. Hiatt
No. C50200
Exp. 6-30-15
CIVIL
STATE OF CALIFORNIA

THE STATE OF CALIFORNIA OR ITS OFFICERS OR AGENTS SHALL NOT BE RESPONSIBLE FOR THE ACCURACY OR COMPLETENESS OF SCANNED COPIES OF THIS PLAN SHEET.

TO ACCOMPANY PLANS DATED 12-28-15

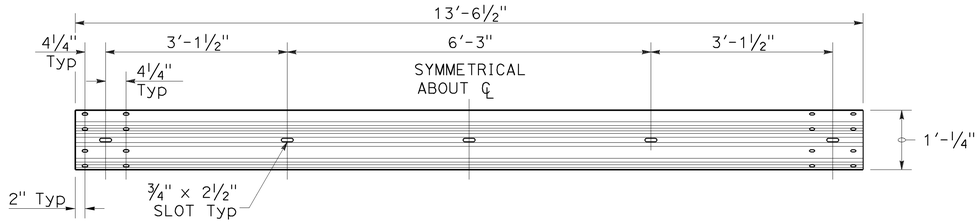

TYPICAL RAIL ELEMENT

NOTE:

1. Slotted holes for splice bolts to overlap ends of rail element.

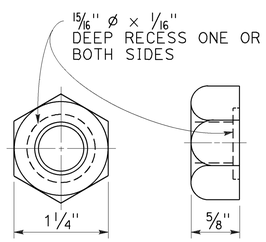

⅝" ø RECESS NUT

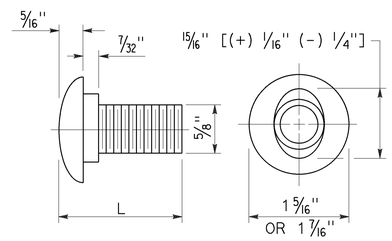

⅝" ø BUTTON HEAD BOLT

BUTTON HEAD BOLT

L	THREAD LENGTH
1⅜"	FULL THREAD LENGTH
2"	FULL THREAD LENGTH
10"	4" Min THREAD LENGTH
18"	4" Min THREAD LENGTH
20"	4" Min THREAD LENGTH
22"	4" Min THREAD LENGTH
26"	4" Min THREAD LENGTH
36"	4" Min THREAD LENGTH
** 2¾"	2" Min THREAD LENGTH
** 19"	4" Min THREAD LENGTH

** For nested rail applications.

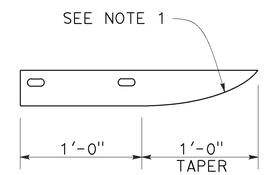

PLAN

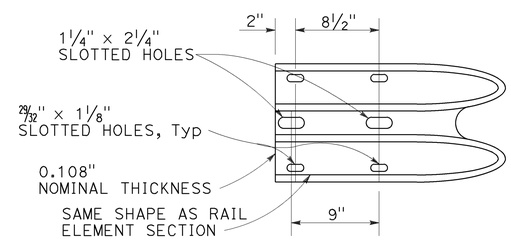

ELEVATION

END CAP
(TYPE A)

STATE OF CALIFORNIA
DEPARTMENT OF TRANSPORTATION

MIDWEST GUARDRAIL SYSTEM STANDARD HARDWARE

NO SCALE

RSP A77M1 DATED JULY 19, 2013 SUPPLEMENTS THE STANDARD PLANS BOOK DATED 2010.

REVISED STANDARD PLAN RSP A77M1

2010 REVISED STANDARD PLAN RSP A77M1

7-3-13

Dist	COUNTY	ROUTE	POST MILES TOTAL PROJECT	SHEET No.	TOTAL SHEETS
10	Mer	99	15.1/16.0	48	79

Randell D. Hiatt
REGISTERED CIVIL ENGINEER

July 19, 2013
PLANS APPROVAL DATE

REGISTERED PROFESSIONAL ENGINEER
Randell D. Hiatt
No. C50200
Exp. 6-30-15
CIVIL
STATE OF CALIFORNIA

THE STATE OF CALIFORNIA OR ITS OFFICERS OR AGENTS SHALL NOT BE RESPONSIBLE FOR THE ACCURACY OR COMPLETENESS OF SCANNED COPIES OF THIS PLAN SHEET.

TO ACCOMPANY PLANS DATED 12-28-15

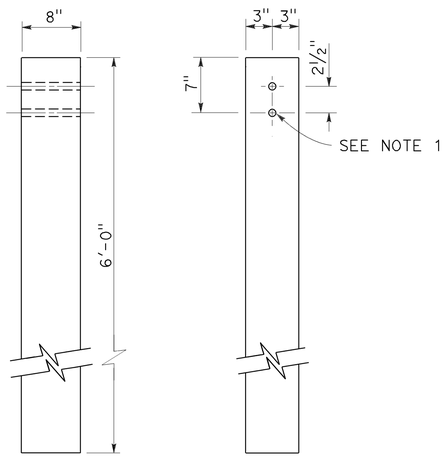

SIDE FRONT

6" x 8" WOOD POST
See Note 3

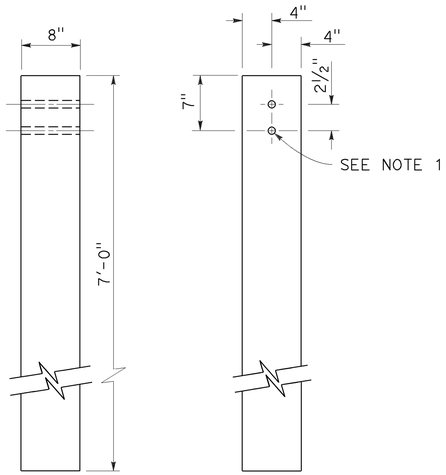

SIDE FRONT

8" x 8" WOOD POST
See Note 4

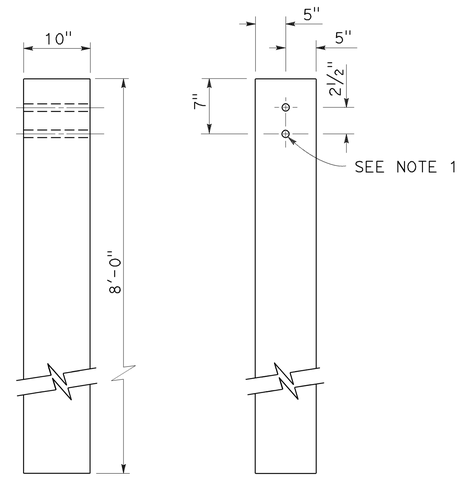

SIDE FRONT

10" x 10" WOOD POST
See Note 5

NOTES:

1. All holes in wood posts and blocks shall be 3/4" Dia ± 1/16".
2. Dimensions shown for wood post are nominal.
3. This post and block combination used for standard line post sections of MGS.
4. This post and 8" x 12" block combination used for line post sections of MGS on narrow roadways.
5. This post and 8" x 12" block combination is typically used where strengthened line post sections of MGS are warranted to shield fixed objects.
6. See Revised Standard Plan RSP A77L3 for use of 6" x 8" and 8" x 8" wood blocks.

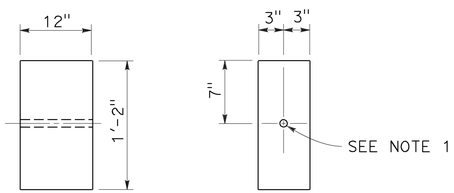

SIDE FRONT

6" x 12" WOOD BLOCK
See Note 3

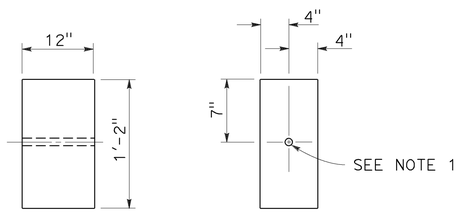

SIDE FRONT

8" x 12" WOOD BLOCK

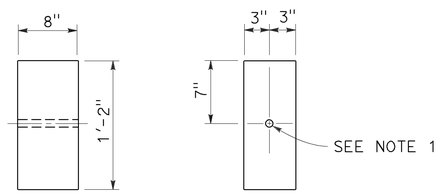

SIDE FRONT

6" x 8" WOOD BLOCK
Only for use with metal beam guard rail see Note 6

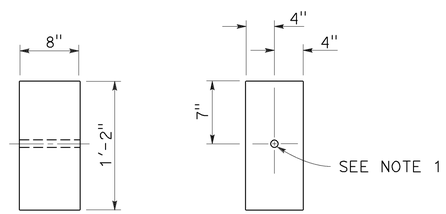

SIDE FRONT

8" x 8" WOOD BLOCK
Only for use with metal beam guard rail see Note 6

STATE OF CALIFORNIA
DEPARTMENT OF TRANSPORTATION

MIDWEST GUARDRAIL SYSTEM WOOD POST AND WOOD BLOCK DETAILS

NO SCALE

RSP A77N1 DATED JULY 19, 2013 SUPPLEMENTS THE STANDARD PLANS BOOK DATED 2010.

REVISED STANDARD PLAN RSP A77N1

2010 REVISED STANDARD PLAN RSP A77N1

7-3-13

Dist	COUNTY	ROUTE	POST MILES TOTAL PROJECT	SHEET No.	TOTAL SHEETS
10	Mer	99	15.1/16.0	49	79

Randell D. Hiatt
REGISTERED CIVIL ENGINEER

November 15, 2013
PLANS APPROVAL DATE

REGISTERED PROFESSIONAL ENGINEER
Randell D. Hiatt
No. C50200
Exp. 6-30-15
CIVIL
STATE OF CALIFORNIA

THE STATE OF CALIFORNIA OR ITS OFFICERS OR AGENTS SHALL NOT BE RESPONSIBLE FOR THE ACCURACY OR COMPLETENESS OF SCANNED COPIES OF THIS PLAN SHEET.

TO ACCOMPANY PLANS DATED 12-28-15

2010 REVISED STANDARD PLAN RSP A77N3

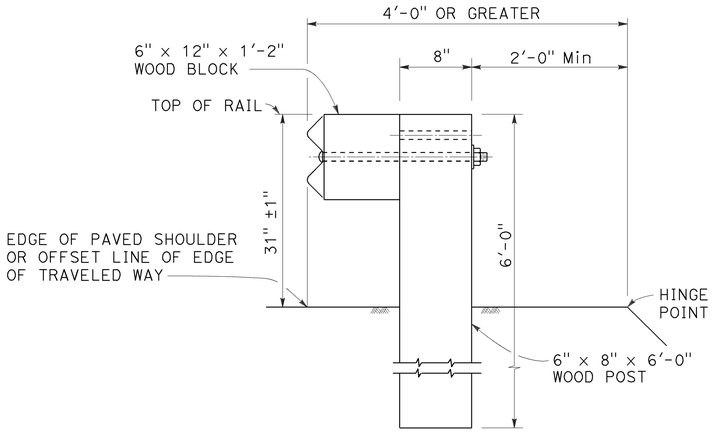

DETAIL A

TYPICAL ROADWAY INSTALLATION

See Note 1

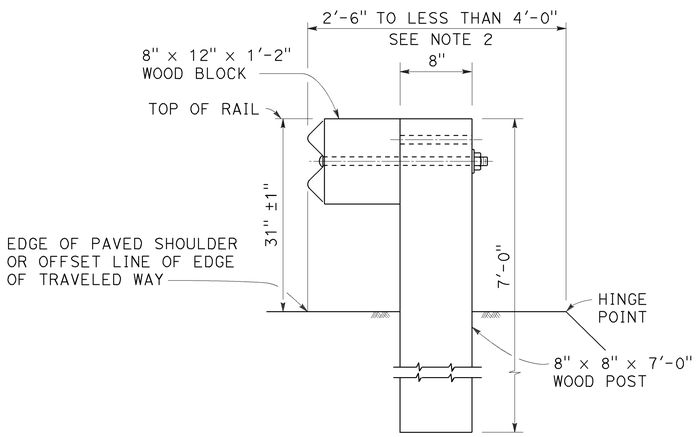

DETAIL B

NARROW ROADWAY INSTALLATION

See Note 1

POST EMBEDMENT

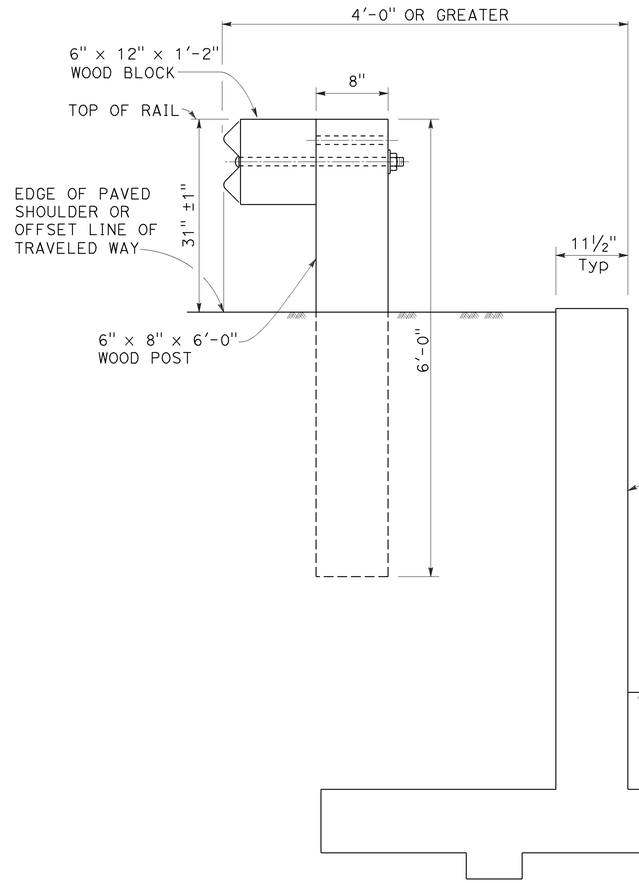

DETAIL C

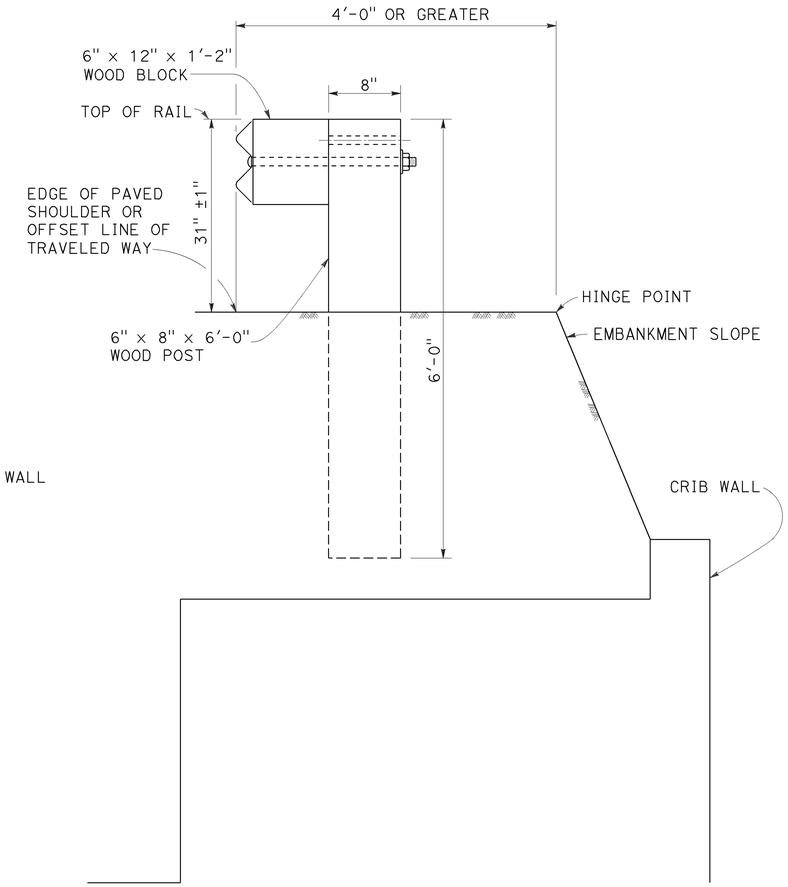

DETAIL D

INSTALLATION AT EARTH RETAINING WALLS

NOTES:

1. These installation details also applicable to steel line post installations. For Detail A, C, and D, where steel line post installations are constructed, W6 x 8.5 or W6 x 9 steel post, 6'-0" in length, with 6" x 12" x 1'-2" notched wood blocks or notched recycled plastic blocks are to be used in place of the size of wood post and wood block shown. For Detail B, where steel line post installations are constructed, W6 x 15 steel post, 8'-0" in length, with 8" x 12" x 1'-2" notched wood blocks or notched recycled plastic blocks are to be used in place of the size of wood post and wood block shown. For additional installation details, see Revised Standard Plan RSP A77L1 and RSP A77L2.
2. Where the distance between the face of the rail and the hinge point is less than 2'-6", see the Project Plans for special details.
3. For dike positioning with MGS installations, see Revised Standard Plan RSP A77N4.

STATE OF CALIFORNIA
DEPARTMENT OF TRANSPORTATION

MIDWEST GUARDRAIL SYSTEM TYPICAL LINE POST EMBEDMENT AND HINGE POINT OFFSET DETAILS

NO SCALE

RSP A77N3 DATED NOVEMBER 15, 2013 SUPERSEDES RSP A77N3
DATED JULY 19, 2013 THAT SUPPLEMENTS THE STANDARD PLANS BOOK DATED 2010.

REVISED STANDARD PLAN RSP A77N3

10-29-13

Dist	COUNTY	ROUTE	POST MILES TOTAL PROJECT	SHEET No.	TOTAL SHEETS
10	Mer	99	15.1/16.0	50	79

Randell D. Hiatt
REGISTERED CIVIL ENGINEER

July 19, 2013
PLANS APPROVAL DATE

REGISTERED PROFESSIONAL ENGINEER
Randell D. Hiatt
No. C50200
Exp. 6-30-15
CIVIL
STATE OF CALIFORNIA

THE STATE OF CALIFORNIA OR ITS OFFICERS OR AGENTS SHALL NOT BE RESPONSIBLE FOR THE ACCURACY OR COMPLETENESS OF SCANNED COPIES OF THIS PLAN SHEET.

TO ACCOMPANY PLANS DATED 12-28-15

NOTES:

1. When necessary to place dike more than 7" in front of face of MGS, only Type C dike may be used. For dike details, see Revised Standard Plan RSP A87B.
2. For standard railing post embedment, see Revised Standard Plan RSP A77N3.
3. MGS delineation to be used where shown on the Project Plans.
4. When dike or curb is placed under MGS, the maximum height of the dike or curb shall be 6". Mountable dike should not be used. For dike and curb details, see Revised Standard Plans RSP A87A and RSP A87B.
5. For details of typical distance between the face of rail and hinge point, see Revised Standard Plan RSP A77N3.
6. For steel line posts, use 1/4 - 20 self-tapping screws in 0.22" diameter holes or 1/4" bolts in 9/32" diameter holes.

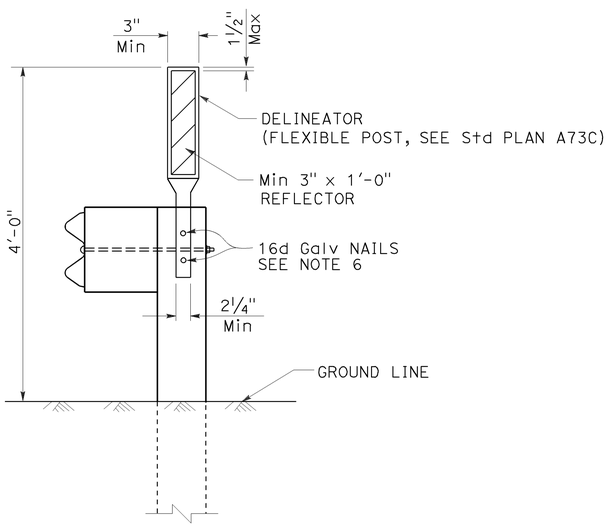

MGS DELINEATION

See Note 3

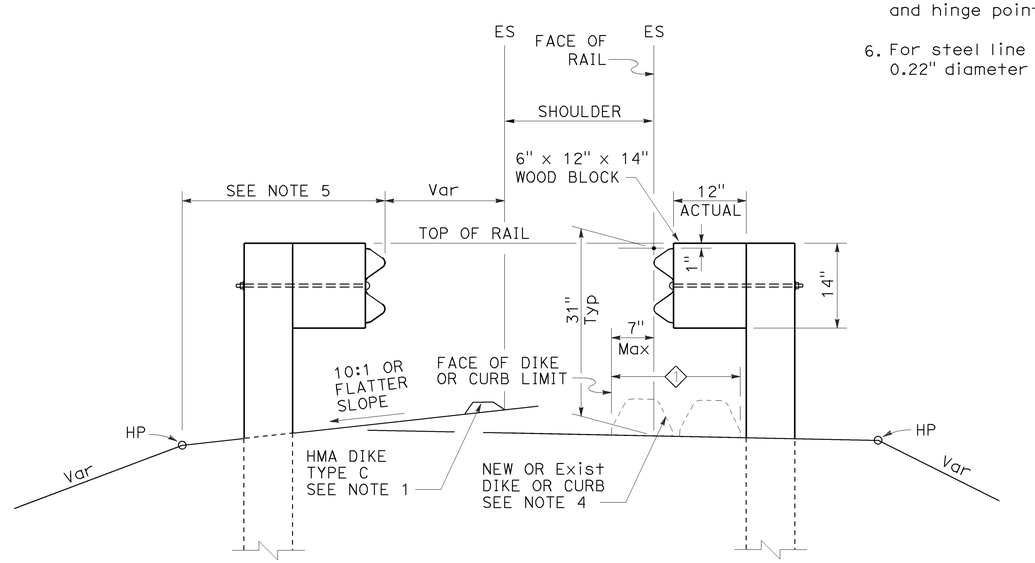

DIKE POSITIONING

See Note 1

1 PERMISSIBLE DIKE OR CURB PLACEMENT AREA

STATE OF CALIFORNIA
DEPARTMENT OF TRANSPORTATION

MIDWEST GUARDRAIL SYSTEM TYPICAL RAILING DELINEATION AND DIKE POSITIONING DETAILS

NO SCALE

RSP A77N4 DATED JULY 19, 2013 SUPPLEMENTS THE STANDARD PLANS BOOK DATED 2010.

REVISED STANDARD PLAN RSP A77N4

2010 REVISED STANDARD PLAN RSP A77N4

7-10-13

Dist	COUNTY	ROUTE	POST MILES TOTAL PROJECT	SHEET No.	TOTAL SHEETS
10	Mer	99	15.1/16.0	51	79

Randell D. Hiatt
REGISTERED CIVIL ENGINEER

July 19, 2013
PLANS APPROVAL DATE

REGISTERED PROFESSIONAL ENGINEER
Randell D. Hiatt
No. C50200
Exp. 6-30-15
CIVIL
STATE OF CALIFORNIA

THE STATE OF CALIFORNIA OR ITS OFFICERS OR AGENTS SHALL NOT BE RESPONSIBLE FOR THE ACCURACY OR COMPLETENESS OF SCANNED COPIES OF THIS PLAN SHEET.

TO ACCOMPANY PLANS DATED 12-28-15

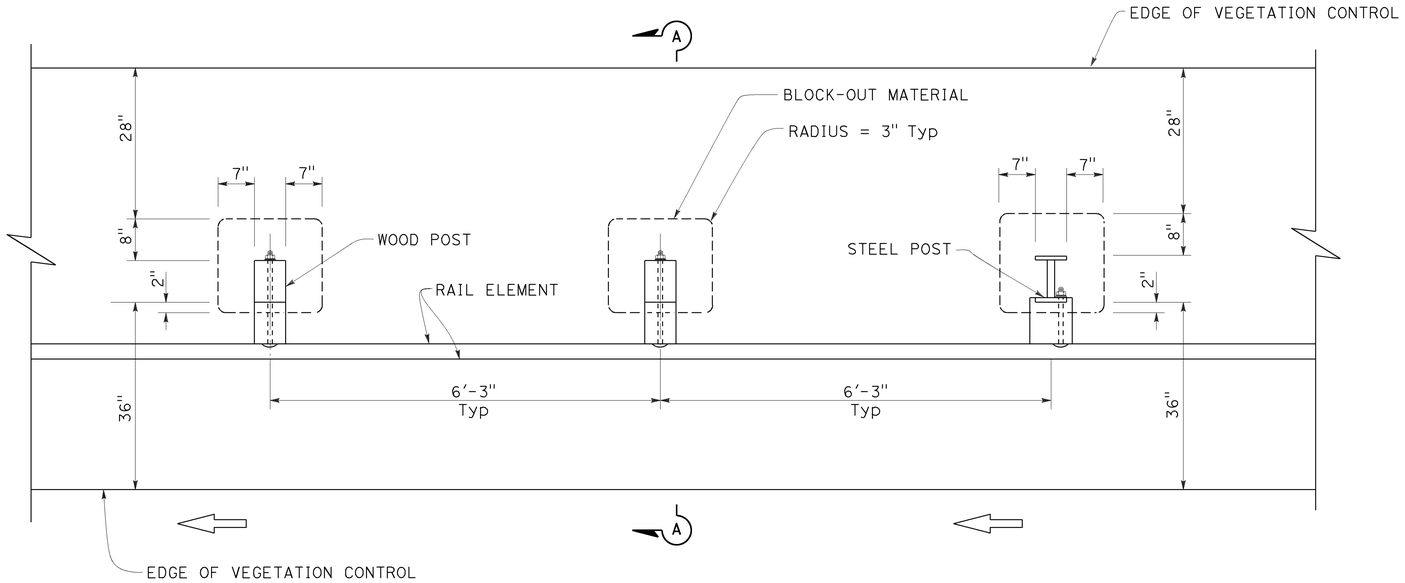

PLAN

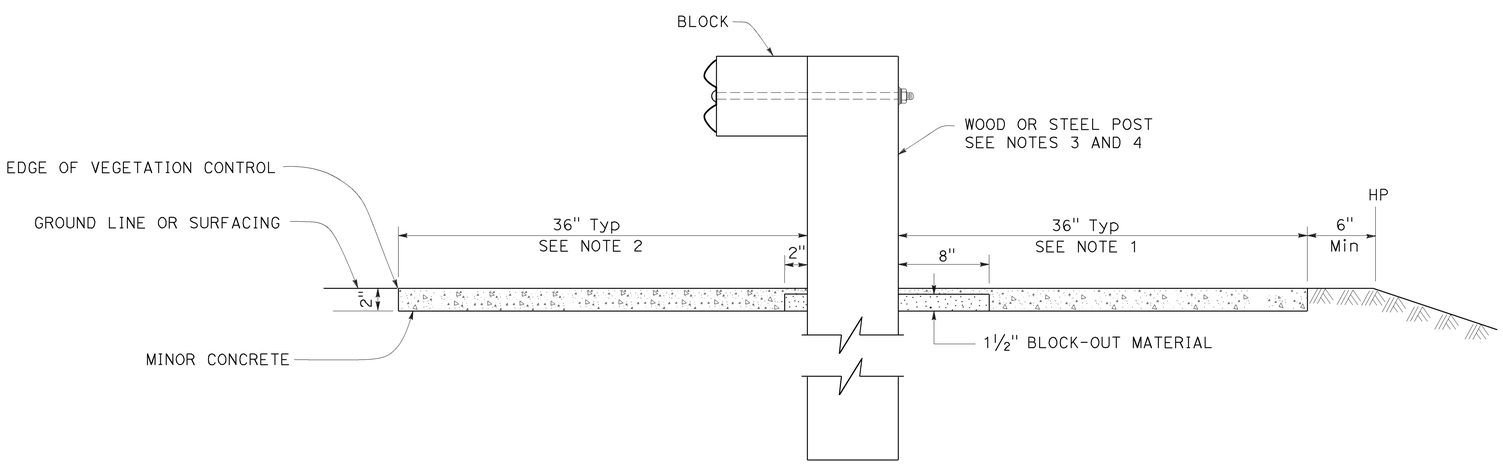

SECTION A-A

NOTES:

1. Where the distance between back of post and hinge point is less than 42", construct vegetation control to 6" from hinge point while maintaining the 8" block-out at back of post. If the 8" block-out at back of post can not be maintained, construct vegetation control flush with the back edge of post.
2. Where dike is constructed under railing, construct vegetation control to back edge of dike. Where paved shoulder is constructed within 36" in front of the post, construct vegetation control to the edge of paved shoulder.
3. For wood post sizes, see Revised Standard Plan RSP A77N1.
4. For steel post sizes, see Revised Standard Plan RSP A77N2.
5. For details not shown, see Revised Standard Plans RSP A77L1 and RSP A77L2.

STATE OF CALIFORNIA
DEPARTMENT OF TRANSPORTATION

MIDWEST GUARDRAIL SYSTEM TYPICAL VEGETATION CONTROL STANDARD RAILING SECTION

NO SCALE

RSP A77N5 DATED JULY 19, 2013 SUPPLEMENTS THE STANDARD PLANS BOOK DATED 2010.

REVISED STANDARD PLAN RSP A77N5

2010 REVISED STANDARD PLAN RSP A77N5

7-3-13

Dist	COUNTY	ROUTE	POST MILES TOTAL PROJECT	SHEET No.	TOTAL SHEETS
10	Mer	99	15.1/16.0	52	79

Randell D. Hiatt
REGISTERED CIVIL ENGINEER

July 19, 2013
PLANS APPROVAL DATE

REGISTERED PROFESSIONAL ENGINEER
Randell D. Hiatt
No. C50200
Exp. 6-30-15
CIVIL
STATE OF CALIFORNIA

THE STATE OF CALIFORNIA OR ITS OFFICERS OR AGENTS SHALL NOT BE RESPONSIBLE FOR THE ACCURACY OR COMPLETENESS OF SCANNED COPIES OF THIS PLAN SHEET.

TO ACCOMPANY PLANS DATED 12-28-15

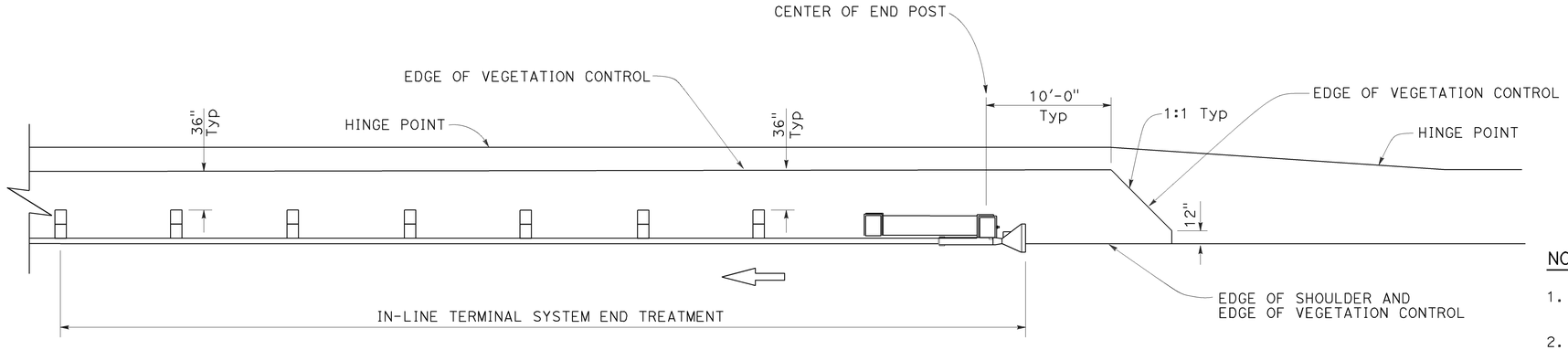

PLAN

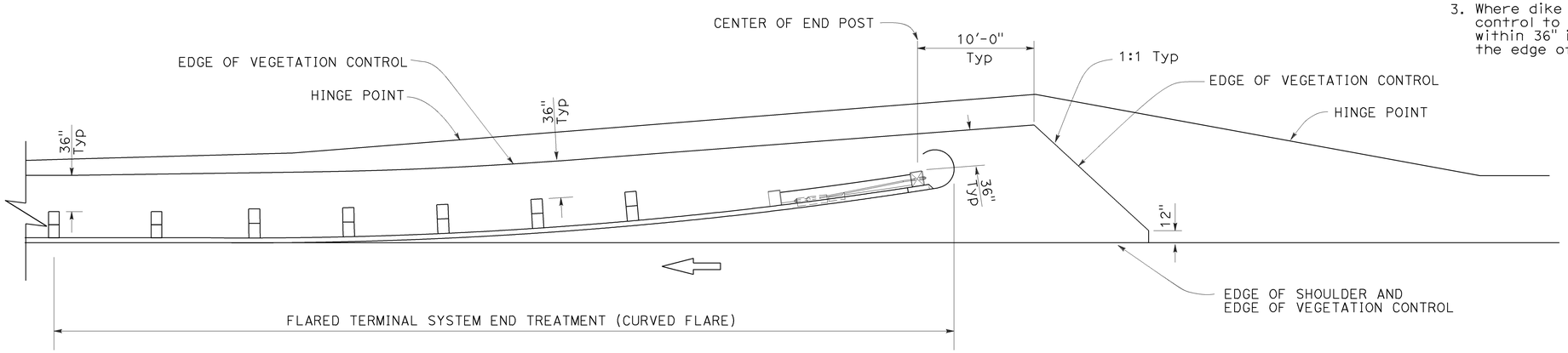

PLAN

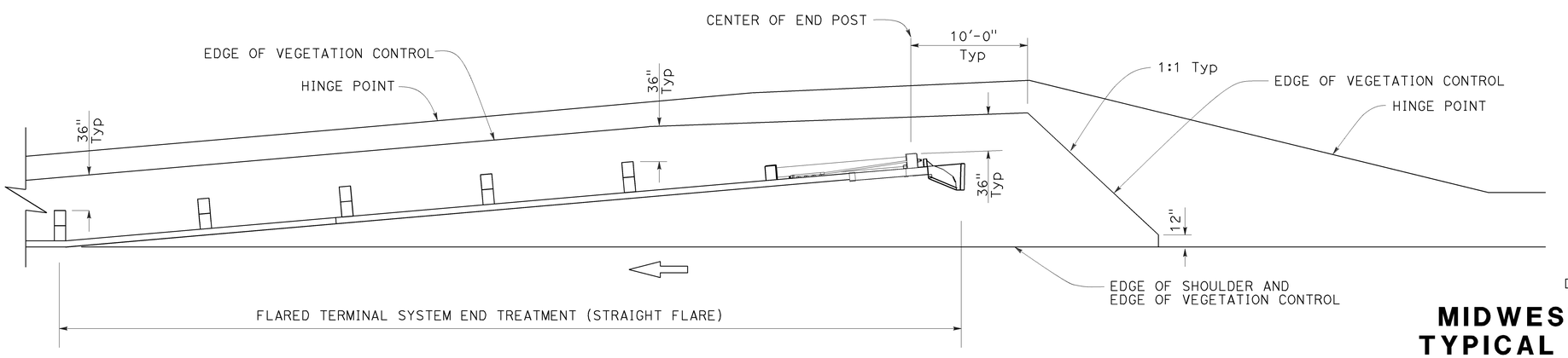

PLAN

NOTES:

1. See Revised Standard Plan RSP A77N5 for additional vegetation control details.
2. Where the distance between back of post and hinge point is less than 42", construct vegetation control to 6" from hinge point while maintaining the 8" block-out at back of post. If the 8" block-out at back of post can not be maintained, construct vegetation control flush with the back edge of post.
3. Where dike is constructed under railing, construct vegetation control to back edge of dike. Where paved shoulder is constructed within 36" in front of the post, construct vegetation control to the edge of paved shoulder.

STATE OF CALIFORNIA
DEPARTMENT OF TRANSPORTATION

MIDWEST GUARDRAIL SYSTEM TYPICAL VEGETATION CONTROL FOR TERMINAL SYSTEM END TREATMENTS

NO SCALE

RSP A77N6 DATED JULY 19, 2013 SUPPLEMENTS THE STANDARD PLANS BOOK DATED 2010.

REVISED STANDARD PLAN RSP A77N6

2010 REVISED STANDARD PLAN RSP A77N6

6-12-13

Dist	COUNTY	ROUTE	POST MILES TOTAL PROJECT	SHEET No.	TOTAL SHEETS
10	Mer	99	15.1/16.0	53	79

Randell D. Hiatt
REGISTERED CIVIL ENGINEER

November 15, 2013
PLANS APPROVAL DATE

REGISTERED PROFESSIONAL ENGINEER
Randell D. Hiatt
No. C50200
Exp. 6-30-15
CIVIL
STATE OF CALIFORNIA

THE STATE OF CALIFORNIA OR ITS OFFICERS OR AGENTS SHALL NOT BE RESPONSIBLE FOR THE ACCURACY OR COMPLETENESS OF SCANNED COPIES OF THIS PLAN SHEET.

TO ACCOMPANY PLANS DATED 12-28-15

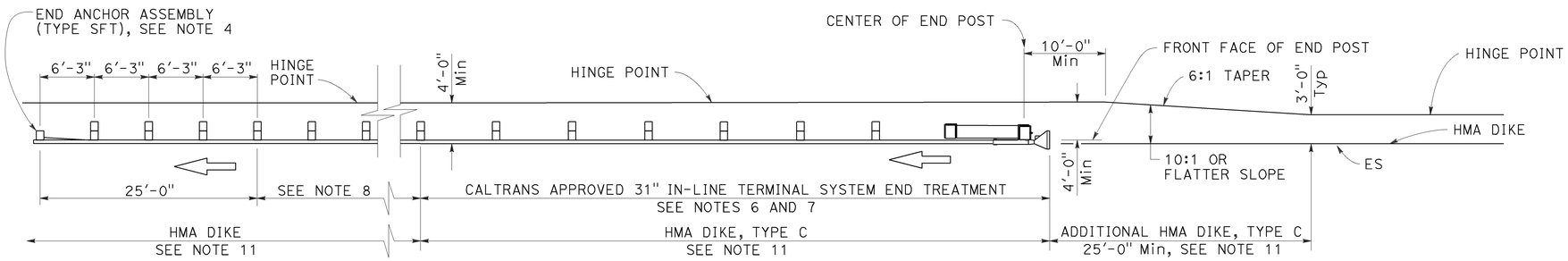

TYPE 11A LAYOUT

(Embankment MGS installation with 31" in-line end treatment at traffic approach end of railing) see Note 5

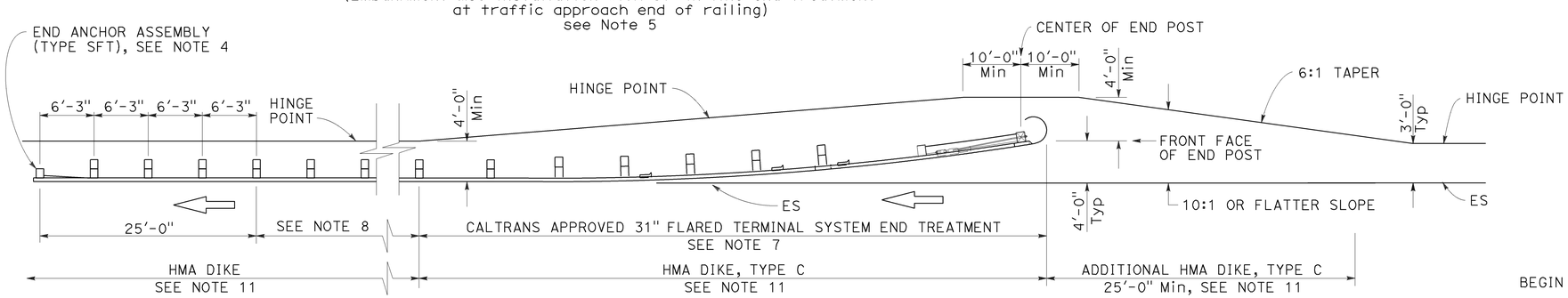

TYPE 11B LAYOUT

(Embankment MGS installation with 31" flared end treatment at traffic approach end of railing) see Note 5

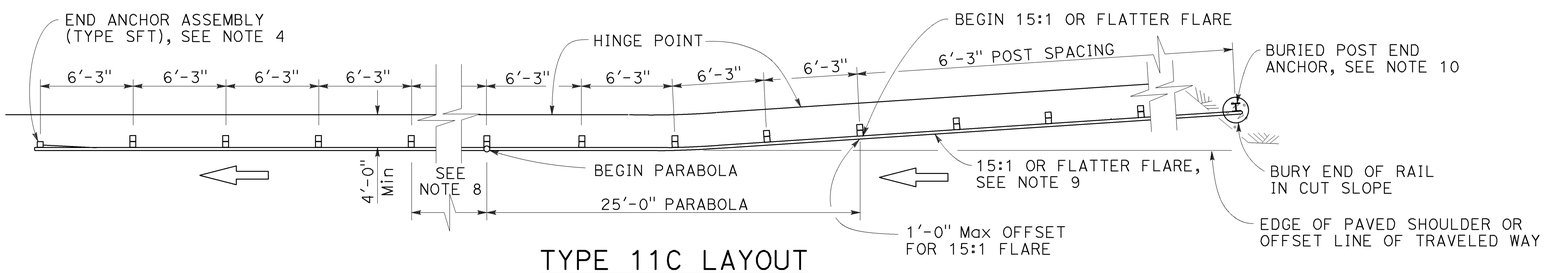

TYPE 11C LAYOUT

(Embankment MGS installation with buried end anchor treatment at traffic approach end of railing) see Notes 5 and 11

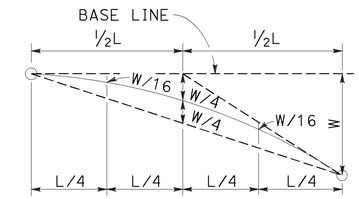

TYPICAL PARABOLIC LAYOUT

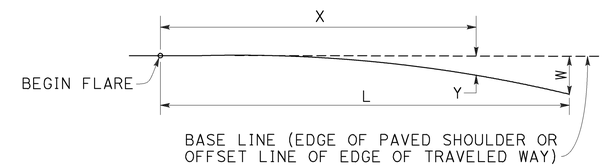

$$Y = \frac{WX^2}{L^2}$$

Y = OFFSET FROM BASE LINE
W = MAXIMUM OFFSET
X = DISTANCE ALONG BASE LINE
L = LENGTH OF FLARE

PARABOLIC FLARE OFFSETS

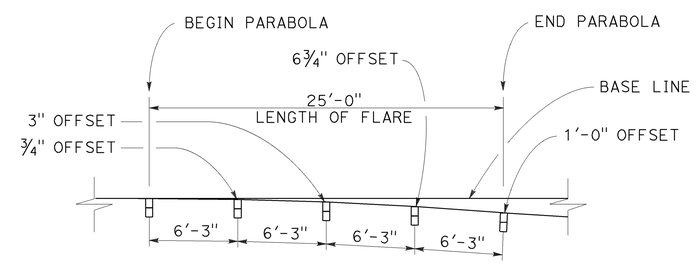

TYPICAL FLARE OFFSETS FOR 1 FOOT Max END OFFSET

NOTES:

1. Line post, blocks and hardware to be used are shown on Revised Standard Plans RSP A77L1, RSP A77L2, RSP A77M1, RSP A77N1 and RSP A77N2.
2. MGS post spacing to be 6'-3" center to center, except as otherwise noted.
3. Except as noted, line posts are 6" x 8" x 6'-0" wood with 6" x 12" x 1'-2" wood blocks. W6 x 8.5 or W6 x 9 steel posts, 6'-0" in length, with 6" x 12" x 1'-2" notched wood blocks or recycled plastic blocks may be used for 6" x 8" x 6'-0" wood post with 6" x 12" x 1'-2" wood blocks where applicable and when specified.
4. For End Anchor Assembly (Type SFT) details, see Revised Standard Plan RSP A77S1.
5. Layout Types 11A, 11B or 11C are typically used where MGS is recommended to shield embankment slopes and a crashworthy end treatment is required for only one direction of traffic.
6. 31" in-line terminal system end treatments are used where site conditions will not accommodate a flared end treatment.
7. The type of 31" terminal system end treatment to be used will be shown on the Project Plans.
8. Dependent on site conditions (embankment height and side slope), construction of additional MGS (length equal to multiples of 12'-6" with 6'-3" post spacing) may be advisable.
9. The 15:1 or flatter flare used with buried end anchors is based on the edge of the paved shoulder or offset line of edge of the traveled way. The length of MGS within the 15:1 or flatter flare is based on site conditions and should be a length equal to multiples of 12'-6".
10. For details of the buried post end anchor used with Type 11C Layout, see Revised Standard Plan RSP A77T2.
11. Where placement of dike is required with MGS installations, see Revised Standard Plan RSP A77N4 for dike positioning details.

STATE OF CALIFORNIA
DEPARTMENT OF TRANSPORTATION

MIDWEST GUARDRAIL SYSTEM TYPICAL LAYOUTS FOR EMBANKMENTS

NO SCALE

RSP A77P1 DATED NOVEMBER 15, 2013 SUPERSEDES RSP A77P1 DATED JULY 19, 2013 THAT SUPPLEMENTS THE STANDARD PLANS BOOK DATED 2010.

REVISED STANDARD PLAN RSP A77P1

2010 REVISED STANDARD PLAN RSP A77P1

10-4-13

Dist	COUNTY	ROUTE	POST MILES TOTAL PROJECT	SHEET No.	TOTAL SHEETS
10	Mer	99	15.1/16.0	54	79

Randell D. Hiatt
REGISTERED CIVIL ENGINEER

July 19, 2013
PLANS APPROVAL DATE

REGISTERED PROFESSIONAL ENGINEER
Randell D. Hiatt
No. C50200
Exp. 6-30-15
CIVIL
STATE OF CALIFORNIA

THE STATE OF CALIFORNIA OR ITS OFFICERS OR AGENTS SHALL NOT BE RESPONSIBLE FOR THE ACCURACY OR COMPLETENESS OF SCANNED COPIES OF THIS PLAN SHEET.

TO ACCOMPANY PLANS DATED 12-28-15

NOTES:

1. Refer to Revised Standard Plans RSP A77L1 and RSP A77L2 for component details for MGS not shown on this plan.
2. All posts for any standard barrier run shall be of the same type: Wood or Steel.
3. Install posts in soil.

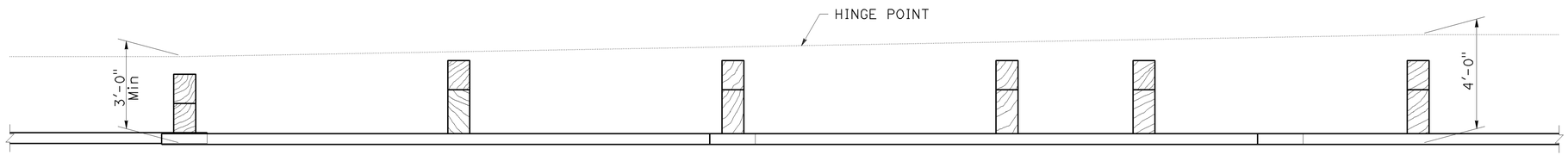

PLAN

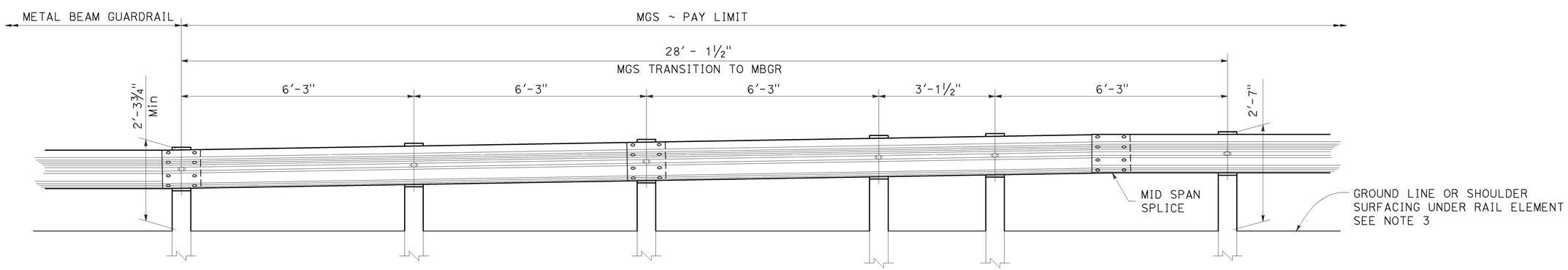

ELEVATION

STATE OF CALIFORNIA
DEPARTMENT OF TRANSPORTATION

MIDWEST GUARDRAIL SYSTEM TRANSITION TO METAL BEAM GUARDRAIL

NO SCALE

RSP A77U5 DATED JULY 19, 2013 SUPPLEMENTS THE STANDARD PLANS BOOK DATED 2010.

REVISED STANDARD PLAN RSP A77U5

2010 REVISED STANDARD PLAN RSP A77U5

Dist	COUNTY	ROUTE	POST MILES TOTAL PROJECT	SHEET No.	TOTAL SHEETS
10	Mer	99	15.1/16.0	55	79

REGISTERED CIVIL ENGINEER

July 18, 2014
PLANS APPROVAL DATE

REGISTERED PROFESSIONAL ENGINEER Glenn DeCou No. C34547 Exp. 9-30-15 CIVIL STATE OF CALIFORNIA

THE STATE OF CALIFORNIA OR ITS OFFICERS OR AGENTS SHALL NOT BE RESPONSIBLE FOR THE ACCURACY OR COMPLETENESS OF SCANNED COPIES OF THIS PLAN SHEET.

TO ACCOMPANY PLANS DATED 12-28-15

2010 REVISED STANDARD PLAN RSP A85

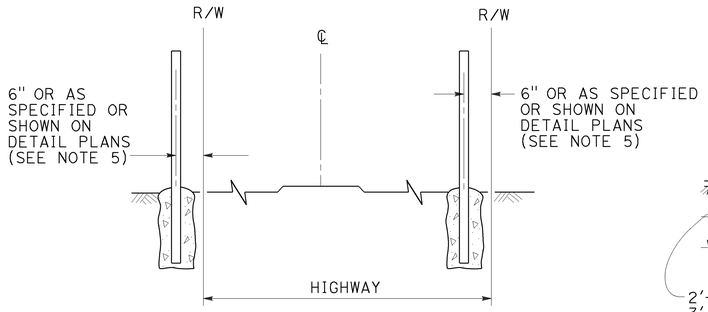

FENCE LOCATION

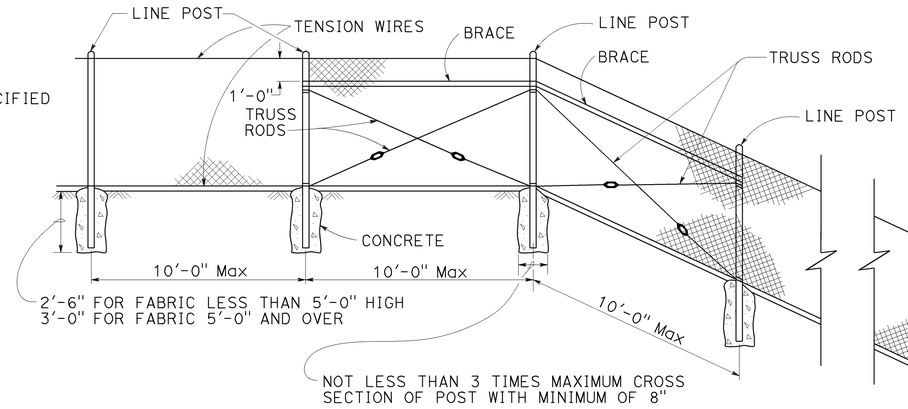

CHAIN LINK FENCE ON SHARP BREAK IN GRADE

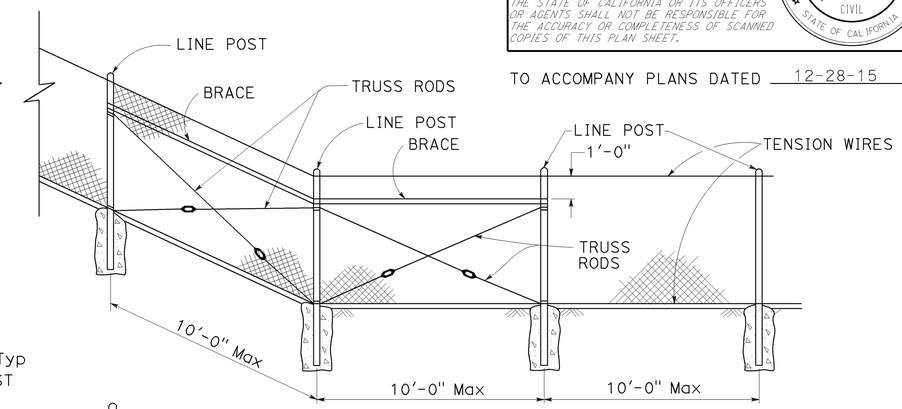

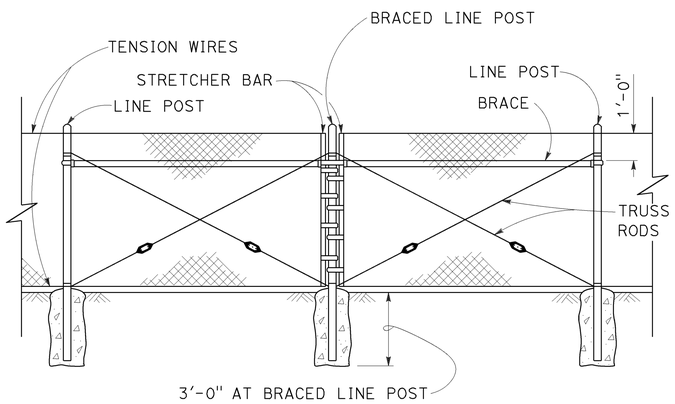

BRACED LINE POST INSTALLATION

Braced line post at intervals not exceeding 1000'

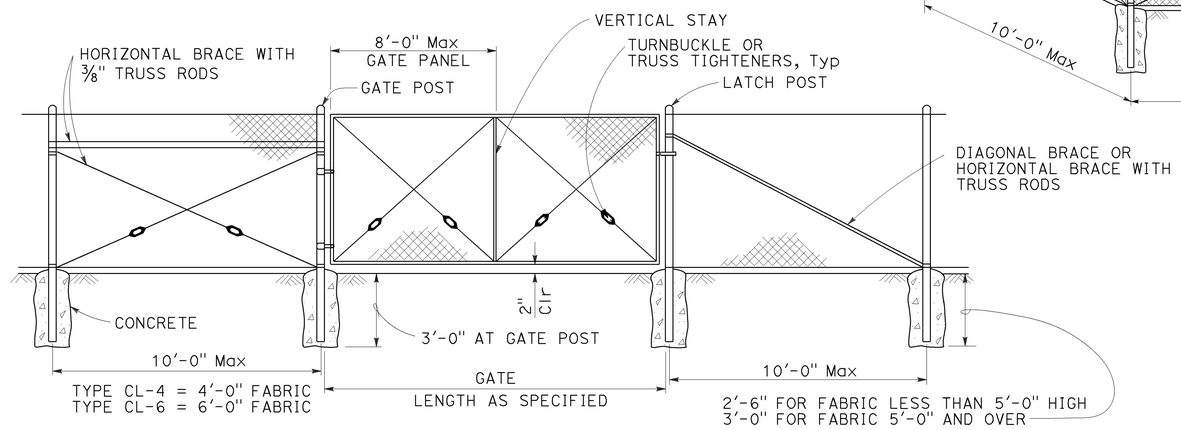

CHAIN LINK GATE INSTALLATION

GATE POST			
FENCE HEIGHT	GATE WIDTHS	ROUND OD PIPE	WEIGHT (lb/ft)
6'-0" AND LESS	UP THRU 6'-0"	2.875"	5.80
	OVER 6'-0" THRU 12'-0"	4.500"	10.80
	OVER 12'-0" THRU 18'-0"	5.563"	14.63
	OVER 18'-0" TO 24'-0" Max	6.625"	18.99
OVER 6'-0" TO 8'-0" Max	UP THRU 6'-0"	3.500"	7.58
	OVER 6'-0" THRU 12'-0"	5.563"	14.63
	OVER 12'-0" THRU 18'-0"	6.625"	18.99
	OVER 18'-0" TO 24'-0" Max	8.625"	28.58

Above post dimensions and weights are minimums. Larger sizes may be used upon approval.

NOTES:

1. The table below shows minimum sized posts and braces complying with the specifications. Larger or heavier post and brace sizes may be used upon approval.
2. Sections shown in the tables must also comply with the strength requirements and other provisions of the Specifications.
3. Other sections which comply with the strength requirements and other provisions of the Specifications may be used upon approval.
4. Options exercised shall be uniform on any one project.
5. Offset to be 2'-0" at monument locations, measured at right angles to R/W lines. Taper to achieve offset to be at least 20'-0" long.
6. See Revised Standard Plan RSP A85B for Brace, Stretcher Bar, and Truss Tightener Details.

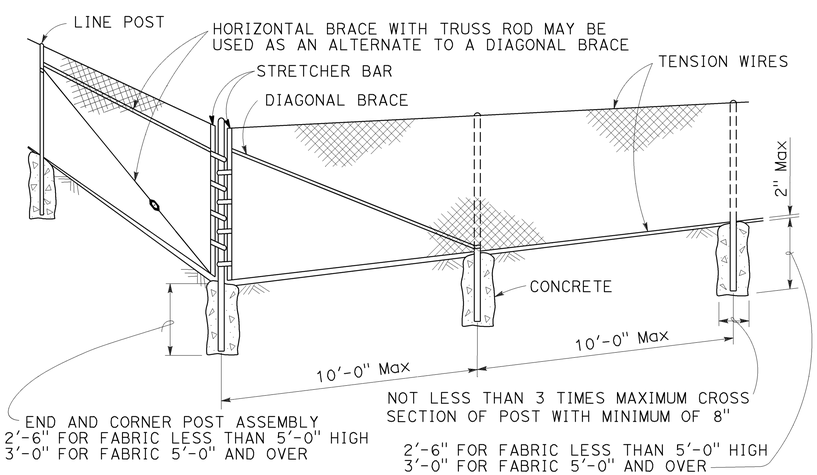

CORNER POST

TYPICAL MEMBER DIMENSIONS (See Notes)										
FENCE HEIGHT	LINE POSTS				END, LATCH AND CORNER POSTS		BRACES			
	ROUND OD PIPE	WEIGHT (lb/ft)	ROLL FORMED		ROUND OD PIPE	WEIGHT (lb/ft)	ROUND OD PIPE	WEIGHT (lb/ft)	ROLL FORMED	
			SECTION	WEIGHT (lb/ft)					SECTION	WEIGHT (lb/ft)
6'-0" AND LESS	1.900"	2.72	1.875" x 1.625"	1.85	2.375"	3.65	1.66"	2.27	1.625" x 1.25"	1.35
OVER 6'-0" TO 8'-0" Max	2.375"	3.65	2.25" x 1.70"	2.78	2.875"	5.80	1.66"	2.27	1.625" x 1.25"	1.35

STATE OF CALIFORNIA
DEPARTMENT OF TRANSPORTATION

CHAIN LINK FENCE

NO SCALE

RSP A85 DATED JULY 18, 2014 SUPERSEDES STANDARD PLAN A85 DATED MAY 20, 2011 - PAGE 112 OF THE STANDARD PLANS BOOK DATED 2010.

REVISED STANDARD PLAN RSP A85

7-1-14

Dist	COUNTY	ROUTE	POST MILES TOTAL PROJECT	SHEET No.	TOTAL SHEETS
10	Mer	99	15.1/16.0	56	79

Glenn DeCou
REGISTERED CIVIL ENGINEER

October 19, 2012
PLANS APPROVAL DATE

REGISTERED PROFESSIONAL ENGINEER
Glenn DeCou
No. C34547
Exp. 9-30-13
CIVIL
STATE OF CALIFORNIA

THE STATE OF CALIFORNIA OR ITS OFFICERS OR AGENTS SHALL NOT BE RESPONSIBLE FOR THE ACCURACY OR COMPLETENESS OF SCANNED COPIES OF THIS PLAN SHEET.

TO ACCOMPANY PLANS DATED 12-28-15

2010 REVISED STANDARD PLAN RSP A85B

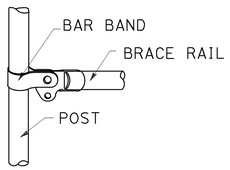

BRACE RAIL

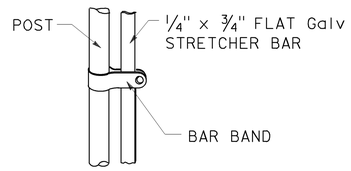

STRETCHER BAR

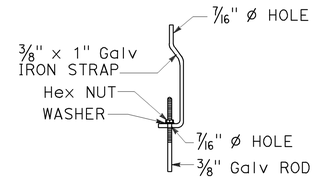

TRUSS TIGHTENER

NOTES:

1. All material for abutment connection to be galvanized.
2. The chain link fabric shall be replaced by barbed wire strands at 12" maximum centers between the double posts.
3. When the width of the culvert makes it necessary to anchor a post to the top of the culvert, a cast iron shoe or other device approved by the Engineer shall be used.
4. Fencing over stream and around headwall may also use Barbed Wire or Wire Mesh fencing with either wood post or steel post installation.
5. See Standard Plan A85 for Chain Link fence dimensions. See Standard Plan A86 for Barbed Wire and Wire Mesh fence dimensions and for wood post and steel post installation.

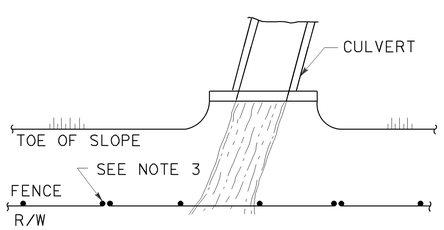

PLAN

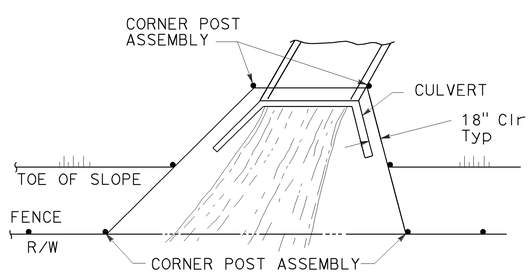

PLAN

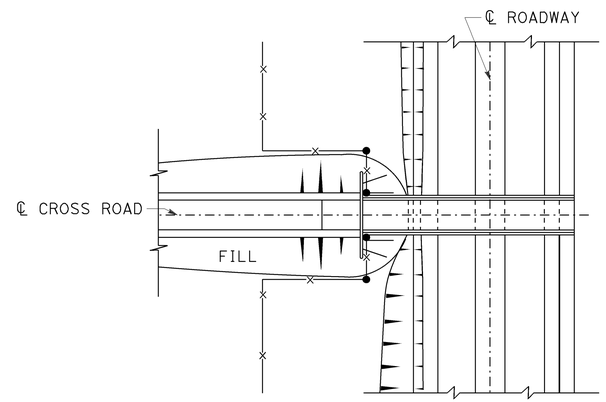

PLAN OF ROADWAY - OVERCROSSING

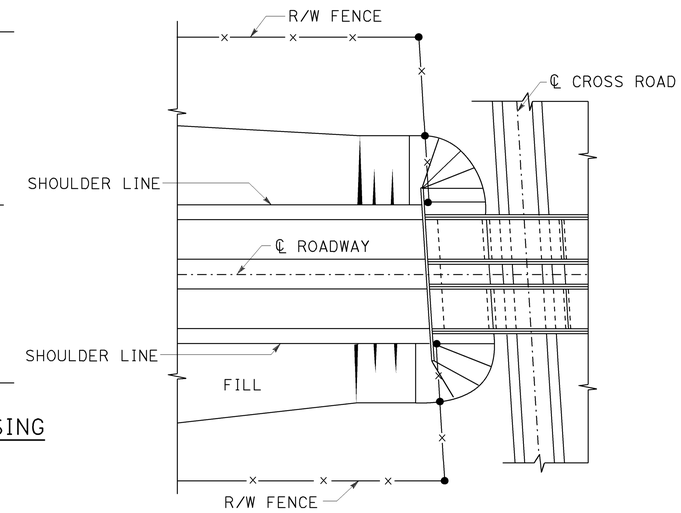

PLAN OF ROADWAY - UNDERCROSSING

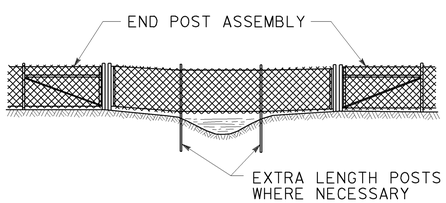

ELEVATION

INSTALLATION OVER STREAM

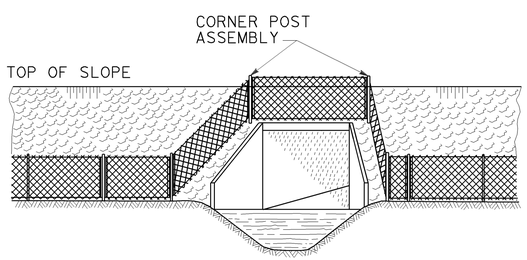

ELEVATION

INSTALLATION AROUND HEADWALL

See Note 4

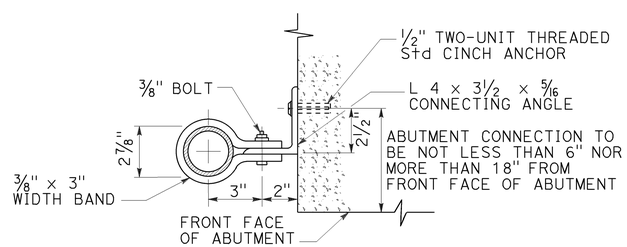

ABUTMENT CONNECTION

TYPICAL INSTALLATION AT BRIDGES

STATE OF CALIFORNIA
DEPARTMENT OF TRANSPORTATION

CHAIN LINK FENCE DETAILS

NO SCALE

RSP A85B DATED OCTOBER 19, 2012 SUPERSEDES STANDARD PLAN A85B
DATED MAY 20, 2011 - PAGE 114 OF THE STANDARD PLANS BOOK DATED 2010.

REVISED STANDARD PLAN RSP A85B

7-19-12

Dist	COUNTY	ROUTE	POST MILES TOTAL PROJECT	SHEET No.	TOTAL SHEETS
10	Mer	99	15.1/16.0	57	79

REGISTERED CIVIL ENGINEER

July 19, 2013
PLANS APPROVAL DATE

REGISTERED PROFESSIONAL ENGINEER
Michael Janzen
No. 44788
Exp. 03-31-14
CIVIL
STATE OF CALIFORNIA

THE STATE OF CALIFORNIA OR ITS OFFICERS OR AGENTS SHALL NOT BE RESPONSIBLE FOR THE ACCURACY OR COMPLETENESS OF SCANNED COPIES OF THIS PLAN SHEET.

TO ACCOMPANY PLANS DATED 12-28-15

2010 REVISED STANDARD PLAN RSP A87A

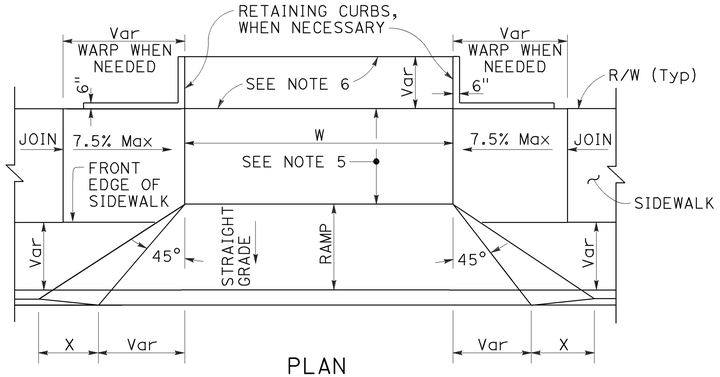

PLAN

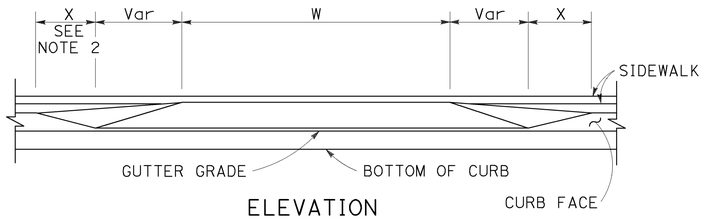

ELEVATION

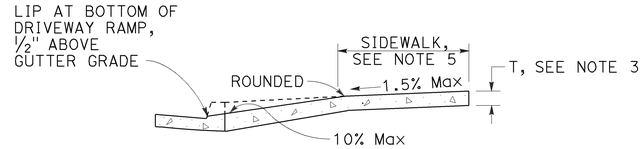

CASE A

Typical driveway, sidewalk not depressed

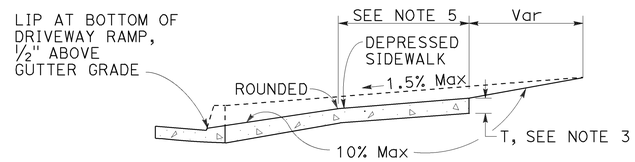

CASE B

Driveway with depressed sidewalk

SECTIONS

DRIVEWAYS

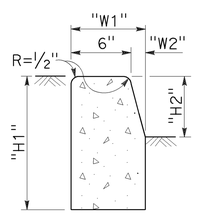

TYPE A1 CURBS

See Table A

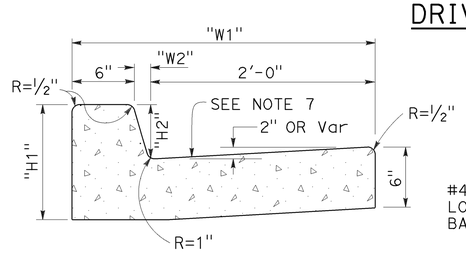

TYPE A2 CURBS

See Table A

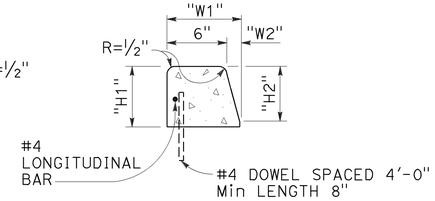

TYPE A3 CURBS

Superimposed on existing pavement
See Table A

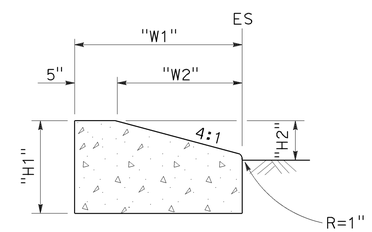

TYPE D CURBS

See Table A

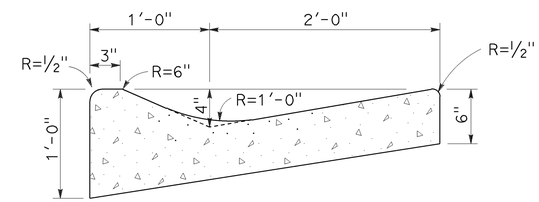

TYPE E CURB

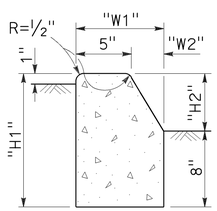

TYPE B1 CURBS

See Table A

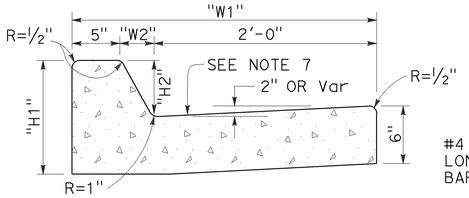

TYPE B2 CURBS

See Table A

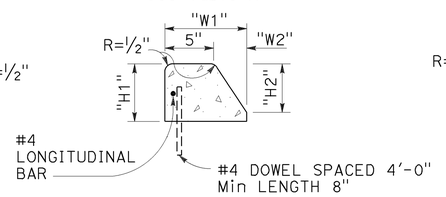

TYPE B3 CURBS

Superimposed on existing pavement
See Table A

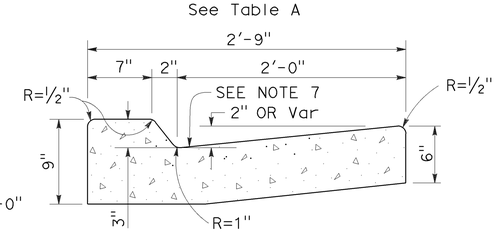

TYPE B4 CURBS

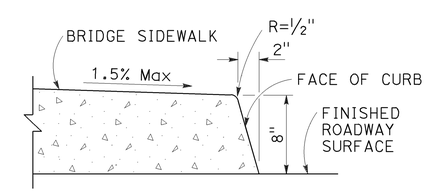

TYPE H CURB

On Bridges

CURBS

TABLE A

CURB TYPE	DIMENSIONS			
	"H1"	"H2"	"W1"	"W2"
A1-6	1'-2"	6"	7½"	1½"
A1-8	1'-4"	8"	8"	2"
A2-6	1'-0"	6"	2'-7½"	1½"
A2-8	1'-2"	8"	2'-8"	2"
A3-6	6"	5"	7¼"	1¼"
A3-8	8"	7"	7¾"	1¾"
B1-4	1'-0"	4"	7½"	2½"
B1-6	1'-2"	6"	9"	4"
B2-4	10"	4"	2'-7½"	2½"
B2-6	1'-0"	6"	2'-9"	4"
B3-4	4"	3"	7"	2"
B3-6	6"	5"	8½"	3½"
D-4	10"	4"	1'-6"	1'-1"
D-6	1'-0"	6"	2'-2"	1'-9"

CURB QUANTITIES

TYPE	CUBIC YARDS PER LINEAR FOOT
A1-6	0.02585
A1-8	0.03084
A2-6	0.05903
A2-8	0.06379
A3-6	0.01036
A3-8	0.01435
B1-4	0.02185
B1-6	0.02930
B2-4	0.05515
B2-6	0.06171
B3-4	0.00641
B3-6	0.01074
B4	0.05709
D-4	0.04083
D-6	0.06804
E	0.06661

NOTES:

1. Case A driveway section typically applies.
2. X=3'-0" except for curb heights over 10" where 4:1 slopes shall be used on curb slope.
3. Sidewalk and ramp thickness "T" at driveway shall be 4" for residental and 6" for commercial.
4. Difference in slope of the driveway ramp and the slope of a line between the gutter and a point on the roadway 5'-0" from gutter line shall not exceed 15%. Reduce driveway ramp slope, not gutter slope, where required.
5. Minimum width of clear passageway for sidewalk shall be 4'-2".
6. Retaining curbs and acquisition of construction easement may be necessary for narrow sidewalks or curb heights in excess of 6".
7. Across the pedestrian route at curb ramp locations, the gutter pan slope shall not exceed 1" of depth for each 2'-0" of width.

STATE OF CALIFORNIA
DEPARTMENT OF TRANSPORTATION

CURBS AND DRIVEWAYS

NO SCALE

RSP A87A DATED JULY 19, 2013 SUPERSEDES STANDARD PLAN A87A
DATED MAY 20, 2011 - PAGE 119 OF THE STANDARD PLANS BOOK DATED 2010.

REVISED STANDARD PLAN RSP A87A

7-8-13

Dist	COUNTY	ROUTE	POST MILES TOTAL PROJECT	SHEET No.	TOTAL SHEETS
10	Mer	99	15.1/16.0	58	79

REGISTERED CIVIL ENGINEER

July 19, 2013
PLANS APPROVAL DATE

REGISTERED PROFESSIONAL ENGINEER
Michael Janzen
No. 44788
Exp. 03-31-14
CIVIL
STATE OF CALIFORNIA

THE STATE OF CALIFORNIA OR ITS OFFICERS OR AGENTS SHALL NOT BE RESPONSIBLE FOR THE ACCURACY OR COMPLETENESS OF SCANNED COPIES OF THIS PLAN SHEET.

TO ACCOMPANY PLANS DATED 12-28-15

2010 REVISED STANDARD PLAN RSP A87B

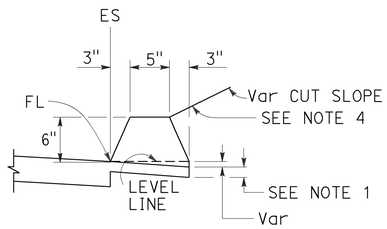

TYPE A
See Note 3

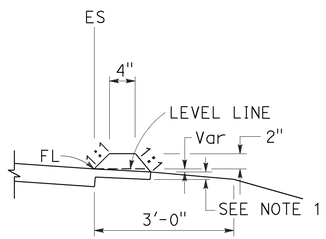

TYPE C

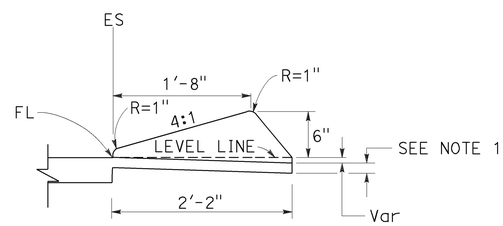

TYPE D

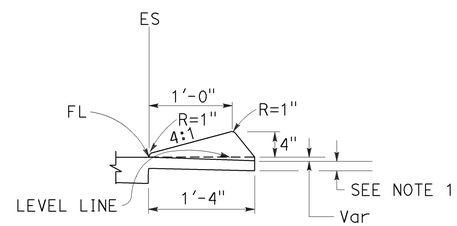

TYPE E

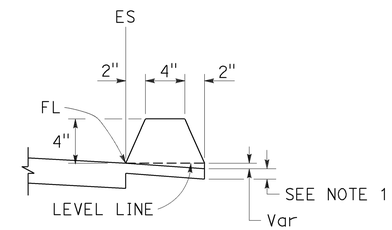

TYPE F
See Note 5

DIKES

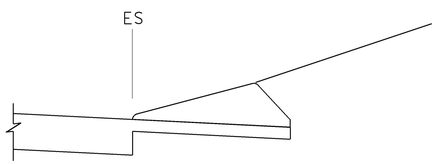

CASE C-1
Cut Slope

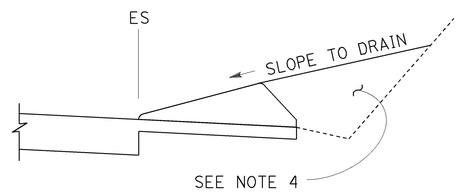

CASE C-2
Cut Slope

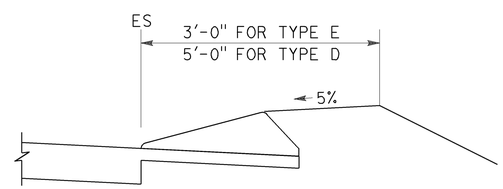

CASE F

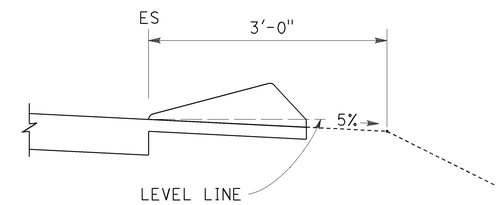

CASE R
See Note 2

TYPE D AND E BACKFILL DETAILS

NOTES:

1. For HMA shoulders only, extend top layer of HMA placed on the shoulder under dike with no joint at the ES. For projects with OGFC shoulders, do not extend OGFC under dike. See project plans for modified dike detail.
2. Case R applies to retrofit only projects where restrictive conditions do not provide enough width for Case F backfill.
3. Type A dike only to be used where restrictive slope conditions do not provide enough width to use Type D or Type E dike.
4. Fill and compact with excavated material to top of dike.
5. Use Type F dike, where dike is required with guard railing installations. See Revised Standard Plan RSP A77N4 for dike positioning details.

DIKE QUANTITIES

TYPE	CUBIC YARDS PER LINEAR FOOT
A	0.0135
C	0.0038
D	0.0293
E	0.0130
F	0.0066

Quantities based on 5% cross slope.

STATE OF CALIFORNIA
DEPARTMENT OF TRANSPORTATION

HOT MIX ASPHALT DIKES

NO SCALE

RSP A87B DATED JULY 19, 2013 SUPERSEDES STANDARD PLAN A87B
DATED MAY 20, 2011 - PAGE 120 OF THE STANDARD PLANS BOOK DATED 2010.

REVISED STANDARD PLAN RSP A87B

6-27-13

TO ACCOMPANY PLANS DATED 12-28-15

Dist	COUNTY	ROUTE	POST MILES TOTAL PROJECT	SHEET No.	TOTAL SHEETS
10	Mer	99	15.1/16.0	59	79

REGISTERED CIVIL ENGINEER

October 19, 2012
PLANS APPROVAL DATE

REGISTERED PROFESSIONAL ENGINEER Glenn DeCou No. C34547 Exp. 9-30-13 CIVIL STATE OF CALIFORNIA

THE STATE OF CALIFORNIA OR ITS OFFICERS OR AGENTS SHALL NOT BE RESPONSIBLE FOR THE ACCURACY OR COMPLETENESS OF SCANNED COPIES OF THIS PLAN SHEET.

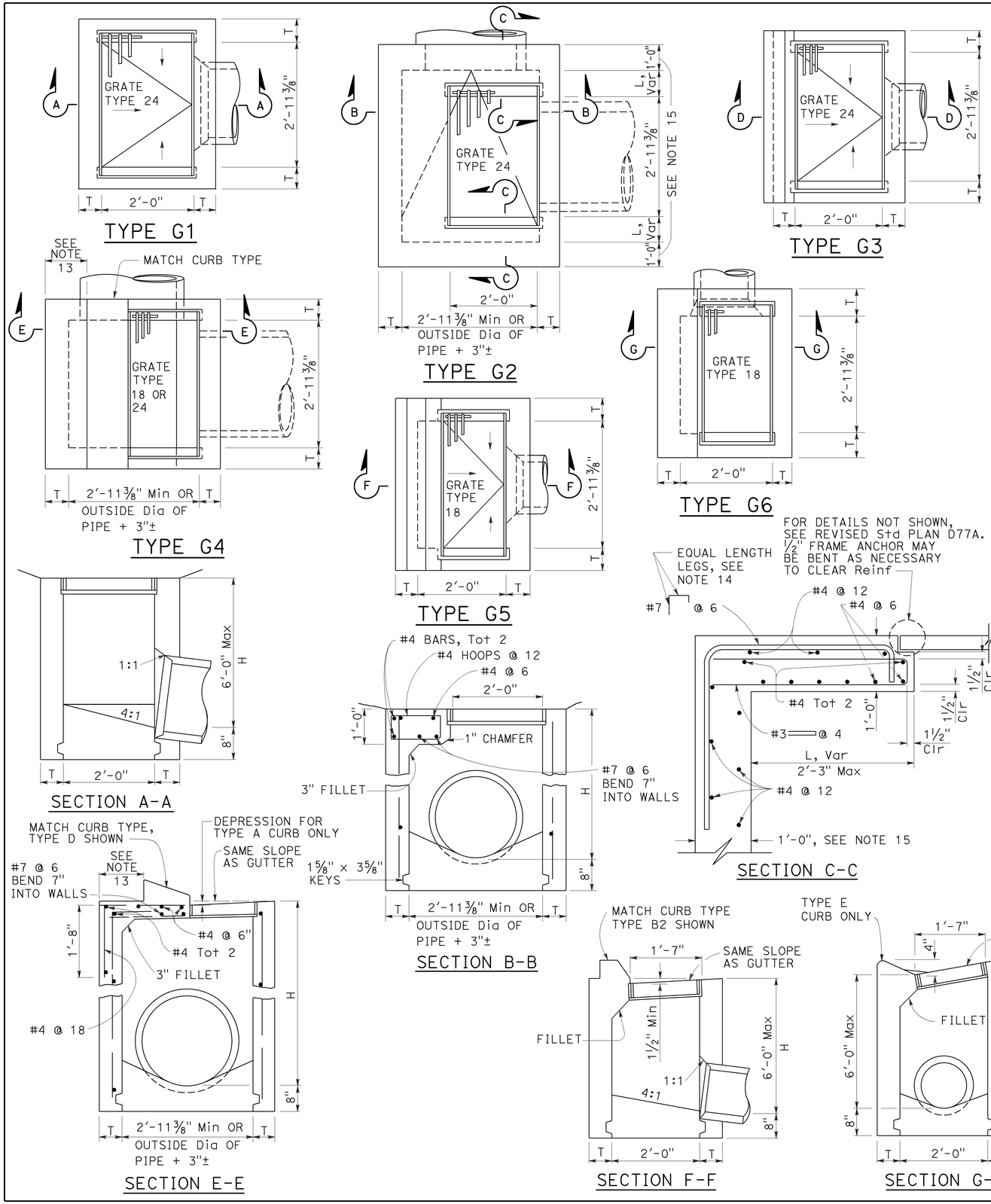

NOTES:

1. "H" is the difference in elevation between the outlet pipe flow line and the normal gutter grade line undepressed.
2. For "T" wall thickness, see Table A below.
3. Wall reinforcing not required when "H" is 8'-0" or less and the unsupported width or length is 7'-0" or less. Walls exceeding these limits shall be reinforced with #4 bars @ 1'-6" ± centers placed 1½" clear to inside of box unless otherwise shown.
4. Inlet bottom reinforcing not required. See Standard Plan D74C for alternative reinforced bottom and alternative half round bottom.
5. Steps-None required where "H" is less than 2'-6". Where "H" is 2'-6" or more, install steps with lowest rung 1'-0" above the floor and highest rung not more than 6" below top of inlet. The distance between steps shall not exceed 1'-0" and shall be uniform throughout the length of the wall. Place steps in the wall without an opening. Steps inserts may be substituted for the bar steps. Step inserts shall comply with State Industrial Safety requirements. See Standard Plan D74C for step details.
6. Details shown apply to both metal and concrete pipe.
7. Pipe(s) can be placed in any wall.
8. Curb section shall match adjacent curb.
9. Basin floors shall have wood trowel finish and a minimum slope of 12:3 from all directions toward outlet pipe.
10. Set inlet so that grate bars are parallel to direction of principal surface flow.
11. See Revised Standard Plans D77A and D77B for grate and frame details and weights of miscellaneous iron and steel.
12. See Standard Plan D78A for gutter depression details.
13. This dimenison will vary with different grates, curbs types, box width and wall thickness.
14. Bar may be rotated as necessary to clear opening. Where "L" is 6" or less, bar may be omitted.
15. Where "L" is 6" or less, wall thickness shall be as shown in Table A.
16. Cast-in-place inlets to be formed around all pipes/stubs intersecting the inlet, and concrete poured in one continuous operation. Precast inlets shall have mortared connections conforming to details for Type GCP Inlet shown on Standard Plan D75B. See Standard Specifications for mortar composition.

TABLE A

CONCRETE QUANTITIES				
TYPE	H=3'-0" TO 8'-0" (T=6")		H=8'-1" TO 20'-0" (T=8")	
	H=3'-0" (CY)	ADDITIONAL PCC PER FOOT (CY)	H=8'-1" (CY)	ADDITIONAL PCC PER FOOT (CY)
G-1	0.95	0.220	See Note A	SEE NOTE A
G-2*	1.31	0.255	3.50	0.357
G-3	1.03	0.220	See Note A	SEE NOTE A
G-4* (TYPE 24)	1.27	0.255	3.48	0.357
G-4* (TYPE 18)	1.30	0.255	3.50	0.357
G-5	1.02	0.220	SEE NOTE A	SEE NOTE A
G-6	1.04	0.220	SEE NOTE A	SEE NOTE A

TABLE BASED ON 8" FLOOR SLAB. NO DEDUCTIONS ARE TO BE MADE TO THESE QUANTITIES BECAUSE OF PIPE OPENINGS, DIFFERENT FLOOR ALTERNATIVES OR DIFFERENT CURB TYPES. * QUANTITIES FOR TYPE G-2 AND G-4 INLETS BASED ON THE MINIMUM INTERIOR DIMENSIONS.

NOTE A:

Maximum allowable height 6'-0".

STATE OF CALIFORNIA
DEPARTMENT OF TRANSPORTATION

DRAINAGE INLETS

NO SCALE

RSP D73 DATED OCTOBER 19, 2012 SUPERSEDES STANDARD PLAN D73 DATED MAY 20, 2011 - PAGE 156 OF THE STANDARD PLANS BOOK DATED 2010.

REVISED STANDARD PLAN RSP D73

2010 REVISED STANDARD PLAN RSP D73

7-19-12

Dist	COUNTY	ROUTE	POST MILES TOTAL PROJECT	SHEET No.	TOTAL SHEETS
10	Mer	99	15.1/16.0	60	79

Raymond Don Tsztoo
REGISTERED CIVIL ENGINEER

April 19, 2013
PLANS APPROVAL DATE

REGISTERED PROFESSIONAL ENGINEER Raymond Don Tsztoo No. C37332 Exp. 6-30-14 CIVIL STATE OF CALIFORNIA

THE STATE OF CALIFORNIA OR ITS OFFICERS OR AGENTS SHALL NOT BE RESPONSIBLE FOR THE ACCURACY OR COMPLETENESS OF SCANNED COPIES OF THIS PLAN SHEET.

TO ACCOMPANY PLANS DATED 12-28-15

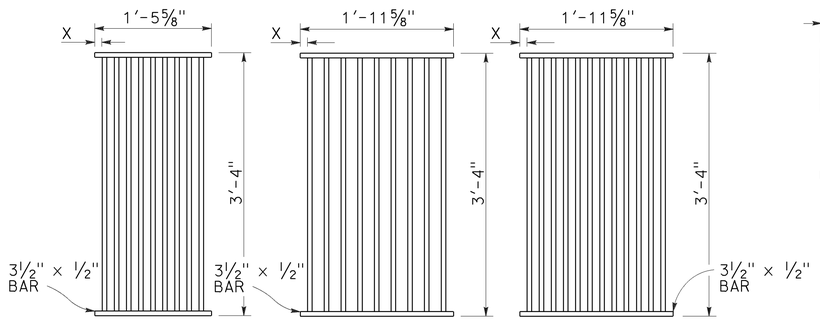

TYPE 18-9
1⅜" Clear spacing. Use within the roadbed on highways where bicycles and pedestrians are excluded.

TYPE 24-9
2" Clear spacing. Use in locations off the roadbed on all types of highways.

TYPE 24-12
1⅜" Clear spacing. Use within the roadbed on highways where bicycles and pedestrians are excluded.

RECTANGULAR GRATE DETAILS
(See table below)

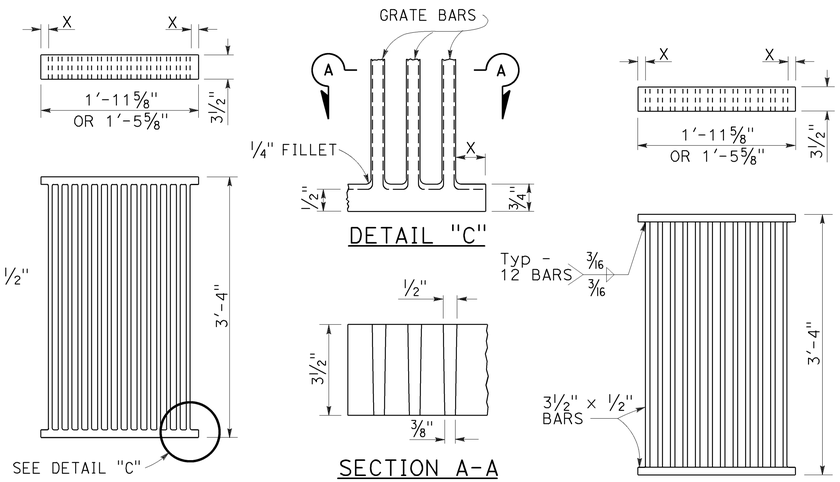

ALTERNATIVE CAST DUCTILE IRON GRATE OR CAST CARBON STEEL GRATE

ALTERNATIVE WELDED GRATE

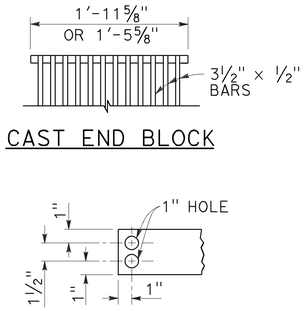

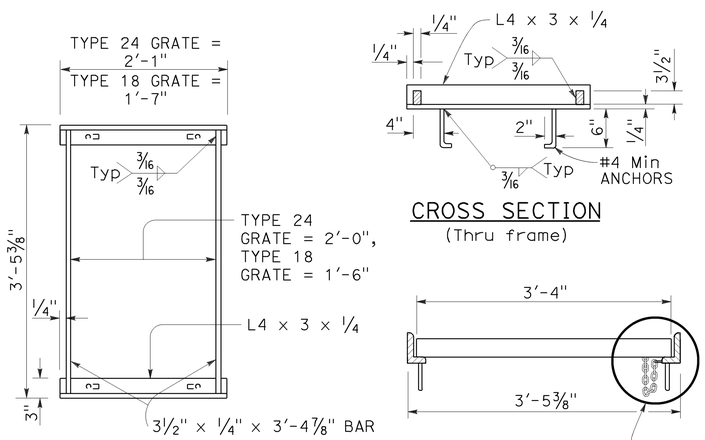

RECTANGULAR FRAME DETAILS
(For all rectangular grates)

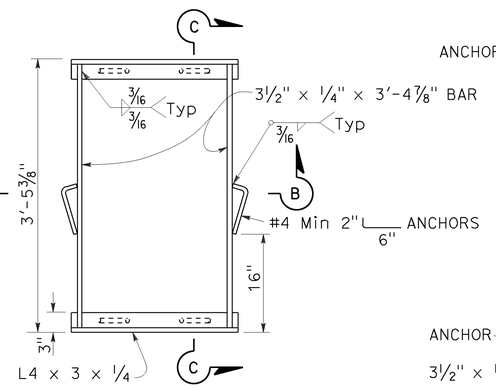

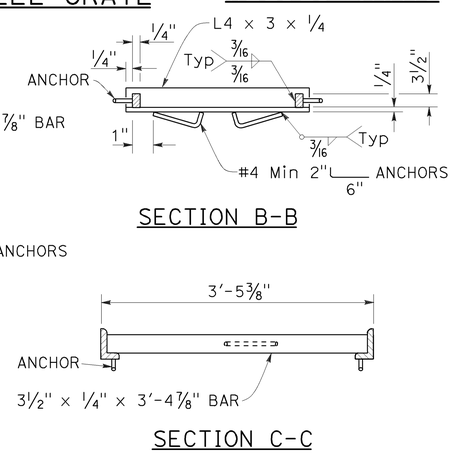

ALTERNATIVE ANCHOR FOR RECTANGULAR FRAME
(For details not shown, See Rectangular Frame Details)

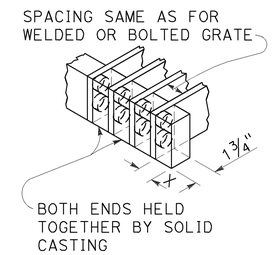

ALTERNATIVE CAST DUCTILE IRON OR CAST CARBON STEEL END BLOCK GRATE

NOTES:

1. Grate type numbers refer to approximate width of grate in inches and number of bars, respectively.
2. Contractor has the option of using cast ductile iron, cast carbon steel, welded, bolted, or cast end block grate.
3. Rounded top of bars optional on all grates.
4. Pipe inlets with a grate shall be placed so that bars parallel direction of principle surface flow.
5. Complete joint penetration butt welds may be substituted for the fillet welds on all anchors.
6. Standard square, hexagon, round or equivalent headed anchors may be substituted for the right angle hooks on the anchors shown on this plan.
7. Grate and frame weights are based on welded grates (weights of face angles, steps, protection bars, etc. are not included).
8. Connect chain to grate and frame only at locations shown on the plans. When chain is required, do not use cast ductile iron grates.

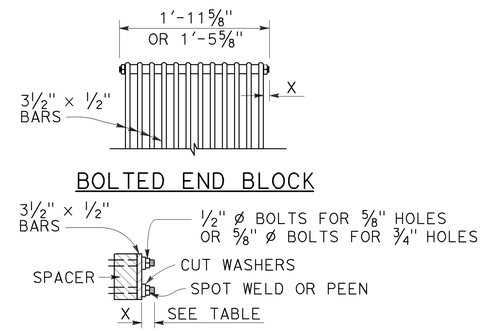

ALTERNATIVE BOLTED GRATE

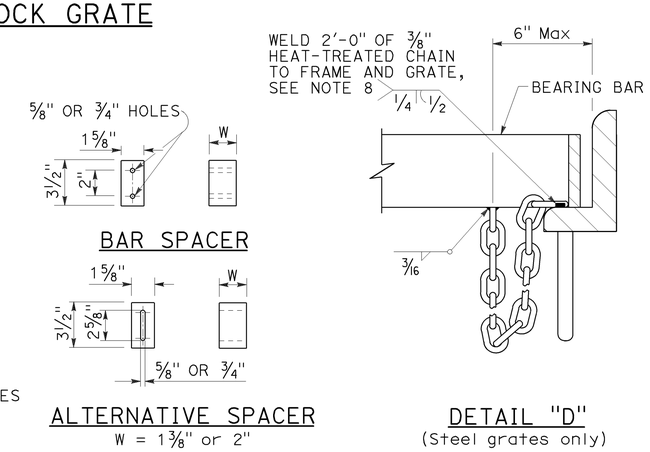

GRATE BAR SPACING TABLE

TYPE	No. OF BARS	CLEAR BAR SPACING	X
18-9	9	1⅜"	1 1/16"
24-9	9	2"	1 9/16"
24-12	12	1⅜"	1¼"

INLET TYPE	COVER TYPE	WEIGHT LB
OS	PLATE	174
OL-7	PLATE	170
OL-10	PLATE	170
OL-14	PLATE	170
OL-21	PLATE	170
OCP	PLATE	112
OCPI	PLATE	112
OCPI	REDWOOD	42
OMP	PLATE	177
OMPI	PLATE	177

INLET TYPE	GRATE TYPE	No. OF GRATES	WEIGHT LB
GDO	24-12	2	634
GOL-7	24-12	1	326
GOL-10	24-12	1	326
GO,G1,G2,G3,G4 (TYPE 24)	24-9	1	263
	24-12	1	326
G4 (TYPE 18),G5,G6	18-9	1	249
GT1	18-9	2	498
GT2	18-9	2	498
GT3	24-12	2	652
GT4	24-12	2	652
TRASH RACK			22
GRATE CHAIN			3

BASIS FOR Misc IRON & STEEL FINAL PAY WEIGHTS FOR DRAINAGE INLETS
(See Note 7)

STATE OF CALIFORNIA
DEPARTMENT OF TRANSPORTATION

GRATE DETAILS No. 1

NO SCALE

RSP D77A DATED APRIL 19, 2013 SUPERSEDES RSP D77A DATED JULY 20, 2012 AND STANDARD PLAN D77A DATED MAY 20, 2011 - PAGE 164 OF THE STANDARD PLANS BOOK DATED 2010.

REVISED STANDARD PLAN RSP D77A

2010 REVISED STANDARD PLAN RSP D77A

4-4-13

Dist	COUNTY	ROUTE	POST MILES TOTAL PROJECT	SHEET No.	TOTAL SHEETS
10	Mer	99	15.1/16.0	61	79

Raymond Don Tsztoo
REGISTERED CIVIL ENGINEER

October 30, 2015
PLANS APPROVAL DATE

REGISTERED PROFESSIONAL ENGINEER
Raymond Don Tsztoo
No. C37332
Exp. 6-30-16
CIVIL
STATE OF CALIFORNIA

THE STATE OF CALIFORNIA OR ITS OFFICERS OR AGENTS SHALL NOT BE RESPONSIBLE FOR THE ACCURACY OR COMPLETENESS OF SCANNED COPIES OF THIS PLAN SHEET.

TO ACCOMPANY PLANS DATED 12-28-15

ANNULAR AND HELICAL PROFILE

COUPLING TYPE	PIPE CORRUGATION	PIPE SIZE	W OR A	PIPE WALL THICKNESS		BAND THICKNESS		BAR AND STRAP (CSP ONLY)				ANGLE						
												DIMENSIONS		BOLTS (No.- Dia)		RIVETS ANGLE TO BAND		SPOT WELDS ANGLE TO BAND
				CSP	CAP	CSP	CAP	STRAP THICKNESS	BOLTS Dia	BAR Dia	BAR YIELD STRENGTH	CSP	CAP	CSP	CAP	CSP	CAP	CSP
TWO PIECE INTEGRAL FLANGE	1½′ × ¼"	6"	7"	0.064"-0.168"		0.052"								3-⅜"				
	1½′ × ¼"	8"-10"	7"	0.064"-0.168"	0.060"-0.164"	0.064"	0.060"							3-⅜"	3-⅜"			
ANNULAR	2⅔" × ½"	THROUGH 24"	12"	0.064"-0.168"	0.060"-0.164"	0.064"	0.060"					2" × 2" × 3/16"	2" × 2" × 3/16"	3-½"	3-½"	3-⅜"	3-⅜"	3-½"
HUGGER	2⅔" × ½" REROLLED END	THROUGH 24"	10½"	0.064"-0.168"		0.064"		0.079"	½"	⅞"	32 ksi							

SPIRAL RIB PROFILE

COUPLING TYPE	PIPE CORRUGATION	PIPE SIZE	W	PIPE WALL THICKNESS		BAND THICKNESS		BAR AND STRAP (SSRP ONLY)				ANGLE						
												DIMENSIONS		BOLTS (No.- Dia)		RIVETS ANGLE TO BAND		SPOT WELDS ANGLE TO BAND
				SSRP	ASRP	SSRP	ASRP	STRAP THICKNESS	BOLTS Dia	BAR Dia	BAR YIELD STRENGTH	SSRP	ASRP	SSRP	ASRP	SSRP	ASRP	SSRP
ANNULAR	2⅔" × ½" * REROLLED END	24"	12"	0.064"-0.168"	0.060"-0.164"	0.064"	0.060"					2" × 2" × 3/16"	2" × 2" × 3/16"	3-½"	3-½"	3-⅜"	3-⅜"	3-½"
HUGGER	2⅔" × ½" * REROLLED END	24"	10½"	0.064"-0.168"		0.064"		0.079"	½"	⅞"	32 ksi							

* See Note 11.

NOTES:

1. For helically corrugated coupling bands, the connection angles may be oriented parallel to the pipe axis, provided connecting holes are slotted lengthwise sufficiently to allow adjustment for the helix angle.
2. Tension strap may be connected to band with either spot welds or fillet welds that develop minimum required strength of strap.
3. Use 1¼" gage line dimension on attached angle leg for rivets and spot welds.
4. Band thickness shall not be less than:
   a. 3 standard thicknesses lighter than the thickness of the pipe for Corrugated Steel Pipe.
   b. 2 standard thicknesses lighter than the thickness of the pipe and in no case lighter than 0.060" for Corrugated Aluminum Pipe.
5. Dimensions, thicknesses and strengths shown are minimum.
6. For pipe arches use same width band as for round pipe of equal periphery.
7. Fillet welds of equivalent strength may be substituted for spot welds or rivets.
8. Spot welds shall develop minimum required strength of strap.
9. Pipe with rerolled ends having at least two 2⅔" × ½" annular corrugations at each end with or without an upturned flange may be connected with any of the annular coupling bands shown for pipe of the same diameter and wall thickness and having 2⅔" × ½" corrugations.
10. For downdrain applications, two piece integral flange couplers shall have factory applied sleeve type rubber gaskets with a minimum length of 7" measured along the length of the pipe.
11. All profiles of Spiral Rib Pipe (¾" × ¾" ribs at 7½" pitch and ¾" × 1" ribs at 11½" pitch in both steel and aluminum and ¾" × 1" ribs at 8½" pitch in steel only) shall be manufactured with rerolled ends. Corrugation profile of the rerolled ends shall be 2⅔" × ½" annual corrugations with a minimum of two full corrugations at each end.

STATE OF CALIFORNIA
DEPARTMENT OF TRANSPORTATION

CORRUGATED METAL PIPE COUPLING DETAILS No. 7 DOWNDRAIN

NO SCALE

RSP D97G DATED OCTOBER 30, 2015 SUPERSEDES STANDARD PLAN D97G DATED MAY 20, 2011 - PAGE 202 OF THE STANDARD PLANS BOOK DATED 2010.

REVISED STANDARD PLAN RSP D97G

2010 REVISED STANDARD PLAN RSP D97G

8-19-15

Dist	COUNTY	ROUTE	POST MILES TOTAL PROJECT	SHEET No.	TOTAL SHEETS
10	Mer	99	15.1/16.0	62	79

Gregory A. Balzer
LICENSED LANDSCAPE ARCHITECT

July 19, 2013
PLANS APPROVAL DATE

LICENSED LANDSCAPE ARCHITECT Gregory A. Balzer 2516 STATE OF CALIFORNIA
Gregory A. Balzer
Original Date 2-28-15
Renewal Date 7-19-13
Date

THE STATE OF CALIFORNIA OR ITS OFFICERS OR AGENTS SHALL NOT BE RESPONSIBLE FOR THE ACCURACY OR COMPLETENESS OF SCANNED COPIES OF THIS PLAN SHEET.

TO ACCOMPANY PLANS DATED 12-28-15

2010 REVISED STANDARD PLAN RSP H1

A

AB	AGGREGATE BASE
ABS	ACRYLONITRILE-BUTADIENE-STYRENE
AC	ASPHALT CONCRETE
ACC	ARMOR-CLAD CONDUCTORS
Adj	ADJACENT/ADJUSTABLE
AIC	AUXILIARY IRRIGATION CONTROLLER
Alt	ALTERNATIVE
AMEND	AMENDMENT
ARV	AIR RELEASE VALVE
AUTO	AUTOMATIC
AUX	AUXILIARY
AVB	ATMOSPHERIC VACUUM BREAKER

B

B&B	BALLED AND BURLAPPED
B/B	BRASS/BRONZE
B/B/PL	BRASS/BRONZE/PLASTIC
B/PL	BRASS/PLASTIC
BFM	BONDED FIBER MATRIX
Bit Ctd	BITUMINOUS COATED
BP	BOOSTER PUMP
BPA	BACKFLOW PREVENTER ASSEMBLY
BPE	BACKFLOW PREVENTER ENCLOSURE
BV	BALL VALVE

C

C	CONDUIT
CAP	CORRUGATED ALUMINUM PIPE
CARV	COMBINATION AIR RELEASE VALVE
CB	COUPLING BAND
CCA	CAM COUPLER ASSEMBLY
CEC	CONTROLLER ENCLOSURE CABINET
CHDPE	CORRUGATED HIGH DENSITY POLYETHYLENE
CL	CHAIN LINK
CNC	CONTROL AND NEUTRAL CONDUCTORS
Conc	CONCRETE
CP	COPPER PIPE
CS	COMPOST SOCK
CSP	CORRUGATED STEEL PIPE
CST	CENTER STRIP
CV	CHECK VALVE

D

Dia	DIAMETER
DIP	DUCTILE IRON PIPE
DIT	DRIP IRRIGATION TUBING
DG	DECOMPOSED GRANITE
DN	DIAMETER NOMINAL
DVA	DRIP VALVE ASSEMBLY

E

EC	EROSION CONTROL
ECTC	EROSION CONTROL TECHNOLOGY COUNCIL
Elect	ELECTRIC/ELECTRICAL
Elev	ELEVATION
ELL	ELBOW
ENCL	ENCLOSURE
EP	EDGE OF PAVEMENT
ES	EDGE OF SHOULDER
EST	END STRIP
ESTB	ESTABLISHMENT
ETW	EDGE OF TRAVELED WAY

F

F	FULL CIRCLE
F/P	FULL/PART CIRCLE
FCV	FLOW CONTROL VALVE
FERT	FERTILIZER
FG	FINISHED GRADE
FH	FLEXIBLE HOSE
FIPT	FEMALE IRON PIPE THREAD
FIS	FERTILIZER INJECTOR SYSTEM
FL	FLOW LINE
FR	FIBER ROLL
FS	FLOW SENSOR
FSC	FLOW SENSOR CABLE
FV	FLUSH VALVE

G

Galv	GALVANIZED
GARV	GARDEN VALVE
GARVA	GARDEN VALVE ASSEMBLY
GM	GRAVEL MULCH
GPH	GALLONS PER HOUR
GPM	GALLONS PER MINUTE
GSP	GALVANIZED STEEL PIPE
GV	GATE VALVE

H

H	HALF CIRCLE
HDPE	HIGH DENSITY POLYETHYLENE
HP	HORSEPOWER/HINGE POINT
HPL	HIGH PRESSURE LINE
Hwy	HIGHWAY

I

IC	IRRIGATION CONTROLLER
ICC	IRRIGATION CONTROLLER(S) IN CONTROLLER ENCLOSURE CABINET
ID	INSIDE DIAMETER
IFS	IRRIGATION FILTRATION SYSTEM
IPS	IRON PIPE SIZE
IPT	IRON PIPE THREAD
Irr	IRRIGATION

L

L	LENGTH

M

Max	MAXIMUM
MBGR	METAL BEAM GUARD RAILING
MCV	MANUAL CONTROL VALVE
MIC	MASTER IRRIGATION CONTROLLER
Min	MINIMUM
MIPT	MALE IRON PIPE THREAD
Misc	MISCELLANEOUS
Mtl	MATERIAL
MVP	MAINTENANCE VEHICLE PULLOUT

N

NCN	NO COMMON NAME
NL	NOZZLE LINE
No.	NUMBER
NPT	NATIONAL PIPE THREAD

O

O/C	ON CENTER
OD	OUTSIDE DIAMETER
OL	OVERLAP

P

P	PART CIRCLE
PB	PULL BOX
PCC	PORTLAND CEMENT CONCRETE
PE	POLYETHYLENE
Pkt	PACKET
PL	PLASTIC
PLS	PURE LIVE SEED
PLT	PLANT/PLANTING
PLT ESTB	PLANT ESTABLISHMENT
PM	POST MILE
PR	PRESSURE RATED
PRLV	PRESSURE RELIEF VALVE
PRV	PRESSURE REGULATING VALVE
PVC	POLYVINYL CHLORIDE
Pvmt	PAVEMENT

Q

Q	QUARTER CIRCLE
QCV	QUICK COUPLING VALVE

R

R	RADIUS
RCP	REINFORCED CONCRETE PIPE
RCV	REMOTE CONTROL VALVE
RCVM	REMOTE CONTROL VALVE (MASTER)
RCVMF	REMOTE CONTROL VALVE (MASTER) W/FLOW SENSOR
RCVP	REMOTE CONTROL VALVE W/PRESSURE REGULATOR
RCW	RECYCLED WATER
RECP	ROLLED EROSION CONTROL PRODUCT
REQ	REQUIRED
RICS	REMOTE IRRIGATION CONTROL SYSTEM
R/W	RIGHT OF WAY

S

S	SLIP
SCH	SCHEDULE
SF	STATE-FURNISHED
Shld	SHOULDER
Sq	SQUARE
SST	SIDE STRIP
Sta	STATION
Std	STANDARD
SW	SIDEWALK/SOUND WALL

T

T	THIRD CIRCLE/THREAD
TLS	TRUCK LOADING STANDPIPE
TQ	THREE QUARTER CIRCLE
TRM	TURF REINFORCEMENT MAT
TT	TWO-THIRDS CIRCLE
TWSA	TREE WELL SPRINKLER ASSEMBLY
Typ	TYPICAL

U

UG	UNDERGROUND

W

W	WIDTH
W/	WITH
WM	WATER METER
WS	WYE STRAINER
WSA	WYE STRAINER ASSEMBLY
WSP	WELDED STEEL PIPE
WWM	WELDED WIRE MESH

NOTE:
For additional abbreviations, see Standard Plans A10A and A10B.

STATE OF CALIFORNIA
DEPARTMENT OF TRANSPORTATION

LANDSCAPE AND EROSION CONTROL ABBREVIATIONS

NO SCALE

RSP H1 DATED JULY 19, 2013 SUPERSEDES STANDARD PLAN H1 DATED MAY 20, 2011 - PAGE 218 OF THE STANDARD PLANS BOOK DATED 2010.

REVISED STANDARD PLAN RSP H1

Dist	COUNTY	ROUTE	POST MILES TOTAL PROJECT	SHEET No.	TOTAL SHEETS
10	Mer	99	15.1/16.0	63	79

LICENSED LANDSCAPE ARCHITECT

November 15, 2013
PLANS APPROVAL DATE

LICENSED LANDSCAPE ARCHITECT — Gregory A. Belzer — 2016 — STATE OF CALIFORNIA
Expires 2-28-15
Renewal Date
11-15-13
Date

THE STATE OF CALIFORNIA OR ITS OFFICERS OR AGENTS SHALL NOT BE RESPONSIBLE FOR THE ACCURACY OR COMPLETENESS OF SCANNED COPIES OF THIS PLAN SHEET.

TO ACCOMPANY PLANS DATED 12-28-15

EXISTING	NEW	ITEM DESCRIPTION
		WATER METER (WM)
		BACKFLOW PREVENTER ASSEMBLY (BPA)
		BACKFLOW PREVENTER ENCLOSURE (BPE)
		BOOSTER PUMP (BP)
		TRUCK LOADING STANDPIPE (TLS)
	FS	FLOW SENSOR (FS)
		MASTER IRRIGATION CONTROLLER (MIC)
		AUXILIARY IRRIGATION CONTROLLER (AIC)
		IRRIGATION CONTROLLER (IC) IRRIGATION CONTROLLER (IC) (BATTERY) IRRIGATION CONTROLLER (IC) (SOLAR) IRRIGATION CONTROLLER (IC) (TWO WIRE) IRRIGATION CONTROLLER(S) IN CONTROLLER ENCLOSURE CABINET (ICC)
acc	ACC	ARMOR-CLAD CONDUCTORS (ACC)
cnc	CNC	CONTROL AND NEUTRAL CONDUCTORS (CNC)
		IRRIGATION CONDUIT
		EXTEND IRRIGATION CONDUIT
dip	DIP	DUCTILE IRON PIPE (SUPPLY LINE) (MAIN) (DIP)
		GALVANIZED STEEL PIPE (SUPPLY LINE) (MAIN) (GSP)
		GALVANIZED STEEL PIPE (SUPPLY LINE) (LATERAL) (GSP)
		PLASTIC PIPE (SUPPLY LINE) (MAIN)
		PLASTIC PIPE (SUPPLY LINE) (LATERAL)
cp	CP	COPPER PIPE (SUPPLY LINE)
dit	DIT	DRIP IRRIGATION TUBING
		REMOTE CONTROL VALVE (RCV) REMOTE CONTROL VALVE (MASTER) (RCVM) REMOTE CONTROL VALVE (MASTER) W/FLOW METER (RCVMF)
P	P	REMOTE CONTROL VALVE W/PRESSURE REGULATOR (RCVP)
		EXISTING MANUAL CONTROL VALVE (MCV)
	V	DRIP VALVE ASSEMBLY (DVA)
	Y	WYE STRAINER ASSEMBLY (WSA)

EXISTING	NEW	ITEM DESCRIPTION
		GATE VALVE (GV)
		BALL VALVE (BV)
		QUICK COUPLING VALVE (QCV)
		CAM COUPLER ASSEMBLY (CCA)
		GARDEN VALVE ASSEMBLY (GARVA)
		PRESSURE REGULATING VALVE (PRV)
		PRESSURE RELIEF VALVE (PRLV)
		FLOW CONTROL VALVE (FCV)
		COMBINATION AIR RELEASE VALVE (CARV)
		CHECK VALVE (CV)
		FLUSH VALVE (FV)
		EXISTING NOZZLE LINE W/TURNING UNION
		EXISTING IRRIGATION SYSTEM
		EXISTING IRRIGATION SYSTEM TO BE REMOVED
		CHAIN LINK GATE
		QUICK COUPLING VALVE W/SPRINKLER PROTECTOR
3	3	SPRINKLER W/SPRINKLER PROTECTOR
	C	CONNECT TO EXISTING SYSTEM
		CAP
		CAP EXISTING
	\\\FR\\\	FIBER ROLL
	\\\CS\\\	COMPOST SOCK

RCV SIZE
IRRIGATION CONTROLLER
CONTROLLER STATION
VALVE IN PARALLEL (IF APPLICABLE)
GPM
QUANTITY OF SPRINKLERS (WHEN SHOWN)

* 2½"-A-2b-40-60

VALVE CODE

* VALVE CODES FOR EXISTING VALVES ARE SHOWN IN A DASHED ENCLOSURE.

STATE OF CALIFORNIA
DEPARTMENT OF TRANSPORTATION

LANDSCAPE AND EROSION CONTROL SYMBOLS

NO SCALE

RSP H2 DATED NOVEMBER 15, 2013 SUPERSEDES RSP H2 DATED JULY 19, 2013 AND STANDARD PLAN H2 DATED MAY 20, 2011 - PAGE 219 OF THE STANDARD PLANS BOOK DATED 2010.

REVISED STANDARD PLAN RSP H2

2010 REVISED STANDARD PLAN RSP H2

10-9-13

Dist	COUNTY	ROUTE	POST MILES TOTAL PROJECT	SHEET No.	TOTAL SHEETS
10	Mer	99	15.1/16.0	64	79

Gregory A. Belzer
LICENSED LANDSCAPE ARCHITECT

July 19, 2013
PLANS APPROVAL DATE

LICENSED LANDSCAPE ARCHITECT
Gregory A. Belzer 2516
Gregory A. Belzer
09-30-14
Renewal Date
2-28-15
Renewal Date
7-19-13
Date
STATE OF CALIFORNIA

THE STATE OF CALIFORNIA OR ITS OFFICERS OR AGENTS SHALL NOT BE RESPONSIBLE FOR THE ACCURACY OR COMPLETENESS OF SCANNED COPIES OF THIS PLAN SHEET.

TO ACCOMPANY PLANS DATED 12-28-15

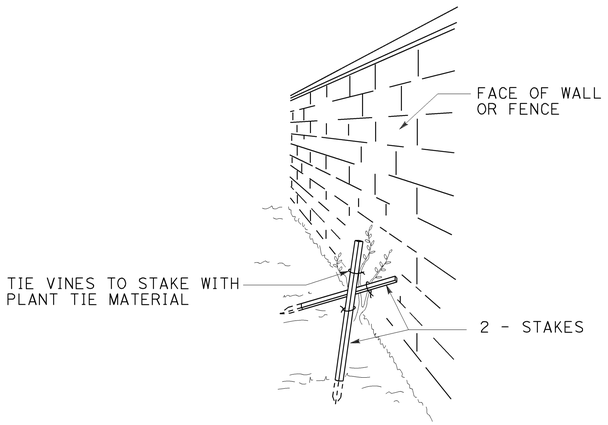

PERSPECTIVE
VINE STAKING

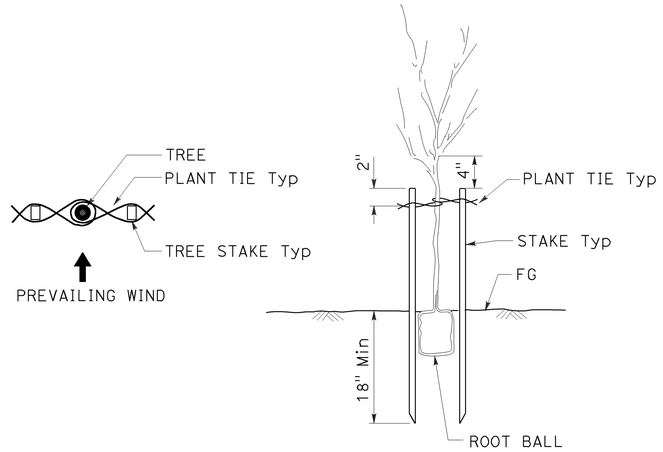

TREE STAKING

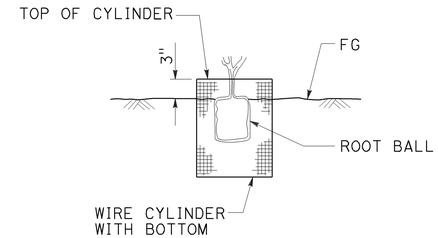

SECTION
ROOT PROTECTOR

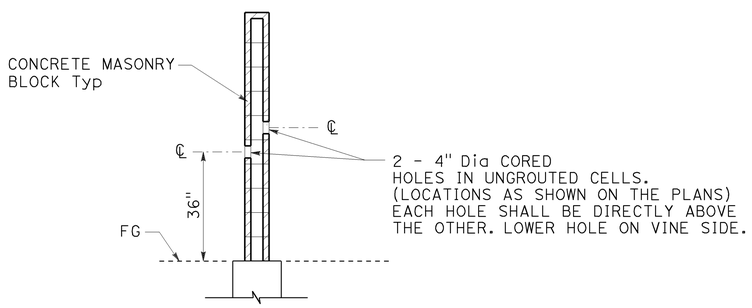

SECTION
CORE HOLE (VINE)

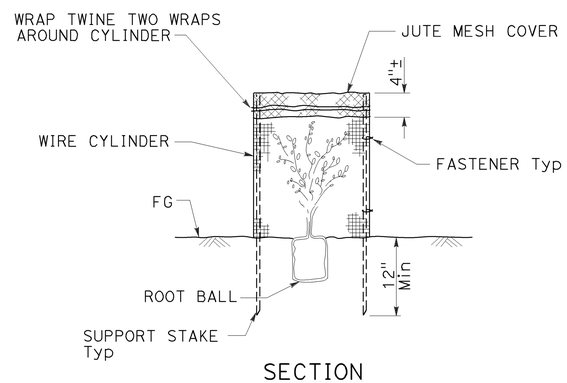

SECTION
FOLIAGE PROTECTOR

STATE OF CALIFORNIA
DEPARTMENT OF TRANSPORTATION

LANDSCAPE DETAILS

NO SCALE

RSP H4 DATED JULY 19, 2013 SUPERSEDES STANDARD PLAN H4
DATED MAY 20, 2011 - PAGE 221 OF THE STANDARD PLANS BOOK DATED 2010.

REVISED STANDARD PLAN RSP H4

2010 REVISED STANDARD PLAN RSP H4

6-28-13

Dist	COUNTY	ROUTE	POST MILES TOTAL PROJECT	SHEET No.	TOTAL SHEETS
10	Mer	99	15.1/16.0	65	79

LICENSED LANDSCAPE ARCHITECT

July 19, 2013
PLANS APPROVAL DATE

THE STATE OF CALIFORNIA OR ITS OFFICERS OR AGENTS SHALL NOT BE RESPONSIBLE FOR THE ACCURACY OR COMPLETENESS OF SCANNED COPIES OF THIS PLAN SHEET.

LICENSED LANDSCAPE ARCHITECT — Gregory A. Belzer — 2376 — 02-28-15 — 7-19-13 — STATE OF CALIFORNIA

TO ACCOMPANY PLANS DATED 12-28-15

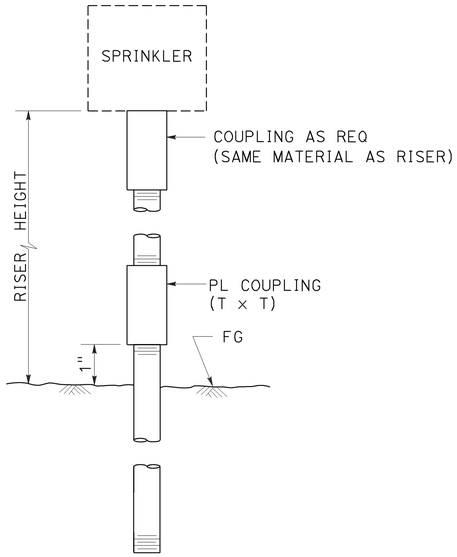

ELEVATION

RISER SPRINKLER ASSEMBLY TYPE I

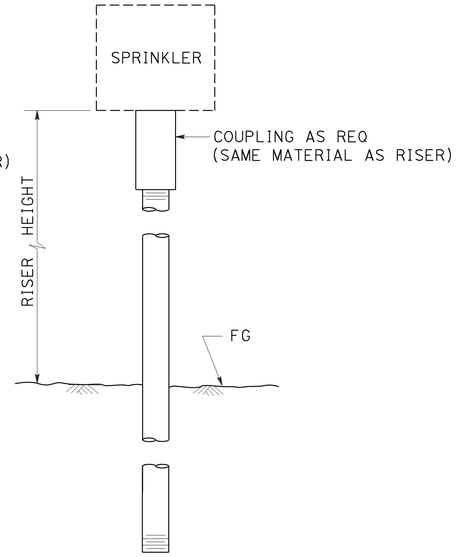

ELEVATION

RISER SPRINKLER ASSEMBLY TYPE II

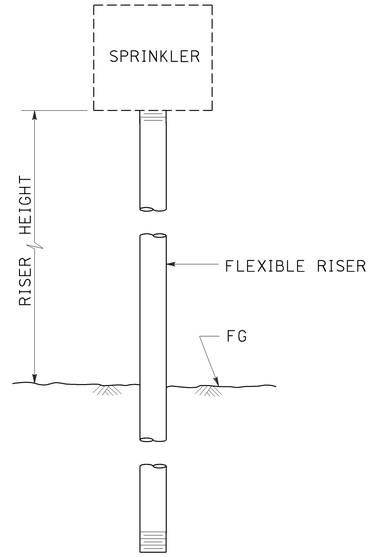

ELEVATION

RISER SPRINKLER ASSEMBLY TYPE III

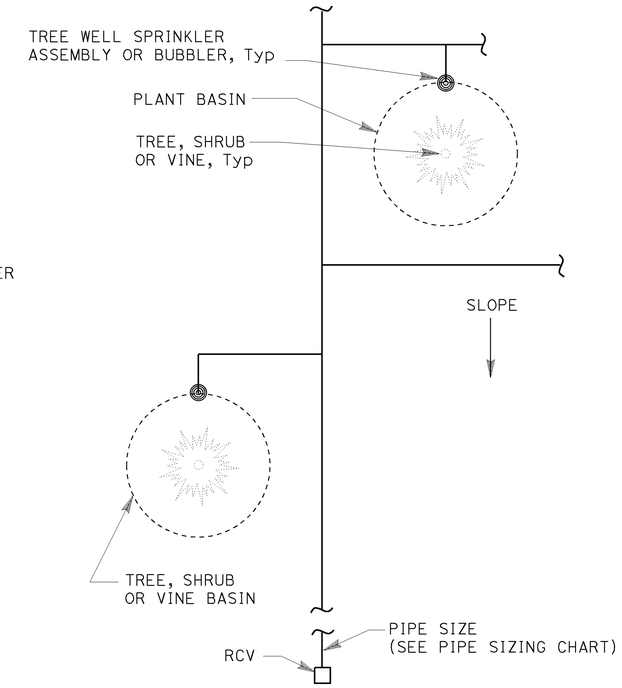

PLAN

NOTES:

1. Install tree well sprinkler assembly on up-hill side of plant when on slope.
2. Install bubbler within basin.

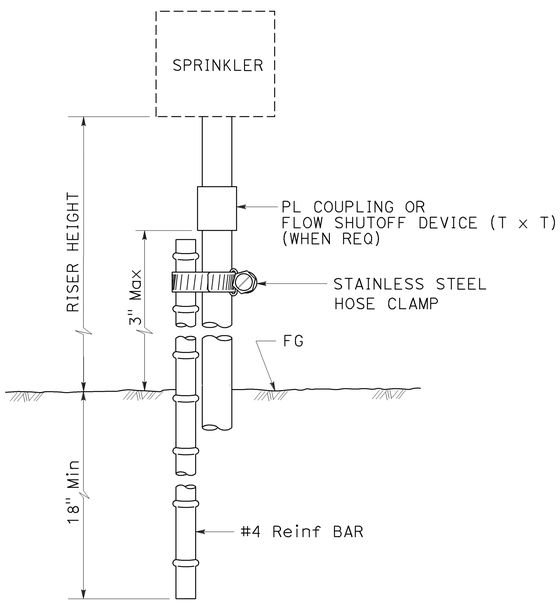

ELEVATION

RISER SPRINKLER ASSEMBLY TYPE IV

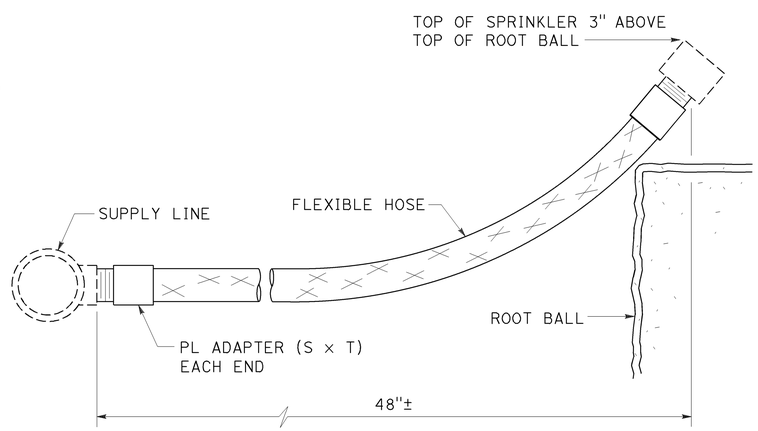

ELEVATION

RISER SPRINKLER ASSEMBLY TYPE V

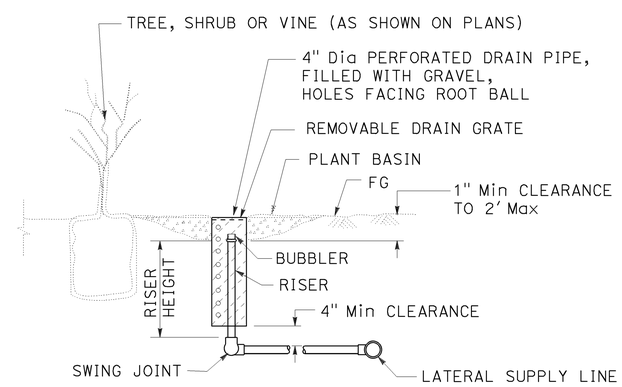

SECTION

TREE WELL SPRINKLER ASSEMBLY

STATE OF CALIFORNIA
DEPARTMENT OF TRANSPORTATION

LANDSCAPE DETAILS

NO SCALE

RSP H5 DATED JULY 19, 2013 SUPERSEDES STANDARD PLAN H5
DATED MAY 20, 2011 - PAGE 222 OF THE STANDARD PLANS BOOK DATED 2010.

REVISED STANDARD PLAN RSP H5

2010 REVISED STANDARD PLAN RSP H5

6-28-13

Dist	COUNTY	ROUTE	POST MILES TOTAL PROJECT	SHEET No.	TOTAL SHEETS
10	Mer	99	15.1/16.0	66	79

Gregory A. Belzer
LICENSED LANDSCAPE ARCHITECT

July 19, 2013
PLANS APPROVAL DATE

LICENSED LANDSCAPE ARCHITECT Gregory A. Belzer 2516 STATE OF CALIFORNIA
Gregory A. Belzer
02-28-15
Renewal Date
7-19-13
Date

THE STATE OF CALIFORNIA OR ITS OFFICERS OR AGENTS SHALL NOT BE RESPONSIBLE FOR THE ACCURACY OR COMPLETENESS OF SCANNED COPIES OF THIS PLAN SHEET.

TO ACCOMPANY PLANS DATED 12-28-15

2010 REVISED STANDARD PLAN RSP H6

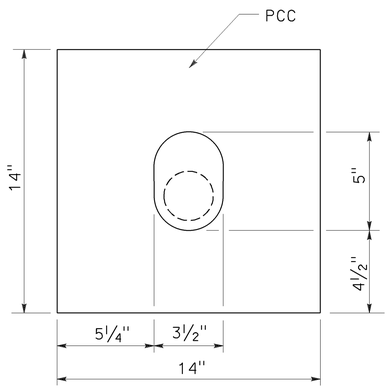

PLAN

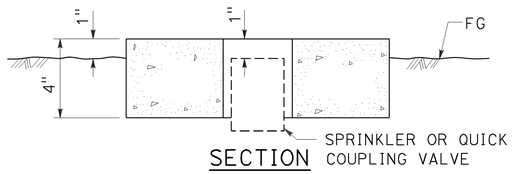

SECTION

SPRINKLER PROTECTOR TYPE I

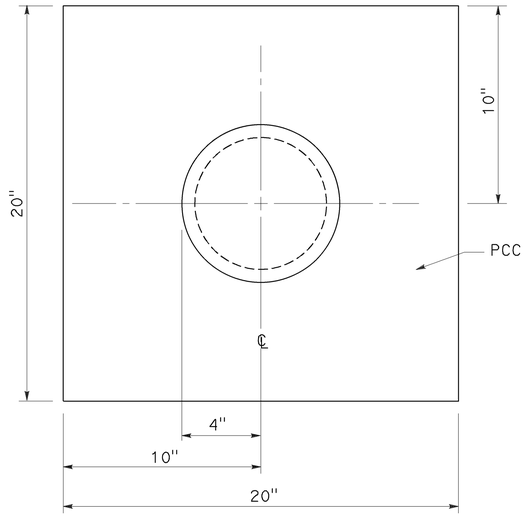

PLAN

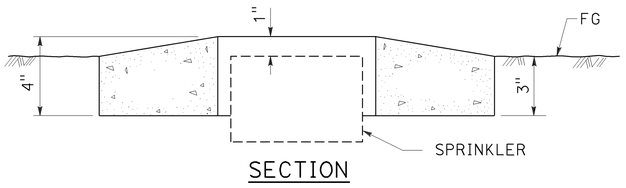

SECTION

SPRINKLER PROTECTOR TYPE II

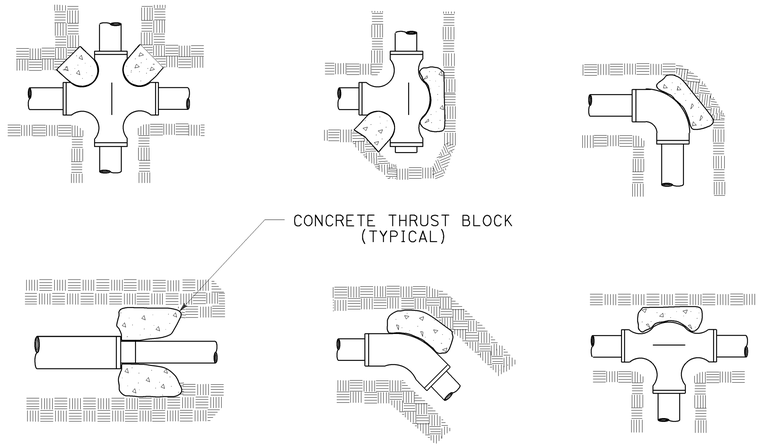

TYPICAL THRUST BLOCKS

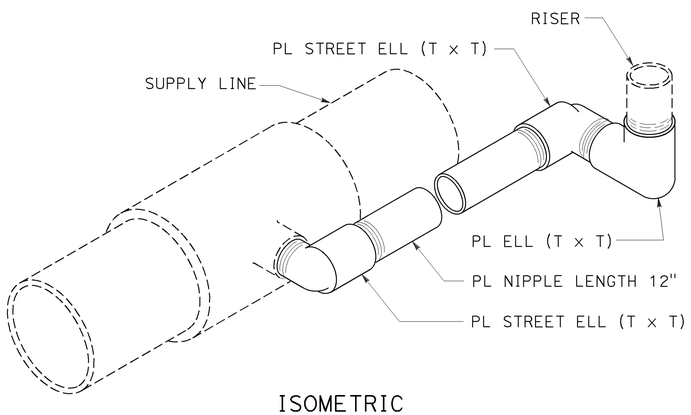

ISOMETRIC

POP-UP SPRINKLER ASSEMBLY TYPE I

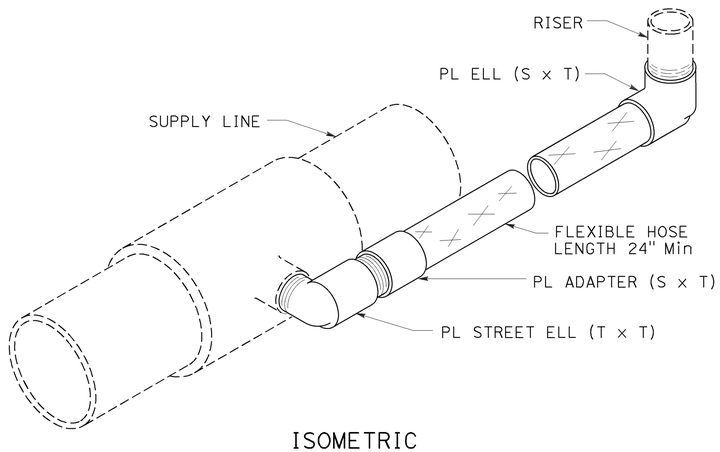

ISOMETRIC

POP-UP SPRINKLER ASSEMBLY TYPE II

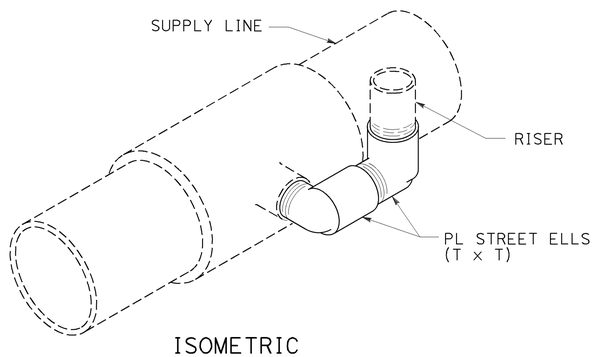

ISOMETRIC

POP-UP SPRINKLER ASSEMBLY TYPE III

STATE OF CALIFORNIA
DEPARTMENT OF TRANSPORTATION

LANDSCAPE DETAILS

NO SCALE

RSP H6 DATED JULY 19, 2013 SUPERSEDES STANDARD PLAN H6
DATED MAY 20, 2011 - PAGE 223 OF THE STANDARD PLANS BOOK DATED 2010.

REVISED STANDARD PLAN RSP H6

6-28-13

Dist	COUNTY	ROUTE	POST MILES TOTAL PROJECT	SHEET No.	TOTAL SHEETS
10	Mer	99	15.1/16.0	67	79

LICENSED LANDSCAPE ARCHITECT

July 19, 2013
PLANS APPROVAL DATE

LICENSED LANDSCAPE ARCHITECT Gregory A. Belzer 2576 STATE OF CALIFORNIA
Gregory A. Belzer
02-28-15
Renewal Date
7-19-13
Date

THE STATE OF CALIFORNIA OR ITS OFFICERS OR AGENTS SHALL NOT BE RESPONSIBLE FOR THE ACCURACY OR COMPLETENESS OF SCANNED COPIES OF THIS PLAN SHEET.

TO ACCOMPANY PLANS DATED 12-28-15

2010 REVISED STANDARD PLAN RSP H7

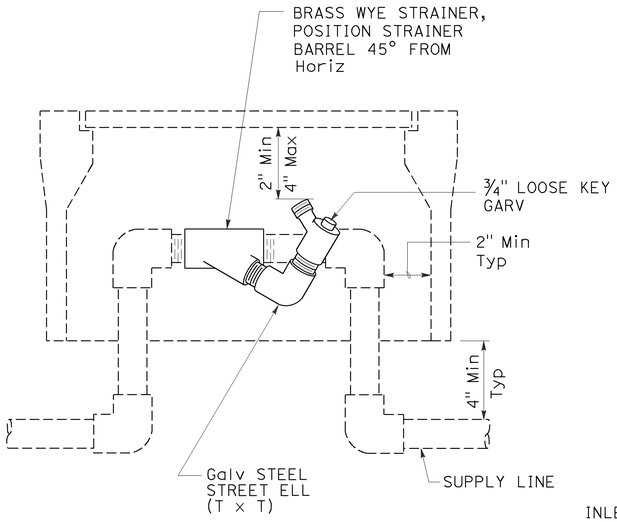

ELEVATION
WYE STRAINER ASSEMBLY

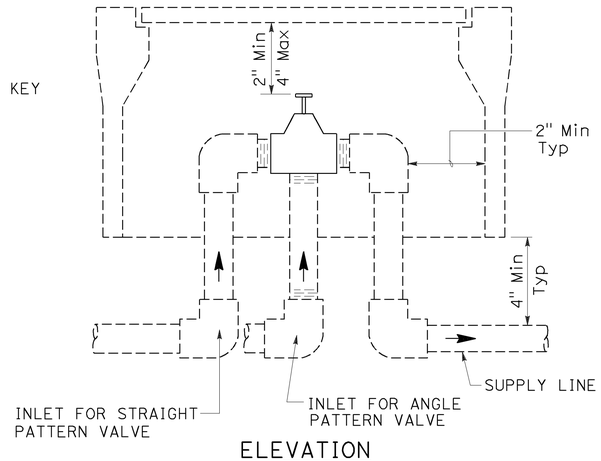

ELEVATION
VALVE

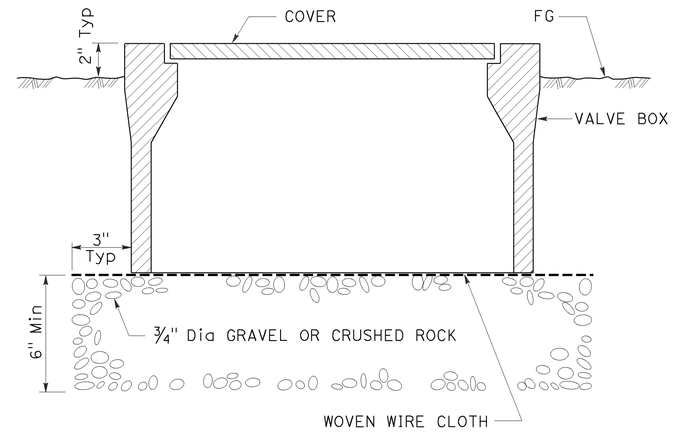

SECTION
VALVE BOX

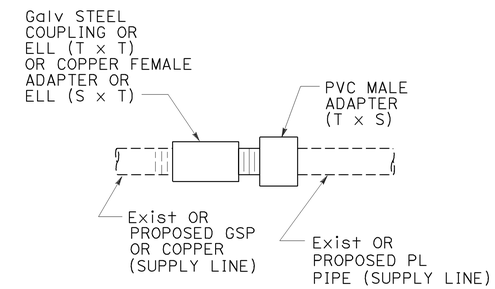

GALVANIZED OR COPPER PIPE CONNECTION TO PLASTIC PIPE

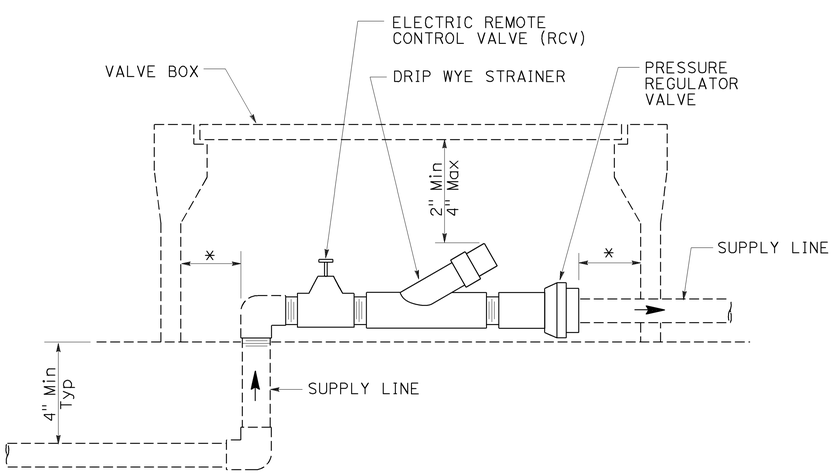

ELEVATION
DRIP VALVE ASSEMBLY

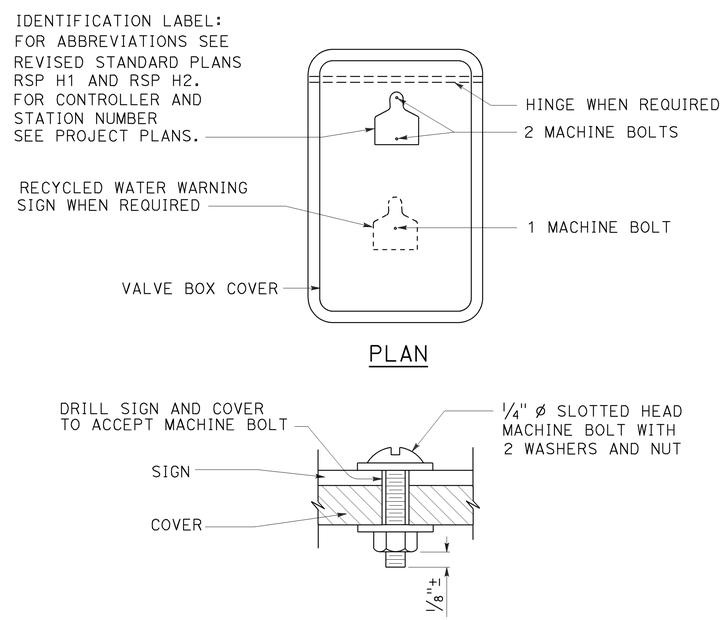

PLAN

SECTION
VALVE BOX IDENTIFICATION

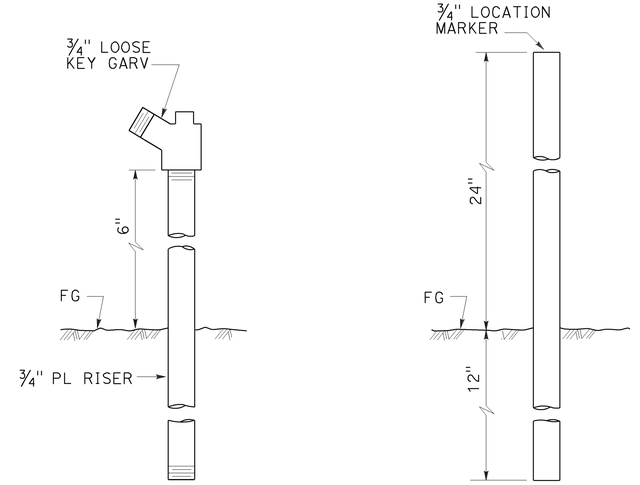

ELEVATION
GARDEN VALVE ASSEMBLY

ELEVATION
LOCATION MARKER

GARDEN VALVE ASSEMBLY

STATE OF CALIFORNIA
DEPARTMENT OF TRANSPORTATION

LANDSCAPE DETAILS

NO SCALE

RSP H7 DATED JULY 19, 2013 SUPERSEDES STANDARD PLAN H7
DATED MAY 20, 2011 - PAGE 224 OF THE STANDARD PLANS BOOK DATED 2010.

REVISED STANDARD PLAN RSP H7

6-20-13

Dist	COUNTY	ROUTE	POST MILES TOTAL PROJECT	SHEET No.	TOTAL SHEETS
10	Mer	99	15.1/16.0	68	79

LICENSED LANDSCAPE ARCHITECT

October 30, 2015
PLANS APPROVAL DATE

LICENSED LANDSCAPE ARCHITECT
Michael V. Ferrara 3859
9-30-17
Renewal Date
Date
STATE OF CALIFORNIA

THE STATE OF CALIFORNIA OR ITS OFFICERS OR AGENTS SHALL NOT BE RESPONSIBLE FOR THE ACCURACY OR COMPLETENESS OF SCANNED COPIES OF THIS PLAN SHEET.

TO ACCOMPANY PLANS DATED 12-28-15

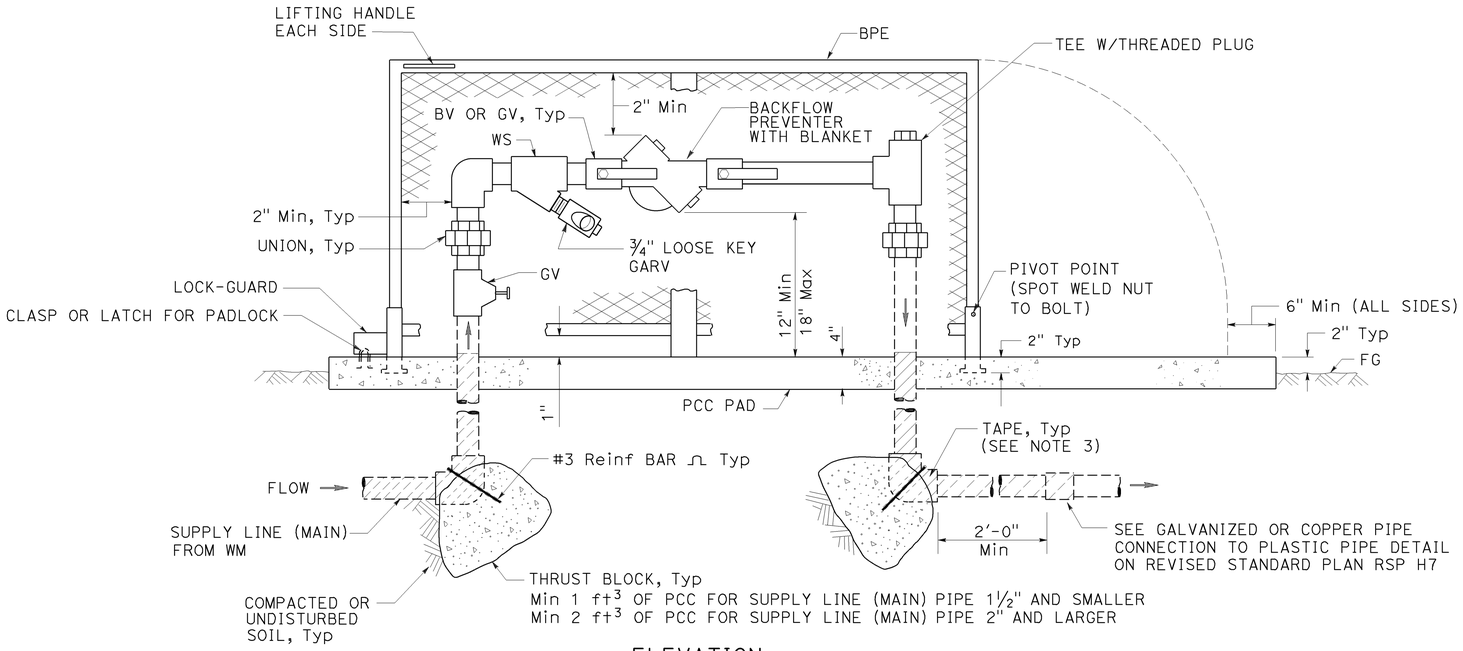

ELEVATION

BACKFLOW PREVENTER ASSEMBLY

IN ONE PIECE ENCLOSURE

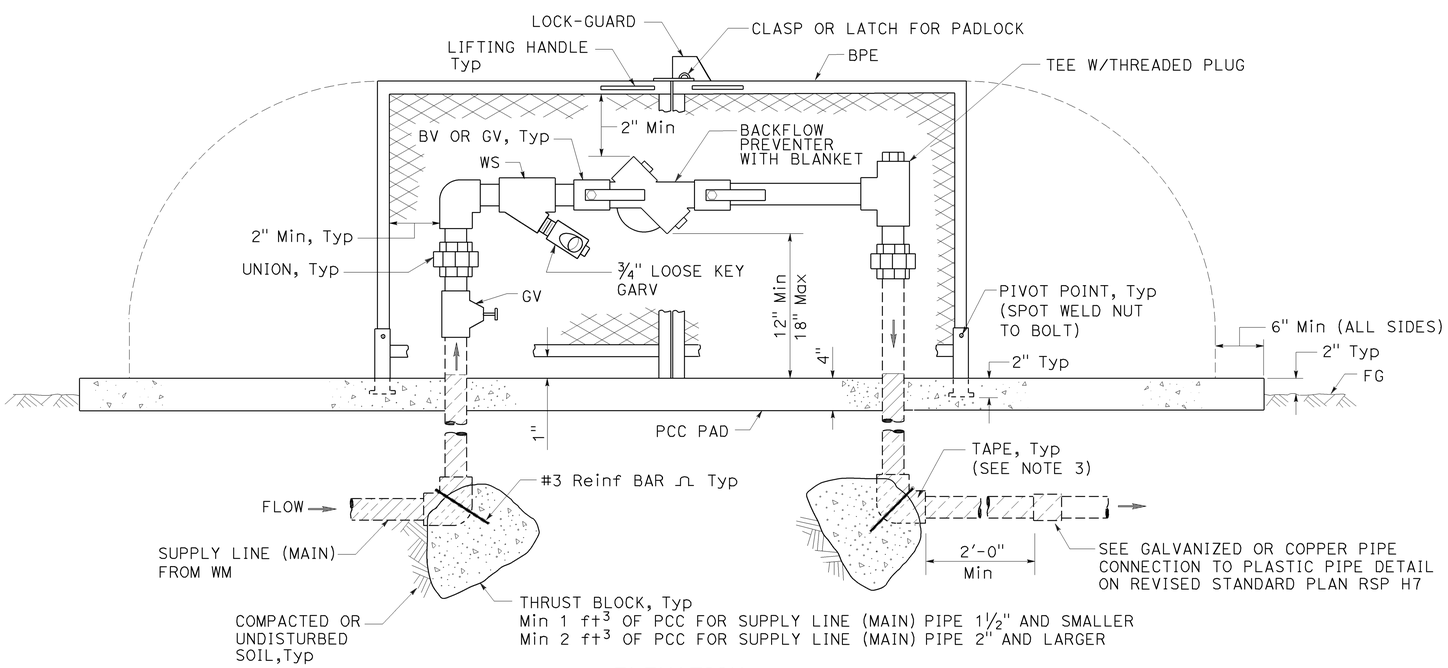

ELEVATION

BACKFLOW PREVENTER ASSEMBLY

IN TWO PIECE ENCLOSURE

NOTES:

1. Wye strainer and fittings must be the same size as the backflow preventer shown on the plans.
2. Backflow preventer assembly manifold pipe must be the same pipe as the supply line (main) pipe to be installed from the water meter to the backflow preventer assembly.
3. All metal in contact with soil and Portland Cement Concrete must be wrapped with 2" wide plastic backed adhesive polyethylene tape 20 mil thick with ½" overlap.

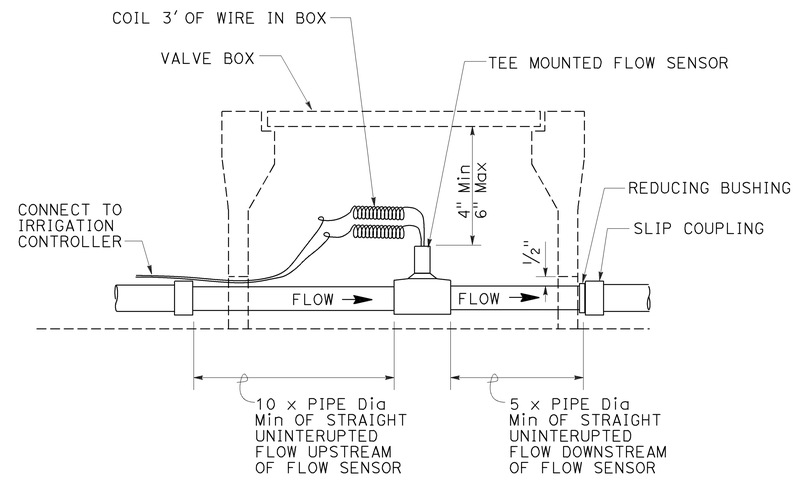

SECTION

FLOW SENSOR

STATE OF CALIFORNIA
DEPARTMENT OF TRANSPORTATION

LANDSCAPE DETAILS

NO SCALE

RSP H8 DATED OCTOBER 30, 2015 SUPERSEDES RSP H8 DATED JULY 19, 2013 AND STANDARD PLAN H8 DATED MAY 20, 2011 - PAGE 225 OF THE STANDARD PLANS BOOK DATED 2010.

REVISED STANDARD PLAN RSP H8

2010 REVISED STANDARD PLAN RSP H8

10-7-15

Dist	COUNTY	ROUTE	POST MILES TOTAL PROJECT	SHEET No.	TOTAL SHEETS
10	Mer	99	15.1/16.0	69	79

Gregory A. Balzer
LICENSED LANDSCAPE ARCHITECT

July 19, 2013
PLANS APPROVAL DATE

LICENSED LANDSCAPE ARCHITECT
Gregory A. Balzer 2516
Gregory A. Balzer
Original Sign
2-28-15
Renewal Date
7-19-13
Date
STATE OF CALIFORNIA

THE STATE OF CALIFORNIA OR ITS OFFICERS OR AGENTS SHALL NOT BE RESPONSIBLE FOR THE ACCURACY OR COMPLETENESS OF SCANNED COPIES OF THIS PLAN SHEET.

TO ACCOMPANY PLANS DATED 12-28-15

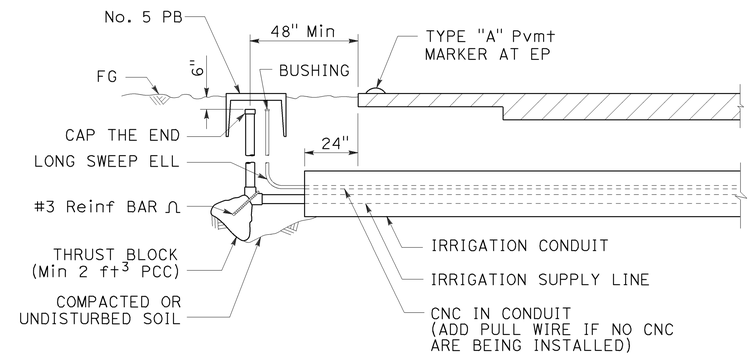

SECTION

IRRIGATION CONDUIT

UNDER TRAVELED WAY

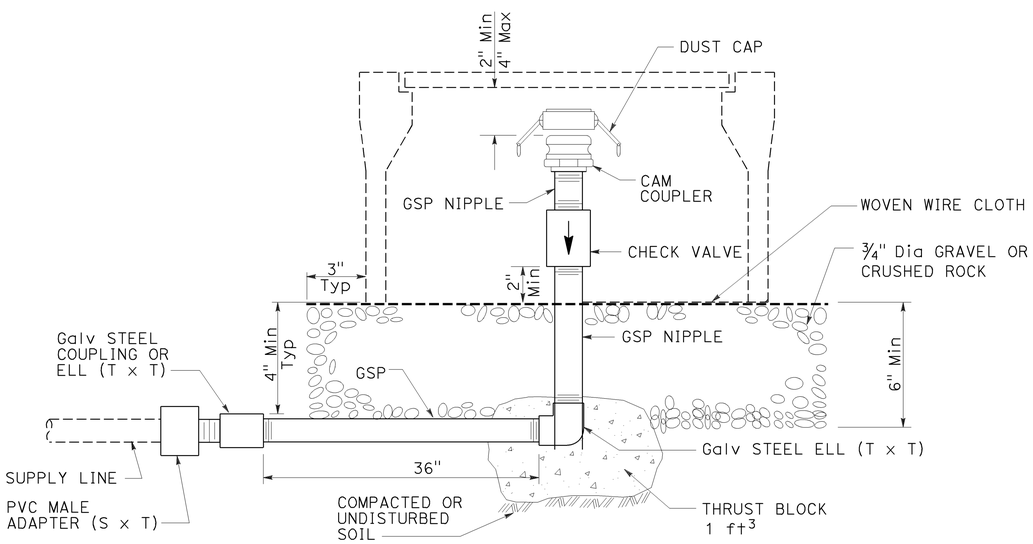

ELEVATION

CAM COUPLER ASSEMBLY

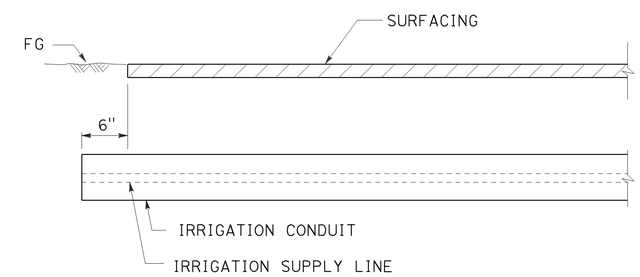

SECTION

IRRIGATION CONDUIT

UNDER SIDEWALKS, DRIVEWAYS AND PATHS

STATE OF CALIFORNIA
DEPARTMENT OF TRANSPORTATION

LANDSCAPE DETAILS

NO SCALE

RSP H9 DATED JULY 19, 2013 SUPERSEDES STANDARD PLAN H9
DATED MAY 20, 2011 - PAGE 226 OF THE STANDARD PLANS BOOK DATED 2010.

REVISED STANDARD PLAN RSP H9

2010 REVISED STANDARD PLAN RSP H9

6-28-13

Dist	COUNTY	ROUTE	POST MILES TOTAL PROJECT	SHEET No.	TOTAL SHEETS
10	Mer	99	15.1/16.0	70	79

LICENSED LANDSCAPE ARCHITECT

July 19, 2013
PLANS APPROVAL DATE

LICENSED LANDSCAPE ARCHITECT
Gregory A. Balzer 2516
Gregory A. Balzer
Original Date
2-28-15
Renewal Date
7-19-13
Date
STATE OF CALIFORNIA

THE STATE OF CALIFORNIA OR ITS OFFICERS OR AGENTS SHALL NOT BE RESPONSIBLE FOR THE ACCURACY OR COMPLETENESS OF SCANNED COPIES OF THIS PLAN SHEET.

TO ACCOMPANY PLANS DATED 12-28-15

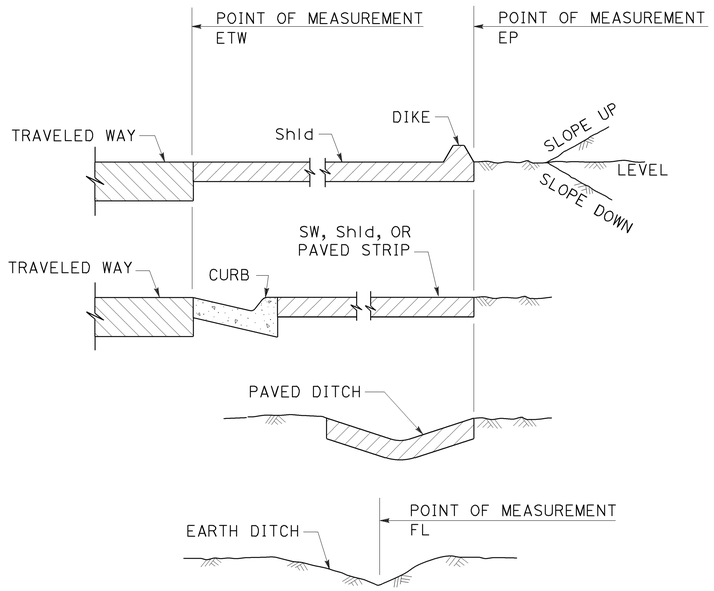

SECTION
POINTS OF MEASUREMENT

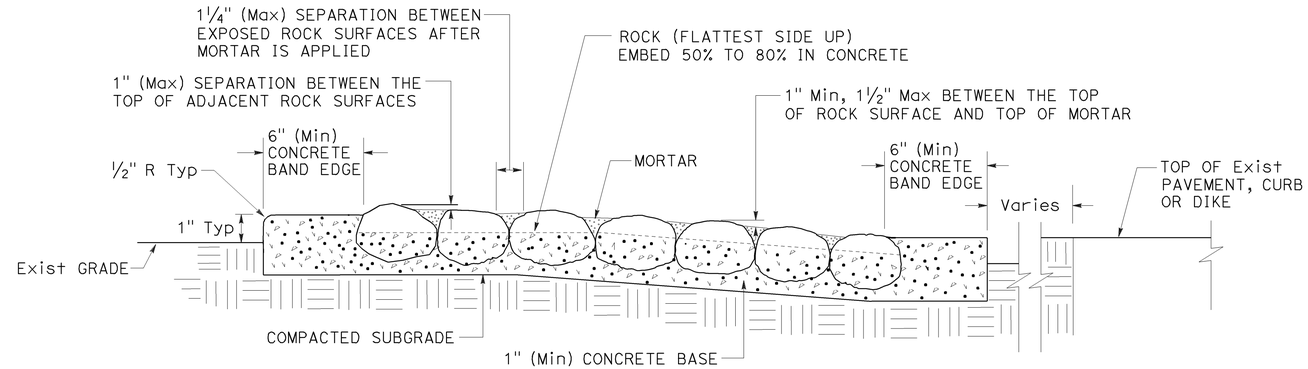

SECTION
ROCK BLANKET

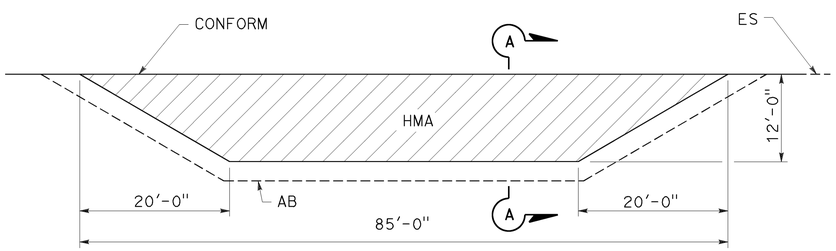

PLAN

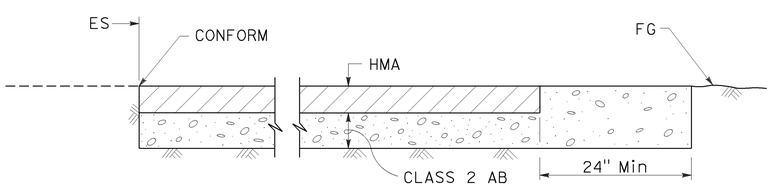

SECTION A-A
MAINTENANCE VEHICLE PULLOUT

STATE OF CALIFORNIA
DEPARTMENT OF TRANSPORTATION

LANDSCAPE DETAILS

NO SCALE

RSP H9A DATED JULY 19, 2013 SUPPLEMENTS THE STANDARD PLANS BOOK DATED 2010.

REVISED STANDARD PLAN RSP H9A

2010 REVISED STANDARD PLAN RSP H9A

6-21-13

Dist	COUNTY	ROUTE	POST MILES TOTAL PROJECT	SHEET No.	TOTAL SHEETS
10	Mer	99	15.1/16.0	71	79

REGISTERED CIVIL ENGINEER

July 19, 2013
PLANS APPROVAL DATE

REGISTERED PROFESSIONAL ENGINEER
Gurinderpal Bhullar
No. C48815
Exp. 9-30-14
CIVIL
STATE OF CALIFORNIA

THE STATE OF CALIFORNIA OR ITS OFFICERS OR AGENTS SHALL NOT BE RESPONSIBLE FOR THE ACCURACY OR COMPLETENESS OF SCANNED COPIES OF THIS PLAN SHEET.

TO ACCOMPANY PLANS DATED 12-28-15

2010 REVISED STANDARD PLAN RSP T9

TABLE 1

TAPER LENGTH CRITERIA AND CHANNELIZING DEVICE SPACING

SPEED (S)	MINIMUM TAPER LENGTH * FOR WIDTH OF OFFSET 12 FEET (W)				MAXIMUM CHANNELIZING DEVICE SPACING		
					X	Y	Z **
	TANGENT 2L	MERGING L	SHIFTING L/2	SHOULDER L/3	TAPER	TANGENT	CONFLICT
mph	ft	ft	ft	ft	ft	ft	ft
20	160	80	40	27	20	40	10
25	250	125	63	42	25	50	12
30	360	180	90	60	30	60	15
35	490	245	123	82	35	70	17
40	640	320	160	107	40	80	20
45	1080	540	270	180	45	90	22
50	1200	600	300	200	50	100	25
55	1320	660	330	220	55	110	27
60	1440	720	360	240	60	120	30
65	1560	780	390	260	65	130	32
70	1680	840	420	280	70	140	35

* - For other offsets, use the following merging taper length formula for L:
For speed of 40 mph or less, $L = WS^2/60$
For speed of 45 mph or more, $L = WS$

Where: L = Taper length in feet
W = Width of offset in feet
S = Posted speed limit, off-peak 85th-percentile speed prior to work starting, or the anticipated operating speed in mph

** - Use for taper and tangent sections where there are no pavement markings or where there is a conflict between existing pavement markings and channelizers (CA).

TABLE 2

LONGITUDINAL BUFFER SPACE AND FLAGGER STATION SPACING

SPEED *	Min D **	DOWNGRADE Min D ***		
		-3%	-6%	-9%
mph	ft	ft	ft	ft
20	115	116	120	126
25	155	158	165	173
30	200	205	215	227
35	250	257	271	287
40	305	315	333	354
45	360	378	400	427
50	425	446	474	507
55	495	520	553	593
60	570	598	638	686
65	645	682	728	785
70	730	771	825	891

* - Speed is posted speed limit, off-peak 85th-percentile speed prior to work starting, or the anticipated operating speed in mph

** - Longitudinal buffer space or flagger station spacing

*** - Use on sustained downgrade steeper than -3 percent and longer than 1 mile.

TABLE 3

ADVANCE WARNING SIGN SPACING

ROAD TYPE	DISTANCE BETWEEN SIGNS *		
	A	B	C
	ft	ft	ft
URBAN - 25 mph OR LESS	100	100	100
URBAN - MORE THAN 25 mph TO 40 mph	250	250	250
URBAN - MORE THAN 40 mph	350	350	350
RURAL	500	500	500
EXPRESSWAY / FREEWAY	1000	1500	2640

* - The distances are approximate, are intended for guidance purposes only, and should be applied with engineering judgment. These distances should be adjusted by the Engineer for field conditions, if necessary, by increasing or decreasing the recommmended distances.

STATE OF CALIFORNIA
DEPARTMENT OF TRANSPORTATION

TRAFFIC CONTROL SYSTEM TABLES FOR LANE AND RAMP CLOSURES

NO SCALE

RSP T9 DATED JULY 19, 2013 SUPERSEDES RSP T9 DATED APRIL 19, 2013 THAT SUPPLEMENTS THE STANDARD PLANS BOOK DATED 2010.

REVISED STANDARD PLAN RSP T9

TO ACCOMPANY PLANS DATED 12-28-15

Dist	COUNTY	ROUTE	POST MILES TOTAL PROJECT	SHEET No.	TOTAL SHEETS
10	Mer	99	15.1/16.0	72	79

REGISTERED CIVIL ENGINEER

April 19, 2013
PLANS APPROVAL DATE

REGISTERED PROFESSIONAL ENGINEER Gurinderpal Bhullar No. C48815 Exp. 9-30-14 CIVIL STATE OF CALIFORNIA

THE STATE OF CALIFORNIA OR ITS OFFICERS OR AGENTS SHALL NOT BE RESPONSIBLE FOR THE ACCURACY OR COMPLETENESS OF SCANNED COPIES OF THIS PLAN SHEET.

NOTES: See Revised Standard Plan RSP T9 for tables.

Use cone spacing X for taper segment, Y for tangent segment or Z for conflict situations, as approriate, per Table 1, unless X, Y, or Z cone spacing is shown on this sheet.

Unless otherwise specified in the special provisions, all temporary warning signs shall have black legend on fluorescent orange background.

California codes are designated by (CA). Otherwise, Federal (MUTCD) codes are shown.

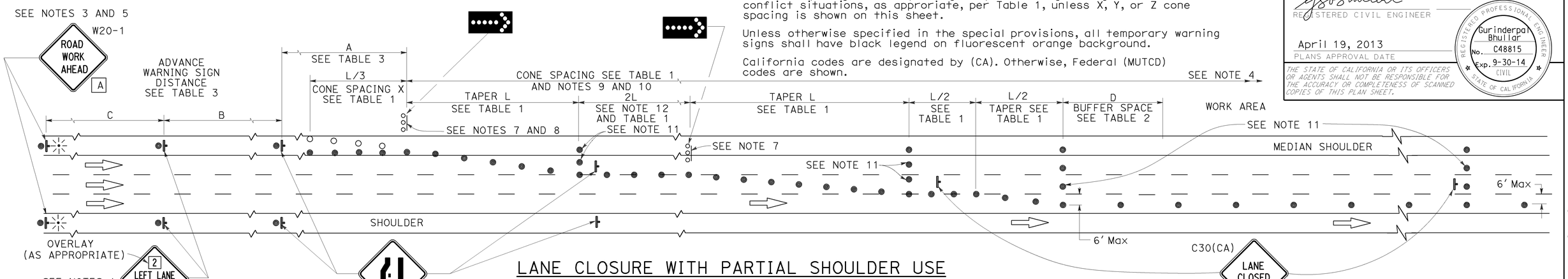

LANE CLOSURE WITH PARTIAL SHOULDER USE

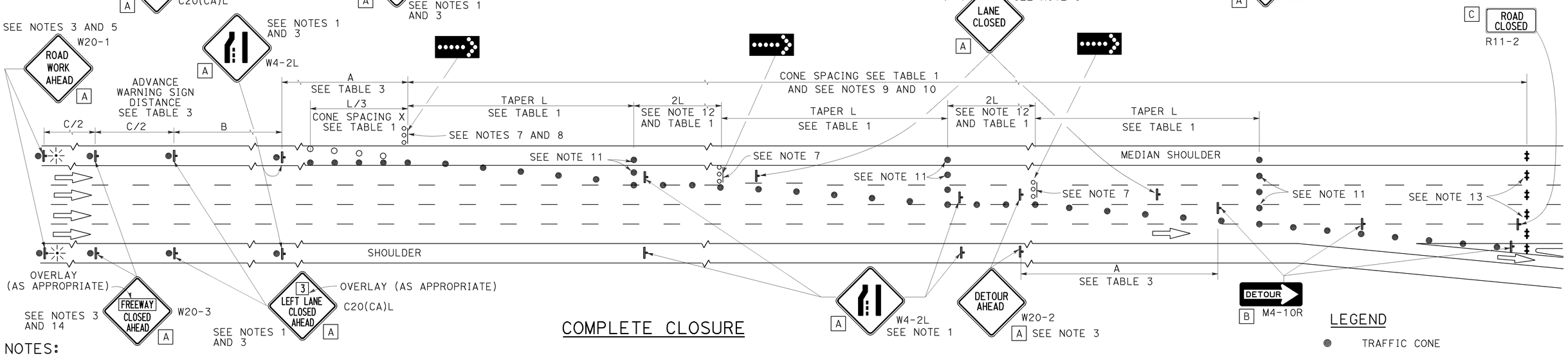

COMPLETE CLOSURE

NOTES:

1. Lane closures on the right side using partial median shoulder as a traffic lane shall conform to the details as shown except that C20(CA)R and W4-2R signs shall be used.
2. At least one person shall be assigned to provide full time maintenance of traffic control devices for lane closures.
3. Each advance warning sign on each side of the roadway shall be equipped with at least two flags for daytime closure. Each flag shall be at least 16" X 16" in size and shall be orange or fluorescent red-orange in color. Flashing beacons shall be placed at the locations indicated for lane closure during hours of darkness.
4. A G20-2 "END ROAD WORK" sign, with minimum size of 48" x 24" as appropriate, shall be placed at the end of the lane closure unless the end of work area is obvious or ends within a larger project's limits.
5. If the W20-1 sign would follow within 2000' of a stationary W20-1 or G20-1 "ROAD WORK NEXT ___ MILES", use a C20(CA) sign for the first advance warning sign.
6. Place a C30(CA) sign every 2000' throughout length of lane closure.
7. One flashing arrow sign for each lane closed. The flashing arrow signs shall be Type I.
8. A minimum 1500' of sight distance shall be provided where possible for vehicles approaching the first flashing arrow sign. Lane closures shall not begin at the top of crest vertical curve or on a horizontal curve.
9. All cones used for lane closures during the hours of darkness shall be fitted with retroreflective bands (or sleeves) as specified in the specifications.
10. Portable delineators, placed at one-half the spacing indicated for traffic cones, may be used instead of cones for daytime closures only.
11. Unless otherwise specified in the special provisions, a minimum of 3 cones shall be placed transversely across each closed lane and shoulder at each location where a taper across a traffic lane ends and every 2000' as shown on the "Lane Closure With Partial Shoulder Use" detail. Two Type II barricades may be used instead of the 3 cones. The transverse alignment of the cones or barricades on the closed shoulder may be shifted from the transverse alignment to provide access to the work.
12. Unless otherwise specified in the special provisions, the 2L tangent shown along lane lines shall be used between the L tapers required for each closed traffic lane.
13. A minimum of Two Type II or III barricades shall be placed across each closed lane and shoulder at the location shown and every 2000' within the complete closure area. Within the complete closure area, the transverse alignment of the barricades on the closed shoulder may be shifted from the transverse alignment to provide access to the work.
14. When specified in the special provisions, a W20-2 "DETOUR AHEAD" sign is to be used in place of the W20-3 "FREEWAY CLOSED AHEAD" sign.

SIGN PANEL SIZE (Min)

A	48" x 48"
B	48" x 18"
C	48" x 30"

LEGEND

- TRAFFIC CONE
- TRAFFIC CONE (OPTIONAL TAPER)
- TEMPORARY TRAFFIC CONTROL SIGN
- FLASHING ARROW SIGN (FAS)
- FAS SUPPORT OR TRAILER
- PORTABLE FLASHING BEACON

STATE OF CALIFORNIA
DEPARTMENT OF TRANSPORTATION

TRAFFIC CONTROL SYSTEM FOR LANE CLOSURES ON FREEWAYS AND EXPRESSWAYS

NO SCALE

RSP T10A DATED APRIL 19, 2013 SUPERSEDES STANDARD PLAN T10A DATED MAY 20, 2011 - PAGE 238 OF THE STANDARD PLANS BOOK DATED 2010.

REVISED STANDARD PLAN RSP T10A

2010 REVISED STANDARD PLAN RSP T10A

12-18-12

Dist	COUNTY	ROUTE	POST MILES TOTAL PROJECT	SHEET No.	TOTAL SHEETS
10	Mer	99	15.1/16.0	73	79

REGISTERED CIVIL ENGINEER

April 19, 2013
PLANS APPROVAL DATE

REGISTERED PROFESSIONAL ENGINEER
Gurinderpal Bhullar
No. C48815
Exp. 9-30-14
CIVIL
STATE OF CALIFORNIA

THE STATE OF CALIFORNIA OR ITS OFFICERS OR AGENTS SHALL NOT BE RESPONSIBLE FOR THE ACCURACY OR COMPLETENESS OF SCANNED COPIES OF THIS PLAN SHEET.

TO ACCOMPANY PLANS DATED 12-28-15

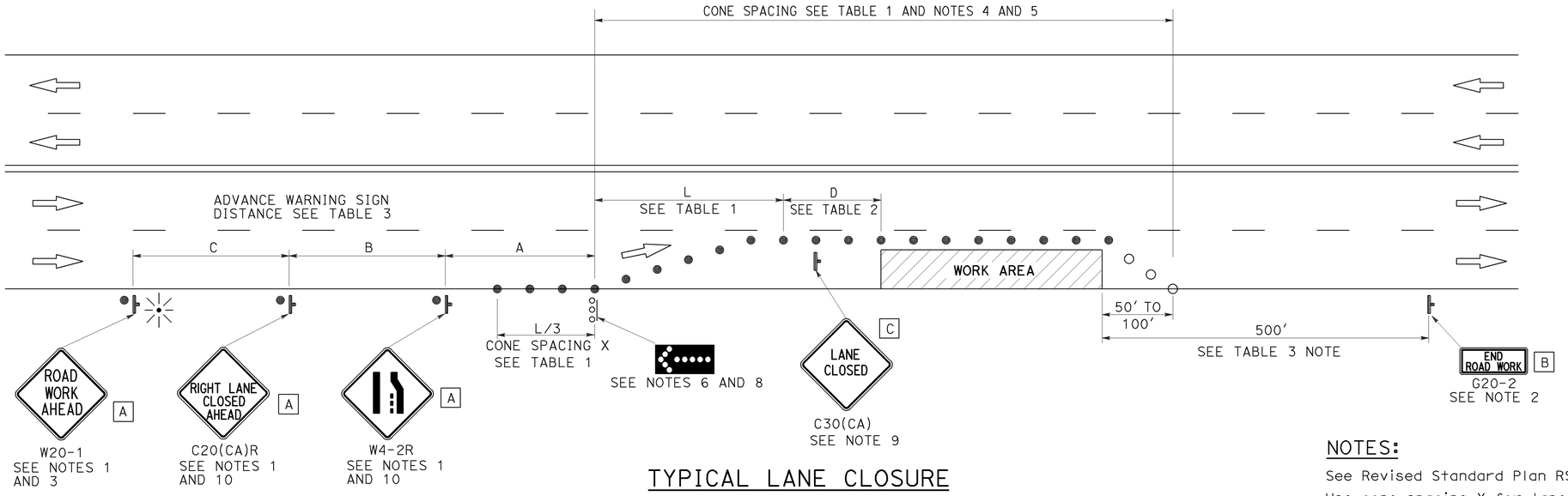

TYPICAL LANE CLOSURE

NOTES:

See Revised Standard Plan RSP T9 for tables.

Use cone spacing X for taper segment, Y for tangent segment or Z for conflict situations, as approriate, per Table 1, unless X, Y, or Z cone spacing is shown on this sheet.

Unless otherwise specified in the special provisions, all temporary warning signs shall have black legend on fluorescent orange background.

California codes are designated by (CA). Otherwise, Federal (MUTCD) codes are shown.

NOTES:

1. Each advance warning sign shall be equipped with at least two flags for daytime closure. Each flag shall be at least 16" x 16" in size and shall be orange or fluorescent red-orange in color. Flashing beacons shall be placed at the locations indicated for lane closure during hours of darkness.
2. A G20-2 "END ROAD WORK" sign, as appropriate, shall be placed at the end of the lane closure unless the end of work area is obvious, or ends within a larger project's limits.
3. If the W20-1 sign would follow within 2000' of a stationary W20-1 or G20-1 "ROAD WORK NEXT _____ MILES", use a C20(CA) sign for the first advance warning sign.
4. All cones used for lane closures during the hours of darkness shall be fitted with retroreflective bands (or sleeves) as specified in the specifications.
5. Portable delineators, placed at one-half the spacing indicated for traffic cones, may be used instead of cones for daytime closures only.
6. Flashing arrow sign shall be either Type I or Type II.
7. For approach speeds over 50 mph, use the "Traffic Control System for Lane Closure On Freeways And Expressways" plan for lane closure details and requirements.
8. A minimum 1500' of sight distance shall be provided where possible for vehicles approaching the first flashing arrow sign. Lane closures shall not begin at the top of crest vertical curve or on a horizontal curve.
9. Place a C30(CA) sign every 2000' throughout length of lane closure.
10. Median lane closures shall conform to the details as shown except that C20(CA)L and W4-2L signs shall be used.
11. At least one person shall be assigned to provide full time maintenance of traffic control devices for lane closure unless, otherwise directed by the Engineer.

LEGEND

- TRAFFIC CONE
- TRAFFIC CONE (OPTIONAL TAPER)
- TEMPORARY TRAFFIC CONTROL SIGN
- FLASHING ARROW SIGN (FAS)
- FAS SUPPORT OR TRAILER
- PORTABLE FLASHING BEACON

SIGN PANEL SIZE (Min)

A	48" x 48"
B	36" x 18"
C	30" x 30"

STATE OF CALIFORNIA
DEPARTMENT OF TRANSPORTATION

TRAFFIC CONTROL SYSTEM FOR LANE CLOSURE ON MULTILANE CONVENTIONAL HIGHWAYS

NO SCALE

RSP T11 DATED APRIL 19, 2013 SUPERSEDES STANDARD PLAN T11 DATED MAY 20, 2011 - PAGE 239 OF THE STANDARD PLANS BOOK DATED 2010.

REVISED STANDARD PLAN RSP T11

2010 REVISED STANDARD PLAN RSP T11

4-2-13

Dist	COUNTY	ROUTE	POST MILES TOTAL PROJECT	SHEET No.	TOTAL SHEETS
10	Mer	99	15.1/16.0	74	79

REGISTERED CIVIL ENGINEER

April 20, 2012
PLANS APPROVAL DATE

REGISTERED PROFESSIONAL ENGINEER Gary Wang No. C58298 Exp. 6-30-12 CIVIL STATE OF CALIFORNIA

THE STATE OF CALIFORNIA OR ITS OFFICERS OR AGENTS SHALL NOT BE RESPONSIBLE FOR THE ACCURACY OR COMPLETENESS OF SCANNED COPIES OF THIS PLAN SHEET.

TO ACCOMPANY PLANS DATED 12-28-15

2010 REVISED STANDARD PLAN RSP B3-3B

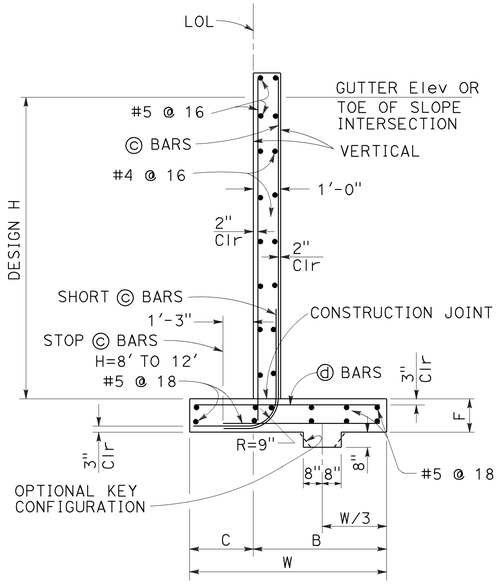

SPREAD FOOTING SECTION

Place concrete in toe against undisturbed material, except as permitted by the Engineer.

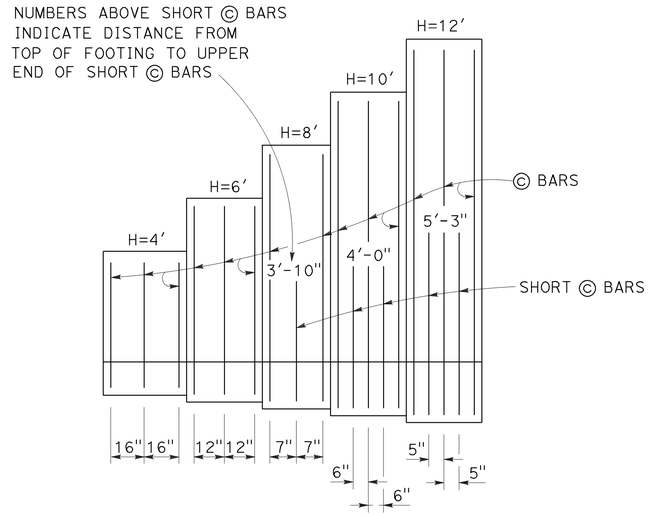

ELEVATION

DESIGN CONDITIONS:

Design H may be exceeded by 6" before going to the next size. Special footing design is required where foundation material is incapable of supporting bearing stress listed in the table.

DESIGN NOTES:

DESIGN: AASHTO LRFD Bridge Design Specifications, 4th Edition with California Amendments

LS: Varied surcharge on level ground surface

DC: Stem Architectural Treatment of thickness up to 6" of concrete (75 psf) considered

SEISMIC: $k_h = 0.2$
$k_v = 0.0$

SOIL: $\phi = 34°$
$\gamma = 120$ pcf

REINFORCED CONCRETE: $f'c = 3{,}600$ psi
$fy = 60{,}000$ psi

LOAD COMBINATIONS AND LIMIT STATES:

Service I	$Q = 1.00DC+1.00EV+1.00EH+1.00LS$
Strength I	$Q = \alpha DC+\phi EV+\eta EH+1.75LS$
Extreme I	$Q = 1.00DC+1.00EV+1.00EH+1.00EQD+1.00EQE$

Where:

Q:	Force Effects
α:	1.25 or 0.90, Whichever Controls Design
ϕ:	1.35 or 1.00, Whichever Controls Design
η:	1.50 or 0.90, Whichever Controls Design
DC:	Dead Load of Structure Components
EH:	Horizontal Earth Fill Pressure
EV:	Vertical Earth Pressure from Earth Fill Weight
LS:	Live Load Surcharge
EQE:	Seismic Earth Pressure
EQD:	Soil and Structural and Nonstructural Components Inertia

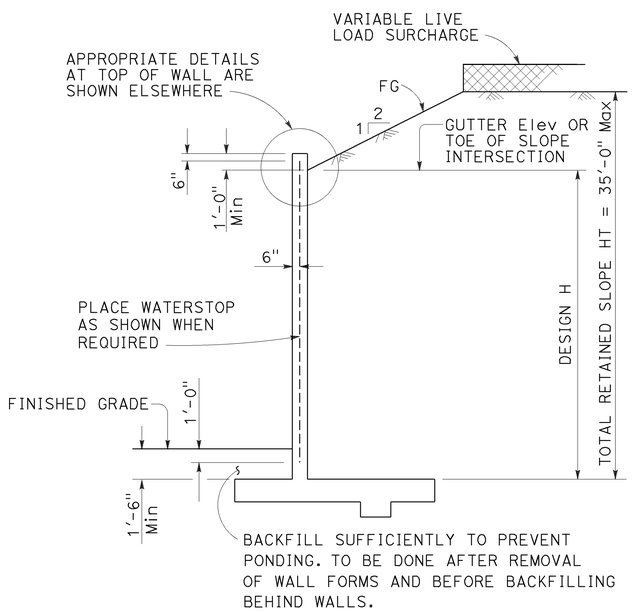

DESIGN SECTION

SYMBOLS:

Ser - service limit state I
Str - strength limit state I
Ext - extreme event limit state I
B' - effective footing width (ft)
q'_o - net bearing stress (ksf), OG assumed to be FG at toe
q_o - gross uniform bearing stress (ksf)

TABLE OF REINFORCING STEEL, DIMENSIONS AND DATA

DESIGN H	4'	6'	8'	10'	12'
W	5'-10"	7'-7"	9'-0"	11'-0"	12'-5"
C	2'-4"	2'-7"	3'-0"	3'-6"	4'-0"
B	3'-6"	5'-0"	6'-0"	7'-6"	8'-5"
F	1'-4"	1'-7"	1'-7"	1'-9"	1'-9"
© BARS	#5 @ 16	#5 @ 12	#5 @ 7	#6 @ 6	#7 @ 5
ⓓ BARS	#5 @ 16	#5 @ 12	#5 @ 7	#6 @ 6	#7 @ 5
Ser: B', q'_o	4.0, 0.8	5.6, 1.0	8.8, 1.1	10.6, 1.3	12.0, 1.6
Str: B', q_o	1.9, 2.0	3.5, 2.1	4.5, 2.3	6.5, 2.3	7.7, 2.5
Ext: B', q_o	2.8, 2.3	3.3, 3.3	3.9, 3.9	5.3, 4.1	5.9, 4.5

NOTES:

1. For details not shown and drainage notes see RSP B3-5
2. For wall stem joint details see B0-3 / 3-3 and B0-3 / 3-4
3. At © and short © bars:
   H ≤ 6', no splices are allowed within 1'-8" above the top of footing.
   H > 6', no splices are allowed within H/4 above the top of footing.

STATE OF CALIFORNIA
DEPARTMENT OF TRANSPORTATION

RETAINING WALL TYPE 1A (CASE 2)

NO SCALE

RSP B3-3B DATED APRIL 20, 2012 SUPPLEMENTS THE STANDARD PLANS BOOK DATED 2010.

REVISED STANDARD PLAN RSP B3-3B

2-22-12

Dist	COUNTY	ROUTE	POST MILES TOTAL PROJECT	SHEET No.	TOTAL SHEETS
10	Mer	99	15.1/16.0	75	79

REGISTERED CIVIL ENGINEER — DATE 11-06-15

12-28-15
PLANS APPROVAL DATE

REGISTERED PROFESSIONAL ENGINEER — C. Tong — No. 64543 — Exp. 6-30-17 — CIVIL — STATE OF CALIFORNIA

The State of California or its officers or agents shall not be responsible for the accuracy or completeness of scanned copies of this plan sheet.

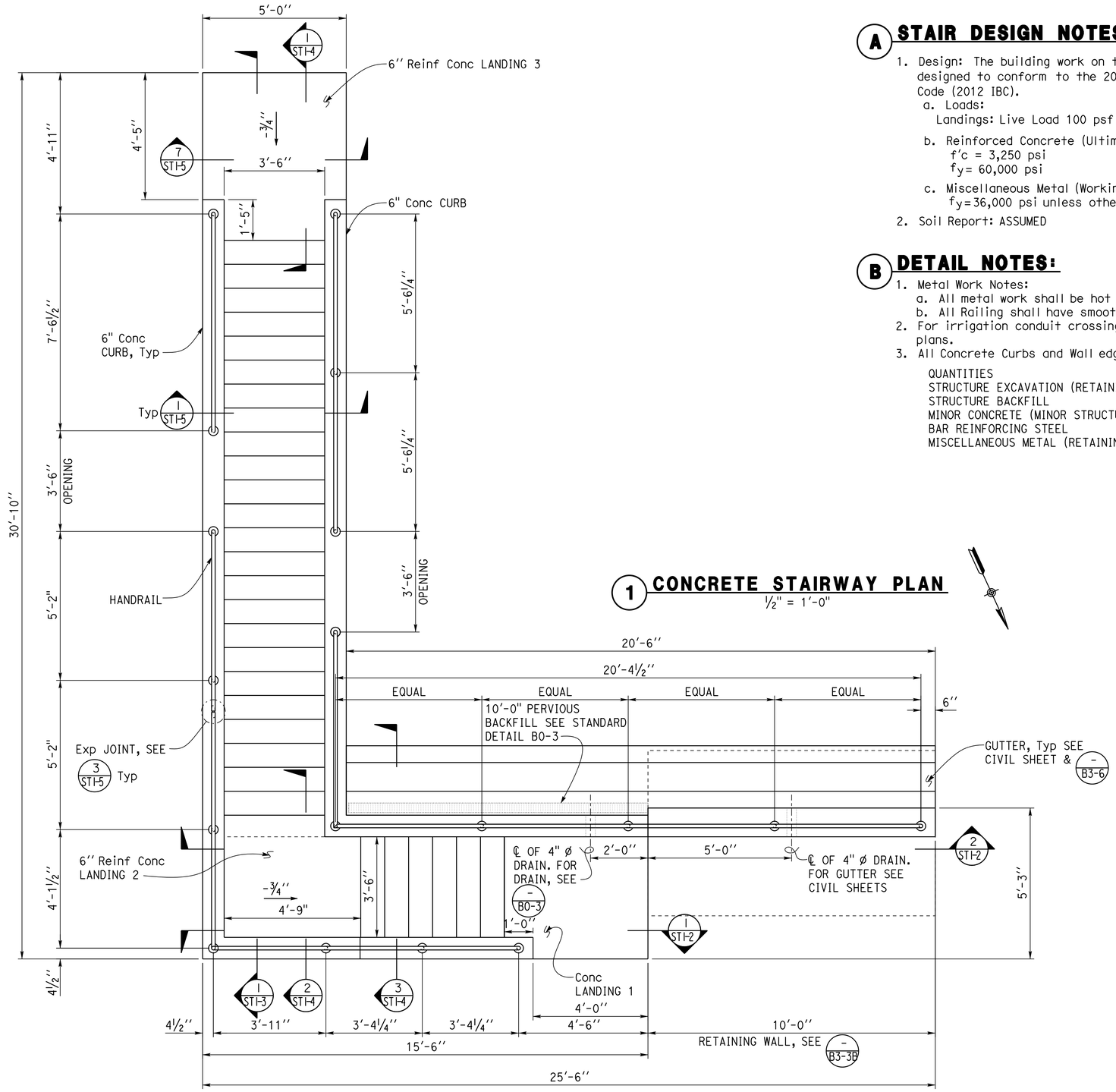

1 CONCRETE STAIRWAY PLAN

1/2" = 1'-0"

A STAIR DESIGN NOTES:

1. Design: The building work on this project has been designed to conform to the 2013 California Building Code (2012 IBC).
   a. Loads:
      Landings: Live Load 100 psf
   b. Reinforced Concrete (Ultimate Strength Design):
      $f'c$ = 3,250 psi
      f_y = 60,000 psi
   c. Miscellaneous Metal (Working Stress Design):
      f_y = 36,000 psi unless otherwise noted
2. Soil Report: ASSUMED

B DETAIL NOTES:

1. Metal Work Notes:
   a. All metal work shall be hot dip galvanized after fabrication
   b. All Railing shall have smooth edges.
2. For irrigation conduit crossing local See Irrigation & Planting plans.
3. All Concrete Curbs and Wall edges to be 3/4" Chamfered.

QUANTITIES

STRUCTURE EXCAVATION (RETAINING WALL)	16 CY
STRUCTURE BACKFILL	12 CY
MINOR CONCRETE (MINOR STRUCTURE)	23 CY
BAR REINFORCING STEEL	3,114 LB
MISCELLANEOUS METAL (RETAINING WALL)	362 LB

SYMBOLS

- ELEVATION OF WORKING POINT
- EARTH
- FREE DRAINING GRANULAR MATERIAL
- REINFORCED CONCRETE
- 3 / ST-1 — 5b: DETAIL NUMBER OR NOTE NUMBER; ADDITIONAL REFERENCE (IF REQUIRED); SHEET NUMBER
- LIMITS OF STRUCTURE BACKFILL (SHOWN ON PLAN VIEW)

ABBREVIATIONS

Alt	ALTERNATIVE
APC	ALTERNATIVE PIPE CULVERT
C-C	CENTER-TO-CENTER
Clr	CLEAR
Conc	CONCRETE
Const	CONSTRUCTION
EL	ELEVATION
(E)	EXISTING
Exp	EXPANSION
FG	FINISH GRADE
FL	FLOW LINE
GWT	GROUND WATER TABLE
Jt	JOINT
MEA	MECHANICAL EXPANSION ANCHOR
OH	OPPOSITE HAND
PP LOL	PUMPING PLANT LAYOUT LINE
RCP	REINFORCED CONCRETE PIPE
Sim	SIMILAR
Stagg	STAGGERED
Sym	SYMMETRICAL
Typ	TYPICAL

DESIGN ENGINEER

	BY	CHECKED
DESIGN	Thomas Thong	Tahir Rashid
DETAILS	Daniel Harakh	Thomas Thong
QUANTITIES		

STATE OF CALIFORNIA
DEPARTMENT OF TRANSPORTATION

DIVISION OF ENGINEERING SERVICES
ARCHITECTURAL AND STRUCTURAL DESIGN

BRIDGE No.
POST MILE 15.1/16.0

MERCED 99 ROADSIDE IMPROVEMENTS

STAIRS — CONCRETE STAIRWAY PLAN

SHEET ST1-1

TAEMWW Imperial - CCSC Rev. 02/13

ORIGINAL SCALE IN INCHES FOR REDUCED PLANS 0 1 2 3

UNIT: 3581 CONTRACT No.: 10-0X6304
PROJECT NUMBER & PHASE: 10130000931

DISREGARD PRINTS BEARING EARLIER REVISION DATES

REVISION DATES (PRELIMINARY STAGE ONLY): 04-15-15 04-23-15 07-09-15 07-13-15 08-17-15 08-26-15 10-28-15

SHEET 1 OF 5

04-JAN-2016 11:32

S:\tadelin\oadd\0x6301\Structures\st01_01.dgn

Dist	COUNTY	ROUTE	POST MILES TOTAL PROJECT	SHEET No.	TOTAL SHEETS
10	Mer	99	15.1/16.0	76	79

REGISTERED CIVIL ENGINEER — DATE 11-06-15

12-28-15
PLANS APPROVAL DATE

REGISTERED PROFESSIONAL ENGINEER C. Tong No. 64543 Exp. 6-30-17 CIVIL STATE OF CALIFORNIA

The State of California or its officers or agents shall not be responsible for the accuracy or completeness of scanned copies of this plan sheet.

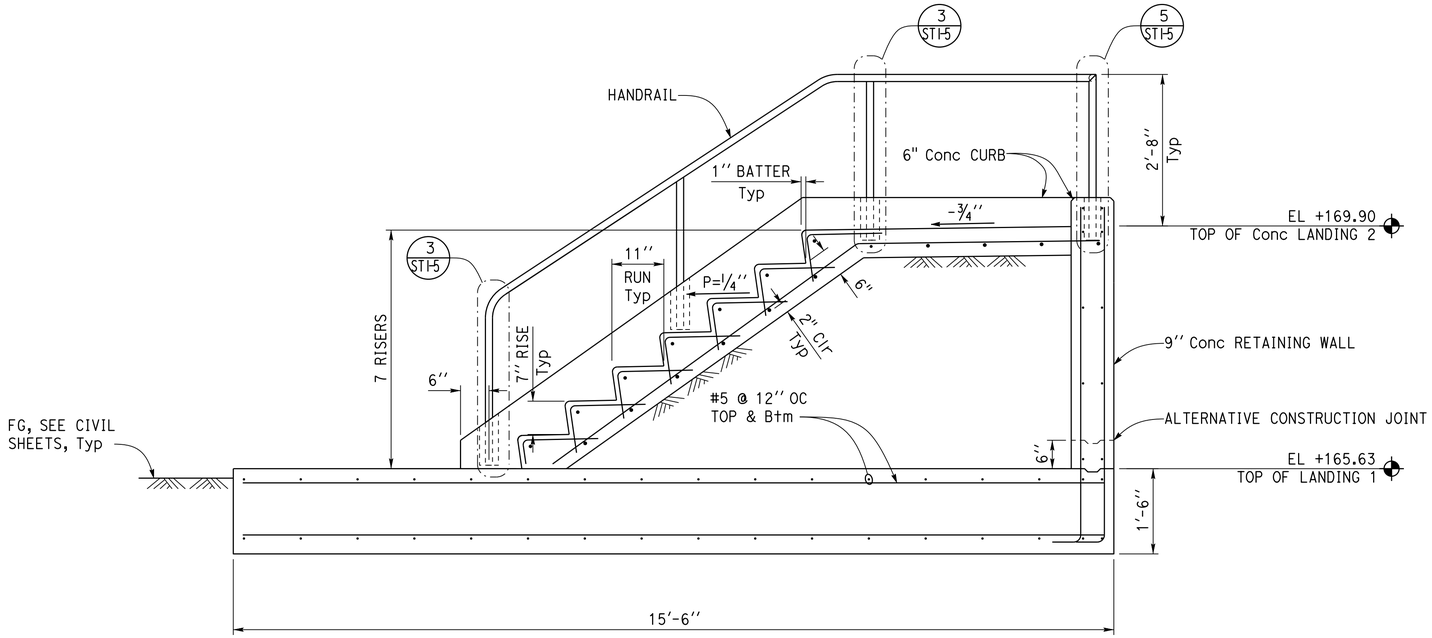

1 CONCRETE STAIRWAY 1 SECTION

3/4" = 1'-0"

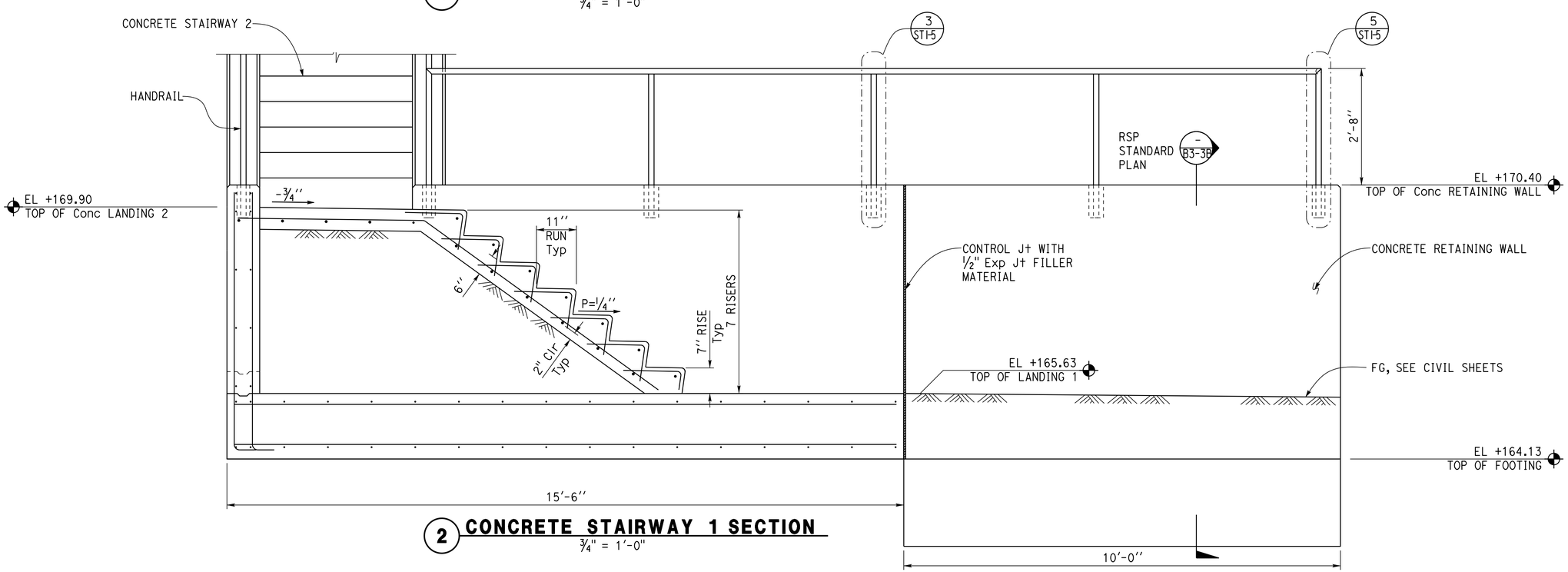

2 CONCRETE STAIRWAY 1 SECTION

3/4" = 1'-0"

	BY	CHECKED
DESIGN	Thomas Thong	Tahir Rashid
DETAILS	Daniel Harakh	Thomas Thong
QUANTITIES		

STATE OF CALIFORNIA
DEPARTMENT OF TRANSPORTATION

DIVISION OF ENGINEERING SERVICES
ARCHITECTURAL AND STRUCTURAL DESIGN

BRIDGE No.
POST MILE 15.1/16.0

MERCED 99 ROADSIDE IMPROVEMENTS

STAIRS — CONCRETE STAIRWAY 1 SECTIONS

SHEET ST1-2

TAEMWW Imperial - CCSC Rev. 02/13

ORIGINAL SCALE IN INCHES FOR REDUCED PLANS 0 1 2 3

UNIT: 3581 CONTRACT No.: 10-0X6304
PROJECT NUMBER & PHASE: 10130000931

DISREGARD PRINTS BEARING EARLIER REVISION DATES → 04-15-15 04-29-15 04-29-15 08-17-15 10-28-15

REVISION DATES (PRELIMINARY STAGE ONLY) — SHEET 2 OF 5

04-JAN-2016 11:32

S:\tadelin\addd\0x6301\Structures\st01_02.dgn

Dist	COUNTY	ROUTE	POST MILES TOTAL PROJECT	SHEET No.	TOTAL SHEETS
10	Mer	99	15.1/16.0	77	79

REGISTERED CIVIL ENGINEER — DATE 11-06-15

PLANS APPROVAL DATE 12-28-15

REGISTERED PROFESSIONAL ENGINEER C. Tong No. 64543 Exp. 6-30-17 CIVIL STATE OF CALIFORNIA

The State of California or its officers or agents shall not be responsible for the accuracy or completeness of scanned copies of this plan sheet.

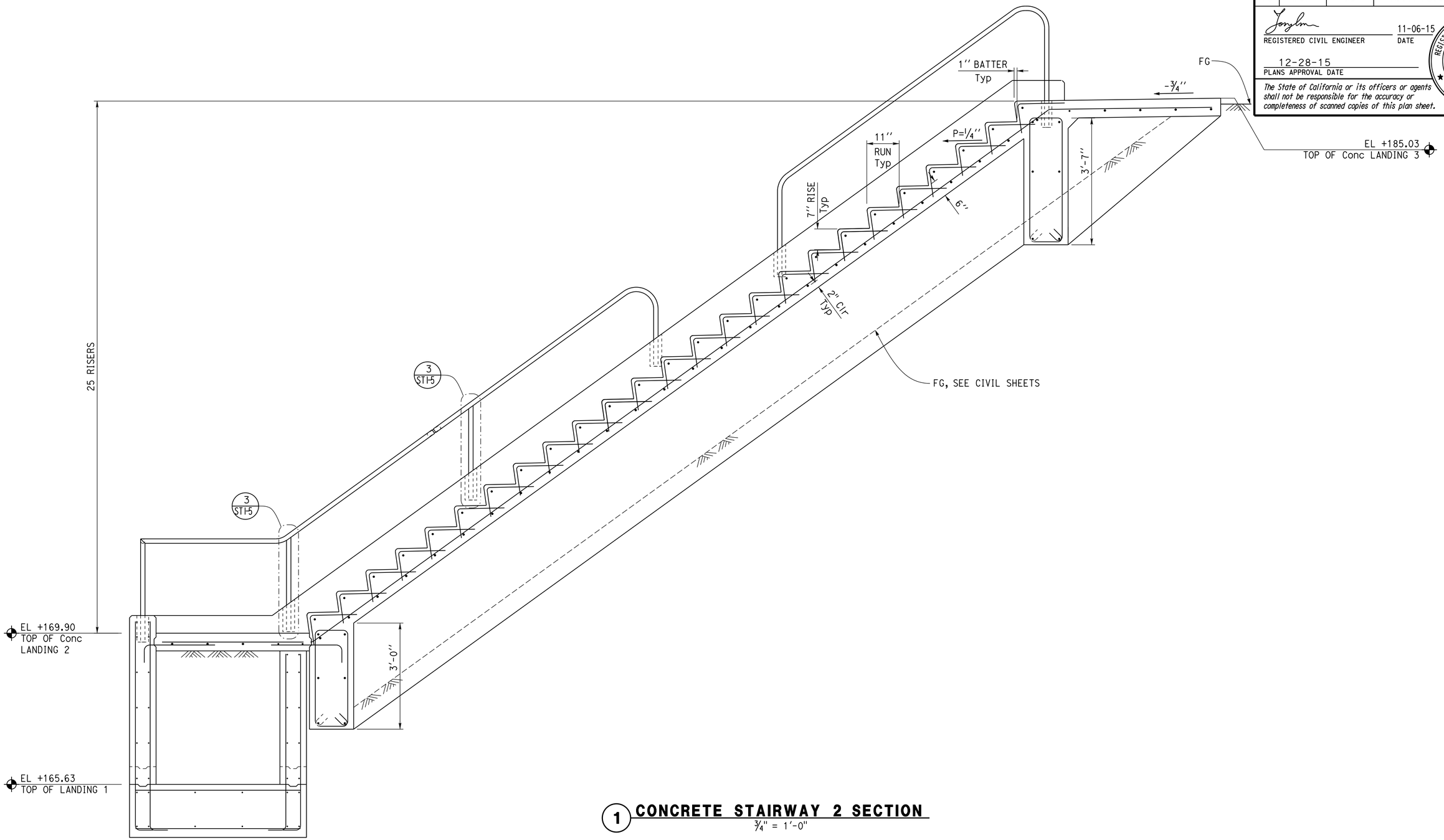

1 CONCRETE STAIRWAY 2 SECTION

3/4" = 1'-0"

DESIGN	BY Thomas Thong	CHECKED Tahir Rashid	
DETAILS	BY Daniel Harakh	CHECKED Thomas Thong	
QUANTITIES	BY	CHECKED	

STATE OF CALIFORNIA DEPARTMENT OF TRANSPORTATION

DIVISION OF ENGINEERING SERVICES ARCHITECTURAL AND STRUCTURAL DESIGN

BRIDGE No.

POST MILE 15.1/16.0

MERCED 99 ROADSIDE IMPROVEMENTS

STAIRS — CONCRETE STAIRWAY 2 SECTION

SHEET **ST1-3**

TAEMWW Imperial - CCSC Rev. 02/13

ORIGINAL SCALE IN INCHES FOR REDUCED PLANS 0 1 2 3

UNIT: 3581 CONTRACT No.: 10-0X6304
PROJECT NUMBER & PHASE: 10130000931

DISREGARD PRINTS BEARING EARLIER REVISION DATES → REVISION DATES (PRELIMINARY STAGE ONLY) 04-15-15 10-28-15

SHEET 3 OF 5

04-JAN-2016 11:32

S:\tadelin\qadd\0x6301\Structures\st01_03.dgn

Dist	COUNTY	ROUTE	POST MILES TOTAL PROJECT	SHEET No.	TOTAL SHEETS
10	Mer	99	15.1/16.0	78	79

REGISTERED CIVIL ENGINEER — DATE 11-06-15

12-28-15
PLANS APPROVAL DATE

REGISTERED PROFESSIONAL ENGINEER C. Tong No. 64543 Exp. 6-30-17 CIVIL STATE OF CALIFORNIA

The State of California or its officers or agents shall not be responsible for the accuracy or completeness of scanned copies of this plan sheet.

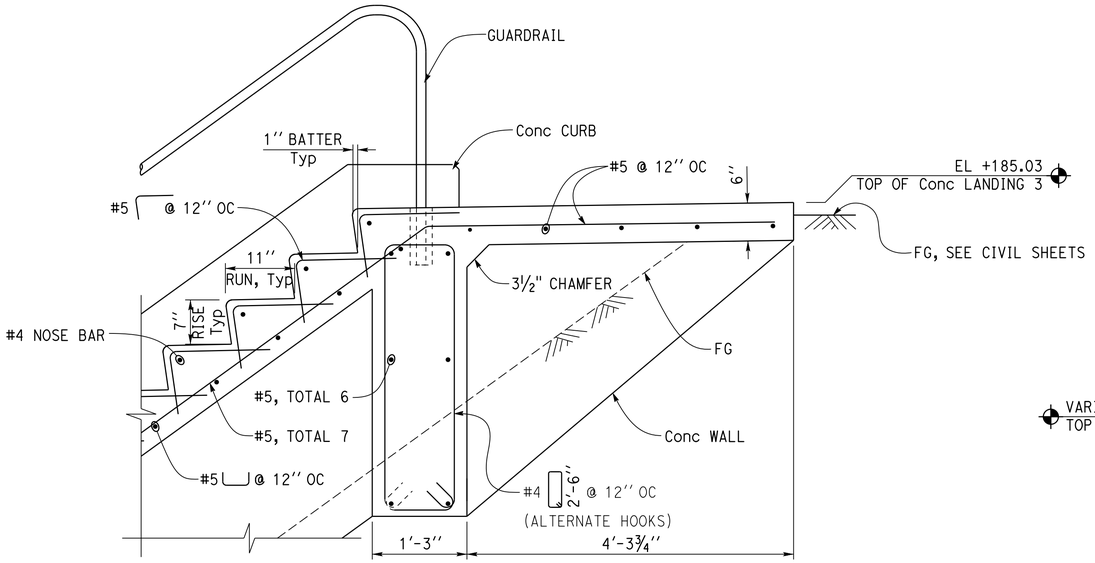

1 TOP OF STAIRWAY 2 AT LANDING 3

1" = 1'-0"

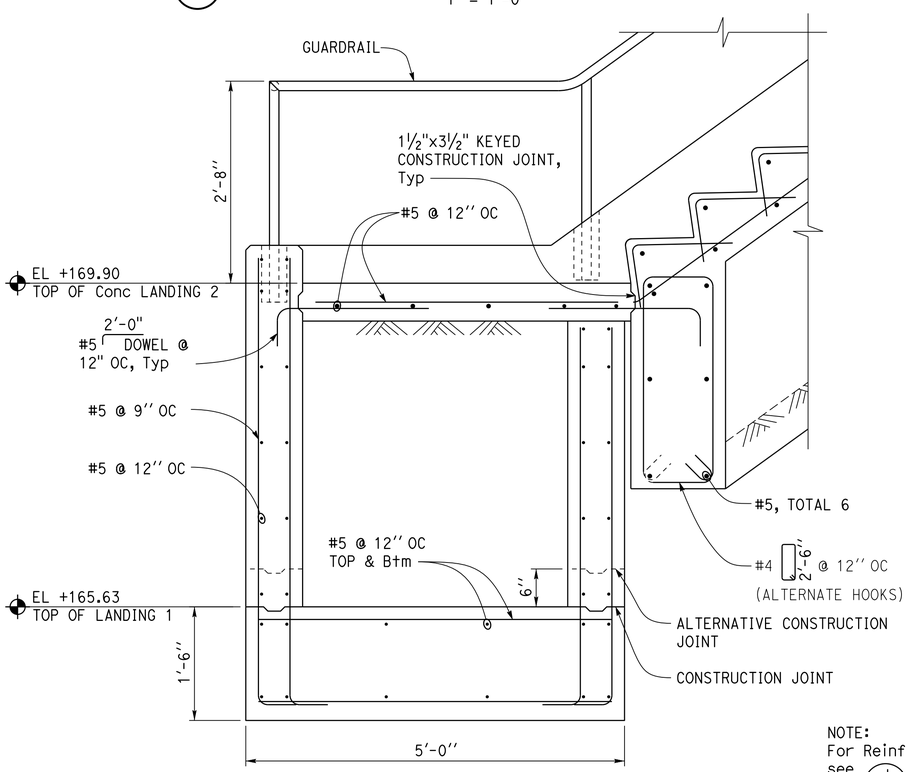

NOTE:
For Reinf not noted see 1

2 BOTTOM OF STAIRWAY 2 AT LANDING 2

1" = 1'-0"

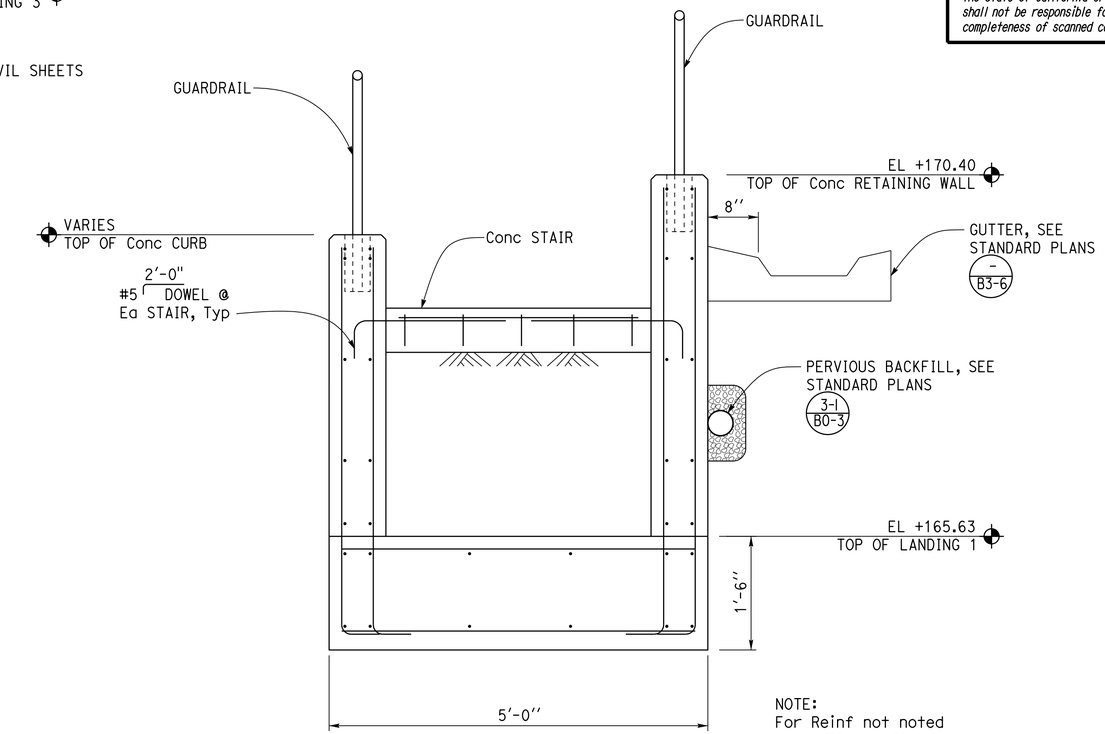

NOTE:
For Reinf not noted see 1 & 2

3 STAIR RISER AT STAIRWAY 1

1" = 1'-0"

DESIGN	BY Thomas Thong	CHECKED Tahir Rashid	
DETAILS	BY Daniel Harakh	CHECKED Thomas Thong	
QUANTITIES	BY	CHECKED	

STATE OF CALIFORNIA
DEPARTMENT OF TRANSPORTATION

DIVISION OF ENGINEERING SERVICES
ARCHITECTURAL AND STRUCTURAL DESIGN

BRIDGE No.
POST MILE 15.1/16.0

MERCED 99 ROADSIDE IMPROVEMENTS

STAIRS — STAIRWAY SECTIONS

SHEET **ST1-4**

TAEMWW Imperial - CCSC Rev. 02/13

ORIGINAL SCALE IN INCHES FOR REDUCED PLANS 0 1 2 3

UNIT: 3581 CONTRACT No.: 10-0X6304
PROJECT NUMBER & PHASE: 10130000931

DISREGARD PRINTS BEARING EARLIER REVISION DATES → 04-15-15 04-24-15 04-30-15 08-17-15 10-28-15

REVISION DATES (PRELIMINARY STAGE ONLY)

SHEET 4 OF 5

S:\tadelin\addd\0x6301\Structures\st01_04.dgn

04-JAN-2016 11:32

Dist	COUNTY	ROUTE	POST MILES TOTAL PROJECT	SHEET No.	TOTAL SHEETS
10	Mer	99	15.1/16.0	79	79

REGISTERED CIVIL ENGINEER — DATE 11-06-15

12-28-15
PLANS APPROVAL DATE

REGISTERED PROFESSIONAL ENGINEER C. Tong No. 64543 Exp. 6-30-17 CIVIL STATE OF CALIFORNIA

The State of California or its officers or agents shall not be responsible for the accuracy or completeness of scanned copies of this plan sheet.

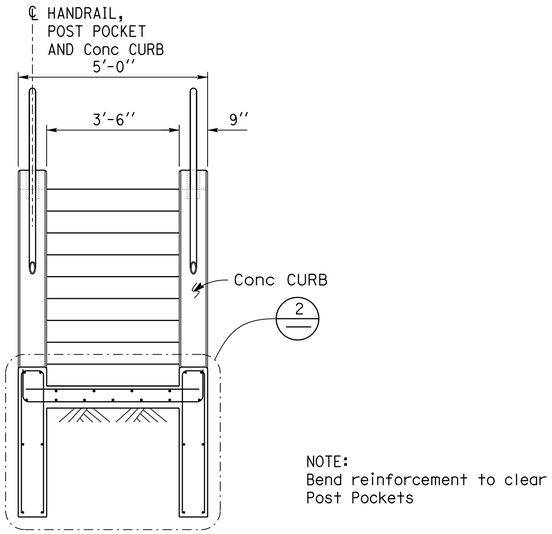

NOTE:
Bend reinforcement to clear Post Pockets

1 STAIRWAY 2 SECTION
1/2" = 1'-0"

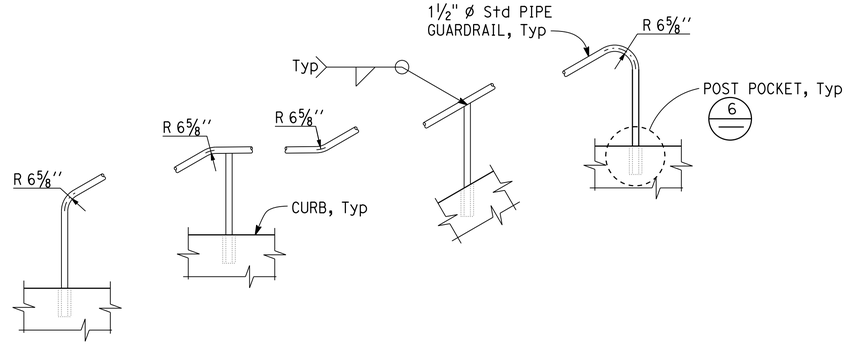

3 ACCESS STAIRWAY RAILING DETAILS
1/2" = 1'-0"

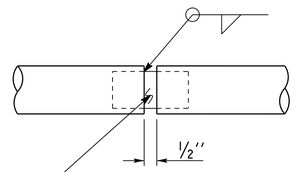

1 1/4" ø x 0'-5'' Std PIPE SLOTTED LONGITUDINALLY TO SLIP FIT INSIDE 1 1/2" ø Std PIPE GUARDRAIL

4 EXPANSION JOINT DETAIL AT 10'-0'' MAX
4" = 1'-0"

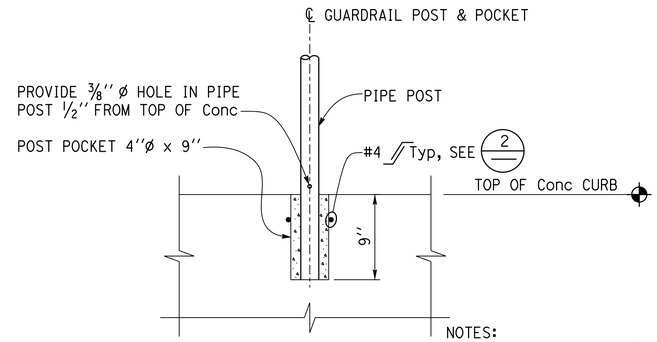

NOTES:
1. Pack post pocket with epoxy grout, Typ.
2. Conc Curb not shown

6 POST POCKET DETAIL
1 1/2" = 1'-0"

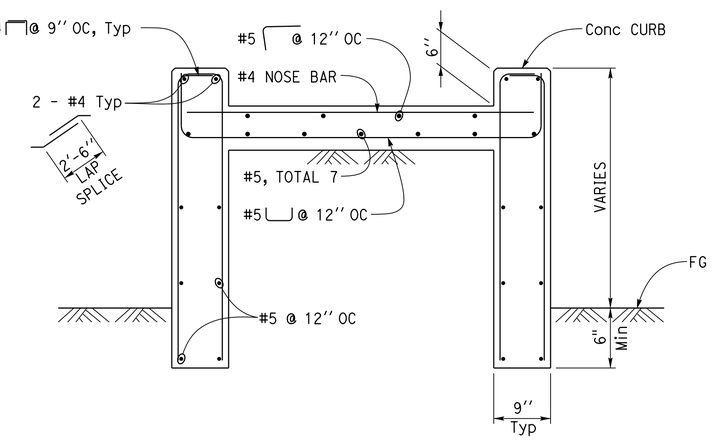

2 STAIRWAY 2 SECTION
1" = 1'-0"

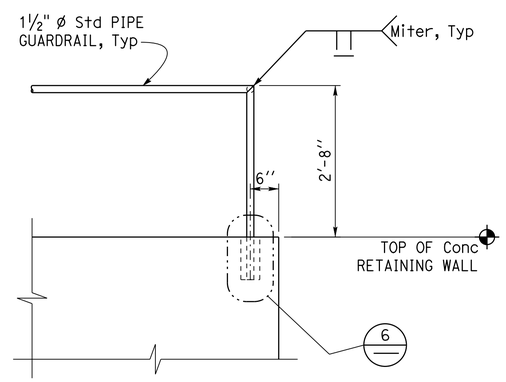

5 GUARDRAIL ELEVATION
3/4" = 1'-0"

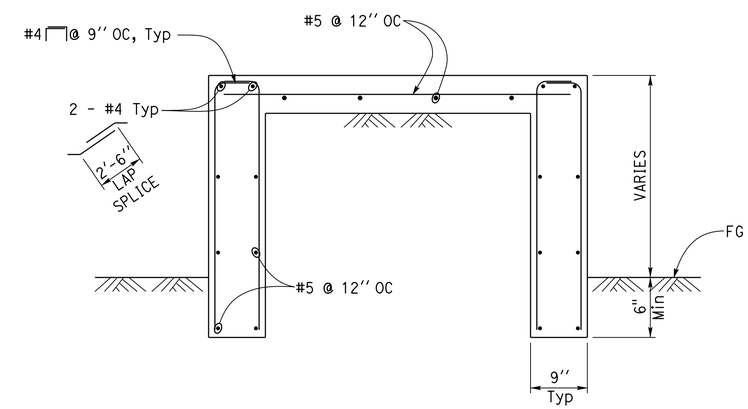

7 LANDING 3 SECTION
1" = 1'-0"

	BY	CHECKED
DESIGN	Thomas Thong	Tahir Rashid
DETAILS	Daniel Harakh	Thomas Thong
QUANTITIES		

STATE OF CALIFORNIA
DEPARTMENT OF TRANSPORTATION

DIVISION OF ENGINEERING SERVICES
ARCHITECTURAL AND STRUCTURAL DESIGN

BRIDGE No.
POST MILE 15.1/16.0

MERCED 99 ROADSIDE IMPROVEMENTS
STAIRS
STAIRWAY DETAILS

SHEET ST1-5

TAEMWW Imperial - CCSC Rev. 02/13

ORIGINAL SCALE IN INCHES FOR REDUCED PLANS 0 1 2 3

UNIT: 3581 CONTRACT No.: 10-0X6304
PROJECT NUMBER & PHASE: 10130000931

DISREGARD PRINTS BEARING EARLIER REVISION DATES → 04-15-15 05-01-15 10-28-15

REVISION DATES (PRELIMINARY STAGE ONLY) SHEET 5 OF 5

04-JAN-2016 11:32

S:\tadelin\oadd\0x6301\Structures\st01_05.dgn