| Dist | COUNTY | ROUTE | POST MILES TOTAL PROJECT | SHEET No. | TOTAL SHEETS |
|---|---|---|---|---|---|
| 10 | Mer | 5 | 21.4 | 1 | 42 |

ACIM-005-5(145)406E

STATE OF CALIFORNIA
# DEPARTMENT OF TRANSPORTATION

## PROJECT PLANS FOR CONSTRUCTION ON
# STATE HIGHWAY
## IN MERCED COUNTY
## AT SANTA NELLA
## AT SAN LUIS WASTEWAY BRIDGE

TO BE SUPPLEMENTED BY STANDARD PLANS DATED 2010

INDEX OF PLANS


| SHEET NO. | DESCRIPTION |
|---|---|
| 1 | TITLE AND LOCATION MAP |
| 2 | TYPICAL CROSS SECTIONS |
| 3-4 | CONSTRUCTION DETAILS |
| 5 | CONSTRUCTION AREA SIGNS |
| 6-8 | MOTORIST INFORMATION PLANS, DETAILS AND QUANTITIES |
| 9-13 | STAGE CONSTRUCTION PLANS AND QUANTITIES |
| 14-18 | TRAFFIC HANDLING PLANS AND QUANTITIES |
| 19-20 | SUMMARY OF QUANTITIES |
| 21-37 | REVISED STANDARD PLANS |

STRUCTURE PLANS

38-42 SAN LUIS WASTEWAY BRIDGE Br No. 39-0167L/R


THE STANDARD PLANS LIST APPLICABLE TO THIS CONTRACT IS INCLUDED IN THE NOTICE TO BIDDERS AND SPECIAL PROVISIONS BOOK.

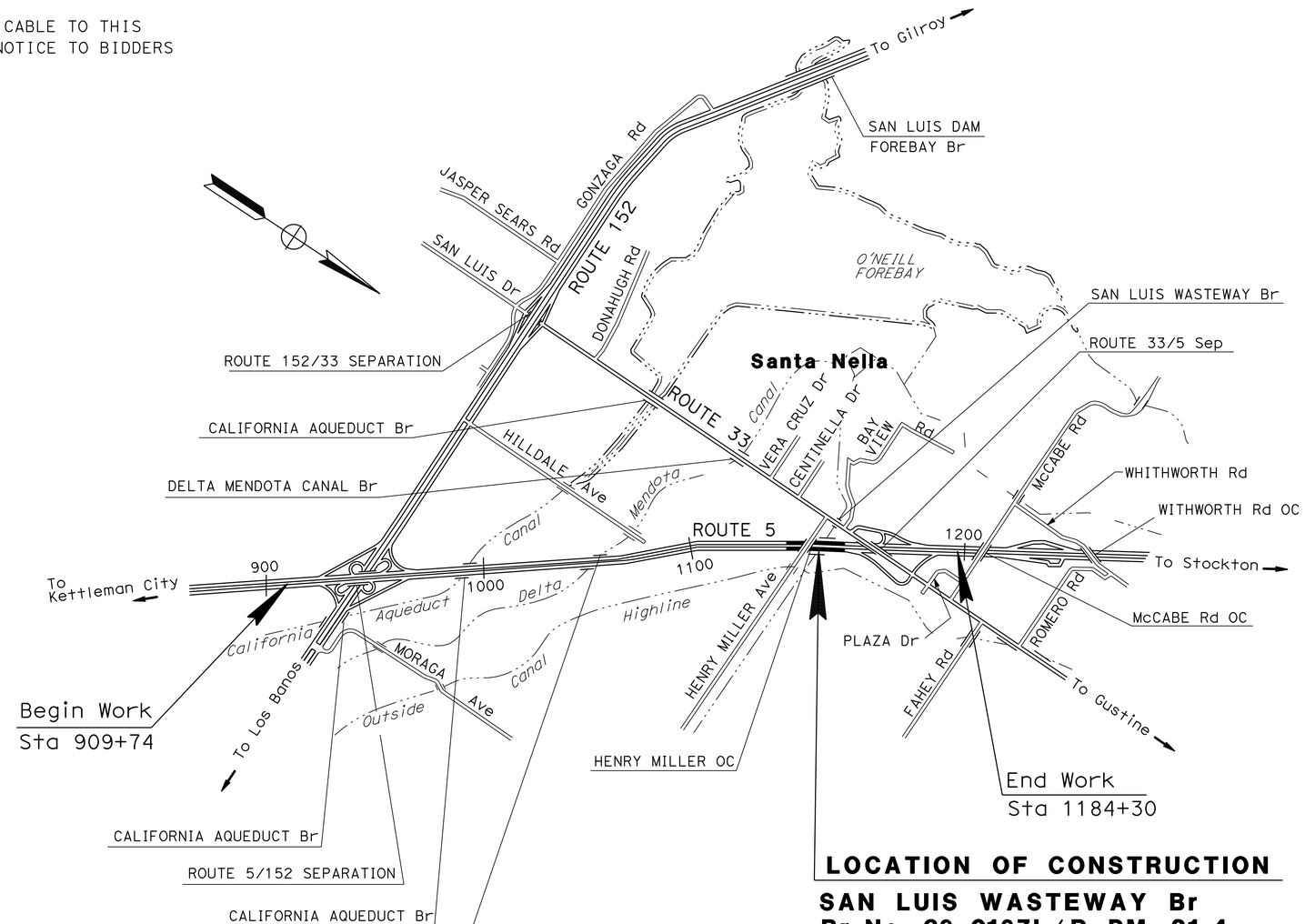


**LOCATION OF CONSTRUCTION**

**SAN LUIS WASTEWAY Br**
**Br No. 39-0167L/R PM 21.4**

LOCATION MAP

Rhodel De Claro 4/2/14
PROJECT ENGINEER REGISTERED CIVIL ENGINEER — DATE

December 29, 2014
PLANS APPROVAL DATE

REGISTERED PROFESSIONAL ENGINEER
RHODEL De CLARO
No. 74058
Exp. 06/30/15
CIVIL
STATE OF CALIFORNIA

*THE STATE OF CALIFORNIA OR ITS OFFICERS OR AGENTS SHALL NOT BE RESPONSIBLE FOR THE ACCURACY OR COMPLETENESS OF SCANNED COPIES OF THIS PLAN SHEET.*

PROJECT MANAGER: ALVIN MANGINDIN
DESIGN ENGINEER: ALVIN MANGINDIN

THE CONTRACTOR SHALL POSSESS THE CLASS (OR CLASSES) OF LICENSE AS SPECIFIED IN THE "NOTICE TO BIDDERS."

NO SCALE

| CONTRACT No. | 10-0X6104 |
|---|---|
| PROJECT ID | 1013000003 |

LAST REVISION 00-00-00 — DATE PLOTTED => 30-MAR-2015 TIME PLOTTED => 15:19

| Dist | COUNTY | ROUTE | POST MILES TOTAL PROJECT | SHEET No. | TOTAL SHEETS |
|---|---|---|---|---|---|
| 10 | Mer | 5 | 21.4 | 2 | 42 |

Rhodel De Claro 4/2/14
REGISTERED CIVIL ENGINEER DATE

12-29-14
PLANS APPROVAL DATE

REGISTERED PROFESSIONAL ENGINEER RHODEL De CLARO No. 74058 Exp. 6/30/15 CIVIL STATE OF CALIFORNIA

*THE STATE OF CALIFORNIA OR ITS OFFICERS OR AGENTS SHALL NOT BE RESPONSIBLE FOR THE ACCURACY OR COMPLETENESS OF SCANNED COPIES OF THIS PLAN SHEET.*

## NOTES:

1. DIMENSIONS OF PAVEMENT STRUCTURES (STRUCTURAL SECTIONS) ARE SUBJECT TO TOLERANCES SPECIFIED IN THE STANDARD SPECIFICATIONS.
2. FOR ACCURATE RIGHT OF WAY DATA, CONTACT RIGHT OF WAY ENGINEERING AT THE DISTRICT OFFICE.
3. EXISTING UTILITY FACILITIES HAVE NOT BEEN PLOTTED ON THESE PLANS.
4. FOR COLD PLANE AC PAVEMENT DIMENSIONS AND LOCATIONS, SEE CONSTRUCTION DETAILS AND SUMMARY OF QUANTITIES SHEET.
5. FOR GUARDRAIL, DOUBLE THRIE BEAM BARRIER, SHOULDER RUMBLE STRIP (HMA, GROUND-IN INDENTATIONS), HMA DIKE, AND SHOULDER BACKING LOCATIONS, SEE SUMMARY OF QUANTITIES.

## ABBREVIATION:

RSC - RAPID STRENGTH CONCRETE

## DESIGN DESIGNATION

| | | | |
|---|---|---|---|
| ADT (2015) | 30,400 | D | 60% |
| ADT (2035) | 31,100 | T | 20% |
| DHV | 3,100 | V | 70 mph |
| ESAL | 4,950 | $TI_{20}$ | 14.5 |

PAVEMENT CLIMATE REGION: INLAND VALLEY

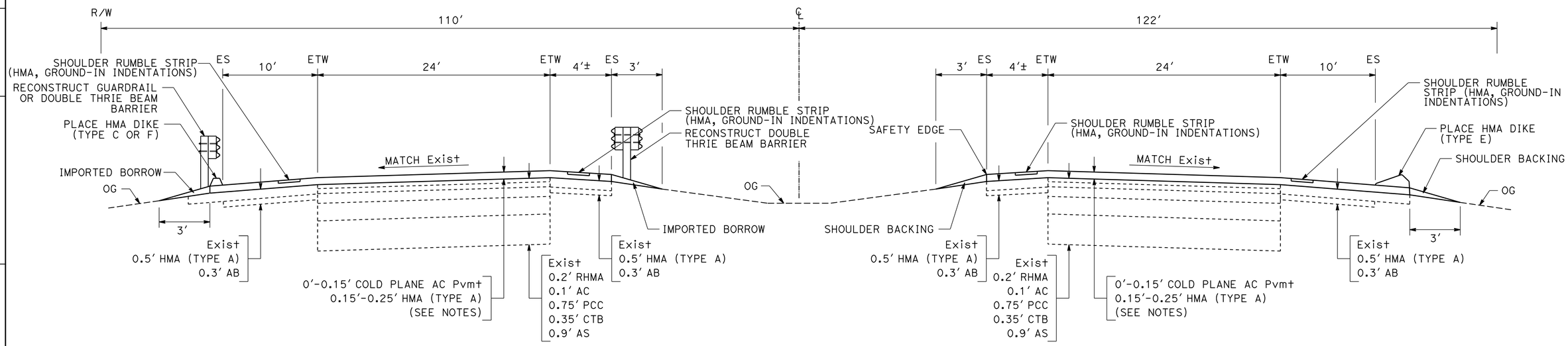


Sta 1132+93 TO 1133+67
SOUTHBOUND
(EB)

Sta 1132+16 TO 1132+91
NORTHBOUND
(EB)

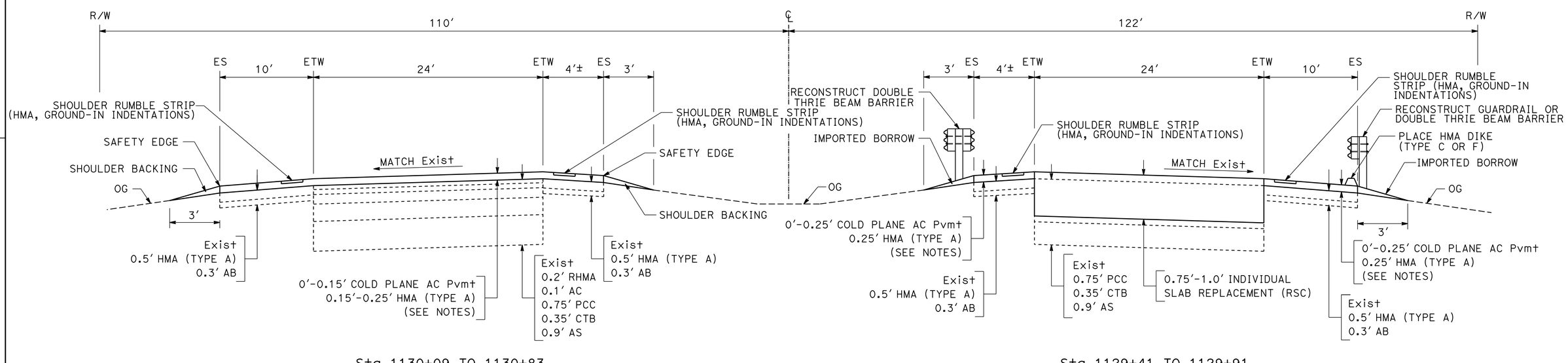


Sta 1130+09 TO 1130+83
SOUTHBOUND
(BB)

Sta 1129+41 TO 1129+91
NORTHBOUND
(BB)

PM 21.4
**ROUTE 5**

# TYPICAL CROSS SECTIONS

NO SCALE

**X-1**

STATE OF CALIFORNIA - DEPARTMENT OF TRANSPORTATION
Caltrans®
**MAINTENANCE**

FUNCTIONAL SUPERVISOR: ALVIN MANGINDIN
CALCULATED-DESIGNED BY: RHODEL DE CLARO
CHECKED BY: JOSE A. ALICEA II
REVISED BY: RDC
DATE REVISED: 04/01/14

LAST REVISION 00-00-00
DATE PLOTTED => 14-JAN-2015
TIME PLOTTED => 16:31

| Dist | COUNTY | ROUTE | POST MILES TOTAL PROJECT | SHEET No. | TOTAL SHEETS |
|---|---|---|---|---|---|
| 10 | Mer | 5 | 21.4 | 3 | 42 |

Rhodel De Claro 4/2/14
REGISTERED CIVIL ENGINEER DATE

12-29-14
PLANS APPROVAL DATE

REGISTERED PROFESSIONAL ENGINEER RHODEL De CLARO No. 74058 Exp. 6/30/15 CIVIL STATE OF CALIFORNIA

*THE STATE OF CALIFORNIA OR ITS OFFICERS OR AGENTS SHALL NOT BE RESPONSIBLE FOR THE ACCURACY OR COMPLETENESS OF SCANNED COPIES OF THIS PLAN SHEET.*

## NOTES:

1. SEE STRUCTURE PLANS FOR WORK ON STRUCTURES.
2. EXISTING UTILITY FACILITIES HAVE NOT BEEN PLOTTED ON THESE PLANS.

## ABBREVIATION:

RSC - RAPID STRENGTH CONCRETE

## LEGEND:

- COLD PLANE AC PAVEMENT HMA (TYPE A)
- INDIVIDUAL SLAB REPLACEMENT (RSC)
- ROADWAY EXCAVATION SHOULDER BACKING
- SHOULDER RUMBLE STRIP (HMA, GROUND-IN INDENTATIONS)

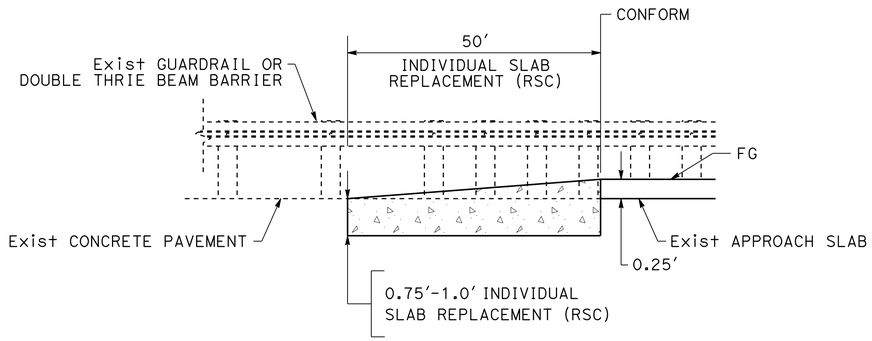


NB (BB)

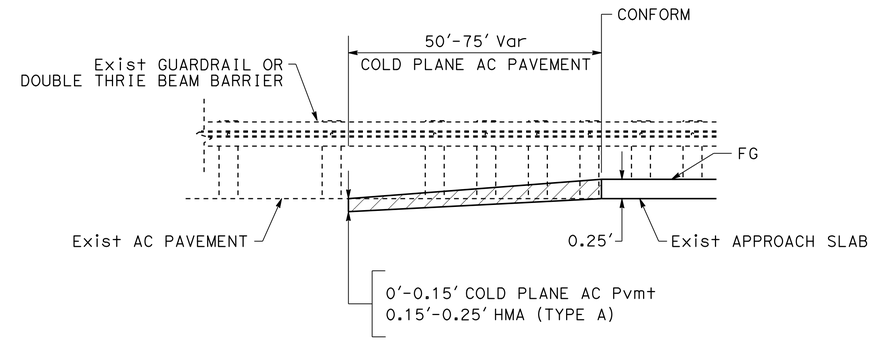


SB (BB, EB),
NB (EB)

## LONGITUDINAL CONFORM TAPERS AT APPROCH SLABS

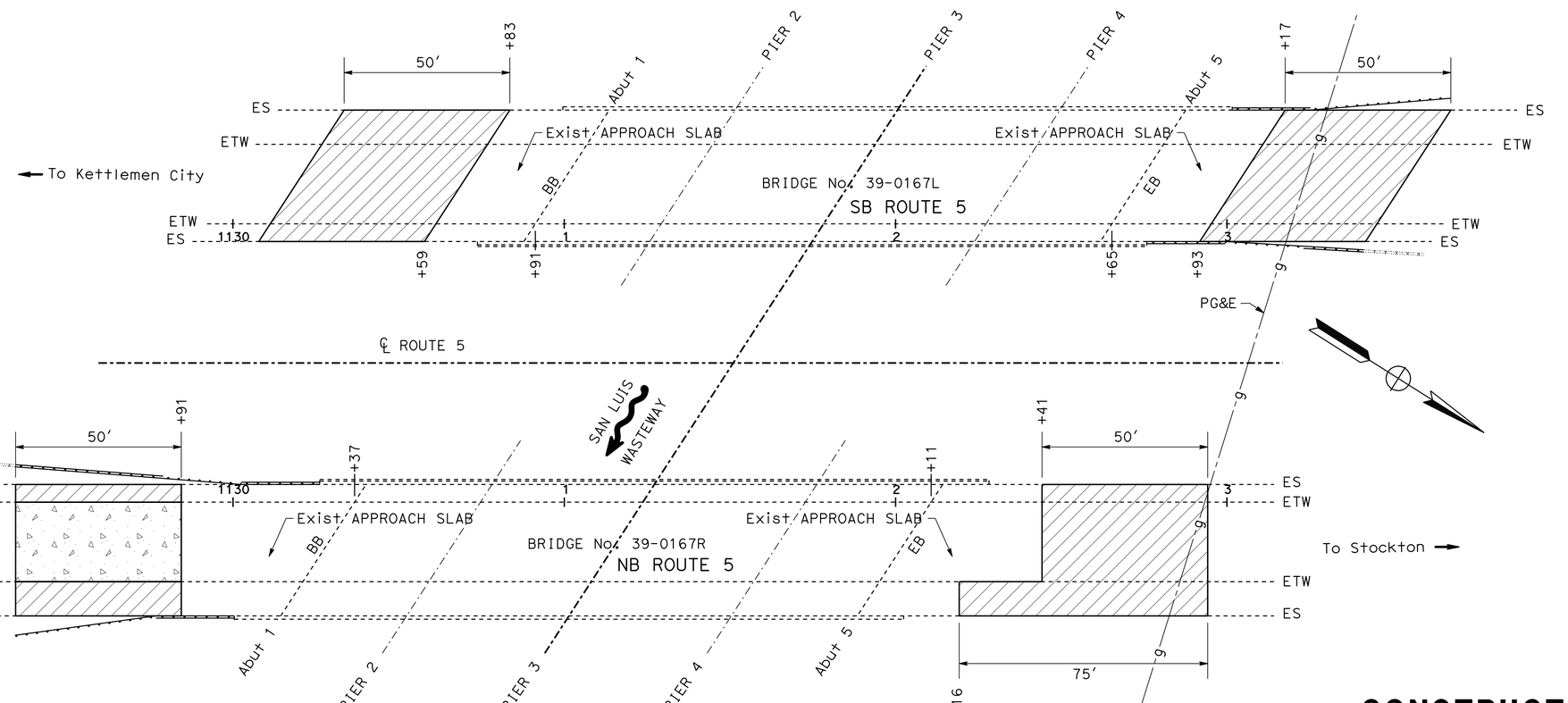


## CONFORM TAPERS LAYOUT

# CONSTRUCTION DETAILS

NO SCALE

**C-1**

| RDC | 04/14/14 |
|---|---|
| REVISED BY | DATE REVISED |
| RHODEL DE CLARO | JOSE A. ALICEA II |
| CALCULATED-DESIGNED BY | CHECKED BY |
| FUNCTIONAL SUPERVISOR | ALVIN MANGINDIN |

STATE OF CALIFORNIA - DEPARTMENT OF TRANSPORTATION
Caltrans
MAINTENANCE

LAST REVISION 00-00-00 | DATE PLOTTED => 14-JAN-2015 | TIME PLOTTED => 16:31

| Dist | COUNTY | ROUTE | POST MILES TOTAL PROJECT | SHEET No. | TOTAL SHEETS |
|---|---|---|---|---|---|
| 10 | Mer | 5 | 21.4 | 4 | 42 |

Rhodel De Claro 4/2/14
REGISTERED CIVIL ENGINEER DATE

12-29-14
PLANS APPROVAL DATE

REGISTERED PROFESSIONAL ENGINEER RHODEL De CLARO No. 74058 Exp. 6/30/15 CIVIL STATE OF CALIFORNIA

*THE STATE OF CALIFORNIA OR ITS OFFICERS OR AGENTS SHALL NOT BE RESPONSIBLE FOR THE ACCURACY OR COMPLETENESS OF SCANNED COPIES OF THIS PLAN SHEET.*

## NOTES (THIS SHEET ONLY):

1. REMOVE STAGE CONSTRUCTION 1A SHOULDER WIDENING (RIGHT) AND REPLACE WITH SHOULDER BACKING (SEE SECTION A-A).
2. SEE SUMMARY OF QUANTITIES FOR SHOULDER RUMBLE STRIP (HMA, GROUND-IN INDENTATIONS) AND HMA DIKE LOCATIONS.

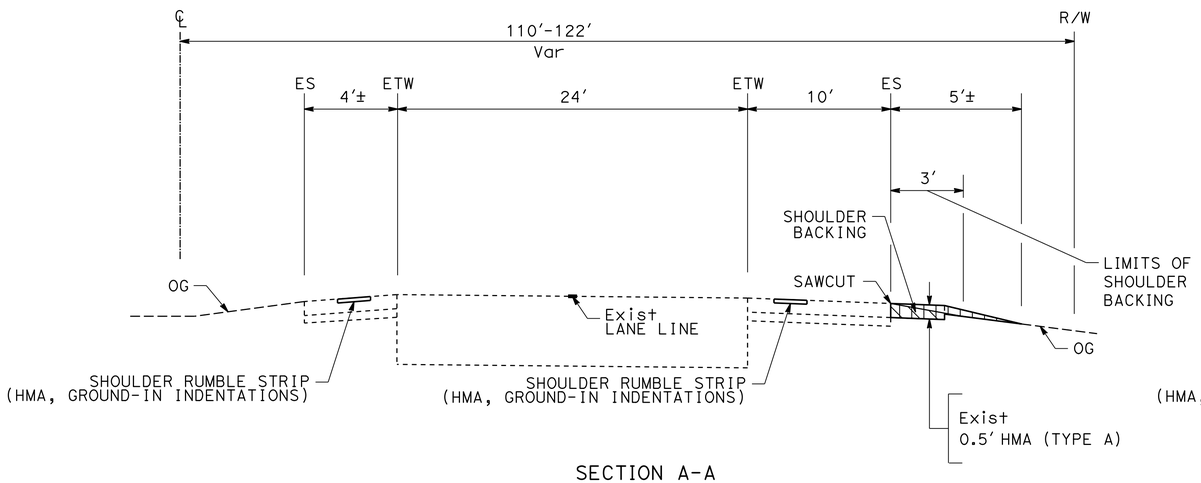


SECTION A-A
Sta 1125+91 TO 1129+91 (NB)
Sta 1126+59 TO 1130+87 (SB)

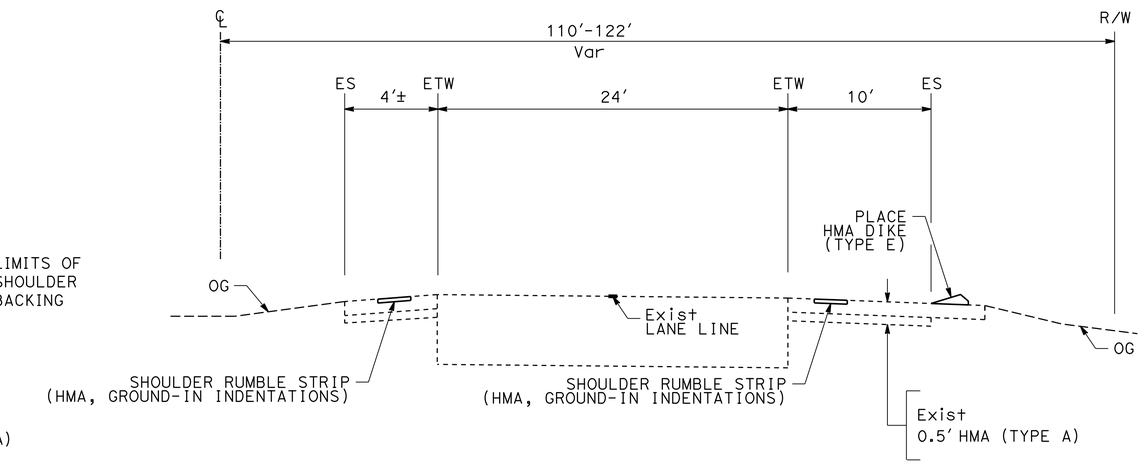


SECTION B-B
Sta 1132+16 TO 1136+41 (NB)
Sta 1132+96 TO 1137+21 (SB)

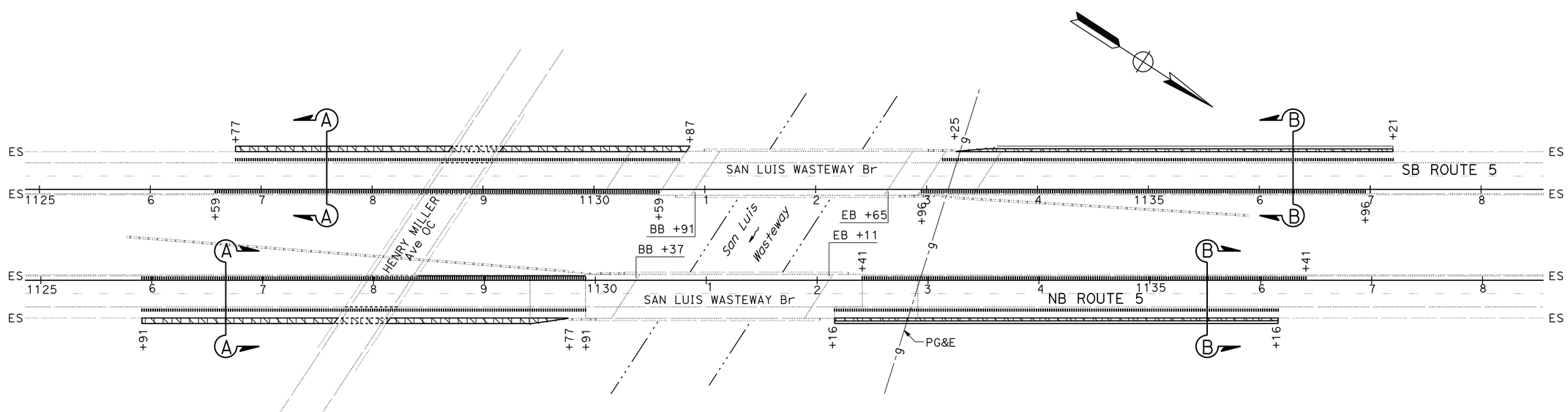


# CONSTRUCTION DETAILS
NO SCALE

**C-2**

| RDC | 04/14/14 |
|---|---|
| REVISED BY | DATE REVISED |
| RHODEL DE CLARO | JOSE A. ALICEA II |
| CALCULATED-DESIGNED BY | CHECKED BY |
| FUNCTIONAL SUPERVISOR | ALVIN MANGINDIN |

STATE OF CALIFORNIA - DEPARTMENT OF TRANSPORTATION
Caltrans
MAINTENANCE

LAST REVISION 00-00-00
DATE PLOTTED => 14-JAN-2015
TIME PLOTTED => 16:31

| Dist | COUNTY | ROUTE | POST MILES TOTAL PROJECT | SHEET No. | TOTAL SHEETS |
|---|---|---|---|---|---|
| 10 | Mer | 5 | 21.4 | 5 | 42 |

REGISTERED CIVIL ENGINEER 4/2/14 DATE

12-29-14
PLANS APPROVAL DATE

REGISTERED PROFESSIONAL ENGINEER RHODEL De CLARO No. 74058 Exp. 6/30/15 CIVIL STATE OF CALIFORNIA

*THE STATE OF CALIFORNIA OR ITS OFFICERS OR AGENTS SHALL NOT BE RESPONSIBLE FOR THE ACCURACY OR COMPLETENESS OF SCANNED COPIES OF THIS PLAN SHEET.*

NOTES:

1. EXACT SIGN LOCATIONS TO BE DETERMINED BY THE ENGINEER.
2. SEE TRAFFIC HANDLING PLAN, TRAFFIC HANDLING QUANTITIES, AND MOTORIST INFORMATION QUANTITIES FOR ADDITIONAL STATIONARY MOUNTED CONSTRUCTION AREA SIGNS.

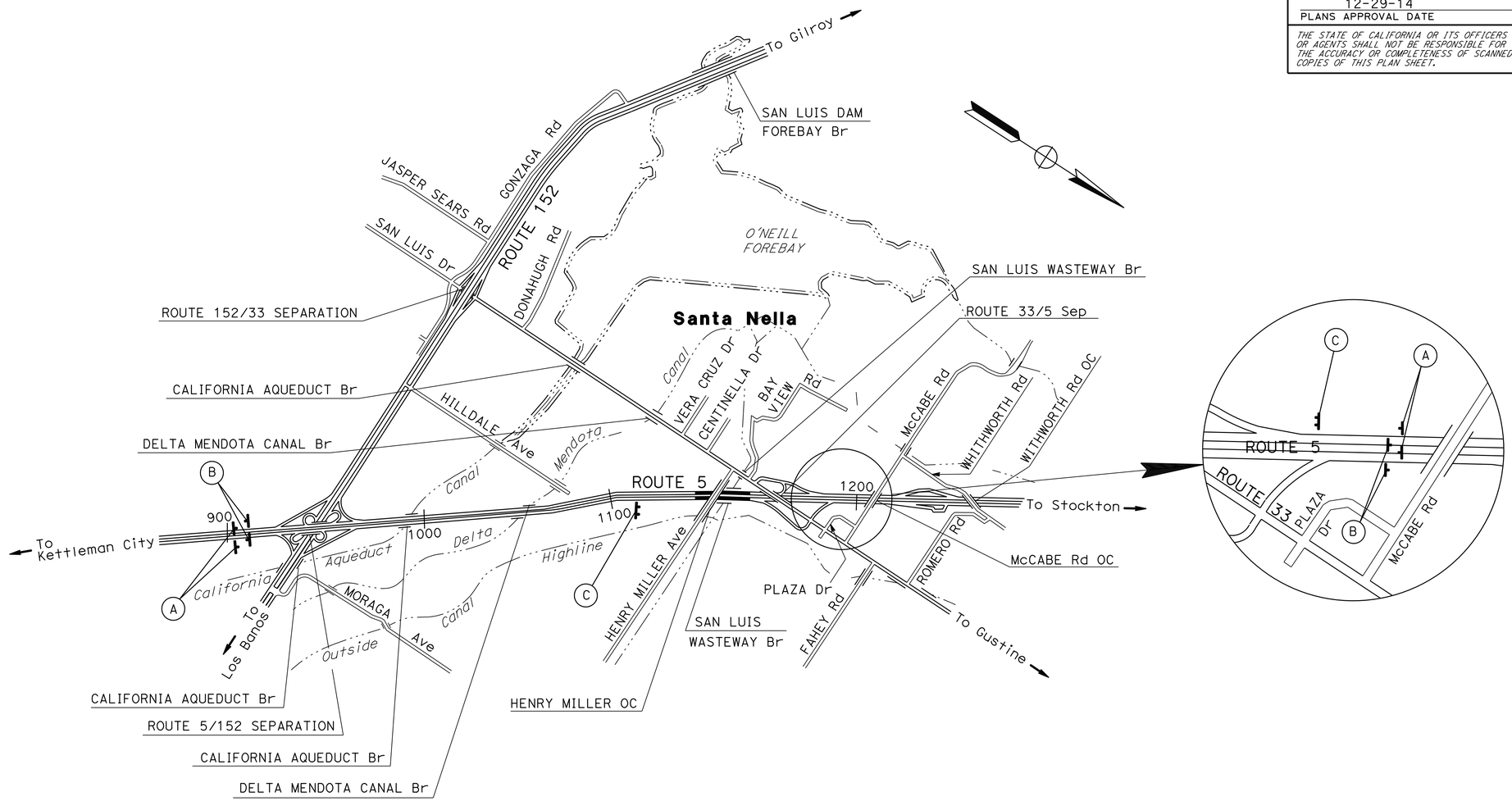


## STATIONARY MOUNTED CONSTRUCTION AREA SIGNS

| SIGN | SIGN CODE | | PANEL SIZE | No. OF POSTS AND SIZE | SIGN MESSAGE |
|---|---|---|---|---|---|
| | FEDERAL | STATE | | | |
| A | W20-1 | | 48" x 48" | 1 - 6" x 6" | ROAD WORK AHEAD |
| B | G20-2 | | 36" x 18" | 1 - 4" x 4" | END ROAD WORK |
| C | | CPFIS | 132" x 184" | 2 - 6" x 6" | CONSTRUCTION PROJECT FUNDING IDENTIFICATION SIGNS |

*APPROVED FOR CONSTRUCTION AREA SIGN WORK ONLY*

# CONSTRUCTION AREA SIGNS

NO SCALE

**CS-1**

STATE OF CALIFORNIA - DEPARTMENT OF TRANSPORTATION
Caltrans
MAINTENANCE

FUNCTIONAL SUPERVISOR: ALVIN MANGINDIN
CALCULATED-DESIGNED BY: RHODEL DE CLARO
CHECKED BY: JOSE A. ALICEA II
REVISED BY: RDC
DATE REVISED: 04/07/14

LAST REVISION 00-00-00
DATE PLOTTED => 14-JAN-2015
TIME PLOTTED => 16:31

| Dist | COUNTY | ROUTE | POST MILES TOTAL PROJECT | SHEET No. | TOTAL SHEETS |
|---|---|---|---|---|---|
| 10 | Mer | 5 | 21.4 | 6 | 42 |

REGISTERED CIVIL ENGINEER 4/4/14 DATE

12-29-14
PLANS APPROVAL DATE

REGISTERED PROFESSIONAL ENGINEER HUE NGUYEN No. 74484 Exp. 12/31/15 CIVIL STATE OF CALIFORNIA

*THE STATE OF CALIFORNIA OR ITS OFFICERS OR AGENTS SHALL NOT BE RESPONSIBLE FOR THE ACCURACY OR COMPLETENESS OF SCANNED COPIES OF THIS PLAN SHEET.*

## LEGEND:

I - PORTABLE CHANGEABLE MESSAGE SIGN (PCMS)

(xx) - CONSTRUCTION AREA SIGN No.

## NOTES:

1. EXACT PCMS LOCATIONS SHALL BE DETERMINED BY THE ENGINEER.
2. DURING THE SB RTE 5 LANE CLOSURE, THE PCMS SHALL READ THE FOLLOWING MESSAGES:

PCMS M: SB RTE 5 HEAVY TRAFFIC → USE DETOUR

PCMS D: BRIDGE WORK AHEAD → ONE LANE AHEAD

PCMS E: ONE LANE AHEAD → EXPECT DELAYS

PCMS F: EXPECT DELAYS → USE DETOUR → →

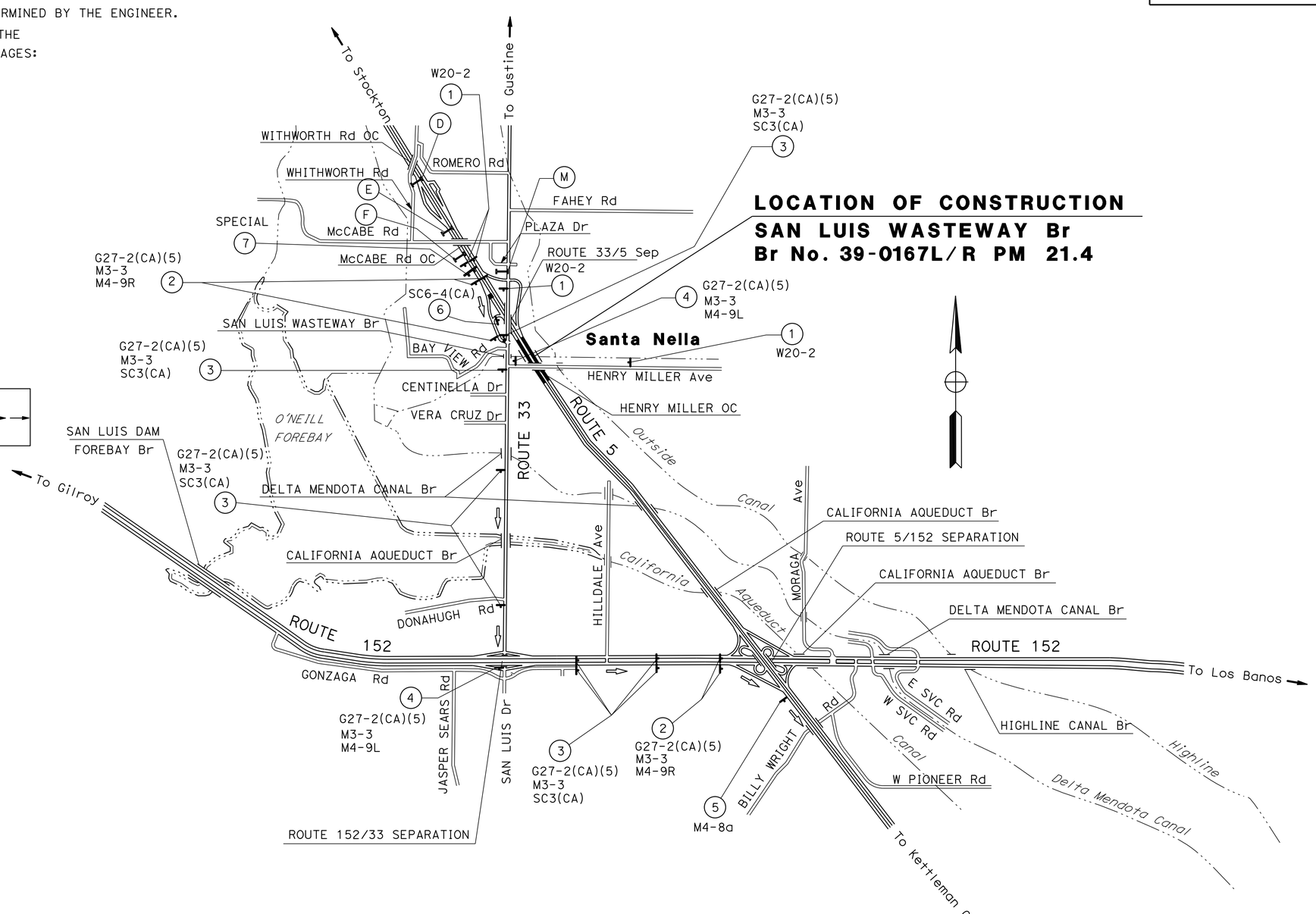


# MOTORIST INFORMATION PLAN
## DETOUR PLAN

NO SCALE

**MI-1**

*APPROVED FOR MOTORIST INFORMATION WORK ONLY*

STATE OF CALIFORNIA - DEPARTMENT OF TRANSPORTATION
Caltrans® TRAFFIC DESIGN

FUNCTIONAL SUPERVISOR: MOHAMMED QATAMI
CALCULATED-DESIGNED BY: RAJINI TEKALKOTE
CHECKED BY: HUE NGUYEN
REVISED BY: RT, RT, RT
DATE REVISED: 01-12-15, 04-07-14, 01-23-14

LAST REVISION 00-00-00
DATE PLOTTED => 14-JAN-2015
TIME PLOTTED => 16:31

| Dist | COUNTY | ROUTE | POST MILES TOTAL PROJECT | SHEET No. | TOTAL SHEETS |
|---|---|---|---|---|---|
| 10 | Mer | 5 | 21.4 | 7 | 42 |

REGISTERED CIVIL ENGINEER 4/4/14 DATE

12-29-14
PLANS APPROVAL DATE

REGISTERED PROFESSIONAL ENGINEER HUE NGUYEN No. 74484 Exp. 12/31/15 CIVIL STATE OF CALIFORNIA

*THE STATE OF CALIFORNIA OR ITS OFFICERS OR AGENTS SHALL NOT BE RESPONSIBLE FOR THE ACCURACY OR COMPLETENESS OF SCANNED COPIES OF THIS PLAN SHEET.*

NOTE:

1. DURING THE NB RTE 5 LANE CLOSURE, THE PCMS SHALL READ THE FOLLOWING MESSAGES:

PCMS N

NB RTE 5 HEAVY TRAFFIC → USE DETOUR

PCMS A

BRIDGE WORK 3 MI AHEAD → ONE LANE AHEAD

PCMS B

EXPECT DELAYS → USE DETOUR → →

PCMS C

BRIDGE WORK AHEAD → ONE LANE AHEAD

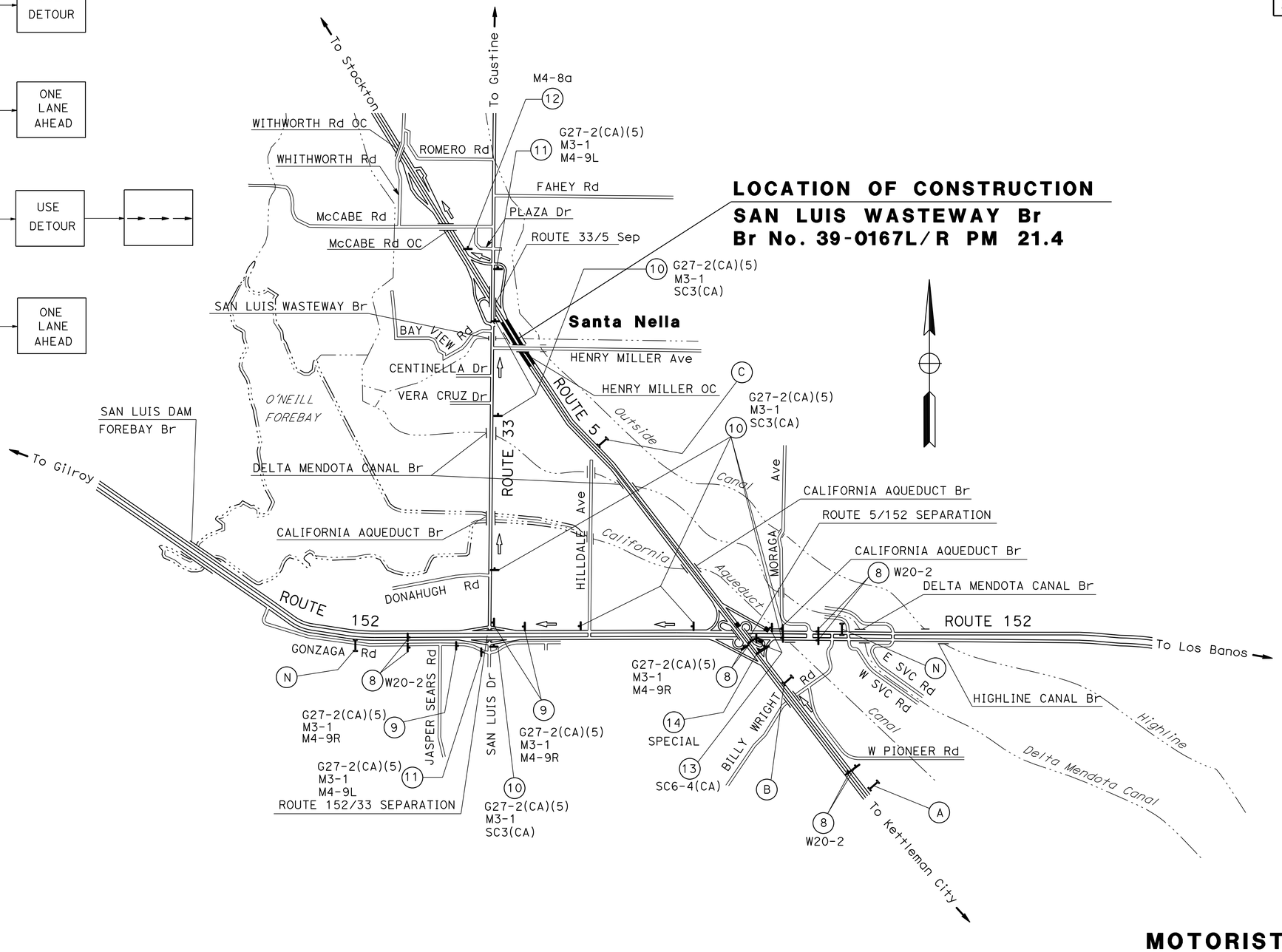


# MOTORIST INFORMATION PLAN
## DETOUR PLAN

NO SCALE

**MI-2**

*APPROVED FOR MOTORIST INFORMATION WORK ONLY*

| | | |
|---|---|---|
| HN | 12-22-14 | |
| RT | 04-07-14 | |
| RT | 01-24-14 | |
| REVISED BY | DATE REVISED | |
| RAJINI TEKALKOTE | HUE NGUYEN | |
| CALCULATED-DESIGNED BY | CHECKED BY | |
| FUNCTIONAL SUPERVISOR | MOHAMMED QATAMI | |

STATE OF CALIFORNIA - DEPARTMENT OF TRANSPORTATION
Caltrans
TRAFFIC DESIGN

LAST REVISION 00-00-00
DATE PLOTTED => 14-JAN-2015
TIME PLOTTED => 16:31

| Dist | COUNTY | ROUTE | POST MILES TOTAL PROJECT | SHEET No. | TOTAL SHEETS |
|---|---|---|---|---|---|
| 10 | Mer | 5 | 21.4 | 8 | 42 |

REGISTERED CIVIL ENGINEER 4/4/14 DATE

12-29-14
PLANS APPROVAL DATE

REGISTERED PROFESSIONAL ENGINEER HUE NGUYEN No. 74484 Exp. 12/31/15 CIVIL STATE OF CALIFORNIA

*THE STATE OF CALIFORNIA OR ITS OFFICERS OR AGENTS SHALL NOT BE RESPONSIBLE FOR THE ACCURACY OR COMPLETENESS OF SCANNED COPIES OF THIS PLAN SHEET.*

# STATIONARY MOUNTED CONSTRUCTION AREA SIGNS

| SHEET No. | SIGN No. | SIGN CODE FEDERAL | SIGN CODE CALIFORNIA | PANEL SIZE | SIGN MESSAGE | No. OF SIGN EA | No. OF POST AND SIZE |
|---|---|---|---|---|---|---|---|
| MI-1 | 1 | W20-2 | | 48" x 48" | DETOUR AHEAD | 3 | 1 - 6" x 6" |
| | 2 | | G27-2(CA)(5) | 21" x 18" | INTERSTATE ROUTE MARKER | 5 | 1 - 4" x 6" |
| | | M3-3 | | 24" x 12" | SOUTH | | |
| | | M4-9R | | 30" x 24" | DETOUR | | |
| | 3 | | G27-2(CA)(5) | 21" x 18" | INTERSTATE ROUTE MARKER | 8 | 1 - 4" x 6" |
| | | M3-3 | | 24" x 12" | SOUTH | | |
| | | | SC3(CA) | 36" x 12" | DETOUR WITH ARROW | | |
| | 4 | | G27-2(CA)(5) | 21" x 18" | INTERSTATE ROUTE MARKER | 2 | 1 - 4" x 6" |
| | | M3-3 | | 24" x 12" | SOUTH | | |
| | | M4-9L | | 30" x 24" | DETOUR | | |
| | 5 | M4-8a | | 24" x 12" | END DETOUR | 1 | 1 - 4" x 4" |
| | 6 | | SC6-4(CA) | 48" x 60" | RAMP CLOSED | 1 | 1 - 6" x 6" |
| | 7 | SPECIAL SIGN | | 66" x 48" | ALT ROUTE DETOUR WITH ARROW | 1 | 2 - 4" x 6" |
| MI-2 | 8 | W20-2 | | 48" x 48" | DETOUR AHEAD | 6 | 1 - 6" x 6" |
| | 9 | | G27-2(CA)(5) | 21" x 18" | INTERSTATE ROUTE MARKER | 5 | 1 - 4" x 6" |
| | | M3-3 | | 24" x 12" | SOUTH | | |
| | | M4-9R | | 30" x 24" | DETOUR | | |
| | 10 | | G27-2(CA)(5) | 21" x 18" | INTERSTATE ROUTE MARKER | 7 | 1 - 4" x 6" |
| | | M3-3 | | 24" x 12" | SOUTH | | |
| | | | SC3(CA) | 36" x 12" | DETOUR WITH ARROW | | |
| | 11 | | G27-2(CA)(5) | 21" x 18" | INTERSTATE ROUTE MARKER | 2 | 1 - 4" x 6" |
| | | M3-3 | | 24" x 12" | SOUTH | | |
| | | M4-9L | | 30" x 24" | DETOUR | | |
| | 12 | M4-8a | | 24" x 12" | END DETOUR | 1 | 1 - 4" x 4" |
| | 13 | | SC6-4(CA) | 48" x 60" | RAMP CLOSED | 2 | 1 - 6" x 6" |
| | 14 | SPECIAL SIGN | | 66" x 48" | ALT ROUTE DETOUR WITH ARROW | 1 | 2 - 4" x 6" |

NOTE: SEE CONSTRUCTION AREA SIGNS AND TRAFFIC HANDLING SHEETS FOR ADDITIONAL CONSTRUCTION AREA SIGNS.

SIGN No. 7, 14 SPECIAL SIGN

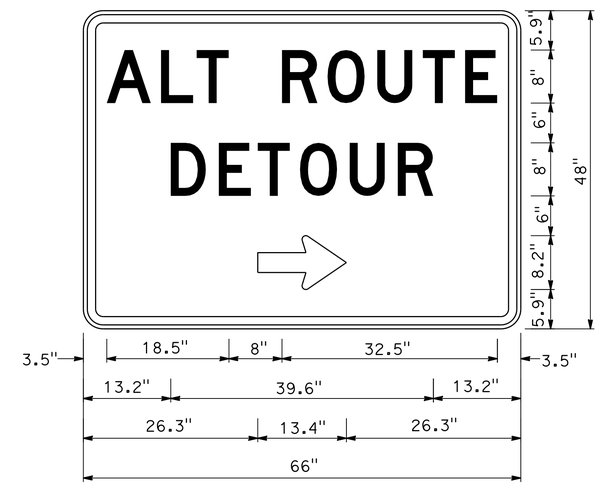


3.0" RADIUS, 1.3" BORDER, 0.6" INDENT, BLACK ON ORANGE;
[ALT ROUTE] D; [DETOUR] D;
STANDARD ARROW CUSTOM 13.4" x 8.1" 0°;

# MOTORIST INFORMATION DETAILS AND QUANTITIES

NO SCALE

**MID-1**

| REVISED BY | DATE REVISED |
|---|---|
| RDC | 04/07/14 |
| RT | 02/24/14 |
| RT | 01/23/14 |

RAJINI TEKALKOTE — HUE NGUYEN

CALCULATED-DESIGNED BY — CHECKED BY

FUNCTIONAL SUPERVISOR — MOHAMMED QATAMI

STATE OF CALIFORNIA - DEPARTMENT OF TRANSPORTATION

Caltrans® **TRAFFIC DESIGN**

LAST REVISION 00-00-00 — DATE PLOTTED => 14-JAN-2015 — TIME PLOTTED => 16:31

| Dist | COUNTY | ROUTE | POST MILES TOTAL PROJECT | SHEET No. | TOTAL SHEETS |
|---|---|---|---|---|---|
| 10 | Mer | 5 | 21.4 | 9 | 42 |

REGISTERED CIVIL ENGINEER — DATE 4/2/14

12-29-14
PLANS APPROVAL DATE

RHODEL De CLARO No. 74058 Exp. 6/30/15 CIVIL — REGISTERED PROFESSIONAL ENGINEER — STATE OF CALIFORNIA

*THE STATE OF CALIFORNIA OR ITS OFFICERS OR AGENTS SHALL NOT BE RESPONSIBLE FOR THE ACCURACY OR COMPLETENESS OF SCANNED COPIES OF THIS PLAN SHEET.*

## STAGE 1A CONSTRUCTION NOTES:

1. SHOULDER RECONSTRUCTION EXCLUDES BRIDGE DECK AND APPROACH SLABS.
2. USE STANDARD PLAN T10 FOR THIS STAGE FOR TRAFFIC CONTROL.
3. ALL EXISTING UTILITY FACILITIES HAVE NOT BEEN PLOTTED ON THESE PLANS.

## LEGEND:

- CONSTRUCT THIS STAGE
- ROADWAY EXCAVATION
- HMA (TYPE A)
- COLD PLANE AC PAVEMENT HMA (TYPE A)
- GRIND Exist CONCRETE PAVEMENT HMA (TYPE A)
- ROADWAY EXCAVATION HMA (TYPE A) CLASS 2 AB
- TEMPORARY RAILING (TYPE K)
- TEMPORARY CRASH CUSHION MODULE ARRAY 'TS14'

## ABBREVIATION

PG&E - PACIFIC GAS AND ELECTRIC COMPANY

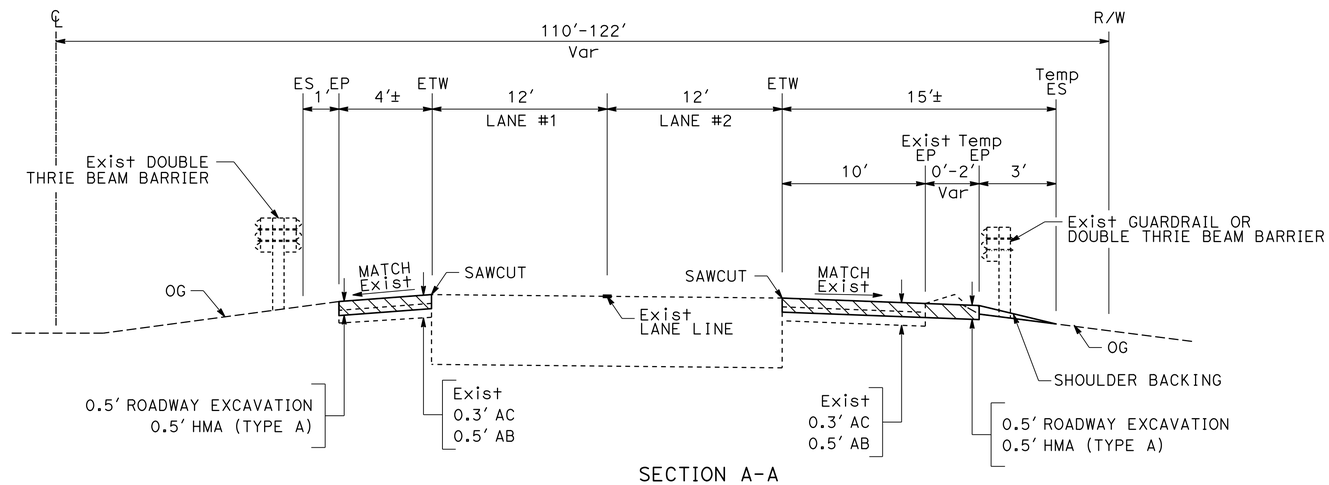


SECTION A-A
Sta 1125+91 TO 1136+16 (NB) (RIGHT)
Sta 1125+91 TO 1136+41 (NB) (LEFT)
Sta 1126+77 TO 1137+21 (SB) (RIGHT)
Sta 1126+61 TO 1136+93 (SB) (LEFT)
NOTE: NB AND SB DIRECTIONS ARE SYMMETRICAL

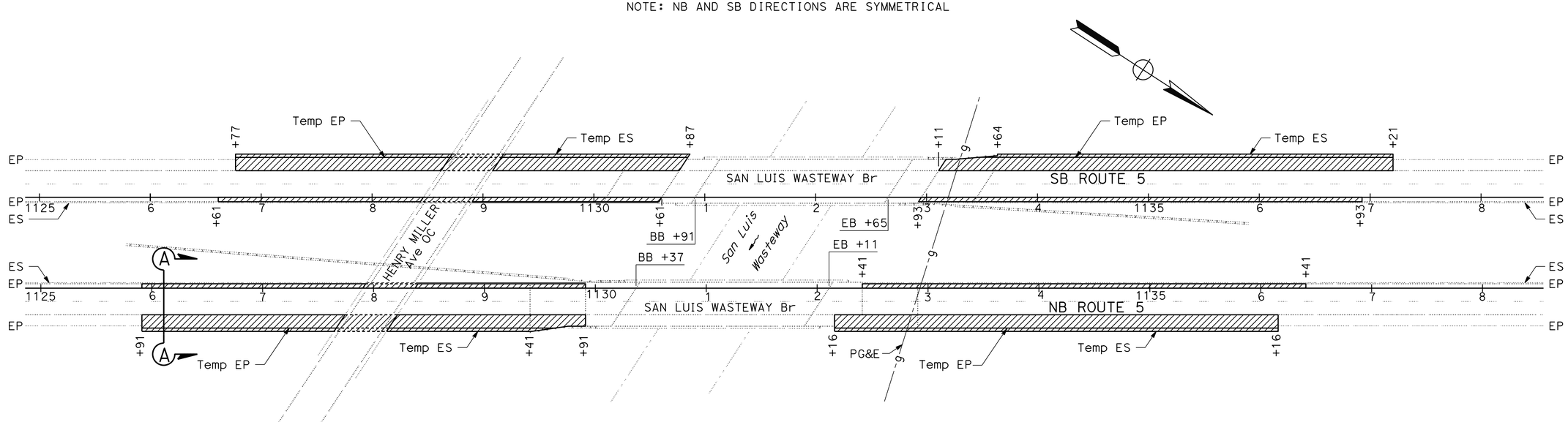


*APPROVED FOR STAGE CONSTRUCTION WORK ONLY*

# STAGE CONSTRUCTION
## STAGE 1A
NO SCALE

**SC-1**

STATE OF CALIFORNIA - DEPARTMENT OF TRANSPORTATION
Caltrans®
MAINTENANCE

FUNCTIONAL SUPERVISOR: ALVIN MANGINDIN
CALCULATED-DESIGNED BY: RHODEL DE CLARO
CHECKED BY: JOSE A. ALICEA II
REVISED BY: RDC
DATE REVISED: 04/15/14

LAST REVISION 00-00-00
DATE PLOTTED => 14-JAN-2015
TIME PLOTTED => 16:31

| Dist | COUNTY | ROUTE | POST MILES TOTAL PROJECT | SHEET No. | TOTAL SHEETS |
|---|---|---|---|---|---|
| 10 | Mer | 5 | 21.4 | 10 | 42 |

Rhodel De Claro 4/2/14
REGISTERED CIVIL ENGINEER DATE

12-29-14
PLANS APPROVAL DATE

REGISTERED PROFESSIONAL ENGINEER RHODEL De CLARO No. 74058 Exp. 6/30/15 CIVIL STATE OF CALIFORNIA

*THE STATE OF CALIFORNIA OR ITS OFFICERS OR AGENTS SHALL NOT BE RESPONSIBLE FOR THE ACCURACY OR COMPLETENESS OF SCANNED COPIES OF THIS PLAN SHEET.*

## STAGE 1B CONSTRUCTION SEQUENCE:

1. REMOVE CONCRETE BARRIER (USE STANDARD PLAN T10).
2. PLACE TEMPORARY RAILING (TYPE K), SEE SECTION A-A.
3. SEE STRUCTURE GENERAL PLAN FOR CONCRETE BARRIER REPLACEMENT.
4. RECONSTRUCT DOUBLE THRIE BEAM BARRIER (SEE TYPICAL CROSS SECTIONS AND SUMMARY OF QUANITIES).

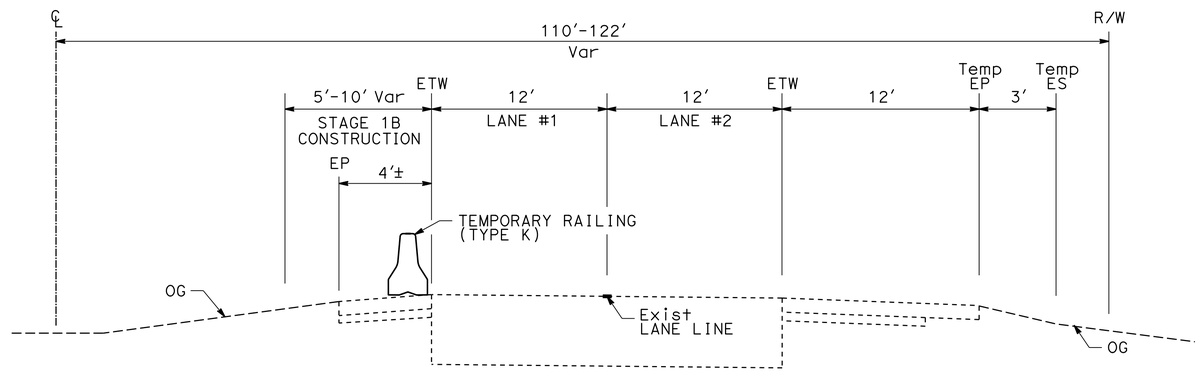


SECTION A-A
Sta 1129+41 TO 1132+41 (NB)
Sta 1130+58 TO 1133+44 (SB)
NOTE: NB AND SB DIRECTIONS ARE SYMMETRICAL

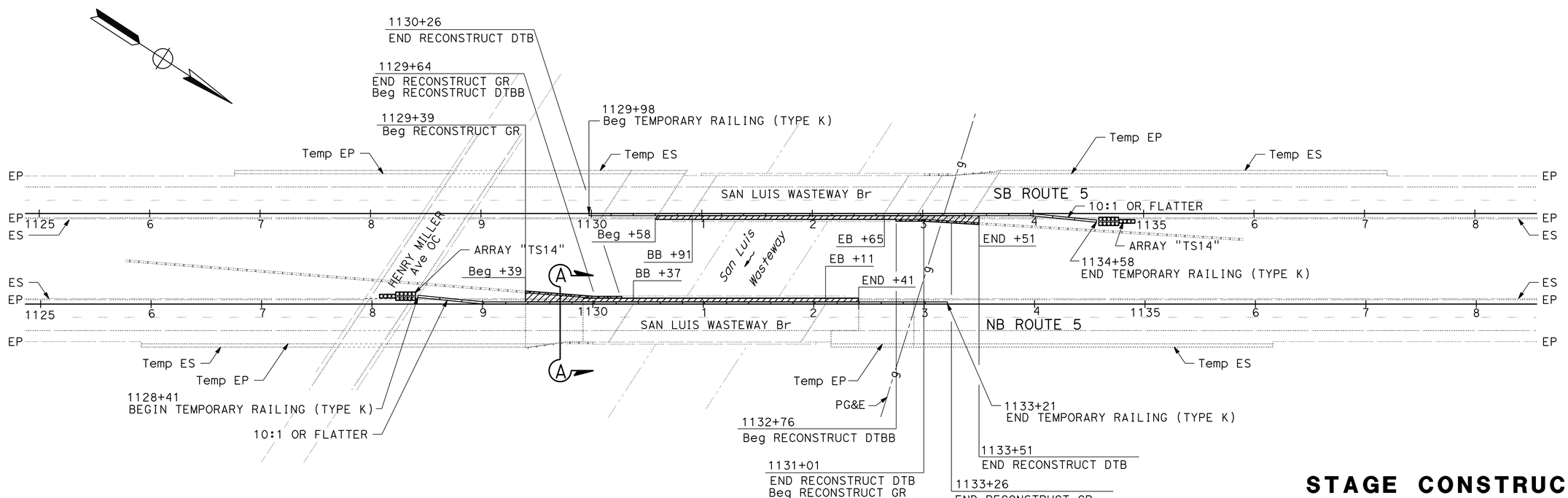


*APPROVED FOR STAGE CONSTRUCTION WORK ONLY*

# STAGE CONSTRUCTION
## STAGE 1B
NO SCALE

**SC-2**

STATE OF CALIFORNIA - DEPARTMENT OF TRANSPORTATION
Caltrans®
MAINTENANCE

FUNCTIONAL SUPERVISOR: ALVIN MANGINDIN
CALCULATED-DESIGNED BY: RHODEL DE CLARO
CHECKED BY: JOSE A. ALICEA II
REVISED BY: RDC
DATE REVISED: 04/15/14

LAST REVISION 00-00-00
DATE PLOTTED => 14-JAN-2015
TIME PLOTTED => 16:31

| Dist | COUNTY | ROUTE | POST MILES TOTAL PROJECT | SHEET No. | TOTAL SHEETS |
|---|---|---|---|---|---|
| 10 | Mer | 5 | 21.4 | 11 | 42 |

REGISTERED CIVIL ENGINEER — DATE 4/2/14

12-29-14
PLANS APPROVAL DATE

REGISTERED PROFESSIONAL ENGINEER RHODEL De CLARO No. 74058 Exp. 6/30/15 CIVIL STATE OF CALIFORNIA

*THE STATE OF CALIFORNIA OR ITS OFFICERS OR AGENTS SHALL NOT BE RESPONSIBLE FOR THE ACCURACY OR COMPLETENESS OF SCANNED COPIES OF THIS PLAN SHEET.*

## STAGE 1C TRAFFIC NOTES:

1 EACH DIRECTION SHALL BE CONSTRUCTED SEPARATELY.
2. THIS STAGE TO BE CONSTRUCTED USING EXTENDED CLOSURE WINDOWS IN LANE REQUIREMENT CHARTS (SEE TRAFFIC HANDLING. PLANS FOR ALTERNATE ROUTE).

## STAGE 1C CONSTRUCTION SEQUENCE:

1. SEE STRUCTURE GENERAL PLAN FOR CONCRETE DECK OVERLAY.
2. PLACE TEMPORARY CONFORM TAPERS TO MATCH NEW BRIDGE DECK GRADE (SEE SECTIONS B-B, C-C, D-D, AND STAGE CONSTRUCTION QUANTITIES SHEET FOR LOCATIONS AND QUANTITIES).

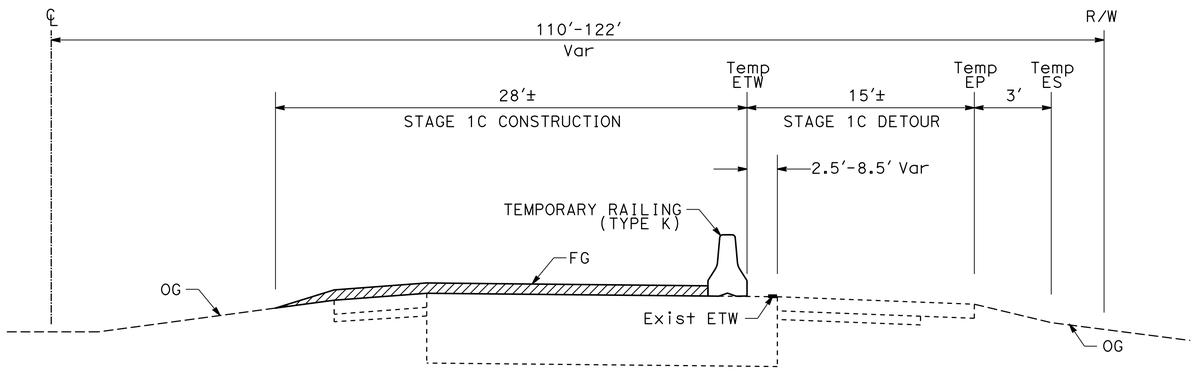


SECTION A-A
Sta 1129+64 TO 1132+64 (NB)
Sta 1130+39 TO 1133+28 (SB)
NOTE: NB AND SB DIRECTIONS ARE SYMMETRICAL

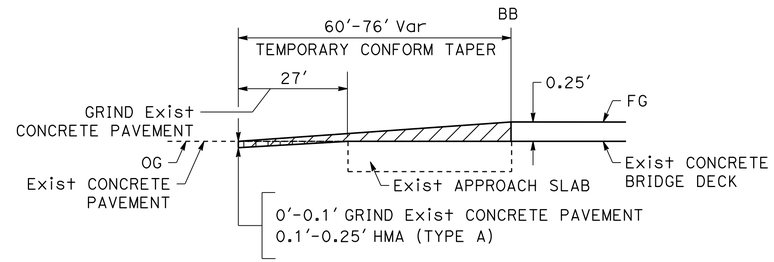


NB APPROACH (BB)
SECTION B-B

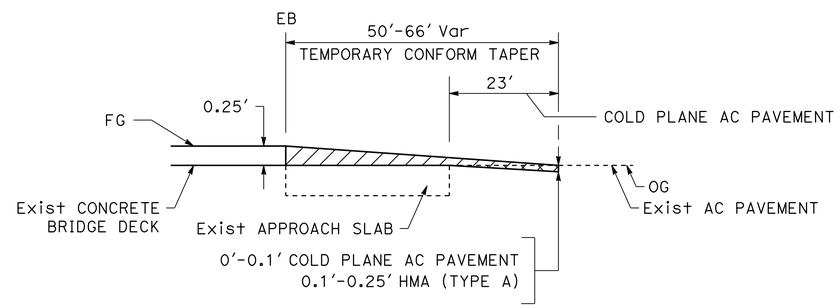


NB DEPARTURE (EB)
SECTION C-C

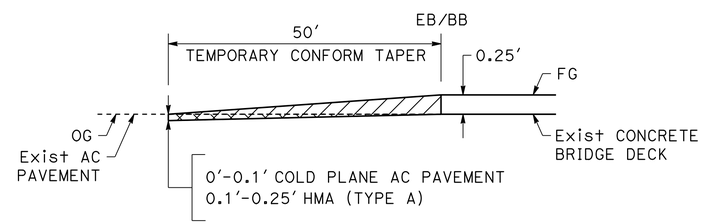


SB DEPARTURE/APPROACH (EB/BB)
SECTION D-D

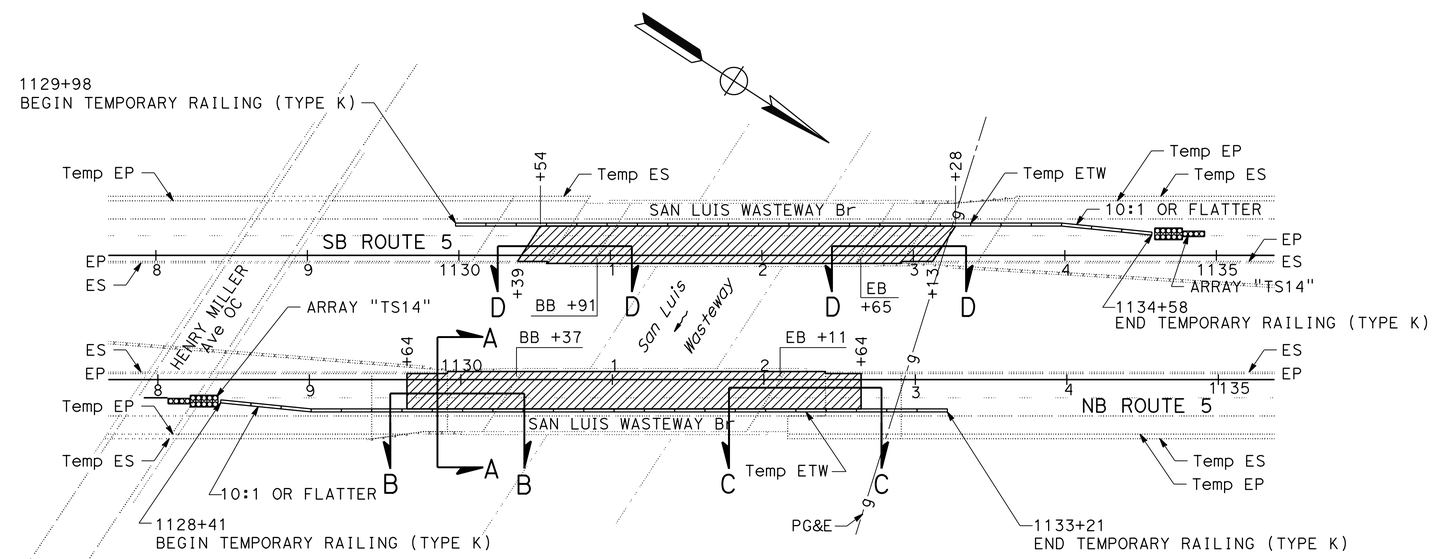


**LONGITUDINAL TEMPORARY CONFORM TAPERS AT BRIDGE DECK/APPROCH SLABS**

*APPROVED FOR STAGE CONSTRUCTION WORK ONLY*

# STAGE CONSTRUCTION
## STAGE 1C
NO SCALE

**SC-3**

STATE OF CALIFORNIA - DEPARTMENT OF TRANSPORTATION
**MAINTENANCE**
Caltrans

FUNCTIONAL SUPERVISOR: ALVIN MANGINDIN
CALCULATED-DESIGNED BY: RHODEL DE CLARO
CHECKED BY: JOSE A. ALICEA II
REVISED BY: RDC
DATE REVISED: 04/16/14

LAST REVISION 00-00-00
DATE PLOTTED => 14-JAN-2015
TIME PLOTTED => 16:31

| Dist | COUNTY | ROUTE | POST MILES TOTAL PROJECT | SHEET No. | TOTAL SHEETS |
|---|---|---|---|---|---|
| 10 | Mer | 5 | 21.4 | 12 | 42 |

REGISTERED CIVIL ENGINEER — DATE 4/2/14

12-29-14
PLANS APPROVAL DATE

REGISTERED PROFESSIONAL ENGINEER — RHODEL De CLARO No. 74058 Exp. 6/30/15 CIVIL — STATE OF CALIFORNIA

*THE STATE OF CALIFORNIA OR ITS OFFICERS OR AGENTS SHALL NOT BE RESPONSIBLE FOR THE ACCURACY OR COMPLETENESS OF SCANNED COPIES OF THIS PLAN SHEET.*

## STAGE 2 CONSTRUCTION SEQUENCE:

1. SEE STRUCTURE GENERAL PLAN FOR CONCRETE BARRIER REPLACEMENT, AND CONCRETE DECK OVERLAY.
2. CONSTRUCT TEMPORARY CONFORM TAPERS TO MATCH NEW BRIDGE DECK GRADE (SEE SECTION B-B, C-C, D-D, AND STAGE CONSTRUCTION QUANTITIES SHEET FOR LOCATIONS AND QUANTITIES).
3. RECONSTRUCT GUARDRAIL AND DOUBLE THRIE BEAM BARRIER.

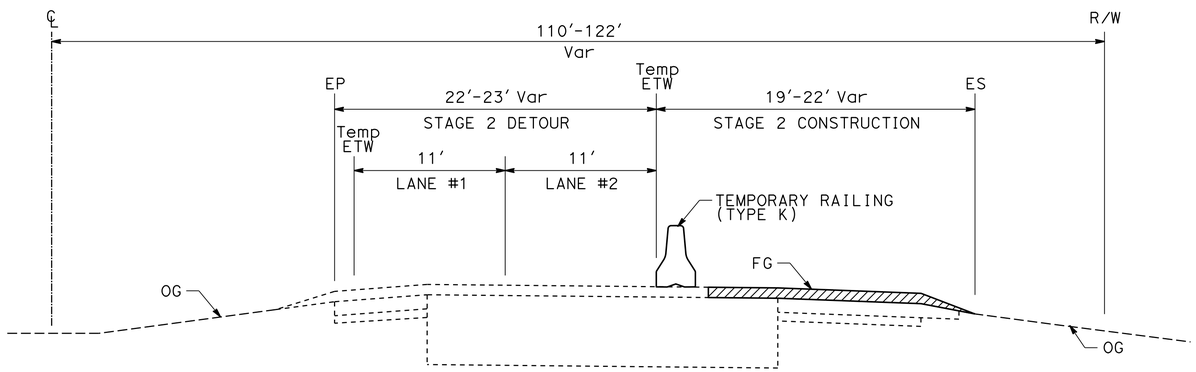


SECTION A-A
STA 1129+64 TO 1132+64 (NB)
STA 1130+54 TO 1133+39 (SB)
NOTE: NB AND SB DIRECTIONS ARE SYMMETRICAL

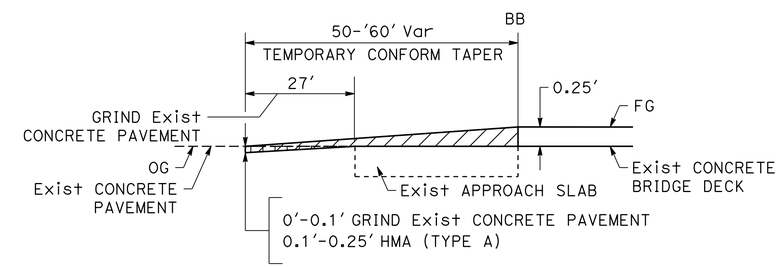


NB APPROACH (BB)
SECTION B-B

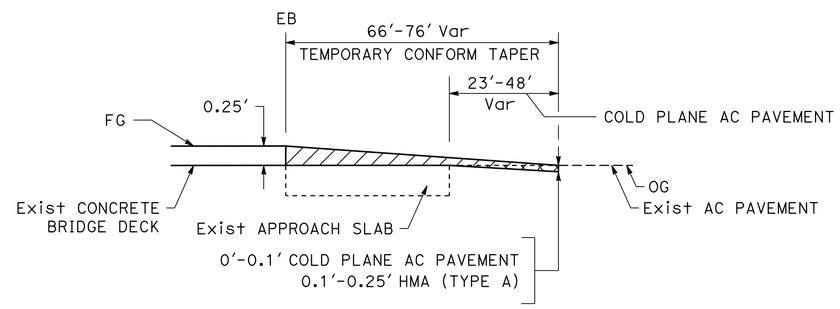


NB DEPARTURE (EB)
SECTION C-C

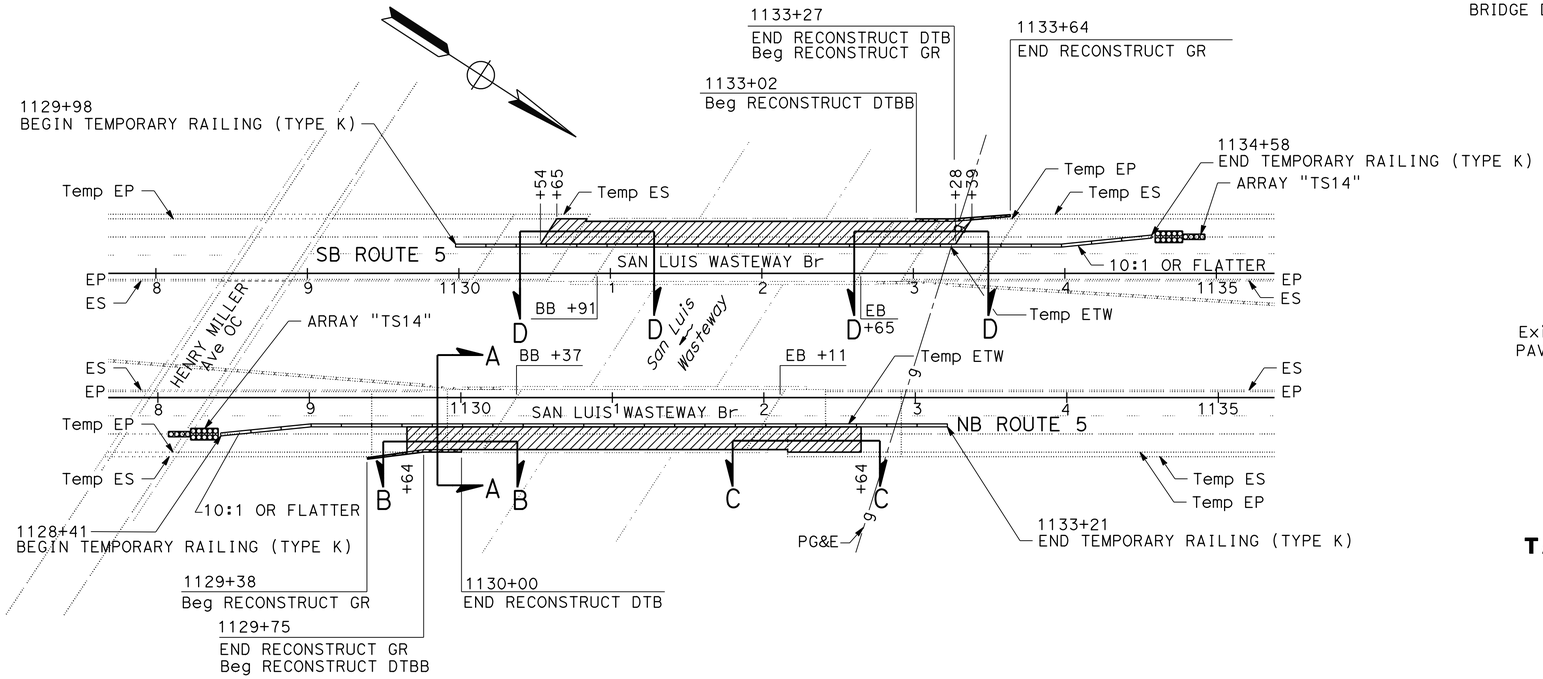


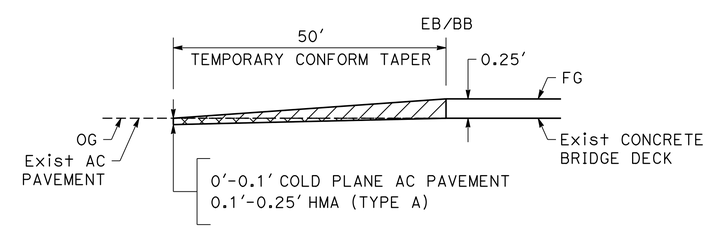


SB DEPARTURE/APPROACH (EB/BB)
SECTION D-D

**LONGITUDINAL TEMPORARY CONFORM TAPERS AT BRIDGE DECK/APROCH SLABS**

*APPROVED FOR STAGE CONSTRUCTION WORK ONLY*

# STAGE CONSTRUCTION
## STAGE 2
NO SCALE

**SC-4**

| CALCULATED-DESIGNED BY | CHECKED BY | REVISED BY | DATE REVISED | FUNCTIONAL SUPERVISOR |
|---|---|---|---|---|
| RHODEL DE CLARO | JOSE A. ALICEA II | RDC | 04/15/14 | ALVIN MANGINDIN |

STATE OF CALIFORNIA - DEPARTMENT OF TRANSPORTATION
Caltrans
MAINTENANCE

LAST REVISION 00-00-00 | DATE PLOTTED => 14-JAN-2015 | TIME PLOTTED => 16:31

| Dist | COUNTY | ROUTE | POST MILES TOTAL PROJECT | SHEET No. | TOTAL SHEETS |
|---|---|---|---|---|---|
| 10 | Mer | 5 | 21.4 | 13 | 42 |

REGISTERED CIVIL ENGINEER 4/2/14 DATE

12-29-14
PLANS APPROVAL DATE

REGISTERED PROFESSIONAL ENGINEER RHODEL De CLARO No. 74058 Exp. 6/30/15 CIVIL STATE OF CALIFORNIA

*THE STATE OF CALIFORNIA OR ITS OFFICERS OR AGENTS SHALL NOT BE RESPONSIBLE FOR THE ACCURACY OR COMPLETENESS OF SCANNED COPIES OF THIS PLAN SHEET.*

NOTES:

1. * - TOTAL INCLUDED IN ROADWAY ITEMS TABLE (SEE SUMMARY OF QUANTITIES).
2. ** - EXCLUDES BRIDGE DECK AND APPROACH SLABS.
3. (N) - NOT A SEPARATE PAY ITEM, FOR INFORMATION ONLY.
4. (1) - FOR INFORMATION ONLY.

## TEMPORARY RAILING (TYPE K) AND TEMPORARY CRASH CUSHION

| STAGE | DIRECTION | LOCATION (Sta/Sta) | TEMPORARY RAILING (TYPE K) | TEMPORARY CRASH CUSHION MODULE |
|---|---|---|---|---|
| | | | LF | EA |
| 1B | NB | 1128+41/1133+21 | 480 | 14 |
| | SB | 1129+98/1134+58 | 460 | 14 |
| 1C | NB | 1128+41/1133+21 | 480 | 14 |
| | SB | 1129+98/1134+58 | 460 | 14 |
| 2 | NB | 1128+41/1133+21 | 480 | 14 |
| | SB | 1129+98/1134+58 | 460 | 14 |
| | | TOTAL | 2820 | 84 |

## SHOULDER RECONSTRUCTION

| STAGE CONSTRUCTION | DIRECTION | SIDE | LOCATION (Sta/Sta) | LENGTH (N) | ROADWAY EXCAVATION WIDTH (N) | ROADWAY EXCAVATION DEPTH (N) | SHOULDER BACKING WIDTH (N) | SHOULDER BACKING DEPTH (N) | HMA (TYPE A) (1) | SHOULDER BACKING (1) | ROADWAY EXCAVATION |
|---|---|---|---|---|---|---|---|---|---|---|---|
| | | | | | | | | | TON | TON | CY |
| 1A | NB | RIGHT | 1125+91/1136+16 ** | 800′ | 12′ | 0.5′ | 3′ | 0.25′ | 360 | 22 | 178 |
| | | LEFT | 1125+91/1136+41 ** | 800′ | 4′ | 0.5′ | | | 120 | | 60 |
| | SB | RIGHT | 1126+77/1137+21 ** | 818′ | 12′ | 0.5′ | 3′ | 0.25′ | 364 | 22 | 180 |
| | | LEFT | 1126+61/1136+93 ** | 800′ | 4′ | 0.5′ | | | 120 | | 60 |
| | | | | | | | | | | TOTAL | 478 * |

## CONFORM TAPERS

| STAGE CONSTRUCTION | DIRECTION | DESCRIPTION | LOCATION (Sta/Sta) | COLD PLANE AC PAVEMENT | | GRIND Exist CONCRETE PAVEMENT | | HMA (TYPE A) TEMPORARY CONFORM | | | SHOULDER BACKING (1) | HMA (TYPE A) (1) | TACK COAT | COLD PLANE AC PAVEMENT | GRIND Exist CONCRETE PAVEMENT |
|---|---|---|---|---|---|---|---|---|---|---|---|---|---|---|---|
| | | | | LENGTH (N) | WIDTH (N) | LENGTH (N) | WIDTH (N) | LENGTH (N) | WIDTH (N) | DEPTH (N) | | | | | |
| | | | | | | | | | | | TON | TON | TON | SQYD | SQYD |
| 1C | NB | APPROACH (BB) | 1129+64/1130+40 | | | 27′ | 23′ | 60′-76′ | 23′-25′ | 0.1′-0.25′ | 0.8 | 18 | 0.11 | | 69 |
| | | DEPARTURE (EB) | 1131+98/1132+64 | 23′ | 23′ | | | 50′-66′ | 23′-25′ | 0.1′-0.25′ | 0.6 | 15 | 0.09 | 59 | |
| | SB | APPROACH (EB) | 1132+62/1133+28 | 20′ | 23′ | | | 50′ | 23′-25′ | 0.1′-0.25′ | 0.6 | 16 | 0.11 | 127 | |
| | | DEPARTURE (BB) | 1130+39/1131+04 | 20′ | 23′ | | | 50′ | 23′-25′ | 0.1′-0.25′ | 0.6 | 16 | 0.11 | 127 | |
| 2 | NB | APPROACH (BB) | 1129+64/1130+24 | | | 27′ | 17′ | 50′-60′ | 15′-17′ | 0.1′-0.25′ | 0.8 | 9 | 0.04 | | 51 |
| | | DEPARTURE (EB) | 1131+88/1132+64 | 23′-48′ | 5′-12′ | | | 66′-76′ | 5′-12′ | 0.1′-0.25′ | 1.4 | 13 | 0.05 | 77 | |
| | SB | APPROACH (EB) | 1132+78/1133+39 | 20′ | 17′ | | | 50′ | 15′-17′ | 0.1′-0.25′ | 0.6 | 14 | 0.07 | 95 | |
| | | DEPARTURE (BB) | 1130+54/1131+14 | 20′ | 17′ | | | 50′ | 15′-17′ | 0.1′-0.25′ | 0.6 | 14 | 0.07 | 95 | |
| | | | | | | | | | | | | TOTAL | 0.7* | 580* | 120 |

# STAGE CONSTRUCTION QUANTITIES
# SCQ-1

STATE OF CALIFORNIA - DEPARTMENT OF TRANSPORTATION
MAINTENANCE
Caltrans

FUNCTIONAL SUPERVISOR: ALVIN MANGINDIN
CALCULATED-DESIGNED BY: RHODEL DE CLARO
CHECKED BY: JOSE A. ALICEA II
REVISED BY: RDC
DATE REVISED: 04/14/14

LAST REVISION 00-00-00
DATE PLOTTED => 14-JAN-2015
TIME PLOTTED => 16:31

| Dist | COUNTY | ROUTE | POST MILES TOTAL PROJECT | SHEET No. | TOTAL SHEETS |
|---|---|---|---|---|---|
| 10 | Mer | 5 | 21.4 | 14 | 42 |

REGISTERED CIVIL ENGINEER 4/4/14 DATE

12-29-14
PLANS APPROVAL DATE

REGISTERED PROFESSIONAL ENGINEER HUE NGUYEN No. 74484 Exp 12/31/15 CIVIL STATE OF CALIFORNIA

*THE STATE OF CALIFORNIA OR ITS OFFICERS OR AGENTS SHALL NOT BE RESPONSIBLE FOR THE ACCURACY OR COMPLETENESS OF SCANNED COPIES OF THIS PLAN SHEET.*

## NOTES:

1. SEE STAGE CONSTRUCTION SC SHEETS FOR TYPICAL CROSS SECTION.
2. EXISTING STRIPING TO REMAIN IN PLACE IN THIS STAGE.
3. USE STANDARD PLAN T10 FOR THIS STAGE.
4. EXACT SIGN LOCATIONS TO BE DETERMINED BY THE ENGINEER.
5. * - SIGN TO REMAIN IN PLACE FROM PREVIOUS STAGE(S).
6. EXACT LOCATION OF THE PCMS TO BE DETERMINED BY THE ENGINEER.

## LEGEND:

- XX - TEMPORARY TRAFFIC STRIPE (TAPE) DETAIL No.
- XX - REMOVE THERMOPLASTIC TRAFFIC STRIPE DETAIL No.
- CONSTRUCTION AREA SIGN (ONE POST)
- XX - CONSTRUCTION AREA SIGN No.
- FLASHING ARROW SIGN (TYPE I)
- PCMS
- TYPE III BARRICADE
- CHANNELIZER (SURFACE MOUNTED)

## ABBREVIATIONS:

FAS - FLASHING ARROW SIGN

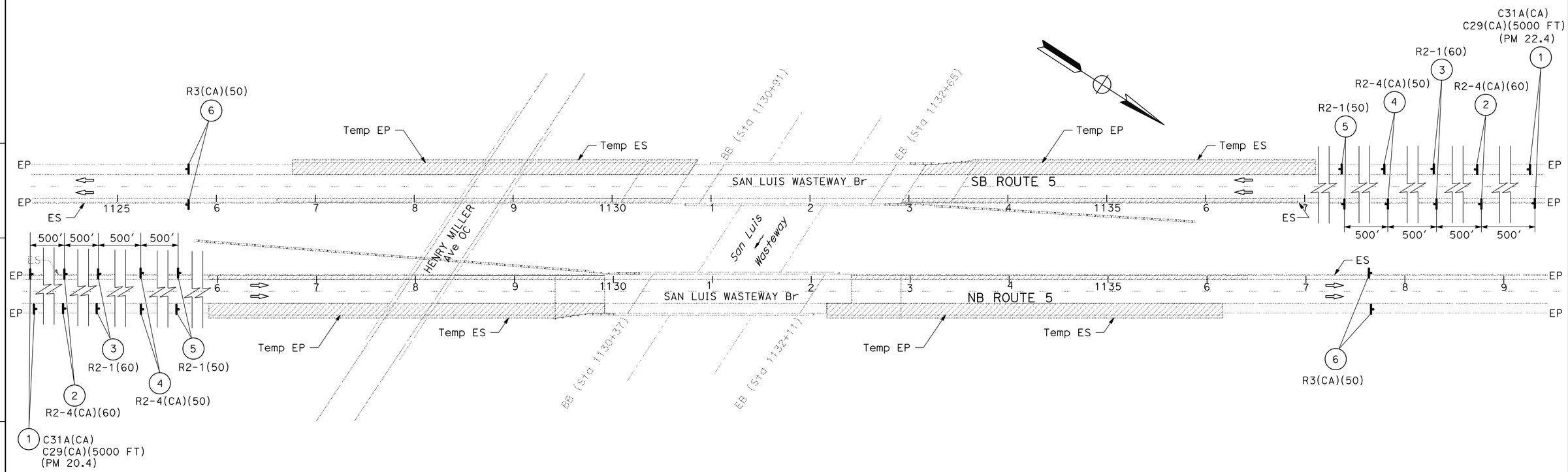


*APPROVED FOR TRAFFIC HANDLING WORK ONLY*

# TRAFFIC HANDLING PLAN
## STAGE 1A
NO SCALE

**TH-1**

| | | | |
|---|---|---|---|
| 01-12-15 | RT | RAJINI TEKALKOTE | CALCULATED-DESIGNED BY |
| 04-15-14 | RT | HUE NGUYEN | CHECKED BY |
| 02-11-14 | RT | MOHAMMED QATAMI | FUNCTIONAL SUPERVISOR |
| DATE REVISED | REVISED BY | | |

STATE OF CALIFORNIA - DEPARTMENT OF TRANSPORTATION
Caltrans® **TRAFFIC DESIGN**

LAST REVISION 00-00-00 | DATE PLOTTED => 14-JAN-2015 | TIME PLOTTED => 16:31

| Dist | COUNTY | ROUTE | POST MILES TOTAL PROJECT | SHEET No. | TOTAL SHEETS |
|---|---|---|---|---|---|
| 10 | Mer | 5 | 21.4 | 15 | 42 |

REGISTERED CIVIL ENGINEER 4/4/14 DATE

12-29-14
PLANS APPROVAL DATE

REGISTERED PROFESSIONAL ENGINEER HUE NGUYEN No. 74484 Exp 12/31/15 CIVIL STATE OF CALIFORNIA

*THE STATE OF CALIFORNIA OR ITS OFFICERS OR AGENTS SHALL NOT BE RESPONSIBLE FOR THE ACCURACY OR COMPLETENESS OF SCANNED COPIES OF THIS PLAN SHEET.*

## NOTES (THIS STAGE):

1. SEE STAGE CONSTRUCTION SC-2 FOR TYPICAL CROSS SECTION AND PLACEMENT OF Temp K-RAIL.
2. EXISTING STRIPING TO REMAIN IN PLACE IN THIS STAGE.

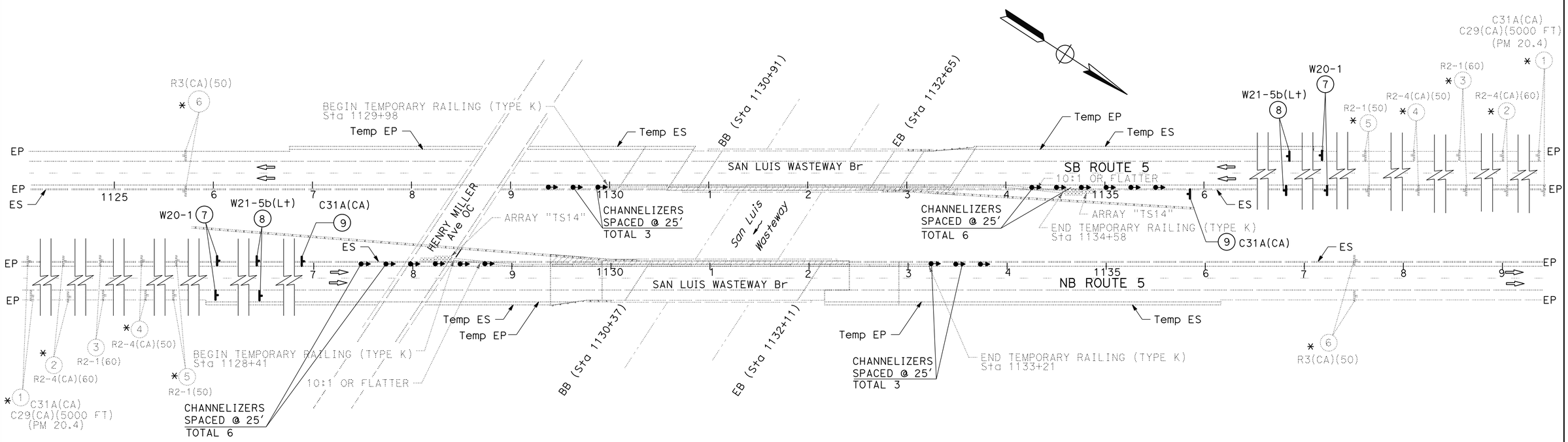


# TRAFFIC HANDLING PLAN
## STAGE 1B

NO SCALE

**TH-2**

*APPROVED FOR TRAFFIC HANDLING WORK ONLY*

| | | |
|---|---|---|
| RT | 01-12-15 | |
| RT | 04-07-14 | |
| RT | 01-23-14 | |
| REVISED BY | DATE REVISED | |
| RAJINI TEKALKOTE | HUE NGUYEN | CALCULATED-DESIGNED BY / CHECKED BY |
| FUNCTIONAL SUPERVISOR | MOHAMMED QATAMI | |

STATE OF CALIFORNIA - DEPARTMENT OF TRANSPORTATION
Caltrans
TRAFFIC DESIGN

LAST REVISION 00-00-00
DATE PLOTTED => 14-JAN-2015
TIME PLOTTED => 16:31

| Dist | COUNTY | ROUTE | POST MILES TOTAL PROJECT | SHEET No. | TOTAL SHEETS |
|---|---|---|---|---|---|
| 10 | Mer | 5 | 21.4 | 16 | 42 |

REGISTERED CIVIL ENGINEER 4/4/14 DATE

12-29-14
PLANS APPROVAL DATE

REGISTERED PROFESSIONAL ENGINEER HUE NGUYEN No. 74484 Exp 12/31/15 CIVIL STATE OF CALIFORNIA

*THE STATE OF CALIFORNIA OR ITS OFFICERS OR AGENTS SHALL NOT BE RESPONSIBLE FOR THE ACCURACY OR COMPLETENESS OF SCANNED COPIES OF THIS PLAN SHEET.*

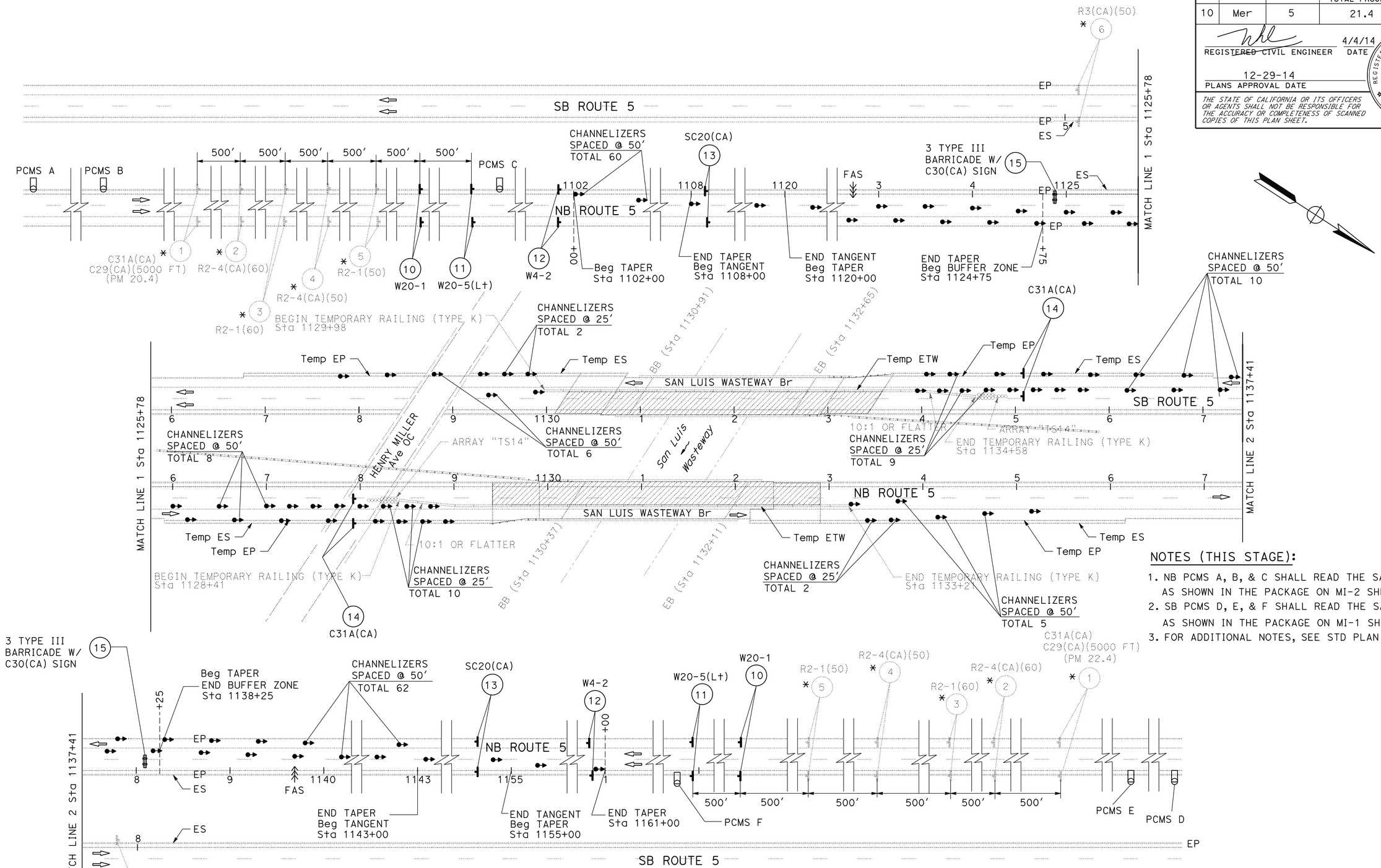


## NOTES (THIS STAGE):

1. NB PCMS A, B, & C SHALL READ THE SAME MASSAGES AS SHOWN IN THE PACKAGE ON MI-2 SHEET.
2. SB PCMS D, E, & F SHALL READ THE SAME MESSAGES AS SHOWN IN THE PACKAGE ON MI-1 SHEET.
3. FOR ADDITIONAL NOTES, SEE STD PLAN RSP T10A.

# TRAFFIC HANDLING PLAN
## STAGE 1C

NO SCALE

**TH-3**

*APPROVED FOR TRAFFIC HANDLING WORK ONLY*

| REVISED BY | DATE REVISED |
|---|---|
| RT | 01-23-14 |
| RT | 04-16-14 |
| RT | 01-12-15 |

CALCULATED-DESIGNED BY: RAJINI TEKALKOTE
CHECKED BY: HUE NGUYEN
FUNCTIONAL SUPERVISOR: MOHAMMED QATAMI

STATE OF CALIFORNIA - DEPARTMENT OF TRANSPORTATION
Caltrans®
TRAFFIC DESIGN

LAST REVISION 00-00-00
DATE PLOTTED => 14-JAN-2015
TIME PLOTTED => 16:31

| Dist | COUNTY | ROUTE | POST MILES TOTAL PROJECT | SHEET No. | TOTAL SHEETS |
|---|---|---|---|---|---|
| 10 | Mer | 5 | 21.4 | 17 | 42 |

REGISTERED CIVIL ENGINEER — DATE 4/4/14

12-29-14
PLANS APPROVAL DATE

REGISTERED PROFESSIONAL ENGINEER HUE NGUYEN No. 74484 Exp 12/31/15 CIVIL STATE OF CALIFORNIA

*THE STATE OF CALIFORNIA OR ITS OFFICERS OR AGENTS SHALL NOT BE RESPONSIBLE FOR THE ACCURACY OR COMPLETENESS OF SCANNED COPIES OF THIS PLAN SHEET.*

## NOTES (THIS STAGE):

1. PCMS G & H SHALL READ:

   SLOW DOWN
   ↓
   LANE SHIFT AHEAD

2. EXACT PCMS LOCATIONS TO BE DETERMINED BY ENGINEER.
3. * - SIGNS TO REMAIN IN PLACE FROM PREVIOUS STAGE.

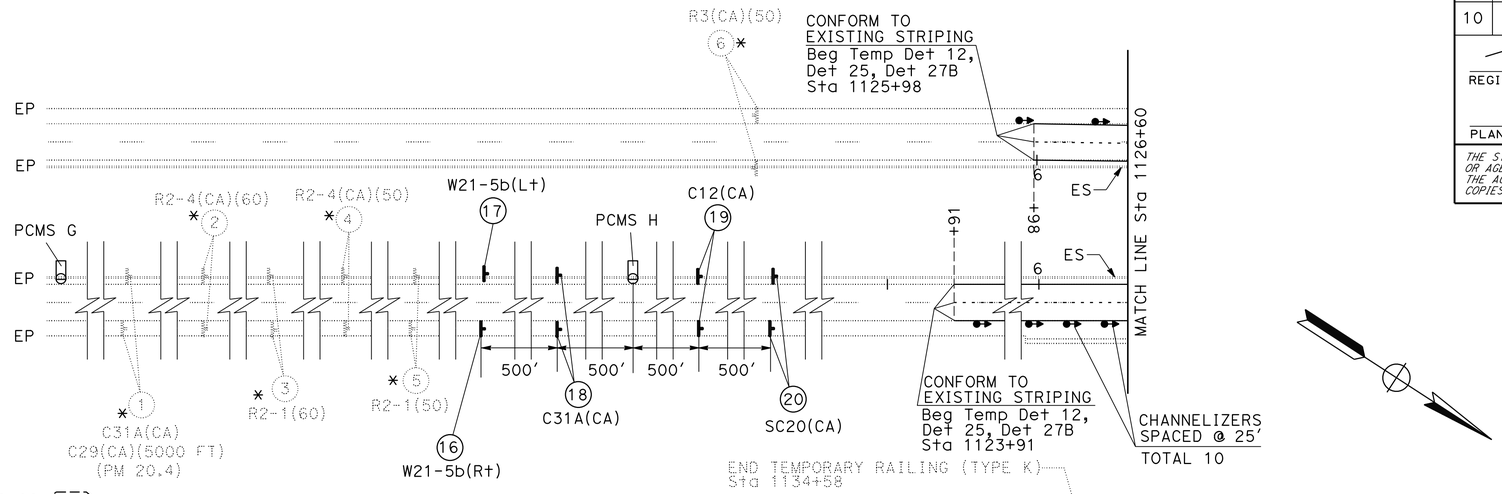


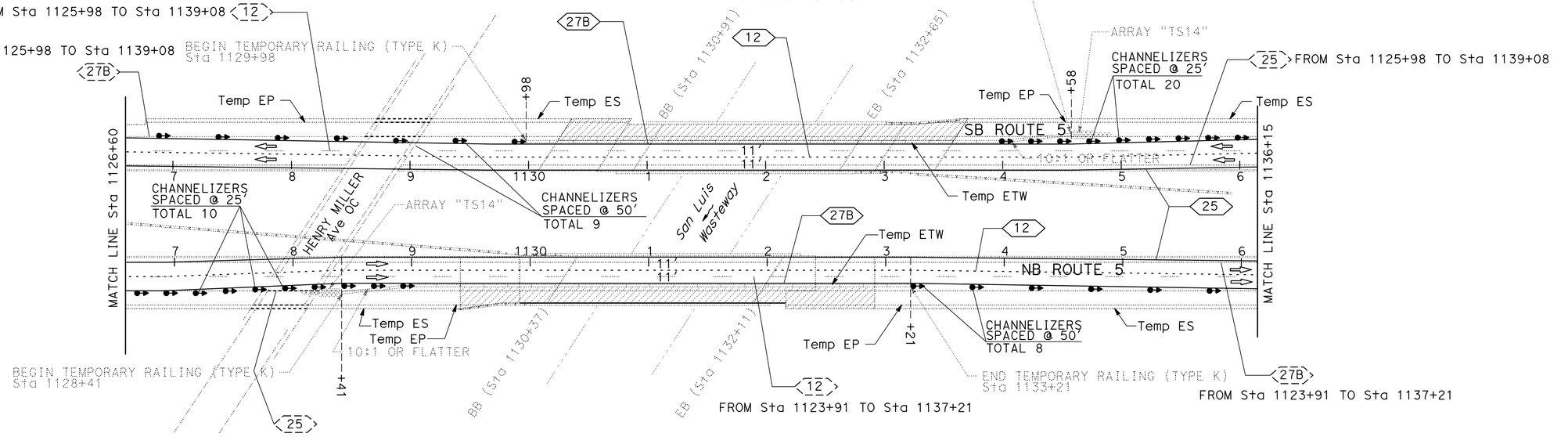


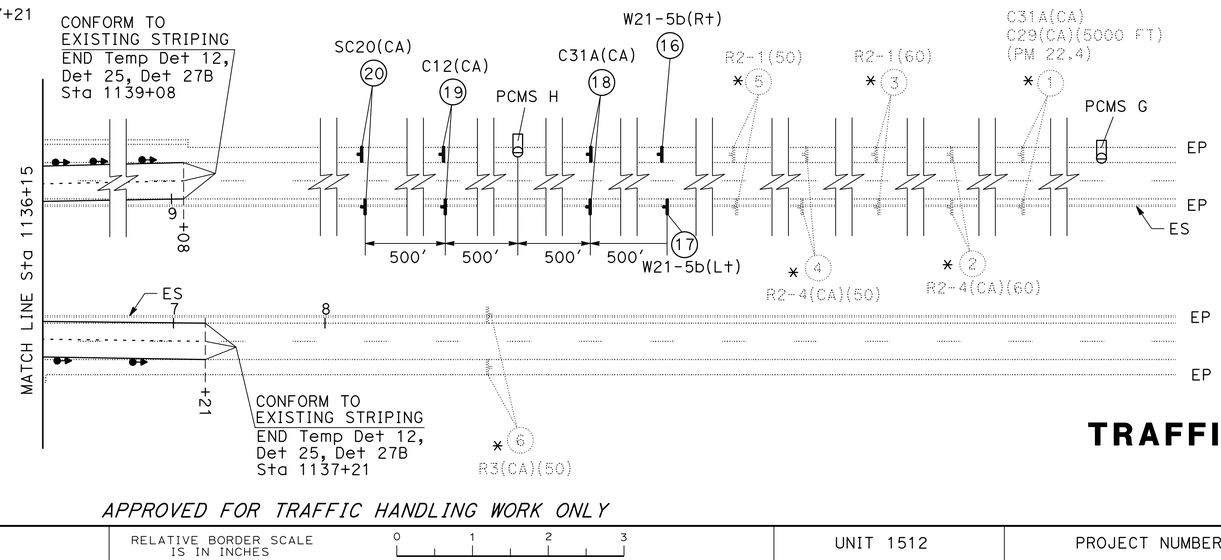


*APPROVED FOR TRAFFIC HANDLING WORK ONLY*

# TRAFFIC HANDLING PLAN
## STAGE 2
NO SCALE

**TH-4**

STATE OF CALIFORNIA - DEPARTMENT OF TRANSPORTATION
Caltrans® **TRAFFIC DESIGN**

| | | | | | |
|---|---|---|---|---|---|
| CALCULATED-DESIGNED BY | RAJINI TEKALKOTE | REVISED BY | RT | RT | RT |
| CHECKED BY | HUE NGUYEN | DATE REVISED | 01-12-15 | 01-31-14 | 01-23-14 |
| FUNCTIONAL SUPERVISOR | MOHAMMED QATAMI | | | | |

LAST REVISION 00-00-00 | DATE PLOTTED => 14-JAN-2015 | TIME PLOTTED => 16:31

| Dist | COUNTY | ROUTE | POST MILES TOTAL PROJECT | SHEET No. | TOTAL SHEETS |
|---|---|---|---|---|---|
| 10 | Mer | 5 | 21.4 | 18 | 42 |

REGISTERED CIVIL ENGINEER 4/4/14 DATE

12-29-14
PLANS APPROVAL DATE

REGISTERED PROFESSIONAL ENGINEER HUE NGUYEN No. 74484 Exp 12/31/15 CIVIL STATE OF CALIFORNIA

*THE STATE OF CALIFORNIA OR ITS OFFICERS OR AGENTS SHALL NOT BE RESPONSIBLE FOR THE ACCURACY OR COMPLETENESS OF SCANNED COPIES OF THIS PLAN SHEET.*

NOTE:

SEE CONSTRUCTION AREA SIGNS, MOTORIST INFORMATION PLANS FOR ADDITIONAL CONSTRUCTION AREA SIGNS.

## TRAFFIC HANDLING DELINEATION QUANTITIES

| SHEET No. | LOCATION/STATION | DIRECTION | REMOVE YELLOW THERMOPLASTIC TRAFFIC STRIPE (HAZARDOUS WASTE) | REMOVE THERMOPLASTIC TRAFFIC STRIPE | TEMPORARY TRAFFIC STRIPE (TAPE) | | | TEMPORARY PAVEMENT MARKER | | CHANNELIZER (SURFACE MOUNTED) |
|---|---|---|---|---|---|---|---|---|---|---|
| | | | | | DETAIL 12 | DETAIL 25 | DETAIL 27B | TYPE G | TYPE H | |
| | | | | LF | LF | LF | LF | EA | EA | EA |
| TH-2 | Sta 1127+00 TO Sta 1134+00 | NB | | | | | | | | 9 |
| | Sta 1129+00 TO Sta 1136+00 | SB | | | | | | | | 9 |
| TH-3 | Sta 1120+00 TO Sta 1138+00 | NB | | | | | | | | 85 |
| | Sta 1125+78 TO Sta 1142+00 | SB | | | | | | | | 89 |
| TH-4 | Sta 1123+91 TO Sta 1137+21 | NB | 1330 | 2660 | 1330 | 1330 | 1330 | 30 | 30 | 28 |
| | Sta 1125+98 TO Sta 1139+08 | SB | 1310 | 2620 | 1310 | 1310 | 1310 | 28 | 28 | 29 |
| SUBTOTAL | | | | | 2640 | 2640 | 2640 | 58 | 58 | |
| TOTAL | | | 2640 | 5280 | 7920 | | | 116 | | 249 |

## STATIONARY MOUNTED CONSTRUCTION AREA SIGNS

| SHEET No. | SIGN No. | SIGN CODE | | SIGN MESSAGE | PANEL SIZE | No. POST AND SIZE | No. OF SIGNS | TYPE III BARRICADE | REMARKS |
|---|---|---|---|---|---|---|---|---|---|
| | | FEDERAL | CALIFORNIA | | | | EA | EA | |
| TH-1 | 1 | | C31A(CA) | NO SHOULDER | 48" x 48" | 1 - 6" x 6" | 4 | | |
| | | | C29(CA) | 5000 FT | 36" x 9" | | | | |
| | 2 | | R2-4(CA)(60) | SPEED ZONE AHEAD (60 MPH) | 48" x 60" | 1 - 6" x 6" | 4 | | |
| | 3 | R2-1(60) | | SPEED LIMIT (60 MPH) | 48" x 60" | 1 - 6" x 6" | 4 | | |
| | 4 | | R2-4(CA)(50) | SPEED ZONE AHEAD (50 MPH) | 48" x 60" | 1 - 6" x 6" | 4 | | |
| | 5 | R2-1(50) | | SPEED LIMIT (50 MPH) | 48" x 60" | 1 - 6" x 6" | 4 | | |
| | 6 | | R3(CA)(50) | END SPEED LIMIT (50 MPH) | 48" x 60" | 1 - 6" x 6" | 4 | | |
| TH-2 | 7 | W20-1 | | ROAD WORK AHEAD | 48" x 48" | 1 - 6" x 6" | 4 | | |
| | 8 | W21-5b(L†) | | LEFT SHOULDER CLOSED AHEAD | 48" x 48" | 1 - 6" x 6" | 4 | | |
| | 9 | | C31A(CA) | NO SHOULDER | 48" x 48" | 1 - 6" x 6" | 2 | | |
| TH-3 | 10 | W20-1 | | ROAD WORK AHEAD | 48" x 48" | 1 - 6" x 6" | 4 | | |
| | 11 | W20-5(L†) | | LEFT LANE CLOSED XX MILE | 48" x 48" | 1 - 6" x 6" | 4 | | |
| | 12 | W4-2 | | LANE ENDS | 48" x 48" | 1 - 6" x 6" | 4 | | |
| | 13 | | SC20(CA) | SLOW FOR THE CONE ZONE | 48" x 48" | 1 - 6" x 6" | 4 | | |
| | 14 | | C31A(CA) | NO SHOULDER | 48" x 48" | 1 - 6" x 6" | 4 | | |
| | 15 | | C30(CA) | LANE CLOSED | 48" x 48" | | 2 | 6 | MOUNT ON TYPE III BARRICADE |
| TH-4 | 16 | W21-5b(R†) | | RIGHT SHOULDER CLOSED XX FT | 48" x 48" | 1 - 6" x 6" | 2 | | |
| | 17 | W21-5b(L†) | | LEFT SHOULDER CLOSED XX FT | 48" x 48" | 1 - 6" x 6" | 2 | | |
| | 18 | | C31A(CA) | NO SHOULDER | 48" x 48" | 1 - 6" x 6" | 4 | | |
| | 19 | | C12(CA) | NARROW LANE(S) | 48" x 48" | 1 - 6" x 6" | 4 | | |
| | 20 | | SC20(CA) | SLOW FOR THE CONE ZONE | 48" x 48" | 1 - 6" x 6" | 4 | | |
| | | | | | | | TOTAL | 6 | |

# TRAFFIC HANDLING QUANTITIES
# THQ-1

| | | | |
|---|---|---|---|
| RT | RT | RT | REVISED BY |
| 01-12-15 | 12-17-14 | 01-23-14 | DATE REVISED |
| RAJINI TEKALKOTE | | | |
| HUE NGUYEN | | | |
| CALCULATED-DESIGNED BY | | | |
| CHECKED BY | | | |
| FUNCTIONAL SUPERVISOR | | | |
| MOHAMMED QATAMI | | | |

STATE OF CALIFORNIA - DEPARTMENT OF TRANSPORTATION
Caltrans® TRAFFIC DESIGN

LAST REVISION 00-00-00
DATE PLOTTED => 14-JAN-2015
TIME PLOTTED => 16:31

| Dist | COUNTY | ROUTE | POST MILES TOTAL PROJECT | SHEET No. | TOTAL SHEETS |
|---|---|---|---|---|---|
| 10 | Mer | 5 | 21.4 | 19 | 42 |

REGISTERED CIVIL ENGINEER 4/2/14 DATE

12-29-14
PLANS APPROVAL DATE

REGISTERED PROFESSIONAL ENGINEER RHODEL De CLARO No. 74058 Exp. 6/30/15 CIVIL STATE OF CALIFORNIA

*THE STATE OF CALIFORNIA OR ITS OFFICERS OR AGENTS SHALL NOT BE RESPONSIBLE FOR THE ACCURACY OR COMPLETENESS OF SCANNED COPIES OF THIS PLAN SHEET.*

NOTES:

1. * - TOTAL INCLUDED IN ROADWAY ITEMS TABLE.
2. ** - FROM STRUCTURE GENERAL PLAN.
3. (N) - NOT A SEPARATE PAY ITEM, FOR INFORMATION ONLY.
4. SHOULDER RUMBLE STRIP (HMA, GROUND-IN INDENTATIONS) QUANTITIES EXCLUDE BRIDGE DECK AND APPROACH SLABS.
5. SAFETY EDGE LOCATIONS AND LENGTHS ARE APPROXIMATE AND WILL BE DETERMINED BY THE ENGINEER.

## SHOULDER ITEMS

| DIRECTION | SIDE | LOCATION (Sta/Sta) | LENGTH (N) | ROADWAY EXCAVATION WIDTH (N) | ROADWAY EXCAVATION DEPTH (N) | SHOULDER BACKING WIDTH (N) | SHOULDER BACKING DEPTH (N) | ROADWAY EXCAVATION | SHOULDER BACKING |
|---|---|---|---|---|---|---|---|---|---|
| | | | | | | | | CY | TON |
| NB | RIGHT | 1125+91/1129+91 | 386′ | 5′ | 0.5′ | 3′ | 0.50′ | 36 | 21 |
| SB | LEFT | 1126+77/1130+87 | 410′ | 5′ | 0.5′ | 3′ | 0.50′ | 38 | 22 |
| SB | RIGHT | 1130+09/1130+75 | 66′ | | | 3′ | 0.25′ | | 4 |
| NB | LEFT | 1132+25/1132+91 | 66′ | | | 3′ | 0.25′ | | 4 |
| | | | | | | | TOTAL | 74* | 51* |

## SAFETY EDGE

| DIRECTION | SIDE | LOCATION | SAFETY EDGE (N) |
|---|---|---|---|
| NB | LEFT | 1132+41/1129+91 | 50′ |
| SB | RIGHT | 1130+09/1130+59 | 50′ |
| | LEFT | 1130+33/1130+83 | 50′ |

## CONCRETE PAVEMENT ITEMS

| DIRECTION | LOCATION (Sta/Sta) | LENGTH (N) | WIDTH (N) | DEPTH (N) | INDIVIDUAL SLAB REPLACEMENT (RSC) | DRILL AND BOND DOWEL |
|---|---|---|---|---|---|---|
| | | | | | CY | LF |
| NB | 1129+41/1129+91 | 50′ | 24′ | 0.75′-1.0′ Var | 39 | 48* |

## SHOULDER RUMBLE STRIP (HMA, GROUND-IN INDENTATIONS)

| DIRECTION | SIDE | LOCATION | Sta |
|---|---|---|---|
| NB | RIGHT | 1125+91/1136+16 | 8 |
| | LEFT | 1125+91/1136+41 | 8 |
| SB | RIGHT | 1126+59/1136+96 | 8 |
| | LEFT | 1126+77/1137+21 | 8 |
| | | TOTAL | 32 |

## DIKE ITEMS

| DIRECTION | SIDE | LOCATION (Sta/Sta) | PLACE HMA DIKE (TYPE C) | PLACE HMA DIKE (TYPE E) | PLACE HMA DIKE (TYPE F) | HMA (TYPE A) | TACK COAT |
|---|---|---|---|---|---|---|---|
| | | | LF | LF | LF | TON | TON |
| NB | RIGHT | 1129+41/1130+01 | 35 | | 25 | 2 | 0.025 |
| | RIGHT | 1132+16/1136+16 | | 386 | | 10 | 0.025 |
| SB | LEFT | 1133+02/1133+94 | 67 | | 25 | 4 | 0.025 |
| | LEFT | 1133+94/1137+21 | | 327 | | 9 | 0.025 |
| | | TOTAL | 102 | 713 | 50 | 25* | 0.100* |

## ROADWAY ITEMS

| LOCATION | ROADWAY EXCAVATION | DRILL AND BOND DOWEL | COLD PLANE AC PAVEMENT | HMA (TYPE A) | TACK COAT | SHOULDER BACKING |
|---|---|---|---|---|---|---|
| | CY | LF | SQYD | TON | TON | TON |
| STAGE CONSTRUCTION | 478 | | 580 | 1079 | 0.7 | 50 |
| CONFORM TAPERS | | 48 | 741 | 100 | 0.3 | |
| HMA DIKE | | | | 25 | 0.1 | |
| SHOULDER ITEMS | 74 | | | | | 51 |
| FROM STRUCTURES | | 1190** | | | | |
| TOTAL | 552 | 1238 | 1321 | 1204 | 1.1 | 101 |

## CONFORM TAPERS

| DIRECTION | LOCATION (Sta/Sta) | LENGTH (N) | WIDTH (N) | COLD PLANE AC Pvmt | HMA (TYPE A) | TACK COAT |
|---|---|---|---|---|---|---|
| | | | | SQYD | TON | TON |
| NB | 1129+41/1129+91 | 50′ | 14′ | 78 | 11 | 0.03 |
| | 1132+16/1132+91 | 50′-75 Var | 38′ | 239 | 32 | 0.09 |
| SB | 1130+09/1130+83 | 50′ | 38′ | 212 | 29 | 0.09 |
| | 1132+93/1133+67 | 50′ | 38′ | 212 | 29 | 0.09 |
| | | | TOTAL | 741* | 100* | 0.3* |

# SUMMARY OF QUANTITIES
# Q-1

| REVISED BY | DATE REVISED |
|---|---|
| RDC | 04/14/14 |

| CALCULATED-DESIGNED BY | CHECKED BY |
|---|---|
| RHODEL DE CLARO | JOSE A. ALICEA II |

FUNCTIONAL SUPERVISOR: ALVIN MANGINDIN

STATE OF CALIFORNIA - DEPARTMENT OF TRANSPORTATION
Caltrans
MAINTENANCE

LAST REVISION 00-00-00
DATE PLOTTED => 14-JAN-2015
TIME PLOTTED => 16:31

| Dist | COUNTY | ROUTE | POST MILES TOTAL PROJECT | SHEET No. | TOTAL SHEETS |
|---|---|---|---|---|---|
| 10 | Mer | 5 | 21.4 | 20 | 42 |

REGISTERED CIVIL ENGINEER 4/2/14 DATE

12-29-14
PLANS APPROVAL DATE

REGISTERED PROFESSIONAL ENGINEER RHODEL De CLARO No. 74058 Exp. 6/30/15 CIVIL STATE OF CALIFORNIA

*THE STATE OF CALIFORNIA OR ITS OFFICERS OR AGENTS SHALL NOT BE RESPONSIBLE FOR THE ACCURACY OR COMPLETENESS OF SCANNED COPIES OF THIS PLAN SHEET.*

NOTES:

TRAFFIC MANAGMENT SYSTEM ELEMENT LOCATIONS ARE APPROXIMATE.

## TRAFFIC MANAGEMENT SYSTEM ELEMENTS (EXISTING)

| PM | DIRECTION | LOCATION | TYPE | DESCRIPTION |
|---|---|---|---|---|
| 21.71 | SB | SOUTH OF ON-RAMP FROM ROUTE 33 | TMS | TRAFFIC MONITORING STATION |
| 21.73 | NB | OFF-RAMP TO ROUTE 33 | TMS | TRAFFIC MONITORING STATION |
| 21.73 | NB | SOUTH OF OFF-RAMP TO ROUTE 33 | TMS | TRAFFIC MONITORING STATION |
| 22.04 | SB | OFF-RAMP TO ROUTE 33 | TMS | TRAFFIC MONITORING STATION |
| 22.04 | SB | NORTH OF OFF-RAMP TO ROUTE 33 | TMS | TRAFFIC MONITORING STATION |

## GUARDRAIL AND THRIE BEAM BARRIER ITEMS

| DIRECTION | SIDE | LOCATION (Sta/Sta) | RECONSTRUCT GUARDRAIL | RECONSTRUCT DOUBLE THRIE BEAM BARRIER | IMPORTED BORROW (CY) | TREATED WOOD WASTE |
|---|---|---|---|---|---|---|
| | | | LF | LF | CY | LB |
| NB | RIGHT | 1129+38/1130+00 | 37.5 | 25 | 2 | 1740 |
| | LEFT | 1129+39/1130+26 | 25 | 62.5 | 2 | 2146 |
| SB | RIGHT | 1132+76/1133+51 | 37.5 | 25 | 2 | 1740 |
| | LEFT | 1133+02/1133+64 | 25 | 50 | 2 | 1956 |
| | | TOTAL | 125 | 162.5 | 8 | 7582 |

## PAVEMENT DELINEATION ITEMS

| LOCATION (SAN LUIS WASTEWAY BRIDGE) | | 4" THERMOPLASTIC TRAFFIC STRIPE | | 4" THERMOPLASTIC TRAFFIC STRIPE BROKEN (36-12) | REMOVE PAVEMENT MARKER | PAVEMENT MARKER (RETROREFLECTIVE) | |
|---|---|---|---|---|---|---|---|
| | | YELLOW | WHITE | WHITE | | TYPE H | TYPE G |
| | | DETAIL 25 | DETAIL 27B | DETAIL 12 | | DETAIL 25 | DETAIL 12 |
| DIRECTION | LOCATION (Sta/Sta) | LF | | LF | EA | EA | |
| NB | 1123+91/1137+21 | 1330 | 1330 | 1330 | 60 | 30 | 30 |
| SB | 1125+98/1139+08 | 1310 | 1310 | 1310 | 56 | 28 | 28 |
| | SUBTOTAL | 2640 | 2640 | 2640 | 116 | 58 | 58 |
| | TOTAL | 5280 | | 2640 | 116 | 116 | |

# SUMMARY OF QUANTITIES
# Q-2

| | | | |
|---|---|---|---|
| RDC | 04/16/14 | REVISED BY | DATE REVISED |
| RHODEL DE CLARO | JOSE A. ALICEA II | CALCULATED-DESIGNED BY | CHECKED BY |
| FUNCTIONAL SUPERVISOR | ALVIN MANGINDIN | | |

STATE OF CALIFORNIA - DEPARTMENT OF TRANSPORTATION
Caltrans
MAINTENANCE

LAST REVISION 00-00-00
DATE PLOTTED => 14-JAN-2015
TIME PLOTTED => 16:31

## M

| | |
|---|---|
| Maint | MAINTENANCE |
| Max | MAXIMUM |
| MB | METAL BEAM |
| MBB | METAL BEAM BARRIER |
| MBGR | METAL BEAM GUARD RAILING |
| Med | MEDIAN |
| MGS | MIDWEST GUARDRAIL SYSTEM |
| MH | MANHOLE |
| Min | MINIMUM |
| Misc | MISCELLANEOUS |
| Misc I & S | MISCELLANEOUS IRON AND STEEL |
| Mkr | MARKER |
| Mod | MODIFIED,<br>MODIFY |
| Mon | MONUMENT |
| MP | METAL PLATE |
| MPGR | METAL PLATE GUARD RAILING |
| MR | MOVEMENT RATING |
| MSE | MECHANICALLY STABILIZED EMBANKMENT |
| Mt | MOUNTAIN, MOUNT |
| Mtl | MATERIAL |
| MVP | MAINTENANCE VEHICLE PULLOUT |

## N

| | |
|---|---|
| N | NORTH |
| NB | NORTHBOUND |
| No. | NUMBER (MUST HAVE PERIOD) |
| Nos. | NUMBERS (MUST HAVE PERIOD) |
| NPS | NOMINAL PIPE SIZE |
| NS | NEAR SIDE |
| NSP | NEW STANDARD PLAN |
| NTS | NOT TO SCALE |

## O

| | |
|---|---|
| Oblr | OBLITERATE |
| OC | OVERCROSSING |
| OD | OUTSIDE DIAMETER |
| OF | OUTSIDE FACE |
| OG | ORIGINAL GROUND |
| OGAC | OPEN GRADED ASPHALT CONCRETE |
| OGFC | OPEN GRADED FRICTION COURSE |
| OH | OVERHEAD |
| OHWM | ORDINARY HIGH WATER MARK |
| O-O | OUT TO OUT |
| Opp | OPPOSITE |
| OSD | OVERSIDE DRAIN |

## P

| | |
|---|---|
| P | PAGE |
| PAP | PERFORATED ALUMINUM PIPE |
| PB | PULL BOX |
| PC | POINT OF CURVATURE,<br>PRECAST |
| PCC | POINT OF COMPOUND CURVE,<br>PORTLAND CEMENT CONCRETE |
| PCMS | PORTABLE CHANGEABLE MESSAGE SIGN |
| PCP | PERFORATED CONCRETE PIPE,<br>PRESTRESSED CONCRETE PIPE |
| PCVC | POINT OF COMPOUND VERTICAL CURVE |
| PEC | PERMIT TO ENTER AND CONSTRUCT |
| Ped | PEDESTRIAN |
| Ped OC | PEDESTRIAN OVERCROSSING |
| Ped UC | PEDESTRIAN UNDERCROSSING |
| Perm Mtl | PERMEABLE MATERIAL |

## P continued

| | |
|---|---|
| PG | PROFILE GRADE |
| PI | POINT OF INTERSECTION |
| PJP | PARTIAL JOINT PENETRATION |
| Pkwy | PARKWAY |
| ℙ,PL | PLATE |
| P/L | PROPERTY LINE |
| PM | POST MILE,<br>TIME FROM NOON TO MIDNIGHT |
| PN | PAVING NOTCH |
| POC | POINT OF HORIZONTAL CURVE |
| POT | POINT OF TANGENT |
| POVC | POINT OF VERTICAL CURVE |
| PP | PIPE PILE,<br>PLASTIC PIPE,<br>POWER POLE |
| PPL | PREFORMED PERMEABLE LINER |
| PPP | PERFORATED PLASTIC PIPE |
| PRC | POINT OF REVERSE CURVE |
| PRF | PAVEMENT REINFORCING FABRIC |
| PRVC | POINT OF REVERSE VERTICAL CURVE |
| PS&E | PLANS, SPECIFICATIONS AND ESTIMATES |
| PS, P/S | PRESTRESSED |
| PSP | PERFORATED STEEL PIPE |
| PT | POINT OF TANGENCY |
| PVC | POLYVINYL CHLORIDE |
| Pvmt | PAVEMENT |

## Q

| | |
|---|---|
| Qty | QUANTITY |

## R

| | |
|---|---|
| R | RADIUS |
| R & D | REMOVE AND DISPOSE |
| R & S | REMOVE AND SALVAGE |
| R/C | RATE OF CHANGE |
| RCA | REINFORCED CONCRETE ARCH |
| RCB | REINFORCED CONCRETE BOX |
| RCP | REINFORCED CONCRETE PIPE |
| RCPA | REINFORCED CONCRETE PIPE ARCH |
| Rd | ROAD |
| Reinf | REINFORCED,<br>REINFORCEMENT,<br>REINFORCING |
| Rel | RELOCATE |
| Repl | REPLACEMENT |
| Ret | RETAINING |
| Rev | REVISED, REVISION |
| Rdwy | ROADWAY |
| RHMA | RUBBERIZED HOT MIX ASPHALT |
| Riv | RIVER |
| RM | ROAD-MIXED |
| RP | RADIUS POINT,<br>REFERENCE POINT |
| RR | RAILROAD |
| RSP | ROCK SLOPE PROTECTION,<br>REVISED STANDARD PLAN |
| Rt | RIGHT |
| Rte | ROUTE |
| RW | REDWOOD,<br>RETAINING WALL |
| R/W | RIGHT OF WAY |
| Rwy | RAILWAY |

## S

| | |
|---|---|
| S | SOUTH,<br>SUPPLEMENT |
| SAE | STRUCTURE APPROACH EMBANKMENT |
| Salv | SALVAGE |
| SAPP | STRUCTURAL ALUMINUM PLATE PIPE |
| SB | SOUTHBOUND |
| SC | SAND CUSHION |
| SCSP | SLOTTED CORRUGATED STEEL PIPE |
| SD | STORM DRAIN |
| Sec | SECOND,<br>SECTION |
| Sep | SEPARATION |
| SG | SUBGRADE |
| Shld | SHOULDER |
| Sht | SHEET |
| Sim | SIMILAR |
| ₤ | STATION LINE |
| SM | SELECTED MATERIAL |
| Spec | SPECIAL,<br>SPECIFICATIONS |
| SPP | SLOTTED PLASTIC PIPE |
| SS | SLOPE STAKE |
| SSBM | STRAP AND SADDLE BRACKET METHOD |
| SSD | STRUCTURAL SECTION DRAIN |
| SSPA | STRUCTURAL STEEL PLATE ARCH |
| SSPP | STRUCTURAL STEEL PLATE PIPE |
| SSPPA | STRUCTURAL STEEL PLATE PIPE ARCH |
| SSRP | STEEL SPIRAL RIB PIPE |
| St | STREET |
| Sta | STATION |
| STBB | SINGLE THRIE BEAM BARRIER |
| Std | STANDARD |
| Str | STRUCTURE |
| Surf | SURFACING |
| SW | SIDEWALK,<br>SOUND WALL |
| Swr | SEWER |
| Sym | SYMMETRICAL |
| S4S | SURFACE 4 SIDES |

## T

| | |
|---|---|
| T | SEMI-TANGENT |
| Tan | TANGENT |
| TBB | THRIE BEAM BARRIER |
| Tbr | TIMBER |
| TC | TOP OF CURB |
| TCB | TRAFFIC CONTROL BOX |
| TCE | TEMPORARY CONSTRUCTION EASEMENT |
| Tel | TELEPHONE |
| Temp | TEMPORARY |
| TG | TOP OF GRADE |
| Tot | TOTAL |
| TP | TELEPHONE POLE |
| TPB | TREATED PERMEABLE BASE |
| TPM | TREATED PERMEABLE MATERIAL |
| Trans | TRANSITION |

## T continued

| | |
|---|---|
| TS | TRANSVERSE,<br>TRAFFIC SIGNAL,<br>TUBULAR STEEL |
| Typ | TYPICAL |

## U

| | |
|---|---|
| UC | UNDERCROSSING |
| UD | UNDERDRAIN |
| UG | UNDERGROUND |
| UON | UNLESS OTHERWISE NOTED |
| UP | UNDERPASS |

## V

| | |
|---|---|
| V | VALVE,<br>DESIGN SPEED |
| Var | VARIABLE,<br>VARIES |
| VC | VERTICAL CURVE |
| VCP | VITRIFIED CLAY PIPE |
| Vert | VERTICAL |
| Via | VIADUCT |
| Vol | VOLUME |

## W

| | |
|---|---|
| W | WEST,<br>WIDTH |
| WB | WESTBOUND |
| WH | WEEP HOLE |
| WM | WIRE MESH |
| WS | WATER SURFACE |
| WSP | WELDED STEEL PIPE |
| Wt | WEIGHT |
| WV | WATER VALVE |
| WW | WINGWALL |
| WWLOL | WINGWALL LAYOUT LINE |

## X

| | |
|---|---|
| X Sec | CROSS SECTION |
| Xing | CROSSING |

## Y

| | |
|---|---|
| Yr | YEAR |
| Yrs | YEARS |

| Dist | COUNTY | ROUTE | POST MILES TOTAL PROJECT | SHEET No. | TOTAL SHEETS |
|---|---|---|---|---|---|
| 10 | Mer | 5 | 21.4 | 21 | 42 |

Grace M. Tsushima
REGISTERED CIVIL ENGINEER

July 19, 2013
PLANS APPROVAL DATE

REGISTERED PROFESSIONAL ENGINEER
Grace M. Tsushima
No. C49814
Exp. 9-30-14
CIVIL
STATE OF CALIFORNIA

*THE STATE OF CALIFORNIA OR ITS OFFICERS OR AGENTS SHALL NOT BE RESPONSIBLE FOR THE ACCURACY OR COMPLETENESS OF SCANNED COPIES OF THIS PLAN SHEET.*

TO ACCOMPANY PLANS DATED 12-29-14

**2010 REVISED STANDARD PLAN RSP A10B**

### UNIT OF MEASUREMENT SYMBOLS:

Some of the symbols used in the project plan quantity tables and in the Bid Item List are:

TABLE A

| SYMBOL USED | DEFINITIONS |
|---|---|
| ACRE | ACRE |
| CF | CUBIC FOOT |
| CY | CUBIC YARD |
| EA | EACH |
| GAL | GALLON |
| LB | POUND |
| LF | LINEAR FOOT |
| SQFT | SQUARE FOOT |
| SQYD | SQUARE YARD |
| STA | 100 FEET |
| TAB | TABLET |
| TON | 2,000 POUNDS |

Some of the symbols used in the plans other than in the project plan quantity tables are:

TABLE B

| SYMBOL USED | DEFINITIONS |
|---|---|
| ksi | KIPS PER SQUARE INCH |
| ksf | KIPS PER SQUARE FOOT |
| psi | POUNDS PER SQUARE INCH |
| psf | POUNDS PER SQUARE FOOT |
| $lb/ft^3$, pcf | POUNDS PER CUBIC FOOT |
| tsf | TONS PER SQUARE FOOT |
| mph, MPH * | MILES PER HOUR |
| ø | NOMINAL DIAMETER |
| oz | OUNCE |
| lb | POUND |
| kip | 1,000 POUNDS |
| cal | CALORIE |
| ft | FOOT OR FEET |
| gal | GALLON |

* For use on a sign panel only

STATE OF CALIFORNIA
DEPARTMENT OF TRANSPORTATION

# ABBREVIATIONS (SHEET 2 OF 2)

NO SCALE

RSP A10B DATED JULY 19, 2013 SUPERSEDES STANDARD PLAN A10B DATED MAY 20, 2011 - PAGE 2 OF THE STANDARD PLANS BOOK DATED 2010.

**REVISED STANDARD PLAN RSP A10B**

6-7-13

| Dist | COUNTY | ROUTE | POST MILES TOTAL PROJECT | SHEET No. | TOTAL SHEETS |
|---|---|---|---|---|---|
| 10 | Mer | 5 | 21.4 | 22 | 42 |

Randell D. Hiatt
REGISTERED CIVIL ENGINEER

July 19, 2013
PLANS APPROVAL DATE

REGISTERED PROFESSIONAL ENGINEER
Randell D. Hiatt
No. C50200
Exp. 6-30-15
CIVIL
STATE OF CALIFORNIA

*THE STATE OF CALIFORNIA OR ITS OFFICERS OR AGENTS SHALL NOT BE RESPONSIBLE FOR THE ACCURACY OR COMPLETENESS OF SCANNED COPIES OF THIS PLAN SHEET.*

TO ACCOMPANY PLANS DATED 12-29-14

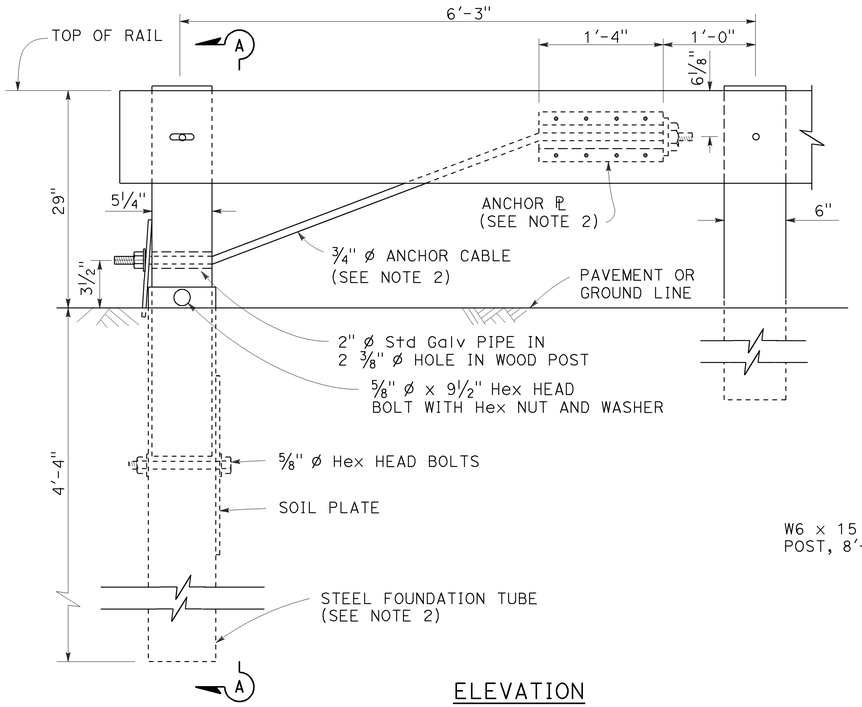


ELEVATION
END ANCHOR
ASSEMBLY (TYPE SFT)

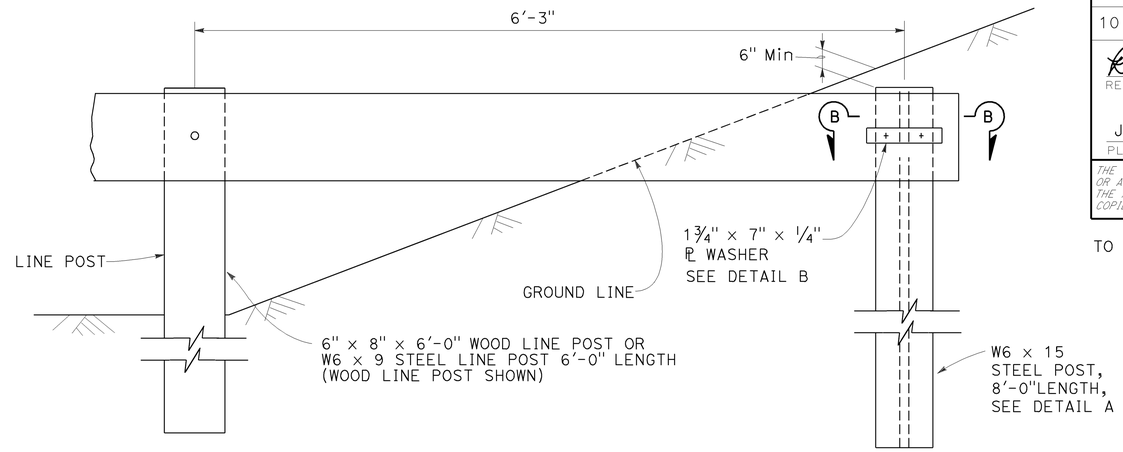


BURIED POST END ANCHOR

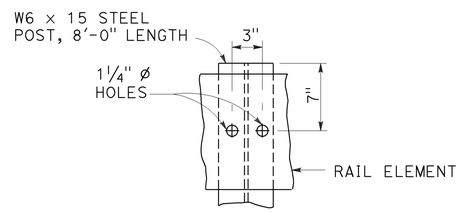


DETAIL A

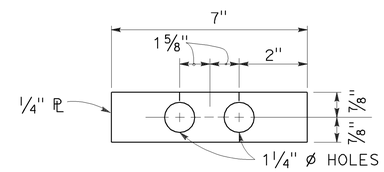


DETAIL B

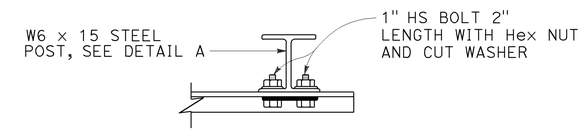


SECTION B-B

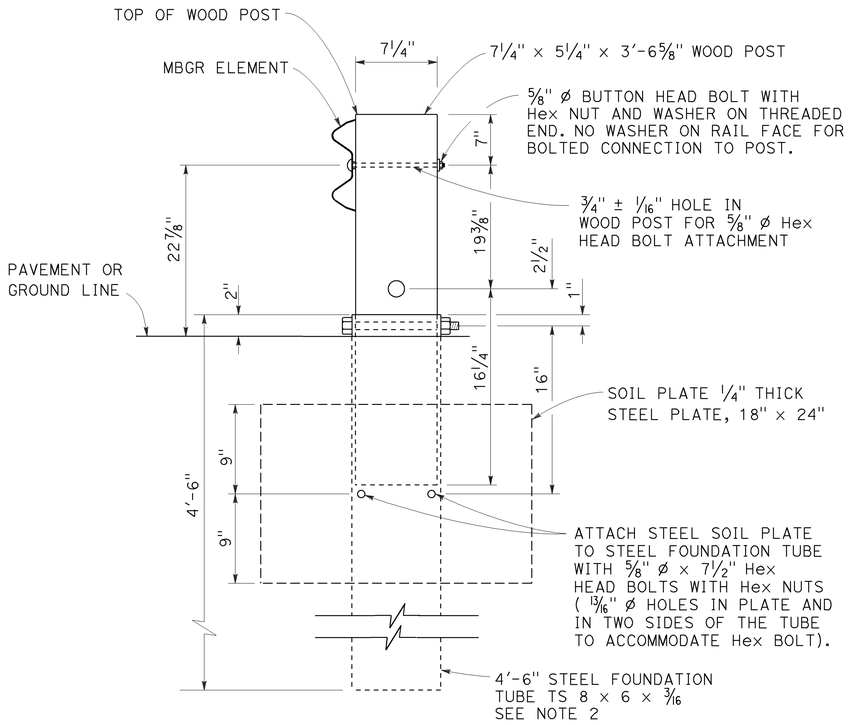


SECTION A-A

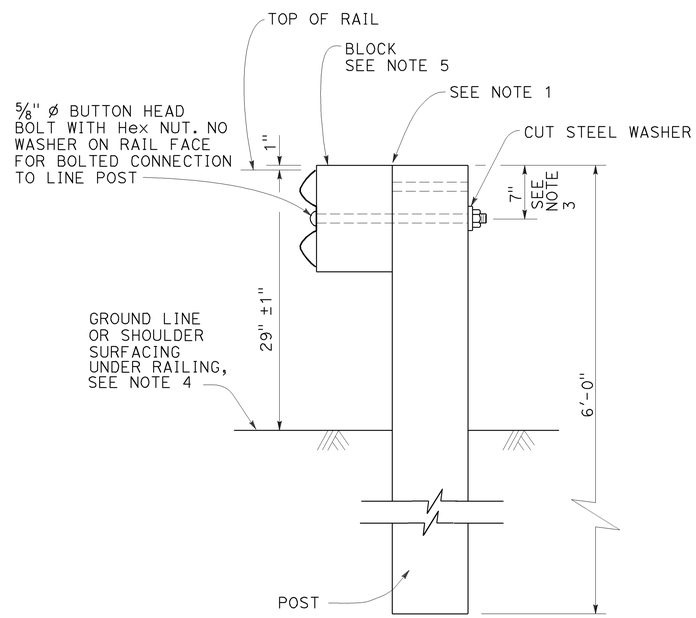


TYPICAL LINE
POST INSTALLATION

NOTES:

1. For wood post and wood block, toenail with 2-16d Galv nails in top of block. For steel post and notched wood or plastic block, notched face of block faces steel post.
2. A 6'-0" Length steel foundation tube, TS 8 x 6 x 3/16, without a soil plate, may be furnished and installed in place of the 4'-6" length steel foundation tube and soil plate shown, Minimum embadment of the 6'-0" length tube shall be 5'-9". A 5/8" ø Hex head bolt and nut shall be installed in the hole in the 6'-0" length tube to keep the wood post from dropping into the tube.
3. To connect railing to 27" terminal system end treatment, transition the top of railing height at a ratio of 120:1 to terminal system end treatment height plus one 12'-6" standard railing section at the transitioned height for a horizontal connection to the end treatment.
4. Install posts in soil.
5. See Revised Standard Plans RSP A77N1 and RSP A77N2 for details.
6. Holes excavation in the slope to construct the buried post end anchor shall be backfilled with selected earth, placed in layers approximately 1'-0" thick. Each layer shall be moistened and thoroughly compacted.

STATE OF CALIFORNIA
DEPARTMENT OF TRANSPORTATION

# METAL BEAM GUARD RAILING RECONSTRUCT INSTALLATION

NO SCALE

RSP A77L3 DATED JULY 19, 2013 SUPPLEMENTS THE STANDARD PLANS BOOK DATED 2010.

**REVISED STANDARD PLAN RSP A77L3**

**2010 REVISED STANDARD PLAN RSP A77L3**

7-16-13

| Dist | COUNTY | ROUTE | POST MILES TOTAL PROJECT | SHEET No. | TOTAL SHEETS |
|---|---|---|---|---|---|
| 10 | Mer | 5 | 21.4 | 23 | 42 |

Randell D. Hiatt
REGISTERED CIVIL ENGINEER

July 19, 2013
PLANS APPROVAL DATE

REGISTERED PROFESSIONAL ENGINEER — Randell D. Hiatt — No. C50200 — Exp. 6-30-15 — CIVIL — STATE OF CALIFORNIA

*THE STATE OF CALIFORNIA OR ITS OFFICERS OR AGENTS SHALL NOT BE RESPONSIBLE FOR THE ACCURACY OR COMPLETENESS OF SCANNED COPIES OF THIS PLAN SHEET.*

TO ACCOMPANY PLANS DATED 12-29-14

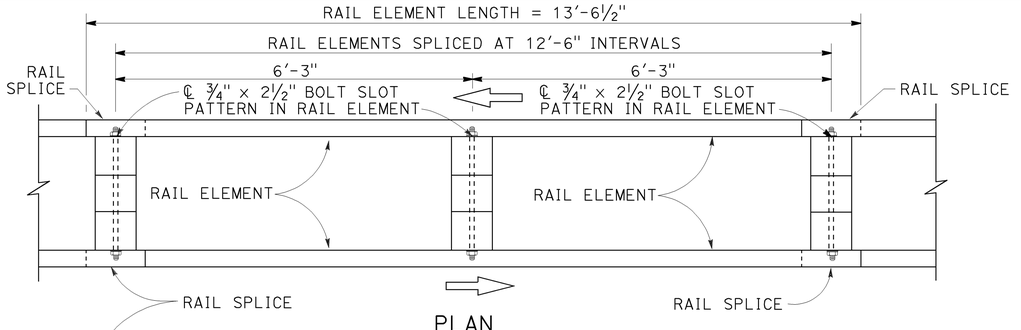


PLAN

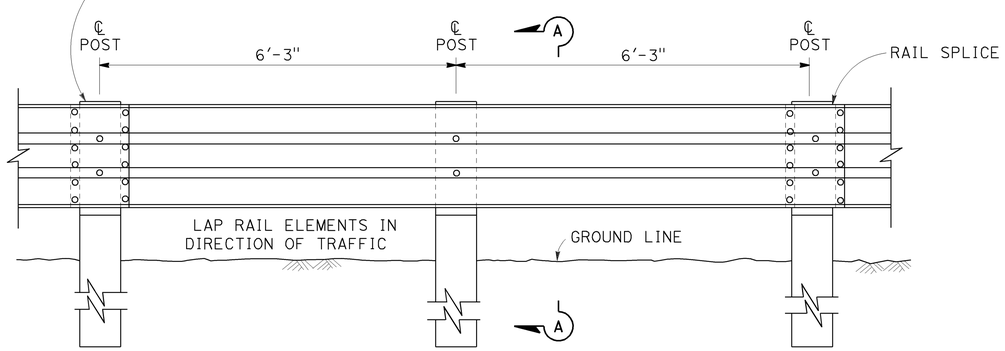


ELEVATION

## DOUBLE THRIE BEAM BARRIER

(Wood post and blocks)
See Note 1

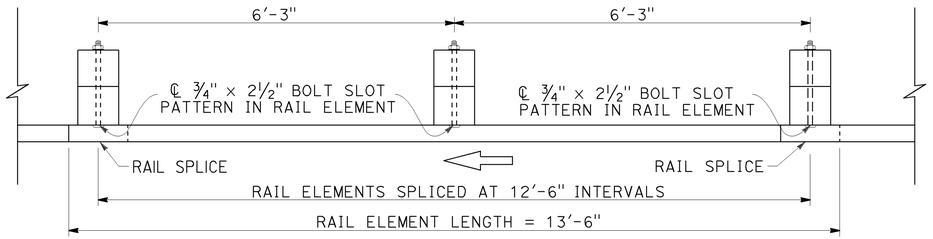


PLAN

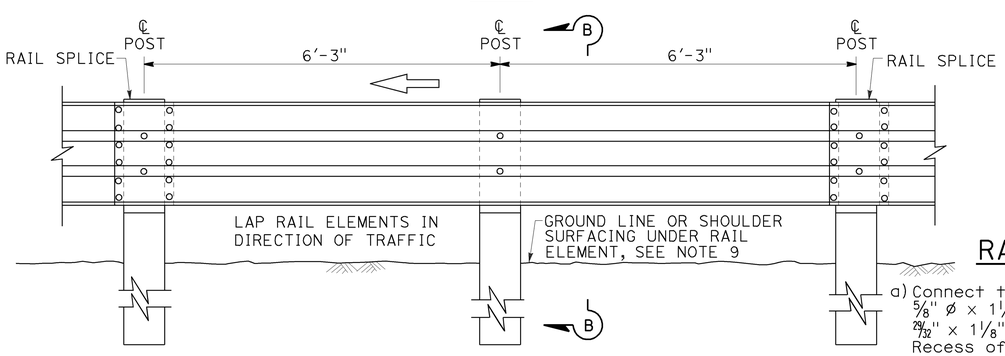


ELEVATION

## SINGLE THRIE BEAM BARRIER

(Wood post and blocks)
See Note 1

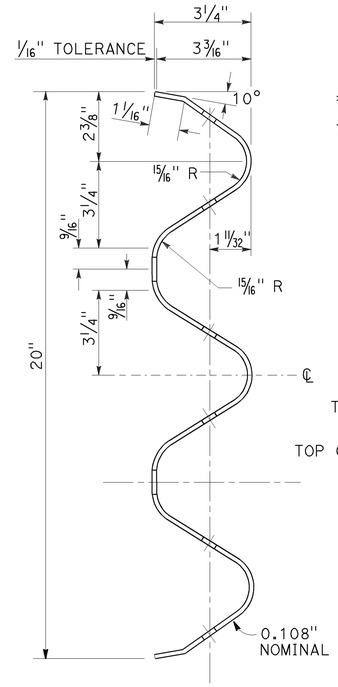


## SECTION THRU RAIL ELEMENT

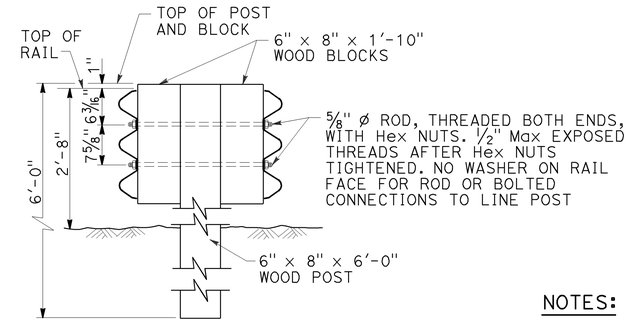


SECTION A-A

## TYPICAL WOOD LINE POST INSTALLATION

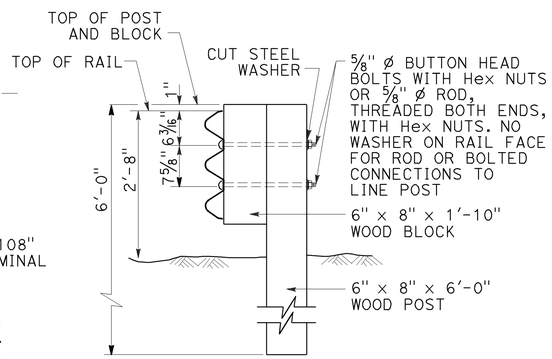


Where bolts are used, install so that the threaded end of the bolts and nuts are placed away from traffic side of rail.

SECTION B-B

## TYPICAL WOOD LINE POST INSTALLATION

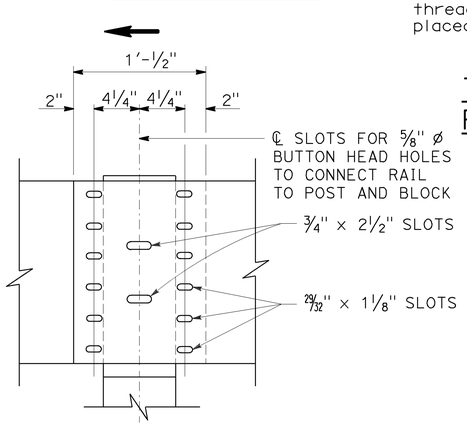


ELEVATION

## RAIL ELEMENT SPLICE DETAIL

a) Connect the overlapped ends of the thrie beam rail elements with ⅝" ø x 1¼" button head oval shoulder bolts inserted into the 29/32" x 1⅛" slots and bolted together with ⅝" ø recessed hex nuts. Recess of hex nut points toward rail element. A total of 12 bolts and nuts are to be used at each rail splice connection.

b) The ends of the rail elements are to be overlapped in the direction of traffic (see details).

c) Where end cap is to be attached to the end of a rail element, a total of 4 of the above described splice bolts and nuts are to be used. Where a return cap is to be attached to the ends of rail elements, a total of 8 of the above described splice bolts and nuts are to be used.

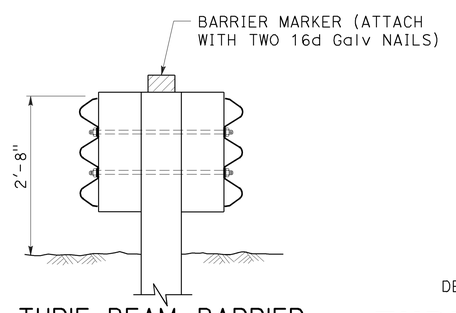


## THRIE BEAM BARRIER DELINEATION

See Note 8

## NOTES:

1. For details of steel post thrie beam barrier, see Standard Plan A78B.
2. For details of standard hardware, posts and blocks used to construct thrie beam barrier, see Standard Plan A78C1 and Revised Standard Plan RSP A78C2.
3. Thrie beam barrier post spacing to be 6'-3" center to center, except as otherwise noted.
4. Top of barrier rail to be 2'-8" above ground line or shoulder surfacing under the rail element.
5. For barrier end treatments and barrier connections, see Standard Plans A78E3 and A78G, and Revised Standard Plans RSP A78E1, RSP A78E2 RSP A77Q1, RSP A77Q2 and RSP A78H.
6. For connection to Concrete Barrier (Type 60), see Standard Plans A78I.
7. For details of thrie beam barrier on bridge see Standard Plan A78D2. For details of thrie beam barrier at fixed object, see Revised Standard Plan RSP A78D1.
8. Median barrier delineation to be used when required by the Special Provisions. Spacing of barrier markers to match spacing of raised pavement markers on adjacent median edgeline pavement delineation.
9. Install posts in soil.

STATE OF CALIFORNIA
DEPARTMENT OF TRANSPORTATION

# THRIE BEAM BARRIER STANDARD BARRIER RAILING SECTION (WOOD POST WITH WOOD BLOCK)

NO SCALE

RSP A78A DATED JULY 19, 2013 SUPERSEDES STANDARD PLAN A78A DATED MAY 20, 2011 - PAGE 89 OF THE STANDARD PLANS BOOK DATED 2010.

**REVISED STANDARD PLAN RSP A78A**

**2010 REVISED STANDARD PLAN RSP A78A**

6-27-13

| Dist | COUNTY | ROUTE | POST MILES TOTAL PROJECT | SHEET No. | TOTAL SHEETS |
|---|---|---|---|---|---|
| 10 | Mer | 5 | 21.4 | 24 | 42 |

Randell D. Hiatt
REGISTERED CIVIL ENGINEER

July 19, 2013
PLANS APPROVAL DATE

REGISTERED PROFESSIONAL ENGINEER
Randell D. Hiatt
No. C50200
Exp. 6-30-15
CIVIL
STATE OF CALIFORNIA

*THE STATE OF CALIFORNIA OR ITS OFFICERS OR AGENTS SHALL NOT BE RESPONSIBLE FOR THE ACCURACY OR COMPLETENESS OF SCANNED COPIES OF THIS PLAN SHEET.*

TO ACCOMPANY PLANS DATED 12-29-14

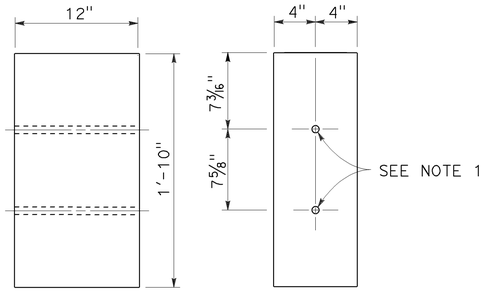


SIDE FRONT

8" x 12"
WOOD BLOCK

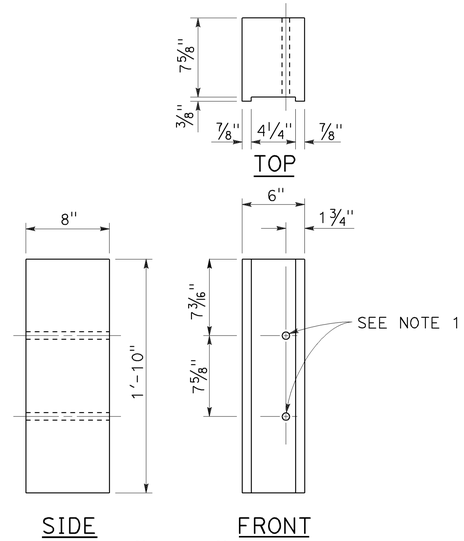


SIDE FRONT

6" x 8"
NOTCHED WOOD BLOCK
See Notes 3 and 5

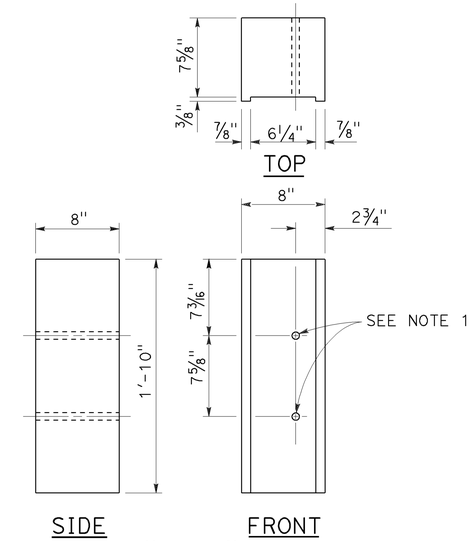


SIDE FRONT

8" x 8"
NOTCHED WOOD BLOCK
See Notes 4 and 5

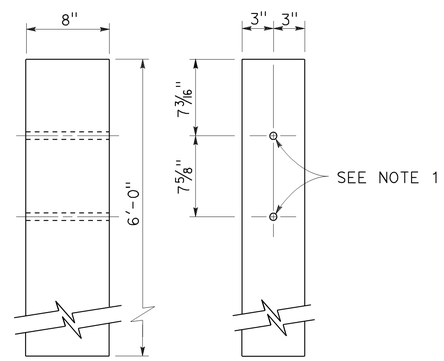


SIDE FRONT

6" x 8"
WOOD POST

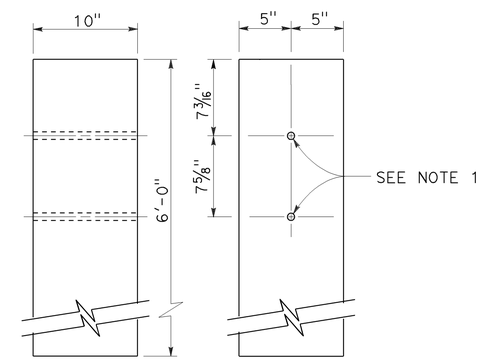


SIDE FRONT

10" x 10"
WOOD POST

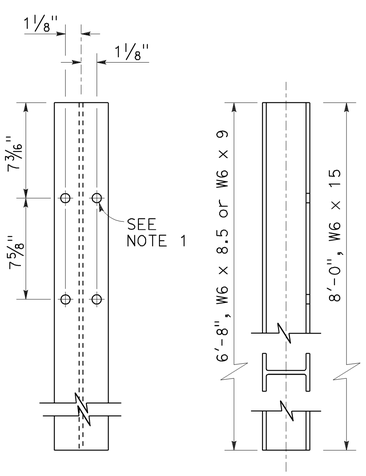


FRONT SIDE

STEEL POST
W6 x 9 or W6 x 8.5 and W6 x 15

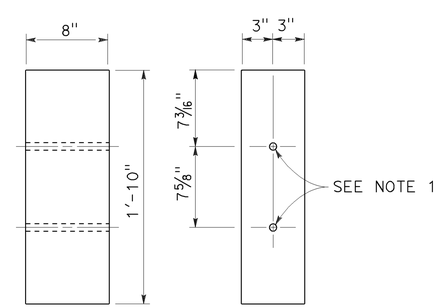


SIDE FRONT

6" x 8"
WOOD BLOCK

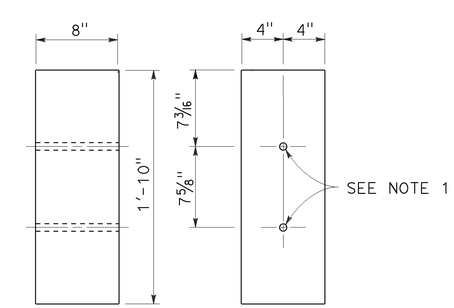


SIDE FRONT

8" x 8"
WOOD BLOCK

## NOTES:

1. All holes in steel post to be 13/16" Dia maximum. Holes in wood posts and wood blocks to be 3/4" Dia ±1/16".
2. Dimensions shown for wood post are nominal.
3. For use with W6 x 8.5 or W6 x 9 steel post.
4. For use with W6 x 15 steel post.
5. Notched face of block faces steel post.

STATE OF CALIFORNIA
DEPARTMENT OF TRANSPORTATION

# THRIE BEAM BARRIER POST AND BLOCK DETAILS

NO SCALE

RSP A78C2 DATED JULY 19, 2013 SUPERSEDES STANDARD PLAN A78C2 DATED MAY 20, 2011 - PAGE 92 OF THE STANDARD PLANS BOOK DATED 2010.

**REVISED STANDARD PLAN RSP A78C2**

**2010 REVISED STANDARD PLAN RSP A78C2**

7-3-13

| Dist | COUNTY | ROUTE | POST MILES TOTAL PROJECT | SHEET No. | TOTAL SHEETS |
|---|---|---|---|---|---|
| 10 | Mer | 5 | 21.4 | 25 | 42 |

REGISTERED CIVIL ENGINEER

July 19, 2013
PLANS APPROVAL DATE

REGISTERED PROFESSIONAL ENGINEER
Michael Janzen
No. 44788
Exp. 03-31-14
CIVIL
STATE OF CALIFORNIA

*THE STATE OF CALIFORNIA OR ITS OFFICERS OR AGENTS SHALL NOT BE RESPONSIBLE FOR THE ACCURACY OR COMPLETENESS OF SCANNED COPIES OF THIS PLAN SHEET.*

TO ACCOMPANY PLANS DATED 12-29-14

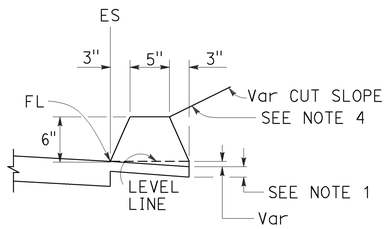


TYPE A
See Note 3

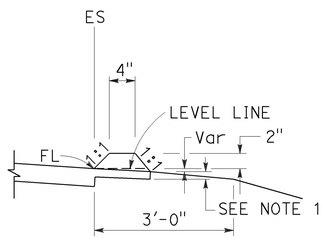


TYPE C

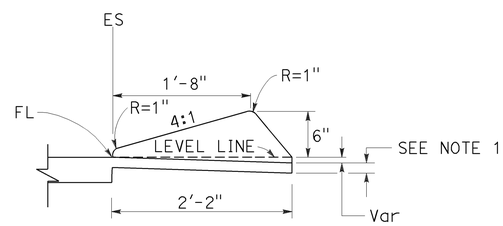


TYPE D

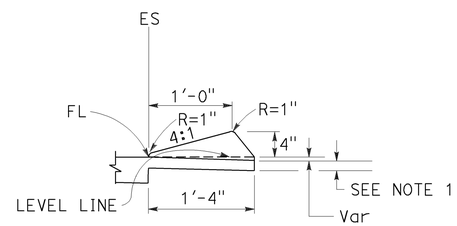


TYPE E

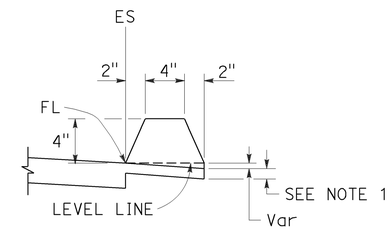


TYPE F
See Note 5

## DIKES

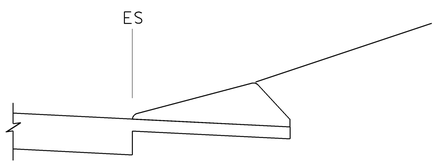


CASE C-1
Cut Slope

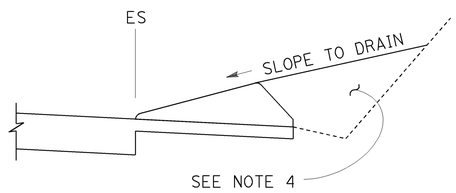


CASE C-2
Cut Slope

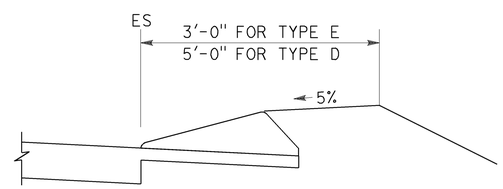


CASE F

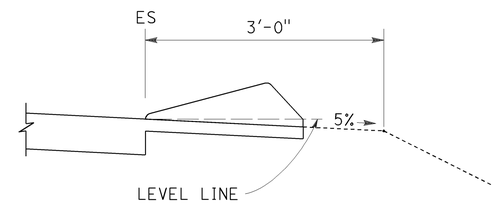


CASE R
See Note 2

## TYPE D AND E BACKFILL DETAILS

### NOTES:

1. For HMA shoulders only, extend top layer of HMA placed on the shoulder under dike with no joint at the ES. For projects with OGFC shoulders, do not extend OGFC under dike. See project plans for modified dike detail.
2. Case R applies to retrofit only projects where restrictive conditions do not provide enough width for Case F backfill.
3. Type A dike only to be used where restrictive slope conditions do not provide enough width to use Type D or Type E dike.
4. Fill and compact with excavated material to top of dike.
5. Use Type F dike, where dike is required with guard railing installations. See Revised Standard Plan RSP A77N4 for dike positioning details.

### DIKE QUANTITIES

| TYPE | CUBIC YARDS PER LINEAR FOOT |
|---|---|
| A | 0.0135 |
| C | 0.0038 |
| D | 0.0293 |
| E | 0.0130 |
| F | 0.0066 |

Quantities based on 5% cross slope.

STATE OF CALIFORNIA
DEPARTMENT OF TRANSPORTATION

# HOT MIX ASPHALT DIKES

NO SCALE

RSP A87B DATED JULY 19, 2013 SUPERSEDES STANDARD PLAN A87B DATED MAY 20, 2011 - PAGE 120 OF THE STANDARD PLANS BOOK DATED 2010.

**REVISED STANDARD PLAN RSP A87B**

**2010 REVISED STANDARD PLAN RSP A87B**

6-27-13

| Dist | COUNTY | ROUTE | POST MILES TOTAL PROJECT | SHEET No. | TOTAL SHEETS |
|---|---|---|---|---|---|
| 10 | Mer | 5 | 21.4 | 26 | 42 |

William K. Farnbach
REGISTERED CIVIL ENGINEER

July 19, 2013
PLANS APPROVAL DATE

REGISTERED PROFESSIONAL ENGINEER
William K. Farnbach
No. C49042
Exp. 9-30-14
CIVIL
STATE OF CALIFORNIA

*THE STATE OF CALIFORNIA OR ITS OFFICERS OR AGENTS SHALL NOT BE RESPONSIBLE FOR THE ACCURACY OR COMPLETENESS OF SCANNED COPIES OF THIS PLAN SHEET.*

TO ACCOMPANY PLANS DATED 12-29-14

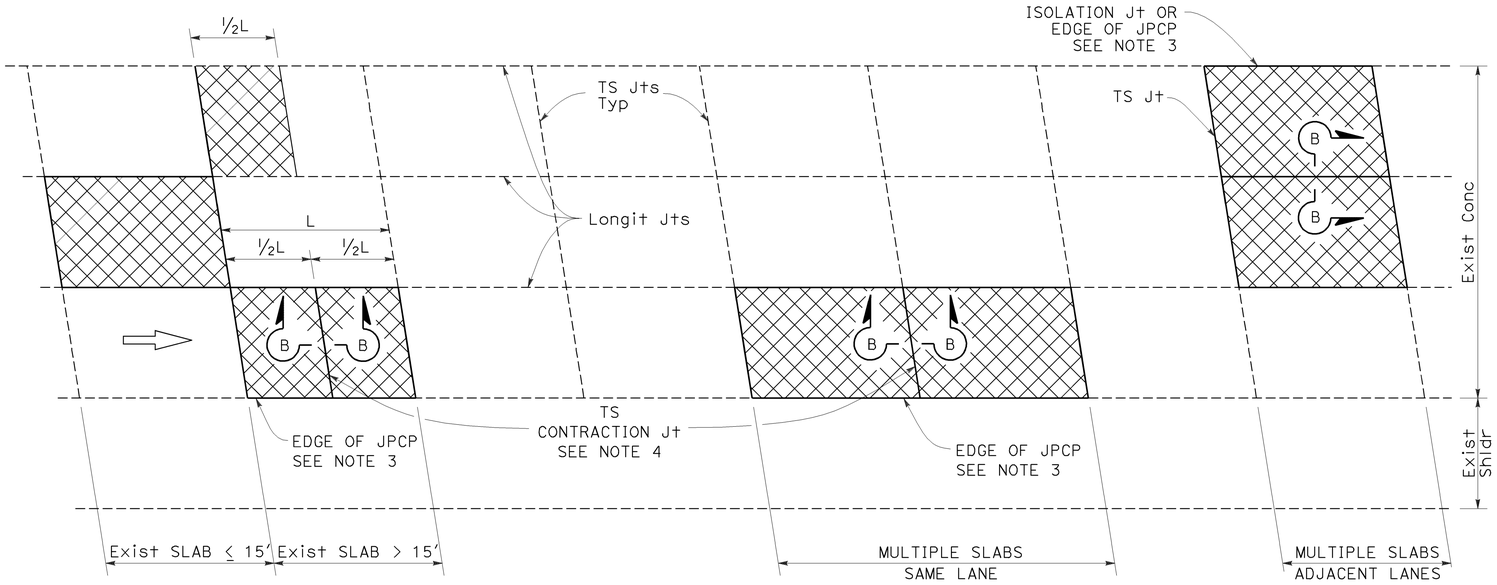


## PLAN

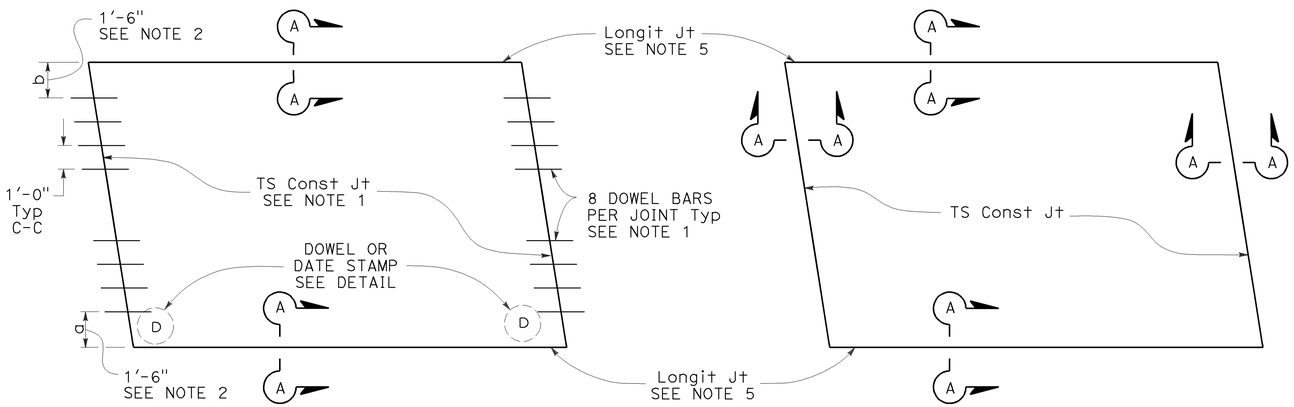


TYPE I
See Design Note 1

TYPE II
See Design Note 2

## SLAB LAYOUT

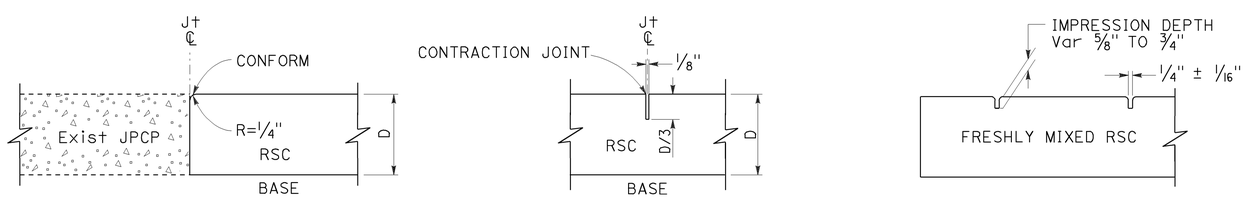


SECTION A-A

SECTION B-B

SECTION C-C

## LEGEND:

RSC RAPID STRENGTH CONCRETE

INDIVIDUAL SLAB REPLACEMENT WITH RSC

## NOTES:

1. For details not shown, see Revised Standard Plan RSP P10.
2. Where the existing outside shoulder is asphalt concrete pavement, "a" = 1'-0" and "b" = 2'-0".
3. Use side forms where edge of RSC pavement is adjacent to asphalt concrete.
4. Transverse contraction joint to match skew of existing joint. Omit dowel bars.
5. Do not place tie bars at longitudinal joints.

## DESIGN NOTES:

1. For concrete slab repair with at least 5 years design life.
2. For short term repairs < 5 yrs design life or for slab replacements with cracking and seating.

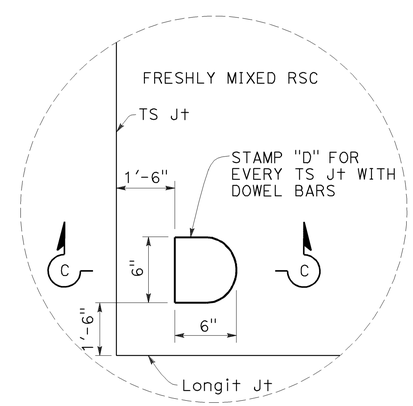


DOWEL STAMP DETAIL

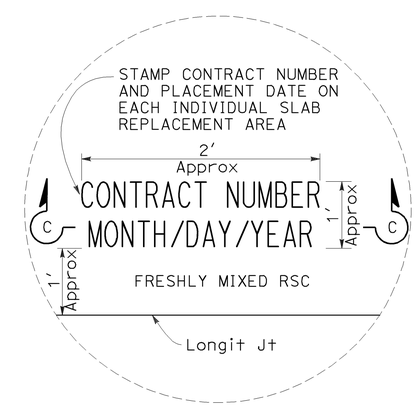


DATE STAMP DETAIL

STATE OF CALIFORNIA
DEPARTMENT OF TRANSPORTATION

# INDIVIDUAL SLAB REPLACEMENT WITH RAPID STRENGTH CONCRETE

NO SCALE

RSP P8 DATED JULY 19, 2013 SUPERSEDES RSP P8 DATED APRIL 20, 2012 AND STANDARD PLAN P8 DATED MAY 20, 2011 - PAGE 130 OF THE STANDARD PLANS BOOK DATED 2010.

**REVISED STANDARD PLAN RSP P8**

**2010 REVISED STANDARD PLAN RSP P8**

5-31-13

| Dist | COUNTY | ROUTE | POST MILES TOTAL PROJECT | SHEET No. | TOTAL SHEETS |
|---|---|---|---|---|---|
| 10 | Mer | 5 | 21.4 | 27 | 42 |

William K. Farnbach
REGISTERED CIVIL ENGINEER

July 19, 2013
PLANS APPROVAL DATE

REGISTERED PROFESSIONAL ENGINEER William K. Farnbach No. C49042 Exp. 9-30-14 CIVIL STATE OF CALIFORNIA

*THE STATE OF CALIFORNIA OR ITS OFFICERS OR AGENTS SHALL NOT BE RESPONSIBLE FOR THE ACCURACY OR COMPLETENESS OF SCANNED COPIES OF THIS PLAN SHEET.*

TO ACCOMPANY PLANS DATED 12-29-14

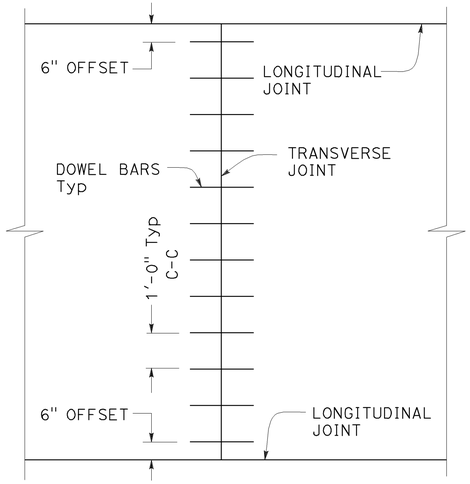


## TRANSVERSE JOINT DOWEL BAR LAYOUT

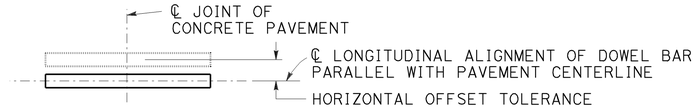


PLAN

## HORIZONTAL OFFSET TOLERANCE

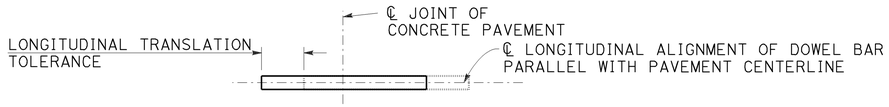


PLAN

## LONGITUDINAL TRANSLATION TOLERANCE

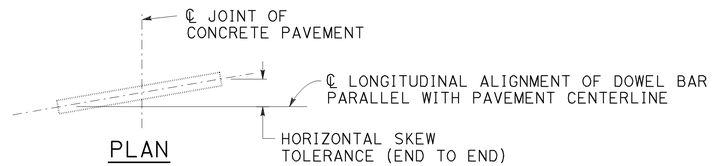


PLAN

## HORIZONTAL SKEW TOLERANCE

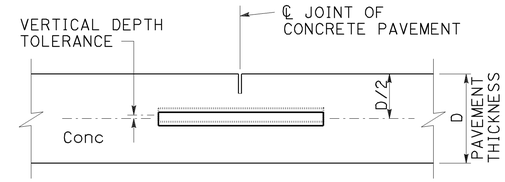


ELEVATION

## VERTICAL DEPTH TOLERANCE

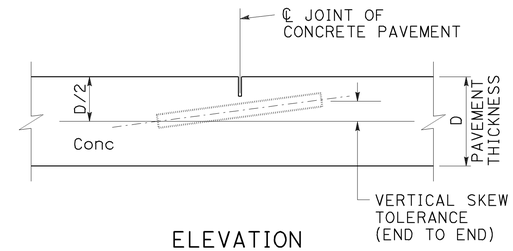


ELEVATION

## VERTICAL SKEW TOLERANCE

NOTES:

1. See Revised Standard Plan RSP P1 for typical dowel bar placement and locations.
2. Where fresh concrete pavement is placed against new concrete or existing concrete pavement, rounding the corner of the existing concrete pavement is not required.
3. May also use ¾" Dia dowel bars 2'-4" ± ¼" in length. Center the length of dowel bars at the centerline of longitudinal joint.

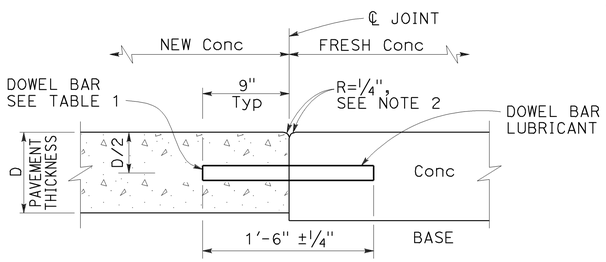


## TRANSVERSE CONSTRUCTION JOINT DETAIL

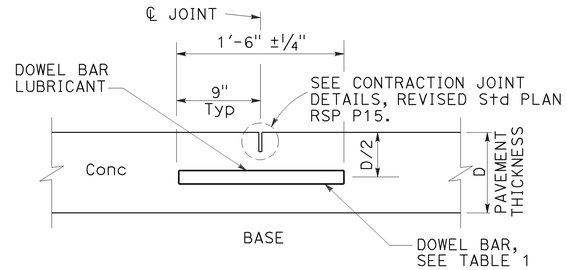


## TRANSVERSE CONTRACTION JOINT

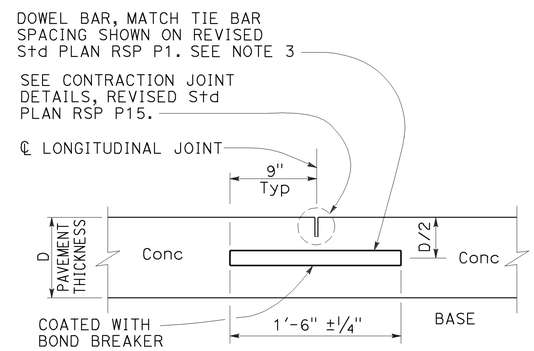


## LONGITUDINAL CONTRACTION JOINT WITH DOWEL BARS

See Revised Std Plan RSP P18

TABLE 1

| DOWEL BAR DIAMETER TABLE | | | |
|---|---|---|---|
| PAVEMENT THICKNESS | 0.65' | > 0.65' - 0.85' | > 0.85' |
| MINIMUM DOWEL * BAR DIAMETER | 1" | 1¼" | 1½" |

* The drilled hole diameter must be ⅛" to 3/16" larger than the bar diameter.

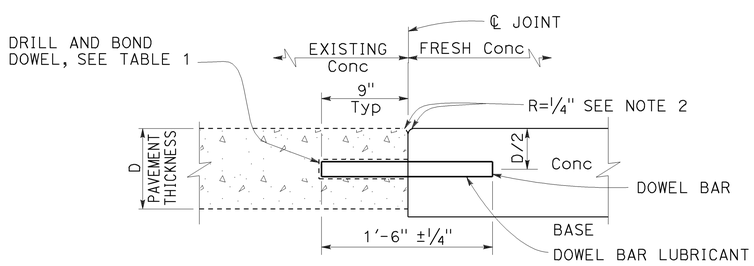


## TRANSVERSE CONSTRUCTION JOINT FOR EXISTING CONCRETE PAVEMENT

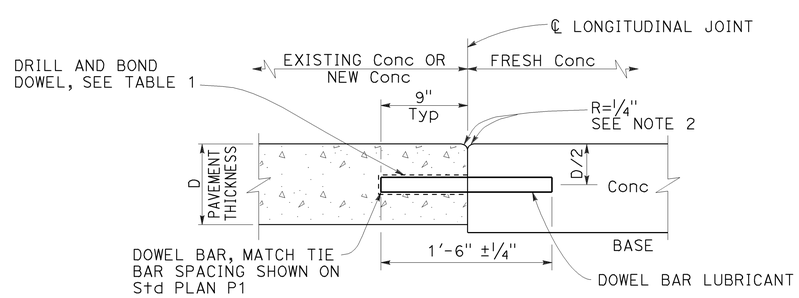


## LONGITUDINAL CONSTRUCTION JOINT WITH DOWEL BARS

See Revised Std Plan RSP P18

STATE OF CALIFORNIA
DEPARTMENT OF TRANSPORTATION

# CONCRETE PAVEMENT DOWEL BAR DETAILS

NO SCALE

RSP P10 DATED JULY 19, 2013 SUPERSEDES RSP P10 DATED APRIL 20, 2012 AND STANDARD PLAN P10 DATED MAY 20, 2011 - PAGE 131 OF THE STANDARD PLANS BOOK DATED 2010.

**REVISED STANDARD PLAN RSP P10**

**2010 REVISED STANDARD PLAN RSP P10**

5-31-13

| DIST | COUNTY | ROUTE | POST MILES TOTAL PROJECT | SHEET No. | TOTAL SHEETS |
|---|---|---|---|---|---|
| 10 | Mer | 5 | 21.4 | 28 | 42 |

REGISTERED CIVIL ENGINEER

November 15, 2013
PLANS APPROVAL DATE

REGISTERED PROFESSIONAL ENGINEER Cornelis M. Hakim No. C55610 Exp. 12-31-14 CIVIL STATE OF CALIFORNIA

*THE STATE OF CALIFORNIA OR ITS OFFICERS OR AGENTS SHALL NOT BE RESPONSIBLE FOR THE ACCURACY OR COMPLETENESS OF SCANNED COPIES OF THIS PLAN SHEET.*

TO ACCOMPANY PLANS DATED 12-29-14

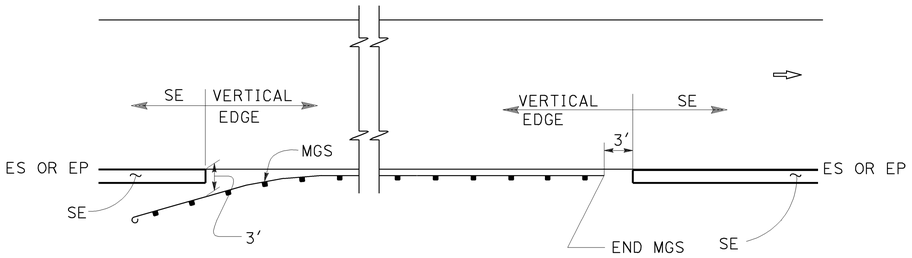


MGS

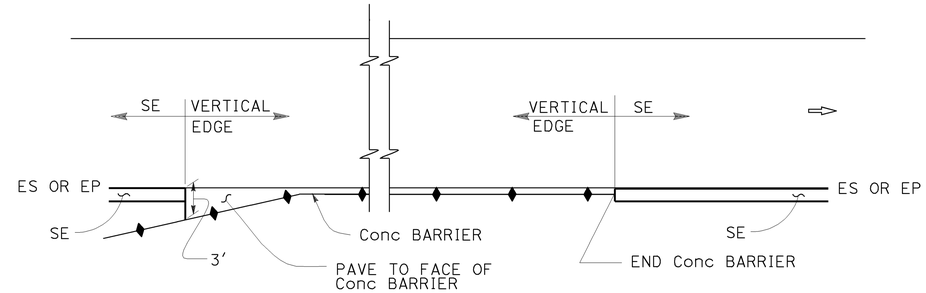


CONCRETE BARRIER

ABBREVIATIONS:

SE SAFETY EDGE

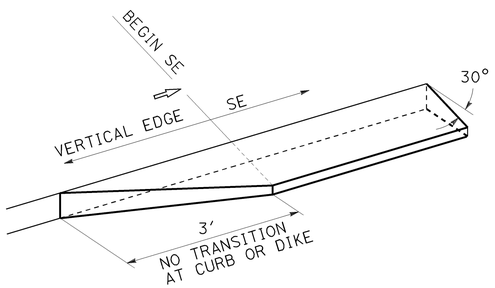


TRANSITION DETAIL FOR CONCRETE ONLY

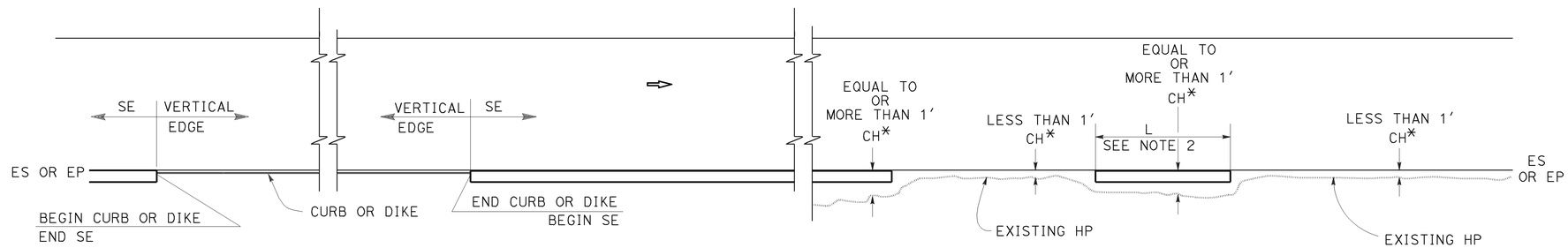


CURB OR DIKE

NARROW SIDE SLOPE

* CH = Distance from ES or EP to existing HP.

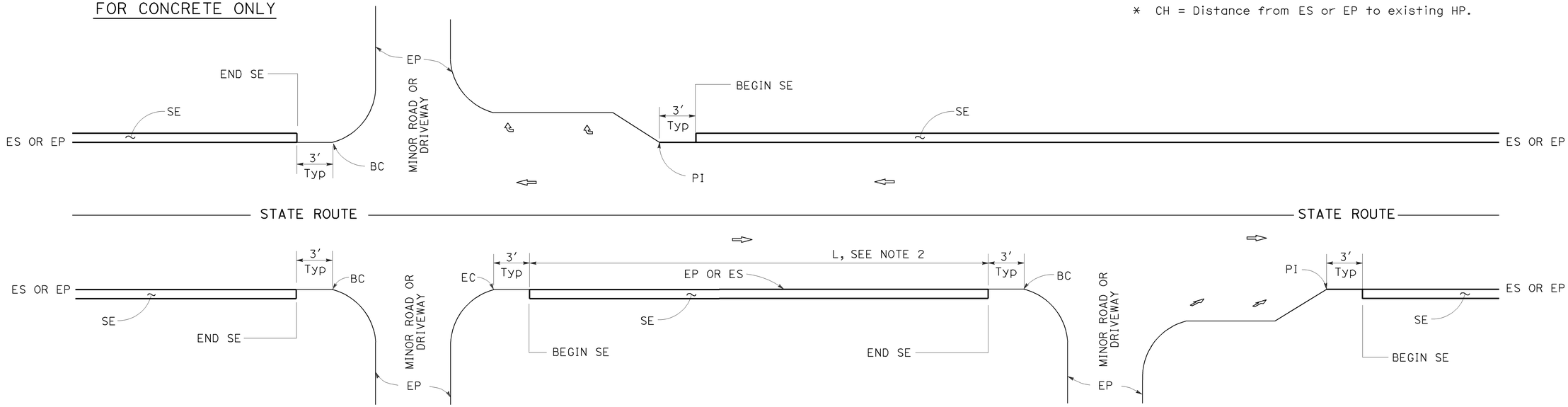


INTERSECTION

MINOR ROADWAY OR DRIVEWAY

DRIVEWAY AND INTERSECTION

NOTES:

1. For details not shown, see Revised Standard Plans RSP P75 and RSP P76.
2. Safety edge is optional when L is less than 30′.

STATE OF CALIFORNIA
DEPARTMENT OF TRANSPORTATION

# PAVEMENT EDGE TREATMENTS

NO SCALE

RSP P74 DATED NOVEMBER 15, 2013 SUPERSEDES RSP P74 DATED JANUARY 20, 2012 THAT SUPPLEMENTS THE STANDARD PLANS BOOK DATED 2010.

**REVISED STANDARD PLAN RSP P74**

**2010 REVISED STANDARD PLAN RSP P74**

10-11-13

| DIST | COUNTY | ROUTE | POST MILES TOTAL PROJECT | SHEET No. | TOTAL SHEETS |
|---|---|---|---|---|---|
| 10 | Mer | 5 | 21.4 | 29 | 42 |

REGISTERED CIVIL ENGINEER

November 15, 2013
PLANS APPROVAL DATE

REGISTERED PROFESSIONAL ENGINEER Cornelis M. Hakim No. C55610 Exp. 12-31-14 CIVIL STATE OF CALIFORNIA

THE STATE OF CALIFORNIA OR ITS OFFICERS OR AGENTS SHALL NOT BE RESPONSIBLE FOR THE ACCURACY OR COMPLETENESS OF SCANNED COPIES OF THIS PLAN SHEET.

TO ACCOMPANY PLANS DATED 12-29-14

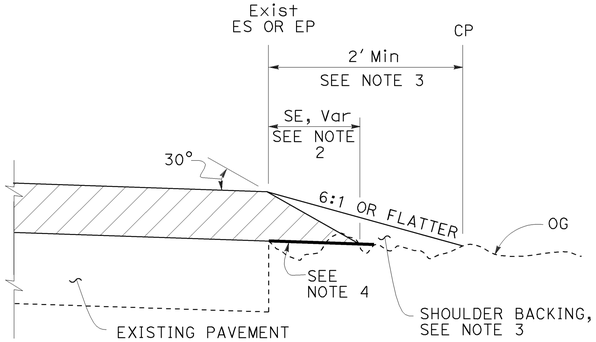


CASE A
Safety Edge

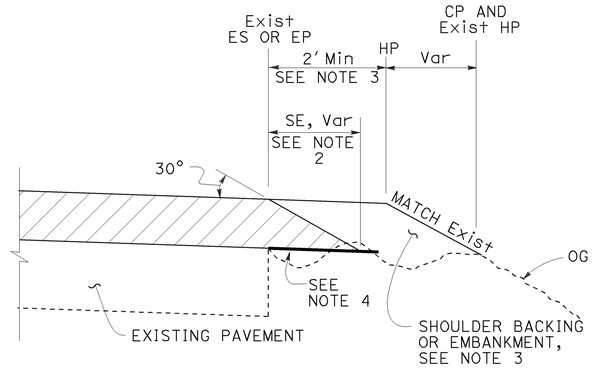


CASE B
Safety Edge

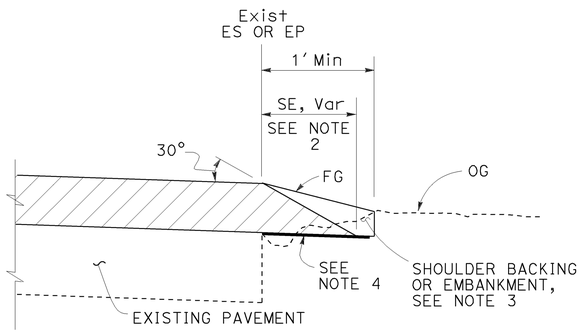


CASE C
Safety Edge

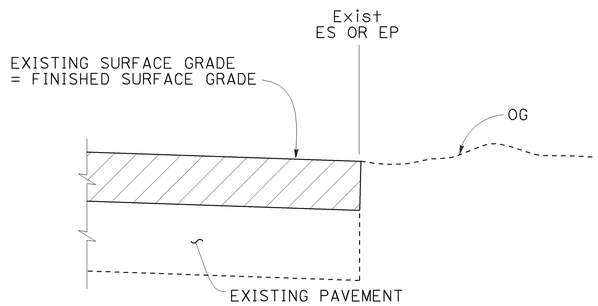


CASE D
Vertical Edge

## LEGEND:

- HMA OVERLAY
- HMA OR CONCRETE OVERLAY
- CONCRETE OVERLAY

## ABBREVIATIONS:

SE SAFETY EDGE
TT TOTAL THICKNESS OF SE

## TABLE A
## EDGE TREATMENT FOR VARIOUS OVERLAY THICKNESS AND CONDITIONS

| | OVERLAY THICKNESS | |
|---|---|---|
| FIELD CONDITION | LESS THAN 0.15' | 0.15' OR MORE |
| Exist SLOPE 6:1 OR FLATTER | CASE E | CASE A |
| Exist SLOPE 3:1 TO 6:1 | CASE E | CASE B |
| Exist SLOPE STEEPER THAN 3:1 | CASE F | CASE F |
| CUT SECTION (REPLACE, COLD PLANE, MILL PAVEMENT) | CASE D | CASE C |

## ADDITIONAL HMA OR CONCRETE QUANTITIES FOR SE/SIDE/MILE

| TYPICAL CROSS SECTION | TT | TOTAL ADDITIONAL MATERIAL FOR SE/SIDE/MILE | | |
|---|---|---|---|---|
| | | HMA (TON) | CONCRETE (CY)* | CONCRETE (CY)** |
| TT | 0.15' | NA | NA | NA |
| | 0.20' | 13.7 | NA | NA |
| | 0.30' | 30.9 | NA | NA |
| | 0.40' | 54.9 | NA | NA |
| | 0.45' | 69.4 | NA | NA |
| TT 0.43' | 0.50' | 84.2 | NA | NA |
| | 0.60' | 113.9 | NA | NA |
| | 0.70' | 143.6 | 70.9 | 94.2 |
| | 0.80' | 173.3 | 85.6 | 112.2 |
| | 0.90' | 203.0 | 100.3 | 130.2 |
| | 1.00' | 232.7 | 114.9 | 148.2 |
| | 1.10' | 262.4 | 129.6 | 166.2 |
| | 1.20' | 292.1 | 144.3 | 184.2 |

* For Detail "A"
** For Optional Detail "A"

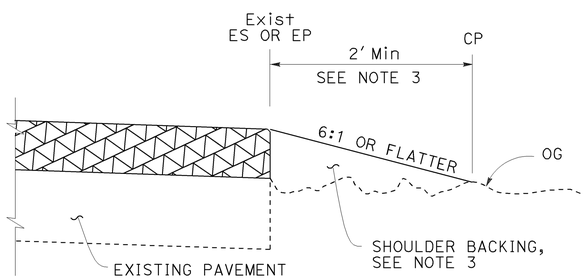


CASE E
Vertical Edge

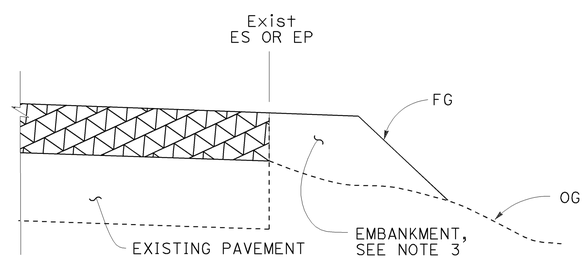


CASE F
Vertical Edge
* See Table A and Revised Std Plan RSP P74

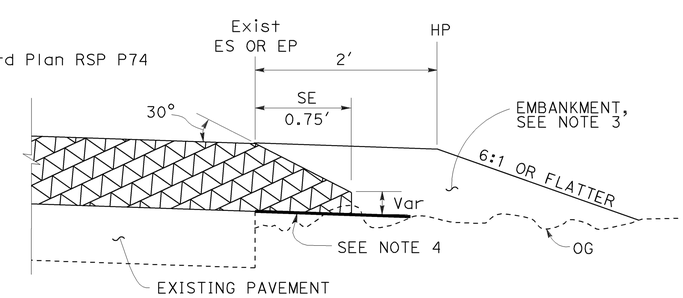


DETAIL "A"
For HMA overlay thickness more than 0.43' or concrete overlay

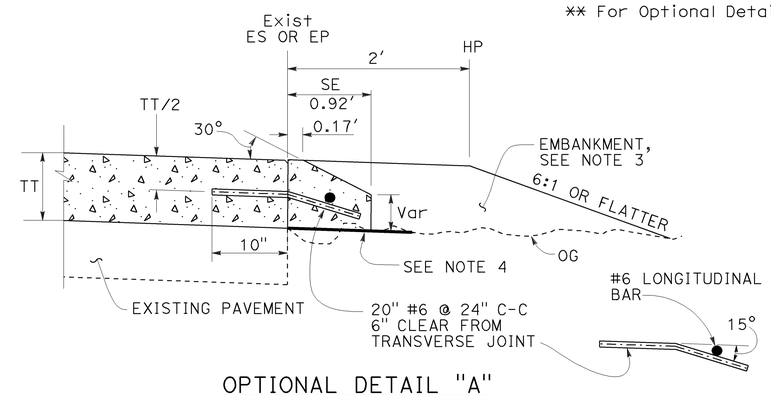


OPTIONAL DETAIL "A"
For concrete overlay
See Note 5

## NOTES:

1. For limits of safety edge and vertical edge treatments, see Revised Standard Plan RSP P74.
2. Details shown for HMA overlay thickness less than 0.43'. See Detail "A" for HMA overlay thickness more than 0.43' or concrete overlay.
3. For locations and limits of shoulder backing or embankment see project plans.
4. Grade existing ground to place safety edge. 1' minimum width
5. Safety edge transverse joint must match overlay transverse joint. End of #6 longitudinal bar must be 2" ±½" clear from transverse joint.
6. Safety edge is not needed in the area of MGS, barrier, right turn lane and acceleration lane. See Revised Standard Plan RSP P74.

STATE OF CALIFORNIA
DEPARTMENT OF TRANSPORTATION

# PAVEMENT EDGE TREATMENTS-OVERLAYS

NO SCALE

RSP P75 DATED NOVEMBER 15, 2013 SUPERSEDES RSP P75 DATED JANUARY 20, 2012 THAT SUPPLEMENTS THE STANDARD PLANS BOOK DATED 2010.

**REVISED STANDARD PLAN RSP P75**

**2010 REVISED STANDARD PLAN RSP P75**

10-4-13

| Dist | COUNTY | ROUTE | POST MILES TOTAL PROJECT | SHEET No. | TOTAL SHEETS |
|---|---|---|---|---|---|
| 10 | Mer | 5 | 21.4 | 30 | 42 |

REGISTERED CIVIL ENGINEER

July 19, 2013
PLANS APPROVAL DATE

REGISTERED PROFESSIONAL ENGINEER
Gurinderpal Bhullar
No. C48815
Exp. 9-30-14
CIVIL
STATE OF CALIFORNIA

THE STATE OF CALIFORNIA OR ITS OFFICERS OR AGENTS SHALL NOT BE RESPONSIBLE FOR THE ACCURACY OR COMPLETENESS OF SCANNED COPIES OF THIS PLAN SHEET.

TO ACCOMPANY PLANS DATED 12-29-14

2010 REVISED STANDARD PLAN RSP T9

## TABLE 1

### TAPER LENGTH CRITERIA AND CHANNELIZING DEVICE SPACING

| SPEED (S) | MINIMUM TAPER LENGTH * FOR WIDTH OF OFFSET 12 FEET (W) | | | | MAXIMUM CHANNELIZING DEVICE SPACING | | |
|---|---|---|---|---|---|---|---|
| | | | | | X | Y | Z ** |
| | TANGENT 2L | MERGING L | SHIFTING L/2 | SHOULDER L/3 | TAPER | TANGENT | CONFLICT |
| mph | ft | ft | ft | ft | ft | ft | ft |
| 20 | 160 | 80 | 40 | 27 | 20 | 40 | 10 |
| 25 | 250 | 125 | 63 | 42 | 25 | 50 | 12 |
| 30 | 360 | 180 | 90 | 60 | 30 | 60 | 15 |
| 35 | 490 | 245 | 123 | 82 | 35 | 70 | 17 |
| 40 | 640 | 320 | 160 | 107 | 40 | 80 | 20 |
| 45 | 1080 | 540 | 270 | 180 | 45 | 90 | 22 |
| 50 | 1200 | 600 | 300 | 200 | 50 | 100 | 25 |
| 55 | 1320 | 660 | 330 | 220 | 55 | 110 | 27 |
| 60 | 1440 | 720 | 360 | 240 | 60 | 120 | 30 |
| 65 | 1560 | 780 | 390 | 260 | 65 | 130 | 32 |
| 70 | 1680 | 840 | 420 | 280 | 70 | 140 | 35 |

* - For other offsets, use the following merging taper length formula for L:
For speed of 40 mph or less, $L = WS^2/60$
For speed of 45 mph or more, $L = WS$

Where: L = Taper length in feet
W = Width of offset in feet
S = Posted speed limit, off-peak 85th-percentile speed prior to work starting, or the anticipated operating speed in mph

** - Use for taper and tangent sections where there are no pavement markings or where there is a conflict between existing pavement markings and channelizers (CA).

## TABLE 2

### LONGITUDINAL BUFFER SPACE AND FLAGGER STATION SPACING

| SPEED * | Min D ** | DOWNGRADE Min D *** | | |
|---|---|---|---|---|
| | | -3% | -6% | -9% |
| mph | ft | ft | ft | ft |
| 20 | 115 | 116 | 120 | 126 |
| 25 | 155 | 158 | 165 | 173 |
| 30 | 200 | 205 | 215 | 227 |
| 35 | 250 | 257 | 271 | 287 |
| 40 | 305 | 315 | 333 | 354 |
| 45 | 360 | 378 | 400 | 427 |
| 50 | 425 | 446 | 474 | 507 |
| 55 | 495 | 520 | 553 | 593 |
| 60 | 570 | 598 | 638 | 686 |
| 65 | 645 | 682 | 728 | 785 |
| 70 | 730 | 771 | 825 | 891 |

* - Speed is posted speed limit, off-peak 85th-percentile speed prior to work starting, or the anticipated operating speed in mph

** - Longitudinal buffer space or flagger station spacing

*** - Use on sustained downgrade steeper than -3 percent and longer than 1 mile.

## TABLE 3

### ADVANCE WARNING SIGN SPACING

| ROAD TYPE | DISTANCE BETWEEN SIGNS * | | |
|---|---|---|---|
| | A | B | C |
| | ft | ft | ft |
| URBAN - 25 mph OR LESS | 100 | 100 | 100 |
| URBAN - MORE THAN 25 mph TO 40 mph | 250 | 250 | 250 |
| URBAN - MORE THAN 40 mph | 350 | 350 | 350 |
| RURAL | 500 | 500 | 500 |
| EXPRESSWAY / FREEWAY | 1000 | 1500 | 2640 |

* - The distances are approximate, are intended for guidance purposes only, and should be applied with engineering judgment. These distances should be adjusted by the Engineer for field conditions, if necessary, by increasing or decreasing the recommmended distances.

STATE OF CALIFORNIA
DEPARTMENT OF TRANSPORTATION

# TRAFFIC CONTROL SYSTEM TABLES FOR LANE AND RAMP CLOSURES

NO SCALE

RSP T9 DATED JULY 19, 2013 SUPERSEDES RSP T9 DATED APRIL 19, 2013 THAT SUPPLEMENTS THE STANDARD PLANS BOOK DATED 2010.

**REVISED STANDARD PLAN RSP T9**

4-30-13

TO ACCOMPANY PLANS DATED 12-29-14

| Dist | COUNTY | ROUTE | POST MILES TOTAL PROJECT | SHEET No. | TOTAL SHEETS |
|---|---|---|---|---|---|
| 10 | Mer | 5 | 21.4 | 31 | 42 |

REGISTERED CIVIL ENGINEER

April 19, 2013
PLANS APPROVAL DATE

REGISTERED PROFESSIONAL ENGINEER Gurinderpal Bhullar No. C48815 Exp. 9-30-14 CIVIL STATE OF CALIFORNIA

*THE STATE OF CALIFORNIA OR ITS OFFICERS OR AGENTS SHALL NOT BE RESPONSIBLE FOR THE ACCURACY OR COMPLETENESS OF SCANNED COPIES OF THIS PLAN SHEET.*

## NOTES:

See Revised Standard Plan RSP T9 for tables.

Use cone spacing X for taper segment, Y for tangent segment or Z for conflict situations, as approriate, per Table 1, unless X, Y, or Z cone spacing is shown on this sheet.

Unless otherwise specified in the special provisions, all temporary warning signs shall have black legend on fluorescent orange background.

California codes are designated by (CA). Otherwise, Federal (MUTCD) codes are shown.

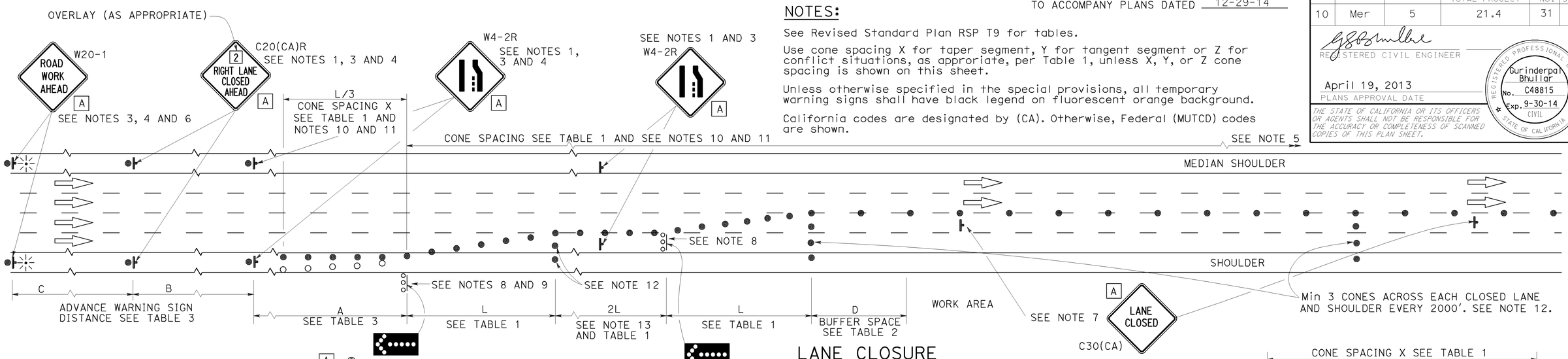


## LANE CLOSURE

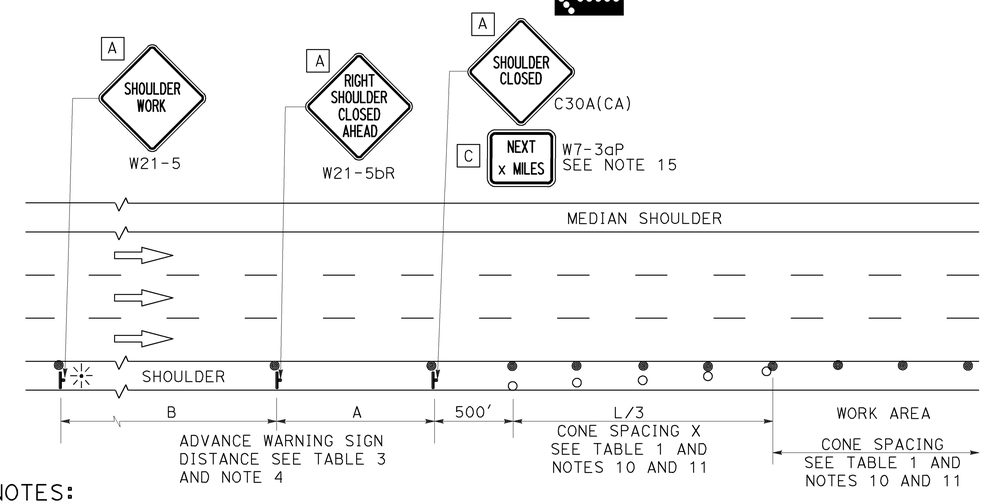


## SHOULDER CLOSURE

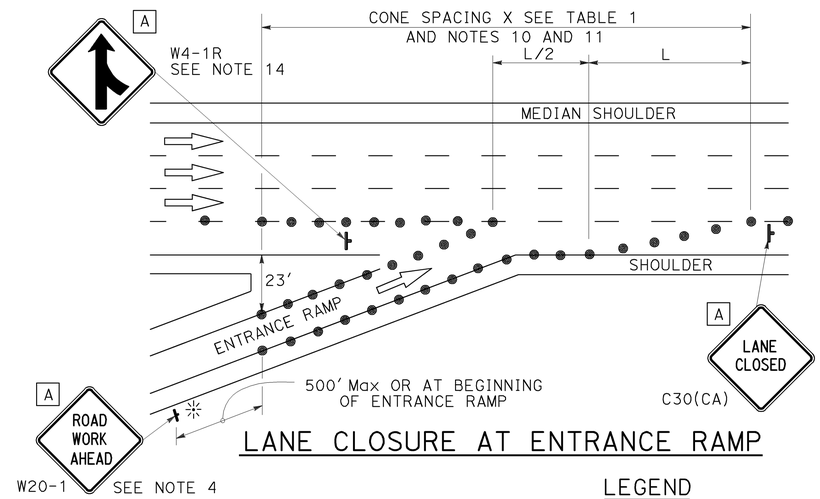


## LANE CLOSURE AT ENTRANCE RAMP

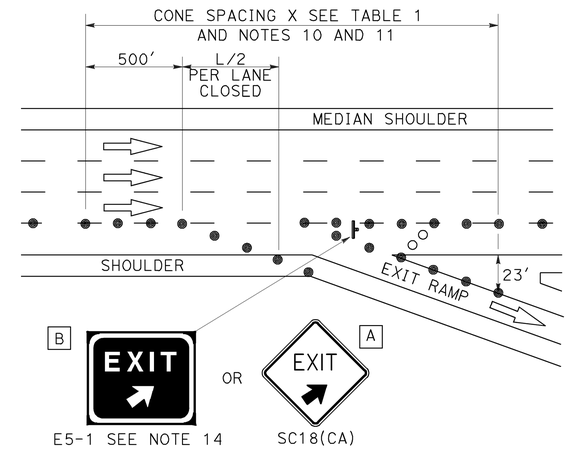


## LANE CLOSURE AT EXIT RAMP

## NOTES:

1. Median lane closures shall conform to the details as shown except that C20(CA)L and W4-2L signs shall be used.
2. At least one person shall be assigned to provide full time maintenance of traffic control devices for lane closures.
3. Duplicate sign installations are not required:
   a) On opposite shoulder if at least one-half of the available lanes remain open to traffic.
   b) In the median if the width of the median shoulder is less than 8' and the outside lanes are to be closed.
4. Each advance warning sign on each side of the roadway shall be equipped with at least two flags for daytime closure. Each flag shall be at least 16" x 16" in size and shall be orange or fluorescent red-orange in color. Flashing beacons shall be placed at the locations indicated for lane closure during hours of darkness.
5. A G20-2 "END ROAD WORK" sign, with minimum size of 48" x 24" as appropriate, shall be placed at the end of the lane closure unless the end of work area is obvious or ends within a larger project's limits.
6. If the W20-1 sign would follow within 2000' of a stationary W20-1 or G20-1 "ROAD WORK NEXT _____ MILES", use a C20(CA) sign for the first advance warning sign.
7. Place a C30(CA) sign every 2000' throughout length of lane closure.
8. One flashing arrow sign for each lane closed. The flashing arrow signs shall be Type I.
9. A minimum 1500' of sight distance shall be provided where possible for vehicles approaching the first flashing arrow sign. Lane closures shall not begin at top of crest vertical curve or on a horizontal curve.
10. All cones used for lane closures during the hours of darkness shall be fitted with retroreflective bands (or sleeves) as specified in the specifications.
11. Portable delineators, placed at one-half the spacing indicated for traffic cones may be used instead of cones for daytime closures only.
12. Unless otherwise specified in the special provisions, a minimum of 3 cones shall be placed transversely across each closed lane and shoulder at each location where a taper across a traffic lane ends and every 2000' as shown on the "Lane Closure" detail. Two Type II barricades may be used instead of the 3 cones. The transverse alignment of the cones or barricades on the closed shoulder may be shifted from the transverse alignment to provide access to the work.
13. Unless otherwise specified in the special provisions, the 2L tangent shown along lane lines shall be used between the L tapers required for each closed traffic lane.
14. Unless otherwise specified in the special provisions, the E5-1 or SC18(CA) and W4-1 signs shall be used as shown.
15. A W7-3aP "NEXT____ MILES" plaque must be used if theshoulder closure extends beyond the distance that can be perceived by road users.

## LEGEND

- TRAFFIC CONE
- TRAFFIC CONE (OPTIONAL TAPER)
- TEMPORARY TRAFFIC CONTROL SIGN
- FLASHING ARROW SIGN (FAS)
- FAS SUPPORT OR TRAILER
- PORTABLE FLASHING BEACON

## SIGN PANEL SIZE (Min)

| | |
|---|---|
| A | 48" x 48" |
| B | 72" x 60" |
| C | 36" x 30" |

STATE OF CALIFORNIA
DEPARTMENT OF TRANSPORTATION

# TRAFFIC CONTROL SYSTEM FOR LANE CLOSURE ON FREEWAYS AND EXPRESSWAYS

NO SCALE

RSP T10 DATED APRIL 19, 2013 SUPERSEDES STANDARD PLAN T10 DATED MAY 20, 2011 - PAGE 237 OF THE STANDARD PLANS BOOK DATED 2010.

**REVISED STANDARD PLAN RSP T10**

**2010 REVISED STANDARD PLAN RSP T10**

12-18-12

TO ACCOMPANY PLANS DATED 12-29-14

| Dist | COUNTY | ROUTE | POST MILES TOTAL PROJECT | SHEET No. | TOTAL SHEETS |
|---|---|---|---|---|---|
| 10 | Mer | 5 | 21.4 | 32 | 42 |

REGISTERED CIVIL ENGINEER

April 19, 2013
PLANS APPROVAL DATE

REGISTERED PROFESSIONAL ENGINEER Gurinderpal Bhullar No. C48815 Exp. 9-30-14 CIVIL STATE OF CALIFORNIA

*THE STATE OF CALIFORNIA OR ITS OFFICERS OR AGENTS SHALL NOT BE RESPONSIBLE FOR THE ACCURACY OR COMPLETENESS OF SCANNED COPIES OF THIS PLAN SHEET.*

**NOTES:** See Revised Standard Plan RSP T9 for tables.

Use cone spacing X for taper segment, Y for tangent segment or Z for conflict situations, as approriate, per Table 1, unless X, Y, or Z cone spacing is shown on this sheet.

Unless otherwise specified in the special provisions, all temporary warning signs shall have black legend on fluorescent orange background.

California codes are designated by (CA). Otherwise, Federal (MUTCD) codes are shown.

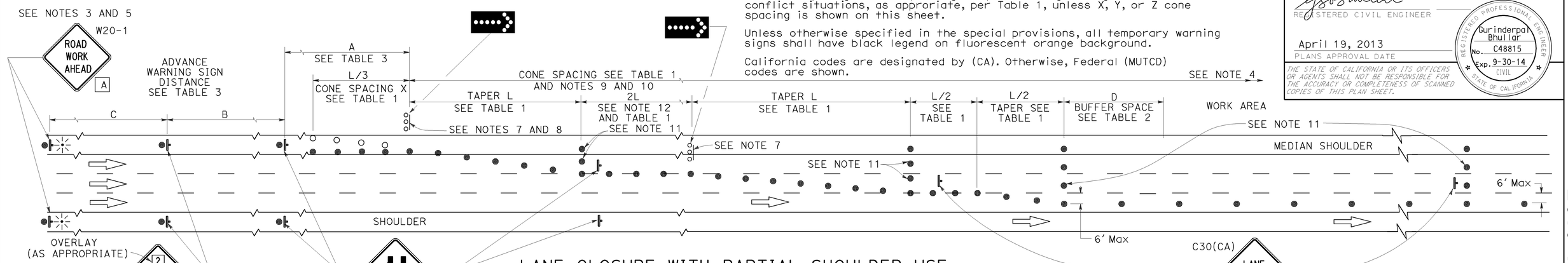


## LANE CLOSURE WITH PARTIAL SHOULDER USE

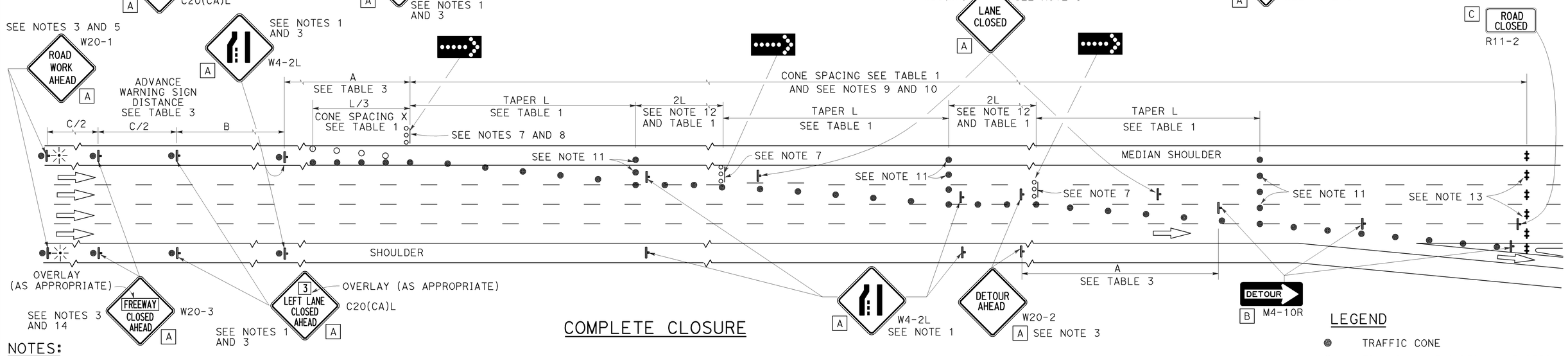


## COMPLETE CLOSURE

## NOTES:

1. Lane closures on the right side using partial median shoulder as a traffic lane shall conform to the details as shown except that C20(CA)R and W4-2R signs shall be used.
2. At least one person shall be assigned to provide full time maintenance of traffic control devices for lane closures.
3. Each advance warning sign on each side of the roadway shall be equipped with at least two flags for daytime closure. Each flag shall be at least 16" X 16" in size and shall be orange or fluorescent red-orange in color. Flashing beacons shall be placed at the locations indicated for lane closure during hours of darkness.
4. A G20-2 "END ROAD WORK" sign, with minimum size of 48" x 24" as appropriate, shall be placed at the end of the lane closure unless the end of work area is obvious or ends within a larger project's limits.
5. If the W20-1 sign would follow within 2000' of a stationary W20-1 or G20-1 "ROAD WORK NEXT ___ MILES", use a C20(CA) sign for the first advance warning sign.
6. Place a C30(CA) sign every 2000' throughout length of lane closure.
7. One flashing arrow sign for each lane closed. The flashing arrow signs shall be Type I.
8. A minimum 1500' of sight distance shall be provided where possible for vehicles approaching the first flashing arrow sign. Lane closures shall not begin at the top of crest vertical curve or on a horizontal curve.
9. All cones used for lane closures during the hours of darkness shall be fitted with retroreflective bands (or sleeves) as specified in the specifications.
10. Portable delineators, placed at one-half the spacing indicated for traffic cones, may be used instead of cones for daytime closures only.
11. Unless otherwise specified in the special provisions, a minimum of 3 cones shall be placed transversely across each closed lane and shoulder at each location where a taper across a traffic lane ends and every 2000' as shown on the "Lane Closure With Partial Shoulder Use" detail. Two Type II barricades may be used instead of the 3 cones. The transverse alignment of the cones or barricades on the closed shoulder may be shifted from the transverse alignment to provide access to the work.
12. Unless otherwise specified in the special provisions, the 2L tangent shown along lane lines shall be used between the L tapers required for each closed traffic lane.
13. A minimum of Two Type II or III barricades shall be placed across each closed lane and shoulder at the location shown and every 2000' within the complete closure area. Within the complete closure area, the transverse alignment of the barricades on the closed shoulder may be shifted from the transverse alignment to provide access to the work.
14. When specified in the special provisions, a W20-2 "DETOUR AHEAD" sign is to be used in place of the W20-3 "FREEWAY CLOSED AHEAD" sign.

## SIGN PANEL SIZE (Min)

| | |
|---|---|
| A | 48" x 48" |
| B | 48" x 18" |
| C | 48" x 30" |

## LEGEND

- TRAFFIC CONE
- TRAFFIC CONE (OPTIONAL TAPER)
- TEMPORARY TRAFFIC CONTROL SIGN
- FLASHING ARROW SIGN (FAS)
- FAS SUPPORT OR TRAILER
- PORTABLE FLASHING BEACON

STATE OF CALIFORNIA
DEPARTMENT OF TRANSPORTATION

# TRAFFIC CONTROL SYSTEM FOR LANE CLOSURES ON FREEWAYS AND EXPRESSWAYS

NO SCALE

RSP T10A DATED APRIL 19, 2013 SUPERSEDES STANDARD PLAN T10A DATED MAY 20, 2011 - PAGE 238 OF THE STANDARD PLANS BOOK DATED 2010.

# REVISED STANDARD PLAN RSP T10A

2010 REVISED STANDARD PLAN RSP T10A

12-18-12

| Dist | COUNTY | ROUTE | POST MILES TOTAL PROJECT | SHEET No. | TOTAL SHEETS |
|---|---|---|---|---|---|
| 10 | Mer | 5 | 21.4 | 33 | 42 |

REGISTERED CIVIL ENGINEER

April 19, 2013
PLANS APPROVAL DATE

REGISTERED PROFESSIONAL ENGINEER Gurinderpal Bhullar No. C48815 Exp. 9-30-14 CIVIL STATE OF CALIFORNIA

*THE STATE OF CALIFORNIA OR ITS OFFICERS OR AGENTS SHALL NOT BE RESPONSIBLE FOR THE ACCURACY OR COMPLETENESS OF SCANNED COPIES OF THIS PLAN SHEET.*

TO ACCOMPANY PLANS DATED 12-29-14

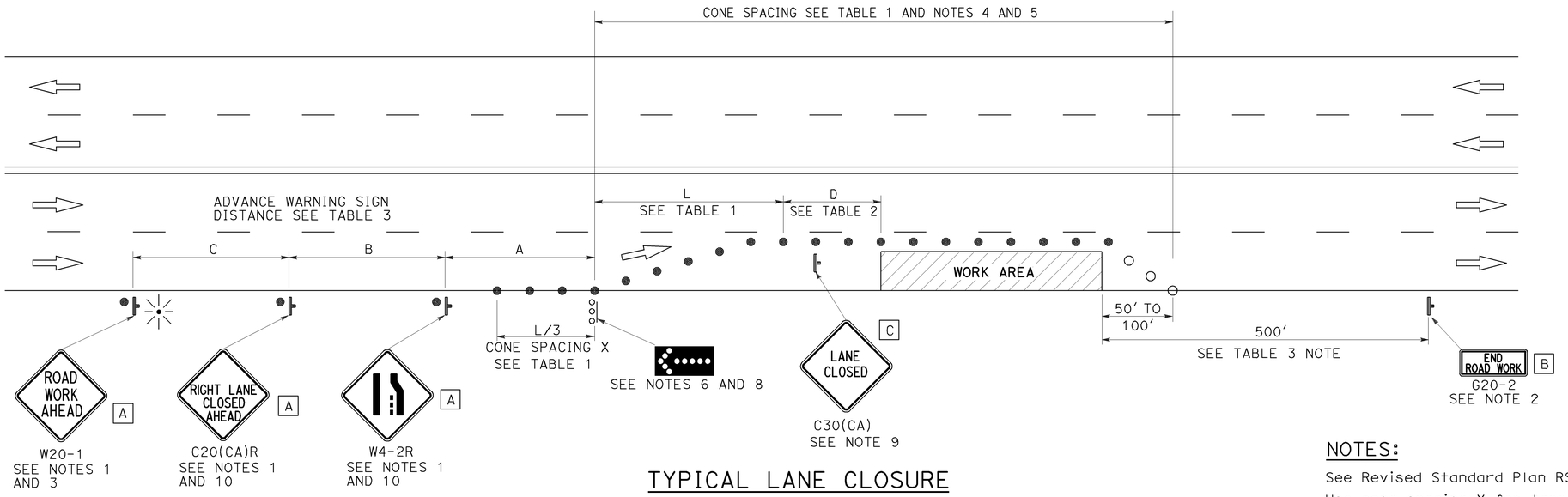


## TYPICAL LANE CLOSURE

## NOTES:

See Revised Standard Plan RSP T9 for tables.

Use cone spacing X for taper segment, Y for tangent segment or Z for conflict situations, as approriate, per Table 1, unless X, Y, or Z cone spacing is shown on this sheet.

Unless otherwise specified in the special provisions, all temporary warning signs shall have black legend on fluorescent orange background.

California codes are designated by (CA). Otherwise, Federal (MUTCD) codes are shown.

## NOTES:

1. Each advance warning sign shall be equipped with at least two flags for daytime closure. Each flag shall be at least 16" x 16" in size and shall be orange or fluorescent red-orange in color. Flashing beacons shall be placed at the locations indicated for lane closure during hours of darkness.
2. A G20-2 "END ROAD WORK" sign, as appropriate, shall be placed at the end of the lane closure unless the end of work area is obvious, or ends within a larger project's limits.
3. If the W20-1 sign would follow within 2000' of a stationary W20-1 or G20-1 "ROAD WORK NEXT _____ MILES", use a C20(CA) sign for the first advance warning sign.
4. All cones used for lane closures during the hours of darkness shall be fitted with retroreflective bands (or sleeves) as specified in the specifications.
5. Portable delineators, placed at one-half the spacing indicated for traffic cones, may be used instead of cones for daytime closures only.
6. Flashing arrow sign shall be either Type I or Type II.
7. For approach speeds over 50 mph, use the "Traffic Control System for Lane Closure On Freeways And Expressways" plan for lane closure details and requirements.
8. A minimum 1500' of sight distance shall be provided where possible for vehicles approaching the first flashing arrow sign. Lane closures shall not begin at the top of crest vertical curve or on a horizontal curve.
9. Place a C30(CA) sign every 2000' throughout length of lane closure.
10. Median lane closures shall conform to the details as shown except that C20(CA)L and W4-2L signs shall be used.
11. At least one person shall be assigned to provide full time maintenance of traffic control devices for lane closure unless, otherwise directed by the Engineer.

## LEGEND

- TRAFFIC CONE
- TRAFFIC CONE (OPTIONAL TAPER)
- TEMPORARY TRAFFIC CONTROL SIGN
- FLASHING ARROW SIGN (FAS)
- FAS SUPPORT OR TRAILER
- PORTABLE FLASHING BEACON

## SIGN PANEL SIZE (Min)

| | |
|---|---|
| A | 48" x 48" |
| B | 36" x 18" |
| C | 30" x 30" |

STATE OF CALIFORNIA
DEPARTMENT OF TRANSPORTATION

# TRAFFIC CONTROL SYSTEM FOR LANE CLOSURE ON MULTILANE CONVENTIONAL HIGHWAYS

NO SCALE

RSP T11 DATED APRIL 19, 2013 SUPERSEDES STANDARD PLAN T11 DATED MAY 20, 2011 - PAGE 239 OF THE STANDARD PLANS BOOK DATED 2010.

**REVISED STANDARD PLAN RSP T11**

**2010 REVISED STANDARD PLAN RSP T11**

4-2-13

| Dist | COUNTY | ROUTE | POST MILES TOTAL PROJECT | SHEET No. | TOTAL SHEETS |
|---|---|---|---|---|---|
| 10 | Mer | 5 | 21.4 | 34 | 42 |

REGISTERED CIVIL ENGINEER

April 19, 2013
PLANS APPROVAL DATE

REGISTERED PROFESSIONAL ENGINEER Gurinderpal Bhullar No. C48815 Exp. 9-30-14 CIVIL STATE OF CALIFORNIA

THE STATE OF CALIFORNIA OR ITS OFFICERS OR AGENTS SHALL NOT BE RESPONSIBLE FOR THE ACCURACY OR COMPLETENESS OF SCANNED COPIES OF THIS PLAN SHEET.

TO ACCOMPANY PLANS DATED 12-29-14

# TYPICAL RAMP CLOSURES

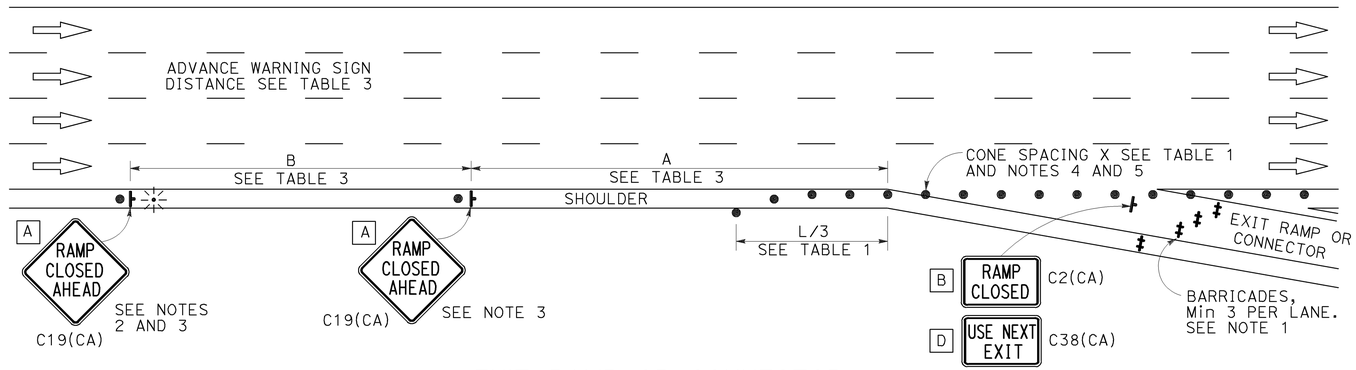


## EXIT RAMP OR CONNECTOR

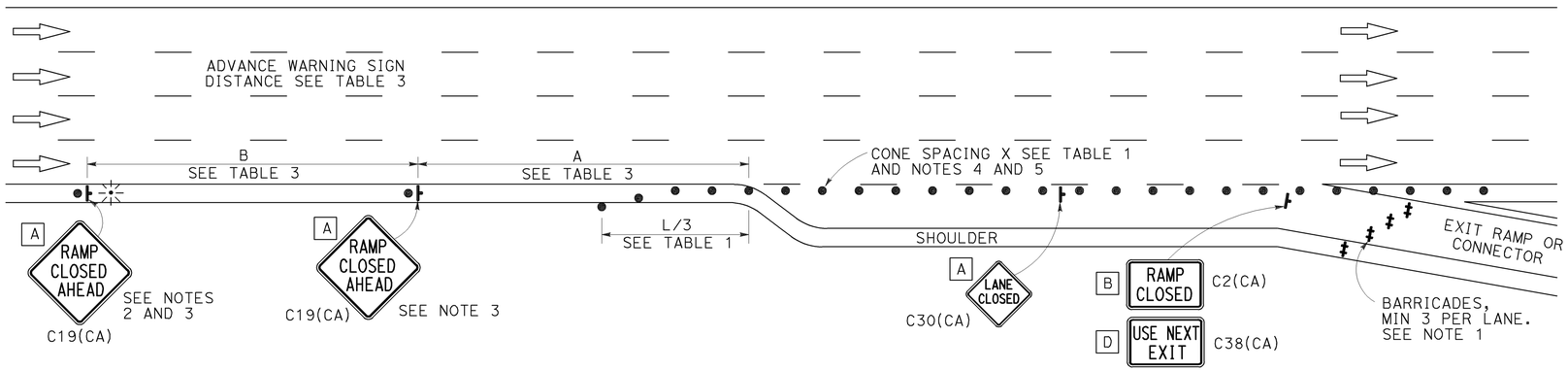


## EXIT RAMP OR CONNECTOR WITH ADDITIONAL LANE

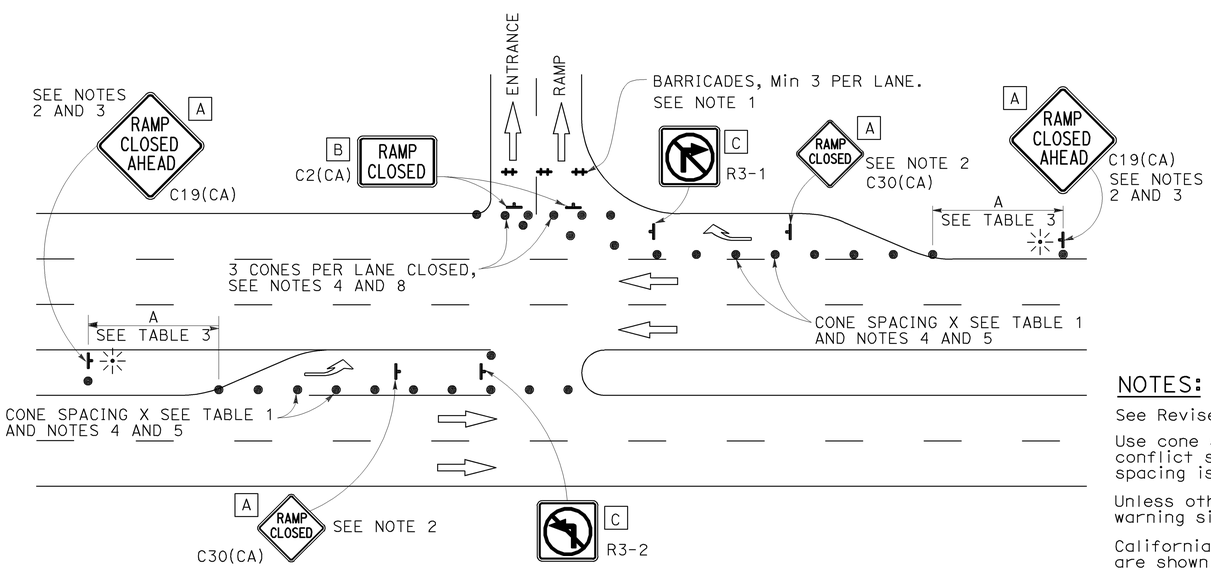


## ENTRANCE RAMP WITH TURNING POCKETS

## SIGN PANEL SIZE (Min)

- A 48" × 48"
- B 48" × 30"
- C 36" × 36"
- D 48" × 36"

## LEGEND

- TRAFFIC CONE
- TEMPORARY TRAFFIC CONTROL SIGN
- BARRICADES
- PORTABLE FLASHING BEACON

## NOTES:

1. Barricades shall be Type I, II, or III for closures lasting one week or less and Type III for closures lasting longer than one week.
2. In addition to placing the C19(CA) "RAMP CLOSED AHEAD" and C30(CA) "RAMP CLOSED" signs, black on orange overlay plates with the word "CLOSED" may be mounted, as directed by the Engineer, on all guide signs that refer to the closed ramp. The letter size on the overlay shall be the same as the guide sign.
3. Each advance C19(CA) "RAMP CLOSED AHEAD" sign shall be equipped with at least two flags for daytime closure. Each flag shall be at least 16" x 16" in size and shall be orange or fluorescent red-orange in color. A flashing beacon shall be placed on top of the first C19(CA) sign during hours of darkness.
4. All cones used for ramp closures during the hours of darkness shall be fitted with retroreflective bands (or sleeves) as specified in the specifications.
5. Portable delineators, placed at one-half the spacing indicated for traffic cones, may be used instead of cones for daytime ramp closures only.
6. At least one person shall be assigned to provide full time maintenance of traffic control devices, unless otherwise directed by the Engineer.
7. The existing "EXIT" signs shall be covered during ramp closures.
8. A minimum of 3 cones shall be placed transversely across each closed lane and shoulder.

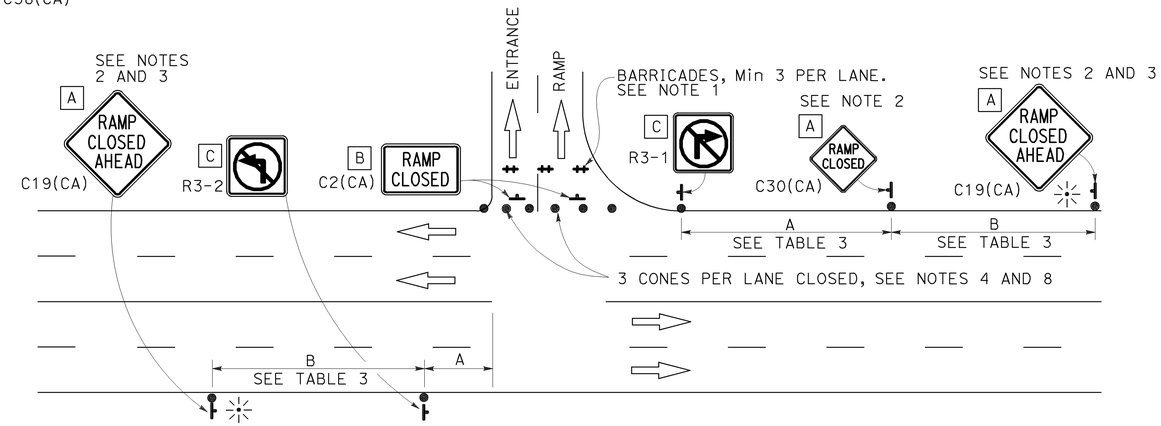


## ENTRANCE RAMP WITHOUT TURNING POCKETS

## NOTES:

See Revised Standard Plan RSP T9 for tables.

Use cone spacing X for taper segment, Y for tangent segment or Z for conflict situations, as approriate, per Table 1, unless X, Y, or Z cone spacing is shown on this sheet.

Unless otherwise specified in the special provisions, all temporary warning signs shall have black legend on fluorescent orange background.

California codes are designated by (CA). Otherwise, Federal (MUTCD) codes are shown.

STATE OF CALIFORNIA
DEPARTMENT OF TRANSPORTATION

# TRAFFIC CONTROL SYSTEM FOR RAMP CLOSURE

NO SCALE

RSP T14 DATED APRIL 19, 2013 SUPERSEDES STANDARD PLAN T14
DATED MAY 20, 2011 - PAGE 242 OF THE STANDARD PLANS BOOK DATED 2010.

**REVISED STANDARD PLAN RSP T14**

**2010 REVISED STANDARD PLAN RSP T14**

12-18-12

| Dist | COUNTY | ROUTE | POST MILES TOTAL PROJECT | SHEET No. | TOTAL SHEETS |
|---|---|---|---|---|---|
| 10 | Mer | 5 | 21.4 | 35 | 42 |

REGISTERED CIVIL ENGINEER

April 19, 2013
PLANS APPROVAL DATE

REGISTERED PROFESSIONAL ENGINEER
Gurinderpal Bhullar
No. C48815
Exp. 9-30-14
CIVIL
STATE OF CALIFORNIA

*THE STATE OF CALIFORNIA OR ITS OFFICERS OR AGENTS SHALL NOT BE RESPONSIBLE FOR THE ACCURACY OR COMPLETENESS OF SCANNED COPIES OF THIS PLAN SHEET.*

TO ACCOMPANY PLANS DATED 12-29-14

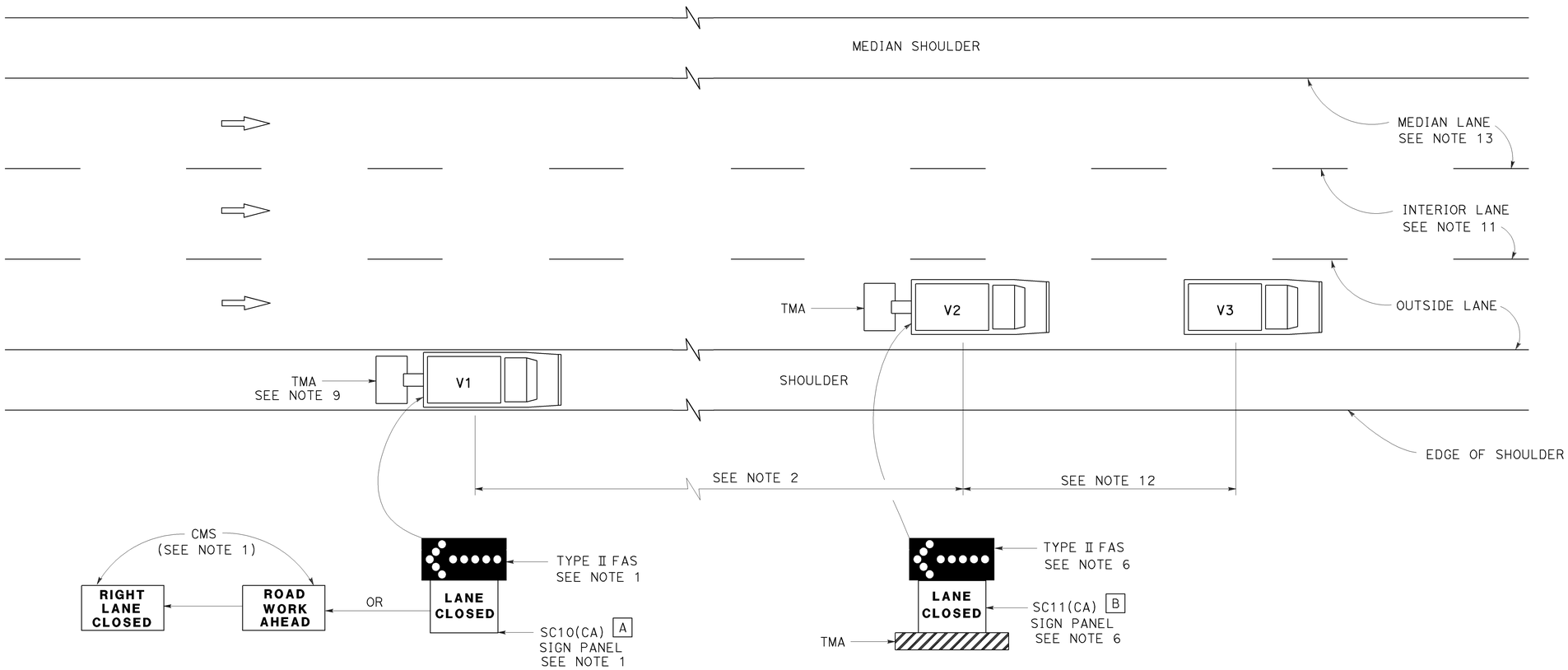


## MOVING LANE CLOSURE ON MEDIAN LANE OR OUTSIDE LANE OF MULTILANE HIGHWAYS

### SIGN PANEL SIZE (Min)

A 66" x 36"

B 54" x 42"

### LEGEND

| | |
|---|---|
| V1 | SIGN VEHICLE |
| V2 | SHADOW VEHICLE |
| V3 | WORK/APPLICATION VEHICLE |
| ⬅ | FLASHING ARROW SIGN (FAS) |
| CMS | CHANGEABLE MESSAGE SIGN |
| TMA | TRUCK-MOUNTED ATTENUATOR |

### NOTES:

1. Either a changeable message sign or a SC10(CA) sign panel and a Type II flashing arrow sign shall be mounted on the rear of sign vehicle V1. The changeable message sign shall be sequenced to show the "ROAD WORK AHEAD" message first, followed by the "RIGHT LANE CLOSED" message. For median lane closure, the flashing arrow symbol shall be reversed with the arrowhead on the right and the changeable message sign shall show "LEFT LANE CLOSED".
2. If traffic queues develop, sign vehicle V1 should be positioned upstream from the end of queue. Sign vehicle V1 shall be positioned where highly visible when shoulders are not available.
3. A minimum sight distance of 1500′ should be provided in advance of sign vehicle V1.
4. Sign vehicle V1 should remain at the beginning of horizontal or vertical curves until the other vehicles (V2 and V3) are far enough beyond the curve to resume the minimum sight distance of 1500′.
5. Vehicle-mounted sign panels shall have Type III or above retroreflective sheeting, black on white, or black on fluorescent orange, with 6" minimum series D letters per Caltrans sign specifications.
6. Shadow vehicle V2 shall be equipped with a truck-mounted attenuator. The sign panel shown and a Type II flashing arrow sign shall be mounted on the rear of shadow vehicle V2. For median lane closure the flashing arrow sign symbol shall be displayed with the arrowhead on the right.
7. All vehicles used for lane closures shall be equipped with two-way radios, and the vehicle operators shall maintain communication during the work or application operation.
8. All vehicles shall be equipped with flashing or rotating amber lights.
9. If sign vehicle V1 encroaches into the traffic lane due to insufficient shoulder width, sign vehicle V1 shall be equipped with a truck-mounted attenuator. Sign vehicle V1 shall stay as close to the edge of shoulder as practicable.
10. Where workers would be on foot in the work area, a stationary type lane closure (Revised Standard Plan T10, T11, etc., as applicable) shall be used instead of this plan.
11. For moving lane closure on interior lane of multilane highways, use Revised Standard Plan T16.
12. The spacing between work vehicle(s) and the shadow vehicles, and between each shadow vehicle should be minimized to deter road users from driving in between.
13. When the work/application vehicle V3 occupies the median lane, sign vehicle V1 should drive in the median shoulder and indicate left lane closed ahead.

STATE OF CALIFORNIA
DEPARTMENT OF TRANSPORTATION

# TRAFFIC CONTROL SYSTEM FOR MOVING LANE CLOSURE ON MULTILANE HIGHWAYS

NO SCALE

RSP T15 DATED APRIL 19, 2013 SUPERSEDES STANDARD PLAN T15
DATED MAY 20, 2011 - PAGE 243 OF THE STANDARD PLANS BOOK DATED 2010.

**REVISED STANDARD PLAN RSP T15**

**2010 REVISED STANDARD PLAN RSP T15**

12-18-12

| Dist | COUNTY | ROUTE | POST MILES TOTAL PROJECT | SHEET No. | TOTAL SHEETS |
|---|---|---|---|---|---|
| 10 | Mer | 5 | 21.4 | 36 | 42 |

REGISTERED CIVIL ENGINEER

April 19, 2013
PLANS APPROVAL DATE

REGISTERED PROFESSIONAL ENGINEER Gurinderpal Bhullar No. C48815 Exp. 9-30-14 CIVIL STATE OF CALIFORNIA

*THE STATE OF CALIFORNIA OR ITS OFFICERS OR AGENTS SHALL NOT BE RESPONSIBLE FOR THE ACCURACY OR COMPLETENESS OF SCANNED COPIES OF THIS PLAN SHEET.*

TO ACCOMPANY PLANS DATED 12-29-14

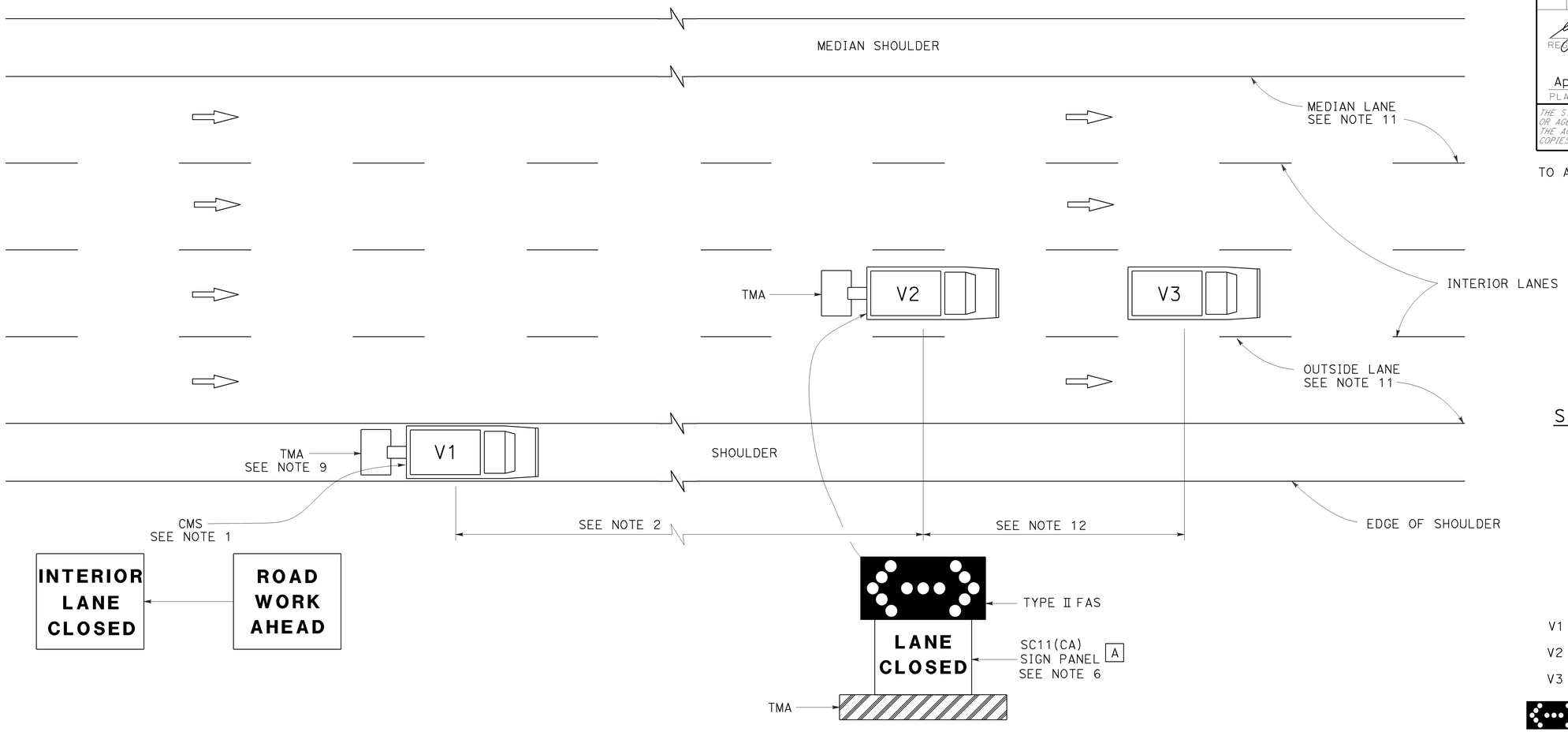


## MOVING LANE CLOSURE ON INTERIOR LANE OF MULTILANE HIGHWAYS

### SIGN PANEL SIZE (Min)

A 54" x 42"

### LEGEND

| | |
|---|---|
| V1 | SIGN VEHICLE |
| V2 | SHADOW VEHICLE |
| V3 | WORK/APPLICATION VEHICLE |
| | FLASHING ARROW SIGN (FAS) IN FLASHING DOUBLE ARROW MODE |
| CMS | CHANGEABLE MESSAGE SIGN |
| TMA | TRUCK-MOUNTED ATTENUATOR |

### NOTES:

1. A changeable message sign shall be mounted on the rear of sign vehicle V1. The changeable message sign shall be sequenced to show the "ROAD WORK AHEAD" message first, followed by the "INTERIOR LANE CLOSED" message. The message "CENTER LANE CLOSED" may be used in place of the "INTERIOR LANE CLOSED" message.
2. If traffic queues develop, sign vehicle V1 should be positioned upstream from the end of queue. Sign vehicle V1 shall be positioned where highly visible when shoulders are not available.
3. A minimum sight distance of 1500′ should be provided in advance of sign vehicle V1.
4. Sign vehicle V1 should remain at the beginning of horizontal or vertical curves until the other vehicles (V2 and V3) are far enough beyond the curve to resume the minimum sight distance of 1500′.
5. Vehicle-mounted sign panels shall have Type III or above retroreflective sheeting, black on white, or black on fluorescent orange, with 6" minimum series D letters per Caltrans sign specifications.
6. Shadow vehicle V2 shall be equipped with a truck-mounted attenuator. The sign panel shown and a Type II flashing arrow sign shall be mounted on the rear of shadow vehicle V2.
7. All vehicles used for lane closures shall be equipped with two-way radios, and the vehicle operators shall maintain communication during the work or application operation.
8. All vehicles shall be equipped with flashing or rotating amber lights.
9. If sign vehicle V1 encroaches into the traffic lane due to insufficient shoulder width, sign vehicle V1 shall be equipped with a truck-mounted attenuator. Sign vehicle V1 shall stay as close to the edge of shoulder as practicable.
10. Where workers would be on foot in the work area, a stationary type lane closure (Revised Standard Plan T10, T11 etc., as applicable) shall be used instead of this plan.
11. For moving lane closure on median lane or outside lane of multilane highways, use Revised Standard Plan T15.
12. The spacing between work vehicle(s) and the shadow vehicles, and between each shadow vehicle should be minimized to deter road users from driving in between.

STATE OF CALIFORNIA
DEPARTMENT OF TRANSPORTATION

# TRAFFIC CONTROL SYSTEM FOR MOVING LANE CLOSURE ON MULTILANE HIGHWAYS

NO SCALE

RSP T16 DATED APRIL 19, 2013 SUPERSEDES STANDARD PLAN T16 DATED MAY 20, 2011 - PAGE 244 OF THE STANDARD PLANS BOOK DATED 2010.

**REVISED STANDARD PLAN RSP T16**

**2010 REVISED STANDARD PLAN RSP T16**

12-18-12

| Dist | COUNTY | ROUTE | POST MILES TOTAL PROJECT | SHEET No. | TOTAL SHEETS |
|---|---|---|---|---|---|
| 10 | Mer | 5 | 21.4 | 37 | 42 |

REGISTERED CIVIL ENGINEER

November 15, 2013
PLANS APPROVAL DATE

REGISTERED PROFESSIONAL ENGINEER Tillat Satter No. C42892 Exp. 3-31-14 CIVIL STATE OF CALIFORNIA

*THE STATE OF CALIFORNIA OR ITS OFFICERS OR AGENTS SHALL NOT BE RESPONSIBLE FOR THE ACCURACY OR COMPLETENESS OF SCANNED COPIES OF THIS PLAN SHEET.*

TO ACCOMPANY PLANS DATED 12-29-14

**2010 REVISED STANDARD PLAN RSP B11-56**

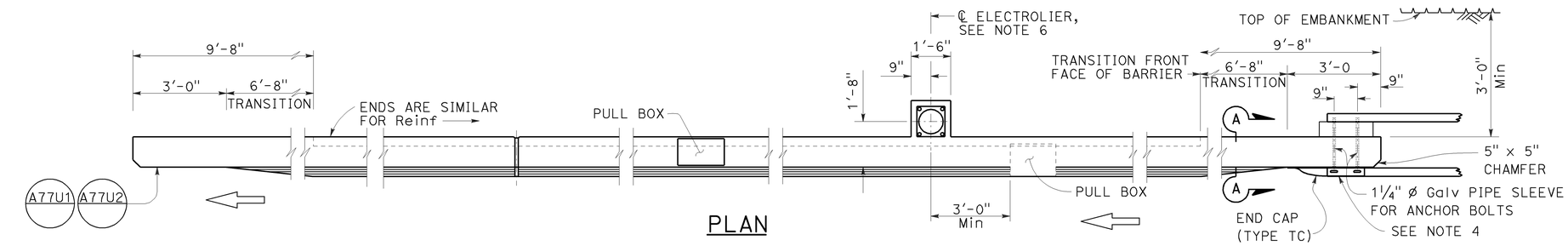


## PLAN

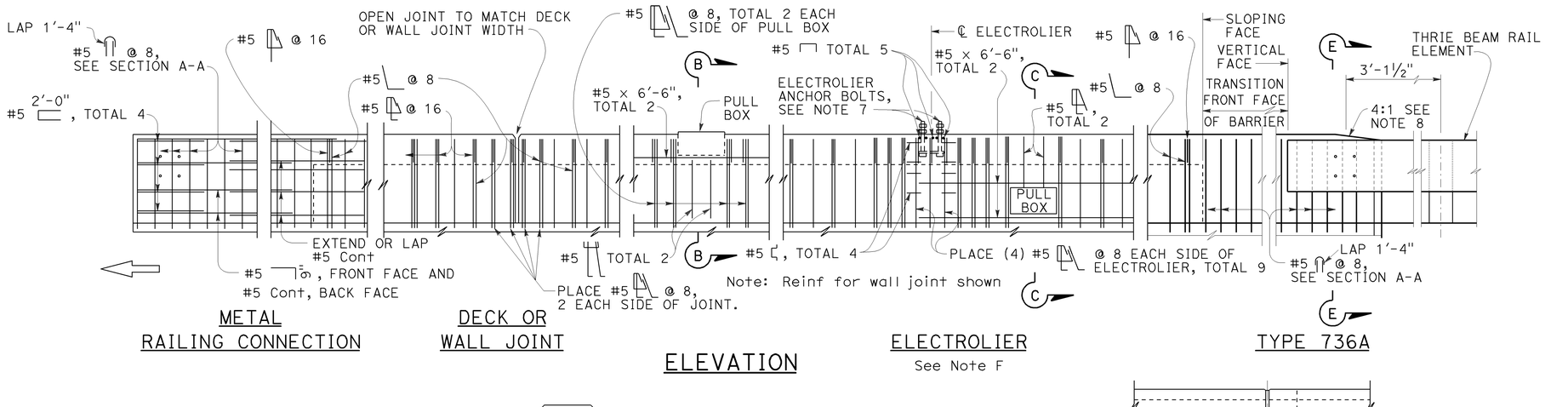


## ELEVATION

## NOTES:

1. Walls are to be backfilled before barrier is placed.
2. Clearance to reinforcing steel in barrier to be 1", except as noted. Longitudinal reinforcement to stop at all expansion joints.
3. Dimensions may vary with roadway cross slope and with certain thickness of surfacing. See Project Plans.
4. For typical metal railing connection details not shown, see Revised Standard Plans RSP A77U1 and RSP A77U2.
5. See Standard Plans ES-9A, ES-9B, ES-9C, ES-9D and ES-9E for electrical details. The maximum number of conduits in the barrier is limited to two 2" conduits along with one 3" conduit. When a 3" conduit is used, it is restricted to the base of the barrier.
6. For electrolier mounting details, See Standard Plans ES-6A and ES-6B.
7. Minimum concrete edge distance, to the reinforcing shown, shall be maintained. Edge distance may be adjusted to accommodate increase in concrete cover for architectual treatment.
8. Taper the top of the end of the bridge railing at 4:1 to match the top elevation of the thrie beam rail element.

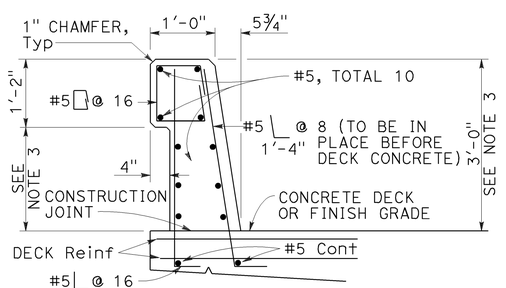


## TYPE 736

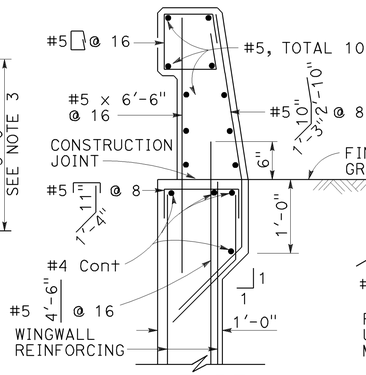


## TYPE 736A

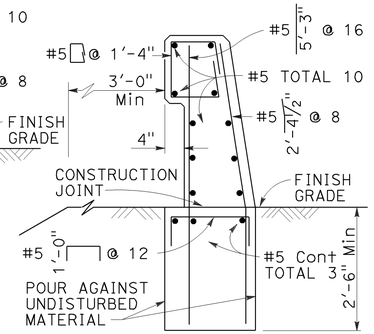


## TYPE 736B

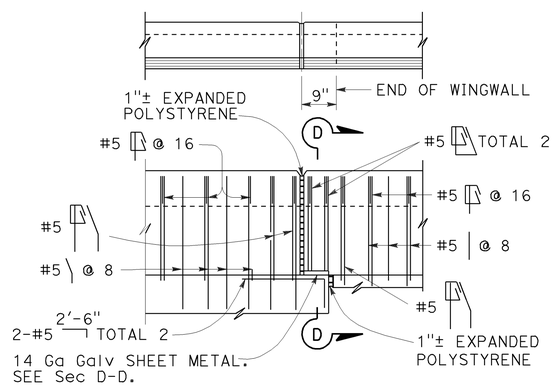


## TYPE 736A TYPE 736B

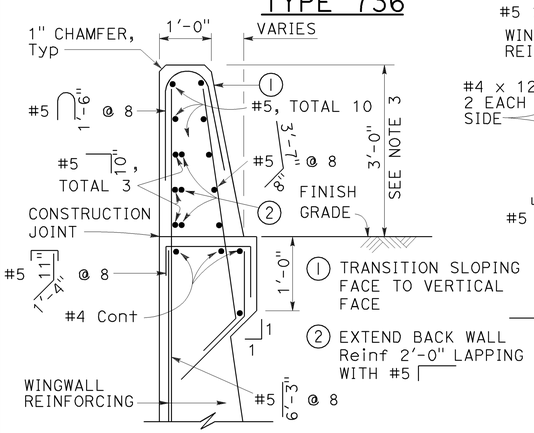


## SECTION A-A

Details shown for barrier anchorage to Type 736A. Anchorgae for barrier Types 736 and 736B are similar to their respective details.

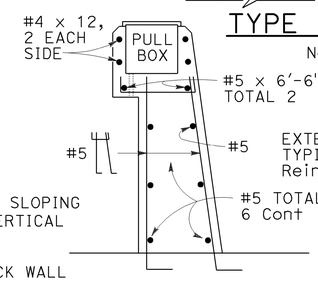


## SECTION B-B

Note: Types 736A & 736B are similar to Type 736 except as noted

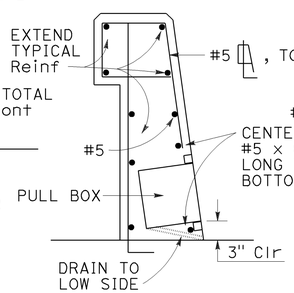


## SECTION C-C

See Notes

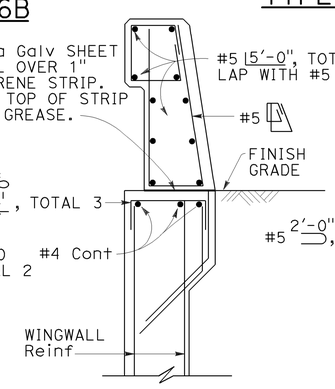


## SECTION D-D

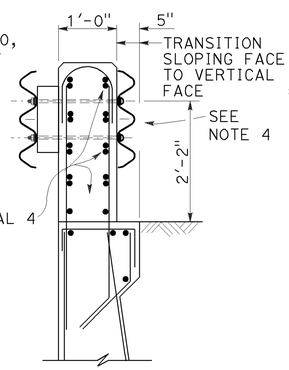


## SECTION E-E

See Notes

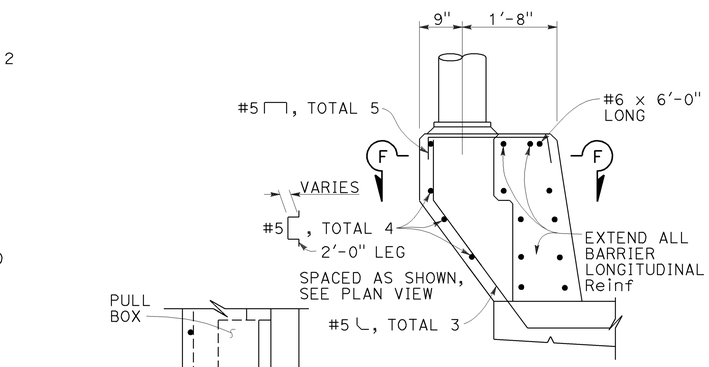


## PEDESTAL ELEVATION

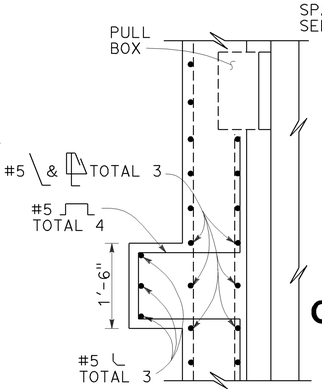


## SECTION F-F

STATE OF CALIFORNIA
DEPARTMENT OF TRANSPORTATION

# CONCRETE BARRIER TYPE 736

NO SCALE

RSP B11-56 DATED NOVEMBER 15, 2013 SUPERSEDES RSP B11-56 DATED JULY 19, 2013 AND STANDARD PLAN B11-56 DATED MAY 20, 2011 - PAGE 298 OF THE STANDARD PLANS BOOK DATED 2010.

**REVISED STANDARD PLAN RSP B11-56**

10-4-13

| DIST | COUNTY | ROUTE | POST MILES TOTAL PROJECT | SHEET No. | TOTAL SHEETS |
|---|---|---|---|---|---|
| 10 | Mer | 5 | 21.4 | 38 | 42 |

REGISTERED CIVIL ENGINEER 3-26-14 DATE

12-29-14
PLANS APPROVAL DATE

REGISTERED PROFESSIONAL ENGINEER BRIAN P. NGUYEN No. C 68270 Exp. 9-30-15 CIVIL STATE OF CALIFORNIA

*The State of California or its officers or agents shall not be responsible for the accuracy or completeness of scanned copies of this plan sheet.*

NOTES: (APPLY TO ALL SHEETS)

Indicates existing structure.

THE CONTRACTOR SHALL VERIFY ALL CONTROLLING FIELD DIMENSIONS BEFORE ORDERING OR FABRICATING ANY MATERIAL.

STANDARD PLAN SHEET NUMBER
DETAIL NUMBER

NOTES: (APPLY TO THIS SHEET ONLY)

Indicates limits of remove 1"± depth polyester concrete overlay, roughen concrete surface to 1/4" amplitude, prepare concrete bridge deck surface and place 4" structural concrete, bridge. For details, see DECK ON DECK DETAILS sheet. Remove unsound concrete and patch with rapid setting concrete prior to placing 4" structural concrete, bridge. For details, see JOINT SEAL AND DECK REPAIR DETAILS sheet.

Indicates location of remove existing approach pavement and place new Structure Approach Slab Type R(30D) and paving notch. For details, see STRUCTURE APPROACH TYPE R(30D) sheet and Roadway Plans for Staging Construction.

Indicates location of remove existing roadway and place new Structure Approach Slab Type R(30D) and Paving Notch. For details, see STRUCTURE APPROACH TYPE R(30D) sheet and Roadway Plans for Staging Construction.

Indicates location of remove existing joint seal and place new joint seal. Prior to replacement of new joint seal, repair joint spalls. For details, see JOINT SEAL AND DECK REPAIR DETAILS sheet.

(1) Remove existing Concrete Barrier Rail Type 1 and asbestos shim and replace with Concrete Barrier Type 736 Modified, salvage metal bridge railing. See DECK ON DECK DETAILS sheet.

(2) Remove existing barrier and section of wingwall. Construct wingwall and place new Concrete Barrier Type 736A Mod. See ABUTMENT AND WINGWALL DETAILS sheet.

(3) Paint bridge name and bridge number.

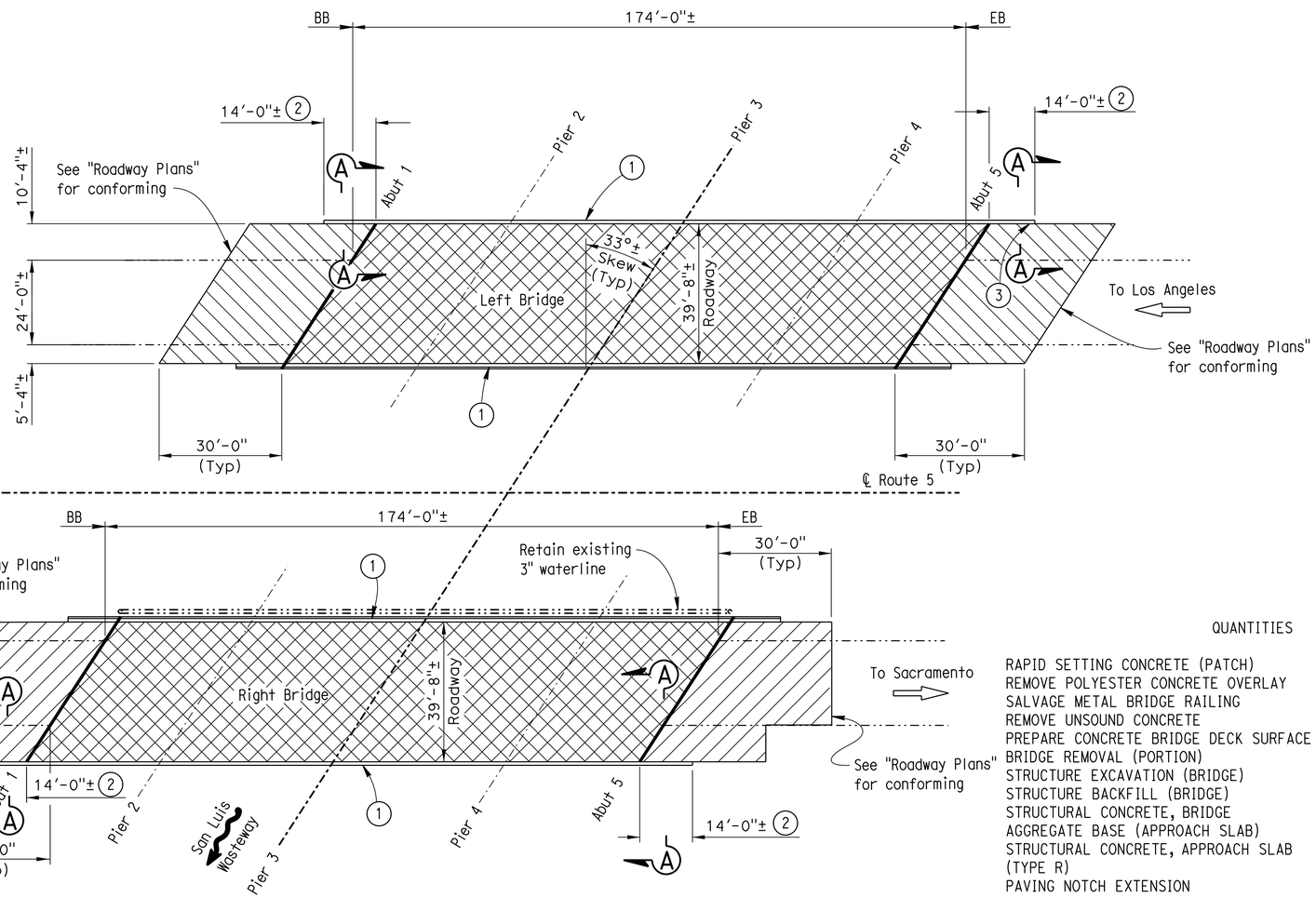


PLAN
1' = 20'

Note:
For Section A-A, see ABUTMENT AND WINGWALL DETAILS sheet.

QUANTITIES

| | | |
|---|---|---|
| RAPID SETTING CONCRETE (PATCH) | 35 | CF |
| REMOVE POLYESTER CONCRETE OVERLAY | 13,805 | SQFT |
| SALVAGE METAL BRIDGE RAILING | 808 | LF |
| REMOVE UNSOUND CONCRETE | 35 | CF |
| PREPARE CONCRETE BRIDGE DECK SURFACE | 14,850 | SQFT |
| BRIDGE REMOVAL (PORTION) | LUMP | SUM |
| STRUCTURE EXCAVATION (BRIDGE) | 8 | CY |
| STRUCTURE BACKFILL (BRIDGE) | 9 | CY |
| STRUCTURAL CONCRETE, BRIDGE | 195 | CY |
| AGGREGATE BASE (APPROACH SLAB) | 20 | CY |
| STRUCTURAL CONCRETE, APPROACH SLAB (TYPE R) | 195 | CY |
| PAVING NOTCH EXTENSION | 162 | CF |
| DRILL AND BOND DOWEL | 1,190 | LF |
| JOINT SEAL (MR 1") | 192 | LF |
| BAR REINFORCING STEEL (BRIDGE) | 37,402 | LB |
| PAINT BRIDGE IDENTIFICATION | 2 | EA |
| CONCRETE BARRIER (TYPE 736 MODIFIED) | 808 | LF |

INDEX TO PLANS


| SHEET NO. | TITLE |
|---|---|
| 1 | GENERAL PLAN |
| 2 | DECK ON DECK DETAILS |
| 3 | ABUTMENT AND WINGWALL DETAILS |
| 4 | JOINT SEAL AND DECK REPAIR DETAILS |
| 5 | STRUCTURE APPROACH TYPE R(30D) |


STANDARD PLANS DATED 2010

| SHEET NO. | TITLE |
|---|---|
| A10A | ABBREVIATIONS (SHEET 1 OF 2) |
| RSP A10B | ABBREVIATIONS (SHEET 2 OF 2) |
| RSP B11-56 | CONCRETE BARRIER TYPE 736 |
| B6-21 | JOINT SEALS (MAXIMUM MOVEMENT RATING = 2") |

3-26-14 Michael J. Lee
DESIGN ENGINEER

| | BY | CHECKED |
|---|---|---|
| DESIGN | K. Truong | B. Nguyen |
| DETAILS | M. Hallstrom | B. Nguyen |
| QUANTITIES | K. Truong | B. Nguyen |

LOAD FACTOR DESIGN — LIVE LOADING: HS20-44 AND ALTERNATIVE AND PERMIT DESIGN LOAD
LAYOUT — BY M. Hallstrom — CHECKED B. Nguyen
SPECIFICATIONS — BY X — PLANS AND SPECS COMPARED X

STATE OF CALIFORNIA
DEPARTMENT OF TRANSPORTATION

DIVISION OF MAINTENANCE
STRUCTURE MAINTENANCE DESIGN

BRIDGE NO. 39-0167L/R
POST MILE 21.42

# SAN LUIS WASTEWAY
# GENERAL PLAN

STRUCTURES MAINTENANCE GENERAL PLAN SHEET (ENGLISH) (REV. 09-01-10)

ORIGINAL SCALE IN INCHES FOR REDUCED PLANS 0 1 2 3

UNIT: 3488
PROJECT NUMBER & PHASE: 1013000003 1
CONTRACT NO.: 10-0X6101

DISREGARD PRINTS BEARING EARLIER REVISION DATES

REVISION DATES 5-1-13

SHEET 1 OF 5

FILE => 10-0x6101_01gp.dgn

USERNAME => s1203300 DATE PLOTTED => 15-JAN-2015 TIME PLOTTED => 10:25

| DIST | COUNTY | ROUTE | POST MILES TOTAL PROJECT | SHEET No. | TOTAL SHEETS |
|---|---|---|---|---|---|
| 10 | Mer | 5 | 21.4 | 39 | 42 |

REGISTERED CIVIL ENGINEER 3-26-14 DATE

12-29-14
PLANS APPROVAL DATE

REGISTERED PROFESSIONAL ENGINEER BRIAN P. NGUYEN No. C 68270 Exp. 9-30-15 CIVIL STATE OF CALIFORNIA

*The State of California or its officers or agents shall not be responsible for the accuracy or completeness of scanned copies of this plan sheet.*

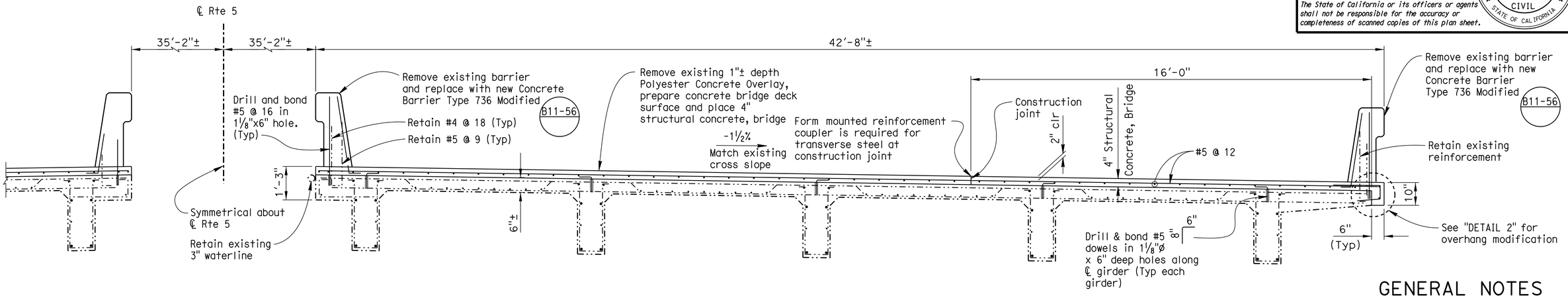


## TYPICAL SECTION

½" = 1'-0"
Right bridge shown, left bridge similar.

Note:
For additional information, see "PARTIAL TYPICAL SECTION".

## GENERAL NOTES
## LOAD FACTOR DESIGN

DESIGN: BRIDGE DESIGN SPECIFICATIONS (1983 AASHTO with Interims and Revisions by CALTRANS)

LIVE LOADING: HS20-44 and alternative.

REINFORCED CONCRETE:
$f_y$ = 60,000 psi
$f'_c$ = 3,600 psi
n = 9

Transverse Deck Slabs (Working Stress Design)
$f_s$ = 20,000 psi
$f_c$ = 1200 psi

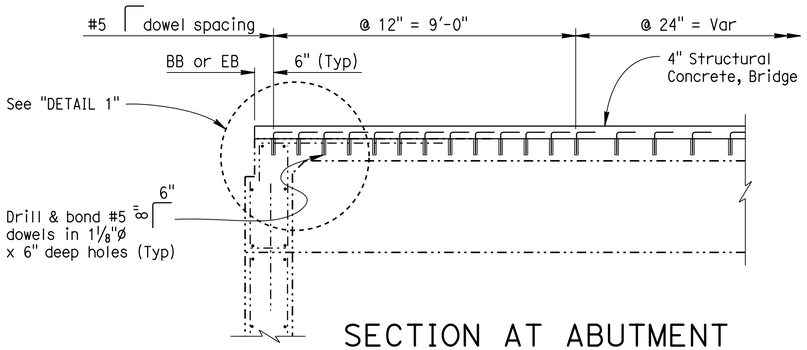


## SECTION AT ABUTMENT

½" = 1'-0"

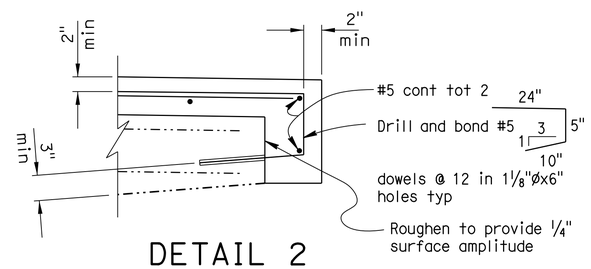


## DETAIL 2

1" = 1'-0"

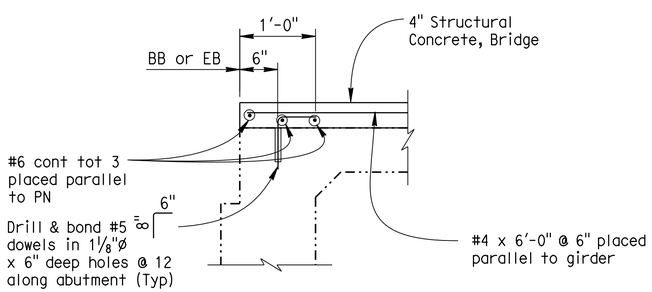


## DETAIL 1

1" = 1'-0"

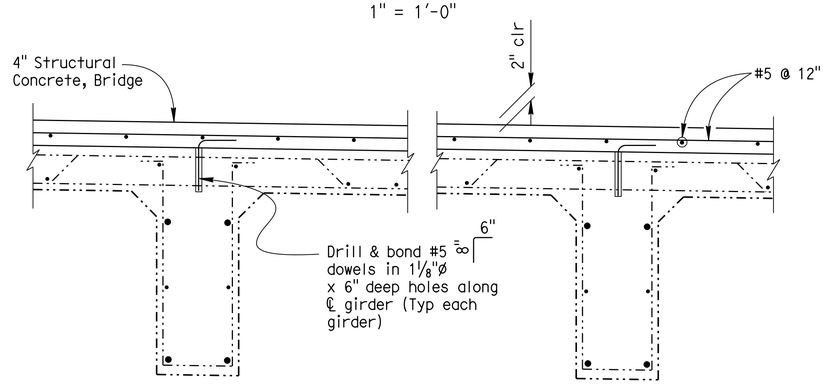


## PARTIAL TYPICAL SECTION

1" = 1'-0"

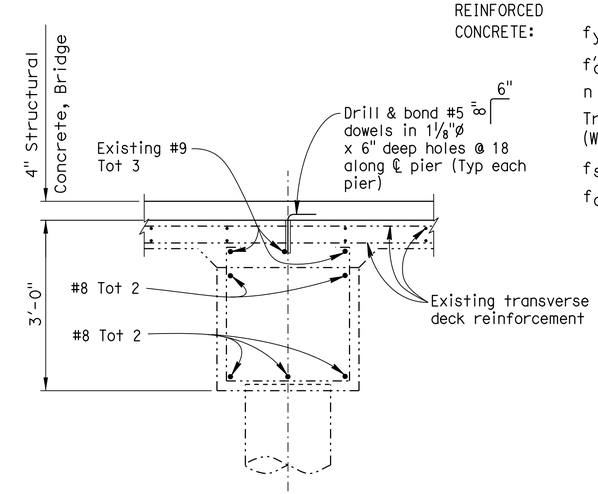


## SECTION AT PIER

¾" = 1'-0"

Note:
For all details, Right bridge shown, Left Bridge symmetrical about ℄ Rte 5.

| | BY | CHECKED |
|---|---|---|
| DESIGN | K. Truong | B. Nguyen |
| DETAILS | M. Hallstrom | B. Nguyen |
| QUANTITIES | K. Truong | B. Nguyen |

STATE OF CALIFORNIA
DEPARTMENT OF TRANSPORTATION

DIVISION OF MAINTENANCE
STRUCTURE MAINTENANCE DESIGN

BRIDGE NO. 39-0167L/R
POST MILE 21.42

# SAN LUIS WASTEWAY
# DECK ON DECK DETAILS

STRUCTURES MAINTENANCE DETAIL SHEET (ENGLISH) (REV. 09-01-10)

ORIGINAL SCALE IN INCHES FOR REDUCED PLANS 0 1 2 3

UNIT: 3488
PROJECT NUMBER & PHASE: 1013000003 1
CONTRACT NO.: 10-0X6101

DISREGARD PRINTS BEARING EARLIER REVISION DATES 5-1-13

SHEET 2 OF 5

FILE => 10-0x6101_02deck-on-deck.dgn

USERNAME => s120300 DATE PLOTTED => 15-JAN-2015 TIME PLOTTED => 10:25

| DIST | COUNTY | ROUTE | POST MILES TOTAL PROJECT | SHEET No. | TOTAL SHEETS |
|---|---|---|---|---|---|
| 10 | Mer | 5 | 21.4 | 40 | 42 |

REGISTERED CIVIL ENGINEER 3-26-14 DATE

12-29-14
PLANS APPROVAL DATE

REGISTERED PROFESSIONAL ENGINEER BRIAN P. NGUYEN No. C 68270 Exp. 9-30-15 CIVIL STATE OF CALIFORNIA

*The State of California or its officers or agents shall not be responsible for the accuracy or completeness of scanned copies of this plan sheet.*

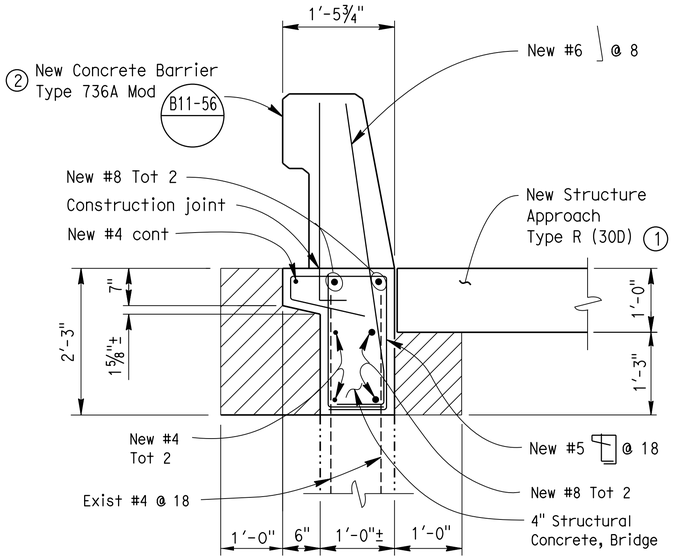


RECONSTRUCTION

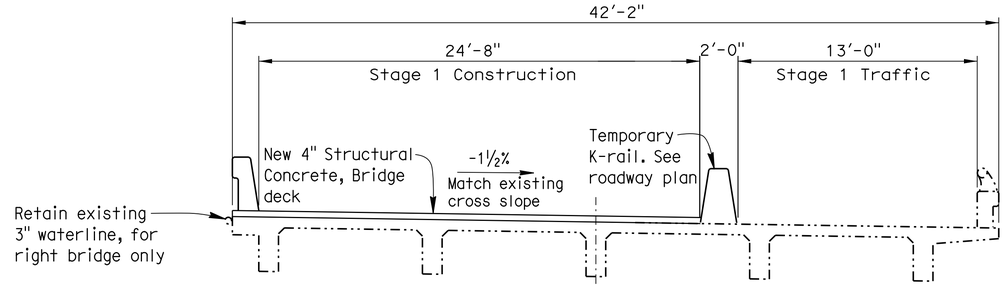


STAGE 1 CONSTRUCTION

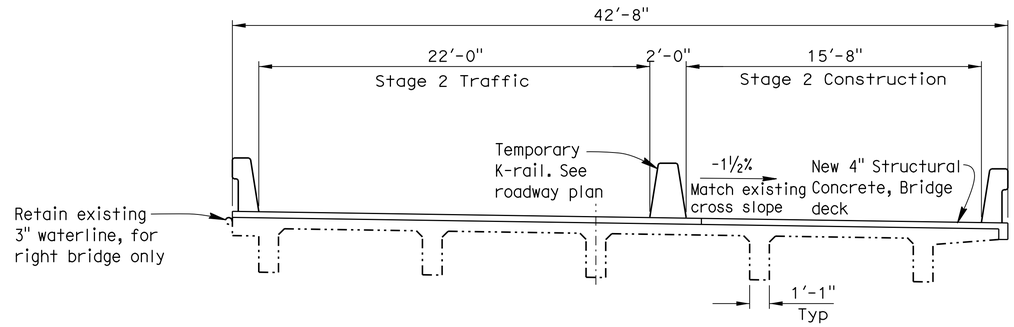


STAGE 2 CONSTRUCTION

## STAGING PLAN

NO SCALE
Right bridge shown, left bridge similar

NOTES: (APPLY TO THIS SHEET ONLY)

Indicates limits of bridge removal (portion). Remove existing wingwall, barrier and existing reinforcing bars except where shown otherwise.

Indicates limits of remove existing structure approach or roadway.

Indicates limits of structure excavation.

Indicates limits of structure backfill.

① For additional details see STRUCTURE APPROACH TYPE R (30D) sheet.

② New concrete barrier Type 736A Mod and Type 736 Mod. should be protected by temporary K-rail if not ready to design strength when open for traffic.

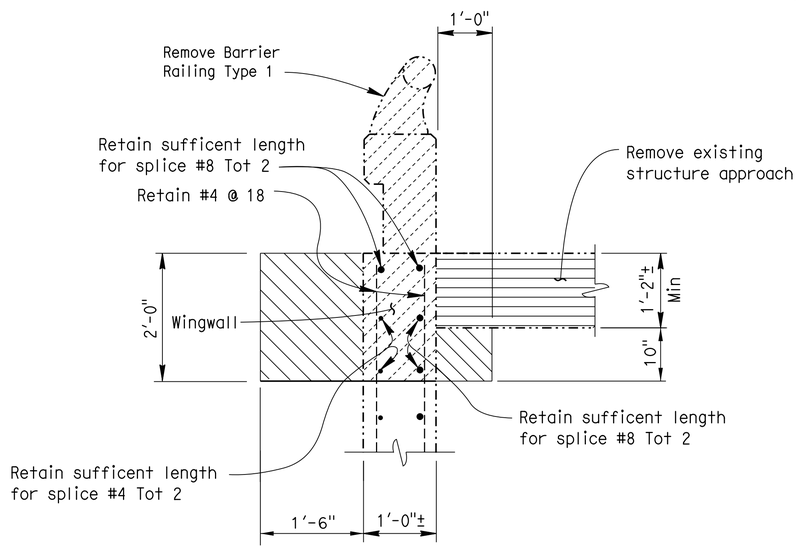


EXISTING

## SECTION A-A

1" = 1'-0"

| | | | |
|---|---|---|---|
| DESIGN | BY K. Truong | CHECKED B. Nguyen | |
| DETAILS | BY M. Hallstrom | CHECKED B. Nguyen | |
| QUANTITIES | BY K. Truong | CHECKED B. Nguyen | |

STATE OF CALIFORNIA
DEPARTMENT OF TRANSPORTATION

DIVISION OF MAINTENANCE
STRUCTURE MAINTENANCE DESIGN

BRIDGE NO. 39-0167L/R
POST MILE 21.42

# SAN LUIS WASTEWAY
# ABUTMENT AND WINGWALL DETAILS

STRUCTURES MAINTENANCE DETAIL SHEET (ENGLISH) (REV. 09-01-10)

ORIGINAL SCALE IN INCHES FOR REDUCED PLANS 0 1 2 3

UNIT: 3488
PROJECT NUMBER & PHASE: 1013000003 1
CONTRACT NO.: 10-0X6101

DISREGARD PRINTS BEARING EARLIER REVISION DATES

REVISION DATES 5-1-13

SHEET 3 OF 5

FILE => 10-0x6101_03abut-and-ww.dgn

USERNAME => s120300 DATE PLOTTED => 15-JAN-2015 TIME PLOTTED => 10:25

| DIST | COUNTY | ROUTE | POST MILES TOTAL PROJECT | SHEET No. | TOTAL SHEETS |
|---|---|---|---|---|---|
| 10 | Mer | 5 | 21.4 | 41 | 42 |

REGISTERED CIVIL ENGINEER 3-26-14 DATE

12-29-14
PLANS APPROVAL DATE

REGISTERED PROFESSIONAL ENGINEER BRIAN P. NGUYEN No. C 68270 Exp. 9-30-15 CIVIL STATE OF CALIFORNIA

*The State of California or its officers or agents shall not be responsible for the accuracy or completeness of scanned copies of this plan sheet.*

## JOINT SEAL TABLE

| BRIDGE NAME | BRIDGE NUMBER | LOCATION | | MINIMUM "MR" (inches) | APPROXIMATE LENGTH (feet) | EXISTING WATERSTOP | APPROXIMATE DEPTH OF JOINT SPALLS (inches) | APPROXIMATE WIDTH OF JOINT SPALLS (inches) | APPROXIMATE LENGTH OF JOINT SPALLS (feet) |
|---|---|---|---|---|---|---|---|---|---|
| SAN LUIS WASTEWAY | 39-0167L | Abut 1 | BB | 1 | 48.0 | No | 3 | 6 | 5 |
| | | Abut 5 | EB | 1 | 48.0 | No | 3 | 6 | 5 |
| SAN LUIS WASTEWAY | 39-0167R | Abut 1 | BB | 1 | 48.0 | No | 3 | 6 | 5 |
| | | Abut 5 | EB | 1 | 48.0 | No | 3 | 6 | 5 |

LEGEND:
BB = Paving notch at beginning of bridge
EB = Paving notch at end of bridge

The following notes apply to JOINT SEAL TYPE B:

1) Seal must satisfy both minimum Movement Rating (MR) and minimum W1 requirements.

2) Minimum W1 is the calculated maximum width of the joint based on field measurements. After the joints have been cleaned, minimum W1 is to be calculated by the Engineer.

3) W1 shall be the smaller of the values determined as follows:

   A) 0.85 times the manufacturer's designed minimum uncompressed width of the seal.

   B) The width of the seal on the third successive test cycle of the pressure deflection test, when compressed to an average pressure of 3 psi.

4) Bend seal 6" up into curb or rail on the low side of the deck where deck joint matches curb or rail joint.

5) For details not shown see RSP B6-21

## DECK REPAIR TABLE
## REMOVE UNSOUND CONCRETE AND RAPID SETTING CONCRETE (PATCH)

| BRIDGE NAME | BRIDGE NUMBER | APPROXIMATE AREA DAMAGED (PERCENT) | APPROXIMATE DEPTH (INCHES) |
|---|---|---|---|
| SAN LUIS WASTEWAY | 39-0167L | 1 | 3 |
| SAN LUIS WASTEWAY | 39-0167R | 1 | 3 |

Locations to be determined by the engineer.
For details see "DECK REPAIR DETAIL".

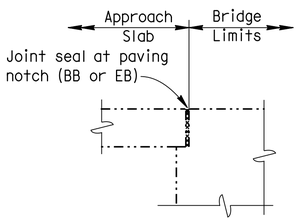


DIAPHRAGM ABUTMENT

## JOINT SEAL LOCATION

NO SCALE

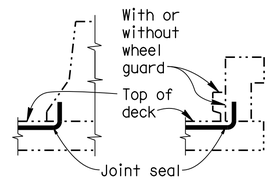


BARRIER RAIL

## JOINT SEAL AT LOW SIDE OF DECK

Details shown for illustration purposes only. For use only where deck joint matches the barrier rail joint.
NO SCALE

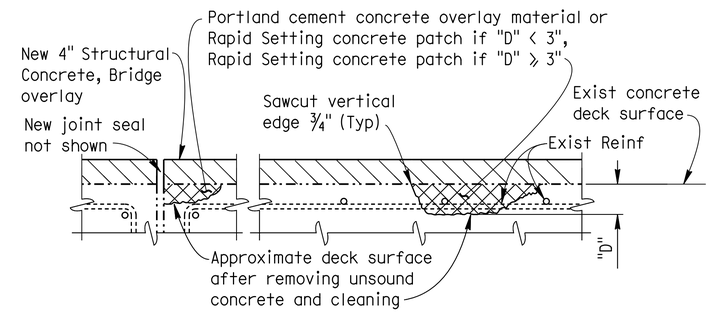


## JOINT AND DECK REPAIR DETAIL

LOCATIONS TO BE DETERMINED BY THE ENGINEER.
REINFORCEMENT MAY BE ENCOUNTERED
DURING DECK CONCRETE REMOVAL.
NO SCALE

| | BY | CHECKED |
|---|---|---|
| DESIGN | K. Truong | B. Nguyen |
| DETAILS | M. Hallstrom | B. Nguyen |
| QUANTITIES | K. Truong | B. Nguyen |

STATE OF CALIFORNIA
DEPARTMENT OF TRANSPORTATION

DIVISION OF MAINTENANCE
STRUCTURE MAINTENANCE DESIGN

BRIDGE NO. 39-0167L/R
POST MILE 21.42

# SAN LUIS WASTEWAY
# JOINT SEAL AND DECK REPAIR DETAILS

STRUCTURES MAINTENANCE DETAIL SHEET (ENGLISH) (REV. 09-01-10)

ORIGINAL SCALE IN INCHES FOR REDUCED PLANS 0 1 2 3

UNIT: 3488
PROJECT NUMBER & PHASE: 1013000003 1
CONTRACT NO.: 10-0X6101

DISREGARD PRINTS BEARING EARLIER REVISION DATES

REVISION DATES 5-1-13

SHEET 4 OF 5

FILE => 10-0x6101_04joint-and-deck.dgn

USERNAME => s120300 DATE PLOTTED => 15-JAN-2015 TIME PLOTTED => 10:25

| DIST | COUNTY | ROUTE | POST MILES TOTAL PROJECT | SHEET No. | TOTAL SHEETS |
|---|---|---|---|---|---|
| 10 | Mer | 5 | 21.4 | 42 | 42 |

REGISTERED CIVIL ENGINEER 3-26-14 DATE

12-29-14
PLANS APPROVAL DATE

REGISTERED PROFESSIONAL ENGINEER BRIAN P. NGUYEN No. C 68270 Exp. 9-30-15 CIVIL STATE OF CALIFORNIA

*The State of California or its officers or agents shall not be responsible for the accuracy or completeness of scanned copies of this plan sheet.*

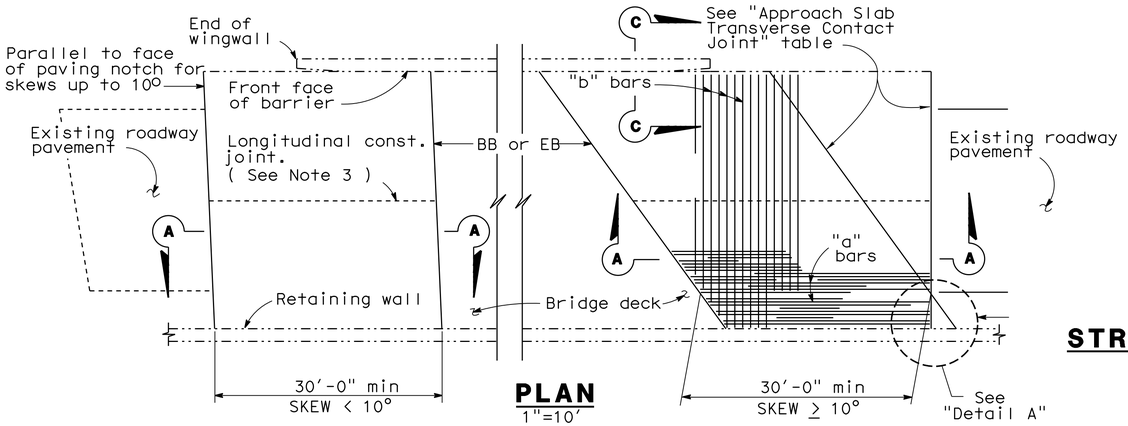


## PLAN
1"=10'

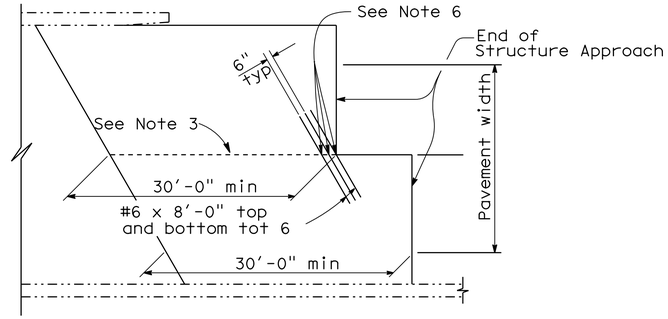


## STRUCTURE APPROACH - END STAGGER DETAIL
No Scale

| APPROACH SLAB TRANSVERSE CONTACT JOINT | | |
|---|---|---|
| APPROACH SKEW | WITH AC ROADWAY PAVEMENT | WITH PCC ROADWAY PAVEMENT |
| < 10° | Parallel to face of paving notch | Parallel to face of paving notch |
| 10° - 45° | Parallel to face of P N use (Detail A) | Stagger lines 24' to 36' apart |
| > 45° | Parallel to face of P N use (Detail A) | Stagger at each lane line |

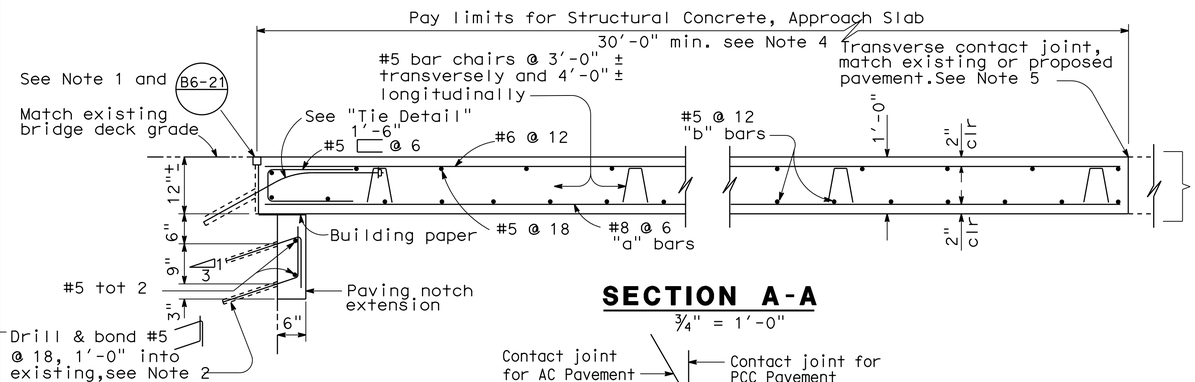


## SECTION A-A
¾" = 1'-0"

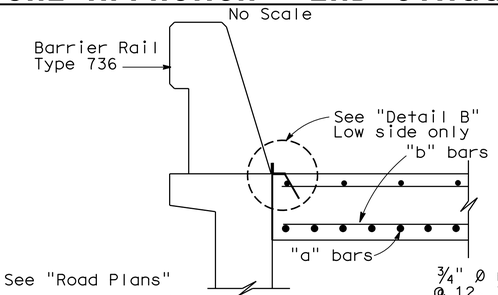


## SECTION C-C
¾" = 1'-0"

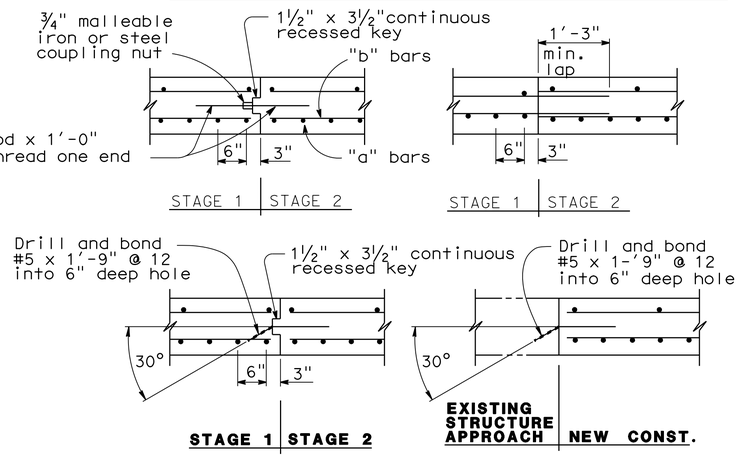


## LONGITUDINAL CONSTRUCTION JOINT ALTERNATIVES
¾" = 1'-0"




## DETAIL A
No Scale

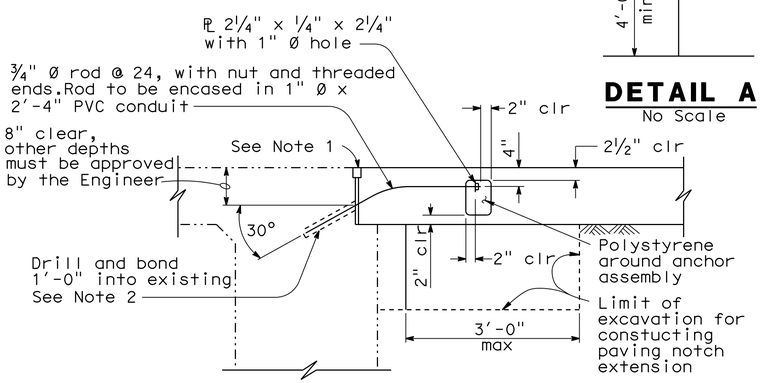


## TIE DETAIL
¾" = 1'-0"

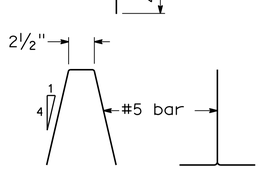


## BAR CHAIR DETAIL
1½" = 1'-0"

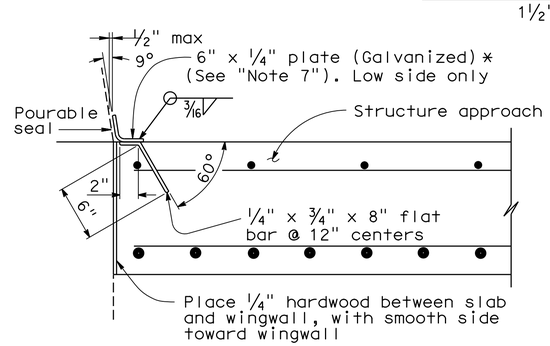


***(TO BE USED WITH TYPE 732 OR TYPE 736 CONCRETE BARRIER)**

## DETAIL B
1½" = 1'-0"

**NOTES:**

1. For details not shown or noted,see Structure Plans. Adjust bar reinforcement to clear a sawcut for sealed joint,when required.
2. Space to avoid existing prestress anchorages and main reinforcement.
3. Longitudinal construction joints,when permitted by the Engineer,shall be located on lane lines.
4. Transverse contact joint shall be a minimum of 5'-0" from an existing or constructed weakened plane joint.
5. For transverse contact joint with existing PCC paving. refer to Standard Plan P10.
6. Couplers are required for stage construction.
7. End angle or plate at beginning of barrier transition, end of wingwall or end of structure approach as applicable.

NOTE:
THE CONTRACTOR SHALL VERIFY ALL CONTROLLING FIELD DIMENSIONS BEFORE ORDERING OR FABRICATING ANY MATERIAL.

STANDARD DRAWING

| RELEASE DATE REVISED | DESIGN | BY M.TRAFFALIS | CHECKED E.THORKILDSEN | RELEASED BY |
|---|---|---|---|---|
| FILE NO. xs3-140e | DETAILS | BY R.YEE | CHECKED E.THORKILDSEN | OFFICE CHIEF |
| | SUBMITTED | BY M.HA | DRAWING DATE 8/92 | |

STATE OF CALIFORNIA DEPARTMENT OF TRANSPORTATION

DIVISION OF MAINTENANCE STRUCTURE MAINTENANCE DESIGN

BRIDGE NO. 39-0167L/R
POST MILE 21.42

# SAN LUIS WASTEWAY
# STRUCTURE APPROACH TYPE R(30D)

STRUCTURES MAINTENANCE DETAIL SHEET (ENGLISH) (REV. 09-01-10)

ORIGINAL SCALE IN INCHES FOR REDUCED PLANS 0 1 2 3

UNIT: 3488
PROJECT NUMBER & PHASE: 1013000003 1 CONTRACT NO.: 10-0X6101

DISREGARD PRINTS BEARING EARLIER REVISION DATES

REVISION DATES 5-1-13 | SHEET 5 | OF 5

FILE => 10-0x6101_05structure-approach.dgn

USERNAME => s120300 DATE PLOTTED => 15-JAN-2015 TIME PLOTTED => 10:25