FOR CONTRACT NO.: 10-0W6104

INFORMATION HANDOUT

MATERIALS INFORMATION

ALTERNATIVE IN-LINE TERMINAL SYSTEM

ALTERNATIVE FLARED TERMINAL SYSTEM

Water Source

ROUTE: 10-Alp-88-0/7.5

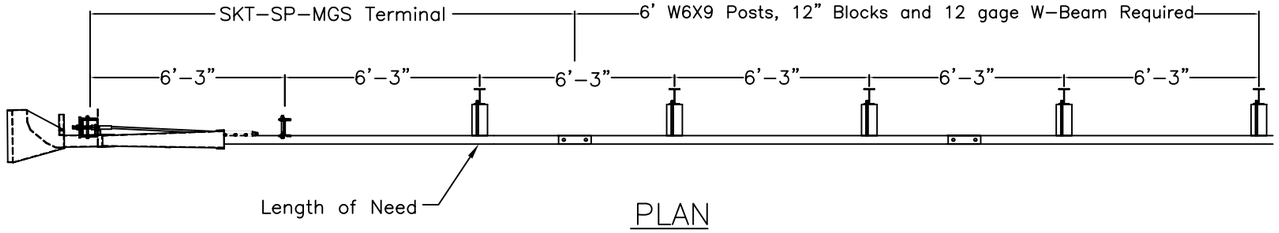

PLAN

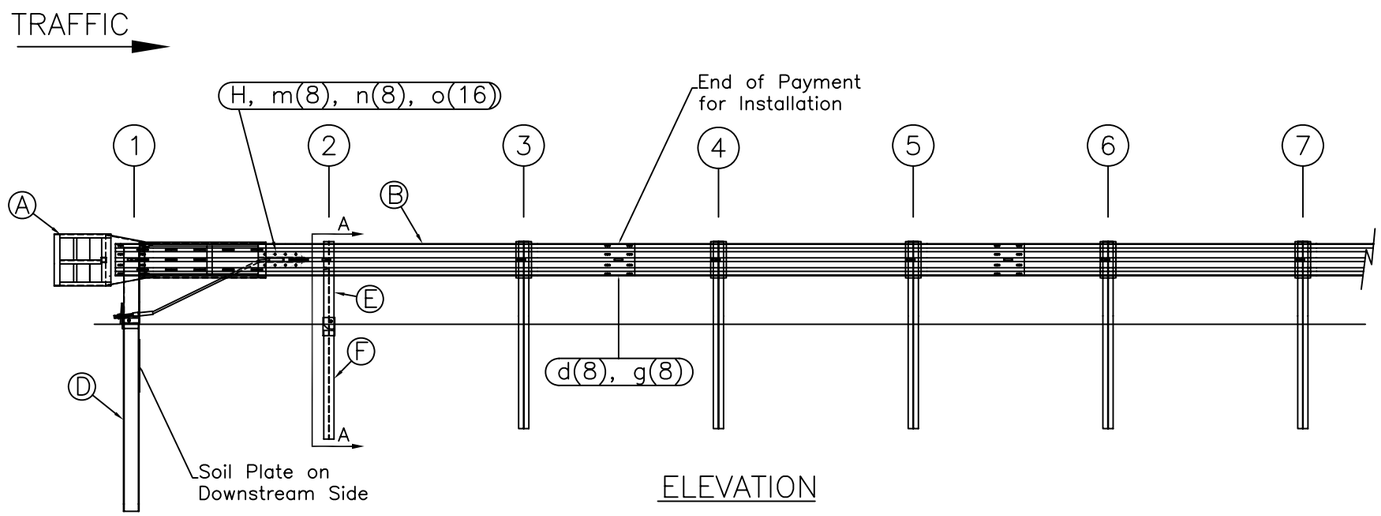

ELEVATION

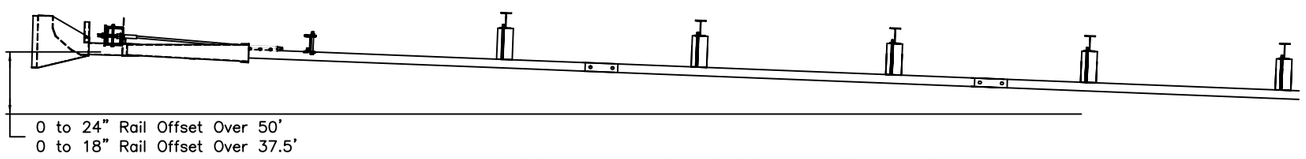

OPTIONAL FLARED INSTALLATION

25:1 maximum flare rate

ITEM	QTY	BILL OF MATERIALS	ITEM NO.
A	1	IMPACT HEAD	S3000
B	1	W-BEAM GUARDRAIL END SECTION, 12 Ga.	MGS-SF1303
C	1	FIRST POST TOP (6X6X$\frac{1}{8}$" Tube)	TPHP1A
D	1	FIRST POST BOTTOM (6' W6X15)	TPHP1B
E	1	SECOND POST ASSEMBLY TOP	UHP2A
F	1	SECOND POST ASSEMBLY BOTTOM	HP3B
G	1	BEARING PLATE	E750
H	1	CABLE ANCHOR BOX	S760
J	1	BCT CABLE ANCHOR ASSEMBLY	E770
		HARDWARE (ALL DIMENSIONS IN INCHES)	
a	2	5/16 x 1 HEX BOLT GRD 5	B5160104A
b	4	5/16 WASHER	W0516
c	2	5/16 HEX NUT	N0516
d	9	5/8 Dia. x 1 1/4 SPLICE BOLT (POST #2)	B580122
e	1	5/8 Dia. x 9 HEX BOLT GRD 5	B580904A
f	3	5/8 WASHER	W050
g	10	5/8 Dia. H.G.R NUT	N050
h	1	3/4 Dia. x 8 1/2 HEX BOLT GRD A449	B340854A
j	1	3/4 Dia. HEX NUT	N030
k	2	1 ANCHOR CABLE HEX NUT	N100
l	2	1 ANCHOR CABLE WASHER	W100
m	8	CABLE ANCHOR BOX SHOULDER BOLT	SB58A
n	8	1/2 A325 STRUCTURAL NUT	N055A
o	16	1 1/16 OD x 9/16 ID A325 STR. WASHER	W050A

GENERAL NOTES:

1. All bolts, nuts, cable assemblies, cable anchors and bearing plates shall be galvanized.
2. The lower sections of the Posts 1&2 shall not protrude more than 4 in above the ground (measured along a 5' cord). Site grading may be necessary to meet this requirement.
3. The lower sections of the hinged posts should not be driven with the upper post attached. If the post is placed in a drilled hole, the backfill material must be satisfactorily compacted to prevent settlement.
4. When competent rock is encountered, a 12" Ø post hole, 20 in. deep cored into the rock surface may be used if approved by the engineer for post 1. Granular material will be placed in the bottom of the hole, approximately 2.5" deep to provide drainage. The first post can be field cut to length, placed in the hole and backfilled with suitable backfill. The soil plate may be trimmed if required.
5. A site evaluation should be considered if there is less than 25' between the outlet side of the terminal and any adjacent driving lane.
6. The breakaway cable assembly must be taut. A locking device (vice grips or channel lock pliers) should be used to prevent the cable from twisting when tightening nuts.

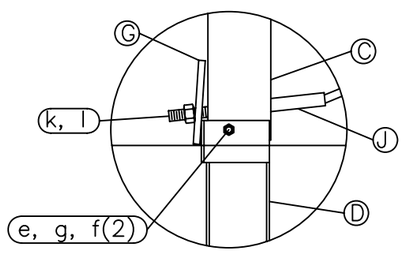

Post #1 Connection Detail

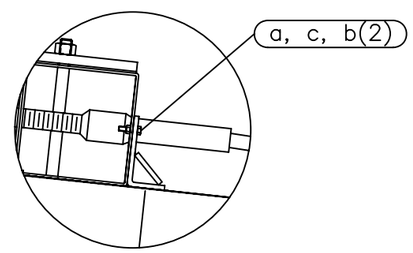

Impact Head Connection Detail

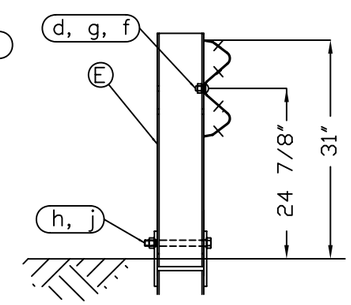

SECTION A-A

Post #2

RSI
Road Systems, Inc.
Big Spring, TX
Phone: 432-263-2435
or Phone: 330-346-0721

SKT-SP-MGS Terminal
Midwest Guardrail System
31" Top of Rail

Sheet: 1
Date: 02/24/10
By: JRR
Drawing Name: SKT-SP-S-MGS
Scale: None
Rev: 0

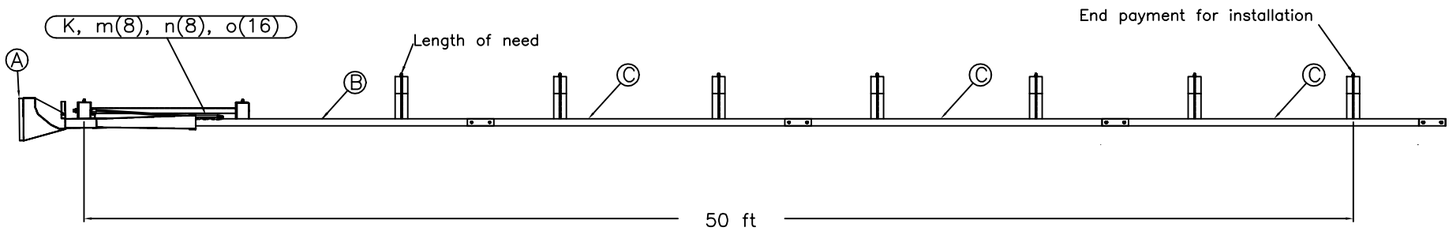

PLAN

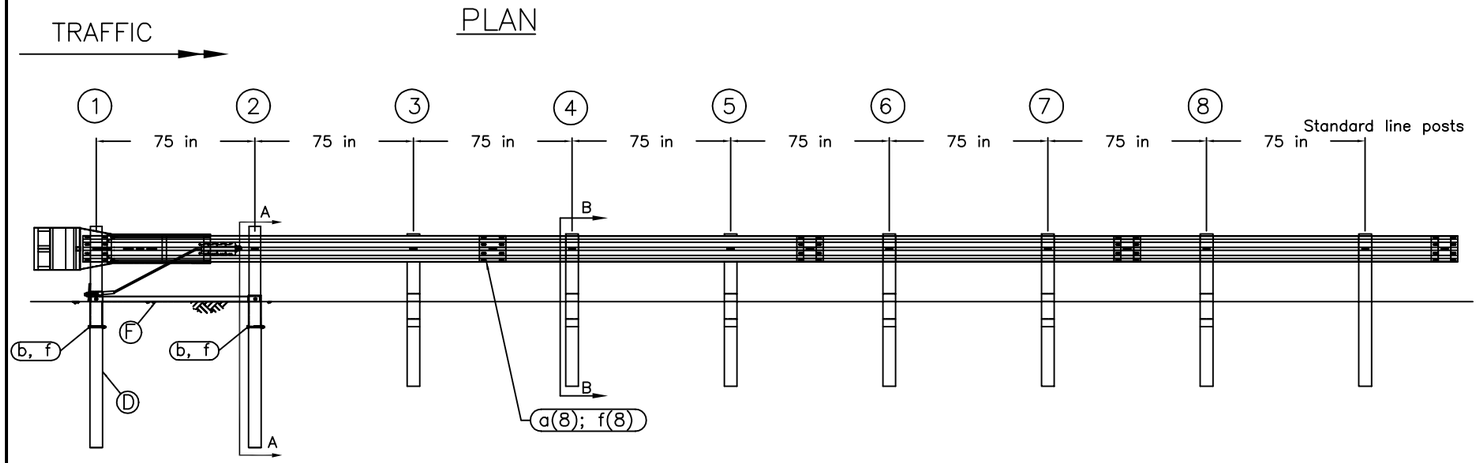

ELEVATION

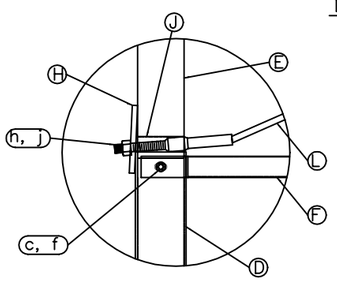

POST #1 CONNECTION DETAIL

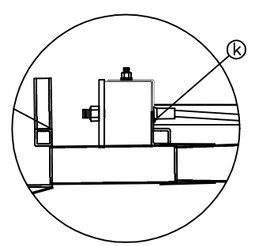

IMPACT HEAD CONNECTION DETAIL

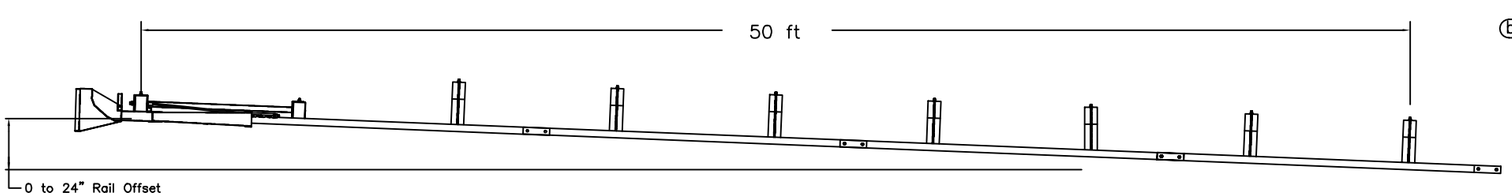

OPTIONAL FLARED INSTALLATION

25:1 maximum flare rate

GENERAL NOTES:

1. Breakaway posts are required with the SKT.
2. All bolts, nuts, cable assemblies, cable anchors and bearing plates shall be galvanized.
3. The SKT can be flared at a rate of up to 25:1 to prevent the impact head from encroaching on the shoulder.
4. The foundation tubes shall not protrude more than 4" above the ground (measured along a 5' cord). Site grading may be necessary to meet this requirement.
5. When rock is encountered, a 12" Ø post hole, 20" into the rock surface may be used if approved by the engineer. Granular material will be placed in the bottom of the hole, approximately 2.5" deep to provide drainage. The first two posts can be field cut to length, placed in the hole and backfilled with adequately compacted material excavated from the hole.
6. The breakaway cable assembly must be taut. A locking device (vice grips or channel lock pliers) should be used to prevent the cable from twisting when tightening nuts.
7. A site evalution should be considered if there is less than 25' between the outlet side of the terminal and any adjacent driving lane.
8. The soil tubes may be driven with an approved driving head. They shall not be driven with the post in the tube.
9. The wood blockouts should be "toe-nailed" to the rectangular wood posts to prevent them from turning when the wood shrinks.

ITEM	QTY	BILL OF MATERIALS	ITEM NO.
A	1	IMPACT HEAD	S3000
B	1	W-BEAM GUARDRAIL END SECTION, 12 Ga.	S1303 MGS
C	3	W-BEAM GUARDRAIL, 12 Ga.	G1203 MGS
D	2	FOUNDATION TUBE	E731
E	2	BCT WOOD POST	P650 MGS
F	1	GROUND STRUT	E780
G	6	CRT WOOD POST	P671 MGS
H	1	BEARING PLATE	E750
J	1	PIPE SLEEVE	E740
K	1	CABLE ANCHOR BOX	S760
L	1	BCT CABLE ANCHOR ASSEMBLY	E770
M	6	MGS TIMBER BLOCKOUT OR EQUIV.	P618
		HARDWARE (ALL DIMENSIONS IN INCHES)	
a	24	5/8ø x 1 1/4 SPLICE BOLT	B580122
b	2	5/8ø x 7 1/2 HEX BOLT	B580754
c	2	5/8ø x 10 HEX BOLT	B581004
d	1	5/8ø x 10 H.G.R. BOLT	B581002
e	6	5/8ø x 22 H.G.R. BOLT	B582202
f	35	5/8ø H.G.R. NUT	N050
g	7	H.G.R. WASHER	W050
h	2	1 ANCHOR CABLE HEX NUT	N100
j	2	1 ANCHOR CABLE WASHER	W100
k	2	3/8 x 3 LAG SCREW	E350
m	8	CABLE ANCHOR BOX SHOULDER BOLT	SB58A
n	8	1/2 A325 STRUCTURAL NUT	N055A
o	16	1 1/16 OD x 9/16 ID A325 STR. WASHER	W050A

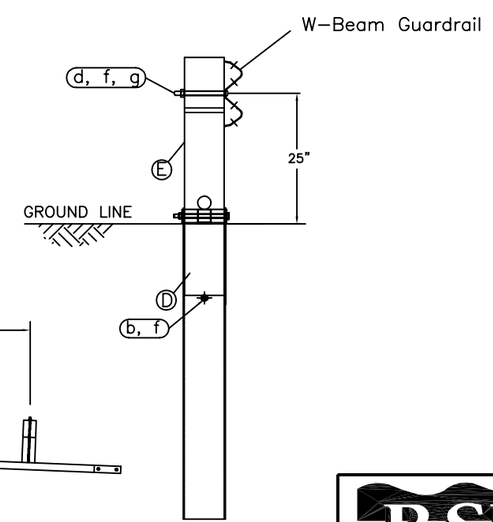

SECTION A-A

Post #2

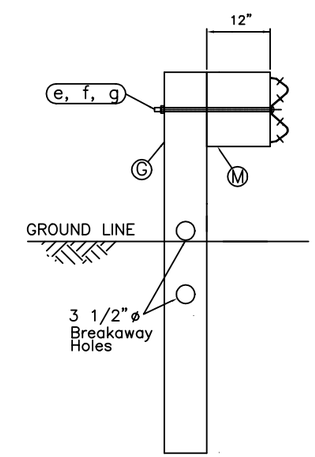

SECTION B-B

Posts 3 thru 8

RSI
Road Systems, Inc.
Big Spring, TX
Phone: 432-263-2435
or Phone: 330-346-0721

Sequential Kinking Terminal
SKT - Assembly

Midwest Guardrail System
Wood Post System

Sheet: A1
Date: 12/01/04
By: JRR
Drawing Name: SKT-MGS-W-US
Scale: NONE
Rev: 0

ITEM NO.	PART NUMBER	DESCRIPTION	QTY	UOM
1	BSI-1301252-KT	X-Tension Terminal Comp, 31 in	1	EACH
2	K070202	X-Tension Hardware Kit, GT,	1	EACH
3	K070206	X-Tension System Hardware Kit,	1	EACH
4	K070210	X-Tension GT Guardrail	1	EACH
5	B061100	BSI, I-Beam Post, Middle, X350	1	EACH
6	MANXT1	X-TENSION Installation Manual	1	EACH

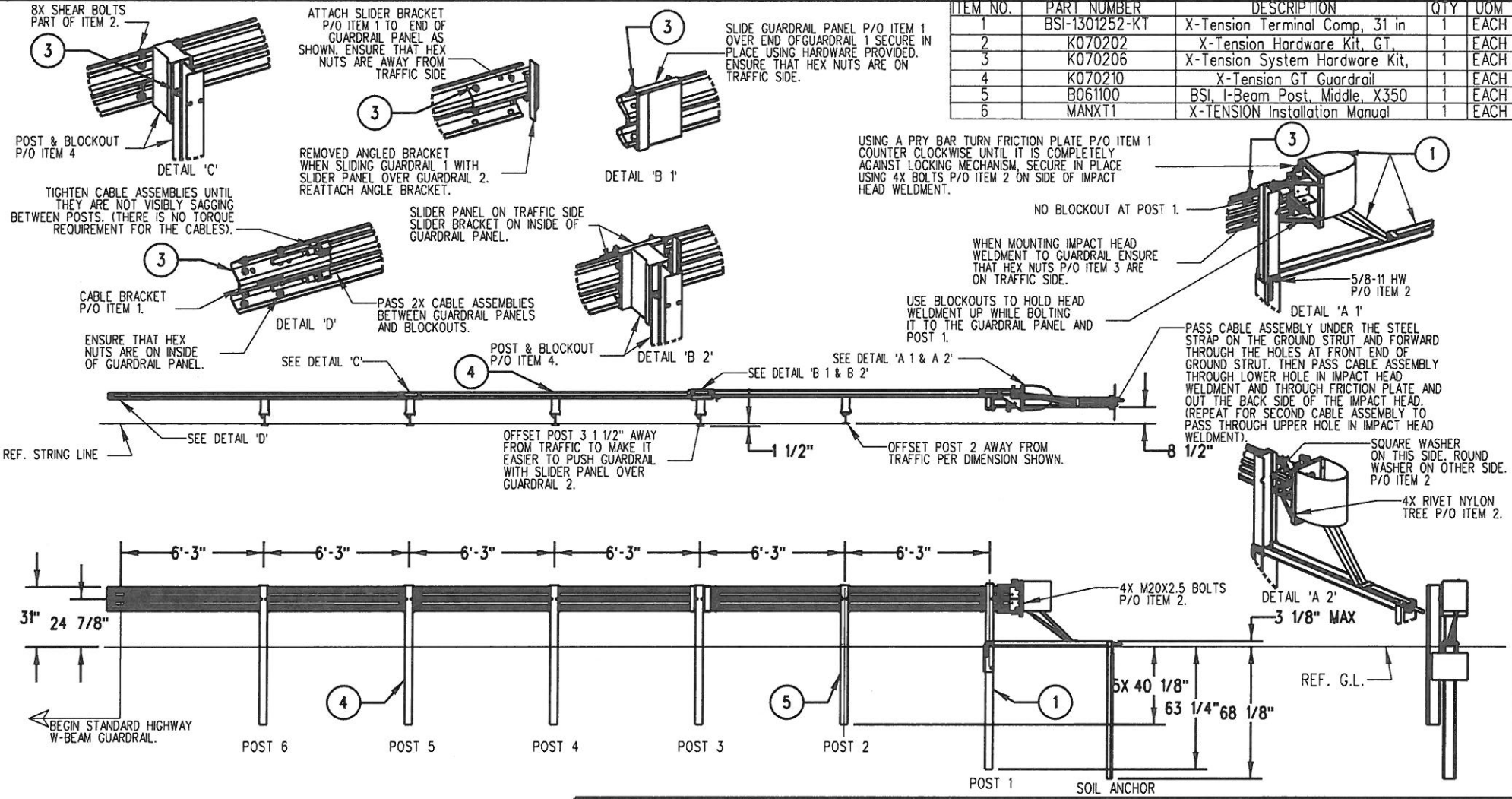

NOTES: UNLESS OTHERWISE SPECIFIED.

1. SYSTEM TO BE INSTALLED PER MANUFACTURER SPECIFICATIONS.
2. ONLY TIGHTEN THE CABLE ASSEMBLIES USING THE NUTS AT THE CABLE BRACKET (SEE DETAIL 'D'). DO NOT TIGHTEN THE CABLES AT THE FRONT OF THE GROUND ANCHOR.
3. WHEN DRIVING STEEL POST, ENSURE THAT A DRIVING CAP WITH TIMBER OR PLASTIC INSERT IS USED TO PREVENT DAMAGE TO THE GALVANIZING TO THE TOP OF THE POST.

© 2012 BARRIER SYSTEMS INC. THE INFORMATION CONTAINED IN THIS DRAWING IS THE SOLE PROPERTY OF BARRIER SYSTEMS INC. ANY REPRODUCTION IN PART OR WHOLE WITHOUT THE WRITTEN PERMISSION OF BARRIER SYSTEMS INC. IS PROHIBITED.

APPROVALS

DRAWN BY:	NMV
DRAWN DATE:	2/08/13
APPR'D BY:	JMT
APPR'D DATE:	2/08/13

UNLESS OTHERWISE SPECIFIED DIMENSIONS ARE IN INCHES. TOLERANCES ARE:
FRACTIONS ±1/16 DECIMAL .XX - ±.03 .XXX - ±.010 ANGLES ±1/2°
INTERPRET DIMENSIONS AND TOLERANCES PER ASME Y14.5-1994
THIRD ANGLE PROJECTION
DO NOT SCALE DRAWING

REV	ECN#	DATE
B	2067	03/02/15
A	2022	2/08/13

LINDSAY TRANSPORTATION SOLUTIONS™

BARRIER SYSTEMS INC.
3333 Vaca Valley Parkway Ste 800
Vacaville, CA 95688
Tel: 888-800-3691
www.barriersystemsinc.com

TITLE
X-TENSION GUARDRAIL TERMINAL SYSTEM STEEL POST WITH COMPOSITE BLOCKOUT 31" RAIL HEIGHT

SIZE	DWG NO.	REV.
B	XTGTSS5	B

SCALE 1:50 SHEET 1 OF 1

Appendix A - System Configuration, 37’ 6” MGS

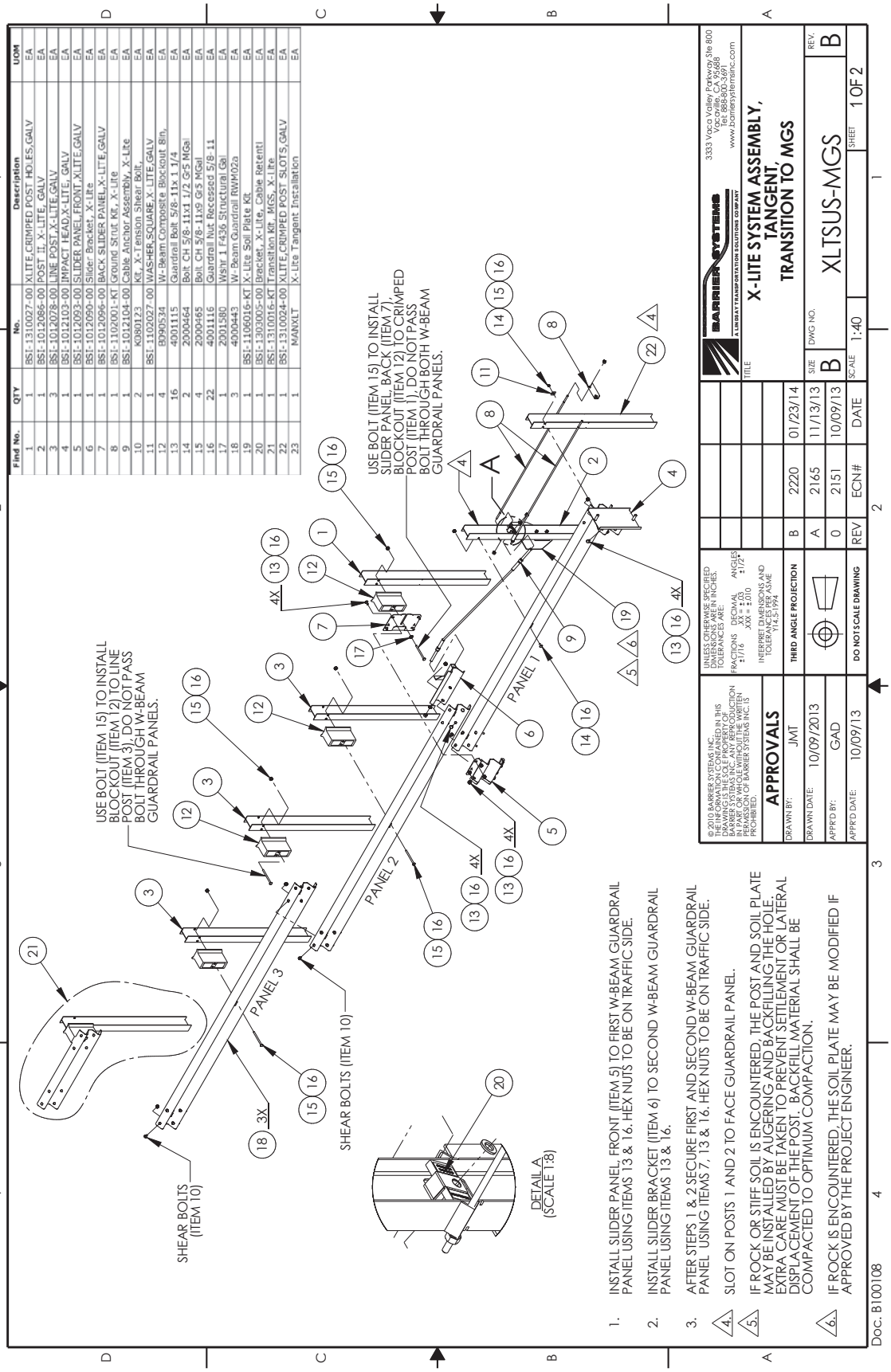

Find No.	QTY	No.	Description	UOM
1	1	BSI-1310027-00	XLITE,CRIMPED POST HOLES,GALV	EA
2	1	BSI-1012086-00	POST II, X-LITE, GALV	EA
3	3	BSI-1012078-00	LINE POST,X-LITE,GALV	EA
4	1	BSI-1012103-00	IMPACT HEAD,X-LITE, GALV	EA
5	1	BSI-1012093-00	SLIDER PANEL FRONT XLITE,GALV	EA
6	1	BSI-1012090-00	Slider Bracket, X-Lite	EA
7	1	BSI-1012096-00	BACK SLIDER PANEL X-LITE,GALV	EA
8	1	BSI-1102001-KT	Ground Strut Kit, X-Lite	EA
9	1	BSI-1012104-00	Cable Anchor Assembly, X-Lite	EA
10	2	K080123	Kit, X-Tension Shear Bolt.	EA
11	1	BSI-1102027-00	WASHER,SQUARE,X-LITE,GALV	EA
12	4	B090534	W-Beam Composite Blockout 8in,	EA
13	16	4001115	Guardrail Bolt 5/8-11x 1 1/4	EA
14	2	2000464	Bolt CH 5/8-11x1 1/2 G-5 MGal	EA
15	4	2000465	Bolt CH 5/8-11x9 G-5 MGal	EA
16	22	4001116	Guardrail Nut Recessed 5/8-11	EA
17	1	2001580	Washr 1 F436 Structural Gal	EA
18	3	4000443	W- Beam Guardrail RWM02a	EA
19	1	BSI-1106016-KT	X-Lite Soil Plate Kit.	EA
20	1	BSI-1303005-00	Bracket, X-Lite, Cable Retenti	EA
21	1	BSI-1310016-KT	Transition Kit, MGS, X-Lite	EA
22	1	BSI-1310024-00	XLITE,CRIMPED POST SLOTS,GALV	EA
23	1	MANXLT	X-Lite Tangent Installation	EA

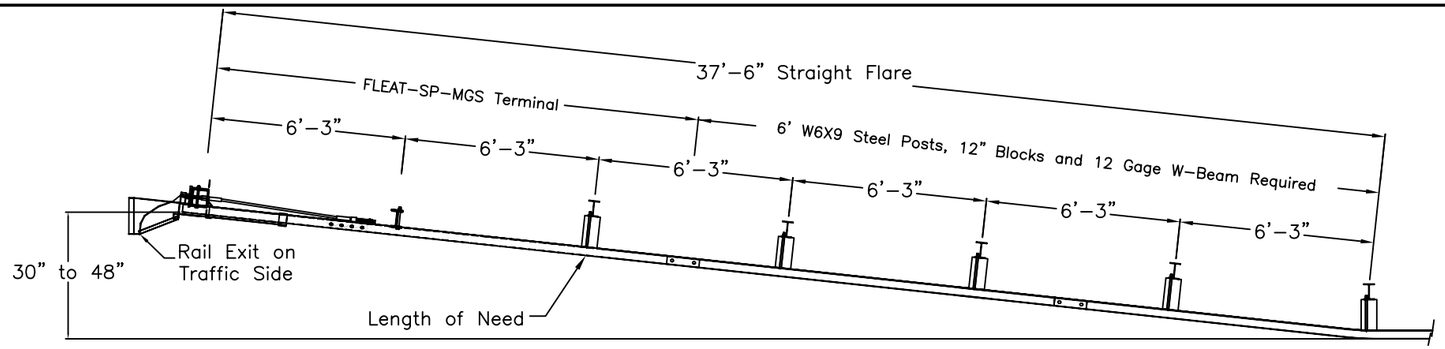

PLAN

TRAFFIC

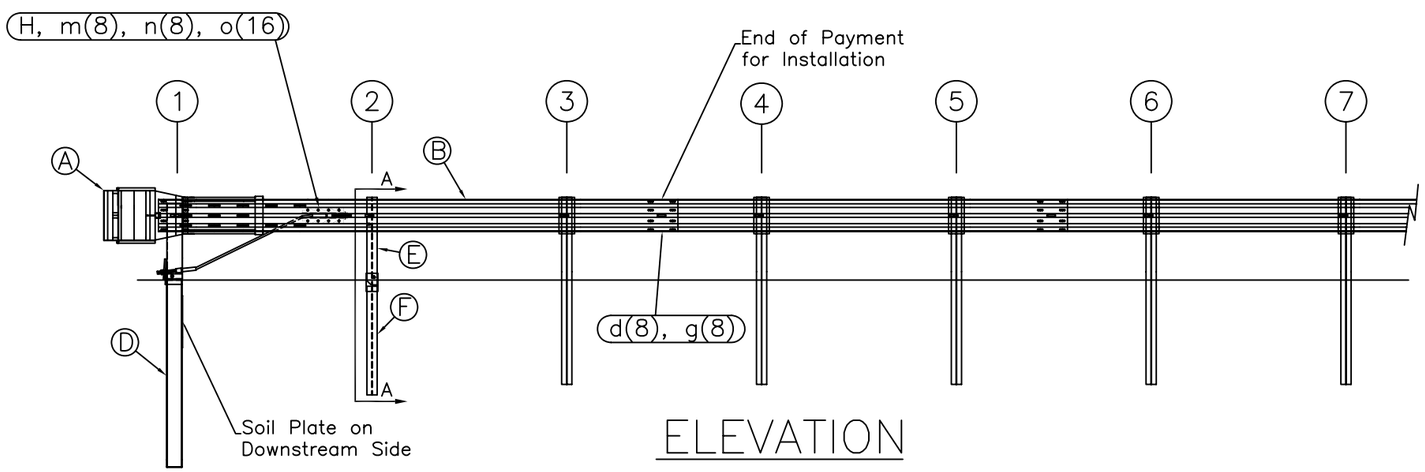

ELEVATION

ITEM	QTY	BILL OF MATERIALS	ITEM NO.
A	1	IMPACT HEAD	F3000
B	1	W-BEAM GUARDRAIL END SECTION, 12 Ga.	MGS-SF1303
C	1	FIRST POST TOP (6X6X$\frac{1}{8}$" Tube)	TPHP1A
D	1	FIRST POST BOTTOM (6' W6X15)	TPHP1B
E	1	SECOND POST ASSEMBLY TOP	UHP2A
F	1	SECOND POST ASSEMBLY BOTTOM	HP3B
G	1	BEARING PLATE	E750
H	1	CABLE ANCHOR BOX	S760
J	1	BCT CABLE ANCHOR ASSEMBLY	E770
		HARDWARE (ALL DIMENSIONS IN INCHES)	
a	2	5/16 x 1 HEX BOLT GRD 5	B5160104A
b	4	5/16 WASHER	W0516
c	2	5/16 HEX NUT	N0516
d	9	5/8 Dia. x 1 1/4 SPLICE BOLT (POST #2)	B580122
e	1	5/8 Dia. x 9 HEX BOLT GRD 5	B580904A
f	3	5/8 WASHER	W050
g	10	5/8 Dia. H.G.R NUT	N050
h	1	3/4 Dia. x 8 1/2 HEX BOLT GRD A449	B340854A
j	1	3/4 Dia. HEX NUT	N030
k	2	1 ANCHOR CABLE HEX NUT	N100
l	2	1 ANCHOR CABLE WASHER	W100
m	8	CABLE ANCHOR BOX SHOULDER BOLT	SB58A
n	8	1/2 A325 STRUCTURAL NUT	N055A
o	16	1 1/16 OD x 9/16 ID A325 STR. WASHER	W050A

GENERAL NOTES:
1. All bolts, nuts, cable assemblies, cable anchors and bearing plates shall be galvanized.
2. The lower sections of the Posts 1&2 shall not protrude more than 4 in above the ground (measured along a 5' cord). Site grading may be necessary to meet this requirement.
3. The lower sections of the hinged posts should not be driven with the upper post attached. If the post is placed in a drilled hole, the backfill material must be satisfactorily compacted to prevent settlement.
4. When competent rock is encountered, a 12" Ø post hole, 20 in. deep cored into the rock surface may be used if approved by the engineer for post 1. Granular material will be placed in the bottom of the hole, approximately 2.5" deep to provide drainage. The first post can be field cut to length, placed in the hole and backfilled with suitable backfill. The soil plate may be trimmed if required.
5. The breakaway cable assembly must be taut. A locking device (vice grips or channel lock pliers) should be used to prevent the cable from twisting when tightening nuts.

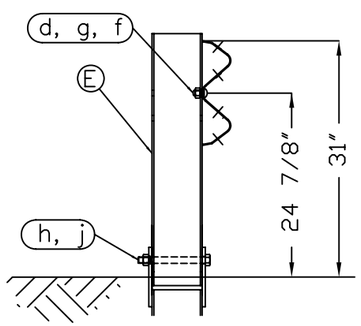

SECTION A-A
Post #2

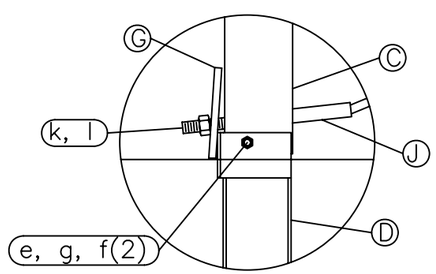

Post #1 Connection Detail

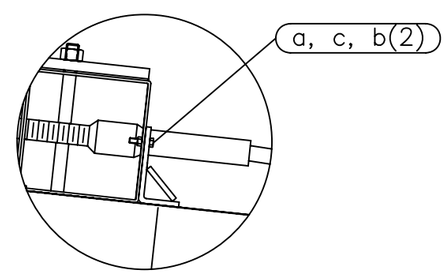

Impact Head Connection Detail

Road Systems, Inc.
Big Spring, TX
Phone: 432-263-2435
or Phone: 330-346-0721

FLEAT-SP-MGS Terminal
Midwest Guardrail System
31" Top of Rail

Sheet: 1
Date: 02/24/10
By: JRR
Drawing Name: FLT-SP-S-MGS
Scale: None
Rev: 0

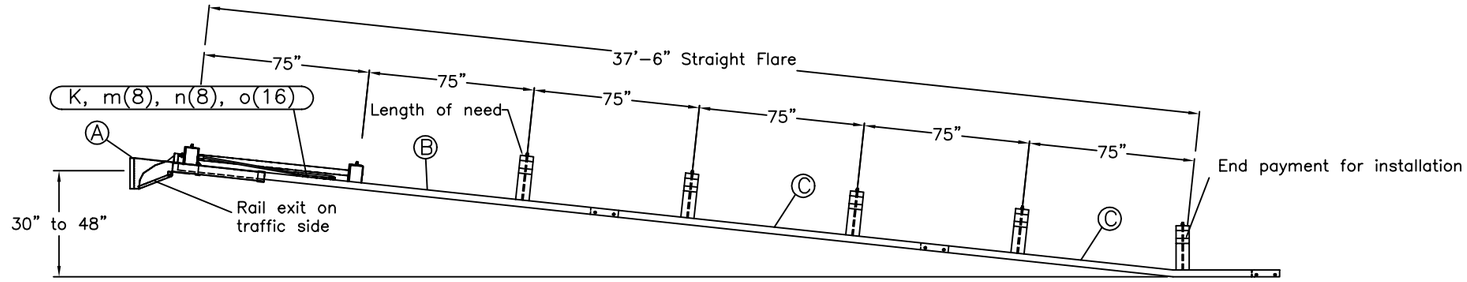

TRAFFIC

PLAN

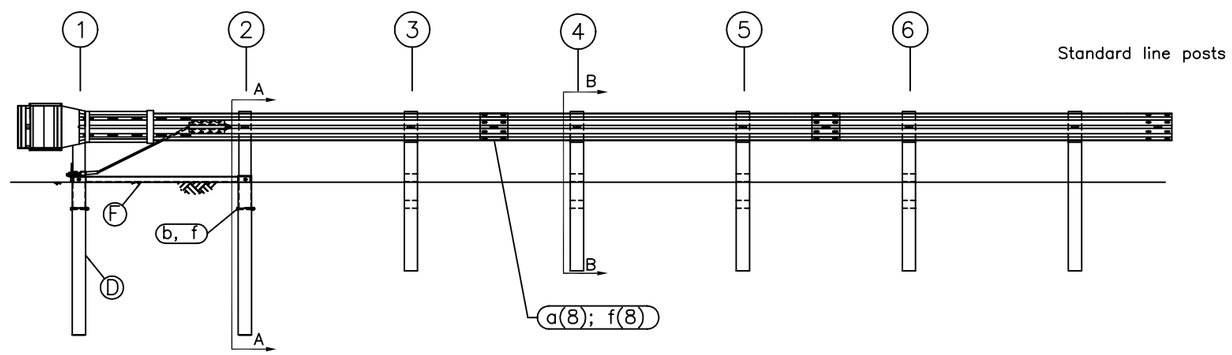

ELEVATION

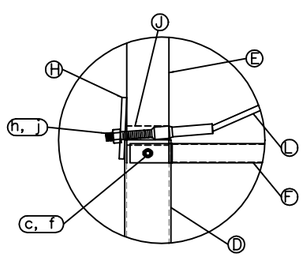

POST #1 CONNECTION DETAILS

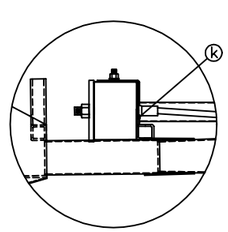

IMPACT HEAD CONNECTION DETAIL

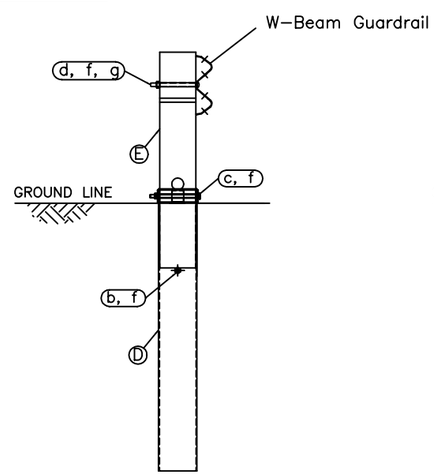

SECTION A-A
Post #2

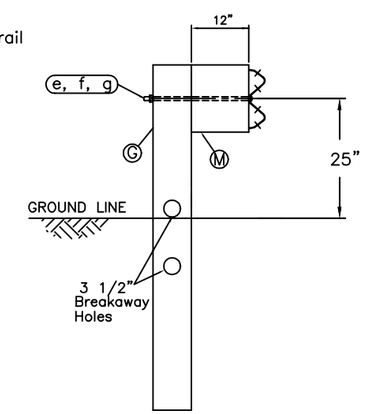

SECTION B-B
Posts 3 thru 6

ITEM	QTY	BILL OF MATERIALS	ITEM NO.
A	1	IMPACT HEAD	F3000
B	1	W-BEAM GUARDRAIL END SECTION, 12 Ga.	F1303 MGS
C	2	W-BEAM GUARDRAIL, 12 Ga.	G1203 MGS
D	2	FOUNDATION TUBE	E731
E	2	BCT WOOD POST	P650 MGS
F	1	GROUND STRUT	E780
G	4	CRT WOOD POST	P671 MGS
H	1	BEARING PLATE	E750
J	1	PIPE SLEEVE	E740
K	1	CABLE ANCHOR BOX	S760
L	1	BCT CABLE ANCHOR ASSEMBLY	E770
M	4	MGS TIMBER BLOCKOUT OR RECYC. EQUIV.	P618
		HARDWARE (ALL DIMENSIONS IN INCHES)	
a	16	5/8ø x 1 1/4 SPLICE BOLT	B580122
b	2	5/8ø x 7 1/2 HEX BOLT	B580754
c	2	5/8ø x 10 HEX BOLT	B581004
d	1	5/8ø x 10 H.G.R. BOLT	B581002
e	4	5/8ø x 22 H.G.R. BOLT	B582202
f	25	5/8ø H.G.R. NUT	N050
g	5	H.G.R. WASHER	W050
h	2	1 ANCHOR CABLE HEX NUT	N100
j	2	1 ANCHOR CABLE WASHER	W100
k	2	3/8 x 3 LAG SCREW	E350
m	8	CABLE ANCHOR BOX SHOULDER BOLT	SB58A
n	8	1/2 A325 STRUCTURAL NUT	N055A
o	16	1 1/16 OD x 9/16 ID A325 STR. WASHER	W050A

GENERAL NOTES:
1. Breakaway posts are required with the FLEAT.
2. All bolts, nuts, cable assemblies, cable anchors and bearing plates shall be galvanized.
3. The foundation tubes shall not protrude more than 4 in above the ground (measured along a 5' cord). Site grading may be necessary to meet this requirement.
4. When rock is encountered, a 12" Ø post hole, 20 in into the rock surface may be used if approved by the engineer. Granular material will be placed in the bottom of the hole, approximately 2.5" deep to provide drainage. The first two posts can be field cut to length, placed in the hole and backfilled with adequately compacted material excavated from the hole.
5. The breakaway cable assembly must be taut. A locking device (vice grips or channel lock pliers) should be used to prevent the cable from twisting when tightening nuts.
6. The soil tubes may be driven with an approved driving head. They shall not be driven with the post in the tube.
7. The wood blockouts should be "toe-nailed" to the rectangular wood posts to prevent them from turning when the wood shrinks.

RSI
Road Systems, Inc.
Big Spring, TX
Phone: 432-263-2435
or Phone: 330-346-0721

Flared Energy Absorbing Terminal - FLEAT Assembly
Midwest Guardrail System

Wood Post System

Sheet: A1
Date: 12/01/2004
By: JRR
Drawing Name: FLT-MGS-W-US
Scale: None
Rev: 0

OFFSET NOTES:
1) POST OFFSET DIMENSIONS ARE GIVEN TO THE CENTER OF THE TRAFFIC FACE OF POSTS, EXCEPT AT POSTS #7 & #8, WHERE DIMENSION IS TO CENTER OF THE TRAFFIC FACE OF THE BLOCKOUTS.
2) GUARDRAIL BETWEEN POST 1-7 IS ON A STRAIGHT LINE FLARE.

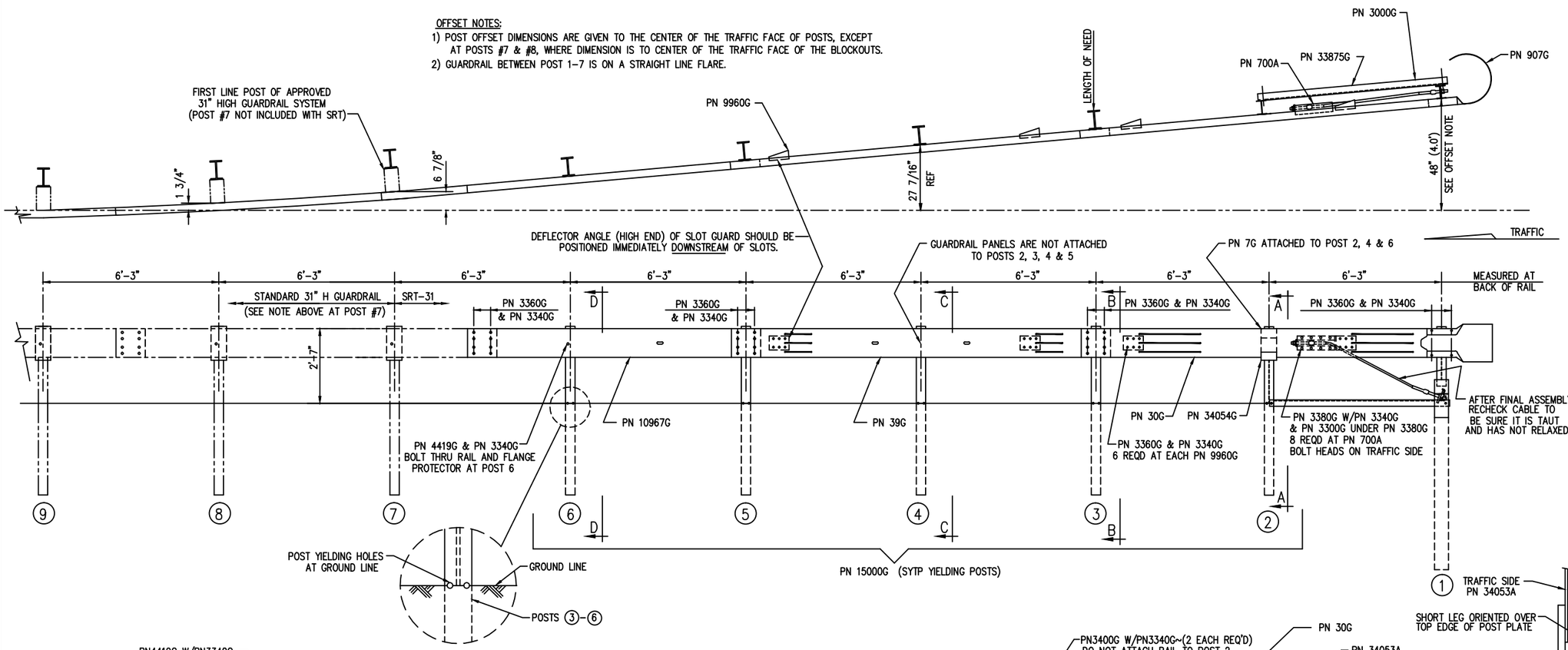

BILL OF MATERIAL

	PN	QTY	DESCRIPTION
	7G	3	12/6"/FLG PROTECTOR (AT POST 2, 4 & 6)
	30G	1	12/12'6/S SRT-1 (GUARDRAIL)
	39G	1	12/12'6/S SRT-2 (GUARDRAIL)
	700A	1	CABLE ANCHOR BRACKET
	907G	1	12/BUFFER/ROLLED (TERMINAL)
	3000G	1	3/4 x 6'-6" CABLE
HARDWARE	3240G	2	5/16" WASHER (AT POST 1)
HARDWARE	3245G	2	5/16" HEX NUT (AT POST 1)
HARDWARE	3300G	12	5/8" WASHER
HARDWARE	3340G	67	5/8" HEX HGR NUT
HARDWARE	3360G	52	5/8"ø x 1 1/4" HGR SPLICE BOLT
HARDWARE	3380G	8	5/8"ø x 1 1/2" HEX HD BOLT
HARDWARE	3400G	4	5/8"ø x 2" HGR POST BOLT (AT POSTS 1, 2 & 4)
HARDWARE	3391G	2	5/8"ø x 1 3/4" HEX BOLT (A325) (AT STRUT)
HARDWARE	3900G	2	1" WASHER (AT CABLE)
HARDWARE	3910G	2	1" HEX NUT (AT CABLE)
HARDWARE	4211G	2	5/16"ø x 1 3/4" HEX BOLT (AT POST 1)
HARDWARE	4419G	1	5/8"ø x 1 3/4" COUNTERSUNK HD BOLT (AT POST 6)
	9960G	4	SLOT GUARD BRACKET
	10967G	1	12/9'4.5/3'1.5/S SRT-3 (GUARDRAIL)
	15000G	5	6'-0" SYT POST (W6 X 8.5)
	33909G	1	CABLE ANCHOR BRACKET (AT POST 1)
	33875G	1	ANGLE STRUT 3 x 3 x 1/4
	34052A	1	CR POST 1 BOT (W6 x 15)
	34053A	1	CR POST 1 TOP (W6 x 8.5)
	34054G	1	POST SHELF ANGLE (AT POST 2)

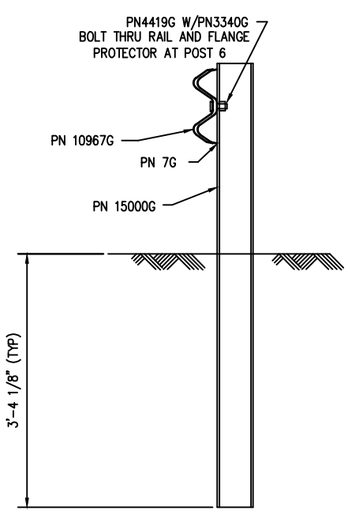

SECTION "D-D"
(@ POST #6)

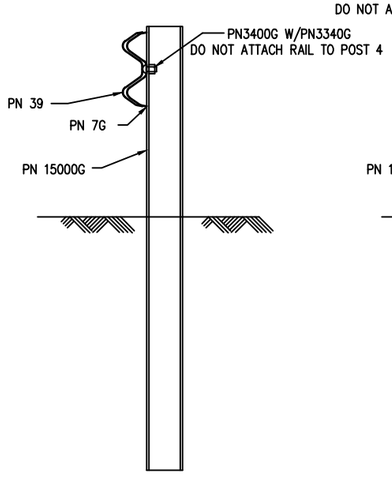

SECTION "C-C"
(@ POST #4)

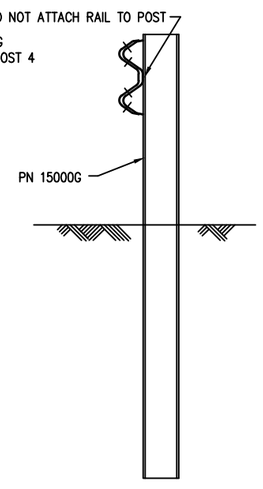

SECTION "B-B"
(@ POST #3 & #5)

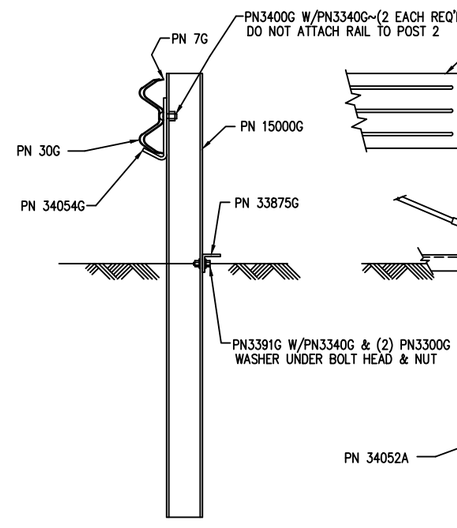

SECTION "A-A"
(@ POST #2)

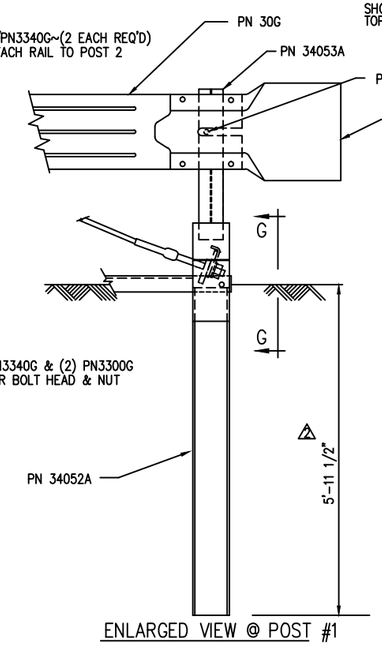

ENLARGED VIEW @ POST #1

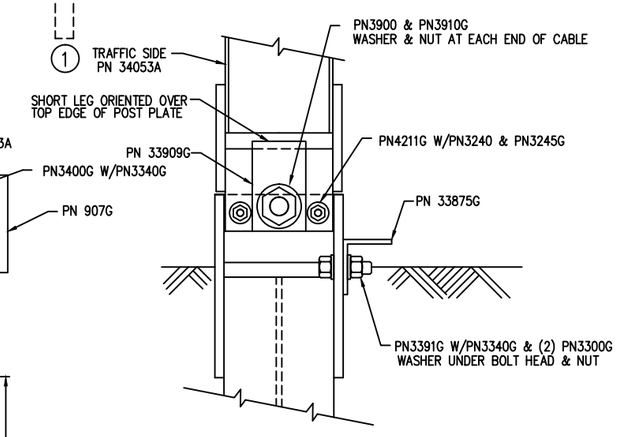

VIEW "G-G"
(@ POST #1)

REV.	CHK'D	BY	DATE	REMARKS
4	BT	LH	10/6/10	OFFSET POSTS #7 & #8
3	BT	LH	2/26/09	REVISED HARDWARE
2	SG	LH	7/28/08	REVISED POST #1 LENGTH IN GROUND
1	SG	LH	1/16/08	REVISED HARDWARE QUANTITY IN BILL OF MATERIAL

SRT-31

SLOTTED RAIL TERMINAL SRT-31 (31" H)
ERECTION DETAILS
(3 PANELS, CR AND SYT POSTS)

DRAWN	BT
CHECKED	SG
SCALE	NTS
DATE	10/30/07
ENG. FILE #	SS436-01E
SHT.No.	E1 OF 1
DRAWING NO.	SS 436
REV.	4

The drawings and the information shown thereon are copyrighted by Trinity Highway Products (2010) and the sole property of Trinity Highway Products. Neither the drawings nor such information is to be used for any purpose other than that for which it was specifically furnished from Trinity Highway Products, LLC., nor is any reproduction authorized without written permission.

TRINITY HIGHWAY PRODUCTS, LLC.
2525 STEMMONS FREEWAY
DALLAS, TX 75207

ITEM NO.	PART NUMBER	DESCRIPTION	QTY	UOM
1	BSI-1301252-KT	X-Tension Terminal Comp, 31 in	1	EACH
2	K070202	X-Tension Hardware Kit, GT,	1	EACH
3	K070206	X-Tension System Hardware Kit,	1	EACH
4	K070210	X-Tension GT Guardrail	1	EACH
5	B061100	BSI, I-Beam Post, Middle, X350	1	EACH
6	MANXT1	X-TENSION Installation Manual	1	EACH

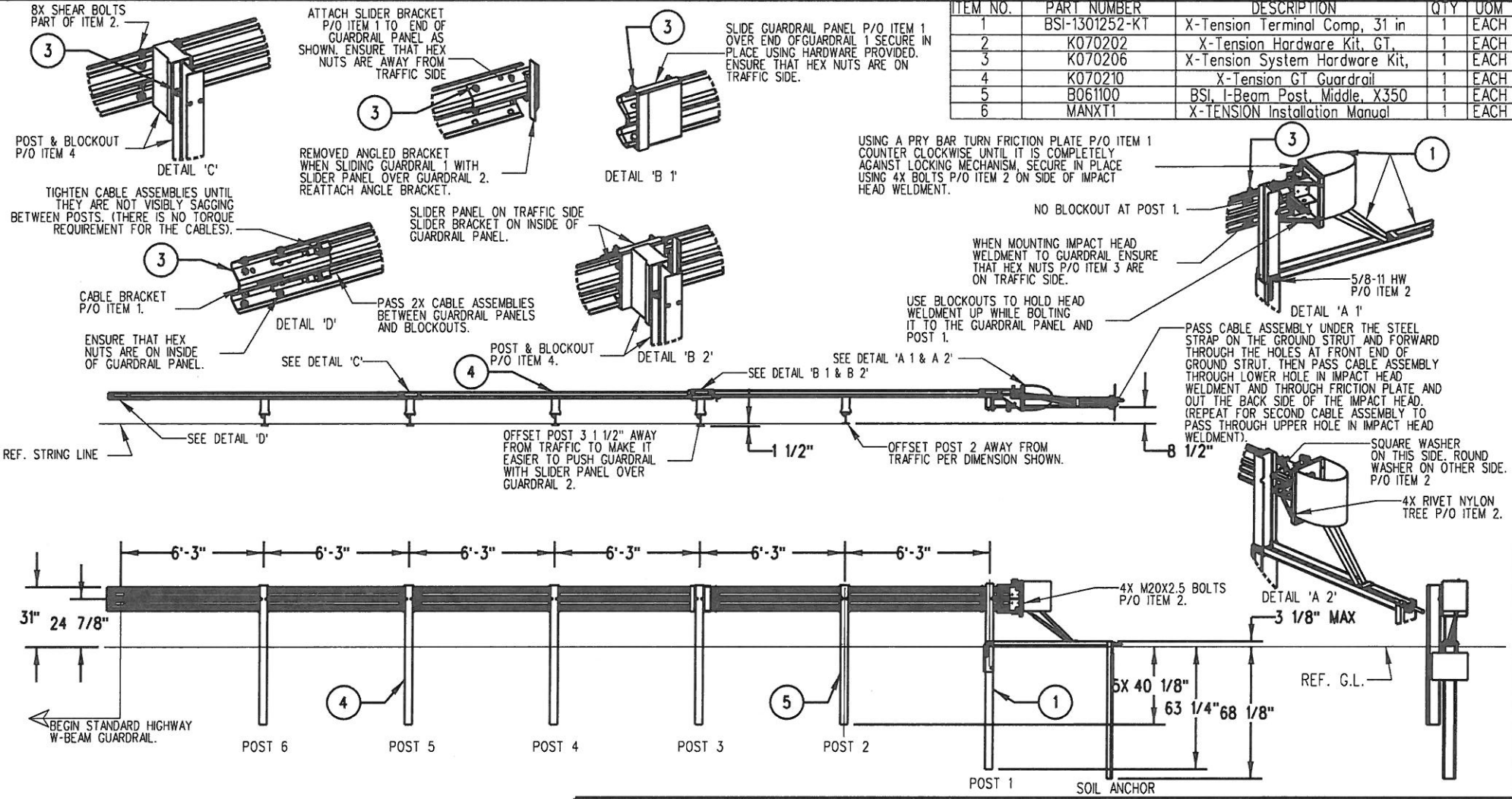

NOTES: UNLESS OTHERWISE SPECIFIED.

1. SYSTEM TO BE INSTALLED PER MANUFACTURER SPECIFICATIONS.
2. ONLY TIGHTEN THE CABLE ASSEMBLIES USING THE NUTS AT THE CABLE BRACKET (SEE DETAIL 'D'). DO NOT TIGHTEN THE CABLES AT THE FRONT OF THE GROUND ANCHOR.
3. WHEN DRIVING STEEL POST, ENSURE THAT A DRIVING CAP WITH TIMBER OR PLASTIC INSERT IS USED TO PREVENT DAMAGE TO THE GALVANIZING TO THE TOP OF THE POST.

© 2012 BARRIER SYSTEMS INC. THE INFORMATION CONTAINED IN THIS DRAWING IS THE SOLE PROPERTY OF BARRIER SYSTEMS INC. ANY REPRODUCTION IN PART OR WHOLE WITHOUT THE WRITTEN PERMISSION OF BARRIER SYSTEMS INC. IS PROHIBITED.

APPROVALS

DRAWN BY:	NMV
DRAWN DATE:	2/08/13
APPR'D BY:	JMT
APPR'D DATE:	2/08/13

UNLESS OTHERWISE SPECIFIED DIMENSIONS ARE IN INCHES. TOLERANCES ARE:
FRACTIONS ±1/16 DECIMAL .XX - ±.03 .XXX - ±.010 ANGLES ±1/2°
INTERPRET DIMENSIONS AND TOLERANCES PER ASME Y14.5-1994
THIRD ANGLE PROJECTION
DO NOT SCALE DRAWING

REV	ECN#	DATE
B	2067	03/02/15
A	2022	2/08/13

LINDSAY TRANSPORTATION SOLUTIONS™

BARRIER SYSTEMS INC.
3333 Vaca Valley Parkway Ste 800
Vacaville, CA 95688
Tel: 888-800-3691
www.barriersystemsinc.com

TITLE
X-TENSION GUARDRAIL TERMINAL SYSTEM STEEL POST WITH COMPOSITE BLOCKOUT 31" RAIL HEIGHT

SIZE	DWG NO.	REV.
B	XTGTSS5	B

SCALE 1:50 SHEET 1 OF 1

From: Mark Gonzales [mailto:MarkG@gardnervillewater.org]
Sent: Wednesday, November 05, 2014 9:26 AM
To: Emukpoeruo, Donald O@DOT
Subject: RE: Water Source Agency

Mr. Emukpoeruo,

Re: Construction Water Supply, Gardnerville Water Company, Gardnerville, Nevada

The Gardnerville Water Company operates a 24/7 construction water fill station located at 1579 Virginia Ranch Road, Gardnerville, Nevada. **Construction water can only be taken from this facility within the Gardnerville Water Company District Service area serving the Town of Gardnerville, Nevada**. The facility has an overhead fill and a 2 ½ inch fire connection. Contractors who wish to utilize the GWC water fill station must request and fill out an Application for Tanker Water and return the completed form to the Gardnerville Water Company at 1579 Virginia Ranch Road, Gardnerville, Nevada 89410 or fax the completed form to GWC at 775-782-2491. Construction water is billed out on a monthly basis at $3.00 per 1,000 gallons.

For more information on Applications for Tanker Water, contractors may call our office at 775-782-2339.

If you wish additional information, please call me at the above listed number.

Mark Gonzales, P.E.
Manager/Engineer
Gardnerville Water Company
markg@gardnervillewater.org
775-782-2339

WATER USE ESTIMATE

Project Information

Contract Number	10-0W6101
Project Identifier Number	1012000019
County/Route/PM	ALP/88/0.0-7.5

Estimate Prepared By

Eric Olson

Estimate Date and Time: **12/2/2014 13:15**

Base Rates Used For Calculating Estimated Required Water

Bid Item / Work Activity	Base Rates	Unit of Measure
Roadway Excavation (Embankment)	30	Gal/CY
Aggregate Base & Subbase	15	Gal/CY
Dust Control	2	Gal/SQYD/Day
Subgrade Compaction	10	Gal/SQYD
Hot Mix Asphalt Compaction	7	Gal/Ton
Concrete	25	Gal/CY
Cold Planning Pavement	0.5	Gal/SQYD
Grind Concrete Pavement	6.5	Gal/SQYD
Groove Concrete Pavement	1.5	Gal/SQYD

Estimated Water Required for Bid Item / Work Activity

Bid Item / Work Activity	Estimated Quantity	Quantity Unit of Measure	Estimated Water Required (Gallons)
Roadway Excavation (Embankment)	161	CY	4,830
Aggregate Base & Subbase	0	CY	0
Dust Control Area	0	SQYD	
Dust Control Days	0	days	0
Subgrade Compaction	0	SQYD	0
Hot Mix Asphalt Compaction	41,803	Ton	292,621
Concrete	70	CY	1,750
Cold Planning Pavement	252,819	SQYD	379,229
Grind Concrete Pavement	0	SQYD	0
Groove Concrete Pavement	0	SQYD	0

Note: Include only concrete that could be produced at a portable plant on the projects site.

Project Estimated Total Water Required	Unit of Measure
678,430	Gallons
90,693	CF
2,568	M^3
2.08	Acre-foot