Dist	COUNTY	ROUTE	POST MILES TOTAL PROJECT	SHEET No.	TOTAL SHEETS
10	SJ	99	4.5/23.0	1	99

STATE OF CALIFORNIA

DEPARTMENT OF TRANSPORTATION

ACNHP-P099(580)E

PROJECT PLANS FOR CONSTRUCTION ON STATE HIGHWAY

IN SAN JOAQUIN COUNTY AT VARIOUS LOCATIONS FROM 0.2 MILE SOUTH OF AUSTIN ROAD TO 0.1 MILE NORTH OF HAMMER LANE OVERCROSSING

TO BE SUPPLEMENTED BY STANDARD PLANS DATED 2010

INDEX OF PLANS

SHEET No.	DESCRIPTION
1	TITLE AND LOCATION MAP
2-5	TYPICAL CROSS SECTIONS
6-11	LAYOUTS
12-13	PROFILE AND SUPERELEVATION DIAGRAMS
14-15	CONSTRUCTION DETAILS
16-21	TEMPORARY WATER POLLUTION CONTROL AND EROSION CONTROL PLANS
22-26	DRAINAGE PLANS, PROFILES, DETAILS AND QUANTITIES
27-32	UTILITY PLANS
33	CONSTRUCTION AREA SIGNS
34-41	PAVEMENT DELINEATION AND SIGN PLAN, DETAILS AND QUANTITIES
42-43	SUMMARY OF QUANTITIES
44	EROSION CONTROL LEGEND
45-55	ELECTRICAL PLANS
55A-55B	SPECIAL ELECTRICAL STRUCTURES 1
56-99	REVISED STANDARD PLANS

THE STANDARD PLANS LIST APPLICABLE TO THIS CONTRACT IS INCLUDED IN THE NOTICE TO BIDDERS AND SPECIAL PROVISIONS BOOK.

LOCATION MAP

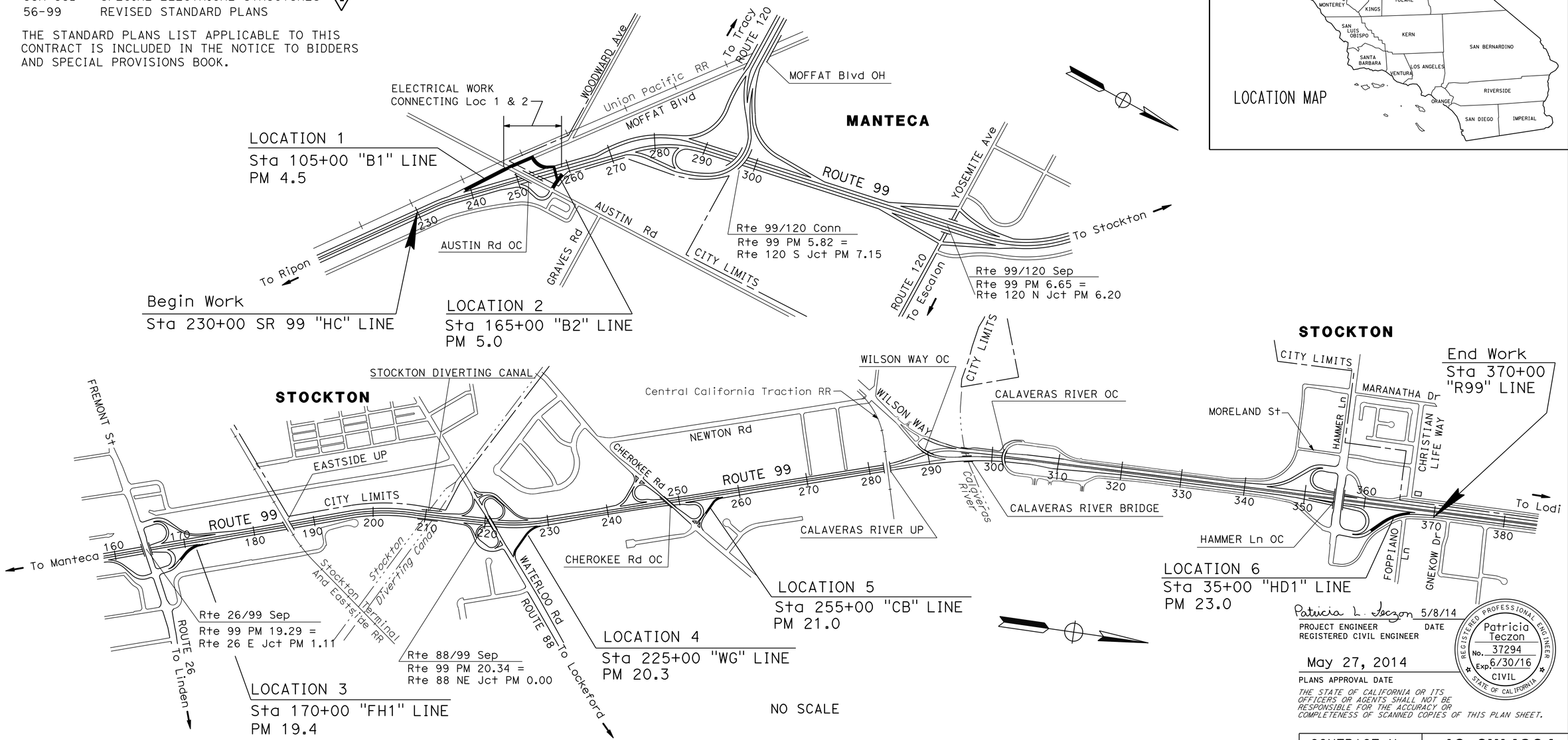

Patricia L. Teczon 5/8/14

PROJECT ENGINEER DATE
REGISTERED CIVIL ENGINEER

May 27, 2014

PLANS APPROVAL DATE

REGISTERED PROFESSIONAL ENGINEER Patricia Teczon No. 37294 Exp. 6/30/16 CIVIL STATE OF CALIFORNIA

THE STATE OF CALIFORNIA OR ITS OFFICERS OR AGENTS SHALL NOT BE RESPONSIBLE FOR THE ACCURACY OR COMPLETENESS OF SCANNED COPIES OF THIS PLAN SHEET.

THE CONTRACTOR SHALL POSSESS THE CLASS (OR CLASSES) OF LICENSE AS SPECIFIED IN THE "NOTICE TO BIDDERS."

1 **REPLACED PER ADDENDUM No. 1 DATED OCTOBER 30, 2014**

CONTRACT No.	10-0W4304
PROJECT ID	1000020607

PROJECT MANAGER: SCOTT GUIDI

DESIGN ENGINEER: CAROLINE REYES

LAST REVISION 05-08-14

DATE PLOTTED => 28-OCT-2014
TIME PLOTTED => 14:08

Dist	COUNTY	ROUTE	POST MILES TOTAL PROJECT	SHEET No.	TOTAL SHEETS
10	SJ	99	4.5/23.0	34	99

REGISTERED CIVIL ENGINEER 3-7-14 DATE

05-27-14
PLANS APPROVAL DATE

REGISTERED PROFESSIONAL ENGINEER STEVEN L. HIATT No. C40772 Exp. 3-31-15 CIVIL STATE OF CALIFORNIA

THE STATE OF CALIFORNIA OR ITS OFFICERS OR AGENTS SHALL NOT BE RESPONSIBLE FOR THE ACCURACY OR COMPLETENESS OF SCANNED COPIES OF THIS PLAN SHEET.

HDR ENGINEERING, INC.
1325 J STREET
SUITE 1300
SACRAMENTO, CA 95814

CITY OF MANTECA
1001 WEST CENTER STREET
MANTECA, CA 95337

NOTES:

1. FOR ACCURATE RIGHT OF WAY DATA, CONTACT RIGHT OF WAY ENGINEERING AT THE DISTRICT OFFICE.
2. SIGN LOCATIONS SHOWN ARE APPROXIMATE. EXACT LOCATIONS TO BE DETERMINED BY THE ENGINEER.

LEGEND:

- CHANGE OF PAVEMENT DELINEATION DETAILS
- LIMIT OF PAVEMENT DELINEATION DETAIL
- PAVEMENT MARKING TYPE II ARROW
- DELINEATOR (CLASS 1) (TYPE F OR G)
- OBJECT MARKER (TYPE L)
- GUARD RAILING DELINEATOR (TYPE F OR G)
- (#) REMOVE THERMOPLASTIC TRAFFIC STRIPE DETAIL NUMBER
- ● LANE/HOV THERMOPLASTIC PAVEMENT MARKING
- ROADSIDE SIGN (STRAP AND SADDLE BRACKET METHOD)
- EXISTING ROADSIDE SIGN (STRAP AND SADDLE BRACKET METHOD)
- EXISTING ROADSIDE SIGN ONE-POST
- EXISTING ROADSIDE SIGN TWO-POST
- ▲ RELOCATE ROADSIDE SIGN (FROM / TO)
- ■ REMOVE ROADSIDE SIGN

ABBREVIATIONS:

(CA) CALIFORNIA SIGN CODE
(B/B) BACK TO BACK
LL LIMIT LINE

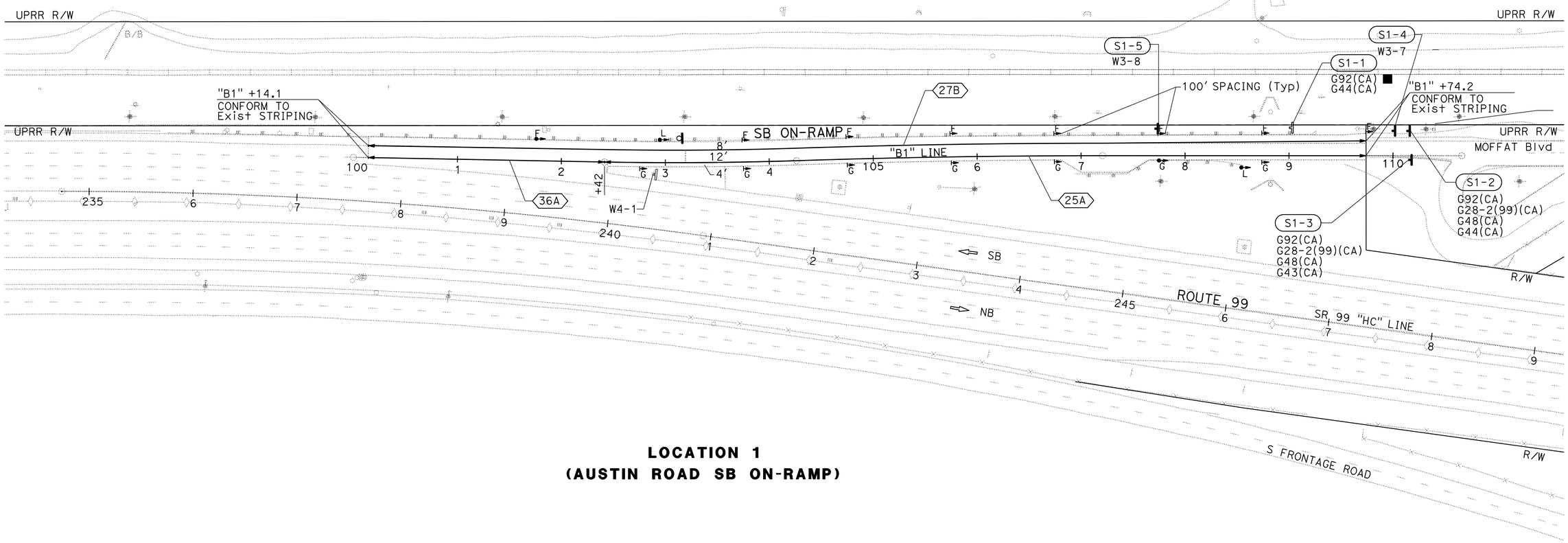

LOCATION 1
(AUSTIN ROAD SB ON-RAMP)

1 REPLACED PER ADDENDUM No.1 DATED OCTOBER 30, 2014

APPROVED FOR PAVEMENT DELINEATION AND SIGN WORK ONLY

PAVEMENT DELINEATION AND SIGN PLAN

SCALE: 1" = 50'

PD-1

STATE OF CALIFORNIA - DEPARTMENT OF TRANSPORTATION
Caltrans

CONSULTANT FUNCTIONAL SUPERVISOR: STEVEN L. HIATT
CALCULATED-DESIGNED BY: VINCENT W. FUNG
CHECKED BY: LINDA RIMBACH
REVISED BY: PT
DATE REVISED: 05/13/14

LAST REVISION 00-00-00
DATE PLOTTED => 28-OCT-2014
TIME PLOTTED => 14:09

Dist	COUNTY	ROUTE	POST MILES TOTAL PROJECT	SHEET No.	TOTAL SHEETS
10	SJ	99	4.5/23.0	35	99

REGISTERED CIVIL ENGINEER 3-7-14 DATE

05-27-14
PLANS APPROVAL DATE

REGISTERED PROFESSIONAL ENGINEER STEVEN L. HIATT No. C40772 Exp. 3-31-15 CIVIL STATE OF CALIFORNIA

THE STATE OF CALIFORNIA OR ITS OFFICERS OR AGENTS SHALL NOT BE RESPONSIBLE FOR THE ACCURACY OR COMPLETENESS OF SCANNED COPIES OF THIS PLAN SHEET.

HDR ENGINEERING, INC.
1325 J STREET
SUITE 1300
SACRAMENTO, CA 95814

CITY OF MANTECA
1001 WEST CENTER STREET
MANTECA, CA 95337

NOTE:
FOR ACCURATE RIGHT OF WAY DATA, CONTACT RIGHT OF WAY ENGINEERING AT THE DISTRICT OFFICE.

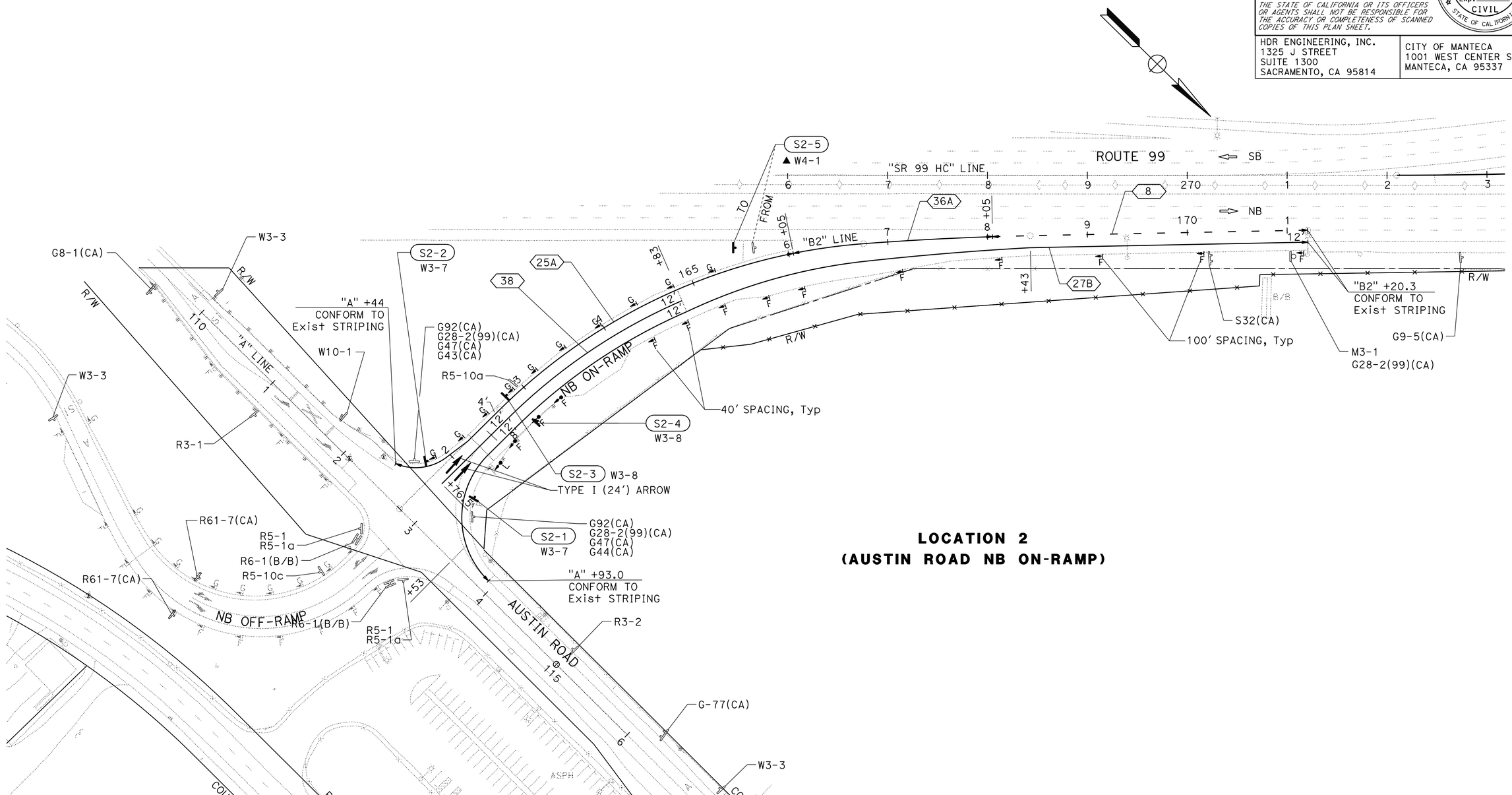

LOCATION 2
(AUSTIN ROAD NB ON-RAMP)

1 **REPLACED PER ADDENDUM No. 1 DATED OCTOBER 30, 2014**

APPROVED FOR PAVEMENT DELINEATION AND SIGN WORK ONLY

PAVEMENT DELINEATION AND SIGN PLAN

SCALE: 1" = 50'

PD-2

STATE OF CALIFORNIA - DEPARTMENT OF TRANSPORTATION
Caltrans

CONSULTANT FUNCTIONAL SUPERVISOR: STEVEN L. HIATT
CALCULATED-DESIGNED BY: VINCENT W. FUNG
CHECKED BY: LINDA RIMBACH
REVISED BY: PT
DATE REVISED: 05/19/14

LAST REVISION 00-00-00
DATE PLOTTED => 28-OCT-2014
TIME PLOTTED => 14:09

Dist	COUNTY	ROUTE	POST MILES TOTAL PROJECT	SHEET No.	TOTAL SHEETS
10	SJ	99	4.5/23.0	36	99

REGISTERED CIVIL ENGINEER 5/9/14 DATE

05-27-14
PLANS APPROVAL DATE

REGISTERED PROFESSIONAL ENGINEER HUE NGUYEN No. 74484 Exp. 12/31/15 CIVIL STATE OF CALIFORNIA

THE STATE OF CALIFORNIA OR ITS OFFICERS OR AGENTS SHALL NOT BE RESPONSIBLE FOR THE ACCURACY OR COMPLETENESS OF SCANNED COPIES OF THIS PLAN SHEET.

NOTE:

FOR ACCURATE RIGHT OF WAY DATA, CONTACT RIGHT OF WAY ENGINEERING AT THE DISTRICT OFFICE.

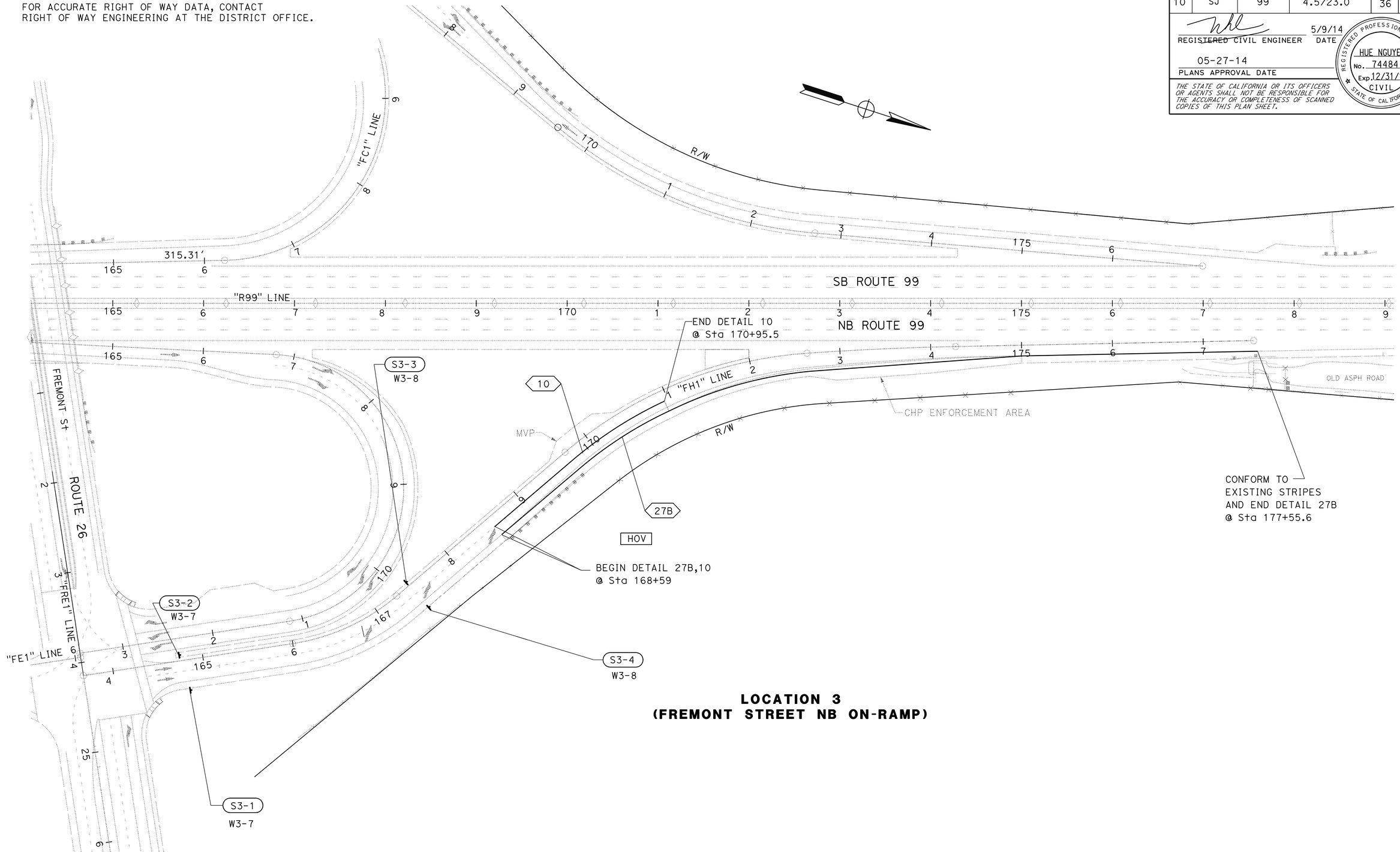

LOCATION 3
(FREMONT STREET NB ON-RAMP)

1 **REPLACED PER ADDENDUM No. 1 DATED OCTOBER 30, 2014**

APPROVED FOR PAVEMENT DELINEATION AND SIGN WORK ONLY

PAVEMENT DELINEATION AND SIGN PLAN

SCALE: 1" = 50'

PD-3

REVISED BY	DATE REVISED
CN	10/08/14

CALCULATED-DESIGNED BY: CECILE NGUYEN
CHECKED BY: HUE NGUYEN
FUNCTIONAL SUPERVISOR: MOHAMMED QATAMI

STATE OF CALIFORNIA - DEPARTMENT OF TRANSPORTATION
Caltrans
TRAFFIC DESIGN

LAST REVISION 00-00-00
DATE PLOTTED => 28-OCT-2014
TIME PLOTTED => 14:09

Dist	COUNTY	ROUTE	POST MILES TOTAL PROJECT	SHEET No.	TOTAL SHEETS
10	SJ	99	4.5/23.0	37	99

REGISTERED CIVIL ENGINEER 5/9/14 DATE

05-27-14
PLANS APPROVAL DATE

REGISTERED PROFESSIONAL ENGINEER HUE NGUYEN No. 74484 Exp. 12/31/15 CIVIL STATE OF CALIFORNIA

THE STATE OF CALIFORNIA OR ITS OFFICERS OR AGENTS SHALL NOT BE RESPONSIBLE FOR THE ACCURACY OR COMPLETENESS OF SCANNED COPIES OF THIS PLAN SHEET.

NOTE:

FOR ACCURATE RIGHT OF WAY DATA, CONTACT RIGHT OF WAY ENGINEERING AT THE DISTRICT OFFICE.

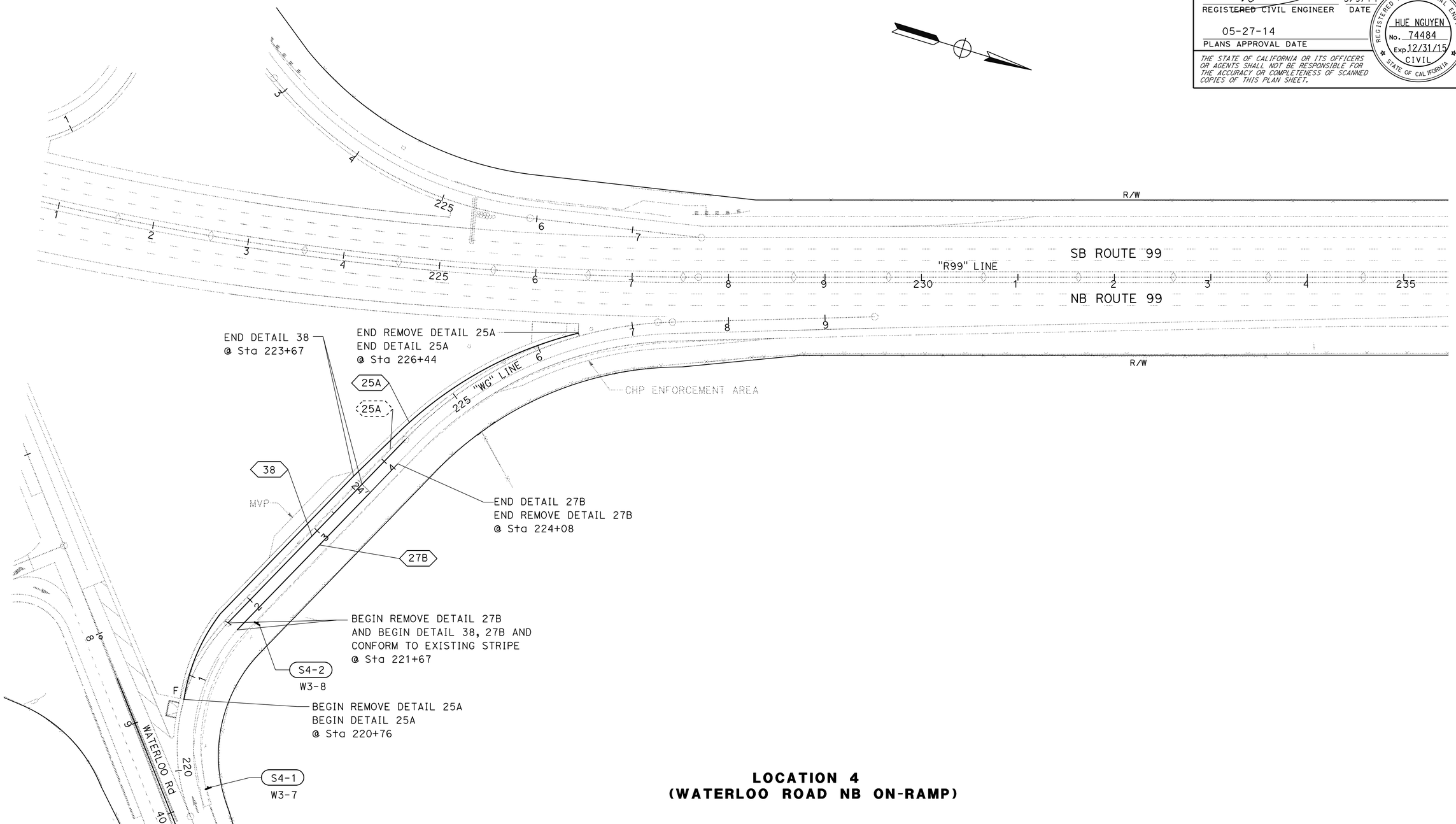

LOCATION 4
(WATERLOO ROAD NB ON-RAMP)

1 REPLACED PER ADDENDUM No. 1 DATED OCTOBER 30, 2014

APPROVED FOR PAVEMENT DELINEATION AND SIGN WORK ONLY

PAVEMENT DELINEATION AND SIGN PLAN

SCALE: 1" = 50'

PD-4

STATE OF CALIFORNIA - DEPARTMENT OF TRANSPORTATION
Caltrans® **TRAFFIC DESIGN**

FUNCTIONAL SUPERVISOR: MOHAMMED QATAMI
CALCULATED-DESIGNED BY: CECILE NGUYEN
CHECKED BY: HUE NGUYEN
REVISED BY: CN
DATE REVISED: 10/08/14

LAST REVISION 00-00-00
DATE PLOTTED => 28-OCT-2014
TIME PLOTTED => 14:09

Dist	COUNTY	ROUTE	POST MILES TOTAL PROJECT	SHEET No.	TOTAL SHEETS
10	SJ	99	4.5/23.0	38	99

REGISTERED CIVIL ENGINEER 5/9/14 DATE

05-27-14
PLANS APPROVAL DATE

REGISTERED PROFESSIONAL ENGINEER HUE NGUYEN No. 74484 Exp. 12/31/15 CIVIL STATE OF CALIFORNIA

THE STATE OF CALIFORNIA OR ITS OFFICERS OR AGENTS SHALL NOT BE RESPONSIBLE FOR THE ACCURACY OR COMPLETENESS OF SCANNED COPIES OF THIS PLAN SHEET.

NOTE:

FOR ACCURATE RIGHT OF WAY DATA, CONTACT RIGHT OF WAY ENGINEERING AT THE DISTRICT OFFICE.

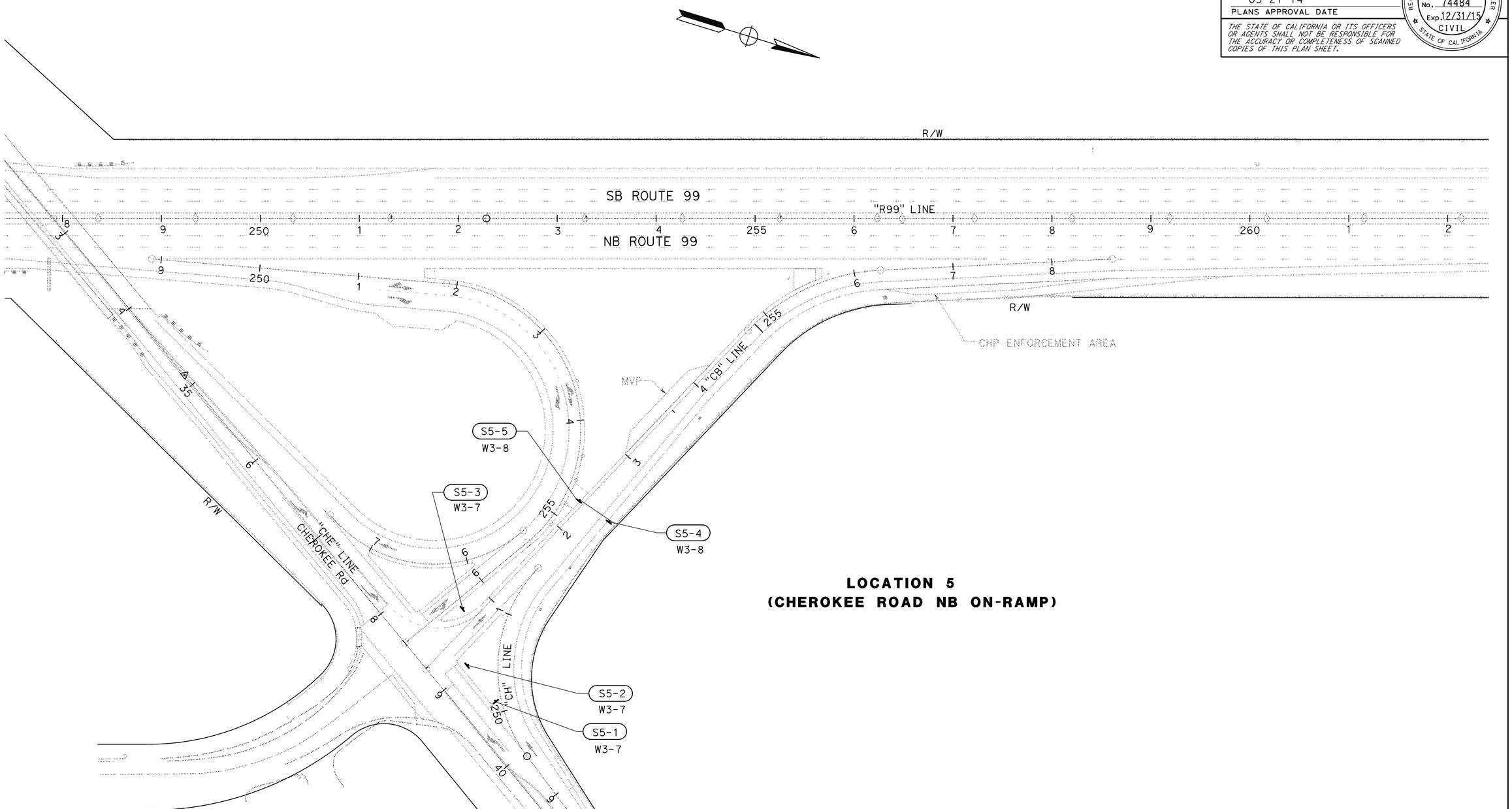

LOCATION 5
(CHEROKEE ROAD NB ON-RAMP)

1 REPLACED PER ADDENDUM No. 1 DATED OCTOBER 30, 2014

APPROVED FOR PAVEMENT DELINEATION AND SIGN WORK ONLY

PAVEMENT DELINEATION AND SIGN PLAN

SCALE: 1" = 50'

PD-5

REVISED BY	DATE REVISED
CN	10/08/14

CALCULATED-DESIGNED BY: CECILE NGUYEN
CHECKED BY: HUE NGUYEN
FUNCTIONAL SUPERVISOR: MOHAMMED QATAMI

STATE OF CALIFORNIA - DEPARTMENT OF TRANSPORTATION
Caltrans
TRAFFIC DESIGN

LAST REVISION 00-00-00
DATE PLOTTED => 28-OCT-2014
TIME PLOTTED => 14:09

Dist	COUNTY	ROUTE	POST MILES TOTAL PROJECT	SHEET No.	TOTAL SHEETS
10	SJ	99	4.5/23.0	39	99

REGISTERED CIVIL ENGINEER 5/9/14 DATE

05-27-14
PLANS APPROVAL DATE

REGISTERED PROFESSIONAL ENGINEER HUE NGUYEN No. 74484 Exp. 12/31/15 CIVIL STATE OF CALIFORNIA

THE STATE OF CALIFORNIA OR ITS OFFICERS OR AGENTS SHALL NOT BE RESPONSIBLE FOR THE ACCURACY OR COMPLETENESS OF SCANNED COPIES OF THIS PLAN SHEET.

NOTE:
FOR ACCURATE RIGHT OF WAY DATA, CONTACT RIGHT OF WAY ENGINEERING AT THE DISTRICT OFFICE.

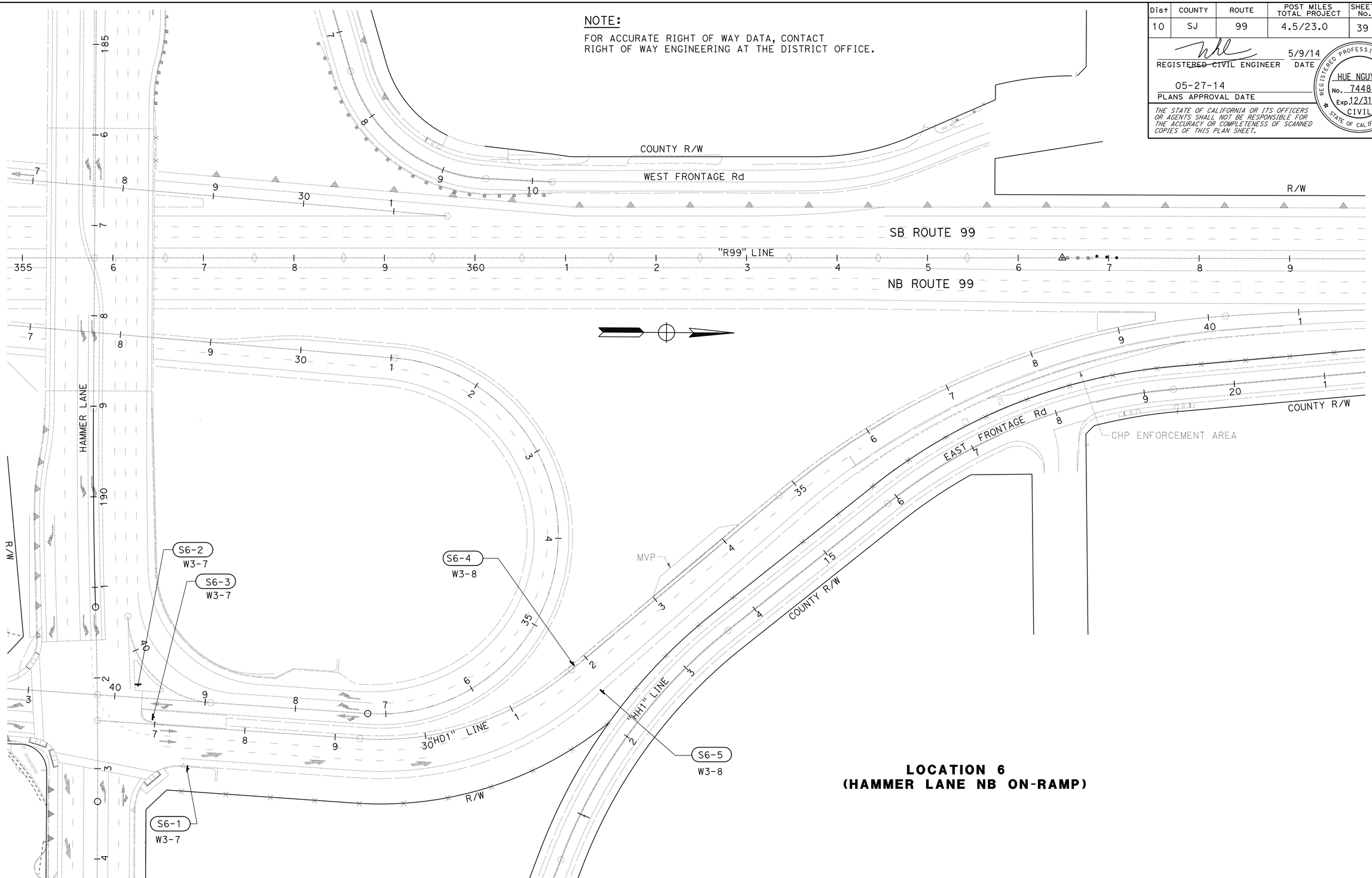

LOCATION 6
(HAMMER LANE NB ON-RAMP)

1 **REPLACED PER ADDENDUM No. 1 DATED OCTOBER 30, 2014**

APPROVED FOR PAVEMENT DELINEATION AND SIGN WORK ONLY

PAVEMENT DELINEATION AND SIGN PLAN

SCALE: 1" = 50'

PD-6

REVISED BY	DATE REVISED
CN	10/08/14

CALCULATED-DESIGNED BY: CECILE NGUYEN
CHECKED BY: HUE NGUYEN
FUNCTIONAL SUPERVISOR: MOHAMMED QATAMI

STATE OF CALIFORNIA - DEPARTMENT OF TRANSPORTATION
Caltrans
TRAFFIC DESIGN

LAST REVISION 00-00-00
DATE PLOTTED => 28-OCT-2014
TIME PLOTTED => 14:09

Dist	COUNTY	ROUTE	POST MILES TOTAL PROJECT	SHEET No.	TOTAL SHEETS
10	SJ	99	4.5/23.0	40	99

REGISTERED CIVIL ENGINEER 5/9/14 DATE

05-27-14
PLANS APPROVAL DATE

REGISTERED PROFESSIONAL ENGINEER HUE NGUYEN No. 74484 Exp. 12/31/15 CIVIL STATE OF CALIFORNIA

THE STATE OF CALIFORNIA OR ITS OFFICERS OR AGENTS SHALL NOT BE RESPONSIBLE FOR THE ACCURACY OR COMPLETENESS OF SCANNED COPIES OF THIS PLAN SHEET.

PAVEMENT DELINEATION ITEMS

SHEET No.	DIRECTION	DESCRIPTION/POST MILE	REMOVE YELLOW THERMOPLASTIC TRAFFIC STRIPE (HAZARDOUS WASTE)	REMOVE THERMOPLASTIC TRAFFIC STRIPE	REMOVE PAVEMENT MARKER
			LF	LF	EA
PD-1	NORTHBOUND	SB ON-RAMP "B1" LINE	732	484	32
PD-2	NORTHBOUND	FREMONT St ON-RAMP	85	150	6
PD-4	NORTHBOUND	WATERLOO Rd ON-RAMP	568	241	26
PD-5	NORTHBOUND	CHEROKEE Rd ON-RAMP			
PD-6	NORTHBOUND	HAMMER LANE ON-RAMP			
TOTAL			1,385	875	64

PAVEMENT DELINEATION ITEMS

SHEET No.	DIRECTION	DESCRIPTION	THERMOPLASTIC TRAFFIC STRIPE						THERMOPLASTIC PAVEMENT MARKING	PAVEMENT MARKER			DELINEATOR (CLASS 1)		GUARD RAILING DELINEATOR		OBJECT MARKER (TYPE L)
			4" SOLID YELLOW	4" SOLID WHITE	4" BROKEN WHITE (17-7)		8" SOLID WHITE	8" SOLID WHITE		(NON-REFLECTIVE)	(RETRO-REFLECTIVE)						
			DETAIL							TYPE			TYPE		TYPE		
			25A	27B	8	10	38	36A	TYPE I	A	G	H	F	G	F	G	
			LF	LF	LF	LF	LF	LF	SQLF		EA		EA		EA		EA
PD-1	SOUTHBOUND	SB ON-RAMP "B1" LINE	732									32					
		SB ON-RAMP "B1" LINE		974									7	6	1	1	2
		SB ON-RAMP "B1" LINE						242			12						
PD-2	NORTHBOUND	NB ON-RAMP "B2" LINE					305				14						
		NB ON-RAMP "B2" LINE	485						62			22					
		NB ON-RAMP "B2" LINE		1,050	316								10	10	3		1
		NB ON-RAMP "B2" LINE						200			10						
		AUSTIN RD "A" LINE															
		AUSTIN RD "A" LINE															
PD-3	NORTHBOUND	FREMONT St ON-RAMP		897		237 •				60	6						
PD-4	NORTHBOUND	WATERLOO Rd ON-RAMP	568	241			200				10	26					
PD-5	NORTHBOUND	CHEROKEE Rd ON-RAMP															
PD-6	NORTHBOUND	HAMMER LANE ON-RAMP															
SUBTOTAL			1,785	3,162	316		505	442	62	60	52	80	33		5		3
TOTAL			4,947		316		947		62	60	132		33		5		3

• NOT A SEPARATE PAY ITEM, FOR INFORMATION ONLY.

1 REPLACED PER ADDENDUM No.1 DATED OCTOBER 30, 2014

PAVEMENT DELINEATION DETAILS AND QUANTITIES

PDD-1

STATE OF CALIFORNIA - DEPARTMENT OF TRANSPORTATION
Caltrans TRAFFIC DESIGN

FUNCTIONAL SUPERVISOR: MOHAMMED QATAMI
CALCULATED-DESIGNED BY: CECILE NGUYEN
CHECKED BY: HUE NGUYEN
REVISED BY: CN
DATE REVISED: 10/08/14

LAST REVISION 03-00-00
DATE PLOTTED => 28-OCT-2014
TIME PLOTTED => 14:09

Dist	COUNTY	ROUTE	POST MILES TOTAL PROJECT	SHEET No.	TOTAL SHEETS
10	SJ	99	4.5/23.0	41	99

REGISTERED CIVIL ENGINEER 5/9/14 DATE

05-27-14
PLANS APPROVAL DATE

REGISTERED PROFESSIONAL ENGINEER HUE NGUYEN No. 74484 Exp. 12/31/15 CIVIL STATE OF CALIFORNIA

THE STATE OF CALIFORNIA OR ITS OFFICERS OR AGENTS SHALL NOT BE RESPONSIBLE FOR THE ACCURACY OR COMPLETENESS OF SCANNED COPIES OF THIS PLAN SHEET.

NOTES:

1. EXACT SIGN LOCATIONS TO BE DETERMINED BY THE ENGINEER.
2. * - INSTALLATION DETAILS INCLUDED IN ELECTRICAL SHEETS.
3. ** - TOTAL INCLUDED IN MGS TABLE IN SUMMARY OF QUANTITIES.

ROADSIDE SIGN ITEMS

SHEET No.	SIGN No.	SIGN CODE FEDERAL	SIGN CODE CALIFORNIA	SIGN MESSAGE	SIZE PANEL	SINGLE FACED	No. OF POST AND SIZE	BACKGROUND SHEETING COLOR	BACKGROUND RETROREFLECTIVITY ASTM TYPE	LEGEND SHEETING COLOR	LEGEND RETROREFLECTIVITY ASTM TYPE	GRAFFITI FLOW STANDARD	GRAFFITI FLOW PREMIUM	FURNISH SINGLE SHEET ALUMINIUM SIGN UNFRAMED 0.080" SQFT	FURNISH SINGLE SHEET ALUMINIUM SIGN UNFRAMED 0.063" SQFT	RETRO-REFLECTIVE SHEETING TYPE XI SQFT	ROADSIDE SIGN (ONE-POST) EA	INSTALL SIGN * (STRAP AND SADDLE BRACKET METHOD) EA	RELOCATE ROADSIDE SIGN EA	REMOVE ROADSIDE SIGN EA	TREATED WOOD WASTE LB	REMARKS
PD-1	S1-1		G92(CA)	FREEWAY ENTRANCE																		
			G44(CA)	DIRECTIONAL ARROW AUXILIARY																1	50	
	S1-2		G92(CA)	FREEWAY ENTRANCE	48"x30"	×	1-4" x 6"	GREEN	XI	WHITE	XI		×	10		10	1					
			G28-2(99)(CA)	STATE ROUTE MARKER	24"x25"	×		GREEN	XI	WHITE	XI		×		4.2	4.2						
			G48(CA)	SOUTH	26"x12"	×		GREEN	XI	WHITE	XI		×		2.2	2.2						
			G44(CA)	DIRECTIONAL ARROW AUXILIARY	24"x15"	×		GREEN	XI	WHITE	XI		×		2.5	2.5						
	S1-3		G92(CA)	FREEWAY ENTRANCE	48"x30"	×	1-4" x 6"	GREEN	XI	WHITE	XI		×	10		10	1					
			G28-2(99)(CA)	STATE ROUTE MARKER	24"x25"	×		GREEN	XI	WHITE	XI		×		4.2	4.2						
			G48(CA)	SOUTH	26"x12"	×		GREEN	XI	WHITE	XI		×		2.2	2.2						
			G43(CA)	DIRECTIONAL ARROW AUXILIARY	24"x15"	×		GREEN	XI	WHITE	XI		×		2.5	2.5						
	S1-4	W3-7		RAMP METER AHEAD	36" x 36"	×		YELLOW	XI	BLACK			×		9.0	9.0		X				MOUNTED ON FLASHING BEACON STANDARD, REFER TO E-3
	S1-5	W3-8		RAMP METERED WHEN FLASHING	36" x 36"	×		YELLOW	XI	BLACK			×		9.0	9.0		X				MOUNTED ON FLASHING BEACON STANDARD, REFER TO E-3
PD-2	S2-1	W3-7		RAMP METER AHEAD	36" x 36"	×		YELLOW	XI	BLACK			×		9.0	9.0		X				
	S2-2	W3-7		RAMP METER AHEAD	36" x 36"	×		YELLOW	XI	BLACK			×		9.0	9.0		X				
	S2-3	W3-8		RAMP METERED WHEN FLASHING	36" x 36"	×		YELLOW	XI	BLACK			×		9.0	9.0		X				MOUNTED ON FLASHING BEACON STANDARD, REFER TO E-4
	S2-4	W3-8		RAMP METERED WHEN FLASHING	36" x 36"	×		YELLOW	XI	BLACK			×		9.0	9.0		X				MOUNTED ON FLASHING BEACON STANDARD, REFER TO E-4
	S2-5	W4-1		MERGE		×													1			
PD-3	S3-1	W3-7		RAMP METER AHEAD	36" x 36"	×		YELLOW	XI	BLACK			×		9.0	9.0		X				MOUNTED ON FLASHING BEACON STANDARD, REFER TO E-5
	S3-2	W3-7		RAMP METER AHEAD	36" x 36"	×		YELLOW	XI	BLACK			×		9.0	9.0		X				MOUNTED ON FLASHING BEACON STANDARD, REFER TO E-5
	S3-3	W3-8		RAMP METERED WHEN FLASHING	36" x 36"	×		YELLOW	XI	BLACK			×		9.0	9.0		X				MOUNTED ON FLASHING BEACON STANDARD, REFER TO E-5
	S3-4	W3-8		RAMP METERED WHEN FLASHING	36" x 36"	×		YELLOW	XI	BLACK			×		9.0	9.0		X				MOUNTED ON FLASHING BEACON STANDARD, REFER TO E-5
PD-4	S4-1	W3-7		RAMP METER AHEAD	36" x 36"	×		YELLOW	XI	BLACK			×		9.0	9.0		X				MOUNTED ON FLASHING BEACON STANDARD, REFER TO E-6
	S4-2	W3-8		RAMP METERED WHEN FLASHING	36" x 36"	×		YELLOW	XI	BLACK			×		9.0	9.0		X				MOUNTED ON FLASHING BEACON STANDARD, REFER TO E-6
PD-5	S5-1	W3-7		RAMP METER AHEAD	36" x 36"	×		YELLOW	XI	BLACK			×		9.0	9.0		X				MOUNTED ON FLASHING BEACON STANDARD, REFER TO E-7
	S5-2	W3-7		RAMP METER AHEAD	36" x 36"	×		YELLOW	XI	BLACK			×		9.0	9.0		X				MOUNTED ON FLASHING BEACON STANDARD, REFER TO E-7
	S5-3	W3-7		RAMP METER AHEAD	36" x 36"	×		YELLOW	XI	BLACK			×		9.0	9.0		X				MOUNTED ON FLASHING BEACON STANDARD, REFER TO E-7
	S5-4	W3-8		RAMP METERED WHEN FLASHING	36" x 36"	×		YELLOW	XI	BLACK			×		9.0	9.0		X				MOUNTED ON FLASHING BEACON STANDARD, REFER TO E-7
	S5-5	W3-8		RAMP METERED WHEN FLASHING	36" x 36"	×		YELLOW	XI	BLACK			×		9.0	9.0		X				MOUNTED ON FLASHING BEACON STANDARD, REFER TO E-7
PD-6	S6-1	W3-7		RAMP METER AHEAD	36" x 36"	×		YELLOW	XI	BLACK			×		9.0	9.0		X				MOUNTED ON FLASHING BEACON STANDARD, REFER TO E-8
	S6-2	W3-7		RAMP METER AHEAD	36" x 36"	×		YELLOW	XI	BLACK			×		9.0	9.0		X				MOUNTED ON FLASHING BEACON STANDARD, REFER TO E-8
	S6-3	W3-7		RAMP METER AHEAD	36" x 36"	×		YELLOW	XI	BLACK			×		9.0	9.0		X				MOUNTED ON FLASHING BEACON STANDARD, REFER TO E-8
	S6-4	W3-8		RAMP METERED WHEN FLASHING	36" x 36"	×		YELLOW	XI	BLACK			×		9.0	9.0		X				MOUNTED ON FLASHING BEACON STANDARD, REFER TO E-8
	S6-5	W3-8		RAMP METERED WHEN FLASHING	36" x 36"	×		YELLOW	XI	BLACK			×		9.0	9.0		X				MOUNTED ON FLASHING BEACON STANDARD, REFER TO E-8
TOTAL														20	215.8	235.8	2		1	1	50	

1 REPLACED PER ADDENDUM No.1 DATED OCTOBER 30, 2014

SIGN QUANTITIES
SQ-1

REVISED BY	DATE REVISED
CN	10/08/14

CECILE NGUYEN — HUE NGUYEN
CALCULATED-DESIGNED BY — CHECKED BY
FUNCTIONAL SUPERVISOR: MOHAMMED QATAMI

STATE OF CALIFORNIA - DEPARTMENT OF TRANSPORTATION
Caltrans® TRAFFIC DESIGN

DATE PLOTTED => 28-OCT-2014
TIME PLOTTED => 14:09

00-00-00

Dist	COUNTY	ROUTE	POST MILES TOTAL PROJECT	SHEET No.	TOTAL SHEETS
10	SJ	99	4.9/23.0	47	99

REGISTERED CIVIL ENGINEER 3-7-14 DATE

05-27-14
PLANS APPROVAL DATE

REGISTERED PROFESSIONAL ENGINEER VINCENT W. FUNG No. C67760 Exp. 6-30-15 CIVIL STATE OF CALIFORNIA

THE STATE OF CALIFORNIA OR ITS OFFICERS OR AGENTS SHALL NOT BE RESPONSIBLE FOR THE ACCURACY OR COMPLETENESS OF SCANNED COPIES OF THIS PLAN SHEET.

HDR ENGINEERING, INC.
1325 J STREET
SUITE 1300
SACRAMENTO, CA 95814

CITY OF MANTECA
1001 WEST CENTER STREET
MANTECA, CA 95337

NOTE:

FOR ACCURATE RIGHT OF WAY DATA, CONTACT RIGHT OF WAY ENGINEERING AT THE DISTRICT OFFICE.

LEGEND:

1. 2"C, 3#2 (UTILITY SERVICE).
2. 120/240 V, 1ø, 3-WIRE TYPE III-AF SERVICE EQUIPMENT ENCLOSURE WITH THE FOLLOWING CIRCUIT BREAKERS:

METER #1 CTID No. 10290990000478

AMPERES	VOLTS	POLES	NAMEPLATE	METER	PHOTOELECTRIC CONTROL TYPE
100	240	2	MAIN BREAKER	YES	-
30	240	2	LIGHTING	YES	-
15	120	1	LIGHTING CONTROL	YES	V
30	120	1	RAMP METERING	YES	-
30	120	1	SPARE	YES	-

3. TYPE 1-A ~~POLE WITH "METER ON"~~ STANDARD WITH FB AND W3-7 SIGN. SEE DETAIL ~~D~~ F ON SHEET E-9. (1)
4. 2"C, 1-5CSC (RMS SIGN).
5. 3"C, 2-5CSC (RMS SIGN), 2-5CSC (RMS SIGNAL), 2#6 (RMS CABINET), 10 DLC.
6. 3"C, 2#6 (RMS CABINET), 2#6 (Ltg).
7. 3"C, 2-5CSC (RMS SIGNAL), 2#6 (Ltg), 9 DLC.
8. 2"C, 2-5CSC (RMS SIGN), 1 DLC.
9. 2"C, 1 TELEPHONE CABLE.
10. TERMINATE 1-TELEPHONE CABLE IN DEPARTMENT-FURNISHED EHTERNET EXTENDER.
11. TYPE 15TS. SEE DETAIL E ON SHEET E-9.
12. Exist MVDS.
13. INSTALL 12'x4'x4" PCC PAD. SEE DETAIL G ON SHEET E-11 CONNECT PCC PAD TO MVP.
14. DEPARTMENT-FURNISHED MODEL 2070E CONTROLLER ASSEMBLY AND ETHERNET EXTENDER FOR RMS.
15. 2"C, 1-5CSC (RMS SIGNAL), 2#6 (Ltg), 1 DLC.
16. 2"C, 1 DLC.
17. PG&E 120/240 V, 1ø, TYPE H SERVICE
18. SEE SHEET E-9, DETAIL A FOR MAINLINE DETECTOR LOOPS LAYOUT.
19. SEE SHEET E-9, DETAIL B FOR RAMP DETECTOR LOOPS LAYOUT.
20. (1) TYPE 1-A STANDARD WITH FB AND W3-8 SIGN. SEE DETAIL G ON SHEET E-9.

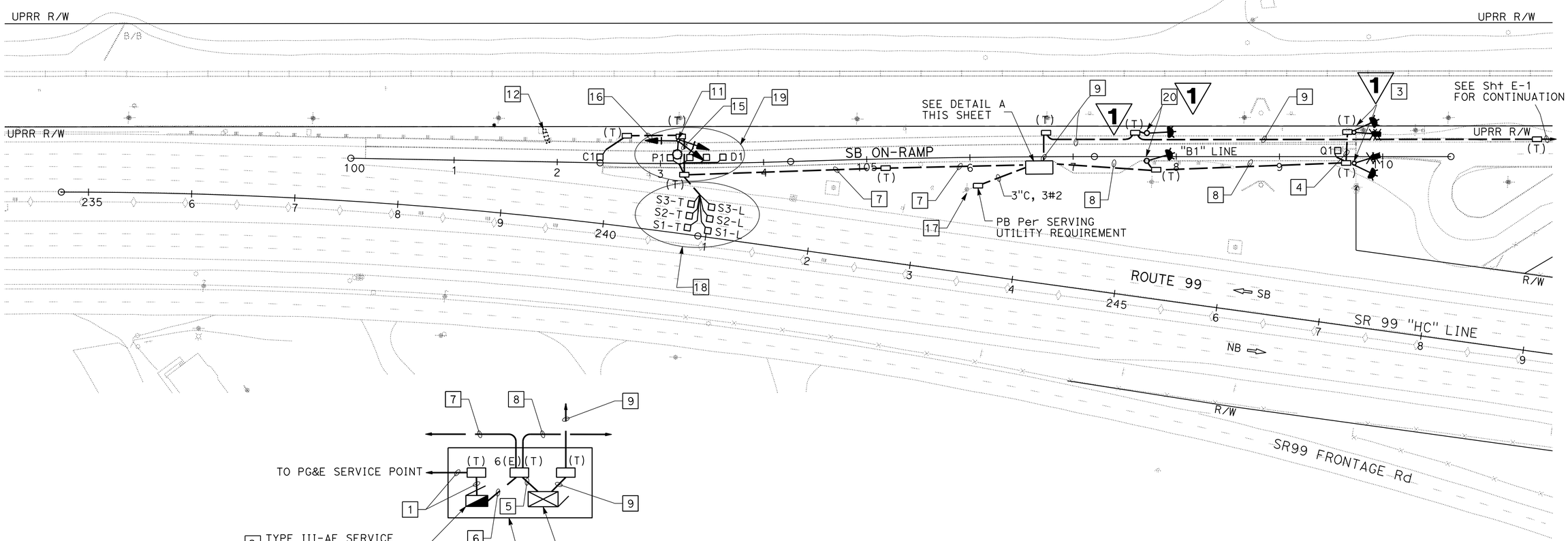

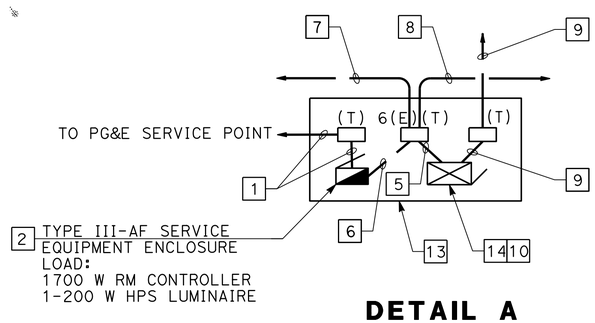

DETAIL A
NO SCALE

(1) **REPLACED PER ADDENDUM No. 1 DATED OCTOBER 30, 2014**

APPROVED FOR ELECTRICAL WORK ONLY

RAMP METERING SYSTEM (LOCATION 1)

SCALE: 1" = 50'

E-3

STATE OF CALIFORNIA - DEPARTMENT OF TRANSPORTATION
Caltrans

CONSULTANT FUNCTIONAL SUPERVISOR: STEVEN L. HIATT
CALCULATED-DESIGNED BY: VINCENT W. FUNG
CHECKED BY: CARY STEWART
REVISED BY: PT
DATE REVISED: 10-23-14

LAST REVISION 00-00-00
DATE PLOTTED => 28-OCT-2014
TIME PLOTTED => 14:09

Dist	COUNTY	ROUTE	POST MILES TOTAL PROJECT	SHEET No.	TOTAL SHEETS
10	SJ	99	4.9/23.0	48	99

REGISTERED CIVIL ENGINEER 3-7-14 DATE

05-27-14
PLANS APPROVAL DATE

REGISTERED PROFESSIONAL ENGINEER VINCENT W. FUNG No. C67760 Exp. 6-30-15 CIVIL STATE OF CALIFORNIA

THE STATE OF CALIFORNIA OR ITS OFFICERS OR AGENTS SHALL NOT BE RESPONSIBLE FOR THE ACCURACY OR COMPLETENESS OF SCANNED COPIES OF THIS PLAN SHEET.

HDR ENGINEERING, INC.
1325 J STREET
SUITE 1300
SACRAMENTO, CA 95814

CITY OF MANTECA
1001 WEST CENTER STREET
MANTECA, CA 95337

NOTE:

FOR ACCURATE RIGHT OF WAY DATA, CONTACT RIGHT OF WAY ENGINEERING AT THE DISTRICT OFFICE.

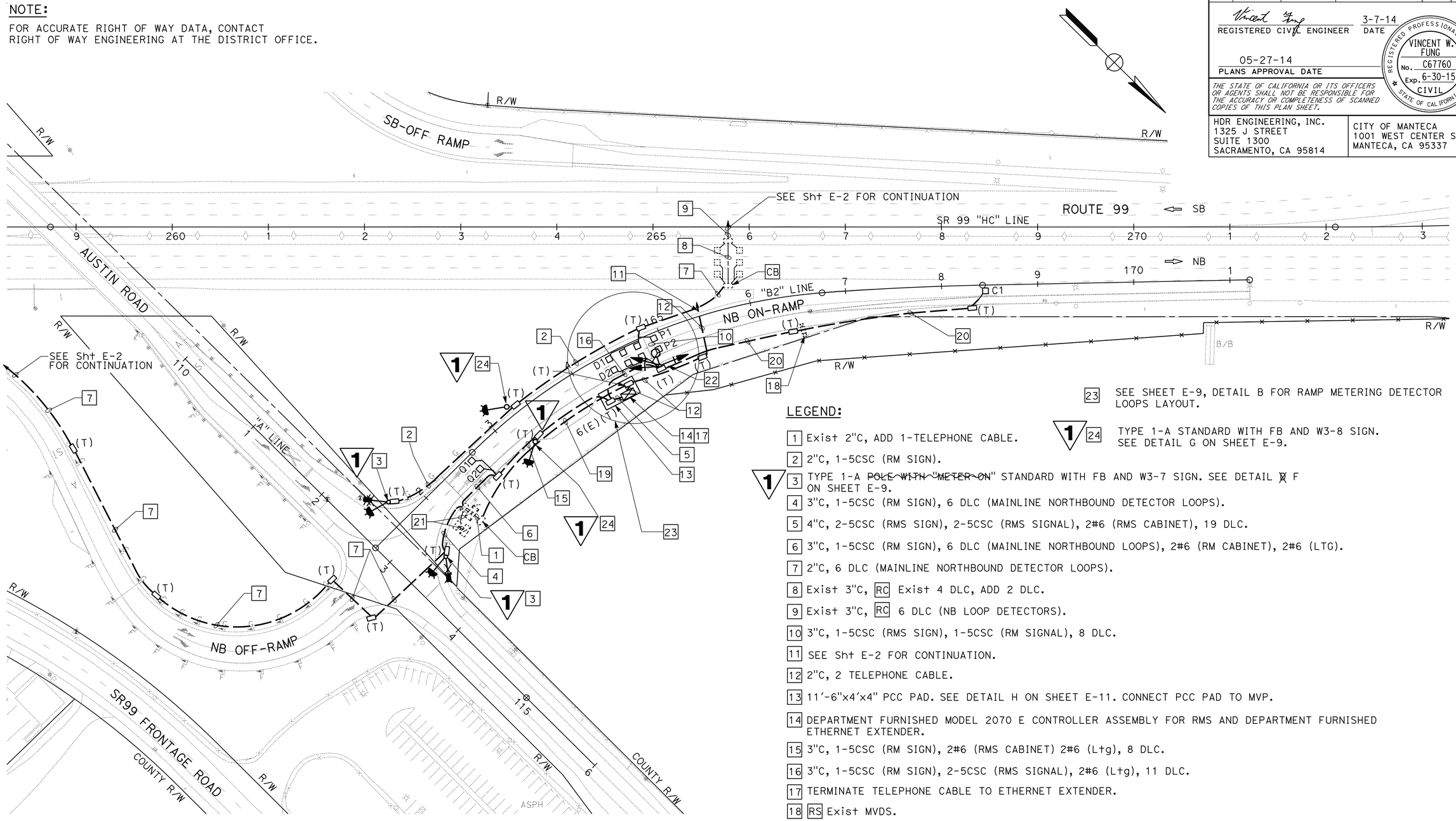

LEGEND:

1 Exist 2"C, ADD 1-TELEPHONE CABLE.
2 2"C, 1-5CSC (RM SIGN).
3 TYPE 1-A ~~POLE WITH "METER ON"~~ STANDARD WITH FB AND W3-7 SIGN. SEE DETAIL ~~D~~ F ON SHEET E-9.
4 3"C, 1-5CSC (RM SIGN), 6 DLC (MAINLINE NORTHBOUND DETECTOR LOOPS).
5 4"C, 2-5CSC (RMS SIGN), 2-5CSC (RMS SIGNAL), 2#6 (RMS CABINET), 19 DLC.
6 3"C, 1-5CSC (RM SIGN), 6 DLC (MAINLINE NORTHBOUND LOOPS), 2#6 (RM CABINET), 2#6 (LTG).
7 2"C, 6 DLC (MAINLINE NORTHBOUND DETECTOR LOOPS).
8 Exist 3"C, RC Exist 4 DLC, ADD 2 DLC.
9 Exist 3"C, RC 6 DLC (NB LOOP DETECTORS).
10 3"C, 1-5CSC (RMS SIGN), 1-5CSC (RM SIGNAL), 8 DLC.
11 SEE Sht E-2 FOR CONTINUATION.
12 2"C, 2 TELEPHONE CABLE.
13 11'-6"x4'x4" PCC PAD. SEE DETAIL H ON SHEET E-11. CONNECT PCC PAD TO MVP.
14 DEPARTMENT FURNISHED MODEL 2070 E CONTROLLER ASSEMBLY FOR RMS AND DEPARTMENT FURNISHED ETHERNET EXTENDER.
15 3"C, 1-5CSC (RM SIGN), 2#6 (RMS CABINET) 2#6 (Ltg), 8 DLC.
16 3"C, 1-5CSC (RM SIGN), 2-5CSC (RMS SIGNAL), 2#6 (Ltg), 11 DLC.
17 TERMINATE TELEPHONE CABLE TO ETHERNET EXTENDER.
18 RS Exist MVDS.
19 2"C, 1-TELEPHONE CABLE.
20 2"C, 1 DLC.
21 Exist 2"C, ADD 2#6 (Ltg).
22 TYPE 15TS. SEE DETAIL E ON SHEET E-9.
23 SEE SHEET E-9, DETAIL B FOR RAMP METERING DETECTOR LOOPS LAYOUT.
24 TYPE 1-A STANDARD WITH FB AND W3-8 SIGN. SEE DETAIL G ON SHEET E-9.

1 **REPLACED PER ADDENDUM No. 1 DATED OCTOBER 30, 2014**

APPROVED FOR ELECTRICAL WORK ONLY

RAMP METERING SYSTEM (LOCATION 2)

SCALE: 1" = 50'

E-4

STATE OF CALIFORNIA - DEPARTMENT OF TRANSPORTATION
Caltrans

CONSULTANT FUNCTIONAL SUPERVISOR: STEVEN L. HIATT
CALCULATED-DESIGNED BY: VINCENT W. FUNG
CHECKED BY: CARY STEWART
REVISED BY: FI
DATE REVISED: 10/23/14

LAST REVISION 00-00-00
DATE PLOTTED => 28-OCT-2014
TIME PLOTTED => 14:09

Dist	COUNTY	ROUTE	POST MILES TOTAL PROJECT	SHEET No.	TOTAL SHEETS
10	SJ	99	4.5/23.0	49	99

REGISTERED ELECTRICAL ENGINEER 5/9/14 DATE

05-27-14
PLANS APPROVAL DATE

REGISTERED PROFESSIONAL ENGINEER JASPAL SINGH No. E16657 Exp. 06/30/16 ELECTRICAL STATE OF CALIFORNIA

THE STATE OF CALIFORNIA OR ITS OFFICERS OR AGENTS SHALL NOT BE RESPONSIBLE FOR THE ACCURACY OR COMPLETENESS OF SCANNED COPIES OF THIS PLAN SHEET.

LEGEND:

1. Exist TYPE III-CF SERVICE EQUIPMENT ENCLOSURE. INSTALL 1 P, 30 A, 120 V CB FOR RMS UNDER METER ID 1029090019290T. LABEL CB AS "RMS."
2. Exist 2"C, 2#6 (RAMP Ltg), 2#8 (INTERSECTION Ltg), 2#8 (SIGN Ltg), ADD 2#6 (RMS CABINET).
3. Exist 2"C, 2#6 (Ltg), 2#8 (SIGN), ADD 2#6 (RMS CABINET).
4. (1) TYPE 1-A STANDARD WITH ~~"METER ON"~~ FB AND W3-7 SIGN, SEE DETAIL ~~X~~ F ON SHEET E-9.
5. 2"C, 2#6 (RMS CABINET), 2-5CSC (RM SIGN), 2 DLC. (1)
6. 3"C, 11 DLC, 2-5CSC (RM SIGN), 1-5CSC (RMS Sig).
7. DEPARTMENT-FURNISHED 2070E CONTROLLER ASSEMBLY FOR RMS. YOU MUST FURNISH AND INSTALL THE WIRELESS MODEM.
8. 2-3"C, 2#6 (RMS), 13 DLC, 1-5CSC (RM Sig), 2-5CSC (RM SIGN).
9. SEE SHEET E-9, DETAIL B FOR RMS DETECTOR LOOP LAYOUT AND DLC IDENTIFICATION.
10. TYPE 15TS SIGNAL STANDARD PER DETAIL E ON SHEET E-9 AND POLE DETAIL ON SES-1.
11. SEE SHEET E-9, DETAIL A FOR MAIN LINE DETECTOR LOOPS LAYOUT AND DESIGNATION.
12. (1) TYPE 1-A STANDARD WITH FB AND W3-8 SIGN. SEE DETAIL G ON SHEET E-9.

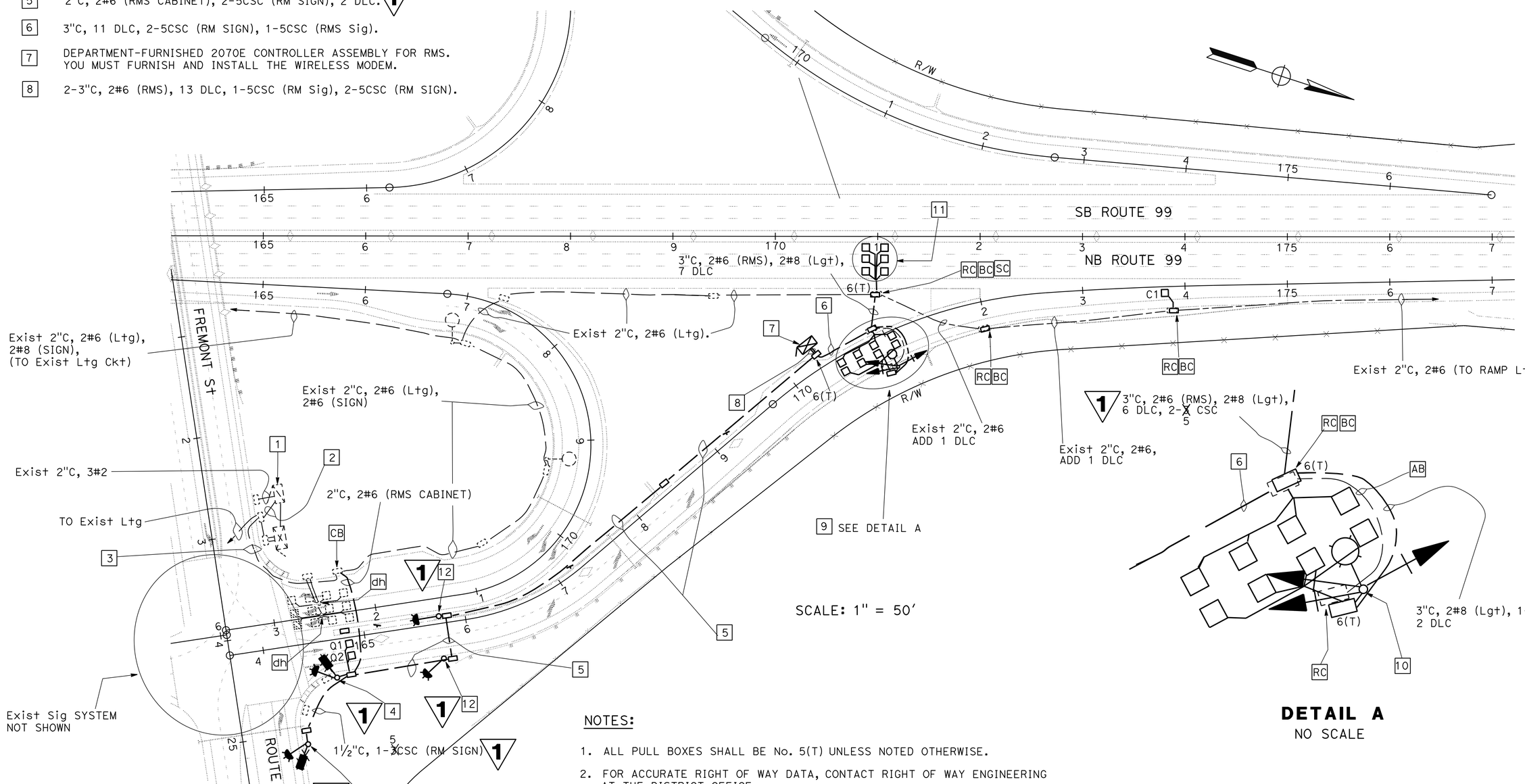

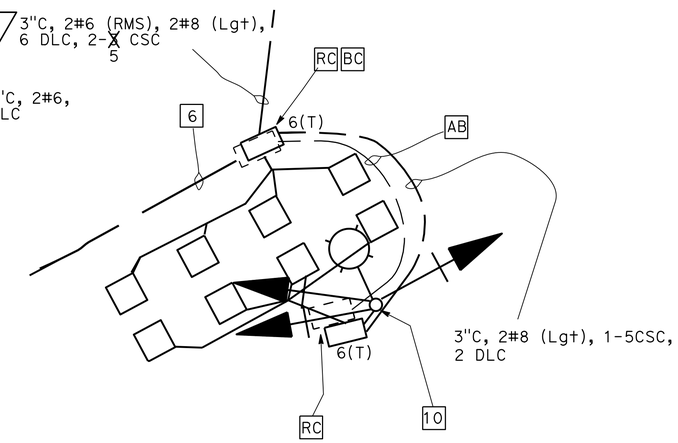

DETAIL A
NO SCALE

NOTES:

1. ALL PULL BOXES SHALL BE No. 5(T) UNLESS NOTED OTHERWISE.
2. FOR ACCURATE RIGHT OF WAY DATA, CONTACT RIGHT OF WAY ENGINEERING AT THE DISTRICT OFFICE.

(1) **REPLACED PER ADDENDUM No. 1 DATED OCTOBER 30, 2014**

APPROVED FOR ELECTRICAL WORK ONLY

RAMP METERING SYSTEM (LOCATION 3)

SCALE AS SHOWN

E-5

REVISED BY	DATE REVISED
FI	10/23/14

FRED IYASERE — JASPAL SINGH
CALCULATED-DESIGNED BY — CHECKED BY
FUNCTIONAL SUPERVISOR — ALI BAKHDOUD

STATE OF CALIFORNIA - DEPARTMENT OF TRANSPORTATION
Caltrans® **ELECTRICAL DESIGN**

LAST REVISION 00-00-00 | DATE PLOTTED => 28-OCT-2014 | TIME PLOTTED => 14:09

Dist	COUNTY	ROUTE	POST MILES TOTAL PROJECT	SHEET No.	TOTAL SHEETS
10	SJ	99	4.5/23.0	50	99

REGISTERED ELECTRICAL ENGINEER — DATE 5/9/14

05-27-14
PLANS APPROVAL DATE

REGISTERED PROFESSIONAL ENGINEER — JASPAL SINGH — No. E16657 — Exp. 06/30/16 — ELECTRICAL — STATE OF CALIFORNIA

THE STATE OF CALIFORNIA OR ITS OFFICERS OR AGENTS SHALL NOT BE RESPONSIBLE FOR THE ACCURACY OR COMPLETENESS OF SCANNED COPIES OF THIS PLAN SHEET.

LEGEND:

1. Exist TYPE III-CF SERVICE EQUIPMENT ENCLOSURE. INSTALL 1 P, 30 A, 120 V CB FOR RMS UNDER METER ID 1029090020350T. LABEL CB AS "RMS."
2. SEE SHEET E-9, DETAIL A FOR MAIN LINE DETECTOR LOOPS LAYOUT AND DESIGNATION.
3. 3"C, 2#6(RMS CABINET), 11 DLC, 1-5CSC (RMS Sig), 2-5CSC (RM SIGN).
4. DEPARTMENT-FURNISHED 2070E CONTROLLER ASSEMBLY FOR RMS. YOU MUST FURNISH AND INSTALL WIRELESS MODEM.
5. 2-3"C, 2#6 (RMS), 13 DLC, 1-5CSC (RMS Sig), 2-5CSC (RM SIGN).
6. SEE SHEET E-9, DETAIL B FOR RMS DETECTOR LOOP LAYOUT AND DLC IDENTIFICATION.
7. TYPE 15TS SIGNAL STANDARD PER DETAIL E ON SHEET E-9 AND POLE DETAIL ON SES-1.
8. 2"C, 4#4, (Ltg & TMS), 2#6 (RMS CABINET), 1-5CSC (RM SIGN), 2 DLC
14. Exist 2"C, 1 DLC.
15. (1) TYPE 1-A STANDARD WITH FB AND W3-8 SIGN. SEE DETAIL G ON SHEET E-9.

NOTES:

1. ALL PULL BOXES SHALL BE No. 5(T) UNLESS NOTED OTHERWISE.
2. FOR ACCURATE RIGHT OF WAY DATA, CONTACT RIGHT OF WAY ENGINEERING AT THE DISTRICT OFFICE.

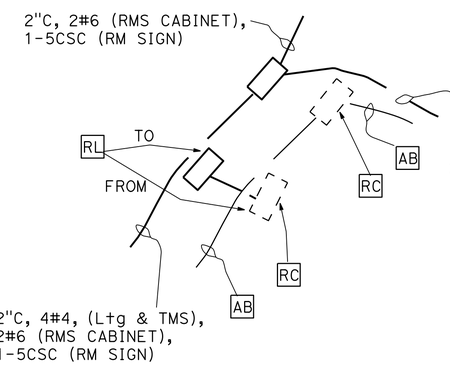

DETAIL A
NO SCALE

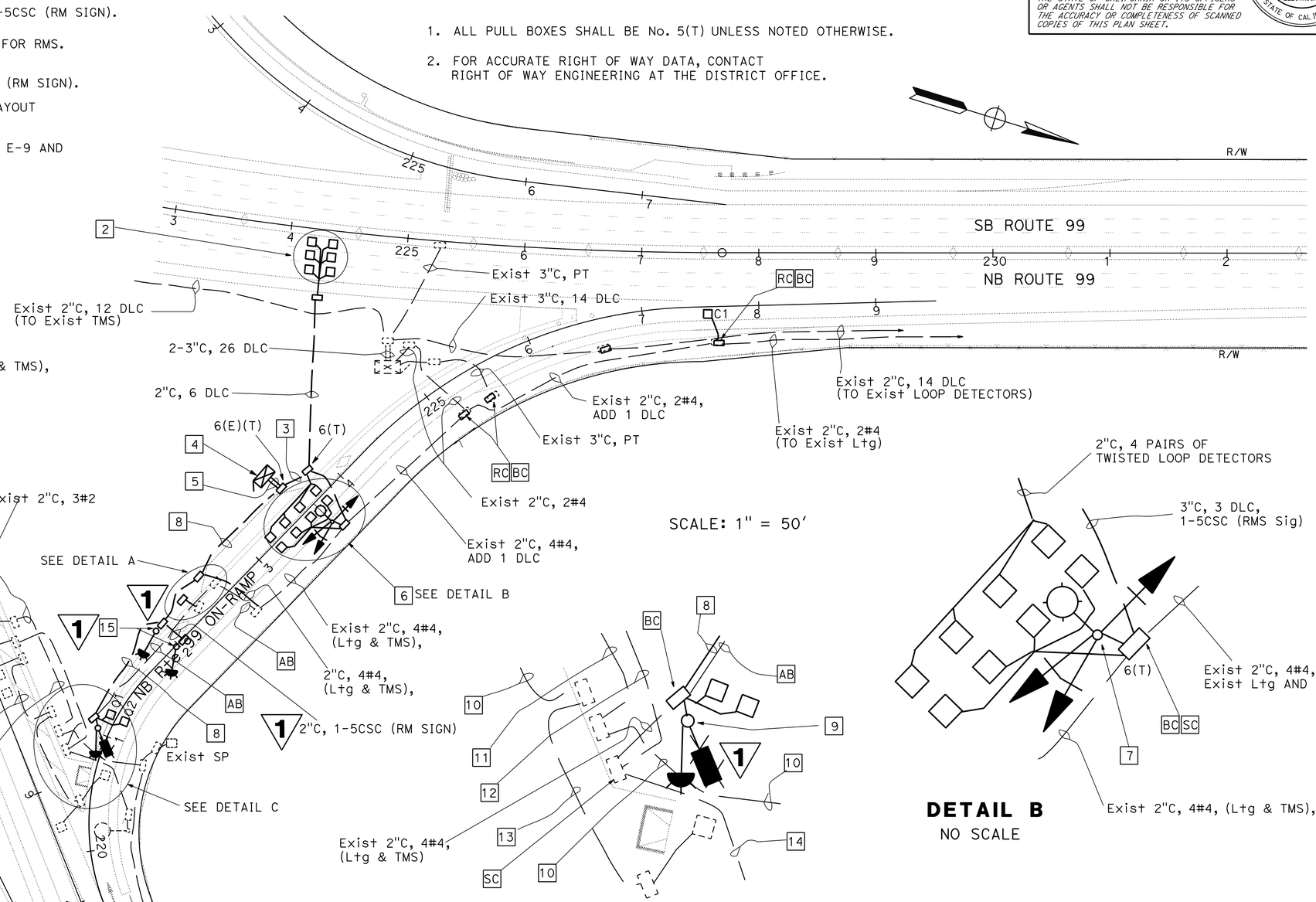

SCALE: 1" = 50'

DETAIL C
NO SCALE

DETAIL B
NO SCALE

9. (1) TYPE 1-A STANDARD WITH ~~"METER ON"~~ FB AND W3-7 SIGN, SEE DETAIL ~~D~~ F ON SHEET E-9.
10. Exist 2"C, 3 DLC.
11. Exist 2"C, 3#2 (SERVICE).
12. Exist 2"C, 2#4 (Ltg), 2#4 (TMS), 3 DLC, ADD 2#6 (RMS CABINET).
13. Exist 2"C, 2 DLC.

(1) REPLACED PER ADDENDUM No. 1 DATED OCTOBER 30, 2014

APPROVED FOR ELECTRICAL WORK ONLY

RAMP METERING SYSTEM (LOCATION 4)

SCALE AS SHOWN

E-6

REVISED BY	DATE REVISED
FI	10-23-14

CALCULATED-DESIGNED BY: FRED IYASERE
CHECKED BY: JASPAL SINGH
FUNCTIONAL SUPERVISOR: ALI BAKHDOUD

STATE OF CALIFORNIA - DEPARTMENT OF TRANSPORTATION
Caltrans® ELECTRICAL DESIGN

LAST REVISION 00-00-00
DATE PLOTTED => 28-OCT-2014
TIME PLOTTED => 14:09

Dist	COUNTY	ROUTE	POST MILES TOTAL PROJECT	SHEET No.	TOTAL SHEETS
10	SJ	99	4.5/23.0	51	99

REGISTERED ELECTRICAL ENGINEER — DATE 5/9/14

05-27-14
PLANS APPROVAL DATE

REGISTERED PROFESSIONAL ENGINEER — JASPAL SINGH — No. E16657 — Exp. 06/30/16 — ELECTRICAL — STATE OF CALIFORNIA

THE STATE OF CALIFORNIA OR ITS OFFICERS OR AGENTS SHALL NOT BE RESPONSIBLE FOR THE ACCURACY OR COMPLETENESS OF SCANNED COPIES OF THIS PLAN SHEET.

LEGENDS:

1. Exist TYPE III-CF SERVICE EQUIPMENT ENCLOSURE. INSTALL 1 P, 30 A, 120 V CB FOR RMS UNDER METER ID 1029090020890T. LABEL CB AS "RMS."
2. SEE SHEET E-9, DETAIL A FOR MAIN LINE DETECTOR LOOPS LAYOUT AND DLC DESIGNATION.
3. 2-3"C, 2#6, 8 DLC, ~~2-3CSC~~ 3-5CSC, 1-5CSC, 1 DLC. (1)
4. DEPARTMENT-FURNISHED 2070E CONTROLLER ASSEMBLY FOR RMS. YOU MUST FURNISH AND INSTALL WIRELESS MODEM.
5. SEE SHEET E-9, DETAIL B FOR RMS DETECTOR LOOP LAYOUT AND DLC INDENTIFICATION.
6. TYPE 15TS SIGNAL STANDARD PER DETAIL E ON SHEET E-9 AND POLE DETAIL ON SES-1.
7. (1) TYPE 1-A STANDARD WITH ~~"METER ON"~~ FB AND W3-7 SIGN, SEE DETAIL ~~D~~ F ON SHEET E-9.
8. (1) TYPE 1-A STANDARD WITH FB AND W3-8 SIGN. SEE DETAIL G ON SHEET E-9.

NOTES:

1. ALL PULL BOXES SHALL BE No. 5(T) UNLESS NOTED OTHERWISE.
2. FOR ACCURATE RIGHT OF WAY DATA, CONTACT RIGHT OF WAY ENGINEERING AT THE DISTRICT OFFICE.

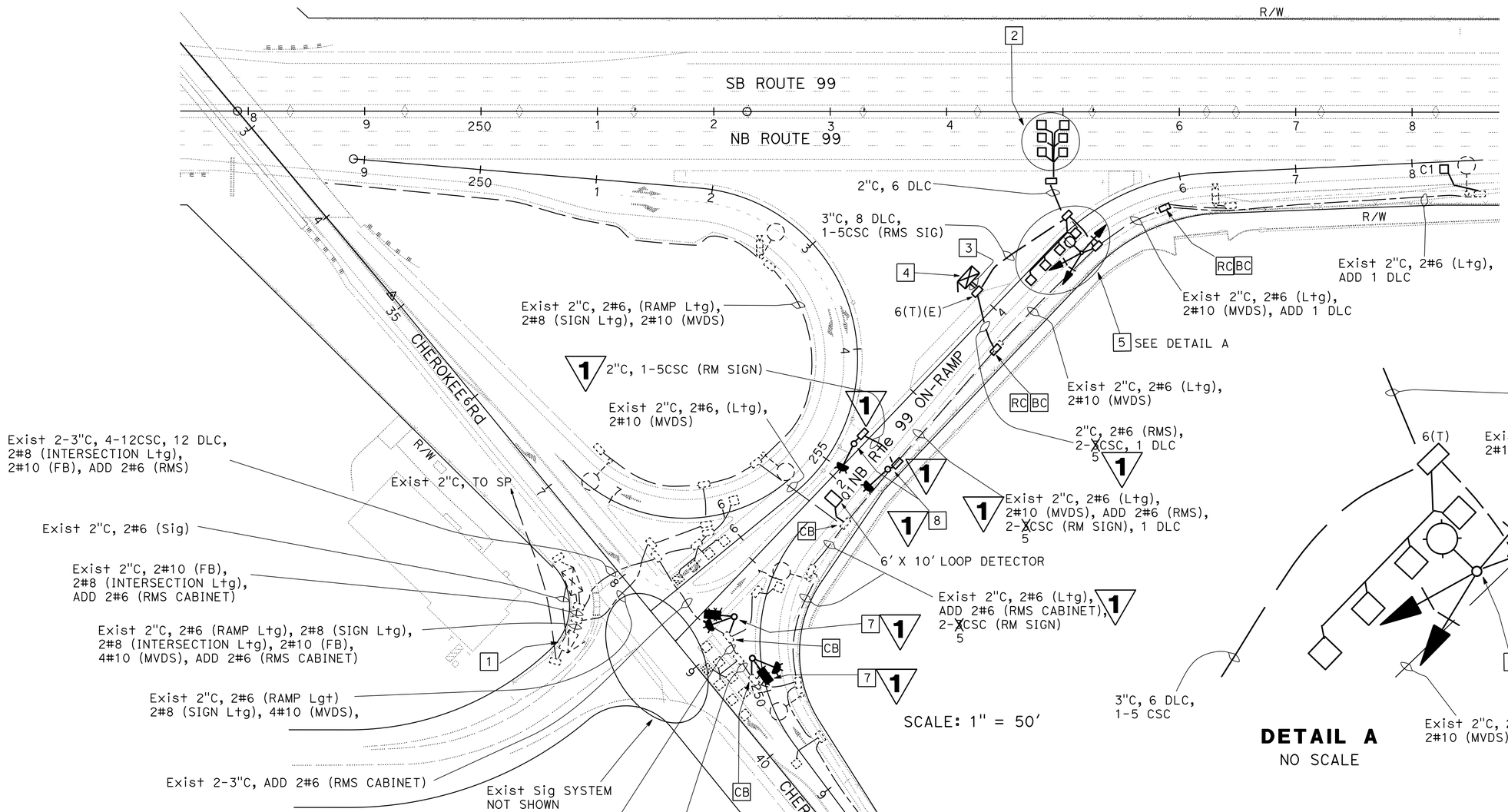

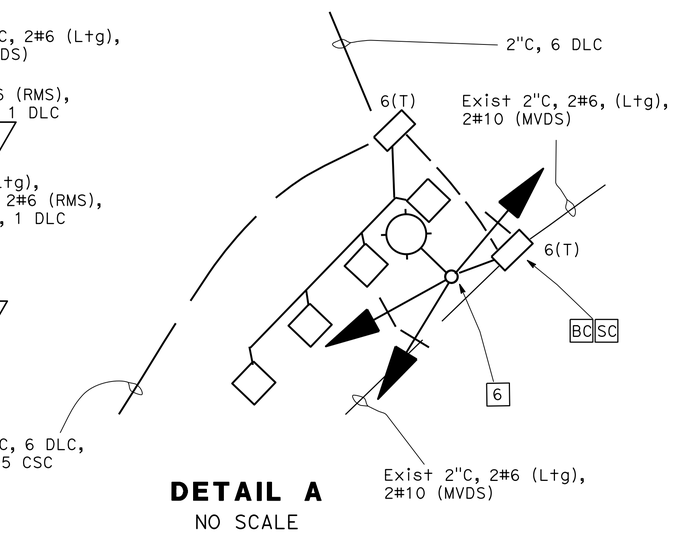

DETAIL A
NO SCALE

(1) **REPLACED PER ADDENDUM No. 1 DATED OCTOBER 30, 2014**

APPROVED FOR ELECTRICAL WORK ONLY

RAMP METERING SYSTEM (LOCATION 5)

SCALE AS SHOWN

E-7

REVISED BY	DATE REVISED
FI	10-23-14

FRED IYASERE — JASPAL SINGH — CALCULATED-DESIGNED BY — CHECKED BY — FUNCTIONAL SUPERVISOR — ALI BAKHDOUD

STATE OF CALIFORNIA - DEPARTMENT OF TRANSPORTATION — Caltrans — **ELECTRICAL DESIGN**

LAST REVISION 00-00-00 — DATE PLOTTED => 28-OCT-2014 — TIME PLOTTED => 14:09

Dist	COUNTY	ROUTE	POST MILES TOTAL PROJECT	SHEET No.	TOTAL SHEETS
10	SJ	99	4.5/23.0	52	99

REGISTERED ELECTRICAL ENGINEER — DATE 5/9/14

05-27-14
PLANS APPROVAL DATE

REGISTERED PROFESSIONAL ENGINEER — JASPAL SINGH — No. E16657 — Exp. 06/30/16 — ELECTRICAL — STATE OF CALIFORNIA

THE STATE OF CALIFORNIA OR ITS OFFICERS OR AGENTS SHALL NOT BE RESPONSIBLE FOR THE ACCURACY OR COMPLETENESS OF SCANNED COPIES OF THIS PLAN SHEET.

LEGEND:

1. Exist TYPE III-CF SERVICE EQUIPMENT ENCLOSURE. INSTALL 1 P, 30 A, 120 V CB FOR RMS UNDER METER ID 1029090022930T. LABEL CB AS "RMS."
2. SEE SHEET E-9, DETAIL A FOR MAIN LINE DETECTOR LOOPS LAYOUT AND DLC DESIGNATION.
3. DEPARTMENT-FURNISHED 2070E CONTROLLER ASSEMBLY FOR RMS. YOU MUST FURNISH AND INSTALL WIRELESS MODEM.
4. SEE SHEET E-9, DETAIL B FOR RMS DETECTOR LOOP LAYOUT AND DLC IDENTIFICATION.
5. TYPE 15TS SIGNAL STANDARD PER DETAIL E ON SHEET E-10 AND POLE DETAIL ON SES-1.
6. TYPE 1-A STANDARD WITH ~~"METER ON"~~ FB AND W3-7 SIGN, SEE DETAIL ~~A~~ F ON SHEET E-9.
7. TYPE 1-A STANDARD WITH FB AND W3-8 SIGN. SEE DETAIL G ON SHEET E-9.

NOTES:

1. ALL PULL BOX SHALL BE No. 5(T) UNLESS NOTED OTHERWISE.
2. FOR ACCURATE RIGHT OF WAY DATA, CONTACT RIGHT OF WAY ENGINEERING AT THE DISTRICT OFFICE.

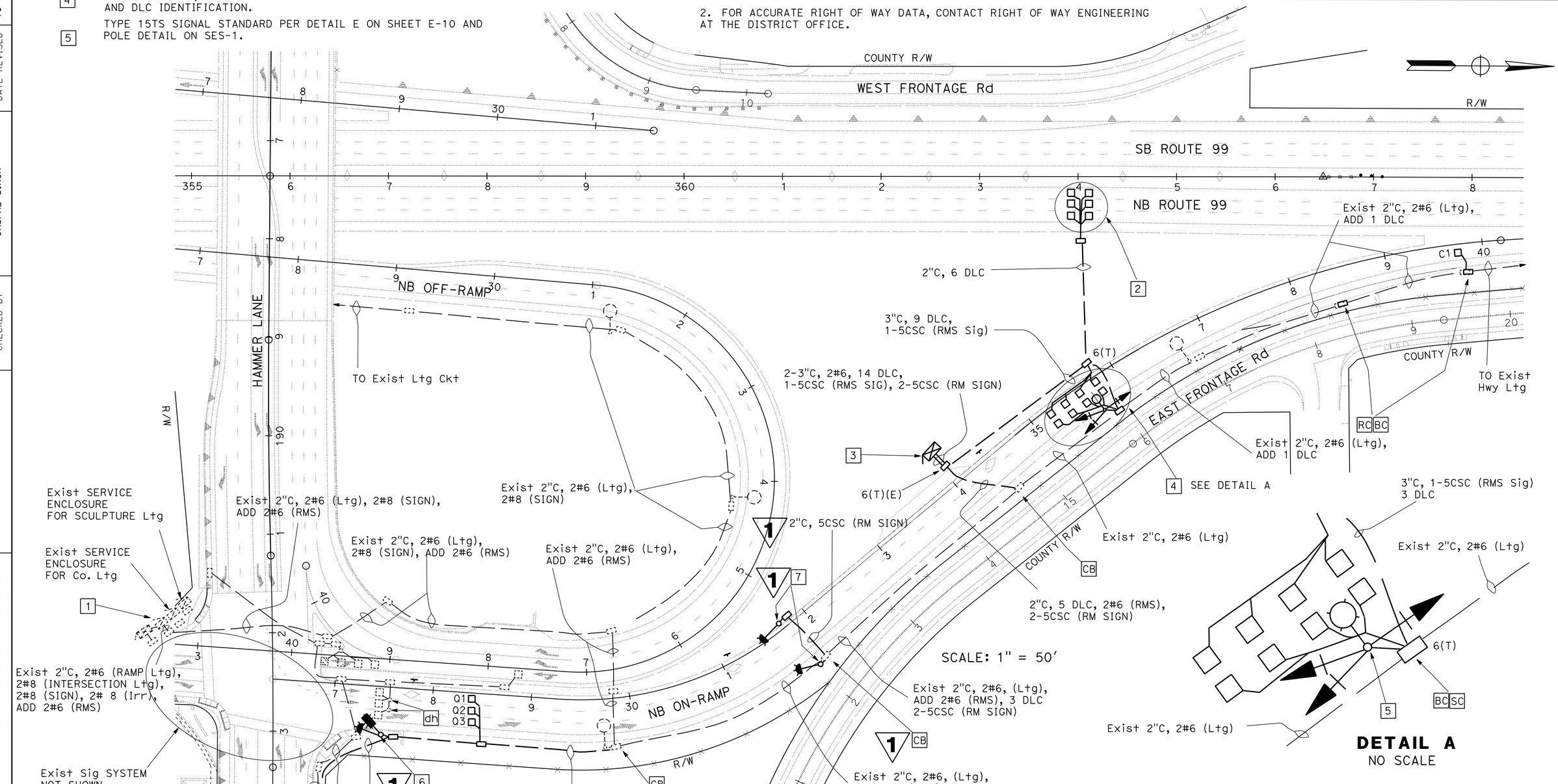

1 REPLACED PER ADDENDUM No. 1 DATED OCTOBER 30, 2014 *APPROVED FOR ELECTRICAL WORK ONLY*

RAMP METERING SYSTEM (LOCATION 6)

SCALE AS SHOWN

E-8

STATE OF CALIFORNIA - DEPARTMENT OF TRANSPORTATION — Caltrans® ELECTRICAL DESIGN

FUNCTIONAL SUPERVISOR: ALI BAKHDOUD

CALCULATED-DESIGNED BY: FRED IYASERE — CHECKED BY: JASPAL SINGH

REVISED BY: FI — DATE REVISED: 10-23-14

LAST REVISION 00-00-00 — DATE PLOTTED => 28-OCT-2014 — TIME PLOTTED => 14:09

BORDER LAST REVISED 7/2/2010 — USERNAME => s120300 — DGN FILE => a0w430ua008.dgn — RELATIVE BORDER SCALE IS IN INCHES 0 1 2 3 — UNIT 1515 — PROJECT NUMBER & PHASE 10000206071

Dist	COUNTY	ROUTE	POST MILES TOTAL PROJECT	SHEET No.	TOTAL SHEETS
10	SJ	99	4.5/23.0	53	99

REGISTERED ELECTRICAL ENGINEER — DATE 5/9/14

05-27-14
PLANS APPROVAL DATE

REGISTERED PROFESSIONAL ENGINEER — JASPAL SINGH — No. E16657 — Exp. 06/30/16 — ELECTRICAL — STATE OF CALIFORNIA

THE STATE OF CALIFORNIA OR ITS OFFICERS OR AGENTS SHALL NOT BE RESPONSIBLE FOR THE ACCURACY OR COMPLETENESS OF SCANNED COPIES OF THIS PLAN SHEET.

NOTE:

SEE SES SHEETS FOR STANDARD DETAILS NOT SHOWN.

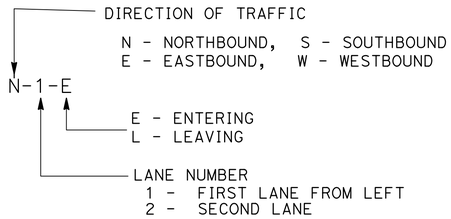

DETECTOR LOOP DESIGNATION

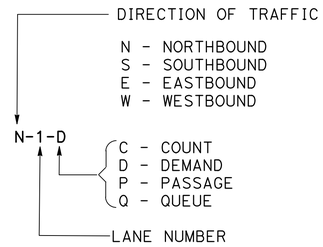

DLC IDENTIFICATION

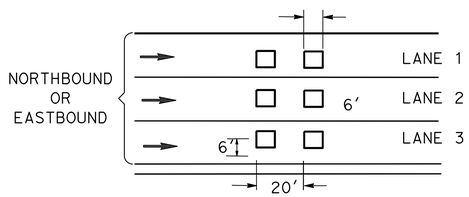

MAIN LINE DETECTOR LOOPS LAYOUT

DETAIL A

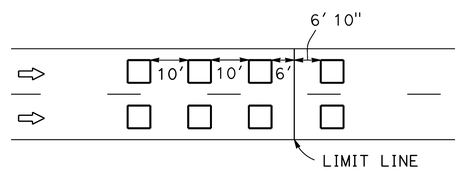

RAMP METERING DETECTOR LOOPS LAYOUT

DETAIL B

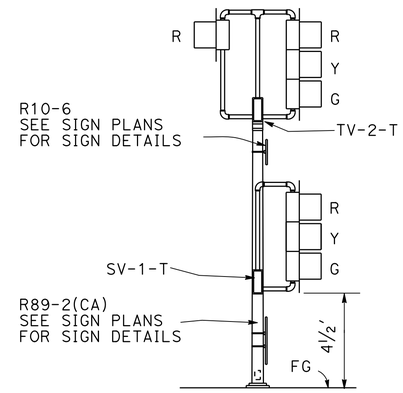

TYPE 1-D STANDARD INSTALLATION

DETAIL C

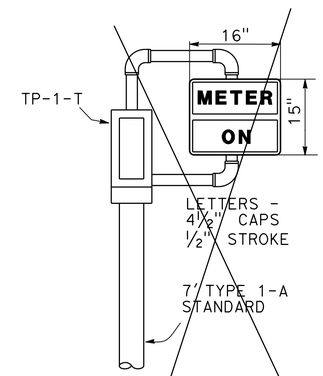

1 **DETAIL D**

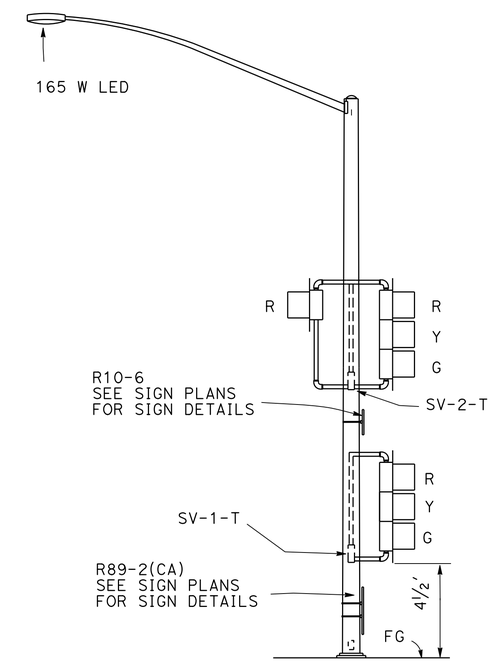

TYPE 15TS STANDARD INSTALLATION

DETAIL E

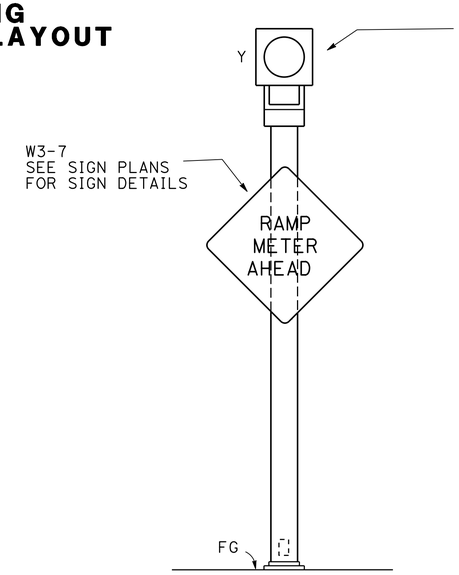

1 **TYPE 1-A STANDARD INSTALLATION**

DETAIL F

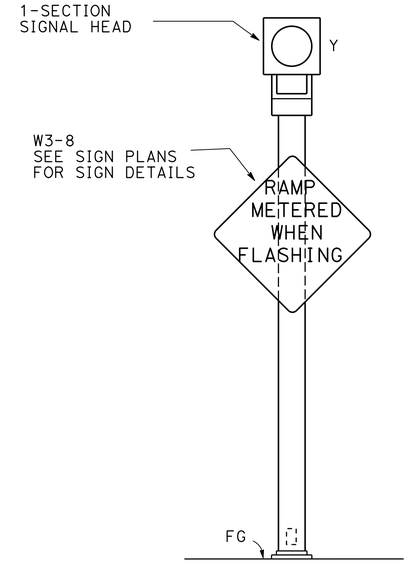

1 **TYPE 1-A STANDARD INSTALLATION**

DETAIL G

1 **REPLACED PER ADDENDUM No. 1 DATED OCTOBER 30, 2014**

ELECTRICAL DETAILS

NO SCALE **E-9**

REVISED BY	DATE REVISED
FI	10-29-14

FRED IYASERE — CALCULATED-DESIGNED BY
JASPAL SINGH — CHECKED BY
FUNCTIONAL SUPERVISOR
ALI BAKHDOUD

STATE OF CALIFORNIA - DEPARTMENT OF TRANSPORTATION
Caltrans® ELECTRICAL DESIGN

LAST REVISION 00-00-00 — DATE PLOTTED => 28-OCT-2014 — TIME PLOTTED => 14:09

Dist	COUNTY	ROUTE	POST MILES TOTAL PROJECT	SHEET No.	TOTAL SHEETS
10	SJ	99	4.5/23.0	55	99

REGISTERED ELECTRICAL ENGINEER 5/9/14 DATE

05-27-14
PLANS APPROVAL DATE

REGISTERED PROFESSIONAL ENGINEER JASPAL SINGH No. E16657 Exp. 06/30/16 ELECTRICAL STATE OF CALIFORNIA

THE STATE OF CALIFORNIA OR ITS OFFICERS OR AGENTS SHALL NOT BE RESPONSIBLE FOR THE ACCURACY OR COMPLETENESS OF SCANNED COPIES OF THIS PLAN SHEET.

NOTE:

ITEMS SHOWN IN TABLES ARE NOT A SEPARATE PAY ITEM, FOR INFORMATION ONLY.

RAMP METERING SYSTEM

SHEET No.	LOCATION	No. 5 (T) PB	No. 6 (T) PB	No. 6 E(T) PB	TYPE A LOOP DETECTORS	TYPE 1-A STANDARD	TYPE 15TS STANDARD	TYPE 1-A FOUNDATION	TYPE 15TS FOUNDATION	MODEL 334L CONTROLLER CABINET FOUNDATION	TYPE III-AF SERVICE EQUIPMENT ENCLOSURE	TYPE III-AF SERVICE EQUIPMENT ENCLOSURE FOUNDATION
		1				1	EA	1				
E-3	1	~~10~~ 11		1	11	~~2~~ 4	1	~~2~~ 4	1			
E-4	2	~~13~~ 14		1	10	~~2~~ 4	1	~~2~~ 4	1			
E-5	3	~~2~~ 8	1	1	17	~~2~~ 4	1	~~2~~ 4	1	1	1	1
E-6	4	~~8~~ 11	1	1	17	~~1~~ 2	1	~~1~~ 2	1	1		
E-7	5	~~4~~ 6	1	1	11	~~2~~ 4	1	~~2~~ 4	1	1		
E-8	6	~~4~~ 8	1	1	18	~~2~~ 4	1	~~2~~ 4	1	1		

RAMP METERING SYSTEM

SHEET No.	LOCATION	2"C TYPE 3	3"C TYPE 3	No. 6 CONDUCTOR	No. 8 CONDUCTOR	DLC	5CSC
		1	LF				1
E-3	1	120	330	3000	1100	7500	810
E-4	2	850	30	3000	960	3400	720
E-5	3	580	80	3000	60	1800	~~2700~~ 2775
E-6	4	150	80	3000	60	1300	~~2700~~ 2760
E-7	5	~~80~~ 130	80	3000	60	1800	~~2700~~ 2775
E-8	6	~~80~~ 130	80	3000	60	2500	~~2700~~ 2790

TRAFFIC MONITORING STATION

SHEET No.	LOCATION	No. 5 (T) PB	No. 6 (T) PB	TYPE A LOOP DETECTOR	2"C TYPE 3	3"C TYPE 3	No. 6 CONDUCTOR	No. 8 CONDUCTOR	DLC	5CSC	TELEPHONE CABLE
		EA			LF						
E-1	1	10		6	1750	150			1500		2500
E-2	2	5			80	730	700	60	1300	2700	1030

1 REPLACED PER ADDENDUM No. 1 DATED OCTOBER 30, 2014

ELECTRICAL QUANTITIES
E-11

STATE OF CALIFORNIA - DEPARTMENT OF TRANSPORTATION
Caltrans ELECTRICAL DESIGN

FUNCTIONAL SUPERVISOR: ALI BAKHDOUD
CALCULATED-DESIGNED BY: FRED IYASERE
CHECKED BY: JASPAL SINGH
REVISED BY: FI
DATE REVISED: 10-23-14

LAST REVISION 00-00-00
DATE PLOTTED => 28-OCT-2014
TIME PLOTTED => 14:09

DIST	COUNTY	ROUTE	POST MILES TOTAL PROJECT	SHEET No.	TOTAL SHEETS
10	SJ	99	4.5/23.0	55A	99

1

Eliseo Lopez 5/2/14
REGISTERED CIVIL ENGINEER DATE

5-27-14
PLANS APPROVAL DATE

The State of California or its officers or agents shall not be responsible for the accuracy or completeness of scanned copies of this plan sheet.

REGISTERED PROFESSIONAL ENGINEER
ELISEO LOPEZ
No. C72910
Exp. 12/31/14
CIVIL
STATE OF CALIFORNIA

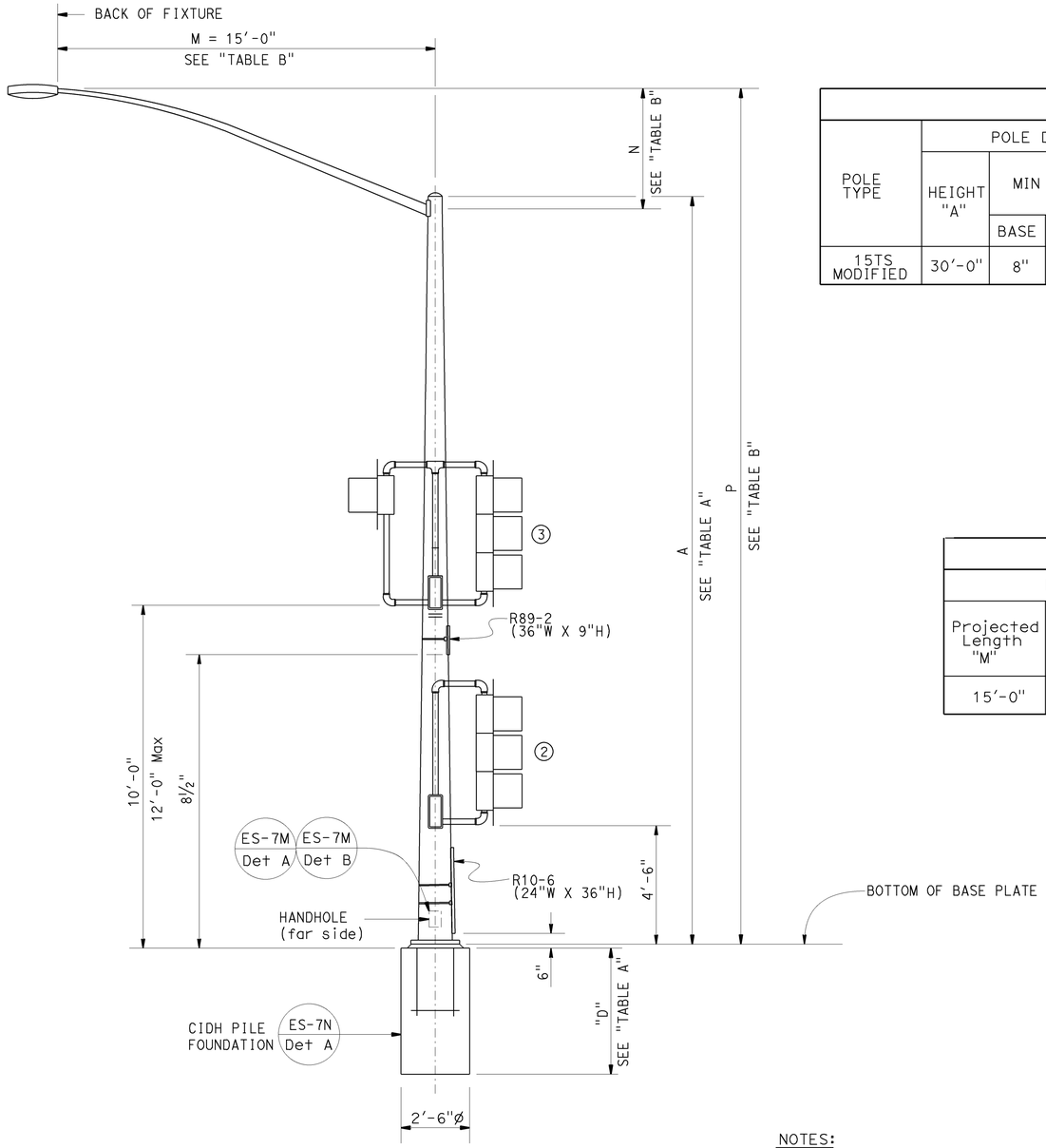

ELEVATION
TYPE 15TS MODIFIED

See Note (1)

NOTE:
THE CONTRACTOR MUST VERIFY ALL CONTROLLING FIELD DIMENSIONS BEFORE ORDERING OR FABRICATING ANY MATERIAL.

TABLE A

POLE TYPE	POLE DATA				BASE PLATE DATA				"D" 2'-6"ø CIDH PILE	
	HEIGHT "A"	MIN OD		WALL THICKNESS	"C"	THICKNESS	ANCHOR BOLTS			
		BASE	TOP				SIZE	BC = BOLT CIRCLE	LEVEL GROUND	SLOPING GROUND
15TS MODIFIED	30'-0"	8"	3 11/16"	0.1793"	1'-1½"	2"	1½"ø x 42"	1'-0"	9'-0"	11'-0"

TABLE B

LUMINAIRE MAST ARM DATA

Projected Length "M"	Rise "N"	Min OD at Pole	Nominal Thickness	Mounting Height "P"
15'-0"	4'-9"±	4¼"	0.1196	34'-3" ±

GENERAL NOTES:

SPECIFICATIONS

DESIGN: AASHTO STANDARD SPECIFICATIONS FOR STRUCTURAL SUPPORTS FOR HIGHWAY SIGNS, LUMINAIRES AND TRAFFIC SIGNALS, FIFTH EDITION

LOADING

WIND LOADING: 100 MPH (3 - SECOND GUST)

UNIT STRESSES

STRUCTURAL STEEL: f_y = 55,000 PSI TAPERED STEEL TUBE
f_y = 50,000 PSI UNLESS OTHERWISE NOTED.

Anchor bolts: fy = 55,000 PSI

REINFORCED CONCRETE: f'_c = 3,600 PSI
fy = 60,000 PSI

NOTES:

1. FOR POLE LOCATIONS, SEE "ELECTRICAL"PLANS.
2. ALL STEEL SHALL BE GALVANIZED AFTER FABRICATION.
3. DURING POLE ERECTION THE POST SHALL BE RAKED AS NECESSARY WITH THE USE OF LEVELING NUTS TO PROVIDE A PLUMB POLE AXIS.
4. THE FOUNDATION SHALL BE TREATED AS LEVEL GROUND CONDITION IF THE SLOPE INCLINATION IS FLATTER THAN 4H:1V.
5. FOUNDATION DESIGN IS BASED ON AASHTO LTS-5 ARTICLE 13.6 BROMS' APPROXIMATE PROCEDURE ASSUMING A COHESSIONLESS MATERIAL. THE ANGLE OF INTERNAL FRICTION USED IS 30 DEGREES AND UNIT WEIGHT OF SOIL USED IS 120 LBS/FT^3.
6. FOR DETAILS NOT SHOWN, SEE "2010 STANDARD PLANS" AND "2010 REVISED STANDARD PLANS".

NOTES:

(1) FOR ADDITIONAL DETAILS AND DATA FOR TYPE 15TS STANDARD, SEE REVISED STANDARD PLAN ES-7A.
(2) 8" DIAMETER 3 SECTION SIGNAL HEAD WITH BACKPLATE.
(3) 12" DIAMETER 3 SECTION SIGNAL HEAD WITH BACKPLATE.

1 **ADDED PER ADDENDUM No. 1 DATED OCTOBER 30, 2014**

NO SCALE

BRANCH CHIEF JEFFREY B WOODY

	BY	CHECKED
DESIGN	ELISEO LOPEZ	MAHFOUD LICHA
DETAILS	JINLI GUO	MAHFOUD LICHA
QUANTITIES		

STATE OF CALIFORNIA
DEPARTMENT OF TRANSPORTATION

DIVISION OF ENGINEERING SERVICES
STRUCTURE DESIGN
SPECIAL DESIGN BRANCH

BRIDGE NO. N/A
POST MILE 4.5/23.0

TYPE 15TS MODIFIED
POLE DETAILS

SES-1

STRUCTURES DESIGN SPECIAL DESIGN SHEET (ENGLISH) (REV. 09-01-10)

ORIGINAL SCALE IN INCHES FOR REDUCED PLANS 0 1 2 3

UNIT: 3619
PROJECT NUMBER & PHASE: 1000020607-1
CONTRACT NO.: 10-0W4301

DISREGARD PRINTS BEARING EARLIER REVISION DATES
REVISION DATES 3/18/14 4/08/14 4/14/14 10/22/14
SHEET 1 OF 2

FILE => 10-0w4301-01.dgn

USERNAME => s114937 DATE PLOTTED => 22-OCT-2014 TIME PLOTTED => 09:03

DIST	COUNTY	ROUTE	POST MILES TOTAL PROJECT	SHEET No.	TOTAL SHEETS
10	SJ	99	4.5/23.0	55B	99

1

Eliseo Lopez 5/2/14
REGISTERED CIVIL ENGINEER DATE

5-27-14
PLANS APPROVAL DATE

REGISTERED PROFESSIONAL ENGINEER ELISEO LOPEZ No. C72910 Exp. 12/31/14 CIVIL STATE OF CALIFORNIA

The State of California or its officers or agents shall not be responsible for the accuracy or completeness of scanned copies of this plan sheet.

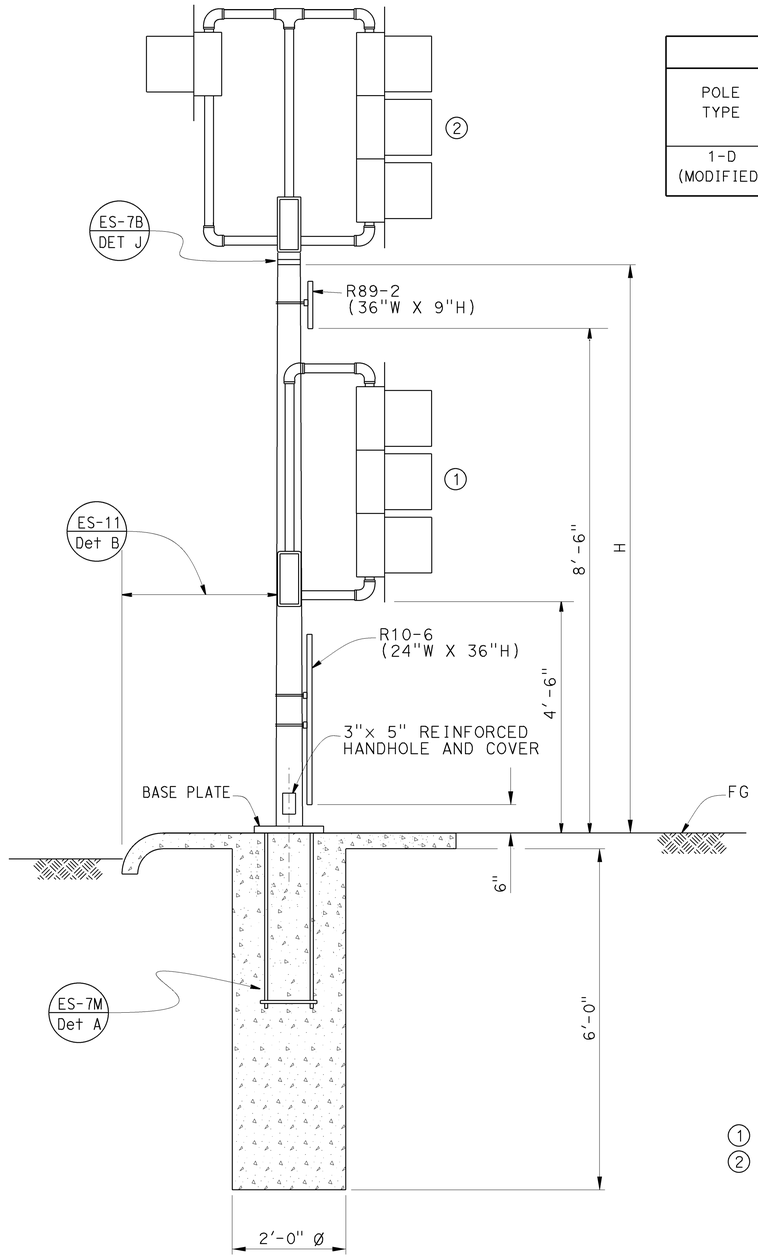

ELEVATION

NO SCALE

Type I-D Pole (Modified)

TABLE A

POLE TYPE	POLE DATA				BASE PLATE DATA			
	H HEIGHT	Min OD BASE	Min OD TOP	THICKNESS	C	BC = BOLT CIRCLE	THICKNESS	ANCHOR BOLTS SIZE
1-D (MODIFIED)	10'	5¼"	3 13/16"	0.1196"	9½"	8½"	¾" Min	1' ø x 3'-0"

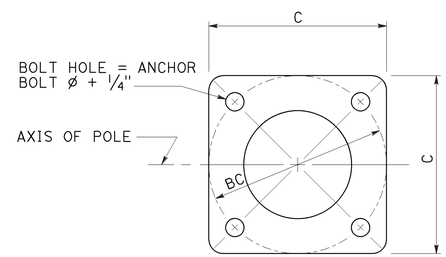

BASE PLATE

NO SCALE

1 8" DIAMETER 3 SECTION SIGNAL HEAD WITH BACKPLATE
2 12" DIAMETER 3 SECTION SIGNAL HEAD WITH BACKPLATE

12" DIAMETER 3 SECTION SIGNAL HEAD WITH BACKPLATE

GENERAL NOTES:

SPECIFICATIONS

DESIGN: AASHTO STANDARD SPECIFICATIONS FOR STRUCTURAL SUPPORTS FOR HIGHWAY SIGNS, LUMINAIRES AND TRAFFIC SIGNALS, FIFTH EDITION.

LOADING
WIND LOADING: 100 MPH (3 - SECOND GUST)

UNIT STRESSES

STRUCTURAL STEEL: f_y = 55,000 PSI TAPERED STEEL TUBE
f_y = 50,000 PSI UNLESS OTHERWISE NOTED.

Anchor bolts: fy = 55,000 PSI

REINFORCED CONCRETE: f'_c = 3,600 PSI
f_y = 60,000 PSI

NOTES:

1. FOR POLE LOCATIONS, SEE "ELECTRICAL" PLANS.
2. ALL STEEL SHALL BE GALVANIZED AFTER FABRICATION.
3. DURING POLE ERECTION THE POLE SHALL BE RAKED AS NECESSARY WITH THE USE OF LEVELING NUTS TO PROVIDE A PLUMB POLE AXIS.
4. THE FOUNDATION SHALL BE TREATED AS LEVEL GROUND CONDITION IF THE SLOPE INCLINATION IS FLATTER THAN 4H:1V.
5. FOUNDATION DESIGN IS BASED ON AASHTO LTS-5 ARTICLE 13.6 BROMS' APPROXIMATE PROCEDURE ASSUMING A COHESIONLESS MATERIAL. THE ANGLE OF INTERNAL FRICTION USED IS 30 DEGREES AND UNIT WEIGHT OF SOIL IS 120 LB/FT³ .
6. ALL ATTACHMENTS, UNLESS OTHERWISE NOTED, SHALL BE MOUNTED TO POLE WITH STAINLESS STEEL STRAPS OR OTHER METHOD WITHOUT DRILLING HOLES IN POLE.
7. FOR DETAILS NOT SHOWN, SEE "2010 STANDARD PLANS".

STANDARD PLAN SHEET NO.
DETAIL NO.

NO SCALE

THE CONTRACTOR MUST VERIFY ALL CONTROLLING FIELD DIMENSIONS BEFORE ORDERING OR FABRICATING ANY MATERIAL.

1 **ADDED PER ADDENDUM No. 1 DATED OCTOBER 30, 2014**

BRANCH CHIEF JEFFREY B WOODY

	BY	CHECKED
DESIGN	ELISEO LOPEZ	MAHFOUD LICHA
DETAILS	JINLI GUO	MAHFOUD LICHA
QUANTITIES		

STATE OF CALIFORNIA
DEPARTMENT OF TRANSPORTATION

DIVISION OF ENGINEERING SERVICES
STRUCTURE DESIGN
SPECIAL DESIGN BRANCH

BRIDGE NO. N/A
POST MILE 4.5/23.0

TYPE 1-D MODIFIED POLE DETAILS

SES-2

STRUCTURES DESIGN SPECIAL DESIGN SHEET (ENGLISH) (REV. 09-01-10)

ORIGINAL SCALE IN INCHES FOR REDUCED PLANS 0 1 2 3

UNIT: 3619
PROJECT NUMBER & PHASE: 1000020607-1
CONTRACT NO.: 10-0W4301

DISREGARD PRINTS BEARING EARLIER REVISION DATES

REVISION DATES 3/18/14 10/22/14 5/27/14 4/18/14

SHEET 2 OF 2

FILE => 10-0w4301-02.dgn

USERNAME => s114937 DATE PLOTTED => 22-OCT-2014 TIME PLOTTED => 08:04