Dist	COUNTY	ROUTE	POST MILES TOTAL PROJECT	SHEET No.	TOTAL SHEETS
10	SJ	99	22.9/38.8	42	139

REGISTERED CIVIL ENGINEER DATE 01-30-14

2-18-14
PLANS APPROVAL DATE

REGISTERED PROFESSIONAL ENGINEER
D S SANGHA
No. 59652
Exp. 12/31/15
CIVIL
STATE OF CALIFORNIA

THE STATE OF CALIFORNIA OR ITS OFFICERS OR AGENTS SHALL NOT BE RESPONSIBLE FOR THE ACCURACY OR COMPLETENESS OF SCANNED COPIES OF THIS PLAN SHEET.

1 REPLACED PER ADDENDUM No. 1 DATED JULY 29, 2014 1

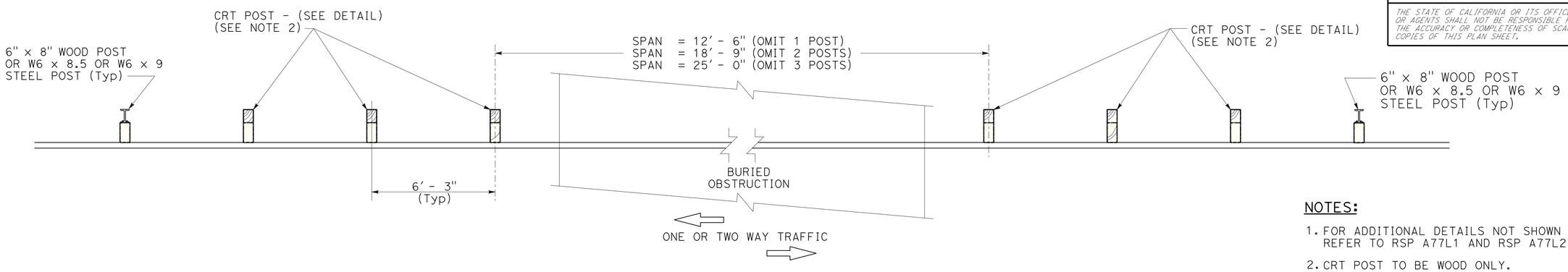

PLAN

NOTES:

1. FOR ADDITIONAL DETAILS NOT SHOWN ON THIS PLAN, REFER TO RSP A77L1 AND RSP A77L2.
2. CRT POST TO BE WOOD ONLY.

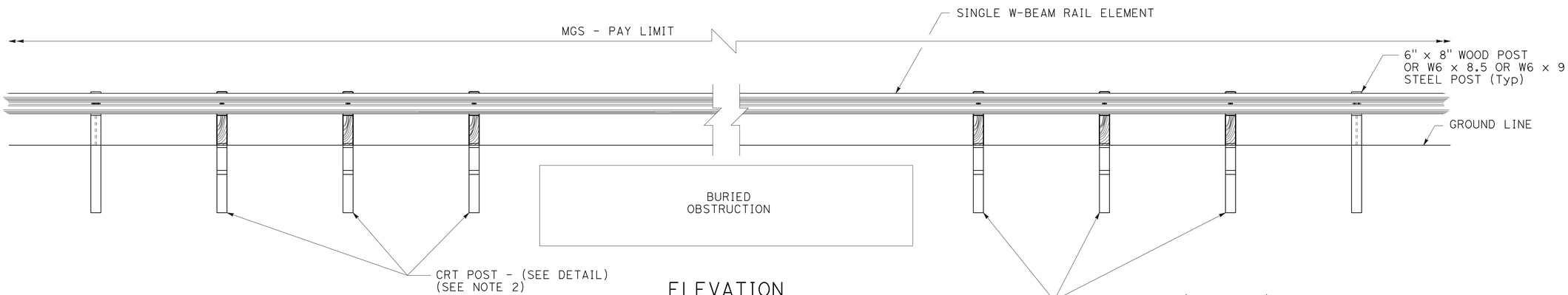

ELEVATION

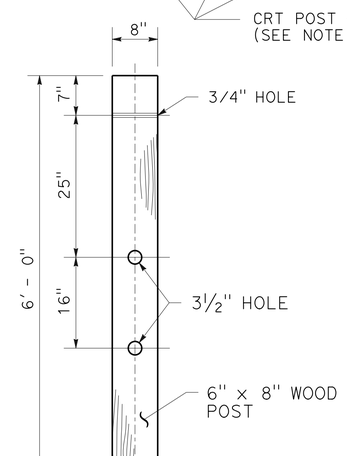

CONTROLLED RELEASING
TERMINAL (CRT) POST DETAIL

MIDWEST GUARDRAIL SYSTEM CONSTRUCTION DETAILS

NO SCALE **C-37**

STATE OF CALIFORNIA - DEPARTMENT OF TRANSPORTATION
Caltrans® 06-DESIGN

FUNCTIONAL SUPERVISOR: DAVID SANGHA
CALCULATED-DESIGNED BY: BALJIT KANDOLA
CHECKED BY: AMRITPAL S BADHESHA
REVISED BY / DATE REVISED

LAST REVISION 07-10-14
DATE PLOTTED => 23-JUL-2014
TIME PLOTTED => 13:50

Dist	COUNTY	ROUTE	POST MILES TOTAL PROJECT	SHEET No.	TOTAL SHEETS
10	SJ	99	22.9/38.8	42A	139

REGISTERED CIVIL ENGINEER 01-30-14 DATE

2-18-14
PLANS APPROVAL DATE

REGISTERED PROFESSIONAL ENGINEER
D S SANGHA
No. 59652
Exp. 12/31/15
CIVIL
STATE OF CALIFORNIA

THE STATE OF CALIFORNIA OR ITS OFFICERS OR AGENTS SHALL NOT BE RESPONSIBLE FOR THE ACCURACY OR COMPLETENESS OF SCANNED COPIES OF THIS PLAN SHEET.

NOTE:

1. USE 15'-7½" LENGTH RAIL.

1

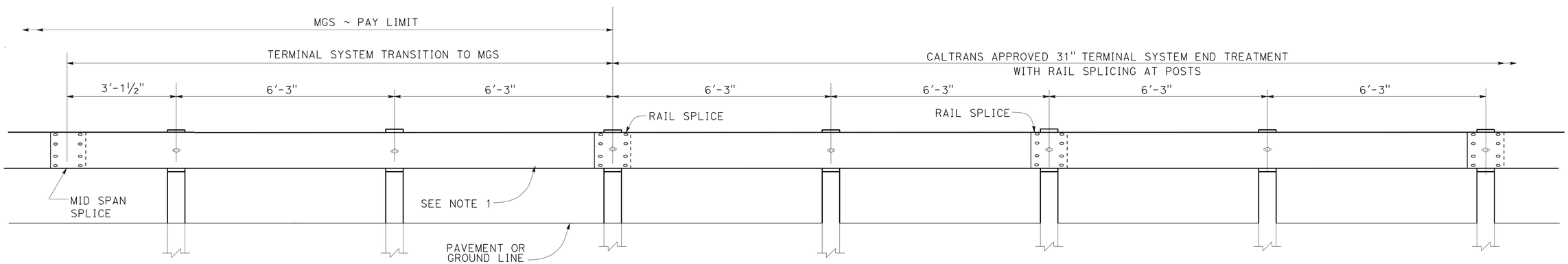

TRANSITION DETAIL FOR 31" TERMINAL SYSTEM END TREATMENT WITH RAIL SPLICING AT POSTS TO MIDWEST GUARDRAIL SYSTEM

1 ADDED PER ADDENDUM No. 1 DATED JULY 29, 2013

CONSTRUCTION DETAILS

NO SCALE **C-37A**

STATE OF CALIFORNIA - DEPARTMENT OF TRANSPORTATION
Caltrans
06-DESIGN

FUNCTIONAL SUPERVISOR: DAVID SANGHA
CALCULATED-DESIGNED BY: AMRITPAL S BADHESHA
CHECKED BY: BALJIT KANDOLA
REVISED BY
DATE REVISED

LAST REVISION 07-10-14
DATE PLOTTED => 23-JUL-2014
TIME PLOTTED => 14:21

Dist	COUNTY	ROUTE	POST MILES TOTAL PROJECT	SHEET No.	TOTAL SHEETS
10	SJ	99	22.9/38.8	87A	139

REGISTERED ELECTRICAL ENGINEER 6-23-14 DATE

7-29-14
PLANS APPROVAL DATE

REGISTERED PROFESSIONAL ENGINEER TARLOK BALWINDER SINGH No. 18394 Exp. 6-30-16 ELECTRICAL STATE OF CALIFORNIA

THE STATE OF CALIFORNIA OR ITS OFFICERS OR AGENTS SHALL NOT BE RESPONSIBLE FOR THE ACCURACY OR COMPLETENESS OF SCANNED COPIES OF THIS PLAN SHEET.

1

LUMINAIRE REPLACEMENT SCHEDULE

Co	PM	POLE No.	LOCATION	Ckt VOLTS	RC Exist Lum (WATTS)	INSTALL LED Lum	Exist PEC TYPE
SJ	22.95	2295A	500′ W OF Rte 99, N SIDE OF HAMMER Ln	240	200	Rdwy 1	V
SJ	22.95	2295B	500′ W OF Rte 99, N SIDE OF HAMMER Ln	240	200	Rdwy 1	V
SJ	22.95	2295C	500′ W OF Rte 99, N SIDE OF HAMMER Ln	240	200	Rdwy 1	V
SJ	22.95	2295D	500′ W OF Rte 99, N SIDE OF HAMMER Ln	240	310	Rdwy 2	V
SJ	22.95	2295E	500′ W OF Rte 99, N SIDE OF HAMMER Ln	240	200	Rdwy 1	V
SJ	22.95	2295F	500′ W OF Rte 99, N SIDE OF HAMMER Ln	240	200	Rdwy 1	V
SJ	22.95	2295G	500′ W OF Rte 99, N SIDE OF HAMMER Ln	240	200	Rdwy 1	V
SJ	22.95	2295H	500′ W OF Rte 99, N SIDE OF HAMMER Ln	240	200	Rdwy 1	V
SJ	22.95	2295J	500′ W OF Rte 99, N SIDE OF HAMMER Ln	240	310	Rdwy 2	V
SJ	22.98	2298A	E OF Rte 99, 250′ N OF HAMMER Ln OC	240	200	Rdwy 1	V
SJ	22.98	2298B	E OF Rte 99, 250′ N OF HAMMER Ln OC	240	310	Rdwy 2	V
SJ	22.98	2298C	E OF Rte 99, 250′ N OF HAMMER Ln OC	240	200	Rdwy 1	V
SJ	22.98	2298D	E OF Rte 99, 250′ N OF HAMMER Ln OC	240	200	Rdwy 1	V
SJ	22.98	2298E	E OF Rte 99, 250′ N OF HAMMER Ln OC	240	200	Rdwy 1	V
SJ	22.98	2298F	E OF Rte 99, 250′ N OF HAMMER Ln OC	240	200	Rdwy 1	V
SJ	22.98	2298G	E OF Rte 99, 250′ N OF HAMMER Ln OC	240	200	Rdwy 1	V
SJ	23.18	2318A	E OF Rte 99, 275′ N OF FOPPIANO Ln	240	200	Rdwy 1	V
SJ	23.98	2398A	E OF 250′ S OF MORADA Ln	240	200	Rdwy 1	V
SJ	23.98	2398B	E OF 250′ S OF MORADA Ln	240	200	Rdwy 1	V
SJ	23.98	2398C	E OF 250′ S OF MORADA Ln	240	310	Rdwy 2	V
SJ	24.03	2403A	Rte 99 AND MORADA Ln/FRONTAGE Rd	240	200	Rdwy 1	V
SJ	25.30	2530A	E OF Rte 99, 700′ S OF EIGHT MILE Rd OC	240	200	Rdwy 1	V
SJ	25.30	2530B	E OF Rte 99, 700′ S OF EIGHT MILE Rd OC	240	200	Rdwy 1	V
SJ	25.30	2530C	E OF Rte 99, 700′ S OF EIGHT MILE Rd OC	240	310	Rdwy 2	V
SJ	25.30	2530D	E OF Rte 99, 700′ S OF EIGHT MILE Rd OC	240	200	Rdwy 1	V
SJ	25.30	2530E	E OF Rte 99, 700′ S OF EIGHT MILE Rd OC	240	200	Rdwy 1	V
SJ	25.44	2544A	E OF Rte 99, 150′ N OF EIGHT MILE Rd OC	240	200	Rdwy 1	V
SJ	25.44	2544B	E OF Rte 99, 150′ N OF EIGHT MILE Rd OC	240	200	Rdwy 1	V
SJ	25.44	2544C	E OF Rte 99, 150′ N OF EIGHT MILE Rd OC	240	310	Rdwy 2	V
SJ	25.44	2544D	E OF Rte 99, 150′ N OF EIGHT MILE Rd OC	240	200	Rdwy 1	V
SJ	27.45	2745A	W OF Rte 99, 150′ S OF ARMSTRONG Rd OC	240	200	Rdwy 1	V
SJ	27.48	2748A	150′ W OF Rte 99, N OF ARMSTRONG Rd OC	240	310	Rdwy 2	V
SJ	27.48	2748C	150′ W OF Rte 99, N OF ARMSTRONG Rd OC	240	310	Rdwy 2	V

LUMINAIRE REPLACEMENT SCHEDULE

Co	PM	POLE No.	LOCATION	Ckt VOLTS	RC Exist Lum (WATTS)	INSTALL LED Lum	Exist PEC TYPE
SJ	27.48	2748D	150′ W OF Rte 99, N OF ARMSTRONG Rd OC	240	200	Rdwy 1	V
SJ	27.48	2748E	150′ W OF Rte 99 N OF ARMSTRONG Rd OC	240	200	Rdwy 1	V
SJ	27.58	2758A	E OF Rte 99, 500′ N OF ARMSTRONG Rd OC	240	200	Rdwy 1	V
SJ	27.58	2758B	E OF Rte 99, 500′ N OF ARMSTRONG Rd OC	240	200	Rdwy 1	V
SJ	27.58	2758C	E OF Rte 99, 500′ N OF ARMSTRONG Rd OC	240	310	Rdwy 2	V
SJ	27.58	2758D	E OF Rte 99, 500′ N OF ARMSTRONG Rd OC	240	200	Rdwy 1	V
SJ	27.58	2758E	E OF Rte 99, 500′ N OF ARMSTRONG Rd OC	240	200	Rdwy 1	V
SJ	28.36	2836A	W OF Rte 99, 500′ N OF HARNEY Ln OC	240	200	Rdwy 1	V
SJ	28.36	2836B	W OF Rte 99, 500′ N OF HARNEY Ln OC	240	200	Rdwy 1	V
SJ	28.36	2836C	W OF Rte 99, 500′ N OF HARNEY Ln OC	240	310	Rdwy 2	V
SJ	28.36	2836D	W OF Rte 99, 500′ N OF HARNEY Ln OC	240	200	Rdwy 1	V
SJ	28.36	2836E	W OF Rte 99, 500′ N OF HARNEY Ln OC	240	200	Rdwy 1	V
SJ	28.55	2855B	W OF Rte 99, 500′ N OF HARNEY Ln OC	240	200	Rdwy 1	V
SJ	28.55	2855D	W OF Rte 99, 500′ N OF HARNEY Ln OC	240	200	Rdwy 1	V
SJ	28.55	2855E	W OF Rte 99, 500′ N OF HARNEY Ln OC	240	310	Rdwy 2	V
SJ	28.55	2855F	W OF Rte 99, 500′ N OF HARNEY Ln OC	240	200	Rdwy 1	V
SJ	28.60	2860C	HARNEY Ln AND CHEROKKE Ln SB ON-RAMP	240	200	Rdwy 1	V
SJ	28.60	2860D	HARNEY Ln AND CHEROKKE Ln SB ON-RAMP	240	200	Rdwy 1	V
SJ	28.79	2879A	W OF Rte 99, 1000′ S OF SOUTH LODI OC	240	200	Rdwy 1	V
SJ	28.79	2879B	W OF Rte 99, 1000′ S OF SOUTH LODI OC	240	310	Rdwy 2	V
SJ	28.79	2879C	W OF Rte 99 1000′ S OF SOUTH LODI OC	240	310	Rdwy 2	V
SJ	28.86	2886A	HARNEY Ln AND E FRONTAGE Rd	240	200	Rdwy 1	V
SJ	28.86	2886B	HARNEY Ln AND E FRONTAGE Rd	240	200	Rdwy 1	V
SJ	28.86	2886C	HARNEY Ln AND E FRONTAGE Rd	240	200	Rdwy 1	V
SJ	28.86	2886D	HARNEY Ln AND E FRONTAGE Rd	240	200	Rdwy 1	V
SJ	28.97	2897A	W OF Rte 99, 200′ S OF S LODI OC	240	200	Rdwy 1	V
SJ	29.47	2847E	S W CORNER OF SB ON-OFF RAMP KETTLEMAN	240	200	Rdwy 1	V
SJ	29.47	2847K	S W CORNER OF SB ON-OFF RAMP KETTLEMAN	240	200	Rdwy 1	V
SJ	29.47	2847L	S W CORNER OF SB ON-OFF RAMP KETTLEMAN	240	200	Rdwy 1	V
SJ	29.71	2971A	W OF Rte 99, 100′ N OF KETTLEMAN Ln	240	310	Rdwy 2	V

1 ADDED PER ADDENDUM No. 1 DATED JULY, 29 2014

MODIFY LIGHTING
E-7A

STATE OF CALIFORNIA - DEPARTMENT OF TRANSPORTATION
Caltrans® ELECTRICAL DESIGN

BALWINDER TARLOCK — REVISED BY
BRIAN R SIMI — DATE REVISED
CALCULATED-DESIGNED BY
CHECKED BY
FUNCTIONAL SUPERVISOR
BRIAN R SIMI

LAST REVISION 02-13-14
DATE PLOTTED => 23-JUL-2014
TIME PLOTTED => 13:50

Dist	COUNTY	ROUTE	POST MILES TOTAL PROJECT	SHEET No.	TOTAL SHEETS
10	SJ	99	22.9/38.8	87B	139

REGISTERED ELECTRICAL ENGINEER 6-23-14 DATE

7-29-14
PLANS APPROVAL DATE

REGISTERED PROFESSIONAL ENGINEER TARLOK BALWINDER SINGH No. 18394 Exp. 6-30-16 ELECTRICAL STATE OF CALIFORNIA

THE STATE OF CALIFORNIA OR ITS OFFICERS OR AGENTS SHALL NOT BE RESPONSIBLE FOR THE ACCURACY OR COMPLETENESS OF SCANNED COPIES OF THIS PLAN SHEET.

1

LUMINAIRE REPLACEMENT SCHEDULE

Co	PM	POLE No.	LOCATION	Ckt VOLTS	RC Exist Lum (WATTS)	INSTALL LED Lum	Exist PEC TYPE
SJ	29.71	2971B	W OF Rte 99, 100′ N OF KETTLEMAN Ln	240	200	Rdwy 1	V
SJ	29.71	2971C	W OF Rte 99, 100′ N OF KETTLEMAN Ln	240	200	Rdwy 1	V
SJ	30.70	3070A	100′ E OF Rte 99, S SIDE OF PINE St	120	200	Rdwy 1	V
SJ	30.88	3088A	300′ W OF Rte 99, 200′ S OF VICTOR Rd	120	200	Rdwy 1	V
SJ	30.88	3088B	300′ W OF Rte 99, 200′ S OF VICTOR Rd	120	200	Rdwy 1	V
SJ	30.88	3088C	300′ W OF Rte 99, 200′ S OF VICTOR Rd	120	200	Rdwy 1	V
SJ	30.88	3088D	300′ W OF Rte 99, 200′ S OF VICTOR Rd	120	200	Rdwy 1	V
SJ	30.88	3088E	300′ W OF Rte 99, 200′ S OF VICTOR Rd	120	200	Rdwy 1	V
SJ	30.88	3088F	300′ W OF Rte 99, 200′ S OF VICTOR Rd	120	200	Rdwy 1	V
SJ	30.88	3088G	300′ W OF Rte 99, 200′ S OF VICTOR Rd	120	200	Rdwy 1	V
SJ	30.88	3088H	300′ W OF Rte 99, 200′ S OF VICTOR Rd	120	200	Rdwy 1	V
SJ	30.88	3088J	300′ W OF Rte 99, 200′ S OF VICTOR Rd	120	200	Rdwy 1	V
SJ	30.88	3088K	300′ W OF Rte 99, 200′ S OF VICTOR Rd	120	200	Rdwy 1	V
SJ	30.89	3089A	300′ W OF Rte 99, 200′ S OF VICTOR Rd	120	200	Rdwy 1	V
SJ	31.27	3127A	300′ W OF Rte 99, 250′ N OF MURRAY St	120	200	Rdwy 1	V
SJ	31.27	3127B	300′ W OF Rte 99, 250′ N OF MURRAY St	120	200	Rdwy 1	V
SJ	31.29	3129A	200′ W OF Rte 99, 300′ S OF N LODI OC	120	310	Rdwy 2	V
SJ	31.37	3137A	200′ W OF Rte 99, 50′ N OF PIONEER St	120	200	Rdwy 1	V
SJ	31.37	3137B	200′ W OF Rte 99, 50′ N OF PIONEER St	120	200	Rdwy 1	V
SJ	31.37	3137C	200′ W OF Rte 99, 50′ N OF PIONEER St	120	200	Rdwy 2	V
SJ	31.37	3137D	200′ W OF Rte 99, 50′ N OF PIONEER St	120	200	Rdwy 1	V
SJ	31.52	3152A	N E QUADRENT OF Rte 99 AND TURNER Rd OC	120	200	Rdwy 1	V
SJ	31.52	3152B	N E QUADRENT OF Rte 99 AND TURNER Rd OC	120	200	Rdwy 1	V
SJ	31.52	3152C	N E QUADRENT OF Rte 99 AND TURNER Rd OC	120	310	Rdwy 2	V
SJ	31.57	3157A	W OF Rte 99, 75′ N OF TURNER Rd OC	240	200	Rdwy 1	V
SJ	31.57	3157B	W OF Rte 99, 75′ N OF TURNER Rd OC	240	310	Rdwy 2	V
SJ	31.57	3157D	W OF Rte 99, 75′ N OF TURNER Rd OC	240	310	Rdwy 2	V
SJ	31.57	3157E	W OF Rte 99, 75′ N OF TURNER Rd OC	240	310	Rdwy 2	V
SJ	31.57	3157F	W OF Rte 99, 75′ N OF TURNER Rd OC	240	200	Rdwy 1	V
SJ	31.57	3157G	W OF Rte 99, 75′ N OF TURNER Rd OC	240	310	Rdwy 2	V
SJ	31.57	3157H	W OF Rte 99, 75′ N OF TURNER Rd OC	240	310	Rdwy 2	V
SJ	31.57	3157K	W OF Rte 99, 75′ N OF TURNER Rd OC	240	310	Rdwy 2	V
SJ	31.57	3157L	W OF Rte 99, 75′ N OF TURNER Rd OC	240	310	Rdwy 2	V

LUMINAIRE REPLACEMENT SCHEDULE

Co	PM	POLE No.	LOCATION	Ckt VOLTS	RC Exist Lum (WATTS)	INSTALL LED Lum	Exist PEC TYPE
SJ	31.57	3157M	W OF Rte 99, 75′ N OF TURNER Rd OC	240	200	Rdwy 1	V
SJ	31.57	3157N	W OF Rte 99, 75′ N OF TURNER Rd OC	240	200	Rdwy 1	V
SJ	31.96	3196A	E OF Rte 99, 900′ N OF MOKELUMNE Riv Br	240	310	Rdwy 2	V
SJ	31.96	3196B	E OF Rte 99, 900′ N OF MOKELUMNE Riv Br	240	310	Rdwy 2	V
SJ	31.96	3196C	E OF Rte 99, 900′ N OF MOKELUMNE Riv Br	240	310	Rdwy 2	V
SJ	31.96	3196D	E OF Rte 99, 900′ N OF MOKELUMNE Riv Br	240	310	Rdwy 2	V
SJ	32.05	3205A	W OF Rte 99, 1400′ N OF MOKELUMNE Riv Br	240	310	Rdwy 2	V
SJ	32.05	3205B	W OF Rte 99, 1400′ N OF MOKELUMNE Riv Br	240	310	Rdwy 2	V
SJ	32.05	3205C	W OF Rte 99, 1400′ N OF MOKELUMNE Riv Br	240	310	Rdwy 2	V
SJ	32.31	3231A	50′ W OF Rte 99, 1200′ S OF WOODBRIDGE OC	240	310	Rdwy 2	V
SJ	32.49	3249A	W OF Rte 99, 300′ S OF WOODBRIDGE Rd OC	240	310	Rdwy 2	V
SJ	32.49	3249B	W OF Rte 99, 300′ S OF WOODBRIDGE Rd OC	240	310	Rdwy 2	V
SJ	32.49	3249C	W OF Rte 99, 300′ S OF WOODBRIDGE Rd OC	240	310	Rdwy 2	V
SJ	32.64	3264A	50′ E OF Rte 99, 300′ S OF WOODBRIDG Rd OC	240	310	Rdwy 2	V
SJ	32.64	3264B	50′ E OF Rte 99, 300′ S OF WOODBRIDG Rd OC	240	310	Rdwy 2	V
SJ	32.64	3264C	50′ E OF Rte 99, 300′ S OF WOODBRIDG Rd OC	240	310	Rdwy 2	V
SJ	32.82	3282A	50′ E OF Rte 99, 1400′ N OF WOODBRIDGE Rd	240	310	Rdwy 2	V
SJ	33.41	3341A	100′ W OF Rte 99, 750′ S OF ACAMPO Rd OC	240	310	Rdwy 2	V
SJ	33.64	3364A	50′ E OF Rte 99, 450′ N OF ACAMPO Rd OC	240	310	Rdwy 2	V
SJ	33.64	3364C	50′ E OF Rte 99, 450′ N OF ACAMPO Rd OC	240	310	Rdwy 2	V
SJ	33.64	3364D	50′ E OF Rte 99, 450′ N OF ACAMPO Rd OC	240	310	Rdwy 2	V
SJ	33.64	3364E	50′ E OF Rte 99, 450′ N OF ACAMPO Rd OC	240	310	Rdwy 2	V
SJ	33.64	3364F	50′ E OF Rte 99, 450′ N OF ACAMPO Rd OC	240	200	Rdwy 1	V
SJ	33.64	3364G	50′ E OF Rte 99, 450′ N OF ACAMPO Rd OC	240	200	Rdwy 1	V
SJ	34.52	3452A	50′ E OF Rte 99, 450′ S OF PELTIER Rd OC	240	310	Rdwy 2	V
SJ	34.52	3452B	50′ E OF Rte 99, 450′ S OF PELTIER Rd OC	240	310	Rdwy 2	V
SJ	34.52	3452C	50′ E OF Rte 99, 450′ S OF PELTIER Rd OC	240	310	Rdwy 2	V
SJ	34.72	3472A	100′ E OF Rte 99, 850′ N OF PELTIER Rd OC	240	310	Rdwy 2	V
SJ	34.72	3472B	100′ E OF Rte 99, 850′ N OF PELTIER Rd OC	240	310	Rdwy 2	V
SJ	34.72	3472C	100′ E OF Rte 99, 850′ N OF PELTIER Rd OC	240	310	Rdwy 2	V

1 **ADDED PER ADDENDUM No. 1 DATED JULY, 29 2014**

MODIFY LIGHTING
E-7B

STATE OF CALIFORNIA - DEPARTMENT OF TRANSPORTATION
Caltrans® **ELECTRICAL DESIGN**
FUNCTIONAL SUPERVISOR: BRIAN R SIMI
CALCULATED-DESIGNED BY: BALWINDER TARLOCK
CHECKED BY: BRIAN R SIMI
REVISED BY / DATE REVISED

LAST REVISION 02-13-14
DATE PLOTTED => 23-JUL-2014
TIME PLOTTED => 13:50

Dist	COUNTY	ROUTE	POST MILES TOTAL PROJECT	SHEET No.	TOTAL SHEETS
10	SJ	99	22.9/38.8	87C	139

REGISTERED ELECTRICAL ENGINEER 6-23-14 DATE

7-29-14
PLANS APPROVAL DATE

REGISTERED PROFESSIONAL ENGINEER
TARLOK BALWINDER SINGH
No. 18394
Exp. 6-30-16
ELECTRICAL
STATE OF CALIFORNIA

THE STATE OF CALIFORNIA OR ITS OFFICERS OR AGENTS SHALL NOT BE RESPONSIBLE FOR THE ACCURACY OR COMPLETENESS OF SCANNED COPIES OF THIS PLAN SHEET.

1

LUMINAIRE REPLACEMENT SCHEDULE

Co	PM	POLE No.	LOCATION	Ckt VOLTS	RC Exist Lum (WATTS)	INSTALL LED Lum	Exist PEC TYPE
SJ	34.72	3472D	100′ E OF Rte 99, 850′ N OF PELTIER Rd OC	240	310	Rdwy 2	V
SJ	35.66	3566B	50′ E OF Rte 99, 400′ N OF JAHANT Rd OC	240	310	Rdwy 2	V
SJ	35.66	3566C	50′ E OF Rte 99, 400′ N OF JAHANT Rd OC	240	310	Rdwy 2	V
SJ	35.66	3566D	50′ E OF Rte 99, 400′ N OF JAHANT Rd OC	240	310	Rdwy 2	V
SJ	35.78	3578A	E OF Rte 99, 1000′ N OF JAHANT Rd OC	240	310	Rdwy 2	V
SJ	35.78	3578B	E OF Rte 99, 1000′ N OF JAHANT Rd OC	240	310	Rdwy 2	V
SJ	35.78	3578D	E OF Rte 99, 1000′ N OF JAHANT Rd OC	240	310	Rdwy 2	V
SJ	36.38	3638A	E OF EAST Fr Rd 1500′ S OF COLLIER Rd OC	240	310	Rdwy 2	V
SJ	36.38	3638B	E OF EAST Fr Rd 1500′ S OF COLLIER Rd OC	240	310	Rdwy 2	V
SJ	36.64	3664A	E OF Rte 99, 100′ S OF COLLIER Rd OC	240	310	Rdwy 2	V
SJ	36.69	3669A	W OF Rte 99, 1300′ N OF COLLIER Rd OC	240	310	Rdwy 2	V
SJ	36.95	3695A	W OF Rte 99, 1300′ N OF COLLIER Rd OC	240	310	Rdwy 2	V
SJ	36.95	3695B	W OF Rte 99, 1300′ N OF COLLIER Rd OC	240	310	Rdwy 2	V
SJ	37.73	3695A	W OF Rte 99, 700′ S OF LIBERTY Rd OC	240	310	Rdwy 2	V
SJ	37.73	3773B	W OF Rte 99, 700′ S OF LIBERTY Rd OC	240	310	Rdwy 2	V
SJ	37.73	3773C	W OF Rte 99, 700′ S OF LIBERTY Rd OC	240	310	Rdwy 2	V
SJ	37.80	3780A	W OF Rte 99, 700′ S OF LIBERTY Rd OC	240	310	Rdwy 2	V
SJ	37.91	3791A	W OF Rte 99, 600′ N OF LIBERTY Rd OC	240	310	Rdwy 2	V
SJ	37.91	3791B	W OF Rte 99, 600′ N OF LIBERTY Rd OC	240	310	Rdwy 2	V

1 **ADDED PER ADDENDUM No. 1 DATED JULY, 29 2014**

MODIFY LIGHTING
E-7C

STATE OF CALIFORNIA - DEPARTMENT OF TRANSPORTATION
Caltrans® ELECTRICAL DESIGN
FUNCTIONAL SUPERVISOR: BRIAN R SIMI
CALCULATED-DESIGNED BY: BALWINDER TARLOCK
CHECKED BY
REVISED BY
DATE REVISED

LAST REVISION 02-13-14
DATE PLOTTED => 23-JUL-2014
TIME PLOTTED => 15:12

Dist	COUNTY	ROUTE	POST MILES TOTAL PROJECT	SHEET No.	TOTAL SHEETS
10	SJ	99	22.9/38.8	90	139

REGISTERED ELECTRICAL ENGINEER DATE 1/29/14

PLANS APPROVAL DATE 2-18-14

REGISTERED PROFESSIONAL ENGINEER JASPAL SINGH No. 16657 Exp 6/30/14 ELECTRICAL STATE OF CALIFORNIA

THE STATE OF CALIFORNIA OR ITS OFFICERS OR AGENTS SHALL NOT BE RESPONSIBLE FOR THE ACCURACY OR COMPLETENESS OF SCANNED COPIES OF THIS PLAN SHEET.

NOTE:

ITEMS SHOWN IN TABLE(S) ARE NOT A SEPARATE PAY ITEM, FOR INFORMATION ONLY.

MODIFY VEHICLE CLASSIFICATION STATION

SHEET No.	TYPE A LOOP DETECTORS	No. 5(T) PB	PIEZO AXLE SENSOR	STC CABLES LENGTH
	EA			FT
E-1	12	3	6	755
E-2	4	-	2	200

MODIFY TRAFFIC MONITORING STATION

SHEET No.	TYPE A LOOP DETECTORS	No. 5(T) PB
	EA	
E-3	6	-
E-4	42	5
E-5	14	-

COMMUNICATION PULL BOX

SHEET No.	No. 6(E)(T) PB
	EA
E-5	32

MODIFY LIGHTING

SHEET No.	No. 5 PB	2" C	No. 8 CONDUCTOR	No. 8 (G) CONDUCTOR	ROADWAY 1 Lum	ROADWAY 2 Lum
	EA	FT			EA	
E-6	1	25	120	60	-	-
E-7A	-	-	-	-	49	14
E-7B	-	-	-	-	27	36
E-7C	-	-	-	-	-	19

1

1 REPLACED PER ADDENDUM No. 1 DATED JULY 29, 2014

ELECTRICAL QUANTITIES
E-10

STATE OF CALIFORNIA - DEPARTMENT OF TRANSPORTATION
Caltrans® ELECRIACAL DESIGN

FUNCTIONAL SUPERVISOR: ALI BAKHDOUD
CALCULATED-DESIGNED BY: JORGE RAMIREZ
CHECKED BY: JASPAL SINGH
REVISED BY
DATE REVISED

LAST REVISION 02-13-14
DATE PLOTTED => 28-JUL-2014
TIME PLOTTED => 13:23

Dist	COUNTY	ROUTE	POST MILES TOTAL PROJECT	SHEET No.	TOTAL SHEETS
10	SJ	99	22.9/38.8	139A	139

Theresa Gabriel
REGISTERED ELECTRICAL ENGINEER

July 19, 2013
PLANS APPROVAL DATE

REGISTERED PROFESSIONAL ENGINEER Theresa Aziz Gabriel No. E15129 Exp. 6-30-14 ELECTRICAL STATE OF CALIFORNIA

THE STATE OF CALIFORNIA OR ITS OFFICERS OR AGENTS SHALL NOT BE RESPONSIBLE FOR THE ACCURACY OR COMPLETENESS OF SCANNED COPIES OF THIS PLAN SHEET.

TO ACCOMPANY PLANS DATED 2-18-14

ISOFOOTCANDLE CURVE - MINIMUM

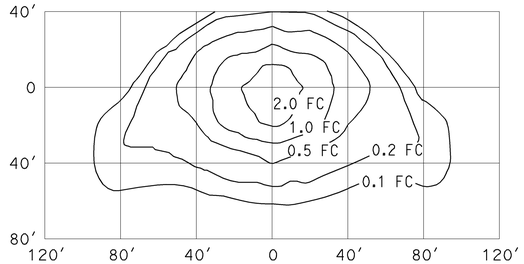

TYPE III MEDIUM CUTOFF

Cutoff Luminaire
34′ Mounting Height
Lamp operated at 22,000 lm
200-W high pressure sodium lamp
ANSI Designation S66

ISOFOOTCANDLE CURVE - MINIMUM

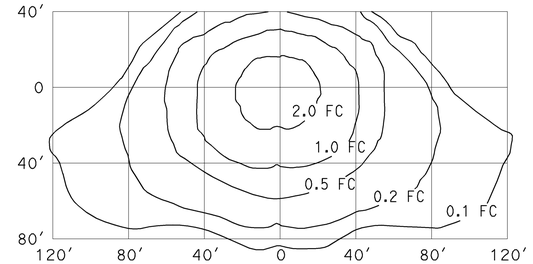

TYPE III MEDIUM CUTOFF

Cutoff Luminaire
40′ Mounting Height
Lamp operated at 37,000 lm
310-W high pressure sodium lamp
ANSI Designation S67

ISOFOOTCANDLE CURVE - MINIMUM

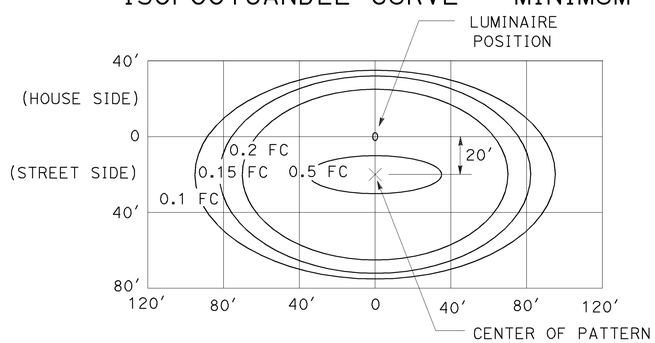

LED LUMINAIRE ROADWAY 1

165-W at 34′ Mounting Height

ISOFOOTCANDLE CURVE - MINIMUM

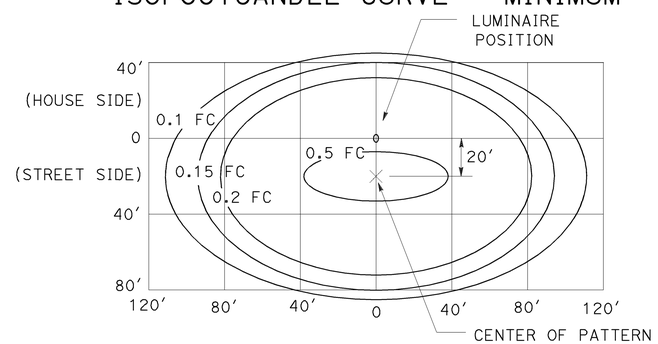

LED LUMINAIRE ROADWAY 2

235-W at 40′ Mounting Height

ISOFOOTCANDLE CURVE - MINIMUM

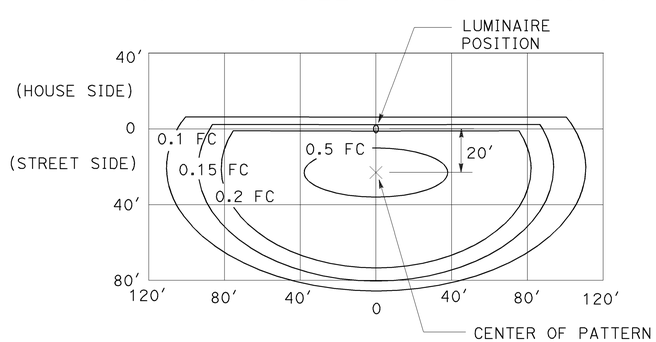

LED LUMINAIRE ROADWAY 3

235-W at 40′ Mounting Height
with back side control

ISOFOOTCANDLE CURVE - MINIMUM

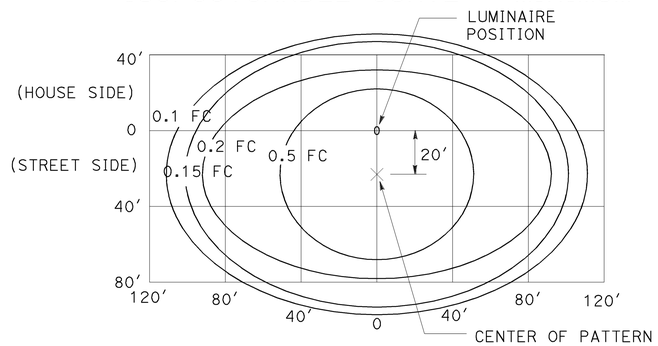

LED LUMINAIRE ROADWAY 4

300-W at 40′ Mounting Height

ISOFOOTCANDLE CURVE - MINIMUM

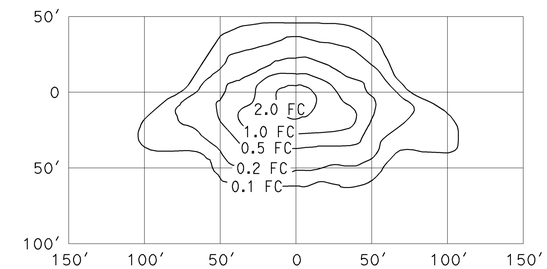

TYPE III MEDIUM CUTOFF

Cutoff Luminaire
30′ Mounting Height
Lamp operated at 16,000 lm
150-W high pressure sodium lamp
ANSI Designation S55

ISOFOOTCANDLE CURVE - MINIMUM

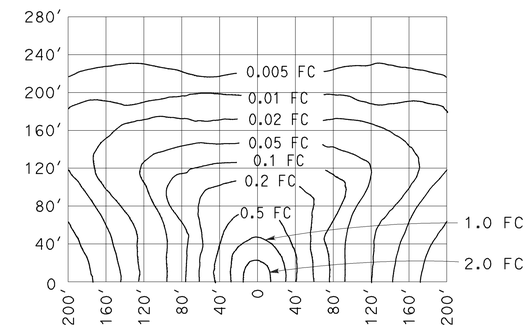

LOW PRESSURE SODIUM LUMINAIRE

40′ Mounting Height
Lamp operated at 33,000 lm
180-W low pressure sodium lamp

STATE OF CALIFORNIA
DEPARTMENT OF TRANSPORTATION

ELECTRICAL SYSTEMS (ISOFOOTCANDLE DIAGRAMS)

NO SCALE

RSP ES-10A DATED JULY 19, 2013 SUPERSEDES RSP ES-10A DATED JULY 20, 2012 THAT SUPPLEMENTS THE STANDARD PLANS BOOK DATED 2010.

REVISED STANDARD PLAN RSP ES-10A

1 ADDED PER ADDENDUM No. 1 DATED JULY 29, 2011

2010 REVISED STANDARD PLAN RSP ES-10A

7-9-13