Dist	COUNTY	ROUTE	POST MILES TOTAL PROJECT	SHEET No.	TOTAL SHEETS
10	Mpa, Tuo	132	0.0/18.7	1	11

INDEX OF PLANS

SHEET NO.	DESCRIPTION
1	TITLE AND LOCATION MAP
2	TYPICAL CROSS SECTIONS
3-4	CONSTRUCTION DETAILS
5	CONSTRUCTION AREA SIGNS
6-7	SUMMARY OF QUANTITIES
8-11	REVISED AND NEW STANDARD PLANS

THE STANDARD PLANS LIST APPLICABLE TO THIS CONTRACT IS INCLUDED IN THE NOTICE TO BIDDERS AND SPECIAL PROVISIONS BOOK.

STATE OF CALIFORNIA

DEPARTMENT OF TRANSPORTATION

PROJECT PLANS FOR CONSTRUCTION ON

STATE HIGHWAY

IN MARIPOSA AND TUOLUMNE COUNTIES AT & NEAR GRANITE SPRINGS FROM STANISLAUS COUNTY LINE TO ROUTE 49

TO BE SUPPLEMENTED BY STANDARD PLANS DATED MAY 2006

LOCATION MAP

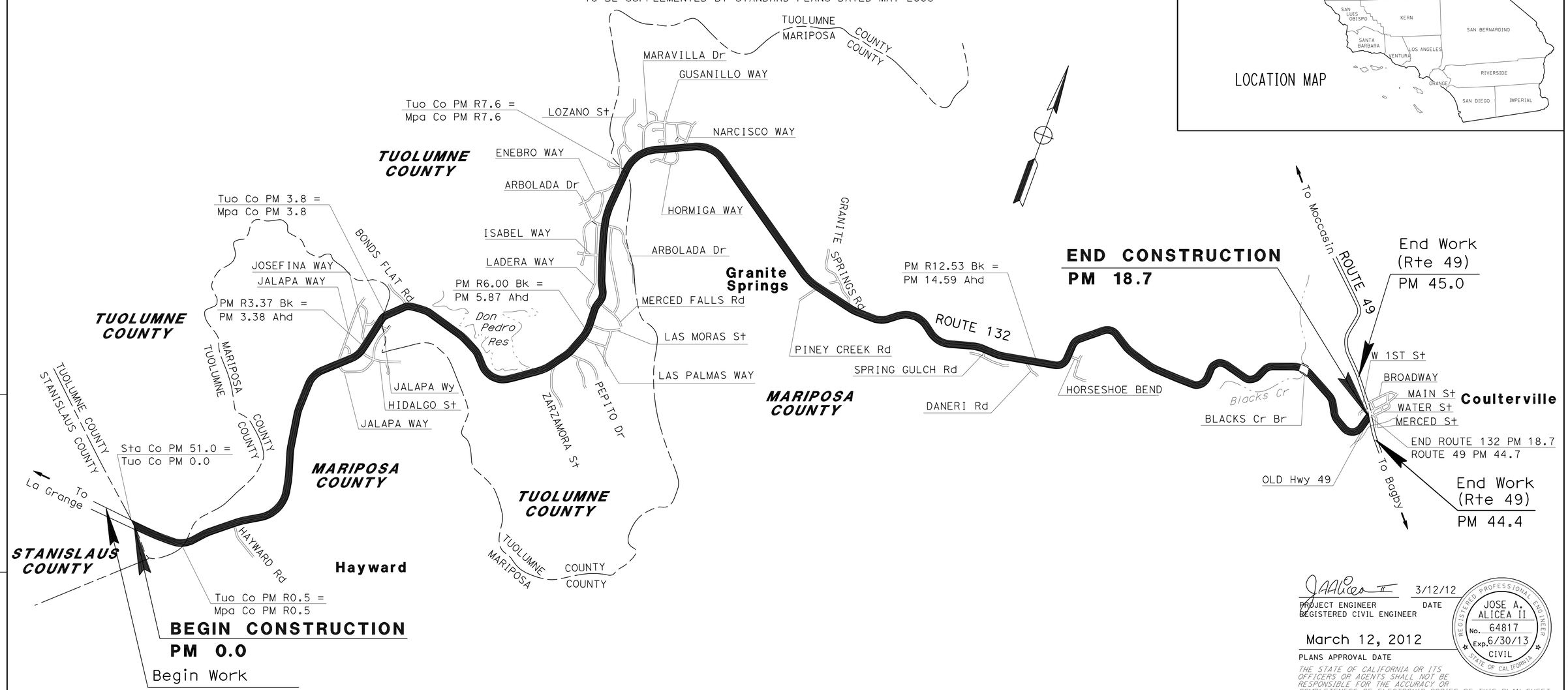

NO SCALE

THE CONTRACTOR SHALL POSSESS THE CLASS (OR CLASSES) OF LICENSE AS SPECIFIED IN THE "NOTICE TO CONTRACTORS."

PROJECT MANAGER ALVIN MANGINDIN

DESIGN ENGINEER ALVIN MANGINDIN

3/12/12

PROJECT ENGINEER REGISTERED CIVIL ENGINEER — DATE

March 12, 2012

PLANS APPROVAL DATE

REGISTERED PROFESSIONAL ENGINEER — JOSE A. ALICEA II — No. 64817 — Exp. 6/30/13 — CIVIL — STATE OF CALIFORNIA

THE STATE OF CALIFORNIA OR ITS OFFICERS OR AGENTS SHALL NOT BE RESPONSIBLE FOR THE ACCURACY OR COMPLETENESS OF ELECTRONIC COPIES OF THIS PLAN SHEET.

CONTRACT No.	10-0W0104
PROJECT ID	1012000007

LAST REVISION 00-00-00 — DATE PLOTTED => 15-MAR-2012 — TIME PLOTTED => 10:43

Dist	COUNTY	ROUTE	POST MILES TOTAL PROJECT	SHEET No.	TOTAL SHEETS
10	Mpa, Tuo	132	0.0/18.7	2	11

REGISTERED CIVIL ENGINEER 3/12/12 DATE

3/12/12
PLANS APPROVAL DATE

REGISTERED PROFESSIONAL ENGINEER JOSE A. ALICEA II No. 64817 Exp. 6/30/13 CIVIL STATE OF CALIFORNIA

THE STATE OF CALIFORNIA OR ITS OFFICERS OR AGENTS SHALL NOT BE RESPONSIBLE FOR THE ACCURACY OR COMPLETENESS OF SCANNED COPIES OF THIS PLAN SHEET.

NOTES:

1. DIMENSIONS OF PAVEMENT STRUCTURES (STRUCTURAL SECTIONS) ARE SUBJECT TO TOLERANCES SPECIFIED IN THE STANDARD SPECIFICATIONS.
2. FOR ACCURATE RIGHT OF WAY DATA, CONTACT RIGHT OF WAY ENGINEERING AT THE DISTRICT OFFICE.
3. EXISTING UTILITY FACILITIES HAVE NOT BEEN PLOTTED ON THESE PLANS.
4. FOR COLD PLANE AC PAVEMENT DIMENSIONS AND LOCATIONS, SEE SUMMARY OF QUANTITIES SHEET.
5. FOR HMA DIKE AND CAP HMA DIKE LOCATIONS, SEE SUMMARY OF QUANTITIES SHEET.

ABBREVIATION:

RHMA-G - RUBBERIZED HOT MIX ASPHALT (GAP GRADED)

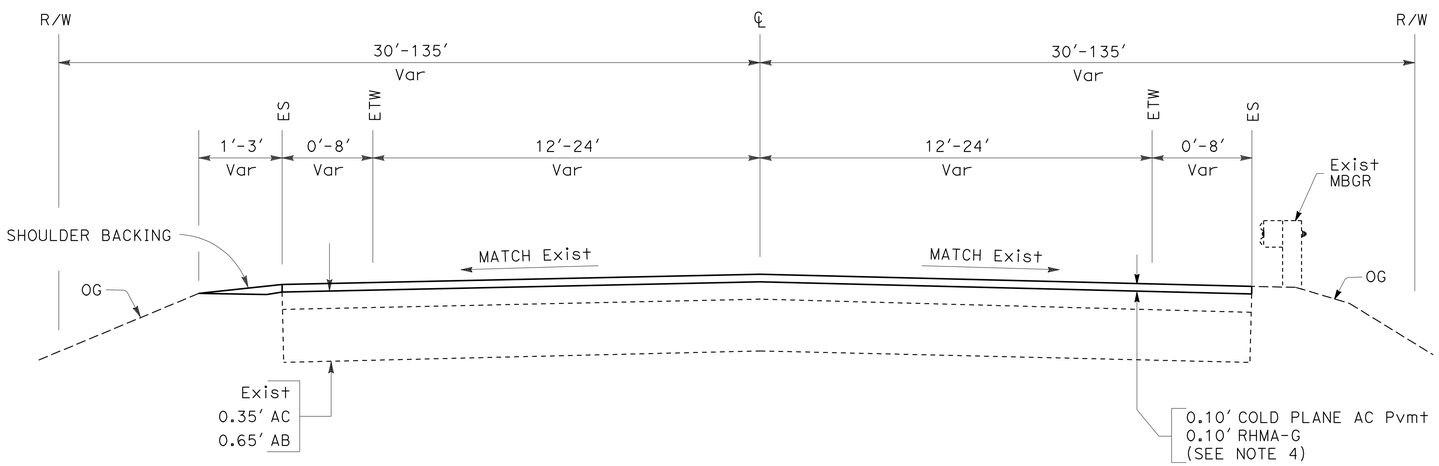

(SEE SUMMARY OF QUANTITIES SHEET)

MBGR LOCATIONS

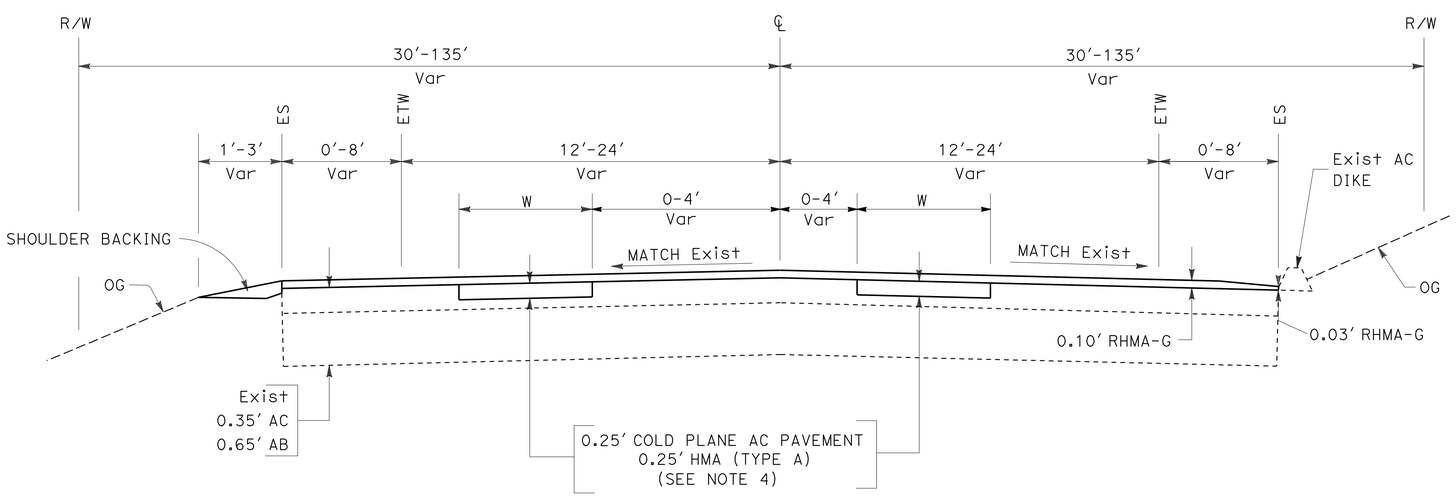

PM 0.0/18.7

ROUTE 132

EXISTING AC DIKE LOCATIONS

PM / PM	SIDE
10.60 / 10.67	R+
10.83 / 11.00	R+
11.47 / 11.52	R+
12.04 / 12.10	R+
14.73 / 14.82	R+
15.56 / 15.73	R+
16.00 / 16.06	R+
16.61 / 16.65	R+
17.11 / 17.20	R+
17.54 / 17.63	R+
18.18 / 18.28	R+
4.84 / 5.18	L+
5.38 / 5.59	L+
5.74 / 5.78	L+
7.53 / 7.69	L+
8.32 / 8.37	L+
8.59 / 8.66	L+
11.00 / 11.06	L+
11.32 / 11.45	L+
11.81 / 11.84	L+
11.93 / 11.99	L+
14.72 / 14.87	L+
14.98 / 15.01	L+
15.16 / 15.28	L+
15.54 / 15.76	L+
16.19 / 16.25	L+
16.40 / 16.49	L+
16.65 / 16.73	L+
16.76 / 16.79	L+
16.85 / 16.97	L+
17.07 / 17.22	L+
17.35 / 17.39	L+
17.46 / 17.50	L+
17.53 / 17.64	L+
18.52 / 18.63	L+

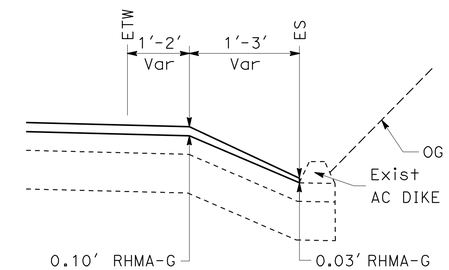

Exist AC DIKE

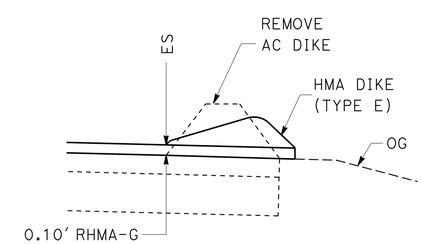

HMA DIKE

TYPICAL CROSS SECTIONS

NO SCALE

X-1

STATE OF CALIFORNIA - DEPARTMENT OF TRANSPORTATION
Caltrans MAINTENANCE

FUNCTIONAL SUPERVISOR	CALCULATED-DESIGNED BY	CHECKED BY	REVISED BY	DATE REVISED
ALVIN MANGINDIN	JOSE ALICEA II	THOA HUYNH	JAA	3/12/12

LAST REVISION 00-00-00 | DATE PLOTTED => 15-MAR-2012 | TIME PLOTTED => 10:43

Dist	COUNTY	ROUTE	POST MILES TOTAL PROJECT	SHEET No.	TOTAL SHEETS
10	Mpa, Tuo	132	0.0/18.7	3	11

REGISTERED CIVIL ENGINEER — DATE 3/12/12

3/12/12
PLANS APPROVAL DATE

REGISTERED PROFESSIONAL ENGINEER JOSE A. ALICEA II No. 64817 Exp. 6/30/13 CIVIL STATE OF CALIFORNIA

THE STATE OF CALIFORNIA OR ITS OFFICERS OR AGENTS SHALL NOT BE RESPONSIBLE FOR THE ACCURACY OR COMPLETENESS OF SCANNED COPIES OF THIS PLAN SHEET.

LEGEND

- COLD PLANE AC PAVEMENT RHMA-G
- COLD PLANE AC PAVEMENT HMA (TYPE A)
- HMA (TYPE A)

ABBREVIATION

RHMA-G - RUBBERIZED HOT MIX ASPHALT (GAP GRADED)

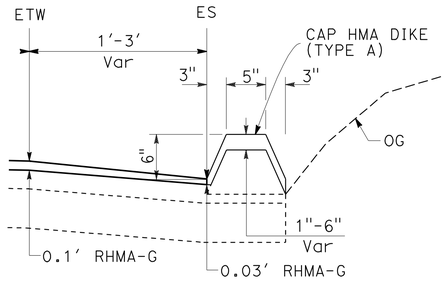

CAP HMA DIKE

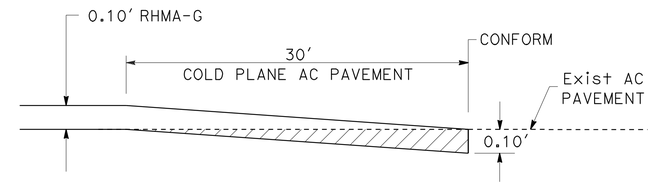

CONFORM TAPER AT EXISTING AC PAVEMENT

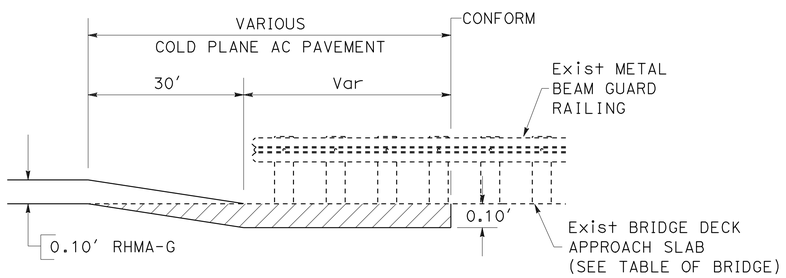

CONFORM TAPER AT APPROACH/DEPARTURE BRIDGE DECK

SEE SUMMARY OF QUANTITIES (CONFORM TAPERS TABLE)

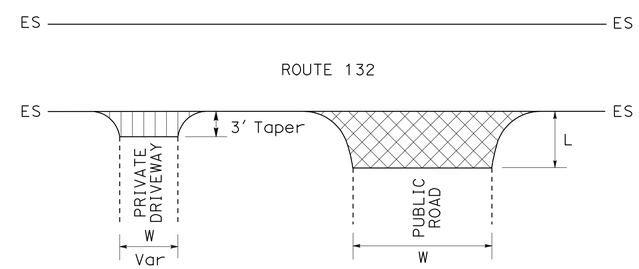

PAVING LIMITS AT PRIVATE DRIVEWAYS AND PUBLIC ROAD INTERSECTIONS

SEE PUBLIC ROAD AND PRIVATE DRIVEWAY INTERSECTIONS TABLES

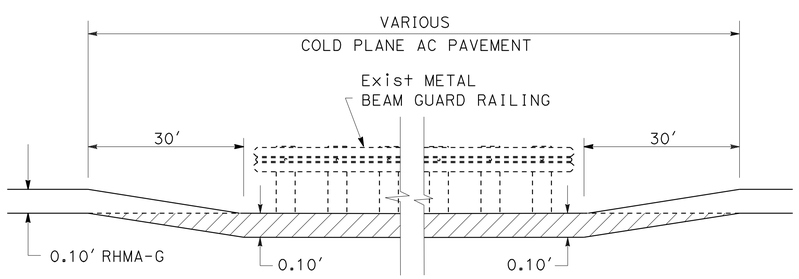

CONFORM TAPER AT METAL BEAM GUARD RAIL

SEE SUMMARY OF QUANTITIES (CONFORM TAPERS AT MBGR TABLE)

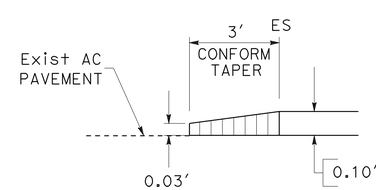

PRIVATE DRIVEWAY CONFORM TAPER

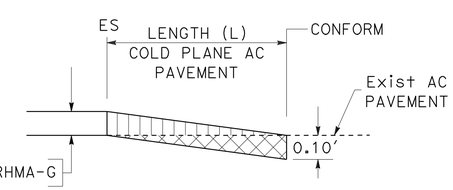

PUBLIC ROAD CONFORM TAPER

CONSTRUCTION DETAILS

NO SCALE

C-1

STATE OF CALIFORNIA - DEPARTMENT OF TRANSPORTATION
Caltrans®
MAINTENANCE

FUNCTIONAL SUPERVISOR: ALVIN MANGINDIN
CALCULATED-DESIGNED BY: JOSE A. ALICEA II
CHECKED BY: THOA HUYNH
REVISED BY: JAA
DATE REVISED: 2/22/12

LAST REVISION 00-00-00
DATE PLOTTED => 15-MAR-2012
TIME PLOTTED => 10:43

Dist	COUNTY	ROUTE	POST MILES TOTAL PROJECT	SHEET No.	TOTAL SHEETS
10	Mpa, Tuo	132	0.0/18.7	4	11

REGISTERED CIVIL ENGINEER 3/12/12 DATE

3/12/12
PLANS APPROVAL DATE

REGISTERED PROFESSIONAL ENGINEER JOSE A. ALICEA II No. 64817 Exp. 6/30/13 CIVIL STATE OF CALIFORNIA

THE STATE OF CALIFORNIA OR ITS OFFICERS OR AGENTS SHALL NOT BE RESPONSIBLE FOR THE ACCURACY OR COMPLETENESS OF SCANNED COPIES OF THIS PLAN SHEET.

TABLE OF BRIDGE

PM	BRIDGE NAME	BRIDGE No.
17.7	BLACKS CREEK	40-0025

PRIVATE DRIVEWAY INTERSECTIONS

PM	SIDE	W	PM	SIDE	W
1.09	R†	20′	18.24	R†	20′
1.38	R†	20′	18.36	R†	20′
1.78	R†	20′	0.78	L†	20′
2.33	R†	20′	1.09	L†	20′
2.72	R†	20′	2.74	L†	20′
4.67	R†	20′	3.82	L†	20′
5.03	R†	20′	5.63	L†	20′
5.06	R†	20′	5.75	L†	20′
5.12	R†	20′	5.96	L†	20′
5.41	R†	20′	6.10	L†	20′
5.92	R†	20′	8.23	L†	20′
5.98	R†	20′	8.38	L†	20′
6.38	R†	20′	8.49	L†	20′
6.66	R†	20′	8.79	L†	20′
7.13	R†	20′	8.97	L†	20′
7.29	R†	20′	9.70	L†	20′
7.49	R†	20′	10.06	L†	20′
7.70	R†	20′	10.10	L†	20′
8.38	R†	20′	10.17	L†	20′
8.79	R†	20′	11.22	L†	20′
8.92	R†	20′	11.67	L†	20′
8.97	R†	20′	12.05	L†	20′
9.11	R†	20′	12.14	L†	20′
9.70	R†	20′	12.39	L†	20′
9.89	R†	20′	12.47	L†	20′
10.10	R†	20′	14.68	L†	20′
10.50	R†	20′	17.34	L†	20′
10.56	R†	20′	17.85	L†	20′
11.12	R†	20′	18.36	L†	20′
12.27	R†	20′	18.42	L†	20′
12.49	R†	20′	18.71	L†	20′
15.82	R†	20′	18.74	L†	20′

PRIVATE DRIVEWAY WIDTHS AND LOCATIONS ARE APPROXIMATE. ACTUAL LOCATIONS AND WIDTHS WILL BE DETERMINED BY THE ENGINEER.

PUBLIC ROAD INTERSECTIONS

PM	SIDE	ROAD NAME	L	W
1.04	R†	HAYWARD Rd	45′	40′
3.10	R†	JALAPA WAY	50′	40′
3.10	L†	JALAPA WAY	50′	45′
3.33	R†	HIDALGO St	60′	40′
3.45	L†	JOSEPHINA WAY	45′	30′
3.67	R†	JALAPA WAY	50′	30′
4.02	L†	BONDS FLAT Rd	60′	45′
5.72	R†	ZARZAMORA St	50′	20′
5.90	R†	PEPITO Dr	55′	25′
5.96	R†	LAS PALMAS WAY	50′	28′
6.10	R†	LAS MORAS St	50′	30′
6.24	L†	LADERA WAY	45′	30′
6.32	R†	MERCED FALLS Rd	45′	35′
6.79	L†	ISABEL WAY	40′	35′
7.08	R†	ARBOLADA Dr	45′	20′
7.08	L†	ARBOLADA Dr	50′	25′
7.47	L†	ENEBRO WAY	40′	30′
7.58	L†	LOZANO St	60′	30′
7.90	L†	MARAVILLA Dr	45′	35′
8.12	R†	GUSANILLO WAY	50′	35′
8.12	L†	GUSANILLO WAY	45′	35′
8.22	R†	HORMIGA WAY	60′	25′
8.33	L†	NARCISCO WAY	45′	35′
10.24	R†	PINEY CREEK Rd	50′	35′
10.56	L†	GRANITE SPRINGS Rd	50′	30′
12.05	R†	SPRING GULCH Rd	40′	25′
12.44	R†	DANERI Rd	40′	35′
14.97	R†	HORSESHOE BEND	45′	35′
18.57	R†	OLD Hwy 49 / CONN OLD Hwy R†	45′	30′

CONSTRUCTION DETAILS
C-2

STATE OF CALIFORNIA - DEPARTMENT OF TRANSPORTATION
Caltrans MAINTENANCE

FUNCTIONAL SUPERVISOR: ALVIN MANGINDIN
CALCULATED-DESIGNED BY: JOSE A. ALICEA II
CHECKED BY: THOA HUYNH
REVISED BY: JAA
DATE REVISED: 03/12/12

LAST REVISION 00-00-00 | DATE PLOTTED => 15-MAR-2012 | TIME PLOTTED => 10:44

Dist	COUNTY	ROUTE	POST MILES TOTAL PROJECT	SHEET No.	TOTAL SHEETS
10	Mpa, Tuo	132	0.0/18.7	5	11

REGISTERED CIVIL ENGINEER 3/12/12 DATE

3/12/12
PLANS APPROVAL DATE

REGISTERED PROFESSIONAL ENGINEER JOSE A. ALICEA II No. 64817 Exp. 6/30/13 CIVIL STATE OF CALIFORNIA

THE STATE OF CALIFORNIA OR ITS OFFICERS OR AGENTS SHALL NOT BE RESPONSIBLE FOR THE ACCURACY OR COMPLETENESS OF SCANNED COPIES OF THIS PLAN SHEET.

STATIONARY MOUNTED CONSTRUCTION AREA SIGNS

SIGN	SIGN CODE	PANEL SIZE	No. OF POSTS AND SIZE	No. OF SIGNS	SIGN MESSAGE
(A)	G20-1	60" x 36"	1 - 4" x 6"	2	ROAD WORK NEXT 19 MILES
(B)	W20-1	36" x 36"	1 - 4" x 6"	34	ROAD WORK AHEAD
(C)	G20-2	36" x 18"	1 - 4" x 4"	2	END ROAD WORK

NOTE: EXACT SIGN LOCATIONS TO BE DETERMINED BY THE ENGINEER.

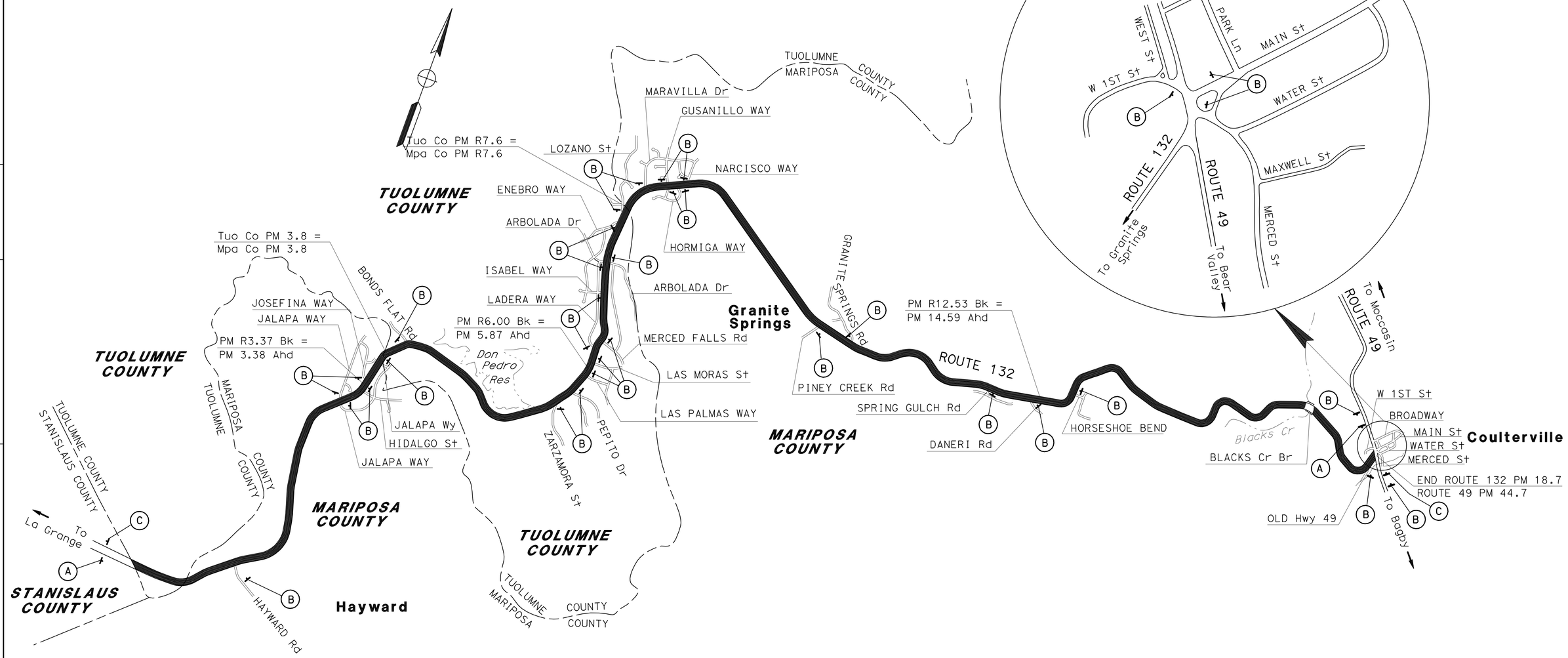

CONSTRUCTION AREA SIGNS

NO SCALE

CS-1

APPROVED FOR CONSTRUCTION AREA SIGN WORK ONLY

REVISED BY	DATE REVISED
JAA	3/12/12

CALCULATED-DESIGNED BY: JOSE ALICEA II
CHECKED BY: THOA HUYNH
FUNCTIONAL SUPERVISOR: ALVIN MANGINDIN

STATE OF CALIFORNIA - DEPARTMENT OF TRANSPORTATION
Caltrans MAINTENANCE

LAST REVISION 00-00-00
DATE PLOTTED => 15-MAR-2012
TIME PLOTTED => 10:44

Dist	COUNTY	ROUTE	POST MILES TOTAL PROJECT	SHEET No.	TOTAL SHEETS
10	Mpa, Tuo	132	0.0/18.7	6	11

REGISTERED CIVIL ENGINEER 3/12/12 DATE

3/12/12
PLANS APPROVAL DATE

REGISTERED PROFESSIONAL ENGINEER JOSE A. ALICEA II No. 64817 Exp. 6/30/13 CIVIL STATE OF CALIFORNIA

THE STATE OF CALIFORNIA OR ITS OFFICERS OR AGENTS SHALL NOT BE RESPONSIBLE FOR THE ACCURACY OR COMPLETENESS OF SCANNED COPIES OF THIS PLAN SHEET.

NOTES:

1. * - TOTAL INCLUDED IN ROADWAY ITEMS TABLE.
2. (N) - NOT A SEPARATE PAY ITEM, FOR INFORMATION ONLY.
3. TRAFFIC MANAGEMENT SYSTEM ELEMENTS LOCATIONS ARE APPROXIMATE.

DIGOUTS

LOCATION		LENGTH (N)	WIDTH (N)	COLD PLANE AC Pvmt	HMA (TYPE A)
PM	SIDE			SQYD	TON
0.5	EB	400′	8′	356	60
2.0	EB	400′	8′	356	60
4.0	EB	400′	8′	356	60
6.0	EB	400′	8′	356	60
8.0	EB	400′	8′	356	60
10.0	EB	400′	8′	356	60
12.0	EB	400′	8′	356	60
14.0	EB	400′	8′	356	60
16.0	EB	400′	8′	356	60
18.0	EB	400′	8′	356	60
0.5	WB	400′	8′	356	60
2.0	WB	400′	8′	356	60
4.0	WB	400′	8′	356	60
6.0	WB	400′	8′	356	60
8.0	WB	400′	8′	356	60
10.0	WB	400′	8′	356	60
12.0	WB	400′	8′	356	60
14.0	WB	400′	8′	356	60
16.0	WB	400′	8′	356	60
18.0	WB	400′	8′	356	60
			TOTAL	7120*	1200*

DIGOUT LOCATIONS ARE APPROXIMATE. ACTUAL LOCATIONS, LENGTHS, AND WIDTHS SHALL BE DETERMINED BY THE ENGINEER.

CONFORM TAPERS AT INTERSECTIONS

LOCATION			LENGTH (N)	WIDTH (N)	COLD PLANE AC Pvmt	HMA (TYPE A)
PM	SIDE	DESCRIPTION			SQYD	TON
1.04	Rt	HAYWARD Rd	45′	40′	200	14
3.10	Rt	JALAPA WAY	50′	40′	223	15
3.10	Lt	JALAPA WAY	50′	45′	250	17
3.33	Rt	HIDALGO St	60′	40′	267	18
3.45	Lt	JOSEPHINA WAY	45′	30′	150	11
3.67	Rt	RD NO NAME	50′	30′	167	12
4.02	Lt	BONDS FLAT Rd	60′	45′	300	21
5.72	Rt	ZARZAMORA St	50′	20′	112	8
5.90	Rt	PEPITO Dr	55′	25′	153	11
5.96	Rt	LAS PALMAS WAY	50′	28′	156	11
6.10	Rt	LAS MORAS St	50′	30′	167	12
6.24	Lt	LADERA WAY	45′	30′	150	11
6.32	Rt	MERCED FALLS Rd	45′	35′	175	12
6.79	Lt	ISABEL WAY	40′	35′	156	11
7.08	Rt	ARBOLADA Dr	45′	20′	100	7
7.08	Lt	ARBOLADA Dr	50′	25′	139	10
7.47	Lt	ENEBRO WAY	40′	30′	134	9
7.58	Lt	LOZANO WAY	60′	30′	200	14
7.90	Lt	MARAVILLA Dr	45′	35′	175	12
8.12	Rt	GUSANILLO WAY	50′	35′	195	14
8.12	Lt	GUSANILLO WAY	45′	35′	175	12
8.22	Rt	HORMIGA WAY	60′	25′	167	12
8.33	Lt	NARCISCO WAY	45′	35′	175	12
10.24	Rt	PINEY CREEK Rd	50′	35′	195	14
10.56	Lt	GRANITE SPRINGS Rd	50′	30′	167	12
12.05	Rt	SPRING GULCH Rd	40′	25′	112	8
12.44	Rt	DANERI Rd	40′	35′	156	11
14.97	Rt	HORSESHOE BEND	45′	35′	175	12
18.57	Rt	OLD HWY 49 / CONN OLD HWY RT	45′	30′	150	11
		PRIVATE DRIVEWAYS		3′		64
				TOTAL	5041*	418*

CONFORM TAPERS AT MBGR

LOCATION	LENGTH (N)	WIDTH (N)	COLD PLANE AC Pvmt	RHMA-G
PM / PM			SQYD	TON
0.85 / 0.90	350	40′	1556	104
2.60 / 2.67	500	28′	1556	104
4.54 / 4.58	300	26′	867	58
4.66 / 4.69	250	26′	723	49
7.72 / 7.97	1500	26′	4334	289
15.35 / 15.53	1150	30′	3834	256
		TOTAL	12,870*	860*

CONFORM TAPERS

LOCATION		LENGTH (N)	WIDTH (N)	COLD PLANE AC Pvmt	RHMA-G
PM	DESCRIPTION			SQYD	TON
0.0	Rte 132 (BEGIN CONSTRUCTION)	30′	24′	80	6
17.7	BLACKS CREEK Br (DEPARTURE)	100′	30′	334	23
17.7	BLACKS CREEK Br (APPROACH)	100′	30′	334	23
18.7	Rte 132 (END CONSTRUCTION)	30′	30′	100	7
			TOTAL	848*	59*

SUMMARY OF QUANTITIES
Q-1

STATE OF CALIFORNIA - DEPARTMENT OF TRANSPORTATION
Caltrans MAINTENANCE

FUNCTIONAL SUPERVISOR: ALVIN MANGINDIN
CALCULATED-DESIGNED BY: JOSE A. ALICEA II
CHECKED BY: THOA HUYNH
REVISED BY: JAA
DATE REVISED: 3/12/12

LAST REVISION 00-00-00
DATE PLOTTED => 15-MAR-2012
TIME PLOTTED => 10:44

Dist	COUNTY	ROUTE	POST MILES TOTAL PROJECT	SHEET No.	TOTAL SHEETS
10	Mpa, Tuo	132	0.0/18.7	7	11

REGISTERED CIVIL ENGINEER 3/12/12 DATE

3/12/12
PLANS APPROVAL DATE

REGISTERED PROFESSIONAL ENGINEER JOSE A. ALICEA II No. 64817 Exp. 6/30/13 CIVIL STATE OF CALIFORNIA

THE STATE OF CALIFORNIA OR ITS OFFICERS OR AGENTS SHALL NOT BE RESPONSIBLE FOR THE ACCURACY OR COMPLETENESS OF SCANNED COPIES OF THIS PLAN SHEET.

ROADWAY ITEMS

LOCATION	COLD PLANE AC PAVEMENT	RUBBERIZED HOT MIX ASPHALT (GAP GRADED)	HOT MIX ASPHALT (TYPE A)	TACK COAT	SHOULDER BACKING	PLACE HMA (Misc. AREA)
	SQYD	TON				SQYD
PM 0.0/18.7		20,460		96	4700	
DIGOUTS	7120		1200	3		
CONFORM TAPERS AT MBGR	12,870	860		5		
CONFORM TAPERS AT INTERSECTIONS	5041		354	2		
CONFORM TAPERS AT PRIVATE DRIVEWAYS			64	1		450
CONFORM TAPERS	848	59		1		
DIKE ITEMS			76	1		
TOTAL	25,879	21,379	1694	108	4700	450

DIKE ITEMS

LOCATION			REMOVE AC DIKE	PLACE HMA DIKE (TYPE E)	CAP HMA DIKE	HMA (TYPE A)
PM	PM	SIDE	LF	LF	LF	TON
10.60	10.65	EB	270	270		7
10.84	10.92	EB	430	430		11
10.94	11.00	EB			320	8
16.84	17.00	EB			850	21
18.62	18.73	EB			590	15
18.53	18.63	WB			530	14
TOTAL			700	700	2290	76 *

TRAFFIC MANAGEMENT SYSTEM ELEMENT (EXISTING)

LOCATION	PM	TYPE
COULTERVILLE, W/O Jct Rte 49	18.75	TRAFFIC MONITORING STATION

PAVEMENT DELINEATION ITEMS

LOCATION	REMOVE YELLOW THERMOPLASTIC TRAFFIC STRIPE (HAZARDOUS WASTE)	REMOVE THERMOPLASTIC TRAFFIC STRIPE		THERMOPLASTIC TRAFFIC STRIPE (SPRAYABLE)								REMOVE PAVEMENT MARKER (N)	PAVEMENT MARKER (RETROREFLECTIVE)							REMOVE THERMOPLASTIC PAVEMENT MARKING						THERMOPLASTIC PAVEMENT MARKING						
				4" WHITE				4" YELLOW			8" WHITE		TYPE D				TYPE G		TYPE H												
	DETAIL 22	DETAIL 29	DETAIL 38	DETAIL 12	DETAIL 27B	DETAIL 27C	DETAIL 29	DETAIL 6	DETAIL 19	DETAIL 22	DETAIL 38		DETAIL 6	DETAIL 19	DETAIL 22	DETAIL 29	DETAIL 12	DETAIL 38	DETAIL 19	STOP	AHEAD	TYPE I 24' ARROW	TYPE III (L) ARROW	TYPE V ARROW	TYPE VI (L) ARROW	LIMIT LINE	STOP	AHEAD	TYPE I 24' ARROW	TYPE III (L) ARROW	TYPE V ARROW	TYPE VI (L) ARROW
PM	LF	LF		LF								EA	EA							SQFT						SQFT						
0.0/18.7	134,464	2400	1290	2271	177,342	6590	1200	6497	14,950	67,232	645	6846	144	324	5612	50	48	34	634	66	31	93	252	33	252	1090	682	31	93	252	33	252
TOTAL	134,464	3690		276,727									6846							727						2433						

SUMMARY OF QUANTITIES
Q-2

STATE OF CALIFORNIA - DEPARTMENT OF TRANSPORTATION
Caltrans MAINTENANCE

FUNCTIONAL SUPERVISOR: ALVIN MANGINDIN
CALCULATED-DESIGNED BY: JOSE A. ALICEA II
CHECKED BY: THOA HUYNH
REVISED BY: JAA
DATE REVISED: 3/12/12

LAST REVISION 00-00-00
DATE PLOTTED => 15-MAR-2012
TIME PLOTTED => 10:44

DIST	COUNTY	ROUTE	POST MILES TOTAL PROJECT	SHEET NO.	TOTAL SHEETS
10	Mpa, Tuo	132	0.0/18.7	8	11

Randell D. Hiatt
REGISTERED CIVIL ENGINEER

June 6, 2008
PLANS APPROVAL DATE

REGISTERED PROFESSIONAL ENGINEER
Randell D. Hiatt
No. C50200
Exp. 6-30-09
CIVIL
STATE OF CALIFORNIA

The State of California or its officers or agents shall not be responsible for the accuracy or completeness of electronic copies of this plan sheet.

To accompany plans dated 3/12/12

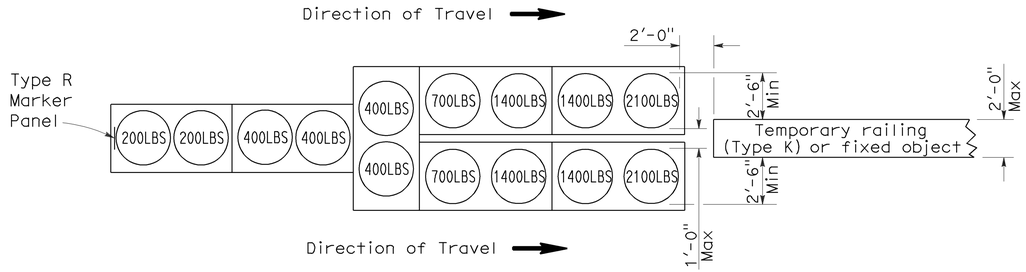

ARRAY 'TU14'

Approach speed 45 mph or more

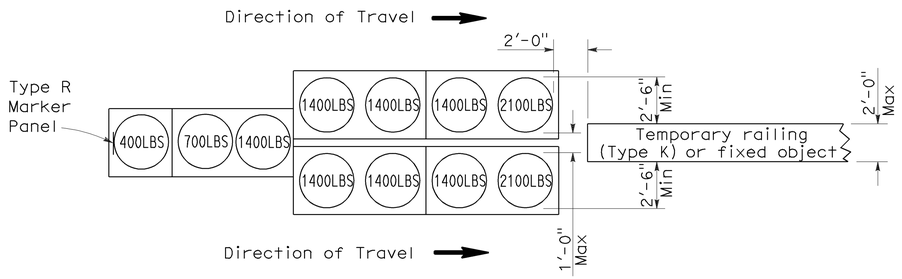

ARRAY 'TU11'

Approach speed less than 45 mph

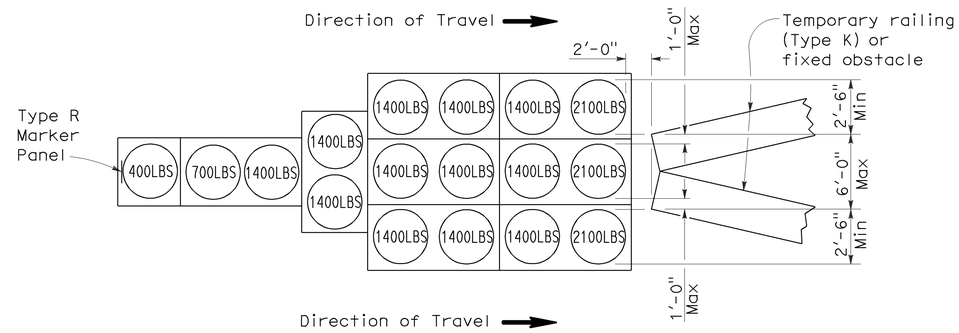

ARRAY 'TU17'

Approach speed less than 45 mph

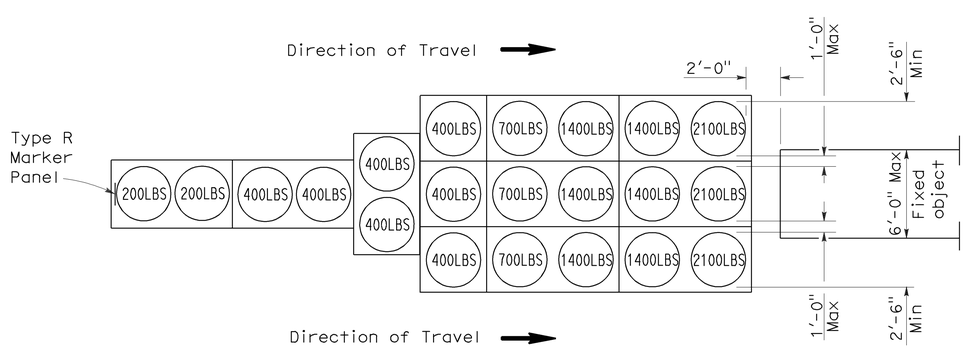

ARRAY 'TU21'

Approach speed 45 mph or more

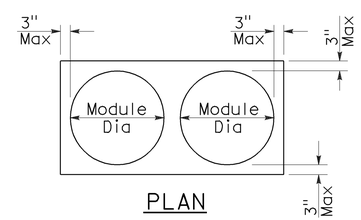

PLAN

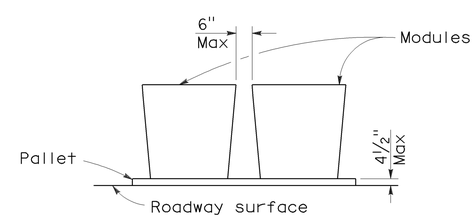

ELEVATION

CRASH CUSHION PALLET DETAIL

See Note 7

NOTES:

1. (XXX) Indicates sand filled module location and weight of sand in pounds for each module. Module spacing is based on the greater diameter of the module.
2. All sand weights are nominal.
3. Temporary crash cushion arrays shall not encroach on the traveled way.
4. Place the top of Type R marker panel 1" below the module lid.
5. Refer to Standard Plan A73B for marker details.
6. Approach speeds indicated conform to NCHRP 350 Report criteria.
7. Use of pallets is optional.

STATE OF CALIFORNIA
DEPARTMENT OF TRANSPORTATION

TEMPORARY CRASH CUSHION, SAND FILLED (UNIDIRECTIONAL)

NO SCALE

RSP T1A DATED JUNE 6, 2008 SUPERSEDES STANDARD PLAN T1A
DATED MAY 1, 2006 - PAGE 211 OF THE STANDARD PLANS BOOK DATED MAY 2006.

REVISED STANDARD PLAN RSP T1A

2006 REVISED STANDARD PLAN RSP T1A

DIST	COUNTY	ROUTE	POST MILES TOTAL PROJECT	SHEET NO.	TOTAL SHEETS
10	Mpa, Tuo	132	0.0/18.7	9	11

Randell D. Hiatt
REGISTERED CIVIL ENGINEER

June 6, 2008
PLANS APPROVAL DATE

REGISTERED PROFESSIONAL ENGINEER
Randell D. Hiatt
No. C50200
Exp. 6-30-09
CIVIL
STATE OF CALIFORNIA

The State of California or its officers or agents shall not be responsible for the accuracy or completeness of electronic copies of this plan sheet.

To accompany plans dated 3/12/12

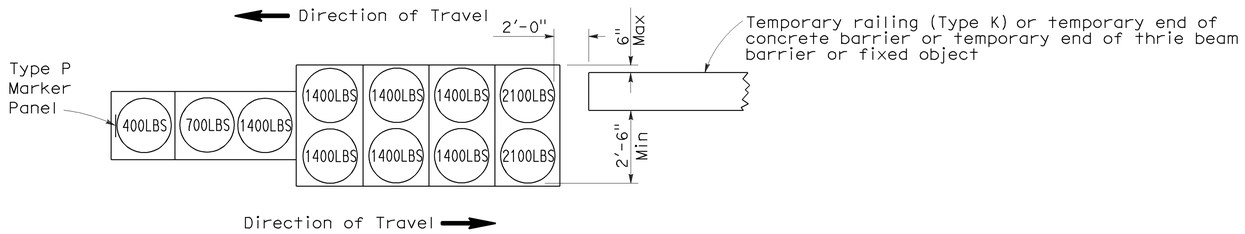

ARRAY 'TB11'

Approach speed less than 45 mph

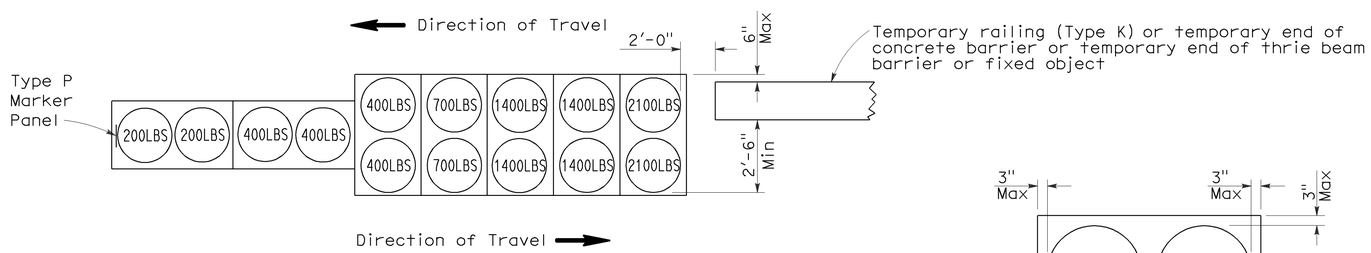

ARRAY 'TB14'

Approach speed 45 mph or more

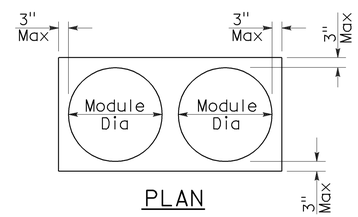

PLAN

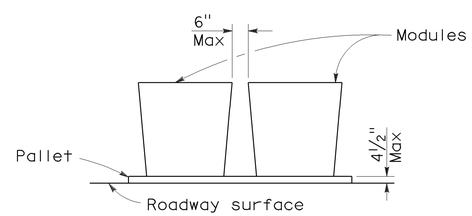

ELEVATION

CRASH CUSHION PALLET DETAIL

See Note 7

NOTES:

1. (XXX) Indicates sand filled module location and weight of sand in pounds for each module. Module spacing is based on the greater diameter of the module.
2. All sand weights are nominal.
3. Temporary crash cushion arrays shall not encroach on the traveled way.
4. Place the Type P marker panel so that the bottom of the panel rests upon the pallet.
5. Refer to Standard Plan A73B for marker details.
6. Approach speeds indicated conform to NCHRP 350 Report criteria.
7. Use of pallets is optional.

STATE OF CALIFORNIA
DEPARTMENT OF TRANSPORTATION

TEMPORARY CRASH CUSHION, SAND FILLED (BIDIRECTIONAL)

NO SCALE

RSP T1B DATED JUNE 6, 2008 SUPERSEDES STANDARD PLAN T1B
DATED MAY 1, 2006 - PAGE 212 OF THE STANDARD PLANS BOOK DATED MAY 2006.

REVISED STANDARD PLAN RSP T1B

2006 REVISED STANDARD PLAN RSP T1B

5-15-08

DIST	COUNTY	ROUTE	POST MILES TOTAL PROJECT	SHEET NO.	TOTAL SHEETS
10	Mpa, Tuo	132	0.0/18.7	10	11

Randell D. Hiatt
REGISTERED CIVIL ENGINEER

June 6, 2008
PLANS APPROVAL DATE

REGISTERED PROFESSIONAL ENGINEER
Randell D. Hiatt
No. C50200
Exp. 6-30-09
CIVIL
STATE OF CALIFORNIA

The State of California or its officers or agents shall not be responsible for the accuracy or completeness of electronic copies of this plan sheet.

To accompany plans dated 3/12/12

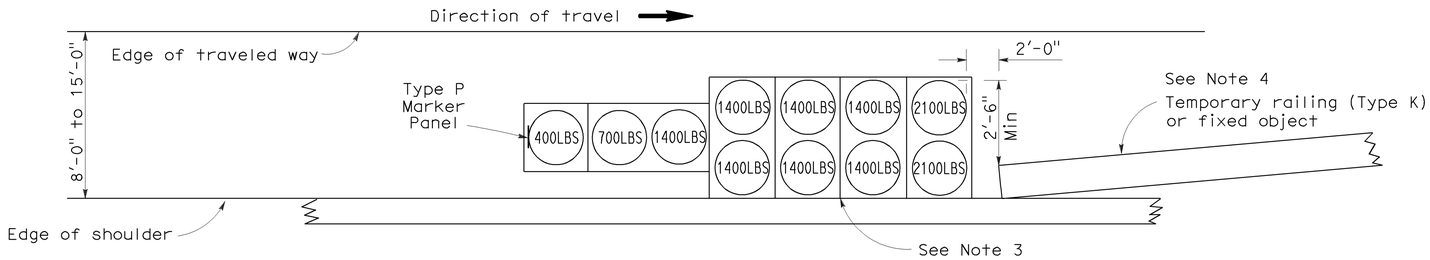

ARRAY 'TS11'

Approach speed less than 45 mph
See Note 9

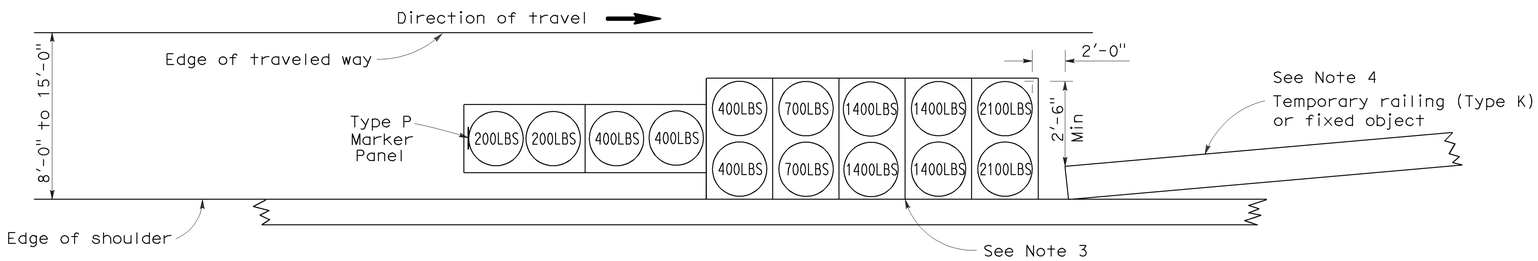

ARRAY 'TS14'

Approach speed 45 mph or more
See Note 9

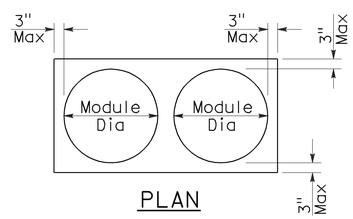

PLAN

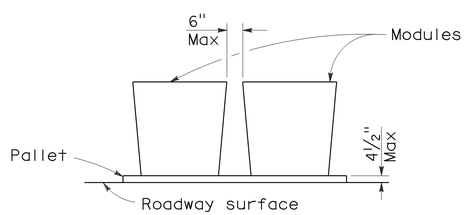

ELEVATION

CRASH CUSHION PALLET DETAIL

See Note 11

NOTES:

1. (XXX) Indicates sand filled module location and weight of sand in pounds for each module. Module spacing is based on the greater diameter of the module.
2. All sand weights are nominal.
3. The temporary crash cushion arrays shown on this plan shall be used only in locations where there will be traffic on one side of the temporary crash cushion array.
4. If the fixed object or approach end of the temporary railing is less than 15'-0" from the edge of traveled way, a temporary crash cushion is required in a construction or work zone.
5. Temporary crash cushion arrays shall not encroach on the traveled way.
6. Arrays for median shoulders shall conform to details shown on this plan for outside shoulders.
7. Place the Type P marker panel so that the bottom of the panel rests upon the pallet and faces traffic.
8. Refer to Standard Plan A73B for marker details.
9. For shoulder widths less than 8'-0", appropriate approved crash cushion protection, other than sand filled modules, shall be provided at fixed objects and at approach ends of temporary railing. The specific type of crash cushion shall be as shown on the project plans or as specified in the Special Provisions, or if not shown on the project plans or specified in the Special Provisions, shall be as approved by the Engineer.
10. Approach speeds indicated conform to NCHRP 350 Report criteria.
11. Use of pallets is optional.

STATE OF CALIFORNIA
DEPARTMENT OF TRANSPORTATION

TEMPORARY CRASH CUSHION, SAND FILLED (SHOULDER INSTALLATIONS)

NO SCALE

RSP T2 DATED JUNE 6, 2008 SUPERSEDES STANDARD PLAN T2
DATED MAY 1, 2006 - PAGE 213 OF THE STANDARD PLANS BOOK DATED MAY 2006.

REVISED STANDARD PLAN RSP T2

2006 REVISED STANDARD PLAN RSP T2

5-15-08

Dist	COUNTY	ROUTE	POST MILES TOTAL PROJECT	SHEET No.	TOTAL SHEETS
10	Mpa, Tuo	132	0.0/18.7	11	11

Randell D. Hiatt
REGISTERED CIVIL ENGINEER

May 20, 2011
PLANS APPROVAL DATE

REGISTERED PROFESSIONAL ENGINEER
Randell D. Hiatt
No. C50200
Exp. 6-30-11
CIVIL
STATE OF CALIFORNIA

The State of California or its officers or agents shall not be responsible for the accuracy or completeness of electronic copies of this plan sheet.

To accompany plans dated 3/12/12

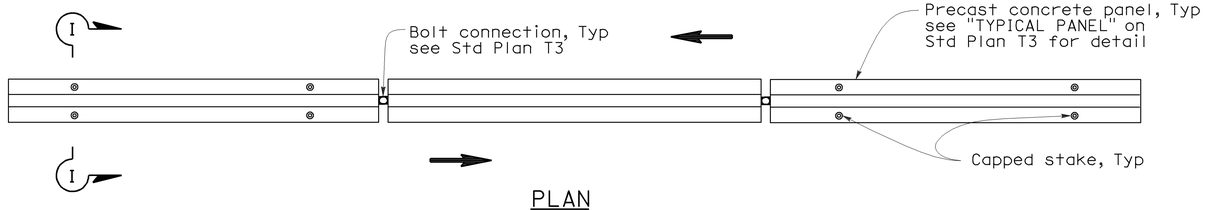

PLAN

RAILING STAKING CONFIGURATION FOR TWO-WAY TRAFFIC

See Note 1

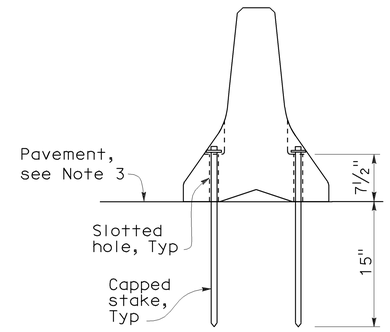

SECTION I-I

NOTES:

1. Where Type K Temporary Railing is placed as a temporary or long term barrier in two-way traffic on highways with less than 24" from the edge of traveled way, use four capped stakes per every other panel with end panels staked.
2. Where Type K Temporary Railing is placed 3" to 24" from the edge of an excavation on highways, use two capped stakes per panel along the traffic side.
3. Staked Type K Temporary Railing must be supported by at least 4" thick concrete, hot mix asphalt or existing asphalt concrete pavement.
4. The minimum yield strength for the washer must be 60,000 psi.
5. Direction of adjacent traffic indicated by ⟹.

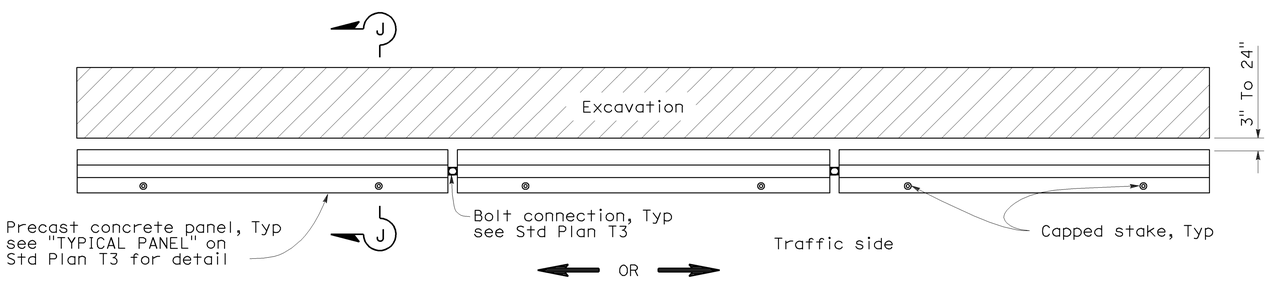

PLAN

RAILING STAKING CONFIGURATION ADJACENT TO AN EXCAVATION

See Note 2

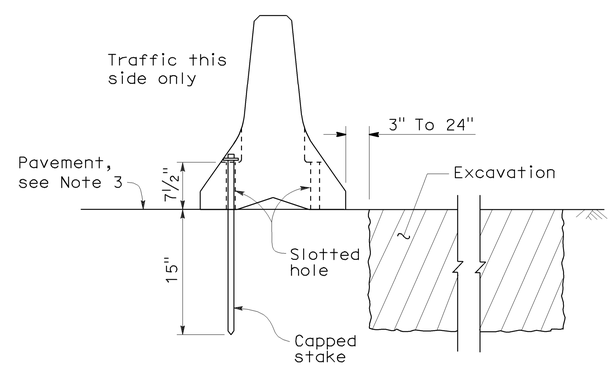

SECTION J-J

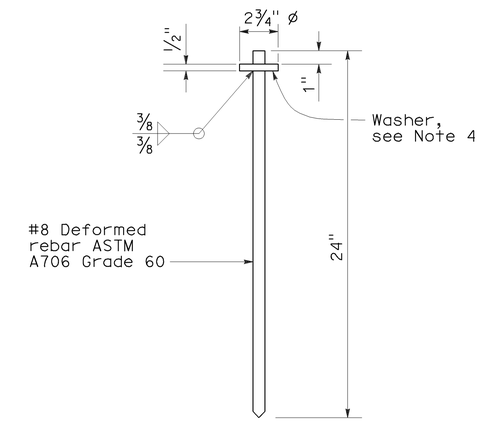

CAPPED STAKE DETAIL

STATE OF CALIFORNIA
DEPARTMENT OF TRANSPORTATION

TEMPORARY RAILING (TYPE K)

NO SCALE

NSP T3A DATED MAY 20, 2011 SUPPLEMENTS
THE STANDARD PLANS BOOK DATED MAY 2006.

NEW STANDARD PLAN NSP T3A

2006 NEW STANDARD PLAN NSP T3A