Dist	COUNTY	ROUTE	POST MILES TOTAL PROJECT	SHEET No.	TOTAL SHEETS
10	Mer,Sta, SJ	5	32.2/32.5, 0.0/28.1, 0.0/R12.4	1	112

STATE OF CALIFORNIA **ACNHPI-005-5(143)417E**

DEPARTMENT OF TRANSPORTATION

PROJECT PLANS FOR CONSTRUCTION ON

STATE HIGHWAY

IN MERCED, STANISLAUS, AND SAN JOAQUIN COUNTIES NEAR LATHROP FROM GARZAS CREEK BRIDGE TO TOM PAINE SLOUGH BRIDGE

TO BE SUPPLEMENTED BY STANDARD PLANS DATED 2010

INDEX OF PLANS

SHEET NO.	DESCRIPTION
1	TITLE AND LOCATION MAP
2-3	TYPICAL CROSS SECTIONS
4-22	CONSTRUCTION DETAILS
23	DRAINAGE DETAILS AND QUANTITIES
24	UTILITY PLAN
25	CONSTRUCTION AREA SIGNS
26-32	TRAFFIC HANDLING DETAILS AND QUANTITIES
33-38	PAVEMENT DELINEATION DETAILS AND QUANTITIES
39-53	SUMMARY OF QUANTITIES
54-65	ELECTRICAL PLANS
66-109	REVISED STANDARD PLANS

STRUCTURE PLANS

110-112 VARIOUS BRIDGES

THE STANDARD PLANS LIST APPLICABLE TO THIS CONTRACT IS INCLUDED IN THE NOTICE TO BIDDERS AND SPECIAL PROVISIONS BOOK.

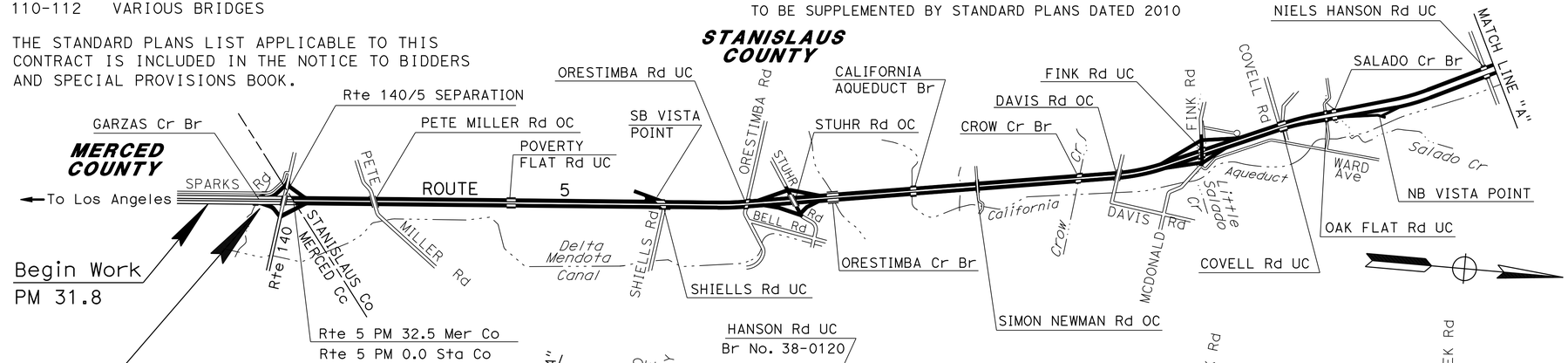

LOCATION MAP

THE CONTRACTOR SHALL POSSESS THE CLASS (OR CLASSES) OF LICENSE AS SPECIFIED IN THE "NOTICE TO BIDDERS."

PROJECT MANAGER ARVINDER BAJWA

DESIGN ENGINEER MICHAEL HUTCHISON

PROJECT ENGINEER REGISTERED CIVIL ENGINEER — DATE 2/11/14

REGISTERED PROFESSIONAL ENGINEER MASON L. LEUNG No. 71709 Exp. 12-31-15 CIVIL STATE OF CALIFORNIA

February 18, 2014

PLANS APPROVAL DATE

THE STATE OF CALIFORNIA OR ITS OFFICERS OR AGENTS SHALL NOT BE RESPONSIBLE FOR THE ACCURACY OR COMPLETENESS OF SCANNED COPIES OF THIS PLAN SHEET.

CONTRACT No.	10-0V6604
PROJECT ID	1000020667

LAST REVISION 00-00-00 DATE PLOTTED => 16-MAY-2014 TIME PLOTTED => 13:05

Dist	COUNTY	ROUTE	POST MILES TOTAL PROJECT	SHEET No.	TOTAL SHEETS
10	Mer,Sta, SJ	5	32.2/32.5, 0.0/28.1, 0.0/R12.4	2	112

REGISTERED CIVIL ENGINEER 2/11/14 DATE

02-18-14
PLANS APPROVAL DATE

REGISTERED PROFESSIONAL ENGINEER MASON L. LEUNG No. 71709 Exp. 12-31-15 CIVIL STATE OF CALIFORNIA

THE STATE OF CALIFORNIA OR ITS OFFICERS OR AGENTS SHALL NOT BE RESPONSIBLE FOR THE ACCURACY OR COMPLETENESS OF SCANNED COPIES OF THIS PLAN SHEET.

NOTES:

1. DIMENSIONS OF THE PAVEMENT STRUCTURES (STRUCTURAL SECTIONS) ARE SUBJECT TO TOLERANCES SPECIFIED IN THE STANDARD SPECIFICATIONS.
2. FOR ACCURATE RIGHT OF WAY, CONTACT RIGHT OF WAY ENGINEERING AT THE DISTRICT OFFICE.
3. EXISTING UTILITY FACILITIES HAVE NOT BEEN PLOTTED ON THESE PLANS.
4. FOR COLD PLANE DIMENSIONS AND LOCATIONS, SEE SUMMARY OF QUANTITIES AND CONSTRUCTION DETAILS.
5. FOR HMA DIKE TYPE AND LOCATIONS, SEE SUMMARY OF QUANTITIES.
6. FOR SAFETY EDGE DETAILS, SEE REVISED STANDARD PLANS RSP P74 AND RSP P75.
7. EXISTING UTILITY FACILITIES HAVE NOT BEEN INCLUDED ON THESE PLANS.

PAVEMENT CLIMATE REGION

INLAND VALLEY

DESIGN DESIGNATION

ADT (2014)	40,600	D 65%
ADT (2024)	49,800	T 20%
DHV	5,000	V 70 MPH

ABBREVIATIONS

RBWC - RUBBERIZED BONDED WEARING COURSE
RSC - RAPID STRENGTH CONCRETE
LCBRS - LEAN CONCRETE BASE (RAPID SETTING)
SE - SAFETY EDGE

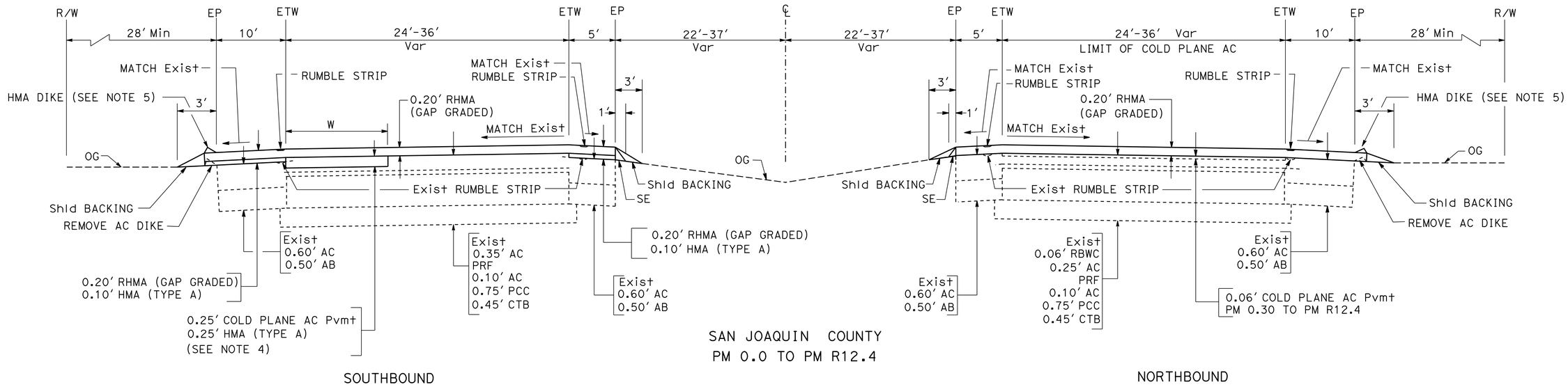

SAN JOAQUIN COUNTY
PM 0.0 TO PM R12.4

SOUTHBOUND NORTHBOUND

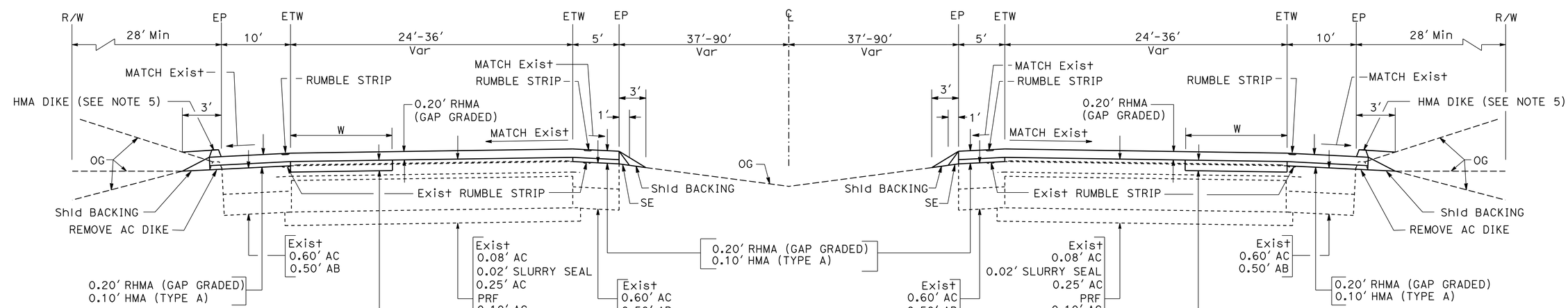

STANISLAUS COUNTY
PM 0.0 TO PM 22.9
PM 23.09 TO PM 28.1

SOUTHBOUND NORTHBOUND

ROUTE 5

TYPICAL CROSS SECTIONS

NO SCALE **X-1**

STATE OF CALIFORNIA - DEPARTMENT OF TRANSPORTATION
Caltrans® DESIGN
FUNCTIONAL SUPERVISOR MICHAEL HUTCHISON
CALCULATED-DESIGNED BY MANUEL PALATINO
CHECKED BY MASON LEUNG
REVISED BY MP
DATE REVISED 02/18/14

LAST REVISION 00-00-00
DATE PLOTTED => 20-MAY-2014
TIME PLOTTED => 07:43

Dist	COUNTY	ROUTE	POST MILES TOTAL PROJECT	SHEET No.	TOTAL SHEETS
10	Mer,Sta, SJ	5	32.2/32.5, 0.0/28.1, 0.0/R12.4	3	112

REGISTERED CIVIL ENGINEER 2/11/14 DATE

02-18-14
PLANS APPROVAL DATE

REGISTERED PROFESSIONAL ENGINEER MASON L. LEUNG No. 71709 Exp. 12-31-15 CIVIL STATE OF CALIFORNIA

THE STATE OF CALIFORNIA OR ITS OFFICERS OR AGENTS SHALL NOT BE RESPONSIBLE FOR THE ACCURACY OR COMPLETENESS OF SCANNED COPIES OF THIS PLAN SHEET.

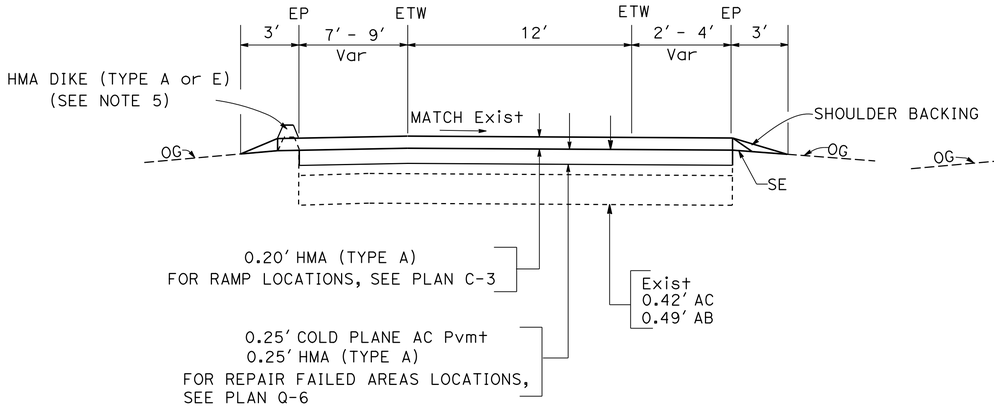

RAMP TYPICAL SECTION

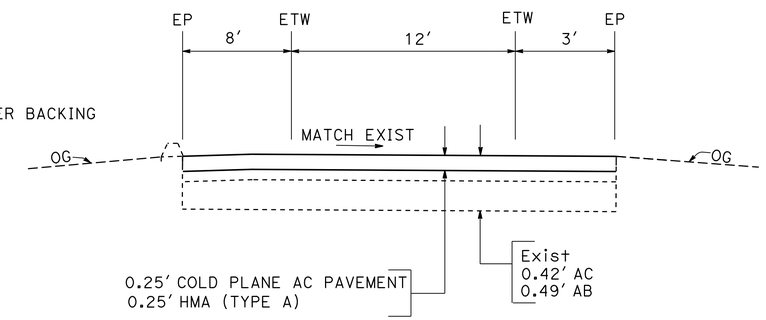

MERCED COUNTY

PM 32.21 NB OFF-RAMP TO ROUTE 140

PM 32.25 SB ON-RAMP FROM ROUTE 140

RAMP TYPICAL SECTION

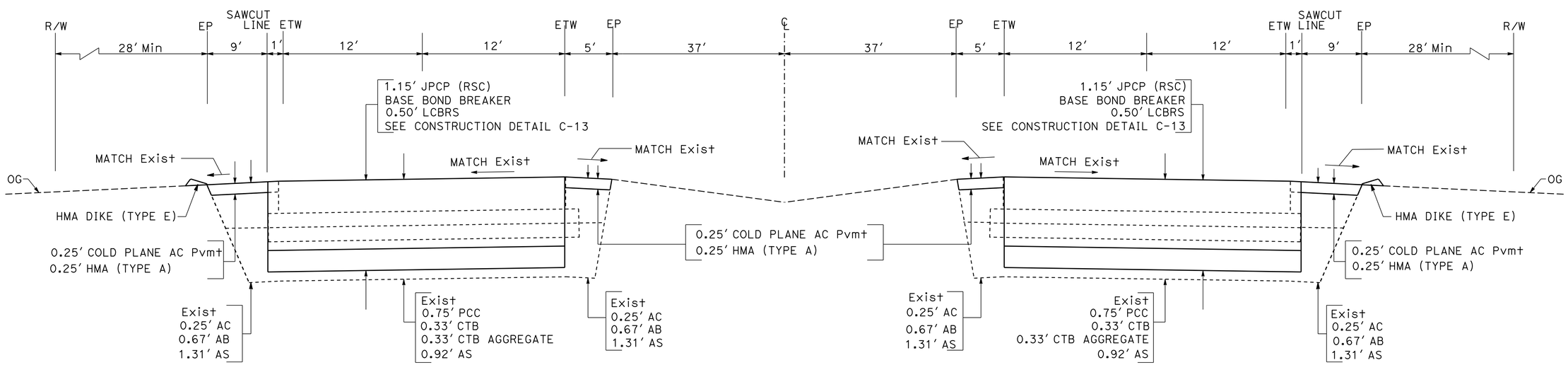

SOUTHBOUND NORTHBOUND

STANISLAUS COUNTY

INGRAM CREEK ROAD UC EB - INGRAM CREEK BRIDGE BB

PM 23.01 TO PM 23.07

ROUTE 5

TYPICAL CROSS SECTIONS

NO SCALE

X-2

STATE OF CALIFORNIA - DEPARTMENT OF TRANSPORTATION

Caltrans® **DESIGN**

FUNCTIONAL SUPERVISOR: MICHAEL HUTCHISON

CALCULATED-DESIGNED BY: MANUEL PALATINO

CHECKED BY: MASON LEUNG

REVISED BY: MP

DATE REVISED: 02/18/14

LAST REVISION 00-00-00

DATE PLOTTED => 16-MAY-2014

TIME PLOTTED => 13:05

Dist	COUNTY	ROUTE	POST MILES TOTAL PROJECT	SHEET No.	TOTAL SHEETS
10	Mer,Sta, SJ	5	32.2/32.5, 0.0/28.1, 0.0/R12.4	4	112

REGISTERED CIVIL ENGINEER 2/11/14 DATE

02-18-14
PLANS APPROVAL DATE

REGISTERED PROFESSIONAL ENGINEER MASON L. LEUNG No. 71709 Exp. 12-31-15 CIVIL STATE OF CALIFORNIA

THE STATE OF CALIFORNIA OR ITS OFFICERS OR AGENTS SHALL NOT BE RESPONSIBLE FOR THE ACCURACY OR COMPLETENESS OF SCANNED COPIES OF THIS PLAN SHEET.

LEGEND:

- RHMA (GAP GRADED)
- HMA (TYPE A)
- COLD PLANE AC PAVEMENT
- REPLACE CONCRETE PAVEMENT JPCP (RSC)

ABBREVIATIONS:

RSC - RAPID STRENGTH CONCRETE
LCBRS - LEAN CONCRETE BASE (RAPID STRENGTH)
CRT - CONTOLLED RELEASING TERMINAL

NOTE:

EXISTING UTILITY FACILITIES HAVE NOT BEEN INCLUDED ON THESE PLANS.

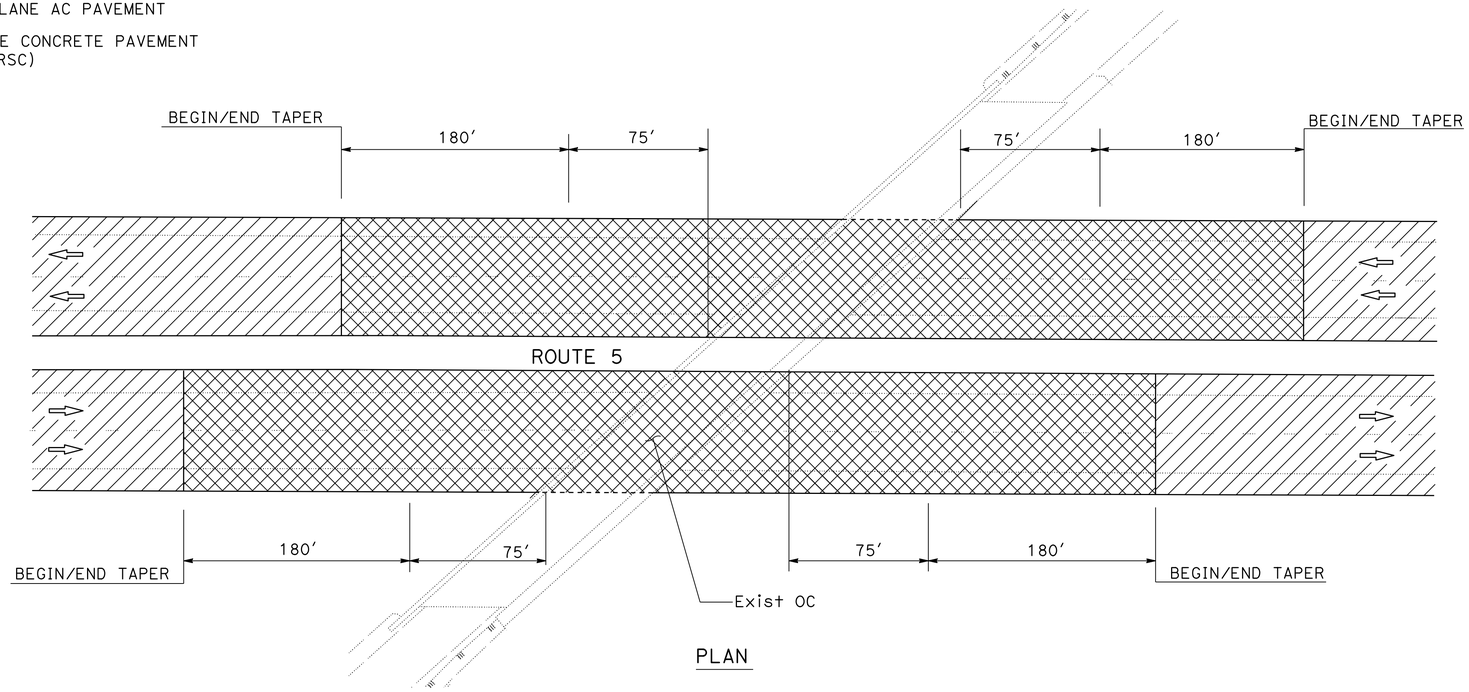

PLAN

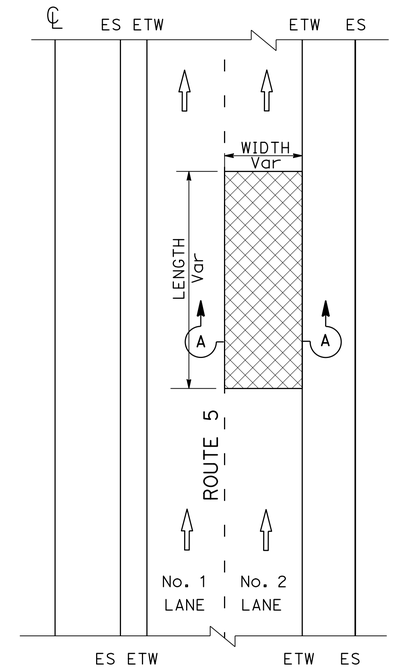

PLAN

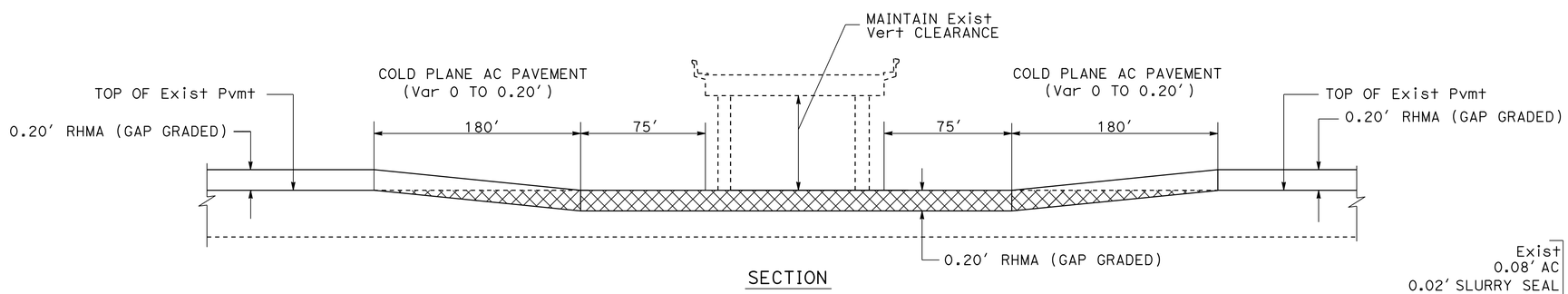

SECTION

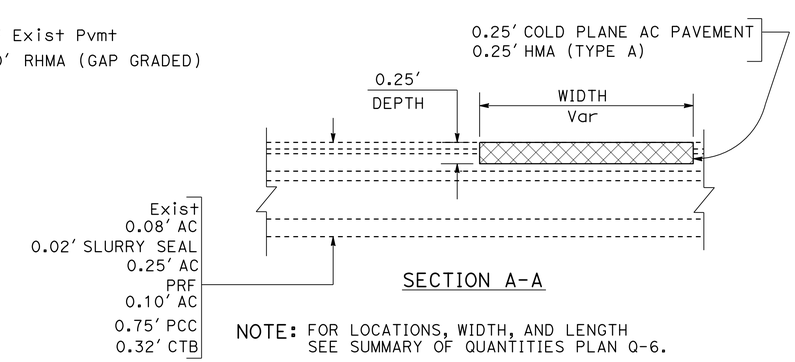

SECTION A-A

NOTE: FOR LOCATIONS, WIDTH, AND LENGTH SEE SUMMARY OF QUANTITIES PLAN Q-6.

OVERCROSSING OVERLAY PAVEMENT TRANSITION TAPER

STANISLAUS COUNTY

PETE MILLER ROAD OC	PM 0.89
STUHR ROAD OC	PM 5.51
SIMON NEWMAN ROAD OC	PM 7.45
DAVIS ROAD OC	PM 9.45

SAN JOAQUIN COUNTY

BLEWETT ROAD OC	PM 2.46
DURHAM FERRY ROAD OC	PM 5.47
KASSON ROAD OC	PM 11.06
11th STREET-OLD Rte 205 OC	PM R11.79

REPAIR FAILED AREAS DETAIL

CONSTRUCTION DETAILS

NO SCALE

C-1

FUNCTIONAL SUPERVISOR: MICHAEL HUTCHISON
CALCULATED-DESIGNED BY: MANUEL PALATINO
CHECKED BY: MASON LEUNG
REVISED BY: MP
DATE REVISED: 02/11/14

STATE OF CALIFORNIA - DEPARTMENT OF TRANSPORTATION
Caltrans® DESIGN

LAST REVISION 00-00-00
DATE PLOTTED => 20-MAY-2014
TIME PLOTTED => 07:45

Dist	COUNTY	ROUTE	POST MILES TOTAL PROJECT	SHEET No.	TOTAL SHEETS
10	Mer,Sta, SJ	5	32.2/32.5, 0.0/28.1, 0.0/R12.4	5	112

REGISTERED CIVIL ENGINEER 2/11/14 DATE

02-18-14
PLANS APPROVAL DATE

REGISTERED PROFESSIONAL ENGINEER MASON L. LEUNG No. 71709 Exp. 12-31-15 CIVIL STATE OF CALIFORNIA

THE STATE OF CALIFORNIA OR ITS OFFICERS OR AGENTS SHALL NOT BE RESPONSIBLE FOR THE ACCURACY OR COMPLETENESS OF SCANNED COPIES OF THIS PLAN SHEET.

NOTES:

1. FOR ACCCURATE RIGHT OF WAY DATA, CONTACT RIGHT OF WAY ENGINEERING AT THE DISTRICT OFFICE.
2. EXISTING UTILITY FACILITIES HAVE NOT BEEN INCLUDED ON THESE PLANS.

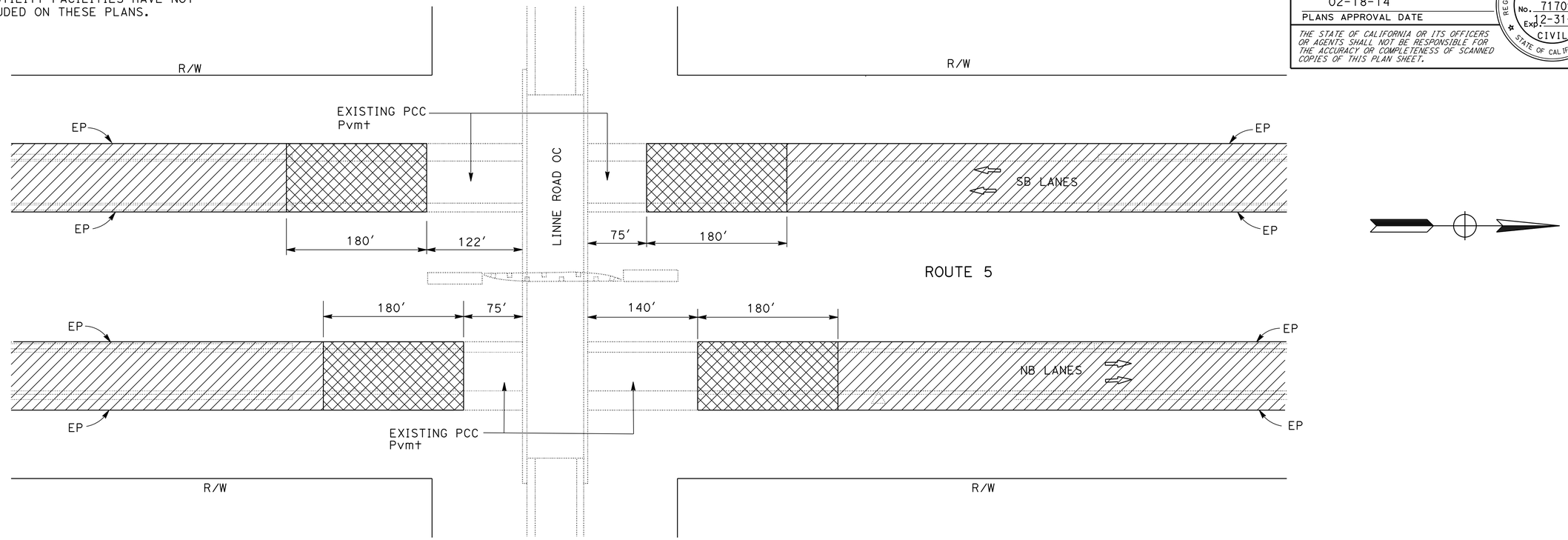

PLAN

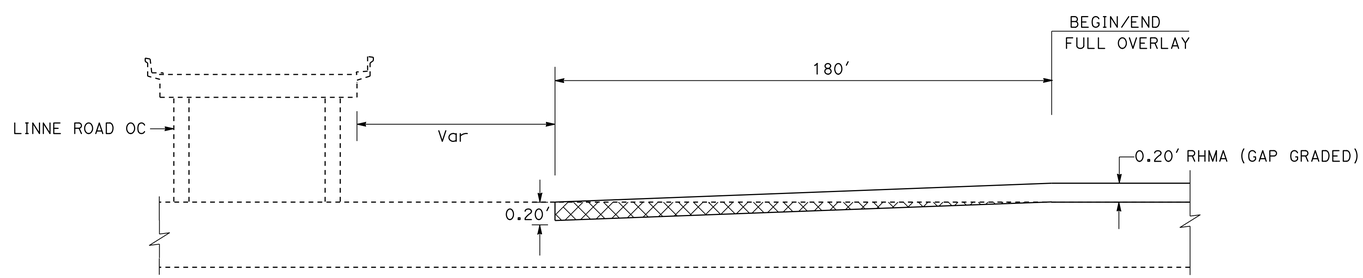

SECTION

PAVING DETAIL

ROUTE 5-SJ-PM 7.48 / LINNE ROAD OC

CONSTRUCTION DETAILS

NO SCALE

C-2

STATE OF CALIFORNIA - DEPARTMENT OF TRANSPORTATION
Caltrans® DESIGN

FUNCTIONAL SUPERVISOR: MICHAEL HUTCHISON
CALCULATED-DESIGNED BY: MANUEL PALATINO
CHECKED BY: MASON LEUNG
REVISED BY: MP
DATE REVISED: 02/11/14

LAST REVISION 00-00-00
DATE PLOTTED => 20-MAY-2014
TIME PLOTTED => 07:45

Dist	COUNTY	ROUTE	POST MILES TOTAL PROJECT	SHEET No.	TOTAL SHEETS
10	Mer,Sta, SJ	5	32.2/32.5, 0.0/28.1, 0.0/R12.4	6	112

REGISTERED CIVIL ENGINEER 2/11/14 DATE

02-18-14
PLANS APPROVAL DATE

REGISTERED PROFESSIONAL ENGINEER MASON L. LEUNG No. 71709 Exp. 12-31-15 CIVIL STATE OF CALIFORNIA

THE STATE OF CALIFORNIA OR ITS OFFICERS OR AGENTS SHALL NOT BE RESPONSIBLE FOR THE ACCURACY OR COMPLETENESS OF SCANNED COPIES OF THIS PLAN SHEET.

NOTE:
EXISTING UTILITY FACILITIES HAVE NOT BEEN INCLUDED ON THESE PLANS.

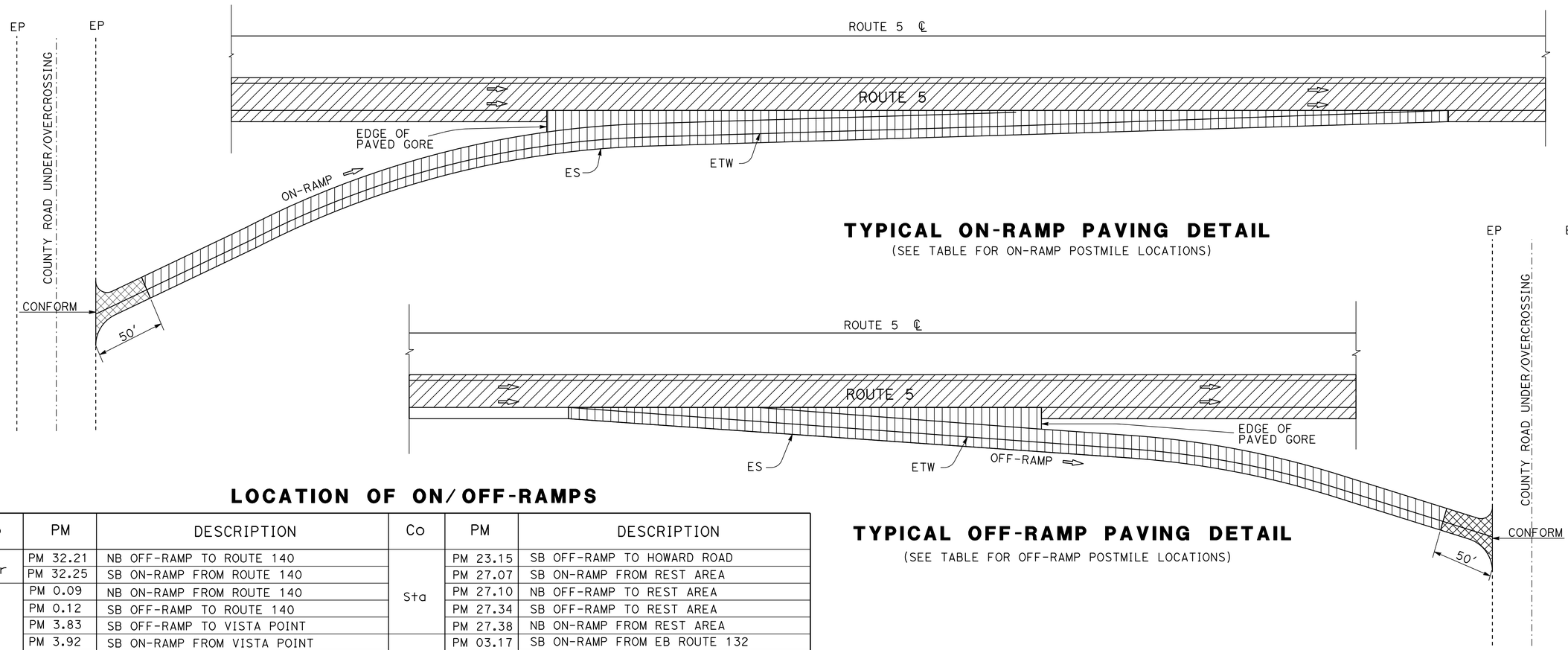

TYPICAL ON-RAMP PAVING DETAIL
(SEE TABLE FOR ON-RAMP POSTMILE LOCATIONS)

TYPICAL OFF-RAMP PAVING DETAIL
(SEE TABLE FOR OFF-RAMP POSTMILE LOCATIONS)

LOCATION OF ON/OFF-RAMPS

Co	PM	DESCRIPTION	Co	PM	DESCRIPTION
Mer	PM 32.21	NB OFF-RAMP TO ROUTE 140	Sta	PM 23.15	SB OFF-RAMP TO HOWARD ROAD
	PM 32.25	SB ON-RAMP FROM ROUTE 140		PM 27.07	SB ON-RAMP FROM REST AREA
Sta	PM 0.09	NB ON-RAMP FROM ROUTE 140		PM 27.10	NB OFF-RAMP TO REST AREA
	PM 0.12	SB OFF-RAMP TO ROUTE 140		PM 27.34	SB OFF-RAMP TO REST AREA
	PM 3.83	SB OFF-RAMP TO VISTA POINT		PM 27.38	NB ON-RAMP FROM REST AREA
	PM 3.92	SB ON-RAMP FROM VISTA POINT	SJ	PM 03.17	SB ON-RAMP FROM EB ROUTE 132
	PM 5.34	SB ON-RAMP FROM STUHR ROAD		PM 03.18	NB OFF-RAMP TO EB ROUTE 132
	PM 5.39	NB OFF-RAMP TO STUHR ROAD		PM 03.38	SB OFF-RAMP TO EB ROUTE 132 LOOP
	PM 5.62	SB OFF-RAMP TO STUHR ROAD		PM 03.38	NB ON-RAMP FROM EB ROUTE 132 LOOP
	PM 5.64	NB ON-RAMP FROM STUHR ROAD		PM 03.51	SB ON-RAMP FROM WB ROUTE 132 LOOP
	PM 10.57	NB OFF-RAMP TO FINK ROAD		PM 03.51	NB OFF-RAMP TO WB ROUTE 132 LOOP
	PM 10.60	SB ON-RAMP FROM FINK ROAD		PM 03.64	NB ON-RAMP FROM WB ROUTE 132
	PM 10.85	SB OFF-RAMP TO FINK ROAD		PM 03.65	SB OFF-RAMP TO WB ROUTE 132
	PM 10.88	NB ON-RAMP FROM FINK ROAD		PM 06.55	NB OFF-RAMP TO ROUTE 33
	PM 12.84	NB OFF-RAMP TO VISTA POINT		PM 06.60	SB ON-RAMP FROM ROUTE 33
	PM 12.95	NB ON-RAMP FROM VISTA POINT		PM 06.76	SB OFF-RAMP TO ROUTE 33
	PM 15.71	SB ON-RAMP FROM DEL PUERTO CANYON Rd		PM 06.76	NB ON-RAMP FROM ROUTE 33
	PM 15.71	NB OFF-RAMP TO DEL PUERTO CANYON Rd		PM 10.79	NB OFF-RAMP TO KASSON ROAD
	PM 16.03	SB OFF-RAMP TO DEL PUERTO CANYON Rd		PM 10.86	SB ON-RAMP FROM KASSON ROAD
	PM 16.03	NB ON-RAMP FROM DEL PUERTO CANYON Rd		PM 10.99	NB ON-RAMP FROM KASSON ROAD
	PM 22.85	NB OFF-RAMP TO HOWARD ROAD		PM R11.32	SB OFF-RAMP TO KASSON ROAD
	PM 22.87	SB ON-RAMP FROM HOWARD ROAD		PM R12.07	SB OFF-RAMP TRACY EXIT @ 11th St
	PM 23.14	NB ON-RAMP FROM HOWARD ROAD		PM R12.19	NB ON-RAMP FROM OLD Rte 205-11th St

CONSTRUCTION DETAILS
NO SCALE

C-3

REVISED BY	DATE REVISED
HR	01/21/14

HERNANDO RAPOSAS — CALCULATED-DESIGNED BY
MASON LEUNG — CHECKED BY
FUNCTIONAL SUPERVISOR: MICHAEL HUTCHISON

STATE OF CALIFORNIA - DEPARTMENT OF TRANSPORTATION
Caltrans® DESIGN

LAST REVISION 00-00-00
DATE PLOTTED => 16-MAY-2014
TIME PLOTTED => 13:05

Dist	COUNTY	ROUTE	POST MILES TOTAL PROJECT	SHEET No.	TOTAL SHEETS
10	Mer,Sta, SJ	5	32.2/32.5, 0.0/28.1, 0.0/R12.4	7	112

REGISTERED CIVIL ENGINEER 2/11/14 DATE

02-18-14
PLANS APPROVAL DATE

REGISTERED PROFESSIONAL ENGINEER MASON L. LEUNG No. 71709 Exp. 12-31-15 CIVIL STATE OF CALIFORNIA

THE STATE OF CALIFORNIA OR ITS OFFICERS OR AGENTS SHALL NOT BE RESPONSIBLE FOR THE ACCURACY OR COMPLETENESS OF SCANNED COPIES OF THIS PLAN SHEET.

NOTE:
EXISTING UTILITY FACILITIES HAVE NOT BEEN INCLUDED ON THESE PLANS.

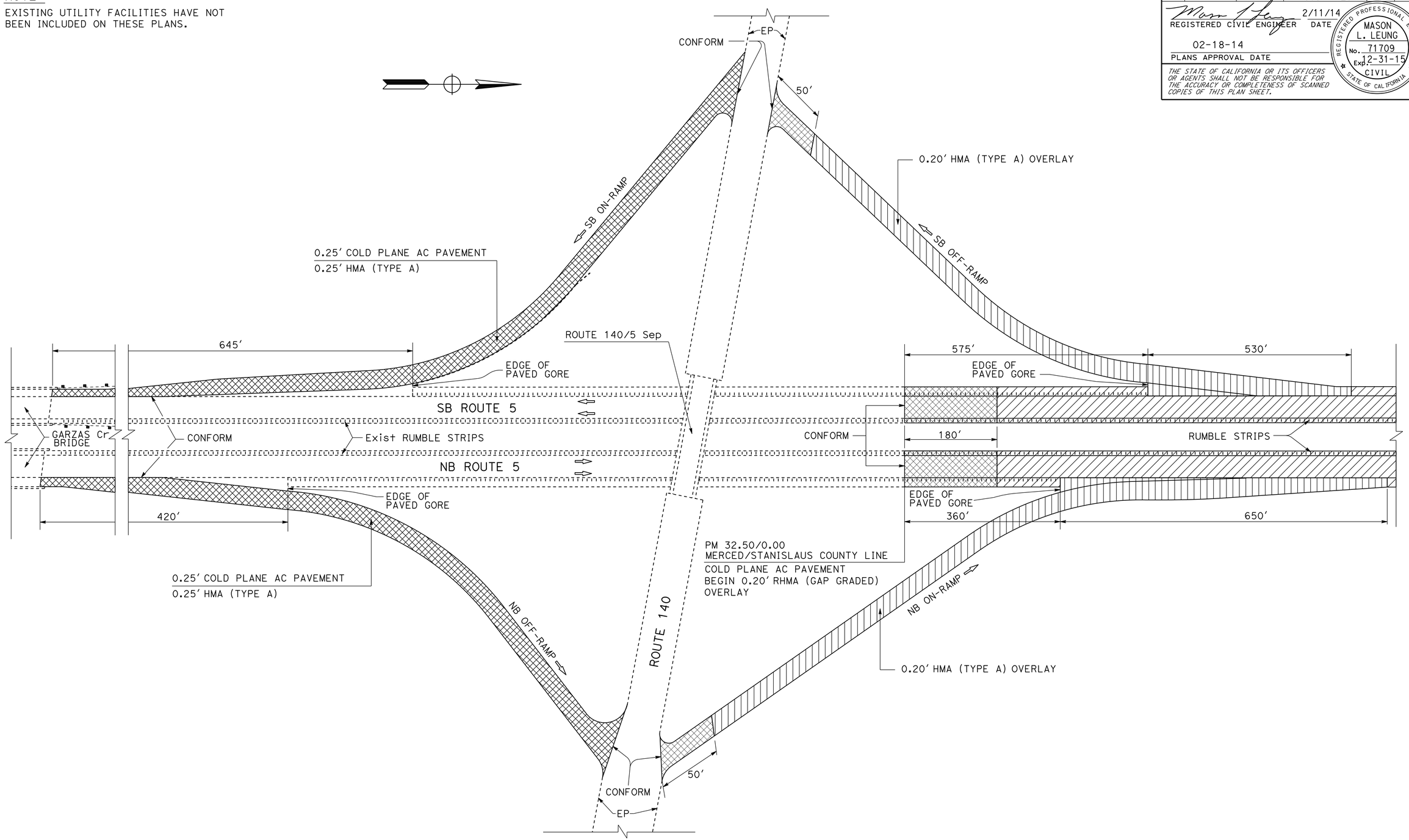

PAVING LIMITS AT ON/OFF-RAMPS OF ROUTE 5/ROUTE 140

(SEE TABLE FOR ON/OFF-RAMPS POSTMILE LOCATIONS)

CONSTRUCTION DETAILS

NO SCALE

C-4

STATE OF CALIFORNIA - DEPARTMENT OF TRANSPORTATION
Caltrans DESIGN

FUNCTIONAL SUPERVISOR: MICHAEL HUTCHISON
CALCULATED-DESIGNED BY: HERNANDO RAPOSAS
CHECKED BY: MASON LEUNG
REVISED BY: HR
DATE REVISED: 01/21/14

LAST REVISION 00-00-00
DATE PLOTTED => 16-MAY-2014
TIME PLOTTED => 13:05

Dist	COUNTY	ROUTE	POST MILES TOTAL PROJECT	SHEET No.	TOTAL SHEETS
10	Mer,Sta, SJ	5	32.2/32.5, 0.0/28.1, 0.0/R12.4	8	112

REGISTERED CIVIL ENGINEER 2/11/14 DATE

02-18-14
PLANS APPROVAL DATE

REGISTERED PROFESSIONAL ENGINEER MASON L. LEUNG No. 71709 Exp. 12-31-15 CIVIL STATE OF CALIFORNIA

THE STATE OF CALIFORNIA OR ITS OFFICERS OR AGENTS SHALL NOT BE RESPONSIBLE FOR THE ACCURACY OR COMPLETENESS OF SCANNED COPIES OF THIS PLAN SHEET.

NOTE:

EXISTING UTILITY FACILITIES HAVE NOT BEEN INCLUDED ON THESE PLANS.

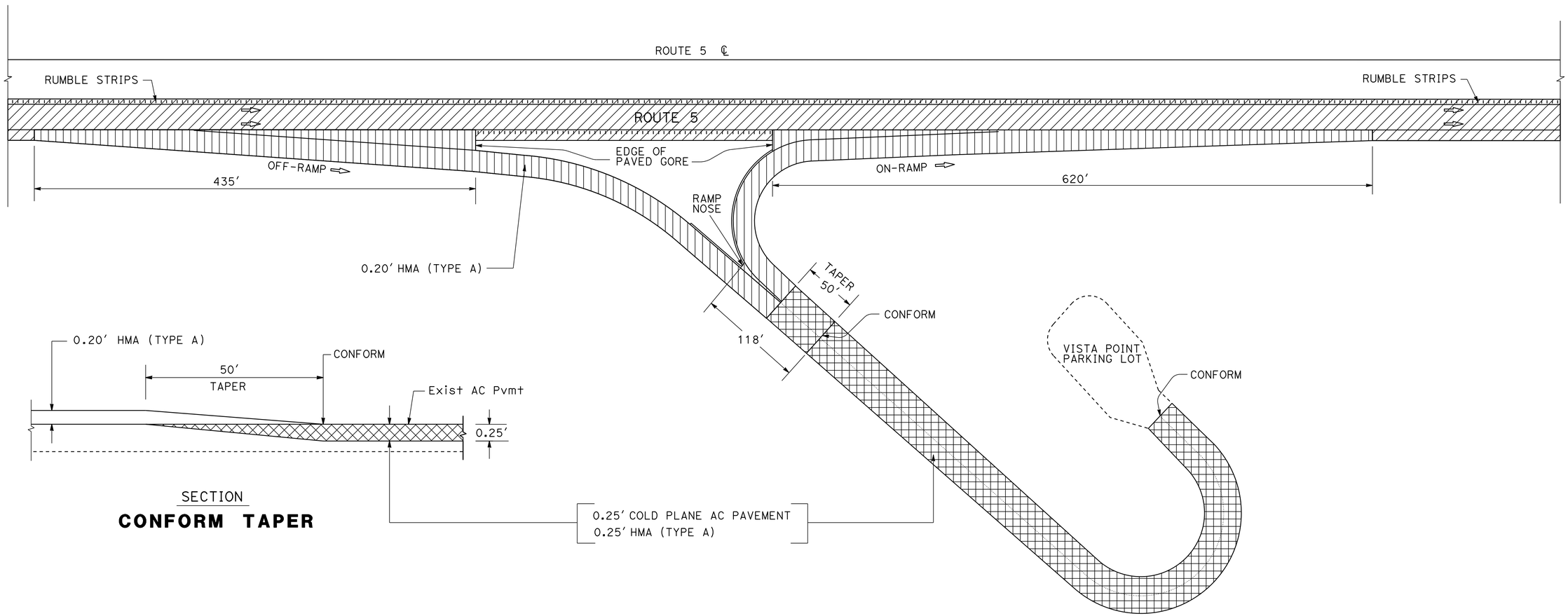

PAVING LIMITS AT ON/OFF-RAMPS OF VISTA POINT

SB Sta PM 3.83
NB Sta PM 12.84

CONSTRUCTION DETAILS

NO SCALE

C-5

REVISED BY	DATE REVISED
HR	01/21/14

HERNANDO RAPOSAS
MASON LEUNG
CALCULATED-DESIGNED BY
CHECKED BY
FUNCTIONAL SUPERVISOR
MICHAEL HUTCHISON

STATE OF CALIFORNIA - DEPARTMENT OF TRANSPORTATION
Caltrans
DESIGN

LAST REVISION 00-00-00
DATE PLOTTED => 16-MAY-2014
TIME PLOTTED => 13:05

Dist	COUNTY	ROUTE	POST MILES TOTAL PROJECT	SHEET No.	TOTAL SHEETS
10	Mer,Sta, SJ	5	32.2/32.5, 0.0/28.1, 0.0/R12.4	9	112

REGISTERED CIVIL ENGINEER 2/11/14 DATE

02-18-14
PLANS APPROVAL DATE

REGISTERED PROFESSIONAL ENGINEER MASON L. LEUNG No. 71709 Exp. 12-31-15 CIVIL STATE OF CALIFORNIA

THE STATE OF CALIFORNIA OR ITS OFFICERS OR AGENTS SHALL NOT BE RESPONSIBLE FOR THE ACCURACY OR COMPLETENESS OF SCANNED COPIES OF THIS PLAN SHEET.

NOTE:

EXISTING UTILITY FACILITIES HAVE NOT BEEN INCLUDED ON THESE PLANS.

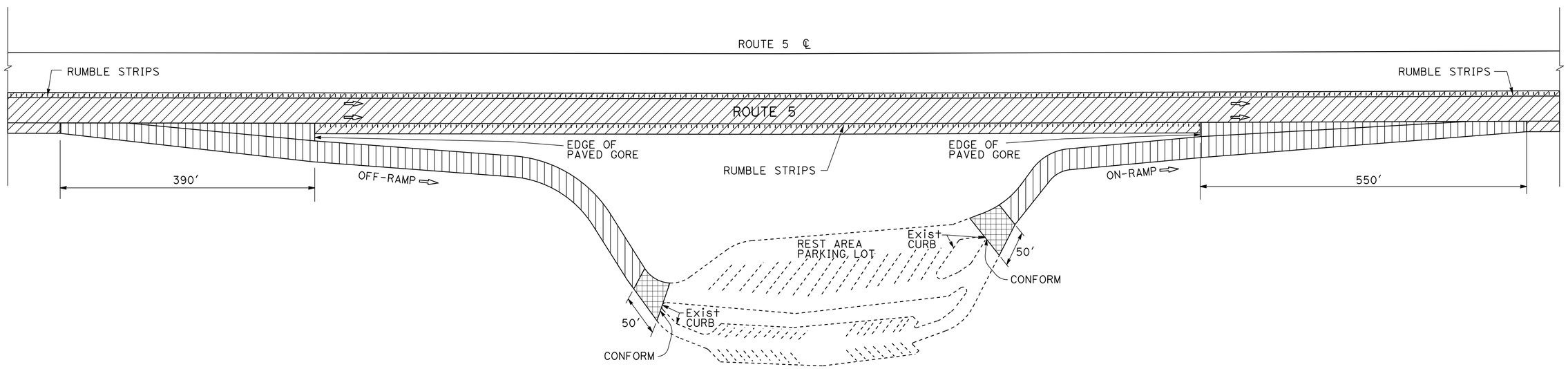

PAVING LIMITS AT ON/OFF-RAMPS OF REST AREA

NB Sta PM 27.10
SB Sta PM 27.34

CONSTRUCTION DETAILS

NO SCALE

C-6

REVISED BY	HR
DATE REVISED	01/21/14
CALCULATED-DESIGNED BY	HERNANDO RAPOSAS
CHECKED BY	MASON LEUNG
FUNCTIONAL SUPERVISOR	MICHAEL HUTCHISON

STATE OF CALIFORNIA - DEPARTMENT OF TRANSPORTATION
Caltrans® DESIGN

LAST REVISION 00-00-00
DATE PLOTTED => 16-MAY-2014
TIME PLOTTED => 13:05

Dist	COUNTY	ROUTE	POST MILES TOTAL PROJECT	SHEET No.	TOTAL SHEETS
10	Mer,Sta, SJ	5	32.2/32.5, 0.0/28.1, 0.0/R12.4	10	112

REGISTERED CIVIL ENGINEER 2/11/14 DATE

02-18-14
PLANS APPROVAL DATE

REGISTERED PROFESSIONAL ENGINEER MASON L. LEUNG No. 71709 Exp. 12-31-15 CIVIL STATE OF CALIFORNIA

THE STATE OF CALIFORNIA OR ITS OFFICERS OR AGENTS SHALL NOT BE RESPONSIBLE FOR THE ACCURACY OR COMPLETENESS OF SCANNED COPIES OF THIS PLAN SHEET.

NOTE:
EXISTING UTILITY FACILITIES HAVE NOT BEEN INCLUDED ON THESE PLANS.

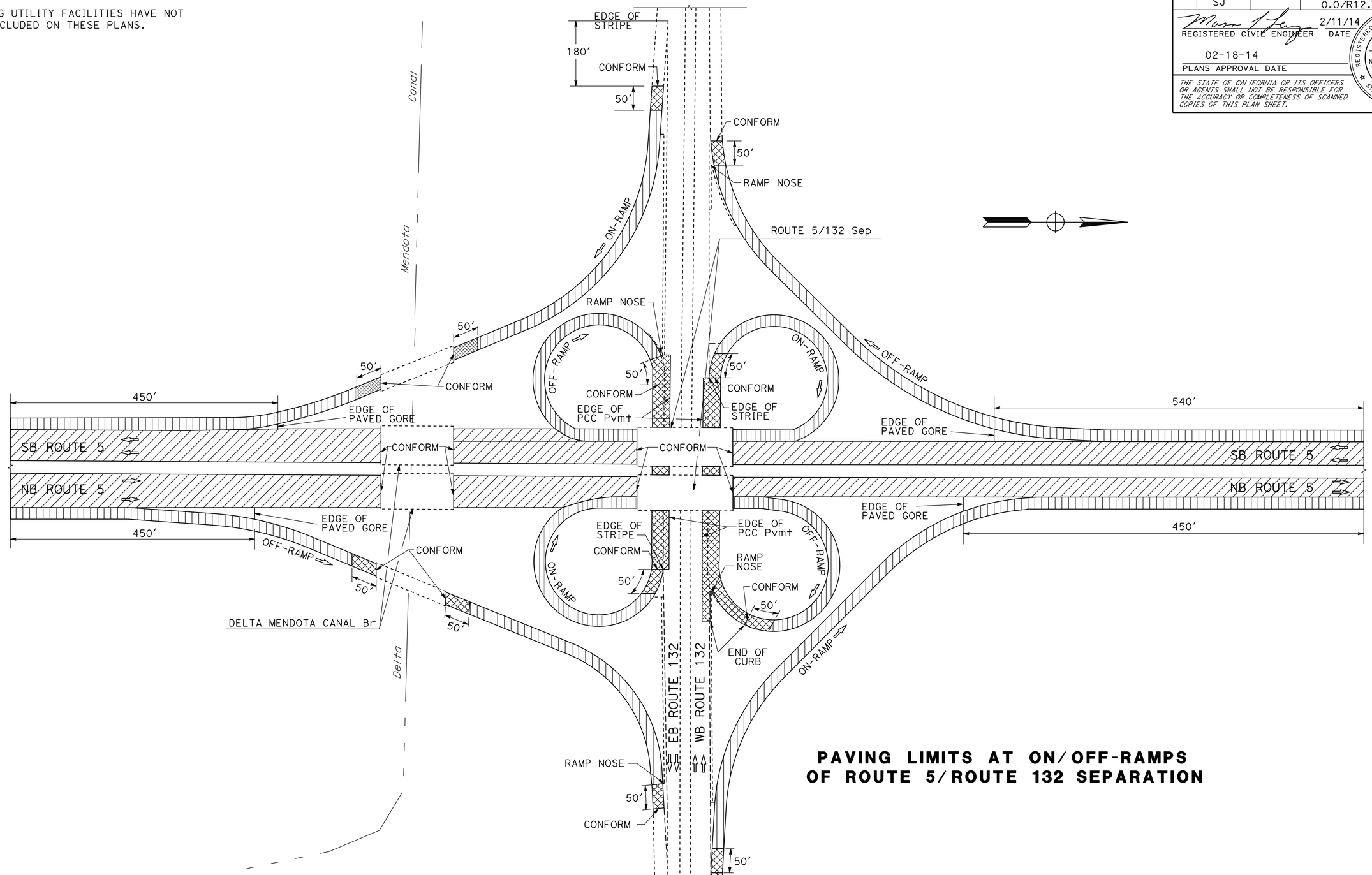

PAVING LIMITS AT ON/OFF-RAMPS OF ROUTE 5/ROUTE 132 SEPARATION

CONSTRUCTION DETAILS
NO SCALE
C-7

STATE OF CALIFORNIA - DEPARTMENT OF TRANSPORTATION
Caltrans® **DESIGN**
FUNCTIONAL SUPERVISOR: MICHAEL HUTCHISON
CALCULATED-DESIGNED BY: HERNANDO RAPOSAS
CHECKED BY: MASON LEUNG
REVISED BY: HR
DATE REVISED: 02/18/14

LAST REVISION 00-00-00
DATE PLOTTED => 16-MAY-2014
TIME PLOTTED => 13:05

Dist	COUNTY	ROUTE	POST MILES TOTAL PROJECT	SHEET No.	TOTAL SHEETS
10	Mer,Sta, SJ	5	32.2/32.5, 0.0/28.1, 0.0/R12.4	11	112

REGISTERED CIVIL ENGINEER 2/11/14 DATE

02-18-14
PLANS APPROVAL DATE

REGISTERED PROFESSIONAL ENGINEER MASON L. LEUNG No. 71709 Exp. 12-31-15 CIVIL STATE OF CALIFORNIA

THE STATE OF CALIFORNIA OR ITS OFFICERS OR AGENTS SHALL NOT BE RESPONSIBLE FOR THE ACCURACY OR COMPLETENESS OF SCANNED COPIES OF THIS PLAN SHEET.

NOTE:

EXISTING UTILITY FACILITIES HAVE NOT BEEN INCLUDED ON THESE PLANS.

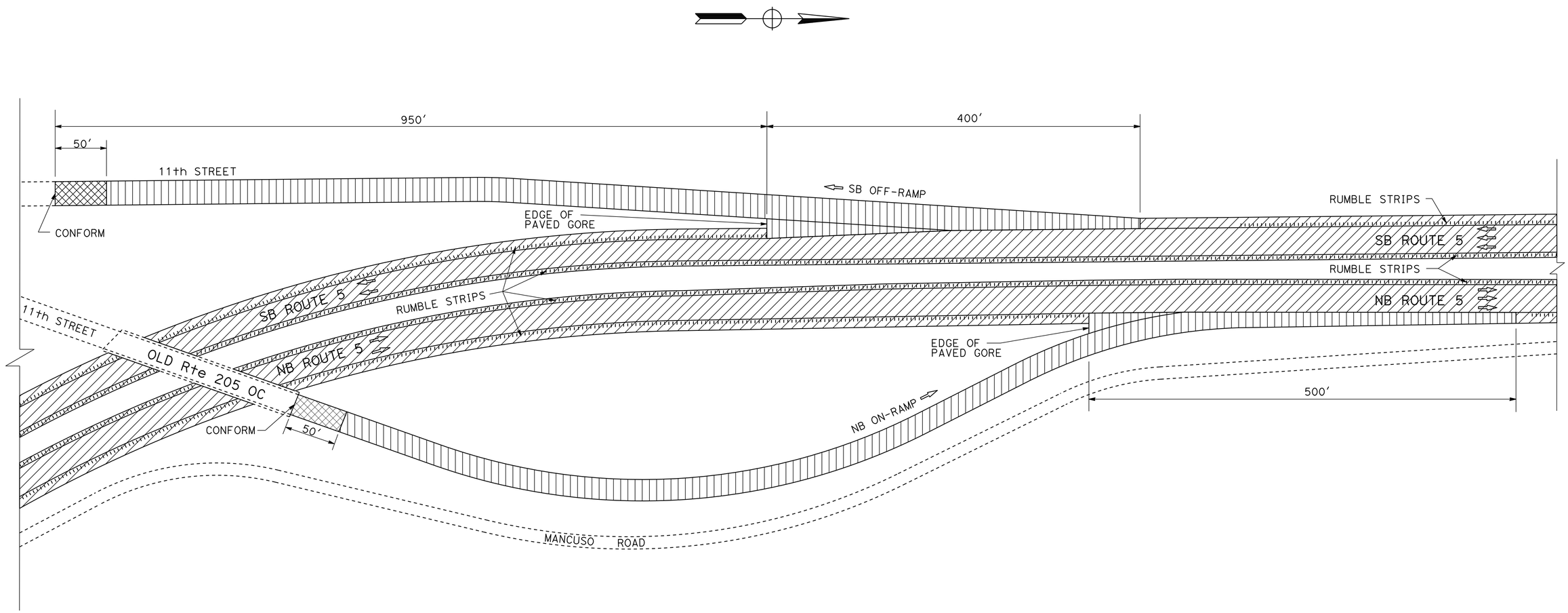

PAVING LIMITS AT ON/OFF-RAMPS OF ROUTE 5/11th STREET

SJ PM R11.79

CONSTRUCTION DETAILS

NO SCALE

C-8

REVISED BY	HR
DATE REVISED	01/21/14
CALCULATED-DESIGNED BY	HERNANDO RAPOSAS
CHECKED BY	MASON LEUNG
FUNCTIONAL SUPERVISOR	MICHAEL HUTCHISON

STATE OF CALIFORNIA - DEPARTMENT OF TRANSPORTATION

Caltrans® DESIGN

LAST REVISION 00-00-00 | DATE PLOTTED => 16-MAY-2014 | TIME PLOTTED => 13:05

Dist	COUNTY	ROUTE	POST MILES TOTAL PROJECT	SHEET No.	TOTAL SHEETS
10	Mer,Sta, SJ	5	32.2/32.5, 0.0/28.1, 0.0/R12.4	12	112

REGISTERED CIVIL ENGINEER 2/11/14 DATE

02-18-14
PLANS APPROVAL DATE

REGISTERED PROFESSIONAL ENGINEER MASON L. LEUNG No. 71709 Exp. 12-31-15 CIVIL STATE OF CALIFORNIA

THE STATE OF CALIFORNIA OR ITS OFFICERS OR AGENTS SHALL NOT BE RESPONSIBLE FOR THE ACCURACY OR COMPLETENESS OF SCANNED COPIES OF THIS PLAN SHEET.

NOTE:
EXISTING UTILITY FACILITIES HAVE NOT BEEN INCLUDED ON THESE PLANS.

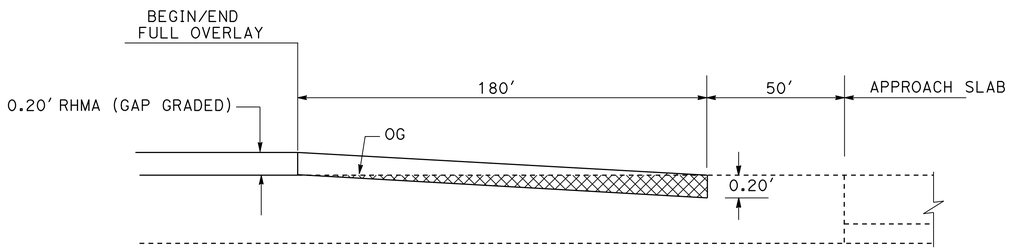

SECTION

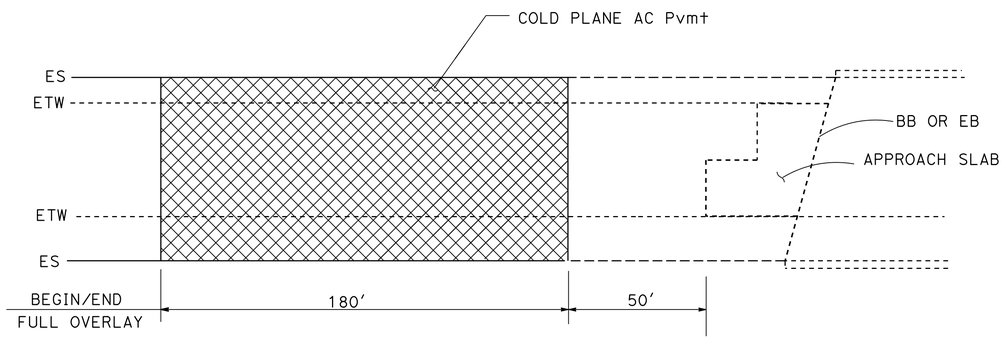

PLAN

TYPICAL BRIDGE APPROACH SLAB PAVEMENT TRANSITION TAPER

STANISLAUS COUNTY

LOCATION	Dir	PM	DESCRIPTION
POVERTY FLAT UC	NB/SB	2.48	BB & EB
SHIELLS ROAD UC	NB/SB	3.99	BB & EB
ORESTIMBA ROAD UC	NB/SB	5.02	BB & EB
ORESTIMBA CREEK BRIDGE	NB/SB	5.73	BB & EB
CALIFORNIA AQUEDUCT	NB/SB	6.47	BB & EB
CROW CREEK BRIDGE	SB	8.94	BB & EB
CROW CREEK BRIDGE	NB	8.95	BB & EB
FINK ROAD UC	NB/SB	10.71	BB & EB
COVELL ROAD UC	NB/SB	11.22	BB & EB
OAK FLAT ROAD UC	NB/SB	12.53	BB & EB
SALADO CREEK BRIDGE	NB/SB	12.68	BB & EB
NIELS HANSON ROAD UC	NB/SB	14.94	BB & EB
DEL PUERTO CANYON ROAD UC	NB/SB	15.86	BB & EB
DEL PUERTO CREEK ROAD UC	NB/SB	18.31	BB & EB
KERN CREEK ROAD UC	NB	20.68	BB & EB
KERN CREEK ROAD UC	SB	20.69	BB & EB
INGRAM CREEK ROAD UC	NB	22.99	BB
INGRAM CREEK BRIDGE	NB	23.07	EB
INGRAM CREEK BRIDGE	SB	23.07	BB

SAN JOAQUIN COUNTY

LOCATION	Dir	PM	DESCRIPTION
Rte 5/580 SEPARATION	SB	0.63	BB & EB
HOSPITAL CREEK BRIDGE	NB/SB	1.10	BB & EB
CALIFORNIA AQUEDUCT Br	NB	2.00	BB & EB
CALIFORNIA AQUEDUCT Br	SB	2.02	BB & EB
DELTA MENDOTA CANAL Br	NB/SB	3.27	BB & EB
Rte 5/132 SEPARATION	NB/SB	3.42	BB & EB
Rte 5/33 SEPARATION & OH	NB/SB	6.41	BB & EB
TOM PAINE SLOUGH BRIDGE	NB	R12.39	BB
TOM PAINE SLOUGH BRIDGE	SB	R12.39	EB

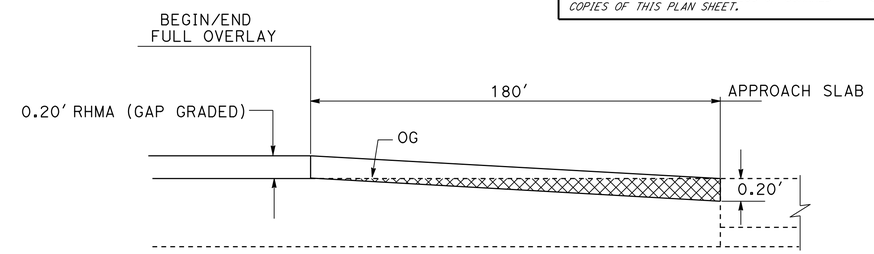

SECTION

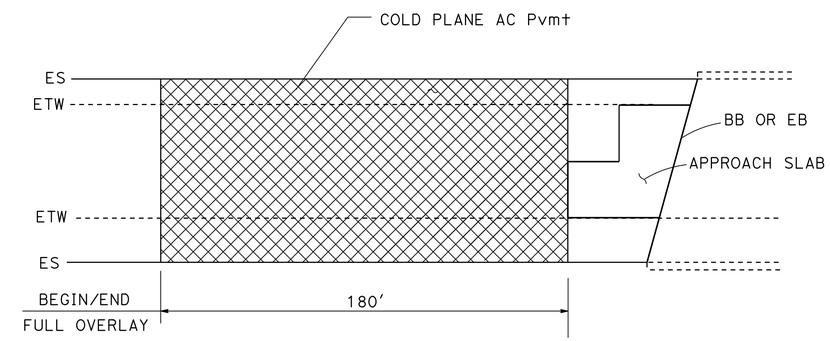

PLAN

PAVEMENT TRANSITION TAPER AT NEW BRIDGE APPROACH SLAB LOCATIONS

STANISLAUS COUNTY

LOCATION	Dir	PM	DESCRIPTION
HANSON ROAD UC	NB	17.24	BB & EB
HANSON ROAD UC	SB	17.25	BB & EB
INGRAM CREEK ROAD UC	SB	22.99	EB
KHALSA ROAD UC	NB/SB	25.53	BB & EB

SAN JOAQUIN COUNTY

LOCATION	Dir	PM	DESCRIPTION
DEUEL OH	NB/SB	10.65	BB & EB

CONSTRUCTION DETAILS

NO SCALE

C-9

STATE OF CALIFORNIA - DEPARTMENT OF TRANSPORTATION
Caltrans® DESIGN
FUNCTIONAL SUPERVISOR MICHAEL HUTCHISON
CALCULATED-DESIGNED BY MANUEL PALATINO
CHECKED BY MASON LEUNG
REVISED BY MP
DATE REVISED 02/18/14

LAST REVISION 00-00-00
DATE PLOTTED => 16-MAY-2014
TIME PLOTTED => 13:05

Dist	COUNTY	ROUTE	POST MILES TOTAL PROJECT	SHEET No.	TOTAL SHEETS
10	Mer,Sta, SJ	5	32.2/32.5, 0.0/28.1, 0.0/R12.4	13	112

REGISTERED CIVIL ENGINEER 2/11/14 DATE

02-18-14
PLANS APPROVAL DATE

REGISTERED PROFESSIONAL ENGINEER MASON L. LEUNG No. 71709 Exp. 12-31-15 CIVIL STATE OF CALIFORNIA

THE STATE OF CALIFORNIA OR ITS OFFICERS OR AGENTS SHALL NOT BE RESPONSIBLE FOR THE ACCURACY OR COMPLETENESS OF SCANNED COPIES OF THIS PLAN SHEET.

NOTE:
EXISTING UTILITY FACILITIES HAVE NOT BEEN INCLUDED ON THESE PLANS.

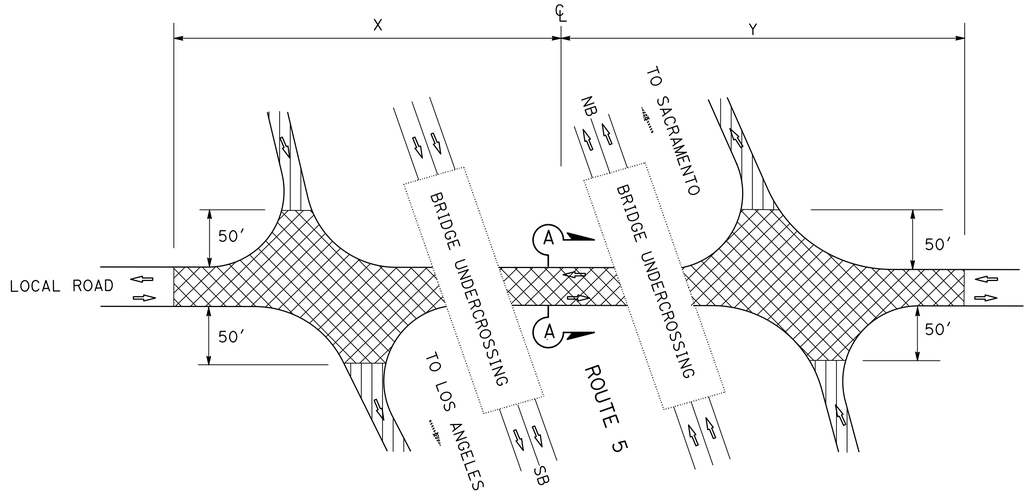

PAVING LIMITS AT LOCAL ROADS

COUNTY	LOCAL ROADS	X	Y
Sta	FINK ROAD	215′	270′
	DEL PUERTO CANYON ROAD	320′	262′
	INGRAM CREEK ROAD	250′	500′

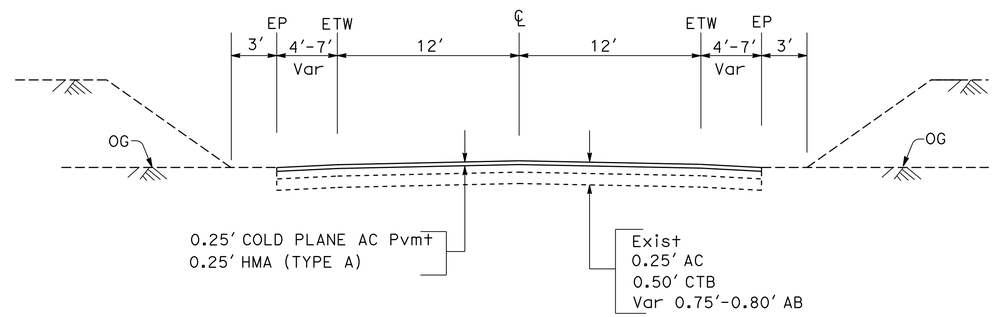

SECTION A-A

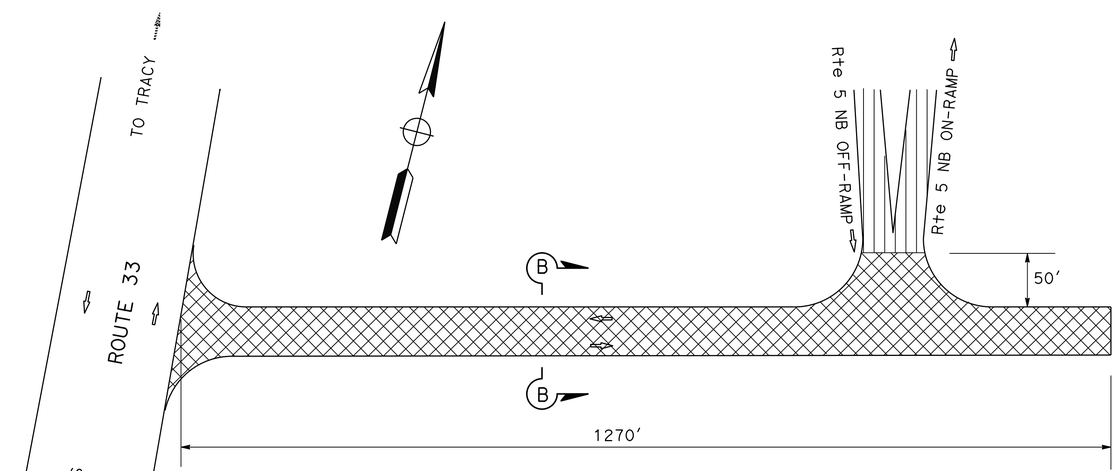

PAVING LIMITS AT ROUTE 33 CONNECTOR ROAD

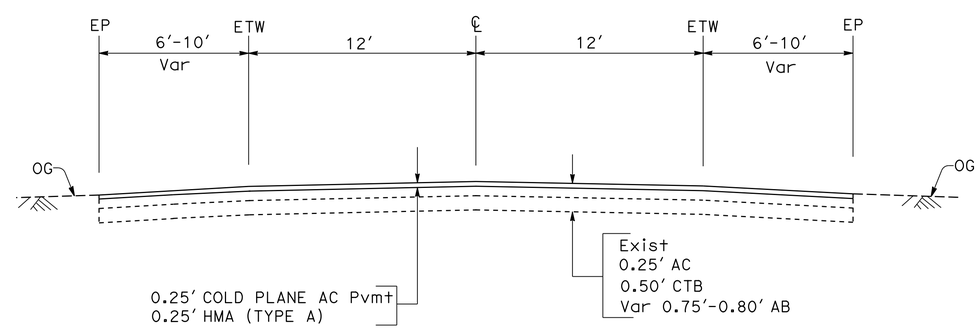

SECTION B-B

CONSTRUCTION DETAILS

NO SCALE

C-10

REVISED BY	DATE REVISED
MP	02/18/14

CALCULATED-DESIGNED BY: MANUEL PALATINO
CHECKED BY: MASON LEUNG
FUNCTIONAL SUPERVISOR: MICHAEL HUTCHISON

STATE OF CALIFORNIA - DEPARTMENT OF TRANSPORTATION
Caltrans®
DESIGN

LAST REVISION 00-00-00
DATE PLOTTED => 16-MAY-2014
TIME PLOTTED => 13:05

Dist	COUNTY	ROUTE	POST MILES TOTAL PROJECT	SHEET No.	TOTAL SHEETS
10	Mer,Sta, SJ	5	32.2/32.5, 0.0/28.1, 0.0/R12.4	14	112

REGISTERED CIVIL ENGINEER 2/11/14 DATE

02-18-14
PLANS APPROVAL DATE

REGISTERED PROFESSIONAL ENGINEER MASON L. LEUNG No. 71709 Exp. 12-31-15 CIVIL STATE OF CALIFORNIA

THE STATE OF CALIFORNIA OR ITS OFFICERS OR AGENTS SHALL NOT BE RESPONSIBLE FOR THE ACCURACY OR COMPLETENESS OF SCANNED COPIES OF THIS PLAN SHEET.

NOTES: (THIS SHEET ONLY)

1. FOR LOCATIONS OF RUMBLE STRIPS, SEE SUMMARY OF QUANTITIES.
2. FOR RUMBLE STRIP DETAILS NOT SHOWN, SEE STANDARD PLAN A40B.

NOTE:

EXISTING UTILITY FACILITIES HAVE NOT BEEN INCLUDED ON THESE PLANS.

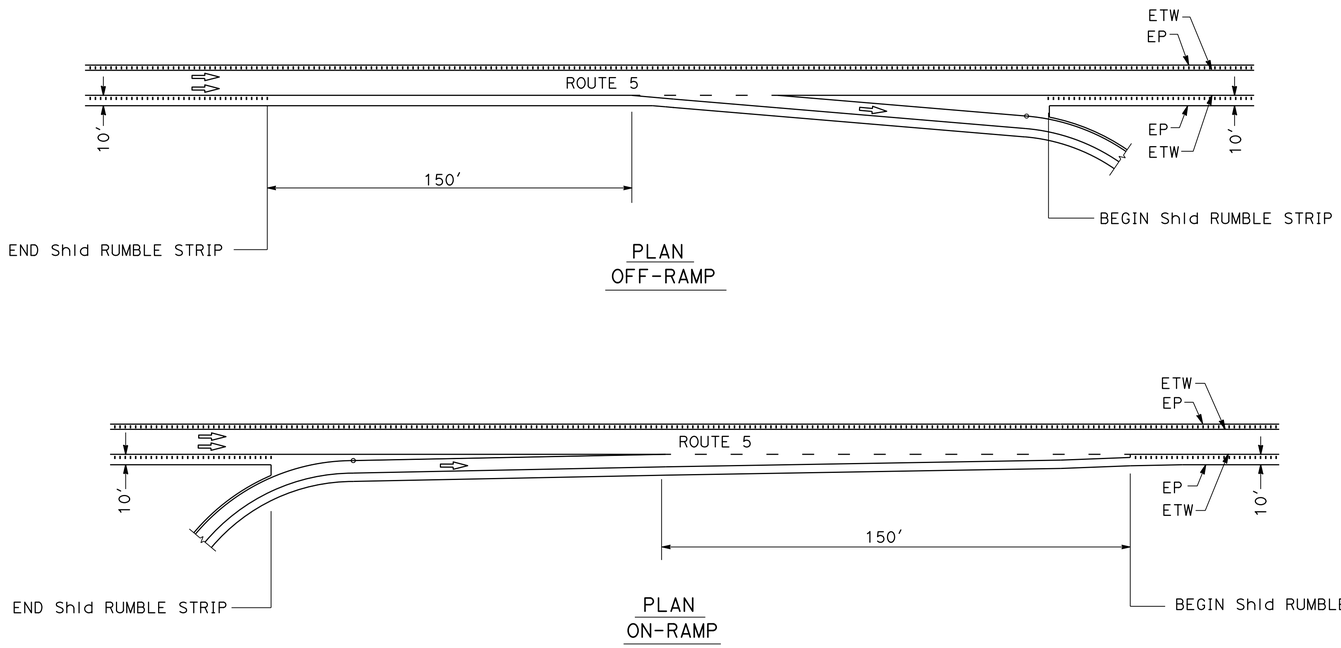

RUMBLE STRIP LAYOUT

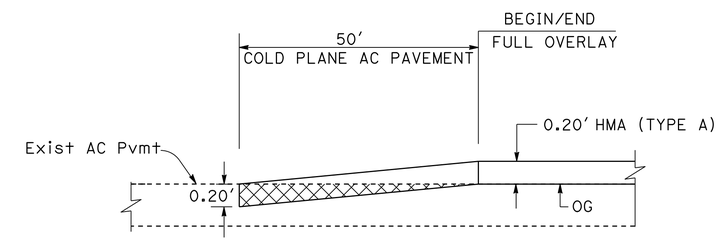

RAMP OVERLAY CONFORM TAPER

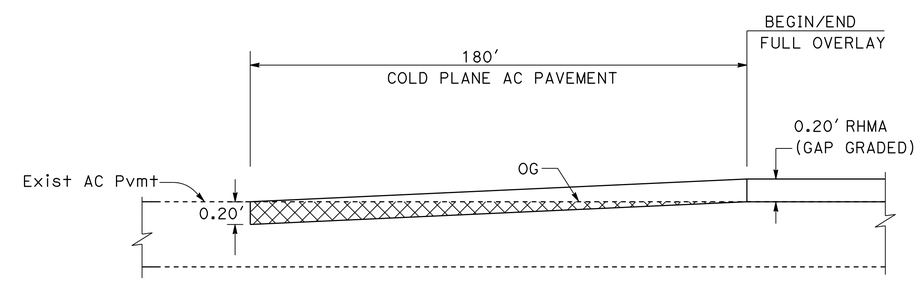

MAINLINE OVERLAY CONFORM TAPER

SB PM 32.5/0.0 (MERCED/STANISLAUS COUNTY LINE)
NB PM 32.5/0.0 (MERCED/STANISLAUS COUNTY LINE)

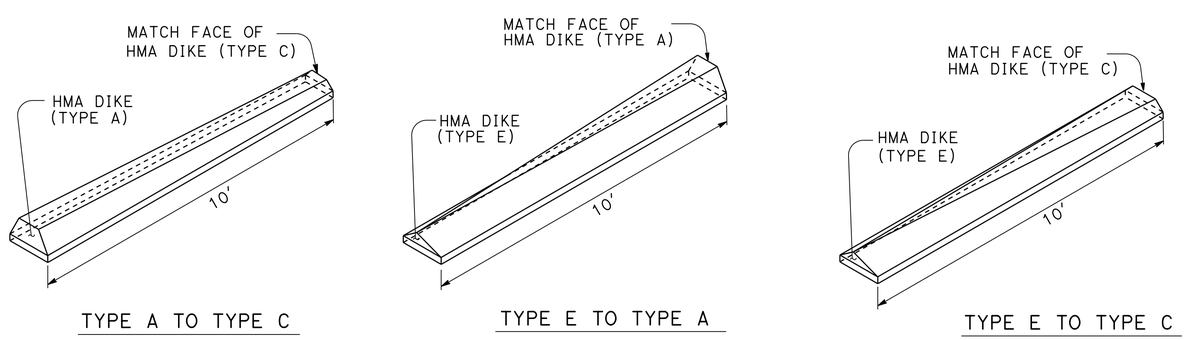

HMA DIKE TRANSITION DETAILS

CONSTRUCTION DETAILS

NO SCALE

C-11

REVISED BY	DATE REVISED
MP	02/11/14

CALCULATED-DESIGNED BY	CHECKED BY
MANUEL PALATINO	MASON LEUNG

FUNCTIONAL SUPERVISOR: MICHAEL HUTCHISON

STATE OF CALIFORNIA - DEPARTMENT OF TRANSPORTATION
Caltrans® DESIGN

LAST REVISION 00-00-00 | DATE PLOTTED => 16-MAY-2014 | TIME PLOTTED => 13:05

Dist	COUNTY	ROUTE	POST MILES TOTAL PROJECT	SHEET No.	TOTAL SHEETS
10	Mer,Sta, SJ	5	32.2/32.5, 0.0/28.1, 0.0/R12.4	15	112

REGISTERED CIVIL ENGINEER 2/11/14 DATE

02-18-14
PLANS APPROVAL DATE

REGISTERED PROFESSIONAL ENGINEER MASON L. LEUNG No. 71709 Exp. 12-31-15 CIVIL STATE OF CALIFORNIA

THE STATE OF CALIFORNIA OR ITS OFFICERS OR AGENTS SHALL NOT BE RESPONSIBLE FOR THE ACCURACY OR COMPLETENESS OF SCANNED COPIES OF THIS PLAN SHEET.

NOTE:
EXISTING UTILITY FACILITIES HAVE NOT BEEN INCLUDED ON THESE PLANS.

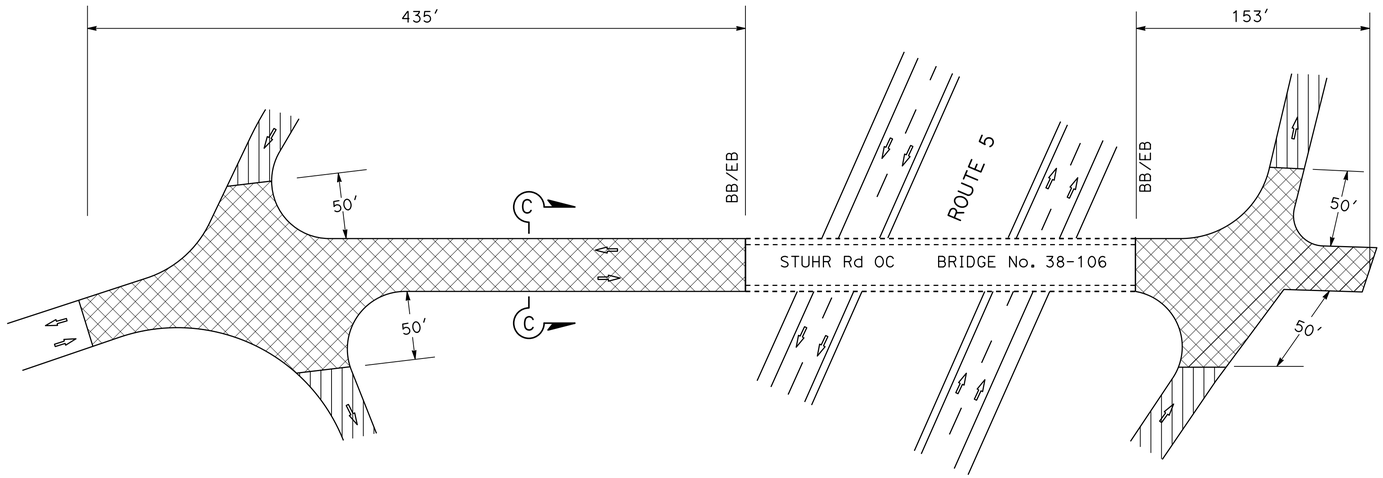

STUHR ROAD

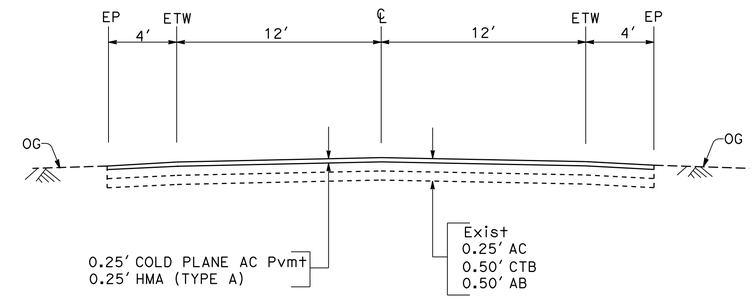

SECTION C-C

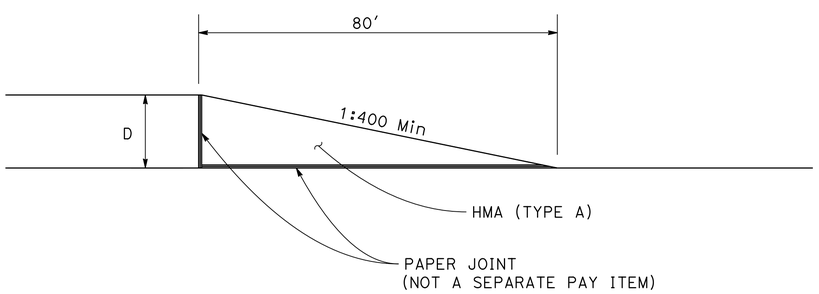

TEMPORARY HMA OVERLAY CONFORM TAPER

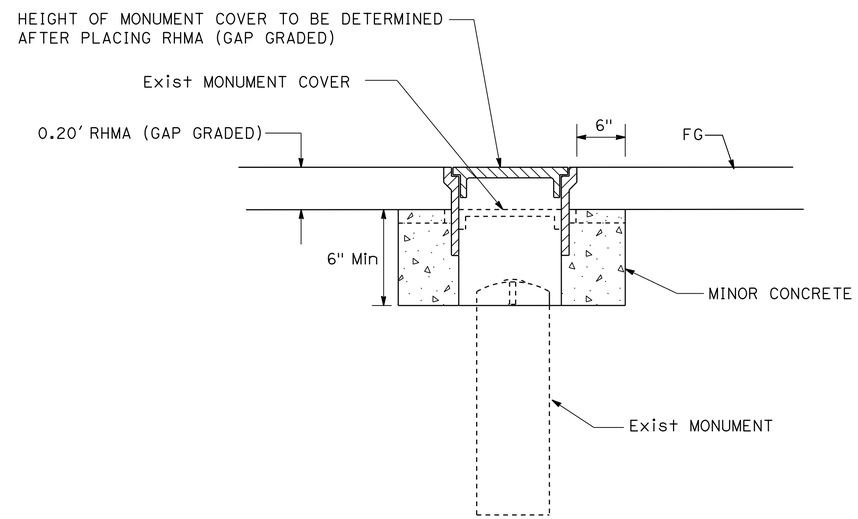

SURVEY MONUMENT
ADJUST MONUMENT COVER

(FOR LOCATIONS, SEE SUMMARY OF QUANTITIES)

CONSTRUCTION DETAILS

NO SCALE

C-12

REVISED BY	DATE REVISED
MP	01/22/14

CALCULATED-DESIGNED BY	CHECKED BY
MANUEL PALATINO	MASON LEUNG

FUNCTIONAL SUPERVISOR: MICHAEL HUTCHISON

STATE OF CALIFORNIA - DEPARTMENT OF TRANSPORTATION
Caltrans® **DESIGN**

LAST REVISION 00-00-00 | DATE PLOTTED => 16-MAY-2014 | TIME PLOTTED => 13:05

Dist	COUNTY	ROUTE	POST MILES TOTAL PROJECT	SHEET No.	TOTAL SHEETS
10	Mer,Sta, SJ	5	32.2/32.5, 0.0/28.1, 0.0/R12.4	16	112

REGISTERED CIVIL ENGINEER 2/11/14 DATE

02-18-14
PLANS APPROVAL DATE

REGISTERED PROFESSIONAL ENGINEER MASON L. LEUNG No. 71709 Exp. 12-31-15 CIVIL STATE OF CALIFORNIA

THE STATE OF CALIFORNIA OR ITS OFFICERS OR AGENTS SHALL NOT BE RESPONSIBLE FOR THE ACCURACY OR COMPLETENESS OF SCANNED COPIES OF THIS PLAN SHEET.

NOTES:

1. L = REPLACE CONCRETE PAVEMENT LENGTH IN FEET.
2. Exist CONCRETE PAVEMENT SHALL BE REMOVED BY NON-IMPACT METHODS.
3. DO NOT DAMAGE ADJACENT BRIDGE APPROACH SLABS.
4. MATCH EXISTING CROSS SLOPES.
5. IF DAMAGED, SUBGRADE MATERIAL TO BE REMOVED AND REPLACED WITH LEAN CONCRETE BASE RAPID SETTING AS DIRECTED BY THE ENGINEER.
6. SEE TYPICAL CROSS SECTIONS X-2 FOR MORE DETAILS.
7. EXISTING UTILITY FACILITIES HAVE NOT BEEN INCLUDED ON THESE PLANS.

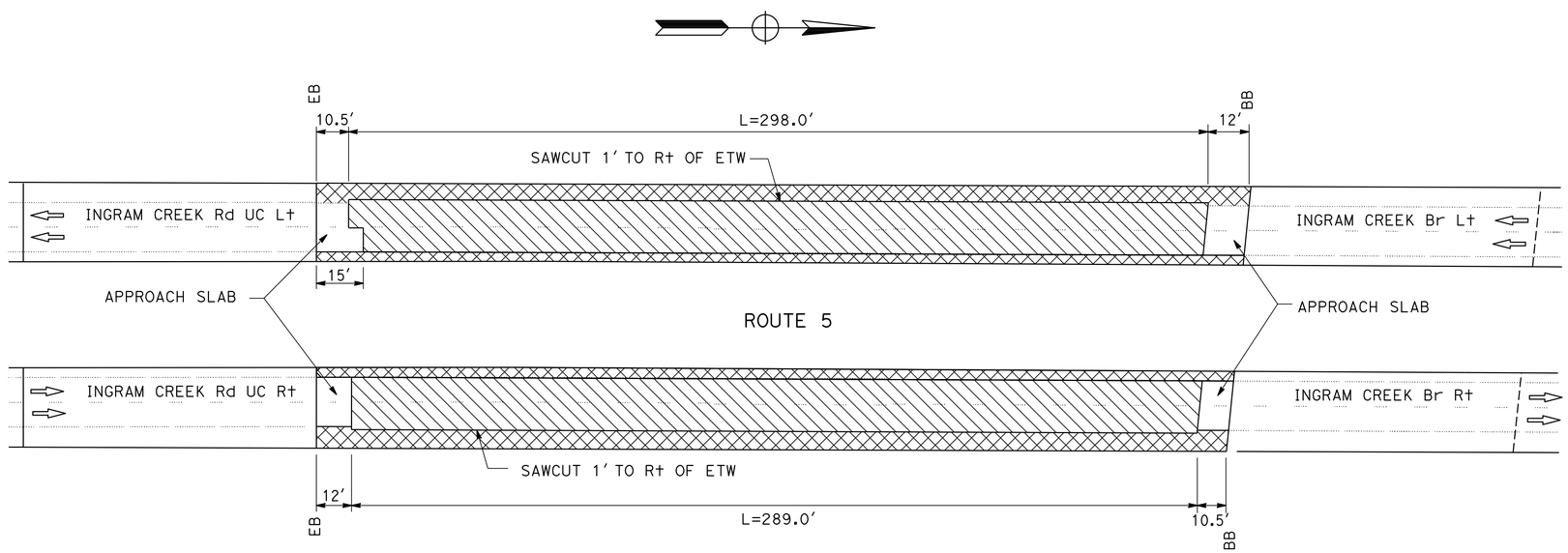

PLAN

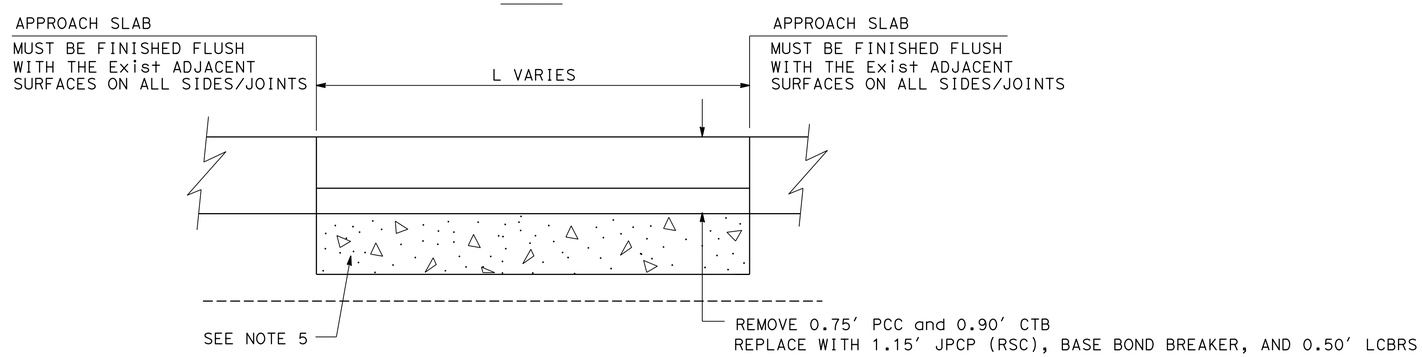

SECTION

Sta NB PM 22.99/23.07
Sta SB PM 22.99/23.07

CONCRETE PAVEMENT REPLACEMENT DETAIL

CONSTRUCTION DETAILS

NO SCALE

C-13

REVISED BY	DATE REVISED
ML	02/18/14

MARLON LOPEZ — MASON LEUNG — CALCULATED-DESIGNED BY — CHECKED BY — FUNCTIONAL SUPERVISOR — MICHAEL HUTCHISON

STATE OF CALIFORNIA - DEPARTMENT OF TRANSPORTATION — Caltrans — DESIGN

LAST REVISION 00-00-00 — DATE PLOTTED => 16-MAY-2014 — TIME PLOTTED => 13:05

Dist	COUNTY	ROUTE	POST MILES TOTAL PROJECT	SHEET No.	TOTAL SHEETS
10	Mer,Sta, SJ	5	32.2/32.5, 0.0/28.1, 0.0/R12.4	17	112

REGISTERED CIVIL ENGINEER 2/11/14 DATE

02-18-14
PLANS APPROVAL DATE

REGISTERED PROFESSIONAL ENGINEER MASON L. LEUNG No. 71709 Exp. 12-31-15 CIVIL STATE OF CALIFORNIA

THE STATE OF CALIFORNIA OR ITS OFFICERS OR AGENTS SHALL NOT BE RESPONSIBLE FOR THE ACCURACY OR COMPLETENESS OF SCANNED COPIES OF THIS PLAN SHEET.

NOTE:
EXISTING UTILITY FACILITIES HAVE NOT BEEN INCLUDED ON THESE PLANS.

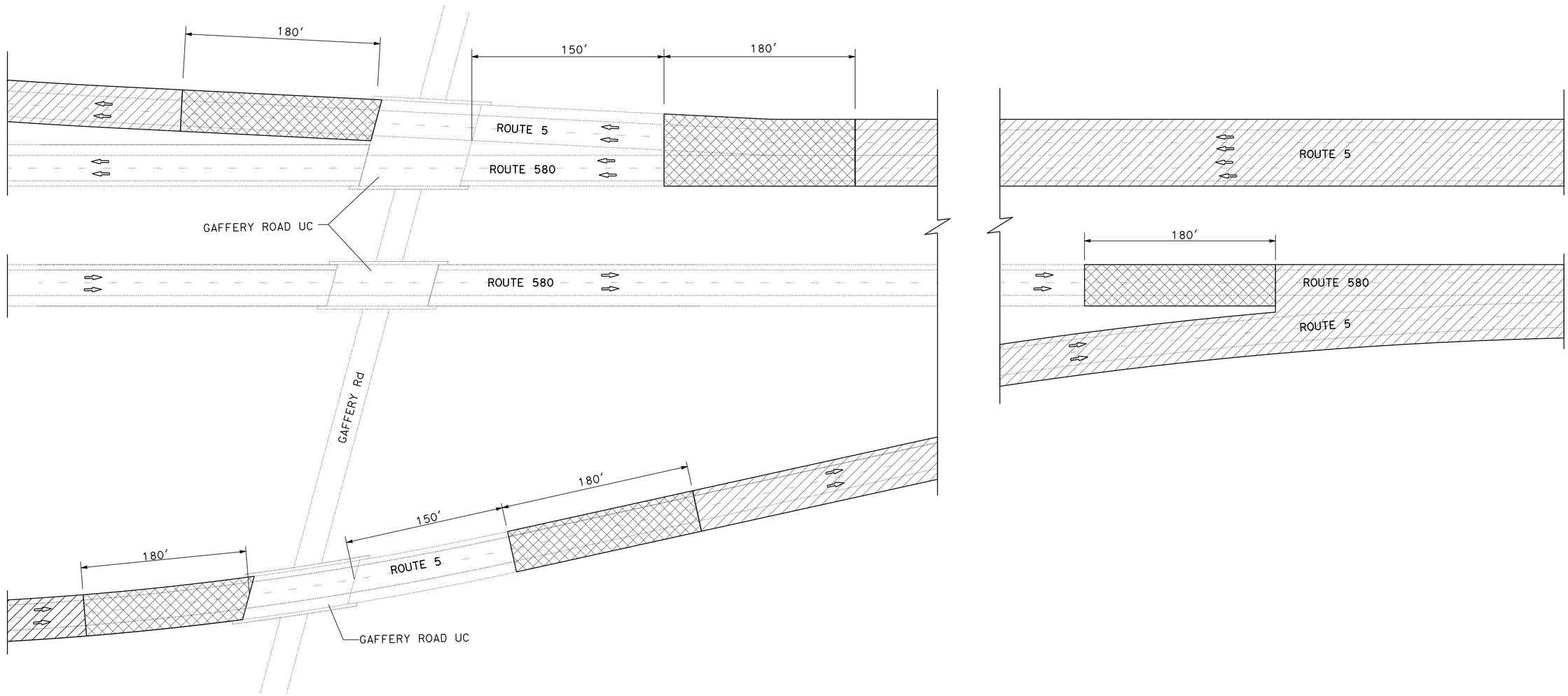

PAVING LIMITS AT ROUTE 5/ROUTE 580

CONSTRUCTION DETAILS

NO SCALE

C-14

REVISED BY	DATE REVISED
MP	02/18/14

MANUEL PALATINO
MASON LEUNG

CALCULATED-DESIGNED BY
CHECKED BY

FUNCTIONAL SUPERVISOR
MICHAEL HUTCHISON

STATE OF CALIFORNIA - DEPARTMENT OF TRANSPORTATION
Caltrans
DESIGN

LAST REVISION 00-00-00
DATE PLOTTED => 20-MAY-2014
TIME PLOTTED => 07:47

Dist	COUNTY	ROUTE	POST MILES TOTAL PROJECT	SHEET No.	TOTAL SHEETS
10	Mer,Sta, SJ	5	32.2/32.5, 0.0/28.1, 0.0/R12.4	18	112

REGISTERED CIVIL ENGINEER 2/11/14 DATE

02-18-14
PLANS APPROVAL DATE

REGISTERED PROFESSIONAL ENGINEER MASON L. LEUNG No. 71709 Exp. 12-31-15 CIVIL STATE OF CALIFORNIA

THE STATE OF CALIFORNIA OR ITS OFFICERS OR AGENTS SHALL NOT BE RESPONSIBLE FOR THE ACCURACY OR COMPLETENESS OF SCANNED COPIES OF THIS PLAN SHEET.

NOTES:

1. THE CONTRACTOR MUST VERIFY ALL CONTROLLING FIELD DIMENSIONS BEFORE ORDERING OR FABRICATING ANY MATERIAL.
2. CUT AND REMOVE PORTION OF TYPE 1 AND BRIDGE APPROACH GUARD RAILING AS REQUIRED.
3. EXISTING UTILITY FACILITIES HAVE NOT BEEN INCLUDED ON THESE PLANS.

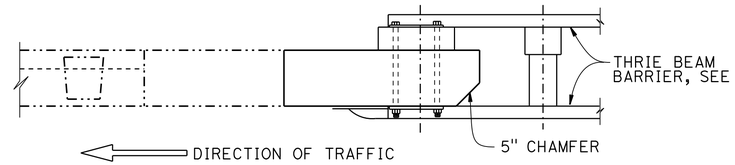

PLAN

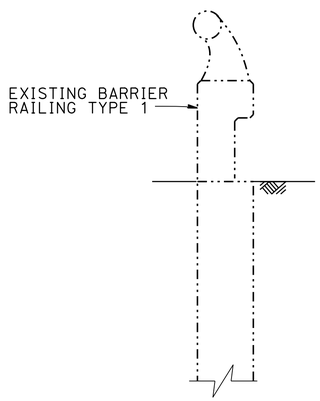

SECTION A-A

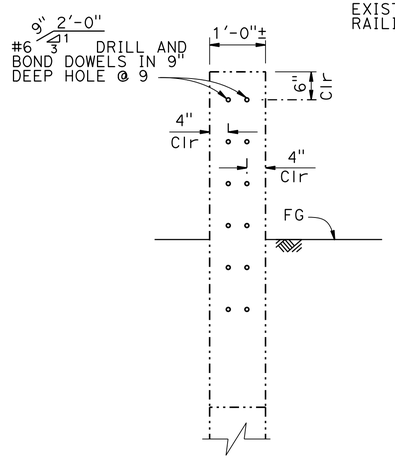

SECTION B-B

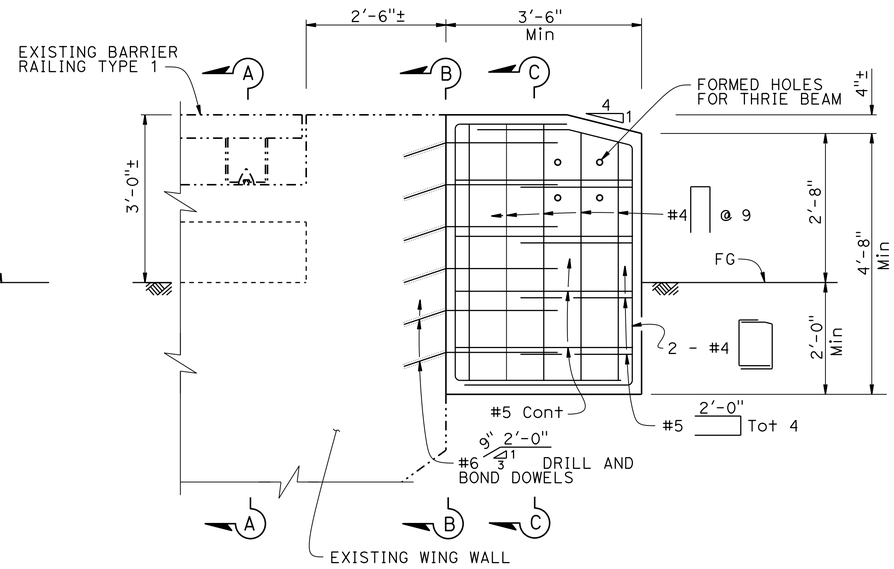

ELEVATION

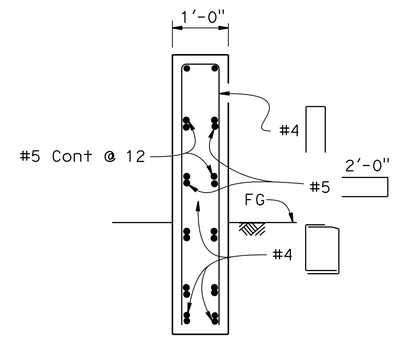

NOTE:
DRILL AND BOND DOWELS NOT SHOWN

SECTION C-C

BARRIER RAILING CONNECTION DETAIL
TYPE 1

CONSTRUCTION DETAILS
NO SCALE
C-15

REVISED BY	DATE REVISED
MP	02/12/14

MANUEL PALATINO — MASON LEUNG
CALCULATED-DESIGNED BY — CHECKED BY
FUNCTIONAL SUPERVISOR — MICHAEL HUTCHISON

STATE OF CALIFORNIA - DEPARTMENT OF TRANSPORTATION
Caltrans® DESIGN

LAST REVISION 00-00-00 | DATE PLOTTED => 20-MAY-2014 | TIME PLOTTED => 11:12

Dist	COUNTY	ROUTE	POST MILES TOTAL PROJECT	SHEET No.	TOTAL SHEETS
10	Mer,Sta, SJ	5	32.2/32.5, 0.0/28.1, 0.0/R12.4	19	112

REGISTERED CIVIL ENGINEER 2/11/14 DATE

02-18-14
PLANS APPROVAL DATE

REGISTERED PROFESSIONAL ENGINEER MASON L. LEUNG No. 71709 Exp. 12-31-15 CIVIL STATE OF CALIFORNIA

THE STATE OF CALIFORNIA OR ITS OFFICERS OR AGENTS SHALL NOT BE RESPONSIBLE FOR THE ACCURACY OR COMPLETENESS OF SCANNED COPIES OF THIS PLAN SHEET.

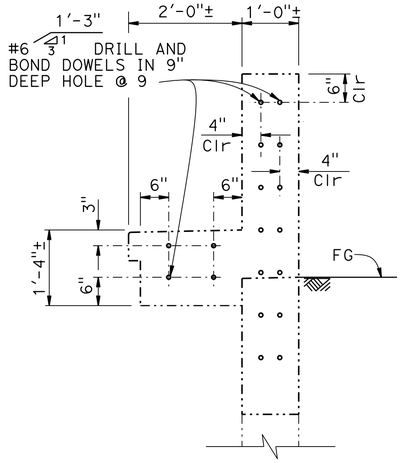

SECTION C-C

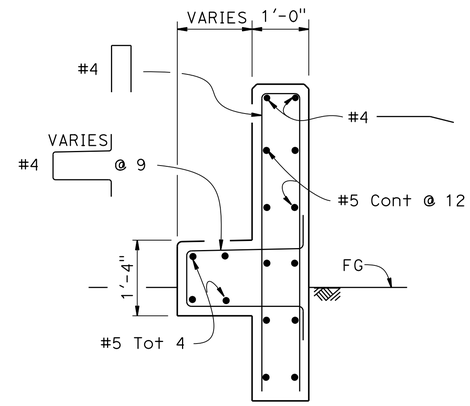

SECTION D-D

NOTES:

1. THE CONTRACTOR MUST VERIFY ALL CONTROLLING FIELD DIMENSIONS BEFORE ORDERING OR FABRICATING ANY MATERIAL.
2. CUT AND REMOVE PORTION OF TYPE 2 AND BRIDGE APPROACH GUARD RAILING AS REQUIRED.
3. EXISTING UTILITY FACILITIES HAVE NOT BEEN INCLUDED ON THESE PLANS.

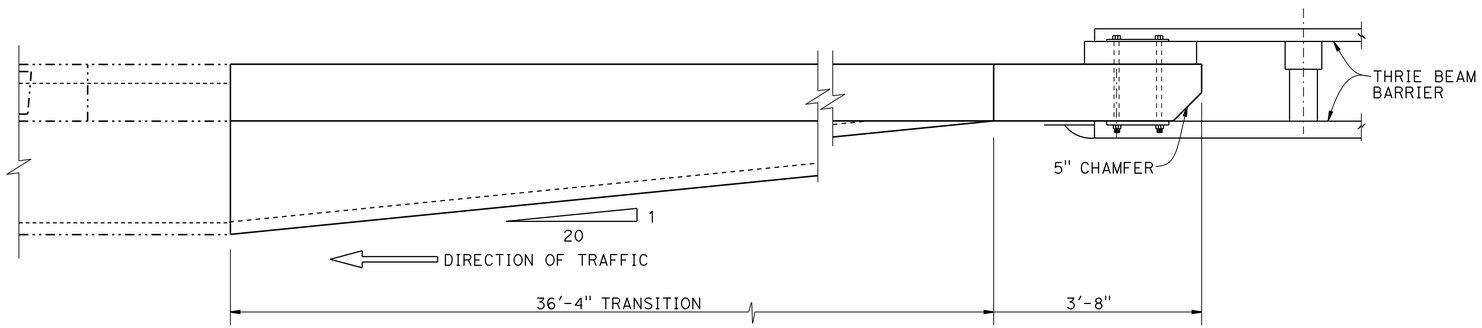

PLAN

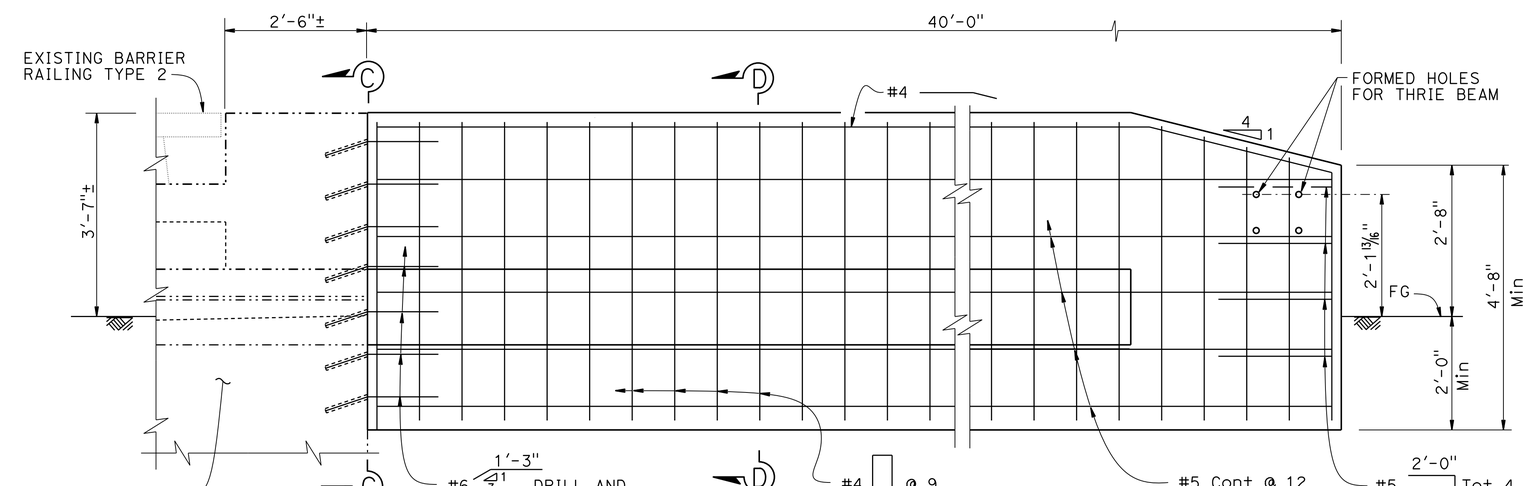

ELEVATION

BARRIER RAILING CONNECTION DETAIL

TYPE 2

CONSTRUCTION DETAILS

NO SCALE

C-16

REVISED BY	ML
DATE REVISED	02/12/14
CALCULATED-DESIGNED BY	MARLON LOPEZ
CHECKED BY	MASON LEUNG
FUNCTIONAL SUPERVISOR	MICHAEL HUTCHISON

STATE OF CALIFORNIA - DEPARTMENT OF TRANSPORTATION

Caltrans® **DESIGN**

LAST REVISION 00-00-00 | DATE PLOTTED => 16-MAY-2014 | TIME PLOTTED => 13:05

Dist	COUNTY	ROUTE	POST MILES TOTAL PROJECT	SHEET No.	TOTAL SHEETS
10	Mer,Sta, SJ	5	32.2/32.5, 0.0/28.1, 0.0/R12.4	20	112

REGISTERED CIVIL ENGINEER 2/11/14 DATE

02-18-14
PLANS APPROVAL DATE

REGISTERED PROFESSIONAL ENGINEER MASON L. LEUNG No. 71709 Exp. 12-31-15 CIVIL STATE OF CALIFORNIA

THE STATE OF CALIFORNIA OR ITS OFFICERS OR AGENTS SHALL NOT BE RESPONSIBLE FOR THE ACCURACY OR COMPLETENESS OF SCANNED COPIES OF THIS PLAN SHEET.

NOTES:

1. THE CONTRACTOR MUST VERIFY ALL CONTROLLING FIELD DIMENSIONS BEFORE ORDERING OR FABRICATING ANY MATERIAL.
2. EXISTING UTILITY FACILITIES HAVE NOT BEEN INCLUDED ON THESE PLANS.

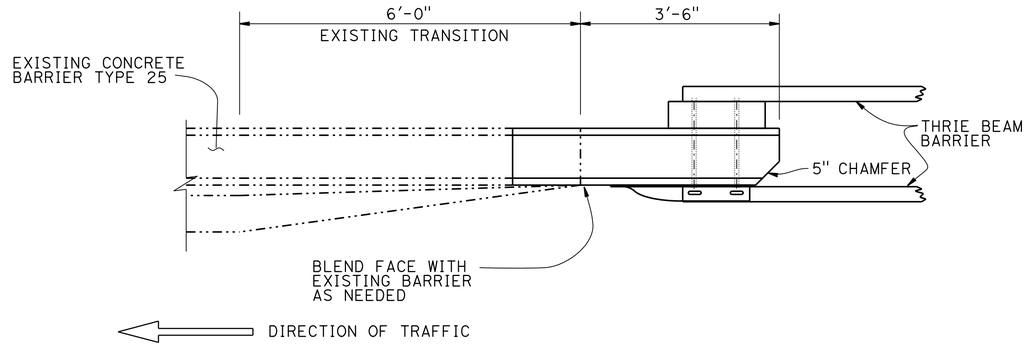

PLAN

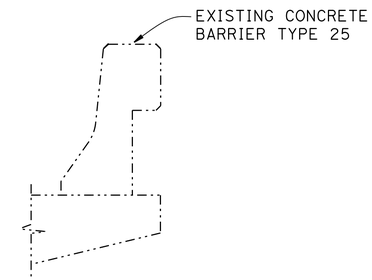

CONCRETE BARRIER TYPE 25

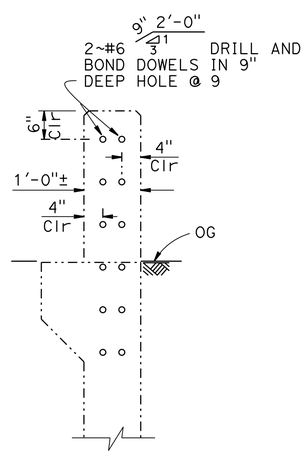

SECTION E-E

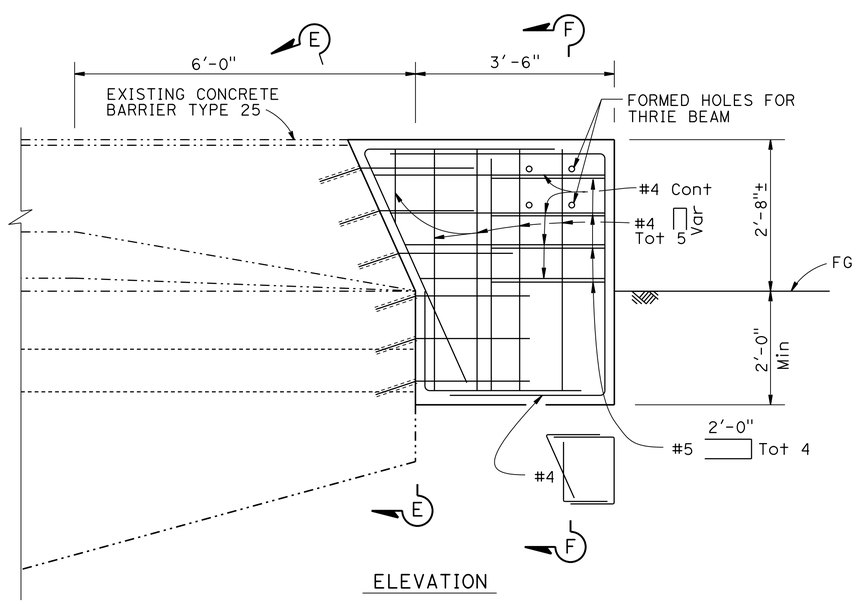

ELEVATION

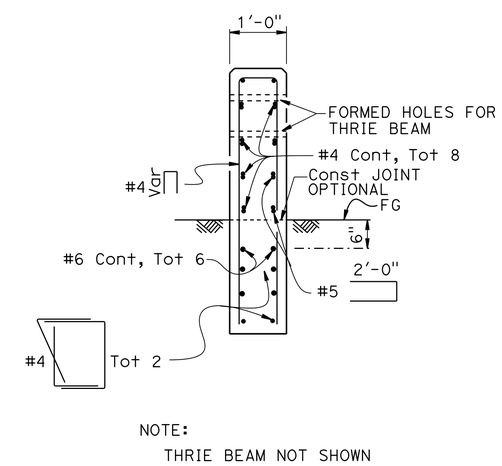

NOTE:
THRIE BEAM NOT SHOWN

SECTION F-F

BARRIER RAILING CONNECTION DETAIL

TYPE 25

CONSTRUCTION DETAILS

NO SCALE **C-17**

REVISED BY	DATE REVISED
ML	02/12/14

CALCULATED-DESIGNED BY: MARLON LOPEZ
CHECKED BY: MASON LEUNG
FUNCTIONAL SUPERVISOR: MICHAEL HUTCHISON

STATE OF CALIFORNIA - DEPARTMENT OF TRANSPORTATION
Caltrans® **DESIGN**

LAST REVISION 00-00-00 | DATE PLOTTED => 20-MAY-2014 | TIME PLOTTED => 11:28

Dist	COUNTY	ROUTE	POST MILES TOTAL PROJECT	SHEET No.	TOTAL SHEETS
10	Mer,Sta, SJ	5	32.2/32.5, 0.0/28.1, 0.0/R12.4	21	112

REGISTERED CIVIL ENGINEER 2/11/14 DATE

02-18-14
PLANS APPROVAL DATE

REGISTERED PROFESSIONAL ENGINEER MASON L. LEUNG No. 71709 Exp. 12-31-15 CIVIL STATE OF CALIFORNIA

THE STATE OF CALIFORNIA OR ITS OFFICERS OR AGENTS SHALL NOT BE RESPONSIBLE FOR THE ACCURACY OR COMPLETENESS OF SCANNED COPIES OF THIS PLAN SHEET.

NOTES:

1. THE CONTRACTOR MUST VERIFY ALL CONTROLLING FIELD DIMENSIONS BEFORE ORDERING OR FABRICATING ANY MATERIAL.
2. EXISTING UTILITY FACILITIES HAVE NOT BEEN INCLUDED ON THESE PLANS.

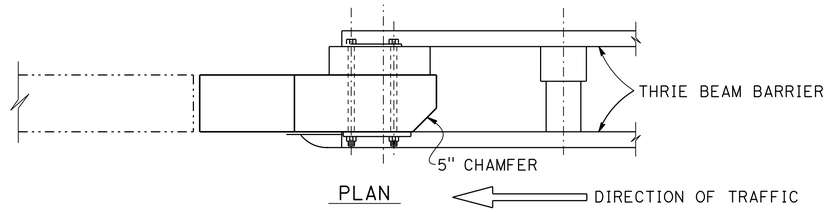

PLAN

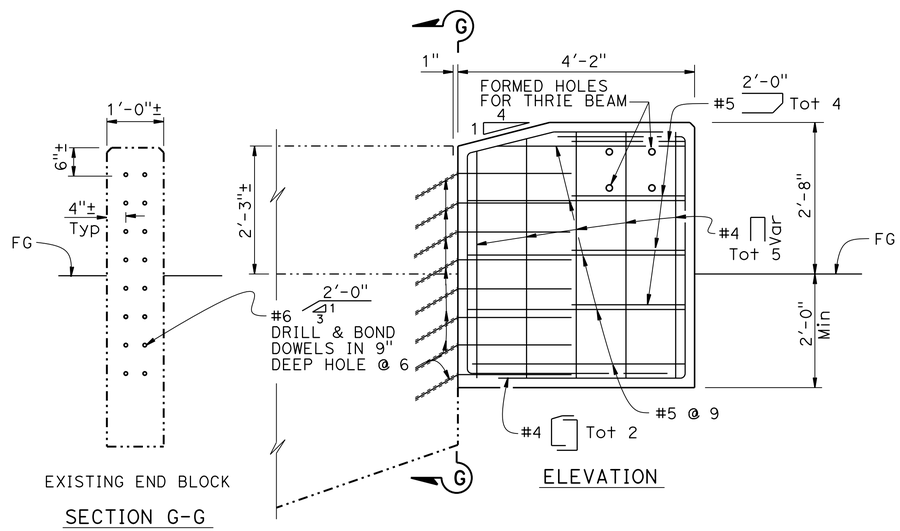

BARRIER RAILING CONNECTION DETAIL

TYPE 9

CONSTRUCTION DETAILS

NO SCALE

C-18

STATE OF CALIFORNIA - DEPARTMENT OF TRANSPORTATION
Caltrans® **DESIGN**

FUNCTIONAL SUPERVISOR: MICHAEL HUTCHISON
CALCULATED-DESIGNED BY: MARLON LOPEZ
CHECKED BY: MASON LEUNG
REVISED BY: ML
DATE REVISED: 02/12/14

LAST REVISION 00-00-00
DATE PLOTTED => 16-MAY-2014
TIME PLOTTED => 13:05

Dist	COUNTY	ROUTE	POST MILES TOTAL PROJECT	SHEET No.	TOTAL SHEETS
10	Mer,Sta, SJ	5	32.2/32.5, 0.0/28.1, 0.0/R12.4	22	112

REGISTERED CIVIL ENGINEER 2/11/14 DATE

02-18-14
PLANS APPROVAL DATE

REGISTERED PROFESSIONAL ENGINEER MASON L. LEUNG No. 71709 Exp. 12-31-15 CIVIL STATE OF CALIFORNIA

THE STATE OF CALIFORNIA OR ITS OFFICERS OR AGENTS SHALL NOT BE RESPONSIBLE FOR THE ACCURACY OR COMPLETENESS OF SCANNED COPIES OF THIS PLAN SHEET.

NOTES: (THIS SHEET ONLY)

1. FOR ADDITIONAL DETAILS NOT SHOWN ON THIS PLAN, REFER TO RSP A77L1.
2. CRT POST TO BE WOOD ONLY.

NOTE:

EXISTING UTILITY FACILITIES HAVE NOT BEEN INCLUDED ON THESE PLANS.

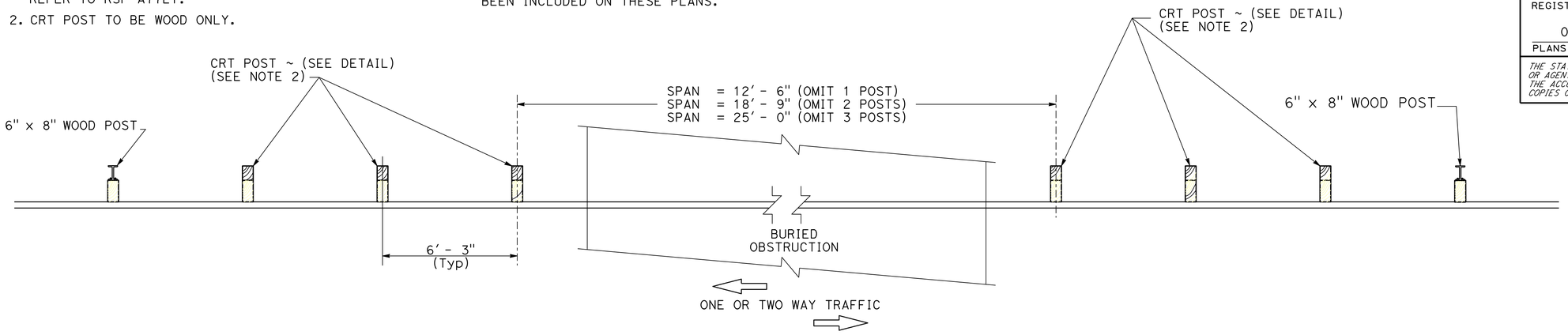

PLAN

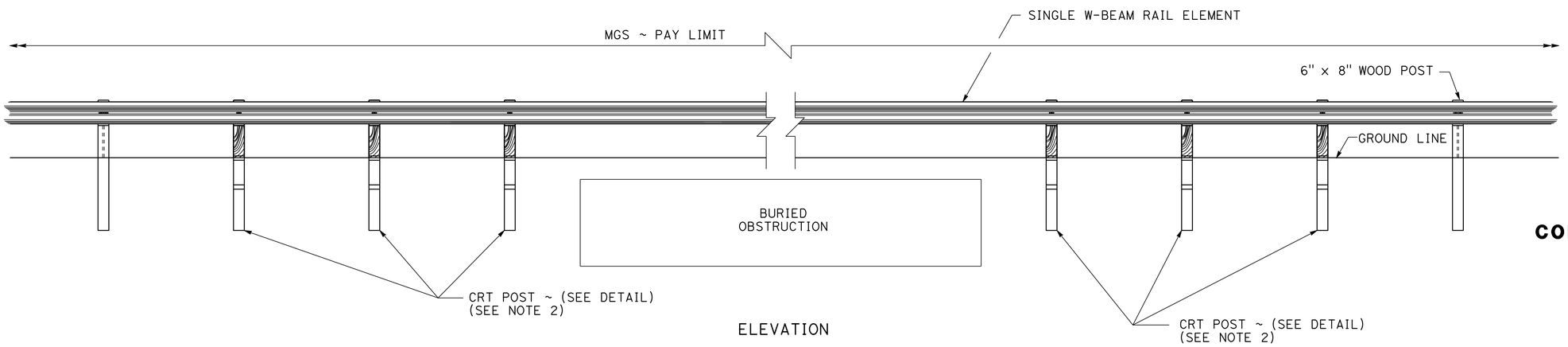

ELEVATION

MIDWEST GUARDRAIL SYSTEM DETAILS

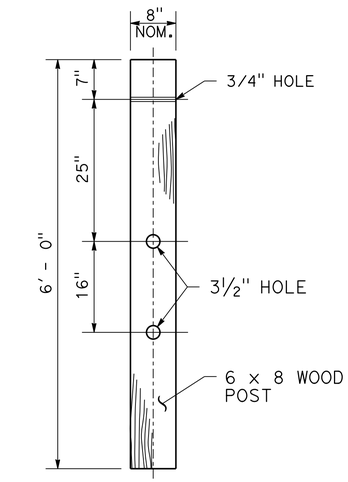

CONTROLLED RELEASING TERMINAL (CRT) POST DETAIL

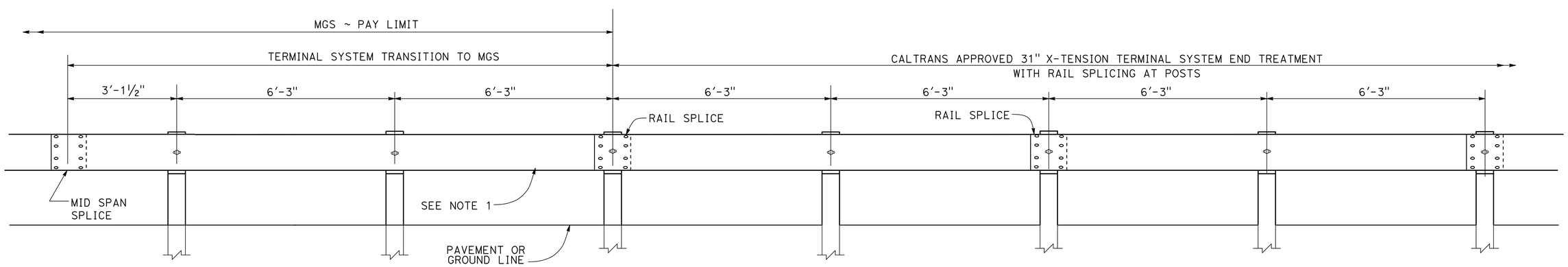

TRANSITION DETAIL FOR 31" X-TENSION TERMINAL SYSTEM END TREATMENT WITH RAIL SPLICING AT POSTS TO MIDWEST GUARDRAIL SYSTEM

(USE 15'-7½" LENGTH RAIL)

CONSTRUCTION DETAILS

NO SCALE

C-19

REVISED BY	DATE REVISED
ML	02/18/14

MARLON LOPEZ — CALCULATED-DESIGNED BY
MASON LEUNG — CHECKED BY
MICHAEL HUTCHISON — FUNCTIONAL SUPERVISOR

STATE OF CALIFORNIA - DEPARTMENT OF TRANSPORTATION
Caltrans DESIGN

LAST REVISION 00-00-00
DATE PLOTTED => 20-MAY-2014
TIME PLOTTED => 07:49

Dist	COUNTY	ROUTE	POST MILES TOTAL PROJECT	SHEET No.	TOTAL SHEETS
10	Mer,Sta, SJ	5	32.2/32.5, 0.0/28.1, 0.0/R12.4	23	112

REGISTERED CIVIL ENGINEER 2/11/14 DATE

02-18-14
PLANS APPROVAL DATE

REGISTERED PROFESSIONAL ENGINEER MASON L. LEUNG No. 71709 Exp. 12-31-15 CIVIL STATE OF CALIFORNIA

THE STATE OF CALIFORNIA OR ITS OFFICERS OR AGENTS SHALL NOT BE RESPONSIBLE FOR THE ACCURACY OR COMPLETENESS OF SCANNED COPIES OF THIS PLAN SHEET.

NOTES:

1. FOR ACCURATE RIGHT OF WAY DATA, CONTACT RIGHT OF WAY ENGINEERING AT THE DISTRICT OFFICE.
2. EXISTING UTILITY FACILITIES HAVE NOT BEEN INCLUDED ON THESE PLANS.

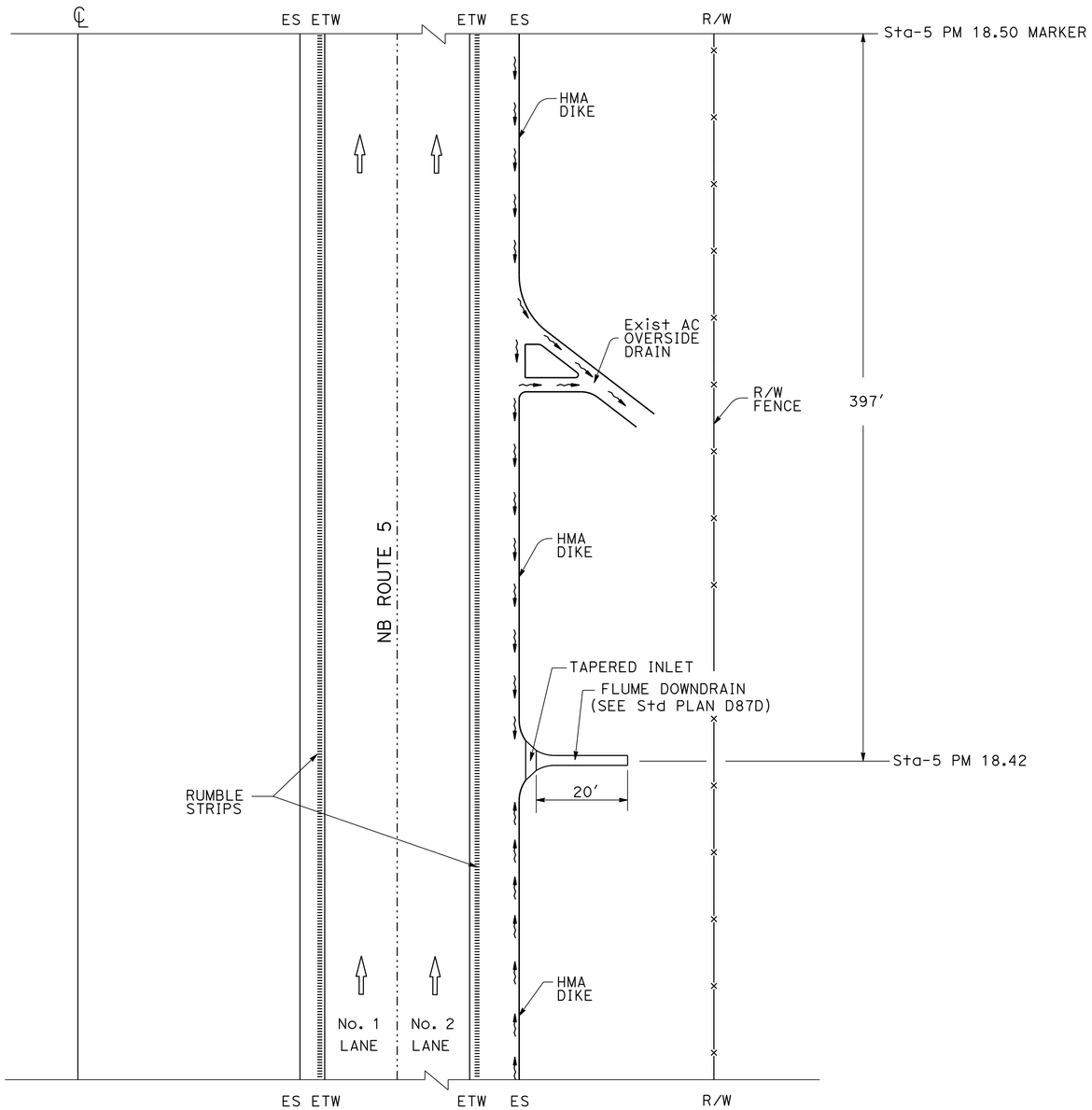

DOWNDRAIN DETAIL

Sta PM 18.42

DOWNDRAIN QUANTITIES

Co	PM	SIDE	FLUME DOWNDRAIN	TAPERED INLET	FLUME ANCHOR ASSEMBLY
			LF	EA	EA
Sta	18.42	NB	20	1	1

ADJUST FRAME AND GRATE TO GRADE

Co	PM	SIDE/LOCATION	DESCRIPTION	EA
Sta	4.71	NB	DRAINAGE INLET	1
	4.71	SB	DRAINAGE INLET	1
	4.83	NB	DRAINAGE INLET	1
	4.83	SB	DRAINAGE INLET	1
	23.15	SB OFF-RAMP	DRAINAGE INLET	1
SJ	3.38	NB ON-RAMP LOOP	DRAINAGE INLET	1
	10.74	NB OFF-RAMP	DRAINAGE INLET	1
	10.74	SB	DRAINAGE INLET	1
	10.83	NB OFF-RAMP	DRAINAGE INLET	1
	10.83	SB ON-RAMP	DRAINAGE INLET	1
	10.91	NB	DRAINAGE INLET	1
TOTAL				11

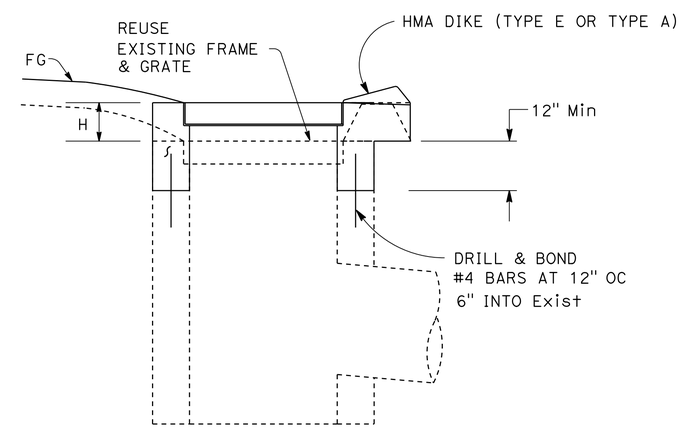

ADJUST FRAME AND GRATE TO GRADE DETAIL

DRAINAGE DETAILS AND QUANTITIES

NO SCALE

DD-1

STATE OF CALIFORNIA - DEPARTMENT OF TRANSPORTATION	FUNCTIONAL SUPERVISOR	CALCULATED-DESIGNED BY	HERNANDO RAPOSAS
DESIGN	MICHAEL HUTCHISON	CHECKED BY	MASON LEUNG
		REVISED BY	HR
		DATE REVISED	01/27/14

LAST REVISION 00-00-00 | DATE PLOTTED => 16-MAY-2014 | TIME PLOTTED => 13:05

Dist	COUNTY	ROUTE	POST MILES TOTAL PROJECT	SHEET No.	TOTAL SHEETS
10	Mer,Sta, SJ	5	32.2/32.5, 0.0/28.1, 0.0/R12.4	24	112

REGISTERED CIVIL ENGINEER 2/11/14 DATE

02-18-14
PLANS APPROVAL DATE

REGISTERED PROFESSIONAL ENGINEER MASON L. LEUNG No. 71709 Exp. 12-31-15 CIVIL STATE OF CALIFORNIA

THE STATE OF CALIFORNIA OR ITS OFFICERS OR AGENTS SHALL NOT BE RESPONSIBLE FOR THE ACCURACY OR COMPLETENESS OF SCANNED COPIES OF THIS PLAN SHEET.

ABBREVIATIONS:

AT&T - AMERICAN TELEPHONE AND TELEGRAPH COMPANY
PG&E - PACIFIC GAS AND ELECTRIC
HP - HIGH PRESSURE

NOTE:

EXISTING UTILITY FACILITIES HAVE NOT BEEN INCLUDED ON THESE PLANS.

STANISLAUS COUNTY

LOCATION PM/PM	TYPE	UTILITY OWNER	DESCRIPTION
OFF-RAMP Rte 140 NB	16" PETROLEUM PIPE LINE	PHILLIPS 66 PIPELINE LLC	UNDERGROUND CROSSING
ON-RAMP Rte 140 NB	16" PETROLEUM PIPE LINE	PHILLIPS 66 PIPELINE LLC	UNDERGROUND CROSSING
ON-RAMP Rte 140 NB	TELEPHONE	AT&T	OVERHEAD CROSSING
0.06	POWER LINE	PG&E	OVERHEAD CROSSING
0.10	HP GAS LINE	PG&E	UNDERGROUND CROSSING
0.80	WATER LINE	PHILLIPS 66 PIPELINE LLC	UNDERGROUND CROSSING
0.81	2" GAS LINE	SHELL	UNDERGROUND CROSSING
2.48	WATER LINE	PHILLIPS 66 PIPELINE LLC	UNDERGROUND CROSSING
3.90	TELEPHONE	AT&T	OVERHEAD CROSSING
4.01	POWER LINE	PG&E	OVERHEAD CROSSING
5.02	TELEPHONE	AT&T	UNDERGROUND CROSSING
7.54	16" PETROLEUM PIPE LINE	PHILLIPS 66 PIPELINE LLC	UNDERGROUND CROSSING
8.90	POWER LINE	PG&E	OVERHEAD CROSSING
9.40	POWER LINE	PG&E	OVERHEAD CROSSING
9.40	TELEPHONE	AT&T	OVERHEAD CROSSING
9.50	POWER LINE	PG&E	OVERHEAD CROSSING
9.80	POWER LINE	PG&E	OVERHEAD CROSSING
10.90	POWER LINE	PG&E	OVERHEAD CROSSING
11.10	POWER LINE	PG&E	OVERHEAD CROSSING
11.18	16" PETROLEUM PIPE LINE	PHILLIPS 66 PIPELINE LLC	UNDERGROUND CROSSING
12.50	POWER LINE	PG&E	OVERHEAD CROSSING
14.00	TELEPHONE	AT&T	UNDERGROUND CROSSING
15.97	TELEPHONE	PHILLIPS 66 PIPELINE LLC	UNDERGROUND CROSSING
16.61	TELEPHONE	AT&T	UNDERGROUND CROSSING
18.30	POWER LINE	PG&E	OVERHEAD CROSSING
18.59	16" PETROLEUM PIPE LINE	PHILLIPS 66 PIPELINE LLC	UNDERGROUND CROSSING
19.43	TELEPHONE	PHILLIPS 66 PIPELINE LLC	UNDERGROUND CROSSING
20.40	TRANSMISSION POWER LINE	PG&E	OVERHEAD CROSSING
22.69	30"ANODYNE PIPELINE	PHILLIPS 66 PIPELINE LLC	UNDERGROUND CROSSING
22.69	POWER LINE	PHILLIPS 66 PIPELINE LLC	UNDERGROUND CROSSING
23.10	POWER LINE	PG&E	OVERHEAD CROSSING
23.71	16" PETROLEUM PIPE LINE	PHILLIPS 66 PIPELINE LLC	UNDERGROUND CROSSING
25.50	POWER LINE	PG&E	OVERHEAD CROSSING
FINK Rd	TELEPHONE	AT&T	UNDERGROUND CROSSING
DEL PUERTO CANYON Rd	TELEPHONE	AT&T	UNDERGROUND CROSSING
INGRAM CREEK Rd	GAS LINE	PG&E	UNDERGROUND CROSSING
INGRAM CREEK Rd	POWER LINE	PG&E	UNDERGROUND CROSSING

SAN JOAQUIN COUNTY

LOCATION PM	TYPE	UTILITY OWNER	DESCRIPTION
0.30	POWER LINE	PG&E	OVERHEAD CROSSING
0.97	TELEPHONE CABLE	PHILLIPS 66 PIPELINE LLC	UNDERGROUND CROSSING
0.98	POWER LINE	PG&E	OVERHEAD CROSSING
1.05	PIPE LINE	PHILLIPS 66 PIPELINE LLC	UNDERGROUND CROSSING
1.07	TRANSMISSION GAS LINE	PG&E	UNDERGROUND CROSSING
1.92	HP GAS LINE	PG&E	UNDERGROUND CROSSING
2.45	POWER LINE	PG&E	OVERHEAD CROSSING
3.38	TELEPHONE	AT&T	UNDERGROUND CROSSING
4.00	FIBER OPTIC	LEVEL 3 COMMUNICATIONS	UNDERGROUND CROSSING
5.47	TELEPHONE	AT&T	UNDERGROUND CROSSING
5.50	HDPE PIPE	LEVEL 3 COMMUNICATIONS	UNDERGROUND CROSSING
6.99	POWER LINE	PG&E	OVERHEAD CROSSING
7.48	TELEPHONE	AT&T	UNDERGROUND CROSSING
7.50	POWER LINE	PG&E	OVERHEAD CROSSING
8.50	TRANSMISSION POWER LINE	PG&E	OVERHEAD CROSSING
10.63	POWER LINE	PG&E	OVERHEAD CROSSING
10.68	TRANSMISSION POWER LINE	PG&E	OVERHEAD CROSSING
10.94	TRANSMISSION POWER LINE	PG&E	OVERHEAD CROSSING
11.07	HP GAS LINE	PG&E	UNDERGROUND CROSSING
R11.33	POWER LINE	PG&E	OVERHEAD CROSSING
R12.12	TRANSMISSION POWER LINE	PG&E	OVERHEAD CROSSING
R12.36	POWER LINE	PG&E	OVERHEAD CROSSING
R12.46	POWER LINE	PG&E	OVERHEAD CROSSING

UTILITY PLAN
(LOCATIONS)

U-1

REVISED BY	DATE REVISED
MP	02/18/14
JP	01/27/14

JESSA PEREZ — CALCULATED-DESIGNED BY
MASON LEUNG — CHECKED BY
MICHAEL HUTCHISON — FUNCTIONAL SUPERVISOR

STATE OF CALIFORNIA - DEPARTMENT OF TRANSPORTATION
Caltrans DESIGN

LAST REVISION 00-00-00
DATE PLOTTED => 16-MAY-2014
TIME PLOTTED => 13:05

Dist	COUNTY	ROUTE	POST MILES TOTAL PROJECT	SHEET No.	TOTAL SHEETS
10	Mer,Sta, SJ	5	32.2/32.5, 0.0/28.1, 0.0/R12.4	25	112

REGISTERED CIVIL ENGINEER 2/11/4 DATE

02-18-14
PLANS APPROVAL DATE

REGISTERED PROFESSIONAL ENGINEER HUE NGUYEN No. 74484 Exp. 12/31/15 CIVIL STATE OF CALIFORNIA

THE STATE OF CALIFORNIA OR ITS OFFICERS OR AGENTS SHALL NOT BE RESPONSIBLE FOR THE ACCURACY OR COMPLETENESS OF SCANNED COPIES OF THIS PLAN SHEET.

STATIONARY MOUNTED CONSTRUCTION AREA SIGNS

SIGN	SIGN CODE FEDERAL	SIGN CODE CALIFORNIA	SIGN MESSAGE	No. OF SIGNS	PANEL SIZE	No. OF POST AND SIZE
A	W20-1		ROAD WORK AHEAD	12	48" x 48"	1- 6" x 6"
B	G20-2		END ROAD WORK	23	36" x 18"	1- 4" x 4"
C	W20-1		ROAD WORK AHEAD	11	36" x 36"	1- 4" x 6"
D	G20-1		ROAD WORK NEXT 30 MILES	2	60" x 36"	2- 4" x 6"

NOTES:

1. EXACT LOCATIONS OF CONSTRUCTION AREA SIGNS TO BE DETERMINED BY THE ENGINEER.
2. FOR ADDITIONAL CONSTRUCTION AREA SIGNS, SEE TRAFFIC HANDLING SHEETS.
3. EXISTING UTILITY FACILITIES HAVE NOT BEEN INCLUDED ON THESE PLANS.

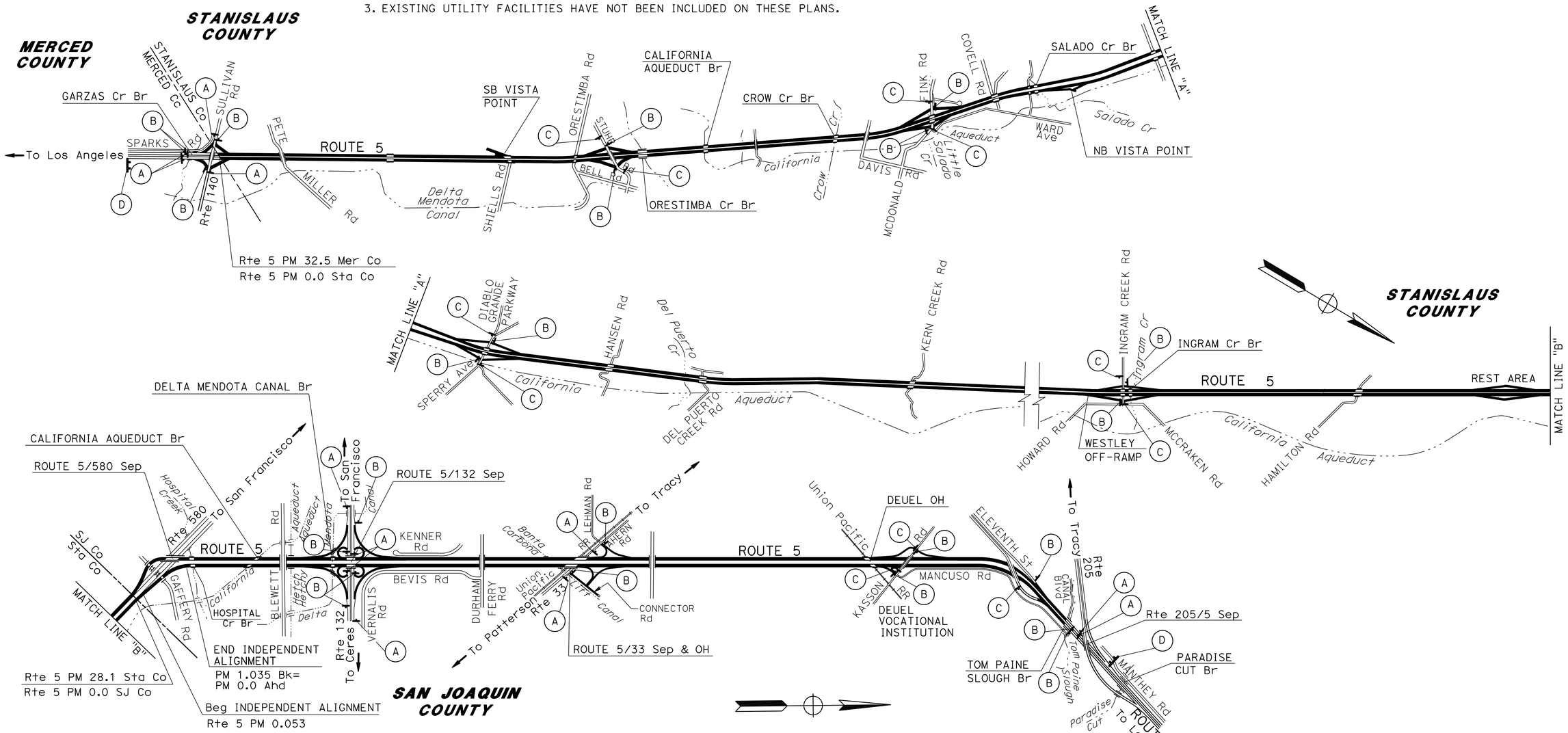

CONSTRUCTION AREA SIGNS

NO SCALE

CS-1

APPROVED FOR CONSTRUCTION AREA SIGN WORK ONLY

CALCULATED-DESIGNED BY	CECILE NGUYEN
CHECKED BY	HUE NGUYEN
REVISED BY	CN
DATE REVISED	02/18/14
FUNCTIONAL SUPERVISOR	MOHAMMED QATAMI

STATE OF CALIFORNIA - DEPARTMENT OF TRANSPORTATION
Caltrans® TRAFFIC DESIGN

LAST REVISION 00-00-00 | DATE PLOTTED => 16-MAY-2014 | TIME PLOTTED => 13:05

Dist	COUNTY	ROUTE	POST MILES TOTAL PROJECT	SHEET No.	TOTAL SHEETS
10	Mer,Sta, SJ	5	32.2/32.5, 0.0/28.1, 0.0/R12.4	26	112

REGISTERED CIVIL ENGINEER 2/11/14 DATE

02-18-14
PLANS APPROVAL DATE

REGISTERED PROFESSIONAL ENGINEER HUE NGUYEN No. 74484 Exp. 12/31/15 CIVIL STATE OF CALIFORNIA

THE STATE OF CALIFORNIA OR ITS OFFICERS OR AGENTS SHALL NOT BE RESPONSIBLE FOR THE ACCURACY OR COMPLETENESS OF SCANNED COPIES OF THIS PLAN SHEET.

LEGEND:

- CHANNELIZER (SURFACE MOUNTED)
- Temp RAILING (TYPE K)
- Temp CRASH CUSHION ARRAY 'TS14'
- DIRECTION OF TRAFFIC
- CONSTRUCTION AREA SIGN
- OBJECT MARKER (TYPE P)

NOTES:

1. CHANNELIZERS TO BE SPACED 20' APART.
2. EXISTING UTILITY FACILITIES HAVE NOT BEEN INCLUDED ON THESE PLANS.

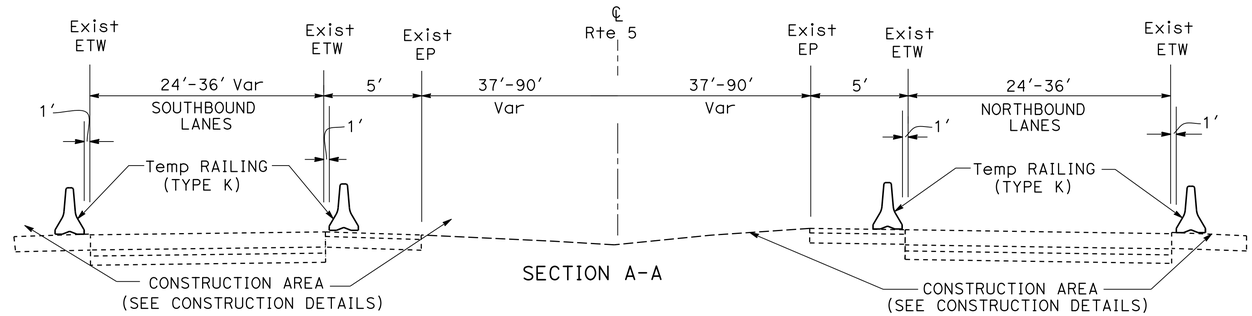

SECTION A-A

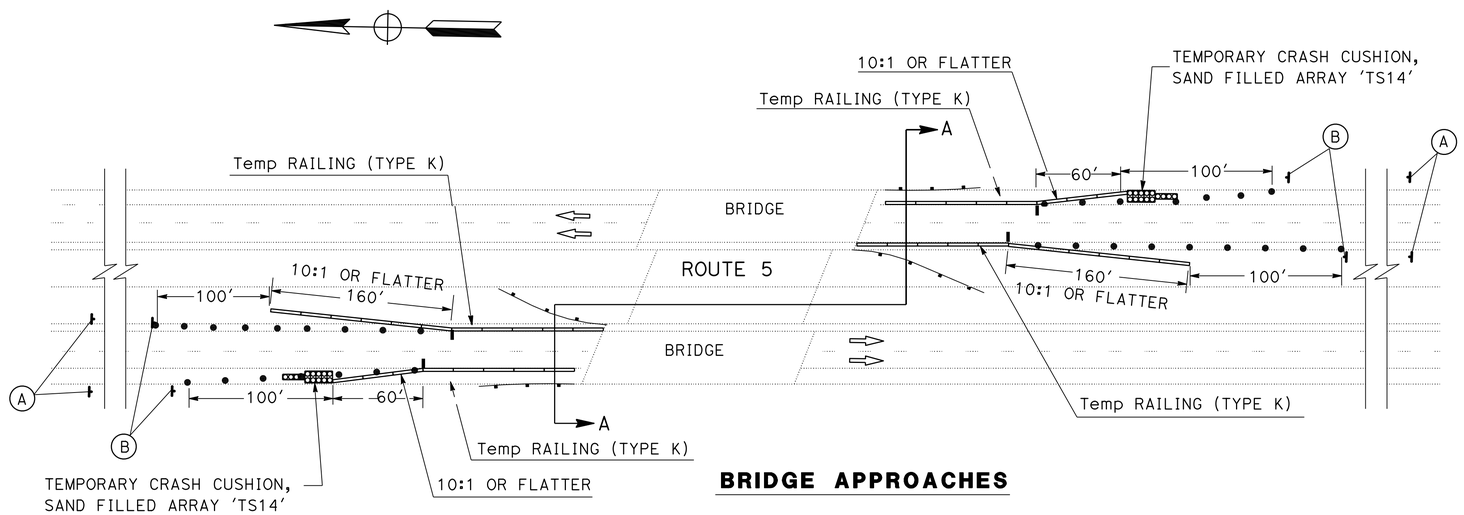

BRIDGE APPROACHES

STATIONARY MOUNTED CONSTRUCTION AREA SIGNS

No. Of LOCATION ONE SIDE/ DIRECTION	SIGN	SIGN CODE FEDERAL	SIGN CODE CALIFORNIA	PANEL SIZE	No. OF POST AND SIZE	No. OF SIGNS	SIGN MESSAGE
115	A		C24(CA)	48" x 48"	1- 6" x 6"	115	SHOULDER WORK AHEAD
	B		C31A(CA)	48" x 48"	1- 6" x 6"	115	NO SHOULDER

NOTES:

1. EXACT SIGN LOCATIONS TO BE DETERMINED BY THE ENGINEER.
2. FOR ADDITIONAL CONSTRUCTION AREA SIGNS, SEE CONSTRUCTION AREA SIGNS SHEET.
3. FOR TEMPORARY RAILING (TYPE K), CHANNELIZER (SURFACE MOUNTED), TEMPORARY CRASH CUSHION, SEE TRAFFIC HANDLING QUANTITIES.

TRAFFIC HANDLING DETAILS

NO SCALE

THD-1

REVISED BY	DATE REVISED
CN	01/27/14

CECILE NGUYEN — HUE NGUYEN
CALCULATED-DESIGNED BY — CHECKED BY
FUNCTIONAL SUPERVISOR — MOHAMMED QATAMI

STATE OF CALIFORNIA - DEPARTMENT OF TRANSPORTATION
Caltrans® TRAFFIC DESIGN

LAST REVISION 00-00-00
DATE PLOTTED => 16-MAY-2014
TIME PLOTTED => 13:05

Dist	COUNTY	ROUTE	POST MILES TOTAL PROJECT	SHEET No.	TOTAL SHEETS
10	Mer,Sta, SJ	5	32.2/32.5, 0.0/28.1, 0.0/R12.4	27	112

REGISTERED CIVIL ENGINEER 2/11/14 DATE

02-18-14
PLANS APPROVAL DATE

REGISTERED PROFESSIONAL ENGINEER HUE NGUYEN No. 74484 Exp. 12/31/15 CIVIL STATE OF CALIFORNIA

THE STATE OF CALIFORNIA OR ITS OFFICERS OR AGENTS SHALL NOT BE RESPONSIBLE FOR THE ACCURACY OR COMPLETENESS OF SCANNED COPIES OF THIS PLAN SHEET.

TEMPORARY RAILING (TYPE K) QUANTITIES

COUNTY	LOCATION PM	DIRECTION	DESCRIPTION	TEMPORARY RAILING (TYPE K) OUTSIDE (LF)	TEMPORARY RAILING (TYPE K) INSIDE (LF)	OBJECT MARKER (TYPE P) (N) (EA)
Sta	0.89	NB	PETE MILLER OC COLUMN BRIDGE	160		1
	2.48	NB	POVERTY FLAT UC			
			OUTSIDE	160		2
			INSIDE		460	
	3.99	NB	SHIELLS Rd UC			
			OUTSIDE	160		2
			INSIDE		440	
	5.02	NB	ORESTIMBA Rd UC			
			OUTSIDE	160		2
			INSIDE		440	
	5.51	NB	STUHR Rd OC COLUMN BRIDGE	160		1
	5.73	NB	ORESTIMBA Cr Br			
			OUTSIDE	160		2
			INSIDE		500	
	6.47	NB	CALIFORNIA AQUEDUCT Br			
			OUTSIDE	160		2
			INSIDE		460	
	8.95	NB	CROW Cr Br			
			OUTSIDE	160		2
			INSIDE		440	
	10.71	NB	FINK Rd UC			
			OUTSIDE	160		2
			INSIDE		440	
	11.22	NB	COVELL Rd UC			
			OUTSIDE	160		2
			INSIDE		460	
	12.53	NB	OAK FLAT Rd UC			
			OUTSIDE	160		2
			INSIDE		420	
	12.68	NB	SALADO Cr Br			
			OUTSIDE	160		2
			INSIDE		480	
	14.94	NB	NIELS HANSON Rd UC			
			OUTSIDE	160		2
			INSIDE		480	
	15.86	NB	DEL PUERTO CANYON Rd UC			
			OUTSIDE	160		2
			INSIDE		440	
	17.24	NB	HANSON Rd UC			
			OUTSIDE	160		2
			INSIDE		440	
SUBTOTAL				2400	5900	28
TOTAL 1				8300		28

TEMPORARY RAILING (TYPE K) QUANTITIES

COUNTY	LOCATION PM	DIRECTION	DESCRIPTION	TEMPORARY RAILING (TYPE K) OUTSIDE (LF)	TEMPORARY RAILING (TYPE K) INSIDE (LF)	OBJECT MARKER (TYPE P) (N) (EA)
Sta	18.31	NB	DEL PUERTO Cr Rd UC			
			OUTSIDE	160		2
			INSIDE		480	
	20.68	NB	KERN Cr Rd UC			
			OUTSIDE	160		2
			INSIDE		440	
	22.99	NB	INGRAM Cr Rd UC			
			OUTSIDE	160		2
			INSIDE		460	
	23.07	NB	INGRAM Cr BRIDGE			
			OUTSIDE	160		2
			INSIDE		460	
	23.07	NB	INGRAM Cr BRIDGE ON-RAMP			
			OUTSIDE	160		2
			INSIDE		260	
	25.53	NB	KHALSA Rd UC			
			OUTSIDE	160		2
			INSIDE		420	
SJ	0.28	NB	GAFFERY Rd UC			
			OUTSIDE	160		2
			INSIDE			
	1.10	NB	HOSPITAL Cr Br			
			OUTSIDE	160		2
			INSIDE		460	
	2.00	NB	CALIFORNIA AQUEDUCT Br			
			OUTSIDE	160		2
			INSIDE		380	
	3.27	NB	DELTA MENDOTA CANAL Br			
			OUTSIDE	160		2
			INSIDE		460	
	3.27	NB	DELTA MENDOTA CANAL Br OFF RAMP			
			OUTSIDE	160		2
			INSIDE		260	
	3.42	NB	Rte 5/132 SEP & OH			
			OUTSIDE	160		2
			INSIDE		460	
	6.41	NB	Rte 5/33 Sep & OH			
			OUTSIDE	160		2
			INSIDE		400	
	10.65	NB	DEUEL OH			
			OUTSIDE	160		2
			INSIDE		520	
	R12.39	NB	TOM PAINE SLOUGH Br			
			OUTSIDE	160		2
			INSIDE		500	
SUBTOTAL				2400	5960	30
TOTAL 2						30

NOTE:

(N) - NOT A SEPARATE PAY ITEM, FOR INFORMATION ONLY.

TRAFFIC HANDLING QUANTITIES

THQ-1

STATE OF CALIFORNIA - DEPARTMENT OF TRANSPORTATION
Caltrans® TRAFFIC DESIGN

FUNCTIONAL SUPERVISOR: MOHAMMED QATAMI
CALCULATED-DESIGNED BY: CECILE NGUYEN
CHECKED BY: HUE NGUYEN
REVISED BY: CN
DATE REVISED: 01/27/14

LAST REVISION 00-00-00
DATE PLOTTED => 16-MAY-2014
TIME PLOTTED => 13:05

TEMPORARY RAILING (TYPE K) QUANTITIES

LOCATION	PM	DIRECTION	DESCRIPTION	TEMPORARY RAILING (TYPE K) OUTSIDE	TEMPORARY RAILING (TYPE K) INSIDE	OBJECT MARKER (TYPE P) (N)
COUNTY				LF		EA
Sta	0.89	SB	PETE MILLER OC BRIDGE COLUMN	160		1
	2.48	SB	POVERTY FLAT UC			
			OUTSIDE	160		2
			INSIDE		460	
	3.99	SB	SHIELLS Rd UC			
			OUTSIDE	160		2
			INSIDE		440	
	5.02	SB	ORESTIMBA Rd UC			
			OUTSIDE	160		2
			INSIDE		440	
	5.51	SB	STUHR Rd OC BRIDGE COLUMN	160		1
	5.73	SB	ORESTIMBA Cr Br			
			OUTSIDE	160		2
			INSIDE		500	
	6.47	SB	CALIFORNIA AQUEDUCT Br			
			OUTSIDE	160		2
			INSIDE		460	
	8.94	SB	CROW Cr Br			
			OUTSIDE	160		2
			INSIDE		440	
	10.71	SB	FINK Rd UC			
			OUTSIDE	160		2
			INSIDE		440	
	11.22	SB	COVELL Rd UC			
			OUTSIDE	160		2
			INSIDE		460	
	12.53	SB	OAK FLAT Rd UC			
			OUTSIDE	160		2
			INSIDE		440	
	12.68	SB	SALADO Cr Br			
			OUTSIDE	160		2
			INSIDE		480	
	14.94	SB	NIELS HANSON Rd UC			
			OUTSIDE	160		2
			INSIDE		460	
	15.86	SB	DEL PUERTO CANYON Rd UC			
			OUTSIDE	160		2
			INSIDE		420	
	17.25	SB	HANSON Rd UC			
			OUTSIDE	160		2
			INSIDE		460	
	18.31	SB	DEL PUERTO Cr Rd UC			
			OUTSIDE	160		2
			INSIDE		500	
SUBTOTAL				2560	6400	30
TOTAL 3				8960		30

TEMPORARY RAILING (TYPE K) QUANTITIES

LOCATION	PM	DIRECTION	DESCRIPTION	TEMPORARY RAILING (TYPE K) OUTSIDE	TEMPORARY RAILING (TYPE K) INSIDE	OBJECT MARKER (TYPE P) (N)
COUNTY				LF		EA
Sta	20.69	SB	KERN Cr Rd UC			
			OUTSIDE	160		2
			INSIDE		440	
	22.99	SB	INGRAM Cr Rd UC			
			OUTSIDE	160		2
			INSIDE		460	
	23.07	SB	INGRAM Cr Rd UC			
			OUTSIDE	160		2
			INSIDE		460	
	23.07	SB	INGRAM Cr BRIDGE OFF-RAMP			
			OUTSIDE	160		2
			INSIDE		260	
	25.53	SB	KHALSA Rd UC			
			OUTSIDE	160		1
			INSIDE			
SJ	0.30	SB	GAFFERY Rd UC			
			OUTSIDE	1640		2
			INSIDE		260	
	0.63	SB	Rte 5/580 Sep			
			OUTSIDE	980		2
			INSIDE		260	
	1.10	SB	HOSPITAL Cr BRIDGE			
			OUTSIDE	160		2
			INSIDE		460	
	2.02	SB	CALIFORNIA AQUEDUCT Br			
			OUTSIDE	160		2
			INSIDE		380	
	3.27	SB	DELTA MENDOTA CANAL Br			
			OUTSIDE	160		2
			INSIDE		460	
		SB	DELTA MENDOTA CANAL Br ON-RAMP			
			OUTSIDE	160		2
			INSIDE		260	
	3.42	SB	Rte 5/132 Sep			
			OUTSIDE			
			INSIDE		460	1
	6.41	SB	Rte 5/33 Sep & OH			
			OUTSIDE	160		2
			INSIDE		400	
SUBTOTAL				4220	4560	24
TOTAL 4				8780		24

Dist	COUNTY	ROUTE	POST MILES TOTAL PROJECT	SHEET No.	TOTAL SHEETS
10	Mer,Sta, SJ	5	32.2/32.5, 0.0/28.1, 0.0/R12.4	28	112

REGISTERED CIVIL ENGINEER 2/11/14 DATE

02-18-14
PLANS APPROVAL DATE

REGISTERED PROFESSIONAL ENGINEER HUE NGUYEN No. 74484 Exp. 12/31/15 CIVIL STATE OF CALIFORNIA

THE STATE OF CALIFORNIA OR ITS OFFICERS OR AGENTS SHALL NOT BE RESPONSIBLE FOR THE ACCURACY OR COMPLETENESS OF SCANNED COPIES OF THIS PLAN SHEET.

NOTE:

(N) - NOT A SEPARATE PAY ITEM, FOR INFORMATION ONLY.

TRAFFIC HANDLING QUANTITIES
THQ-2

STATE OF CALIFORNIA - DEPARTMENT OF TRANSPORTATION
Caltrans® TRAFFIC DESIGN

FUNCTIONAL SUPERVISOR: MOHAMMED QATAMI
CALCULATED-DESIGNED BY: CECILE NGUYEN
CHECKED BY: HUE NGUYEN
REVISED BY: CN
DATE REVISED: 01/27/14

LAST REVISION 00-00-00
DATE PLOTTED => 16-MAY-2014
TIME PLOTTED => 13:05

Dist	COUNTY	ROUTE	POST MILES TOTAL PROJECT	SHEET No.	TOTAL SHEETS
10	Mer,Sta, SJ	5	32.2/32.5, 0.0/28.1, 0.0/R12.4	29	112

REGISTERED CIVIL ENGINEER 2/11/14 DATE

02-18-14
PLANS APPROVAL DATE

REGISTERED PROFESSIONAL ENGINEER HUE NGUYEN No. 74484 Exp. 12/31/15 CIVIL STATE OF CALIFORNIA

THE STATE OF CALIFORNIA OR ITS OFFICERS OR AGENTS SHALL NOT BE RESPONSIBLE FOR THE ACCURACY OR COMPLETENESS OF SCANNED COPIES OF THIS PLAN SHEET.

NOTE:

(N) - NOT A SEPARATE PAY ITEM, FOR INFORMATION ONLY.

TEMPORARY RAILING (TYPE K) QUANTITIES

LOCATION	PM	DIRECTION	DESCRIPTION	TEMPORARY RAILING (TYPE K) OUTSIDE	TEMPORARY RAILING (TYPE K) INSIDE	OBJECT MARKER (TYPE P) (N)
COUNTY				LF		EA
SJ	10.65	SB	DEUEL OH			
			OUTSIDE	160		2
			INSIDE		520	
	R12.39	SB	TOM PAINE SLOUGH Br			
			OUTSIDE	160		1
			INSIDE			
SUBTOTAL				320	520	3
TOTAL THIS SHEET				840		3
TOTAL 1				8,300		30
TOTAL 2				8,360		30
TOTAL 3				8,960		32
TOTAL 4				8,780		24
TOTAL				35,240		119

TRAFFIC HANDLING QUANTITIES

THQ-3

CN	01/27/14
REVISED BY	DATE REVISED
CECILE NGUYEN	HUE NGUYEN
CALCULATED-DESIGNED BY	CHECKED BY
FUNCTIONAL SUPERVISOR	MOHAMMED QATAMI

STATE OF CALIFORNIA - DEPARTMENT OF TRANSPORTATION
Caltrans TRAFFIC DESIGN

LAST REVISION 00-00-00 | DATE PLOTTED => 16-MAY-2014 | TIME PLOTTED => 13:05

Dist	COUNTY	ROUTE	POST MILES TOTAL PROJECT	SHEET No.	TOTAL SHEETS
10	Mer,Sta, SJ	5	32.2/32.5, 0.0/28.1, 0.0/R12.4	30	112

REGISTERED CIVIL ENGINEER 2/11/14 DATE

02-18-14
PLANS APPROVAL DATE

REGISTERED PROFESSIONAL ENGINEER HUE NGUYEN No. 74484 Exp. 12/31/15 CIVIL STATE OF CALIFORNIA

THE STATE OF CALIFORNIA OR ITS OFFICERS OR AGENTS SHALL NOT BE RESPONSIBLE FOR THE ACCURACY OR COMPLETENESS OF SCANNED COPIES OF THIS PLAN SHEET.

CHANNELIZER (SURFACE MOUNTED) QUANTITIES

COUNTY	LOCATION	PM	DIRECTION	DESCRIPTION	CHANNELIZER (SURFACE MOUNTED) OUTSIDE (EA)	CHANNELIZER (SURFACE MOUNTED) INSIDE (EA)
Sta		0.89	NB	PETE MILLER OC COLUMN BRIDGE	7	
		2.48	NB	POVERTY FLAT UC	7	9
		3.99	NB	SHIELLS Rd UC	7	9
		5.02	NB	ORESTIMBA Rd UC	7	9
		5.51	NB	STUHR Rd OC COLUMN BRIDGE	7	
		5.73	NB	ORESTIMBA Cr Br	7	9
		6.47	NB	CALIFORNIA AQUEDUCT Br	7	9
		8.95	NB	CROW Cr Br	7	9
		10.71	NB	FINK Rd UC	7	9
		11.22	NB	COVELL Rd UC	7	9
		12.53	NB	OAK FLAT Rd UC	7	9
		12.68	NB	SALADO Cr Br	7	9
		14.94	NB	NIELS HANSON Rd UC	7	9
		15.86	NB	DEL PUERTO CANYON Rd UC	7	9
		17.24	NB	HANSON Rd UC	7	9
		18.31	NB	DEL PUERTO Cr Rd UC	7	9
		20.68	NB	KERN Cr Rd UC	7	9
		22.99	NB	INGRAM Cr Rd UC	7	9
		23.07	NB	INGRAM Cr BRIDGE	7	9
		23.07	NB	INGRAM Cr BRIDGE ON RAMP	7	9
		25.53	NB	KHALSA Rd UC	7	9
SJ		0.28	NB	GAFFERY Rd UC	7	
		1.10	NB	HOSPITAL Cr Br	7	9
		2.00	NB	CALIFORNIA AQUEDUCT Br	7	9
		3.27	NB	DELTA MENDOTA CANAL Br	7	9
		3.27	NB	DELTA MENDOTA CANAL Br OFF-RAMP	7	9
		3.42	NB	Rte 5/132 Sep	7	9
		6.41	NB	Rte 5/33 Sep & OH	7	9
		10.65	NB	DEUEL OH	7	9
		R12.39	NB	TOM PAINE SLOUGH Br	7	9
Sta		0.89	SB	PETE MILLER OC BRIDGE COLUMN	7	
		2.48	SB	POVERTY FLAT UC	7	9
		3.99	SB	SHIELLS Rd UC	7	9
		5.02	SB	ORESTIMBA Rd UC	7	9
		5.51	SB	STUHR Rd OC BRIDGE COLUMN	7	
		5.73	SB	ORESTIMBA Cr Br	7	9
SUBTOTAL					252	279
TOTAL 1					531	

CHANNELIZER (SURFACE MOUNTED) QUANTITIES

COUNTY	LOCATION	PM	DIRECTION	DESCRIPTION	CHANNELIZER (SURFACE MOUNTED) OUTSIDE (EA)	CHANNELIZER (SURFACE MOUNTED) INSIDE (EA)
Sta		6.47	SB	CALIFORNIA AQUEDUCT	7	9
		8.94	SB	CROW Cr Br	7	9
		10.71	SB	FINK Rd UC	7	9
		11.22	SB	COVELL Rd UC	7	9
		12.53	SB	OAK FLAT Rd UC	7	9
		12.68	SB	SALADO Cr Br	7	9
		14.94	SB	NIELS HANSON Rd UC	7	9
		15.86	SB	DEL PUERTO Rd UC	7	9
		15.86	SB	DEL PUERTO Rd OFF-RAMP		
		17.25	SB	HANSON Rd UC	7	9
		18.31	SB	DEL PUERTO Cr Rd UC	7	9
		20.69	SB	KERN Cr Rd UC	7	9
		22.99	SB	INGRAM Cr Rd UC	7	9
		23.07	SB	INGRAM Cr Rd UC	7	9
		23.07	SB	INGRAM Cr BRIDGE OFF-RAMP	7	9
		25.53	SB	KHALSA Rd UC	7	
SJ		0.30	SB	GAFFERY Rd UC	7	9
		0.63	SB	Rte 5/580 Sep	7	9
		1.10	SB	HOSPITAL Cr Br	7	9
		2.02	SB	CALIFORNIA AQUEDUCT Br	7	9
		3.27	SB	DELTA MENDOTA CANAL Br	7	9
		3.27	SB	DELTA MENDOTA CANAL Br ON-RAMP	7	9
		3.42	SB	Rte 5/132 Sep	7	9
		6.41	SB	Rte 5/33 Sep & OH	7	9
		10.65	SB	DEUEL OH	7	9
		R12.39	SB	TOM PAINE SLOUGH Br	7	
SUBTOTAL					175	207
TOTAL 2					382	
TOTAL 1					531	
TOTAL					913	

TRAFFIC HANDLING QUANTITIES
THQ-4

STATE OF CALIFORNIA - DEPARTMENT OF TRANSPORTATION
Caltrans® TRAFFIC DESIGN

FUNCTIONAL SUPERVISOR: MOHAMMED QATAMI
CALCULATED-DESIGNED BY: CECILE NGUYEN
CHECKED BY: HUE NGUYEN
REVISED BY: CN
DATE REVISED: 01/27/14

LAST REVISION 00-00-00
DATE PLOTTED => 16-MAY-2014
TIME PLOTTED => 13:05

Dist	COUNTY	ROUTE	POST MILES TOTAL PROJECT	SHEET No.	TOTAL SHEETS
10	Mer,Sta, SJ	5	32.2/32.5, 0.0/28.1, 0.0/R12.4	31	112

REGISTERED CIVIL ENGINEER 2/11/14 DATE

02-18-14
PLANS APPROVAL DATE

REGISTERED PROFESSIONAL ENGINEER HUE NGUYEN No. 74484 Exp. 12/31/15 CIVIL STATE OF CALIFORNIA

THE STATE OF CALIFORNIA OR ITS OFFICERS OR AGENTS SHALL NOT BE RESPONSIBLE FOR THE ACCURACY OR COMPLETENESS OF SCANNED COPIES OF THIS PLAN SHEET.

TEMPORARY CRASH CUSHION MODULE QUANTITIES

COUNTY	LOCATION PM	DIRECTION	DESCRIPTION	TEMPORARY CRASH CUSHION MODULE TYPE "TS14" EA
Sta	0.89	NB	PETE MILLER OC COLUMN BRIDGE	14
	2.48	NB	POVERTY FLAT UC	
			OUTSIDE	14
			INSIDE	
	3.99	NB	SHIELLS Rd UC	
			OUTSIDE	14
			INSIDE	
	5.02	NB	ORESTIMBA Rd UC	
			OUTSIDE	14
			INSIDE	
	5.51	NB	STUHR Rd OC	
			COLUMN BRIDGE	14
	5.73	NB	ORESTIMBA Cr Br	
			OUTSIDE	14
			INSIDE	
	6.47	NB	CALIFORNIA AQUEDUCT Br	
			OUTSIDE	14
			INSIDE	
	8.95	NB	CROW Cr Br	
			OUTSIDE	14
			INSIDE	
	10.71	NB	FINK Rd UC	
			OUTSIDE	14
			INSIDE	
	11.22	NB	COVELL Rd UC	
			OUTSIDE	14
			INSIDE	
	12.53	NB	OAK FLAT Rd UC	
			OUTSIDE	14
			INSIDE	
	12.68	NB	SALADO Cr Br	
			OUTSIDE	14
			INSIDE	
	14.94	NB	NIELS HANSON Rd UC	
			OUTSIDE	14
			INSIDE	
	15.86	NB	DEL PUERTO Rd UC	
			OUTSIDE	14
			INSIDE	
	17.24	NB	HANSON Rd UC	
			OUTSIDE	14
			INSIDE	
TOTAL 1				210

TEMPORARY CRASH CUSHION MODULE QUANTITIES

COUNTY	LOCATION PM	DIRECTION	DESCRIPTION	TEMPORARY CRASH CUSHION MODULE TYPE "TS14" EA
Sta	18.31	NB	DEL PUERTO Cr Rd UC	
			OUTSIDE	14
			INSIDE	
	20.68	NB	KERN Cr Rd UC	
			OUTSIDE	14
			INSIDE	
	22.99	NB	INGRAM Cr Rd UC	
			OUTSIDE	14
			INSIDE	
	23.07	NB	INGRAM Cr BRIDGE	
			OUTSIDE	14
			INSIDE	
	23.07	NB	INGRAM Cr BRIDGE ON-RAMP	
			OUTSIDE	14
			INSIDE	
	25.53	NB	KHALSA Rd UC	
			OUTSIDE	14
			INSIDE	
SJ	0.28	NB	GAFFERY Rd UC	
			OUTSIDE	14
			INSIDE	
	1.10	NB	HOSPITAL Cr Br	
			OUTSIDE	14
			INSIDE	
	2.00	NB	CALIFORNIA AQUEDUCT Br	
			OUTSIDE	14
			INSIDE	
	3.27	NB	DELTA MENDOTA CANAL Br	
			OUTSIDE	14
			INSIDE	
	3.27	NB	DELTA MENDOTA CANAL Br OFF-RAMP	
			OUTSIDE	14
			INSIDE	
	3.42	NB	Rte 5/132 Sep	
			OUTSIDE	14
			INSIDE	
	6.41	NB	Rte 5/33 Sep & OH	
			OUTSIDE	14
			INSIDE	
	10.65	NB	DEUEL OH	
			OUTSIDE	14
			INSIDE	
	R12.39	NB	TOM PAINE SLOUGH Br	
			OUTSIDE	14
			INSIDE	
TOTAL 2				210

TRAFFIC HANDLING QUANTITIES

THQ-5

REVISED BY	DATE REVISED	CALCULATED-DESIGNED BY	CHECKED BY	FUNCTIONAL SUPERVISOR
CN	01/27/14	CECILE NGUYEN	HUE NGUYEN	MOHAMMED QATAMI

STATE OF CALIFORNIA - DEPARTMENT OF TRANSPORTATION
Caltrans® TRAFFIC DESIGN

LAST REVISION 00-00-00 | DATE PLOTTED => 16-MAY-2014 | TIME PLOTTED => 13:05

Dist	COUNTY	ROUTE	POST MILES TOTAL PROJECT	SHEET No.	TOTAL SHEETS
10	Mer,Sta, SJ	5	32.2/32.5, 0.0/28.1, 0.0/R12.4	32	112

REGISTERED CIVIL ENGINEER 2/11/14 DATE

02-18-14
PLANS APPROVAL DATE

REGISTERED PROFESSIONAL ENGINEER HUE NGUYEN No. 74484 Exp. 12/31/15 CIVIL STATE OF CALIFORNIA

THE STATE OF CALIFORNIA OR ITS OFFICERS OR AGENTS SHALL NOT BE RESPONSIBLE FOR THE ACCURACY OR COMPLETENESS OF SCANNED COPIES OF THIS PLAN SHEET.

TEMPORARY CRASH CUSHION MODULE QUANTITIES

LOCATION	PM	DIRECTION	DESCRIPTION	TEMPORARY CRASH CUSHION MODULE TYPE "TS14"
COUNTY				EA
Sta	0.89	SB	PETE MILLER OC BRIDGE COLUMN	14
	2.48	SB	POVERTY FLAT UC	
			OUTSIDE	14
			INSIDE	
	3.99	SB	SHIELLS Rd UC	
			OUTSIDE	14
			INSIDE	
	5.02	SB	ORESTIMBA Rd UC	
			OUTSIDE	14
			INSIDE	
	5.51	SB	STUHR Rd OC BRIDGE COLUMN	14
	5.73	SB	ORESTIMBA Cr Br	
			OUTSIDE	14
			INSIDE	
	6.47	SB	CALIFORNIA AQUEDUCT Br	
			OUTSIDE	14
			INSIDE	
	8.94	SB	CROW Cr Br	
			OUTSIDE	14
			INSIDE	
	10.71	SB	FINK Rd UC	
			OUTSIDE	14
			INSIDE	
	11.22	SB	COVELL Rd UC	
			OUTSIDE	14
			INSIDE	
	12.53	SB	OAK FLAT Rd UC	
			OUTSIDE	14
			INSIDE	
	12.68	SB	SALADO Cr Br	
			OUTSIDE	14
			INSIDE	
	14.94	SB	NIELS HANSON Rd UC	
			OUTSIDE	14
			INSIDE	
	15.86	SB	DEL PUERTO Rd UC	
			OUTSIDE	14
			INSIDE	
	17.25	SB	HANSON Rd UC	
			OUTSIDE	14
			INSIDE	
	18.31	SB	DEL PUERTO Cr Rd UC	
			OUTSIDE	14
			INSIDE	
TOTAL 3				224

TEMPORARY CRASH CUSHION MODULE QUANTITIES

LOCATION	PM	DIRECTION	DESCRIPTION	TEMPORARY CRASH CUSHION MODULE TYPE "TS14"
COUNTY				EA
Sta	20.69	SB	KERN Cr Rd UC	
			OUTSIDE	14
			INSIDE	
	22.99	SB	INGRAM Cr Rd UC	
			OUTSIDE	14
			INSIDE	
	23.07	SB	INGRAM Cr Rd UC	
			OUTSIDE	14
			INSIDE	
	23.07	SB	INGRAM Cr BRIDGE OFF-RAMP	
			OUTSIDE	14
			INSIDE	
	25.53	SB	KHALSA Rd UC	
			OUTSIDE	14
			INSIDE	
SJ	0.30	SB	GAFFERY Rd UC	
			OUTSIDE	14
			INSIDE	
	0.63	SB	Rte 5/580 Sep	
			OUTSIDE	14
			INSIDE	
	1.10	SB	HOSPITAL Cr BRIDGE	
			OUTSIDE	14
			INSIDE	
	2.02	SB	CALIFORNIA AQUEDUCT Br	
			OUTSIDE	14
			INSIDE	
	3.27	SB	DELTA MENDOTA CANAL Br	
			OUTSIDE	14
			INSIDE	
		SB	DELTA MENDOTA CANAL Br ON-RAMP	
			OUTSIDE	14
			INSIDE	
	3.42	SB	Rte 5/132 Sep	
			OUTSIDE	14
			INSIDE	
	6.41	SB	Rte 5/33 Sep & OH	
			OUTSIDE	14
			INSIDE	
TOTAL 4				182

TEMPORARY CRASH CUSHION MODULE QUANTITIES

LOCATION	PM	DIRECTION	DESCRIPTION	TEMPORARY CRASH CUSHION MODULE TYPE "TS14"
COUNTY				EA
SJ	10.65	SB	DEUEL OH	
			OUTSIDE	14
			INSIDE	
	R12.39	SB	TOM PAINE SLOUGH Br	
			OUTSIDE	14
			INSIDE	
TOTAL 5				28
TOTAL 1				210
TOTAL 2				210
TOTAL 3				224
TOTAL 4				182
TOTAL				854

TRAFFIC HANDLING QUANTITIES

THQ-6

REVISED BY	DATE REVISED	CALCULATED-DESIGNED BY	CHECKED BY	FUNCTIONAL SUPERVISOR
CN	01/27/14	CECILE NGUYEN	HUE NGUYEN	MOHAMMED QATAMI

STATE OF CALIFORNIA - DEPARTMENT OF TRANSPORTATION
Caltrans® TRAFFIC DESIGN

LAST REVISION 00-00-00 | DATE PLOTTED => 16-MAY-2014 | TIME PLOTTED => 13:05

Dist	COUNTY	ROUTE	POST MILES TOTAL PROJECT	SHEET No.	TOTAL SHEETS
10	Mer,Sta, SJ	5	32.2/32.5, 0.0/28.1, 0.0/R12.4	33	112

REGISTERED CIVIL ENGINEER 2/11/14 DATE

02-18-14
PLANS APPROVAL DATE

REGISTERED PROFESSIONAL ENGINEER HUE NGUYEN No. 74484 Exp. 12/31/13 CIVIL STATE OF CALIFORNIA

THE STATE OF CALIFORNIA OR ITS OFFICERS OR AGENTS SHALL NOT BE RESPONSIBLE FOR THE ACCURACY OR COMPLETENESS OF SCANNED COPIES OF THIS PLAN SHEET.

NOTE:
EXISTING UTILITY FACILITIES HAVE NOT BEEN INCLUDED ON THESE PLANS.

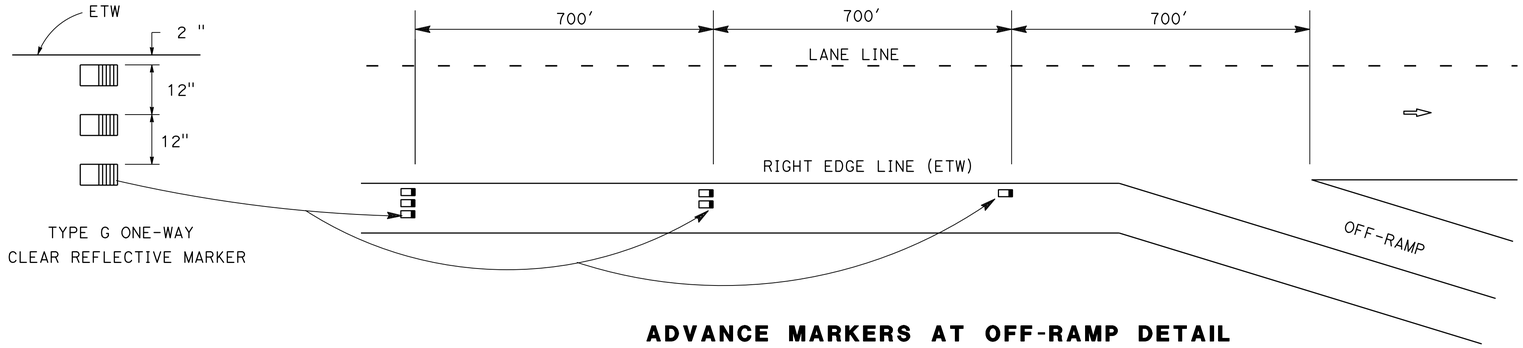

ADVANCE MARKERS AT OFF-RAMP DETAIL

USE 3, 2, 1 PATTERN AS SHOWN

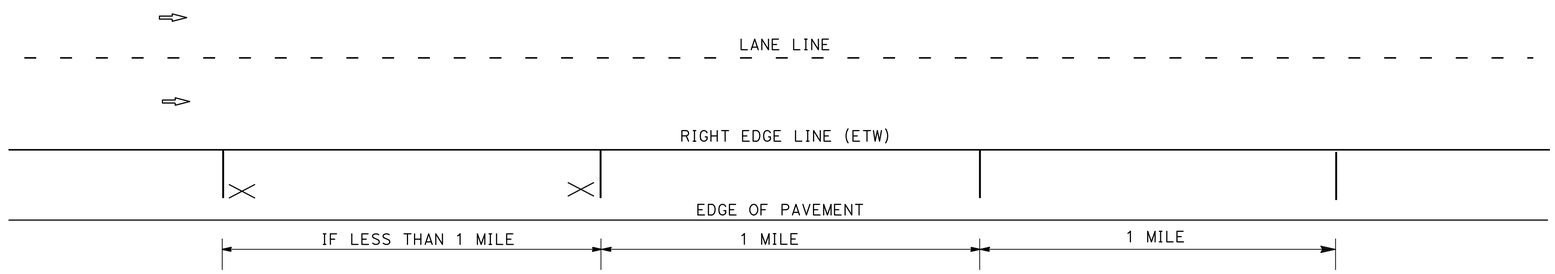

AIRCRAFT PATROL PAVEMENT MARKING LAYOUT

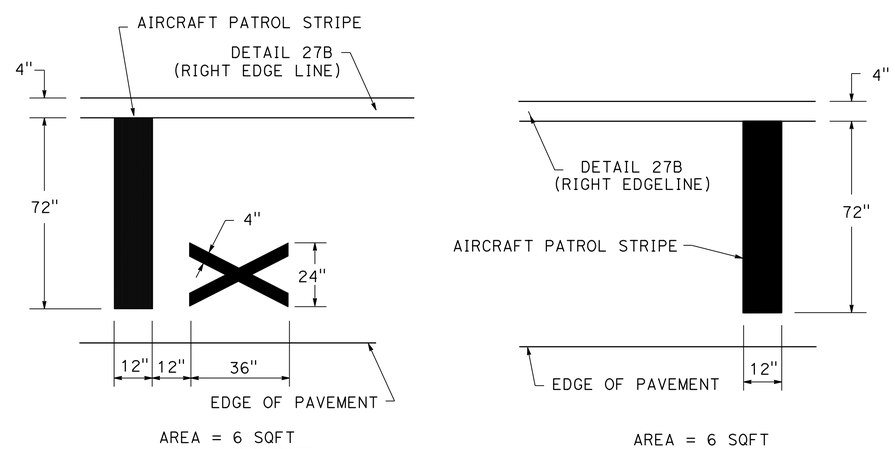

AIRCRAFT PATROL PAVEMENT MARKING DETAILS

NOTE: ALL MARKINGS FOR THIS DETAIL MUST BE WHITE

PAVEMENT DELINEATION DETAILS

NO SCALE

PDD-1

REVISED BY	DATE REVISED
CN	01/27/14

CALCULATED-DESIGNED BY: CECILE NGUYEN
CHECKED BY: HUE NGUYEN

FUNCTIONAL SUPERVISOR: MOHAMMED QATAMI

STATE OF CALIFORNIA - DEPARTMENT OF TRANSPORTATION
Caltrans
TRAFFIC DESIGN

LAST REVISION 00-00-00 | DATE PLOTTED => 16-MAY-2014 | TIME PLOTTED => 13:05

PAVEMENT DELINEATION QUANTITIES

LOCATIONS		DIRECTION	DETAIL No.	THERMOPLASTIC TRAFFIC STRIPE DETAIL 25A 4" SOLID YELLOW (LF)	DETAIL 27B 4" SOLID WHITE (LF)	DETAIL 8 4" (BROKEN 17-7) WHITE (LF)	DETAIL 36,36A, 37 8" SOLID WHITE (LF)	PAVEMENT MARKER (RETROREFLECTIVE) TYPE H (EA)	TYPE D (EA)	TYPE C (EA)	TYPE G (EA)	THERMOPLASTIC PAVEMENT MARKING DIAGONAL PAVEMENT MARKING (SQFT)	STOP (SQFT)	AHEAD (SQFT)	TYPE V ARROW (SQFT)	TYPE I ARROW (SQFT)	LIMIT LINE (SQFT)	REMOVE THERMO-PLASTIC PAVEMENT MARKING (SQFT)	REMOVE THERMO-PLASTIC TRAFFIC STRIPE (LF)	REMOVE YELLOW THERMO-PLASTIC TRAFFIC STRIPE (HAZARDOUS WASTE) (LF)	REMOVE PAVEMENT MARKER (EA)
SULLIVAN Rd	OFF-RAMP	NB	36,25A,27B	1,009	1,334		1,304	44			28		66	31	66		59	479	3,592	4,145	260
	ON-RAMP	NB	36A,25A,8,27B	1,065	1,386	235	524	46			12										
	OFF-RAMP	SB	36,25A,27B	1,082	1,422		1,120	46			28		66	31	66		63				
	ON-RAMP	SB	36A,25A,8,27B	989	1,392	240	644	42			14					31					
SB VISTA POINT	OFF-RAMP	SB	36,25A,27B	1313	2471		1,352	56			30				66			97	1,692	1,543	108
	ON-RAMP	SB	36A,25A,8,27B	230	479	220	340	12			10					31					
STUHR Rd	OFF-RAMP	NB	36,25A,27B	850	1,198		1,320	36			30		66	31	66		52	518	3,790	2,694	204
	ON-RAMP	NB	36A,25A,8,27B	534	838	136	530	24			12					31					
	OFF-RAMP	SB	36,25A,27B	648	1,020		1,440	28			32		88	31	66		56				
	ON-RAMP	SB	36A,25A,8,27B	662	902	212	500	30			12					31					
FINK Rd	OFF-RAMP	NB	36,25A,27B	723	1,008		1,216	32			26		66	31	66		50	505	3,712	2,568	196
	ON-RAMP	NB	36A,25A,8,27B	718	1,004	165	520	32			12					31					
	OFF-RAMP	SB	36,25A,27B	517	828		1,300	24			28		88	31	66		45				
	ON-RAMP	SB	36A,25A,8,27B	610	1,046	189	676	26			16					31					
NB VISTA POINT	OFF-RAMP	NB	36,25A,27B	1254			1,312	54			28				66			97	1,732	1,586	108
	ON-RAMP	NB	36A,25A,8,27B	332	532	218	420	16			10					31					
SPERRY Ave	OFF-RAMP	NB	36,25A,27B	696	1,054		1,456	30			32	51	44	31	66		35	490	4,026	3,017	222
	ON-RAMP	NB	36A,25A,8,27B	823	1,086	161	506	36			12					31					
	OFF-RAMP	SB	36,25A,27B	743	1,057		1,308	32			28		44	31	66		60				
	ON-RAMP	SB	36A,25A,8,27B	755	1,162	137	756	34			18					31					
INGRAM CREEK Rd	OFF-RAMP	NB	36,25A,27B	740	1,091		1,444	32			18	86	44	31	66		43	537	4,144	2687	210
	ON-RAMP	NB	36A,25A,8,27B	611	948	2,071	668	26			32					31					
	OFF-RAMP	SB	36,25A,27B	740	1,084		1,400	32			30		44	31	66		64				
	ON-RAMP	SB	36A,25A,8,27B	596	917	167	632	26			14					31					
REST AREA	OFF-RAMP	NB	36,25A,27B	620	1,003		1,532	28			34				66			198	4,900	2058	202
	ON-RAMP	NB	36A,25A,27B	378	1,084		1,450	18			32										
	OFF-RAMP	SB	36,25A,27B	665	1,003		1,292	30			28				66						
	ON-RAMP	SB	36A,25A,8,27B	395	711	239	626	18			14				66						
ROUTE 580	CONN-RAMP	NB	36				1,492				30								2,322		48
	CONN-RAMP	SB	36A				830				18										
Rte 132	Rte 132	EB	37,27B		545		218			20	20								431		80
	Rte 132	WB	37,27B		532		213			20	20										
Rte 5/Rte 132	OFF-RAMP	NB	36,25A,27B	1,663	2,124		1,320	70			30								3,578	6,201	340
	ON-RAMP	NB	36A,25A,8,27B	1,270	1,894	97	472	54			12										
	OFF-RAMP	SB	36,25A,27B	1,325	2,238		1,524	56			30										
	ON-RAMP	SB	36A,25A,8,27B	1,943	2,086	96	262	82			6										
Rte 132 (LOOPS)	OFF-RAMP	NW	36,25A,27B	670	943		428	30			12								1716	2973	166
	ON-RAMP	NE	36A,25A,8,27B	763	888	460	508	34			6										
	ON-RAMP	SW	36A,25A,8,27B	775	879	460	400	34			6										
	OFF-RAMP	SE	36,25A,27B	765	668		380	34			10										
Rte 33	OFF-RAMP	NB	36,25A,27B	987	1,336		912	42			20				66			585	3,124	4476	318
	ON-RAMP	NB	36A,25A,8,27B	838	1,274	152	596	36			14					31					
	OFF-RAMP	SB	36,25A,27B	861	1,491		1,008	38			22		66	31	99		40				
	ON-RAMP	SB	36A,25A,8,27B	520	920	100	608	24			14					31					
	CONNECTOR Rd	NB	22,27B	1270	2540				108				100	31			90				
KASSON Rd	OFF-RAMP	NB	36,25A,27B	945	1,615		1,020	40			22		66	31	33		30	366	3,784	4,588	270
	ON-RAMP	NB	36A,25A,8,27B	449	842	245	526	20			12					31					
	OFF-RAMP	SB	36,25A,27B	1,053	1,592		1,112	46			24		22		66		56				
	ON-RAMP	SB	36A,25A,8,27B	1,540	1,906	218	600	66			14					31					
	ON-RAMP	SE	36A,25A,8,27B	601	860	242	526	14			12										
FINK Rd			22,27B	425	850				38											850	38
DEL PUERTO CANYON Rd			22,27B	522	1044				46											1,044	46
SUBTOTAL				39,483	58,127	6,460	42,543	1,610	192	40	974	137	870	403	1,254	465	743	3,872	42,543	40,430	2,816
TOTAL 1				97,610		6,460	42,543	2,816				3,872						3,872	42,543	40,430	2,816

Dist	COUNTY	ROUTE	POST MILES TOTAL PROJECT	SHEET No.	TOTAL SHEETS
10	Mer,Sta, SJ	5	32.2/32.5, 0.0/28.1, 0.0/R12.4	34	112

REGISTERED CIVIL ENGINEER 2/11/14 DATE

02-18-14
PLANS APPROVAL DATE

REGISTERED PROFESSIONAL ENGINEER HUE NGUYEN No. 74484 Exp. 12/31/15 CIVIL STATE OF CALIFORNIA

THE STATE OF CALIFORNIA OR ITS OFFICERS OR AGENTS SHALL NOT BE RESPONSIBLE FOR THE ACCURACY OR COMPLETENESS OF SCANNED COPIES OF THIS PLAN SHEET.

CN 01/27/14
REVISED BY DATE REVISED
CECILE NGUYEN HUE NGUYEN
CALCULATED-DESIGNED BY CHECKED BY
FUNCTIONAL SUPERVISOR MOHAMMED QATAMI

STATE OF CALIFORNIA - DEPARTMENT OF TRANSPORTATION
Caltrans® TRAFFIC DESIGN

PAVEMENT DELINEATION QUANTITIES
PDQ-1

LAST REVISION 00-00-00
DATE PLOTTED => 16-MAY-2014
TIME PLOTTED => 13:05

Dist	COUNTY	ROUTE	POST MILES TOTAL PROJECT	SHEET No.	TOTAL SHEETS
10	Mer,Sta, SJ	5	32.2/32.5, 0.0/28.1, 0.0/R12.4	35	112

REGISTERED CIVIL ENGINEER 2/11/14 DATE

02-18-14
PLANS APPROVAL DATE

REGISTERED PROFESSIONAL ENGINEER HUE NGUYEN No. 74484 Exp. 12/31/15 CIVIL STATE OF CALIFORNIA

THE STATE OF CALIFORNIA OR ITS OFFICERS OR AGENTS SHALL NOT BE RESPONSIBLE FOR THE ACCURACY OR COMPLETENESS OF SCANNED COPIES OF THIS PLAN SHEET.

NOTE:
(**) SEE PDD-1 FOR ADVANCE MARKER DETAIL.

PAVEMENT DELINEATION QUANTITIES

LOCATIONS		DIRECTION	DETAIL No.	THERMOPLASTIC TRAFFIC STRIPE DETAIL 22,25A 4" SOLID YELLOW	DETAIL 27B 4" SOLID WHITE	DETAIL 8 4" (BROKEN (7-7) WHITE	DETAIL 36,36A, 37 8" SOLID WHITE	PAVEMENT MARKER (RETROREFLECTIVE) TYPE H	TYPE D	TYPE C	TYPE G	THERMOPLASTIC PAVEMENT MARKING DIAGONAL PAVEMENT MARKING	STOP	AHEAD	TYPE V ARROW	TYPE I ARROW	LIMIT LINE	REMOVE THERMO-PLASTIC PAVEMENT MARKING	REMOVE THERMO-PLASTIC TRAFFIC STRIPE	REMOVE YELLOW THERMO-PLASTIC TRAFFIC STRIPE (HAZARDOUS WASTE)	REMOVE PAVEMENT MARKER
				LF	LF	LF	LF	EA	EA	EA	EA	SQFT	SQFT	SQFT	SQFT	SQFT	SQFT	SQFT	LF	LF	EA
INGRAM Cr Rd			22,27B	690	1380				60				66				60				
STUHR Rd			22,27B	420	840				38												
OLD Rte 205 OC	ON-RAMP	NB	36A,25A,27B	94	330		484	6			12							126	1,584	2,314	140
11th St	OFF-RAMP	SB	36,27B		275		1,100				24										
SUBTOTAL				1,204	2,825		1,584	6	98		36		66				60	126	1,584	2,314	140
TOTAL 1				97,610		6,460	42,543	2,816				3,872						3,872	42,543	40,430	2,816
TOTAL 2				4,029			1,584	140				126						126	1,584	2,314	140
TOTAL 3				101,639		6,460	44,127	2,956				3,998						3,998	44,127	42,744	2,956

PAVEMENT DELINEATION QUANTITIES

LOCATION COUNTY	POST MILE LIMITS	DIRECTION	DETAIL No.	THERMOPLASTIC TRAFFIC STRIPE DETAIL 25 4" SOLID YELLOW	DETAIL 27B 4" SOLID WHITE	DETAIL 8 4" (BROKEN 17-7) WHITE	DETAIL 12 4" (BROKEN 36-12) WHITE	DETAIL 37 8" (BROKEN 12-3) WHITE	DETAIL 38 8" SOLID WHITE	DETAIL 38B 8" SOLID WHITE	PAVEMENT MARKER (RETROREFLECTIVE) TYPE C	TYPE H	TYPE G	TYPE G ADVANCE MARKER	THERMOPLASTIC PAVEMENT MARKING AIRCRAFT PATROL THERMO-PLASTIC PAVEMENT MARKING	TYPE VI ARROW	EXIT	ONLY	REMOVE THERMOPLASTIC PAVEMENT MARKING	REMOVE PAVEMENT MARKER	REMOVE THERMO-PLASTIC TRAFFIC STRIPE	REMOVE YELLOW THERMO-PLASTIC TRAFFIC STRIPE (HAZARDOUS WASTE)
				LF	LF	LF	LF	LF	LF	LF	EA	EA	EA	EAEA	SQFT	SQFT	SQFT	SQFT	SQFT	EA	LF	LF
Mer	32.20 - 32.50	NB/SB	12,25,27B	3,168	3,168		3,168					68	68							148		3,168
Sta	0.0 - 28.10	NB	12,25,37,27B	148,368	148,368		148,368	2,787			94	3,092	3,189		336							
	0.0 - 28.10	SB	12,25,27B,38	148,368	148,368		148,368	3,905	315		132	3,092	3,238		336	42			786	12,909	3,291	296,736
SJ	0.00- R12.40	NB	12,25,37,38B, 27B	65,472	65,472		65,472	898		350	32	1,366	1,414	126	144		18.5	22	538.5	9,534	17,923	132,568
	2.78 - 3.52		38						3,907				164									
	12.03 - R12.40		12				4,516					96										
	0.0 - R12.40	SB	12,25, 38,27B	67,096	65,472		65,472		311			3,092	3,106		144	84						
	3.29 - 4.03		38						3,907				164									
	11.99 - R12.40		12				2,757					58				126						
SUBTOTAL				432,472	430,848		438,121	7,590	8,440	350	258	10,864	11,343	126**	960	252	18.5	22				
TOTAL THIS SHEET				863,320			438,121	7,590	8,790			22,591			1,252.5				1,252.5	22,591	21,214	432,472
TOTAL 3				101,639		6,460			44,127			2,956			3,998				3,998	2,956	44,127	42,744
TOTAL				964,959		6,460	438,121	7,590	52,917			25,547			5,250				5,250	25,547	65,341	475,216

PAVEMENT DELINEATION QUANTITIES
PDQ-2

REVISED BY	DATE REVISED
CN	02/18/14

CALCULATED-DESIGNED BY: CECILE NGUYEN
CHECKED BY: HUE NGUYEN
FUNCTIONAL SUPERVISOR: MOHAMMED QATAMI

STATE OF CALIFORNIA - DEPARTMENT OF TRANSPORTATION
Caltrans® TRAFFIC DESIGN

LAST REVISION 00-00-00 | DATE PLOTTED => 16-MAY-2014 | TIME PLOTTED => 13:05

Dist	COUNTY	ROUTE	POST MILES TOTAL PROJECT	SHEET No.	TOTAL SHEETS
10	Mer,Sta, SJ	5	32.2/32.5, 0.0/28.1, 0.0/R12.4	36	112

REGISTERED CIVIL ENGINEER 2/11/14 DATE

02-18-14
PLANS APPROVAL DATE

REGISTERED PROFESSIONAL ENGINEER HUE NGUYEN No. 74484 Exp. 12/31/15 CIVIL STATE OF CALIFORNIA

THE STATE OF CALIFORNIA OR ITS OFFICERS OR AGENTS SHALL NOT BE RESPONSIBLE FOR THE ACCURACY OR COMPLETENESS OF SCANNED COPIES OF THIS PLAN SHEET.

PAVEMENT DELINEATION QUANTITIES

COUNTY	LOCATION	PM	DIRECTION	DESCRIPTION	OBJECT MARKER (TYPE L-1)	GUARD RAILING DELINEATOR TYPE F	GUARD RAILING DELINEATOR TYPE G	OBJECT MARKER (TYPE P)
					EA	EA		EA
Sta		0.89	NB	PETE MILLER OC COLUMN BRIDGE	1	4		
		2.48	NB	POVERTY FLAT UC				
				OUTSIDE	1	3		1
				INSIDE	1		12	1
		3.99	NB	SHIELLS Rd UC				
				OUTSIDE	1	3		1
				INSIDE	1		11	1
		5.02	NB	ORESTIMBA Rd UC				
				OUTSIDE	1	3		1
				INSIDE	1		11	1
		5.51	NB	STUHR Rd OC COLUMN BRIDGE	1	3		1
		5.73	NB	ORESTIMBA Cr Br				
				OUTSIDE	1	3		1
				INSIDE	1		13	1
		6.47	NB	CALIFORNIA AQUEDUCT Br				
				OUTSIDE	1	3		1
				INSIDE	1		12	1
		8.94	NB	CROW Cr Br				
				OUTSIDE	1	3		1
				INSIDE	1		11	1
		10.71	NB	FINK Rd UC				
				OUTSIDE	1	3		1
				INSIDE	1		11	1
		11.22	NB	COVELL Rd UC				
				OUTSIDE	1	3		1
				INSIDE	1		12	1
		12.53	NB	OAK FLAT Rd UC				
				OUTSIDE	1	3		1
				INSIDE	1		10	1
		12.68	NB	SALADO Cr Br				
				OUTSIDE	1	3		1
				INSIDE	1		13	1
		14.94	NB	NIELS HANSON Rd UC				
				OUTSIDE	1	3		1
				INSIDE	1		13	1
		15.86	NB	DEL PUERTO Rd UC				
				OUTSIDE	1	3		1
				INSIDE	1		11	1
				ON-RAMP	1	7		
				OFF-RAMP	1	5		
		17.24	NB	HANSON Rd UC				
				OUTSIDE	1	3		1
				INSIDE	1		11	1
SUBTOTAL					30	58	151	27
TOTAL 1					30	209		27

PAVEMENT DELINEATION QUANTITIES

COUNTY	LOCATION	PM	DIRECTION	DESCRIPTION	OBJECT MARKER (TYPE L-1)	GUARD RAILING DELINEATOR TYPE F	GUARD RAILING DELINEATOR TYPE G	OBJECT MARKER (TYPE P)
					EA	EA		EA
Sta		18.31	NB	DEL PUERTO Cr Rd UC				
				OUTSIDE	1	3		1
				INSIDE	1		13	1
		20.68	NB	KERN Cr Rd UC				
				OUTSIDE	1	3		1
				INSIDE	1		11	1
		22.99	NB	INGRAM Cr Rd UC				
				OUTSIDE	1	3		1
				INSIDE	1		12	1
		23.07	NB	INGRAM Cr BRIDGE				
				OUTSIDE	1	3		1
				INSIDE	1		12	1
		23.07	NB	INGRAM Cr BRIDGE ON-RAMP				
				OUTSIDE	1	3		1
				INSIDE	1	3		1
		25.53	NB	HAMITON Rd UC				
				OUTSIDE	1	3		1
				INSIDE	1		10	1
SJ		0.28	NB	GAFFERY Rd UC				
				OUTSIDE	1	3		1
				INSIDE				
		1.10	NB	HOSPITAL Cr Br				
				OUTSIDE	1	3		1
				INSIDE	1		12	1
		2.00	NB	CALIFORNIA AQUEDUCT Br				
				OUTSIDE	1	3		1
				INSIDE	1		9	1
		3.27	NB	DELTA MENDOTA CANAL Br				
				OUTSIDE	1	3		1
				INSIDE	1		12	1
		3.27	NB	OUTSIDE	1	3		1
				INSIDE	1	3		1
		3.42	NB	Rte 5/132 Sep				
				OUTSIDE	1	3		1
				INSIDE	1		12	1
		6.41	NB	Rte 5/33 Sep & OH				
				OUTSIDE	1	3		1
				INSIDE	1		9	1
		10.65	NB	DEUEL OH				
				OUTSIDE	1	3		1
				INSIDE	1		14	1
		R12.39	NB	TOM PAINE SLOUGH Br				
				OUTSIDE	1	3		1
				INSIDE	1		13	1
SUBTOTAL					29	51	139	29
TOTAL 2					29	190		29

NOTE:

GUARD RAILING DELINEATORS TO BE SPACED 25' APART.

PAVEMENT DELINEATION QUANTITIES

PDQ-3

STATE OF CALIFORNIA - DEPARTMENT OF TRANSPORTATION
Caltrans® TRAFFIC DESIGN

FUNCTIONAL SUPERVISOR: MOHAMMED QATAMI
CALCULATED-DESIGNED BY: CECILE NGUYEN
CHECKED BY: HUE NGUYEN
REVISED BY: CN
DATE REVISED: 01/28/14

LAST REVISION 00-00-00
DATE PLOTTED => 16-MAY-2014
TIME PLOTTED => 13:05

Dist	COUNTY	ROUTE	POST MILES TOTAL PROJECT	SHEET No.	TOTAL SHEETS
10	Mer,Sta, SJ	5	32.2/32.5, 0.0/28.1, 0.0/R12.4	37	112

REGISTERED CIVIL ENGINEER 2/11/14 DATE

02-18-14
PLANS APPROVAL DATE

REGISTERED PROFESSIONAL ENGINEER HUE NGUYEN No. 74484 Exp. 12/31/15 CIVIL STATE OF CALIFORNIA

THE STATE OF CALIFORNIA OR ITS OFFICERS OR AGENTS SHALL NOT BE RESPONSIBLE FOR THE ACCURACY OR COMPLETENESS OF SCANNED COPIES OF THIS PLAN SHEET.

PAVEMENT DELINEATION QUANTITIES

LOCATION	PM	DIRECTION	DESCRIPTION	OBJECT MARKER (TYPE L-1)	GUARD RAILING DELINEATOR TYPE F	GUARD RAILING DELINEATOR TYPE G	OBJECT MARKER (TYPE P)
COUNTY				EA	EA		EA
Sta	0.89	SB	PETE MILLER OC BRIDGE COLUMN	1	3		1
	2.48	SB	POVERTY FLAT UC				
			OUTSIDE	1	3		1
			INSIDE	1		12	1
	3.99	SB	SHIELLS Rd UC				
			OUTSIDE	1	3		1
			INSIDE	1		11	1
	5.02	SB	ORESTIMBA Rd UC				
			OUTSIDE	1	3		1
			INSIDE	1		11	1
	5.51	SB	STUHR Rd OC BRIDGE COLUMN	1	3		1
	5.73	SB	ORESTIMBA Cr Br				
			OUTSIDE	1	3		1
			INSIDE	1		13	1
	6.47	SB	CALIFORNIA AQUEDUCT Br				
			OUTSIDE	1	3		1
			INSIDE	1		12	1
	8.94	SB	CROW Cr Br				
			OUTSIDE	1	3		1
			INSIDE	1		11	1
	10.71	SB	FINK Rd UC				
			OUTSIDE	1	3		1
			INSIDE	1		11	1
	11.22	SB	COVELL Rd UC				
			OUTSIDE	1	3		1
			INSIDE	1		12	1
	12.53	SB	OAK FLAT Rd UC				
			OUTSIDE	1	3		1
			INSIDE	1		11	1
	12.68	SB	SALADO Cr Br				
			OUTSIDE	1	3		1
			INSIDE	1		13	1
	14.94	SB	NIELS HANSON Rd UC				
			OUTSIDE	1	3		1
			INSIDE	1		12	1
	15.86	SB	DEL PUERTO Rd UC				
			OUTSIDE	1	3		1
			INSIDE	1		11	1
	15.86	SB	DEL PUERTO Rd OFF RAMP	1	9		
	17.24	SB	HANSON Rd UC				
			OUTSIDE	1	3		1
			INSIDE	1		12	1
	18.31	SB	DEL PUERTO Cr Rd UC				
			OUTSIDE	1	3		1
			INSIDE	1		14	1
SUBTOTAL				31	57	166	30
TOTAL 3				31	223		30

PAVEMENT DELINEATION QUANTITIES

LOCATION	PM	DIRECTION	DESCRIPTION	OBJECT MARKER (TYPE L-1)	GUARD RAILING DELINEATOR TYPE F	GUARD RAILING DELINEATOR TYPE G	OBJECT MARKER (TYPE P)
COUNTY				EA	EA		EA
Sta	20.68	SB	KERN Cr Rd UC				
			OUTSIDE	1	3		1
			INSIDE	1		11	1
	22.99	SB	INGRAM Cr Rd UC				
			OUTSIDE	1	3		1
			INSIDE	1		12	1
	23.07	SB	INGRAM Cr Rd UC				
			OUTSIDE	1	3		1
			INSIDE	1		12	1
	23.07	SB	INGRAM Cr BRIDGE OFF-RAMP				
			OUTSIDE	1	3		1
			INSIDE	1		3	1
	25.53	SB	KHALSA Rd UC				
			OUTSIDE	1	3		1
			INSIDE				
SJ	0.28	SB	GAFFERY Rd UC				
			OUTSIDE	1	65		1
			INSIDE	1		3	1
	0.63	SB	Rte 5/580 Sep				
			OUTSIDE	1	37		1
			INSIDE	1		3	1
	1.10	SB	HOSPITAL Cr Br				
			OUTSIDE	1	3		1
			INSIDE	1		12	1
	2.00	SB	CALIFORNIA AQUEDUCT Br				
			OUTSIDE	1	2		1
			INSIDE	1		9	1
	3.27	SB	DELTA MENDOTA CANAL Br				
			OUTSIDE	1	2		1
			INSIDE	1		12	1
		SB	DELTA MENDOTA CANAL Br ON RAMP				
			OUTSIDE	1	2		1
			INSIDE	1		2	1
	3.42	SB	Rte 5/132 Sep				
			OUTSIDE	1	2		1
			INSIDE	1		12	1
	6.41	SB	Rte 5/33 Sep & OH				
			OUTSIDE	1	3		1
			INSIDE	1		9	1
SUBTOTAL				25	131	100	25
TOTAL 4				25	231		25

NOTE:
GUARD RAILING DELINEATORS TO BE SPACED 25' APART.

PAVEMENT DELINEATION QUANTITIES
PDQ-4

REVISED BY CN	DATE REVISED 01/28/14
CECILE NGUYEN	HUE NGUYEN
CALCULATED-DESIGNED BY	CHECKED BY
FUNCTIONAL SUPERVISOR	MOHAMMED QATAMI

STATE OF CALIFORNIA - DEPARTMENT OF TRANSPORTATION
Caltrans® TRAFFIC DESIGN

LAST REVISION 00-00-00 | DATE PLOTTED => 16-MAY-2014 | TIME PLOTTED => 13:05

Dist	COUNTY	ROUTE	POST MILES TOTAL PROJECT	SHEET No.	TOTAL SHEETS
10	Mer,Sta, SJ	5	32.2/32.5, 0.0/28.1, 0.0/R12.4	38	112

REGISTERED CIVIL ENGINEER 2/11/14 DATE

02-18-14
PLANS APPROVAL DATE

REGISTERED PROFESSIONAL ENGINEER HUE NGUYEN No. 74484 Exp. 12/31/15 CIVIL STATE OF CALIFORNIA

THE STATE OF CALIFORNIA OR ITS OFFICERS OR AGENTS SHALL NOT BE RESPONSIBLE FOR THE ACCURACY OR COMPLETENESS OF SCANNED COPIES OF THIS PLAN SHEET.

NOTE:
GUARD RAILING DELINEATORS TO BE SPACED 25' APART.

PAVEMENT DELINEATION QUANTITIES

LOCATION	PM	DIRECTION	DESCRIPTION	OBJECT MARKER (TYPE L-1)	GUARD RAILING DELINEATOR		OBJECT MARKER (TYPE P)
					TYPE F	TYPE G	
COUNTY				EA	EA		EA
SJ	10.65	SB	DEUEL OH				
			OUTSIDE	1	3		1
			INSIDE	1		14	1
	R12.39	SB	TOM PAINE SLOUGH Br				
			OUTSIDE	1	3		1
			INSIDE				
SUBTOTAL				3	6	14	3
TOTAL 5				3	20		3
TOTAL 1				30	209		27
TOTAL 2				29	190		29
TOTAL 3				31	223		30
TOTAL 4				25	231		25
TOTAL				118	873		114

PAVEMENT DELINEATION QUANTITIES
PDQ-5

STATE OF CALIFORNIA - DEPARTMENT OF TRANSPORTATION
Caltrans® TRAFFIC DESIGN

FUNCTIONAL SUPERVISOR: MOHAMMED QATAMI
CALCULATED-DESIGNED BY: CECILE NGUYEN
CHECKED BY: HUE NGUYEN
REVISED BY: CN
DATE REVISED: 01/28/14

LAST REVISION 00-00-00 | DATE PLOTTED => 16-MAY-2014 | TIME PLOTTED => 13:05

Dist	COUNTY	ROUTE	POST MILES TOTAL PROJECT	SHEET No.	TOTAL SHEETS
10	Mer,Sta, SJ	5	32.2/32.5, 0.0/28.1, 0.0/R12.4	39	112

REGISTERED CIVIL ENGINEER 2/11/14 DATE

02-18-14
PLANS APPROVAL DATE

REGISTERED PROFESSIONAL ENGINEER MASON L. LEUNG No. 71709 Exp. 12-31-15 CIVIL STATE OF CALIFORNIA

THE STATE OF CALIFORNIA OR ITS OFFICERS OR AGENTS SHALL NOT BE RESPONSIBLE FOR THE ACCURACY OR COMPLETENESS OF SCANNED COPIES OF THIS PLAN SHEET.

ROADWAY QUANTITIES

COUNTY	DIRECTION	PM/PM	DESCRIPTION	RHMA (GAP GRADED)	HMA (TYPE A)	TACK COAT	SHOULDER RUMBLE STRIP (HMA, GROUND-IN INDENTATIONS)		SHOULDER BACKING	
							INSIDE Shld	OUTSIDE Shld	INSIDE Shld	OUTSIDE Shld
				TON	TON	TON	Sta	Sta	TON	TON
STANISLAUS	NORTHBOUND	0.00/2.48	Mer/Sta COUNTY LINE - POVERTY FLAT ROAD UC BB	7,601	1,438	21.76	131	118	359	501
		2.49/3.99	POVERTY FLAT ROAD UC EB - SHIELLS ROAD UC BB	4,625	887	13.23	79	79	217	324
		4.00/5.02	SHIELLS ROAD UC EB - ORESTIMBA ROAD UC BB	3,309	634	9.37	54	54	147	219
		5.04/5.73	ORESTIMBA ROAD UC EB - ORESTIMBA CREEK BRIDGE BB	1,809	355	5.13	37	22	101	105
		5.78/6.47	ORESTIMBA CREEK BRIDGE EB - CALIFORNIA AQUEDUCT BB	2,015	397	5.76	37	37	100	149
		6.52/8.94	CALIFORNIA AQUEDUCT EB - CROW CREEK BRIDGE BB	7,370	1,405	21.11	128	128	351	523
		8.96/10.71	CROW CREEK BRIDGE EB - FINK ROAD UC BB	5,264	1,000	14.94	93	85	254	360
		10.73/11.22	FINK ROAD UC EB - COVELL ROAD UC BB	1,369	273	3.87	26	12	70	69
		11.23/12.53	COVELL ROAD UC EB - OAK FLAT ROAD UC BB	4,002	767	11.39	69	69	188	281
		12.55/12.68	OAK FLAT ROAD UC EB - SALADO CREEK BRIDGE BB	220	59	0.61	7	7	20	29
		12.72/14.94	SALADO CREEK BRIDGE EB - NIELS HANSON ROAD UC BB	6,971	1,326	19.9	117	117	322	480
		14.97/15.86	NIELS HANSON ROAD UC EB - DEL PUERTO CANYON ROAD UC BB	2,670	517	7.58	47	38	129	169
		15.88/17.24	DEL PUERTO CANYON ROAD UC EB - HANSON ROAD UC BB	4,200	807	12	72	62	198	271
		17.26/18.31	HANSON ROAD UC EB- DEL PUERTO CREEK ROAD UC BB	3,198	617	9.12	56	56	153	228
		18.33/20.68	DEL PUERTO CREEK ROAD UC EB - KERN CREEK ROAD UC BB	7,406	1,404	21.09	124	124	340	508
		20.70/22.99	KERN CREEK ROAD UC EB - INGRAM CREEK ROAD UC BB	7,242	1,371	20.58	121	101	332	446
		23.01/23.07	INGRAM CREEK ROAD UC EB - INGRAM CREEK BRIDGE BB	0	94	0.24	3	3	9	13
		23.09/25.52	INGRAM CREEK BRIDGE EB- KHALSA ROAD UC BB	7,644	1,454	21.85	128	128	352	525
		25.54/28.06	KHALSA ROAD UC EB - Sta/SJ COUNTY LINE	8,307	1,517	28.12	133	112	364	489
	SOUTHBOUND	0.00/2.48	Mer/Sta COUNTY LINE - POVERTY FLAT UC BB	7,542	1,440	21.60	131	122	359	512
		2.49/3.99	POVERTY FLAT ROAD UC EB - SHIELLS ROAD UC BB	4,650	889	13.25	79	79	217	324
		4.01/5.03	SHIELLS ROAD UC EB - ORESTIMBA ROAD UC BB	3,063	593	8.74	54	54	147	219
		5.04/5.73	ORESTIMBA ROAD UC EB - ORESTIMBA CREEK BRIDGE BB	1,757	348	5.01	36	19	99	95
		5.77/6.47	ORESTIMBA CREEK BRIDGE EB - CALIFORNIA AQUEDUCT BB	2,037	401	5.84	37	37	101	151
		6.52/8.95	CALIFORNIA AQUEDUCT EB - CROW CREEK BRIDGE BB	7,391	1,408	21.15	128	128	351	524
		8.96/10.72	CROW CREEK BRIDGE EB - FINK ROAD UC BB	5,267	1,000	14.94	93	79	254	343
		10.74/11.22	FINK ROAD UC EB - COVELL ROAD UC BB	1,338	270	3.82	25	17	70	84
		11.23/12.54	COVELL ROAD UC EB - OAK FLAT ROAD UC BB	3,998	771	11.45	69	69	189	282
		12.56/12.68	OAK FLAT ROAD UC EB - SALADO CREEK BRIDGE BB	172	50	0.48	6	6	17	26
		12.72/14.94	SALADO CREEK BRIDGE EB - NIELS HANSON ROAD UC BB	6,943	1,326	19.90	117	117	322	480
		14.96/15.86	NIELS HANSON ROAD UC EB - DEL PUERTO CANYON ROAD UC BB	2,675	520	7.64	47	36	130	158
		15.88/17.25	DEL PUERTO CANYON ROAD UC EB - HANSON ROAD UC BB	4,210	809	12.04	72	64	198	278
		17.27/18.31	HANSON ROAD UC EB - DEL PUERTO CREEK ROAD UC BB	3,186	612	9.04	55	55	151	226
TOTAL 1				139,451	26,759	403	2,411	2,234	6,611	9,391

SUMMARY OF QUANTITIES
Q-1

STATE OF CALIFORNIA - DEPARTMENT OF TRANSPORTATION
Caltrans® DESIGN

FUNCTIONAL SUPERVISOR: MICHAEL HUTCHISON
CALCULATED-DESIGNED BY: MASON LEUNG
CHECKED BY
REVISED BY: MP
DATE REVISED: 02/11/14
MANUEL PALATINO

LAST REVISION 00-00-00
DATE PLOTTED => 16-MAY-2014
TIME PLOTTED => 13:05

Dist	COUNTY	ROUTE	POST MILES TOTAL PROJECT	SHEET No.	TOTAL SHEETS
10	Mer,Sta, SJ	5	32.2/32.5, 0.0/28.1, 0.0/R12.4	40	112

REGISTERED CIVIL ENGINEER 2/11/14 DATE

02-18-14
PLANS APPROVAL DATE

REGISTERED PROFESSIONAL ENGINEER MASON L. LEUNG No. 71709 Exp. 12-31-15 CIVIL STATE OF CALIFORNIA

THE STATE OF CALIFORNIA OR ITS OFFICERS OR AGENTS SHALL NOT BE RESPONSIBLE FOR THE ACCURACY OR COMPLETENESS OF SCANNED COPIES OF THIS PLAN SHEET.

ROADWAY QUANTITIES

COUNTY	DIRECTION	PM/PM	DESCRIPTION	RHMA (GAP GRADED)	HMA (TYPE A)	TACK COAT	SHOULDER RUMBLE STRIP (HMA, GROUND-IN INDENTATIONS)		SHOULDER BACKING	
							INSIDE Shld	OUTSIDE Shld	INSIDE Shld	OUTSIDE Shld
				TON	TON	TON	Sta	Sta	TON	TON
STANISLAUS	SOUTHBOUND	18.33/20.69	DEL PUERTO CREEK ROAD UC EB - KERN CREEK ROAD UC BB	7,479	1,410	21.19	125	125	342	510
		20.70/22.99	KERN CREEK ROAD UC EB - INGRAM CREEK ROAD UC BB	7,248	1,368	20.54	121	101	331	444
		23.01/23.07	INGRAM CREEK ROAD UC EB - INGRAM CREEK BRIDGE BB	0	91	0.25	3	3	9	13
		23.09/25.53	INGRAM CREEK BRIDGE EB - KHALSA ROAD UC BB	7,720	1,459	21.92	127	127	348	519
		25.55/28.06	KHALSA ROAD UC - Sta/SJ COUNTY LINE	8,692	1,511	25.58	132	108	363	474
SAN JOAQUIN	NORTHBOUND	0.00/0.28	Sta/SJ COUNTY LINE - GAFFERY ROAD UC BB	1,276	0	4.16	15	15	26	39
		0.30/1.10	GAFFERY ROAD UC EB - HOSPITAL CREEK BRIDGE BB	2,388	0	7.72	42	42	74	111
		1.12/2.00	HOSPITAL CREEK BRIDGE EB- CALIFORNIA AQUEDUCT BB	2,634	0	8.51	46	46	81	121
		2.05/3.27	CALIFORNIA AQUEDUCT EB - DELTA MENDOTA CANAL BB	4,098	0	13.32	65	55	112	152
		3.31/3.42	DELTA MENDOTA CANAL EB - Rte 5/132 SEPARATION BB	142	0	0.45	6	6	10	15
		3.47/6.41	Rte 5/132 SEPARATION EB - Rte 5/33 SEPARATION & OH BB	9,072	0	29.42	156	139	271	383
		6.48/10.65	Rte 5/33 SEPARATION & OH EB - DEUEL OH BB	13,060	0	42.33	221	204	384	545
		10.70/R12.39	DEUEL OH EB - TOM PAINE SLOUGH BRIDGE BB	5,347	0	17.40	90	57	156	173
	SOUTHBOUND	0.00/0.30	Sta/SJ COUNTY LINE - GAFFERY ROAD UC BB	886	172	2.54	16	16	42	63
		0.32/0.63	GAFFERY ROAD UC EB - Rte 5/580 SEPARATION BB	804	166	2.25	16	16	43	64
		0.73/1.10	Rte 5/580 SEPARATION EB - HOSPITAL CREEK BRIDGE BB	997	202	2.79	20	20	51	77
		1.12/2.02	HOSPITAL CREEK BRIDGE EB - CALIFORNIA AQUEDUCT BB	2,738	524	7.69	48	48	124	186
		2.07/3.27	CALIFORNIA AQUEDUCT EB- DELTA MENDOTA CANAL BB	3,480	663	9.81	64	54	166	227
		3.31/3.42	DELTA MENDOTA CANAL EB - Rte 5/132 SEPARATION BB	146	44	1.68	6	6	15	23
		3.47/6.41	Rte 5/132 SEPARATION EB - Rte 5/33 SEPARATION & OH BB	9,838	1,732	26.08	157	141	409	567
		6.50/10.65	Rte 5/33 SEPARATION & OH EB - DEUEL OH BB	13,113	2,449	36.99	219	211	571	840
		10.69/R12.39	DEUEL OH EB - TOM PAINE SLOUGH BRIDGE BB	5,463	967	15.17	90	63	235	275
TOTAL THIS SHEET				106,621	12,758	318	1,785	1,603	4,163	5,821
TOTAL 1				139,451	26,759	403	2,411	2,234	6,611	9,391
FROM PAVEMENT TRANSITION TAPER QUANTITIES TABLE				16,711		56				
FROM RAMP QUANTITIES TABLE					18,074	38			1,469	1,469
FROM HMA DIKE QUANTITIES TABLE					6,529					
FROM REPAIR FAILED AREA QUANTITIES TABLE					7,448	21				
TOTAL				262,783	71,568	836	8,033		28,924	

COLD PLANE AC PAVEMENT

DESCRIPTION	SQYD
PAVEMENT TRANSITION TAPERS	122,474
RAMPS	9,870
REPAIR FAILED AREAS	46,139
Rte 5 NB (SJ) PM 0.30 / PM R12.40	187,366
TOTAL	365,849

REMOVE CURB

LOCATION	Dir	LENGTH
		LF
VISTA POINT	NB	1,337
VISTA POINT	SB	819
OFF-RAMP TO STUHR ROAD	NB	830
OFF-RAMP TO STUHR ROAD	SB	357
ON-RAMP FROM STUHR ROAD	SB	261
TOTAL		3,604

MINOR CONCRETE (CURB)

LOCATION	CURB TYPE	Dir	LENGTH	VOLUME
			LF	CY
VISTA POINT	B3-6	NB	1,337	14.4
VISTA POINT	B3-6	SB	819	8.8
OFF-RAMP TO STUHR ROAD	B3-6	NB	830	8.9
OFF-RAMP TO STUHR ROAD	B3-6	SB	357	3.8
ON-RAMP FROM STUHR ROAD	B3-6	SB	261	2.8
TOTAL				38.7

SUMMARY OF QUANTITIES

Q-2

REVISED BY	DATE REVISED
MP	02/11/14

MANUEL PALATINO — MASON LEUNG — CALCULATED-DESIGNED BY — CHECKED BY — FUNCTIONAL SUPERVISOR: MICHAEL HUTCHISON

STATE OF CALIFORNIA - DEPARTMENT OF TRANSPORTATION — Caltrans — DESIGN

LAST REVISION 00-00-00 — DATE PLOTTED => 16-MAY-2014 — TIME PLOTTED => 13:05

Dist	COUNTY	ROUTE	POST MILES TOTAL PROJECT	SHEET No.	TOTAL SHEETS
10	Mer,Sta, SJ	5	32.2/32.5, 0.0/28.1, 0.0/R12.4	41	112

REGISTERED CIVIL ENGINEER 2/11/14 DATE

02-18-14
PLANS APPROVAL DATE

REGISTERED PROFESSIONAL ENGINEER MASON L. LEUNG No. 71709 Exp. 12-31-15 CIVIL STATE OF CALIFORNIA

THE STATE OF CALIFORNIA OR ITS OFFICERS OR AGENTS SHALL NOT BE RESPONSIBLE FOR THE ACCURACY OR COMPLETENESS OF SCANNED COPIES OF THIS PLAN SHEET.

PAVEMENT TRANSITION TAPER QUANTITIES

COUNTY	DIRECTION	PM	LOCATION	RHMA (GAP GRADED) TON	TACK COAT TON	COLD PLANE AC PAVEMENT SQYD	TRANSITION TYPE TAPER
STANISLAUS	NORTHBOUND	0.00	Mer/Sta COUNTY LINE	108	0.36	780	PAVEMENT TRANSITION TAPER
		0.89	PETE MILLER ROAD OC	328	1.09	2,375	OVERCROSSING OVERLAY PAVEMENT TRANSITION TAPER
		2.48	POVERTY FLAT ROAD UC	215	0.72	1,560	BRIDGE APPROACH TRANSITION TAPER
		3.99	SHIELLS ROAD UC	215	0.72	1,560	BRIDGE APPROACH TRANSITION TAPER
		5.02	ORESTIMBA ROAD UC	215	0.72	1,560	BRIDGE APPROACH TRANSITION TAPER
		5.51	STUHR ROAD OC	328	1.09	2,375	OVERCROSSING OVERLAY PAVEMENT TRANSITION TAPER
		5.73	ORESTIMBA CREEK BRIDGE	215	0.72	1,560	BRIDGE APPROACH TRANSITION TAPER
		6.47	CALIFORNIA AQUEDUCT	215	0.72	1,560	BRIDGE APPROACH TRANSITION TAPER
		7.45	SIMON NEWMAN ROAD OC	320	1.06	2,318	OVERCROSSING OVERLAY PAVEMENT TRANSITION TAPER
		8.95	CROW CREEK BRIDGE	215	0.72	1,560	BRIDGE APPROACH TRANSITION TAPER
		9.45	DAVIS ROAD OC	322	1.07	2,331	OVERCROSSING OVERLAY PAVEMENT TRANSITION TAPER
		10.71	FINK ROAD UC	215	0.72	1,560	BRIDGE APPROACH TRANSITION TAPER
		11.22	COVELL ROAD UC	215	0.72	1,560	BRIDGE APPROACH TRANSITION TAPER
		12.53	OAK FLAT ROAD UC	215	0.72	1,560	BRIDGE APPROACH TRANSITION TAPER
		12.68	SALADO CREEK BRIDGE	215	0.72	1,560	BRIDGE APPROACH TRANSITION TAPER
		14.94	NIELS HANSON ROAD UC	215	0.72	1,560	BRIDGE APPROACH TRANSITION TAPER
		15.86	DEL PUERTO CANYON ROAD UC	215	0.72	1,560	BRIDGE APPROACH TRANSITION TAPER
		17.24	HANSON ROAD UC	215	0.72	1,560	BRIDGE APPROACH TRANSITION TAPER
		18.31	DEL PUERTO CREEK ROAD UC	215	0.72	1,560	BRIDGE APPROACH TRANSITION TAPER
		20.68	KERN CREEK ROAD UC	215	0.72	1,560	BRIDGE APPROACH TRANSITION TAPER
		22.99	INGRAM CREEK ROAD UC	108	0.36	780	BRIDGE APPROACH TRANSITION TAPER
		23.07	INGRAM CREEK BRIDGE	108	0.36	780	BRIDGE APPROACH TRANSITION TAPER
		25.53	KHALSA ROAD UC	167	0.36	1,560	BRIDGE APPROACH TRANSITION TAPER
	SOUTHBOUND	0.00	Mer/Sta COUNTY LINE	108	0.36	780	PAVEMENT TRANSITION TAPER
		0.89	PETE MILLER ROAD OC	328	1.09	2,375	OVERCROSSING OVERLAY PAVEMENT TRANSITION TAPER
		2.48	POVERTY FLAT ROAD UC	215	0.72	1,560	BRIDGE APPROACH TRANSITION TAPER
		3.99	SHIELLS ROAD UC	215	0.72	1,560	BRIDGE APPROACH TRANSITION TAPER
		5.02	ORESTIMBA ROAD UC	215	0.72	1,560	BRIDGE APPROACH TRANSITION TAPER
		5.51	STUHR ROAD OC	328	1.09	2,375	OVERCROSSING OVERLAY PAVEMENT TRANSITION TAPER
		5.73	ORESTIMBA CREEK BRIDGE	215	0.72	1,560	BRIDGE APPROACH TRANSITION TAPER
		6.47	CALIFORNIA AQUEDUCT	215	0.72	1,560	BRIDGE APPROACH TRANSITION TAPER
		7.45	SIMON NEWMAN ROAD OC	320	1.06	2,318	OVERCROSSING OVERLAY PAVEMENT TRANSITION TAPER
		8.94	CROW CREEK BRIDGE	215	0.72	1,560	BRIDGE APPROACH TRANSITION TAPER
		9.45	DAVIS ROAD OC	322	1.07	2,331	OVERCROSSING OVERLAY PAVEMENT TRANSITION TAPER
		10.71	FINK ROAD UC	215	0.72	1,560	BRIDGE APPROACH TRANSITION TAPER
		11.22	COVELL ROAD UC	215	0.72	1,560	BRIDGE APPROACH TRANSITION TAPER
		12.53	OAK FLAT ROAD UC	215	0.72	1,560	BRIDGE APPROACH TRANSITION TAPER
TOTAL 1				8,355	28	60,918	

TEMPORARY DRAINAGE INLET PROTECTION

Co	PM	SIDE/LOCATION	EA
Sta	4.71	NB	1
	4.71	SB	1
	4.83	NB	1
	4.83	SB OFF-RAMP	1
	23.15	NB ON-RAMP LOOP	1
SJ	3.38	NB OFF-RAMP	1
	10.74	SB	1
	10.74	NB OFF-RAMP	1
	10.83	SB ON-RAMP	1
	10.83	SB ON-RAMP	1
	10.91	NB	1
TOTAL			11

SUMMARY OF QUANTITIES
Q-3

STATE OF CALIFORNIA - DEPARTMENT OF TRANSPORTATION
Caltrans® DESIGN

FUNCTIONAL SUPERVISOR: MICHAEL HUTCHISON
CALCULATED-DESIGNED BY: MANUEL PALATINO
CHECKED BY: MASON LEUNG
REVISED BY: MP
DATE REVISED: 02/11/14

LAST REVISION 00-00-00
DATE PLOTTED => 16-MAY-2014
TIME PLOTTED => 13:05

Dist	COUNTY	ROUTE	POST MILES TOTAL PROJECT	SHEET No.	TOTAL SHEETS
10	Mer,Sta, SJ	5	32.2/32.5, 0.0/28.1, 0.0/R12.4	42	112

REGISTERED CIVIL ENGINEER 2/11/14 DATE

02-18-14
PLANS APPROVAL DATE

REGISTERED PROFESSIONAL ENGINEER MASON L. LEUNG No. 71709 Exp. 12-31-15 CIVIL STATE OF CALIFORNIA

THE STATE OF CALIFORNIA OR ITS OFFICERS OR AGENTS SHALL NOT BE RESPONSIBLE FOR THE ACCURACY OR COMPLETENESS OF SCANNED COPIES OF THIS PLAN SHEET.

* -TOTAL INCLUDED IN ROADWAY QUANTITIES TABLE.

** -TOTAL INCLUDED IN COLD PLANE AC PAVEMENT TABLE.

PAVEMENT TRANSITION TAPER QUANTITIES

COUNTY	DIRECTION	PM	LOCATION	RHMA (GAP GRADED) TON	TACK COAT TON	COLD PLANE AC PAVEMENT SQYD	TRANSITION TYPE TAPER
STANISLAUS	SOUTHBOUND	12.68	SALADO CREEK BRIDGE	215	0.72	1,560	BRIDGE APPROACH TRANSITION TAPER
		14.94	NIELS HANSON ROAD UC	215	0.72	1,560	BRIDGE APPROACH TRANSITION TAPER
		15.86	DEL PUERTO CANYON ROAD UC	215	0.72	1,560	BRIDGE APPROACH TRANSITION TAPER
		17.25	HANSON ROAD UC	215	0.72	1,560	BRIDGE APPROACH TRANSITION TAPER
		18.31	DEL PUERTO CREEK BRIDGE	215	0.72	1,560	BRIDGE APPROACH TRANSITION TAPER
		20.69	KERN CREEK ROAD UC	215	0.72	1,560	BRIDGE APPROACH TRANSITION TAPER
		22.99	INGRAM CREEK ROAD UC	108	0.36	780	BRIDGE APPROACH TRANSITION TAPER
		23.07	INGRAM CREEK BRIDGE	108	0.36	780	BRIDGE APPROACH TRANSITION TAPER
		25.53	KHALSA ROAD UC	167	0.56	1,560	BRIDGE APPROACH TRANSITION TAPER
SAN JOAQUIN	NORTHBOUND	0.22	Rte 580	108	0.36	780	PAVEMENT TRANSITION TAPER
		0.28	GAFFERY ROAD UC	167	0.56	1,560	BRIDGE APPROACH TRANSITION TAPER
		1.10	HOSPITAL CREEK BRIDGE	215	0.72	1,560	BRIDGE APPROACH TRANSITION TAPER
		2.00	CALIFORNIA AQUEDUCT	215	0.72	1,560	BRIDGE APPROACH TRANSITION TAPER
		2.46	BLEWETT ROAD OC	326	1.08	2,362	OVERCROSSING OVERLAY PAVEMENT TRANSITION TAPER
		3.27	DELTA MENDOTA CANAL	215	0.72	1,560	BRIDGE APPROACH TRANSITION TAPER
		3.42	Rte 5/132 SEPARATION	215	0.72	1,560	BRIDGE APPROACH TRANSITION TAPER
		5.47	DURHAM FERRY ROAD OC	326	1.08	2,362	OVERCROSSING OVERLAY PAVEMENT TRANSITION TAPER
		6.41	Rte 5/33 SEPARATION & OH	215	0.72	1,560	BRIDGE APPROACH TRANSITION TAPER
		7.48	LINNE ROAD OC	220	0.72	1,560	OVERCROSSING OVERLAY PAVEMENT TRANSITION TAPER
		10.65	DEUEL OH	215	0.72	1,560	BRIDGE APPROACH TRANSITION TAPER
		11.06	KASSON ROAD OC	326	1.08	2,362	OVERCROSSING OVERLAY PAVEMENT TRANSITION TAPER
		R11.79	11th STREET-OLD Rte 205 OC	330	1.10	2,392	OVERCROSSING OVERLAY PAVEMENT TRANSITION TAPER
		R12.39	TOM PAINE SLOUGH BRIDGE	141	0.47	1,020	BRIDGE APPROACH TRANSITION TAPER
	SOUTHBOUND	0.03	Rte 580	108	0.36	780	PAVEMENT TRANSITION TAPER
		0.30	GAFFERY ROAD UC	167	0.56	1,560	BRIDGE APPROACH TRANSITION TAPER
		0.63	Rte 5/580 SEPARATION	215	0.72	1,560	BRIDGE APPROACH TRANSITION TAPER
		1.10	HOSPITAL CREEK BRIDGE	215	0.72	1,560	BRIDGE APPROACH TRANSITION TAPER
		2.02	CALIFORNIA AQUEDUCT	215	0.72	1,560	BRIDGE APPROACH TRANSITION TAPER
		2.46	BLEWETT ROAD OC	326	1.08	2,362	OVERCROSSING OVERLAY PAVEMENT TRANSITION TAPER
		3.27	DELTA MENDOTA CANAL	215	0.72	1,560	BRIDGE APPROACH TRANSITION TAPER
		3.42	Rte 5/132 SEPARATION	215	0.72	1,560	BRIDGE APPROACH TRANSITION TAPER
		5.47	DURHAM FERRY ROAD OC	326	1.08	2,362	OVERCROSSING OVERLAY PAVEMENT TRANSITION TAPER
		6.41	Rte 5/33 SEPARATION & OH	215	0.72	1,560	BRIDGE APPROACH TRANSITION TAPER
		7.48	LINNE ROAD OC	220	0.72	1,560	OVERCROSSING OVERLAY PAVEMENT TRANSITION TAPER
		10.65	DEUEL OH	215	0.72	1,560	BRIDGE APPROACH TRANSITION TAPER
		11.06	KASSON ROAD OC	326	1.08	2,362	OVERCROSSING OVERLAY PAVEMENT TRANSITION TAPER
		R11.79	11th STREET-OLD Rte 205 OC	330	1.10	2,392	OVERCROSSING OVERLAY PAVEMENT TRANSITION TAPER
		R12.39	TOM PAINE SLOUGH BRIDGE	141	0.47	1,020	BRIDGE APPROACH TRANSITION TAPER
TOTAL THIS SHEET				8,356	28	61,556	
TOTAL 1				8,355	28	60,918	
TOTAL				16,711*	56 *	122,474**	

SUMMARY OF QUANTITIES
Q-4

MANUEL PALATINO	MASON LEUNG	MICHAEL HUTCHISON	MP
REVISED BY	DATE REVISED	CALCULATED-DESIGNED BY	CHECKED BY
02/11/14			

FUNCTIONAL SUPERVISOR

STATE OF CALIFORNIA - DEPARTMENT OF TRANSPORTATION

Caltrans® DESIGN

LAST REVISION 00-00-00 | DATE PLOTTED => 16-MAY-2014 | TIME PLOTTED => 13:05

Dist	COUNTY	ROUTE	POST MILES TOTAL PROJECT	SHEET No.	TOTAL SHEETS
10	Mer,Sta, SJ	5	32.2/32.5, 0.0/28.1, 0.0/R12.4	43	112

REGISTERED CIVIL ENGINEER 2/11/14 DATE

02-18-14
PLANS APPROVAL DATE

REGISTERED PROFESSIONAL ENGINEER MASON L. LEUNG No. 71709 Exp. 12-31-15 CIVIL STATE OF CALIFORNIA

THE STATE OF CALIFORNIA OR ITS OFFICERS OR AGENTS SHALL NOT BE RESPONSIBLE FOR THE ACCURACY OR COMPLETENESS OF SCANNED COPIES OF THIS PLAN SHEET.

RAMP QUANTITIES

COUNTY	DIRECTION	PM	LOCATION	HMA (TYPE A)	TACK COAT	COLD PLANE AC Pvmt	SHOULDER BACKING	
							INSIDE Shld	OUTSIDE Shld
				TON	TON	SQYD	TON	TON
STANISLAUS	NORTHBOUND	0.09	ON-RAMP FROM Rte 140	547	1.14	278	42	42
		5.39	OFF-RAMP TO STUHR ROAD	408	0.85	256	31	31
		5.64	ON-RAMP FROM STUHR ROAD	325	0.68	200	25	25
		10.57	OFF-RAMP TO FINK ROAD	357	0.75	217	27	27
		10.88	ON-RAMP FROM FINK ROAD	380	0.80	267	29	29
		12.84	OFF-RAMP TO VISTA POINT	311	0.65	122	43	43
		12.95	ON-RAMP FROM VISTA POINT	266	0.56	122	40	40
		15.71	OFF-RAMP TO DEL PUERTO ROAD	367	0.77	278	28	28
		16.03	ON-RAMP FROM DEL PUERTO ROAD	414	0.87	256	32	32
		22.85	OFF-RAMP TO HOWARD ROAD	379	0.79	167	29	29
		23.14	ON-RAMP FROM HOWARD ROAD	348	0.73	194	27	27
		27.10	OFF-RAMP TO REST AREA	356	0.75	200	27	27
		27.38	ON-RAMP FROM REST AREA	381	0.80	200	29	29
TOTAL 2				4,839	10	2,757	409	409
SAN JOAQUIN	NORTHBOUND	3.18	OFF-RAMP TO EB Rte 132	687	1.37	600	52	52
		3.38	ON-RAMP FROM EB Rte 132 LOOP	544	1.14	200	42	42
		3.51	OFF-RAMP TO WB Rte 132 LOOP	323	0.68	167	25	25
		3.64	ON-RAMP FROM WB Rte 132	308	0.64	194	23	23
		6.55	OFF-RAMP TO Rte 33	441	0.93	256	34	34
		6.76	ON-RAMP FROM Rte 33	431	0.91	200	33	33
		10.79	OFF-RAMP TO KASSON ROAD	465	0.98	200	36	36
		10.99	ON-RAMP FROM KASSON ROAD	295	0.62	200	23	23
		R12.19	ON-RAMP FROM 11th St	671	1.41	200	51	51
TOTAL 3				4,165	9	2,217	319	319

RAMP QUANTITIES

COUNTY	DIRECTION	PM	LOCATION	HMA (TYPE A)	TACK COAT	COLD PLANE AC Pvmt	SHOULDER BACKING	
							INSIDE Shld	OUTSIDE Shld
				TON	TON	SQYD	TON	TON
STANISLAUS	SOUTHBOUND	0.12	OFF-RAMP TO Rte 140	485	1.01	339	37	37
		5.34	ON-RAMP FROM STUHR ROAD	363	0.76	189	28	28
		5.62	OFF-RAMP TO STUHR ROAD	350	0.73	256	27	27
		10.60	ON-RAMP FROM FINK ROAD	408	0.85	228	31	31
		10.85	OFF-RAMP TO FINK ROAD	286	0.60	217	22	22
		3.83	ON-RAMP FROM VISTA POINT	237	0.49	122	42	42
		3.92	OFF-RAMP TO VISTA POINT	287	0.59	122	46	46
		15.71	ON-RAMP FROM DEL PUERTO ROAD	415	0.87	256	32	32
		16.03	OFF-RAMP TO DEL PUERTO ROAD	367	0.77	244	28	28
		22.87	ON-RAMP FROM HOWARD ROAD	360	0.75	189	27	27
		23.15	OFF-RAMP TO HOWARD ROAD	375	0.78	189	29	29
		27.07	ON-RAMP FROM REST AREA	332	0.69	200	25	25
		27.34	OFF-RAMP TO REST AREA	356	0.74	200	27	27
TOTAL 1				4,621	10	2,751	401	401
SAN JOAQUIN	SOUTHBOUND	3.17	ON-RAMP FROM EB Rte 132	694	1.38	600	53	53
		3.38	OFF-RAMP TO EB Rte 132 LOOP	746	1.57	200	57	57
		3.51	ON-RAMP FROM WB Rte 132 LOOP	311	0.66	189	24	24
		3.65	OFF-RAMP TO WB Rte 132	330	0.68	189	25	25
		6.60	ON-RAMP FROM Rte 33	359	0.76	189	28	28
		6.76	OFF-RAMP TO Rte 33	425	0.89	256	32	32
		10.86	ON-RAMP FROM KASSON ROAD	702	1.48	200	54	54
		R11.32	OFF-RAMP TO KASSON ROAD	458	0.96	200	35	35
		R12.07	OFF-RAMP TO 11th St	424	0.89	122	32	32
TOTAL 4				4,449	9	2,145	340	340
TOTAL 3				4,165	9	2,217	319	319
TOTAL 2				4,839	10	2,757	409	409
TOTAL 1				4,621	10	2,751	401	401
TOTAL				18,074 *	38 *	9,870 **	1,469 *	1,469 *

* - TOTAL INCLUDED IN ROADWAY QUANTITIES TABLE.

* * - TOTAL INCLUDED IN COLD PLANE AC PAVEMENT TABLE.

SUMMARY OF QUANTITIES

Q-5

STATE OF CALIFORNIA - DEPARTMENT OF TRANSPORTATION
Caltrans DESIGN

FUNCTIONAL SUPERVISOR: MICHAEL HUTCHISON
CALCULATED-DESIGNED BY: MASON LEUNG
CHECKED BY
REVISED BY: MP
DATE REVISED: 02/11/14

LAST REVISION 00-00-00
DATE PLOTTED => 16-MAY-2014
TIME PLOTTED => 13:05

Dist	COUNTY	ROUTE	POST MILES TOTAL PROJECT	SHEET No.	TOTAL SHEETS
10	Mer,Sta, SJ	5	32.2/32.5, 0.0/28.1, 0.0/R12.4	44	112

REGISTERED CIVIL ENGINEER 2/11/14 DATE

02-18-14
PLANS APPROVAL DATE

REGISTERED PROFESSIONAL ENGINEER MASON L. LEUNG No. 71709 Exp. 12-31-15 CIVIL STATE OF CALIFORNIA

THE STATE OF CALIFORNIA OR ITS OFFICERS OR AGENTS SHALL NOT BE RESPONSIBLE FOR THE ACCURACY OR COMPLETENESS OF SCANNED COPIES OF THIS PLAN SHEET.

REPAIR FAILED AREA QUANTITIES

COUNTY	LOCATION	Dir	LANE No.	LENGTH	WIDTH	DEPTH	HMA (TYPE A)	COLD PLANE AC Pvmt	TACK COAT
				Ft			TON	SQYD	TON
STANISLAUS	INGRAM CREEK Rd	LOCAL Rd	-	762	32	0.25	445	2,709	1.24
	DEL PUERTO CANYON Rd	LOCAL Rd	-	588	32	0.25	344	2,091	0.96
	FINK Rd	LOCAL Rd	-	485	32	0.25	283	1,724	0.80
	STUHR Rd	LOCAL Rd	-	588	30	0.25	322	1,960	0.90
	VISTA POINT RAMP	NB	-	762	36	0.25	501	3,048	1.40
	VISTA POINT RAMP	SB	-	916	36	0.25	602	3,664	1.68
	Rte 140 OFF-RAMP	NB	-	1,345	22	0.25	540	3,288	1.51
	PM 2.49 TO PM 2.53	NB	2	220	12	0.25	48	293	0.13
	PM 5.04 TO PM 5.06	NB	2	80	12	0.25	18	107	0.05
	PM 6.45 TO PM 6.47	NB	2	60	12	0.25	13	80	0.04
	PM 9.54 TO PM 9.55	NB	2	50	12	0.25	11	67	0.03
	PM 12.53 TO PM 12.54	NB	2	160	12	0.25	33	213	0.06
	PM 14.48 TO PM 14.99	NB	2	80	12	0.25	18	107	0.05
	PM 17.26 TO PM 17.28	NB	2	80	12	0.25	18	107	0.05
	PM 23.01 TO PM 23.07	NB	2	312	12	0.25	68	416	0.19
	PM 25.51 TO PM 25.52	NB	2	80	12	0.25	18	107	0.05
	Rte 140 ON-RAMP	NB	-	1,598	22	0.25	650	3,906	1.79
	Rte 140 OFF-RAMP	SB	-	1,417	22	0.25	577	3,464	1.59
	Rte 140 ON-RAMP	SB	-	1,497	22	0.25	601	3,659	1.68
	PM 2.49 TO PM 2.51	SB	2	80	12	0.25	18	107	0.05
	PM 5.01 TO PM 5.03	SB	2	40	12	0.25	9	53	0.02
	PM 5.04 TO PM 5.05	SB	2	50	12	0.25	11	67	0.03
	PM 6.45 TO PM 6.47	SB	2	60	12	0.25	13	80	0.04
	PM 6.52 TO PM 6.53	SB	2	60	12	0.25	13	80	0.04
	PM 8.93 TO PM 8.95	SB	2	100	12	0.25	22	133	0.06
	PM 8.96 TO PM 8.98	SB	2	80	12	0.25	18	107	0.05
	PM 10.74 TO PM 10.75	SB	2	60	12	0.25	13	80	0.04
	PM 12.71 TO PM 12.73	SB	2	60	12	0.25	13	80	0.04
	PM 14.96 TO PM 14.97	SB	2	50	12	0.25	11	67	0.03
	PM 23.01 TO PM 23.07	SB	2	322	15	0.25	88	1,431	0.66
	PM 25.53 TO PM 25.55	SB	1 & 2	50	24	0.25	22	133	0.06
SAN JOAQUIN	Rte 33 CONNECTOR Rd	NB	1 & 2	1,270	41	0.25	950	5,786	2.65
	Rte 5/132 SEP LOOP OFF-RAMP	NB	-	190	22	0.25	76	464	0.21
	Rte 5/132 SEP AUXILLIARY LANE	EB	-	660	30	0.25	361	2,200	1.01
	Rte 5/132 SEP AUXILLIARY LANE	WB	-	660	30	0.25	361	2,200	1.01
	KASSON Rd OFF-RAMP	NB	-	500	12	0.25	110	667	0.31
	PM 2.91 TO PM 3.09	SB	2	950	12	0.25	209	1,267	0.58
	PM R11.90 TO PM R11.92	SB	1	20	12	0.25	4	27	0.01
	PM R11.90 TO PM R11.92	SB	2	75	12	0.25	16	100	0.05
TOTAL							7,448 *	46,139 **	21 *

* -TOTAL INCLUDED IN ROADWAY QUANTITIES TABLE.

** -TOTAL INCLUDED IN COLD PLANE AC PAVEMENT TABLE.

SUMMARY OF QUANTITIES

Q-6

STATE OF CALIFORNIA - DEPARTMENT OF TRANSPORTATION
Caltrans DESIGN
FUNCTIONAL SUPERVISOR MICHAEL HUTCHISON
CALCULATED-DESIGNED BY JESSA PEREZ
CHECKED BY MASON LEUNG
REVISED BY JP
DATE REVISED 02/12/14

LAST REVISION 00-00-00
DATE PLOTTED => 16-MAY-2014
TIME PLOTTED => 13:05

Dist	COUNTY	ROUTE	POST MILES TOTAL PROJECT	SHEET No.	TOTAL SHEETS
10	Mer,Sta, SJ	5	32.2/32.5, 0.0/28.1, 0.0/R12.4	45	112

REGISTERED CIVIL ENGINEER 2/11/14 DATE

02-18-14
PLANS APPROVAL DATE

REGISTERED PROFESSIONAL ENGINEER MASON L. LEUNG No. 71709 Exp. 12-31-15 CIVIL STATE OF CALIFORNIA

THE STATE OF CALIFORNIA OR ITS OFFICERS OR AGENTS SHALL NOT BE RESPONSIBLE FOR THE ACCURACY OR COMPLETENESS OF SCANNED COPIES OF THIS PLAN SHEET.

HMA DIKE QUANTITIES

COUNTY	DIRECTION	LOCATION PM/PM	REMOVE AC DIKE	PLACE HMA DIKE (TYPE A)	PLACE HMA DIKE (TYPE C)	PLACE HMA DIKE (TYPE E)	HMA (TYPE A)
			LF	LF	LF	LF	TON
STANISLAUS	SOUTHBOUND	0.00/0.10	528	528			14.3
		0.10/0.30	1,056	1,056			28.5
		0.30/0.41	581			581	15.1
		0.41/0.44	158	158			4.3
		0.44/0.62	950			950	24.7
		0.62/0.80	950	950			25.7
		0.80/0.92	634			634	16.5
		0.92/1.36	2,323	2,323			62.7
		1.36/1.80	2,323			2,323	60.4
		1.80/2.11	1,637	1,637			44.2
		2.11/2.17	317			317	8.2
		2.17/2.26	475	475			12.8
		2.26/2.48	1,162			1,162	30.2
		2.49/2.50	63	25	38		1
		2.50/2.67	935			935	24.3
		2.81/2.93	634			634	16.5
		3.21/3.25	211			211	5.5
		3.25/3.36	581	581			15.7
		3.36/3.71	1,848			1,848	48.1
		3.71/3.86	792	792			21.4
		ON-RAMP FROM VISTA Pt	1,008	580		428	26.8
		OFF-RAMP TO VISTA Pt	1,323	1,323			35.7
		4.00/4.01	63	25	38		1
		4.01/4.22	1,104			1,104	28.7
		4.22/4.35	686	686			18.5
		4.53/4.95	2,218	2,218			59.8
		4.95/5.02	370			370	9.6
		5.03/5.04	63	25	38		1
		5.04/5.32	1,420			1,420	36.9
		ON-RAMP FROM STUHR Rd	524	524			14.1
		OFF-RAMP TO STUHR Rd	675	675			18.2
		5.32/5.73	2,154			2,154	56
		5.78/5.79	63	25	38		1
		5.79/6.11	1,785			1,785	46.4
		6.11/6.33	1,162	1,162			31.4
		6.33/6.47	739			739	19.2
		6.52/6.53	63	25	38		1
		6.53/6.57	211			211	5.5
		6.57/6.74	898	898			24.2
		6.74/6.77	158			158	4.1
		6.77/6.88	581	581			15.7
		6.88/6.92	211			211	5.5
		7.15/7.27	634			634	16.5
TOTAL 1			36,271	17,272	190	18,809	957

HMA DIKE QUANTITIES

COUNTY	DIRECTION	LOCATION PM/PM	REMOVE AC DIKE	PLACE HMA DIKE (TYPE A)	PLACE HMA DIKE (TYPE C)	PLACE HMA DIKE (TYPE E)	HMA (TYPE A)
			LF	LF	LF	LF	TON
STANISLAUS	SOUTHBOUND	7.27/7.31	211	211			5.7
		7.31/7.36	264			264	6.9
		7.36/7.46	528	528			14.3
		7.46/7.53	370			370	9.6
		7.53/7.62	475	475			12.8
		7.62/7.75	686			686	17.8
		7.75/7.77	106	106			2.9
		7.77/7.82	264			264	6.9
		7.82/7.91	475	475			12.8
		7.91/7.97	317			317	8.2
		7.97/8.03	317	317			8.6
		8.03/8.13	528			528	13.7
		8.13/8.18	264	264			7.1
		8.18/8.29	581			581	15.1
		8.29/8.44	792	792			21.4
		8.53/8.67	739	739			19.9
		8.67/8.94	1,426			1,426	37.1
		8.96/8.97	63	25	38		1
		9.67/9.99	1,690	1,690			45.6
		9.99/10.15	845			845	21.9
		10.18/10.31	686	686			18.5
		10.31/10.38	370			370	9.6
		10.38/10.61	1,214	1,214			32.8
		10.61/10.71	528			528	13.7
		ON-RAMP FROM FINK Rd	578	578			15.6
		OFF-RAMP TO FINK Rd	360			360	9.4
		10.73/10.74	63	25	38		1
		10.74/10.82	428			428	11.1
		10.82/10.90	422			422	11
		11.23/11.24	63	25	38		1
		11.24/11.61	1,954			1,954	43
		11.61/11.69	422	422			11.4
		11.69/11.91	1,162			1,162	30.2
		11.91/12.05	739	739			19.9
		12.05/12.26	1,109			1,109	28.8
		12.26/12.53	1,426	1,426			38.5
		12.55/12.56	63	25	38		1
		12.56/12.69	681			681	17.7
		12.72/12.73	63	25	38		1
		12.73/12.95	1,241			1,241	32.3
		12.95/13.22	1,426	1,426			43.5
		13.22/13.45	1,214			1,214	31.6
		13.45/13.69	1,267	1,267			34.2
		13.69/13.79	528			528	13.7
TOTAL 2			28,948	13,480	190	15,278	763

SUMMARY OF QUANTITIES
Q-7

STATE OF CALIFORNIA - DEPARTMENT OF TRANSPORTATION
Caltrans® DESIGN

FUNCTIONAL SUPERVISOR: MICHAEL HUTCHISON
CALCULATED-DESIGNED BY: MASON LEUNG
CHECKED BY
REVISED BY: MP
DATE REVISED: 01/28/14

LAST REVISION 00-00-00
DATE PLOTTED => 16-MAY-2014
TIME PLOTTED => 13:05

Dist	COUNTY	ROUTE	POST MILES TOTAL PROJECT	SHEET No.	TOTAL SHEETS
10	Mer,Sta, SJ	5	32.2/32.5, 0.0/28.1, 0.0/R12.4	46	112

REGISTERED CIVIL ENGINEER 2/11/14 DATE

02-18-14
PLANS APPROVAL DATE

REGISTERED PROFESSIONAL ENGINEER MASON L. LEUNG No. 71709 Exp. 12-31-15 CIVIL STATE OF CALIFORNIA

THE STATE OF CALIFORNIA OR ITS OFFICERS OR AGENTS SHALL NOT BE RESPONSIBLE FOR THE ACCURACY OR COMPLETENESS OF SCANNED COPIES OF THIS PLAN SHEET.

HMA DIKE QUANTITIES

COUNTY	DIRECTION	LOCATION PM/PM	REMOVE AC DIKE	PLACE HMA DIKE (TYPE A)	PLACE HMA DIKE (TYPE C)	PLACE HMA DIKE (TYPE E)	HMA (TYPE A)
			LF	LF	LF	LF	TON
STANISLAUS	SOUTHBOUND	13.89/13.94	264			264	6.9
		13.94/14.04	528	528			14.3
		14.04/14.11	370			370	9.6
		14.11/14.19	422	422			11.4
		14.19/14.24	264			264	6.9
		14.24/14.39	792	792			21.4
		14.39/14.44	264			264	6.9
		14.44/14.67	1,214	1,214			32.8
		14.67/14.71	211			211	5.5
		14.71/14.81	528	528			14.3
		14.81/14.95	739			739	19.2
		14.97/14.98	63	25	38		1
		14.98/15.44	2,429	2,429			65.6
		15.44/15.51	370			370	9.6
		15.51/15.62	581	581			15.7
		15.73/15.86	686	686			18.5
		ON-RAMP FROM DEL PUERTO Rd	711			711	18.5
		OFF-RAMP TO DEL PUERTO Rd	750		38	712	18.8
		15.88/15.89	63	25	38		1
		15.89/16.00	634	634			17.1
		16.14/16.25	581	581			15.7
		16.25/16.28	158			158	4.1
		16.28/16.39	581	581			15.7
		16.39/16.42	158			158	4.1
		16.42/16.52	528	528			14.3
		16.52/16.54	106			106	2.8
		16.54/16.65	581	581			15.7
		16.65/16.77	634			634	16.5
		16.77/16.83	317	317			8.6
		16.83/16.86	158			158	4.1
		16.86/16.96	528	528			14.3
		16.96/17.01	264			264	6.9
		17.01/17.09	422	422			11.4
		17.09/17.13	211			211	5.5
		17.13/17.21	422	422			11.4
		17.21/17.24	158			158	4.1
		17.26/17.27	63	25	38		1
		17.27/17.32	285			285	7.4
		17.32/17.44	634	634			17.1
TOTAL 3			18,672	12,483	152	6,037	496

HMA DIKE QUANTITIES

COUNTY	DIRECTION	LOCATION PM/PM	REMOVE AC DIKE	PLACE HMA DIKE (TYPE A)	PLACE HMA DIKE (TYPE C)	PLACE HMA DIKE (TYPE E)	HMA (TYPE A)
			LF	LF	LF	LF	TON
STANISLAUS	SOUTHBOUND	17.94/18.32	2,006			2,006	52.2
		18.33/18.34	63	25	38		1
		18.34/18.37	158	158			4.3
		18.37/18.39	106			106	2.8
		18.39/19.00	3,221	3,221			87
		19.94/20.00	317			317	8.2
		20.04/20.10	317	317			8.6
		20.30/20.44	739	739			19.9
		20.63/20.68	264			264	6.9
		20.70/20.71	63	25	38		1
		20.71/20.83	686	686			18.5
		20.96/21.08	634			634	16.5
		21.54/21.66	634			634	16.5
		22.02/22.08	317	317			8.6
		22.18/22.35	898	898			24.3
		22.62/22.86	1,267	1,267			34.21
		23.01/23.02	63	25	38		1
		23.02/23.07	264			264	6.9
		23.09/23.10	63	25	38		1
		23.29/23.37	422			422	11
		23.37/23.80	2,270	2,270			61.3
		23.80/23.88	422			422	11
		23.88/23.90	106	106			2.9
		23.90/23.96	317			317	8.2
		23.96/24.17	1,109	1109			29.9
		24.17/24.21	211			211	5.5
		24.29/24.36	370			370	9.6
		24.45/24.52	370			370	9.6
		24.68/24.81	686			686	17.8
		25.38/25.52	739			739	19.2
		25.54/25.55	63	25	38		1
		25.55/25.65	544			544	14.1
		25.65/26.21	2,957	2,957			79.8
		26.31/26.74	2,270			2,270	59
		26.90/27.05	792	792			21.5
		ON-RAMP FROM REST AREA	362	362			9.8
		OFF-RAMP TO REST AREA	572			572	14.9
TOTAL 4			26,994	15,324	190	11,480	715

SUMMARY OF QUANTITIES
Q-8

STATE OF CALIFORNIA - DEPARTMENT OF TRANSPORTATION
Caltrans DESIGN

FUNCTIONAL SUPERVISOR: MICHAEL HUTCHISON
CALCULATED-DESIGNED BY: MASON LEUNG
CHECKED BY
REVISED BY: MP
DATE REVISED: 01/28/14

LAST REVISION 00-00-00
DATE PLOTTED => 16-MAY-2014
TIME PLOTTED => 13:05

Dist	COUNTY	ROUTE	POST MILES TOTAL PROJECT	SHEET No.	TOTAL SHEETS
10	Mer,Sta, SJ	5	32.2/32.5, 0.0/28.1, 0.0/R12.4	47	112

REGISTERED CIVIL ENGINEER 2/11/14 DATE

02-18-14
PLANS APPROVAL DATE

REGISTERED PROFESSIONAL ENGINEER MASON L. LEUNG No. 71709 Exp. 12-31-15 CIVIL STATE OF CALIFORNIA

THE STATE OF CALIFORNIA OR ITS OFFICERS OR AGENTS SHALL NOT BE RESPONSIBLE FOR THE ACCURACY OR COMPLETENESS OF SCANNED COPIES OF THIS PLAN SHEET.

HMA DIKE QUANTITIES

COUNTY	DIRECTION	LOCATION PM/PM	REMOVE AC DIKE	PLACE HMA DIKE (TYPE A)	PLACE HMA DIKE (TYPE C)	PLACE HMA DIKE (TYPE E)	HMA (TYPE A)
			LF	LF	LF	LF	TON
STANISLAUS	NORTHBOUND	0.09/0.23	739	739			19.9
		0.23/0.29	317			317	8.2
		0.29/0.38	475	475			12.8
		0.43/0.64	1,109	1,109			29.9
		0.63/0.87	1,214			1,214	31.6
		0.87/0.89	106	106			2.9
		0.89/0.96	422			422	11
		1.00/1.21	1,162	1,162			31.4
		1.24/1.37	686	686			18.5
		1.37/1.76	2,112			2,112	54.9
		1.76/2.11	1,795	1,795			48.5
		2.18/2.26	370	370			10
		2.26/2.46	1,056			1,056	27.5
		2.46/2.47	63	25	38		1
		2.49/2.79	1,568			1,568	41
		2.79/3.05	1,373	1,373			37.1
		3.22/3.35	686	686			18.5
		3.35/3.70	1,848			1,848	48.1
		3.70/3.98	1,478	1,478			39.9
		3.98/3.99	63	25	38		1
		4.01/4.05	227			227	5.9
		4.05/4.11	317	317			8.6
		4.11/4.21	528			528	13.7
		4.21/4.30	475	475			12.8
		4.95/5.00	264			264	6.9
		5.00/5.01	63	25	38		1
		5.04/5.29	1,363			1,363	35.4
		5.51/5.52	70	70			1.9
		ON-RAMP FROM STUHR Rd	227	227			6.1
		5.62/5.72	534			534	13.9
		5.72/5.73	63	285	38		1
		5.78/6.13	1,853			1,853	48.2
		6.13/6.18	264	264			7.1
		6.20/6.33	686	686			18.5
		6.33/6.46	686			686	17.8
		6.46/6.47	63	25	38		1
		6.52/6.60	429			429	11.2
		6.60/6.76	861	861			23.3
		6.76/6.89	686			686	17.8
		6.89/7.14	1,320	1,320			35.6
		7.14/7.37	1,214			1,214	31.6
TOTAL 5			30,835	14,324	190	16,321	812

HMA DIKE QUANTITIES

COUNTY	DIRECTION	LOCATION PM/PM	REMOVE AC DIKE	PLACE HMA DIKE (TYPE A)	PLACE HMA DIKE (TYPE C)	PLACE HMA DIKE (TYPE E)	HMA (TYPE A)
			LF	LF	LF	LF	TON
STANISLAUS	NORTHBOUND	7.37/7.51	739	739			19.9
		7.51/7.61	553			553	14.4
		7.61/7.68	370	370			10
		7.68/7.72	243			243	6.3
		7.73/7.90	950	950			25.7
		7.90/7.96	317			317	8.2
		7.96/8.01	264	264			7.1
		8.01/8.26	1,320			1,320	34.3
		8.27/8.43	792	792			21.4
		8.43/8.52	475			475	12.4
		8.52/8.67	792	792			21.4
		8.67/8.92	1,352			1,352	35.2
		8.92/8.93	63	25	38		1
		9.68/9.93	1,373	1,373			37.1
		9.93/10.12	1,003			1,003	26.1
		10.12/10.33	1,056	1,056			28.6
		10.33/10.41	475			475	12.4
		10.41/10.51	528	528			14.3
		10.51/10.58	370			370	9.6
		10.60/10.69	475			475	12.4
		OFF-RAMP TO FINK Rd	663			663	17.2
		10.70/10.71	63	25	38		1
		ON-RAMP FROM FINK Rd	736			736	19.1
		10.73/10.82	507			507	13.2
		11.02/11.18	792			792	20.6
		11.22/11.23	63	25	38		1
		11.23/11.57	1,779			1,779	46.2
		11.97/12.05	422	422			11.4
		12.05/12.31	1,373			1,373	35.7
		12.31/12.53	1,162	1,162			31.4
		12.53/12.54	63	25	38		1
		12.55/12.69	718			718	18.7
		12.69/12.70	63	25	38		1
		12.73/12.84	612			612	15.9
		OFF-RAMP TO VISTA Pt	475	475			12.8
		ON-RAMP FROM VISTA Pt	960	648		312	25.6
		12.98/13.33	1,848	1,848			49.9
		13.33/13.48	792			792	20.6
		13.48/13.51	158	158			4.2
		13.51/13.55	211			211	5.5
		13.55/13.60	264	264			7.1
		13.60/13.63	106			106	2.8
		13.63/13.73	581	581			15.7
TOTAL 6			27,921	12,547	190	15,184	735

SUMMARY OF QUANTITIES
Q-9

REVISED BY	DATE REVISED
MP	01/28/14

CALCULATED-DESIGNED BY: MANUEL PALATINO
CHECKED BY: MASON LEUNG
FUNCTIONAL SUPERVISOR: MICHAEL HUTCHISON

STATE OF CALIFORNIA - DEPARTMENT OF TRANSPORTATION
Caltrans DESIGN

LAST REVISION 00-00-00 | DATE PLOTTED => 02-JUN-2014 | TIME PLOTTED => 10:33

Dist	COUNTY	ROUTE	POST MILES TOTAL PROJECT	SHEET No.	TOTAL SHEETS
10	Mer,Sta, SJ	5	32.2/32.5, 0.0/28.1, 0.0/R12.4	48	112

REGISTERED CIVIL ENGINEER 2/11/14 DATE

02-18-14
PLANS APPROVAL DATE

REGISTERED PROFESSIONAL ENGINEER MASON L. LEUNG No. 71709 Exp. 12-31-15 CIVIL STATE OF CALIFORNIA

THE STATE OF CALIFORNIA OR ITS OFFICERS OR AGENTS SHALL NOT BE RESPONSIBLE FOR THE ACCURACY OR COMPLETENESS OF SCANNED COPIES OF THIS PLAN SHEET.

HMA DIKE QUANTITIES

COUNTY	DIRECTION	LOCATION PM/PM	REMOVE AC DIKE	PLACE HMA DIKE (TYPE A)	PLACE HMA DIKE (TYPE C)	PLACE HMA DIKE (TYPE E)	HMA (TYPE A)
			LF	LF	LF	LF	TON
STANISLAUS	NORTHBOUND	14.07/14.22	792			792	20.6
		14.32/14.96	3,432			3,432	89.2
		14.96/14.97	63	25	38		1
		14.97/15.10	702			702	18.3
		15.44/15.71	1,426			1,426	37.1
		OFF-RAMP TO DEL PUERTO Rd	633	633			17.4
		15.82/15.83	63	25	38		1
		15.87/16.00	655			655	17
		ON-RAMP FROM DEL PUERTO Rd	752	442		310	20
		16.00/16.08	417			417	10.8
		16.08/16.22	739	739			19.9
		16.22/16.29	370			370	9.6
		16.29/16.36	370	370			10
		16.36/16.39	158			158	4.1
		16.39/16.47	422	422			11.4
		16.47/16.57	528			528	13.7
		16.57/16.65	422	422			11.4
		16.65/16.70	211			211	5.5
		16.70/16.77	370	370			10
		16.77/16.85	422			422	10.9
		16.85/16.94	475	475			12.8
		16.94/16.98	211			211	5.5
		16.98/17.05	370	370			10
		17.05/17.09	211			211	5.5
		17.09/17.12	158	158			4.3
		17.12/17.18	317			317	8.2
		17.18/17.20	106	106			2.9
		17.20/17.21	63	25	38		1
		17.26/17.68	2,212			2,212	57.5
		17.91/18.31	2,112			2,112	54.9
		18.31/18.32	63	25	38		1
		18.33/18.41	422			422	10.9
		18.41/18.63	1,162	1,162			31.4
		19.04/19.14	528			528	13.7
		19.27/19.35	422	422			11.4
		19.40/19.63	1,214			1,214	31.6
		19.66/19.72	317			317	8.2
		19.72/19.85	686	686			18.5
		19.85/20.21	1,901			1,901	49.4
TOTAL 7			25,897	6,877	152	18,868	677

HMA DIKE QUANTITIES

COUNTY	DIRECTION	LOCATION PM/PM	REMOVE AC DIKE	PLACE HMA DIKE (TYPE A)	PLACE HMA DIKE (TYPE C)	PLACE HMA DIKE (TYPE E)	HMA (TYPE A)
			LF	LF	LF	LF	TON
STANISLAUS	NORTHBOUND	20.33/20.67	1,795	1,795			48.5
		20.67/20.68	63	25	38		1
		20.69/20.92	1,188			1,188	30.9
		21.17/21.37	1,056	1,056			28.5
		21.37/21.75	2,059			2,059	53.5
		22.09/22.34	1,320			1,320	34.3
		22.39/22.50	581			581	15.1
		22.50/22.61	581	581			15.7
		22.86/22.99	686			686	17.8
		22.99/23.00	63	25	38		1
		23.01/23.07	312			312	8.1
		23.07/23.08	63	25	38		1
		23.11/23.43	1,690			1,690	43.9
		23.43/23.72	1,823	1,823			49.2
		23.72/23.99	1,426			1,426	37.1
		24/19/24.95	4,013			4,013	104.3
		25.00/25.13	686			686	17.8
		25.19/25.35	845	845			22.8
		25.35/25.51	845			845	22
		25.51/25.52	63	25	38		1
		25.54/25.69	797			797	20.7
		25.90/26.24	1,795	1,795			48.5
		26.45/26.72	1,448			1,448	37.7
		27.01/27.11	528			528	13.7
		OFF-RAMP TO REST AREA	581			581	15.1
		ON-RAMP FROM REST AREA	185			185	4.8
		DEL PUERTO CANYON ROAD	480	480			13
		INGRAM CREEK ROAD	563	413	150		12.3
SAN JOAQUIN	SOUTHBOUND	0.84/0.91	370			370	9.6
		2.07/2.08	63	25	38		1
		2.08/2.20	637			637	16.6
		ON-RAMP FROM EB Rte 132	340	340			9.2
		3.21/3.27	317	317			8.6
		3.31/3.32	63	25	38		1
		3.32/3.35	106	106			2.9
TOTAL 8			29,751	9,701	378	19,672	776

SUMMARY OF QUANTITIES
Q-10

REVISED BY	DATE REVISED
MP	02/12/14

CALCULATED-DESIGNED BY: MANUEL PALATINO
CHECKED BY: MASON LEUNG
FUNCTIONAL SUPERVISOR: MICHAEL HUTCHISON

STATE OF CALIFORNIA - DEPARTMENT OF TRANSPORTATION
Caltrans® DESIGN

LAST REVISION 00-00-00
DATE PLOTTED => 16-MAY-2014
TIME PLOTTED => 13:06

Dist	COUNTY	ROUTE	POST MILES TOTAL PROJECT	SHEET No.	TOTAL SHEETS
10	Mer,Sta, SJ	5	32.2/32.5, 0.0/28.1, 0.0/R12.4	49	112

REGISTERED CIVIL ENGINEER 2/11/14 DATE

02-18-14
PLANS APPROVAL DATE

REGISTERED PROFESSIONAL ENGINEER MASON L. LEUNG No. 71709 Exp. 12-31-15 CIVIL STATE OF CALIFORNIA

THE STATE OF CALIFORNIA OR ITS OFFICERS OR AGENTS SHALL NOT BE RESPONSIBLE FOR THE ACCURACY OR COMPLETENESS OF SCANNED COPIES OF THIS PLAN SHEET.

HMA DIKE QUANTITIES

COUNTY	DIRECTION	LOCATION PM/PM	REMOVE AC DIKE	PLACE HMA DIKE (TYPE A)	PLACE HMA DIKE (TYPE C)	PLACE HMA DIKE (TYPE E)	HMA (TYPE A)
			LF	LF	LF	LF	TON
SAN JOAQUIN	SOUTHBOUND	LOOP OFF-RAMP TO EB Rte 132	379	379			10.2
		3.47/3.48	65	32	33		1.1
		LOOP ON-RAMP FROM WB Rte 132	630	630			17.0
		3.51/3.61	528	528			14.3
		6.11/6.43	1,690			1,690	43.9
		6.50/6.51	75	65	10		1.8
		ON-RAMP FROM Rte 33	872	872			23.5
		OFF-RAMP TO Rte 33	606	606			16.4
		6.62/6.73	872	872			23.5
		10.34/10.65	606	606			16.4
		10.65/10.66	75	65	10		1.8
		ON-RAMP FROM KASSON Rd	1,723			1,723	44.8
SAN JOAQUIN	NORTHBOUND	0.28/0.29	63	25	38		1
		2.05/2.22	897			897	23.3
		3.20/3.28	422	422			11.4
		OFF-RAMP TO EB Rte 132	461	461			12.5
		3.27/3.28	63	25	38		1
		3.28/3.33	265			265	6.9
		5.35/5.47	634	634			17.1
		3.43/3.44	63	25	38		1
		LOOP OFF-RAMP TO WB Rte 132	882	882			23.4
		3.51/3.56	264	264			7.1
		3.56/3.61	264			264	6.9
		6.13/6.40	1,426			1,426	37.1
		6.41/6.42	75	65	10		1.8
		OFF-RAMP TO Rte 33	1,402			1,402	36.5
		ON-RAMP FROM Rte 33	1,264			1,264	32.9
		10.36/10.67	1,637			1,637	42.6
		10.65/10.66	75	65	10		1.8
		OFF-RAMP TO KASSON Rd	1,496			1,496	38.9
		10.80/10.96	845			845	22
		ON-RAMP FROM KASSON Rd	880			880	22.9
		ON-RAMP FROM 11th St	1,696	1,521		175	45.6
TOTAL THIS SHEET			23,195	9,044	187	13,964	608
TOTAL 1			36,271	17,272	190	18,809	957
TOTAL 2			28,948	13,480	190	15,278	763
TOTAL 3			18,672	12,483	152	6,037	496
TOTAL 4			26,662	15,324	190	11,148	705
TOTAL 5			30,835	14,324	190	16,321	812
TOTAL 6			27,921	12,547	190	15,184	735
TOTAL 7			25,897	6,877	152	18,868	677
TOTAL 8			29,751	9,701	378	19,672	776
TOTAL			248,152	111,052	1,819	135,281	6,529 *

* - TOTAL INCLUDED IN ROADWAY QUANTITIES TABLE.

ADJUST MONUMENT COVER

Co	DIRECTION	LOCATION	PM	EA
SJ	NORTHBOUND	OUTSIDE Shld	0.41	1
			0.61	1
			0.81	1
			1.45	1
			1.81	1
			2.21	1
			2.59	1
			3.72	1
			4.10	1
			4.46	1
			4.86	1
			5.24	1
			5.58	1
			6.0	1
			6.36	1
			6.75	1
			7.13	1
			7.51	1
			7.89	1
			8.27	1
			8.65	1
			9.03	1
			9.40	1
			9.78	1
			10.16	1
			10.58	1
			10.92	1
			11.11	1
			R11.30	1
			R11.68	1
			R11.97	1
SJ	SOUTHBOUND	OUTSIDE Shld	0.27	1
			0.41	1
			0.60	1
			0.84	1
			1.07	1
			1.26	1
			1.64	1
			2.40	1
			2.78	1
			3.19	1
			3.91	1
			4.29	1
			4.67	1
TOTAL 1				44

ADJUST MONUMENT COVER

Co	DIRECTION	LOCATION	PM	EA
SJ	SOUTHBOUND	OUTSIDE Shld	5.05	1
			5.48	1
			5.79	1
			6.18	1
			6.54	1
			6.94	1
			7.32	1
			7.70	1
			8.08	1
			8.46	1
			8.84	1
			9.21	1
			9.59	1
			9.97	1
			10.35	1
			10.73	1
			R11.50	1
			R11.87	1
			R12.25	1
Mer	SOUTHBOUND	OUTSIDE Shld	32.25	1
Sta	SOUTHBOUND	OUTSIDE Shld	0.10	1
			0.44	1
			0.63	1
			0.93	1
			1.20	1
			1.34	1
			1.71	1
			1.96	1
			2.08	1
			2.27	1
			2.65	1
			3.03	1
			3.43	1
			4.22	1
			4.55	1
			4.85	1
			5.14	1
			5.41	1
			5.80	1
TOTAL 2				39
TOTAL 1				44
TOTAL				83

SUMMARY OF QUANTITIES
Q-11

REVISED BY	MP	CALCULATED-DESIGNED BY	
DATE REVISED	02/12/14	CHECKED BY	
MANUEL PALATINO		FUNCTIONAL SUPERVISOR	
MASON LEUNG		MICHAEL HUTCHISON	

STATE OF CALIFORNIA - DEPARTMENT OF TRANSPORTATION
Caltrans® DESIGN

LAST REVISION 00-00-00 | DATE PLOTTED => 16-MAY-2014 | TIME PLOTTED => 13:06

Dist	COUNTY	ROUTE	POST MILES TOTAL PROJECT	SHEET No.	TOTAL SHEETS
10	Mer,Sta, SJ	5	32.2/32.5, 0.0/28.1, 0.0/R12.4	50	112

REGISTERED CIVIL ENGINEER 2/11/14 DATE

02-18-14
PLANS APPROVAL DATE

REGISTERED PROFESSIONAL ENGINEER MASON L. LEUNG No. 71709 Exp. 12-31-15 CIVIL STATE OF CALIFORNIA

THE STATE OF CALIFORNIA OR ITS OFFICERS OR AGENTS SHALL NOT BE RESPONSIBLE FOR THE ACCURACY OR COMPLETENESS OF SCANNED COPIES OF THIS PLAN SHEET.

NOTE:

(N) NOT A SEPARATE PAY ITEM, FOR INFORMATION ONLY.

JOINTED PLAIN CONCRETE PAVEMENT QUANTITIES

COUNTY	DIRECTION	LOCATION POSTMILE/POSTMILE	LENGTH (N)	WIDTH (N)	DEPTH (N)	REMOVE CONDRETE PAVEMENT	JOINTED PLAIN CONCRETE PAVEMENT (RSC)	DRILL & BOND (DOWEL BAR) (N)	BASE BOND BREAKER	LEAN CONCRETE BASE (RAPID SETTING)	ISOLATION JOINT SEAL (PREFORMED COMPRESSION)
			LF	LF	LF	CY	CY	EA	SQYD	CY	LF
Sta	NB	INGRAM CREEK UC TO INGRAM CREEK BRIDGE 22.99/23.07									
		LANE No. 1	289.0	12.0	1.65	211.9	147.7	148	385.3	64.2	626.0
		LANE No. 2	289.0	13.0	1.65	229.6	160.0	24	417.4	69.6	
	SB	INGRAM CREEK UC TO INGRAM CREEK BRIDGE 22.99/23.07									
		LANE No. 1	293.5	12.0	1.65	215.2	150.0	150	391.3	65.2	644.0
		LANE No. 2	298.0	13.0	1.65	236.7	165.0	24	430.4	71.7	
TOTAL						893.4	622.7		1624.4	270.7	1270.0

TRAFFIC MANAGEMENT SYSTEM ELEMENTS (EXISTING)

COUNTY	DIRECTION	PM	LOCATION	TYPE	DESCRIPTION
STANISLAUS	NB	27.16	WESTLEY REST AREA	CMS	CHANGEABLE MESSAGE SIGN
	SB	27.40	WESTLEY REST AREA	CMS	CHANGEABLE MESSAGE SIGN
	NB	27.40	WESTLEY REST AREA	TMS	TRAFFIC MONITORING STATION
	NB	27.66	WESTLEY REST AREA	TMS	TRAFFIC MONITORING STATION
	NB	27.80	NORTH OF WESTLEY REST AREA	RWIS	ROADWAY WEATHER INFORMATION SYSTEM
	NB	27.91	WESTLEY REST AREA	TMS	TRAFFIC MONITORING STATION
	NB	28.05	WESTLEY REST AREA	CCTV	CLOSED CURCUIT TELEVISION
SAN JOAQUIN	NB	0.11	WESTLEY REST AREA	TMS	TRAFFIC MONITORING STATION
	NB	0.11	Sta/SJ COUNTY LINE	TMS	TRAFFIC MONITORING STATION
	SB	0.11	Sta/SJ COUNTY LINE	TMS	TRAFFIC MONITORING STATION
	BOTH	0.30	GAFFERY ROAD UC	VCS	VEHICLE CLASSIFICATION SYSTEM
	BOTH	3.4	ROUTE 5/132 Sep ALL RAMPS	TMS	TRAFFIC MONITORING STATION
	NB	4.0	ROUTE 5/132 Sep	TMS	TRAFFIC MONITORING STATION
	SB	4.0	ROUTE 5/132 Sep	TMS	TRAFFIC MONITORING STATION
	SB	4.0	OFF-RAMP TO ROUTE 5/132 Sep	TMS	TRAFFIC MONITORING STATION
	BOTH	6.5	ROUTE 5/33 Sep & OH ALL RAMPS	TMS	TRAFFIC MONITORING STATION
	BOTH	7.50	NORTH OF LINNE ROAD OC	WIM	WEATHER IN MOTION
	BOTH	11.0	KASSON Rd OC ALL RAMPS	TMS	TRAFFIC MONITORING STATION
	NB	R12.11	NORTH OF 11TH St OFF-RAMP	CCTV	CLOSED CIRCUIT TELEVISION
	BOTH	R12.3	11TH St OFF/ON-RAMPS	TMS	TRAFFIC MONITORING STATION
	NB	R12.40	SOUTH OF ROUTE 205	CMS	CHANGEABLE MESSAGE SIGN
	SB	R12.60	ROUTE 205/5 Sep	CCTV	CLOSED CIRCUIT TELEVISION
	NB	R12.65	SOUTH OF EB ROUTE 205/5 Sep	TMS	TRAFFIC MONITORING STATION
	SB	R12.73	SOUTH OF PARADISE CUT Br	TMS	TRAFFIC MONITORING STATION
	NB	R12.83	SOUTH OF EB ROUTE 205/5 Sep	TMS	TRAFFIC MONITORING STATION
		R12.85	PARADISE CUT Br	RWIS	ROADWAY WEATHER INFORMATION SYSTEM

SUMMARY OF QUANTITIES

Q-12

CALCULATED-DESIGNED BY MARLON LOPEZ
CHECKED BY MASON LEUNG
REVISED BY MLL
DATE REVISED 02/18/14
ML 02/12/14
FUNCTIONAL SUPERVISOR MICHAEL HUTCHISON

STATE OF CALIFORNIA - DEPARTMENT OF TRANSPORTATION
Caltrans® DESIGN

LAST REVISION 00-00-00
DATE PLOTTED => 16-MAY-2014
TIME PLOTTED => 13:06

Dist	COUNTY	ROUTE	POST MILES TOTAL PROJECT	SHEET No.	TOTAL SHEETS
10	Mer,Sta, SJ	5	32.2/32.5, 0.0/28.1, 0.0/R12.4	51	112

REGISTERED CIVIL ENGINEER 2/11/14 DATE

02-18-14
PLANS APPROVAL DATE

REGISTERED PROFESSIONAL ENGINEER MASON L. LEUNG No. 71709 Exp. 12-31-15 CIVIL STATE OF CALIFORNIA

THE STATE OF CALIFORNIA OR ITS OFFICERS OR AGENTS SHALL NOT BE RESPONSIBLE FOR THE ACCURACY OR COMPLETENESS OF SCANNED COPIES OF THIS PLAN SHEET.

MIDWEST GUARDRAIL SYSTEM QUANTITIES

COUNTY	DIRECTION	PM	LOCATION	SHOULDER INSIDE	SHOULDER OUTSIDE	LAYOUT TYPE	REMOVE GUARDRAIL **	TREATED WOOD WASTE	TRANSITION RAILING (TYPE WB-31)	MIDWEST GUARDRAIL SYSTEM (WOOD POST)	ALTERNATIVE IN-LINE TERMINAL SYSTEM	END ANCHOR ASSEMBLY (TYPE SFT)	RAIL TENSIONING ASSEMBLY	ALTERNATIVE FLARED TERMINAL SYSTEM	DOUBLE MIDWEST GUARDRAIL SYSTEM (WOOD POST)	ALTERNATIVE CRASH CUSHION SYSTEM	DOUBLE MIDWEST GUARDRAIL SYSTEM FLARE SLOPE	BARRIER RAILING CONNECTION DETAIL TYPE	CONCRETE BARRIER (TRANSITION)	REMOVE CRASH CUSHION (SAND FILLED) *
						(N)	LF	LB	EA	LF	EA	EA	EA	EA	LF	EA	(N)	(N)	LF	EA
STANISLAUS	NORTHBOUND	0.89	PETE MILLER Rd OC																	
					X	12A	37.5	738	1		1							9	4.2	
		2.48	POVERTY FLAT Rd UC		X	12B	62.5	1,148	1					1				1	3.5	
				X		12E	100	1,675	1	25			1		225	1	15:1	1	3.5	
		3.99	SHIELLS Rd UC		X	12B	62.5	1,148	1					1				1	3.5	
				X		12E	100	1,675	1	25			1		200	1	15:1	1	3.5	
		5.02	ORESTIMBA Rd UC		X	12B	62.5	1,148	1					1				1	3.5	
				X		12E	100	1,675	1	25			1		200	1	15:1	1	3.5	
		5.51	STUHR Rd OC		X	12B	62.5	1,148	1					1				9	4.2	
		5.73	ORESTIMBA CREEK Br		X	12B	100	1,640	1					1				2	40.0	
				X		12E	100	1,623	1	25			1		250	1	15:1	1	3.5	
		6.47	CALIFORNIA AQUEDUCT Br		X	12B	62.5	1,148	1					1				1	3.5	
				X		12E	100	1,675	1	25			1		225	1	15:1	1	3.5	
		8.95	CROW CREEK Br		X	12B	62.5	1,148	1					1				1	3.5	
				X		12E	100	1,675	1	25			1		200	1	15:1	1	3.5	
		10.71	FINK Rd UC		X	12B	62.5	1,148	1					1				1	3.5	
				X		12E	100	1,675	1	25			1		200	1	15:1	1	3.5	
		11.22	COVELL Rd UC		X	12B	62.5	1,148	1					1				1	3.5	
				X		12E	100	1,675	1	25			1		212.5	1	15:1	1	3.5	
		12.53	OAK FLAT Rd UC		X	12B	50	902	1					1				1	3.5	
				X		12E	100	1,675	1	25			1		175	1	15:1	1	3.5	
		12.68	SALADO CREEK Br		X	12B	62.5	1,148	1					1				1	3.5	
				X		12E	100	1,675	1	25			1		237.5	1	15:1	1	3.5	
		14.94	NIELS HANSON Rd UC		X	12B	62.5	1,148	1					1				1	3.5	
				X		12E	100	1,675	1	25			1		237.5	1	15:1	1	3.5	
		15.86	DEL PUERTO CANYON Rd UC		X	12B	62.5	1,148	1					1				1	3.5	
				X		12E	100	1,675	1	25			1		200	1	15:1	1	3.5	
		17.24	HANSON Rd UC		X	12B	62.5	1,148	1					1				1	3.5	
				X		12E	100	1,675	1	25			1		200	1	15:1	1	3.5	
		18.31	DEL PUERTO CREEK Rd UC		X	12B	62.5	1,148	1					1				1	3.5	
				X		12E	100	1,675	1	25			1		237.5	1	15:1	1	3.5	
		20.68	KERN CREEK Rd UC		X	12B	62.5	1,148	1					1				1	3.5	
				X		12E	100	1,675	1	25			1		200	1	15:1	1	3.5	
		22.99	INGRAM CREEK Rd UC		X	12B	62.5	1,148	1					1				1	3.5	
				X		12E	100	1,675	1	25			1		212.5	1	15:1	1	3.5	
		22.99	INGRAM CREEK Rd		X	16E	292	3,936		212.5				2						
					X	16E	267	3,608		200				2						
		23.07	INGRAM CREEK Br		X	12B	62.5	1,148	1					1				1	3.5	
				X		12E	100	1,675	1	25			1		212.5	1	15:1	1	3.5	
		23.07	INGRAM CREEK Br NB ON-RAMP		X	12B	62.5	1,148	1					1				25	3.5	
				X		12B	62.5	1,148	1					1				25	3.5	
		25.53	KHALSA Rd UC		X	12B	62.5	1,148	1					1				1	3.5	
				X		12E	100	1,675	1	25			1		175	1	15:1	1	3.5	
		27.09	WESTLEY REST AREA OVERHEAD COLUMN SIGN																	
						15A	232	3,198		225		2			25	1				1
TOTAL 1							3,966	65,932	40	1,087.5	1	2	18	25	3,825.0	19			177.9	1

NOTES:

1. * CRASH CUSHION ARRAY.
2. ** MEASURED FROM WALL OR BRIDGE RAIL INCLUDING TERMINAL SYSTEM END TREATMENT.
3. (N) NOT A SEPARATE PAY ITEM, FOR INFORMATION ONLY.

SUMMARY OF QUANTITIES
Q-13

REVISED BY	DATE REVISED
MLL	02/18/14
ML	02/12/14

CALCULATED-DESIGNED BY: MASON LEUNG
CHECKED BY:
FUNCTIONAL SUPERVISOR: MICHAEL HUTCHISON

STATE OF CALIFORNIA - DEPARTMENT OF TRANSPORTATION
Caltrans DESIGN

LAST REVISION 00-00-00
DATE PLOTTED => 16-MAY-2014
TIME PLOTTED => 13:06

Dist	COUNTY	ROUTE	POST MILES TOTAL PROJECT	SHEET No.	TOTAL SHEETS
10	Mer,Sta, SJ	5	32.2/32.5, 0.0/28.1, 0.0/R12.4	52	112

REGISTERED CIVIL ENGINEER 2/11/14 DATE

02-18-14
PLANS APPROVAL DATE

REGISTERED PROFESSIONAL ENGINEER MASON L. LEUNG No. 71709 Exp. 12-31-15 CIVIL STATE OF CALIFORNIA

THE STATE OF CALIFORNIA OR ITS OFFICERS OR AGENTS SHALL NOT BE RESPONSIBLE FOR THE ACCURACY OR COMPLETENESS OF SCANNED COPIES OF THIS PLAN SHEET.

MIDWEST GUARDRAIL SYSTEM QUANTITIES

COUNTY	DIRECTION	PM	LOCATION	SHOULDER INSIDE	SHOULDER OUTSIDE	LAYOUT TYPE (N)	REMOVE GUARDRAIL ** LF	TREATED WOOD WASTE LB	TRANSITION RAILING (TYPE WB-31) EA	MIDWEST GUARDRAIL SYSTEM (WOOD POST) LF	ALTERNATIVE IN-LINE TERMINAL SYSTEM EA	END ANCHOR ASSEMBLY (TYPE SFT) EA	RAIL TENSIONING ASSEMBLY EA	ALTERNATIVE FLARED TERMINAL SYSTEM EA	DOUBLE MIDWEST GUARDRAIL SYSTEM (WOOD POST) LF	ALTERNATIVE CRASH CUSHION SYSTEM EA	DOUBLE MIDWEST GUARDRAIL SYSTEM FLARE SLOPE (N)	BARRIER RAILING CONNECTION DETAIL TYPE (N)	CONCRETE BARRIER (TRANSITION) LF	REMOVE CRASH CUSHION (SAND FILLED) * EA
SAN JOAQUIN	NORTHBOUND	0.28	GAFFERY Rd UC		X	12B	62.5	1,148	1					1				1	3.5	
		1.10	HOSPITAL CREEK Br		X	12A	75	1,230	1		1							1	3.5	
				X		12E	100	1,675	1	25			1		225	1	15:1	1	3.5	1
		2.00	CALIFORNIA AQUEDUCT Br		X	12B	62.5	1,148	1					1				1	3.5	
				X		12E	100	1,675	1	25			1		137.5	1	15:1	1	3.5	1
		2.82	OVERHEAD COLUMN SIGN		X	16B	62.5	1,148		37.5		1		1						
		3.15	OVERHEAD COLUMN SIGN		X	16A	75	1,066		37.5	1	1								
		3.27	DELTA MENDOTA CANAL Br		X	12B	62.5	1,148	1					1				1	3.5	
				X		12E	100	1,675	1	25			1		212.5	1	15:1	1	3.5	1
		3.27	DELTA MENDOTA CANAL Br NB OFF-RAMP		X	12B	62.5	1,148	1					1				1	3.5	
				X		12B	62.5	1,148	1					1				1	3.5	
		3.42	ROUTE 5/132 SEPARATION		X	12B	62.5	1,148	1					1				1	3.5	
				X		12E	100	1,675	1	25			1		212.5	1	15:1	1	3.5	1
		6.41	ROUTE 5/33 Sep & OH		X	12A	75	1,230	1		1							1	3.5	
				X		12E	100	1,675	1	25			1		150	1	15:1	1	3.5	1
		10.65	DEUEL OH		X	12A	75	1,230	1		1							1	3.5	
				X		12E	100	1,675	1	25			1		275	1	15:1	1	3.5	
		R12.04	OVERHEAD COLUMN SIGN		X	16B	83	1,312		50		1		1						
		R12.37	OVERHEAD COLUMN SIGN		X	16B	114	1,722		87.5		1		1						
		R12.39	TOM PAINE SLOUGH Br		X	12B	62.5	1,148	1					1				1	3.5	
				X		12E	100	1,675	1	25			1		250	1	15:1	1	3.5	
STANISLAUS	SOUTHBOUND	0.89	PETE MILLER Rd OC		X	12A	37.5	738	1		1							9	4.2	
		2.48	POVERTY FLAT Rd UC		X	12B	62.5	1,148	1					1				1	3.5	
				X		12E	100	1,675	1	25			1		225	1	15:1	1	3.5	
		3.83	SB VISTA POINT		X		400	2,624		400		2								
		3.99	SHIELLS Rd UC		X	12B	62.5	1,148	1					1				1	3.5	
				X		12E	100	1,675	1	25			1		200	1	15:1	1	3.5	
		5.02	ORESTIMBA Rd UC		X	12B	62.5	1,148	1					1				1	3.5	
				X		12E	100	1,593	1	25			1		200	1	15:1	1	3.5	
		5.51	STUHR Rd OC		X	12B	62.5	1,148	1					1				9	4.2	
		5.73	ORESTIMBA CREEK Br		X	12B	62.5	1,148	1					1				1	3.5	
				X		12E	100	1,623	1	25			1		250	1	15:1	1	3.5	
		6.47	CALIFORNIA AQUEDUCT Br		X	12B	62.5	1,148	1					1				1	3.5	
				X		12E	100	1,675	1	25			1		212.5	1	15:1	1	3.5	
		8.94	CROW CREEK Br		X	12B	62.5	1,148	1					1				1	3.5	
				X		12E	100	1,675	1	25			1		200	1	15:1	1	3.5	
		10.71	FINK Rd UC		X	12B	62.5	1,148	1					1				1	3.5	
				X		12E	100	1,675	1	25			1		200	1	15:1	1	3.5	
		11.22	COVELL Rd UC		X	12B	62.5	1,148	1					1				1	3.5	
				X		12E	100	1,675	1	25			1		212.5	1	15:1	1	3.5	
		12.53	OAK FLAT Rd UC		X	12B	62.5	1,148	1					1				1	3.5	
				X		12E	75	1,321	1	25			1		200	1	30:1	1	3.5	
		12.68	SALADO CREEK Br		X	12B	62.5	1,148	1					1				1	3.5	
				X		12E	100	1,675	1	25			1		237.5	1	15:1	1	3.5	
		14.94	NIELS HANSON Rd UC		X	12B	62.5	1,148	1					1				1	3.5	
				X		12E	62.5	1,148	1	25			1		212.5	1	30:1	1	3.5	
		15.86	DEL PUERTO CANYON Rd UC		X	12B	62.5	1,148	1					1				1	3.5	
				X		12E	75	656	1	25			1		187.5	1	15:1	1	3.5	
TOTAL 2							4,059.5	65,051	43	1,087.5	5	6	19	23	4,000.0	19			151.9	5

NOTES:

1. * CRASH CUSHION ARRAY.
2. ** MEASURED FROM WALL OR BRIDGE RAIL INCLUDING TERMINAL SYSTEM END TREATMENT.
3. (N) NOT A SEPARATE PAY ITEM, FOR INFORMATION ONLY.

SUMMARY OF QUANTITIES

Q-14

REVISED BY	DATE REVISED
MLL	02/18/14
ML	02/12/14

CALCULATED-DESIGNED BY: MARLON LOPEZ
CHECKED BY: MASON LEUNG
FUNCTIONAL SUPERVISOR: MICHAEL HUTCHISON

STATE OF CALIFORNIA - DEPARTMENT OF TRANSPORTATION
Caltrans® DESIGN

LAST REVISION 00-00-00 | DATE PLOTTED => 02-JUN-2014 | TIME PLOTTED => 10:34

Dist	COUNTY	ROUTE	POST MILES TOTAL PROJECT	SHEET No.	TOTAL SHEETS
10	Mer,Sta, SJ	5	32.2/32.5, 0.0/28.1, 0.0/R12.4	53	112

REGISTERED CIVIL ENGINEER 2/11/14 DATE

02-18-14
PLANS APPROVAL DATE

REGISTERED PROFESSIONAL ENGINEER MASON L. LEUNG No. 71709 Exp. 12-31-15 CIVIL STATE OF CALIFORNIA

THE STATE OF CALIFORNIA OR ITS OFFICERS OR AGENTS SHALL NOT BE RESPONSIBLE FOR THE ACCURACY OR COMPLETENESS OF SCANNED COPIES OF THIS PLAN SHEET.

MIDWEST GUARDRAIL SYSTEM QUANTITIES

COUNTY	DIRECTION	PM	LOCATION	SHOULDER INSIDE	SHOULDER OUTSIDE	LAYOUT TYPE (N)	REMOVE GUARDRAIL ** LF	TREATED WOOD WASTE LB	TRANSITION RAILING (TYPE WB-31) EA	MIDWEST GUARDRAIL SYSTEM (WOOD POST) LF	ALTERNATIVE IN-LINE TERMINAL SYSTEM EA	END ANCHOR ASSEMBLY (TYPE SFT) EA	RAIL TENSIONING ASSEMBLY EA	ALTERNATIVE FLARED TERMINAL SYSTEM EA	DOUBLE MIDWEST GUARDRAIL SYSTEM (WOOD POST) LF	ALTERNATIVE CRASH CUSHION SYSTEM EA	DOUBLE MIDWEST GUARDRAIL SYSTEM FLARE TYPE (N)	BARRIER RAILING CONNECTION (N) (N)	CONCRETE BARRIER (TRANSITION) LF	REMOVE CRASH CUSHION (SAND FILLED) * EA
STANISLAUS	SOUTHBOUND	15.86	DEL PUERTO CANYON Rd SB OFF-RAMP		X	11B	212.5	1,476		175		1		1						
		17.25	HANSON Rd UC		X	12B	62.5	1,148	1					1				1	3.5	
				X		12E	75	1,321	1	25			1		225	1	30:1	1	3.5	
		18.31	DEL PUERTO CREEK Rd UC		X	12B	62.5	1,148	1					1				1	3.5	
				X		12E	87.5	1,485	1	25			1		262.5	1	30:1	1	3.5	
		20.69	KERN CREEK Rd UC		X	12B	62.5	1,148	1					1				1	3.5	
				X		12E	100	1,675	1	25			1		200	1	15:1	1	3.5	
		22.99	INGRAM CREEK Rd UC		X	12B	62.5	1,148	1					1				1	3.5	
				X		12E	100	1,675	1	25			1		212.5	1	15:1	1	3.5	
		23.07	INGRAM CREEK BR		X	12B	62.5	1,148	1					1				1	3.5	
				X		12E	100	1,675	1	25			1		212.5	1	15:1	1	3.5	
		23.07	INGRAM CREEK BR SB OFF-RAMP		X	12B	62.5	1,148	1					1				25	3.5	
				X		12B	62.5	1,148	1					1				25	3.5	
		25.53	KHALSA Rd UC		X	12B	62.5	1,148	1					1				1	3.5	
		27.50	OVERHEAD COLUMN SIGN		X	16B	112.5	1,722		75		1		1						
SAN JOAQUIN	SOUTHBOUND	0.30	GAFFERY Rd UC		X	12A	1587.5	21,074	1	1512.5	1							1	3.5	
				X		12A	75	1,230	1		1							1	3.5	
		0.73	ROUTE 5/580 Sep		X	12A	925	12,382	1	850	1							1	3.5	
				X		12A	75	1,230	1		1							1	3.5	1
		1.10	HOSPITAL CREEK Br		X	12A	75	1,230	1		1							1	3.5	
				X		12E	100	1,675	1	25			1		225	1	15:1	1	3.5	1
		2.07	CALIFORNIA AQUEDUCT Br		X	12B	62.5	1,148	1					1				1	3.5	
				X		12E	112.5	1,722	1	25			1		137.5	1	15:1	1	3.5	1
		3.27	DELTA MENDOTA CANAL Br		X	12B	62.5	1,148	1					1				1	3.5	
				X		12E	100	1,675	1	25			1		212.5	1	15:1	1	3.5	
		3.27	DELTA MENDOTA CANAL Br SB ON-RAMP		X	12B	62.5	1,148	1					1				1	3.5	
				X		12B	62.5	1,148	1					1				1	3.5	1
		3.42	ROUTE 5/132 SEPARATION		X		62.5	1,148	1					1				1	3.5	
				X		12E	100	1,675	1	25			1		212.5	1	15:1	1	3.5	1
		6.41	ROUTE 5/33 Sep & OH		X	12A	75	1,230	1		1							1	3.5	
				X		12E	100	1,675	1	25			1		150	1	15:1	1	3.5	
		10.65	DEUEL OH		X	12A	75	1,230	1		1							1	3.5	
				X		12E	100	1,675	1	25			1		275	1	15:1	1	3.5	
		R12.39	TOM PAINE SLOUGH Br		X	12B	62.5	1,148	1					1				1	3.5	
TOTAL THIS SHEET							5,162.5	76,804	32	2,887.5	7	2	11	16	2,325.0	11			112.0	5
TOTAL 2							4,059.5	65,051	43	1,087.5	5	6	19	23	4,000.0	19			151.9	5
TOTAL 1							3,966	65,932	40	1,087.5	1	2	18	25	3,825.0	19			177.9	1
TOTAL							13,188	207,787	115	5,062.5	13	10	48	64	10,150.0	49			441.8	11

NOTES:

1. * CRASH CUSHION ARRAY.
2. ** MEASURED FROM WALL OR BRIDGE RAIL INCLUDING TERMINAL SYSTEM END TREATMENT.
3. (N) NOT A SEPARATE PAY ITEM, FOR INFORMATION ONLY.

SUMMARY OF QUANTITIES

Q-15

REVISED BY	MLL	ML
DATE REVISED	02/18/14	02/12/14

CALCULATED-DESIGNED BY: MARLON LOPEZ
CHECKED BY: MASON LEUNG
FUNCTIONAL SUPERVISOR: MICHAEL HUTCHISON

STATE OF CALIFORNIA - DEPARTMENT OF TRANSPORTATION
Caltrans® DESIGN

LAST REVISION 00-00-00
DATE PLOTTED => 16-MAY-2014
TIME PLOTTED => 13:06

Dist	COUNTY	ROUTE	POST MILES TOTAL PROJECT	SHEET No.	TOTAL SHEETS
10	Mer,Sta, SJ	5	32.2/32.5, 0.0/28.1, 0.0/R12.4	54	112

REGISTERED ELECTRICAL ENGINEER 2/11/14 DATE

02-18-14
PLANS APPROVAL DATE

REGISTERED PROFESSIONAL ENGINEER JASPAL SINGH No. E16657 Exp. 06/30/14 ELECTRICAL STATE OF CALIFORNIA

THE STATE OF CALIFORNIA OR ITS OFFICERS OR AGENTS SHALL NOT BE RESPONSIBLE FOR THE ACCURACY OR COMPLETENESS OF SCANNED COPIES OF THIS PLAN SHEET.

LEGEND:

1 COIL 10′ OF EACH LOOP DETECTOR IN PULL BOX.

2 IDENTIFY AND PLACE LOOP DETECTORS PER DETAIL B SHOWN ON SHEET E-10.

ABBREVIATONS:

CYN - CANYON
PAS - PIEZO AXLE SENSOR
STC - SCREENED TRANSMISSION CABLE
VCS - VEHICLE CLASSIFICATION STATION

NE - NORTH EAST
NW - NORTH WEST
SE - SOUTH EAST
SW - SOUTH WEST

NOTES:

1. FOR ACCURATE RIGHT OF WAY DATA, CONTACT RIGHT OF WAY ENGINEERING AT THE DISTRICT OFFICE.
2. EXISTING UTILITY FACILITIES HAVE NOT BEEN INCLUDED ON THESE PLANS.

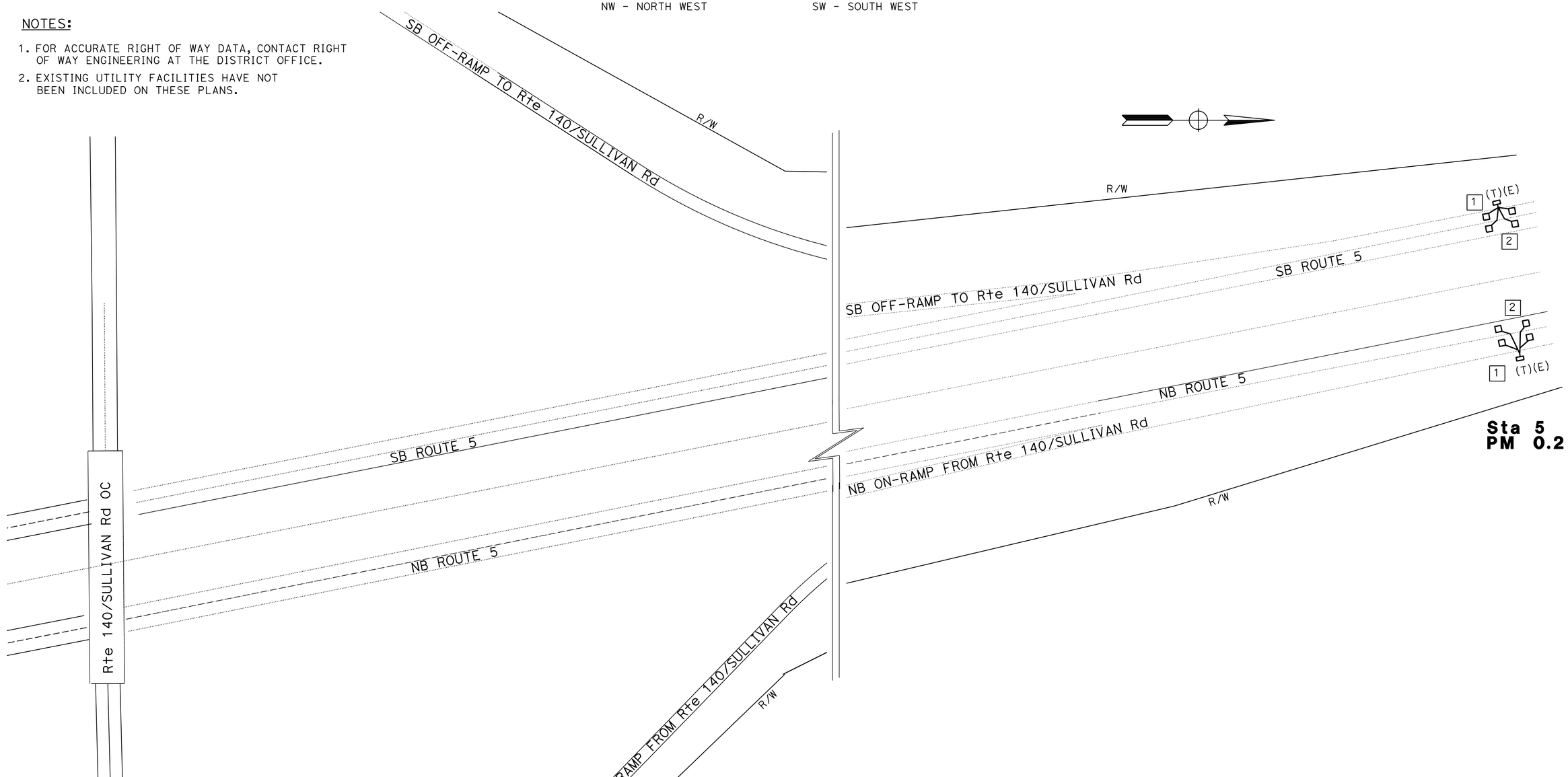

TRAFFIC MONITORING STATION (LOCATION 1)

SCALE: 1" = 50′

E-1

APPROVED FOR ELECTRICAL WORK ONLY

STATE OF CALIFORNIA - DEPARTMENT OF TRANSPORTATION
Caltrans® **ELECTRICAL DESIGN**

FUNCTIONAL SUPERVISOR	CALCULATED-DESIGNED BY	REVISED BY	DATE REVISED
ALI BAKHDOUD	FRED IYASERE	FI	02/18/14
	JASPAL SINGH		
	CHECKED BY		

LAST REVISION 00-00-00 | DATE PLOTTED => 20-MAY-2014 | TIME PLOTTED => 13:02

Dist	COUNTY	ROUTE	POST MILES TOTAL PROJECT	SHEET No.	TOTAL SHEETS
10	Mer,Sta, SJ	5	32.2/32.5, 0.0/28.1, 0.0/R12.4	55	112

REGISTERED ELECTRICAL ENGINEER 2/11/14 DATE

02-18-14
PLANS APPROVAL DATE

REGISTERED PROFESSIONAL ENGINEER JASPAL SINGH No. E16657 Exp. 06/30/14 ELECTRICAL STATE OF CALIFORNIA

THE STATE OF CALIFORNIA OR ITS OFFICERS OR AGENTS SHALL NOT BE RESPONSIBLE FOR THE ACCURACY OR COMPLETENESS OF SCANNED COPIES OF THIS PLAN SHEET.

LEGEND:

1 COIL 10′ OF EACH LOOP DETECTOR IN PULL BOX.

2 IDENTIFY AND PLACE LOOP DETECTORS PER DETAIL B SHOWN ON SHEET E-10.

NOTES:

1. FOR ACCURATE RIGHT OF WAY DATA, CONTACT RIGHT OF WAY ENGINEERING AT THE DISTRICT OFFICE.
2. EXISTING UTILITY FACILITIES HAVE NOT BEEN INCLUDED ON THESE PLANS.

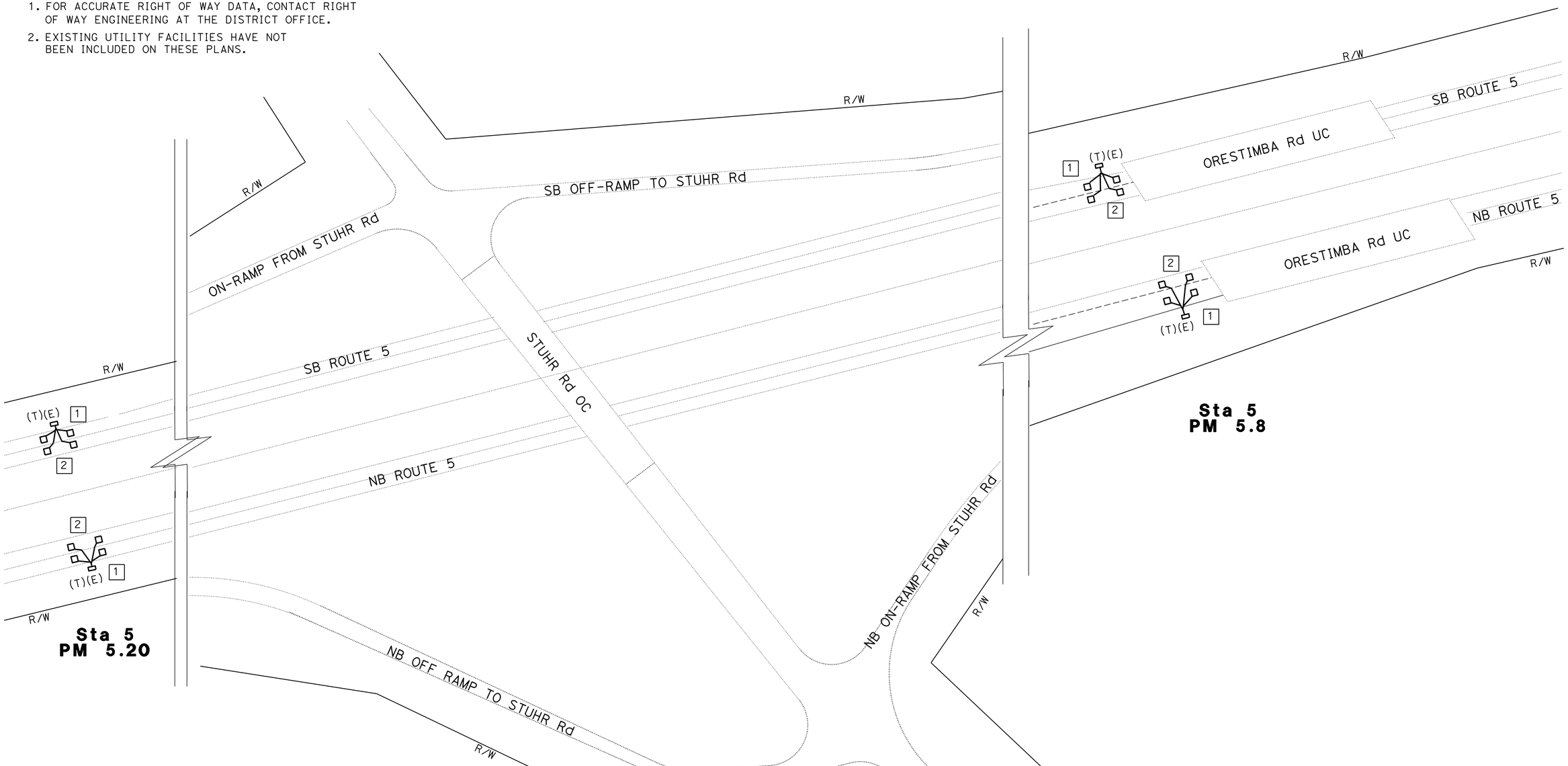

TRAFFIC MONITORING STATION (LOCATION 2)

SCALE: 1" = 50′

E-2

APPROVED FOR ELECTRICAL WORK ONLY

STATE OF CALIFORNIA - DEPARTMENT OF TRANSPORTATION
Caltrans® **ELECTRICAL DESIGN**

FUNCTIONAL SUPERVISOR: ALI BAKHDOUD
CALCULATED-DESIGNED BY: FRED IYASERE
CHECKED BY: JASPAL SINGH
REVISED BY: FI
DATE REVISED: 02/18/14

LAST REVISION 00-00-00
DATE PLOTTED => 16-MAY-2014
TIME PLOTTED => 13:06

Dist	COUNTY	ROUTE	POST MILES TOTAL PROJECT	SHEET No.	TOTAL SHEETS
10	Mer,Sta, SJ	5	32.2/32.5, 0.0/28.1, 0.0/R12.4	56	112

REGISTERED ELECTRICAL ENGINEER DATE 2/11/14

02-18-14
PLANS APPROVAL DATE

REGISTERED PROFESSIONAL ENGINEER JASPAL SINGH No. E16657 Exp. 06/30/14 ELECTRICAL STATE OF CALIFORNIA

THE STATE OF CALIFORNIA OR ITS OFFICERS OR AGENTS SHALL NOT BE RESPONSIBLE FOR THE ACCURACY OR COMPLETENESS OF SCANNED COPIES OF THIS PLAN SHEET.

LEGEND:

1 COIL 10′ OF EACH LOOP DETECTOR IN PULL BOX.

2 IDENTIFY AND PLACE LOOP DETECTORS PER DETAIL B SHOWN ON SHEET E-10.

NOTES:

1. FOR ACCURATE RIGHT OF WAY DATA, CONTACT RIGHT OF WAY ENGINEERING AT THE DISTRICT OFFICE.
2. EXISTING UTILITY FACILITIES HAVE NOT BEEN INCLUDED ON THESE PLANS.

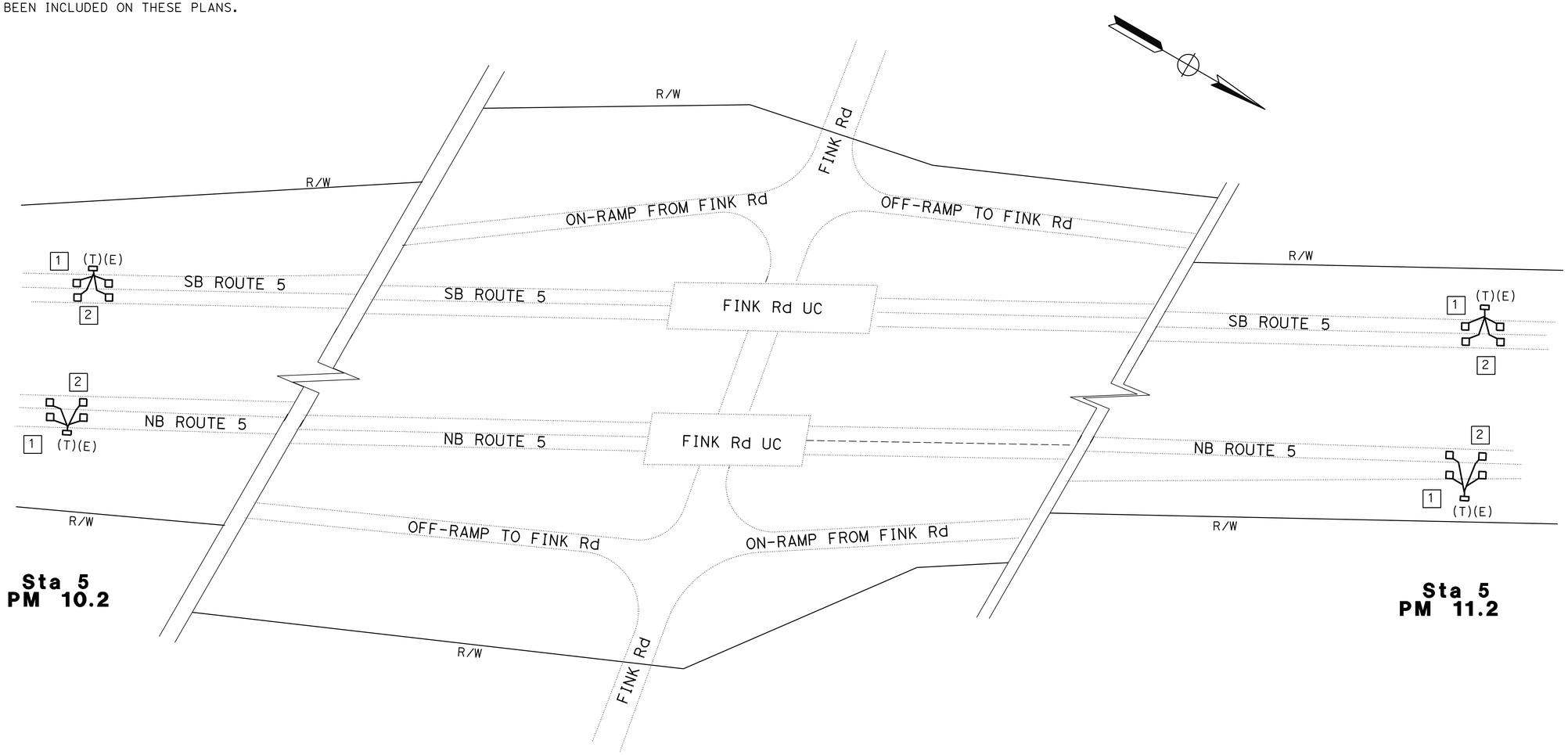

TRAFFIC MONITORING STATION (LOCATION 3)

SCALE: 1" = 50′

APPROVED FOR ELECTRICAL WORK ONLY

E-3

STATE OF CALIFORNIA - DEPARTMENT OF TRANSPORTATION
Caltrans® **ELECTRICAL DESIGN**

FUNCTIONAL SUPERVISOR: ALI BAKHDOUD
CALCULATED-DESIGNED BY: FRED IYASERE
CHECKED BY: JASPAL SINGH
REVISED BY: FI
DATE REVISED: 02/18/14

LAST REVISION 00-00-00
DATE PLOTTED => 16-MAY-2014
TIME PLOTTED => 13:06

Dist	COUNTY	ROUTE	POST MILES TOTAL PROJECT	SHEET No.	TOTAL SHEETS
10	Mer,Sta, SJ	5	32.2/32.5, 0.0/28.1, 0.0/R12.4	57	112

REGISTERED ELECTRICAL ENGINEER 2/11/14 DATE

02-18-14
PLANS APPROVAL DATE

REGISTERED PROFESSIONAL ENGINEER JASPAL SINGH No. E16657 Exp. 06/30/14 ELECTRICAL STATE OF CALIFORNIA

THE STATE OF CALIFORNIA OR ITS OFFICERS OR AGENTS SHALL NOT BE RESPONSIBLE FOR THE ACCURACY OR COMPLETENESS OF SCANNED COPIES OF THIS PLAN SHEET.

LEGEND:

1 COIL 10′ OF EACH LOOP DETECTOR IN PULL BOX.

2 IDENTIFY AND PLACE LOOP DETECTORS PER DETAIL B SHOWN ON SHEET E-10.

NOTES:

1. FOR ACCURATE RIGHT OF WAY DATA, CONTACT RIGHT OF WAY ENGINEERING AT THE DISTRICT OFFICE.
2. EXISTING UTILITY FACILITIES HAVE NOT BEEN INCLUDED ON THESE PLANS.

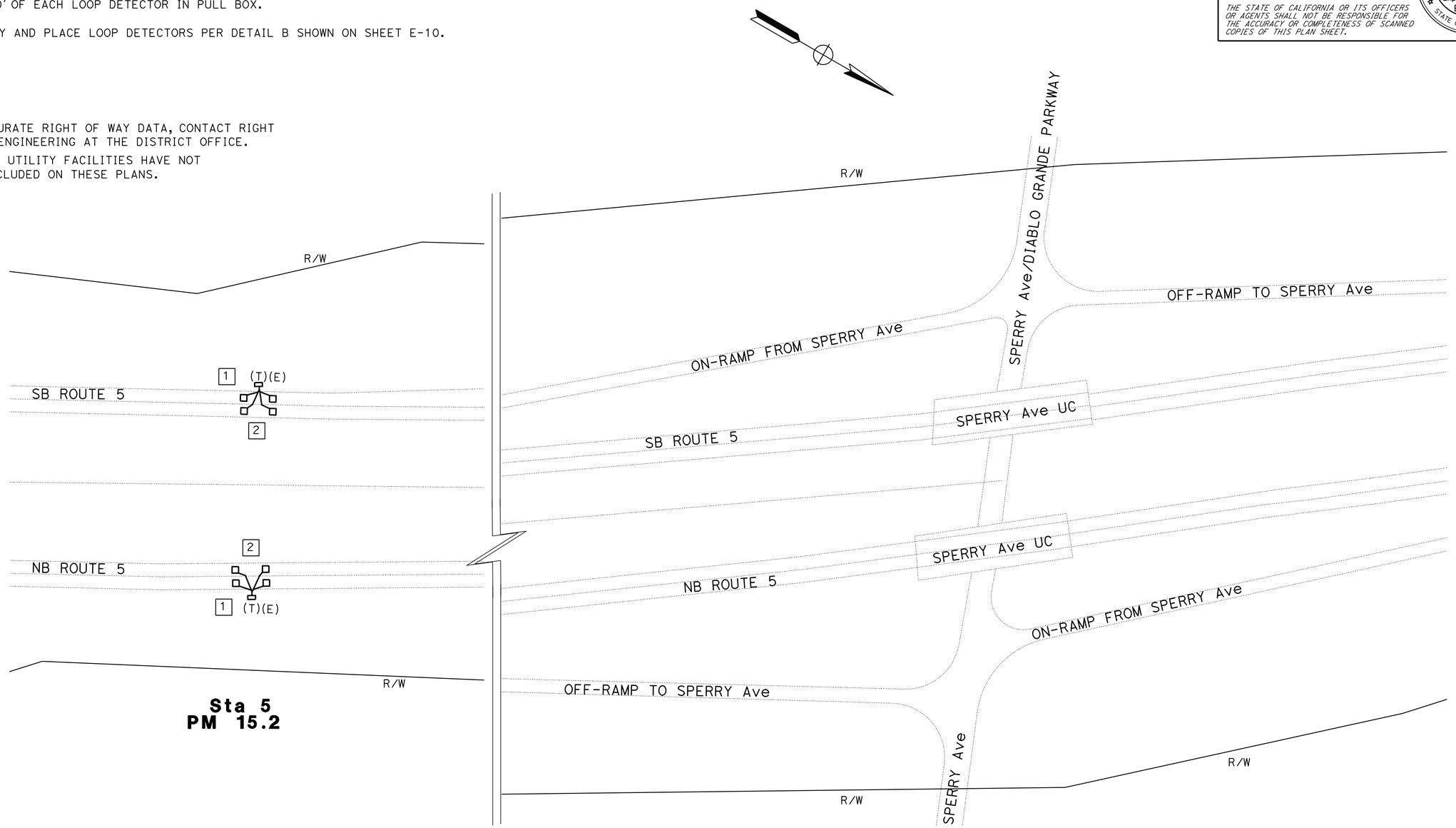

TRAFFIC MONITORING STATION (LOCATION 4)

SCALE: 1" = 50′

APPROVED FOR ELECTRICAL WORK ONLY

E-4

REVISED BY	DATE REVISED
FI	02/18/14

FRED IYASERE — JASPAL SINGH — CALCULATED-DESIGNED BY — CHECKED BY — FUNCTIONAL SUPERVISOR — ALI BAKHDOUD

STATE OF CALIFORNIA - DEPARTMENT OF TRANSPORTATION — Caltrans — **ELECTRICAL DESIGN**

LAST REVISION 00-00-00 — DATE PLOTTED => 16-MAY-2014 — TIME PLOTTED => 13:06

Dist	COUNTY	ROUTE	POST MILES TOTAL PROJECT	SHEET No.	TOTAL SHEETS
10	Mer,Sta, SJ	5	32.2/32.5, 0.0/28.1, 0.0/R12.4	58	112

REGISTERED ELECTRICAL ENGINEER 2/11/14 DATE

02-18-14
PLANS APPROVAL DATE

REGISTERED PROFESSIONAL ENGINEER JASPAL SINGH No. E16657 Exp. 06/30/14 ELECTRICAL STATE OF CALIFORNIA

THE STATE OF CALIFORNIA OR ITS OFFICERS OR AGENTS SHALL NOT BE RESPONSIBLE FOR THE ACCURACY OR COMPLETENESS OF SCANNED COPIES OF THIS PLAN SHEET.

LEGEND:

1 PIEZO AXLE SENSORS AND LOOP DETECTORS. SEE IDENTIFICATION AND PLACEMENT DETAILS ON SHEET E-10.

NOTES:

1. FOR ACCURATE RIGHT OF WAY DATA, CONTACT RIGHT OF WAY ENGINEERING AT THE DISTRICT OFFICE.
2. EXISTING UTILITY FACILITIES HAVE NOT BEEN INCLUDED ON THESE PLANS.

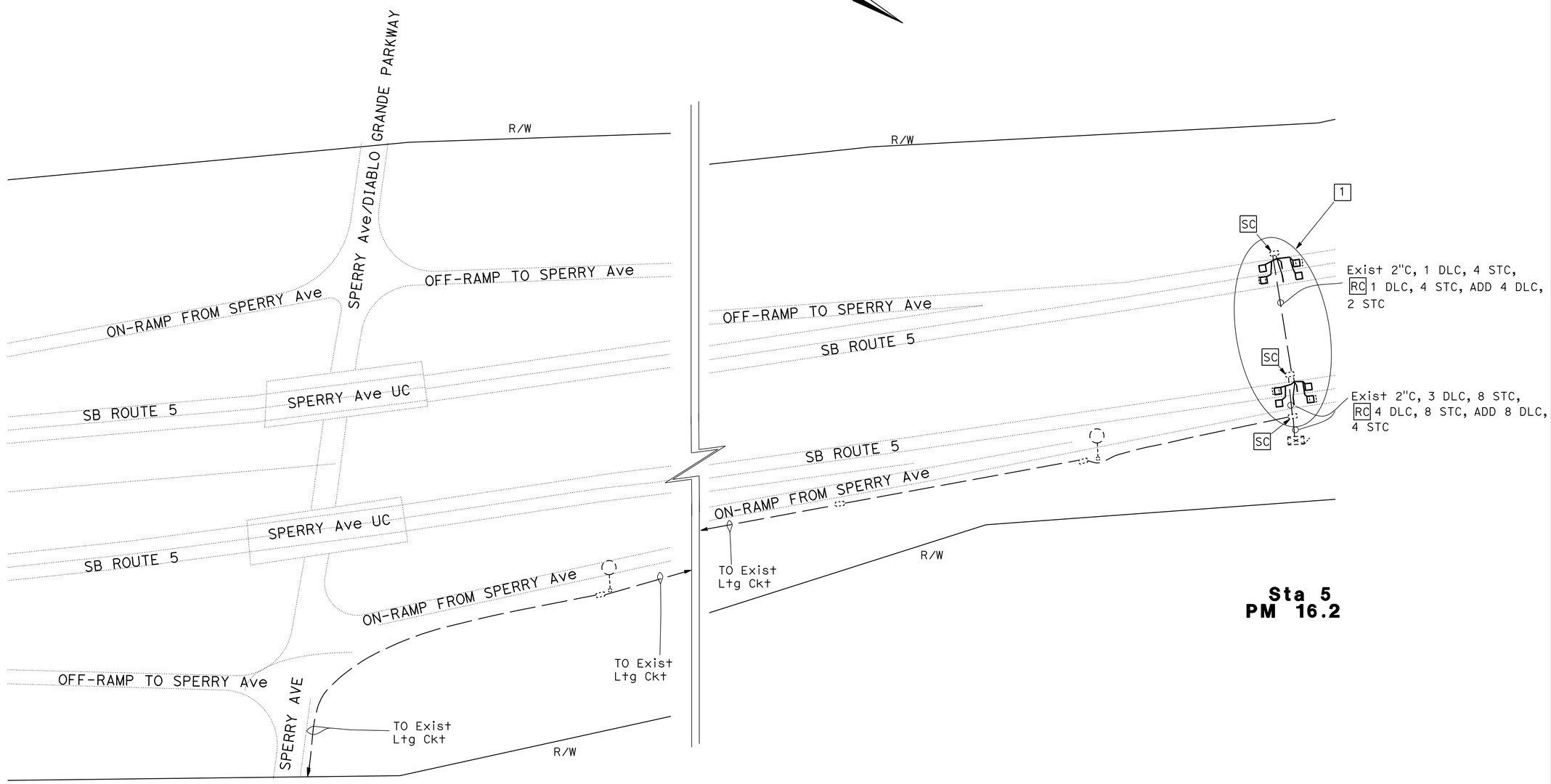

MODIFY VEHICLE CLASSIFICATION STATION

SCALE: 1" = 50'

E-5

APPROVED FOR ELECTRICAL WORK ONLY

STATE OF CALIFORNIA - DEPARTMENT OF TRANSPORTATION
Caltrans® ELECTRICAL DESIGN

FUNCTIONAL SUPERVISOR: ALI BAKHDOUD
CALCULATED-DESIGNED BY: FRED IYASERE
CHECKED BY: JASPAL SINGH
REVISED BY: FI
DATE REVISED: 02/18/14

LAST REVISION 00-00-00
DATE PLOTTED => 16-MAY-2014
TIME PLOTTED => 13:06

Dist	COUNTY	ROUTE	POST MILES TOTAL PROJECT	SHEET No.	TOTAL SHEETS
10	Mer,Sta, SJ	5	32.2/32.5, 0.0/28.1, 0.0/R12.4	59	112

REGISTERED ELECTRICAL ENGINEER DATE 2/11/14

02-18-14
PLANS APPROVAL DATE

REGISTERED PROFESSIONAL ENGINEER JASPAL SINGH No. E16657 Exp. 06/30/14 ELECTRICAL STATE OF CALIFORNIA

THE STATE OF CALIFORNIA OR ITS OFFICERS OR AGENTS SHALL NOT BE RESPONSIBLE FOR THE ACCURACY OR COMPLETENESS OF SCANNED COPIES OF THIS PLAN SHEET.

LEGEND:

1 COIL 10′ OF EACH LOOP DETECTOR IN PULL BOX.

2 IDENTIFY AND PLACE LOOP DETECTORS PER DETAIL B SHOWN ON SHEET E-10.

NOTES:

1. FOR ACCURATE RIGHT OF WAY DATA, CONTACT RIGHT OF WAY ENGINEERING AT THE DISTRICT OFFICE.
2. EXISTING UTILITY FACILITIES HAVE NOT BEEN INCLUDED ON THESE PLANS.

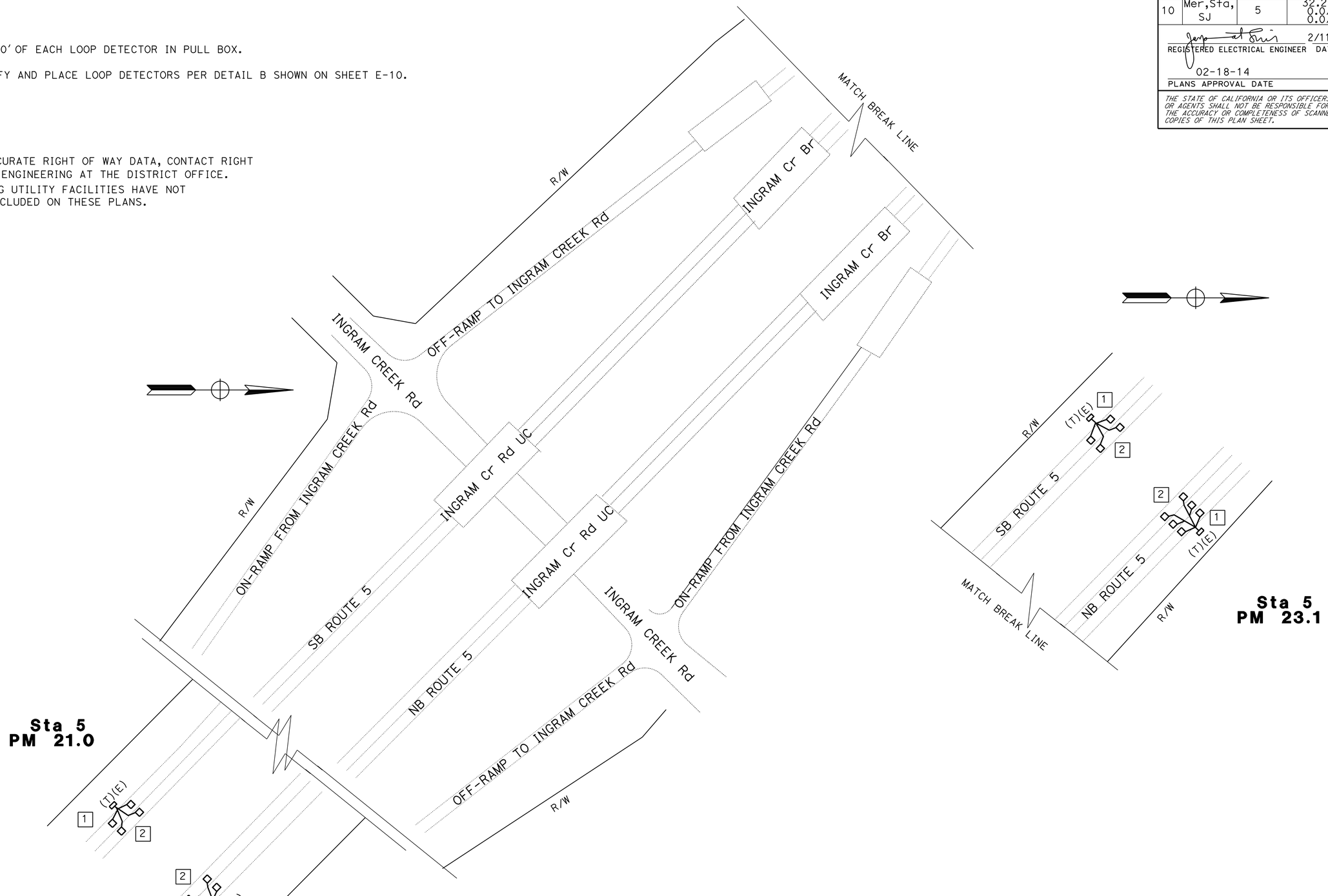

APPROVED FOR ELECTRICAL WORK ONLY

TRAFFIC MONITORING STATION (LOCATION 5)

SCALE: 1" = 50′

E-6

STATE OF CALIFORNIA - DEPARTMENT OF TRANSPORTATION
Caltrans ELECTRICAL DESIGN

FUNCTIONAL SUPERVISOR: ALALIB ABAHOOD

CALCULATED-DESIGNED BY: FRED IYASERE
CHECKED BY: JASPAL SINGH

REVISED BY: FI
DATE REVISED: 02/18/14

LAST REVISION DATE PLOTTED => 16-MAY-2014
00-00-00 TIME PLOTTED => 13:06

BORDER LAST REVISED 7/2/2010 | USERNAME => s123936 | DGN FILE => 1000020667ua006.dgn | RELATIVE BORDER SCALE IS IN INCHES 0 1 2 3 | UNIT 1555 | PROJECT NUMBER & PHASE 10000206671

Dist	COUNTY	ROUTE	POST MILES TOTAL PROJECT	SHEET No.	TOTAL SHEETS
10	Mer,Sta, SJ	5	32.2/32.5, 0.0/28.1, 0.0/R12.4	60	112

REGISTERED ELECTRICAL ENGINEER 2/11/14 DATE

02-18-14
PLANS APPROVAL DATE

REGISTERED PROFESSIONAL ENGINEER JASPAL SINGH No. E16657 Exp. 06/30/14 ELECTRICAL STATE OF CALIFORNIA

THE STATE OF CALIFORNIA OR ITS OFFICERS OR AGENTS SHALL NOT BE RESPONSIBLE FOR THE ACCURACY OR COMPLETENESS OF SCANNED COPIES OF THIS PLAN SHEET.

LEGEND:

1 Exist CONDUIT SHALL BE PROTECTED IN PLACE WHEN EXTENSION OF Exist BARRIER RAILING OCCURS, SEE CONSTRUCTION DETAIL SHEETS.

2 Exist VEHICLE CLASSIFICATION STATION.

NOTES:

1. FOR ACCURATE RIGHT OF WAY DATA, CONTACT RIGHT OF WAY ENGINEERING AT THE DISTRICT OFFICE.
2. EXISTING UTILITY FACILITIES HAVE NOT BEEN INCLUDED ON THESE PLANS.

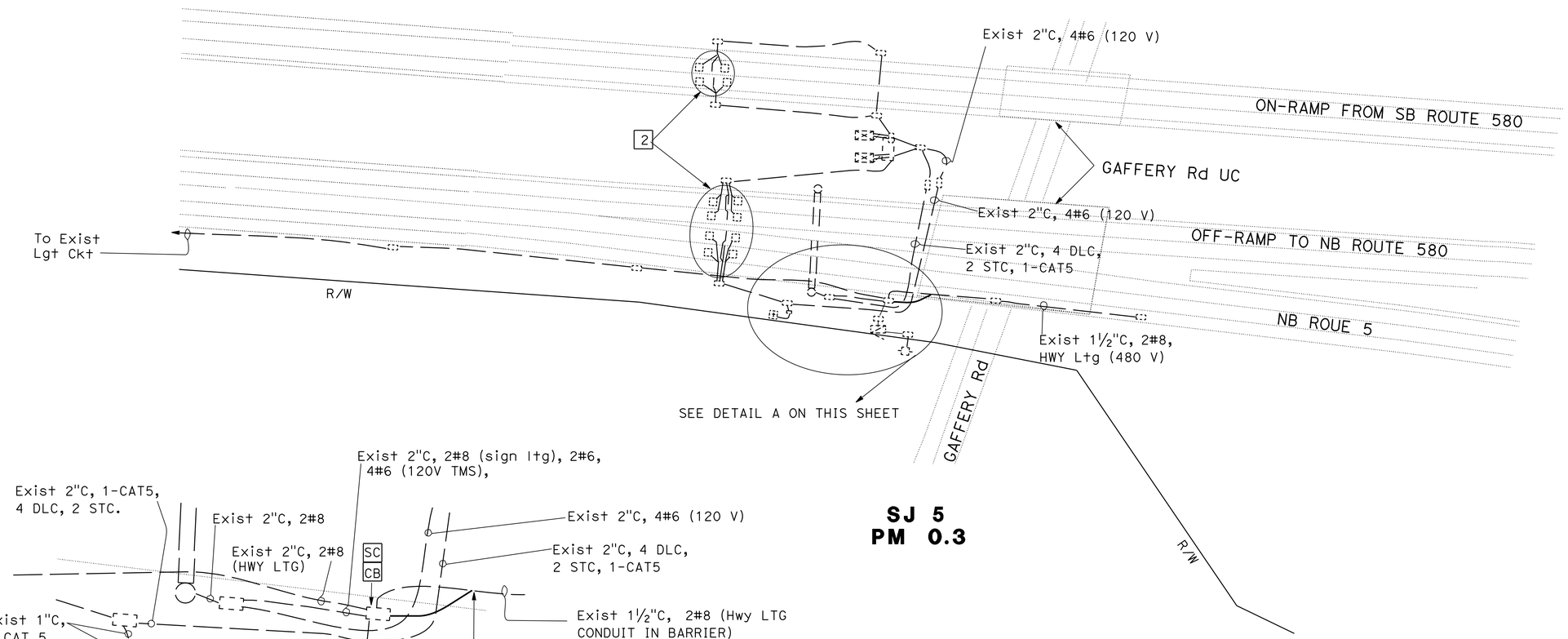

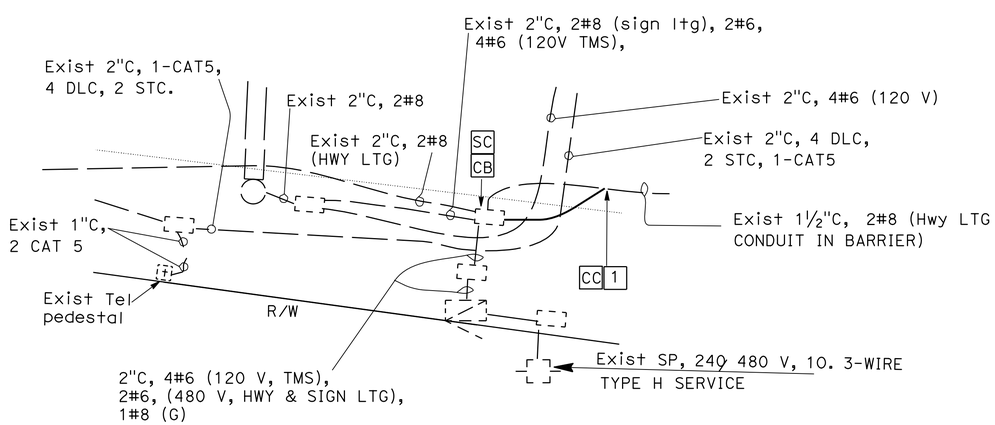

DETAIL A
NO SCALE

APPROVED FOR ELECTRICAL WORK ONLY

MODIFY LIGHTING

SCALE: 1" = 50'

E-7

STATE OF CALIFORNIA - DEPARTMENT OF TRANSPORTATION
ELECTRICAL DESIGN

FUNCTIONAL SUPERVISOR: ALI BAKHDOUD
CALCULATED-DESIGNED BY: FRED IYASERE
CHECKED BY: JASPAL SINGH
REVISED BY: FI
DATE REVISED: 02/18/14

LAST REVISION 00-00-00
DATE PLOTTED => 16-MAY-2014
TIME PLOTTED => 13:06

Dist	COUNTY	ROUTE	POST MILES TOTAL PROJECT	SHEET No.	TOTAL SHEETS
10	Mer,Sta, SJ	5	32.2/32.5, 0.0/28.1, 0.0/R12.4	61	112

REGISTERED ELECTRICAL ENGINEER 2/11/14 DATE

02-18-14
PLANS APPROVAL DATE

REGISTERED PROFESSIONAL ENGINEER JASPAL SINGH No. E16657 Exp. 06/30/14 ELECTRICAL STATE OF CALIFORNIA

THE STATE OF CALIFORNIA OR ITS OFFICERS OR AGENTS SHALL NOT BE RESPONSIBLE FOR THE ACCURACY OR COMPLETENESS OF SCANNED COPIES OF THIS PLAN SHEET.

NOTES:

1. FOR ACCURATE RIGHT OF WAY DATA, CONTACT RIGHT OF WAY ENGINEERING AT THE DISTRICT OFFICE.
2. EXISTING UTILITY FACILITIES HAVE NOT BEEN INCLUDED ON THESE PLANS.

LEGEND:

[1] NEW AND Exist CONDUIT SHALL BE PROTECTED IN PLACE WHEN EXTENSION OF Exist BARRIER RAILING OCCURS, SEE CONSTRUCTION DETAILS SHEETS.

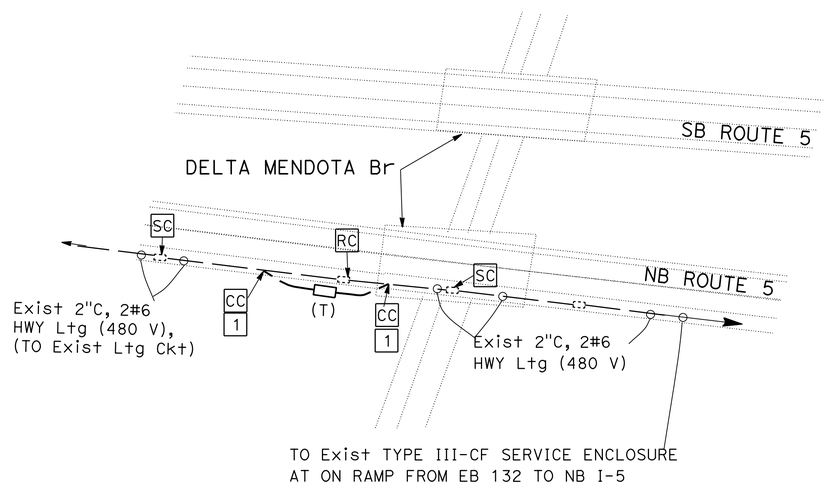

DELTA MENDOTA CANAL Br
SJ 5
PM 3.3

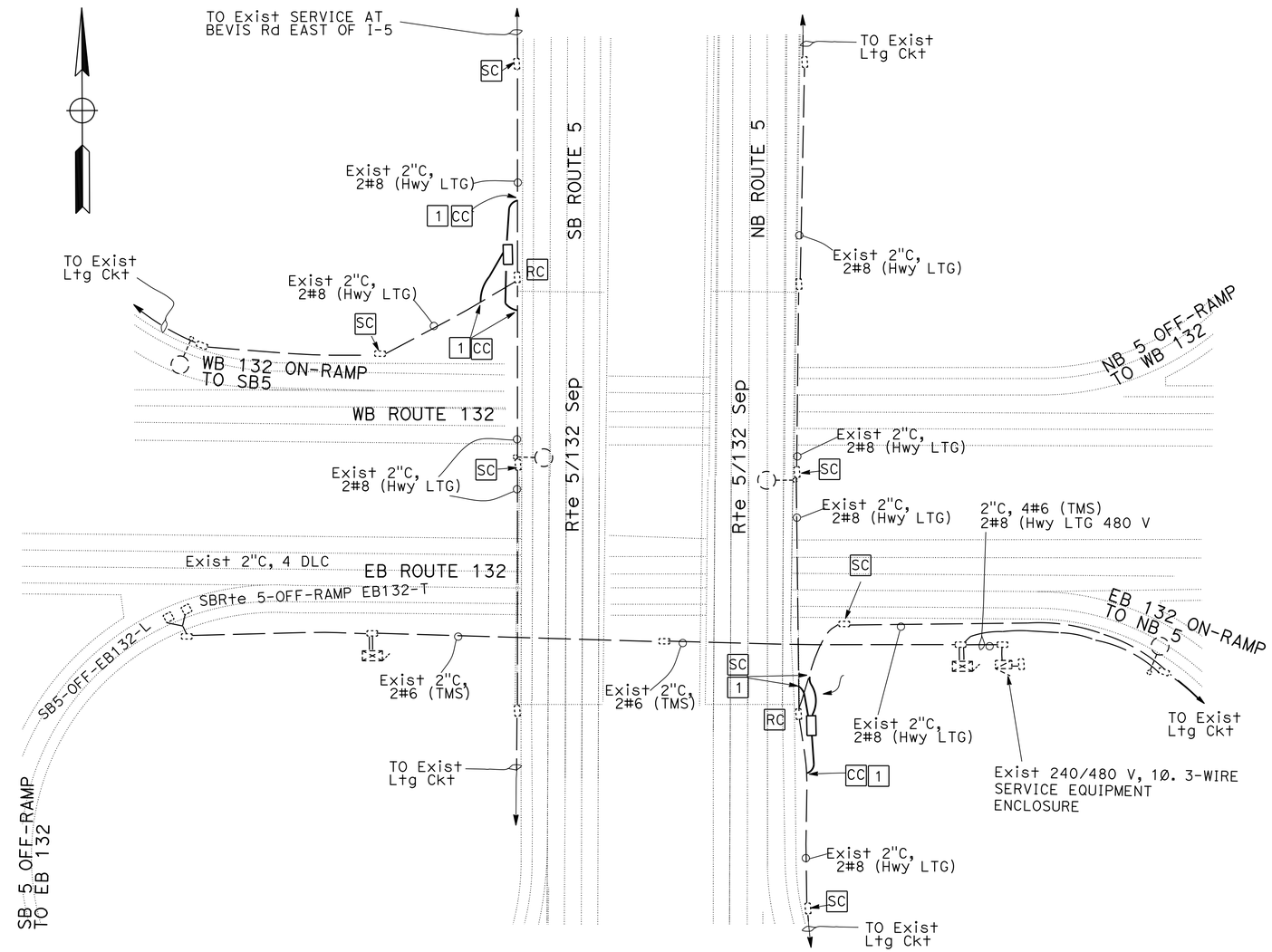

SJ 5
PM 3.4

APPROVED FOR ELECTRICAL WORK ONLY

MODIFY LIGHTING

SCALE: 1" = 50'

E-8

STATE OF CALIFORNIA - DEPARTMENT OF TRANSPORTATION
Caltrans® ELECTRICAL DESIGN

FUNCTIONAL SUPERVISOR	CALCULATED-DESIGNED BY	CHECKED BY	REVISED BY	DATE REVISED
ALI BAKHDOUD	FRED IYASERE	JASPAL SINGH	FI	02/18/14

LAST REVISION 00-00-00 | DATE PLOTTED => 16-MAY-2014 | TIME PLOTTED => 13:06

Dist	COUNTY	ROUTE	POST MILES TOTAL PROJECT	SHEET No.	TOTAL SHEETS
10	Mer,Sta, SJ	5	32.2/32.5, 0.0/28.1, 0.0/R12.4	62	112

REGISTERED ELECTRICAL ENGINEER 2/11/14 DATE

02-18-14
PLANS APPROVAL DATE

REGISTERED PROFESSIONAL ENGINEER JASPAL SINGH No. E16657 Exp. 06/30/14 ELECTRICAL STATE OF CALIFORNIA

THE STATE OF CALIFORNIA OR ITS OFFICERS OR AGENTS SHALL NOT BE RESPONSIBLE FOR THE ACCURACY OR COMPLETENESS OF SCANNED COPIES OF THIS PLAN SHEET.

NOTES:

1. FOR ACCURATE RIGHT OF WAY DATA, CONTACT RIGHT OF WAY ENGINEERING AT THE DISTRICT OFFICE.
2. EXISTING UTILITY FACILITIES HAVE NOT BEEN INCLUDED ON THESE PLANS.

LEGEND:

[1] NEW AND Exist CONDUIT SHALL BE PROTECTED IN PLACE WHEN EXTENSION OF Exist BARRIER RAILING OCCURS, SEE CONSTRUCTION DETAILS SHEETS.

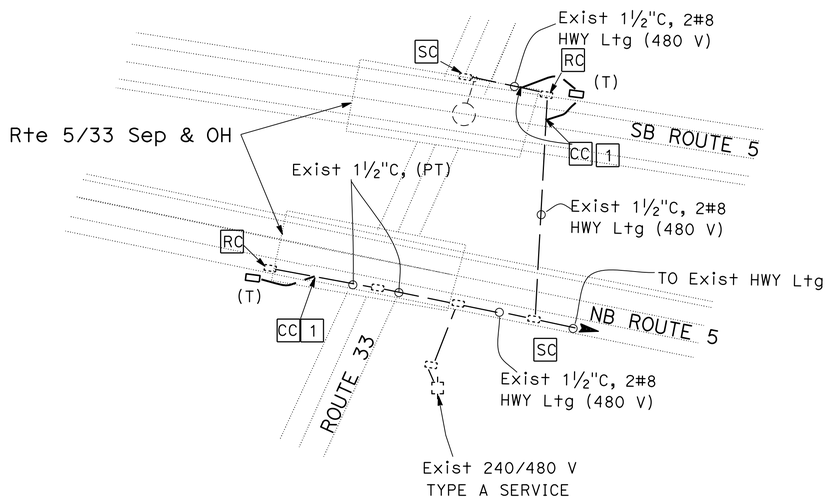

SJ 5
PM 6.4

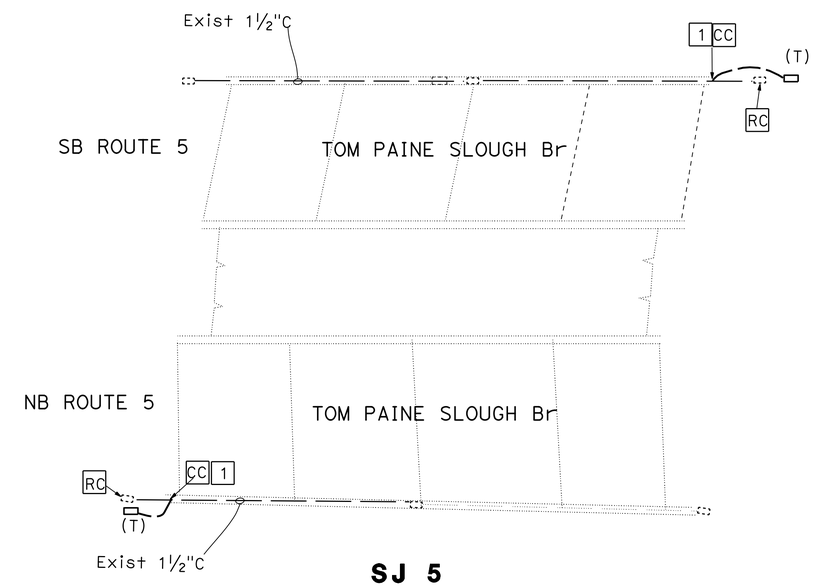

SJ 5
PM 12.4

APPROVED FOR ELECTRICAL WORK ONLY

MODIFY LIGHTING

NO SCALE

E-9

REVISED BY	DATE REVISED
FI	02/18/14

FRED IYASERE — JASPAL SINGH — CALCULATED-DESIGNED BY — CHECKED BY — FUNCTIONAL SUPERVISOR — ALI BAKHDOUD

STATE OF CALIFORNIA - DEPARTMENT OF TRANSPORTATION
Caltrans
ELECTRICAL DESIGN

LAST REVISION 00-00-00 — DATE PLOTTED => 16-MAY-2014 — TIME PLOTTED => 13:06

Dist	COUNTY	ROUTE	POST MILES TOTAL PROJECT	SHEET No.	TOTAL SHEETS
10	Mer,Sta, SJ	5	32.2/32.5, 0.0/28.1, 0.0/R12.4	63	112

REGISTERED ELECTRICAL ENGINEER 2/11/14 DATE

02-18-14
PLANS APPROVAL DATE

REGISTERED PROFESSIONAL ENGINEER JASPAL SINGH No. E16657 Exp. 06/30/14 ELECTRICAL STATE OF CALIFORNIA

THE STATE OF CALIFORNIA OR ITS OFFICERS OR AGENTS SHALL NOT BE RESPONSIBLE FOR THE ACCURACY OR COMPLETENESS OF SCANNED COPIES OF THIS PLAN SHEET.

NOTE:

RC Exist HPS Lum, INSTALL LED Lum AS SHOWN IN THE TABLES.

ROUTE 5 LUMINAIRE REPLACEMENT SCHEDULE

COUNTY	PM	Approx SERVICE LOCATION	ELECTROLIER LOCATION	Std No.	Ckt VOLTAGE	RC Exist HPS Lum	INSTALL LED Lum
STA	0.01	SB Rte 5 OFF-RAMP, 900' N OF SULLIVAN Rd	SB Rte 5 SULLIVAN Rd ON-RAMP	00009A	120/240 V	310 W	Roadway 2
			SB Rte 5 SULLIVAN Rd OFF-RAMP	00009B	120/240 V	200 W	Roadway 1
			NB Rte 5 SULLIVAN Rd OFF-RAMP	00009C	120/240 V	200 W	Roadway 1
STA	5.06	NE CORNER OF NB ON-RAMP FROM STURH Rd	NB Rte 5 STUHR Rd OFF-RAMP	00506A	120/240 V	200 W	Roadway 1
			NB Rte 5 STUHR Rd OFF-RAMP	00506B	120/240 V	200 W	Roadway 1
			NB Rte 5 STUHR Rd ON-RAMP	00506C	120/240 V	310 W	Roadway 2
			SB Rte 5 STUHR Rd OFF-RAMP	00506D	120/240 V	310 W	Roadway 2
			SB Rte 5 STUHR Rd OFF-RAMP	00506E	120/240 V	200 W	Roadway 1
			SB Rte 5 STUHR Rd ON-RAMP	00506F	120/240 V	200 W	Roadway 1
STA	10.56	NB Rte 5 OFF-RAMP TO FINK-WARD Rd, 800' S OF FINK-WARD Rd	NB Rte 5 FINK-WARD Rd OFF-RAMP	01056A	120/240 V	200 W	Roadway 1
			NB Rte 5 FINK-WARD Rd OFF-RAMP	01056B	120/240 V	200 W	Roadway 1
			SB Rte 5 FINK-WARD Rd ON-RAMP	01056C	120/240 V	310 W	Roadway 2
STA	10.93	SB Rte 5 OFF-RAMP TO FINK-WARD Rd, 1000' N OF FINK-WARD Rd	SB Rte 5 FINK-WARD Rd ON-RAMP	01093A	120/240 V	310 W	Roadway 2
			SB Rte 5 FINK-WARD Rd OFF-RAMP	01093B	120/240 V	200 W	Roadway 1
			NB Rte 5 FINK-WARD Rd ON-RAMP	01093C	120/240 V	200 W	Roadway 1
			NB Rte 5 FINK-WARD Rd ON-RAMP	01093D	120/240 V	200 W	Roadway 1
STA	15.88	NE CORNER OF NB ON-RAMP AND DEL PUERTO CYN Rd	NB Rte 5 DEL PUERTO CYN Rd OFF-RAMP	01588A	120/240 V	200 W	Roadway 1
			NB Rte 5 DEL PUERTO CYN Rd OFF-RAMP	01588B	120/240 V	310 W	Roadway 2
			SB Rte 5 DEL PUERTO CYN Rd OFF-RAMP	01588C	120/240 V	200 W	Roadway 1
			SB Rte 5 DEL PUERTO CYN Rd OFF-RAMP	01588F	120/240 V	310 W	Roadway 2
			SB Rte 5 DEL PUERTO CYN Rd OFF-RAMP	01588G	120/240 V	200 W	Roadway 1
			NB Rte 5 DEL PUERTO CYN Rd ON-RAMP	01588H	120/240 V	200 W	Roadway 1
STA	22.78	NB OFF-RAMP INGRAM Cr Rd, 800' S OF INGRAM Cr Rd	NB Rte 5 INGRAM Cr Rd OFF-RAMP	02278A	120/240 V	310 W	Roadway 2
			NB Rte 5 INGRAM Cr Rd OFF-RAMP	02278B	120/240 V	310 W	Roadway 2
			SB Rte 5 INGRAM Cr Rd ON-RAMP	02278C	120/240 V	310 W	Roadway 2
STA	23.10	Rte 5 E SHOULDER, 600' N OF INGRAM Cr Rd	SB Rte 5 INGRAM Cr Rd OFF-RAMP	02310A	120/240 V	310 W	Roadway 2
			SB Rte 5 INGRAM Cr Rd OFF-RAMP	02310A	120/240 V	310 W	Roadway 2
			NB Rte 5 INGRAM Cr Rd ON-RAMP	02310B	120/240 V	310 W	Roadway 2
			SB Rte 5 INGRAM Cr Rd ON-RAMP	02310C	120/240 V	310 W	Roadway 2

ROUTE 5 LUMINAIRE REPLACEMENT SCHEDULE

COUNTY	PM	Approx SERVICE LOCATION	ELECTROLIER LOCATION	Std No.	Ckt VOLTAGE	RC Exist HPS Lum	INSTALL LED Lum
SJ	6.49	NW CORNER OF Rte 33 ON-RAMP TO NB Rte 5 100' NORTH OF Rte 33	SB Rte 5 ON-RAMP FROM EB Rte 33	00893	240/480 V	310 W	Roadway 2
			NB Rte 5 OFF-RAMP TO Rte 33	00894	240/480 V	310 W	Roadway 2
			NB Rte 5 OFF-RAMP TO Rte 33	00895	240/480 V	310 W	Roadway 2
			SB Rte 5 OFF-RAMP TO Rte 33	00896	240/480 V	310 W	Roadway 2
			SB Rte 5 OFF-RAMP TO Rte 33	00897	240/480 V	310 W	Roadway 2
			NB Rte 5 ON-RAMP TO Rte 33	00898	240/480 V	310 W	Roadway 2
SJ	6.48	NW CORNER OF Rte 5 NB OFF/ON RAMPS, 100' N OF Rte 33	NB AND SB Rte 5 ON AND OFF RAMPS TO AND FROM Rte 33	0648A	240/480 V	310 W	Roadway 2
				0648B	240/480 V	310 W	Roadway 2
				0648C	240/480 V	310 W	Roadway 2
				0648D	240/480 V	310 W	Roadway 2
				0648E	240/480 V	310 W	Roadway 2
				0648F	240/480 V	310 W	Roadway 2
SJ	11.08	NB Rte 5 ON-RAMP, 100' N OF KASSON Rd	SB Rte 5 KASSON Rd ON-RAMP	01108A	240/480 V	310 W	Roadway 2
			NB Rte 5 KASSON Rd OFF-RAMP	01108B	240/480 V	310 W	Roadway 2
			NB Rte 5 KASSON Rd OFF-RAMP	01108C	240/480 V	310 W	Roadway 2
			NB Rte 5 KASSON Rd ON-RAMP	01108D	240/480 V	310 W	Roadway 2
			SB Rte 5 KASSON Rd OFF-RAMP	01108E	240/480 V	310 W	Roadway 2
			SB Rte 5 KASSON Rd OFF-RAMP	01108F	240/480 V	310 W	Roadway 2
SJ	12.14	Rte 5 E SHOULDER ON-RAMP FROM OLD RTE 50	NB Rte 5 OLD Rte 50 ON-RAMP	01214B	240/480 V	310 W	Roadway 2

LUMINAIRES	TOTAL QUANTITY
310 W HPS Lum TO BE REPLACED WITH TYPE ROADWAY 2 LED Lum	33
200 W HPS Lum TO BE REPLACED WITH TYPE ROADWAY 1 LED Lum	15

MODIFY LIGHTING
E-10

REVISED BY	DATE REVISED
FI	02/11/14

FRED IYASERE — JASPAL SINGH — CALCULATED-DESIGNED BY — CHECKED BY

FUNCTIONAL SUPERVISOR: ALI BAKHDOUD

STATE OF CALIFORNIA - DEPARTMENT OF TRANSPORTATION
Caltrans® ELECTRICAL DESIGN

LAST REVISION 00-00-00 — DATE PLOTTED => 20-MAY-2014 — TIME PLOTTED => 13:02

Dist	COUNTY	ROUTE	POST MILES TOTAL PROJECT	SHEET No.	TOTAL SHEETS
10	Mer,Sta, SJ	5	32.2/32.5, 0.0/28.1, 0.0/R12.4	64	112

REGISTERED ELECTRICAL ENGINEER DATE 2/11/14

02-18-14
PLANS APPROVAL DATE

REGISTERED PROFESSIONAL ENGINEER JASPAL SINGH No. E16657 Exp. 06/30/14 ELECTRICAL STATE OF CALIFORNIA

THE STATE OF CALIFORNIA OR ITS OFFICERS OR AGENTS SHALL NOT BE RESPONSIBLE FOR THE ACCURACY OR COMPLETENESS OF SCANNED COPIES OF THIS PLAN SHEET.

NOTE:

EXISTING UTILITY FACILITIES HAVE NOT BEEN INCLUDED ON THESE PLANS.

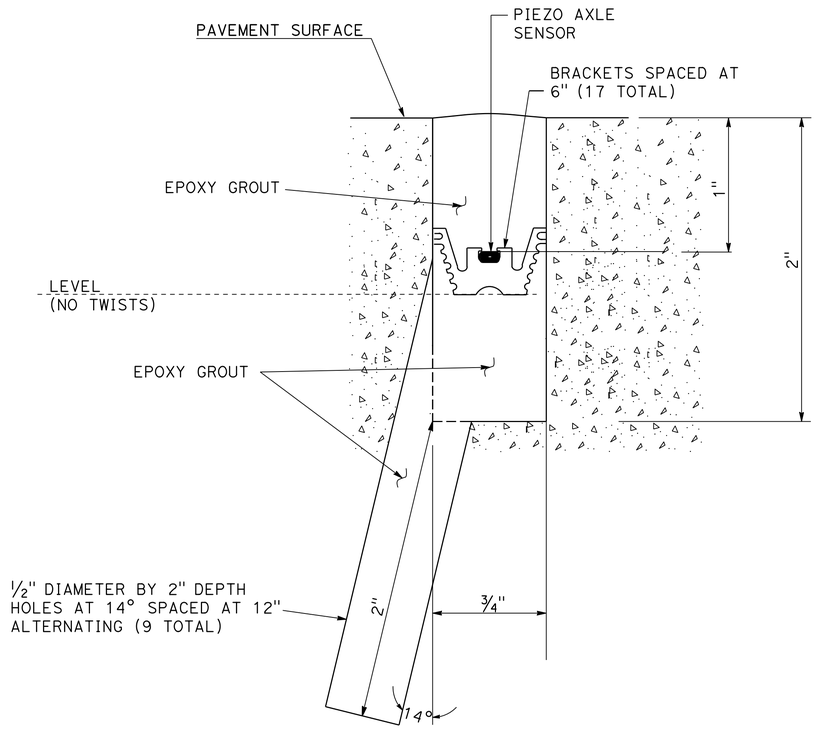

SECTION A-A

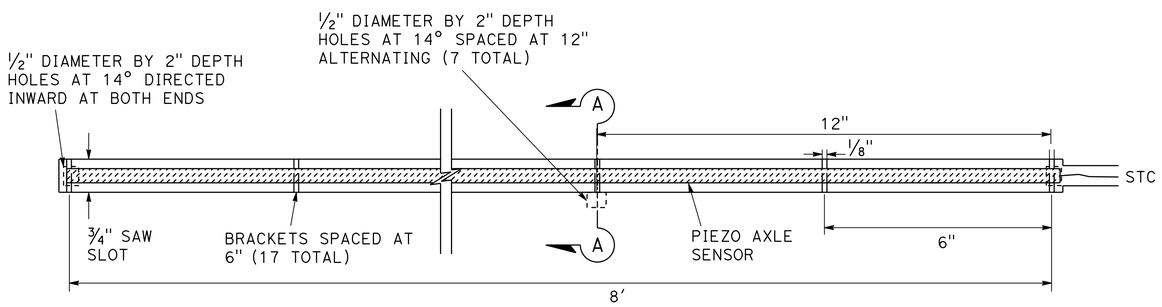

PIEZO AXLE SENSOR INSTALLATION

TOP VIEW
DETAIL A

INDUCTIVE LOOP DETECTOR SENSOR DESIGNATION

N-1-E

- DIRECTION OF TRAFFIC
  - N - NORTHBOUND , S - SOUTHBOUND
  - E - EASTBOUND , W - WESTBOUND
- E - ENTERING
  L - LEAVING
- LANE NUMBER
  - 1 - FIRST LANE FROM LEFT
  - 2 - SECOND LANE

PIEZO AXLE SENSOR DESIGNATION

N-P-1-1

- DIRECTION OF TRAFFIC
  - N - NORTHBOUND, S - SOUTHBOUND
  - E - EASTBOUND, W - WESTBOUND
- PIEZO AXLE SENSOR
- 1 - FOR ALL PIEZO AXLE SENSORS
- LANE NUMBER
  - 1 - FIRST LANE FROM LEFT
  - 2 - SECOND LANE

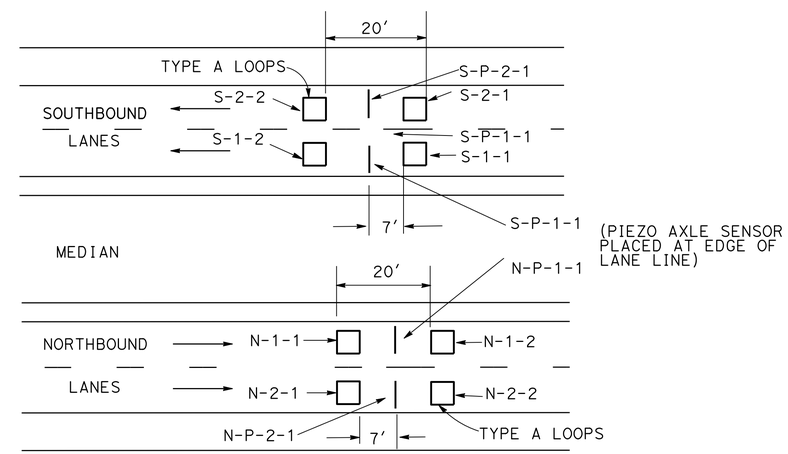

LOOP DETECTOR AND PIEZO AXLE SENSOR PLACEMENT AND DESIGNATION

DETAIL B

ELECTRICAL DETAILS

NO SCALE

E-11

STATE OF CALIFORNIA - DEPARTMENT OF TRANSPORTATION
Caltrans® ELECTRICAL DESIGN

CALCULATED-DESIGNED BY	FRED IYASERE	REVISED BY	FI
CHECKED BY	JASPAL SINGH	DATE REVISED	02/18/14
FUNCTIONAL SUPERVISOR	ALI BAKHDOUD		

LAST REVISION 00-00-00 | DATE PLOTTED => 20-MAY-2014 | TIME PLOTTED => 07:52

Dist	COUNTY	ROUTE	POST MILES TOTAL PROJECT	SHEET No.	TOTAL SHEETS
10	Mer,Sta, SJ	5	32.2/32.5, 0.0/28.1, 0.0/R12.4	65	112

REGISTERED ELECTRICAL ENGINEER 2/11/4 DATE

02-18-14
PLANS APPROVAL DATE

REGISTERED PROFESSIONAL ENGINEER JASPAL SINGH No. E16657 Exp. 06/30/14 ELECTRICAL STATE OF CALIFORNIA

THE STATE OF CALIFORNIA OR ITS OFFICERS OR AGENTS SHALL NOT BE RESPONSIBLE FOR THE ACCURACY OR COMPLETENESS OF SCANNED COPIES OF THIS PLAN SHEET.

NOTE:

ITEMS SHOWN IN TABLES ARE NOT SEPARATE PAY ITEMS, FOR INFORMATION ONLY.

TRAFFIC MONITORING STATION

SHEET No.	LOCATION	2"C TYPE 3	TYPE A LOOPS	No. 5(T) PB
		LF	EA	
E-1	1	10	8	2
E-2	2	20	16	4
E-3	3	20	16	4
E-4	4	10	8	2
E-6	5	20	18	4

VEHICLE CLASSIFICATION STATION

SHEET No.	DLC	SCREEN TRANSMISSION CABLE	TYPE A DETECTOR LOOPS	PIEZO AXLE SENSOR
	LF		EA	
E-5	500	600	8	4

MODIFY LIGHTING

SHEET No.	1½"C TYPE 3	No. 8 CONDUCTOR	No. 5 PB	LED LUMINAIRE
	LF		EA	
E-7	15	200	-	-
E-8	20	800	3	-
E-9	40	500	4	-
E-10	-	-	-	48

ELECTRICAL QUANTITIES
E-12

FRED IYASERE	JASPAL SINGH	FI	02/18/14
CALCULATED-DESIGNED BY	CHECKED BY	REVISED BY	DATE REVISED
FUNCTIONAL SUPERVISOR	ALI BAKHDOUD		

STATE OF CALIFORNIA - DEPARTMENT OF TRANSPORTATION
Caltrans® ELECTRICAL DESIGN

LAST REVISION 00-00-00 | DATE PLOTTED => 20-MAY-2014 TIME PLOTTED => 07:52

M

Maint	MAINTENANCE
Max	MAXIMUM
MB	METAL BEAM
MBB	METAL BEAM BARRIER
MBGR	METAL BEAM GUARD RAILING
Med	MEDIAN
MGS	MIDWEST GUARDRAIL SYSTEM
MH	MANHOLE
Min	MINIMUM
Misc	MISCELLANEOUS
Misc I & S	MISCELLANEOUS IRON AND STEEL
Mkr	MARKER
Mod	MODIFIED,
	MODIFY
Mon	MONUMENT
MP	METAL PLATE
MPGR	METAL PLATE GUARD RAILING
MR	MOVEMENT RATING
MSE	MECHANICALLY STABILIZED EMBANKMENT
Mt	MOUNTAIN, MOUNT
Mtl	MATERIAL
MVP	MAINTENANCE VEHICLE PULLOUT

N

N	NORTH
NB	NORTHBOUND
No.	NUMBER (MUST HAVE PERIOD)
Nos.	NUMBERS (MUST HAVE PERIOD)
NPS	NOMINAL PIPE SIZE
NS	NEAR SIDE
NSP	NEW STANDARD PLAN
NTS	NOT TO SCALE

O

Oblr	OBLITERATE
OC	OVERCROSSING
OD	OUTSIDE DIAMETER
OF	OUTSIDE FACE
OG	ORIGINAL GROUND
OGAC	OPEN GRADED ASPHALT CONCRETE
OGFC	OPEN GRADED FRICTION COURSE
OH	OVERHEAD
OHWM	ORDINARY HIGH WATER MARK
O-O	OUT TO OUT
Opp	OPPOSITE
OSD	OVERSIDE DRAIN

P

P	PAGE
PAP	PERFORATED ALUMINUM PIPE
PB	PULL BOX
PC	POINT OF CURVATURE,
	PRECAST
PCC	POINT OF COMPOUND CURVE,
	PORTLAND CEMENT CONCRETE
PCMS	PORTABLE CHANGEABLE MESSAGE SIGN
PCP	PERFORATED CONCRETE PIPE,
	PRESTRESSED CONCRETE PIPE
PCVC	POINT OF COMPOUND VERTICAL CURVE
PEC	PERMIT TO ENTER AND CONSTRUCT
Ped	PEDESTRIAN
Ped OC	PEDESTRIAN OVERCROSSING
Ped UC	PEDESTRIAN UNDERCROSSING
Perm Mtl	PERMEABLE MATERIAL

P continued

PG	PROFILE GRADE
PI	POINT OF INTERSECTION
PJP	PARTIAL JOINT PENETRATION
Pkwy	PARKWAY
ℙ,PL	PLATE
P/L	PROPERTY LINE
PM	POST MILE,
	TIME FROM NOON TO MIDNIGHT
PN	PAVING NOTCH
POC	POINT OF HORIZONTAL CURVE
POT	POINT OF TANGENT
POVC	POINT OF VERTICAL CURVE
PP	PIPE PILE,
	PLASTIC PIPE,
	POWER POLE
PPL	PREFORMED PERMEABLE LINER
PPP	PERFORATED PLASTIC PIPE
PRC	POINT OF REVERSE CURVE
PRF	PAVEMENT REINFORCING FABRIC
PRVC	POINT OF REVERSE VERTICAL CURVE
PS&E	PLANS, SPECIFICATIONS AND ESTIMATES
PS, P/S	PRESTRESSED
PSP	PERFORATED STEEL PIPE
PT	POINT OF TANGENCY
PVC	POLYVINYL CHLORIDE
Pvmt	PAVEMENT

Q

Qty	QUANTITY

R

R	RADIUS
R & D	REMOVE AND DISPOSE
R & S	REMOVE AND SALVAGE
R/C	RATE OF CHANGE
RCA	REINFORCED CONCRETE ARCH
RCB	REINFORCED CONCRETE BOX
RCP	REINFORCED CONCRETE PIPE
RCPA	REINFORCED CONCRETE PIPE ARCH
Rd	ROAD
Reinf	REINFORCED,
	REINFORCEMENT,
	REINFORCING
Rel	RELOCATE
Repl	REPLACEMENT
Ret	RETAINING
Rev	REVISED, REVISION
Rdwy	ROADWAY
RHMA	RUBBERIZED HOT MIX ASPHALT
Riv	RIVER
RM	ROAD-MIXED
RP	RADIUS POINT,
	REFERENCE POINT
RR	RAILROAD
RSP	ROCK SLOPE PROTECTION,
	REVISED STANDARD PLAN
Rt	RIGHT
Rte	ROUTE
RW	REDWOOD,
	RETAINING WALL
R/W	RIGHT OF WAY
Rwy	RAILWAY

S

S	SOUTH,
	SUPPLEMENT
SAE	STRUCTURE APPROACH EMBANKMENT
Salv	SALVAGE
SAPP	STRUCTURAL ALUMINUM PLATE PIPE
SB	SOUTHBOUND
SC	SAND CUSHION
SCSP	SLOTTED CORRUGATED STEEL PIPE
SD	STORM DRAIN
Sec	SECOND,
	SECTION
Sep	SEPARATION
SG	SUBGRADE
Shld	SHOULDER
Sht	SHEET
Sim	SIMILAR
℄	STATION LINE
SM	SELECTED MATERIAL
Spec	SPECIAL,
	SPECIFICATIONS
SPP	SLOTTED PLASTIC PIPE
SS	SLOPE STAKE
SSBM	STRAP AND SADDLE BRACKET METHOD
SSD	STRUCTURAL SECTION DRAIN
SSPA	STRUCTURAL STEEL PLATE ARCH
SSPP	STRUCTURAL STEEL PLATE PIPE
SSPPA	STRUCTURAL STEEL PLATE PIPE ARCH
SSRP	STEEL SPIRAL RIB PIPE
St	STREET
Sta	STATION
STBB	SINGLE THRIE BEAM BARRIER
Std	STANDARD
Str	STRUCTURE
Surf	SURFACING
SW	SIDEWALK,
	SOUND WALL
Swr	SEWER
Sym	SYMMETRICAL
S4S	SURFACE 4 SIDES

T

T	SEMI-TANGENT
Tan	TANGENT
TBB	THRIE BEAM BARRIER
Tbr	TIMBER
TC	TOP OF CURB
TCB	TRAFFIC CONTROL BOX
TCE	TEMPORARY CONSTRUCTION EASEMENT
Tel	TELEPHONE
Temp	TEMPORARY
TG	TOP OF GRADE
Tot	TOTAL
TP	TELEPHONE POLE
TPB	TREATED PERMEABLE BASE
TPM	TREATED PERMEABLE MATERIAL
Trans	TRANSITION

T continued

TS	TRANSVERSE,
	TRAFFIC SIGNAL,
	TUBULAR STEEL
Typ	TYPICAL

U

UC	UNDERCROSSING
UD	UNDERDRAIN
UG	UNDERGROUND
UON	UNLESS OTHERWISE NOTED
UP	UNDERPASS

V

V	VALVE,
	DESIGN SPEED
Var	VARIABLE,
	VARIES
VC	VERTICAL CURVE
VCP	VITRIFIED CLAY PIPE
Vert	VERTICAL
Via	VIADUCT
Vol	VOLUME

W

W	WEST,
	WIDTH
WB	WESTBOUND
WH	WEEP HOLE
WM	WIRE MESH
WS	WATER SURFACE
WSP	WELDED STEEL PIPE
Wt	WEIGHT
WV	WATER VALVE
WW	WINGWALL
WWLOL	WINGWALL LAYOUT LINE

X

X Sec	CROSS SECTION
Xing	CROSSING

Y

Yr	YEAR
Yrs	YEARS

Dist	COUNTY	ROUTE	POST MILES TOTAL PROJECT	SHEET No.	TOTAL SHEETS
10	Mer,Sta, SJ	5	32.2/32.5, 0.0/28.1, 0.0/R12.4	66	112

Grace M. Tsushima
REGISTERED CIVIL ENGINEER

July 19, 2013
PLANS APPROVAL DATE

REGISTERED PROFESSIONAL ENGINEER
Grace M. Tsushima
No. C49814
Exp. 9-30-14
CIVIL
STATE OF CALIFORNIA

THE STATE OF CALIFORNIA OR ITS OFFICERS OR AGENTS SHALL NOT BE RESPONSIBLE FOR THE ACCURACY OR COMPLETENESS OF SCANNED COPIES OF THIS PLAN SHEET.

TO ACCOMPANY PLANS DATED 02-18-14

UNIT OF MEASUREMENT SYMBOLS:

Some of the symbols used in the project plan quantity tables and in the Bid Item List are:

TABLE A

SYMBOL USED	DEFINITIONS
ACRE	ACRE
CF	CUBIC FOOT
CY	CUBIC YARD
EA	EACH
GAL	GALLON
LB	POUND
LF	LINEAR FOOT
SQFT	SQUARE FOOT
SQYD	SQUARE YARD
STA	100 FEET
TAB	TABLET
TON	2,000 POUNDS

Some of the symbols used in the plans other than in the project plan quantity tables are:

TABLE B

SYMBOL USED	DEFINITIONS
ksi	KIPS PER SQUARE INCH
ksf	KIPS PER SQUARE FOOT
psi	POUNDS PER SQUARE INCH
psf	POUNDS PER SQUARE FOOT
lb/ft^3, pcf	POUNDS PER CUBIC FOOT
tsf	TONS PER SQUARE FOOT
mph, MPH *	MILES PER HOUR
ø	NOMINAL DIAMETER
oz	OUNCE
lb	POUND
kip	1,000 POUNDS
cal	CALORIE
ft	FOOT OR FEET
gal	GALLON

* For use on a sign panel only

STATE OF CALIFORNIA
DEPARTMENT OF TRANSPORTATION

ABBREVIATIONS (SHEET 2 OF 2)

NO SCALE

RSP A10B DATED JULY 19, 2013 SUPERSEDES STANDARD PLAN A10B DATED MAY 20, 2011 - PAGE 2 OF THE STANDARD PLANS BOOK DATED 2010.

REVISED STANDARD PLAN RSP A10B

2010 REVISED STANDARD PLAN RSP A10B

6-7-13

Dist	COUNTY	ROUTE	POST MILES TOTAL PROJECT	SHEET No.	TOTAL SHEETS
10	Mer,Sta, SJ	5	32.2/32.5, 0.0/28.1, 0.0/R12.4	67	112

Roberta L. McLaughlin
REGISTERED CIVIL ENGINEER

July 19, 2013
PLANS APPROVAL DATE

REGISTERED PROFESSIONAL ENGINEER
Roberta L. McLaughlin
No. C40375
Exp. 3-31-15
CIVIL
STATE OF CALIFORNIA

THE STATE OF CALIFORNIA OR ITS OFFICERS OR AGENTS SHALL NOT BE RESPONSIBLE FOR THE ACCURACY OR COMPLETENESS OF SCANNED COPIES OF THIS PLAN SHEET.

TO ACCOMPANY PLANS DATED 02-18-14

EXIT RAMP NEUTRAL AREA (GORE) TREATMENT

DETAIL 36

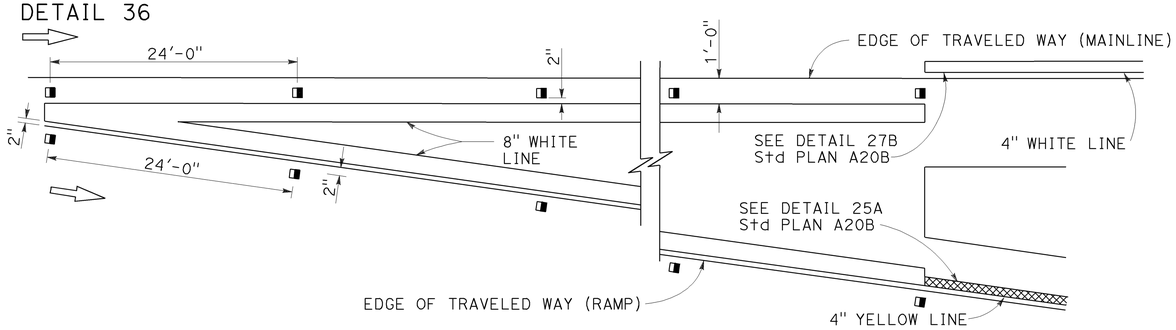

ENTRANCE RAMP NEUTRAL AREA (MERGE) TREATMENT

DETAIL 36A

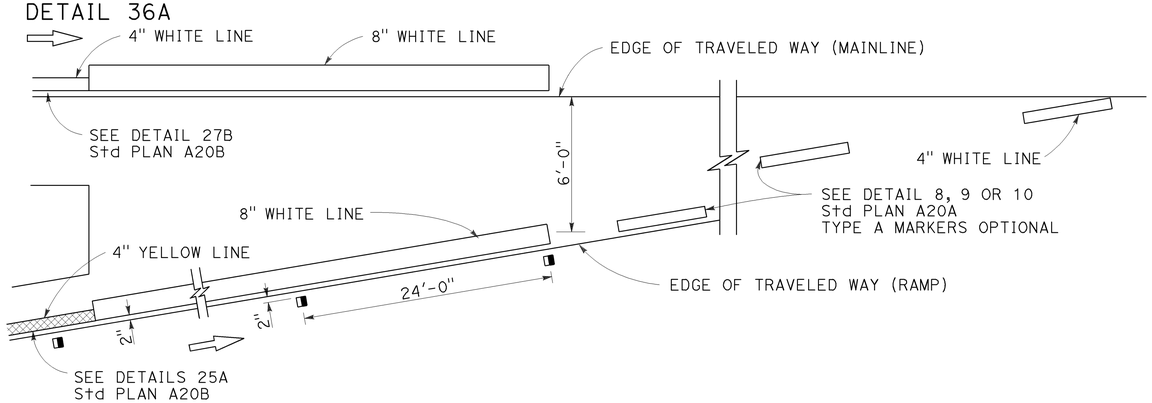

ENTRANCE RAMP NEUTRAL AREA (ACCELERATION LANE) TREATMENT

DETAIL 36B

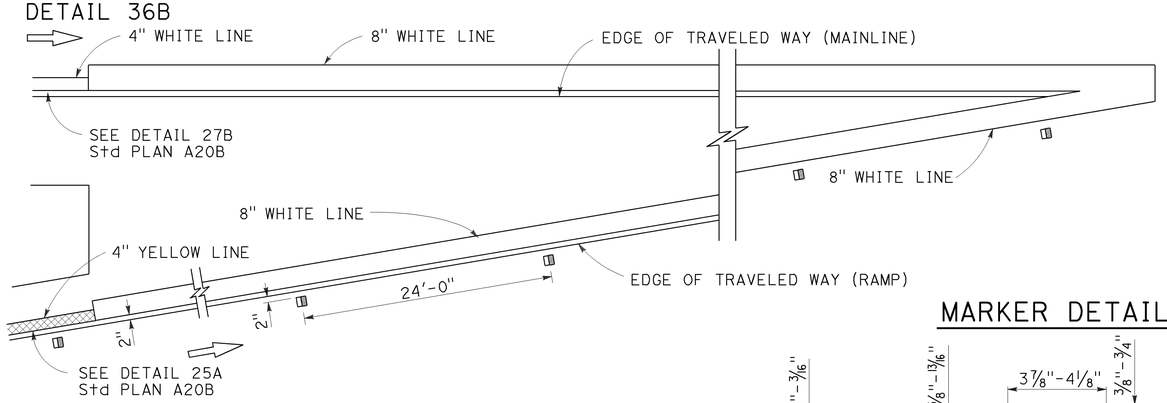

LANE DROP AT EXIT RAMPS

DETAIL 37

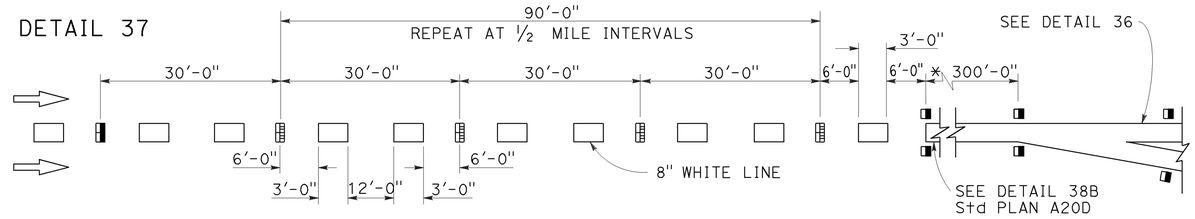

DETAIL 37A

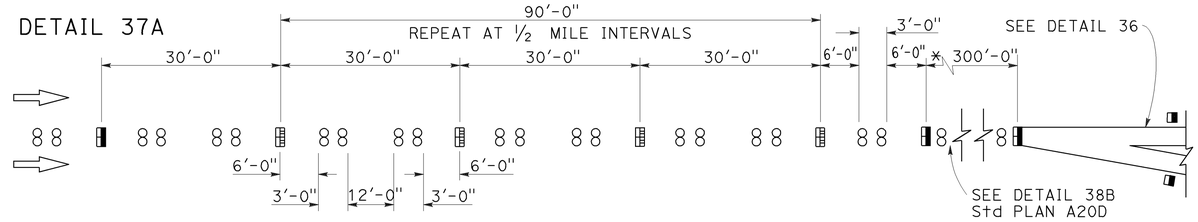

* The solid channelizing line shown may be omitted on short auxiliary lanes where weaving length is critical.

LANE DROP AT INTERSECTIONS

DETAIL 37B

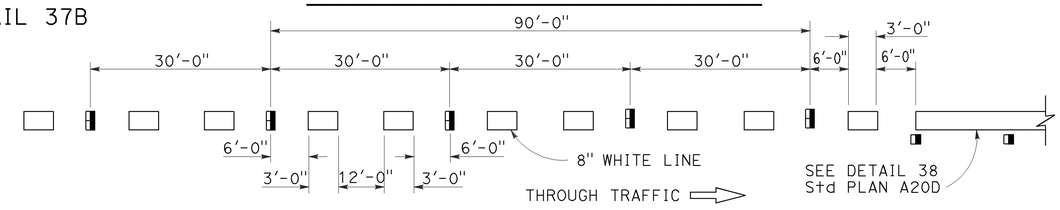

DETAIL 37C

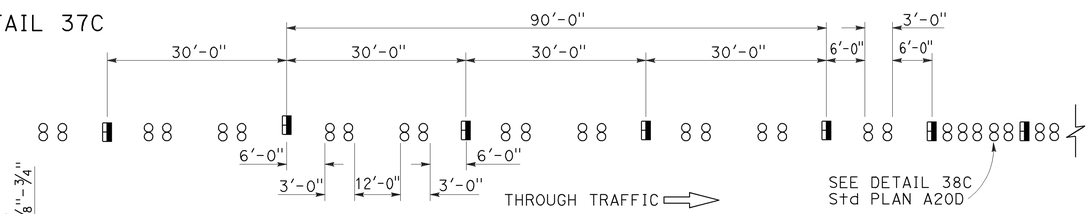

MARKER DETAILS

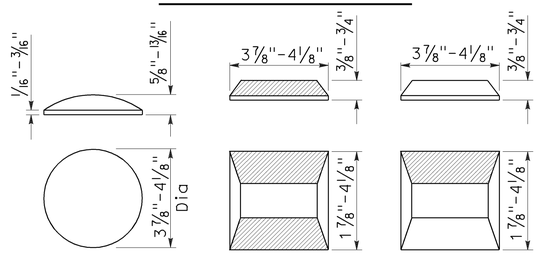

LEGEND:

MARKERS

- ○ TYPE A WHITE NON-REFLECTIVE
- ⊟ TYPE C RED-CLEAR RETROREFLECTIVE
- ◨ TYPE G ONE-WAY CLEAR RETROREFLECTIVE

STATE OF CALIFORNIA
DEPARTMENT OF TRANSPORTATION

PAVEMENT MARKERS AND TRAFFIC LINE TYPICAL DETAILS

NO SCALE

RSP A20C DATED JULY 19, 2013 SUPERSEDES STANDARD PLAN A20C DATED MAY 20, 2011 - PAGE 11 OF THE STANDARD PLANS BOOK DATED 2010.

REVISED STANDARD PLAN RSP A20C

2010 REVISED STANDARD PLAN RSP A20C

4-29-13

Dist	COUNTY	ROUTE	POST MILES TOTAL PROJECT	SHEET No.	TOTAL SHEETS
10	Mer,Sta, SJ	5	32.2/32.5, 0.0/28.1, 0.0/R12.4	68	112

Roberta L. McLaughlin
REGISTERED CIVIL ENGINEER

April 20, 2012
PLANS APPROVAL DATE

REGISTERED PROFESSIONAL ENGINEER
Roberta L. McLaughlin
No. C40375
Exp. 3-31-13
CIVIL
STATE OF CALIFORNIA

THE STATE OF CALIFORNIA OR ITS OFFICERS OR AGENTS SHALL NOT BE RESPONSIBLE FOR THE ACCURACY OR COMPLETENESS OF SCANNED COPIES OF THIS PLAN SHEET.

TO ACCOMPANY PLANS DATED 02-18-14

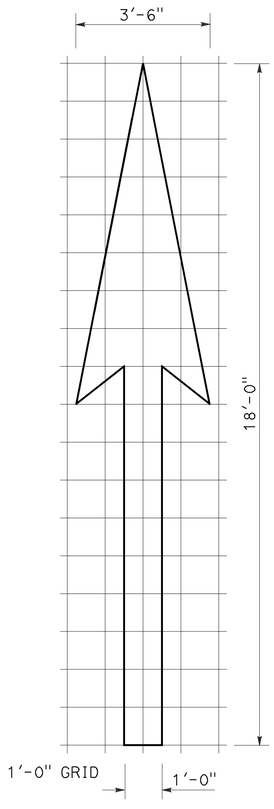

A=25 ft^2

TYPE I 18'-0" ARROW

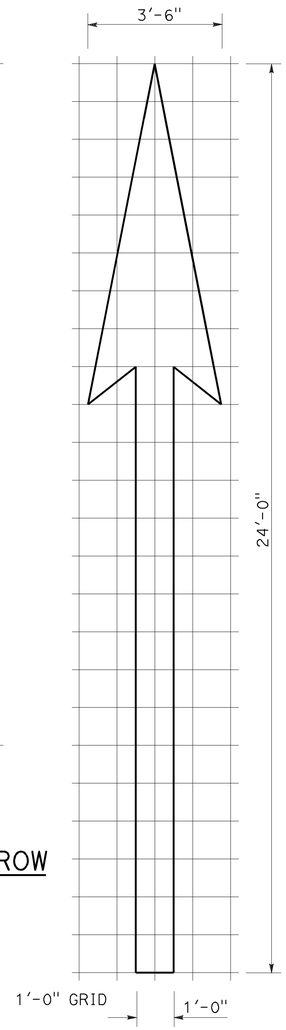

A=31 ft^2

TYPE I 24'-0" ARROW

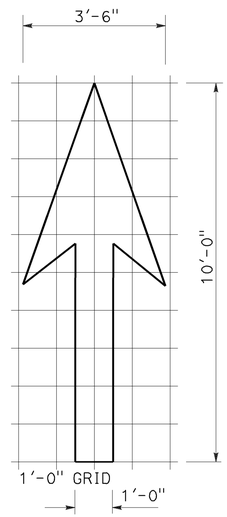

A=14 ft^2

TYPE I 10'-0" ARROW

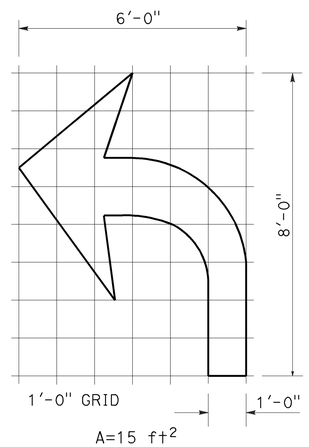

A=15 ft^2

TYPE IV (L) ARROW

(For Type IV (R) arrow, use mirror image)

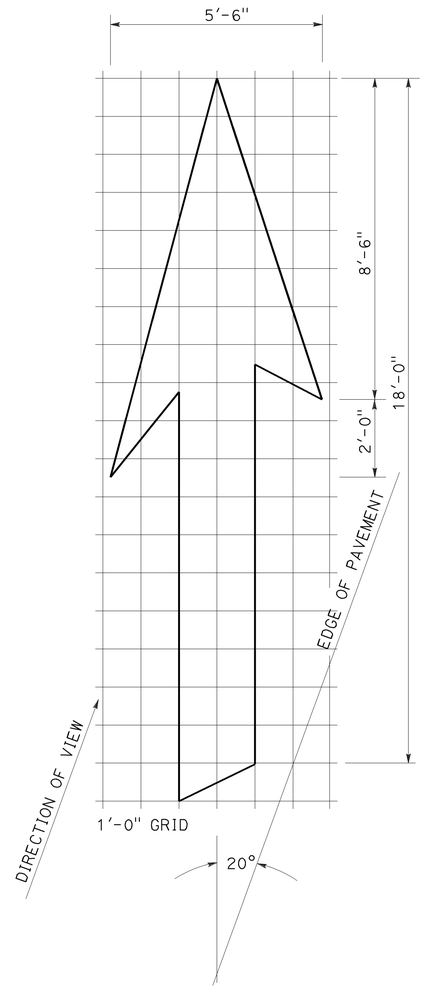

A=42 ft^2

TYPE VI ARROW

Right lane drop arrow
(For left lane, use mirror image)

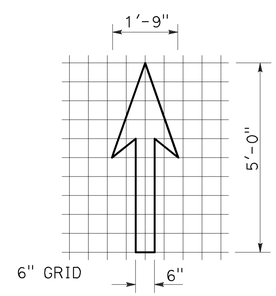

A=3.5 ft^2

BIKE LANE ARROW

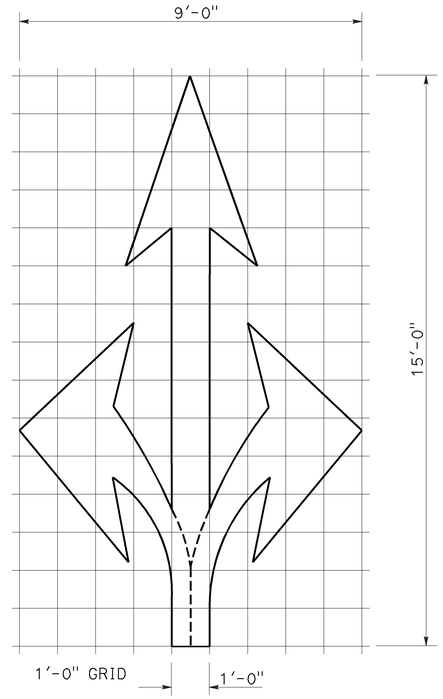

A=36 ft^2

TYPE VIII ARROW

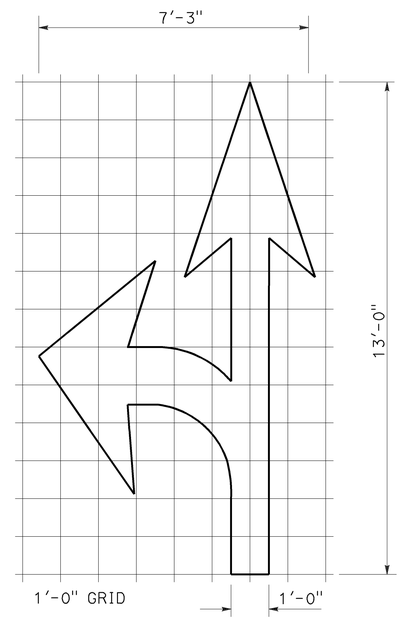

A=27 ft^2

TYPE VII (L) ARROW

(For Type VII (R) arrow, use mirror image)

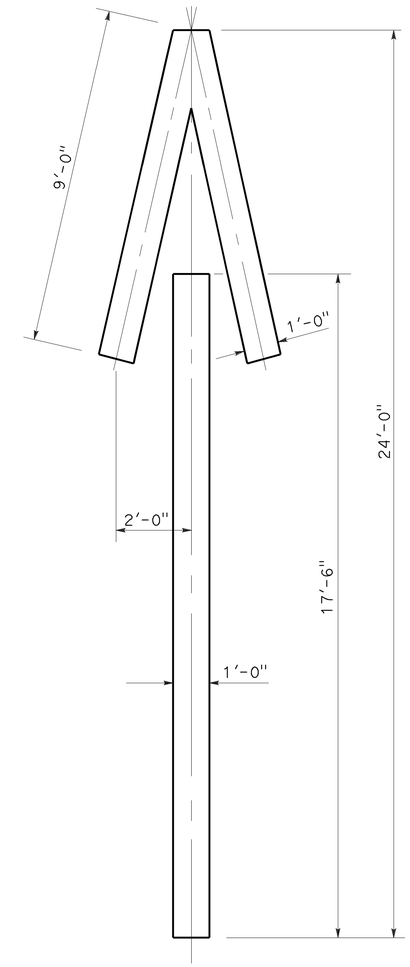

A=33 ft^2

TYPE V ARROW

NOTE:
Minor variations in dimensions may be accepted by the Engineer.

STATE OF CALIFORNIA
DEPARTMENT OF TRANSPORTATION

PAVEMENT MARKINGS ARROWS

NO SCALE

RSP A24A DATED APRIL 20, 2012 SUPERSEDES STANDARD PLAN A24A DATED MAY 20, 2011 - PAGE 13 OF THE STANDARD PLANS BOOK DATED 2010.

REVISED STANDARD PLAN RSP A24A

2010 REVISED STANDARD PLAN RSP A24A

3-14-12

Dist	COUNTY	ROUTE	POST MILES TOTAL PROJECT	SHEET No.	TOTAL SHEETS
10	Mer,Sta, SJ	5	32.2/32.5, 0.0/28.1, 0.0/R12.4	69	112

REGISTERED CIVIL ENGINEER

July 20, 2012
PLANS APPROVAL DATE

REGISTERED PROFESSIONAL ENGINEER
Roberta L. McLaughlin
No. C40375
Exp. 3-31-13
CIVIL
STATE OF CALIFORNIA

THE STATE OF CALIFORNIA OR ITS OFFICERS OR AGENTS SHALL NOT BE RESPONSIBLE FOR THE ACCURACY OR COMPLETENESS OF SCANNED COPIES OF THIS PLAN SHEET.

TO ACCOMPANY PLANS DATED 02-18-14

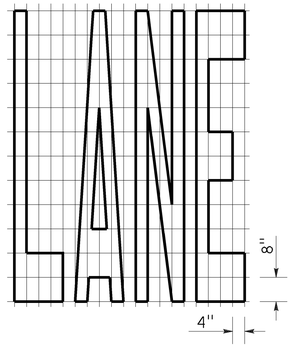

A=24 ft^2

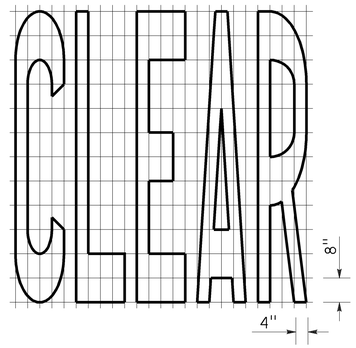

A=27 ft^2

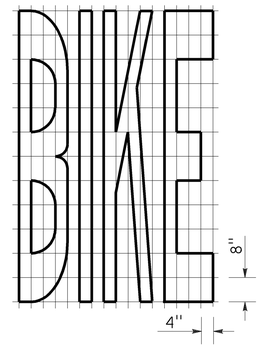

A=21 ft^2

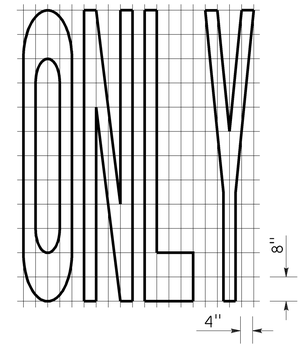

A=22 ft^2

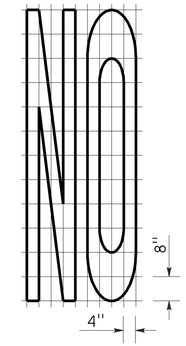

A=14 ft^2

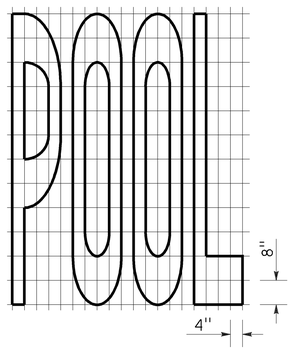

A=23 ft^2

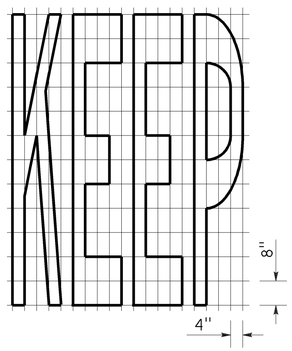

A=24 ft^2

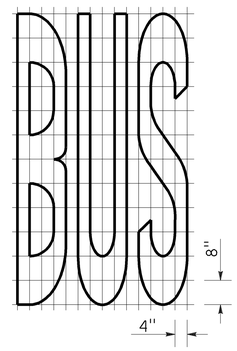

A=20 ft^2

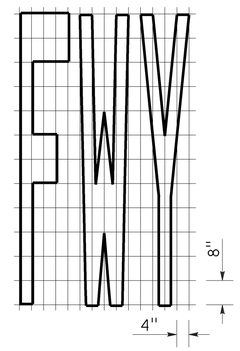

A=16 ft^2

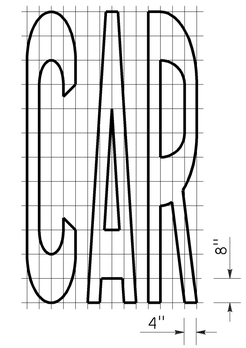

A=17 ft^2

WORD MARKINGS			
ITEM	ft^2	ITEM	ft^2
LANE	24	NO	14
POOL	23	BIKE	21
CAR	17	BUS	20
CLEAR	27	ONLY	22
KEEP	24	FWY	16

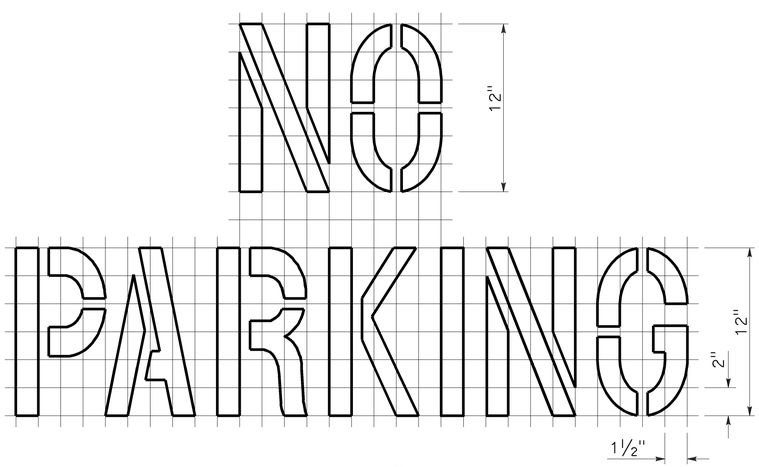

A=2 ft^2
See Notes 6 and 7

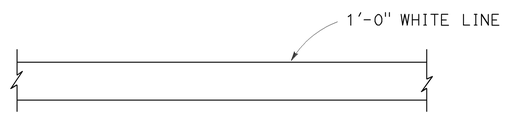

LIMIT LINE (STOP LINE)

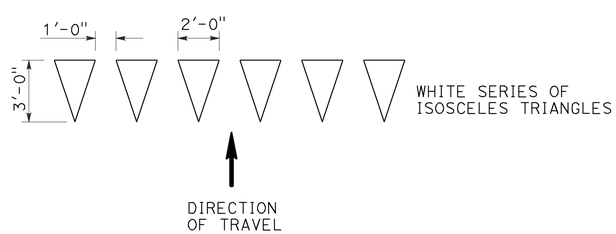

YIELD LINE

NOTES:

1. If a message consists of more than one word, it should read "UP", i.e., the first word should be nearest the driver.
2. The space between words should be at least four times the height of the characters for low speed roads, but not more than ten times the height of the characters. The space may be reduced appropriately where there is limited space because of local conditions.
3. Minor variations in dimensions may be accepted by the Engineer.
4. Portions of a letter, number or symbol may be separated by connecting segments not to exceed 2" in width.
5. The words "NO PARKING" pavement marking is to be used for parking facilities. For typical locations of markings, see Standard Plans A90A and A90B.
6. The words "NO PARKING", shall be painted in white letters no less than 1'-0" high on a contrasting background and located so that it is visible to traffic enforcement officials.

STATE OF CALIFORNIA
DEPARTMENT OF TRANSPORTATION

PAVEMENT MARKINGS WORDS, LIMIT AND YIELD LINES

NO SCALE

RSP A24E DATED JULY 20, 2012 SUPERSEDES STANDARD PLAN A24E DATED MAY 20, 2011 - PAGE 17 OF THE STANDARD PLANS BOOK DATED 2010.

REVISED STANDARD PLAN RSP A24E

2010 REVISED STANDARD PLAN RSP A24E

6-12-12

Dist	COUNTY	ROUTE	POST MILES TOTAL PROJECT	SHEET No.	TOTAL SHEETS
10	Mer,Sta, SJ	5	32.2/32.5, 0.0/28.1, 0.0/R12.4	70	112

Randell D. Hiatt
REGISTERED CIVIL ENGINEER

July 19, 2013
PLANS APPROVAL DATE

REGISTERED PROFESSIONAL ENGINEER Randell D. Hiatt No. C50200 Exp. 6-30-15 CIVIL STATE OF CALIFORNIA

THE STATE OF CALIFORNIA OR ITS OFFICERS OR AGENTS SHALL NOT BE RESPONSIBLE FOR THE ACCURACY OR COMPLETENESS OF SCANNED COPIES OF THIS PLAN SHEET.

TO ACCOMPANY PLANS DATED 02-18-14

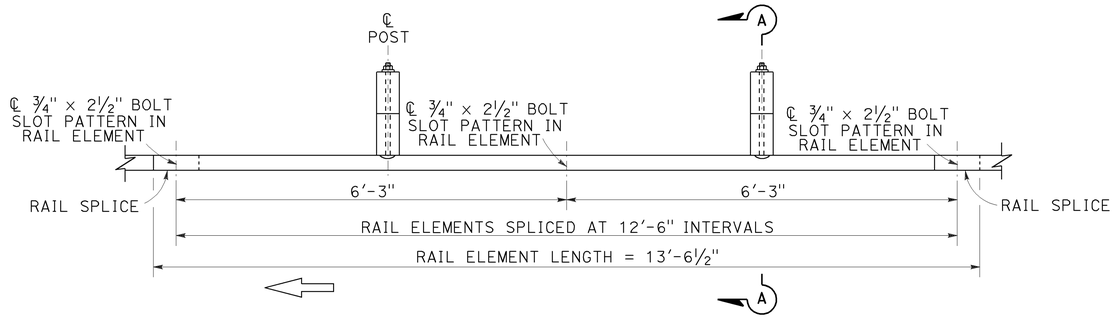

PLAN

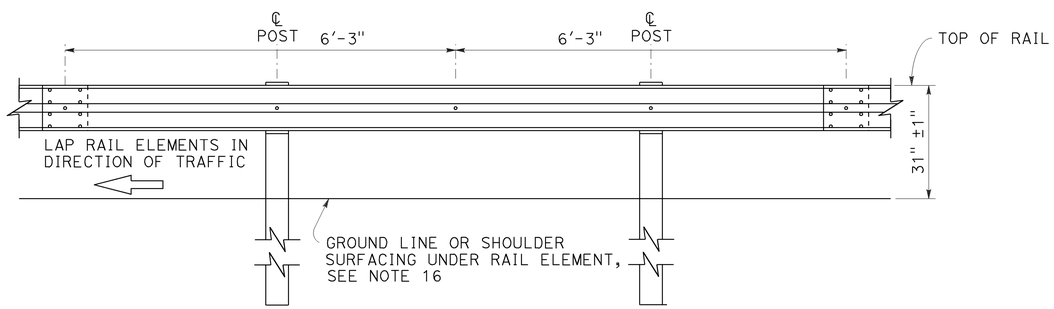

ELEVATION

MIDWEST GUARDRAIL SYSTEM WITH WOOD POST AND BLOCKS

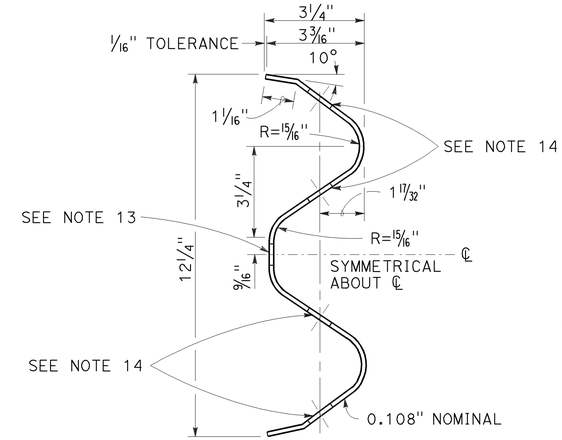

SECTION THRU RAIL ELEMENT

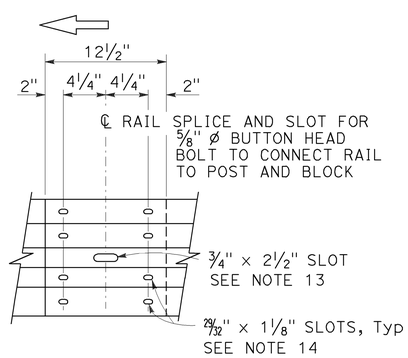

ELEVATION

RAIL ELEMENT SPLICE DETAIL

a) Connect the over lapped end of the rail elements with ⅝" ø × 1⅜" button head oval shoulder splice bolts inserted into the 29⁄32" × 1⅛" slots and bolted together with ⅝" ø recessed hex nuts. Recess of hex nut points toward rail element. A total of 8 bolts and nuts are to be used at each rail splice connection.

b) The ends of the rail elements are to be overlapped in the direction of traffic (see details).

c) Where end cap is to be attached to the end of a rail element, a total of 4 of the above described splice bolts and nuts are to be used.

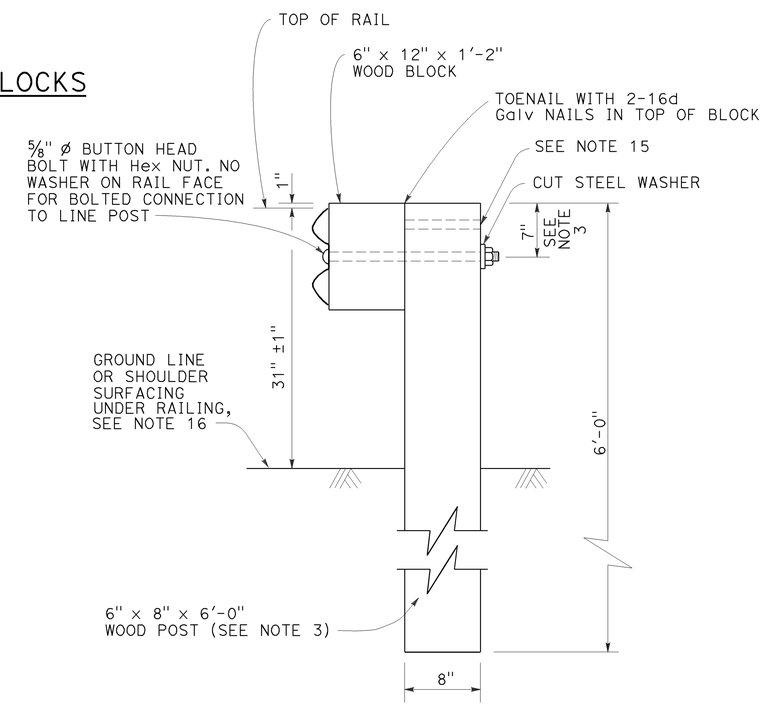

SECTION A-A

TYPICAL WOOD LINE POST INSTALLATION

See Note 4

NOTES:

1. For details of steel post installations, see Revised Standard Plan RSP A77L2.
2. For details of standard hardware used to construct MGS, see Revised Standard Plan RSP A77M1.
3. For details of wood posts and wood blocks used to construct MGS, see Revised Standard Plan RSP A77N1.
4. For additional installation details, see Revised Standard Plan RSP A77N3.
5. MGS post spacing to be 6'-3" center to center, except as otherwise noted.
6. For MGS typical layouts, see the A77P, A77Q and A77R Series of Standard Plans.
7. If railing is connected to terminal system end treatment, use 31" height terminal system end treatment.
8. For MGS end anchor details, see Revised Standard Plans RSP A77S1 and RSP A77T2.
9. For details of MGS transition to bridge railing, see Revised Standard Plan RSP A77U4.
10. For additional details of MSG connection to bridge railing, see Revised Standard Plans RSP A77U1, RSP A77U2 and RSP A77V1.
11. For MGS connection details to abutments and walls, see Revised Standard Plan RSP A77U3.
12. For typical MGS delineation and dike positioning details, see Revised Standard Plan RSP A77N4.
13. Slotted hole for bolted connection of rail element to block and post. See "Section Thru Rail Element".
14. Slotted holes for splice bolts to overlap ends of rail element. See "Section Thru Rail Element".
15. Additional hole in uppermost portion of line post is for potential future adjustments of railing height. See Revised Standard Plan RSP A77N1.
16. Install posts in soil.

STATE OF CALIFORNIA
DEPARTMENT OF TRANSPORTATION

MIDWEST GUARDRAIL SYSTEM STANDARD RAILING SECTION (WOOD POST WITH WOOD BLOCK)

NO SCALE

RSP A77L1 DATED JULY 19, 2013 SUPPLEMENTS STANDARD PLANS BOOK DATED 2010.

REVISED STANDARD PLAN RSP A77L1

2010 REVISED STANDARD PLAN RSP A77L1

7-3-13

Dist	COUNTY	ROUTE	POST MILES TOTAL PROJECT	SHEET No.	TOTAL SHEETS
10	Mer,Sta, SJ	5	32.2/32.5, 0.0/28.1, 0.0/R12.4	71	112

Randell D. Hiatt
REGISTERED CIVIL ENGINEER

July 19, 2013
PLANS APPROVAL DATE

REGISTERED PROFESSIONAL ENGINEER
Randell D. Hiatt
No. C50200
Exp. 6-30-15
CIVIL
STATE OF CALIFORNIA

THE STATE OF CALIFORNIA OR ITS OFFICERS OR AGENTS SHALL NOT BE RESPONSIBLE FOR THE ACCURACY OR COMPLETENESS OF SCANNED COPIES OF THIS PLAN SHEET.

TO ACCOMPANY PLANS DATED 02-18-14

2010 REVISED STANDARD PLAN RSP A77L3

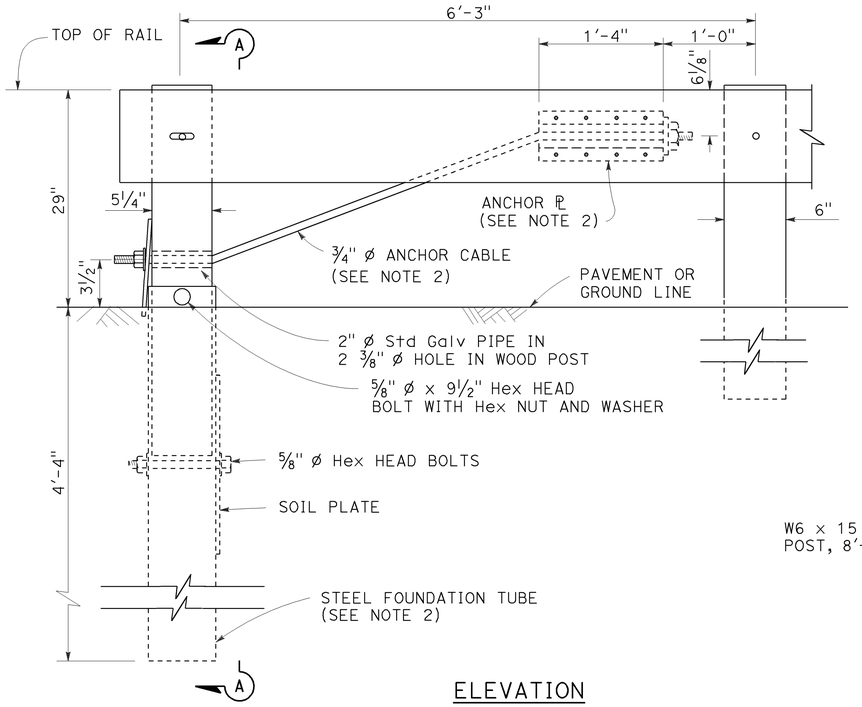

ELEVATION
END ANCHOR
ASSEMBLY (TYPE SFT)

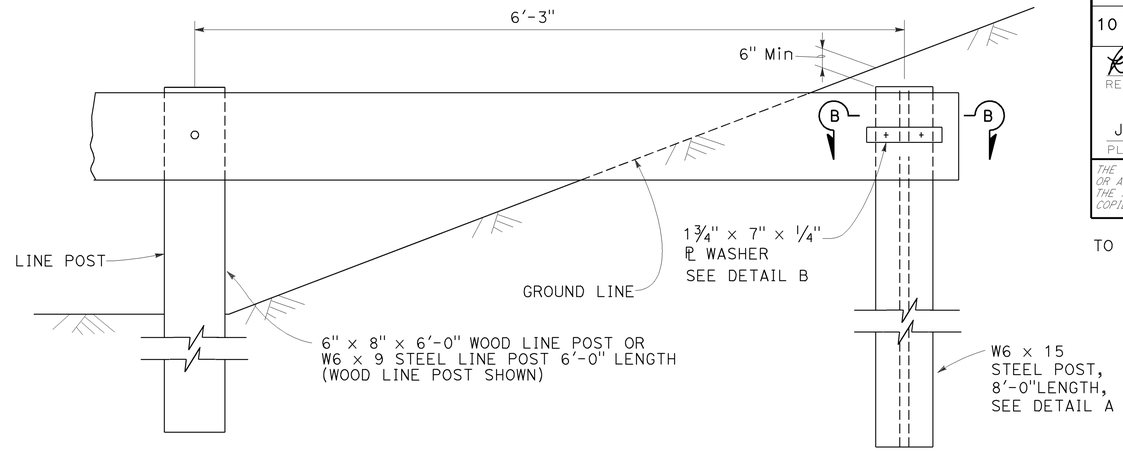

BURIED POST END ANCHOR

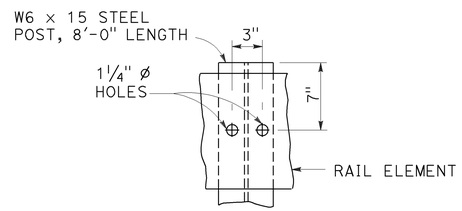

DETAIL A

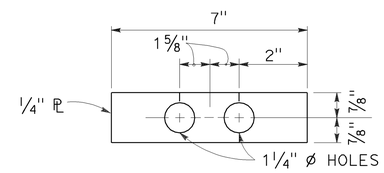

DETAIL B

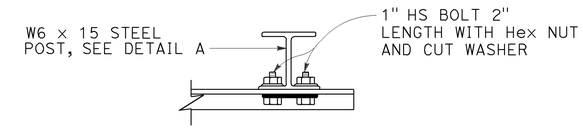

SECTION B-B

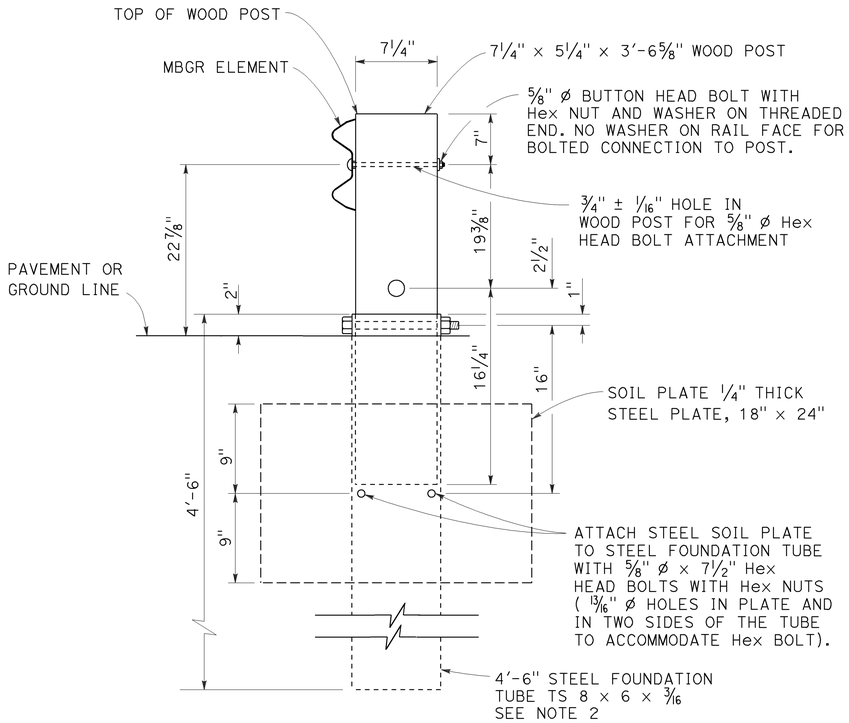

SECTION A-A

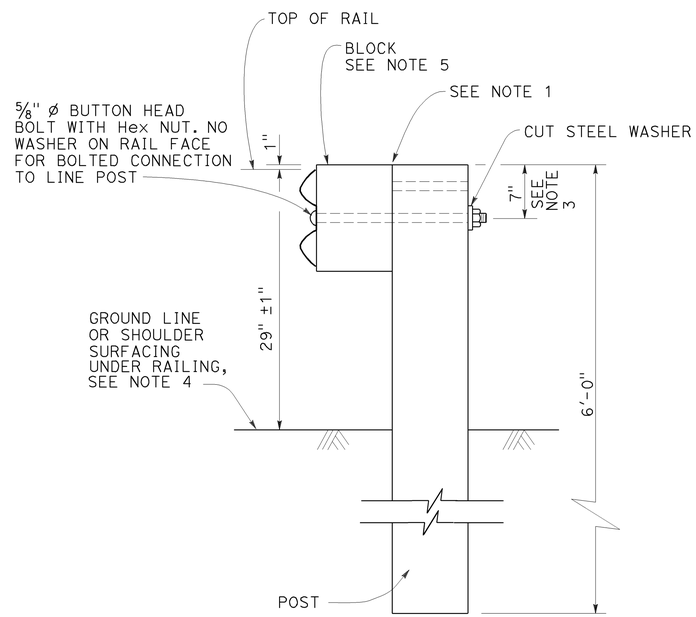

TYPICAL LINE
POST INSTALLATION

NOTES:

1. For wood post and wood block, toenail with 2-16d Galv nails in top of block. For steel post and notched wood or plastic block, notched face of block faces steel post.
2. A 6'-0" Length steel foundation tube, TS 8 x 6 x 3/16, without a soil plate, may be furnished and installed in place of the 4'-6" length steel foundation tube and soil plate shown, Minimum embadment of the 6'-0" length tube shall be 5'-9". A 5/8" Ø Hex head bolt and nut shall be installed in the hole in the 6'-0" length tube to keep the wood post from dropping into the tube.
3. To connect railing to 27" terminal system end treatment, transition the top of railing height at a ratio of 120:1 to terminal system end treatment height plus one 12'-6" standard railing section at the transitioned height for a horizontal connection to the end treatment.
4. Install posts in soil.
5. See Revised Standard Plans RSP A77N1 and RSP A77N2 for details.
6. Holes excavation in the slope to construct the buried post end anchor shall be backfilled with selected earth, placed in layers approximately 1'-0" thick. Each layer shall be moistened and thoroughly compacted.

STATE OF CALIFORNIA
DEPARTMENT OF TRANSPORTATION

METAL BEAM GUARD RAILING RECONSTRUCT INSTALLATION

NO SCALE

RSP A77L3 DATED JULY 19, 2013 SUPPLEMENTS THE STANDARD PLANS BOOK DATED 2010.

REVISED STANDARD PLAN RSP A77L3

7-16-13

Dist	COUNTY	ROUTE	POST MILES TOTAL PROJECT	SHEET No.	TOTAL SHEETS
10	Mer,Sta, SJ	5	32.2/32.5, 0.0/28.1, 0.0/R12.4	72	112

Randell D. Hiatt
REGISTERED CIVIL ENGINEER

July 19, 2013
PLANS APPROVAL DATE

REGISTERED PROFESSIONAL ENGINEER
Randell D. Hiatt
No. C50200
Exp. 6-30-15
CIVIL
STATE OF CALIFORNIA

THE STATE OF CALIFORNIA OR ITS OFFICERS OR AGENTS SHALL NOT BE RESPONSIBLE FOR THE ACCURACY OR COMPLETENESS OF SCANNED COPIES OF THIS PLAN SHEET.

TO ACCOMPANY PLANS DATED 02-18-14

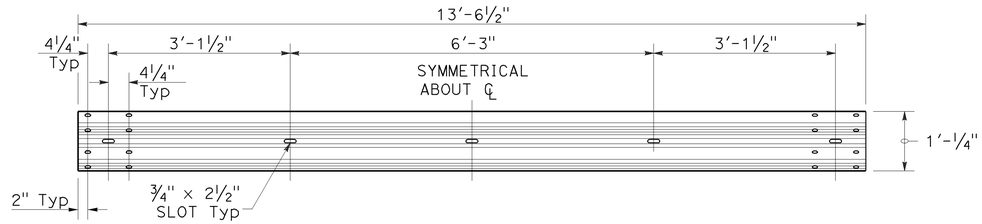

TYPICAL RAIL ELEMENT

NOTE:

1. Slotted holes for splice bolts to overlap ends of rail element.

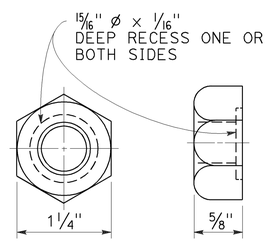

⅝" ø RECESS NUT

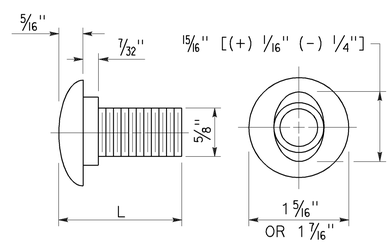

⅝" ø BUTTON HEAD BOLT

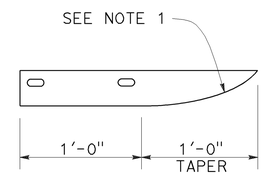

PLAN

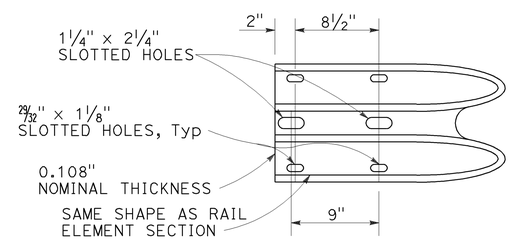

ELEVATION

END CAP
(TYPE A)

BUTTON HEAD BOLT

L	THREAD LENGTH
1⅜"	FULL THREAD LENGTH
2"	FULL THREAD LENGTH
10"	4" Min THREAD LENGTH
18"	4" Min THREAD LENGTH
20"	4" Min THREAD LENGTH
22"	4" Min THREAD LENGTH
26"	4" Min THREAD LENGTH
36"	4" Min THREAD LENGTH
** 2¾"	2" Min THREAD LENGTH
** 19"	4" Min THREAD LENGTH

** For nested rail applications.

STATE OF CALIFORNIA
DEPARTMENT OF TRANSPORTATION

MIDWEST GUARDRAIL SYSTEM STANDARD HARDWARE

NO SCALE

RSP A77M1 DATED JULY 19, 2013 SUPPLEMENTS THE STANDARD PLANS BOOK DATED 2010.

REVISED STANDARD PLAN RSP A77M1

2010 REVISED STANDARD PLAN RSP A77M1

7-3-13

Dist	COUNTY	ROUTE	POST MILES TOTAL PROJECT	SHEET No.	TOTAL SHEETS
10	Mer,Sta, SJ	5	32.2/32.5, 0.0/28.1, 0.0/R12.4	73	112

Randell D. Hiatt
REGISTERED CIVIL ENGINEER

July 19, 2013
PLANS APPROVAL DATE

REGISTERED PROFESSIONAL ENGINEER
Randell D. Hiatt
No. C50200
Exp. 6-30-15
CIVIL
STATE OF CALIFORNIA

THE STATE OF CALIFORNIA OR ITS OFFICERS OR AGENTS SHALL NOT BE RESPONSIBLE FOR THE ACCURACY OR COMPLETENESS OF SCANNED COPIES OF THIS PLAN SHEET.

TO ACCOMPANY PLANS DATED 02-18-14

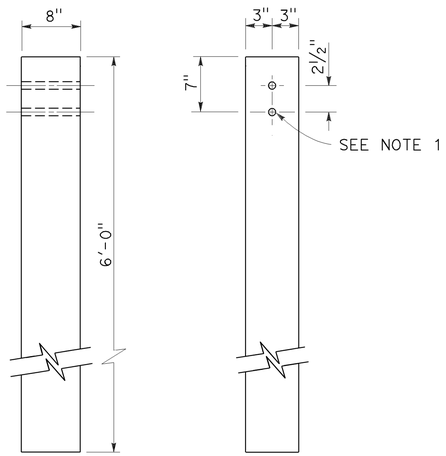

SIDE FRONT

6" x 8" WOOD POST
See Note 3

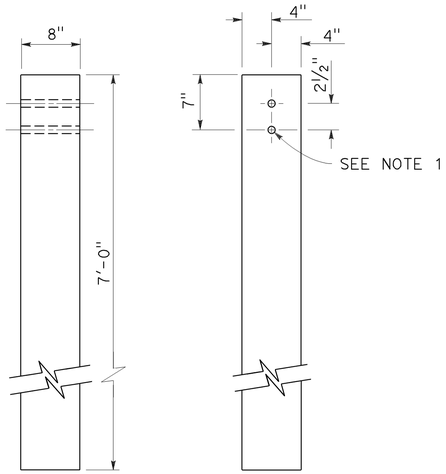

SIDE FRONT

8" x 8" WOOD POST
See Note 4

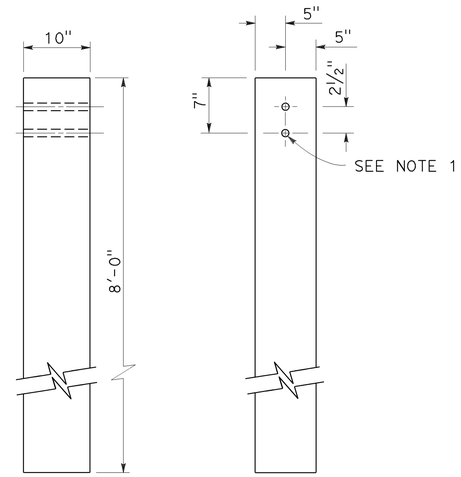

SIDE FRONT

10" x 10" WOOD POST
See Note 5

NOTES:

1. All holes in wood posts and blocks shall be 3/4" Dia ± 1/16".
2. Dimensions shown for wood post are nominal.
3. This post and block combination used for standard line post sections of MGS.
4. This post and 8" x 12" block combination used for line post sections of MGS on narrow roadways.
5. This post and 8" x 12" block combination is typically used where strengthened line post sections of MGS are warranted to shield fixed objects.
6. See Revised Standard Plan RSP A77L3 for use of 6" x 8" and 8" x 8" wood blocks.

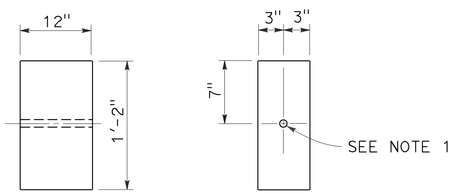

SIDE FRONT

6" x 12" WOOD BLOCK
See Note 3

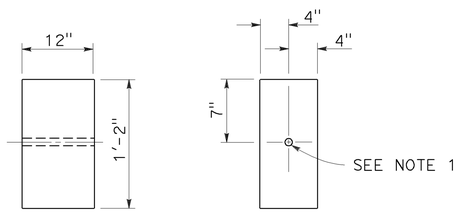

SIDE FRONT

8" x 12" WOOD BLOCK

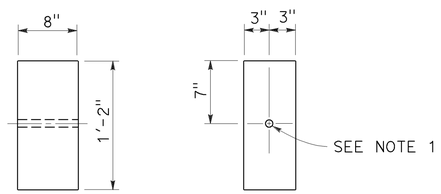

SIDE FRONT

6" x 8" WOOD BLOCK
Only for use with metal beam guard rail see Note 6

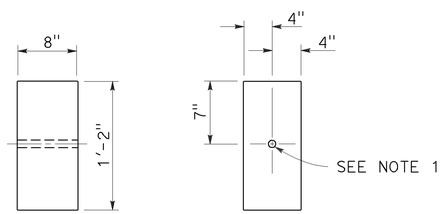

SIDE FRONT

8" x 8" WOOD BLOCK
Only for use with metal beam guard rail see Note 6

STATE OF CALIFORNIA
DEPARTMENT OF TRANSPORTATION

MIDWEST GUARDRAIL SYSTEM WOOD POST AND WOOD BLOCK DETAILS

NO SCALE

RSP A77N1 DATED JULY 19, 2013 SUPPLEMENTS THE STANDARD PLANS BOOK DATED 2010.

REVISED STANDARD PLAN RSP A77N1

2010 REVISED STANDARD PLAN RSP A77N1

7-3-13

Dist	COUNTY	ROUTE	POST MILES TOTAL PROJECT	SHEET No.	TOTAL SHEETS
10	Mer,Sta, SJ	5	32.2/32.5, 0.0/28.1, 0.0/R12.4	74	112

Randell D. Hiatt
REGISTERED CIVIL ENGINEER

November 15, 2013
PLANS APPROVAL DATE

REGISTERED PROFESSIONAL ENGINEER
Randell D. Hiatt
No. C50200
Exp. 6-30-15
CIVIL
STATE OF CALIFORNIA

THE STATE OF CALIFORNIA OR ITS OFFICERS OR AGENTS SHALL NOT BE RESPONSIBLE FOR THE ACCURACY OR COMPLETENESS OF SCANNED COPIES OF THIS PLAN SHEET.

TO ACCOMPANY PLANS DATED 02-18-14

2010 REVISED STANDARD PLAN RSP A77N3

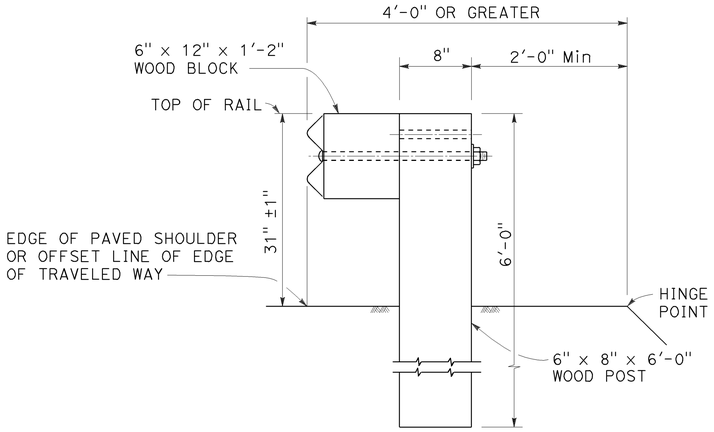

DETAIL A

TYPICAL ROADWAY INSTALLATION

See Note 1

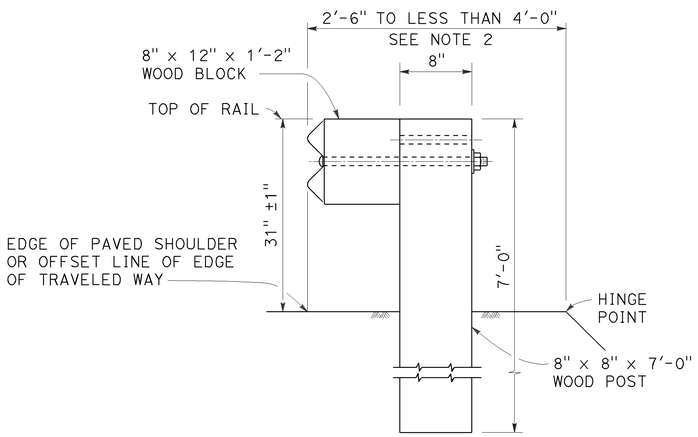

DETAIL B

NARROW ROADWAY INSTALLATION

See Note 1

POST EMBEDMENT

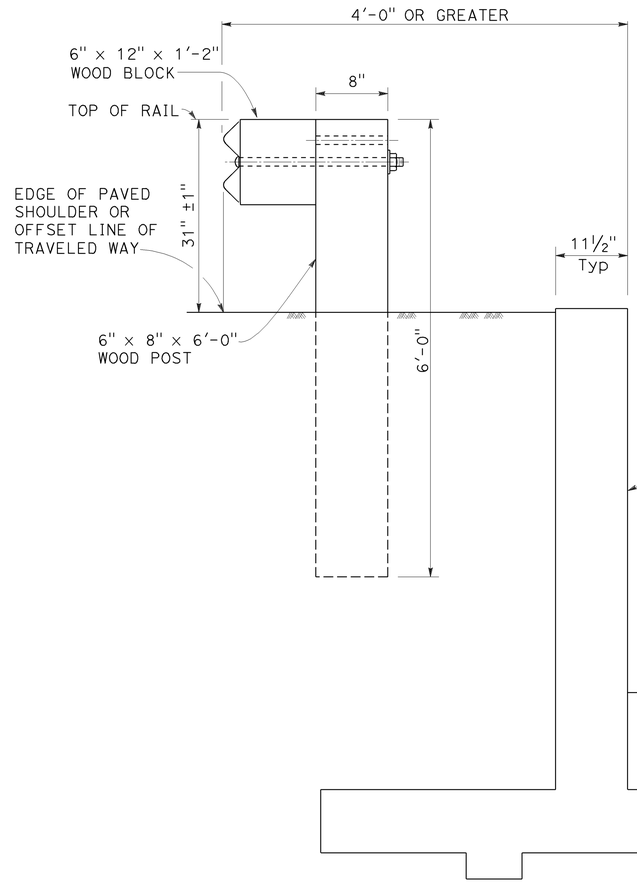

DETAIL C

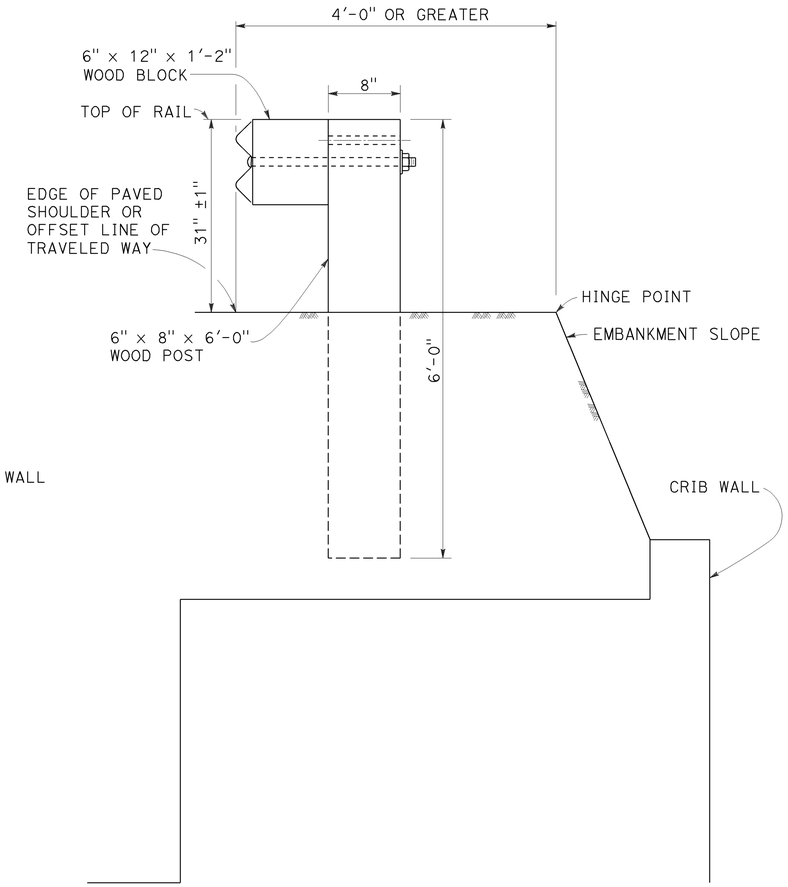

DETAIL D

INSTALLATION AT EARTH RETAINING WALLS

NOTES:

1. These installation details also applicable to steel line post installations. For Detail A, C, and D, where steel line post installations are constructed, W6 x 8.5 or W6 x 9 steel post, 6'-0" in length, with 6" x 12" x 1'-2" notched wood blocks or notched recycled plastic blocks are to be used in place of the size of wood post and wood block shown. For Detail B, where steel line post installations are constructed, W6 x 15 steel post, 8'-0" in length, with 8" x 12" x 1'-2" notched wood blocks or notched recycled plastic blocks are to be used in place of the size of wood post and wood block shown. For additional installation details, see Revised Standard Plan RSP A77L1 and RSP A77L2.
2. Where the distance between the face of the rail and the hinge point is less than 2'-6", see the Project Plans for special details.
3. For dike positioning with MGS installations, see Revised Standard Plan RSP A77N4.

STATE OF CALIFORNIA
DEPARTMENT OF TRANSPORTATION

MIDWEST GUARDRAIL SYSTEM TYPICAL LINE POST EMBEDMENT AND HINGE POINT OFFSET DETAILS

NO SCALE

RSP A77N3 DATED NOVEMBER 15, 2013 SUPERSEDES RSP A77N3
DATED JULY 19, 2013 THAT SUPPLEMENTS THE STANDARD PLANS BOOK DATED 2010.

REVISED STANDARD PLAN RSP A77N3

10-29-13

Dist	COUNTY	ROUTE	POST MILES TOTAL PROJECT	SHEET No.	TOTAL SHEETS
10	Mer,Sta, SJ	5	32.2/32.5, 0.0/28.1, 0.0/R12.4	75	112

Randell D. Hiatt
REGISTERED CIVIL ENGINEER

July 19, 2013
PLANS APPROVAL DATE

REGISTERED PROFESSIONAL ENGINEER
Randell D. Hiatt
No. C50200
Exp. 6-30-15
CIVIL
STATE OF CALIFORNIA

THE STATE OF CALIFORNIA OR ITS OFFICERS OR AGENTS SHALL NOT BE RESPONSIBLE FOR THE ACCURACY OR COMPLETENESS OF SCANNED COPIES OF THIS PLAN SHEET.

TO ACCOMPANY PLANS DATED 02-18-14

NOTES:

1. When necessary to place dike more than 7" in front of face of MGS, only Type C dike may be used. For dike details, see Revised Standard Plan RSP A87B.
2. For standard railing post embedment, see Revised Standard Plan RSP A77N3.
3. MGS delineation to be used where shown on the Project Plans.
4. When dike or curb is placed under MGS, the maximum height of the dike or curb shall be 6". Mountable dike should not be used. For dike and curb details, see Revised Standard Plans RSP A87A and RSP A87B.
5. For details of typical distance between the face of rail and hinge point, see Revised Standard Plan RSP A77N3.
6. For steel line posts, use 1/4 - 20 self-tapping screws in 0.22" diameter holes or 1/4" bolts in 9/32" diameter holes.

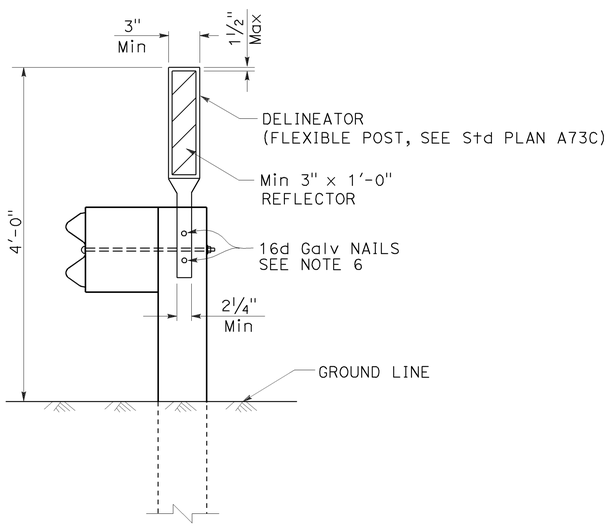

MGS DELINEATION

See Note 3

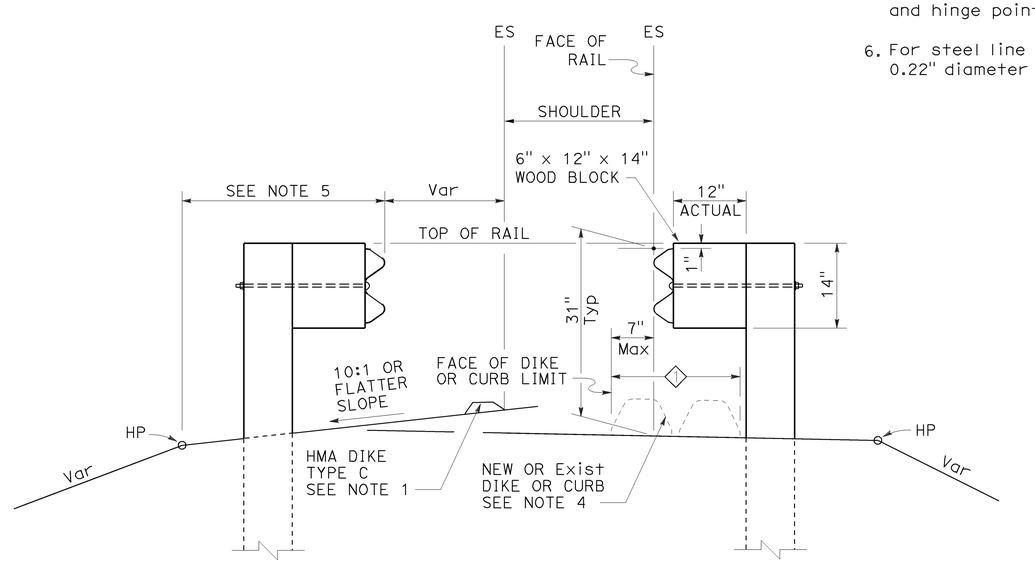

DIKE POSITIONING

See Note 1

1 PERMISSIBLE DIKE OR CURB PLACEMENT AREA

STATE OF CALIFORNIA
DEPARTMENT OF TRANSPORTATION

MIDWEST GUARDRAIL SYSTEM TYPICAL RAILING DELINEATION AND DIKE POSITIONING DETAILS

NO SCALE

RSP A77N4 DATED JULY 19, 2013 SUPPLEMENTS THE STANDARD PLANS BOOK DATED 2010.

REVISED STANDARD PLAN RSP A77N4

2010 REVISED STANDARD PLAN RSP A77N4

7-10-13

Dist	COUNTY	ROUTE	POST MILES TOTAL PROJECT	SHEET No.	TOTAL SHEETS
10	Mer,Sta, SJ	5	32.2/32.5, 0.0/28.1, 0.0/R12.4	76	112

Randell D. Hiatt
REGISTERED CIVIL ENGINEER

November 15, 2013
PLANS APPROVAL DATE

REGISTERED PROFESSIONAL ENGINEER
Randell D. Hiatt
No. C50200
Exp. 6-30-15
CIVIL
STATE OF CALIFORNIA

THE STATE OF CALIFORNIA OR ITS OFFICERS OR AGENTS SHALL NOT BE RESPONSIBLE FOR THE ACCURACY OR COMPLETENESS OF SCANNED COPIES OF THIS PLAN SHEET.

TO ACCOMPANY PLANS DATED 02-18-14

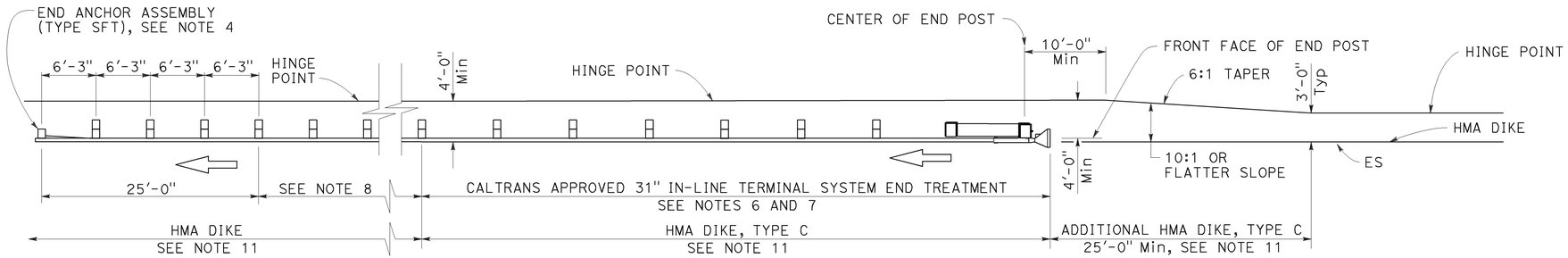

TYPE 11A LAYOUT

(Embankment MGS installation with 31" in-line end treatment at traffic approach end of railing) see Note 5

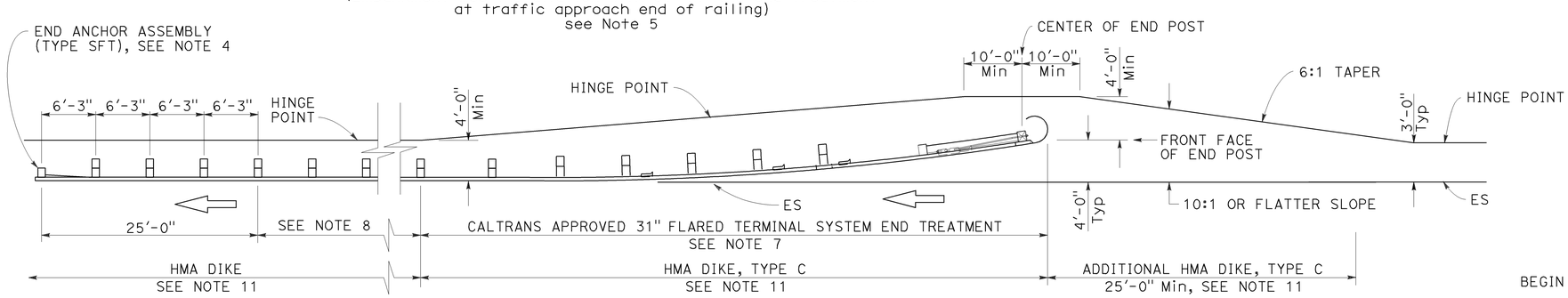

TYPE 11B LAYOUT

(Embankment MGS installation with 31" flared end treatment at traffic approach end of railing) see Note 5

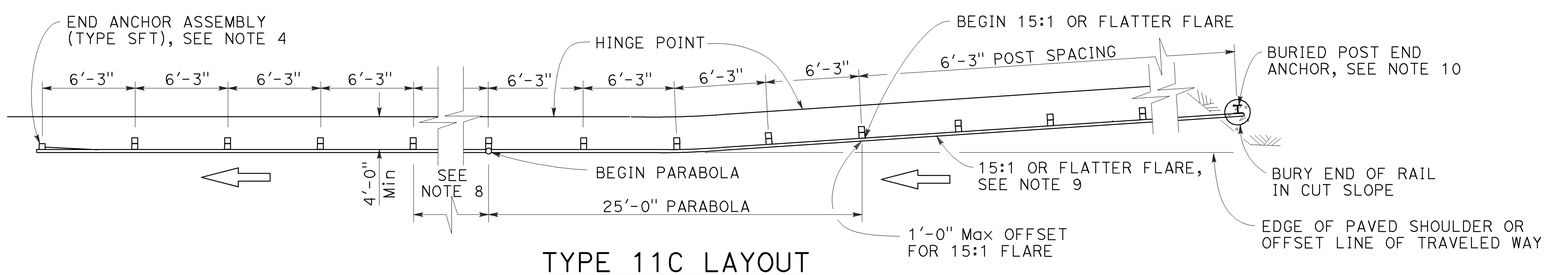

TYPE 11C LAYOUT

(Embankment MGS installation with buried end anchor treatment at traffic approach end of railing) see Notes 5 and 11

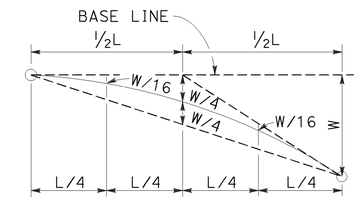

TYPICAL PARABOLIC LAYOUT

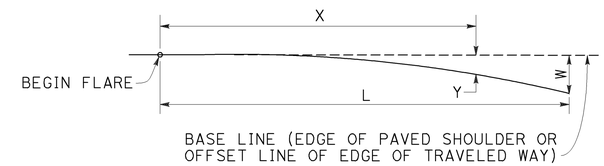

$$Y = \frac{WX^2}{L^2}$$

Y = OFFSET FROM BASE LINE
W = MAXIMUM OFFSET
X = DISTANCE ALONG BASE LINE
L = LENGTH OF FLARE

PARABOLIC FLARE OFFSETS

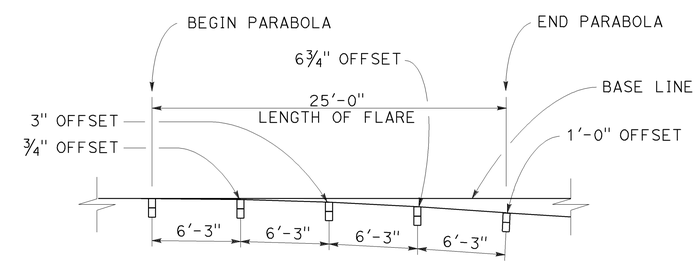

TYPICAL FLARE OFFSETS FOR 1 FOOT Max END OFFSET

NOTES:

1. Line post, blocks and hardware to be used are shown on Revised Standard Plans RSP A77L1, RSP A77L2, RSP A77M1, RSP A77N1 and RSP A77N2.
2. MGS post spacing to be 6'-3" center to center, except as otherwise noted.
3. Except as noted, line posts are 6" x 8" x 6'-0" wood with 6" x 12" x 1'-2" wood blocks. W6 x 8.5 or W6 x 9 steel posts, 6'-0" in length, with 6" x 12" x 1'-2" notched wood blocks or recycled plastic blocks may be used for 6" x 8" x 6'-0" wood post with 6" x 12" x 1'-2" wood blocks where applicable and when specified.
4. For End Anchor Assembly (Type SFT) details, see Revised Standard Plan RSP A77S1.
5. Layout Types 11A, 11B or 11C are typically used where MGS is recommended to shield embankment slopes and a crashworthy end treatment is required for only one direction of traffic.
6. 31" in-line terminal system end treatments are used where site conditions will not accommodate a flared end treatment.
7. The type of 31" terminal system end treatment to be used will be shown on the Project Plans.
8. Dependent on site conditions (embankment height and side slope), construction of additional MGS (length equal to multiples of 12'-6" with 6'-3" post spacing) may be advisable.
9. The 15:1 or flatter flare used with buried end anchors is based on the edge of the paved shoulder or offset line of edge of the traveled way. The length of MGS within the 15:1 or flatter flare is based on site conditions and should be a length equal to multiples of 12'-6".
10. For details of the buried post end anchor used with Type 11C Layout, see Revised Standard Plan RSP A77T2.
11. Where placement of dike is required with MGS installations, see Revised Standard Plan RSP A77N4 for dike positioning details.

STATE OF CALIFORNIA
DEPARTMENT OF TRANSPORTATION

MIDWEST GUARDRAIL SYSTEM TYPICAL LAYOUTS FOR EMBANKMENTS

NO SCALE

RSP A77P1 DATED NOVEMBER 15, 2013 SUPERSEDES RSP A77P1 DATED JULY 19, 2013 THAT SUPPLEMENTS THE STANDARD PLANS BOOK DATED 2010.

REVISED STANDARD PLAN RSP A77P1

2010 REVISED STANDARD PLAN RSP A77P1

10-4-13

Dist	COUNTY	ROUTE	POST MILES TOTAL PROJECT	SHEET No.	TOTAL SHEETS
10	Mer,Sta, SJ	5	32.2/32.5, 0.0/28.1, 0.0/R12.4	77	112

Randell D. Hiatt
REGISTERED CIVIL ENGINEER

July 19, 2013
PLANS APPROVAL DATE

REGISTERED PROFESSIONAL ENGINEER
Randell D. Hiatt
No. C50200
Exp. 6-30-15
CIVIL
STATE OF CALIFORNIA

THE STATE OF CALIFORNIA OR ITS OFFICERS OR AGENTS SHALL NOT BE RESPONSIBLE FOR THE ACCURACY OR COMPLETENESS OF SCANNED COPIES OF THIS PLAN SHEET.

TO ACCOMPANY PLANS DATED 02-18-14

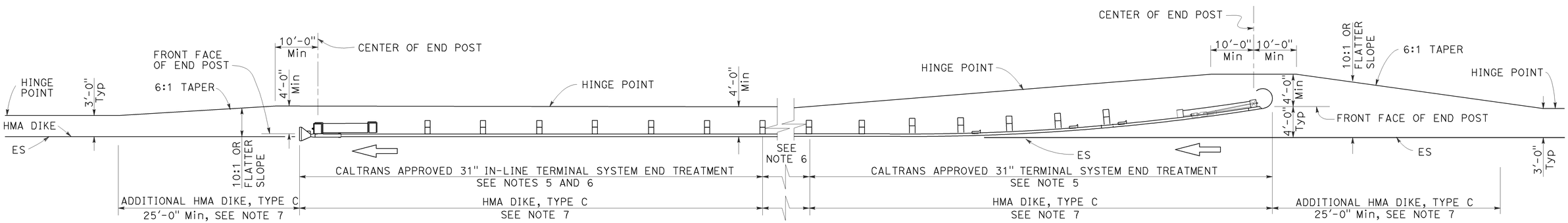

TYPE 11H LAYOUT

(Embankment MGS installation with 31" flared end treatment
and 31" in-line treatment at the ends of railing)
See Notes 4 and 7

NOTES:

1. Line post, blocks and hardware to be used are shown on Revised Standard Plans RSP A77L1, RSP A77L2, RSP A77M1, RSP A77N1 and RSP A77N2.
2. MGS post spacing to be 6'-3" center to center, except as otherwise noted.
3. Except as noted, line posts are 6" x 8" x 6'-0" wood with 6" x 12" x 1'-2" wood blocks. W6 x 8.5 or W6 x 9 steel posts, 6'-0" in length, with 6" x 12" x 1'-2" notched wood blocks or plastic blocks may be used for 6" x 8" x 6'-0" wood post with 6" x 12" x 1'-2" wood blocks where applicable and when specified.
4. Layout Types 11D through 11L, shown on the A77P Series of Standard Plans, are typically used where MGS is recommended to shield embankment slopes and a crashworthy 31" end treatment is required for both directions of traffic.
5. The type of 31" terminal system end treatment to be used will be shown on the Project Plans.
6. Dependent on site conditions (embankment height and side slope), construction of additional MGS (length equal to multiples of 12'-6" with 6'-3" post spacing) may be advisable.
7. Where placement of dike is required with MGS installations, see Revised Standard Plan RSP A77N4 for dike positioning details.

STATE OF CALIFORNIA
DEPARTMENT OF TRANSPORTATION

MIDWEST GUARDRAIL SYSTEM TYPICAL LAYOUTS FOR EMBANKMENTS

NO SCALE

RSP A77P4 DATED JULY 19, 2013 SUPPLEMENTS THE STANDARD PLANS BOOK DATED 2010.

REVISED STANDARD PLAN RSP A77P4

2010 REVISED STANDARD PLAN RSP A77P4

6-19-13

Dist	COUNTY	ROUTE	POST MILES TOTAL PROJECT	SHEET No.	TOTAL SHEETS
10	Mer,Sta, SJ	5	32.2/32.5, 0.0/28.1, 0.0/R12.4	78	112

Randell D. Hiatt
REGISTERED CIVIL ENGINEER

July 19, 2013
PLANS APPROVAL DATE

REGISTERED PROFESSIONAL ENGINEER
Randell D. Hiatt
No. C50200
Exp. 6-30-15
CIVIL
STATE OF CALIFORNIA

THE STATE OF CALIFORNIA OR ITS OFFICERS OR AGENTS SHALL NOT BE RESPONSIBLE FOR THE ACCURACY OR COMPLETENESS OF SCANNED COPIES OF THIS PLAN SHEET.

TO ACCOMPANY PLANS DATED 02-18-14

2010 REVISED STANDARD PLAN RSP A77Q1

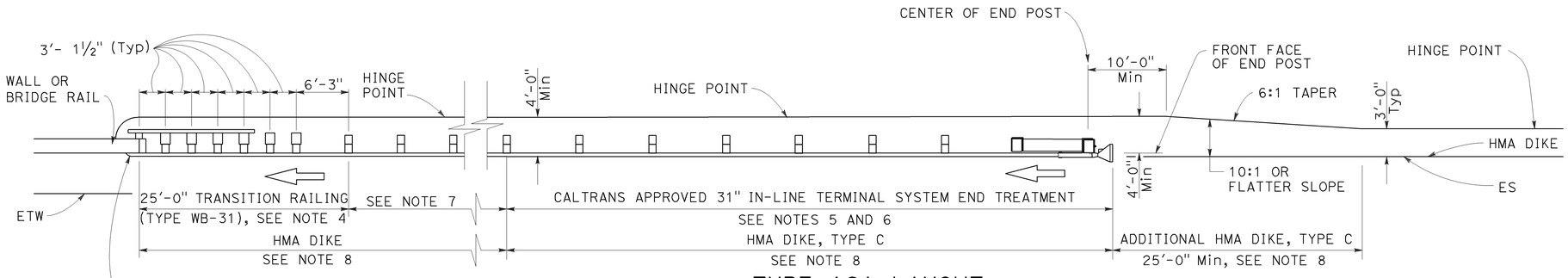

TYPE 12A LAYOUT

(MGS installation at structure approach with
31" In-line end treatment at traffic approach end of railing)
See Notes 9

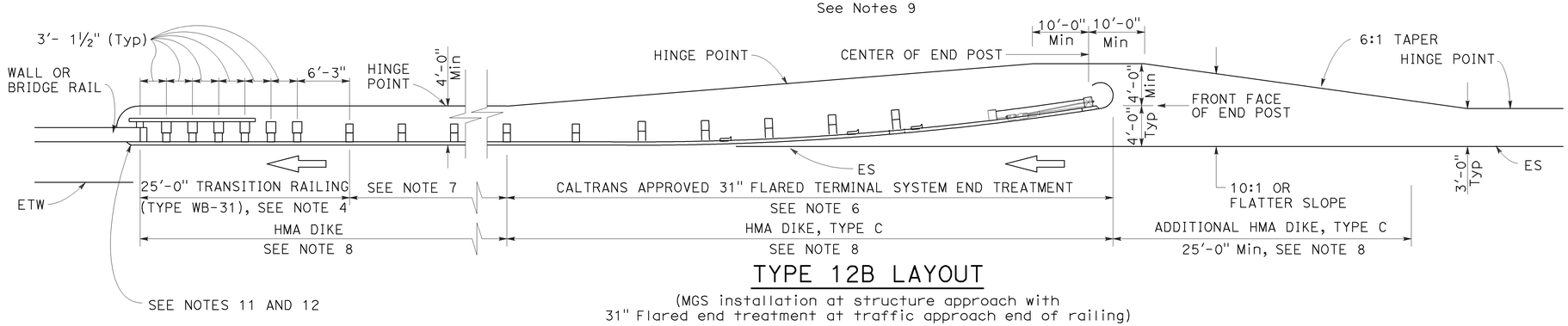

TYPE 12B LAYOUT

(MGS installation at structure approach with
31" Flared end treatment at traffic approach end of railing)
See Notes 9

NOTES:

1. Line post, blocks and hardware to be used are shown on Revised Standard Plans RSP A77L1, RSP A77L2, RSP A77M1, RSP A77N1 and RSP A77N2.
2. MGS post spacing to be 6'-3" center to center, except as otherwise noted.
3. Except as noted, line posts are 6" x 8" x 6'-0" wood with 6" x 12" x 1'-2" wood blocks. W6 x 8.5 or W6 x 9 steel posts, 6'-0" in length, with 6" x 12" x 1'-2" notched wood blocks or plastic blocks may be used for 6" x 8" x 6'-0" wood posts with 6" x 12" x 1'-2" wood blocks where applicable and when specified.
4. For Transition Railing (Type WB-31) details for Types 12A and 12B Layouts, see Revised Standard Plan RSP A77U4.
5. 31" in-line terminal system end treatments are used where site conditions will not accommodate a 31" flared end treatment.
6. The type 31" of terminal system end treatment to be used will be shown on the Project Plans.
7. Dependent on site conditions (embankment height, side slopes, or other fixed objects), it may be advisable to construct additional guard railing (a length equal to multiples of 12'-6" with 6'-3" post spacing) between the transition railing and end treatment. A 12.5 degree angle of departure can be drawn on the Project Plans from the edge of traveled way through the outer most point of the fixed object to determine the additional length of railing needed.
8. Where placement of dike is required with guard railing installations, see Revised Standard Plan RSP A77N4 for dike positioning details.
9. Type 12A or Type 12B Layouts are typically used:
   a. To the right of approaching traffic, at the end of a structure, on two-lane conventional highway where the roadbed width across the structure is less than 40 feet.
   b. To the left of approaching traffic, at the end of a structure, on two-lane conventional highway where the roadbed width across the structure is less than 40 feet.
   c. To the right of approaching traffic at the end of each structure on multilane freeways or expressways with separate adjacent or parallel bridges.
   d. To the right of approaching traffic at the end of the structure on multilane freeways or expressways with decked median on the bridge.
10. See Revised Standard Plan RSP A77Q3 for typical layout used left of approaching traffic at the ends of each structure on multilane freeways or expressways with separate adjacent or parallel bridges.
11. For additional details of typical connections to bridge rail, see Connection Detail AA on Revised Standard Plans RSP A77U1 and RSP A77U2 and Connection Detail FF on Revised Standard Plans RSP A77V1 and RSP A77V2.
12. For additional details of a typical connection to walls or abutments, see Revised Standard Plan RSP A77U3.

STATE OF CALIFORNIA
DEPARTMENT OF TRANSPORTATION

MIDWEST GUARDRAIL SYSTEM TYPICAL LAYOUTS FOR STRUCTURE APPROACH

NO SCALE

RSP A77Q1 DATED JULY 19, 2013 SUPPLEMENTS THE STANDARD PLANS BOOK DATED 2010.

REVISED STANDARD PLAN RSP A77Q1

Dist	COUNTY	ROUTE	POST MILES TOTAL PROJECT	SHEET No.	TOTAL SHEETS
10	Mer,Sta, SJ	5	32.2/32.5, 0.0/28.1, 0.0/R12.4	79	112

Randell D. Hiatt
REGISTERED CIVIL ENGINEER

July 19, 2013
PLANS APPROVAL DATE

REGISTERED PROFESSIONAL ENGINEER
Randell D. Hiatt
No. C50200
Exp. 6-30-15
CIVIL
STATE OF CALIFORNIA

THE STATE OF CALIFORNIA OR ITS OFFICERS OR AGENTS SHALL NOT BE RESPONSIBLE FOR THE ACCURACY OR COMPLETENESS OF SCANNED COPIES OF THIS PLAN SHEET.

TO ACCOMPANY PLANS DATED 02-18-14

2010 REVISED STANDARD PLAN RSP A77Q3

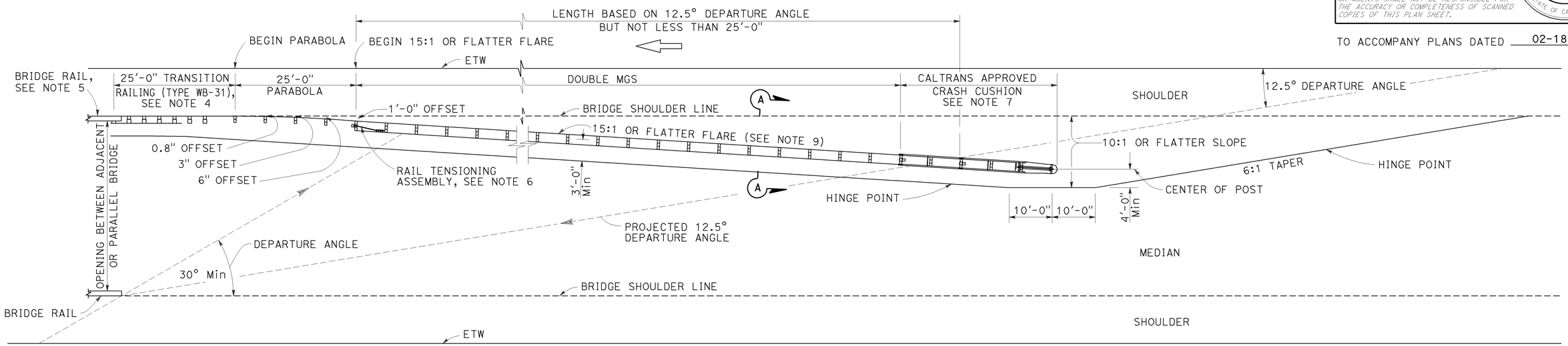

TYPE 12E LAYOUT

See Note 9

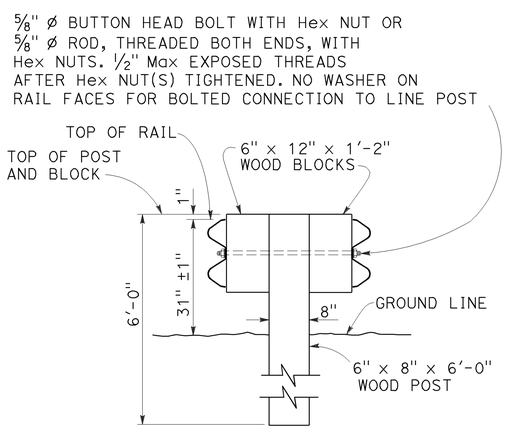

SECTION A-A

TYPICAL DOUBLE MIDWEST GUARDRAIL SYSTEM

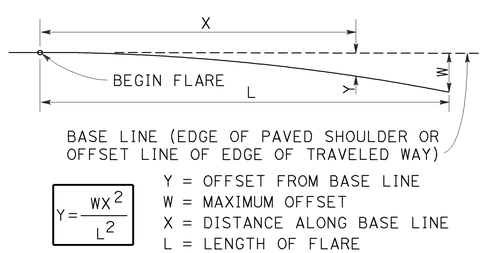

$$Y = \frac{WX^2}{L^2}$$

Y = OFFSET FROM BASE LINE
W = MAXIMUM OFFSET
X = DISTANCE ALONG BASE LINE
L = LENGTH OF FLARE

PARABOLIC FLARE OFFSETS

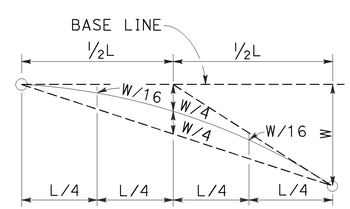

TYPICAL PARABOLIC LAYOUT

NOTES:

1. Line post, blocks and hardware to be used are shown on Revised Standard Plans RSP A77L1, RSP A77L2, RSP A77M1, RSP A77N1 and RSP A77N2.
2. MGS post spacing to be 6'-3" center to center, except as otherwise noted.
3. Except as noted, line posts are 6" x 8" x 6'-0" wood with 6" x 12" x 1'-2" wood blocks. W6 x 8.5 or W6 x 9 steel posts, 6'-0" in length, with 6" x 12" x 1'-2" notched wood blocks or notched recycled plastic blocks may be used for 6" x 8" x 6'-0" wood line posts with 6" x 12" x 1'-2" wood blocks where applicable and when specified.
4. For Transition Railing (Type WB-31) details, see Revised Standard Plan RSP A77U4.
5. For additional details of a typical connection to bridge rail, see Connection Detail AA on Revised Standard Plan RSP A77U1.
6. For Rail Tensioning Assembly details, see Revised Standard Plan RSP A77S2.
7. The type of Crash Cushion to be used will be shown on the Project Plans.
8. Type 12E Layout is typically used left of approaching traffic at the end of each structure on multilane freeways or expressways where a median type barrier is not constructed between separated roadbeds.
9. The 15:1 or flatter flare is measured off of the edge of traveled way.

STATE OF CALIFORNIA
DEPARTMENT OF TRANSPORTATION

MIDWEST GUARDRAIL SYSTEM TYPICAL LAYOUTS FOR STRUCTURE APPROACH

NO SCALE

RSP A77Q3 DATED JULY 19, 2013 SUPPLEMENTS THE STANDARD PLANS BOOK DATED 2010.

REVISED STANDARD PLAN RSP A77Q3

Dist	COUNTY	ROUTE	POST MILES TOTAL PROJECT	SHEET No.	TOTAL SHEETS
10	Mer,Sta, SJ	5	32.2/32.5, 0.0/28.1, 0.0/R12.4	80	112

Randell D. Hiatt
REGISTERED CIVIL ENGINEER

July 19, 2013
PLANS APPROVAL DATE

REGISTERED PROFESSIONAL ENGINEER Randell D. Hiatt No. C50200 Exp. 6-30-15 CIVIL STATE OF CALIFORNIA

THE STATE OF CALIFORNIA OR ITS OFFICERS OR AGENTS SHALL NOT BE RESPONSIBLE FOR THE ACCURACY OR COMPLETENESS OF SCANNED COPIES OF THIS PLAN SHEET.

TO ACCOMPANY PLANS DATED 02-18-14

NOTES:

1. Line post, blocks and hardware to be used are shown on Revised Standard Plans RSP A77L1, RSP A77L2, RSP A77M1, RSP A77N1 and RSP A77N2.
2. MGS post spacing to be 6′-3″ center to center, except as otherwise noted.
3. Except as noted, line posts are 6″ x 8″ x 6′-0″ wood with 6″ x 12″ x 1′-2″ wood blocks. W6 x 8.5 or W6 x 9 steel posts, 6′-0″ in length, with 6″ x 12″ x 1′-2″ notched wood blocks or notched recycled plastic blocks may be used for 6″ x 8″ x 6′-0″ wood line posts with 6″ x 12″ x 1′-2″ wood blocks where applicable and when specified.
4. A 4′-0″ minimum clearance is required between the face of the railing and the face of a fixed object located directly behind MGS section with post spacing of 6′-3″. Construct MGS as shown in the detail "Strengthened Midwest Guardrail System Sections for Fixed Object" on this plan, where the clearance between the face of the railing and the face of a fixed object is less than 4′-0″, but not less than 3′-0″. Where the clearance is less than 3′-0″, a concrete wall or barrier should be constructed to shield the fixed object(s).
5. For End Anchor Assembly (Type SFT) details, see Standard Plan RSP A77S1.
6. Type of crash cushion to be used will be shown on the Project Plans.
7. Type 15A layout is typically used on multilane freeways or expressways to shield fixed objects in the area between separated one-way roadbeds.
8. For typical flare offsets for 25′-0″ length parabola with maximum offset of 1′-0″, see Revised Standard Plan RSP A77P1.
9. The 15:1 or flatter flare is measured off of the edge of the traveled way.
10. W6 x 15 steel post, 8′-0″ in length, with 8″ x 12″ x 1′-2″ notched wood block or notched recycled plastic blocks may be used in place of the 10″ x 10″ x 8′-0″ wood post with 8″ x 12″ x 1′-2″ wood block shown in the detail "Strengthened Midwest Guardrail System Sections for Fixed Object".

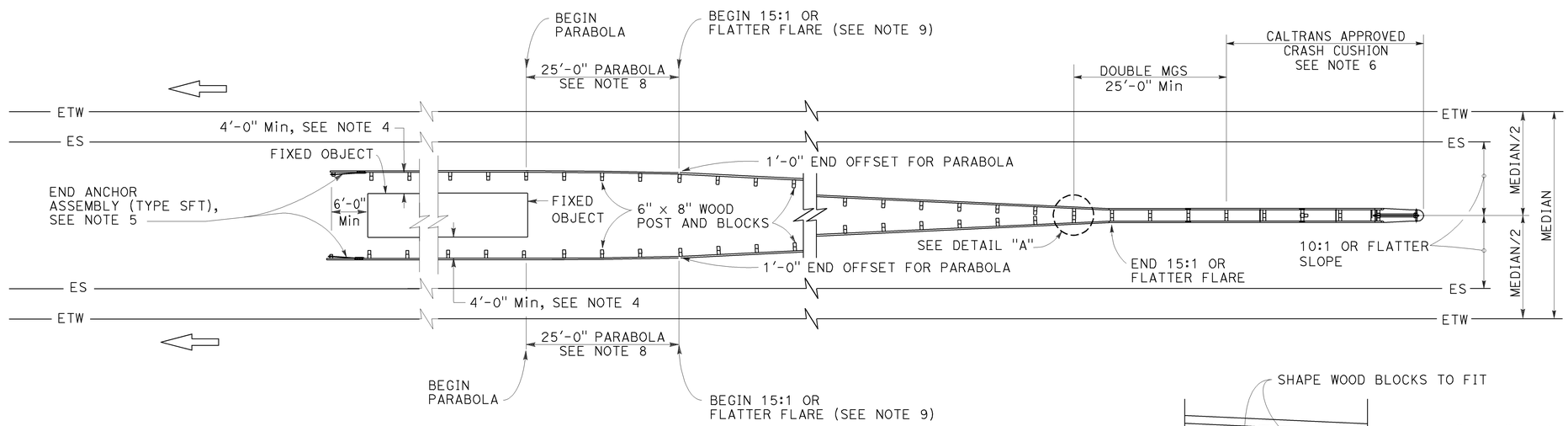

TYPE 15A LAYOUT

See Note 7

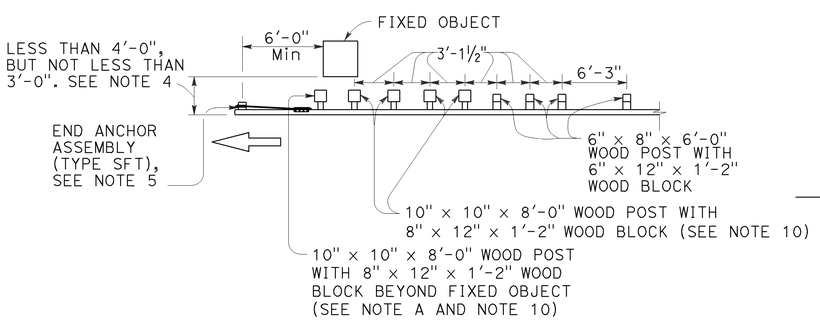

NOTE A: For a series of fixed objects (bridge columns, overhead sign supports, etc.) additional 10″ x 10″ x 8′-0″ wood post with 8″ x 12″ x 1′-2″ wood blocks at 3′-1½″ center to center spacing are to be used between fixed objects.

STRENGTHENED MIDWEST GUARDRAIL SYSTEM SECTIONS FOR FIXED OBJECT

Use strengthened MGS sections with Type 15A layout where minimum clearance between the face of the MGS and the fixed object(s) is less than 4′-0″, but not less than 3′-0″. See Note 4.

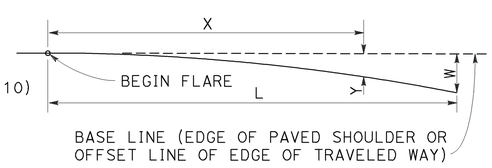

$$Y = \frac{WX^2}{L^2}$$

Y = OFFSET FROM BASE LINE
W = MAXIMUM OFFSET
X = DISTANCE ALONG BASE LINE
L = LENGTH OF FLARE

PARABOLIC FLARE OFFSETS

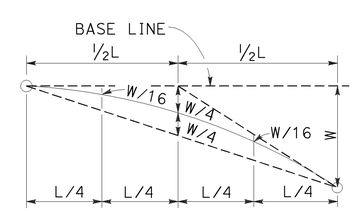

TYPICAL PARABOLIC LAYOUT

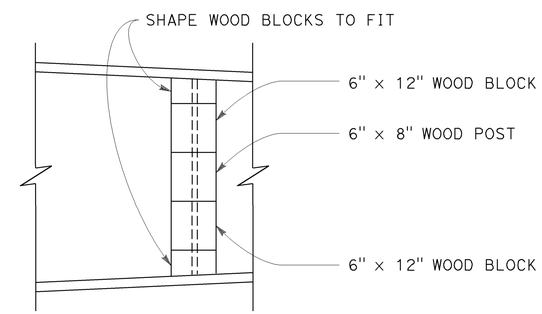

DETAIL "A"

STATE OF CALIFORNIA
DEPARTMENT OF TRANSPORTATION

MIDWEST GUARDRAIL SYSTEM TYPICAL LAYOUTS FOR FIXED OBJECTS BETWEEN SEPARATE ROADBEDS (ONE-WAY TRAFFIC)

NO SCALE

RSP A77R2 DATED JULY 19, 2013 SUPPLEMENTS THE STANDARD PLANS BOOK DATED 2010.

REVISED STANDARD PLAN RSP A77R2

2010 REVISED STANDARD PLAN RSP A77R2

6-20-13

Dist	COUNTY	ROUTE	POST MILES TOTAL PROJECT	SHEET No.	TOTAL SHEETS
10	Mer,Sta, SJ	5	32.2/32.5, 0.0/28.1, 0.0/R12.4	81	112

Randell D. Hiatt
REGISTERED CIVIL ENGINEER

July 19, 2013
PLANS APPROVAL DATE

REGISTERED PROFESSIONAL ENGINEER Randell D. Hiatt No. C50200 Exp. 6-30-15 CIVIL STATE OF CALIFORNIA

THE STATE OF CALIFORNIA OR ITS OFFICERS OR AGENTS SHALL NOT BE RESPONSIBLE FOR THE ACCURACY OR COMPLETENESS OF SCANNED COPIES OF THIS PLAN SHEET.

TO ACCOMPANY PLANS DATED 02-18-14

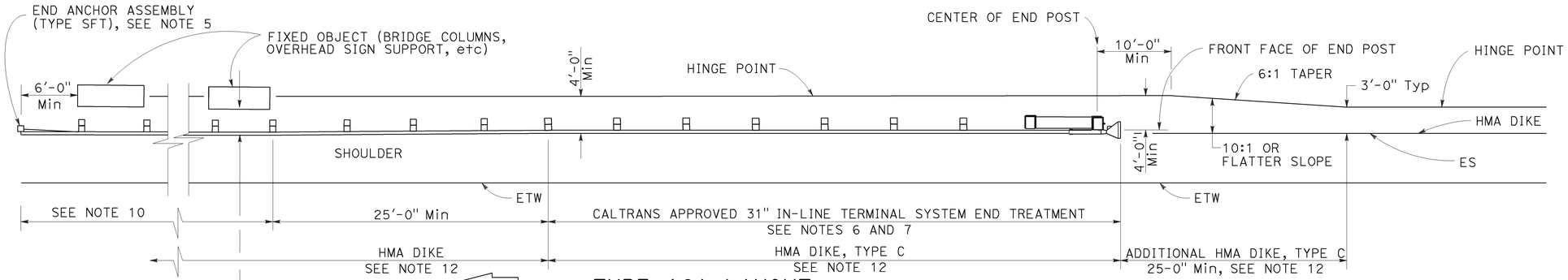

TYPE 16A LAYOUT

(MGS installation at roadside fixed object or objects with 31" in-line end treatment at traffic approach end of railing)
See Notes 11 and 12

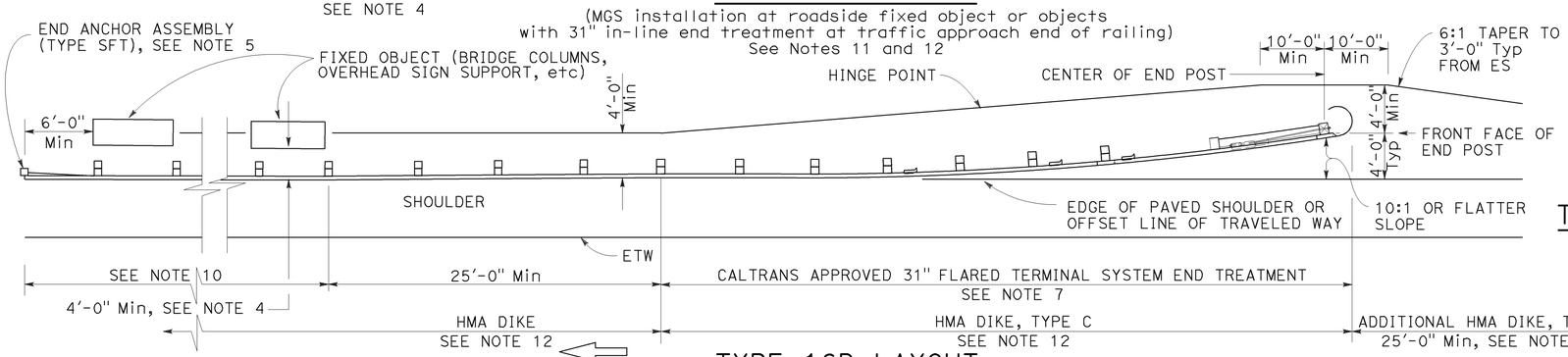

TYPE 16B LAYOUT

(MGS installation at roadside fixed object or objects with 31' flared end treatment at traffic approach end of railing)
See Notes 11 and 12

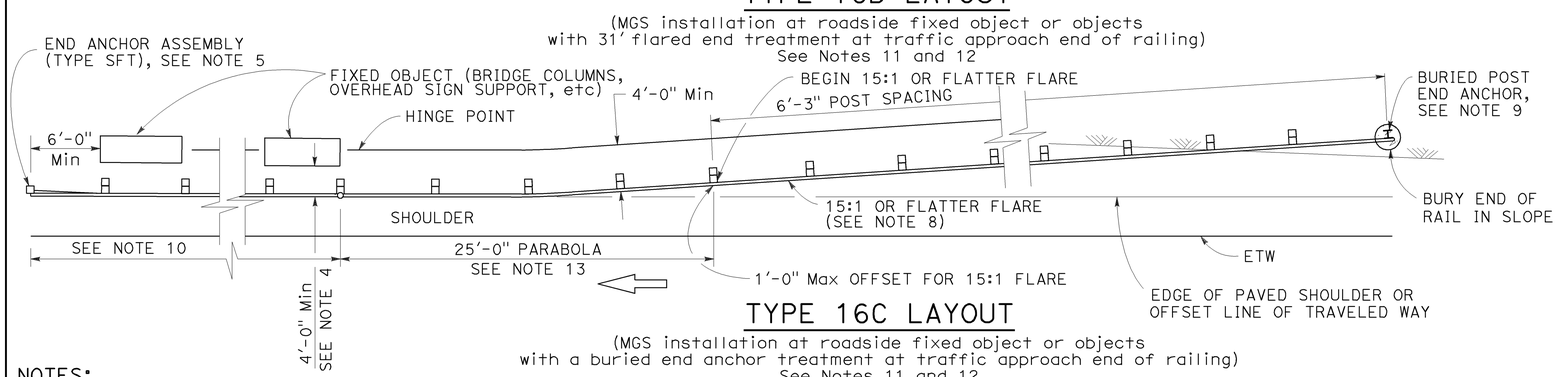

TYPE 16C LAYOUT

(MGS installation at roadside fixed object or objects with a buried end anchor treatment at traffic approach end of railing)
See Notes 11 and 12

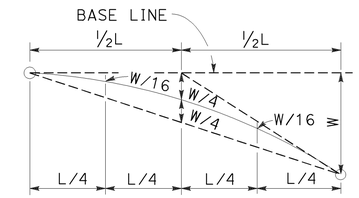

TYPIC AL PARABOLIC LAYOUT

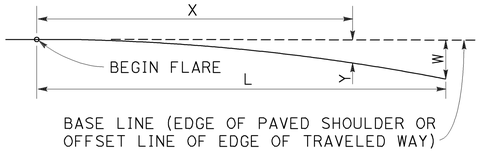

BASE LINE (EDGE OF PAVED SHOULDER OR OFFSET LINE OF EDGE OF TRAVELED WAY)

$$Y = \frac{WX^2}{L^2}$$

Y = OFFSET FROM BASE LINE
W = MAXIMUM OFFSET
X = DISTANCE ALONG BASE LINE
L = LENGTH OF FLARE

PARABOLIC FLARE OFFSETS

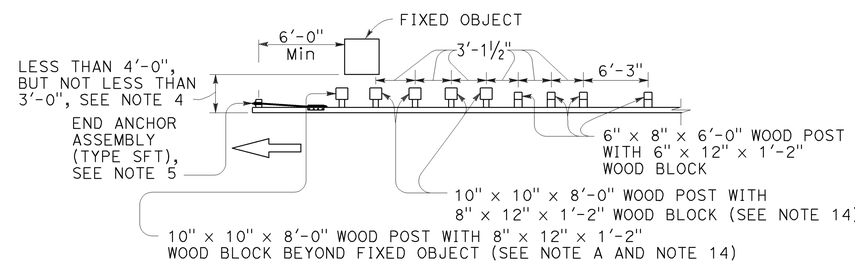

NOTE A: For a series of fixed objects (bridge columns, overhead sign supports, etc.) additional 10" x 10" x 8'-0" wood post with 8" x 12" x 1'-2" wood blocks at 3'-1½" center to center spacing are to be used between fixed objects.

STRENGTHENED MIDWEST GUARDRAIL SYSTEM SECTIONS FOR FIXED OBJECT

Use strengthened MGS sections with Types 16A, 16B or 16C layouts where minimum clearance between the face of the railing and fixed object(s) is less than 4'-0", but not less than 3'-0". See Note 4

NOTES:

1. Line post, blocks and hardware to be used are shown on Revised Standard Plans RSP A77L1, RSP A77L2, RSP A77M1, RSP A77N1 and RSP A77N2.
2. MGS post spacing to be 6'-3" center to center, except as otherwise noted.
3. Except as noted, line posts are 6" x 8" x 6'-0" wood with 6" x 12" x 1'-2" wood blocks. W6 x 8.5 or W6 x 9 steel posts, 6'-0" in length, with 6" x 12" x 1'-2" notched wood blocks or notched recycled plastic blocks may be used for 6" x 8" x 6'-0" wood line posts with 6" x 12" x 1'-2" wood blocks where applicable and when specified.
4. A 4'-0" minimum clearance is required between the face of the railing and the face of a fixed object located directly behind MGS sections with post spacing of 6'-3". Construct MGS as shown in the detail "Strengthened Midwest Guardrail System Sections for Fixed Object" on this plan, where the clearance between the face of the railing and the face of a fixed object is less than 4'-0", but not less than 3'-0". Where the clearance is less than 3'-0", a concrete wall or barrier should be constructed to shield the fixed object(s).
5. For End Anchor Assembly (Type SFT) details, see Revised Standard Plan RSP A77S1.
6. 31" in-line terminal system end treatments are used where site conditions will not accommodate a 31" flared end treatment.
7. The type of 31" terminal system to be used will be shown on the Project Plans.
8. The 15:1 or flatter flare used with Type 16C Layout is based on the edge of the paved shoulder or offset line of edge of the traveled way. The length of MGS within the 15:1 or flatter flare is based on site conditions and should be a length equal to multiples of 12'-6".
9. For details of the Buried Post End Anchor used with Type 16C Layout, see Revised Standard Plan RSP A77T2.
10. As site conditions dictate, construct additional MGS to shield fixed object(s). Additional MGS length equal to multiples of 12'-6". Post spacing at 6'-3" except as specified in Note 4.
11. Layout Types 16A, 16B or 16C are typically used where MGS is recommended to shield roadside fixed object(s) and a crashworthy 31" end treatment is required for only one direction of traffic.
12. Where placement of dike is required with MGS, see Revised Standard Plan RSP A77N4 for dike positioning details.
13. For typical flare offsets for 25'-0" length parabola with maximum offset of 1'-0", see Revised Standard Plan RSP A77P1.
14. W6 x 15 steel post, 8'-0" in length, with 8" x 12" x 1'-2" notched wood block or notched recycled plastic blocks may be used in place of the 10" x 10" x 8'-0" wood post with 8" x 12" x 1'-2" wood block shown in the detail "Strengthened Midwest Guardrail System Sections for Fixed Object".

STATE OF CALIFORNIA
DEPARTMENT OF TRANSPORTATION

MIDWEST GUARDRAIL SYSTEM TYPICAL LAYOUTS FOR ROADSIDE FIXED OBJECTS

NO SCALE

RSP A77R3 DATED JULY 19, 2013 SUPPLEMENTS THE STANDARD PLANS BOOK DATED 2010.

REVISED STANDARD PLAN RSP A77R3

2010 REVISED STANDARD PLAN RSP A77R3

6-20-13

Dist	COUNTY	ROUTE	POST MILES TOTAL PROJECT	SHEET No.	TOTAL SHEETS
10	Mer,Sta, SJ	5	32.2/32.5, 0.0/28.1, 0.0/R12.4	82	112

Randell D. Hiatt
REGISTERED CIVIL ENGINEER

July 19, 2013
PLANS APPROVAL DATE

REGISTERED PROFESSIONAL ENGINEER Randell D. Hiatt No. C50200 Exp. 6-30-15 CIVIL STATE OF CALIFORNIA

THE STATE OF CALIFORNIA OR ITS OFFICERS OR AGENTS SHALL NOT BE RESPONSIBLE FOR THE ACCURACY OR COMPLETENESS OF SCANNED COPIES OF THIS PLAN SHEET.

TO ACCOMPANY PLANS DATED 02-18-14

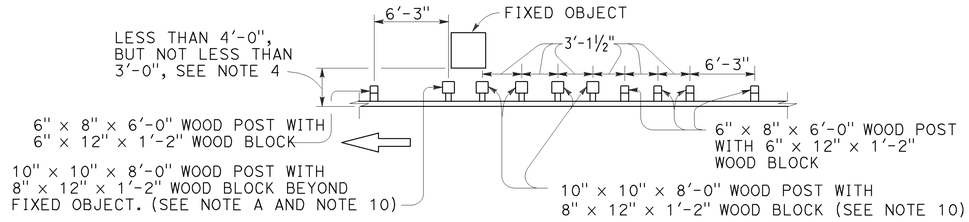

NOTE A: For a series of fixed objects (bridge columns, overhead sign supports, etc.) additional 10" x 10" x 8'-0" wood post with 8" x 12" x 1'-2" wood blocks at 3'-1½" center to center spacing are to be used between fixed object(s).

STRENGTHENED MIDWEST GUARDRAIL SYSTEM SECTIONS FOR FIXED OBJECT

Use strengthened MGS sections with layout Types 16D or 16E where minimum clearance between the face of the MGS and fixed object(s) is less than 4'-0", but not less than 3'-0". See Note 4.

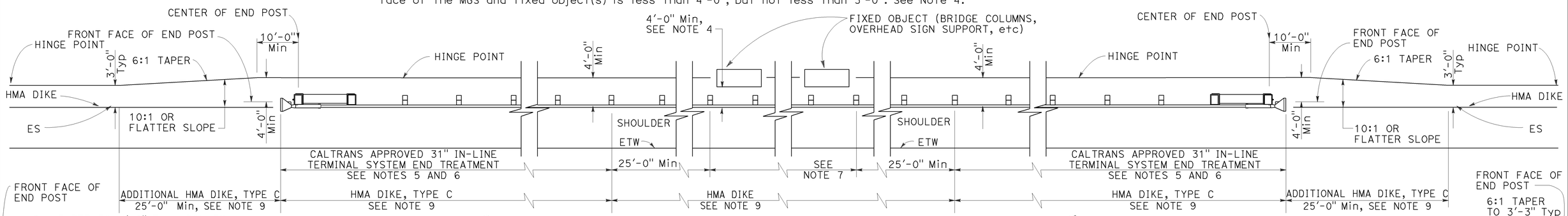

TYPE 16D LAYOUT

(Guard railing installation at roadside fixed object or objects with 31" in-line end treatment at each end of railing) See Note 8

TYPE 16E LAYOUT

(MGS installation at roadside fixed object or objects with 31" flared end treatment at each end of railing) See Note 8

NOTES:

1. Line post, blocks and hardware to be used are shown on Revised Standard Plans RSP A77L1, RSP A77L2, RSP A77M1, RSP A77N1 and RSP A77N2.
2. MGS post spacing to be 6'-3" center to center, except as otherwise noted.
3. Except as noted, line posts are 6" x 8" x 6'-0" wood with 6" x 12" x 1'-2" wood blocks. W6 x 8.5 or W6 x 9 steel posts, 6'-0" in length, with 6" x 12" x 1'-2" notched wood blocks or notched recycled plastic blocks may be used for 6" x 8" x 6'-0" wood line posts with 6" x 12" x 1'-2" wood blocks where applicable and when specified.
4. A 4'-0" minimum clearance is required between the face of the railing and the face of a fixed object located directly behind MGS sections with post spacing at 6'-3". Construct MGS as shown in the detail "Strengthened Midwest Guardrail System Sections for Fixed Object". on this plan, where the clearance between the face of the railing and the face of a fixed object is less than 4'-0", but not less than 3'-0". Where the clearance is less than 3'-0", a concrete wall or barrier should be constructed to shield the fixed object(s).
5. 31" in-line terminal system end treatments are used where site conditions will not accommodate a 31" flared end treatment.
6. The type of 31" terminal system to be used will be shown on the Project Plans.
7. As site conditions dictate, construct additional MGS to shield fixed object(s). Additional MGS length equal to multiples of 12'-6". Post spacing at 6'-3", except as specified in Note 4.
8. Layout Types 16D through 16L, shown on the A77R Series of Standard Plans, are typically used where MGS is recommended to shield roadside fixed object(s) and a crashworthy 31" end treatment is required for both directions of traffic.
9. Where placement of dike is required with MGS, see Revised Standard Plan RSP A77N4 for dike positioning details.
10. W6 x 15 steel post, 8'-0" in length, with 8" x 12" x 1'-2" notched wood block or notched recycled plastic block may be used in place of the 10" x 10" x 8'-0" wood post with 8" x 12" x 1'-2" wood block shown in the detail "Strengthened Midwest Guardrail System Sections for Fixed Object".

STATE OF CALIFORNIA
DEPARTMENT OF TRANSPORTATION

MIDWEST GUARDRAIL SYSTEM TYPICAL LAYOUTS FOR ROADSIDE FIXED OBJECTS

NO SCALE

RSP A77R4 DATED JULY 19, 2013 SUPPLEMENTS THE STANDARD PLANS BOOK DATED 2010.

REVISED STANDARD PLAN RSP A77R4

2010 REVISED STANDARD PLAN RSP A77R4

6-12-13

Dist	COUNTY	ROUTE	POST MILES TOTAL PROJECT	SHEET No.	TOTAL SHEETS
10	Mer,Sta, SJ	5	32.2/32.5, 0.0/28.1, 0.0/R12.4	83	112

Randell D. Hiatt
REGISTERED CIVIL ENGINEER

November 15, 2013
PLANS APPROVAL DATE

REGISTERED PROFESSIONAL ENGINEER
Randell D. Hiatt
No. C50200
Exp. 6-30-15
CIVIL
STATE OF CALIFORNIA

THE STATE OF CALIFORNIA OR ITS OFFICERS OR AGENTS SHALL NOT BE RESPONSIBLE FOR THE ACCURACY OR COMPLETENESS OF SCANNED COPIES OF THIS PLAN SHEET.

TO ACCOMPANY PLANS DATED 02-18-14

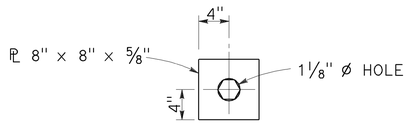

DETAIL "A"
CABLE CONNECTION
END PLATE

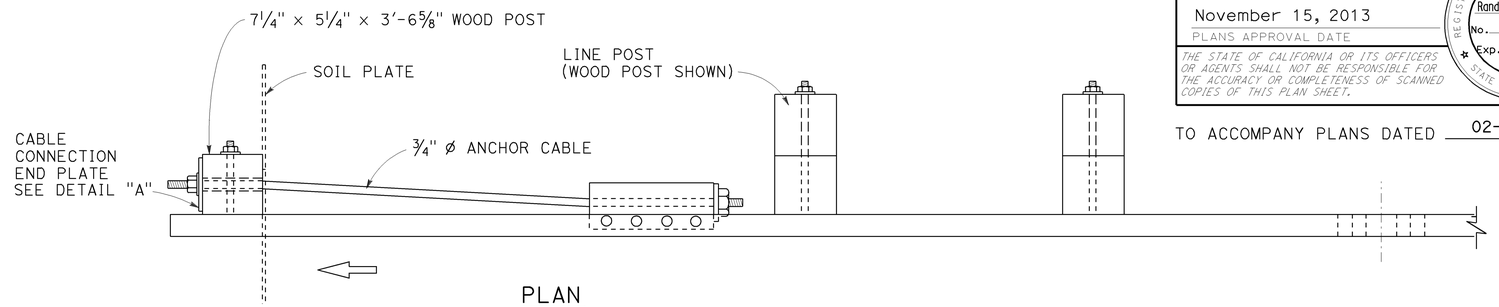

PLAN

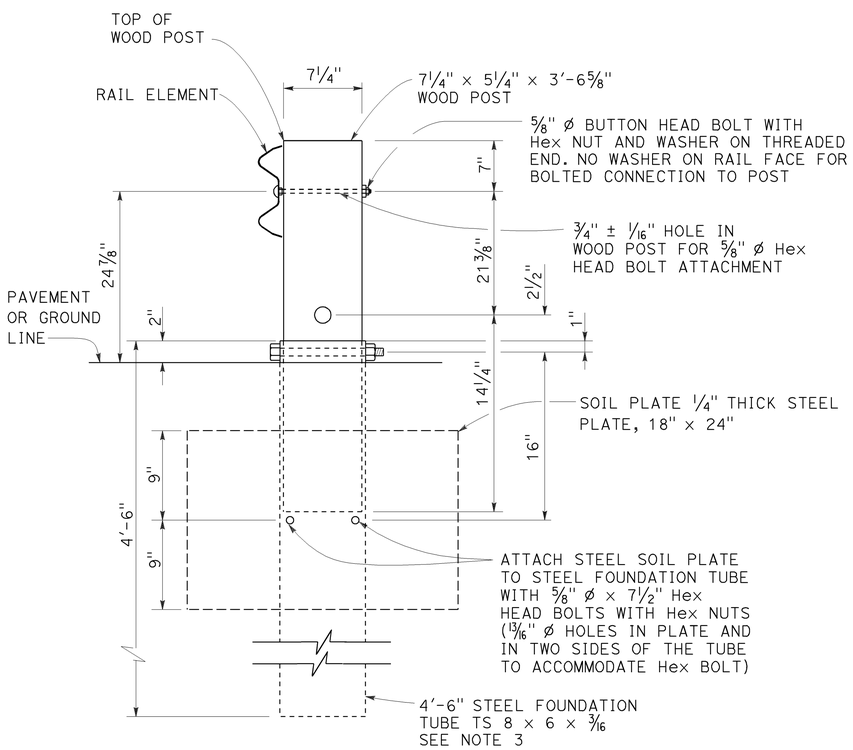

SECTION A-A

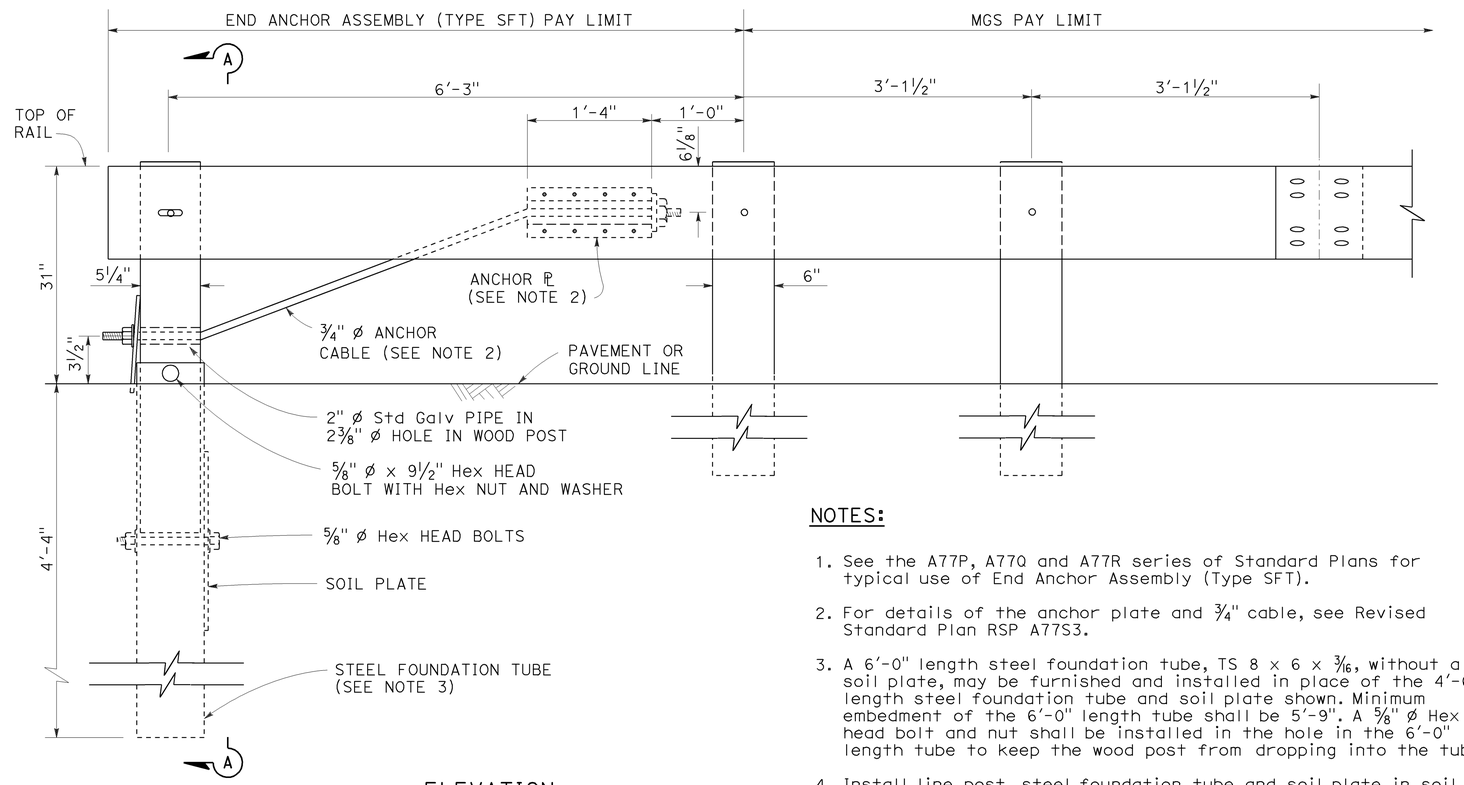

ELEVATION

END ANCHOR
ASSEMBLY (TYPE SFT)
See Note 1

NOTES:

1. See the A77P, A77Q and A77R series of Standard Plans for typical use of End Anchor Assembly (Type SFT).
2. For details of the anchor plate and 3/4" cable, see Revised Standard Plan RSP A77S3.
3. A 6'-0" length steel foundation tube, TS 8 x 6 x 3/16, without a soil plate, may be furnished and installed in place of the 4'-6" length steel foundation tube and soil plate shown. Minimum embedment of the 6'-0" length tube shall be 5'-9". A 5/8" ø Hex head bolt and nut shall be installed in the hole in the 6'-0" length tube to keep the wood post from dropping into the tube.
4. Install line post, steel foundation tube and soil plate in soil.

STATE OF CALIFORNIA
DEPARTMENT OF TRANSPORTATION

MIDWEST GUARDRAIL SYSTEM END ANCHOR ASSEMBLY (TYPE SFT)

NO SCALE

RSP A77S1 DATED NOVEMBER 15, 2013 SUPERSEDES RSP A77S1
DATED JULY 19, 2013 THAT SUPPLEMENTS THE STANDARD PLANS BOOK DATED 2010.

REVISED STANDARD PLAN RSP A77S1

2010 REVISED STANDARD PLAN RSP A77S1

10-4-13

Dist	COUNTY	ROUTE	POST MILES TOTAL PROJECT	SHEET No.	TOTAL SHEETS
10	Mer,Sta, SJ	5	32.2/32.5, 0.0/28.1, 0.0/R12.4	84	112

Randell D. Hiatt
REGISTERED CIVIL ENGINEER

July 19, 2013
PLANS APPROVAL DATE

REGISTERED PROFESSIONAL ENGINEER
Randell D. Hiatt
No. C50200
Exp. 6-30-15
CIVIL
STATE OF CALIFORNIA

THE STATE OF CALIFORNIA OR ITS OFFICERS OR AGENTS SHALL NOT BE RESPONSIBLE FOR THE ACCURACY OR COMPLETENESS OF SCANNED COPIES OF THIS PLAN SHEET.

TO ACCOMPANY PLANS DATED 02-18-14

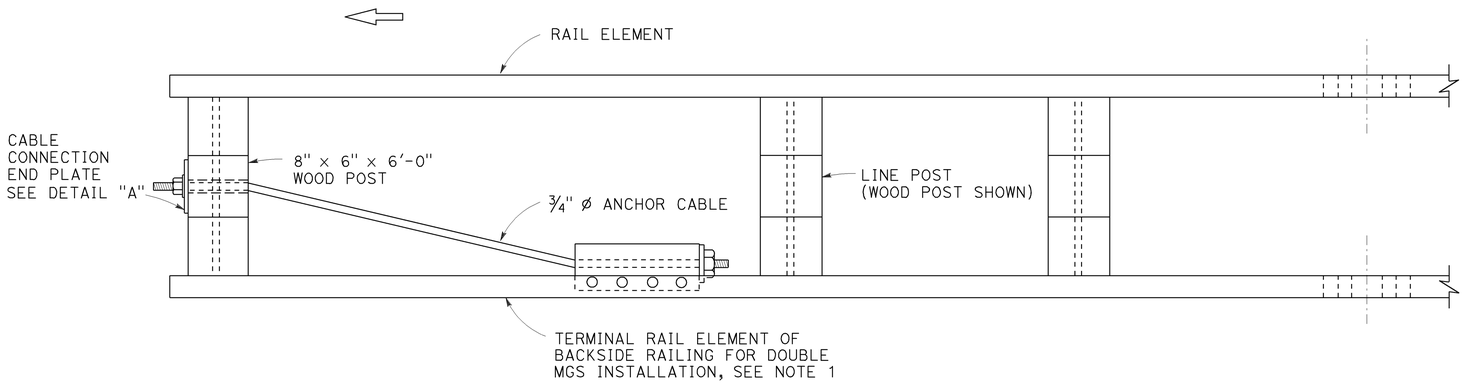

PLAN

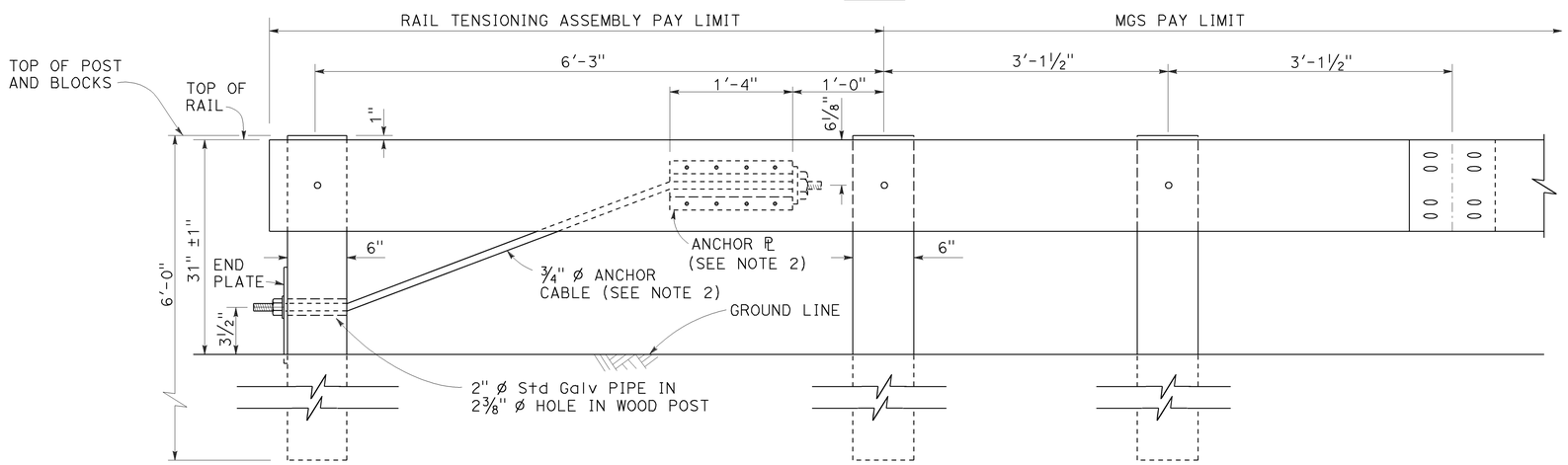

ELEVATION
RAIL TENSIONING ASSEMBLY
See Note 1

NOTES:

1. See Revised Standard Plans RSP A77Q3 and RSP A77R1 for typical use of rail tensioning assembly.
2. For details of the anchor plate and ¾" cable, see Revised Standard Plan RSP A77S3.

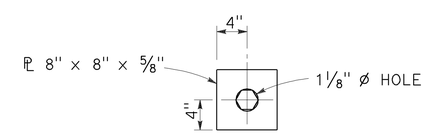

DETAIL "A"
CABLE CONNECTION END PLATE

STATE OF CALIFORNIA
DEPARTMENT OF TRANSPORTATION

MIDWEST GUARDRAIL SYSTEM RAIL TENSIONING ASSEMBLY

NO SCALE

RSP A77S2 DATED JULY 19, 2013 SUPPLEMENTS THE STANDARD PLANS BOOK DATED 2010.

REVISED STANDARD PLAN RSP A77S2

2010 REVISED STANDARD PLAN RSP A77S2

7-3-13

Dist	COUNTY	ROUTE	POST MILES TOTAL PROJECT	SHEET No.	TOTAL SHEETS
10	Mer,Sta, SJ	5	32.2/32.5, 0.0/28.1, 0.0/R12.4	85	112

Randell D. Hiatt
REGISTERED CIVIL ENGINEER

November 15, 2013
PLANS APPROVAL DATE

REGISTERED PROFESSIONAL ENGINEER
Randell D. Hiatt
No. C50200
Exp. 6-30-15
CIVIL
STATE OF CALIFORNIA

THE STATE OF CALIFORNIA OR ITS OFFICERS OR AGENTS SHALL NOT BE RESPONSIBLE FOR THE ACCURACY OR COMPLETENESS OF SCANNED COPIES OF THIS PLAN SHEET.

TO ACCOMPANY PLANS DATED 02-18-14

2010 REVISED STANDARD PLAN RSP A77S3

NOTE:

See Revised Standard Plans RSP A77S1, RSP A77S2 and RSP A77T1 for typical use of anchor cable and anchor plate.

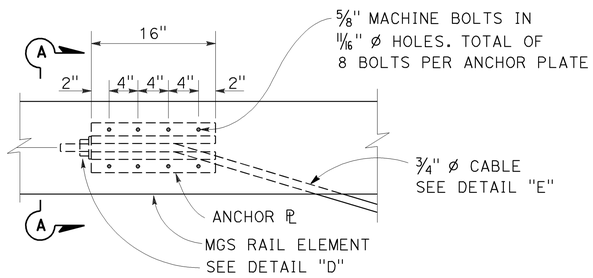

ANCHOR PLATE DETAIL
(MGS shown, TBB similar)

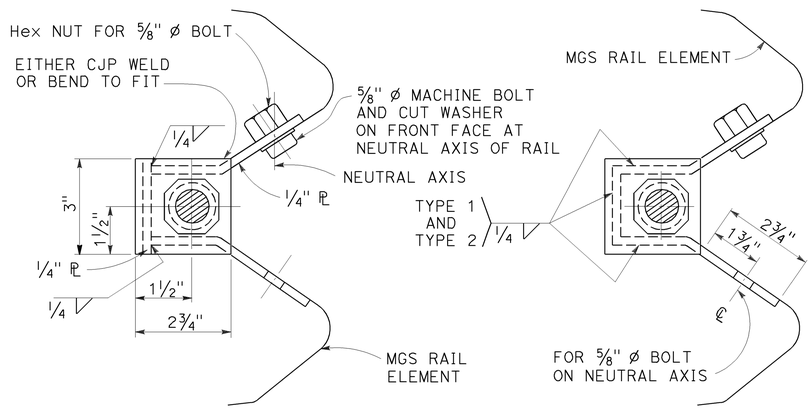

NOTE:
Dimensioning applies to both types.

SECTION A-A
(ALTERNATIVE TYPE 1)

SECTION A-A
(ALTERNATIVE TYPE 2)

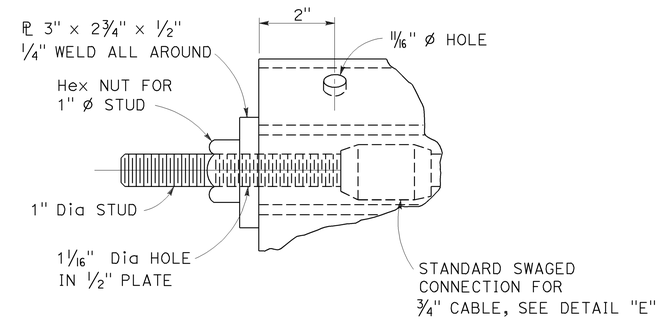

DETAIL "D"

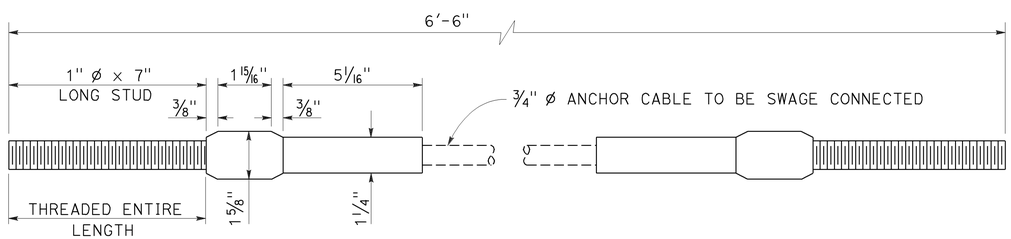

ANCHOR CABLE WITH
SWAGED FITTING AND STUD
DETAIL "E"

STATE OF CALIFORNIA
DEPARTMENT OF TRANSPORTATION

METAL RAILING ANCHOR CABLE AND ANCHOR PLATE DETAILS

NO SCALE

RSP A77S3 DATED NOVEMBER 15, 2013 SUPERSEDES RSP A77S3
DATED JULY 19, 2013 THAT SUPPLEMENTS THE STANDARD PLANS BOOK DATED 2010.

REVISED STANDARD PLAN RSP A77S3

10-4-13

Dist	COUNTY	ROUTE	POST MILES TOTAL PROJECT	SHEET No.	TOTAL SHEETS
10	Mer,Sta, SJ	5	32.2/32.5, 0.0/28.1, 0.0/R12.4	86	112

Randell D. Hiatt
REGISTERED CIVIL ENGINEER

July 19, 2013
PLANS APPROVAL DATE

REGISTERED PROFESSIONAL ENGINEER
Randell D. Hiatt
No. C50200
Exp. 6-30-15
CIVIL
STATE OF CALIFORNIA

THE STATE OF CALIFORNIA OR ITS OFFICERS OR AGENTS SHALL NOT BE RESPONSIBLE FOR THE ACCURACY OR COMPLETENESS OF SCANNED COPIES OF THIS PLAN SHEET.

TO ACCOMPANY PLANS DATED 02-18-14

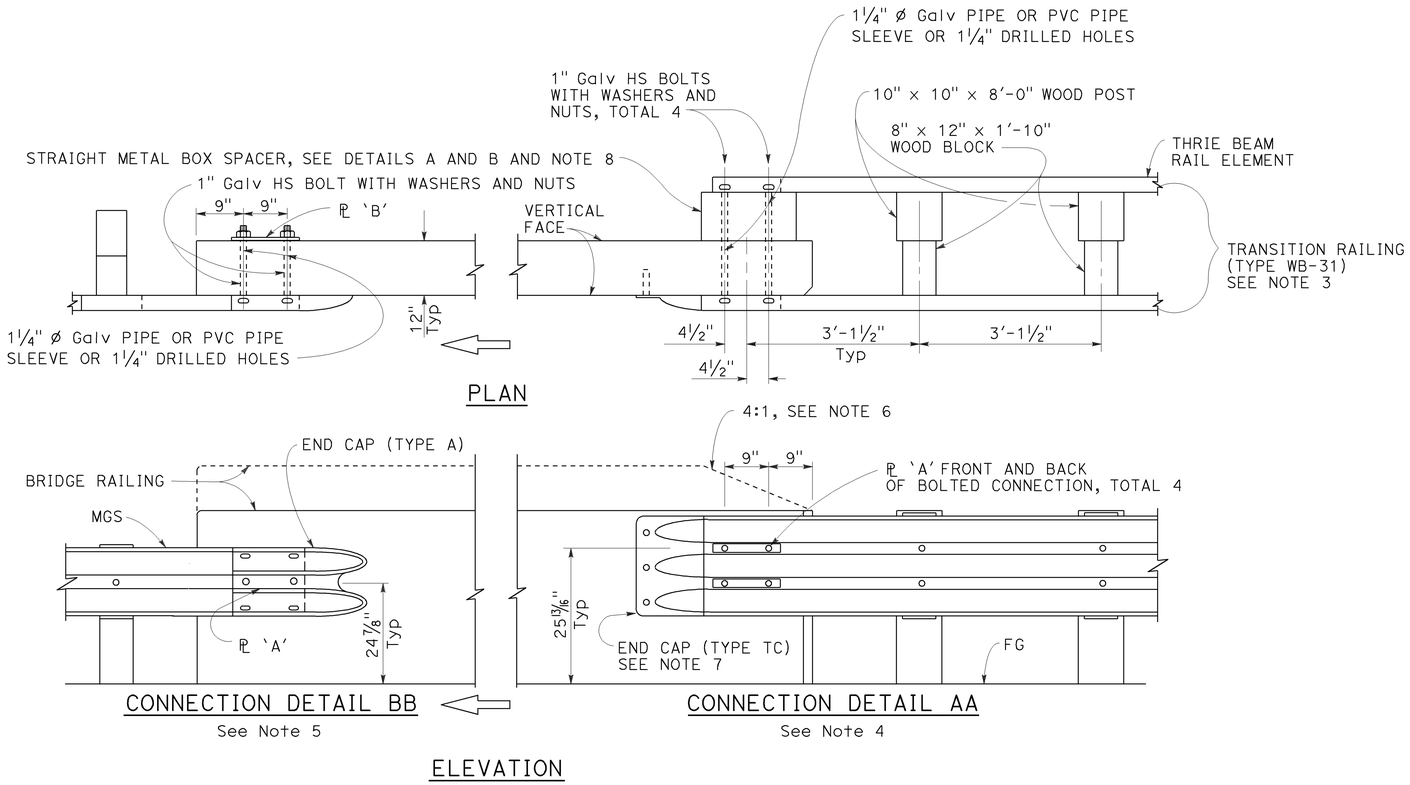

MIDWEST GUARDRAIL SYSTEM CONNECTION TO BRIDGE RAILING WITHOUT SIDEWALK

NOTES:

1. See Revised Standard Plan RSP A77U2 for additional connection details to bridges without sidewalks.
2. Additional details of posts, blocks and hardware are shown on Revised Standard Plans RSP A77M1, RSP A77N1 and RSP A77N2.
3. For additional details of Transition Railing (Type WB-31), see Revised Standard Plan RSP A77U4. Transition Railing (Type WB-31) transitions the 12 gauge MGS railing section to a heavier gage nested thrie beam railing section which is connected to the concrete bridge railing.
4. For typical use of Connection Detail AA, see Layout Types 12A and 12B on Revised Standard Plan RSP A77Q1, Layout Types 12C and 12D on Revised Standard Plan RSP A77Q2, and Layout Type 12E on Revised Standard Plan RSP A77Q3.
5. For typical use of Connection Detail BB, see Layout Type 12D (structure departure railing connection) on Revised Standard Plan RSP A77Q2 and Layout Type 12DD on Revised Standard Plan RSP A77Q5.
6. Where the height of the bridge railing exceeds the height of the thrie beam railing by more than 1" at Connection Detail AA, taper the top of the end of the bridge railing at 4:1 to match the top elevation of the thrie beam rail.
7. For details of End Cap (Type TC), see Revised Standard Plan RSP A77U4.
8. See Revised Standard Plan RSP A77U4 for additional details regarding depth dimension for straight metal box spacer.

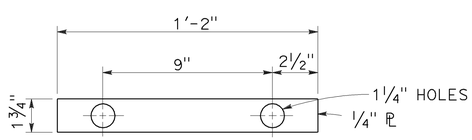

PLATE 'A'

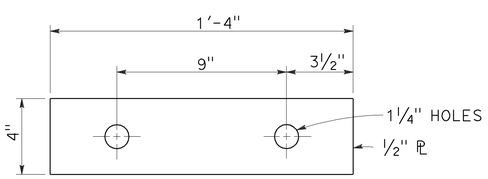

PLATE 'B'
(For backside of connection BB)

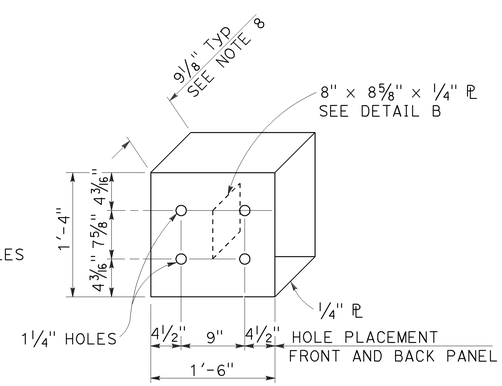

DETAIL A

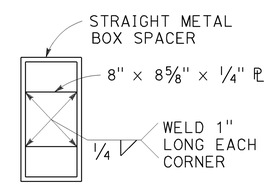

DETAIL B

STRAIGHT METAL BOX SPACER

STATE OF CALIFORNIA
DEPARTMENT OF TRANSPORTATION

MIDWEST GUARDRAIL SYSTEM CONNECTIONS TO BRIDGE RAILINGS WITHOUT SIDEWALKS DETAILS No. 1

NO SCALE

RSP A77U1 DATED JULY 19, 2013 SUPPLEMENTS THE STANDARD PLANS BOOK DATED 2010.

REVISED STANDARD PLAN RSP A77U1

2010 REVISED STANDARD PLAN RSP A77U1

7-8-13

Dist	COUNTY	ROUTE	POST MILES TOTAL PROJECT	SHEET No.	TOTAL SHEETS
10	Mer,Sta, SJ	5	32.2/32.5, 0.0/28.1, 0.0/R12.4	87	112

Randell D. Hiatt
REGISTERED CIVIL ENGINEER

July 19, 2013
PLANS APPROVAL DATE

REGISTERED PROFESSIONAL ENGINEER
Randell D. Hiatt
No. C50200
Exp. 6-30-15
CIVIL
STATE OF CALIFORNIA

THE STATE OF CALIFORNIA OR ITS OFFICERS OR AGENTS SHALL NOT BE RESPONSIBLE FOR THE ACCURACY OR COMPLETENESS OF SCANNED COPIES OF THIS PLAN SHEET.

TO ACCOMPANY PLANS DATED 02-18-14

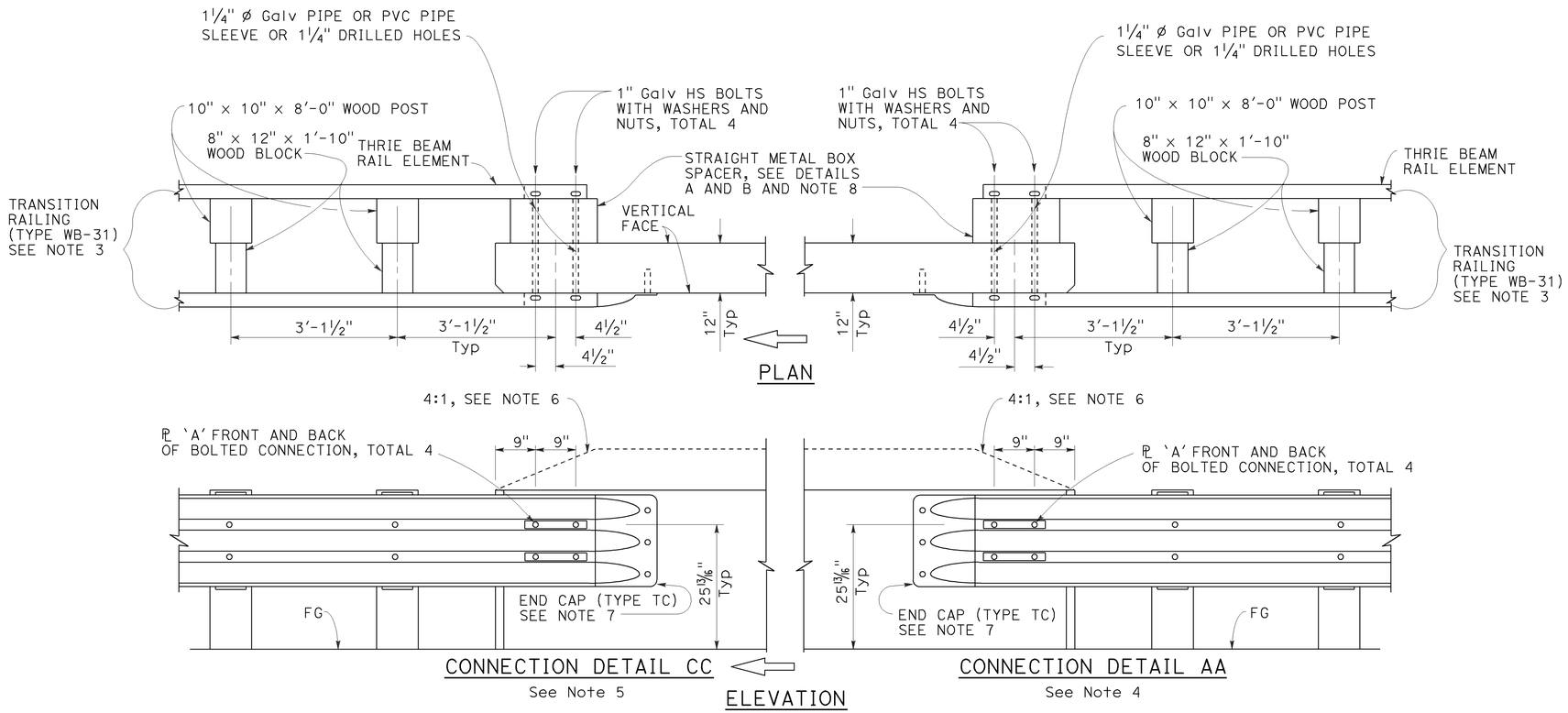

MIDWEST GUARDRAIL SYSTEM CONNECTION TO BRIDGE RAILING WITHOUT SIDEWALK

NOTES:

1. See Revised Standard Plan RSP A77U1 for additional connection details to bridges without sidewalks.
2. Additional details of posts, blocks and hardware are shown on Revised Standard Plans RSP A77M1, RSP A77N1 and RSP A77N2.
3. For additional details of Transition Railing (Type WB-31), see Revised Standard Plan RSP A77U4. Transition Railing (Type WB-31) transitions the 12 gauge MGS railing section to a heavier gage nested thrie beam railing section which is connected to the concrete bridge railing.
4. For typical use of Connection Detail AA, see Layout Types 12A and 12B on Revised Standard Plan RSP A77Q1, Layout Types 12C and 12D on Revised Standard Plan RSP A77Q2, and Layout Type 12E on Revised Standard Plan RSP A77Q3.
5. For typical use of Connection Detail CC, see Layout Types 12AA and 12BB on Revised Standard Plan RSP A77Q4 and Layout Type 12CC on Revised Standard Plan RSP A77Q5.
6. Where the height of the bridge railing exceeds the height of the thrie beam railing by more than 1" at Connection Detail AA and connection Detail CC, taper the top of the end of the bridge railing at 4:1 to match the top elevation of the thrie beam railing.
7. For details of End Cap (Type TC), see Revised Standard Plan RSP A77U4.
8. See Revised Standard Plan RSP A77U4 for additional details regarding depth dimension for straight metal box spacer.

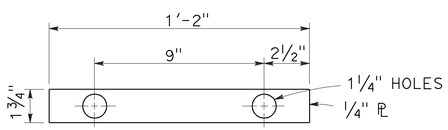

PLATE 'A'

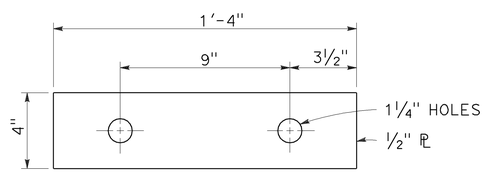

PLATE 'B'
(For backside of connection BB)

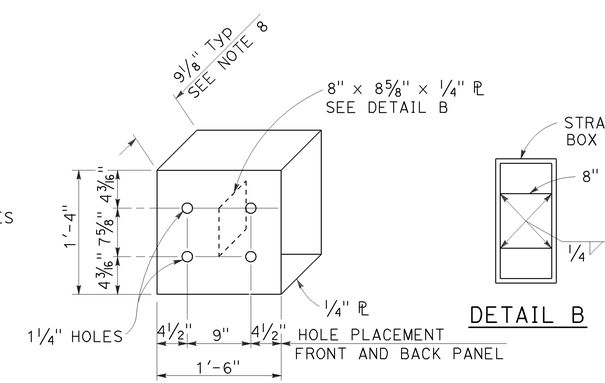

DETAIL A

STRAIGHT METAL BOX SPACER

STATE OF CALIFORNIA
DEPARTMENT OF TRANSPORTATION

MIDWEST GUARDRAIL SYSTEM CONNECTIONS TO BRIDGE RAILINGS WITHOUT SIDEWALKS DETAILS No. 2

NO SCALE

RSP A77U2 DATED JULY 19, 2013 SUPPLEMENTS THE STANDARD PLANS BOOK DATED 2010.

REVISED STANDARD PLAN RSP A77U2

2010 REVISED STANDARD PLAN RSP A77U2

6-20-13

Dist	COUNTY	ROUTE	POST MILES TOTAL PROJECT	SHEET No.	TOTAL SHEETS
10	Mer,Sta, SJ	5	32.2/32.5, 0.0/28.1, 0.0/R12.4	88	112

Randell D. Hiatt
REGISTERED CIVIL ENGINEER

November 15, 2013
PLANS APPROVAL DATE

REGISTERED PROFESSIONAL ENGINEER Randell D. Hiatt No. C50200 Exp. 6-30-15 CIVIL STATE OF CALIFORNIA

THE STATE OF CALIFORNIA OR ITS OFFICERS OR AGENTS SHALL NOT BE RESPONSIBLE FOR THE ACCURACY OR COMPLETENESS OF SCANNED COPIES OF THIS PLAN SHEET.

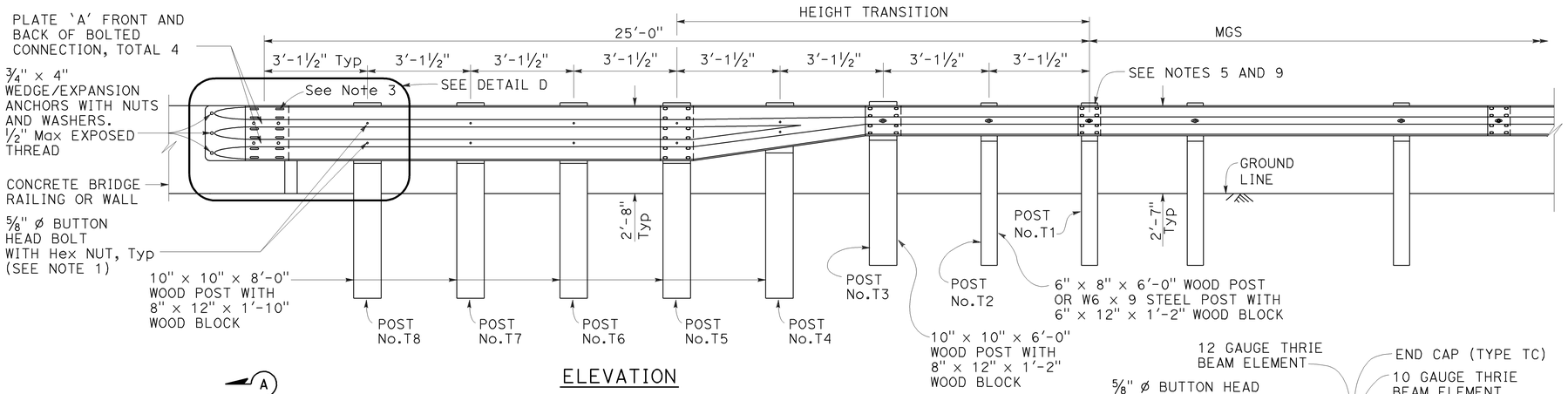

ELEVATION

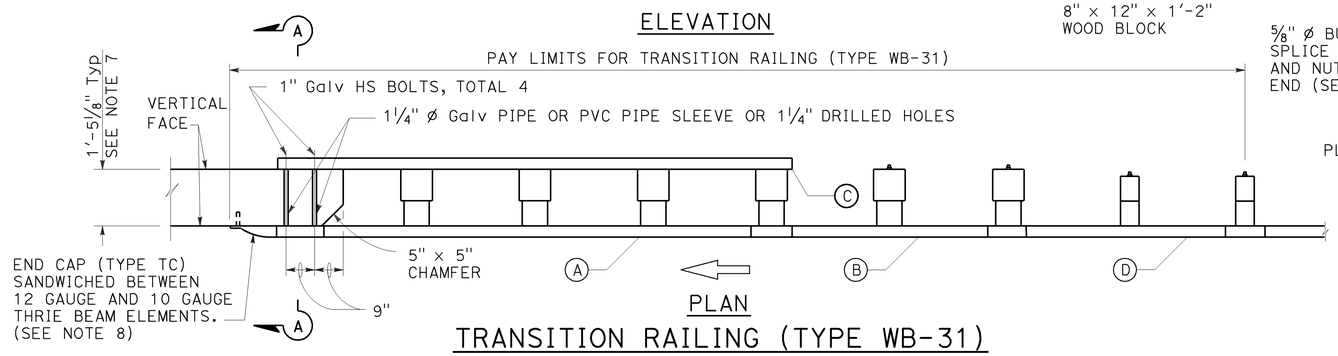

PLAN

TRANSITION RAILING (TYPE WB-31)

(No Blockout Attachment)

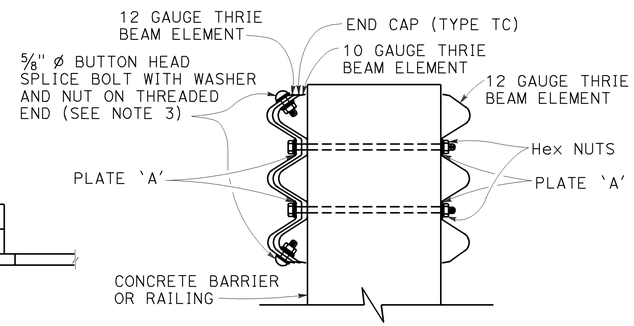

SECTION A-A

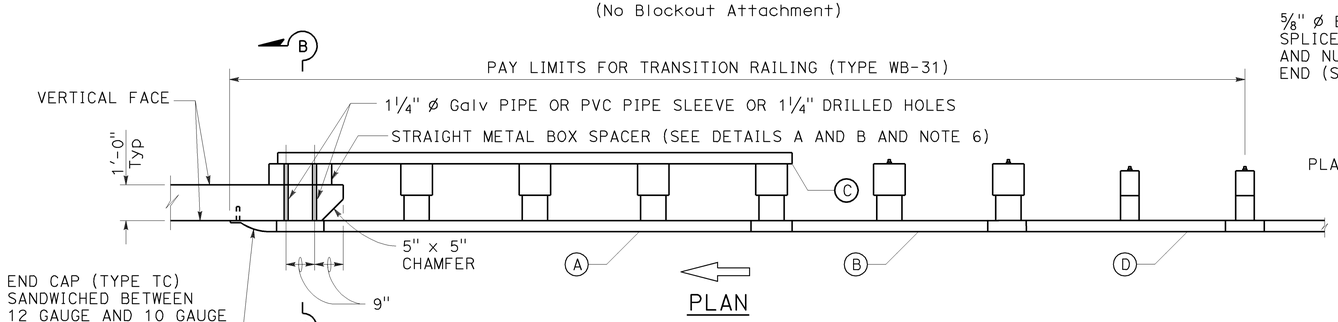

PLAN

TRANSITION RAILING (TYPE WB-31)

(Blockout Attachment)

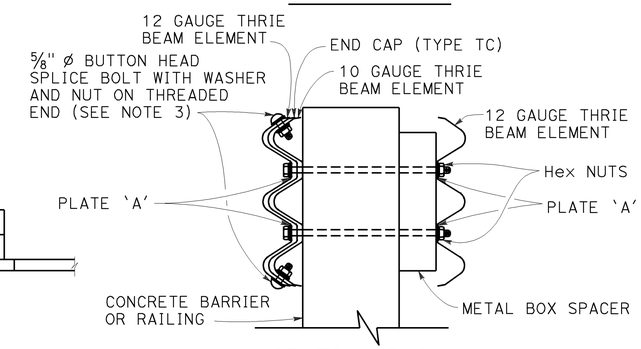

SECTION B-B

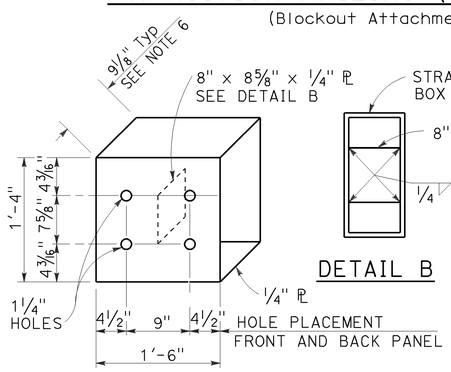

DETAIL A

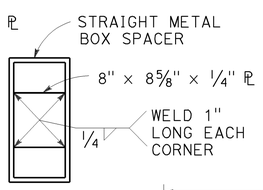

DETAIL B

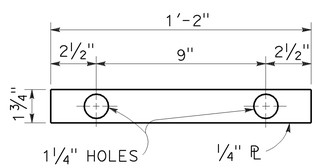

DETAIL C

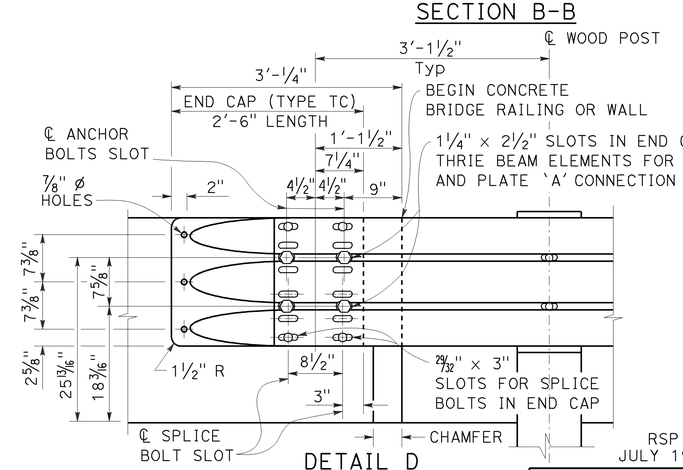

DETAIL D

LEGEND:

(A) NESTED THRIE BEAM ELEMENTS (ONE 12 GAUGE ELEMENT NESTED OVER ONE 10 GAUGE ELEMENT).

(B) ONE ASYMMETRICAL 10 GAUGE "W" BEAM TO THRIE BEAM ELEMENT.

(C) ONE 12 GAUGE THRIE BEAM ELEMENT.

(D) ONE 10 GAUGE "W" BEAM RAIL ELEMENT (7'-3 1/2"LENGTH)

10 GAUGE = 0.138" THICK
12 GAUGE = 0.108" THICK

STRAIGHT METAL BOX SPACER

PLATE 'A'

NOTES:

TO ACCOMPANY PLANS DATED 02-18-14

1. Use 5/8" ø Button head bolts and hex nuts for connections to posts. No washer on rail face for bolted connections to post.
2. The nested rail elements, end cap, and 'W' beam to thrie beam element may be spliced together prior to bolting the elements to the wood post and concrete barrier or railing.
3. Exterior splice bolt holes for rail element splices at Post No. T5 and the connection to the concrete barrier or railing shall be the standard 29/32" x 1 1/8" slot size. Interior splice bolt holes at these locations may be increased up to 1 1/4" ø. Only the top 4 and the bottom 4 splice bolts with washers and nuts are required for rail splices at Post No. T5 and the connection to the concrete barrier or railing.
4. The top elevation of Posts No. T2 through No. T7 shall not project more than 1" above the top elevation of the rail element.
5. Typically, the railing connected to Transition Railing (Type WB-31) will be either standard railing section of MGS with height transition ratio of 150:1 or a Caltrans approved 31" end treatment attached to Post No. T1.
6. The depth of the metal box spacer varies from the 9 1/8" to 1 1/2" and is dependent on the width of the concrete railing or wall. The combined dimension for the depth of the metal box spacer plus the width of railing or wall is typically 21 1/8". Where the space between the backside of the concrete railing or wall and the rear thrie beam element is less than 1 1/2", metal plates similar to Plate 'A' are to be used as spacers.
7. Where the width of the concrete railing or wall is greater than 17 1/8", wood blocks are to be used to fill the space created between the backside of Posts No. T5 through No. T8 and the rear thrie beam element. These wood blocks shall be 8" in width and 1'-2" in length. The dimension between the front thrie beam element and the rear thrie beam element is to match the width of the concrete railing or wall.
8. End cap may be installed over 12 gauge and 10 gauge thrie beam elements where transition railing is installed on the departure end of bridge railing.
9. Conform standard railing section height to 31" at Post No. T1 using height transition ratio of 150:1.

STATE OF CALIFORNIA
DEPARTMENT OF TRANSPORTATION

MIDWEST GUARDRAIL SYSTEM TRANSITION RAILING (TYPE WB-31)

NO SCALE

RSP A77U4 DATED NOVEMBER 15, 2013 SUPERSEDES RSP A77U4 DATED JULY 19, 2013 THAT SUPPLEMENTS THE STANDARD PLANS BOOK DATED 2010.

REVISED STANDARD PLAN RSP A77U4

2010 REVISED STANDARD PLAN RSP A77U4

10-4-13

Dist	COUNTY	ROUTE	POST MILES TOTAL PROJECT	SHEET No.	TOTAL SHEETS
10	Mer,Sta, SJ	5	32.2/32.5, 0.0/28.1, 0.0/R12.4	89	112

Randell D. Hiatt
REGISTERED CIVIL ENGINEER

July 19, 2013
PLANS APPROVAL DATE

REGISTERED PROFESSIONAL ENGINEER
Randell D. Hiatt
No. C50200
Exp. 6-30-15
CIVIL
STATE OF CALIFORNIA

THE STATE OF CALIFORNIA OR ITS OFFICERS OR AGENTS SHALL NOT BE RESPONSIBLE FOR THE ACCURACY OR COMPLETENESS OF SCANNED COPIES OF THIS PLAN SHEET.

TO ACCOMPANY PLANS DATED 02-18-14

NOTES:

1. Refer to Revised Standard Plans RSP A77L1 and RSP A77L2 for component details for MGS not shown on this plan.
2. All posts for any standard barrier run shall be of the same type: Wood or Steel.
3. Install posts in soil.

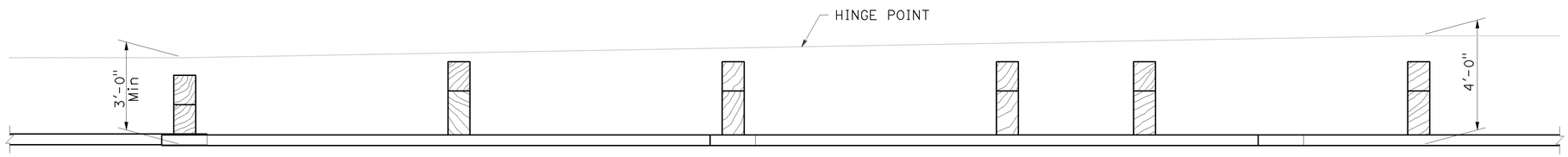

PLAN

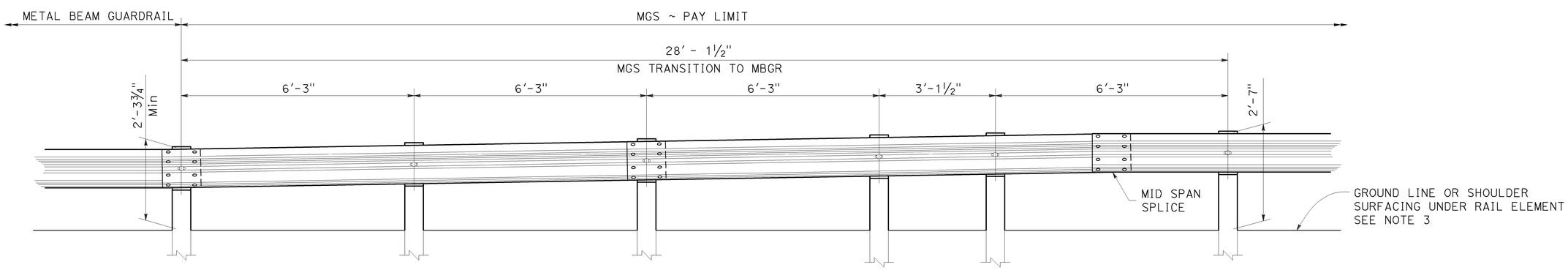

ELEVATION

STATE OF CALIFORNIA
DEPARTMENT OF TRANSPORTATION

MIDWEST GUARDRAIL SYSTEM TRANSITION TO METAL BEAM GUARDRAIL

NO SCALE

RSP A77U5 DATED JULY 19, 2013 SUPPLEMENTS THE STANDARD PLANS BOOK DATED 2010.

REVISED STANDARD PLAN RSP A77U5

2010 REVISED STANDARD PLAN RSP A77U5

6-20-13

Dist	COUNTY	ROUTE	POST MILES TOTAL PROJECT	SHEET No.	TOTAL SHEETS
10	Mer,Sta, SJ	5	32.2/32.5, 0.0/28.1, 0.0/R12.4	90	112

REGISTERED CIVIL ENGINEER

July 19, 2013
PLANS APPROVAL DATE

REGISTERED PROFESSIONAL ENGINEER Michael Janzen No. 44788 Exp. 03-31-14 CIVIL STATE OF CALIFORNIA

THE STATE OF CALIFORNIA OR ITS OFFICERS OR AGENTS SHALL NOT BE RESPONSIBLE FOR THE ACCURACY OR COMPLETENESS OF SCANNED COPIES OF THIS PLAN SHEET.

TO ACCOMPANY PLANS DATED 02-18-14

2010 REVISED STANDARD PLAN RSP A87A

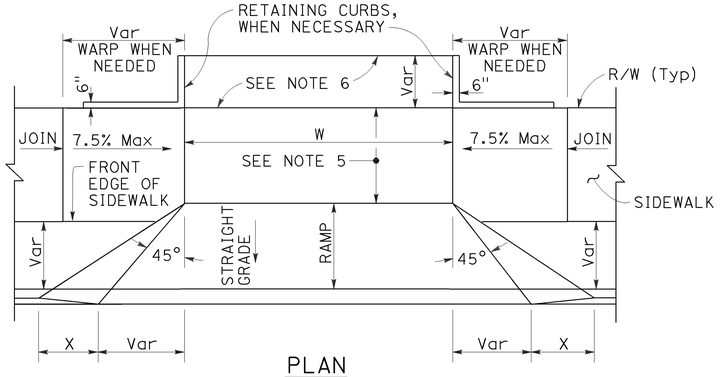

PLAN

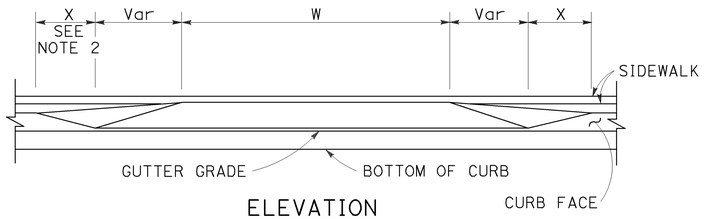

ELEVATION

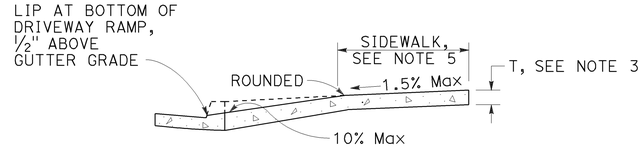

CASE A

Typical driveway, sidewalk not depressed

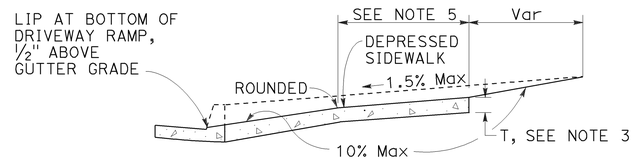

CASE B

Driveway with depressed sidewalk

SECTIONS

DRIVEWAYS

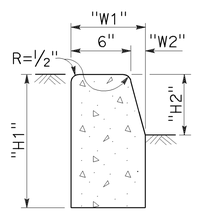

TYPE A1 CURBS

See Table A

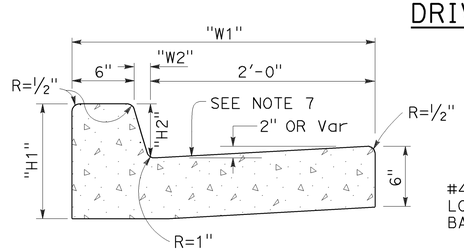

TYPE A2 CURBS

See Table A

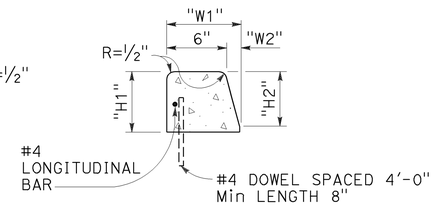

TYPE A3 CURBS

Superimposed on existing pavement
See Table A

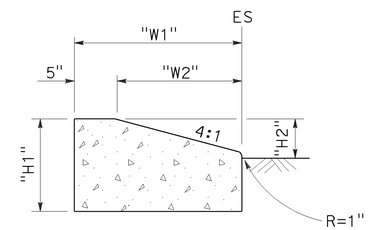

TYPE D CURBS

See Table A

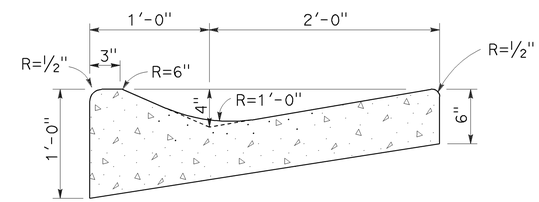

TYPE E CURB

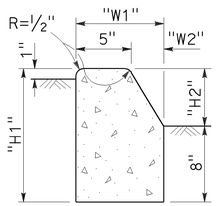

TYPE B1 CURBS

See Table A

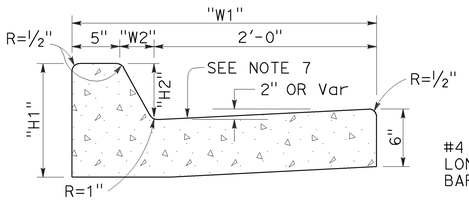

TYPE B2 CURBS

See Table A

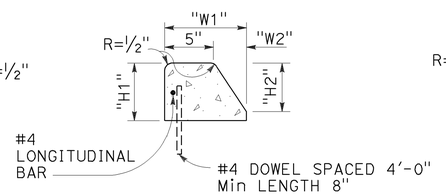

TYPE B3 CURBS

Superimposed on existing pavement
See Table A

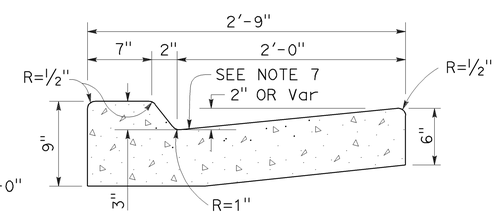

TYPE B4 CURBS

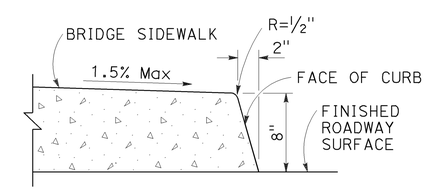

TYPE H CURB

On Bridges

CURBS

TABLE A

CURB TYPE	DIMENSIONS			
	"H1"	"H2"	"W1"	"W2"
A1-6	1'-2"	6"	7½"	1½"
A1-8	1'-4"	8"	8"	2"
A2-6	1'-0"	6"	2'-7½"	1½"
A2-8	1'-2"	8"	2'-8"	2"
A3-6	6"	5"	7¼"	1¼"
A3-8	8"	7"	7¾"	1¾"
B1-4	1'-0"	4"	7½"	2½"
B1-6	1'-2"	6"	9"	4"
B2-4	10"	4"	2'-7½"	2½"
B2-6	1'-0"	6"	2'-9"	4"
B3-4	4"	3"	7"	2"
B3-6	6"	5"	8½"	3½"
D-4	10"	4"	1'-6"	1'-1"
D-6	1'-0"	6"	2'-2"	1'-9"

CURB QUANTITIES

TYPE	CUBIC YARDS PER LINEAR FOOT
A1-6	0.02585
A1-8	0.03084
A2-6	0.05903
A2-8	0.06379
A3-6	0.01036
A3-8	0.01435
B1-4	0.02185
B1-6	0.02930
B2-4	0.05515
B2-6	0.06171
B3-4	0.00641
B3-6	0.01074
B4	0.05709
D-4	0.04083
D-6	0.06804
E	0.06661

NOTES:

1. Case A driveway section typically applies.
2. X=3'-0" except for curb heights over 10" where 4:1 slopes shall be used on curb slope.
3. Sidewalk and ramp thickness "T" at driveway shall be 4" for residental and 6" for commercial.
4. Difference in slope of the driveway ramp and the slope of a line between the gutter and a point on the roadway 5'-0" from gutter line shall not exceed 15%. Reduce driveway ramp slope, not gutter slope, where required.
5. Minimum width of clear passageway for sidewalk shall be 4'-2".
6. Retaining curbs and acquisition of construction easement may be necessary for narrow sidewalks or curb heights in excess of 6".
7. Across the pedestrian route at curb ramp locations, the gutter pan slope shall not exceed 1" of depth for each 2'-0" of width.

STATE OF CALIFORNIA
DEPARTMENT OF TRANSPORTATION

CURBS AND DRIVEWAYS

NO SCALE

RSP A87A DATED JULY 19, 2013 SUPERSEDES STANDARD PLAN A87A
DATED MAY 20, 2011 - PAGE 119 OF THE STANDARD PLANS BOOK DATED 2010.

REVISED STANDARD PLAN RSP A87A

7-8-13

Dist	COUNTY	ROUTE	POST MILES TOTAL PROJECT	SHEET No.	TOTAL SHEETS
10	Mer,Sta, SJ	5	32.2/32.5, 0.0/28.1, 0.0/R12.4	91	112

REGISTERED CIVIL ENGINEER

July 19, 2013
PLANS APPROVAL DATE

REGISTERED PROFESSIONAL ENGINEER
Michael Janzen
No. 44788
Exp. 03-31-14
CIVIL
STATE OF CALIFORNIA

THE STATE OF CALIFORNIA OR ITS OFFICERS OR AGENTS SHALL NOT BE RESPONSIBLE FOR THE ACCURACY OR COMPLETENESS OF SCANNED COPIES OF THIS PLAN SHEET.

TO ACCOMPANY PLANS DATED 02-18-14

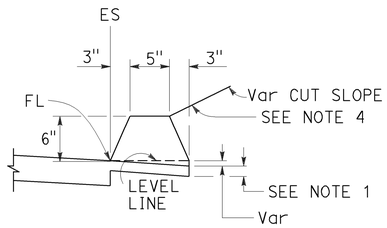

TYPE A
See Note 3

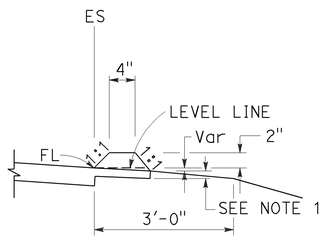

TYPE C

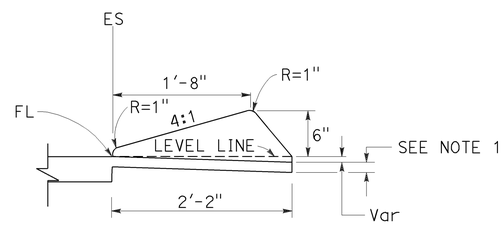

TYPE D

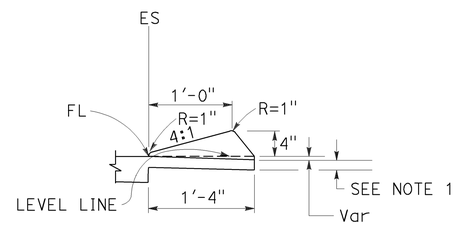

TYPE E

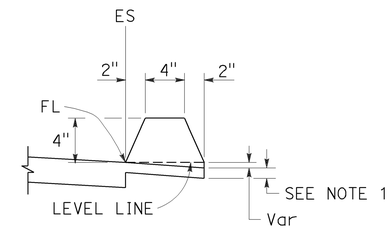

TYPE F
See Note 5

DIKES

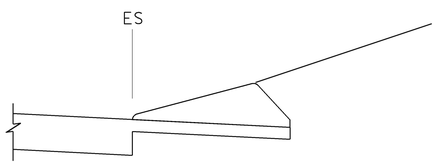

CASE C-1
Cut Slope

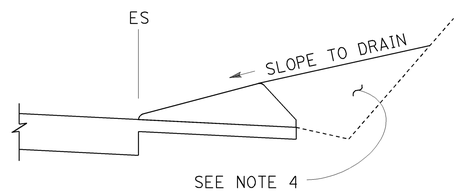

CASE C-2
Cut Slope

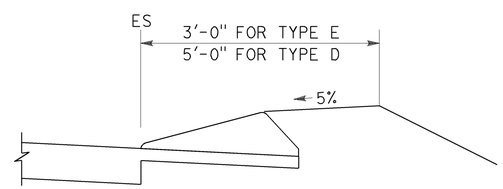

CASE F

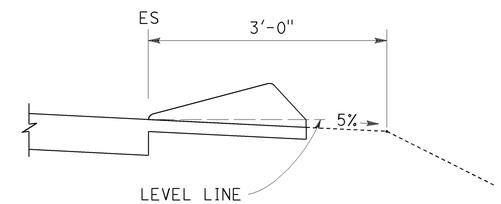

CASE R
See Note 2

TYPE D AND E BACKFILL DETAILS

NOTES:

1. For HMA shoulders only, extend top layer of HMA placed on the shoulder under dike with no joint at the ES. For projects with OGFC shoulders, do not extend OGFC under dike. See project plans for modified dike detail.
2. Case R applies to retrofit only projects where restrictive conditions do not provide enough width for Case F backfill.
3. Type A dike only to be used where restrictive slope conditions do not provide enough width to use Type D or Type E dike.
4. Fill and compact with excavated material to top of dike.
5. Use Type F dike, where dike is required with guard railing installations. See Revised Standard Plan RSP A77N4 for dike positioning details.

DIKE QUANTITIES

TYPE	CUBIC YARDS PER LINEAR FOOT
A	0.0135
C	0.0038
D	0.0293
E	0.0130
F	0.0066

Quantities based on 5% cross slope.

STATE OF CALIFORNIA
DEPARTMENT OF TRANSPORTATION

HOT MIX ASPHALT DIKES

NO SCALE

RSP A87B DATED JULY 19, 2013 SUPERSEDES STANDARD PLAN A87B DATED MAY 20, 2011 - PAGE 120 OF THE STANDARD PLANS BOOK DATED 2010.

REVISED STANDARD PLAN RSP A87B

2010 REVISED STANDARD PLAN RSP A87B

6-27-13

Dist	COUNTY	ROUTE	POST MILES TOTAL PROJECT	SHEET No.	TOTAL SHEETS
10	Mer,Sta, SJ	5	32.2/32.5, 0.0/28.1, 0.0/R12.4	92	112

William K. Farnbach
REGISTERED CIVIL ENGINEER

July 19, 2013
PLANS APPROVAL DATE

REGISTERED PROFESSIONAL ENGINEER William K. Farnbach No. C49042 Exp. 9-30-14 CIVIL STATE OF CALIFORNIA

THE STATE OF CALIFORNIA OR ITS OFFICERS OR AGENTS SHALL NOT BE RESPONSIBLE FOR THE ACCURACY OR COMPLETENESS OF SCANNED COPIES OF THIS PLAN SHEET.

TO ACCOMPANY PLANS DATED 02-18-14

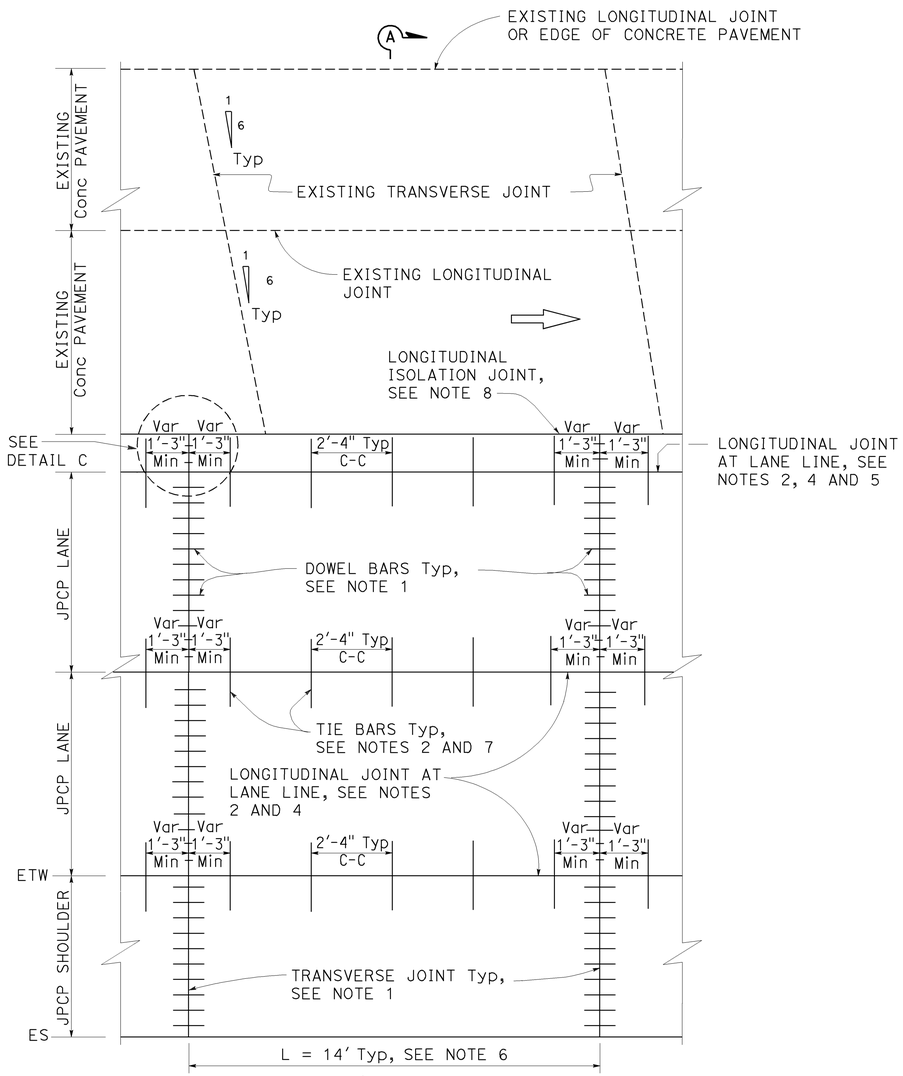

PLAN
ISOLATED
See Note 3

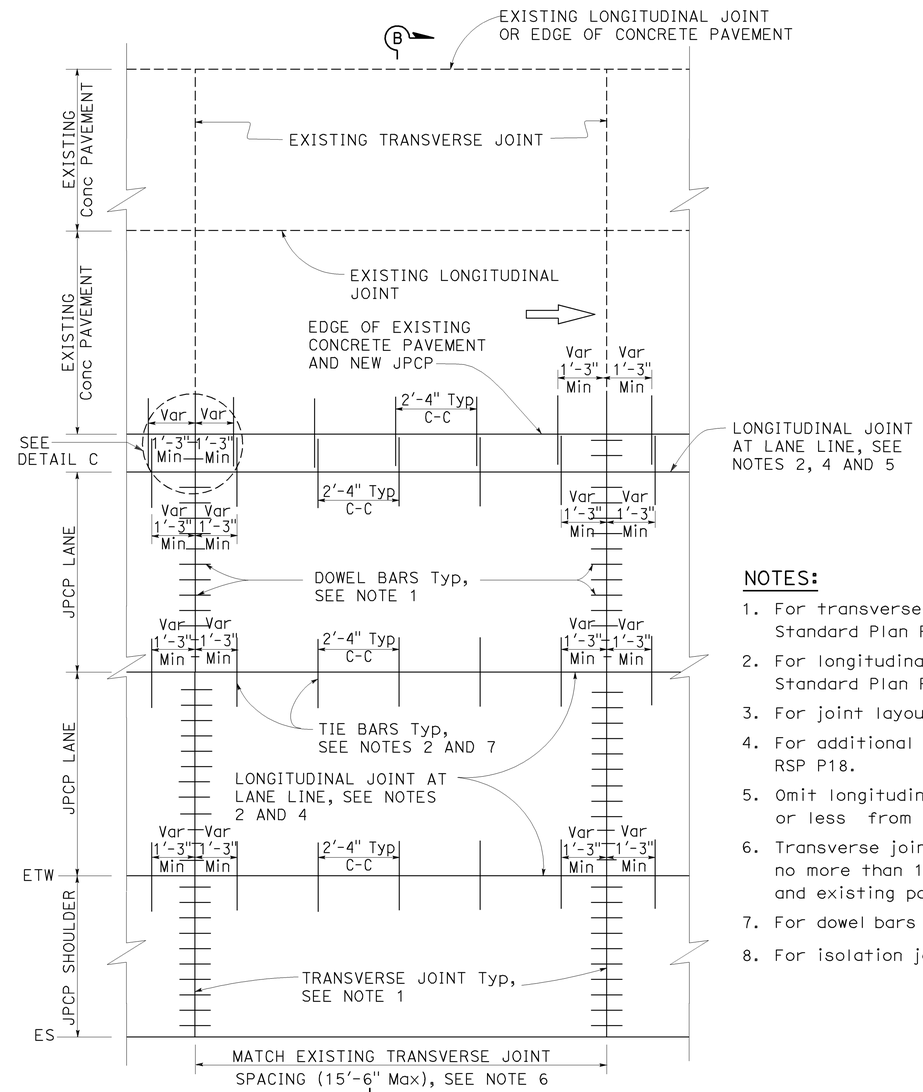

PLAN
TIED
See Note 3

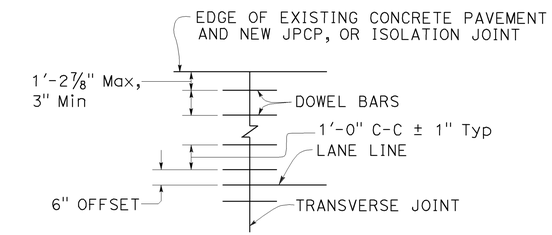

DETAIL C

NOTES:

1. For transverse joint and dowel bar details not shown, see Revised Standard Plan RSP P10.
2. For longitudinal joint and tie bar details not shown, see Revised Standard Plan RSP P15.
3. For joint layout at intersections, see Project Plans.
4. For additional longitudinal joint details, see Revised Standard Plan RSP P18.
5. Omit longitudinal joint when edge of new concrete pavement is 3'-3" or less from JPCP lane line.
6. Transverse joint spacing may be adjusted to no less than 10' and no more than 15'-6" to conform to bridges, change in pavement type and existing pavement.
7. For dowel bars at longitudinal joint. see Revised Standard Plan RSP P18.
8. For isolation joints, see Detail A on Revised Standard Plan RSP P18.

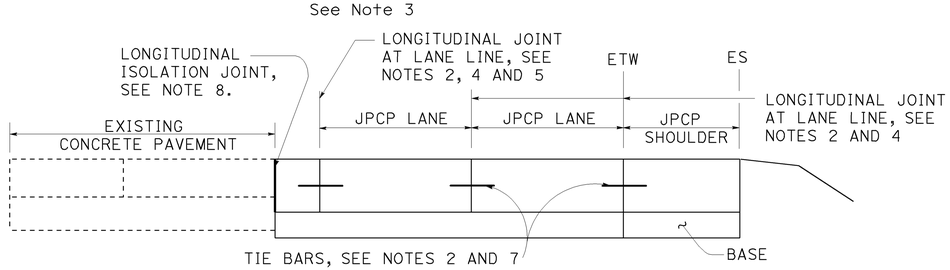

SECTION A-A

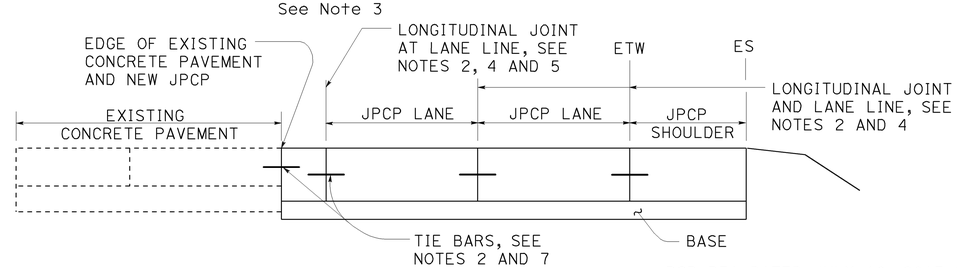

SECTION B-B

STATE OF CALIFORNIA
DEPARTMENT OF TRANSPORTATION

JOINTED PLAIN CONCRETE PAVEMENT LANE & SHOULDER ADDITION OR REPLACEMENT

NO SCALE

RSP P3A DATED JULY 19, 2013 SUPPLEMENTS THE STANDARD PLANS BOOK DATED 2010.

REVISED STANDARD PLAN RSP P3A

2010 REVISED STANDARD PLAN RSP P3A

5-31-13

Dist	COUNTY	ROUTE	POST MILES TOTAL PROJECT	SHEET No.	TOTAL SHEETS
10	Mer,Sta, SJ	5	32.2/32.5, 0.0/28.1, 0.0/R12.4	93	112

William K. Farnbach
REGISTERED CIVIL ENGINEER

July 19, 2013
PLANS APPROVAL DATE

REGISTERED PROFESSIONAL ENGINEER William K. Farnbach No. C49042 Exp. 9-30-14 CIVIL STATE OF CALIFORNIA

THE STATE OF CALIFORNIA OR ITS OFFICERS OR AGENTS SHALL NOT BE RESPONSIBLE FOR THE ACCURACY OR COMPLETENESS OF SCANNED COPIES OF THIS PLAN SHEET.

TO ACCOMPANY PLANS DATED 02-18-14

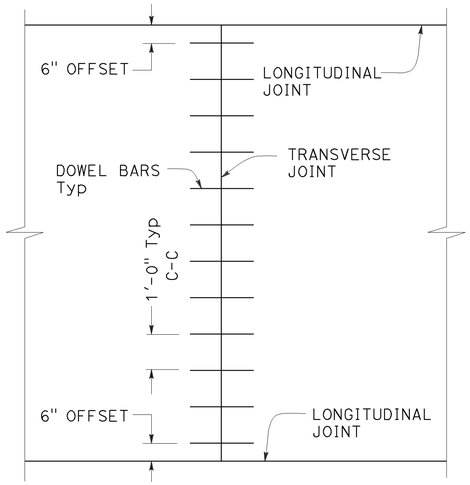

TRANSVERSE JOINT DOWEL BAR LAYOUT

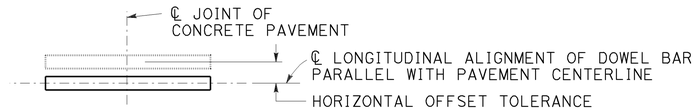

PLAN

HORIZONTAL OFFSET TOLERANCE

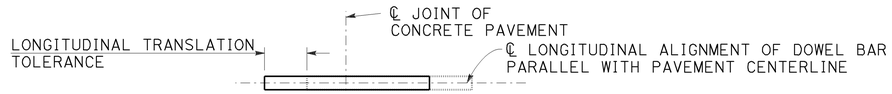

PLAN

LONGITUDINAL TRANSLATION TOLERANCE

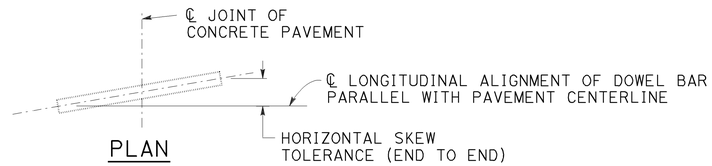

PLAN

HORIZONTAL SKEW TOLERANCE

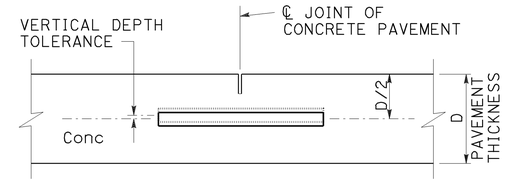

ELEVATION

VERTICAL DEPTH TOLERANCE

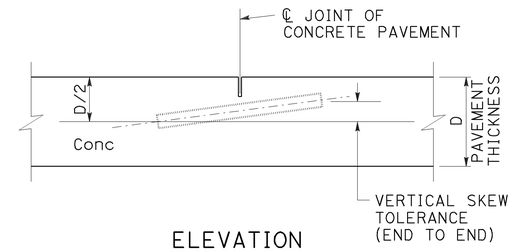

ELEVATION

VERTICAL SKEW TOLERANCE

NOTES:

1. See Revised Standard Plan RSP P1 for typical dowel bar placement and locations.
2. Where fresh concrete pavement is placed against new concrete or existing concrete pavement, rounding the corner of the existing concrete pavement is not required.
3. May also use ¾" Dia dowel bars 2'-4" ± ¼" in length. Center the length of dowel bars at the centerline of longitudinal joint.

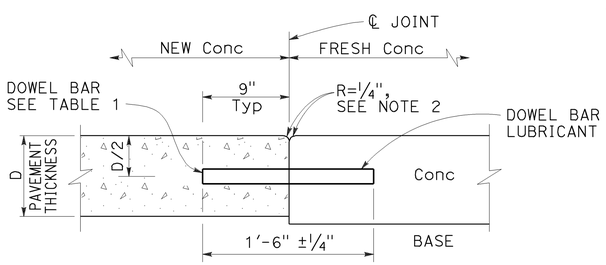

TRANSVERSE CONSTRUCTION JOINT DETAIL

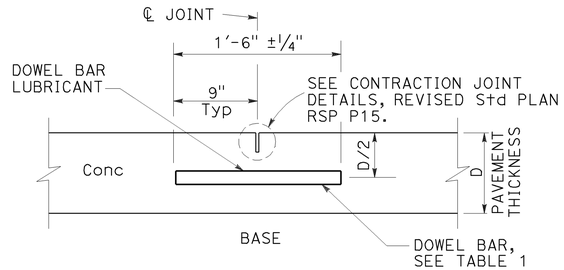

TRANSVERSE CONTRACTION JOINT

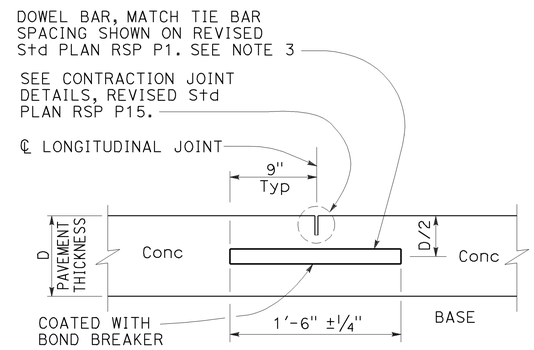

LONGITUDINAL CONTRACTION JOINT WITH DOWEL BARS

See Revised Std Plan RSP P18

TABLE 1

DOWEL BAR DIAMETER TABLE			
PAVEMENT THICKNESS	0.65'	> 0.65' - 0.85'	> 0.85'
MINIMUM DOWEL * BAR DIAMETER	1"	1¼"	1½"

* The drilled hole diameter must be ⅛" to 3/16" larger than the bar diameter.

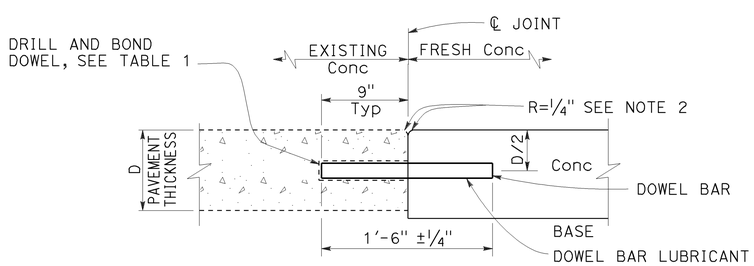

TRANSVERSE CONSTRUCTION JOINT FOR EXISTING CONCRETE PAVEMENT

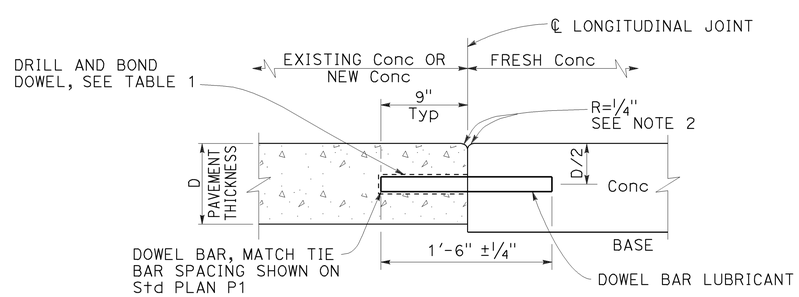

LONGITUDINAL CONSTRUCTION JOINT WITH DOWEL BARS

See Revised Std Plan RSP P18

STATE OF CALIFORNIA
DEPARTMENT OF TRANSPORTATION

CONCRETE PAVEMENT DOWEL BAR DETAILS

NO SCALE

RSP P10 DATED JULY 19, 2013 SUPERSEDES RSP P10 DATED APRIL 20, 2012 AND STANDARD PLAN P10 DATED MAY 20, 2011 - PAGE 131 OF THE STANDARD PLANS BOOK DATED 2010.

REVISED STANDARD PLAN RSP P10

2010 REVISED STANDARD PLAN RSP P10

5-31-13

Dist	COUNTY	ROUTE	POST MILES TOTAL PROJECT	SHEET No.	TOTAL SHEETS
10	Mer,Sta, SJ	5	32.2/32.5, 0.0/28.1, 0.0/R12.4	94	112

REGISTERED CIVIL ENGINEER

November 15, 2013
PLANS APPROVAL DATE

REGISTERED PROFESSIONAL ENGINEER Cornelis M. Hakim No. C55610 Exp. 12-31-14 CIVIL STATE OF CALIFORNIA

THE STATE OF CALIFORNIA OR ITS OFFICERS OR AGENTS SHALL NOT BE RESPONSIBLE FOR THE ACCURACY OR COMPLETENESS OF SCANNED COPIES OF THIS PLAN SHEET.

TO ACCOMPANY PLANS DATED 02-18-14

ABBREVIATIONS:

SE SAFETY EDGE

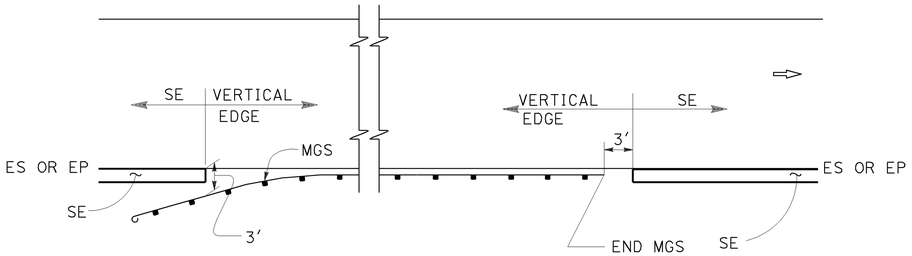

MGS

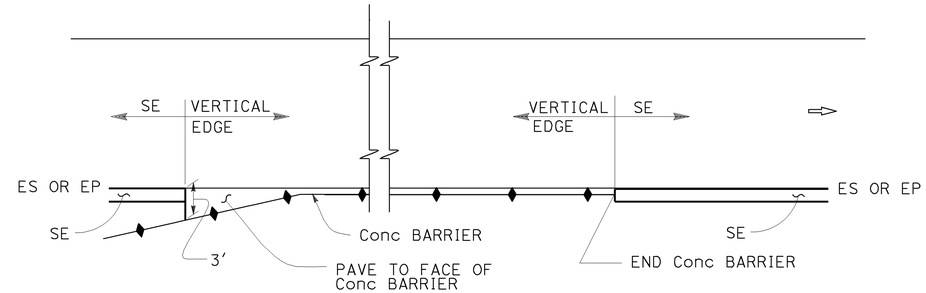

CONCRETE BARRIER

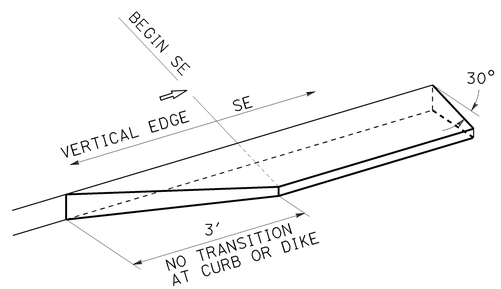

TRANSITION DETAIL FOR CONCRETE ONLY

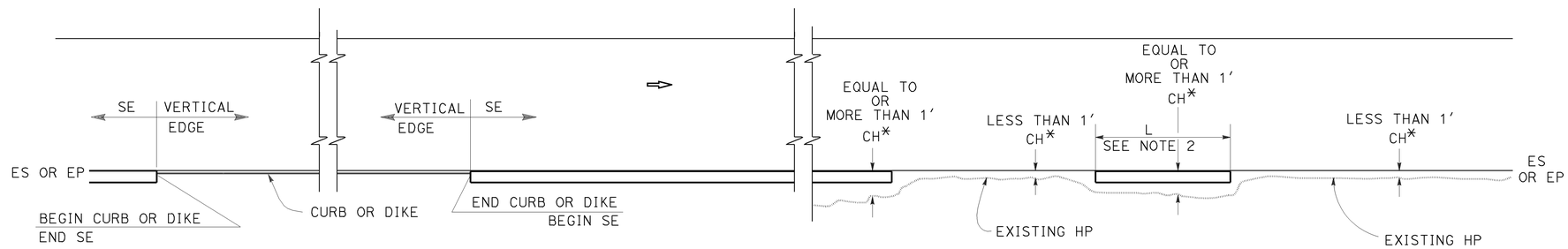

CURB OR DIKE

NARROW SIDE SLOPE

* CH = Distance from ES or EP to existing HP.

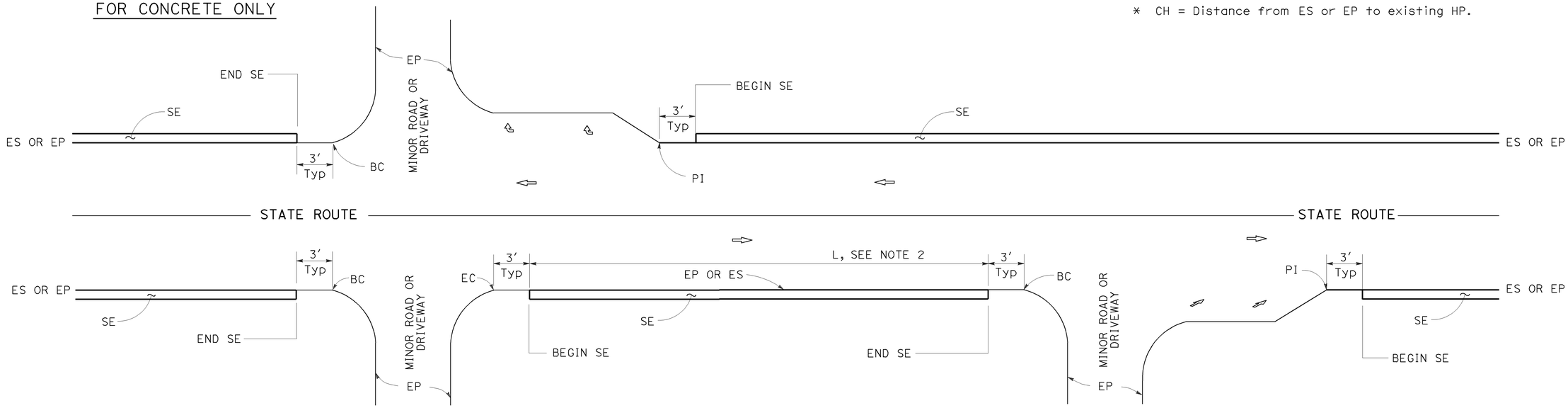

INTERSECTION

MINOR ROADWAY OR DRIVEWAY

DRIVEWAY AND INTERSECTION

NOTES:

1. For details not shown, see Revised Standard Plans RSP P75 and RSP P76.
2. Safety edge is optional when L is less than 30′.

STATE OF CALIFORNIA
DEPARTMENT OF TRANSPORTATION

PAVEMENT EDGE TREATMENTS

NO SCALE

RSP P74 DATED NOVEMBER 15, 2013 SUPERSEDES RSP P74 DATED JANUARY 20, 2012 THAT SUPPLEMENTS THE STANDARD PLANS BOOK DATED 2010.

REVISED STANDARD PLAN RSP P74

2010 REVISED STANDARD PLAN RSP P74

10-11-13

Dist	COUNTY	ROUTE	POST MILES TOTAL PROJECT	SHEET No.	TOTAL SHEETS
10	Mer,Sta, SJ	5	32.2/32.5, 0.0/28.1, 0.0/R12.4	95	112

REGISTERED CIVIL ENGINEER

November 15, 2013
PLANS APPROVAL DATE

REGISTERED PROFESSIONAL ENGINEER Cornelis M. Hakim No. C55610 Exp. 12-31-14 CIVIL STATE OF CALIFORNIA

THE STATE OF CALIFORNIA OR ITS OFFICERS OR AGENTS SHALL NOT BE RESPONSIBLE FOR THE ACCURACY OR COMPLETENESS OF SCANNED COPIES OF THIS PLAN SHEET.

TO ACCOMPANY PLANS DATED 02-18-14

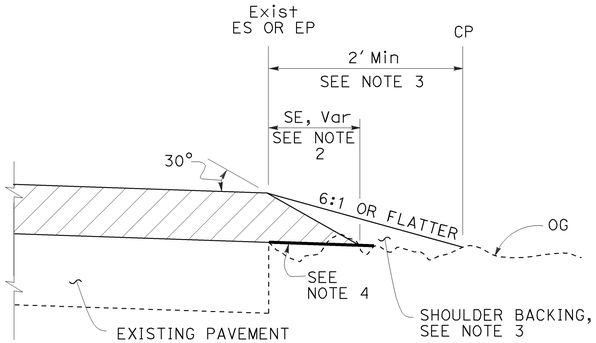

CASE A
Safety Edge

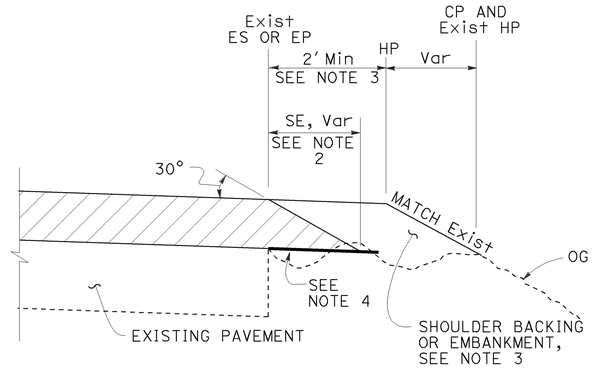

CASE B
Safety Edge

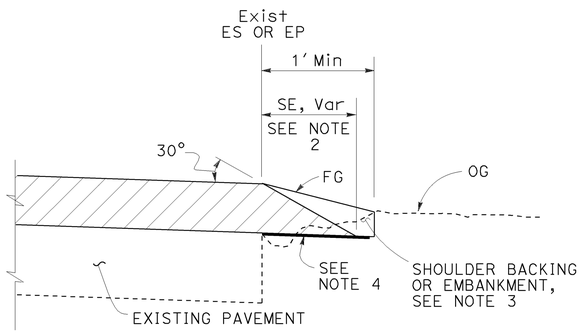

CASE C
Safety Edge

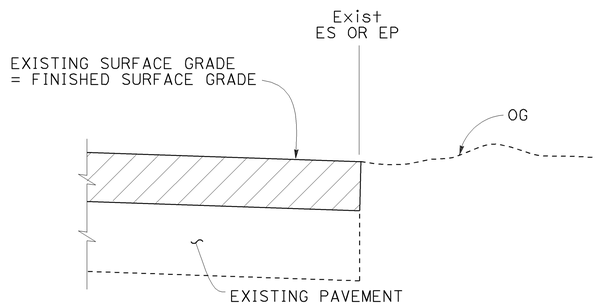

CASE D
Vertical Edge

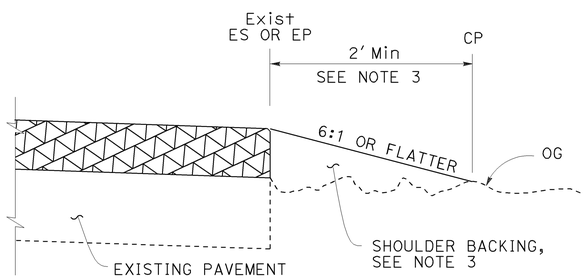

CASE E
Vertical Edge

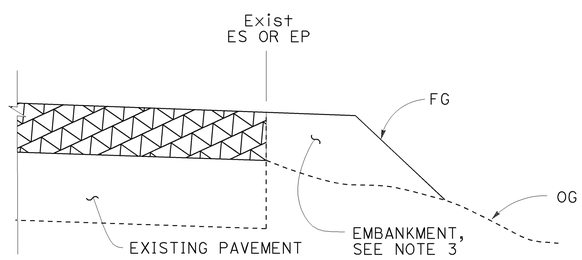

CASE F
Vertical Edge
* See Table A and Revised Std Plan RSP P74

LEGEND:

- HMA OVERLAY
- HMA OR CONCRETE OVERLAY
- CONCRETE OVERLAY

ABBREVIATIONS:

SE SAFETY EDGE
TT TOTAL THICKNESS OF SE

TABLE A
EDGE TREATMENT FOR VARIOUS OVERLAY THICKNESS AND CONDITIONS

	OVERLAY THICKNESS	
FIELD CONDITION	LESS THAN 0.15'	0.15' OR MORE
Exist SLOPE 6:1 OR FLATTER	CASE E	CASE A
Exist SLOPE 3:1 TO 6:1	CASE E	CASE B
Exist SLOPE STEEPER THAN 3:1	CASE F	CASE F
CUT SECTION (REPLACE, COLD PLANE, MILL PAVEMENT)	CASE D	CASE C

ADDITIONAL HMA OR CONCRETE QUANTITIES FOR SE/SIDE/MILE

TYPICAL CROSS SECTION	TT	TOTAL ADDITIONAL MATERIAL FOR SE/SIDE/MILE		
		HMA (TON)	CONCRETE (CY)*	CONCRETE (CY)**
TT	0.15'	NA	NA	NA
	0.20'	13.7	NA	NA
	0.30'	30.9	NA	NA
	0.40'	54.9	NA	NA
	0.45'	69.4	NA	NA
TT 0.43'	0.50'	84.2	NA	NA
	0.60'	113.9	NA	NA
	0.70'	143.6	70.9	94.2
	0.80'	173.3	85.6	112.2
	0.90'	203.0	100.3	130.2
	1.00'	232.7	114.9	148.2
	1.10'	262.4	129.6	166.2
	1.20'	292.1	144.3	184.2

* For Detail "A"
** For Optional Detail "A"

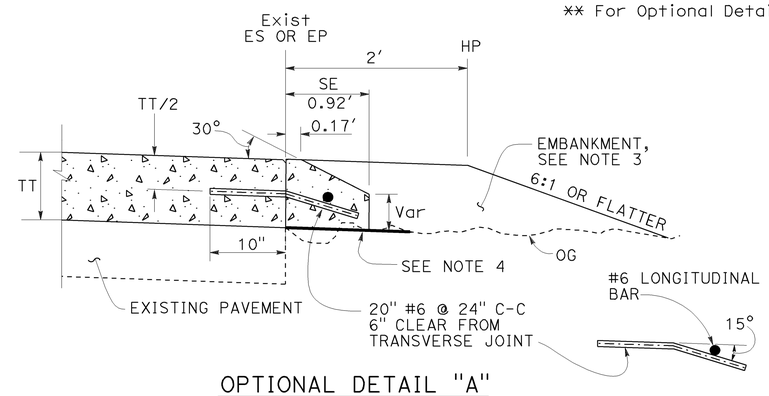

OPTIONAL DETAIL "A"
For concrete overlay
See Note 5

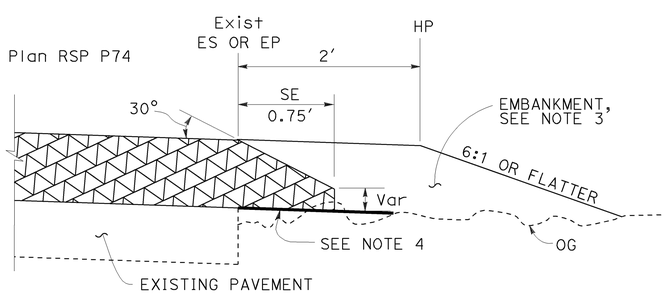

DETAIL "A"
For HMA overlay thickness more than 0.43' or concrete overlay

NOTES:

1. For limits of safety edge and vertical edge treatments, see Revised Standard Plan RSP P74.
2. Details shown for HMA overlay thickness less than 0.43'. See Detail "A" for HMA overlay thickness more than 0.43' or concrete overlay.
3. For locations and limits of shoulder backing or embankment see project plans.
4. Grade existing ground to place safety edge. 1' minimum width
5. Safety edge transverse joint must match overlay transverse joint. End of #6 longitudinal bar must be 2" ±½" clear from transverse joint.
6. Safety edge is not needed in the area of MGS, barrier, right turn lane and acceleration lane. See Revised Standard Plan RSP P74.

STATE OF CALIFORNIA
DEPARTMENT OF TRANSPORTATION

PAVEMENT EDGE TREATMENTS-OVERLAYS

NO SCALE

RSP P75 DATED NOVEMBER 15, 2013 SUPERSEDES RSP P75 DATED JANUARY 20, 2012 THAT SUPPLEMENTS THE STANDARD PLANS BOOK DATED 2010.

REVISED STANDARD PLAN RSP P75

2010 REVISED STANDARD PLAN RSP P75

10-4-13

Dist	COUNTY	ROUTE	POST MILES TOTAL PROJECT	SHEET No.	TOTAL SHEETS
10	Mer,Sta, SJ	5	32.2/32.5, 0.0/28.1, 0.0/R12.4	96	112

REGISTERED CIVIL ENGINEER

July 19, 2013
PLANS APPROVAL DATE

REGISTERED PROFESSIONAL ENGINEER Gurinderpal Bhullar No. C48815 Exp. 9-30-14 CIVIL STATE OF CALIFORNIA

THE STATE OF CALIFORNIA OR ITS OFFICERS OR AGENTS SHALL NOT BE RESPONSIBLE FOR THE ACCURACY OR COMPLETENESS OF SCANNED COPIES OF THIS PLAN SHEET.

TO ACCOMPANY PLANS DATED 02-18-14

TABLE 1

TAPER LENGTH CRITERIA AND CHANNELIZING DEVICE SPACING

SPEED (S)	MINIMUM TAPER LENGTH * FOR WIDTH OF OFFSET 12 FEET (W)				MAXIMUM CHANNELIZING DEVICE SPACING		
					X	Y	Z **
	TANGENT 2L	MERGING L	SHIFTING L/2	SHOULDER L/3	TAPER	TANGENT	CONFLICT
mph	ft	ft	ft	ft	ft	ft	ft
20	160	80	40	27	20	40	10
25	250	125	63	42	25	50	12
30	360	180	90	60	30	60	15
35	490	245	123	82	35	70	17
40	640	320	160	107	40	80	20
45	1080	540	270	180	45	90	22
50	1200	600	300	200	50	100	25
55	1320	660	330	220	55	110	27
60	1440	720	360	240	60	120	30
65	1560	780	390	260	65	130	32
70	1680	840	420	280	70	140	35

* - For other offsets, use the following merging taper length formula for L:
For speed of 40 mph or less, $L = WS^2/60$
For speed of 45 mph or more, $L = WS$

Where: L = Taper length in feet
W = Width of offset in feet
S = Posted speed limit, off-peak 85th-percentile speed prior to work starting, or the anticipated operating speed in mph

** - Use for taper and tangent sections where there are no pavement markings or where there is a conflict between existing pavement markings and channelizers (CA).

TABLE 2

LONGITUDINAL BUFFER SPACE AND FLAGGER STATION SPACING

SPEED *	Min D **	DOWNGRADE Min D ***		
		-3%	-6%	-9%
mph	ft	ft	ft	ft
20	115	116	120	126
25	155	158	165	173
30	200	205	215	227
35	250	257	271	287
40	305	315	333	354
45	360	378	400	427
50	425	446	474	507
55	495	520	553	593
60	570	598	638	686
65	645	682	728	785
70	730	771	825	891

* - Speed is posted speed limit, off-peak 85th-percentile speed prior to work starting, or the anticipated operating speed in mph

** - Longitudinal buffer space or flagger station spacing

*** - Use on sustained downgrade steeper than -3 percent and longer than 1 mile.

TABLE 3

ADVANCE WARNING SIGN SPACING

ROAD TYPE	DISTANCE BETWEEN SIGNS *		
	A	B	C
	ft	ft	ft
URBAN - 25 mph OR LESS	100	100	100
URBAN - MORE THAN 25 mph TO 40 mph	250	250	250
URBAN - MORE THAN 40 mph	350	350	350
RURAL	500	500	500
EXPRESSWAY / FREEWAY	1000	1500	2640

* - The distances are approximate, are intended for guidance purposes only, and should be applied with engineering judgment. These distances should be adjusted by the Engineer for field conditions, if necessary, by increasing or decreasing the recommmended distances.

STATE OF CALIFORNIA
DEPARTMENT OF TRANSPORTATION

TRAFFIC CONTROL SYSTEM TABLES FOR LANE AND RAMP CLOSURES

NO SCALE

RSP T9 DATED JULY 19, 2013 SUPERSEDES RSP T9 DATED APRIL 19, 2013 THAT SUPPLEMENTS THE STANDARD PLANS BOOK DATED 2010.

REVISED STANDARD PLAN RSP T9

2010 REVISED STANDARD PLAN RSP T9

4-30-13

Dist	COUNTY	ROUTE	POST MILES TOTAL PROJECT	SHEET No.	TOTAL SHEETS
10	Mer,Sta, SJ	5	32.2/32.5, 0.0/28.1, 0.0/R12.4	97	112

REGISTERED CIVIL ENGINEER

April 19, 2013
PLANS APPROVAL DATE

REGISTERED PROFESSIONAL ENGINEER Gurinderpal Bhullar No. C48815 Exp. 9-30-14 CIVIL STATE OF CALIFORNIA

THE STATE OF CALIFORNIA OR ITS OFFICERS OR AGENTS SHALL NOT BE RESPONSIBLE FOR THE ACCURACY OR COMPLETENESS OF SCANNED COPIES OF THIS PLAN SHEET.

TO ACCOMPANY PLANS DATED 02-18-14

NOTES:

See Revised Standard Plan RSP T9 for tables.

Use cone spacing X for taper segment, Y for tangent segment or Z for conflict situations, as approriate, per Table 1, unless X, Y, or Z cone spacing is shown on this sheet.

Unless otherwise specified in the special provisions, all temporary warning signs shall have black legend on fluorescent orange background.

California codes are designated by (CA). Otherwise, Federal (MUTCD) codes are shown.

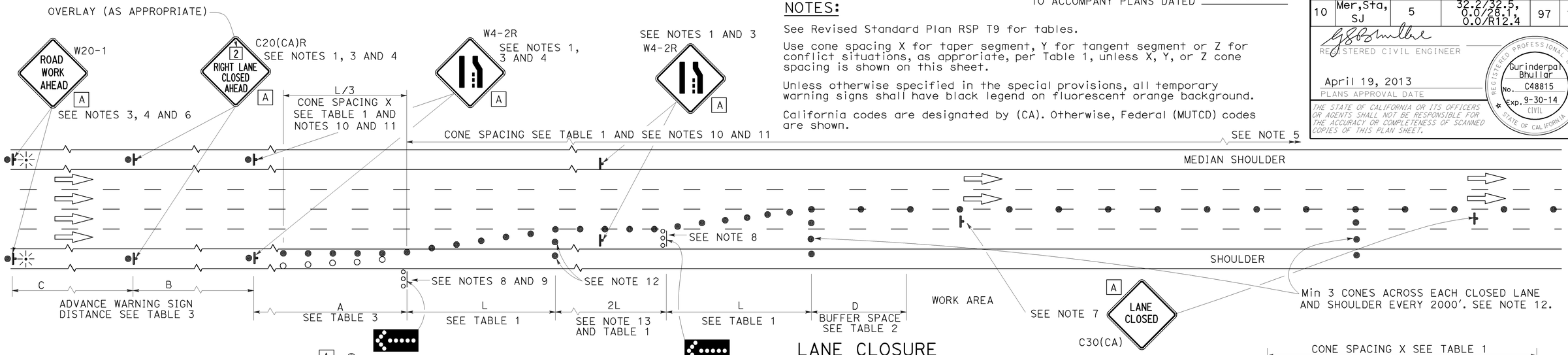

LANE CLOSURE

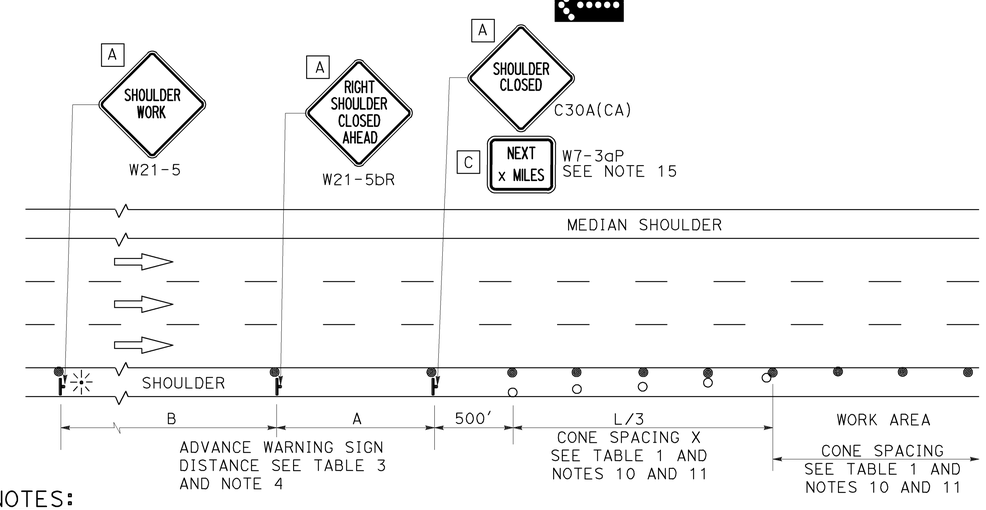

SHOULDER CLOSURE

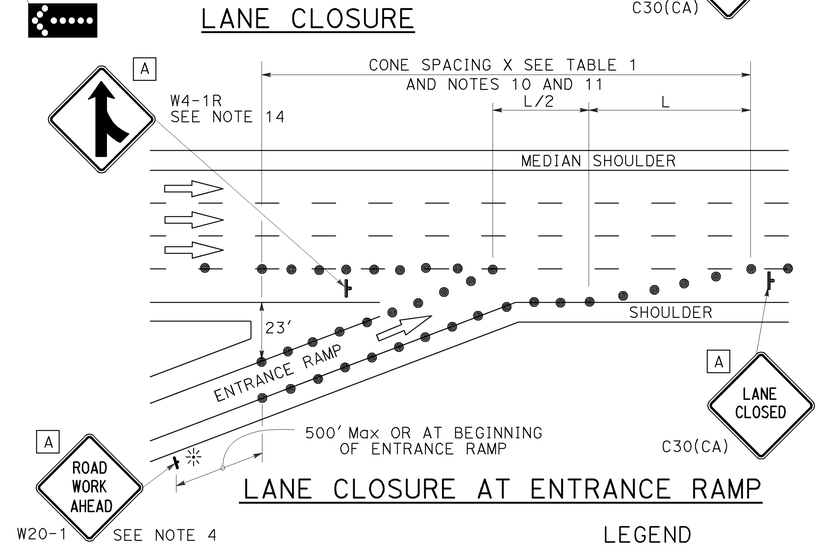

LANE CLOSURE AT ENTRANCE RAMP

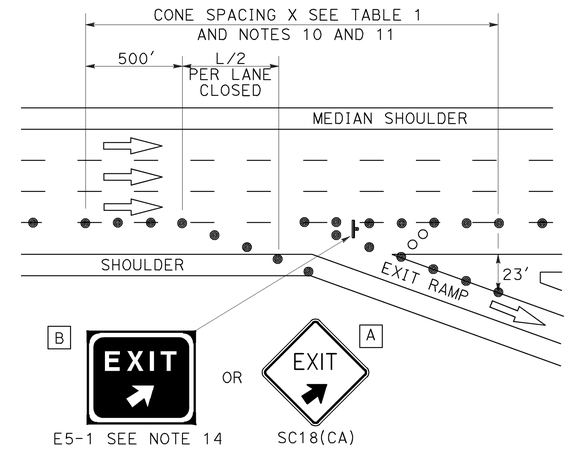

LANE CLOSURE AT EXIT RAMP

NOTES:

1. Median lane closures shall conform to the details as shown except that C20(CA)L and W4-2L signs shall be used.
2. At least one person shall be assigned to provide full time maintenance of traffic control devices for lane closures.
3. Duplicate sign installations are not required:
   a) On opposite shoulder if at least one-half of the available lanes remain open to traffic.
   b) In the median if the width of the median shoulder is less than 8' and the outside lanes are to be closed.
4. Each advance warning sign on each side of the roadway shall be equipped with at least two flags for daytime closure. Each flag shall be at least 16" x 16" in size and shall be orange or fluorescent red-orange in color. Flashing beacons shall be placed at the locations indicated for lane closure during hours of darkness.
5. A G20-2 "END ROAD WORK" sign, with minimum size of 48" x 24" as appropriate, shall be placed at the end of the lane closure unless the end of work area is obvious or ends within a larger project's limits.
6. If the W20-1 sign would follow within 2000' of a stationary W20-1 or G20-1 "ROAD WORK NEXT _____ MILES", use a C20(CA) sign for the first advance warning sign.
7. Place a C30(CA) sign every 2000' throughout length of lane closure.
8. One flashing arrow sign for each lane closed. The flashing arrow signs shall be Type I.
9. A minimum 1500' of sight distance shall be provided where possible for vehicles approaching the first flashing arrow sign. Lane closures shall not begin at top of crest vertical curve or on a horizontal curve.
10. All cones used for lane closures during the hours of darkness shall be fitted with retroreflective bands (or sleeves) as specified in the specifications.
11. Portable delineators, placed at one-half the spacing indicated for traffic cones may be used instead of cones for daytime closures only.
12. Unless otherwise specified in the special provisions, a minimum of 3 cones shall be placed transversely across each closed lane and shoulder at each location where a taper across a traffic lane ends and every 2000' as shown on the "Lane Closure" detail. Two Type II barricades may be used instead of the 3 cones. The transverse alignment of the cones or barricades on the closed shoulder may be shifted from the transverse alignment to provide access to the work.
13. Unless otherwise specified in the special provisions, the 2L tangent shown along lane lines shall be used between the L tapers required for each closed traffic lane.
14. Unless otherwise specified in the special provisions, the E5-1 or SC18(CA) and W4-1 signs shall be used as shown.
15. A W7-3aP "NEXT____ MILES" plaque must be used if theshoulder closure extends beyond the distance that can be perceived by road users.

LEGEND

- TRAFFIC CONE
- TRAFFIC CONE (OPTIONAL TAPER)
- TEMPORARY TRAFFIC CONTROL SIGN
- FLASHING ARROW SIGN (FAS)
- FAS SUPPORT OR TRAILER
- PORTABLE FLASHING BEACON

SIGN PANEL SIZE (Min)

A	48" x 48"
B	72" x 60"
C	36" x 30"

STATE OF CALIFORNIA
DEPARTMENT OF TRANSPORTATION

TRAFFIC CONTROL SYSTEM FOR LANE CLOSURE ON FREEWAYS AND EXPRESSWAYS

NO SCALE

RSP T10 DATED APRIL 19, 2013 SUPERSEDES STANDARD PLAN T10 DATED MAY 20, 2011 - PAGE 237 OF THE STANDARD PLANS BOOK DATED 2010.

REVISED STANDARD PLAN RSP T10

2010 REVISED STANDARD PLAN RSP T10

12-18-12

Dist	COUNTY	ROUTE	POST MILES TOTAL PROJECT	SHEET No.	TOTAL SHEETS
10	Mer,Sta, SJ	5	32.2/32.5, 0.0/28.1, 0.0/R12.4	98	112

REGISTERED CIVIL ENGINEER

April 19, 2013
PLANS APPROVAL DATE

REGISTERED PROFESSIONAL ENGINEER Gurinderpal Bhullar No. C48815 Exp. 9-30-14 CIVIL STATE OF CALIFORNIA

THE STATE OF CALIFORNIA OR ITS OFFICERS OR AGENTS SHALL NOT BE RESPONSIBLE FOR THE ACCURACY OR COMPLETENESS OF SCANNED COPIES OF THIS PLAN SHEET.

TO ACCOMPANY PLANS DATED 02-18-14

NOTES:

See Revised Standard Plan RSP T9 for tables.

Use cone spacing X for taper segment, Y for tangent segment or Z for conflict situations, as approriate, per Table 1, unless X, Y, or Z cone spacing is shown on this sheet.

Unless otherwise specified in the special provisions, all temporary warning signs shall have black legend on fluorescent orange background.

California codes are designated by (CA). Otherwise, Federal (MUTCD) codes are shown.

TYPICAL LANE CLOSURE WITH REVERSIBLE CONTROL

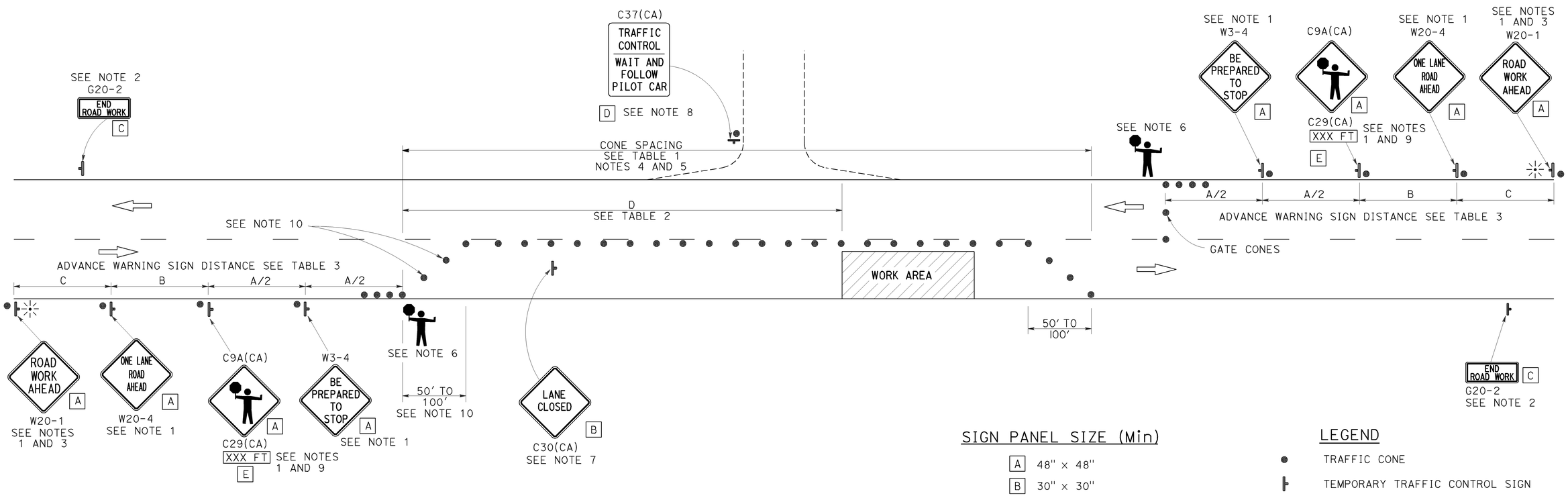

SIGN PANEL SIZE (Min)

A	48" × 48"
B	30" × 30"
C	36" × 18"
D	36" × 42"
E	20" × 7"

LEGEND

- TRAFFIC CONE
- TEMPORARY TRAFFIC CONTROL SIGN
- PORTABLE FLASHING BEACON
- FLAGGER

NOTES:

1. Each advance warning sign in each direction of travel shall be equipped with at least two flags for daytime closure. Each flag shall be at least 16" x 16" in size and shall be orange or fluorescent red-orange in color. Flashing beacons shall be placed at the locations indicated for lane closure during hours of darkness.
2. A G20-2 "END ROAD WORK" sign, as appropriate, shall be placed at the end of the lane control unless the end of work area is obvious, or ends within a larger project's limits.
3. If the W20-1 sign would follow within 2000' of a stationary W20-1 or G20-1 "ROAD WORK NEXT _____ MILES", use a W20-4 sign for the first advance warning sign.
4. All cones used for lane closures during the hours of darkness shall be fitted with retroreflective bands (or sleeves) as specified in the specifications.
5. Portable delineators, placed at one-half the spacing indicated for traffic cones, may be used instead of cones for daytime closures only.
6. Additional advance flaggers may be required. Flagger should stand in a conspicuous place, be visible to approaching traffic as well as approaching vehicles after the first vehicle has stopped. During the hours of darkness, the flagging-station and flagger shall be illuminated and clearly visible to approaching traffic. The illumination footprint of the lighting on the ground shall be at least 20' in diameter. Place a minimum of four cones at 50' intervals in advance of flagger station as shown.
7. Place C30(CA) "LANE CLOSED" sign at 500' to 1000' intervals throughout extended work areas. They are optional if the work area is visible from the flagger station.
8. When a pilot car is used, place a C37(CA) "TRAFFIC CONTROL-WAIT AND FOLLOW PILOT CAR" sign with black legend on white background at all intersections, driveways and alleys without a flagger within traffic control area. Signs shall be clean and visible at all times. Where traffic can not be effectively self-regulated, at least one flagger shall be used at each intersection within traffic control area.
9. An optional C29(CA) sign may be placed below the C9A(CA) sign.
10. Either traffic cones or barricades shall be placed on the taper. Barricades shall be Type I, II, or III.

STATE OF CALIFORNIA
DEPARTMENT OF TRANSPORTATION

TRAFFIC CONTROL SYSTEM FOR LANE CLOSURE ON TWO LANE CONVENTIONAL HIGHWAYS

NO SCALE

RSP T13 DATED APRIL 19, 2013 SUPERSEDES STANDARD PLAN T13 DATED MAY 20, 2011 - PAGE 241 OF THE STANDARD PLANS BOOK DATED 2010.

REVISED STANDARD PLAN RSP T13

2010 REVISED STANDARD PLAN RSP T13

4-2-13

Dist	COUNTY	ROUTE	POST MILES TOTAL PROJECT	SHEET No.	TOTAL SHEETS
10	Mer,Sta, SJ	5	32.2/32.5, 0.0/28.1, 0.0/R12.4	99	112

REGISTERED CIVIL ENGINEER

April 19, 2013
PLANS APPROVAL DATE

REGISTERED PROFESSIONAL ENGINEER Gurinderpal Bhullar No. C48815 Exp. 9-30-14 CIVIL STATE OF CALIFORNIA

THE STATE OF CALIFORNIA OR ITS OFFICERS OR AGENTS SHALL NOT BE RESPONSIBLE FOR THE ACCURACY OR COMPLETENESS OF SCANNED COPIES OF THIS PLAN SHEET.

TO ACCOMPANY PLANS DATED 02-18-14

TYPICAL RAMP CLOSURES

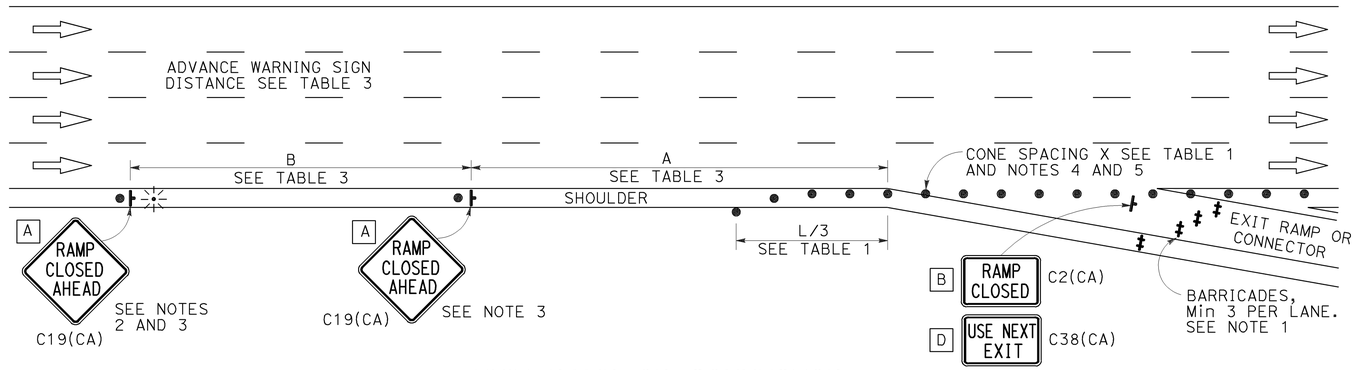

EXIT RAMP OR CONNECTOR

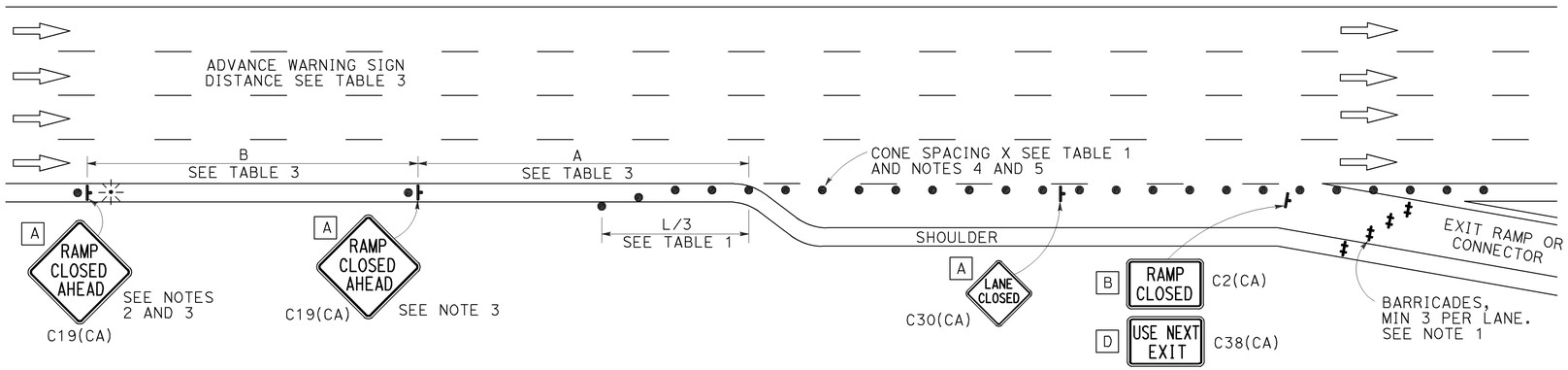

EXIT RAMP OR CONNECTOR WITH ADDITIONAL LANE

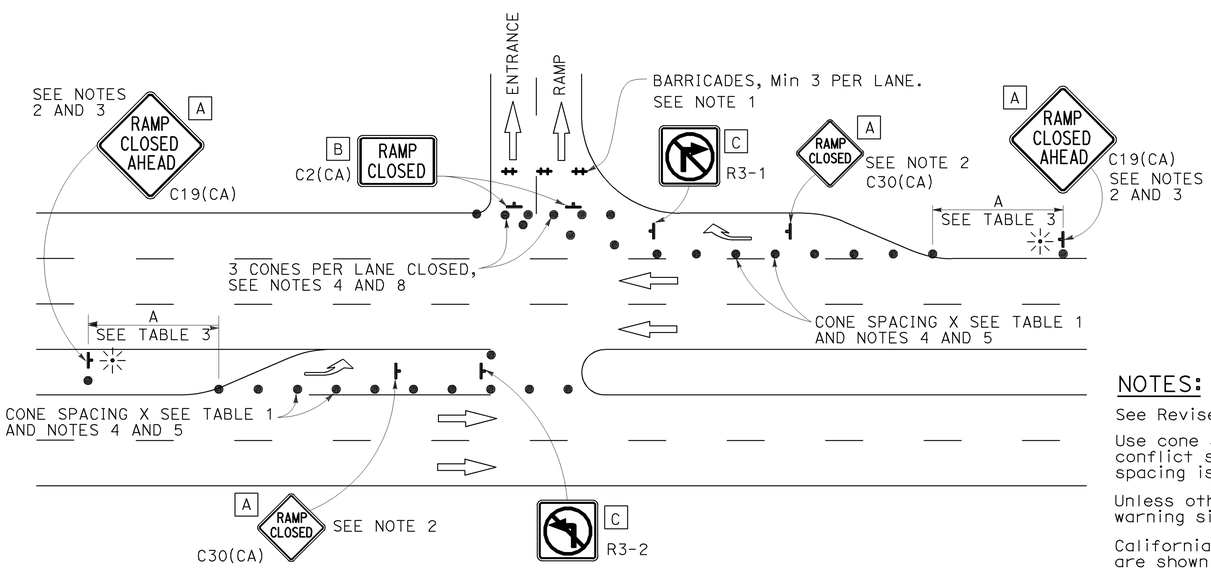

ENTRANCE RAMP WITH TURNING POCKETS

SIGN PANEL SIZE (Min)

- A 48" × 48"
- B 48" × 30"
- C 36" × 36"
- D 48" × 36"

LEGEND

- TRAFFIC CONE
- TEMPORARY TRAFFIC CONTROL SIGN
- BARRICADES
- PORTABLE FLASHING BEACON

NOTES:

1. Barricades shall be Type I, II, or III for closures lasting one week or less and Type III for closures lasting longer than one week.
2. In addition to placing the C19(CA) "RAMP CLOSED AHEAD" and C30(CA) "RAMP CLOSED" signs, black on orange overlay plates with the word "CLOSED" may be mounted, as directed by the Engineer, on all guide signs that refer to the closed ramp. The letter size on the overlay shall be the same as the guide sign.
3. Each advance C19(CA) "RAMP CLOSED AHEAD" sign shall be equipped with at least two flags for daytime closure. Each flag shall be at least 16" × 16" in size and shall be orange or fluorescent red-orange in color. A flashing beacon shall be placed on top of the first C19(CA) sign during hours of darkness.
4. All cones used for ramp closures during the hours of darkness shall be fitted with retroreflective bands (or sleeves) as specified in the specifications.
5. Portable delineators, placed at one-half the spacing indicated for traffic cones, may be used instead of cones for daytime ramp closures only.
6. At least one person shall be assigned to provide full time maintenance of traffic control devices, unless otherwise directed by the Engineer.
7. The existing "EXIT" signs shall be covered during ramp closures.
8. A minimum of 3 cones shall be placed transversely across each closed lane and shoulder.

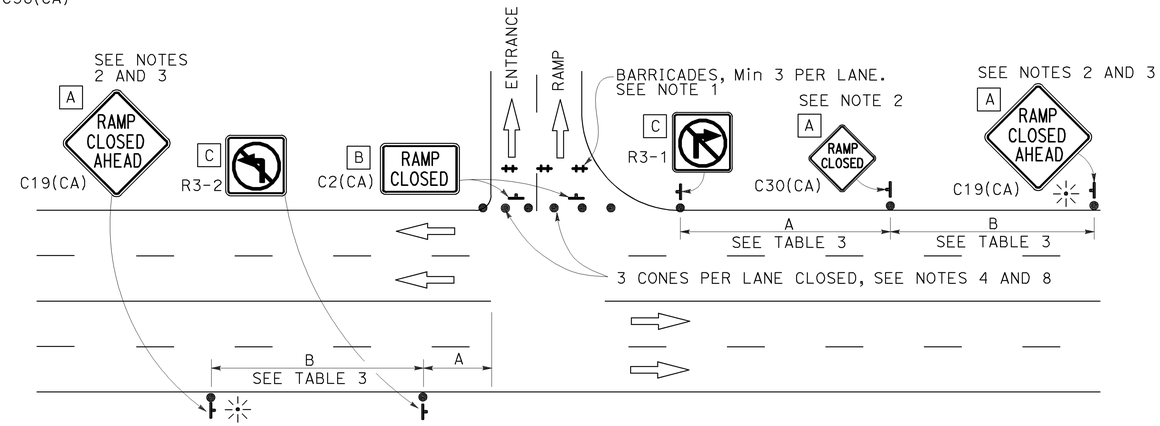

ENTRANCE RAMP WITHOUT TURNING POCKETS

NOTES:

See Revised Standard Plan RSP T9 for tables.

Use cone spacing X for taper segment, Y for tangent segment or Z for conflict situations, as approriate, per Table 1, unless X, Y, or Z cone spacing is shown on this sheet.

Unless otherwise specified in the special provisions, all temporary warning signs shall have black legend on fluorescent orange background.

California codes are designated by (CA). Otherwise, Federal (MUTCD) codes are shown.

STATE OF CALIFORNIA
DEPARTMENT OF TRANSPORTATION

TRAFFIC CONTROL SYSTEM FOR RAMP CLOSURE

NO SCALE

RSP T14 DATED APRIL 19, 2013 SUPERSEDES STANDARD PLAN T14 DATED MAY 20, 2011 - PAGE 242 OF THE STANDARD PLANS BOOK DATED 2010.

REVISED STANDARD PLAN RSP T14

2010 REVISED STANDARD PLAN RSP T14

12-18-12

Dist	COUNTY	ROUTE	POST MILES TOTAL PROJECT	SHEET No.	TOTAL SHEETS
10	Mer,Sta, SJ	5	32.2/32.5, 0.0/28.1, 0.0/R12.4	100	112

REGISTERED CIVIL ENGINEER

April 19, 2013
PLANS APPROVAL DATE

REGISTERED PROFESSIONAL ENGINEER Gurinderpal Bhullar No. C48815 Exp. 9-30-14 CIVIL STATE OF CALIFORNIA

THE STATE OF CALIFORNIA OR ITS OFFICERS OR AGENTS SHALL NOT BE RESPONSIBLE FOR THE ACCURACY OR COMPLETENESS OF SCANNED COPIES OF THIS PLAN SHEET.

TO ACCOMPANY PLANS DATED 02-18-14

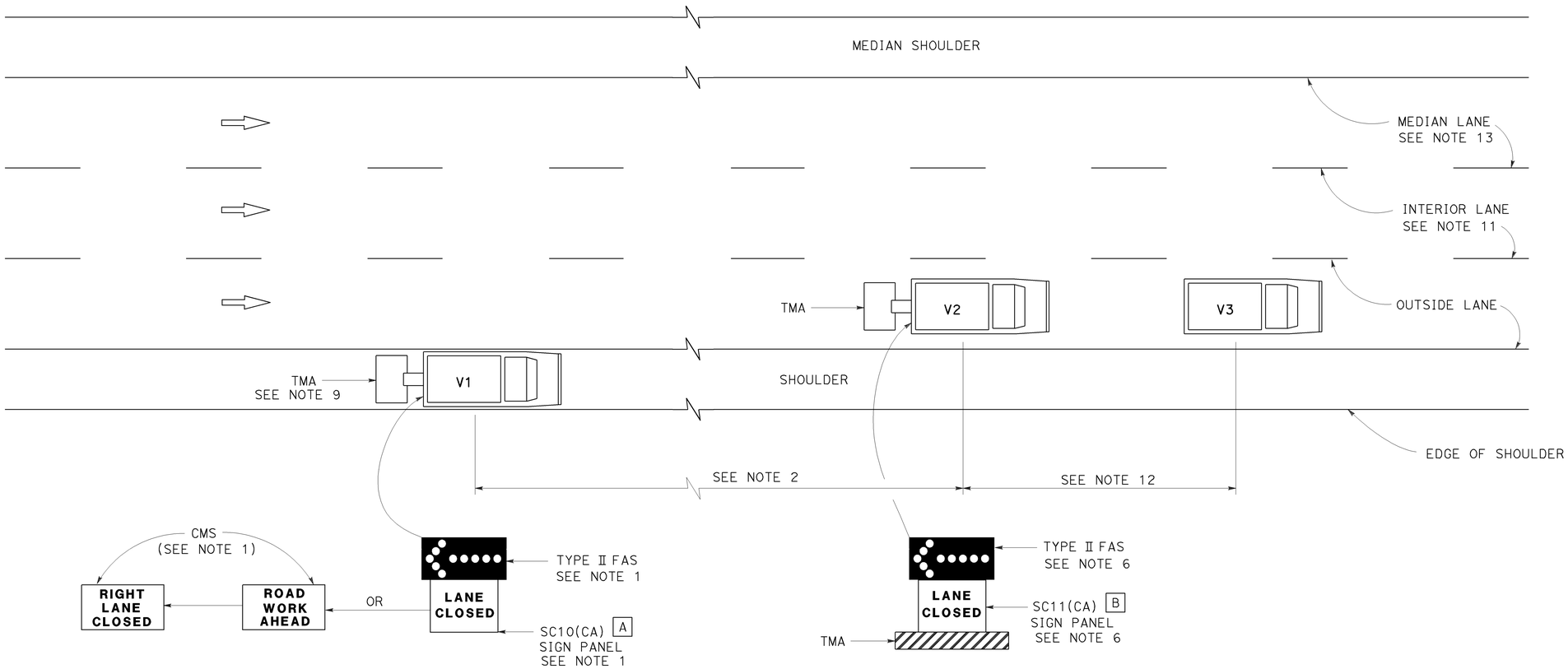

MOVING LANE CLOSURE ON MEDIAN LANE OR OUTSIDE LANE OF MULTILANE HIGHWAYS

SIGN PANEL SIZE (Min)

A 66" x 36"

B 54" x 42"

LEGEND

V1	SIGN VEHICLE
V2	SHADOW VEHICLE
V3	WORK/APPLICATION VEHICLE
	FLASHING ARROW SIGN (FAS)
CMS	CHANGEABLE MESSAGE SIGN
TMA	TRUCK-MOUNTED ATTENUATOR

NOTES:

1. Either a changeable message sign or a SC10(CA) sign panel and a Type II flashing arrow sign shall be mounted on the rear of sign vehicle V1. The changeable message sign shall be sequenced to show the "ROAD WORK AHEAD" message first, followed by the "RIGHT LANE CLOSED" message. For median lane closure, the flashing arrow symbol shall be reversed with the arrowhead on the right and the changeable message sign shall show "LEFT LANE CLOSED".
2. If traffic queues develop, sign vehicle V1 should be positioned upstream from the end of queue. Sign vehicle V1 shall be positioned where highly visible when shoulders are not available.
3. A minimum sight distance of 1500′ should be provided in advance of sign vehicle V1.
4. Sign vehicle V1 should remain at the beginning of horizontal or vertical curves until the other vehicles (V2 and V3) are far enough beyond the curve to resume the minimum sight distance of 1500′.
5. Vehicle-mounted sign panels shall have Type III or above retroreflective sheeting, black on white, or black on fluorescent orange, with 6" minimum series D letters per Caltrans sign specifications.
6. Shadow vehicle V2 shall be equipped with a truck-mounted attenuator. The sign panel shown and a Type II flashing arrow sign shall be mounted on the rear of shadow vehicle V2. For median lane closure the flashing arrow sign symbol shall be displayed with the arrowhead on the right.
7. All vehicles used for lane closures shall be equipped with two-way radios, and the vehicle operators shall maintain communication during the work or application operation.
8. All vehicles shall be equipped with flashing or rotating amber lights.
9. If sign vehicle V1 encroaches into the traffic lane due to insufficient shoulder width, sign vehicle V1 shall be equipped with a truck-mounted attenuator. Sign vehicle V1 shall stay as close to the edge of shoulder as practicable.
10. Where workers would be on foot in the work area, a stationary type lane closure (Revised Standard Plan T10, T11, etc., as applicable) shall be used instead of this plan.
11. For moving lane closure on interior lane of multilane highways, use Revised Standard Plan T16.
12. The spacing between work vehicle(s) and the shadow vehicles, and between each shadow vehicle should be minimized to deter road users from driving in between.
13. When the work/application vehicle V3 occupies the median lane, sign vehicle V1 should drive in the median shoulder and indicate left lane closed ahead.

STATE OF CALIFORNIA
DEPARTMENT OF TRANSPORTATION

TRAFFIC CONTROL SYSTEM FOR MOVING LANE CLOSURE ON MULTILANE HIGHWAYS

NO SCALE

RSP T15 DATED APRIL 19, 2013 SUPERSEDES STANDARD PLAN T15
DATED MAY 20, 2011 - PAGE 243 OF THE STANDARD PLANS BOOK DATED 2010.

REVISED STANDARD PLAN RSP T15

2010 REVISED STANDARD PLAN RSP T15

12-18-12