Dist	COUNTY	ROUTE	POST MILES TOTAL PROJECT	SHEET No.	TOTAL SHEETS
10	Mer	140	0.0/11.9	1	12

ACSTP-P140(033)E

STATE OF CALIFORNIA
DEPARTMENT OF TRANSPORTATION

PROJECT PLANS FOR CONSTRUCTION ON
STATE HIGHWAY

IN MERCED COUNTY
IN AND NEAR GUSTINE
FROM ROUTE 140/5 SEPARATION
TO SAN JOAQUIN RIVER BRIDGE

TO BE SUPPLEMENTED BY STANDARD PLANS DATED MAY 2006

INDEX OF PLANS

SHEET No.	DESCRIPTION
1	TITLE AND LOCATION MAP
2	TYPICAL CROSS SECTIONS
3-5	CONSTRUCTION DETAILS
6	CONSTRUCTION AREA SIGNS
7-8	SUMMARY OF QUANTITIES
9-12	REVISED STANDARD PLANS

THIS STANDARD PLANS LIST APPLICABLE TO THIS CONNTRACT IS INCLUDED IN THE NOTICE TO CONTRACTORS AND SPECIAL PROVISIONS BOOK

LOCATION MAP

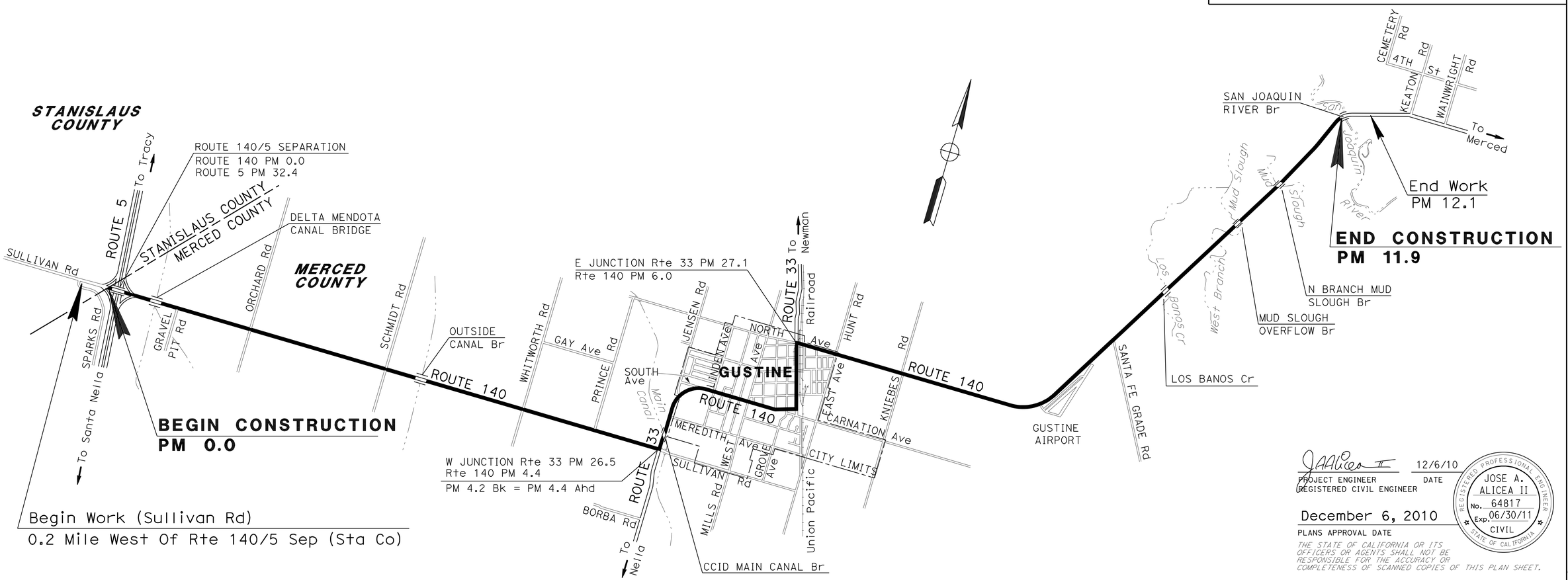

THE CONTRACTOR SHALL POSSESS THE CLASS (OR CLASSES) OF LICENSE AS SPECIFIED IN THE "NOTICE TO BIDDERS."

PROJECT MANAGER ALVIN MANGINDIN

DESIGN ENGINEER ALVIN MANGINDIN

PROJECT ENGINEER REGISTERED CIVIL ENGINEER — DATE 12/6/10

REGISTERED PROFESSIONAL ENGINEER JOSE A. ALICEA II No. 64817 Exp. 06/30/11 CIVIL STATE OF CALIFORNIA

December 6, 2010
PLANS APPROVAL DATE

THE STATE OF CALIFORNIA OR ITS OFFICERS OR AGENTS SHALL NOT BE RESPONSIBLE FOR THE ACCURACY OR COMPLETENESS OF SCANNED COPIES OF THIS PLAN SHEET.

CONTRACT No.	10-0U8704
PROJECT ID	1000020006

LAST REVISION 00-00-00 DATE PLOTTED => 20-DEC-2010 TIME PLOTTED => 07:43

Dist	COUNTY	ROUTE	POST MILES TOTAL PROJECT	SHEET No.	TOTAL SHEETS
10	Mer	140	0.0/11.9	2	12

REGISTERED CIVIL ENGINEER 12/6/10 DATE

12/6/10
PLANS APPROVAL DATE

REGISTERED PROFESSIONAL ENGINEER JOSE A. ALICEA II No. 64817 Exp. 06/30/11 CIVIL STATE OF CALIFORNIA

THE STATE OF CALIFORNIA OR ITS OFFICERS OR AGENTS SHALL NOT BE RESPONSIBLE FOR THE ACCURACY OR COMPLETENESS OF SCANNED COPIES OF THIS PLAN SHEET.

NOTES:

1. DIMENSIONS OF THE PAVEMENT STRUCTURES (STRUCTURAL SECTIONS) ARE SUBJECT TO TOLERANCES SPECIFIED IN THE STANDARD SPECIFICATIONS.
2. SUPERELEVATION AS SHOWN OR AS DIRECTED BY THE ENGINEER.
3. FOR ACCURATE RIGHT OF WAY DATA, CONTACT RIGHT OF WAY ENGINEERING AT THE DISTRICT OFFICE.
4. EXISTING UTILITY FACILITIES HAVE NOT BEEN PLOTTED ON THESE PLANS
5. FOR COLD PLANE AC PAVEMENT DIMENSIONS AND LOCATIONS, SEE SUMMARY OF QUANTITIES SHEET.
6. ENVIRONMENTALLY SENSITIVE AREA (ESA), ALL WORK TO BE PERFORMED ON EXISTING PAVEMENT. STAGING AND PARKING OF EQUIPMENT IS LIMITED TO EXISTING PAVEMENT ONLY. NO SHOULDER BACKING WILL BE PLACED WITHIN ESA.

ABBREVIATION

RHMA-G - RUBBERIZED HOT MIX ASPHALT (GAP GRADED)

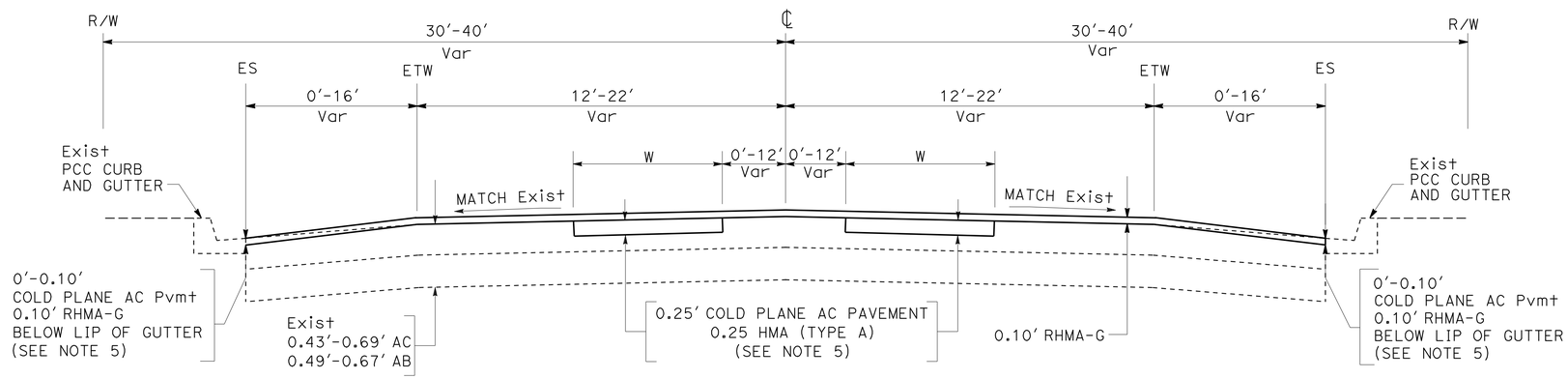

PM 0.16/0.24
PM 5.00/6.05

ROUTE 140

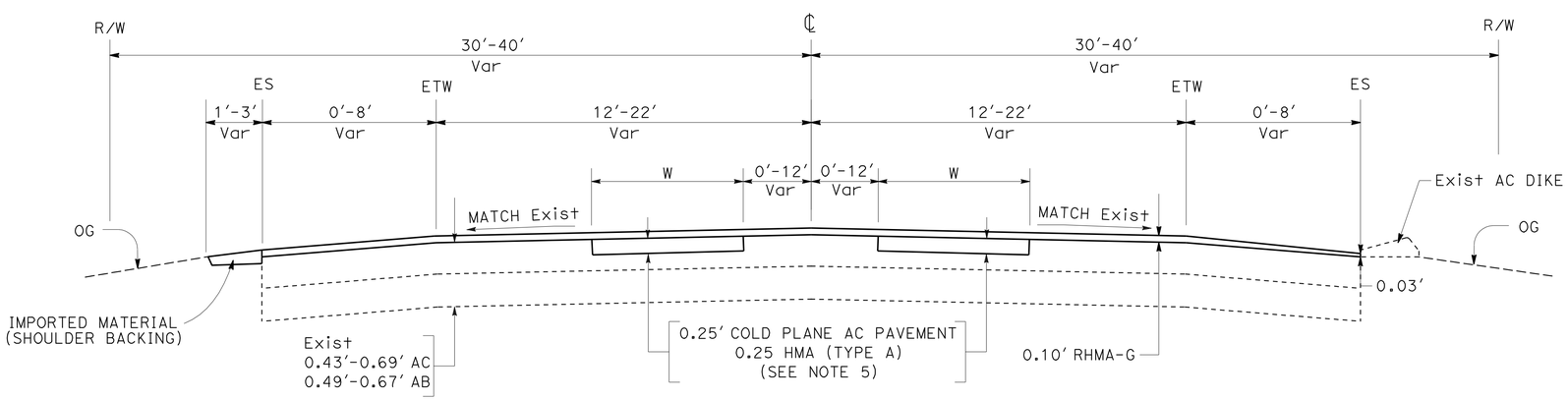

PM 0.0/0.16
PM 0.24/5.00
PM 6.05/11.79

ROUTE 140

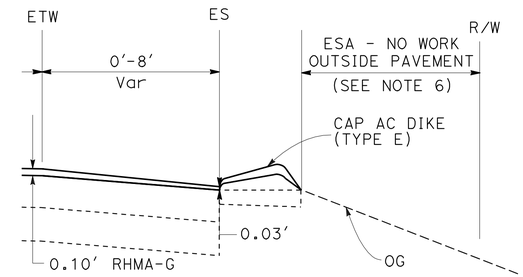

PM 9.75/11.9 (WB/EB)

ESA LOCATIONS

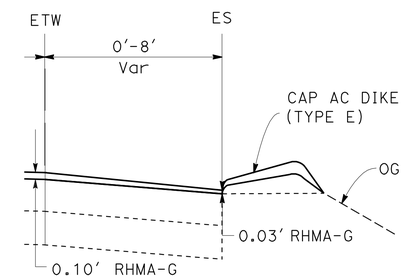

PM 10.60/11.70 (EB)

CAP AC DIKE

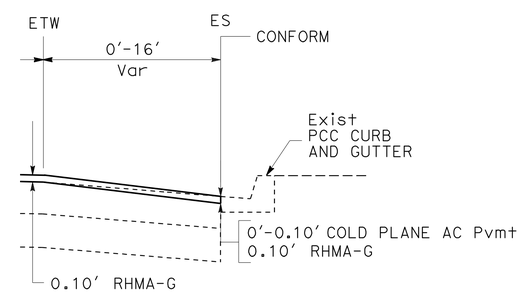

CONFORM TAPER AT CURB & GUTTER

TYPICAL CROSS SECTIONS

NO SCALE

X-1

JO	12/6/10	CALCULATED-DESIGNED BY / CHECKED BY
JHOANNA OAMILDA	JOSE A. ALICEA II	REVISED BY / DATE REVISED
FUNCTIONAL SUPERVISOR	ALVIN MANGINDIN	

STATE OF CALIFORNIA - DEPARTMENT OF TRANSPORTATION
Caltrans
MAINTENANCE

LAST REVISION 00-00-00
DATE PLOTTED => 20-DEC-2010
TIME PLOTTED => 07:44

Dist	COUNTY	ROUTE	POST MILES TOTAL PROJECT	SHEET No.	TOTAL SHEETS
10	Mer	140	0.0/11.9	3	12

REGISTERED CIVIL ENGINEER 12/6/10 DATE

12/6/10
PLANS APPROVAL DATE

REGISTERED PROFESSIONAL ENGINEER JOSE A. ALICEA II No. 64817 Exp. 06/30/11 CIVIL STATE OF CALIFORNIA

THE STATE OF CALIFORNIA OR ITS OFFICERS OR AGENTS SHALL NOT BE RESPONSIBLE FOR THE ACCURACY OR COMPLETENESS OF SCANNED COPIES OF THIS PLAN SHEET.

ABBREVIATION

RHMA-G - RUBBERIZED HOT MIX ASPHALT (GAP GRADED)

LEGEND

- COLD PLANE AC PAVEMENT RHMA-G
- COLD PLANE AC PAVEMENT HMA (TYPE A)
- HMA (TYPE A)

PUBLIC ROAD INTERSECTIONS

PM	SIDE	ROAD NAME	LENGTH	WIDTH
0.13	R†	ROUTE 5 NB OFF RAMP	20′	42′
0.13	L†	ROUTE 5 NB ON RAMP	20′	33′
0.68	R†	GRAVEL PIT Rd	14′	48′
1.18	L†	ORCHARD Rd	11′	49′
1.18	R†	ORCHARD Rd	13′	49′
2.19	L†	SCHMIDT Rd	9′	43′
2.19	R†	SCHMIDT Rd	15′	40′
3.20	L†	WHITWORTH Rd	11′	53′
3.20	R†	WHITWORTH Rd	20′	44′
3.71	L†	PRINCE Rd	14′	28′
4.35	R†	SULLIVAN Rd	30′	60′
4.35	R†	WEST JUNCTION 33	30′	60′
4.60	L†	MEREDITH Ave	22′	55′
4.72	R†	JENSEN Rd	14′	85′
4.88	R†	SOUTH Ave	24′	21′
4.88	R†	SOUTH Ave	17′	45′
5.00	L†	LINDEN Ave	13′	39′
5.00	L†	LINDEN Ave	12′	35′
5.07	L†	ELM Ave	14′	34′
5.13	Both	LAUREL Ave	13′	32′
5.26	Both	WEST Ave	13′	32′
5.30	L†	EIGHTH St	9′	34′
5.37	R†	SEVENTH St	14′	55′
5.46	L†	SIXTH St	6′	62′
5.53	L†	FIFTH St	15′	62′
5.53	L†	GROVE Ave	14′	55′
5.61	L†	SIXTH Ave @ FOURTH St	10′	51′
5.70	R†	FIFTH Ave	16′	53′
5.70	R†	FIFTH Ave	5′	66′
5.79	L†	FOURTH Ave	15′	54′
5.88	R†	THIRD Ave	13′	60′
5.88	L†	THIRD Ave	14′	52′
5.97	L†	SECOND Ave	6′	61′
6.06	R†	FIRST Ave	30′	51′
6.06	L†	EAST JUNCTION 33	30′	52′
6.20	L†	SECOND St	9′	54′
6.35	L†	EAST Ave	20′	38′
6.35	R†	HUNT Rd	8′	74′
6.83	L†	KNIEBES Rd	13′	32′
6.83	R†	KNIEBES Rd	8′	35′
8.60	R†	SANTA FE GRADE Rd	13′	40′

SEE CONSTRUCTION AREA SIGNS FOR ALL PUBLIC ROAD LOCATIONS.

TABLE OF BRIDGES

PM	BRIDGE NAME	BRIDGE No.
0.01	ROUTE 140/5 SEPARATION	39-0182
0.58	DELTA-MENDOTA CANAL	39-0168
2.30	OUTSIDE CANAL	39-0055
4.47	MAIN CANAL	39-0046
10.31	LOS BANOS CREEK	39-0090
10.64	MUD SLOUGH OVERLFOW	39-0107
11.32	NORTH BRANCH MUD SLOUGH	39-0091
11.79	SAN JOAQUIN RIVER	39-0092

PRIVATE DRIVEWAY INTERSECTIONS

PM	SIDE	PM	SIDE
0.61	BOTH	7.29	R†
2.53	R†	7.32	R†
2.80	L†	7.45	R†
2.89	R†	7.78	R†
3.55	R†	7.93	R†
3.68	L†	8.15	R†
3.77	R†	8.21	R†
3.88	R†	8.33	L†
4.02	R†	8.86	L†
7.09	R†	9.12	L†
7.25	BOTH	10.10	R†

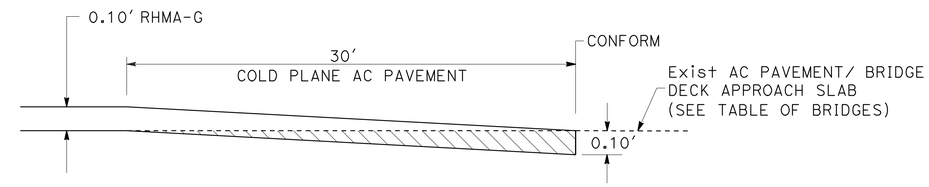

LONGITUDINAL CONFORM TAPER AT EXISTING AC PAVEMENT AND BRIDGE DECK

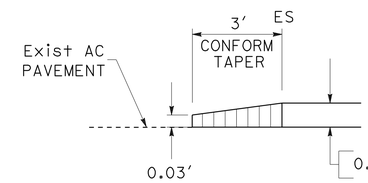

PRIVATE DRIVEWAY CONFORM TAPER

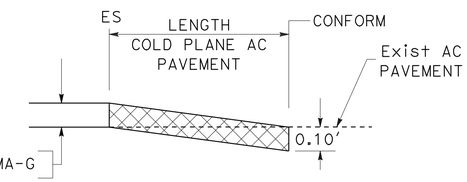

PUBLIC ROAD CONFORM TAPER

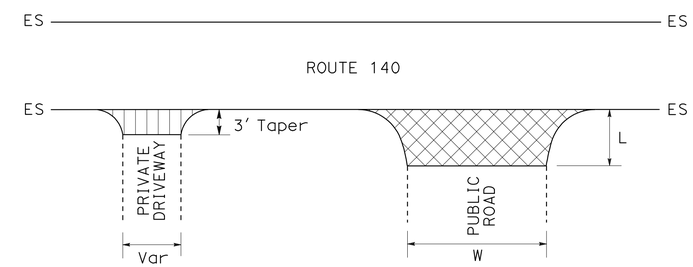

PAVING LIMITS AT PRIVATE DRIVEWAYS AND PUBLIC ROAD INTERSECTIONS

SEE PUBLIC ROAD AND PRIVATE DRIVEWAY INTERSECTIONS TABLES

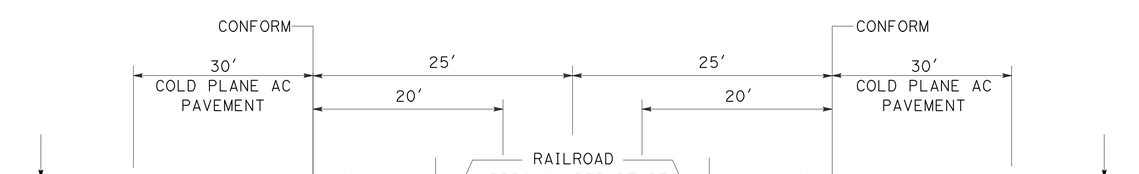

UNION PACIFIC RAILROAD CROSSING - Rte 140 PM 6.06

CONFORM TAPER AT RAILROAD APPROACH/DEPARTURE

CONSTRUCTION DETAILS

NO SCALE

C-1

STATE OF CALIFORNIA - DEPARTMENT OF TRANSPORTATION
Caltrans MAINTENANCE

FUNCTIONAL SUPERVISOR: ALVIN MANGINDIN
CALCULATED-DESIGNED BY: JHOANNA OAMILDA
CHECKED BY: JOSE A. ALICEA II
REVISED BY: JO
DATE REVISED: 11/2/10

LAST REVISION 00-00-00 | DATE PLOTTED => 20-DEC-2010 | TIME PLOTTED => 07:44

Dist	COUNTY	ROUTE	POST MILES TOTAL PROJECT	SHEET No.	TOTAL SHEETS
10	Mer	140	0.0/11.9	4	12

REGISTERED CIVIL ENGINEER — DATE 12/6/10

PLANS APPROVAL DATE 12/6/10

REGISTERED PROFESSIONAL ENGINEER — JOSE A. ALICEA II — No. 64817 — Exp. 06/30/11 — CIVIL — STATE OF CALIFORNIA

THE STATE OF CALIFORNIA OR ITS OFFICERS OR AGENTS SHALL NOT BE RESPONSIBLE FOR THE ACCURACY OR COMPLETENESS OF SCANNED COPIES OF THIS PLAN SHEET.

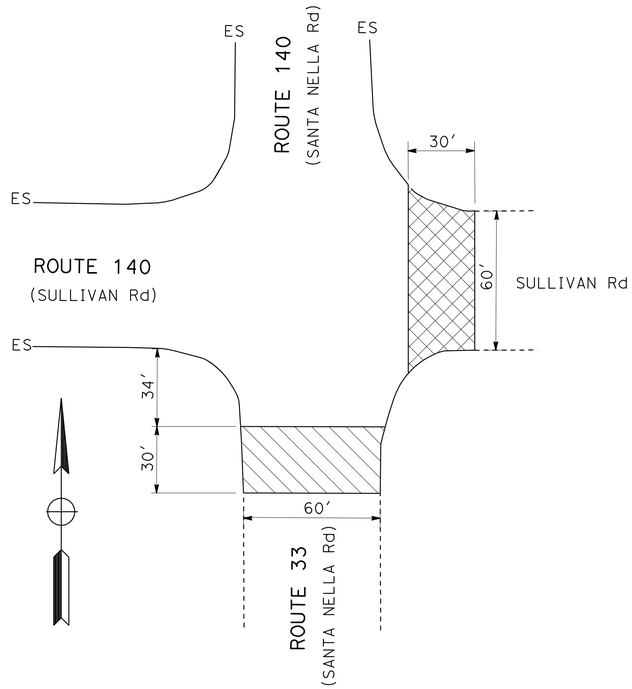

Rte 140 - PM 4.35

PAVING LIMIT AT WEST JUNCTION 33 AND SULLIVAN ROAD

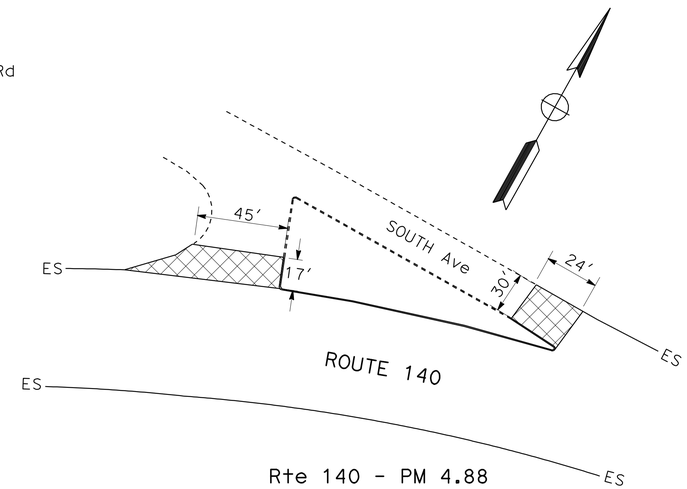

Rte 140 - PM 4.88

PAVING LIMIT AT SOUTH AVENUE

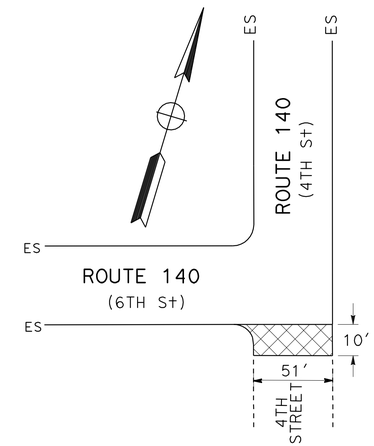

Rte 140 - PM 5.61

PAVING LIMIT AT 4TH STREET

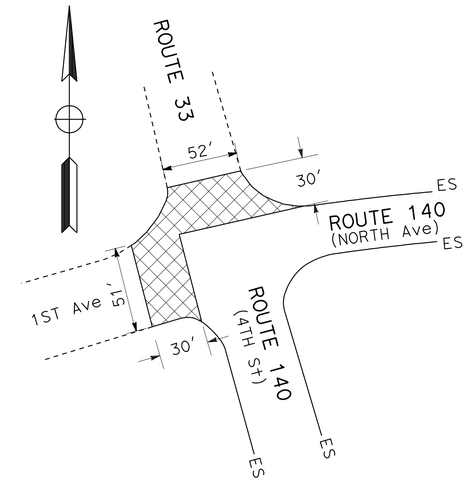

Rte 140 - PM 6.06

PAVING LIMIT AT EAST JUNCTION 33 AND 1ST AVENUE

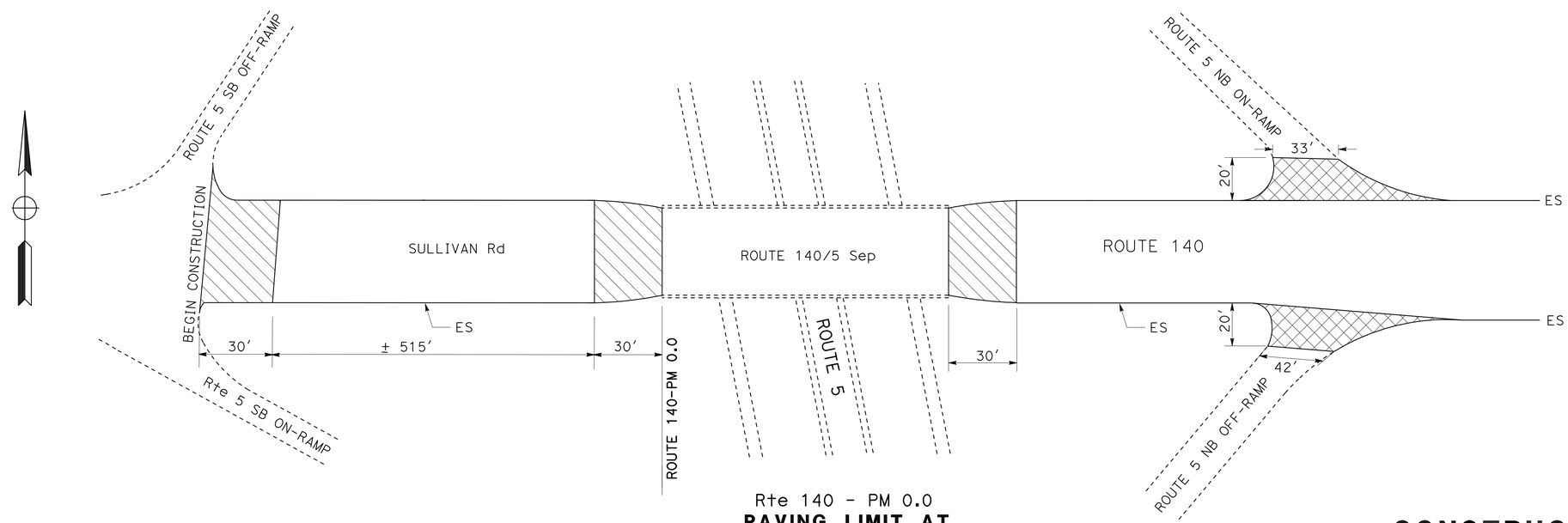

Rte 140 - PM 0.0

PAVING LIMIT AT ROUTE 5/140 SEPARATION

CONSTRUCTION DETAILS

NO SCALE

C-2

STATE OF CALIFORNIA - DEPARTMENT OF TRANSPORTATION — Caltrans — MAINTENANCE

FUNCTIONAL SUPERVISOR: ALVIN MANGINDIN

CALCULATED-DESIGNED BY: JHOANNA OAMILDA — CHECKED BY: JOSE A ALICEA II

REVISED BY: JO — DATE REVISED: 11/04/10

LAST REVISION 00-00-00 — DATE PLOTTED => 20-DEC-2010 — TIME PLOTTED => 07:44

Dist	COUNTY	ROUTE	POST MILES TOTAL PROJECT	SHEET No.	TOTAL SHEETS
10	Mer	140	0.0/11.9	5	12

REGISTERED CIVIL ENGINEER 12/6/10 DATE

12/6/10
PLANS APPROVAL DATE

REGISTERED PROFESSIONAL ENGINEER JOSE A. ALICEA II No. 64817 Exp. 06/30/11 CIVIL STATE OF CALIFORNIA

THE STATE OF CALIFORNIA OR ITS OFFICERS OR AGENTS SHALL NOT BE RESPONSIBLE FOR THE ACCURACY OR COMPLETENESS OF SCANNED COPIES OF THIS PLAN SHEET.

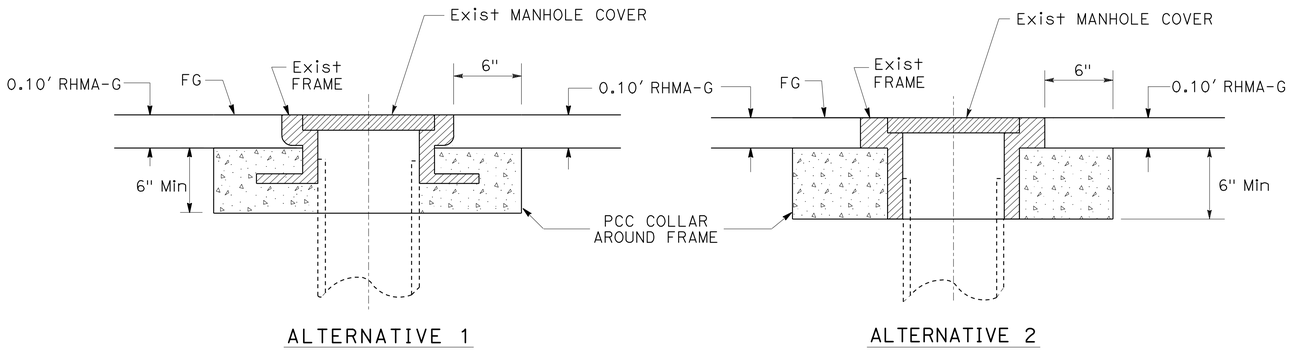

WATER VALVE

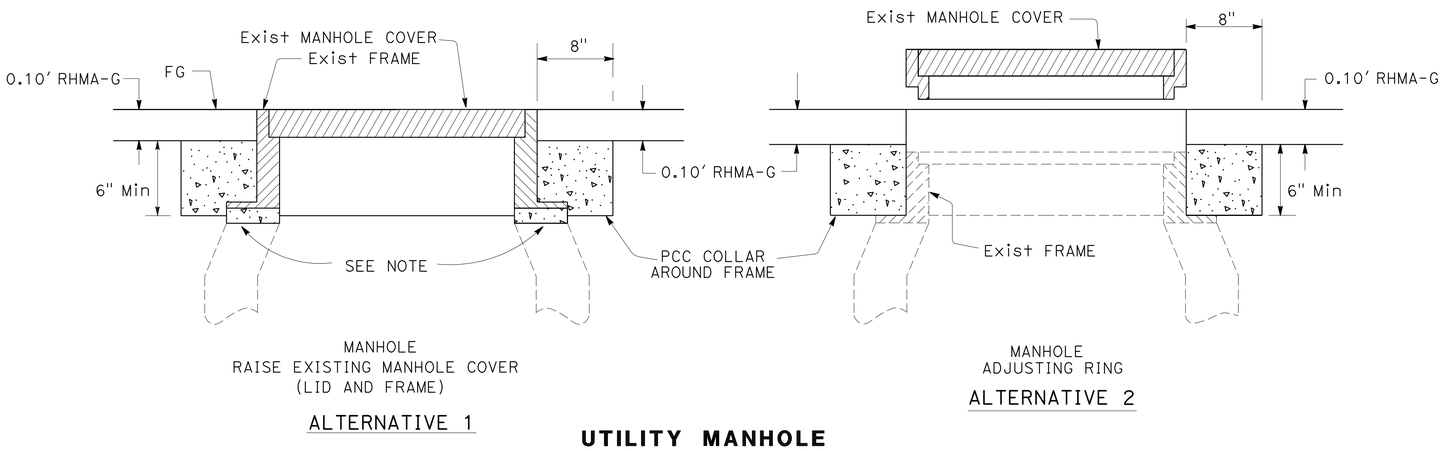

UTILITY MANHOLE

NOTE: RHMA THICKNESS VARIES TO MEET FIELD CONDITION. MINIMUM THICKNESS 0.75" TO MAXIMUM OF 2.5". FOR ADJUSTMENTS OF MORE THAN 2.5" USE STANDARD PRECAST CONCRETE RINGS.

ADJUST FRAME AND COVER TO GRADE

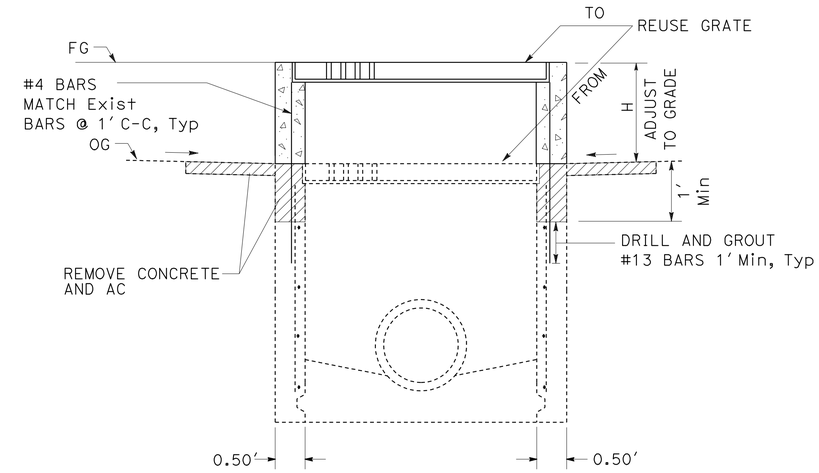

ADJUST FRAME AND GRATE TO GRADE

CONSTRUCTION DETAILS

NO SCALE

C-3

STATE OF CALIFORNIA - DEPARTMENT OF TRANSPORTATION
MAINTENANCE
Caltrans

FUNCTIONAL SUPERVISOR: ALVIN MANGINDIN
CALCULATED-DESIGNED BY: JHOANNA OAMILDA
CHECKED BY: JOSE A ALICEA II
REVISED BY: JO
DATE REVISED: 11/04/10

LAST REVISION 00-00-00
DATE PLOTTED => 20-DEC-2010
TIME PLOTTED => 07:44

Dist	COUNTY	ROUTE	POST MILES TOTAL PROJECT	SHEET No.	TOTAL SHEETS
10	Mer	140	0.0/11.9	6	12

REGISTERED CIVIL ENGINEER 12/6/10 DATE

12/6/10
PLANS APPROVAL DATE

REGISTERED PROFESSIONAL ENGINEER JOSE A. ALICEA II No. 64817 Exp. 06/30/11 CIVIL STATE OF CALIFORNIA

THE STATE OF CALIFORNIA OR ITS OFFICERS OR AGENTS SHALL NOT BE RESPONSIBLE FOR THE ACCURACY OR COMPLETENESS OF SCANNED COPIES OF THIS PLAN SHEET.

NOTES:

1. EXACT SIGN LOCATIONS TO BE DETERMINED BY THE ENGINEER.
2. NO CONSTRUCTION AREA SIGNS SHALL PENETRATE THROUGH THE GROUND BETWEEN POST MILE 8.0 AND 12.0.

STATIONARY MOUNTED CONSTRUCTION AREA SIGNS

SIGN	SIGN CODE	PANEL SIZE	No. OF POSTS AND SIZE	No. OF SIGNS	SIGN MESSAGE
A	G20-1	60" x 36"	1 - 4" x 6"	1	ROAD CONSTRUCTION NEXT 12 MILES
B	W20-1	36" x 36"	1 - 4" x 6"	45	ROAD WORK AHEAD
C	G20-2	36" x 18"	1 - 4" x 4"	3	END ROAD WORK

PORTABLE MOUNTED CONSTRUCTION AREA SIGNS

SIGN	SIGN CODE	PANEL SIZE	No. OF POSTS AND SIZE	No. OF SIGNS	SIGN MESSAGE
D	G20-1	60" x 36"	1 - 4" x 6"	1	ROAD CONSTRUCTION NEXT 12 MILES
E	W20-1	36" x 36"	1 - 4" x 6"	1	ROAD WORK AHEAD
F	G20-2	36" x 18"	1 - 4" x 4"	1	END ROAD WORK

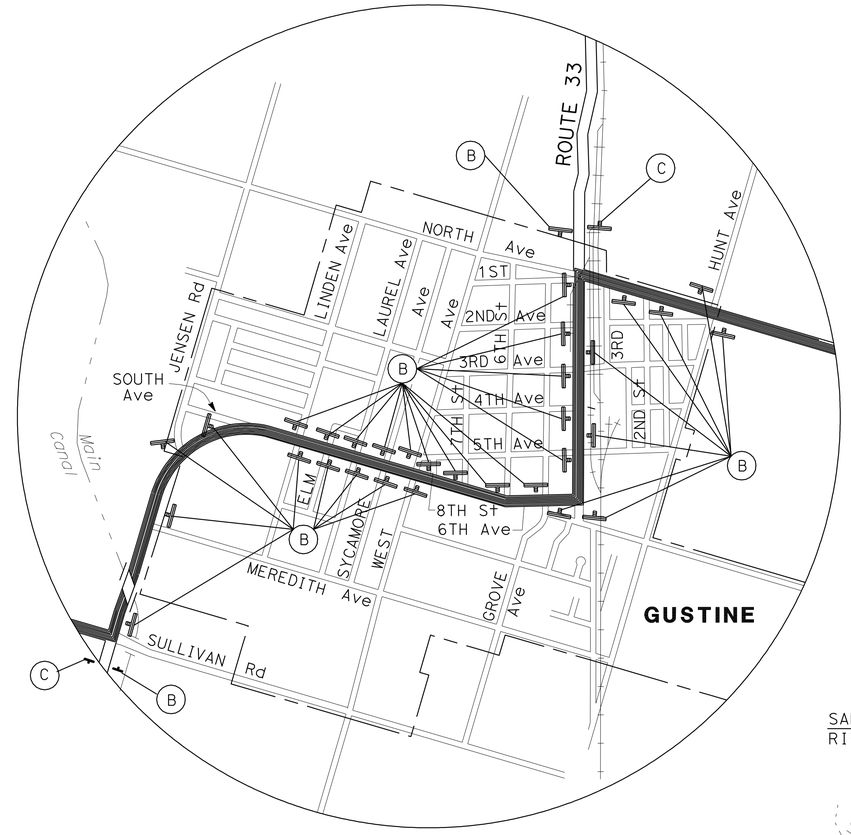

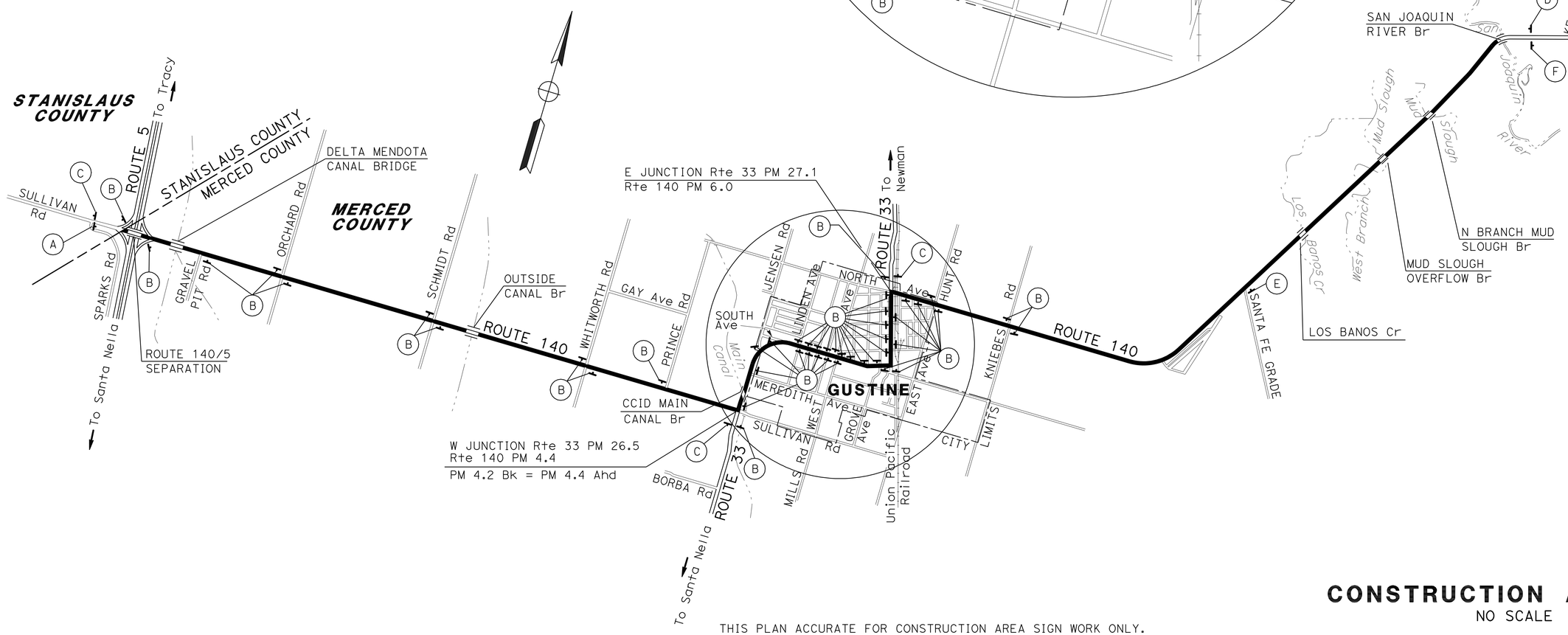

THIS PLAN ACCURATE FOR CONSTRUCTION AREA SIGN WORK ONLY.

CONSTRUCTION AREA SIGNS

NO SCALE

CS-1

FUNCTIONAL SUPERVISOR	ALVIN MANGINDIN
CALCULATED-DESIGNED BY	JHOANNA OAMILDA
CHECKED BY	JOSE A. ALICEA II
REVISED BY	JO
DATE REVISED	12/6/10

STATE OF CALIFORNIA - DEPARTMENT OF TRANSPORTATION
Caltrans
MAINTENANCE

LAST REVISION 00-00-00
DATE PLOTTED => 20-DEC-2010
TIME PLOTTED => 07:44

Dist	COUNTY	ROUTE	POST MILES TOTAL PROJECT	SHEET No.	TOTAL SHEETS
10	Mer	140	0.0/11.9	7	12

REGISTERED CIVIL ENGINEER 12/6/10 DATE

12/6/10
PLANS APPROVAL DATE

REGISTERED PROFESSIONAL ENGINEER JOSE A. ALICEA II No. 64817 Exp. 6/30/11 CIVIL STATE OF CALIFORNIA

THE STATE OF CALIFORNIA OR ITS OFFICERS OR AGENTS SHALL NOT BE RESPONSIBLE FOR THE ACCURACY OR COMPLETENESS OF SCANNED COPIES OF THIS PLAN SHEET.

CAP ASPHALT CONCRETE DIKE

LOCATION			LENGTH (LF)	HMA (TYPE A)	DIKE TYPE
PM	PM	SIDE		TON	
10.60	11.70	EB	5808	92 *	E

CONFORM TAPERS

LOCATION		LENGTH (N)	WIDTH (N)	COLD PLANE AC PAVEMEMT	RHMA-G
PM	DESCRIPTION			SQYD	TON
	SULLIVAN Rd - 575' WEST OF PM 0.0	30'	40'	134	9
	SULLIVAN Rd - 30' WEST OF PM 0.0	60'	40'	267	18
0.58	DELTA-MENDOTA CANAL Br	60'	28'	187	13
2.30	OUTSIDE CANAL Br	60'	28'	187	13
4.65	WEST JUNCTION 33	30'	60'	200	14
4.47	MAIN CANAL Br	60'	32'	214	15
6.08	GX-GUSTINE RR XING	60'	32'	214	15
10.31	LOS BANOS CREEK Br	60'	26'	174	12
10.64	MUD SLOUGH OVERFLOW Br	60'	32'	214	15
11.32	N BRANCH MUD SLOUGH Br	60'	40'	267	18
11.79	SAN JOAQUIN RIVER Br	30'	40'	134	9
			TOTAL	2192 *	151*

CONFORM TAPERS AT CURB & GUTTER

ROUTE	Dir	PM / PM	LENGTH (N)	WIDTH (N)	COLD PLANE AC Pvmt	RHMA-G
					SQYD	TON
140	EB	0.16/0.24	423'	16'	752	51
140	WB	0.16/0.24	423'	16'	752	51
140	EB	5.00/5.89	4700'	16'	8356	557
140	WB	5.00/5.89	4700'	16'	8356	557
140	EB	5.89/5.96	370'	16'	658	44
140	WB	5.96/6.05	476'	16'	847	57
140	EB	5.96/6.05	476'	16'	847	57
				TOTAL	20,568*	1374*

NOTES:
1. (N) - NOT A SEPARATE PAY ITEM, FOR INFORMATION ONLY.
2. * - TOTAL INCLUDED IN ROADWAY ITEMS TABLE.

ABBREVIATION

RHMA-G - RUBBERIZED HOT MIX ASPHALT(GAP GRADED)

ADJUST FRAME AND GRATE TO GRADE

PM	LOCATION	DESCRIPTION	EA
5.97	SECOND AVENUE	GRATE	2

CONFORM TAPERS

LOCATION			LENGTH (N)	WIDTH (N)	COLD PLANE AC PAVEMEMT	HMA (TYPE A)
PM	SIDE	DESCRIPTION			SQYD	TON
0.10	Lt	Rte 5 NB ON-RAMP	20'	33'	74	5
0.10	Rt	Rte 5 NB OFF-RAMP	20'	42'	94	7
0.68	Rt	GRAVEL PIT Rd	14'	48'	75	6
1.18	Rt	ORCHARD Rd	11'	49'	60	5
1.18	Lt	ORCHARD Rd	13'	49'	71	5
2.19	Rt	SCHMIDT Rd	9'	43'	43	3
2.19	Lt	SCHMIDT Rd	15'	40'	67	5
3.20	Rt	WHITWORTH Rd	11'	53'	65	5
3.20	Lt	WHITWORTH Rd	20'	44'	98	7
3.71	Lt	PRINCE Rd	14'	28'	44	3
4.35	Rt	SULLIVAN Rd	30'	60'	200	14
4.60	Rt	MEREDITH Rd	22'	55'	135	10
4.72	Lt	JENSEN Rd	14'	85'	133	9
4.88	Lt	SOUTH Ave	24'	30'	80	6
4.90	Lt	SOUTH Ave	17'	45'	85	6
5.00	Rt	LINDEN Ave	13'	39'	57	4
5.00	Lt	LINDEN Ave	12'	35'	47	4
5.07	Rt	ELM Ave	14'	34'	53	4
5.13	Rt	LAUREL Ave	13'	32'	47	4
5.13	Lt	LAUREL Ave	13'	32'	47	4
5.26	Lt	WEST Ave	13'	32'	47	4
				SUBTOTAL A	1622	120

CONFORM TAPERS

LOCATION			LENGTH (N)	WIDTH (N)	COLD PLANE AC PAVEMEMT	HMA (TYPE A)
PM	SIDE	DESCRIPTION			SQYD	TON
5.26	Rt	WEST Ave	13'	32'	47	4
5.30	Lt	EIGHTH St	9'	34'	34	3
5.37	Lt	SEVENTH St	14'	55'	86	6
5.46	Lt	SIXTH St	6'	62'	42	3
5.53	Lt	FIFTH St	15'	62'	104	7
5.53	Rt	FIFTH St	14'	55'	86	6
5.61	Rt	Sixth Ave At FOURTH St	10'	51'	57	4
5.70	Lt	FIFTH Ave	16'	53'	95	7
5.70	Rt	FIFTH Ave	5'	66'	37	3
5.79	Lt	FOURTH Ave	15'	54'	90	7
5.88	Lt	THIRD Ave	13'	60'	87	6
5.88	Rt	THIRD Ave	14'	52'	81	6
5.97	Lt	SECOND Ave	6'	61'	41	3
6.06	Lt	FIRST Ave	30'	51'	170	12
6.06	Lt	EAST JUNCTION 33	30'	52'	174	12
6.20	Rt	SECOND St	9'	54'	54	4
6.35	Rt	HUNT Rd	20'	38'	85	6
6.35	Lt	EAST Ave	8'	74'	66	5
6.83	Lt	KNIEBES Rd	13'	32'	47	4
6.83	Rt	KNIEBES Rd	8'	35'	32	3
8.60	Rt	SANTA FE GRADE Rd	13'	40'	58	4
				SUBTOTAL B	1573	115
				SUBTOTAL A	1622	120
				TOTAL	3195 *	235*

ADJUST FRAME AND COVER TO GRADE

PM	TYPE	EA
5.00	WATER VALVE	1
5.00	SEWER MANHOLE	1
5.03	SEWER MANHOLE	1
5.07	SEWER MANHOLE	1
5.07	WATER VALVE	2
5.10	WATER VALVE	1
5.13	SEWER MANHOLE	3
5.13	WATER VALVE	4
5.20	WATER VALVE	1
5.26	WATER VALVE	2
5.26	SEWER MANHOLE	5
5.32	WATER VALVE	2
5.34	SEWER MANHOLE	1
5.40	SEWER MANHOLE	3
5.41	SEWER MANHOLE	1
5.49	SEWER MANHOLE	2
5.53	SEWER MANHOLE	1
5.54	SEWER MANHOLE	1
5.61	SEWER MANHOLE	1
5.70	SEWER MANHOLE	3
5.79	SEWER MANHOLE	1
5.81	SEWER MANHOLE	1
5.88	SEWER MANHOLE	2
5.97	SEWER MANHOLE	3
	TOTAL	44

SUMMARY OF QUANTITIES

Q-1

STATE OF CALIFORNIA - DEPARTMENT OF TRANSPORTATION
MAINTENANCE

FUNCTIONAL SUPERVISOR: ALVIN MANGINDIN

CALCULATED-DESIGNED BY: JHOANNA OAMILDA
CHECKED BY: JOSE A ALICEA II

REVISED BY: JO
DATE REVISED: 12/6/10

LAST REVISION 00-00-00
DATE PLOTTED => 20-DEC-2010
TIME PLOTTED => 07:44

Dist	COUNTY	ROUTE	POST MILES TOTAL PROJECT	SHEET No.	TOTAL SHEETS
10	Mer	140	0.0/11.9	8	12

REGISTERED CIVIL ENGINEER 12/6/10 DATE

12/6/10
PLANS APPROVAL DATE

REGISTERED PROFESSIONAL ENGINEER JOSE A. ALICEA II No. 64817 Exp. 6/30/11 CIVIL STATE OF CALIFORNIA

THE STATE OF CALIFORNIA OR ITS OFFICERS OR AGENTS SHALL NOT BE RESPONSIBLE FOR THE ACCURACY OR COMPLETENESS OF SCANNED COPIES OF THIS PLAN SHEET.

TRAVEL LANES

LOCATION		LENGTH (N)	WIDTH (N)	COLD PLANE AC Pvmt	HMA (TYPE A)
	PM/PM			SQYD	TON
EASTBOUND	**	110′	5′	62	11
	***	154′	5′	86	15
	0.01/0.01	22′	10′	25	5
	0.01/0.02	79′	5′	44	8
	0.01/0.02	30′	11′	37	7
	0.01/0.03	93′	5′	52	9
	0.01/0.02	52′	10′	58	10
	0.01/0.02	41′	5′	23	4
	0.20/0.21	57′	10′	64	11
	0.20/0.21	31′	5′	18	3
	0.23/0.25	88′	10′	98	17
	0.57/0.58	33′	5′	19	4
	0.58/0.58	22′	12′	30	5
	0.58/0.58	22′	6′	15	3
	6.20/6.20	11′	5′	7	2
	10.31/10.32	33′	5′	19	4
	10.63/10.67	201′	5′	112	19
	10.85/10.86	58′	5′	33	6
	10.90/10.91	63′	5′	35	6
	10.98/11.00	122′	5′	68	12
	11.00/11.04	227′	5′	127	22
	11.10/11.13	134′	5′	75	13
	11.17/11.19	81′	5′	45	8
	11.27/11.27	21′	5′	12	2
	11.28/11.30	111′	5′	62	11
	11.48/11.57	497′	5′	277	47
			SUBTOTAL A	1503	264

** - SULLIVAN Rd 140′ WEST OF PM 0.0
*** - SULLIVAN Rd 294′ WEST OF PM 0.0

TRAVEL LANES

LOCATION		LENGTH (N)	WIDTH (N)	COLD PLANE AC Pvmt	HMA (TYPE A)
	PM/PM			SQYD	TON
WESTBOUND	0.10/0.10	11′	5′	7	2
	0.23/0.24	65′	5′	37	7
	4.46/4.48	129′	10′	144	25
	10.34/10.35	58′	10′	65	11
	10.49/10.54	273′	5′	152	26
	10.51/10.58	355′	5′	198	34
	10.63/10.67	225′	5′	125	22
	10.85/10.86	50′	5′	28	5
	11.00/11.04	186′	5′	104	18
	11.01/11.08	376′	5′	209	36
	11.10/11.12	95′	5′	53	9
	11.17/11.17	11′	5′	7	2
	11.28/11.29	38′	10′	43	8
	11.40/11.41	51′	5′	29	5
	11.45/11.47	113′	5′	63	11
	11.48/11.52	188′	5′	105	18
	11.49/11.50	40′	5′	23	4
	11.49/11.51	85′	6′	57	10
	11.50/11.51	73′	5′	41	7
	11.51/11.52	48′	5′	27	5
	11.51/11.51	21′	6′	14	3
	11.51/11.53	96′	7′	75	13
			SUBTOTAL B	1606	281
			SUBTOTAL A	1503	264
			TOTAL	3109*	545*

ROADWAY ITEMS

LOCATION	RHMA (GAP GRADED)	COLD PLANE AC PAVEMENT	HMA (TYPE A)	TACK COAT	IMPORTED MATERIAL (SHOULDER BACKING)
	TON	SQYD	TON	TON	TON
PM 0.0/11.9 ****	18,300	3109	545	117	870
CONFORM TAPERS	151	5387	235	3	
CONFORM TAPERS AT CURB & GUTTER	1374	20,568		9	
CAP HMA DIKE			92	1	
TOTAL	19,825	29,064	872	130	870

**** - INCLUDES WORK ON SULLIVAN ROAD

PAVEMENT DELINEATION ITEMS

LOCATION	REMOVE THERMOPLASTIC TRAFFIC STRIPE		THERMOPLASTIC TRAFFIC STRIPE (SPRAYABLE)									REMOVE PAVEMENT MARKER (N)	PAVEMENT MARKER (RETROREFLECTIVE)								REMOVE YELLOW THERMOPLASTIC PAVEMENT MARKING (HAZARDOUS WASTE)	REMOVE THERMOPLASTIC PAVEMENT MARKING	THERMOPLASTIC PAVEMENT MARKING									
	8" WHITE		4" WHITE		8" WHITE		4" YELLOW						TYPE D					TYPE G	TYPE H				CROSS WALK (WHITE)	CROSS WALK (YELLOW)	LIMIT LINE	STOP	AHEAD	SLOW	SCHOOL	XING	RAILROAD XING SYMBOL	TYPE III (L) ARROW	TYPE VI ARROW
	Det 38	Det 38A	Det 27B	Det 27C	Det 38	Det 38A	Det 6	Det 19	Det 22	Det 29	Det 34		Det 6	Det 19	Det 22	Det 29	Det 34	Det 38	Det 19	Det 34												
	LF		LF									EA	EA								SQFT	SQFT	SQFT									
PM 0.0/11.9 ****	318	40	121,067	2955	159	20	38,280	1690	16,765	1373	4436	2824	804	40	1458	120	112	14	74	202	1770	631	98	1296	667	352	124	138	210	126	140	84	42
TOTAL	358		186,745										2824								1770	631	3277									

**** - INCLUDES WORK ON SULLIVAN ROAD

SUMMARY OF QUANTITIES
Q-2

STATE OF CALIFORNIA - DEPARTMENT OF TRANSPORTATION
Caltrans® MAINTENANCE

FUNCTIONAL SUPERVISOR: ALVIN MANGINDIN
CALCULATED-DESIGNED BY: JHOANNA OAMILDA
CHECKED BY: JOSE A ALICEA II
REVISED BY: JO
DATE REVISED: 11/04/10

LAST REVISION 00-00-00
DATE PLOTTED => 20-DEC-2010
TIME PLOTTED => 07:44

DIST	COUNTY	ROUTE	POST MILES TOTAL PROJECT	SHEET NO.	TOTAL SHEETS
10	Mer	140	0.0/11.9	9	12

REGISTERED CIVIL ENGINEER

June 6, 2008
PLANS APPROVAL DATE

REGISTERED PROFESSIONAL ENGINEER
Donald E. Howe
No. C46402
Exp. 3-31-09
CIVIL
STATE OF CALIFORNIA

The State of California or its officers or agents shall not be responsible for the accuracy or completeness of electronic copies of this plan sheet.

To accompany plans dated 12/6/10

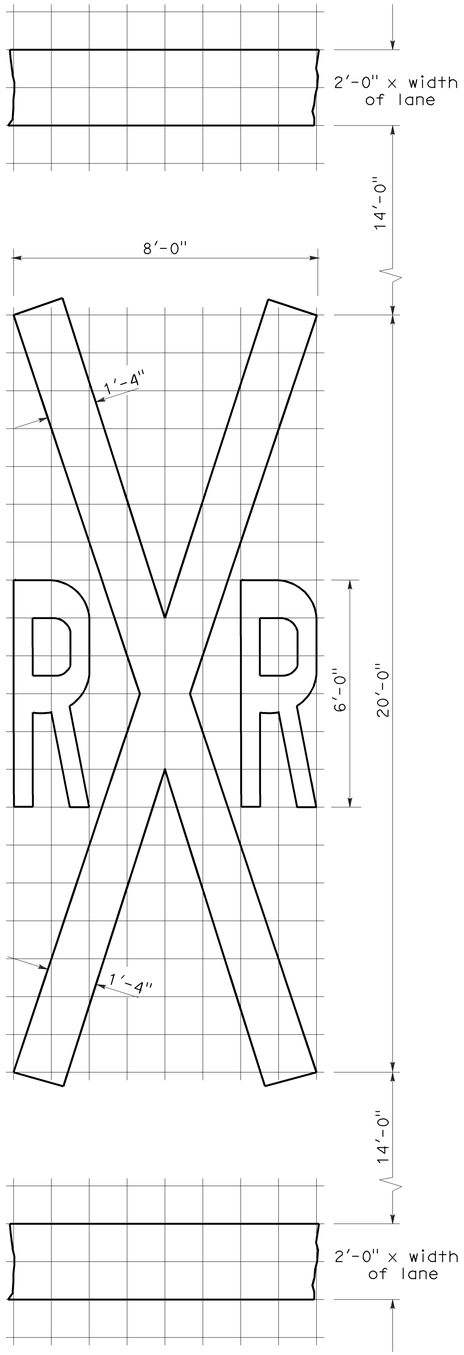

1'-0" GRID
A=70 sq ft ✳

RAILROAD CROSSING SYMBOL

✳70 sq ft DOES NOT INCLUDE THE 2'-0" x VARIABLE WIDTH TRANSVERSE LINES.

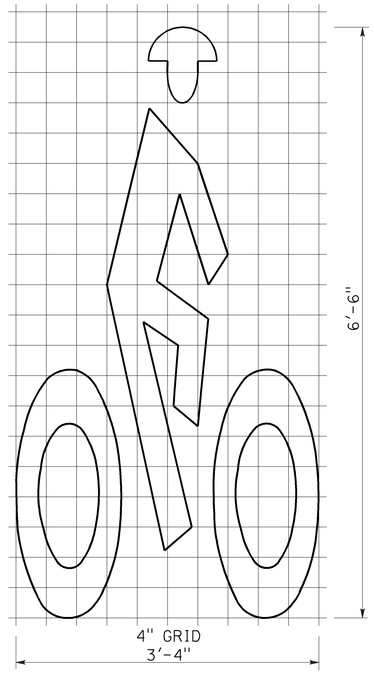

A=7 sq ft

BIKE LANE SYMBOL

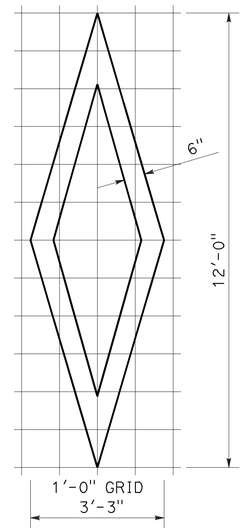

A=11 sq ft

DIAMOND SYMBOL

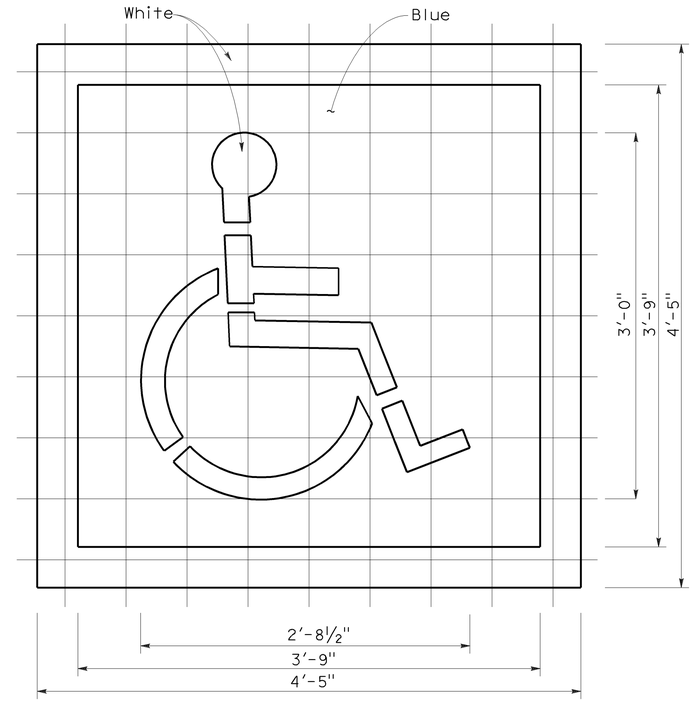

6" GRID
A (White) =9 sq ft
A (Blue) =14 sq ft

INTERNATIONAL SYMBOL OF ACCESSIBILITY MARKING

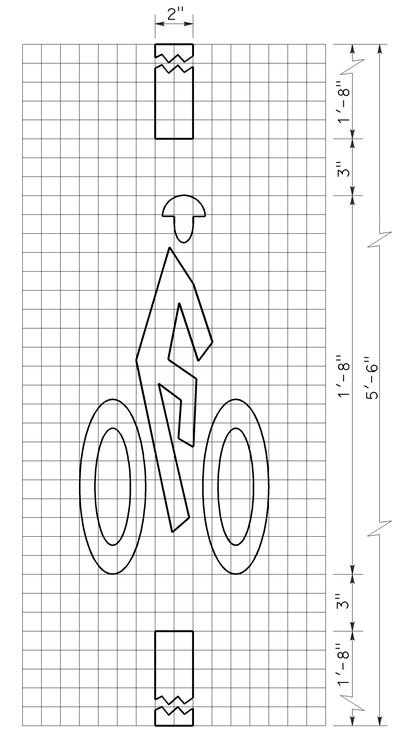

1" GRID
10"
A=2 sq ft

BICYCLE LOOP DETECTOR SYMBOL

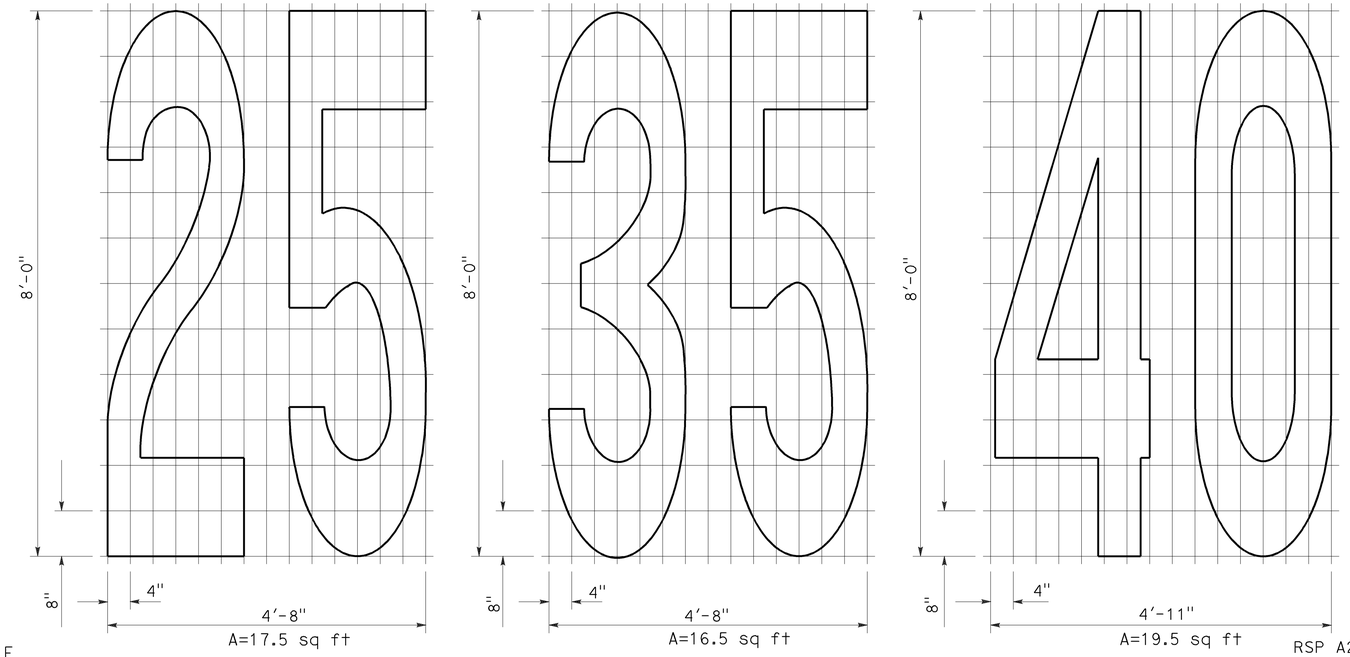

A=17.5 sq ft
A=16.5 sq ft
A=19.5 sq ft

NUMERALS

NOTE:

1. Minor variations in dimensions may be accepted by the Engineer.

STATE OF CALIFORNIA
DEPARTMENT OF TRANSPORTATION

PAVEMENT MARKINGS SYMBOLS AND NUMERALS

NO SCALE

RSP A24C DATED JUNE 6, 2008 SUPERSEDES STANDARD PLAN A24C DATED MAY 1, 2006 - PAGE 11 OF THE STANDARD PLANS BOOK DATED MAY 2006.

REVISED STANDARD PLAN RSP A24C

2006 REVISED STANDARD PLAN RSP A24C

5-27-08

DIST	COUNTY	ROUTE	POST MILES TOTAL PROJECT	SHEET NO.	TOTAL SHEETS
10	Mer	140	0.0/11.9	10	12

Randell D. Hiatt
REGISTERED CIVIL ENGINEER

June 6, 2008
PLANS APPROVAL DATE

REGISTERED PROFESSIONAL ENGINEER
Randell D. Hiatt
No. C50200
Exp. 6-30-09
CIVIL
STATE OF CALIFORNIA

The State of California or its officers or agents shall not be responsible for the accuracy or completeness of electronic copies of this plan sheet.

To accompany plans dated 12/6/10

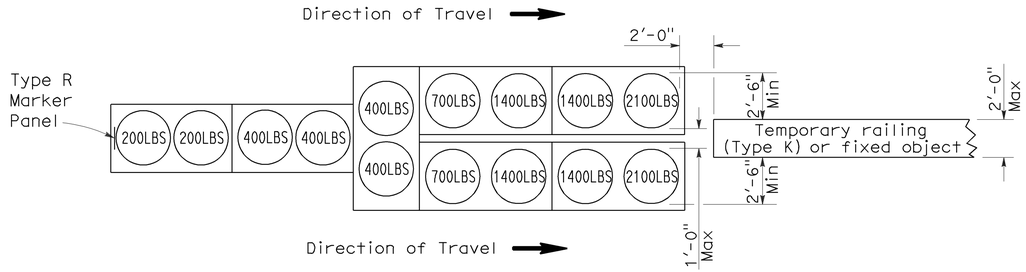

ARRAY 'TU14'

Approach speed 45 mph or more

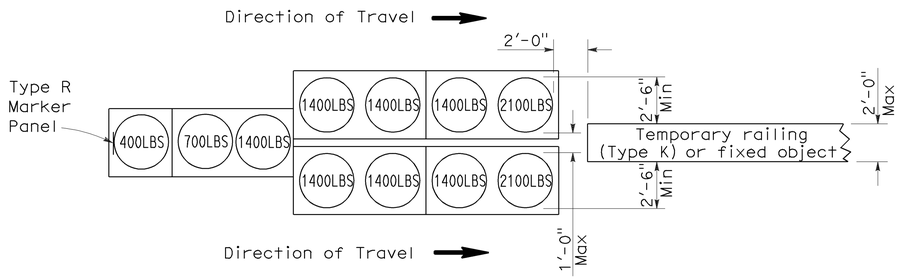

ARRAY 'TU11'

Approach speed less than 45 mph

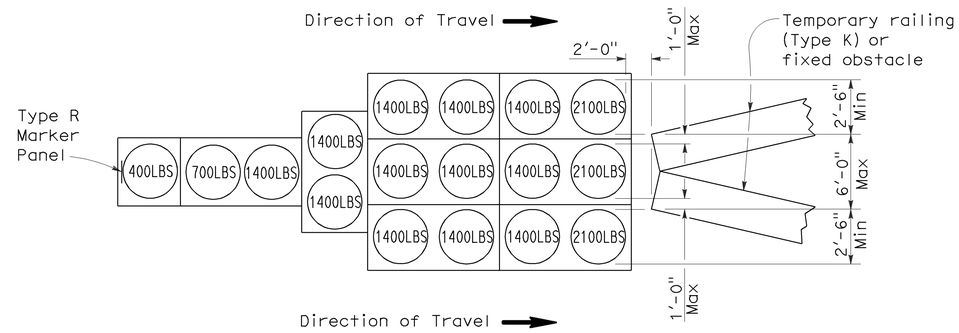

ARRAY 'TU17'

Approach speed less than 45 mph

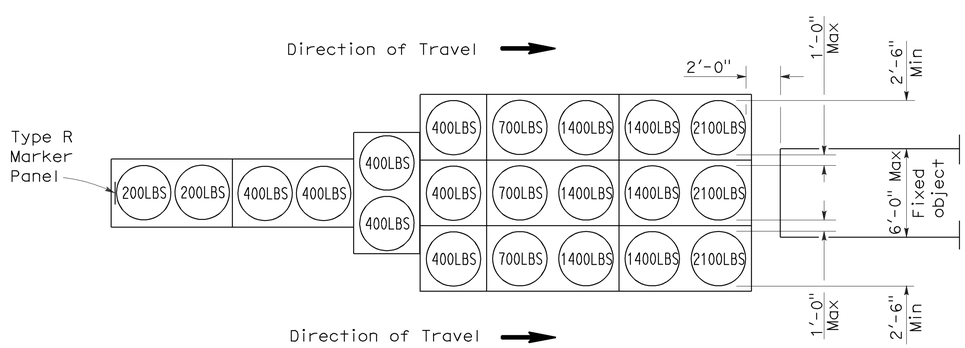

ARRAY 'TU21'

Approach speed 45 mph or more

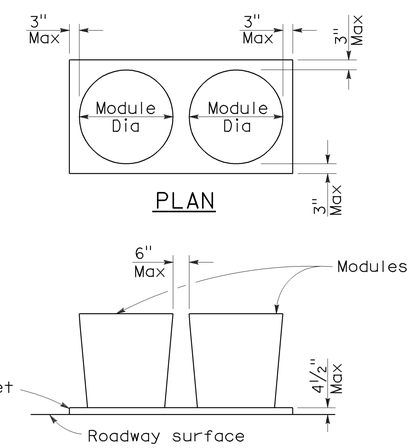

CRASH CUSHION PALLET DETAIL

See Note 7

NOTES:

1. (XXX) Indicates sand filled module location and weight of sand in pounds for each module. Module spacing is based on the greater diameter of the module.
2. All sand weights are nominal.
3. Temporary crash cushion arrays shall not encroach on the traveled way.
4. Place the top of Type R marker panel 1" below the module lid.
5. Refer to Standard Plan A73B for marker details.
6. Approach speeds indicated conform to NCHRP 350 Report criteria.
7. Use of pallets is optional.

STATE OF CALIFORNIA
DEPARTMENT OF TRANSPORTATION

TEMPORARY CRASH CUSHION, SAND FILLED (UNIDIRECTIONAL)

NO SCALE

RSP T1A DATED JUNE 6, 2008 SUPERSEDES STANDARD PLAN T1A
DATED MAY 1, 2006 - PAGE 211 OF THE STANDARD PLANS BOOK DATED MAY 2006.

REVISED STANDARD PLAN RSP T1A

2006 REVISED STANDARD PLAN RSP T1A

DIST	COUNTY	ROUTE	POST MILES TOTAL PROJECT	SHEET NO.	TOTAL SHEETS
10	Mer	140	0.0/11.9	11	12

Randell D. Hiatt
REGISTERED CIVIL ENGINEER

June 6, 2008
PLANS APPROVAL DATE

REGISTERED PROFESSIONAL ENGINEER
Randell D. Hiatt
No. C50200
Exp. 6-30-09
CIVIL
STATE OF CALIFORNIA

The State of California or its officers or agents shall not be responsible for the accuracy or completeness of electronic copies of this plan sheet.

To accompany plans dated 12/6/10

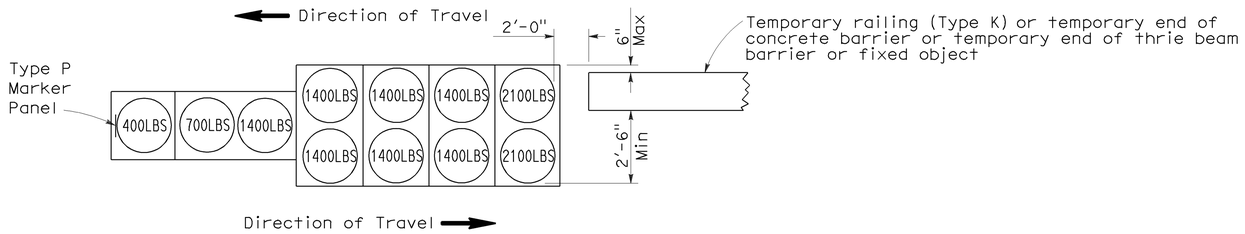

ARRAY 'TB11'

Approach speed less than 45 mph

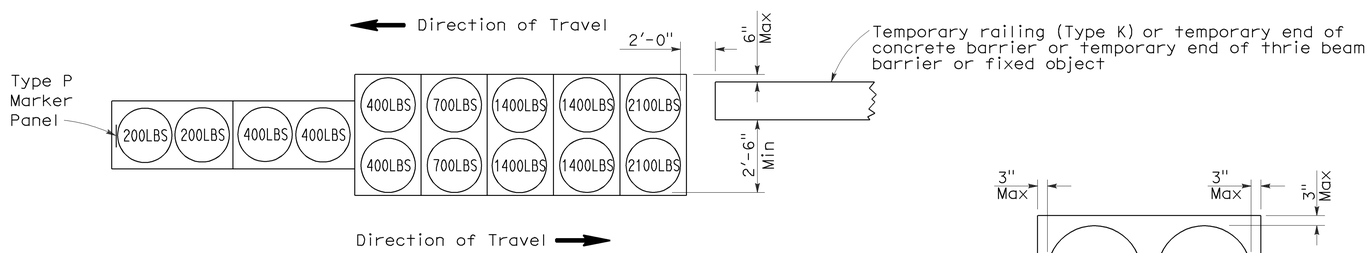

ARRAY 'TB14'

Approach speed 45 mph or more

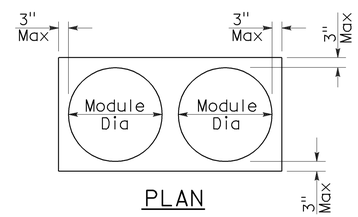

PLAN

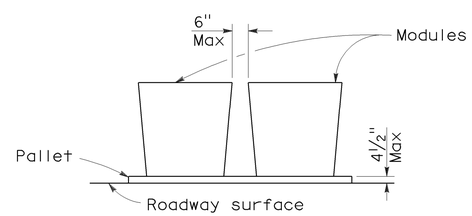

ELEVATION

CRASH CUSHION PALLET DETAIL

See Note 7

NOTES:

1. (XXX) Indicates sand filled module location and weight of sand in pounds for each module. Module spacing is based on the greater diameter of the module.
2. All sand weights are nominal.
3. Temporary crash cushion arrays shall not encroach on the traveled way.
4. Place the Type P marker panel so that the bottom of the panel rests upon the pallet.
5. Refer to Standard Plan A73B for marker details.
6. Approach speeds indicated conform to NCHRP 350 Report criteria.
7. Use of pallets is optional.

STATE OF CALIFORNIA
DEPARTMENT OF TRANSPORTATION

TEMPORARY CRASH CUSHION, SAND FILLED (BIDIRECTIONAL)

NO SCALE

RSP T1B DATED JUNE 6, 2008 SUPERSEDES STANDARD PLAN T1B
DATED MAY 1, 2006 - PAGE 212 OF THE STANDARD PLANS BOOK DATED MAY 2006.

REVISED STANDARD PLAN RSP T1B

2006 REVISED STANDARD PLAN RSP T1B

5-15-08

DIST	COUNTY	ROUTE	POST MILES TOTAL PROJECT	SHEET NO.	TOTAL SHEETS
10	Mer	140	0.0/11.9	12	12

Randell D. Hiatt
REGISTERED CIVIL ENGINEER

June 6, 2008
PLANS APPROVAL DATE

REGISTERED PROFESSIONAL ENGINEER
Randell D. Hiatt
No. C50200
Exp. 6-30-09
CIVIL
STATE OF CALIFORNIA

The State of California or its officers or agents shall not be responsible for the accuracy or completeness of electronic copies of this plan sheet.

To accompany plans dated 12/6/10

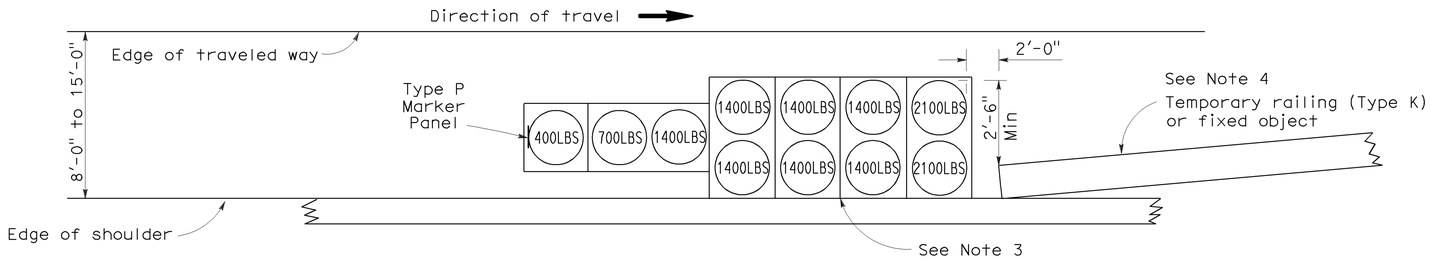

ARRAY 'TS11'

Approach speed less than 45 mph
See Note 9

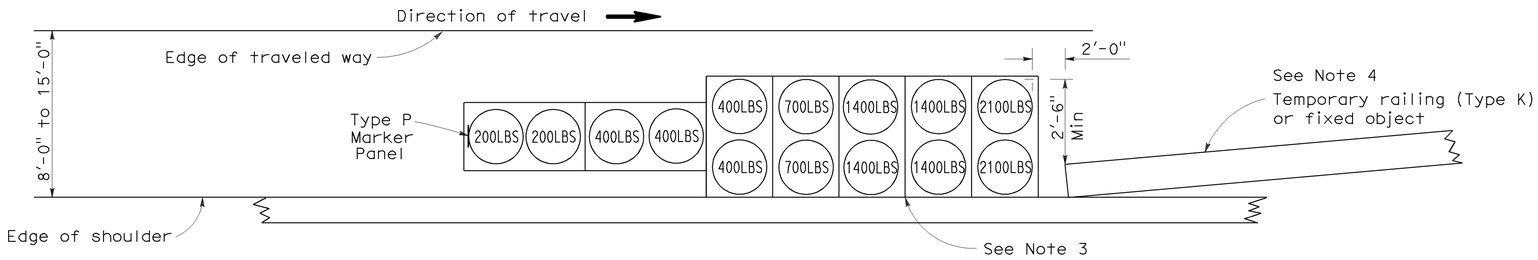

ARRAY 'TS14'

Approach speed 45 mph or more
See Note 9

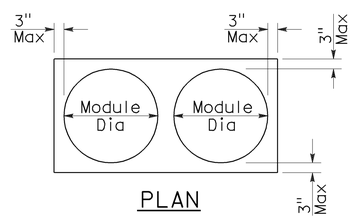

PLAN

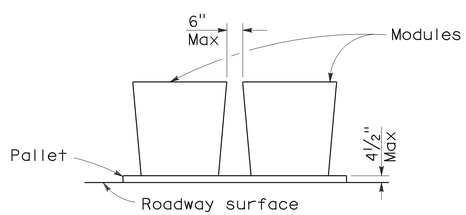

ELEVATION

CRASH CUSHION PALLET DETAIL

See Note 11

NOTES:

1. (XXX) Indicates sand filled module location and weight of sand in pounds for each module. Module spacing is based on the greater diameter of the module.
2. All sand weights are nominal.
3. The temporary crash cushion arrays shown on this plan shall be used only in locations where there will be traffic on one side of the temporary crash cushion array.
4. If the fixed object or approach end of the temporary railing is less than 15'-0" from the edge of traveled way, a temporary crash cushion is required in a construction or work zone.
5. Temporary crash cushion arrays shall not encroach on the traveled way.
6. Arrays for median shoulders shall conform to details shown on this plan for outside shoulders.
7. Place the Type P marker panel so that the bottom of the panel rests upon the pallet and faces traffic.
8. Refer to Standard Plan A73B for marker details.
9. For shoulder widths less than 8'-0", appropriate approved crash cushion protection, other than sand filled modules, shall be provided at fixed objects and at approach ends of temporary railing. The specific type of crash cushion shall be as shown on the project plans or as specified in the Special Provisions, or if not shown on the project plans or specified in the Special Provisions, shall be as approved by the Engineer.
10. Approach speeds indicated conform to NCHRP 350 Report criteria.
11. Use of pallets is optional.

STATE OF CALIFORNIA
DEPARTMENT OF TRANSPORTATION

TEMPORARY CRASH CUSHION, SAND FILLED (SHOULDER INSTALLATIONS)

NO SCALE

RSP T2 DATED JUNE 6, 2008 SUPERSEDES STANDARD PLAN T2
DATED MAY 1, 2006 - PAGE 213 OF THE STANDARD PLANS BOOK DATED MAY 2006.

REVISED STANDARD PLAN RSP T2

2006 REVISED STANDARD PLAN RSP T2

5-15-08