FOR CONTRACT NO.: 10-0U6004

INFORMATION HANDOUT

MATERIALS INFORMATION

INSTALLATION DETAILS FOR
BATTERY BACKUP SYSTEM
(BBS Cabinet mounting details and wiring details)

ROUTE: 10-SJ-4-PM 4.4

Dist	COUNTY	LOCATION CODE	POST MILES TOTAL PROJECT	SHEET No.	TOTAL SHEETS

Theresa Gabriel 12-20-07
REGISTERED CIVIL ENGINEER DATE

PLANS APPROVAL DATE

REGISTERED PROFESSIONAL ENGINEER Theresa A. Gabriel No. E15129 Exp. 6-30-10 ELECT STATE OF CALIFORNIA

THE STATE OF CALIFORNIA OR ITS OFFICERS OR AGENTS SHALL NOT BE RESPONSIBLE FOR THE ACCURACY OR COMPLETENESS OF SCANNED COPIES OF THIS PLAN SHEET.

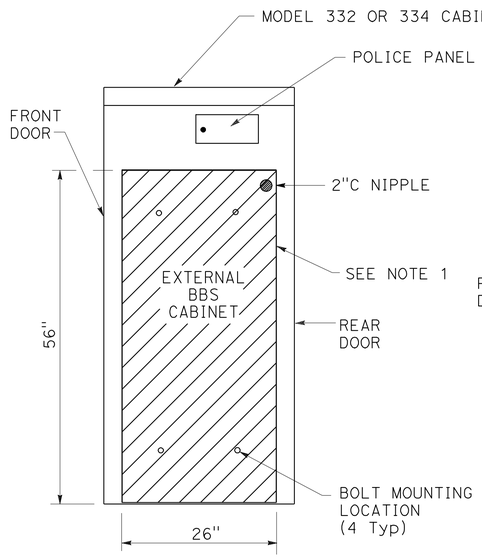

SIDE VIEW

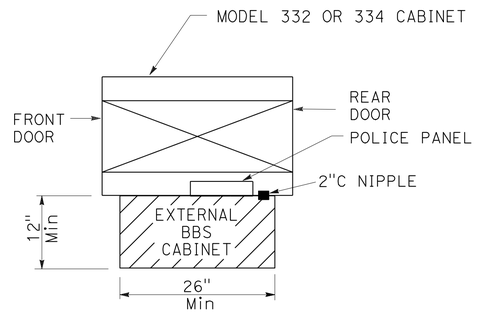

TOP VIEW

EXTERNAL BBS CABINET MOUNTED TO THE MODEL 332 OR 334 CABINET

NOTE: (THIS SHEET ONLY)

1. THE EXTERNAL BBS CABINET SHALL BE MOUNTED TO THE MODEL 332 OR 334 CABINET WITH FOUR 18-8 STAINLESS STEEL HEX HEAD, FULLY-THREADED, 3/8"-16 X 1" BOLTS; TWO WASHERS PER BOLT, DESIGNED FOR 3/8" BOLTS AND ARE 18-8 STAINLESS STEEL, 1" OUTSIDE DIAMETER, ROUND, AND FLAT; AND ONE K-LOCK NUT PER BOLT THAT IS 18-8 STAINLESS STEEL AND A HEX-NUT. THE ENGINEER WILL HAVE TO APPROVE THE BOLT MOUNTING LOCATION PRIOR TO INSTALLATION.
2. THE ANCHOR BOLTS SHALL BE 3/4" Dia X 15" WITH A 2"-90° BEND. THE CABINET MANUFACTURER'S SPECIFICATION SHALL DETERMINE THE LOCATION OF THE ANCHOR BOLTS IN THE FOUNDATION. THE ENGINEER WILL HAVE TO APPROVE THE ANCHOR BOLTS AND ITS LOCATION IN THE FOUNDATION PRIOR TO CONSTRUCTION.
3. THE CONTRACTOR SHALL VERIFY THE DIMENSIONS OF THE BBS CABINET PRIOR TO CONSTRUCTING THE FOUNDATION OF THE MODIFIED PORTION OF THE Std MODEL 332 AND 334 CABINET FOUNDATION. THE ENGINEER WILL HAVE TO APPROVE ANY NECESSARY DEVIATIONS PRIOR TO CONSTRUCTION.
4. ALL DIMENSIONS ARE NOMINAL.

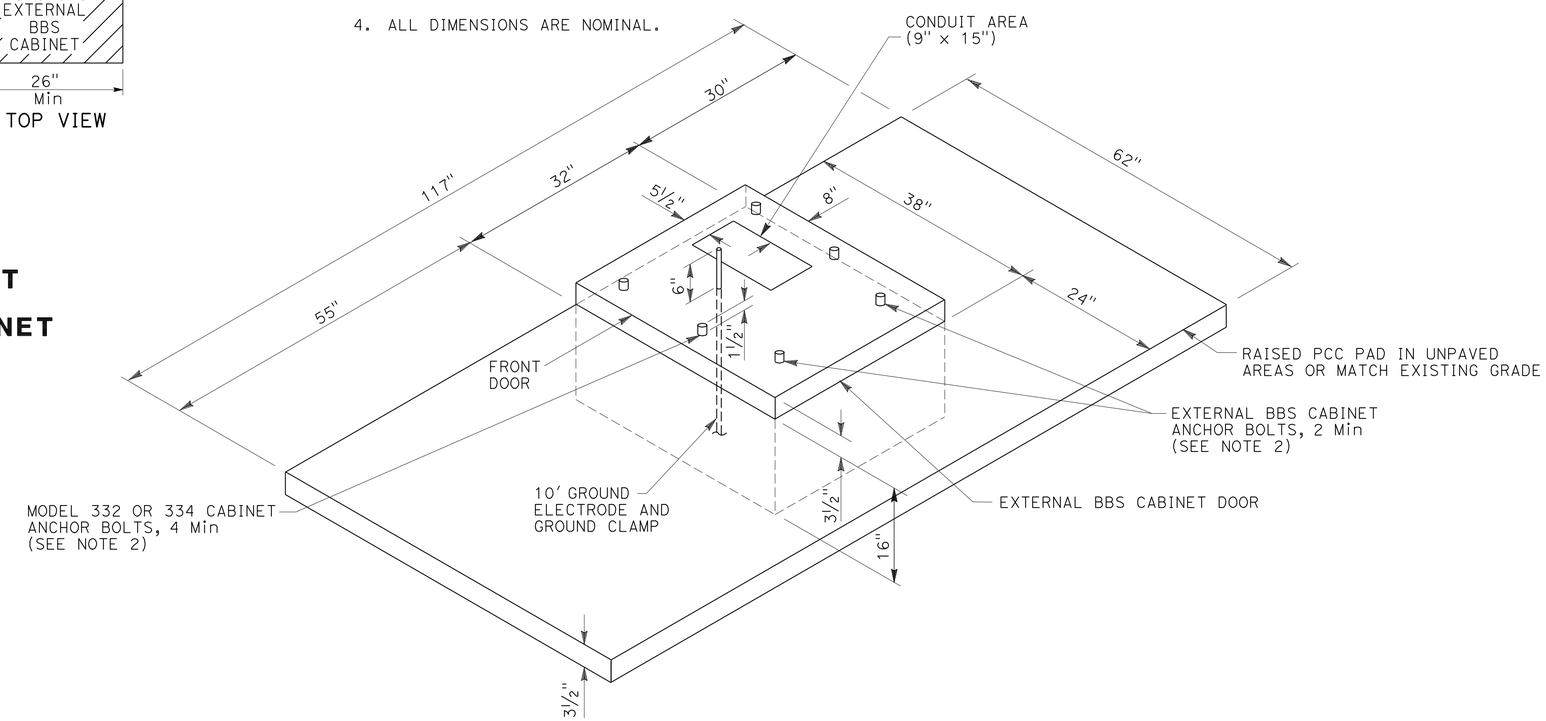

MODIFIED MODEL 332 AND 334 CABINET FOUNDATION DETAIL FOR BATTERY BACKUP SYSTEM (BBS)

(FOR DIMENSIONS AND DETAILS NOT SHOWN AND ADDITIONAL NOTES, SEE SHEET ES-3C OF THE STANDARD PLANS FOR MODEL 332 AND 334 CABINETS)

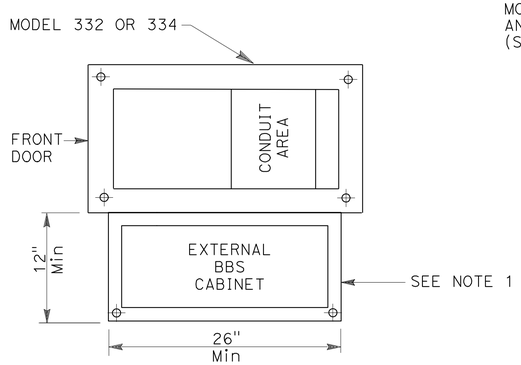

BASE PLAN FOR BBS MOUNTED TO THE MODEL 332 OR 334 CABINET

(FOR DIMENSIONS AND DETAILS NOT SHOWN, SEE SHEET A6-1 TO A6-4, CABINET HOUSING DETAILS OF THE TRANSPORTATION ELECTRICAL EQUIPMENT SPECIFICATION (TEES))

ELECTRICAL SYSTEMS
(BBS FOUNDATION DETAILS)

NO SCALE

THIS PLAN IS ACCURATE FOR ELECTRICAL WORK ONLY.

REVISED BY | DATE REVISED | CALCULATED-DESIGNED BY | CHECKED BY | FUNCTIONAL SUPERVISOR

STATE OF CALIFORNIA - DEPARTMENT OF TRANSPORTATION

Caltrans

LAST REVISION 2-2-09 | DATE PLOTTED => 13-APR-2010 | TIME PLOTTED => 11:41

Dist	COUNTY	LOCATION CODE	POST MILES TOTAL PROJECT	SHEET No.	TOTAL SHEETS

Theresa Gabriel 12-20-07
REGISTERED CIVIL ENGINEER DATE

PLANS APPROVAL DATE

REGISTERED PROFESSIONAL ENGINEER Theresa A. Gabriel No. E15129 Exp. 6-30-10 ELECT STATE OF CALIFORNIA

THE STATE OF CALIFORNIA OR ITS OFFICERS OR AGENTS SHALL NOT BE RESPONSIBLE FOR THE ACCURACY OR COMPLETENESS OF SCANNED COPIES OF THIS PLAN SHEET.

LEGEND: (THIS SHEET ONLY)

PTS = POWER TRANSFER SWITCH
UPS = UNINTERRUPTIBLE POWER SUPPLY
UPSC = UNINTERRUPTIBLE POWER SUPPLY CONTROLLER
UPSM = UPS MODE
BP = BYPASS
MBPS = MANUAL BYPASS SWITCH
AC+ = UNGROUNDED CONDUCTOR
AC- = GROUNDED CONDUCTOR
C = COMMON
Grn = GREEN
Blk = BLACK
Wht = WHITE
SF = STATE-FURNISHED
TB = TERMINAL BOARD
Cntl = CONTROL
Gnd = GROUND
Temp = TEMPERATURE
Batt = BATTERY

NOTES: (THIS SHEET ONLY)

1. TYPE A REFERS TO THE BBS EQUIPMENT FROM MANUFACTURER A.
2. CASE-1 REFERS TO THE SITUATION WHEN THE ENTIRE BBS EQUIPMENT INCLUDING THE BATTERIES ARE INSTALLED IN THE BBS CABINET.
3. THE LOCATION OF THE 2"C NIPPLE WILL BE DETERMINED BY THE ENGINEER IN THE FIELD.
4. THE CONTRACTOR SHALL FURNISH AND INSTALL A NEMA-1 ENCLOSURE WITH 30 A, 1P, 120/240 VOLTS RATED CIRCUIT BREAKER MANUFACTURED PER UL STANDARD 489.
5. A TEMPERATURE PROBE SHALL BE ATTACHED TO THE BATTERY BY TAPE OR ATTACHED TO THE NEGATIVE TERMINAL OF THE BATTERY.
6. THE ELECTRICAL POWER FOR THE COOLING FAN FOR THE BBS CABINET SHALL BE TAPPED FROM THE BOTTOM OF THE TB IN THE 332 CABINET.
7. THE CONTRACTOR SHALL PROVIDE A 9-WIRE WIRING HARNESS OR BUNDLED 9 MULTICOLOR CONDUCTORS, #18 AWG WIRES FROM THE RELAY ON THE INVERTER/CHARGER UNIT TO THE CONTROLLER. THE ENDS OF THE CONDUCTORS SHALL BE INSULATED WITH TAPE AND A SIX-FOOT COIL ON EACH END.

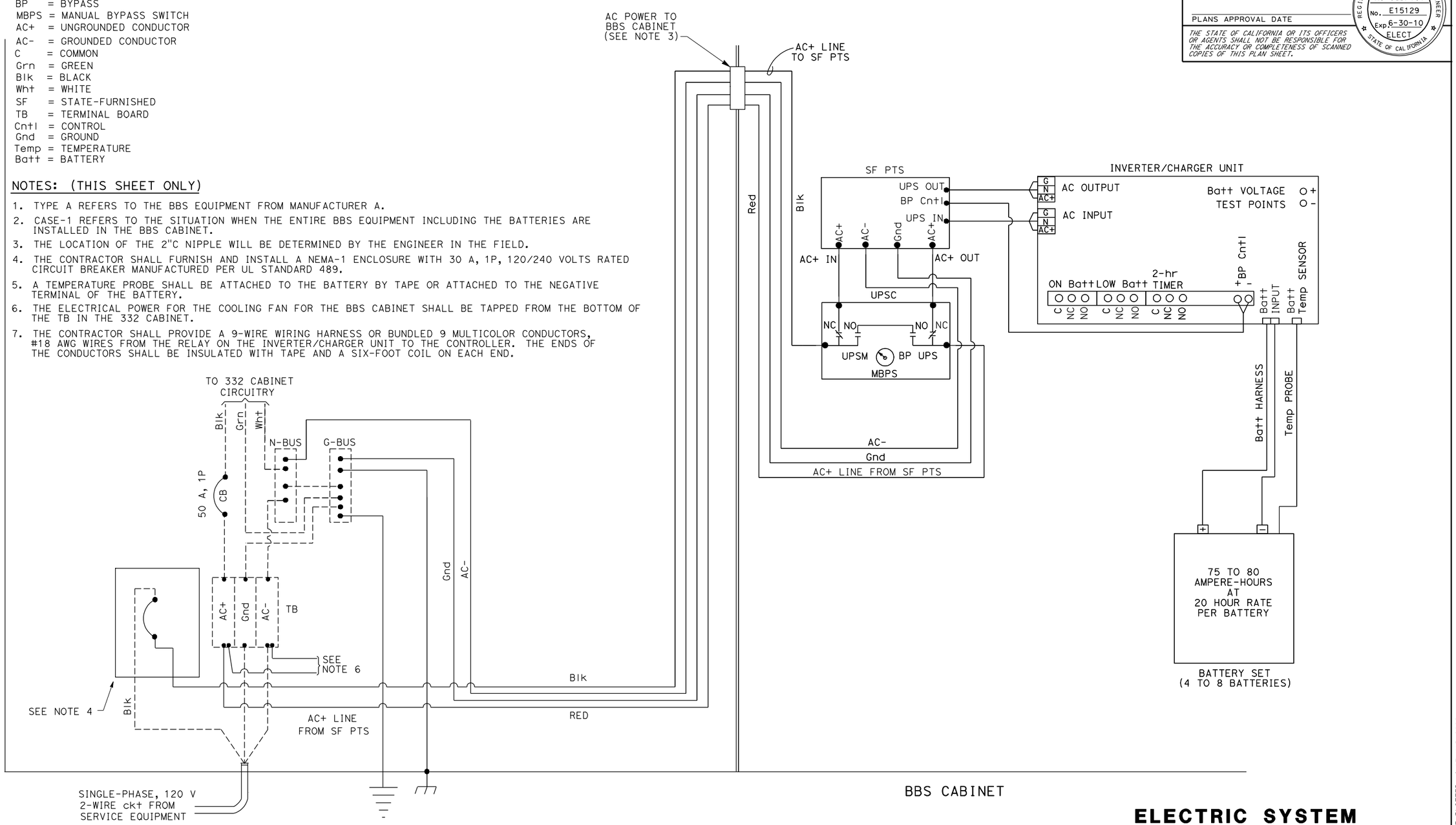

ELECTRIC SYSTEM
(BBS POWER CONNECTION DIAGRAM, TYPE A, CASE-1)

REVISED BY | DATE REVISED
CALCULATED-DESIGNED BY | CHECKED BY
FUNCTIONAL SUPERVISOR
STATE OF CALIFORNIA - DEPARTMENT OF TRANSPORTATION
Caltrans

LAST REVISION 3-11-09 | DATE PLOTTED => 13-MAR-2009 TIME PLOTTED => 09:06

Dist	COUNTY	LOCATION CODE	POST MILES TOTAL PROJECT	SHEET No.	TOTAL SHEETS

Theresa Gabriel 12-20-07
REGISTERED CIVIL ENGINEER DATE

PLANS APPROVAL DATE

REGISTERED PROFESSIONAL ENGINEER Theresa A. Gabriel No. E15129 Exp 6-30-10 ELECT STATE OF CALIFORNIA

THE STATE OF CALIFORNIA OR ITS OFFICERS OR AGENTS SHALL NOT BE RESPONSIBLE FOR THE ACCURACY OR COMPLETENESS OF SCANNED COPIES OF THIS PLAN SHEET.

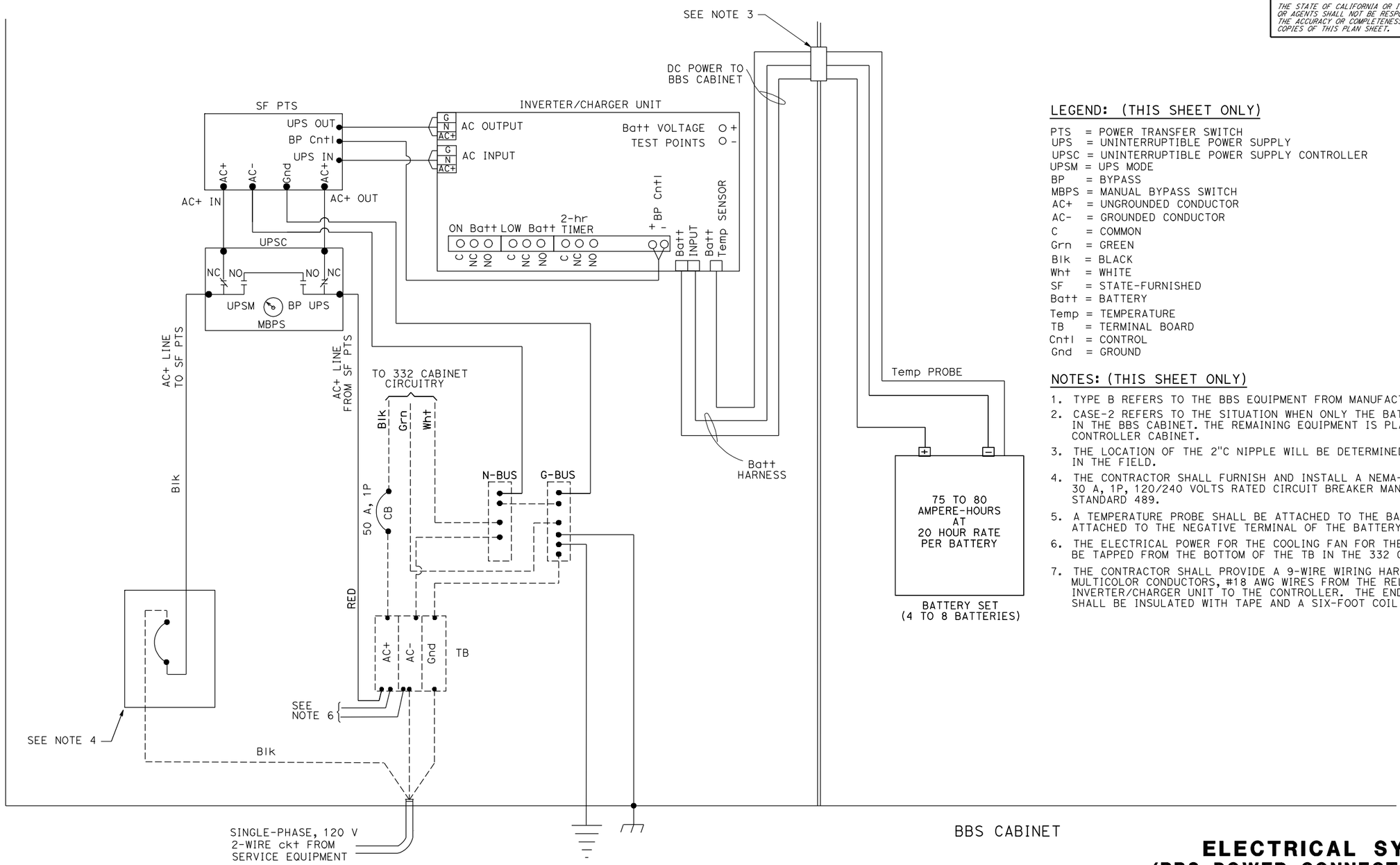

LEGEND: (THIS SHEET ONLY)

PTS = POWER TRANSFER SWITCH
UPS = UNINTERRUPTIBLE POWER SUPPLY
UPSC = UNINTERRUPTIBLE POWER SUPPLY CONTROLLER
UPSM = UPS MODE
BP = BYPASS
MBPS = MANUAL BYPASS SWITCH
AC+ = UNGROUNDED CONDUCTOR
AC- = GROUNDED CONDUCTOR
C = COMMON
Grn = GREEN
Blk = BLACK
Wht = WHITE
SF = STATE-FURNISHED
Batt = BATTERY
Temp = TEMPERATURE
TB = TERMINAL BOARD
Cntl = CONTROL
Gnd = GROUND

NOTES: (THIS SHEET ONLY)

1. TYPE B REFERS TO THE BBS EQUIPMENT FROM MANUFACTURER B.
2. CASE-2 REFERS TO THE SITUATION WHEN ONLY THE BATTERIES ARE INSTALLED IN THE BBS CABINET. THE REMAINING EQUIPMENT IS PLACED IN THE 332 CONTROLLER CABINET.
3. THE LOCATION OF THE 2"C NIPPLE WILL BE DETERMINED BY THE ENGINEER IN THE FIELD.
4. THE CONTRACTOR SHALL FURNISH AND INSTALL A NEMA-1 ENCLOSURE WITH 30 A, 1P, 120/240 VOLTS RATED CIRCUIT BREAKER MANUFACTURED PER UL STANDARD 489.
5. A TEMPERATURE PROBE SHALL BE ATTACHED TO THE BATTERY BY TAPE OR ATTACHED TO THE NEGATIVE TERMINAL OF THE BATTERY.
6. THE ELECTRICAL POWER FOR THE COOLING FAN FOR THE BBS CABINET SHALL BE TAPPED FROM THE BOTTOM OF THE TB IN THE 332 CABINET.
7. THE CONTRACTOR SHALL PROVIDE A 9-WIRE WIRING HARNESS OR BUNDLED 9 MULTICOLOR CONDUCTORS, #18 AWG WIRES FROM THE RELAY ON THE INVERTER/CHARGER UNIT TO THE CONTROLLER. THE ENDS OFTHE CONDUCTORS SHALL BE INSULATED WITH TAPE AND A SIX-FOOT COIL ON EACH END.

ELECTRICAL SYSTEMS
(BBS POWER CONNECTION DIAGRAM, TYPE A, CASE-2)

NO SCALE

REVISED BY	DATE REVISED

CALCULATED-DESIGNED BY	CHECKED BY

FUNCTIONAL SUPERVISOR

STATE OF CALIFORNIA - DEPARTMENT OF TRANSPORTATION
Caltrans

LAST REVISION 2-2-09
DATE PLOTTED => 13-MAR-2009
TIME PLOTTED => 09:07

Dist	COUNTY	LOCATION CODE	POST MILES TOTAL PROJECT	SHEET No.	TOTAL SHEETS

Theresa Gabriel 12-20-07
REGISTERED CIVIL ENGINEER DATE

PLANS APPROVAL DATE

REGISTERED PROFESSIONAL ENGINEER Theresa A. Gabriel No. E15129 Exp. 6-30-10 ELECT STATE OF CALIFORNIA

THE STATE OF CALIFORNIA OR ITS OFFICERS OR AGENTS SHALL NOT BE RESPONSIBLE FOR THE ACCURACY OR COMPLETENESS OF SCANNED COPIES OF THIS PLAN SHEET.

LEGEND: (THIS SHEET ONLY)

PTS = POWER TRANSFER SWITCH
UPS = UNINTERRUPTIBLE POWER SUPPLY
UPSC = UNINTERRUPTIBLE POWER SUPPLY CONTROLLER
UPSM = UPS MODE
BP = BYPASS
MBPS = MANUAL BYPASS SWITCH
AC+ = UNGROUNDED CONDUCTOR
AC- = GROUNDED CONDUCTOR
C = COMMON
Grn = GREEN
Blk = BLACK
Wht = WHITE
SF = STATE-FURNISHED
Batt = BATTERY
Temp = TEMPERATURE
TB = TERMINAL BOARD
Cntl = CONTROL
Gnd = GROUND

NOTES: (THIS SHEET ONLY)

1. TYPE B REFERS TO THE BBS EQUIPMENT FROM MANUFACTURER B.
2. CASE-1 REFERS TO THE SITUATION WHEN THE ENTIRE BBS EQUIPMENT INCLUDING THE BATTERIES ARE INSTALLED IN THE BBS CABINET.
3. THE LOCATION OF THE 2"C NIPPLE WILL BE DETERMINED BY THE ENGINEER IN THE FIELD.
4. THE CONTRACTOR SHALL FURNISH AND INSTALL A NEMA-1 ENCLOSURE WITH 30 A, 1P, 120/240 VOLTS RATED CIRCUIT BREAKER MANUFACTURED PER UL STANDARD 489.
5. A TEMPERATURE PROBE SHALL BE ATTACHED TO THE BATTERY BY TAPE OR ATTACHED TO THE NEGATIVE TERMINAL OF THE BATTERY.
6. THE ELECTRICAL POWER FOR THE COOLING FAN FOR THE BBS CABINET SHALL BE TAPPED FROM THE BOTTOM OF THE TB IN THE 332 CABINET.
7. THE CONTRACTOR SHALL PROVIDE A 9-WIRE WIRING HARNESS OR BUNDLED 9 MULTICOLOR CONDUCTORS, #18 AWG WIRES FROM THE RELAY ON THE INVERTER/CHARGER UNIT TO THE CONTROLLER. THE ENDS OF THE CONDUCTORS SHALL BE INSULATED WITH TAPE AND A SIX-FOOT COIL ON EACH END.

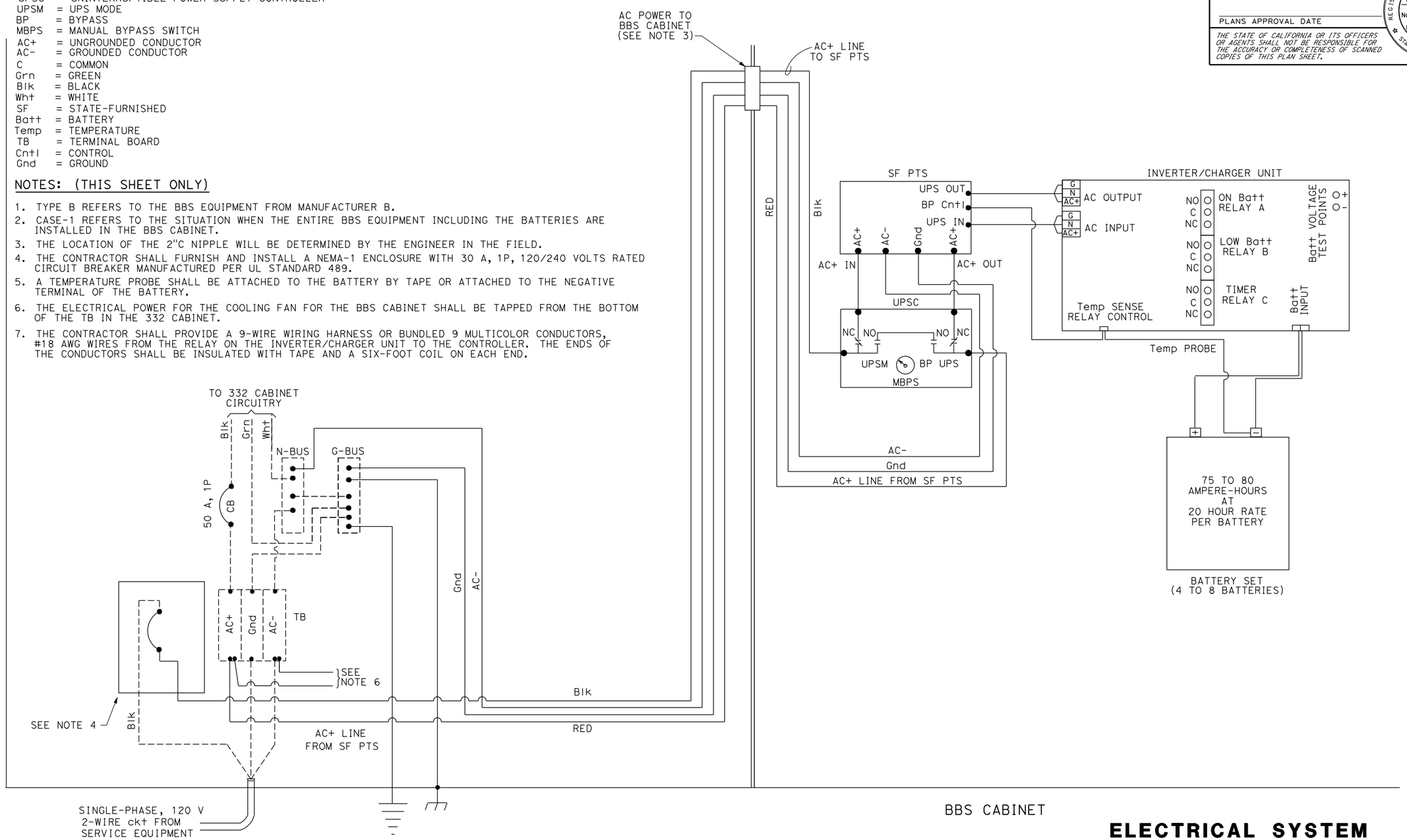

ELECTRICAL SYSTEM

(BBS POWER CONNECTION DIAGRAM, TYPE B, CASE-1)

REVISED BY | DATE REVISED
CALCULATED-DESIGNED BY | CHECKED BY
FUNCTIONAL SUPERVISOR
STATE OF CALIFORNIA - DEPARTMENT OF TRANSPORTATION
Caltrans

LAST REVISION 3-11-09 | DATE PLOTTED => 21-SEP-2009 | TIME PLOTTED => 13:33

Dist	COUNTY	LOCATION CODE	POST MILES TOTAL PROJECT	SHEET No.	TOTAL SHEETS

Theresa Gabriel 12-20-07
REGISTERED CIVIL ENGINEER DATE

PLANS APPROVAL DATE

REGISTERED PROFESSIONAL ENGINEER Theresa A. Gabriel No. E15129 Exp 6-30-10 ELECT STATE OF CALIFORNIA

THE STATE OF CALIFORNIA OR ITS OFFICERS OR AGENTS SHALL NOT BE RESPONSIBLE FOR THE ACCURACY OR COMPLETENESS OF SCANNED COPIES OF THIS PLAN SHEET.

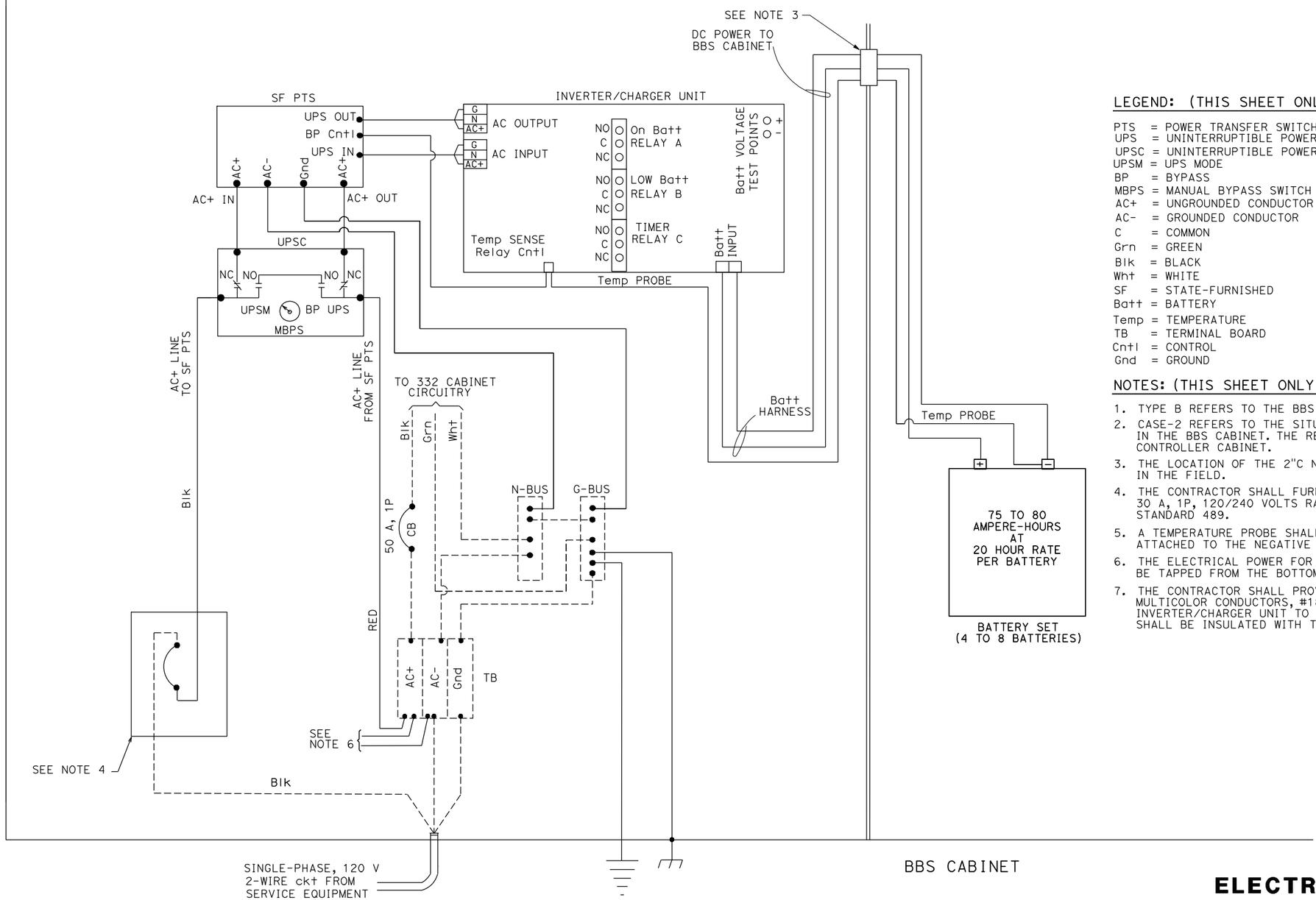

LEGEND: (THIS SHEET ONLY)

PTS = POWER TRANSFER SWITCH
UPS = UNINTERRUPTIBLE POWER SUPPLY
UPSC = UNINTERRUPTIBLE POWER SUPPLY CONTROLLER
UPSM = UPS MODE
BP = BYPASS
MBPS = MANUAL BYPASS SWITCH
AC+ = UNGROUNDED CONDUCTOR
AC- = GROUNDED CONDUCTOR
C = COMMON
Grn = GREEN
Blk = BLACK
Wht = WHITE
SF = STATE-FURNISHED
Batt = BATTERY
Temp = TEMPERATURE
TB = TERMINAL BOARD
Cntl = CONTROL
Gnd = GROUND

NOTES: (THIS SHEET ONLY)

1. TYPE B REFERS TO THE BBS EQUIPMENT FROM MANUFACTURER B.
2. CASE-2 REFERS TO THE SITUATION WHEN ONLY THE BATTERIES ARE INSTALLED IN THE BBS CABINET. THE REMAINING EQUIPMENT IS PLACED IN THE 332 CONTROLLER CABINET.
3. THE LOCATION OF THE 2"C NIPPLE WILL BE DETERMINED BY THE ENGINEER IN THE FIELD.
4. THE CONTRACTOR SHALL FURNISH AND INSTALL A NEMA-1 ENCLOSURE WITH 30 A, 1P, 120/240 VOLTS RATED CIRCUIT BREAKER MANUFACTURED PER UL STANDARD 489.
5. A TEMPERATURE PROBE SHALL BE ATTACHED TO THE BATTERY BY TAPE OR ATTACHED TO THE NEGATIVE TERMINAL OF THE BATTERY.
6. THE ELECTRICAL POWER FOR THE COOLING FAN FOR THE BBS CABINET SHALL BE TAPPED FROM THE BOTTOM OF THE TB IN THE 332 CABINET.
7. THE CONTRACTOR SHALL PROVIDE A 9-WIRE WIRING HARNESS OR BUNDLED 9 MULTICOLOR CONDUCTORS, #18 AWG WIRES FROM THE RELAY ON THE INVERTER/CHARGER UNIT TO THE CONTROLLER. THE ENDS OFTHE CONDUCTORS SHALL BE INSULATED WITH TAPE AND A SIX-FOOT COIL ON EACH END.

ELECTRICAL SYSTEM

(BBS POWER CONNECTION DIAGRAM, TYPE B, CASE-2)

REVISED BY	DATE REVISED

CALCULATED-DESIGNED BY
CHECKED BY
FUNCTIONAL SUPERVISOR

STATE OF CALIFORNIA - DEPARTMENT OF TRANSPORTATION
Caltrans

LAST REVISION 3-11-09
DATE PLOTTED => 13-MAR-2009
TIME PLOTTED => 09:10