Dist	COUNTY	ROUTE	POST MILES TOTAL PROJECT	SHEET No.	TOTAL SHEETS
10	SJ	26	18.5/19.0	1	42

ACHSSTP-P026(028)E

STATE OF CALIFORNIA
DEPARTMENT OF TRANSPORTATION

PROJECT PLANS FOR CONSTRUCTION ON
STATE HIGHWAY

IN SAN JOAQUIN COUNTY
NEAR BELLOTA
FROM 0.3 MILE WEST OF SANDSTONE CREEK BRIDGE TO SHELLY ROAD

TO BE SUPPLEMENTED BY STANDARD PLANS DATED 2010

INDEX OF PLANS

SHEET No.	DESCRITPTION
1	TITLE AND LOCATION MAP
2	TYPICAL CROSS SECTIONS
3-4	LAYOUTS
5-6	PROFILE AND SUPERELEVATION
7	CONSTRUCTION DETAILS
8	WATER POLUTION CONTROL PLAN
9-15	DRAINAGE PLANS, PROFILES, DETAILS AND QUANTITIES
16-17	UTILITY PLANS
18	CONSTRUCTION AREA SIGNS
19-21	STAGE CONSTRUCTION
22-28	TRAFFIC HANDLING PLANS AND QUANTITIES
29-33	DETOUR PLANS
34-36	PAVEMENT DELINEATION AND SIGN PLANS AND QUANTITIES
37	SUMMARY OF QUANTITIES
38-40	EROSION CONTROL LEGEND AND PLANS
41-42	REVISED STANDARD PLANS

THE STANDARD PLANS LIST APPLICABLE TO THIS CONTRACT IS INCLUDED IN THE NOTICE TO BIDDERS AND SPECIAL PROVISIONS BOOK.

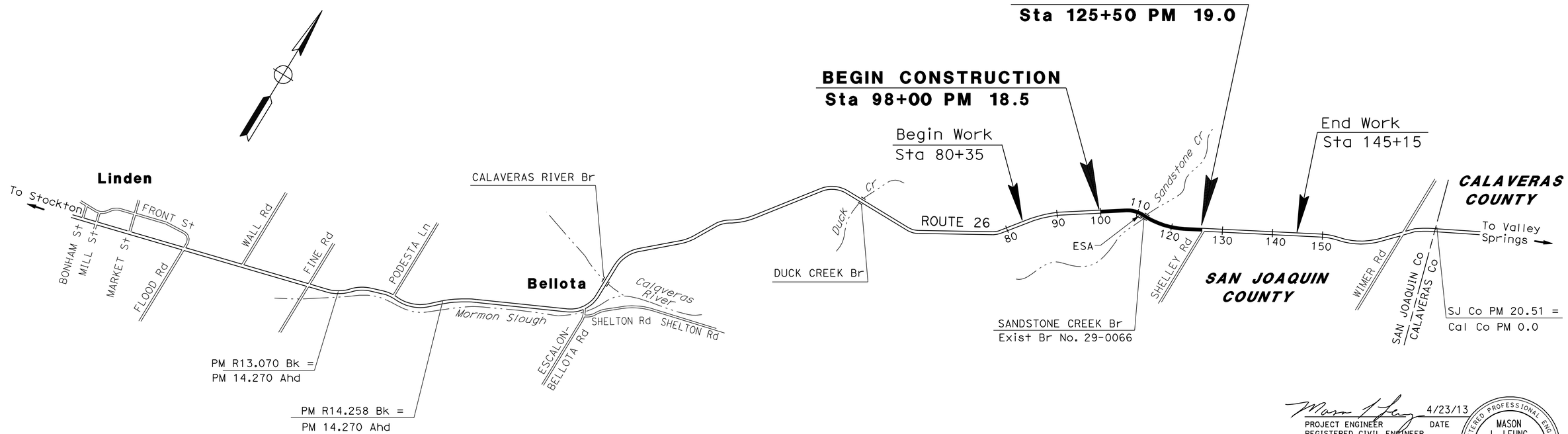

NO SCALE

THE CONTRACTOR SHALL POSSESS THE CLASS (OR CLASSES) OF LICENSE AS SPECIFIED IN THE "NOTICE TO BIDDERS."

PROJECT MANAGER: SCOTT GUIDI
DESIGN ENGINEER: MICHAEL HUTCHISON

4/23/13
PROJECT ENGINEER REGISTERED CIVIL ENGINEER — DATE

May 13, 2013
PLANS APPROVAL DATE

REGISTERED PROFESSIONAL ENGINEER — MASON L. LEUNG — No. 71709 — Exp. 12-31-13 — CIVIL — STATE OF CALIFORNIA

THE STATE OF CALIFORNIA OR ITS OFFICERS OR AGENTS SHALL NOT BE RESPONSIBLE FOR THE ACCURACY OR COMPLETENESS OF SCANNED COPIES OF THIS PLAN SHEET.

CONTRACT No.	10-0T1604
PROJECT ID	1000000271

LAST REVISION 00-00-00
DATE PLOTTED => 10-JUN-2013
TIME PLOTTED => 08:05

Dist	COUNTY	ROUTE	POST MILES TOTAL PROJECT	SHEET No.	TOTAL SHEETS
10	SJ	26	18.5/19.0	2	42

REGISTERED CIVIL ENGINEER 4/23/13 DATE

5/13/13
PLANS APPROVAL DATE

REGISTERED PROFESSIONAL ENGINEER MASON L. LEUNG No. 71709 Exp. 12-31-13 CIVIL STATE OF CALIFORNIA

THE STATE OF CALIFORNIA OR ITS OFFICERS OR AGENTS SHALL NOT BE RESPONSIBLE FOR THE ACCURACY OR COMPLETENESS OF SCANNED COPIES OF THIS PLAN SHEET.

NOTES:

1. DIMENSIONS OF THE STRUCTURAL SECTIONS ARE SUBJECT TO TOLERANCES SPECIFIED IN THE STANDARD SPECIFICATIONS.
2. SUPERELEVATION AS SHOWN OR AS DIRECTED BY THE ENGINEER.

ABBREVIATION:

SE - SAFETY EDGE

ROUTE 26
DESIGN DESIGNATION

ADT	(2013)	6,400	D	70%
ADT	(2033)	11,200	T	5%
DHV		1,100	V	60 mph
			TI	10.0

PAVEMENT CLIMATE REGION
INLAND VALLEY

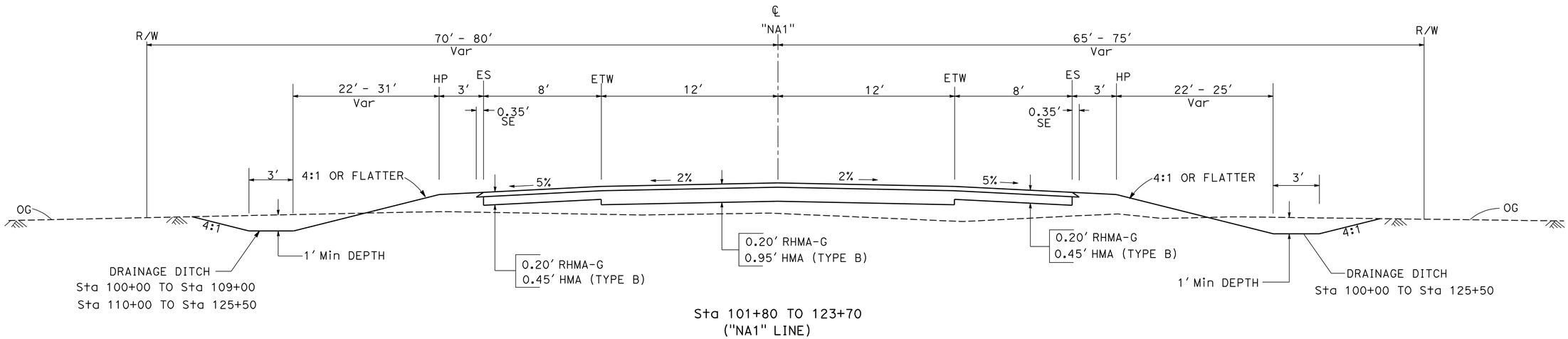

Sta 101+80 TO 123+70
("NA1" LINE)

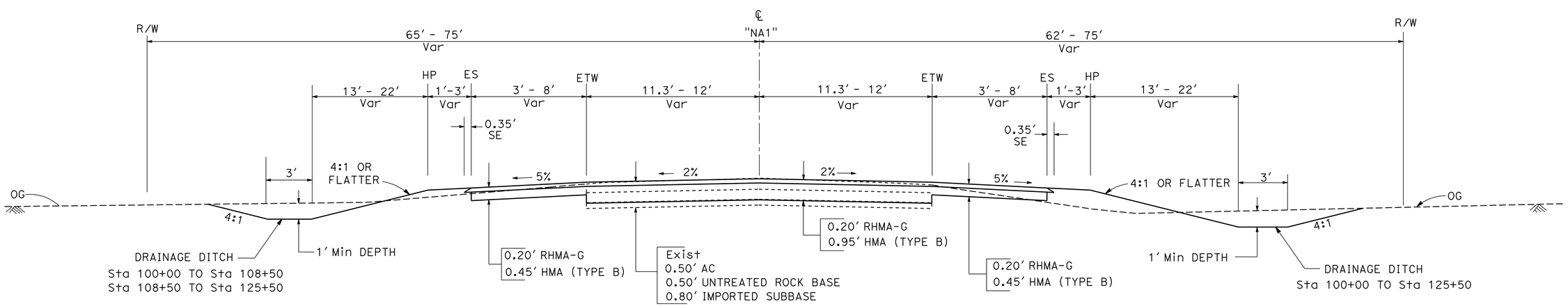

Sta 100+00 TO 101+80
Sta 123+70 TO 125+50
("NA1" LINE)

ROUTE 26

TYPICAL CROSS SECTIONS

NO SCALE

X-1

REVISED BY	DATE REVISED
ML	04/26/13

MANUEL PALATINO — MASON LEUNG
CALCULATED-DESIGNED BY — CHECKED BY
FUNCTIONAL SUPERVISOR — MICHAEL HUTCHISON

STATE OF CALIFORNIA - DEPARTMENT OF TRANSPORTATION
Caltrans®
DESIGN

LAST REVISION 00-00-00
DATE PLOTTED => 10-JUN-2013
TIME PLOTTED => 08:05

Dist	COUNTY	ROUTE	POST MILES TOTAL PROJECT	SHEET No.	TOTAL SHEETS
10	SJ	26	18.5/19.0	3	42

REGISTERED CIVIL ENGINEER 4/23/13 DATE

5/13/13
PLANS APPROVAL DATE

REGISTERED PROFESSIONAL ENGINEER MASON L. LEUNG No. 71709 Exp. 12-31-13 CIVIL STATE OF CALIFORNIA

THE STATE OF CALIFORNIA OR ITS OFFICERS OR AGENTS SHALL NOT BE RESPONSIBLE FOR THE ACCURACY OR COMPLETENESS OF SCANNED COPIES OF THIS PLAN SHEET.

NOTE:

FOR ACCURATE RIGHT OF WAY DATA, CONTACT RIGHT OF WAY ENGINEERING AT THE DISTRICT OFFICE.

LEGEND

REMOVE BASE AND SURFACING

CURVE DATA

No.	R	Δ	T	L
1	2200′	25°56′14"	506.64′	995.92′

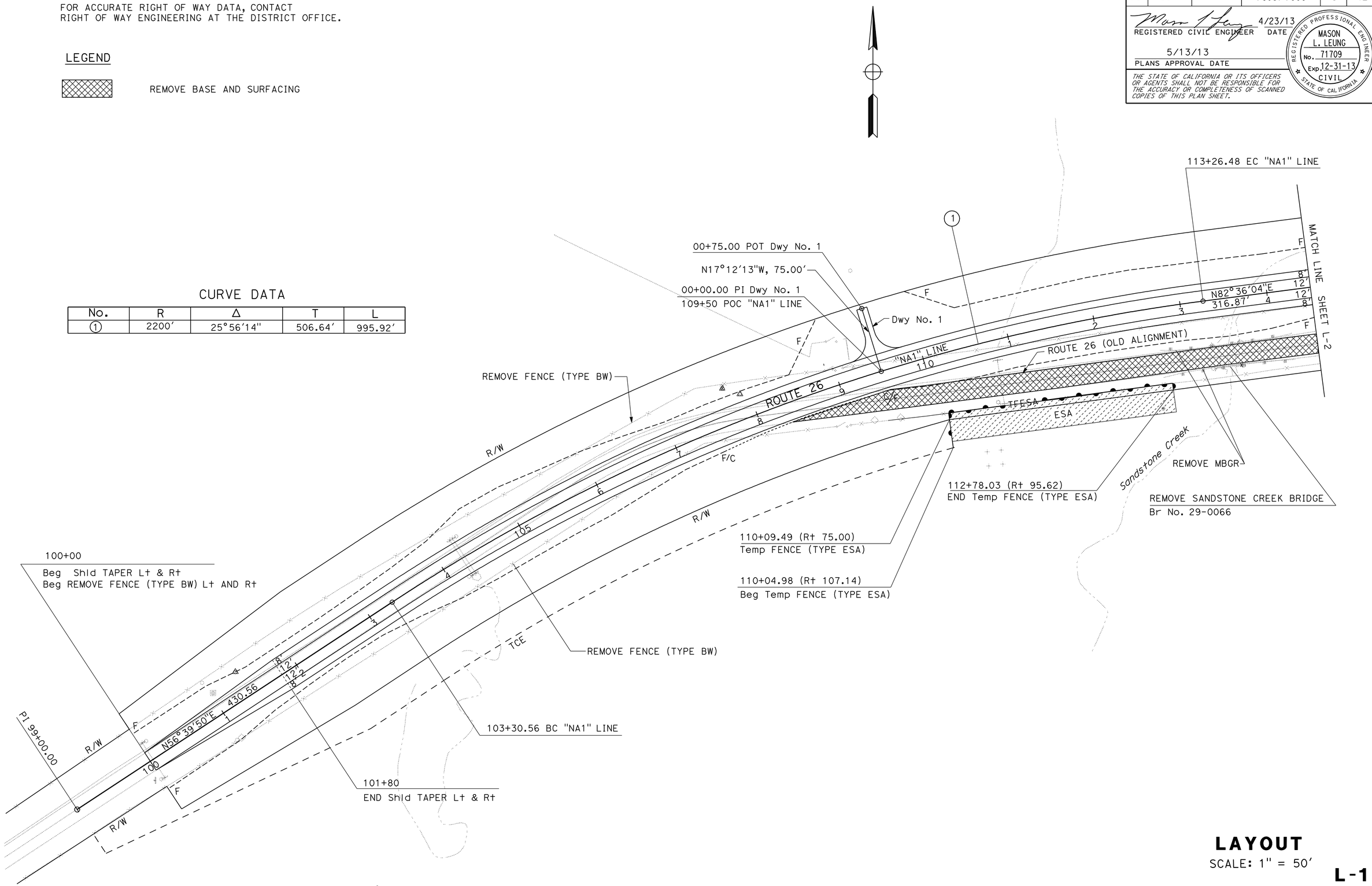

LAYOUT

SCALE: 1" = 50′

L-1

STATE OF CALIFORNIA - DEPARTMENT OF TRANSPORTATION

Caltrans DESIGN

FUNCTIONAL SUPERVISOR: MICHAEL HUTCHISON

CALCULATED-DESIGNED BY: MANUEL PALATINO

CHECKED BY: MASON LEUNG

REVISED BY: ML

DATE REVISED: 04/26/13

LAST REVISION 00-00-00

DATE PLOTTED => 10-JUN-2013
TIME PLOTTED => 08:05

Dist	COUNTY	ROUTE	POST MILES TOTAL PROJECT	SHEET No.	TOTAL SHEETS
10	SJ	26	18.5/19.0	4	42

REGISTERED CIVIL ENGINEER 4/23/13 DATE

5/13/13
PLANS APPROVAL DATE

REGISTERED PROFESSIONAL ENGINEER MASON L. LEUNG No. 71709 Exp. 12-31-13 CIVIL STATE OF CALIFORNIA

THE STATE OF CALIFORNIA OR ITS OFFICERS OR AGENTS SHALL NOT BE RESPONSIBLE FOR THE ACCURACY OR COMPLETENESS OF SCANNED COPIES OF THIS PLAN SHEET.

NOTE:

FOR ACCURATE RIGHT OF WAY DATA, CONTACT RIGHT OF WAY ENGINEERING AT THE DISTRICT OFFICE.

CURVE DATA

No.	R	Δ	T	L
2	1800′	18°14′33"	289.00′	573.11′

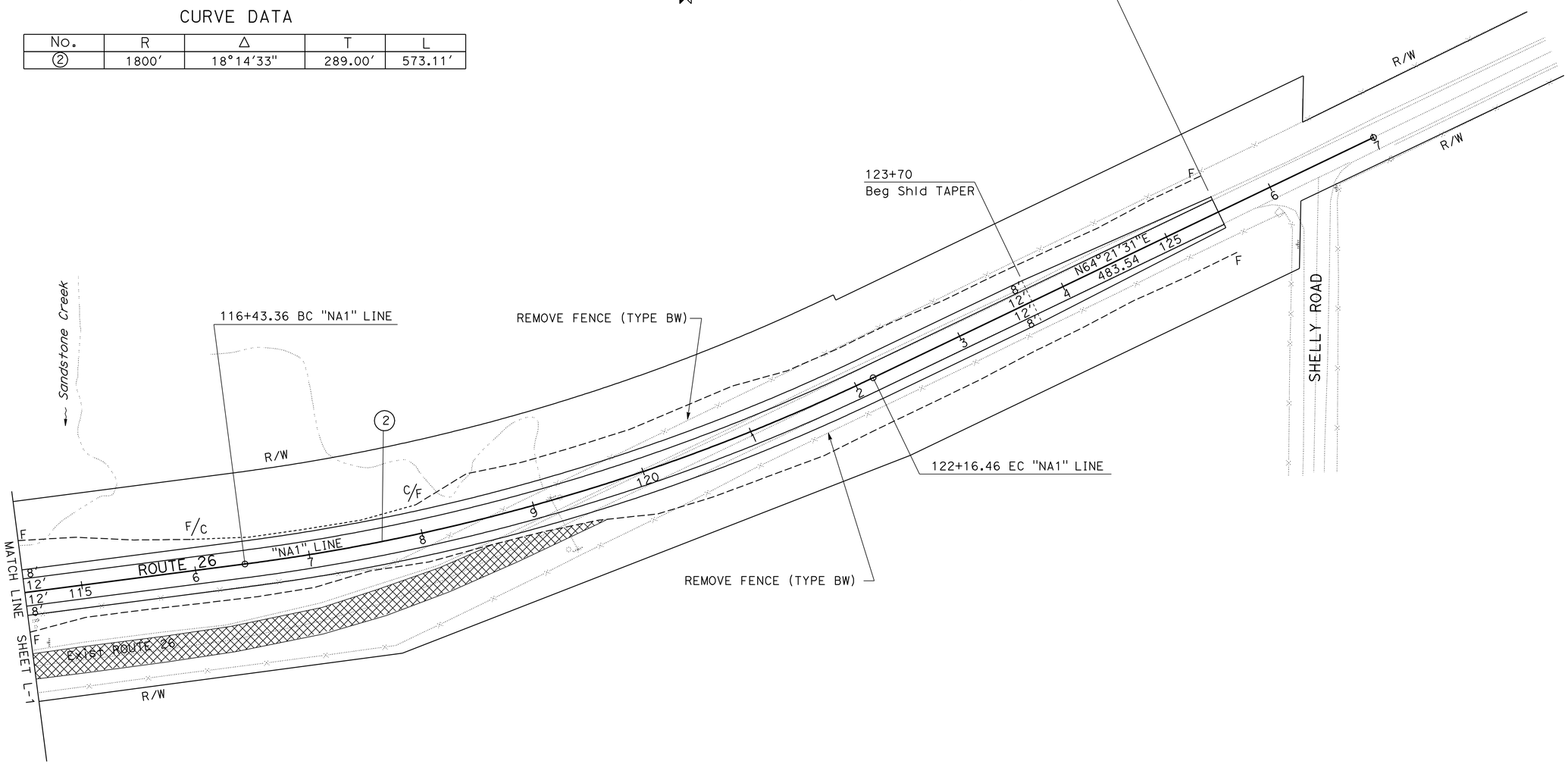

LAYOUT

SCALE: 1" = 50′

L-2

STATE OF CALIFORNIA - DEPARTMENT OF TRANSPORTATION
Caltrans® DESIGN

FUNCTIONAL SUPERVISOR: MICHAEL HUTCHISON
CALCULATED-DESIGNED BY: MANUEL PALATINO
CHECKED BY: MASON LEUNG
REVISED BY: ML
DATE REVISED: 04/18/13

LAST REVISION 00-00-00
DATE PLOTTED => 10-JUN-2013
TIME PLOTTED => 08:05

Dist	COUNTY	ROUTE	POST MILES TOTAL PROJECT	SHEET No.	TOTAL SHEETS
10	SJ	26	18.5/19.0	5	42

REGISTERED CIVIL ENGINEER 4/23/13 DATE

5/13/13
PLANS APPROVAL DATE

REGISTERED PROFESSIONAL ENGINEER MASON L. LEUNG No. 71709 Exp. 12-31-13 CIVIL STATE OF CALIFORNIA

THE STATE OF CALIFORNIA OR ITS OFFICERS OR AGENTS SHALL NOT BE RESPONSIBLE FOR THE ACCURACY OR COMPLETENESS OF SCANNED COPIES OF THIS PLAN SHEET.

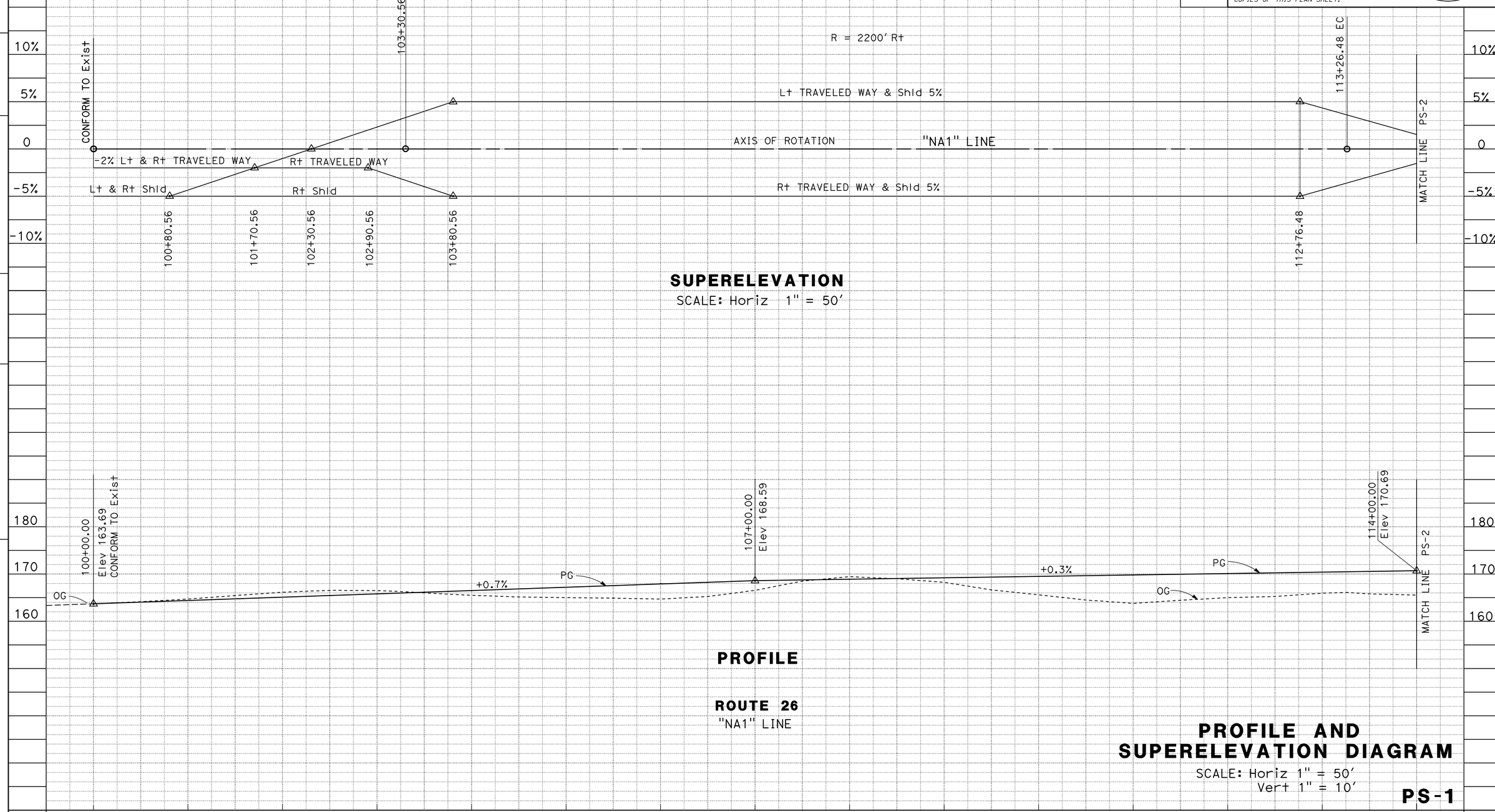

STATION	100	101	102	103	104	105	106	107	108	109	110	111	112	113	114	TOTAL
CY Exc	2335															2335
CY Emb	7571															7571

REVISED BY	DATE REVISED
ML	04/26/13

MANUEL PALATINO — MASON LEUNG

CALCULATED-DESIGNED BY — CHECKED BY

FUNCTIONAL SUPERVISOR

STATE OF CALIFORNIA - DEPARTMENT OF TRANSPORTATION

Caltrans® DESIGN

LAST REVISION 00-00-00 — DATE PLOTTED => 10-JUN-2013 — TIME PLOTTED => 08:05

Dist	COUNTY	ROUTE	POST MILES TOTAL PROJECT	SHEET No.	TOTAL SHEETS
10	SJ	26	18.5/19.0	6	42

REGISTERED CIVIL ENGINEER 4/23/13 DATE

5/13/13
PLANS APPROVAL DATE

REGISTERED PROFESSIONAL ENGINEER MASON L. LEUNG No. 71709 Exp. 12-31-13 CIVIL STATE OF CALIFORNIA

THE STATE OF CALIFORNIA OR ITS OFFICERS OR AGENTS SHALL NOT BE RESPONSIBLE FOR THE ACCURACY OR COMPLETENESS OF SCANNED COPIES OF THIS PLAN SHEET.

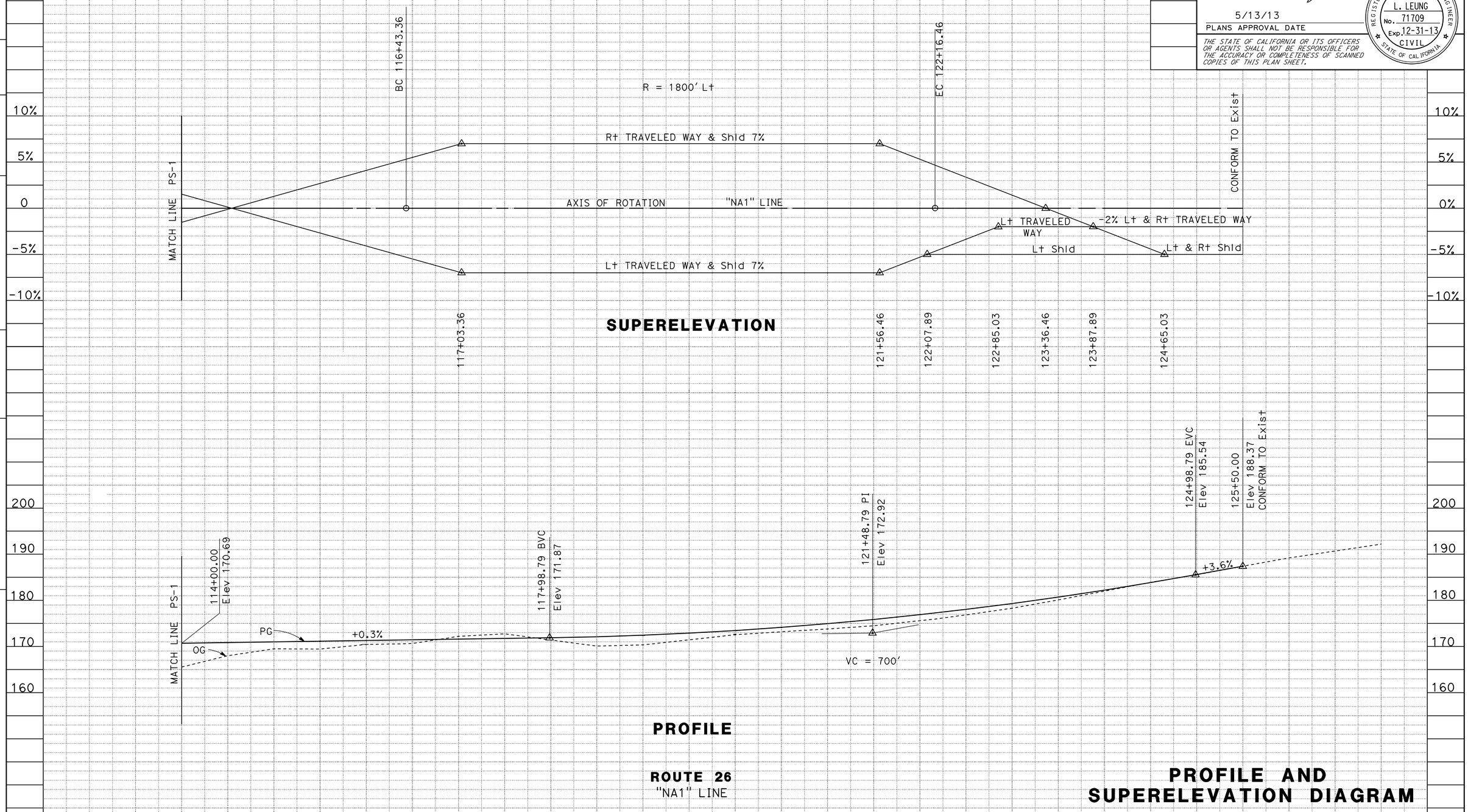

PROFILE AND SUPERELEVATION DIAGRAM

SCALE: Horiz 1" = 50'
Vert 1" = 10'

PS-2

STATION	114	115	116	117	118	119	120	121	122	123	124	125	126	TOTAL
CY Exc	3519													3519
CY Emb	3574													3574

STATE OF CALIFORNIA - DEPARTMENT OF TRANSPORTATION
Caltrans
DESIGN

FUNCTIONAL SUPERVISOR: MICHAEL HUTCHISON
CALCULATED-DESIGNED BY: MANUEL PALATINO
CHECKED BY: MASON LEUNG
REVISED BY: ML
DATE REVISED: 04/26/13

LAST REVISION 00-00-00
DATE PLOTTED => 10-JUN-2013
TIME PLOTTED => 08:05

Dist	COUNTY	ROUTE	POST MILES TOTAL PROJECT	SHEET No.	TOTAL SHEETS
10	SJ	26	18.5/19.0	7	42

REGISTERED CIVIL ENGINEER 4/23/13 DATE

5/13/13
PLANS APPROVAL DATE

REGISTERED PROFESSIONAL ENGINEER MASON L. LEUNG No. 71709 Exp. 12-31-13 CIVIL STATE OF CALIFORNIA

THE STATE OF CALIFORNIA OR ITS OFFICERS OR AGENTS SHALL NOT BE RESPONSIBLE FOR THE ACCURACY OR COMPLETENESS OF SCANNED COPIES OF THIS PLAN SHEET.

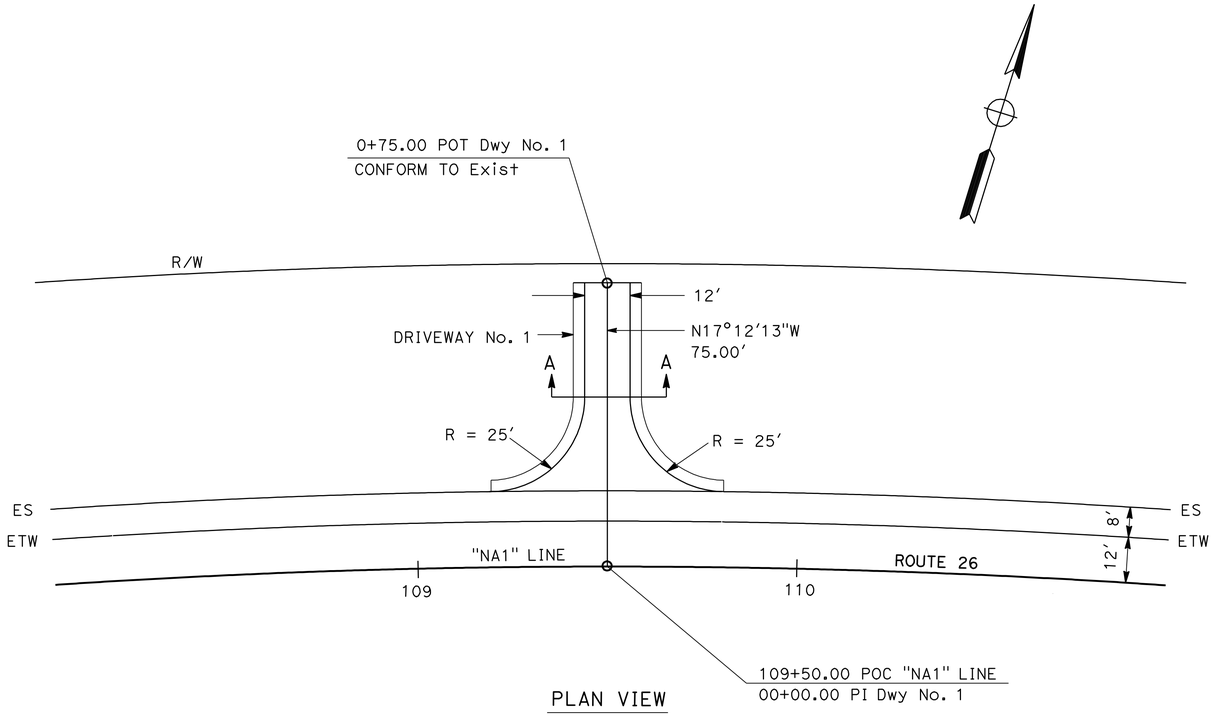

PLAN VIEW

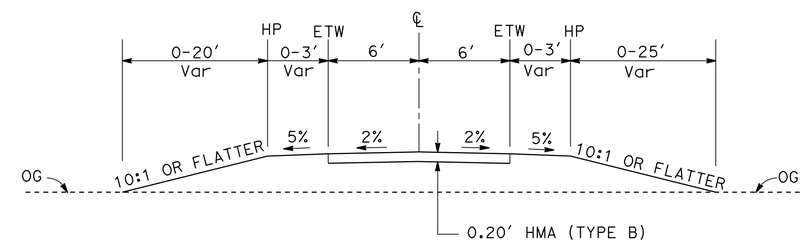

SECTION A-A

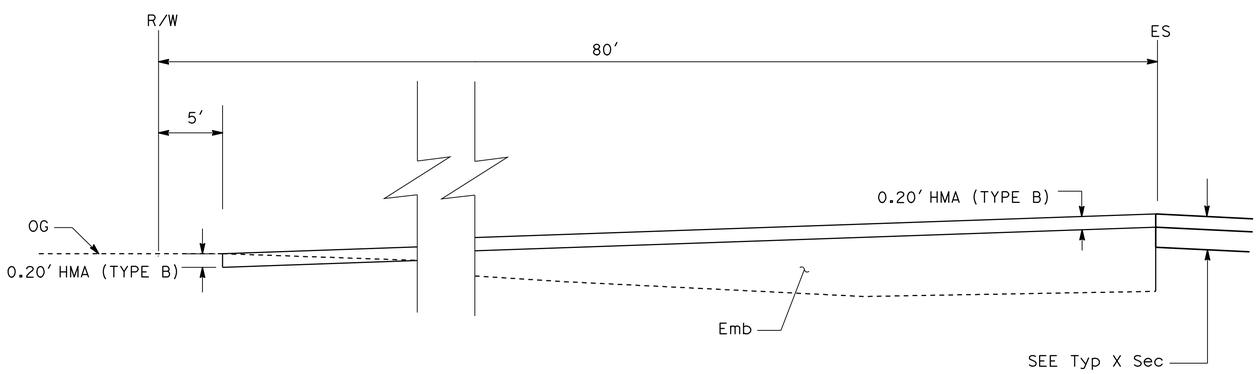

PROFILE VIEW

DRIVEWAY No. 1

CONSTRUCTION DETAILS

NO SCALE

C-1

STATE OF CALIFORNIA - DEPARTMENT OF TRANSPORTATION
Caltrans
DESIGN

FUNCTIONAL SUPERVISOR: MICHAEL HUTCHISON
CALCULATED-DESIGNED BY: MANUEL PALATINO
CHECKED BY: MASON LEUNG
REVISED BY: ML
DATE REVISED: 04/18/13

LAST REVISION 00-00-00
DATE PLOTTED => 10-JUN-2013
TIME PLOTTED => 08:05

Dist	COUNTY	ROUTE	POST MILES TOTAL PROJECT	SHEET No.	TOTAL SHEETS
10	SJ	26	18.5/19.0	8	42

REGISTERED CIVIL ENGINEER 4/23/13 DATE

5/13/13
PLANS APPROVAL DATE

REGISTERED PROFESSIONAL ENGINEER MASON L. LEUNG No. 71709 Exp. 12-31-13 CIVIL STATE OF CALIFORNIA

THE STATE OF CALIFORNIA OR ITS OFFICERS OR AGENTS SHALL NOT BE RESPONSIBLE FOR THE ACCURACY OR COMPLETENESS OF SCANNED COPIES OF THIS PLAN SHEET.

NOTE:

FOR ACCURATE RIGHT OF WAY DATA, CONTACT RIGHT OF WAY ENGINEERING AT THE DISTRICT OFFICE.

BIOFILTRATION SWALES

BIOSWALE	LOCATION	STATION "NA1" LINE	LENGTH	SLOPE	START Elev	END Elev
1	RIGHT	100+08.00 TO 101+83.00	175′	0.016	160.08	162.88
2	RIGHT	102+49.40 TO 104+24.40	175′	0.013	162.49	160.22
3	RIGHT	104+33.40 TO 107+08.40	275′	0.015	159.97	164.09
4	RIGHT	108+78.00 TO 110+83.00	205′	0.012	165.56	163.10
5	RIGHT	111+85.88 TO 113+35.88	150′	0.004	163.77	163.17
6	RIGHT	119+19.75 TO 120+69.75	150′	0.006	168.33	169.23
7	LEFT	100+08.00 TO 101+58.00	150′	0.0096	160.58	162.02
8	LEFT	114+20.44 TO 116+20.44	200′	0.007	163.25	164.65
9	LEFT	119+22.75 TO 121+72.75	250′	0.013	167.94	171.19

LEGEND

BIOFILTRATION SWALE

DITCH
NO SCALE

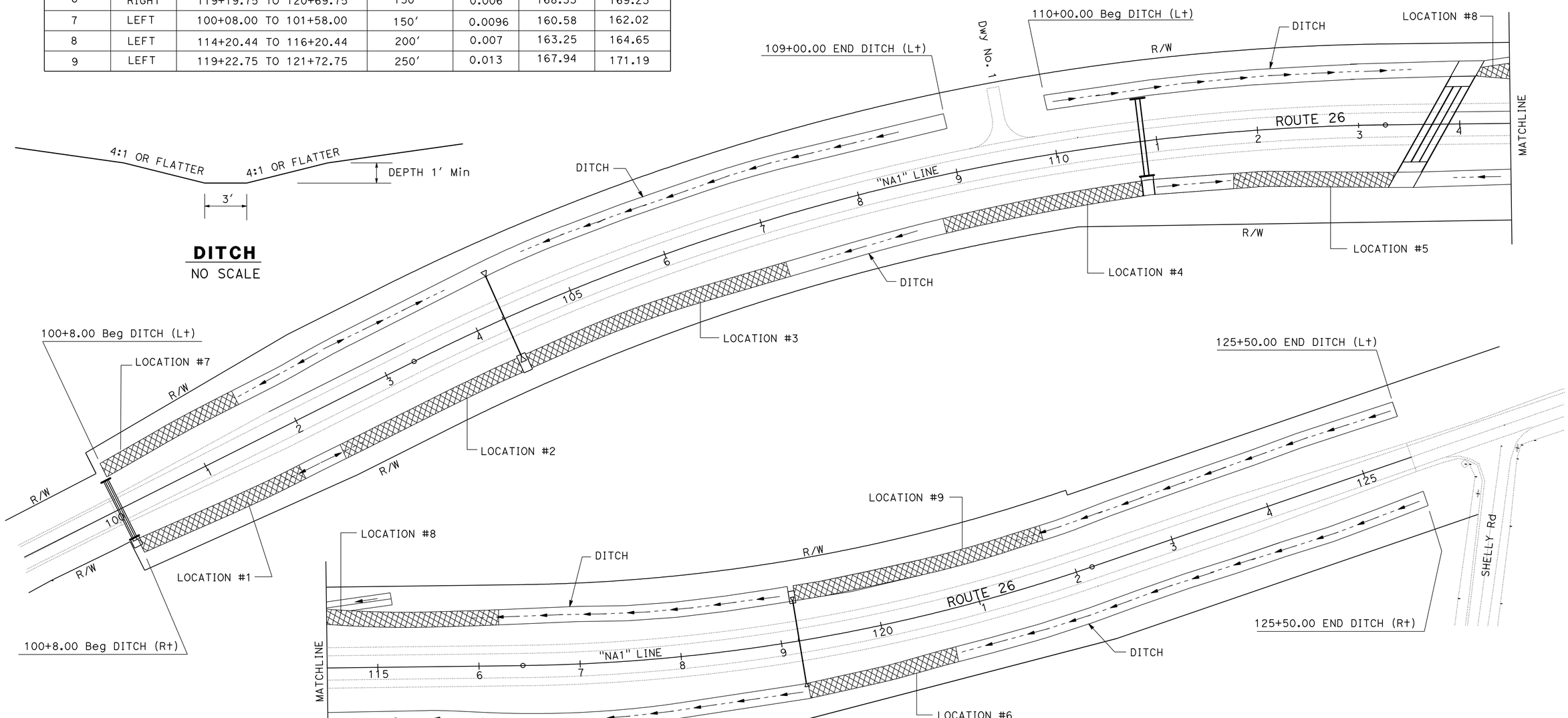

PLAN
SCALE: 1" : 50′

WATER POLLUTION CONTROL PLAN

SCALE AS SHOWN

W-1

APPROVED FOR WATER POLLUTION CONTROL WORK ONLY

REVISED BY	ML
DATE REVISED	04/26/13
CALCULATED-DESIGNED BY	MANUEL PALATINO
CHECKED BY	MASON LEUNG
FUNCTIONAL SUPERVISOR	MICHAEL HUTCHISON

STATE OF CALIFORNIA - DEPARTMENT OF TRANSPORTATION
Caltrans® DESIGN

LAST REVISION 00-00-00 | DATE PLOTTED => 10-JUN-2013 | TIME PLOTTED => 08:05

Dist	COUNTY	ROUTE	POST MILES TOTAL PROJECT	SHEET No.	TOTAL SHEETS
10	SJ	26	18.5/19.0	9	42

REGISTERED CIVIL ENGINEER 4/23/13 DATE

5/13/13
PLANS APPROVAL DATE

REGISTERED PROFESSIONAL ENGINEER MASON L. LEUNG No. 71709 Exp. 12-31-13 CIVIL STATE OF CALIFORNIA

THE STATE OF CALIFORNIA OR ITS OFFICERS OR AGENTS SHALL NOT BE RESPONSIBLE FOR THE ACCURACY OR COMPLETENESS OF SCANNED COPIES OF THIS PLAN SHEET.

NOTE:

FOR ACCURATE RIGHT OF WAY DATA, CONTACT RIGHT OF WAY ENGINEERING AT THE DISTRICT OFFICE.

ABBREVIATION:

RGJ - RUBBER GASKET JOINT

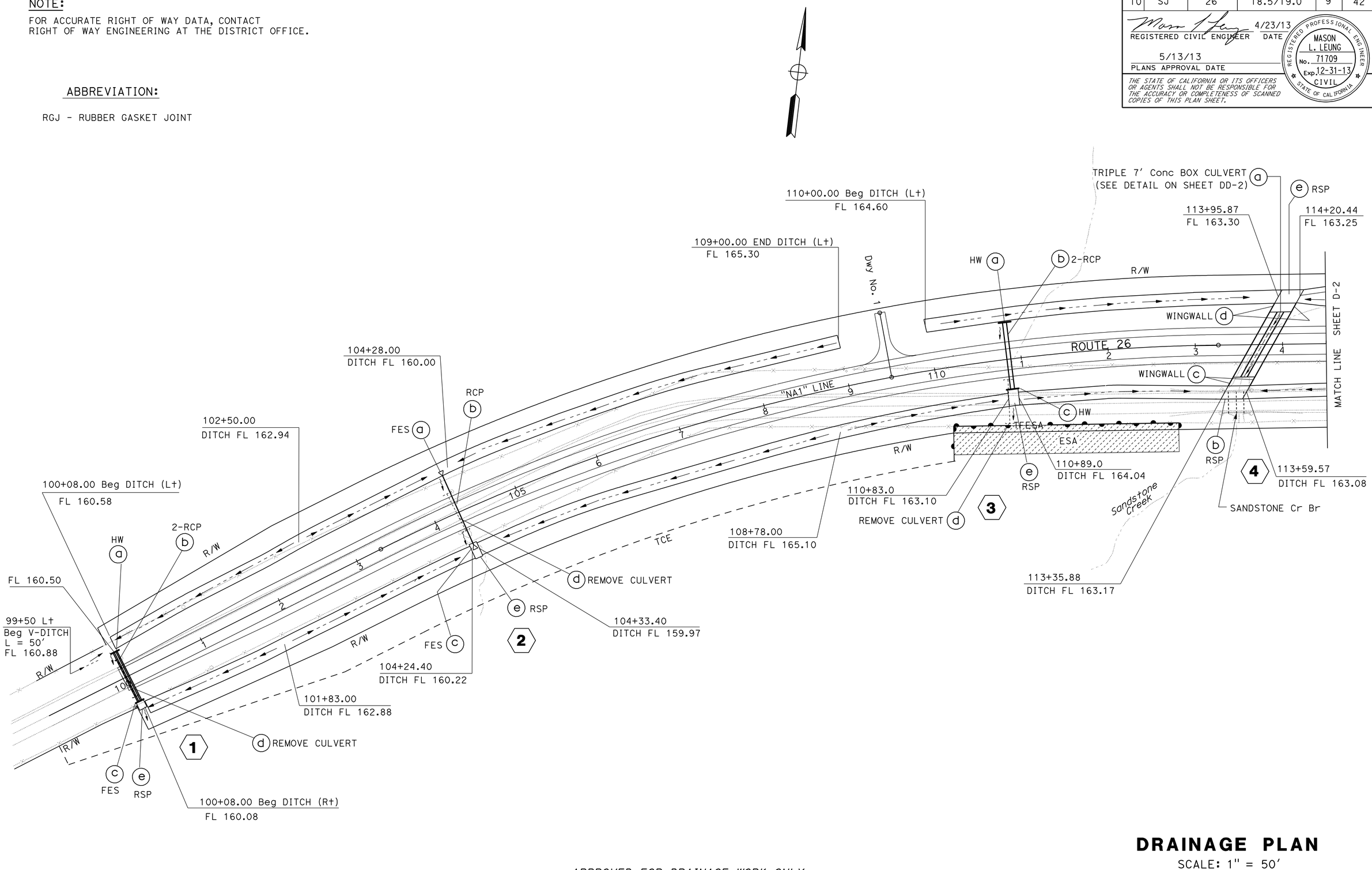

DRAINAGE PLAN

SCALE: 1" = 50'

D-1

APPROVED FOR DRAINAGE WORK ONLY

STATE OF CALIFORNIA - DEPARTMENT OF TRANSPORTATION
Caltrans DESIGN

FUNCTIONAL SUPERVISOR: MICHAEL HUTCHISON
CALCULATED-DESIGNED BY: MANUEL PALATINO
CHECKED BY: MASON LEUNG
REVISED BY: ML
DATE REVISED: 04/26/13

LAST REVISION 00-00-00
DATE PLOTTED => 10-JUN-2013
TIME PLOTTED => 08:05

BORDER LAST REVISED 7/2/2010
USERNAME => s123936
DGN FILE => 10000002711a001.dgn
RELATIVE BORDER SCALE IS IN INCHES 0 1 2 3
UNIT 1455
PROJECT NUMBER & PHASE 10000002711

Dist	COUNTY	ROUTE	POST MILES TOTAL PROJECT	SHEET No.	TOTAL SHEETS
10	SJ	26	18.5/19.0	10	42

REGISTERED CIVIL ENGINEER 4/23/13 DATE

5/13/13
PLANS APPROVAL DATE

REGISTERED PROFESSIONAL ENGINEER MASON L. LEUNG No. 71709 Exp. 12-31-13 CIVIL STATE OF CALIFORNIA

THE STATE OF CALIFORNIA OR ITS OFFICERS OR AGENTS SHALL NOT BE RESPONSIBLE FOR THE ACCURACY OR COMPLETENESS OF SCANNED COPIES OF THIS PLAN SHEET.

NOTE:

FOR ACCURATE RIGHT OF WAY DATA, CONTACT RIGHT OF WAY ENGINEERING AT THE DISTRICT OFFICE.

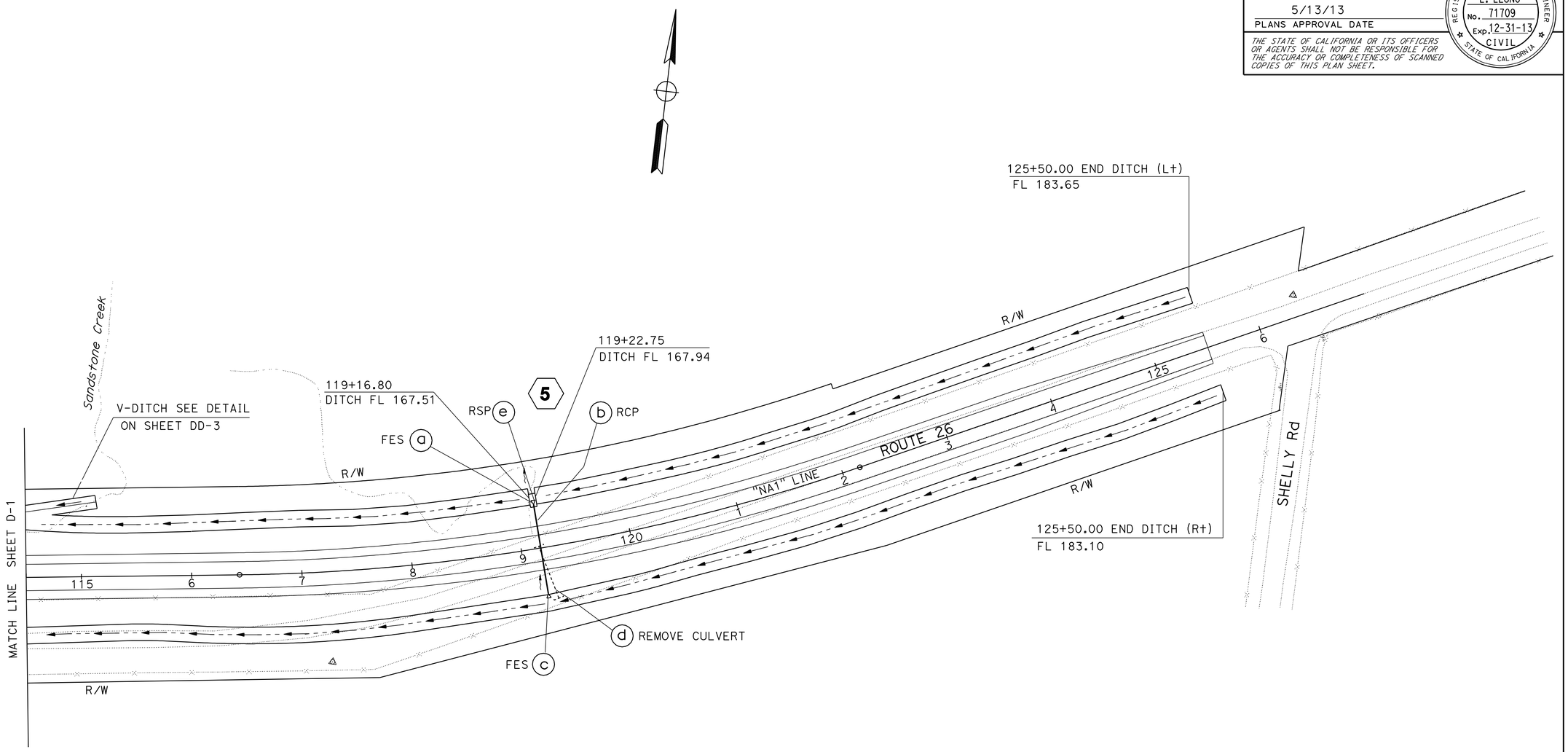

APPROVED FOR DRAINAGE WORK ONLY

DRAINAGE PLAN

SCALE: 1" = 50'

D-2

STATE OF CALIFORNIA - DEPARTMENT OF TRANSPORTATION

Caltrans® **DESIGN**

FUNCTIONAL SUPERVISOR: MICHAEL HUTCHISON

CALCULATED-DESIGNED BY: MANUEL PALATINO

CHECKED BY: MASON LEUNG

REVISED BY: ML

DATE REVISED: 04/19/13

LAST REVISION 00-00-00

DATE PLOTTED => 10-JUN-2013
TIME PLOTTED => 08:05

Dist	COUNTY	ROUTE	POST MILES TOTAL PROJECT	SHEET No.	TOTAL SHEETS
10	SJ	26	18.5/19.0	11	42

REGISTERED CIVIL ENGINEER 4/23/13 DATE

5/13/13
PLANS APPROVAL DATE

REGISTERED PROFESSIONAL ENGINEER MASON L. LEUNG No. 71709 Exp. 12-31-13 CIVIL STATE OF CALIFORNIA

THE STATE OF CALIFORNIA OR ITS OFFICERS OR AGENTS SHALL NOT BE RESPONSIBLE FOR THE ACCURACY OR COMPLETENESS OF SCANNED COPIES OF THIS PLAN SHEET.

ABBREVIATIONS:

RGJ - RUBBER GASKET JOINT
CFES - CONCRETE FLARED END SECTION

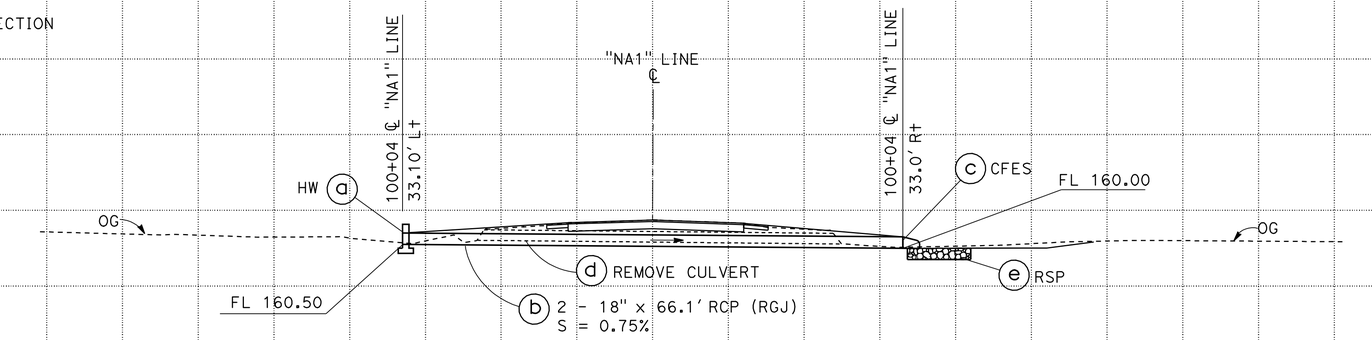

Sta 100+04

DRAINAGE SYSTEM No. 1

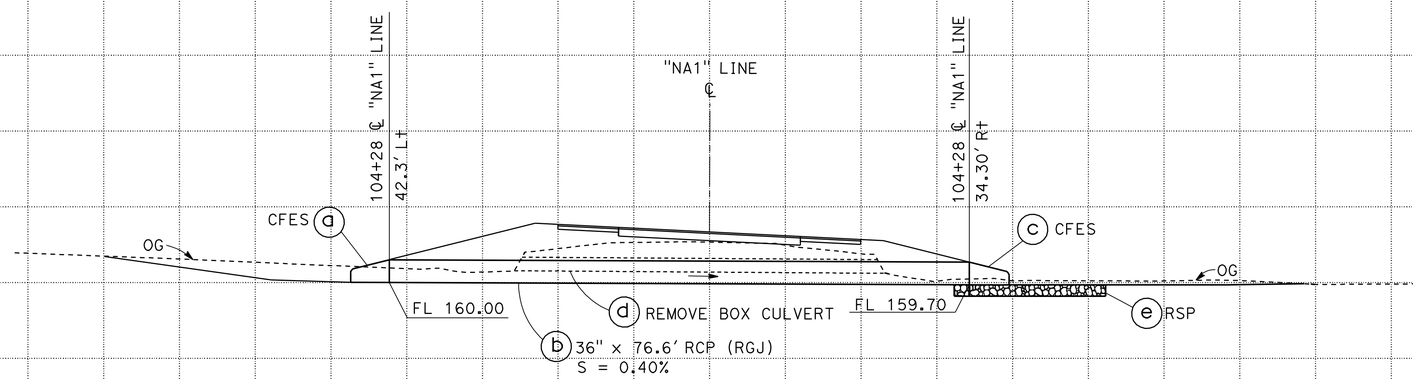

Sta 104+28

DRAINAGE SYSTEM No. 2

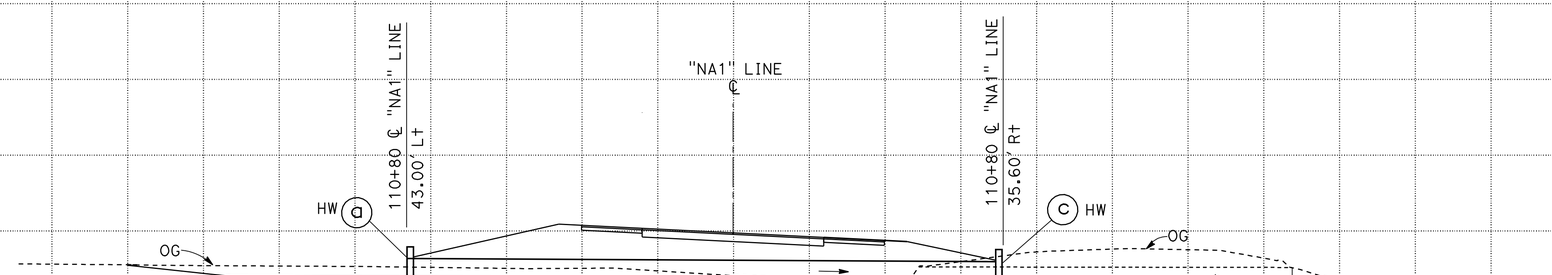

Sta 110+84.00

DRAINAGE SYSTEM No. 3

DRAINAGE PROFILES

SCALE: Horiz 1" = 10'
Vert 1" = 10'

DP-1

REVISED BY	DATE REVISED
ML	04/26/13

CALCULATED-DESIGNED BY: MANUEL PALATINO
CHECKED BY: MASON LEUNG
FUNCTIONAL SUPERVISOR: MICHAEL HUTCHISON

STATE OF CALIFORNIA - DEPARTMENT OF TRANSPORTATION
Caltrans® DESIGN

LAST REVISION 00-00-00 | DATE PLOTTED => 10-JUN-2013 | TIME PLOTTED => 08:05

Dist	COUNTY	ROUTE	POST MILES TOTAL PROJECT	SHEET No.	TOTAL SHEETS
10	SJ	26	18.5/19.0	12	42

REGISTERED CIVIL ENGINEER 4/23/13 DATE

5/13/13
PLANS APPROVAL DATE

REGISTERED PROFESSIONAL ENGINEER MASON L. LEUNG No. 71709 Exp. 12-31-13 CIVIL STATE OF CALIFORNIA

THE STATE OF CALIFORNIA OR ITS OFFICERS OR AGENTS SHALL NOT BE RESPONSIBLE FOR THE ACCURACY OR COMPLETENESS OF SCANNED COPIES OF THIS PLAN SHEET.

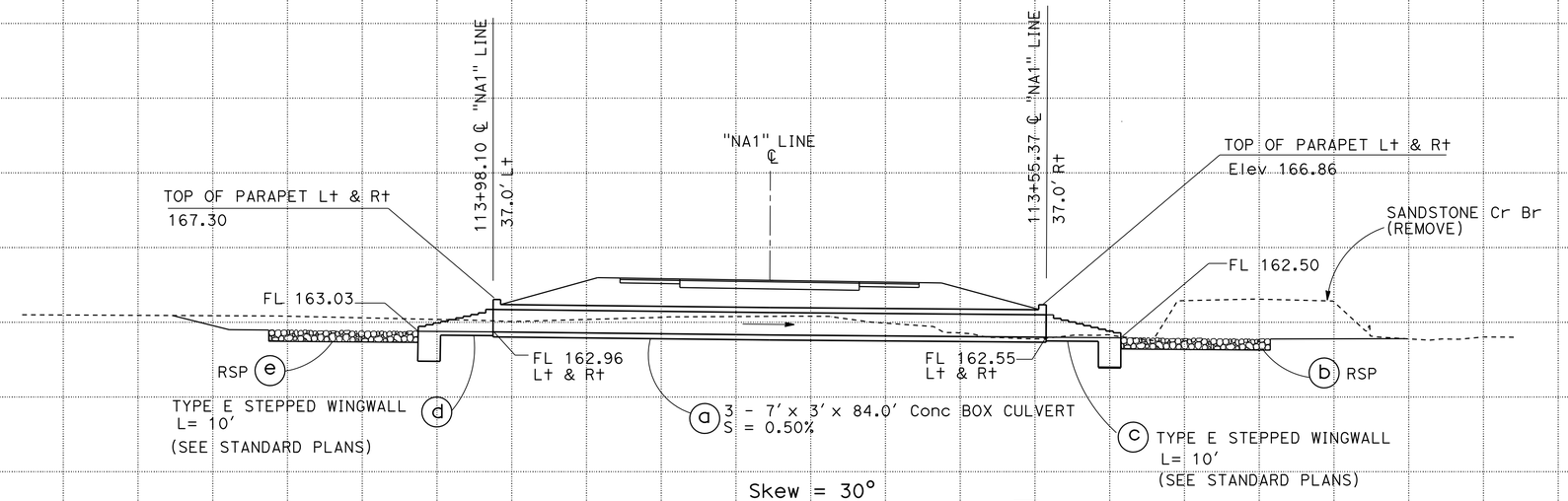

Skew = 30°

DRAINAGE SYSTEM No. 4

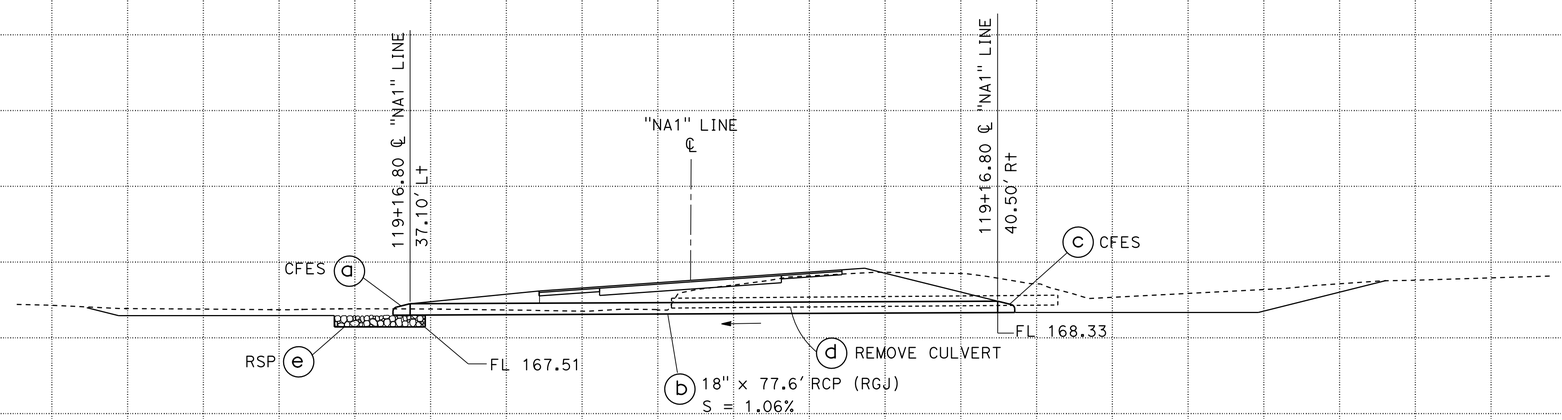

Sta 119+16.80

DRAINAGE SYSTEM No. 5

DRAINAGE PROFILES

SCALE: Horiz 1" = 10'
Vert 1" = 10'

DP-2

STATE OF CALIFORNIA - DEPARTMENT OF TRANSPORTATION
Caltrans
DESIGN

FUNCTIONAL SUPERVISOR: MICHAEL HUTCHISON
CALCULATED-DESIGNED BY: MANUEL PALATINO
CHECKED BY: MASON LEUNG
REVISED BY: ML
DATE REVISED: 04/26/13

LAST REVISION 00-00-00
DATE PLOTTED => 21-JUN-2013
TIME PLOTTED => 13:43

Dist	COUNTY	ROUTE	POST MILES TOTAL PROJECT	SHEET No.	TOTAL SHEETS
10	SJ	26	18.5/19.0	13	42

REGISTERED CIVIL ENGINEER 4/23/13 DATE

5/13/13
PLANS APPROVAL DATE

REGISTERED PROFESSIONAL ENGINEER MASON L. LEUNG No. 71709 Exp. 12-31-13 CIVIL STATE OF CALIFORNIA

THE STATE OF CALIFORNIA OR ITS OFFICERS OR AGENTS SHALL NOT BE RESPONSIBLE FOR THE ACCURACY OR COMPLETENESS OF SCANNED COPIES OF THIS PLAN SHEET.

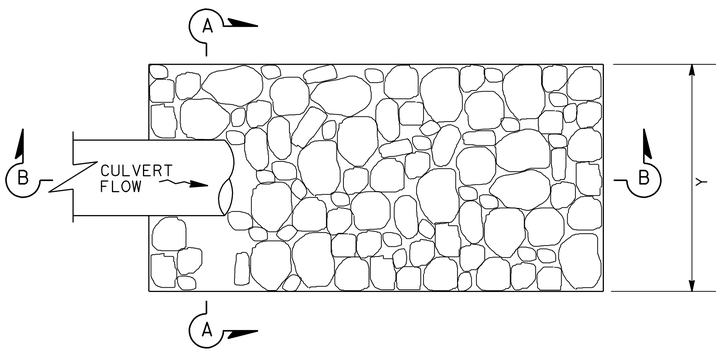

PLAN

ROCK SLOPE PROTECTION TABLE

DRAINAGE SYSTEM ⬡	DRAINAGE UNIT ○	L	X	Y	Z	RSP FABRIC CLASS 8
1	e	11′	9′	8′	1.5′	
2	e	20′	18′	9′	1.5′	
3	e	17′	15′	12′	1.5′	
4	c	20′	-	20′	1.5′	
4	f	20′	-	20′	1.5′	
5	e	11′	9′	4.5′	1.5′	

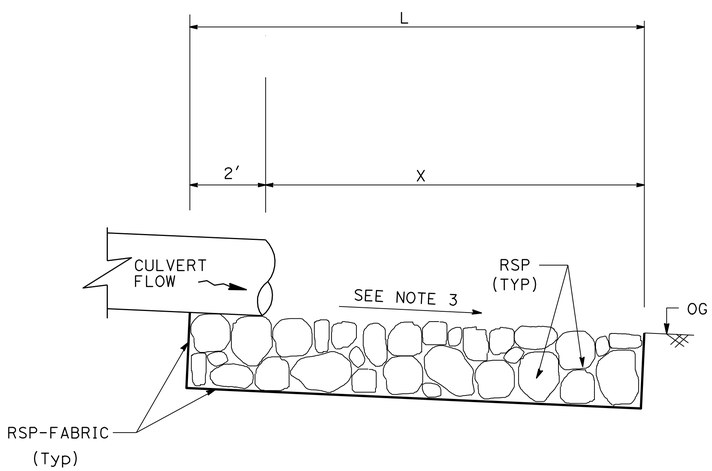

SECTION B-B

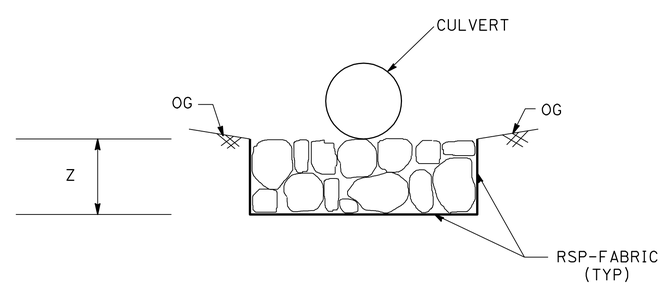

SECTION A-A

NOTES:

1. EXCAVATE AND/OR FILL DISSIPATER TRENCH TO DIMENSIONS (X, Y, Z) AS SHOWN. SQUARED EDGES NOT REQUIRED.
2. PLACE RSP-FABRIC LOOSELY ON BOTTOM & ALL SIDES OF TRENCH. PIN RSP-FABRIC TO SIDES OF TRENCH AS REQUIRED.
3. PLACE RSP CLASS DISSIPATER ROCK IN TRENCH SO THAT ROCK DOES NOT PROTRUDE ABOVE CULVERT FLOW-LINE OR ADJACENT GROUND.
4. MATCH DISSIPATER GRADE WITH DOWNSTREAM FLOW-LINE AND ADJACENT GROUND.
5. RSP-FABRIC SHALL NOT BE EXPOSED ABOVE GROUND.

ROCK SLOPE PROTECTION

DRAINAGE DETAILS

NO SCALE

DD-1

REVISED BY	ML
DATE REVISED	04/26/13
CALCULATED-DESIGNED BY	MANUEL PALATINO
CHECKED BY	MASON LEUNG
FUNCTIONAL SUPERVISOR	MICHAEL HUTCHISON

STATE OF CALIFORNIA - DEPARTMENT OF TRANSPORTATION
Caltrans® DESIGN

LAST REVISION 00-00-00
DATE PLOTTED => 10-JUN-2013
TIME PLOTTED => 08:06

Dist	COUNTY	ROUTE	POST MILES TOTAL PROJECT	SHEET No.	TOTAL SHEETS
10	SJ	26	18.5/19.0	14	42

REGISTERED CIVIL ENGINEER 4/23/13 DATE

5/13/13
PLANS APPROVAL DATE

REGISTERED PROFESSIONAL ENGINEER MASON L. LEUNG No. 71709 Exp. 12-31-13 CIVIL STATE OF CALIFORNIA

THE STATE OF CALIFORNIA OR ITS OFFICERS OR AGENTS SHALL NOT BE RESPONSIBLE FOR THE ACCURACY OR COMPLETENESS OF SCANNED COPIES OF THIS PLAN SHEET.

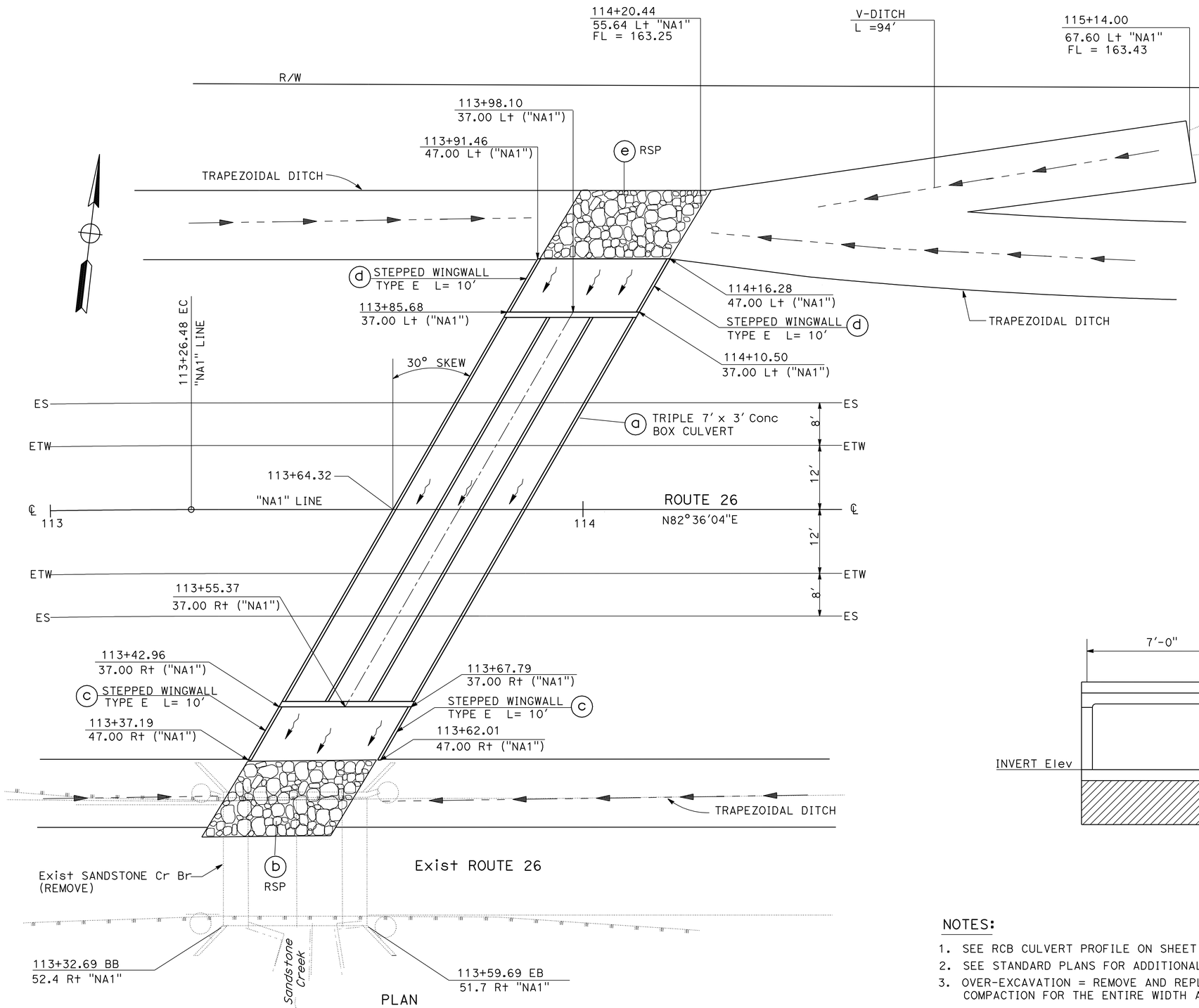

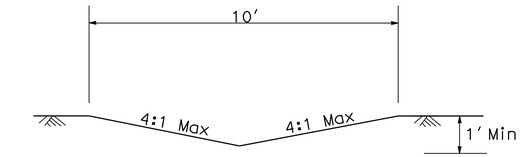

Sta 99+50 to 100+00 (Lt)
("NA1" LINE)

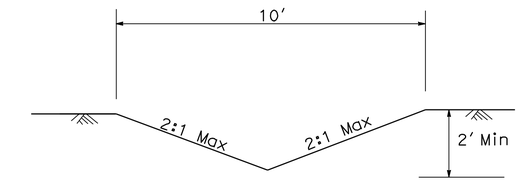

Sta 114+20.44 to 115+14 (Lt)
("NA1" LINE)

V-DITCH

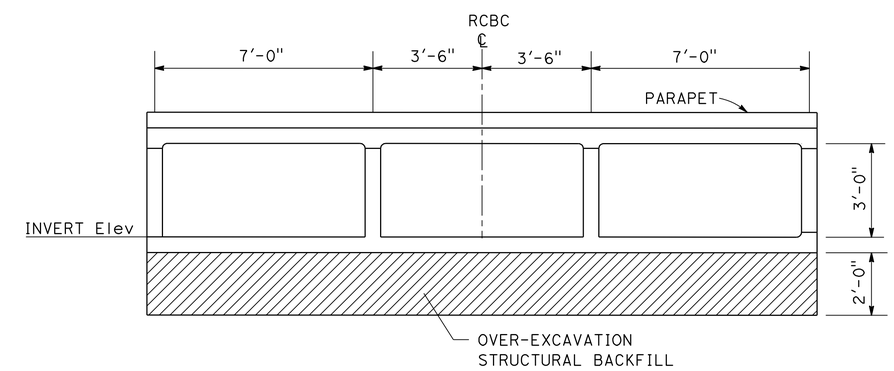

ELEVATION

NOTES:

1. SEE RCB CULVERT PROFILE ON SHEET DP-2.
2. SEE STANDARD PLANS FOR ADDITIONAL BOX CULVERT DIMENSIONS AND DETAILS.
3. OVER-EXCAVATION = REMOVE AND REPLACE MATERIAL AND COMPACT TO 95% RELATIVE COMPACTION FOR THE ENTIRE WIDTH AND LENGTH OF THE BOX CULVERT.

DRAINAGE SYSTEM No. 4

DRAINAGE DETAILS

NO SCALE

DD-2

REVISED BY	DATE REVISED
ML	04/26/13

CALCULATED-DESIGNED BY: MANUEL PALATINO
CHECKED BY: MASON LEUNG
FUNCTIONAL SUPERVISOR: MICHAEL HUTCHISON

STATE OF CALIFORNIA - DEPARTMENT OF TRANSPORTATION
DESIGN
Caltrans

LAST REVISION 00-00-00
DATE PLOTTED => 10-JUN-2013
TIME PLOTTED => 08:06

Dist	COUNTY	ROUTE	POST MILES TOTAL PROJECT	SHEET No.	TOTAL SHEETS
10	SJ	26	18.5/19.0	15	42

REGISTERED CIVIL ENGINEER 4/23/13 DATE

5/13/13
PLANS APPROVAL DATE

REGISTERED PROFESSIONAL ENGINEER MASON L. LEUNG No. 71709 Exp. 12-31-13 CIVIL STATE OF CALIFORNIA

THE STATE OF CALIFORNIA OR ITS OFFICERS OR AGENTS SHALL NOT BE RESPONSIBLE FOR THE ACCURACY OR COMPLETENESS OF SCANNED COPIES OF THIS PLAN SHEET.

DRAINAGE ITEMS

DRAINAGE SYSTEM No.	DRAINAGE UNIT	REMOVE BOX CULVERT	18" RCP	30" RCP	36" RCP	18" Conc FES	36" Conc FES	ROCK SLOPE PROTECTION (LIGHT, METHOD B) (CY)	ROCK SLOPE PROTECTION FABRIC (CLASS 8)	STRUCTURAL CONCRETE, WALL	MINOR CONCRETE (MINOR STRUCTURE)	STRUCTURAL CONCRETE, BOX CULVERT	BAR REINFORCING STEEL	BAR REINFORCING STEEL (BOX CULVERT)	MAXIMUM COVER (N)	PIPE CULVERT JOINT CLASSIFICATION (N)	DESCRIPTION	STATION	DRAINAGE SYSTEM No.	DRAINAGE UNIT
		EA	LF	LF	LF	EA	EA	CY	SQYD	CY	CY	CY	LB	LB	F+					
1	a										1.35						HEADWALL	100+04.0 , 33.1′ L+ "NA1" LINE	1	a
	b		132.2												1.9	S	2-18" RCP (RGJ)	100+04.0 , "NA1" LINE		b
	c					2											2-18" Conc FES	100+04.0 , 33.0′ R+ "NA1" LINE		c
	d	1															REMOVE CULVERT	100+04.0 , "NA1" LINE		d
	e							4.9	16.1								ROCK SLOPE PROTECTION			e
2	a						1										36" Conc FES	104+28.0 , 42.3′ L+ "NA1" LINE	2	a
	b				76.6										4.8	S	36" RCP (RGJ)	104+28.0 , "NA" LINE		b
	c						1										36" Conc FES	104+28.0 , 34.3′ R+ "NA1" LINE		c
	d	1															REMOVE CULVERT	104+28.0 , "NA" LINE		d
	e							10	29.7								ROCK SLOPE PROTECTION			e
3	a										2.21						HEADWALL	110+84.0 , 43.0′ L+ "NA1" LINE	3	a
	b			157.2											4.5	S	2-30" RCP (RGJ)	110+84.0 , "NA1" LINE		b
	c										2.21						HEADWALL	110+84.0 , 35.6′ R+ "NA1" LINE		c
	d	1															REMOVE CULVERT	110+84.0 , "NA1" LINE		d
	e							11.3	32.3								ROCK SLOPE PROTECTION			e
4	a											125.1		29,862			TRIPLE BOX CULVERT	113+71.3 , "NA1" LINE	4	a
	b							22.2	57.8								ROCK SLOPE PROTECTION			b
	c									20			2050				TYPE E WINGWALL			c
	d									20			2050				TYPE E WINGWALL			d
	e							22.2	57.8								ROCK SLOPE PROTECTION			e
5	a					1											18" Conc FES	119+16.8 , 37.1′ L+ "NA1" LINE	5	a
	b		77.6												4.2	S	18" RCP (RGJ)	119+16.8 , "NA1" LINE		b
	c					1											18" Conc FES	119+16.8 , 40.5′ R+ "NA1" LINE		c
	d	1															REMOVE CULVERT	119+16.8 , "NA1" LINE		d
	e							2.8	10.7								ROCK SLOPE PROTECTION			e
TOTAL		4	209.8	157.2	76.6	4	2	73.4	204.4	40	5.8	125.1	4100	29,862		TOTAL				

ABBREVIATIONS

S - STANDARD

RGJ - RUBBER GASKET JOINT

(N)- NOT A SEPARATE PAY ITEM, FOR INFORMATION ONLY.

DRAINAGE QUANTITIES

DQ-1

STATE OF CALIFORNIA - DEPARTMENT OF TRANSPORTATION

Caltrans DESIGN

FUNCTIONAL SUPERVISOR: MICHAEL HUTCHISON

CALCULATED-DESIGNED BY: MANNY PALATINO

CHECKED BY: MASON LEUNG

REVISED BY: ML

DATE REVISED: 04/26/13

LAST REVISION 00-00-00

DATE PLOTTED => 10-JUN-2013
TIME PLOTTED => 08:06

Dist	COUNTY	ROUTE	POST MILES TOTAL PROJECT	SHEET No.	TOTAL SHEETS
10	SJ	26	18.5/19.0	16	42

REGISTERED CIVIL ENGINEER 4/23/13 DATE

5/13/13
PLANS APPROVAL DATE

REGISTERED PROFESSIONAL ENGINEER MASON L. LEUNG No. 71709 Exp. 12-31-13 CIVIL STATE OF CALIFORNIA

THE STATE OF CALIFORNIA OR ITS OFFICERS OR AGENTS SHALL NOT BE RESPONSIBLE FOR THE ACCURACY OR COMPLETENESS OF SCANNED COPIES OF THIS PLAN SHEET.

NOTES:

1. FOR ACCURATE RIGHT OF WAY DATA, CONTACT RIGHT OF WAY ENGINEERING AT THE DISTRICT OFFICE.
2. LOCATIONS OF UTILITY FACILITIES SHOWN ON THE PLAN ARE APPROXIMATE. THE CONTRACTOR SHALL VERIFY UTILITY LOCATIONS PRIOR TO CONSTRUCTION.

ABBREVIATION:

PG&E - PACIFIC GAS AND ELECTRIC

LEGEND:

-e——— ———(oh)——— ——— e Exist OVERHEAD ELECTRICAL TRANSMISSION LINES (PG&E 230 kV)

jt——— ——— ——— - - -(oh)——— Exist JOINT OVERHEAD ELECTRICAL LINES (PG&E 60kV AND 12kV)

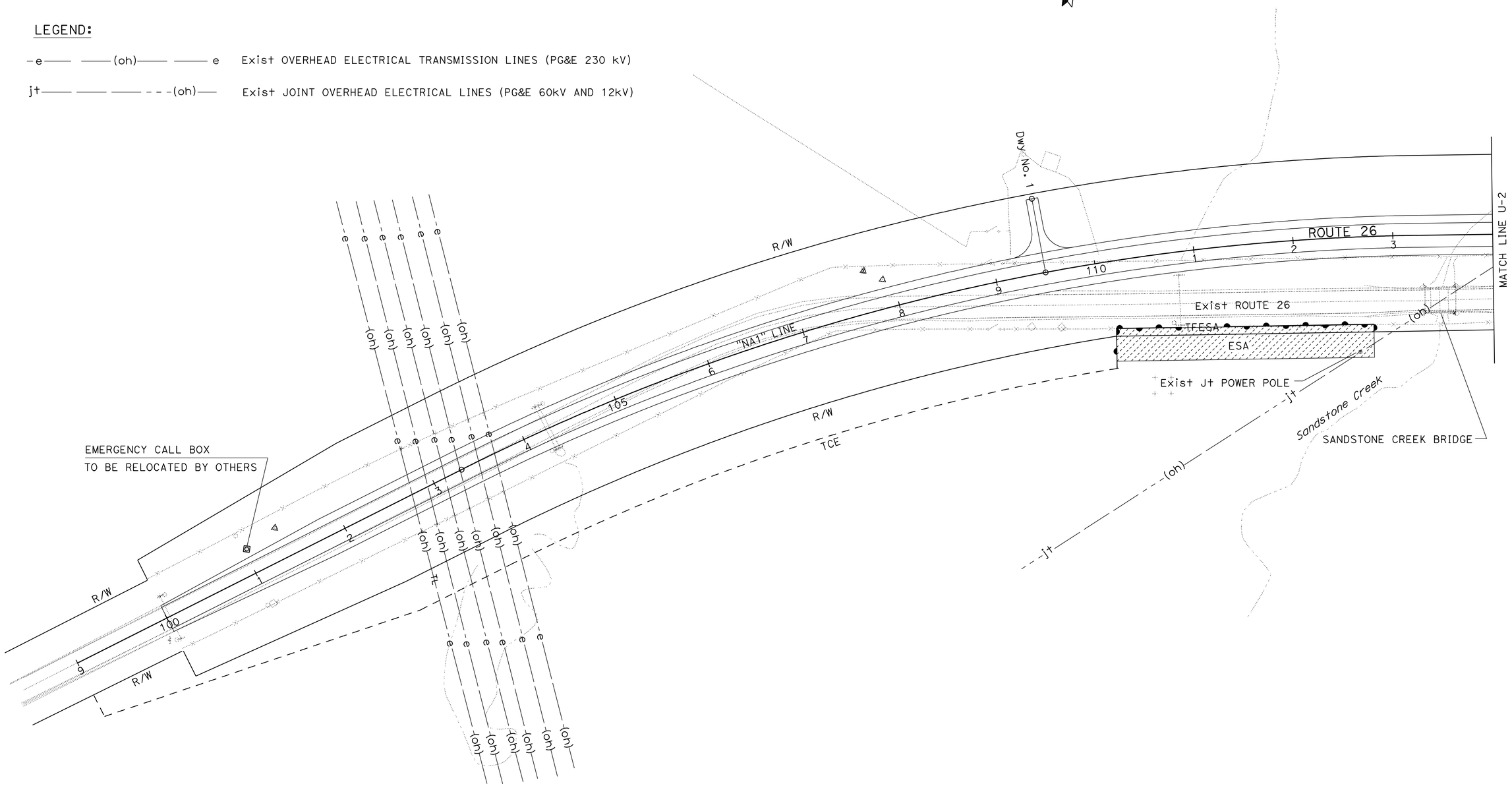

APPROVED FOR UTILITY INFORMATION ONLY

UTILITY PLAN

SCALE: 1" = 50'

U-1

STATE OF CALIFORNIA - DEPARTMENT OF TRANSPORTATION
Caltrans®
DESIGN

FUNCTIONAL SUPERVISOR: MICHAEL HUTCHISON
CALCULATED-DESIGNED BY: MANUEL PALATINO
CHECKED BY: MASON LEUNG
REVISED BY: ML
DATE REVISED: 04/26/13

LAST REVISION 00-00-00
DATE PLOTTED => 10-JUN-2013
TIME PLOTTED => 08:06

Dist	COUNTY	ROUTE	POST MILES TOTAL PROJECT	SHEET No.	TOTAL SHEETS
10	SJ	26	18.5/19.0	17	42

REGISTERED CIVIL ENGINEER 4/23/13 DATE

5/13/13
PLANS APPROVAL DATE

REGISTERED PROFESSIONAL ENGINEER MASON L. LEUNG No. 71709 Exp. 12-31-13 CIVIL STATE OF CALIFORNIA

THE STATE OF CALIFORNIA OR ITS OFFICERS OR AGENTS SHALL NOT BE RESPONSIBLE FOR THE ACCURACY OR COMPLETENESS OF SCANNED COPIES OF THIS PLAN SHEET.

NOTE:

FOR ACCURATE RIGHT OF WAY DATA, CONTACT RIGHT OF WAY ENGINEERING AT THE DISTRICT OFFICE.

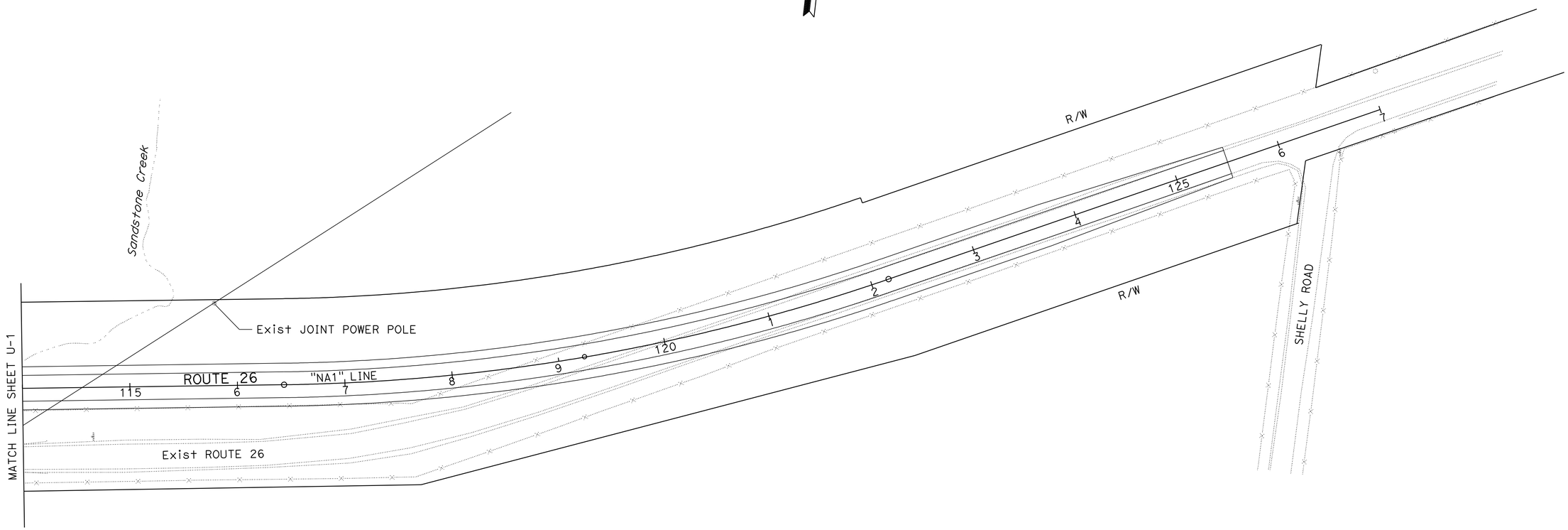

APPROVED FOR UTILITY INFORMATION ONLY

UTILITY PLAN

SCALE: 1" = 50'

U-2

STATE OF CALIFORNIA - DEPARTMENT OF TRANSPORTATION	CONSULTANT FUNCTIONAL SUPERVISOR	CALCULATED-DESIGNED BY	REVISED BY
Caltrans®	MICHAEL HUTCHISON	CHECKED BY	DATE REVISED
DESIGN		MASON LEUNG	MANUEL PALATINO
			ML
			04/19/13

LAST REVISION 00-00-00 | DATE PLOTTED => 10-JUN-2013 | TIME PLOTTED => 08:06

Dist	COUNTY	ROUTE	POST MILES TOTAL PROJECT	SHEET No.	TOTAL SHEETS
10	SJ	26	18.5/19.0	18	42

REGISTERED CIVIL ENGINEER 4/23/13 DATE

5/13/13
PLANS APPROVAL DATE

REGISTERED PROFESSIONAL ENGINEER HUE NGUYEN No. 74484 Exp. 12/31/13 CIVIL STATE OF CALIFORNIA

THE STATE OF CALIFORNIA OR ITS OFFICERS OR AGENTS SHALL NOT BE RESPONSIBLE FOR THE ACCURACY OR COMPLETENESS OF SCANNED COPIES OF THIS PLAN SHEET.

STATIONARY MOUNTED CONSTRUCTION AREA SIGNS

SIGN	SIGN CODE FEDERAL	SIGN CODE CALIFORNIA	SIGN MESSAGE	No. OF SIGNS	PANEL SIZE	No. OF POST AND SIZE
A	W20-1		ROAD WORK AHEAD	2	48" x 48"	1- 6" x 6"
B	G20-2		END ROAD WORK	3	36" x 18"	1- 4" x 4"
C	W20-1		ROAD WORK AHEAD	1	36" x 36"	1- 4" x 6"
D	CPFIS		FUNDING SIGN	2	90" x 60"	2- 6" x 6"

NOTES:

1. LOCATIONS OF CONSTRUCTION AREA SIGNS SHOWN ARE APPROXIMATE, EXACT LOCATIONS TO BE DETERMINED BY THE ENGINEER.
2. FOR ADDITIONAL CONSTRUCTION AREA SIGNS, SEE TRAFFIC HANDLING PLANS.

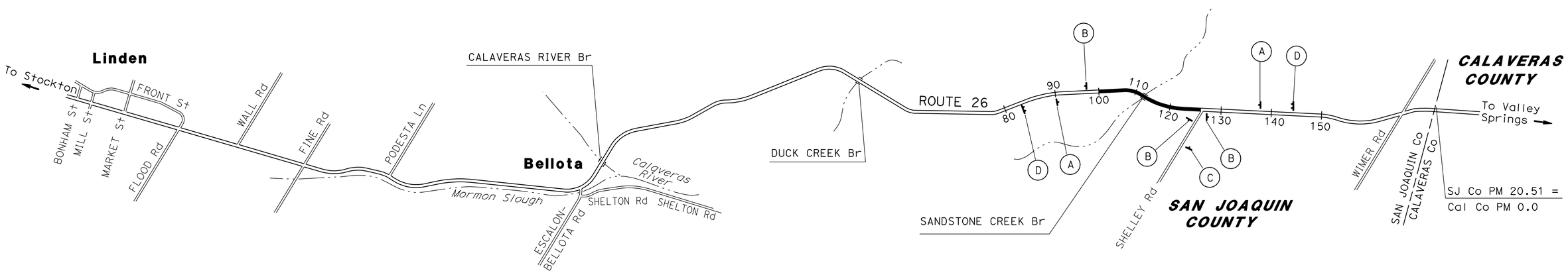

APPROVED FOR CONSTRUCTION AREA SIGN WORK ONLY

CONSTRUCTION AREA SIGNS

NO SCALE

CS-1

STATE OF CALIFORNIA - DEPARTMENT OF TRANSPORTATION
Caltrans® **TRAFFIC DESIGN**

FUNCTIONAL SUPERVISOR: MOHAMMED QATAMI
CALCULATED-DESIGNED BY: CECILE NGUYEN
CHECKED BY: HUE NGUYEN
REVISED BY: CN
DATE REVISED: 04/19/13

LAST REVISION 03-14-13
DATE PLOTTED => 10-JUN-2013
TIME PLOTTED => 08:06

Dist	COUNTY	ROUTE	POST MILES TOTAL PROJECT	SHEET No.	TOTAL SHEETS
10	SJ	26	18.5/19.0	19	42

REGISTERED CIVIL ENGINEER 4/23/13 DATE

5/13/13
PLANS APPROVAL DATE

REGISTERED PROFESSIONAL ENGINEER MASON L. LEUNG No. 71709 Exp. 12-31-13 CIVIL STATE OF CALIFORNIA

THE STATE OF CALIFORNIA OR ITS OFFICERS OR AGENTS SHALL NOT BE RESPONSIBLE FOR THE ACCURACY OR COMPLETENESS OF SCANNED COPIES OF THIS PLAN SHEET.

NOTES:

1. FOR ACCURATE RIGHT OF WAY, CONTACT RIGHT OF WAY ENGINEERING AT THE DISTRICT OFFICE.
2. R/W NOT SHOWN IN THE TCE AREA.

TRAFFIC NOTES:

1. THE TRANSITION FOR THE Temp DETOUR (Sta 99+00 TO 100+00) WILL BE CONSTRUCTED UNDER TRAFFIC CONTROL SYSTEMS.
2. TRAFFIC WILL USE THE Exist ALIGNMENT, SEE TH PLANS FOR MORE DETAILS.

LEGEND

- ROADWAY COMPLETED IN PREVIOUS STAGE
- CONSTRUCT THIS STAGE
- REMOVE ROADWAY
- WORK DONE THIS STAGE UNDER TRAFFIC CONTROL SYSTEM

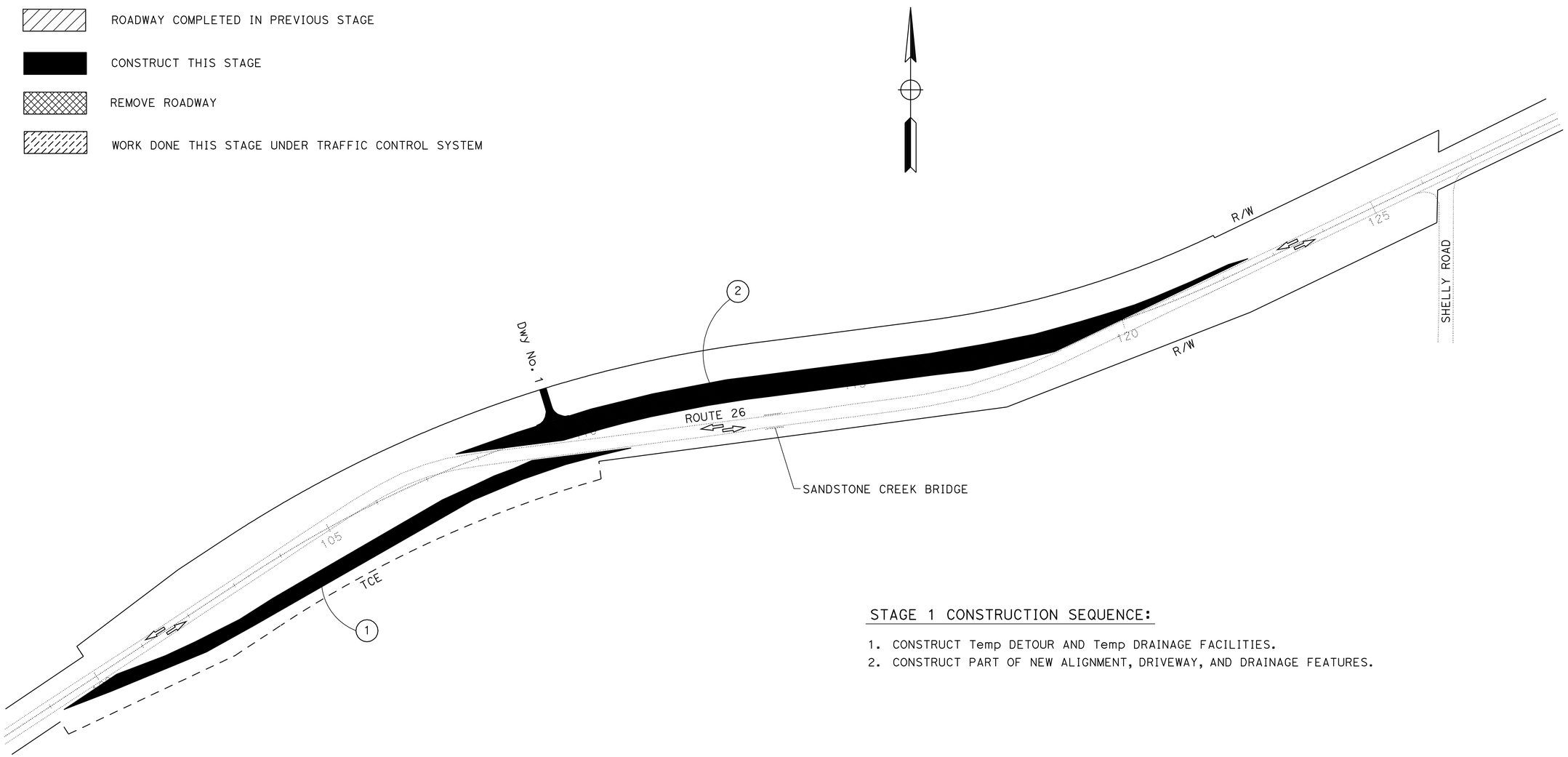

STAGE 1 CONSTRUCTION SEQUENCE:

1. CONSTRUCT Temp DETOUR AND Temp DRAINAGE FACILITIES.
2. CONSTRUCT PART OF NEW ALIGNMENT, DRIVEWAY, AND DRAINAGE FEATURES.

APPROVED FOR STAGE CONSTRUCTION WORK ONLY

STAGE CONSTRUCTION
(STAGE 1)

NO SCALE

SC-1

REVISED BY	ML
DATE REVISED	04/26/13
CALCULATED-DESIGNED BY	MANUEL PALATINO
CHECKED BY	MASON LEUNG
FUNCTIONAL SUPERVISOR	MICHAEL HUTCHISON

STATE OF CALIFORNIA - DEPARTMENT OF TRANSPORTATION
Caltrans
DESIGN

LAST REVISION 00-00-00 | DATE PLOTTED => 10-JUN-2013 | TIME PLOTTED => 08:06

Dist	COUNTY	ROUTE	POST MILES TOTAL PROJECT	SHEET No.	TOTAL SHEETS
10	SJ	26	18.5/19.0	20	42

REGISTERED CIVIL ENGINEER 4/23/13 DATE

5/13/13
PLANS APPROVAL DATE

REGISTERED PROFESSIONAL ENGINEER MASON L. LEUNG No. 71709 Exp. 12-31-13 CIVIL STATE OF CALIFORNIA

THE STATE OF CALIFORNIA OR ITS OFFICERS OR AGENTS SHALL NOT BE RESPONSIBLE FOR THE ACCURACY OR COMPLETENESS OF SCANNED COPIES OF THIS PLAN SHEET.

NOTE:

FOR ACCURATE RIGHT OF WAY DATA, CONTACT RIGHT OF WAY ENGINEERING AT THE DISTRICT OFFICE.

TRAFFIC NOTES:

1. SHIFT TRAFFIC TO DETOUR ROAD ON WEST END OF PROJECT, SEE TH PLANS FOR MORE DETAILS.
2. THE NEW ALIGNMENT TRANSITION (Sta 118+67 TO 125+50) WILL BE CONSTRUCTED UNDER TRAFFIC CONTROL SYSTEMS.

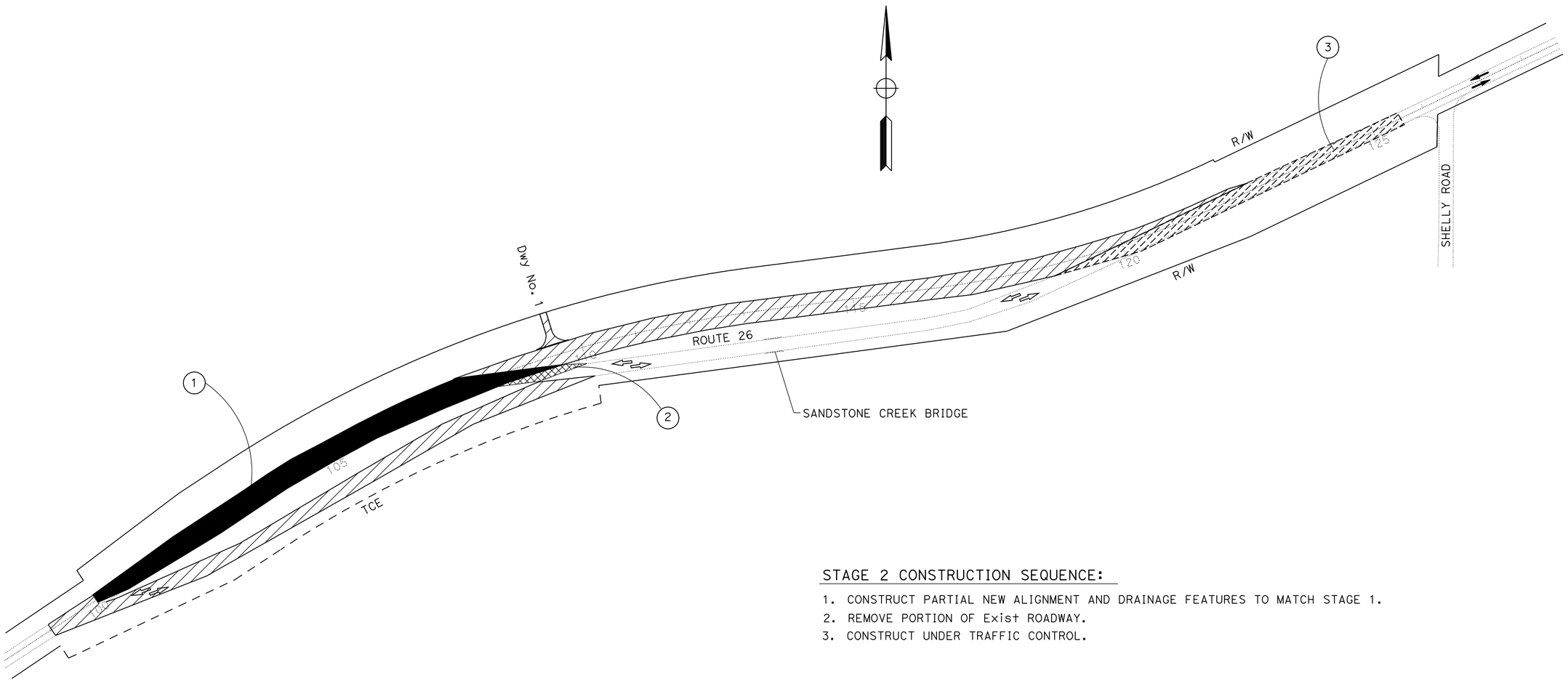

STAGE 2 CONSTRUCTION SEQUENCE:

1. CONSTRUCT PARTIAL NEW ALIGNMENT AND DRAINAGE FEATURES TO MATCH STAGE 1.
2. REMOVE PORTION OF Exist ROADWAY.
3. CONSTRUCT UNDER TRAFFIC CONTROL.

STAGE CONSTRUCTION
(STAGE 2)

NO SCALE

SC-2

APPROVED FOR STAGE CONSTRUCTION WORK ONLY

STATE OF CALIFORNIA - DEPARTMENT OF TRANSPORTATION
Caltrans®
DESIGN

FUNCTIONAL SUPERVISOR: MICHAEL HUTCHISON

CALCULATED-DESIGNED BY: MANUEL PALATINO
CHECKED BY: MASON LEUNG

REVISED BY: ML
DATE REVISED: 04/26/13

LAST REVISION 00-00-00
DATE PLOTTED => 10-JUN-2013
TIME PLOTTED => 08:06

Dist	COUNTY	ROUTE	POST MILES TOTAL PROJECT	SHEET No.	TOTAL SHEETS
10	SJ	26	18.5/19.0	21	42

REGISTERED CIVIL ENGINEER 4/23/13 DATE

5/13/13
PLANS APPROVAL DATE

REGISTERED PROFESSIONAL ENGINEER MASON L. LEUNG No. 71709 Exp. 12-31-13 CIVIL STATE OF CALIFORNIA

THE STATE OF CALIFORNIA OR ITS OFFICERS OR AGENTS SHALL NOT BE RESPONSIBLE FOR THE ACCURACY OR COMPLETENESS OF SCANNED COPIES OF THIS PLAN SHEET.

NOTE:

FOR ACCURATE RIGHT OF WAY DATA, CONTACT RIGHT OF WAY ENGINEERING AT THE DISTRICT OFFICE.

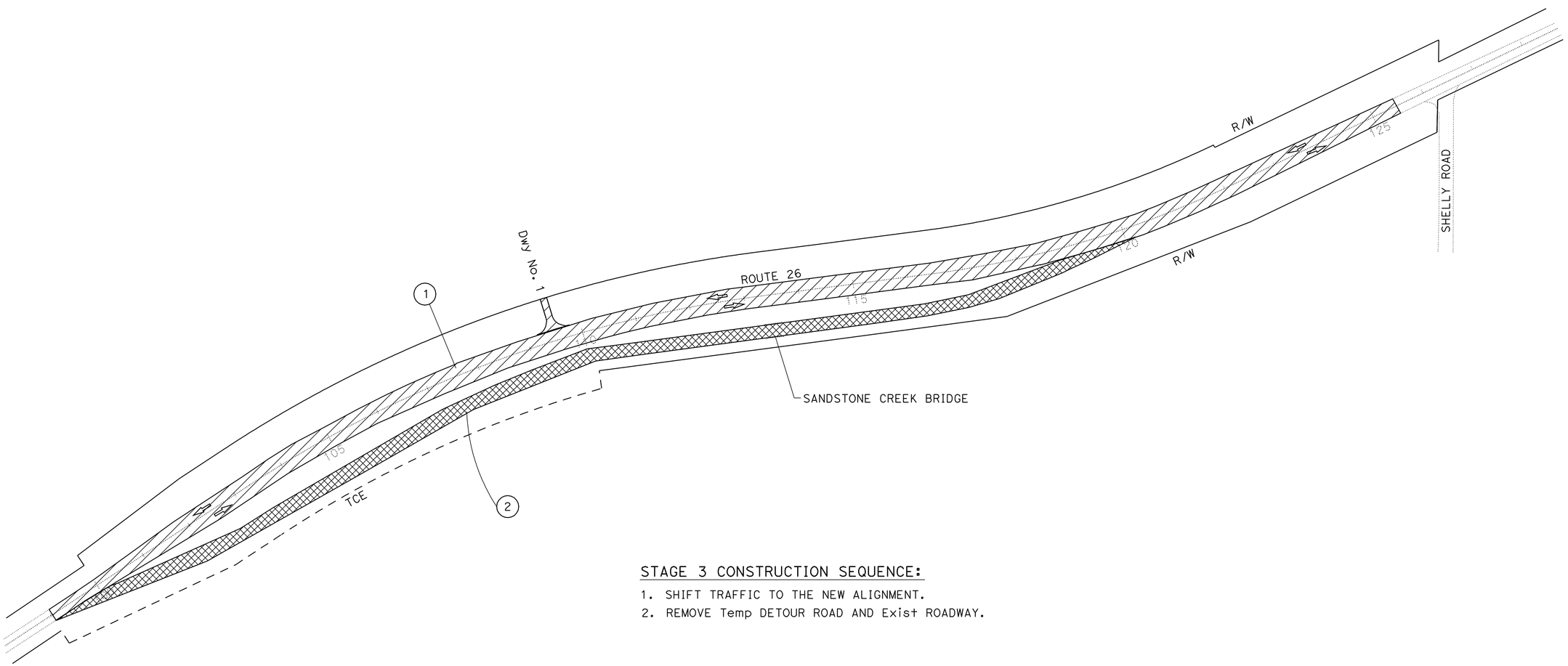

STAGE 3 CONSTRUCTION SEQUENCE:

1. SHIFT TRAFFIC TO THE NEW ALIGNMENT.
2. REMOVE Temp DETOUR ROAD AND Exist ROADWAY.

APPROVED FOR STAGE CONSTRUCTION WORK ONLY

STAGE CONSTRUCTION
(STAGE 3)

NO SCALE

SC-3

CALCULATED-DESIGNED BY	MANUEL PALATINO
CHECKED BY	MASON LEUNG
REVISED BY	ML
DATE REVISED	04/26/13
FUNCTIONAL SUPERVISOR	MICHAEL HUTCHISON

STATE OF CALIFORNIA - DEPARTMENT OF TRANSPORTATION

Caltrans® **DESIGN**

LAST REVISION 00-00-00 | DATE PLOTTED => 10-JUN-2013 | TIME PLOTTED => 08:06

Dist	COUNTY	ROUTE	POST MILES TOTAL PROJECT	SHEET No.	TOTAL SHEETS
10	SJ	26	18.5/19.0	22	42

REGISTERED CIVIL ENGINEER 4/23/13 DATE

5/13/13
PLANS APPROVAL DATE

REGISTERED PROFESSIONAL ENGINEER HUE NGUYEN No. 74484 Exp. 12/31/13 CIVIL STATE OF CALIFORNIA

THE STATE OF CALIFORNIA OR ITS OFFICERS OR AGENTS SHALL NOT BE RESPONSIBLE FOR THE ACCURACY OR COMPLETENESS OF SCANNED COPIES OF THIS PLAN SHEET.

NOTES:

1. FOR ACCURATE RIGHT OF WAY DATA, CONTACT RIGHT OF WAY ENGINEERING AT THE DISTRICT OFFICE.
2. R/W NOT SHOWN IN THE TCE AREA.

LEGEND:

- CONSTRUCT THIS STAGE
- OBLITERATE SURFACING
- TEMPORARY TRAFFIC LINE DETAIL (PAINT)
- CHANNELIZER (SURFACE MOUNTED)
- RELOCATE ROADSIDE SIGN FROM / TO
- INSTALL ROADSIDE SIGN
- REMOVE ROADSIDE SIGN
- TEMPORARY CRASH CUSHION ARRAY 'TS11'

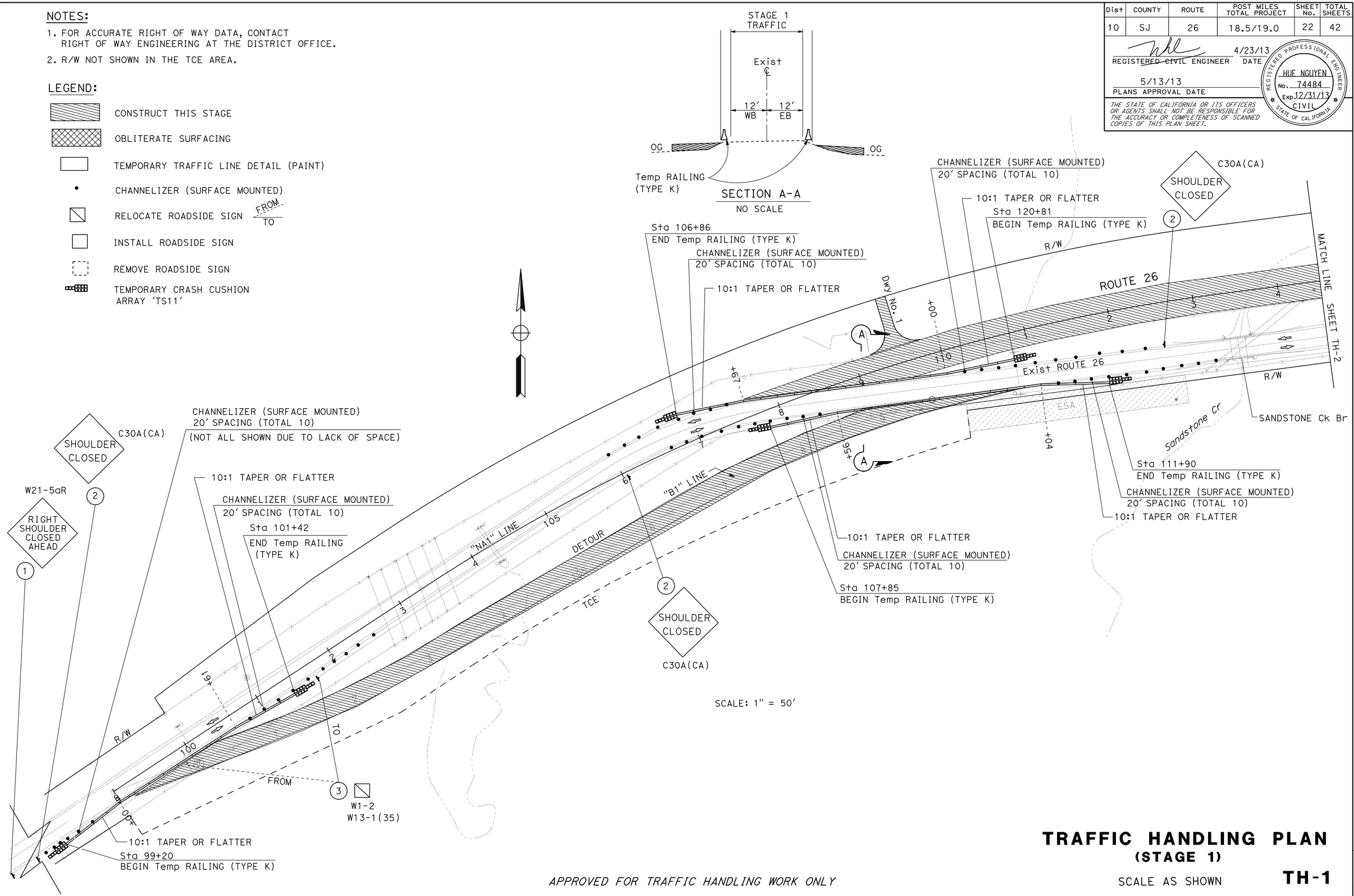

SCALE: 1" = 50'

TRAFFIC HANDLING PLAN
(STAGE 1)

SCALE AS SHOWN

TH-1

APPROVED FOR TRAFFIC HANDLING WORK ONLY

STATE OF CALIFORNIA - DEPARTMENT OF TRANSPORTATION
Caltrans® TRAFFIC DESIGN

FUNCTIONAL SUPERVISOR: MOHAMMED QATAMI
CALCULATED-DESIGNED BY: CECILE NGUYEN
CHECKED BY: HUE NGUYEN
REVISED BY: CN
DATE REVISED: 04/26/13

LAST REVISION 03-14-13
DATE PLOTTED => 10-JUN-2013
TIME PLOTTED => 08:06

Dist	COUNTY	ROUTE	POST MILES TOTAL PROJECT	SHEET No.	TOTAL SHEETS
10	SJ	26	18.5/19.0	23	42

REGISTERED CIVIL ENGINEER 4/23/13 DATE

5/13/13
PLANS APPROVAL DATE

REGISTERED PROFESSIONAL ENGINEER HUE NGUYEN No. 74484 Exp. 12/31/13 CIVIL STATE OF CALIFORNIA

THE STATE OF CALIFORNIA OR ITS OFFICERS OR AGENTS SHALL NOT BE RESPONSIBLE FOR THE ACCURACY OR COMPLETENESS OF SCANNED COPIES OF THIS PLAN SHEET.

NOTE:

FOR ACCURATE RIGHT OF WAY DATA, CONTACT RIGHT OF WAY ENGINEERING AT THE DISTRICT OFFICE.

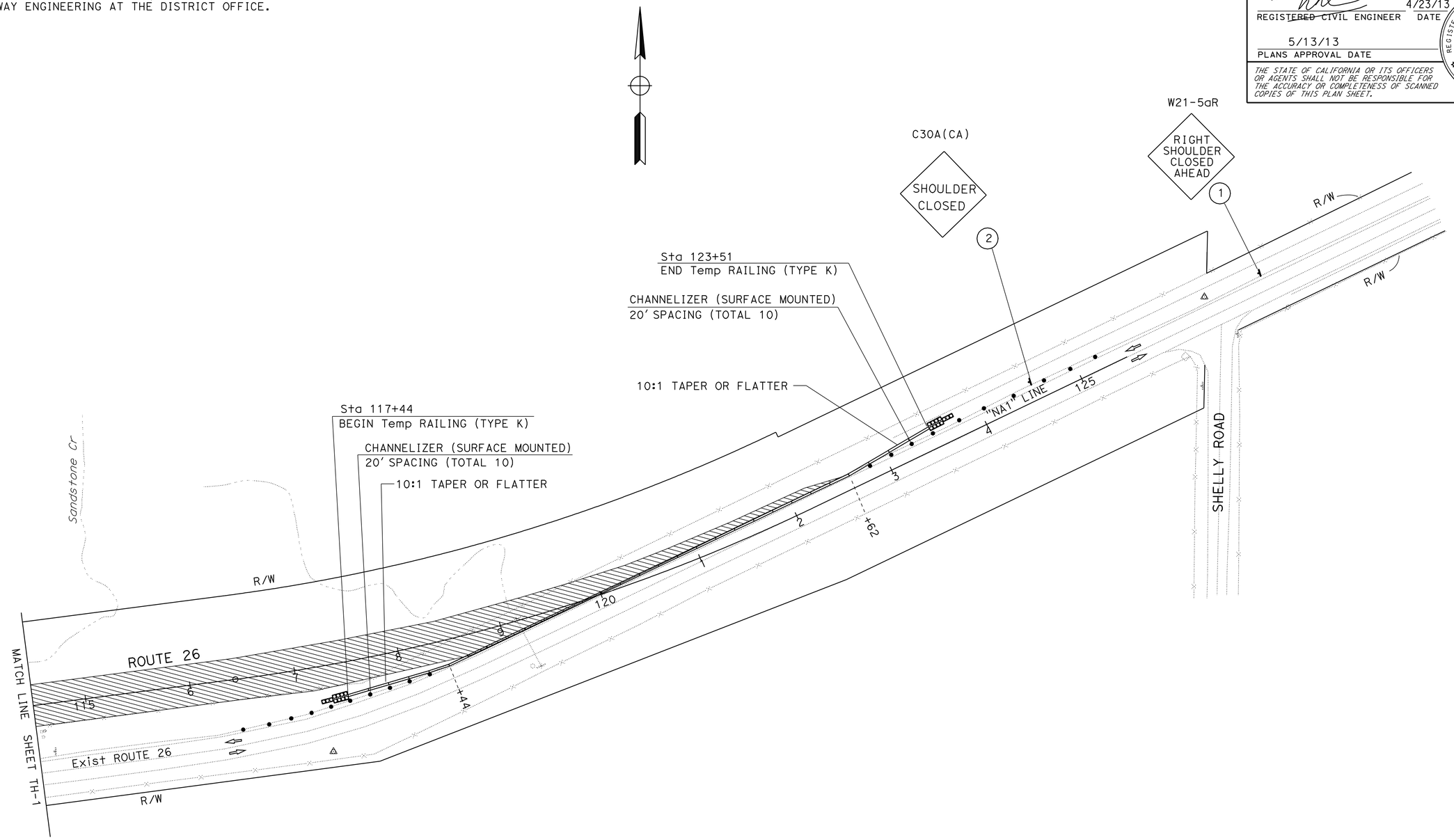

TRAFFIC HANDLING PLAN
(STAGE 1)

SCALE: 1" = 50'

TH-2

APPROVED FOR TRAFFIC HANDLING WORK ONLY

STATE OF CALIFORNIA - DEPARTMENT OF TRANSPORTATION
Caltrans
TRAFFIC DESIGN

FUNCTIONAL SUPERVISOR: MOHAMMED QATAMI

CALCULATED-DESIGNED BY: CECILE NGUYEN
CHECKED BY: HUE NGUYEN

REVISED BY: CN
DATE REVISED: 04/22/13

LAST REVISION 03-14-13
DATE PLOTTED => 10-JUN-2013
TIME PLOTTED => 08:06

Dist	COUNTY	ROUTE	POST MILES TOTAL PROJECT	SHEET No.	TOTAL SHEETS
10	SJ	26	18.5/19.0	24	42

REGISTERED CIVIL ENGINEER 4/23/13 DATE

5/13/13
PLANS APPROVAL DATE

REGISTERED PROFESSIONAL ENGINEER HUE NGUYEN No. 74484 Exp. 12/31/13 CIVIL STATE OF CALIFORNIA

THE STATE OF CALIFORNIA OR ITS OFFICERS OR AGENTS SHALL NOT BE RESPONSIBLE FOR THE ACCURACY OR COMPLETENESS OF SCANNED COPIES OF THIS PLAN SHEET.

NOTE:
FOR ACCURATE RIGHT OF WAY, CONTACT RIGHT OF WAY ENGINEERING AT THE DISTRICT OFFICE.

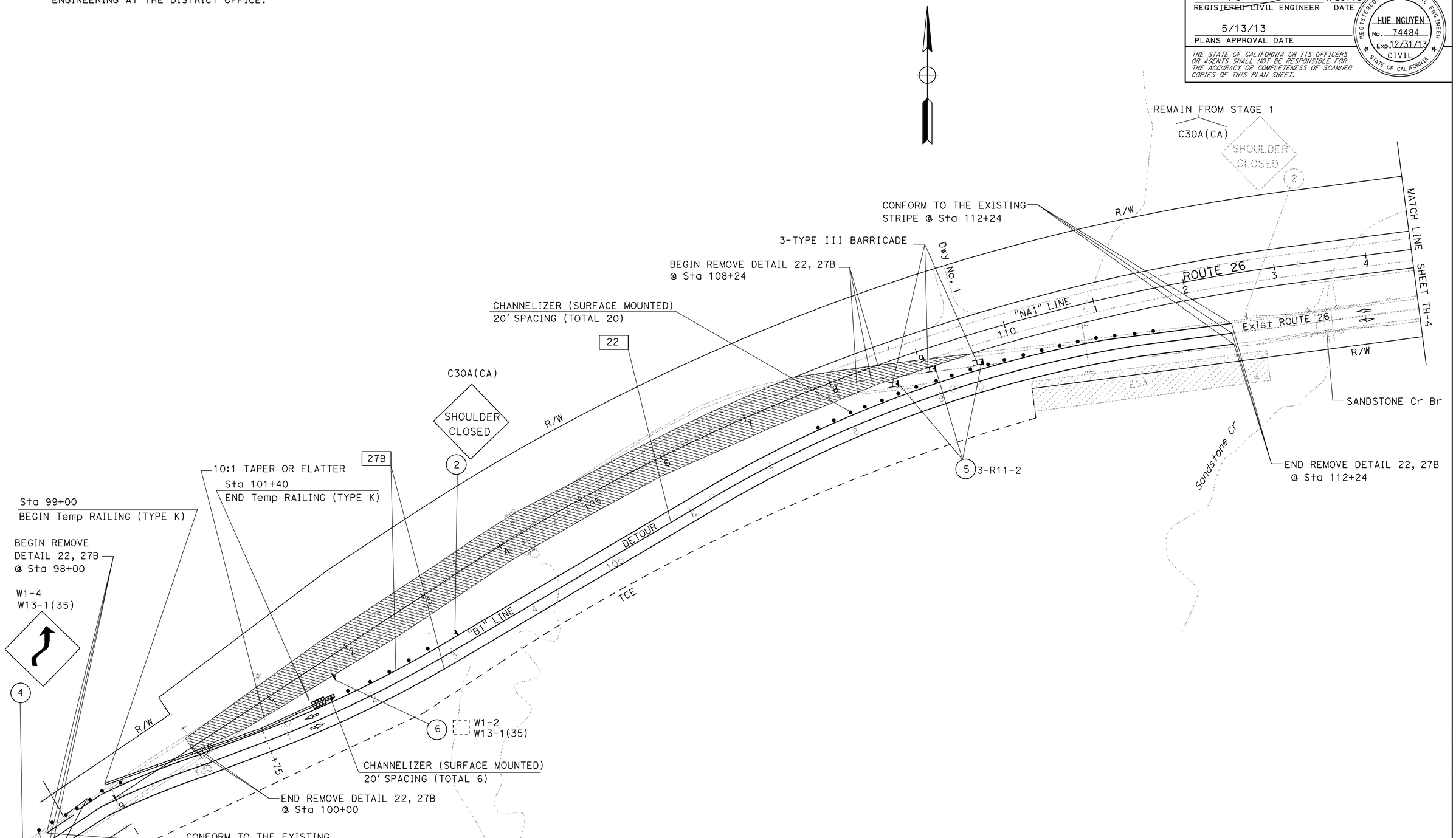

APPROVED FOR TRAFFIC HANDLING WORK ONLY

TRAFFIC HANDLING PLAN
(STAGE 2)

SCALE: 1" = 50'

TH-3

STATE OF CALIFORNIA - DEPARTMENT OF TRANSPORTATION
Caltrans® TRAFFIC DESIGN

FUNCTIONAL SUPERVISOR: MOHAMMED QATAMI
CALCULATED-DESIGNED BY: CECILE NGUYEN
CHECKED BY: HUE NGUYEN
REVISED BY: CN
DATE REVISED: 04/22/13

LAST REVISION 03-14-13
DATE PLOTTED => 10-JUN-2013
TIME PLOTTED => 08:06

Dist	COUNTY	ROUTE	POST MILES TOTAL PROJECT	SHEET No.	TOTAL SHEETS
10	SJ	26	18.5/19.0	25	42

REGISTERED CIVIL ENGINEER 4/23/13 DATE

5/13/13
PLANS APPROVAL DATE

REGISTERED PROFESSIONAL ENGINEER HUE NGUYEN No. 74484 Exp. 12/31/13 CIVIL STATE OF CALIFORNIA

THE STATE OF CALIFORNIA OR ITS OFFICERS OR AGENTS SHALL NOT BE RESPONSIBLE FOR THE ACCURACY OR COMPLETENESS OF SCANNED COPIES OF THIS PLAN SHEET.

NOTE:

FOR ACCURATE RIGHT OF WAY DATA, CONTACT RIGHT OF WAY ENGINEERING AT THE DISTRICT OFFICE.

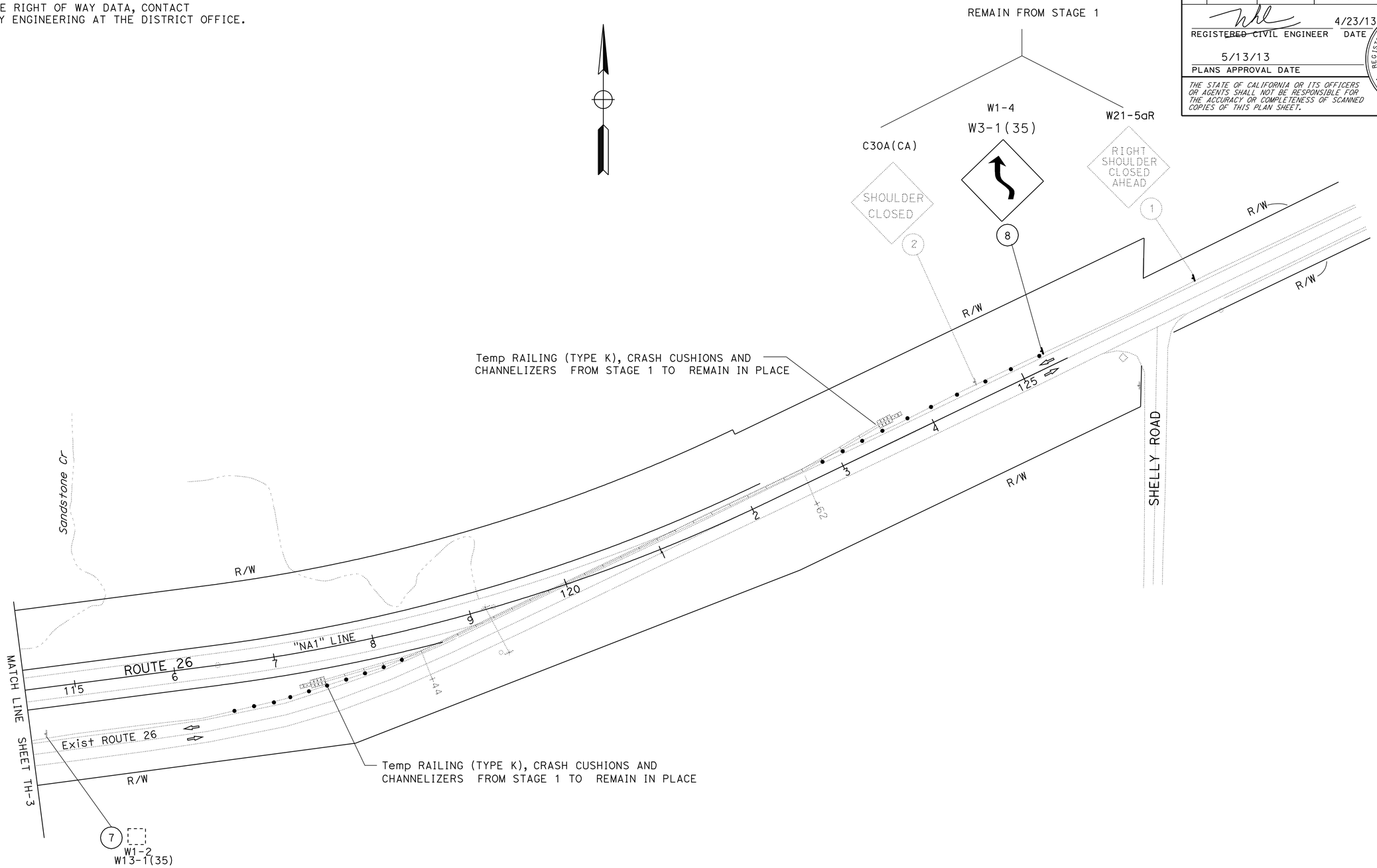

APPROVED FOR TRAFFIC HANDLING WORK ONLY

TRAFFIC HANDLING PLAN
(STAGE 2)

SCALE: 1" = 50'

TH-4

STATE OF CALIFORNIA - DEPARTMENT OF TRANSPORTATION
Caltrans
TRAFFIC DESIGN

FUNCTIONAL SUPERVISOR: MOHAMMED QATAMI
CALCULATED-DESIGNED BY: CECILE NGUYEN
CHECKED BY: HUE NGUYEN
REVISED BY: CN
DATE REVISED: 04/26/13

LAST REVISION 03-14-13
DATE PLOTTED => 10-JUN-2013
TIME PLOTTED => 08:06

Dist	COUNTY	ROUTE	POST MILES TOTAL PROJECT	SHEET No.	TOTAL SHEETS
10	SJ	26	18.5/19.0	26	42

REGISTERED CIVIL ENGINEER 4/23/13 DATE

5/13/13
PLANS APPROVAL DATE

REGISTERED PROFESSIONAL ENGINEER HUE NGUYEN No. 74484 Exp. 12/31/13 CIVIL STATE OF CALIFORNIA

THE STATE OF CALIFORNIA OR ITS OFFICERS OR AGENTS SHALL NOT BE RESPONSIBLE FOR THE ACCURACY OR COMPLETENESS OF SCANNED COPIES OF THIS PLAN SHEET.

NOTE:

FOR ACCURATE RIGHT OF WAY, CONTACT RIGHT OF WAY ENGINEERING AT THE DISTRICT OFFICE.

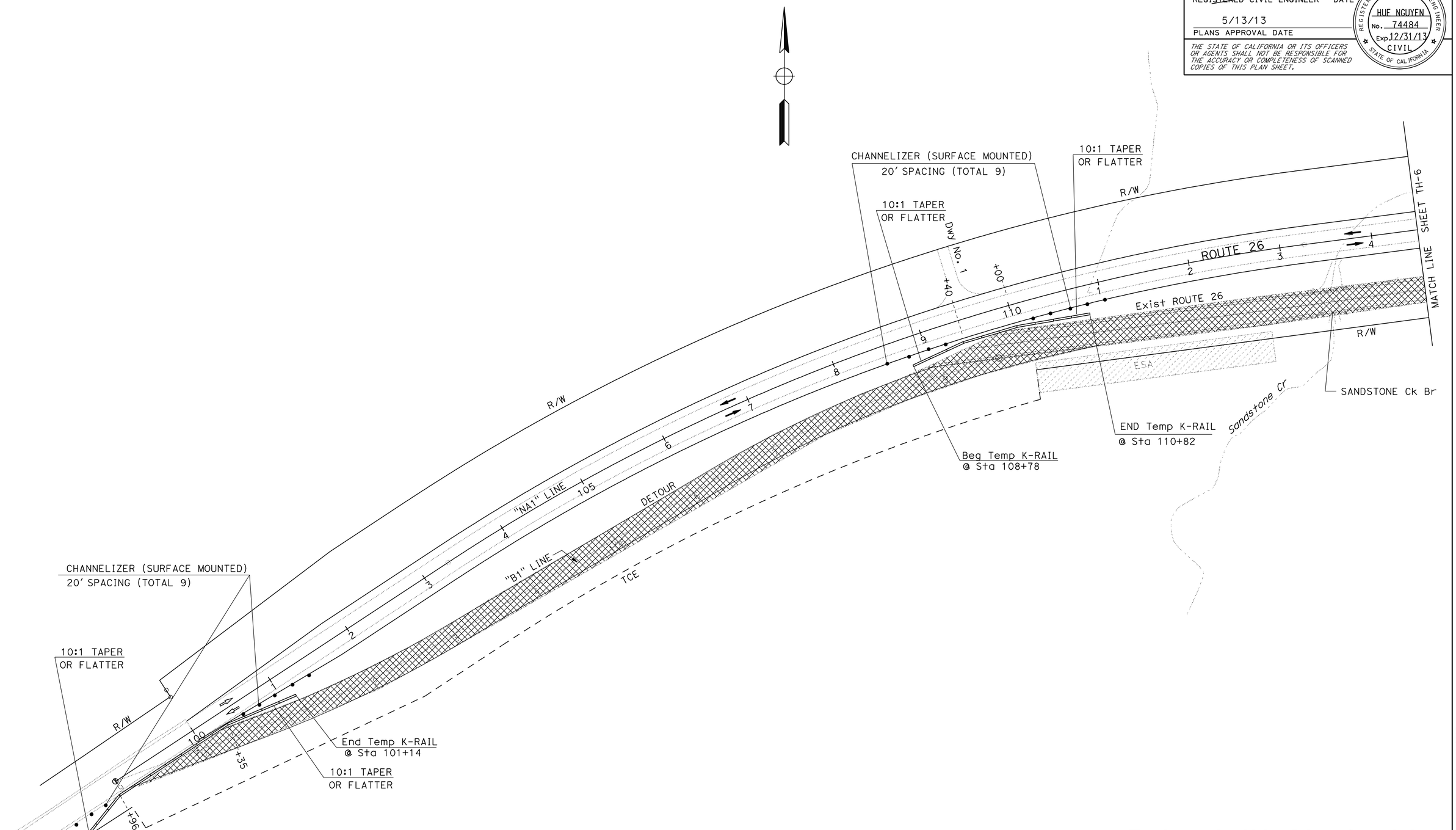

APPROVED FOR TRAFFIC HANDLING WORK ONLY

TRAFFIC HANDLING PLAN
(STAGE 3)

SCALE: 1" = 50'

TH-5

CN	04/26/13
REVISED BY	DATE REVISED
CECILE NGUYEN	
HUE NGUYEN	
CALCULATED-DESIGNED BY	
CHECKED BY	
FUNCTIONAL SUPERVISOR	
MOHAMMED QATAMI	

STATE OF CALIFORNIA - DEPARTMENT OF TRANSPORTATION

Caltrans® TRAFFIC DESIGN

LAST REVISION 03-14-13 | DATE PLOTTED => 10-JUN-2013 | TIME PLOTTED => 08:06

Dist	COUNTY	ROUTE	POST MILES TOTAL PROJECT	SHEET No.	TOTAL SHEETS
10	SJ	26	18.5/19.0	27	42

REGISTERED CIVIL ENGINEER 4/23/13 DATE

5/13/13
PLANS APPROVAL DATE

REGISTERED PROFESSIONAL ENGINEER HUE NGUYEN No. 74484 Exp. 12/31/13 CIVIL STATE OF CALIFORNIA

THE STATE OF CALIFORNIA OR ITS OFFICERS OR AGENTS SHALL NOT BE RESPONSIBLE FOR THE ACCURACY OR COMPLETENESS OF SCANNED COPIES OF THIS PLAN SHEET.

NOTE:

FOR ACCURATE RIGHT OF WAY, CONTACT RIGHT OF WAY ENGINEERING AT THE DISTRICT OFFICE.

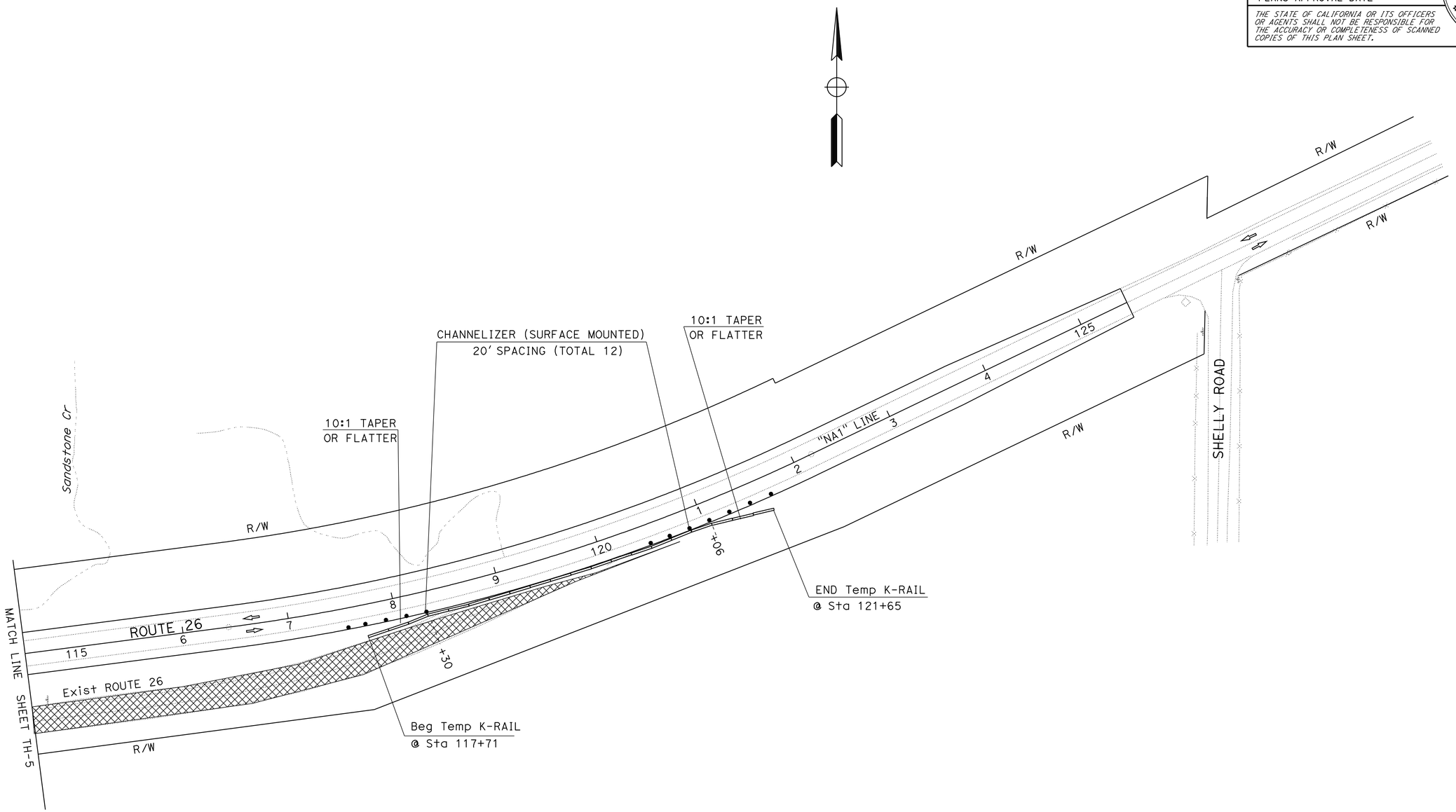

TRAFFIC HANDLING PLAN
(STAGE 3)

SCALE: 1" = 50'

TH-6

APPROVED FOR TRAFFIC HANDLING WORK ONLY

STATE OF CALIFORNIA - DEPARTMENT OF TRANSPORTATION
Caltrans
TRAFFIC DESIGN

FUNCTIONAL SUPERVISOR: MOHAMMED QATAMI

CALCULATED-DESIGNED BY: CECILE NGUYEN
CHECKED BY: HUE NGUYEN

REVISED BY: CN
DATE REVISED: 04/26/13

LAST REVISION 03-14-13
DATE PLOTTED => 10-JUN-2013
TIME PLOTTED => 08:06

Dist	COUNTY	ROUTE	POST MILES TOTAL PROJECT	SHEET No.	TOTAL SHEETS
10	SJ	26	18.5/19.0	28	42

REGISTERED CIVIL ENGINEER 4/23/13 DATE

5/13/13
PLANS APPROVAL DATE

REGISTERED PROFESSIONAL ENGINEER HUE NGUYEN No. 74484 Exp. 12/31/13 CIVIL STATE OF CALIFORNIA

THE STATE OF CALIFORNIA OR ITS OFFICERS OR AGENTS SHALL NOT BE RESPONSIBLE FOR THE ACCURACY OR COMPLETENESS OF SCANNED COPIES OF THIS PLAN SHEET.

NOTE:

1. FOR ADDITIONAL CONSTRUCTION AREA SIGNS REFER TO SHEET CS-1.
2. * TOTAL INCLUDED ON PDQ-1 IN ROADSIDE SIGN ITEMS.

STATIONARY MOUNTED CONSTRUCTION AREA SIGNS

STAGE	SIGN No.	SIGN CODE FEDERAL	SIGN CODE CALIFORNIA	SIGN MESSAGE	PANEL SIZE	No. OF POST AND SIZE	No. OF SIGNS EA	No. OF SIGN PANEL EA	REMARKS
1&2	1	W21-5aR		RIGHT SHOULDER CLOSED AHEAD	48" x 48"	1 - 6" x 6"	2		
	2		C30A	SHOULDER CLOSED	48" x 48"	1 - 6" x 6"	5		
	3	W1-2		CURVE					REFER TO PDQ-1 FOR MORE SIGNS
		W13-1(35)		ADVISORY SPEED PLATE					
	4	W1-4R		REVERSE CURVE	48" x 48"	1 - 6" x 6"	1		
		W13-1(35)		ADVISORY SPEED PLATE					
	5	R11-2		ROAD CLOSED	48" x 30"			3	MOUNT ON BARRICADE
	6	W1-2		CURVE					REFER TO PDQ-1 FOR MORE SIGNS
		W13-1(35)		ADVISORY SPEED PLATE					
	7	W1-2		CURVE					REFER TO PDQ-1 FOR MORE SIGNS
		W13-1(35)		ADVISORY SPEED PLATE					
	8	W1-4L		REVERSE CURVE	48" x 48"	1 - 6" x 6"	1		
		W13-1(35)		ADVISORY SPEED PLATE					

TEMPORARY RAILING (TYPE K)

STAGE	SHEET No.	DIRECTION	LOCATION Sta	TO Sta	LF
1	TH-1	EB	99+20 "NA1"	101+42 "NA1"	220
		EB	107+85 "NA1"	111+90 "NA1"	400
		WB	106+86 "NA1"	110+81 "NA1"	400
	TH-2	WB	117+44 "NA1"	123+51 "NA1"	600
2	TH-3	EB	99+00 "NA1"	101+40 "B1"	240
3	TH-5	EB	98+38 "NA1"	101+14 "NA1"	260
			108+78 "NA1"	110+82 "NA1"	200
	TH-6	EB	117+71 "NA1"	121+65 "NA1"	400
TOTAL					2720

TEMPORARY CRASH CUSHION

STAGE	SHEET No.	TYPE "TS11" EA
1	TH-1	66
	TH-2	22
2	TH-3	11
TOTAL		99

CHANNELIZER (SURFACE MOUNTED)

STAGE	SHEET No.	EA
1	TH-1	60
	TH-2	20
2	TH-3	33
3	TH-5	18
	TH-6	12
TOTAL		143

TYPE III BARRICADE

SHEET No.	EA
TH-3	3

TEMPORARY PAVEMENT DELINEATION ITEMS

STAGE	SHEET No.	LOCATION Sta TO Sta	REMOVVE YELLOW THERMOPLASTIC TRAFFIC STRIPE (HAZARDOUS WASTE)	REMOVVE THERMOPLASTIC TRAFFIC STRIPE	REMOVVE PAVEMENT MAKER	TEMPORARY TRAFFIC STRIPE (PAINT) 4" WHITE DETAIL 27B	TEMPORARY TRAFFIC STRIPE (PAINT) 4" YELLOW DETAIL 22	TEMPORARY PAVEMENT MARKER
			LF	LF	EA	LF		EA
2	TH-3	98+00 "NA1" TO 100+00 "NA1"	400	400	53			
		108+24 "NA1" TO 112+24 "NA1"	800	800				
		98+00 "NA1" TO 112+24 "B1"				2848	1424	121
TOTAL			1200	1200	53	4272		121

ROADSIDE SIGN ITEMS

SIGN No.	RELOCATE ROADSIDE SIGN * EA	REMOVE ROADSIDE SIGN * EA
3	1	
6		1
7		1
TOTAL	1	2

TRAFFIC HANDLING QUANTITIES

THQ-1

STATE OF CALIFORNIA - DEPARTMENT OF TRANSPORTATION
Caltrans TRAFFIC DESIGN

FUNCTIONAL SUPERVISOR: MOHAMMED QATAMI
CALCULATED-DESIGNED BY: CECILE NGUYEN
CHECKED BY: HUE NGUYEN
REVISED BY: CN
DATE REVISED: 04/26/13

LAST REVISION 00-00-00
DATE PLOTTED => 10-JUN-2013
TIME PLOTTED => 08:06

Dist	COUNTY	ROUTE	POST MILES TOTAL PROJECT	SHEET No.	TOTAL SHEETS
10	SJ	26	18.5/19.0	29	42

REGISTERED CIVIL ENGINEER 4/23/13 DATE

5/13/13
PLANS APPROVAL DATE

REGISTERED PROFESSIONAL ENGINEER MASON L. LEUNG No. 71709 Exp. 12-31-13 CIVIL STATE OF CALIFORNIA

THE STATE OF CALIFORNIA OR ITS OFFICERS OR AGENTS SHALL NOT BE RESPONSIBLE FOR THE ACCURACY OR COMPLETENESS OF SCANNED COPIES OF THIS PLAN SHEET.

NOTES:

1. FOR ACCURATE RIGHT OF WAY DATA, CONTACT RIGHT OF WAY ENGINEERING AT THE DISTRICT OFFICE.
2. R/W NOT SHOWN IN THE TCE AREA.

DRAINAGE ITEMS (DETOUR)

DRAINAGE SYSTEM No.	DRAINAGE UNIT	12" TEMPORARY CULVERT LF	18" TEMPORARY CULVERT LF	MAXIMUM COVER (N) F+	PIPE CULVERT JOINT CLASSIFICATION (N)	STATION
T1	a	71.6		2.1		100+04, "B1" LINE
T2	a		38	1.2	S	101+00, "B1" LINE
T3	a		52.6	3.0	S	104+50, "B1" LINE
		71.6	90.6		TOTAL	

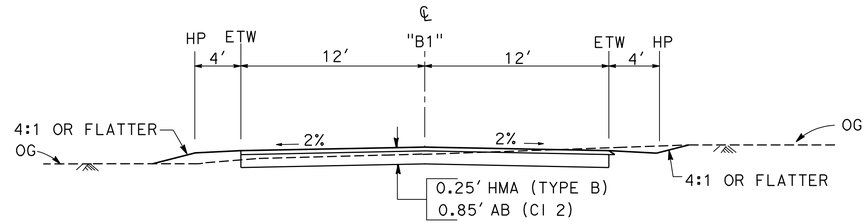

SECTION

NO SCALE

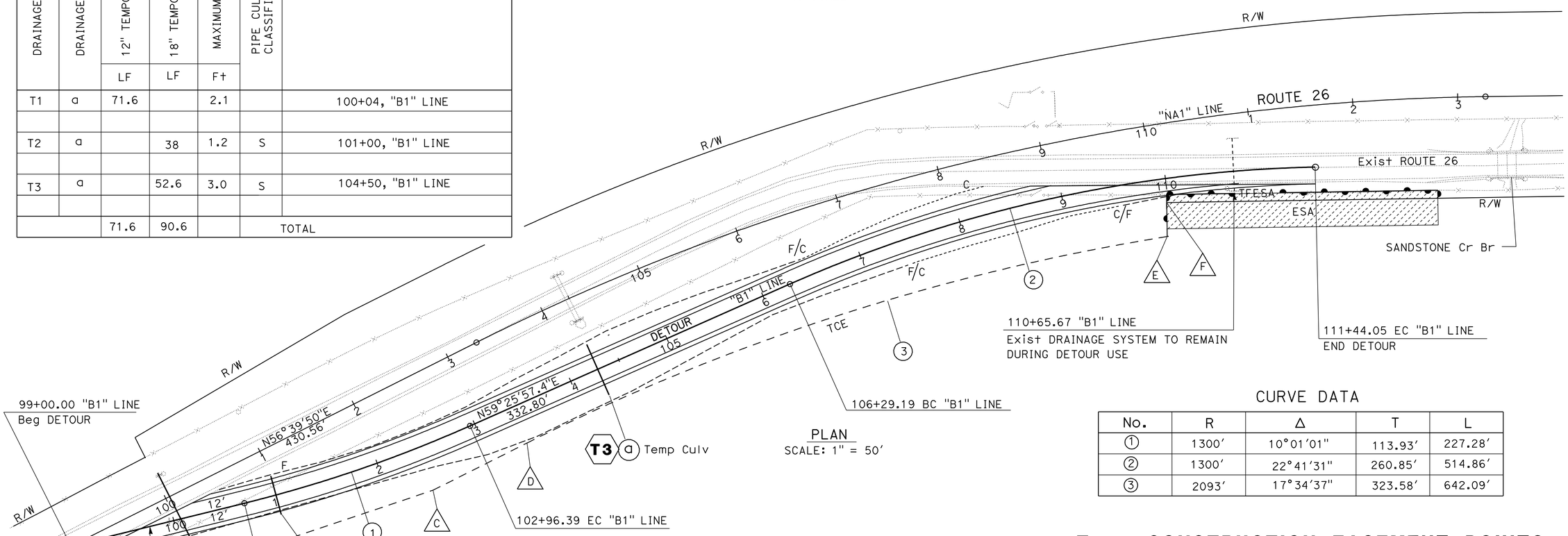

PLAN
SCALE: 1" = 50'

CURVE DATA

No.	R	Δ	T	L
1	1300'	10°01'01"	113.93'	227.28'
2	1300'	22°41'31"	260.85'	514.86'
3	2093'	17°34'37"	323.58'	642.09'

ROADWAY ITEMS (DETOUR)

LOCATION Sta TO Sta	ROADWAY EXCAVATION CY	REMOVE BASE AND SURFACING CY	IMPORTED BORROW CY	HMA (TYPE B) TON	TACK COAT TON	CI 2 AB CY
DETOUR ROAD ("B1" LINE) 99+00 TO 111+04	3047	978	1812	453	0.7	756

TOTAL TO BE INCLUDED IN ROADWAY ITEMS (Q-1).

Temp CONSTRUCTION EASEMENT POINTS

LOCATION	STATION "NA1" LINE	OFFSET FROM "NA1" LINE	NORTHINGS	EASTINGS
A	99+00.00	36.48'	2216324.268	6425796.700
B	99+00.00	60.00'	2216304.615	6425809.627
C	102+30.56	107.00'	2216447.008	6426111.626
D	103+30.56	107.00'	2216501.963	6426195.172
E	110+05.48	107.00'	2216767.674	6426776.941
F	110+10.24	75.00'	2216799.716	6426772.680

APPROVED FOR DETOUR CONSTRUCTION WORK ONLY

DETOUR PLAN

SCALE AS SHOWN

DE-1

STATE OF CALIFORNIA - DEPARTMENT OF TRANSPORTATION
Caltrans® DESIGN

FUNCTIONAL SUPERVISOR: MICHAEL HUTCHISON
CALCULATED-DESIGNED BY: MANUEL PALATINO
CHECKED BY: MASON LEUNG
REVISED BY: ML
DATE REVISED: 04/22/13

LAST REVISION 00-00-00
DATE PLOTTED => 10-JUN-2013
TIME PLOTTED => 08:06

Dist	COUNTY	ROUTE	POST MILES TOTAL PROJECT	SHEET No.	TOTAL SHEETS
10	SJ	26	18.5/19.0	30	42

REGISTERED CIVIL ENGINEER 4/23/13 DATE

5/13/13
PLANS APPROVAL DATE

REGISTERED PROFESSIONAL ENGINEER
MASON L. LEUNG
No. 71709
Exp. 12-31-13
CIVIL
STATE OF CALIFORNIA

THE STATE OF CALIFORNIA OR ITS OFFICERS OR AGENTS SHALL NOT BE RESPONSIBLE FOR THE ACCURACY OR COMPLETENESS OF SCANNED COPIES OF THIS PLAN SHEET.

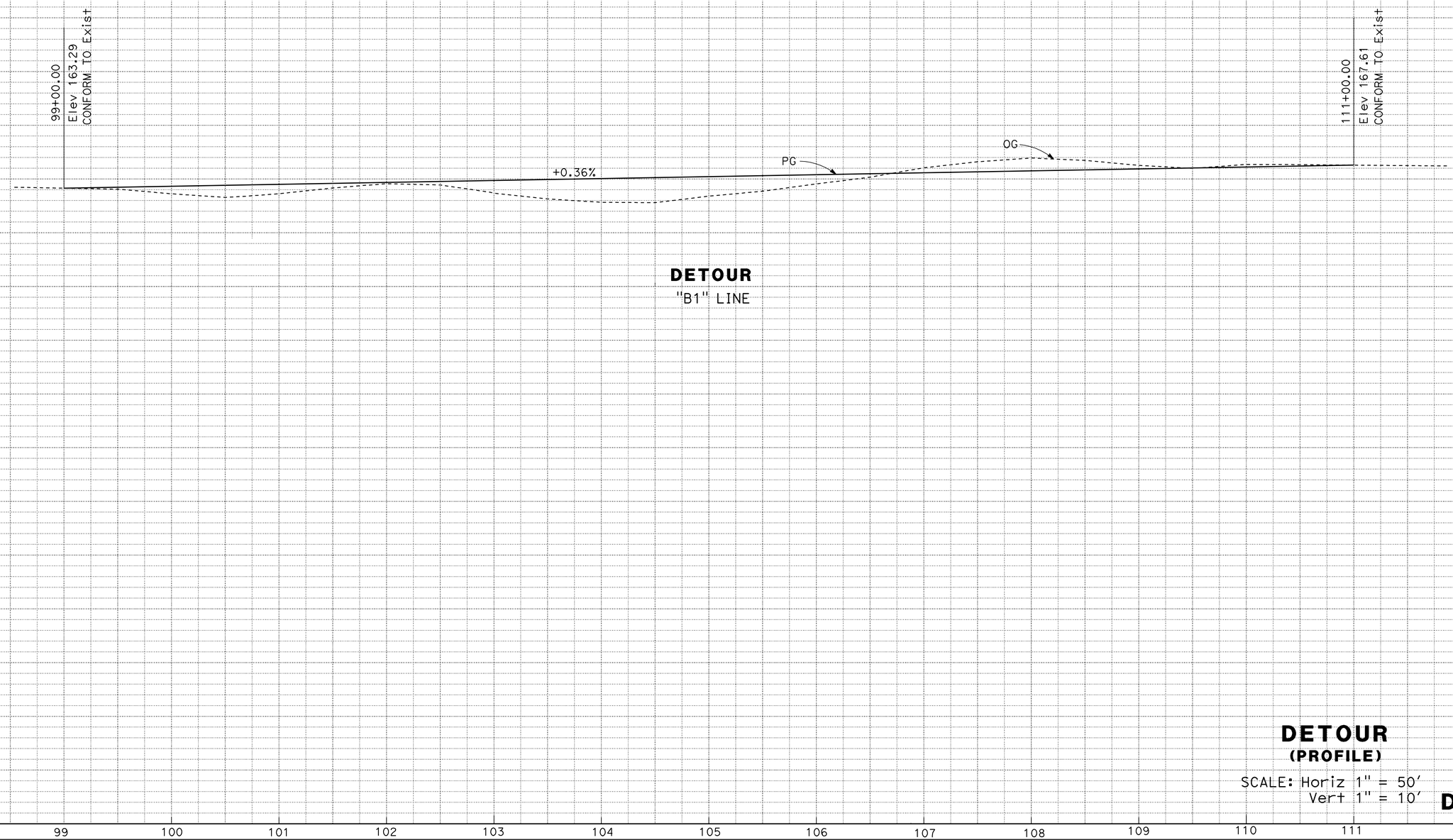

DETOUR
(PROFILE)

SCALE: Horiz 1" = 50'
Vert 1" = 10'

DE-2

STATION		99	100	101	102	103	104	105	106	107	108	109	110	111	TOTAL
CY	Exc							2714							2714
	Emb							1651							1651

STATE OF CALIFORNIA - DEPARTMENT OF TRANSPORTATION
Caltrans® DESIGN

FUNCTIONAL SUPERVISOR: MICHAEL HUTCHISON

CALCULATED-DESIGNED BY: MANUEL PALATINO
CHECKED BY: MASON LEUNG

REVISED BY: ML
DATE REVISED: 04/26/13

LAST REVISION 00-00-00
DATE PLOTTED => 10-JUN-2013
TIME PLOTTED => 08:06

Dist	COUNTY	ROUTE	POST MILES TOTAL PROJECT	SHEET No.	TOTAL SHEETS
10	SJ	26	18.5/19.0	31	42

LICENSED LANDSCAPE ARCHITECT

5/13/13

PLANS APPROVAL DATE

THE STATE OF CALIFORNIA OR ITS OFFICERS OR AGENTS SHALL NOT BE RESPONSIBLE FOR THE ACCURACY OR COMPLETENESS OF SCANNED COPIES OF THIS PLAN SHEET.

LICENSED LANDSCAPE ARCHITECT Agustin Escutia No. 5543 Signature 5/31/14 Renewal Date 5/1/13 Date STATE OF CALIFORNIA

NOTES:

1. FOR ACCURATE RIGHT OF WAY, CONTACT RIGHT OF WAY ENGINEERING AT THE DISTRICT OFFICE.
2. R/W NOT SHOWN IN TCE AREA.

LEGEND

TEMPORARY MULCH

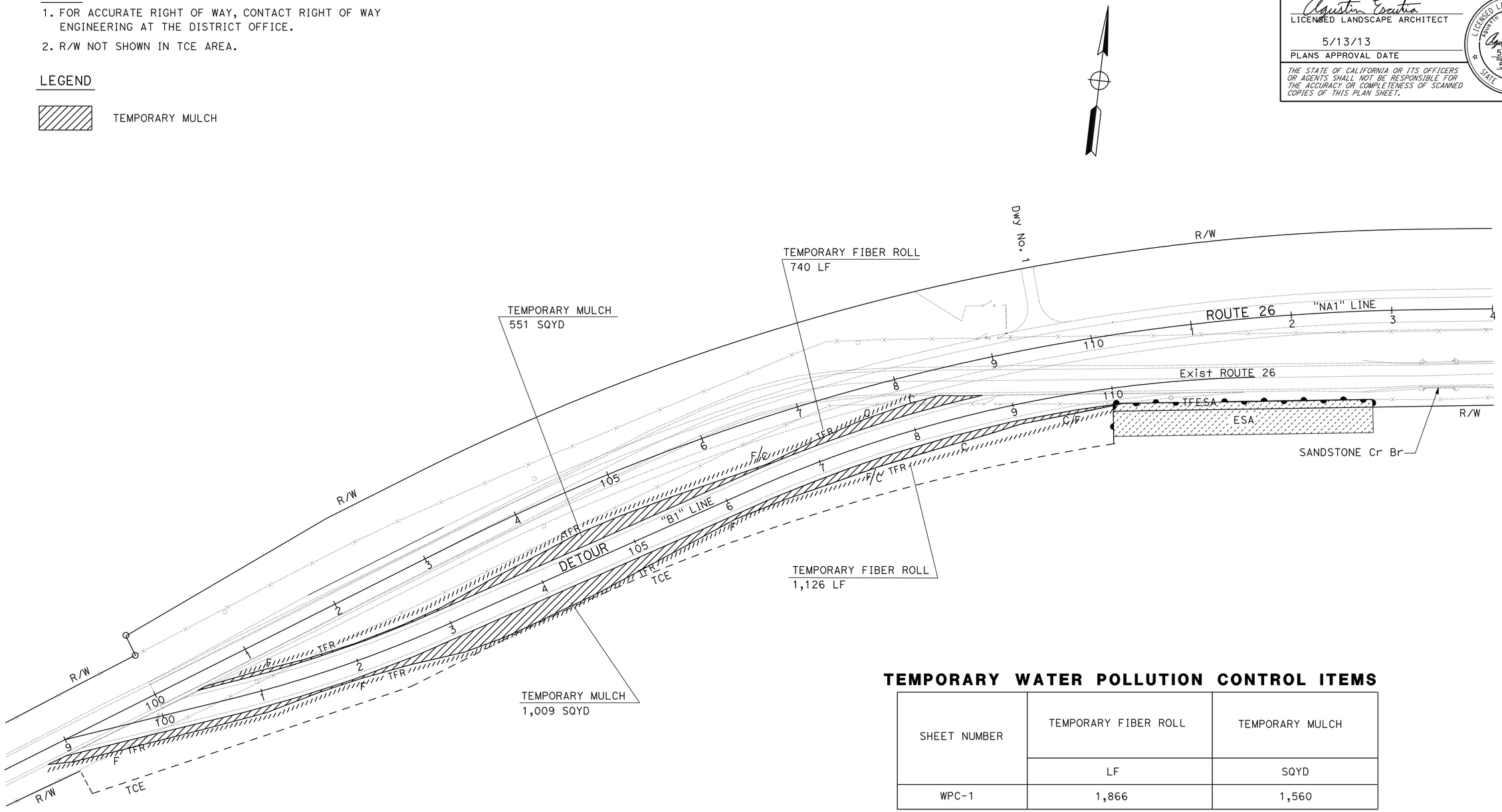

TEMPORARY WATER POLLUTION CONTROL ITEMS

SHEET NUMBER	TEMPORARY FIBER ROLL	TEMPORARY MULCH
	LF	SQYD
WPC-1	1,866	1,560

DETOUR

(TEMPORARY WATER POLLUTION CONTROL PLAN & QUANTITIES)

SCALE: 1" = 50'

DE-3

APPROVED FOR TEMPORARY WATER POLLUTION CONTROL WORK ONLY

STATE OF CALIFORNIA - DEPARTMENT OF TRANSPORTATION

Caltrans® LANDSCAPE ARCHITECTURE

SENIOR LANDSCAPE ARCHITECT: BRAD COLE

CALCULATED-DESIGNED BY: ROBYN FONG

CHECKED BY: WILLIAM DUTTERA

REVISED BY: RF

DATE REVISED: 04/29/13

LAST REVISION 00-00-00

DATE PLOTTED => 10-JUN-2013

TIME PLOTTED => 08:06

BORDER LAST REVISED 7/2/2010

USERNAME => s123936

DGN FILE => 1000000271mg003.dgn

RELATIVE BORDER SCALE IS IN INCHES 0 1 2 3

UNIT 1503

PROJECT NUMBER & PHASE 10000002711

Dist	COUNTY	ROUTE	POST MILES TOTAL PROJECT	SHEET No.	TOTAL SHEETS
10	SJ	26	18.5/19.0	32	42

REGISTERED CIVIL ENGINEER 4/23/13 DATE

5/13/13
PLANS APPROVAL DATE

REGISTERED PROFESSIONAL ENGINEER MASON L. LEUNG No. 71709 Exp. 12-31-13 CIVIL STATE OF CALIFORNIA

THE STATE OF CALIFORNIA OR ITS OFFICERS OR AGENTS SHALL NOT BE RESPONSIBLE FOR THE ACCURACY OR COMPLETENESS OF SCANNED COPIES OF THIS PLAN SHEET.

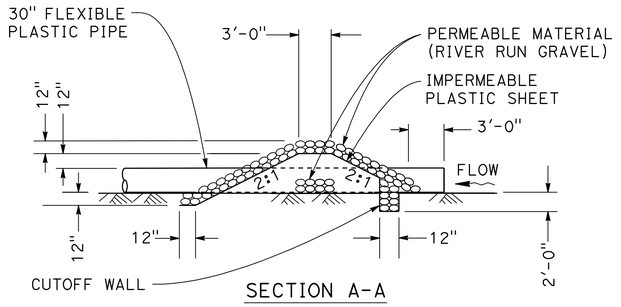

SECTION A-A

COFFER DAM (TYPE 1)

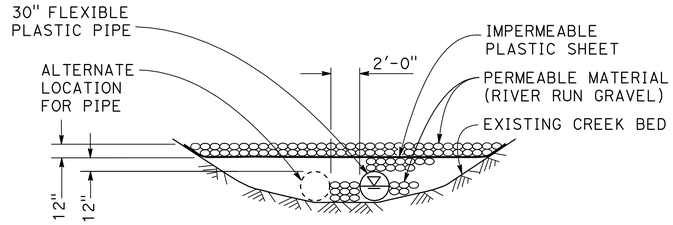

SECTION C-C

COFFER DAM (TYPE 1)

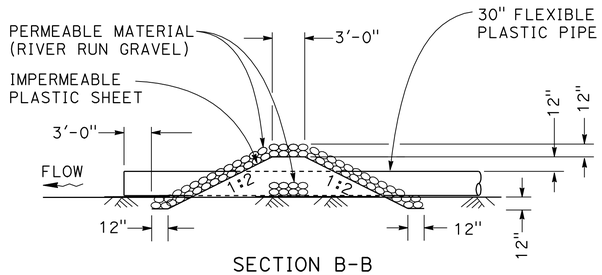

SECTION B-B

DOWNSTREAM BERM (TYPE 1)

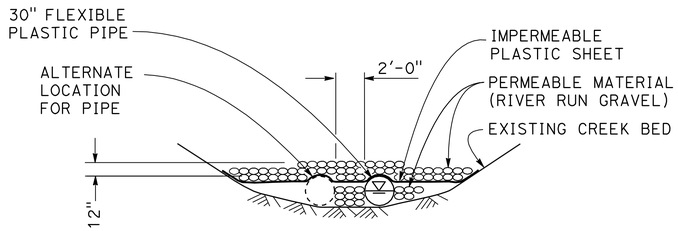

SECTION D-D

DOWNSTREAM BERM (TYPE 1)

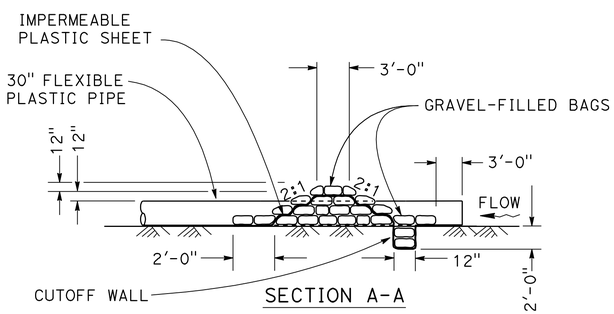

SECTION A-A

COFFER DAM (TYPE 2)

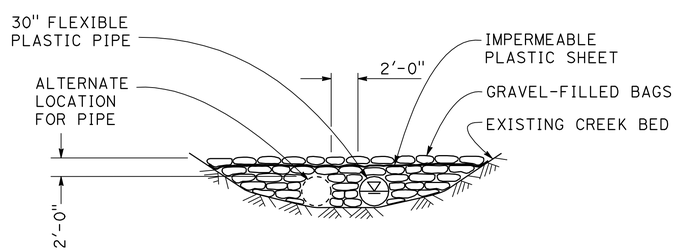

SECTION C-C

COFFER DAM (TYPE 2)

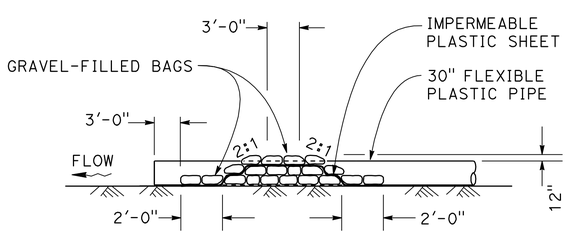

SECTION B-B

DOWNSTREAM BERM (TYPE 2)

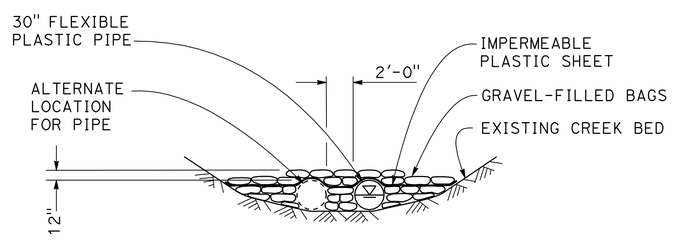

SECTION D-D

DOWNSTREAM BERM (TYPE 2)

NOTES:

1. EXACT SIZE, LENGTH, AND LOCATION OF THE PLASTIC FLEXIBLE PIPE TO BE DETERMINED IN THE FIELD BY THE ENGINEER.
2. GRAVEL-FILLED BAG ANCHORS TO BE PLACED AT INTERMEDIATE LOCATIONS AS DETERMINED BY THE ENGINEER.
3. USE FLEXIBLE PIPE OR RIGID PIPE WITH WATER TIGHT JOINTS AS NECESSARY TO FOLLOW CREEK ALIGNMENT.

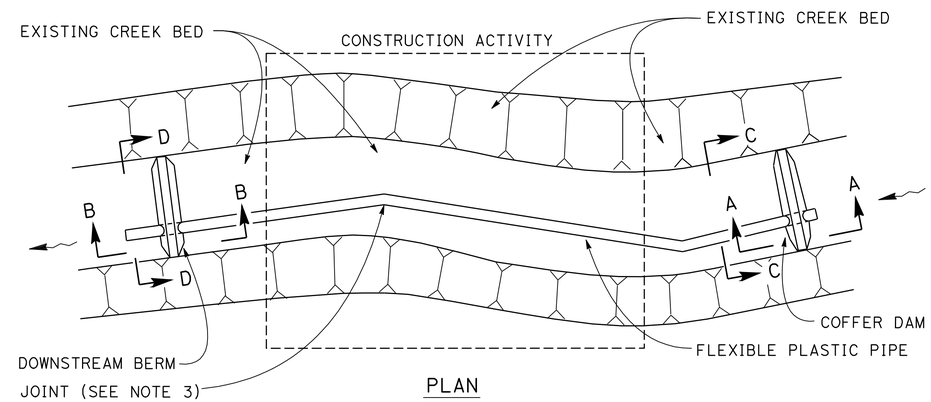

PLAN

TEMPORARY CREEK DIVERSION SYSTEM SCHEMATIC

DETOUR

(TEMPORARY WATER POLLUTION CONTROL DETAILS)
(TEMPORARY CREEK DIVERSION SYSTEM)

NO SCALE

DE-4

STATE OF CALIFORNIA - DEPARTMENT OF TRANSPORTATION
DESIGN
FUNCTIONAL SUPERVISOR: MICHAEL HUTCHISON
CALCULATED-DESIGNED BY: MANNY PALATINO
CHECKED BY: MASON LEUNG
REVISED BY: ML
DATE REVISED: 04/23/13

LAST REVISION 00-00-00
DATE PLOTTED => 10-JUN-2013
TIME PLOTTED => 08:06

Dist	COUNTY	ROUTE	POST MILES TOTAL PROJECT	SHEET No.	TOTAL SHEETS
10	SJ	26	18.5/19.0	33	42

REGISTERED CIVIL ENGINEER 4/23/13 DATE

5/13/13
PLANS APPROVAL DATE

REGISTERED PROFESSIONAL ENGINEER MASON L. LEUNG No. 71709 Exp. 12-31-13 CIVIL STATE OF CALIFORNIA

THE STATE OF CALIFORNIA OR ITS OFFICERS OR AGENTS SHALL NOT BE RESPONSIBLE FOR THE ACCURACY OR COMPLETENESS OF SCANNED COPIES OF THIS PLAN SHEET.

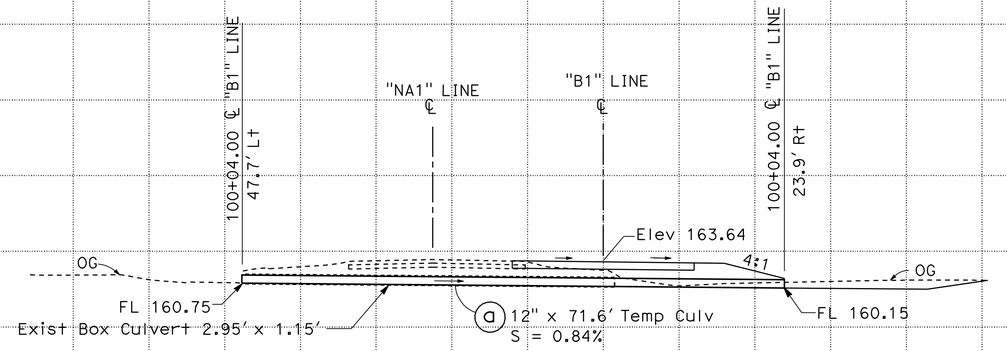

Sta 100+04 "NA1" LINE

DRAINAGE SYSTEM No. T1

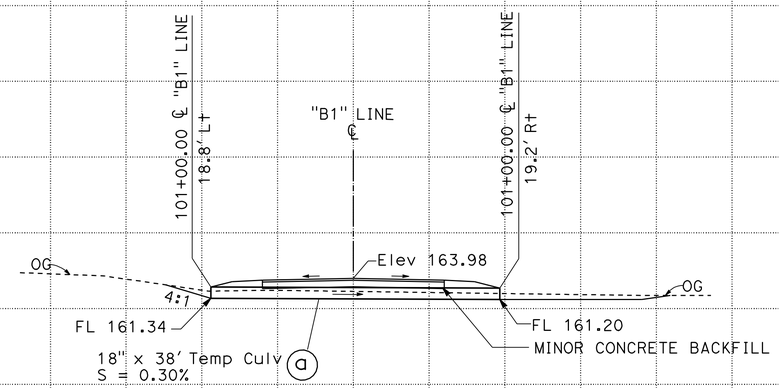

Sta 101+00 "B1" LINE

DRAINAGE SYSTEM No. T2

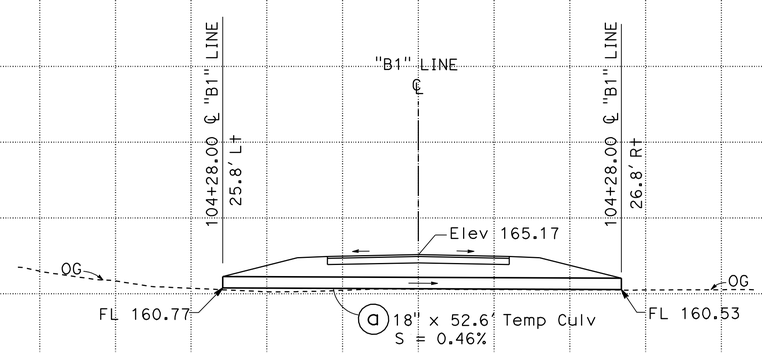

Sta 104+28 "B1" LINE

DRAINAGE SYSTEM No. T3

DETOUR
(DRAINAGE PROFILES)

SCALE: Horiz 1" = 10'
Vert 1" = 10'

DE-5

REVISED BY	DATE REVISED
MP	04/26/13

MANUEL PALATINO — MASON LEUNG
CALCULATED-DESIGNED BY — CHECKED BY
FUNCTIONAL SUPERVISOR — MICHAEL HUTCHISON

STATE OF CALIFORNIA - DEPARTMENT OF TRANSPORTATION
Caltrans® **DESIGN**

LAST REVISION 00-00-00 | DATE PLOTTED => 10-JUN-2013 | TIME PLOTTED => 08:06

Dist	COUNTY	LOCATION CODE	POST MILES TOTAL PROJECT	SHEET No.	TOTAL SHEETS
10	SJ	26	18.5/19.0	34	42

REGISTERED CIVIL ENGINEER 4/23/13 DATE

5/13/13
PLANS APPROVAL DATE

REGISTERED PROFESSIONAL ENGINEER HUE NGUYEN No. 74484 Exp. 12/31/13 CIVIL STATE OF CALIFORNIA

THE STATE OF CALIFORNIA OR ITS OFFICERS OR AGENTS SHALL NOT BE RESPONSIBLE FOR THE ACCURACY OR COMPLETENESS OF SCANNED COPIES OF THIS PLAN SHEET.

NOTE:

FOR ACCURATE RIGHT OF WAY DATA, CONTACT RIGHT OF WAY ENGINEERING AT THE DISTRICT OFFICE.

LEGEND

- (No.) ROADSIDE SIGN NUMBER
- REMOVE ROADSIDE SIGN
- ROADSIDE SIGN-ONE POST
- CHANGE OF PAVEMENT DELINEATION DETAIL
- DELINEATOR (TYPE F)
- OBJECT MARKER (TYPE L)

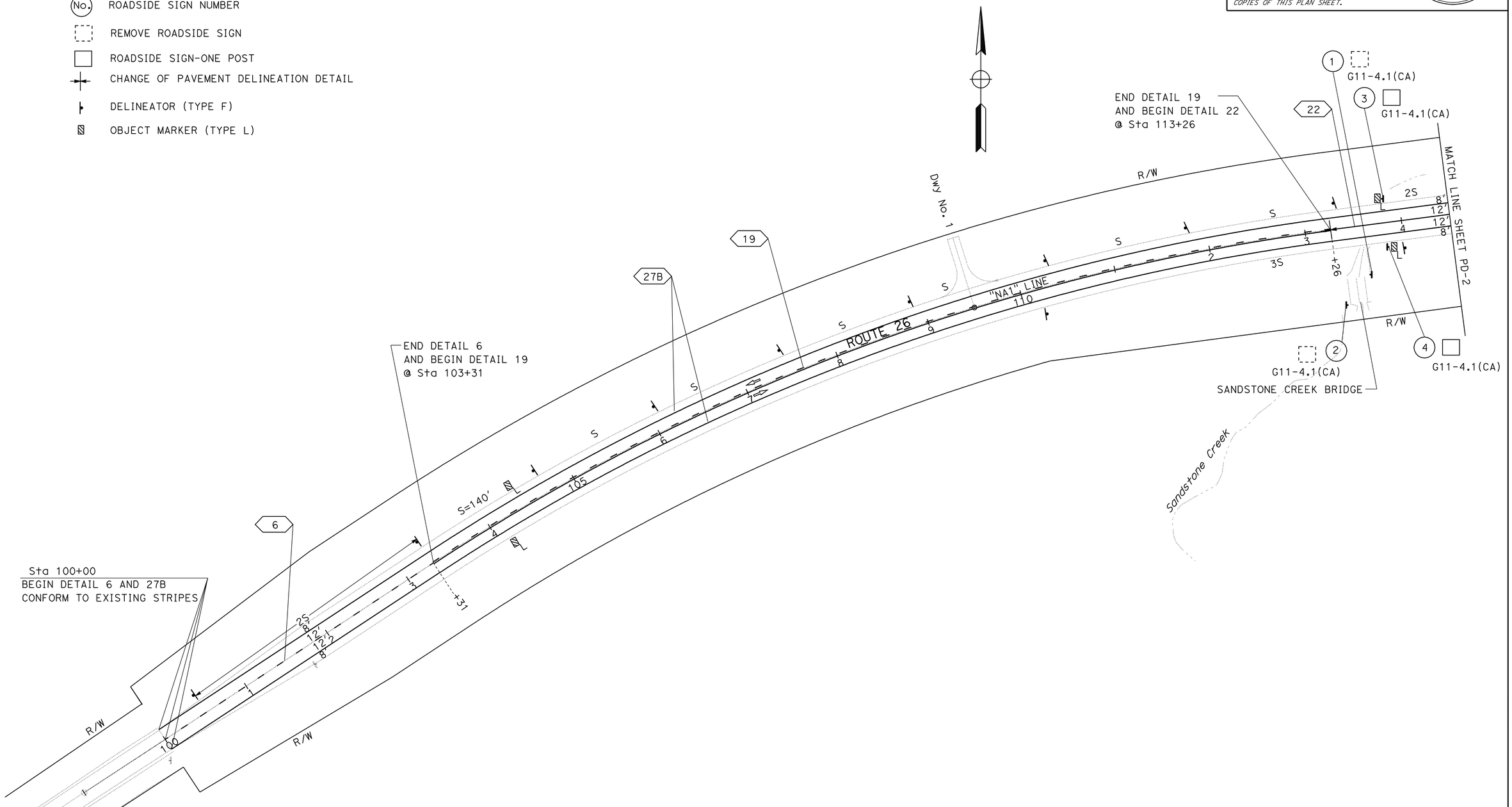

PAVEMENT DELINEATION AND SIGN PLAN

SCALE: 1" = 50'

PD-1

APPROVED FOR PAVEMENT DELINEATION AND SIGN WORK ONLY

REVISED BY	DATE REVISED
CN	04/22/13

CALCULATED-DESIGNED BY: CECILE NGUYEN
CHECKED BY: HUE NGUYEN
FUNCTIONAL SUPERVISOR: MOHAMMED QATAMI

STATE OF CALIFORNIA - DEPARTMENT OF TRANSPORTATION
Caltrans® TRAFFIC DESIGN

LAST REVISION 03-14-13 | DATE PLOTTED => 10-JUN-2013 | TIME PLOTTED => 08:06

Dist	COUNTY	ROUTE	POST MILES TOTAL PROJECT	SHEET No.	TOTAL SHEETS
10	SJ	26	18.5/19.0	35	42

REGISTERED CIVIL ENGINEER 4/23/13 DATE

5/13/13
PLANS APPROVAL DATE

REGISTERED PROFESSIONAL ENGINEER HUE NGUYEN No. 74484 Exp. 12/31/13 CIVIL STATE OF CALIFORNIA

THE STATE OF CALIFORNIA OR ITS OFFICERS OR AGENTS SHALL NOT BE RESPONSIBLE FOR THE ACCURACY OR COMPLETENESS OF SCANNED COPIES OF THIS PLAN SHEET.

NOTE:
FOR ACCURATE RIGHT OF WAY, CONTACT RIGHT OF WAY ENGINEERING AT THE DISTRICT OFFICE.

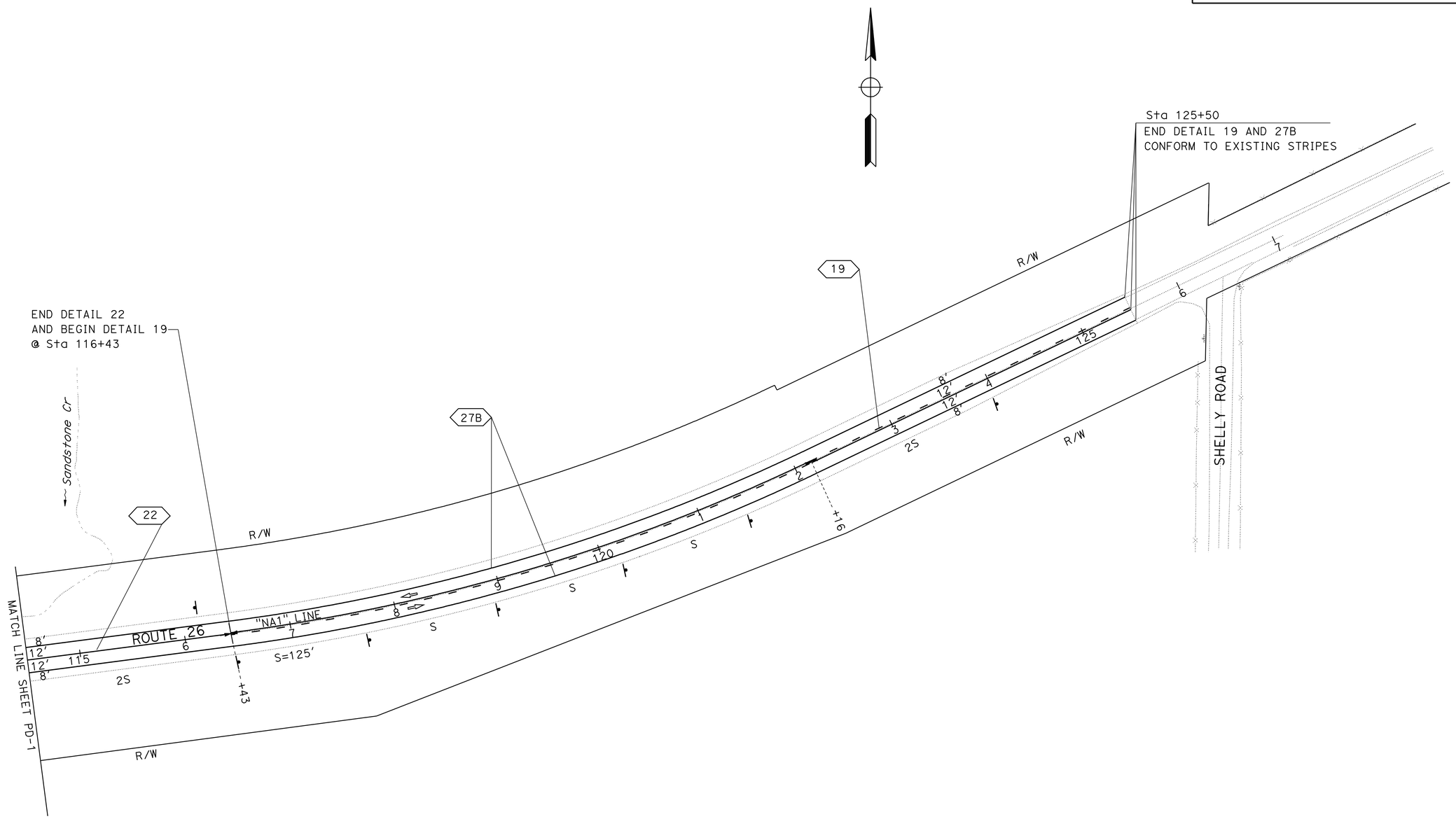

APPROVED FOR PAVEMENT DELINEATION AND SIGN WORK ONLY

PAVEMENT DELINEATION AND SIGN PLAN

SCALE: 1" = 50'

PD-2

STATE OF CALIFORNIA - DEPARTMENT OF TRANSPORTATION
Caltrans® **TRAFFIC DESIGN**

FUNCTIONAL SUPERVISOR: MOHAMMED QATAMI
CALCULATED-DESIGNED BY: CECILE NGUYEN
CHECKED BY: HUE NGUYEN
REVISED BY: CN
DATE REVISED: 04/23/13

LAST REVISION 03-14-13 | DATE PLOTTED => 10-JUN-2013 | TIME PLOTTED => 08:06

Dist	COUNTY	ROUTE	POST MILES TOTAL PROJECT	SHEET No.	TOTAL SHEETS
10	SJ	26	18.5/19.0	36	42

REGISTERED CIVIL ENGINEER 4/23/13 DATE

5/13/13
PLANS APPROVAL DATE

REGISTERED PROFESSIONAL ENGINEER HUE NGUYEN No. 74484 Exp. 12/31/13 CIVIL STATE OF CALIFORNIA

THE STATE OF CALIFORNIA OR ITS OFFICERS OR AGENTS SHALL NOT BE RESPONSIBLE FOR THE ACCURACY OR COMPLETENESS OF SCANNED COPIES OF THIS PLAN SHEET.

PAVEMENT DELINEATION

STATION "NA1" LINE	THERMOPLASTIC TRAFFIC STRIPE (SPRAYABLE)				PAVEMENT MARKER (RETROREFLECTIVE)		DELINEATOR (CLASS 1)	OBJECT MARKER (TYPE L)
	4" DOUBLE YELLOW	4" SOLID 4" BROKEN YELLOW 36-12	4" BROKEN YELLOW 36-12	4" SOLID WHITE	TYPE D	TYPE H	TYPE F	
	DETAIL 22	DETAIL 19	DETAIL 6	DETAIL 27B				
	LF	LF	LF	LF	EA		EA	EA
100+00 TO 103+31			331		8		18	
103+31 TO 113+26		995			22	42		2
113+26 TO 116+43	317				28			
116+43 TO 125+50		907			20	39		
100+00 TO 125+50				5100				
SUBTOTAL	317	1902	331	5100	78	81	18	2
TOTAL	7650				159		18	2

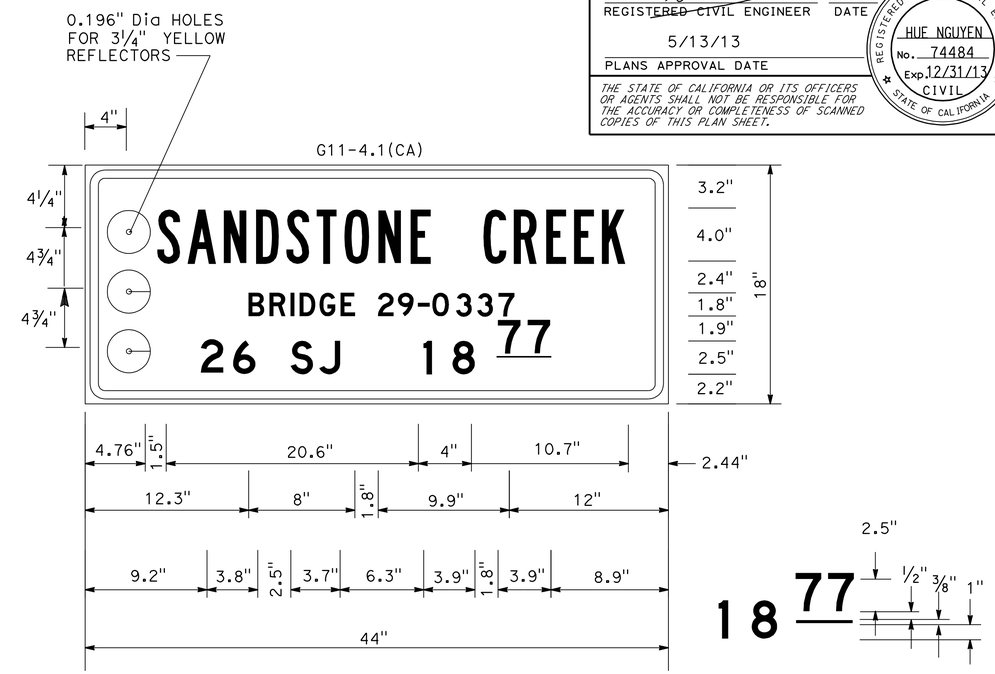

1.5" RADIUS, 0.6" BORDER, 0.4" INDENT, BLACK ON WHITE;
[SANDSTONE CREEK] B;
[BRIDGE 29-0336] D;
[26 SJ] D; [R5] D;
[24] D;

ROADSIDE SIGN No. 3 & 4

ROADSIDE SIGN ITEMS

SIGN No.	SIGN CODE		SIGN MESSAGE	SIGN PANEL SIZE	POST SIZE	REMOVE ROADSIDE SIGN	RELOCATE ROADSIDE SIGN	ROADSIDE SIGN (ONE POST)	SIGN MATERIALS								
									FURNISH SINGLE SHEET ALUMINUM SIGN 0.063" (UNFRAMED)	SINGLE FACED	DOUBLE FACED	BACKGROUND		LEGEND		GRAFFITI FILM	
	FEDERAL	CALIFORNIA										SHEETING COLOR	RETROFLECTIVE ASTM TYPE	SHEETING COLOR	RETROFLECTIVE ASTM TYPE	STANDARD	PREMIUM
						EA	EA	EA	SQFT								
1		G11-4.1(CA)	SANDSTONE CREEK			1											
2		G11-4.1(CA)	SANDSTONE CREEK			1											
3		G11-4.1(CA)	SANDSTONE CREEK	44" × 18"	4" × 4"			1	5.5	×		WHITE	III	BLACK			×
4		G11-4.1(CA)	SANDSTONE CREEK	44" × 18"	4" × 4"			1	5.5	×		WHITE	III	BLACK			×
THQ-1						2	1										
TOTAL						4	1	2	11.0								

NOTE:
EXACT LOCATIONS OF SIGNS TO BE DETERMINED BY THE ENGINEER.

PAVEMENT DELINEATION DETAILS AND PAVEMENT DELINEATION AND SIGN QUANTITIES

NO SCALE

PDQ-1

CALCULATED-DESIGNED BY	CN
CHECKED BY	05/03/13
REVISED BY	CECILE NGUYEN
DATE REVISED	HUE NGUYEN
FUNCTIONAL SUPERVISOR	MOHAMMED QATAMI

STATE OF CALIFORNIA - DEPARTMENT OF TRANSPORTATION
Caltrans® TRAFFIC DESIGN

LAST REVISION 03-14-13
DATE PLOTTED => 10-JUN-2013
TIME PLOTTED => 08:06

Dist	COUNTY	ROUTE	POST MILES TOTAL PROJECT	SHEET No.	TOTAL SHEETS
10	SJ	26	18.5/19.0	37	42

REGISTERED CIVIL ENGINEER 4/23/13 DATE

5/13/13
PLANS APPROVAL DATE

REGISTERED PROFESSIONAL ENGINEER MASON L. LEUNG No. 71709 Exp. 12-31-13 CIVIL STATE OF CALIFORNIA

THE STATE OF CALIFORNIA OR ITS OFFICERS OR AGENTS SHALL NOT BE RESPONSIBLE FOR THE ACCURACY OR COMPLETENESS OF SCANNED COPIES OF THIS PLAN SHEET.

ROADWAY ITEMS

LOCATION	Sta TO Sta	ROADWAY EXCAVATION	REMOVE BASE AND SURFACING	STRUCTURAL BACKFILL	IMPORTED BORROW	RUBBERIZED HOT MIX ASPHALT (GAP GRADED)	HOT MIX ASPHALT (TYPE B)	TACK COAT	CLASS 2 AGGREGATE BASE
		CY	CY	CY	CY	TON	TON	TON	CY
ROUTE 26 ("NA1" LINE)	100+00 TO 125+50	7,918	3910	131	11,145	1509	5696	9.2	
DRIVEWAY No. 1	109+50 ("NA1" LINE)				40		15	0.1	
SHEET TOTAL		7,918	3910	131	11,185	1509		9.3	
DETOUR TOTAL		3,047	978		1,812		453	0.7	756
TOTAL		10,965	4888	131	12,997	1509	6164	10	756

REMOVE MBGR

LOCATION	LF
ROUTE 26 SANDSTONE Cr Br	306

REMOVE FENCE (TYPE BW)

LOCATION (Sta TO Sta)	LF
100+00 TO 125+50 "NA1" LINE Lt & Rt	5100

Temp FENCE (TYPE ESA)

LOCATION	Temp FENCE (TYPE ESA)
	LF
110+04.98 TO 112+78.03 "NA1" LINE Rt	291

SUMMARY OF QUANTITIES

Q-1

STATE OF CALIFORNIA - DEPARTMENT OF TRANSPORTATION
Caltrans
DESIGN

FUNCTIONAL SUPERVISOR: MICHAEL HUTCHISON
CALCULATED-DESIGNED BY: MANNY PALATINO
CHECKED BY: MASON LEUNG
REVISED BY: ML
DATE REVISED: 04/26/13

LAST REVISION 00-00-00
DATE PLOTTED => 10-JUN-2013
TIME PLOTTED => 08:06

Dist	COUNTY	ROUTE	POST MILES TOTAL PROJECT	SHEET No.	TOTAL SHEETS
10	SJ	26	18.5/19.0	38	42

LICENSED LANDSCAPE ARCHITECT

5/13/13
PLANS APPROVAL DATE

LICENSED LANDSCAPE ARCHITECT
Agustin Escutia No. 4393
Signature
5/31/14
Renewal date
5/13
Date
STATE OF CALIFORNIA

THE STATE OF CALIFORNIA OR ITS OFFICERS OR AGENTS SHALL NOT BE RESPONSIBLE FOR THE ACCURACY OR COMPLETENESS OF SCANNED COPIES OF THIS PLAN SHEET.

FIBER ROLLS

SEQUENCE	ITEM	MATERIAL		REMARKS
		DESCRIPTION	TYPE	
IN EC TYPE 2 AREAS FIBER ROLLS MUST BE INSTALLED AFTER RECP (NETTING) AND BEFORE HYDROSEED.	FIBER ROLLS	FIBER ROLLS	TYPE B 8" TO 10" Dia	TYPE 1 FIBER ROLL INSTALLATION

EROSION CONTROL TYPE 1

SEQUENCE	ITEM	MATERIAL		APPLICATION RATE	DEPTH
		DESCRIPTION	TYPE		
STEP 1	COMPOST	COMPOST	MEDIUM	270 CY/ACRE	-
STEP 2	INCORPORATE MATERIALS	COMPOST	-	-	6"
STEP 3	HYDROSEED	SEED	MIX 1	20 LB/ACRE	-
		FIBER	CELLULOSE	400 LB/ACRE	-
		FERTILIZER	ORGANIC*	100 LB/ACRE	-
STEP 4	HYDROMULCH	FIBER	CELLULOSE	800 LB/ACRE	-
		TACKIFIER	PSYLLIUM	400 LB/ACRE	-
		ALTERNATE FIBER	STRAW	1000 LB/ACRE	-

* ORGANIC FERTILIZER MUST BE PELLETED OR GRANULAR AND SHALL HAVE A GUARANTEED CHEMICAL ANALYSIS RANGE (N-P-K) (%) WITHIN: (N) 5 TO 7, (P) 1 TO 5, AND (K) 2 TO 10. THE CUMULATIVE (N) RELEASE RATE MUST BE NO MORE THAN 70 PERCENT THE FIRST 70 DAYS AFTER INCUBATION (86 DEGREE F) WITH 100 PERCENT AT 350 DAYS OR MORE.

EROSION CONTROL TYPE 2

SEQUENCE	ITEM	MATERIAL		APPLICATION RATE	DEPTH
		DESCRIPTION	TYPE		
STEP 1	COMPOST	COMPOST	MEDIUM	135 CY/ACRE	-
STEP 2	INCORPORATE MATERIALS	COMPOST	-	-	4"
STEP 3	ROLLED EROSION CONTROL PRODUCT (NETTING)	NETTING	TYPE A	-	-
STEP 4	HYDROSEED	SEED	MIX 1	20 LB/ACRE	-
		FIBER	CELLULOSE	400 LB/ACRE	-
		FERTILIZER	ORGANIC*	100 LB/ACRE	-
STEP 5	HYDROMULCH	FIBER	CELLULOSE	800 LB/ACRE	-
		TACKIFIER	PSYLLIUM	400 LB/ACRE	-
		ALTERNATE FIBER	STRAW	1000 LB/ACRE	-

* ORGANIC FERTILIZER MUST BE PELLETED OR GRANULAR AND SHALL HAVE A GUARANTEED CHEMICAL ANALYSIS RANGE (N-P-K) (%) WITHIN: (N) 5 TO 7, (P) 1 TO 5, AND (K) 2 TO 10. THE CUMULATIVE (N) RELEASE RATE MUST BE NO MORE THAN 70 PERCENT THE FIRST 70 DAYS AFTER INCUBATION (86 DEGREE F) WITH 100 PERCENT AT 350 DAYS OR MORE.

SEED MIX

SEED	BOTANICAL NAME (COMMON NAME)	PERCENT GERMINATION (MINIMUM)	POUNDS PURE LIVE SEED PER ACRE (SLOPE MEASUREMENT)
MIX 1	ELYMUS GLAUCUS * (BLUE WILDRYE)	85	6
	ESCHSCHOLZIA CALIFORNICA * (CALIFORNIA POPPY)	80	3
	HORDEUM VULGARE * (COMMON BARLEY)	85	3
	NASSELLA PULCHRA * (PURPLE NEEDLE GRASS)	85	1
	TRIFOLIUM HIRTUM * (ROSE CLOVER)	80	1
	VULPIA MICROSTACHYS * (SMALL FESCUE)	90	6

* SEED PRODUCED IN CALIFORNIA ONLY.

EROSION CONTROL LEGEND
ECL-1

CALCULATED-DESIGNED BY	ROBYN FONG
CHECKED BY	WILLIAM DUTTERA
SENIOR LANDSCAPE ARCHITECT	BRAD COLE
REVISED BY	RF
DATE REVISED	04/24/12

STATE OF CALIFORNIA - DEPARTMENT OF TRANSPORTATION
Caltrans® LANDSCAPE ARCHITECTURE

LAST REVISION 00-00-00
DATE PLOTTED => 10-JUN-2013
TIME PLOTTED => 08:06

Dist	COUNTY	ROUTE	POST MILES TOTAL PROJECT	SHEET No.	TOTAL SHEETS
10	SJ	26	18.5/19.0	39	42

LICENSED LANDSCAPE ARCHITECT

5/13/13

PLANS APPROVAL DATE

THE STATE OF CALIFORNIA OR ITS OFFICERS OR AGENTS SHALL NOT BE RESPONSIBLE FOR THE ACCURACY OR COMPLETENESS OF SCANNED COPIES OF THIS PLAN SHEET.

LICENSED LANDSCAPE ARCHITECT Agustin Escutia No. 5543 Signature 5/31/14 Renewal Date 5/1/13 Date STATE OF CALIFORNIA

NOTE:

FOR ACCURATE RIGHT OF WAY DATA, CONTACT RIGHT OF WAY ENGINEERING AT THE DISTRICT OFFICE.

LEGEND:

EROSION CONTROL TYPE 1

EROSION CONTROL TYPE 2

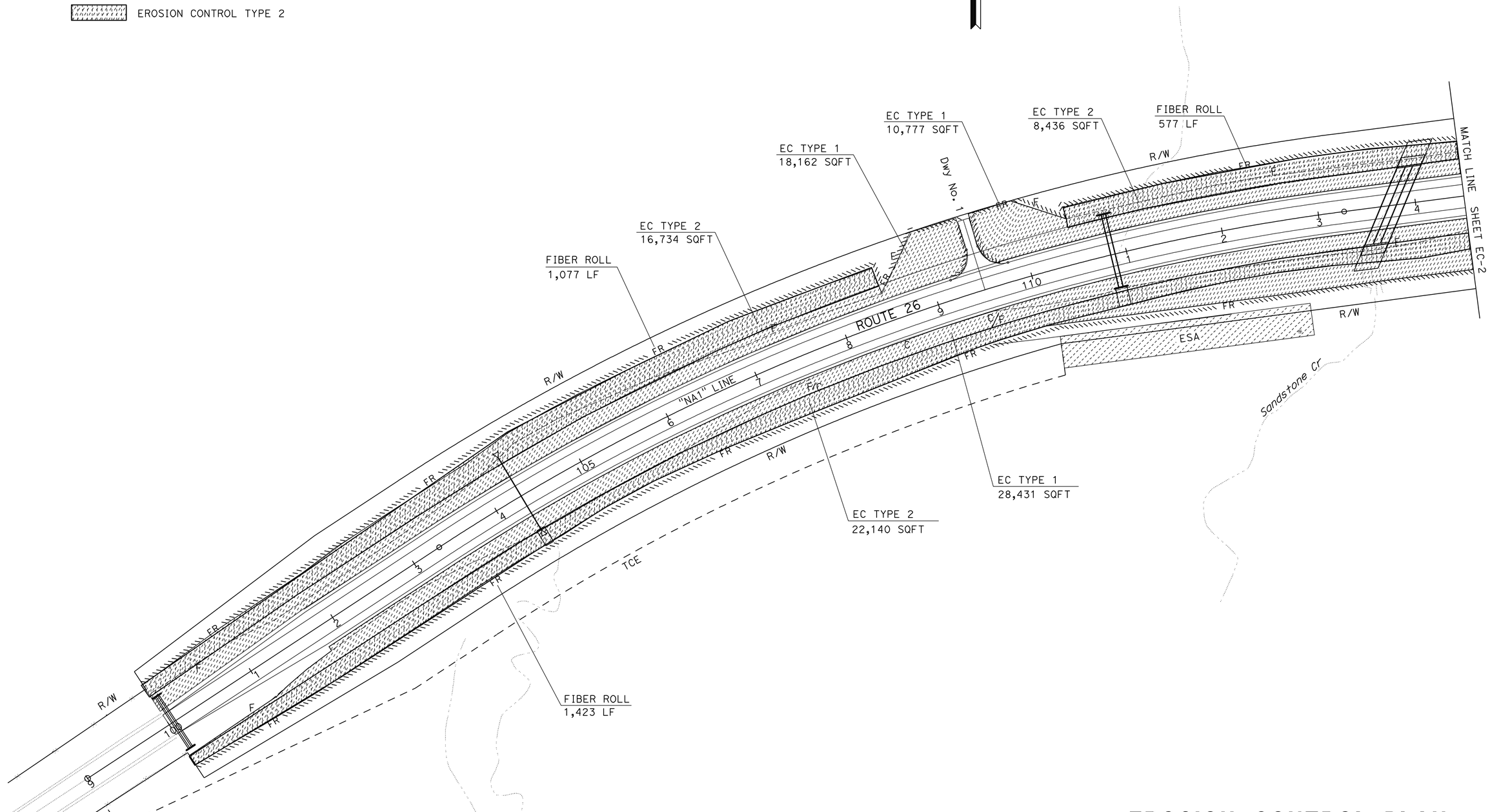

APPROVED FOR EROSION CONTROL WORK ONLY

EROSION CONTROL PLAN

SCALE: 1" = 50'

EC-1

STATE OF CALIFORNIA - DEPARTMENT OF TRANSPORTATION

Caltrans LANDSCAPE ARCHITECTURE

SENIOR LANDSCAPE ARCHITECT: BRAD COLE

CALCULATED-DESIGNED BY: ROBYN FONG

CHECKED BY: WILLIAM DUTTERA

REVISED BY: RF

DATE REVISED: 05/02/13

LAST REVISION 00-00-00

DATE PLOTTED => 10-JUN-2013

TIME PLOTTED => 08:06

Dist	COUNTY	ROUTE	POST MILES TOTAL PROJECT	SHEET No.	TOTAL SHEETS
10	SJ	26	18.5/19.0	40	42

LICENSED LANDSCAPE ARCHITECT

5/13/13

PLANS APPROVAL DATE

THE STATE OF CALIFORNIA OR ITS OFFICERS OR AGENTS SHALL NOT BE RESPONSIBLE FOR THE ACCURACY OR COMPLETENESS OF SCANNED COPIES OF THIS PLAN SHEET.

LICENSED LANDSCAPE ARCHITECT — Agustin Escutia No. 5543 — Signature — 5/31/14 Renewal Date — 5/1/13 Date — STATE OF CALIFORNIA

NOTE:

FOR ACCURATE RIGHT OF WAY DATA, CONTACT RIGHT OF WAY ENGINEERING AT THE DISTRICT OFFICE.

EROSION CONTROL ITEMS

SHEET NUMBER	DESCRIPTION	INCORPORATE MATERIALS	ROLLED EROSION CONTROL PRODUCT (NETTING)	COMPOST	FIBER ROLLS	HYDROSEED	HYDROMULCH
		SQFT	SQFT	CY	LF	SQFT	SQFT
EC-1	EROSION CONTROL TYPE 1 **	57,370	—	361	3,077	57,370	57,370
	EROSION CONTROL TYPE 2 *	47,310	47,310	145		47,310	47,310
EC-2	EROSION CONTROL TYPE 1 **	39,496	—	249	2,205	39,496	39,496
	EROSION CONTROL TYPE 2 *	37,711	37,711	116		37,711	37,711
	TOTAL	181,887	85,021	871	5,282	181,887	181,887

* - BIOFILTRATION SWALE AREAS
** - BIOFILTRATION STRIP AREAS

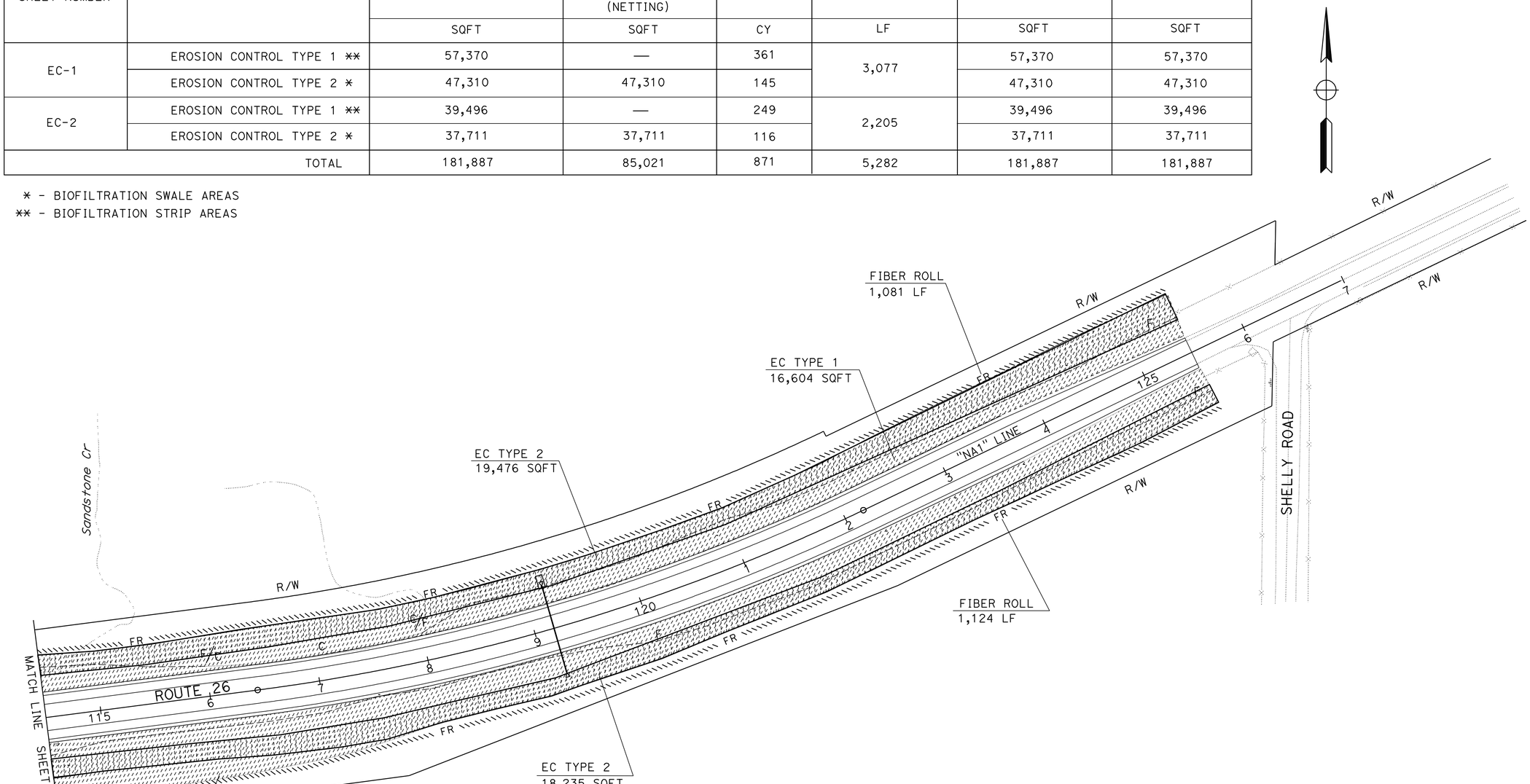

EROSION CONTROL PLAN AND QUANTITIES

SCALE: 1" = 50'

EC-2

APPROVED FOR EROSION CONTROL WORK ONLY

STATE OF CALIFORNIA - DEPARTMENT OF TRANSPORTATION
Caltrans® LANDSCAPE ARCHITECTURE

SENIOR LANDSCAPE ARCHITECT: BRAD COLE
CALCULATED-DESIGNED BY: ROBYN FONG
CHECKED BY: WILLIAM DUTTERA
REVISED BY: RF
DATE REVISED: 05/02/13

LAST REVISION 00-00-00
DATE PLOTTED => 10-JUN-2013
TIME PLOTTED => 08:06

DIST	COUNTY	ROUTE	POST MILES TOTAL PROJECT	SHEET No.	TOTAL SHEETS
10	SJ	26	18.5/19.0	41	42

REGISTERED CIVIL ENGINEER

January 20, 2012
PLANS APPROVAL DATE

REGISTERED PROFESSIONAL ENGINEER
Cornelis M. Hakim
No. C55610
Exp. 12-31-12
CIVIL
STATE OF CALIFORNIA

THE STATE OF CALIFORNIA OR ITS OFFICERS OR AGENTS SHALL NOT BE RESPONSIBLE FOR THE ACCURACY OR COMPLETENESS OF SCANNED COPIES OF THIS PLAN SHEET.

TO ACCOMPANY PLANS DATED 5/13/13

LEGEND:

- HMA PAVEMENT
- HMA OR CONCRETE PAVEMENT
- CONCRETE PAVEMENT

ABBREVIATIONS:

SE SAFETY EDGE
TT TOTAL THICKNESS OF SE
HW HINGE WIDTH, DISTANCE FROM ES OR EP TO HP

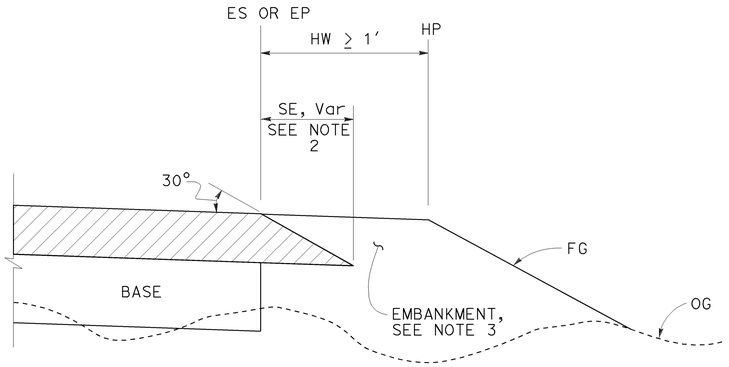

CASE K
Safety Edge - Fill Section, HW ≥ 1′

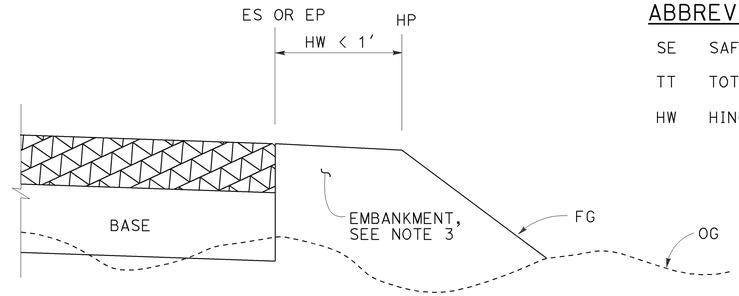

CASE L
Vertical Edge - Fill Section, HW < 1′

FILL SECTION

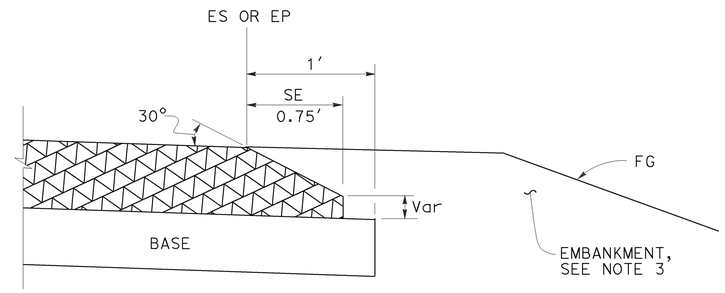

DETAIL "B"
For HMA pavement thickness more than 0.43′ or concrete pavement

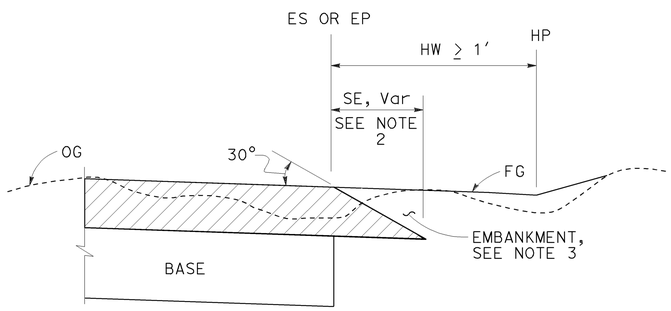

CASE M
Safety Edge - Cut Section, HW ≥ 1′

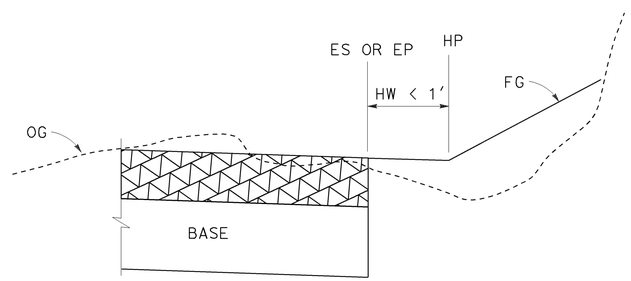

CASE N
Vertical Edge - Cut Section, HW < 1′

CUT SECTION

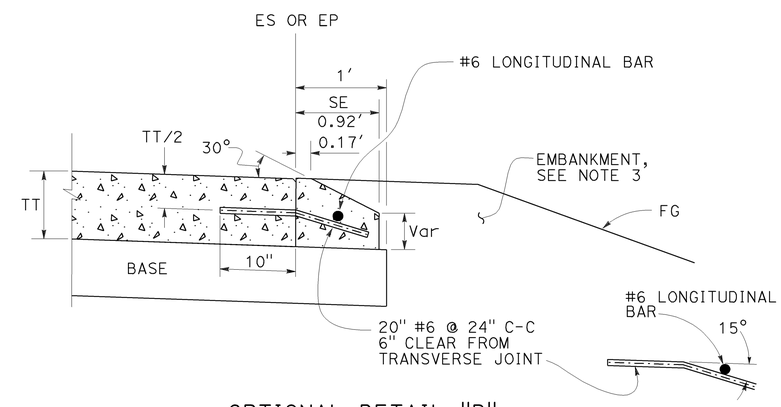

OPTIONAL DETAIL "B"
For concrete pavement
See Note 4

NOTES:

1. For limits of safety edge and vertical edge treatments, see Revised Standard Plan RSP P74
2. Details shown for HMA pavement thickness less than 0.43′. See Detail "B" for HMA pavement thickness more than 0.43′ or concrete pavement.
3. For locations and limits of embankment see project plans.
4. Safety edge transverse joint must match pavement transverse joint. End of #6 longitudinal bar must be 2" ±½" clear from transverse joint.
5. Safety edge is not needed in the area of MBGR, barrier, right turn lane and acceleration lane. See Revised Standard Plan RSP P74.

STATE OF CALIFORNIA
DEPARTMENT OF TRANSPORTATION

PAVEMENT EDGE TREATMENTS-NEW CONSTRUCTION

NO SCALE

RSP P76 DATED JANUARY 20, 2012 SUPPLEMENTS THE STANDARD PLANS BOOK DATED 2010.

REVISED STANDARD PLAN RSP P76

2010 REVISED STANDARD PLAN RSP P76

01-09-12

Dist	COUNTY	ROUTE	POST MILES TOTAL PROJECT	SHEET No.	TOTAL SHEETS
10	SJ	26	18.5/19.0	42	42

REGISTERED CIVIL ENGINEER

April 19, 2013
PLANS APPROVAL DATE

REGISTERED PROFESSIONAL ENGINEER Gurinderpal Bhullar No. C48815 Exp. 9-30-14 CIVIL STATE OF CALIFORNIA

THE STATE OF CALIFORNIA OR ITS OFFICERS OR AGENTS SHALL NOT BE RESPONSIBLE FOR THE ACCURACY OR COMPLETENESS OF SCANNED COPIES OF THIS PLAN SHEET.

TO ACCOMPANY PLANS DATED 5/13/13

2010 REVISED STANDARD PLAN RSP T13

NOTES:

See Revised Standard Plan RSP T9 for tables.

Use cone spacing X for taper segment, Y for tangent segment or Z for conflict situations, as approriate, per Table 1, unless X, Y, or Z cone spacing is shown on this sheet.

Unless otherwise specified in the special provisions, all temporary warning signs shall have black legend on fluorescent orange background.

California codes are designated by (CA). Otherwise, Federal (MUTCD) codes are shown.

TYPICAL LANE CLOSURE WITH REVERSIBLE CONTROL

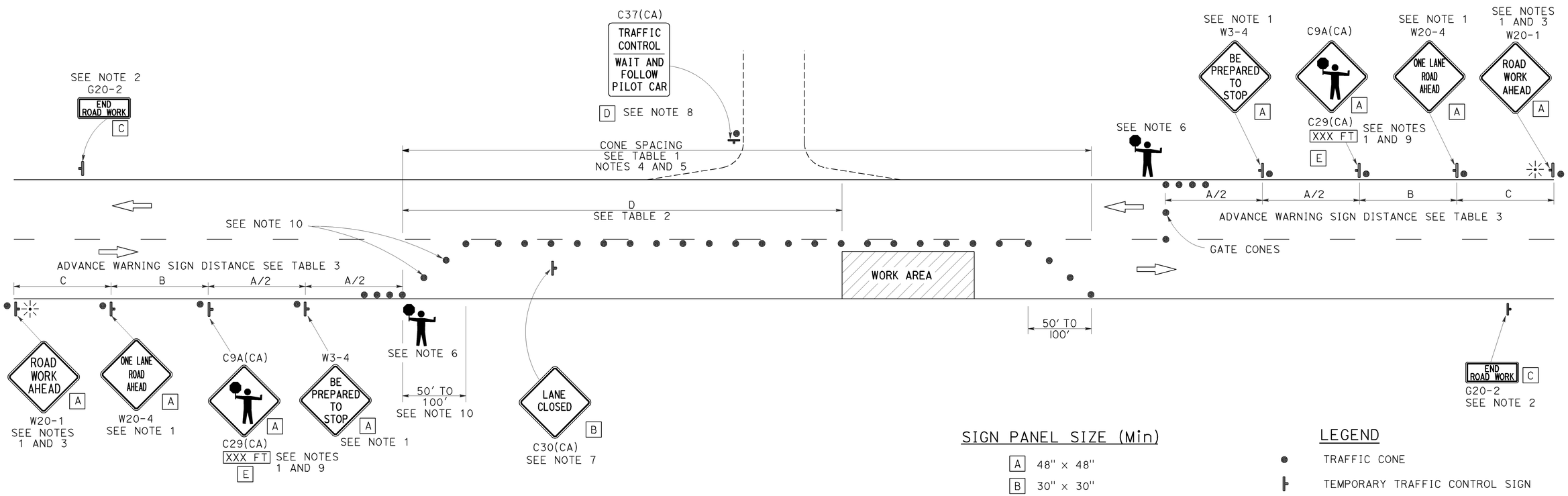

SIGN PANEL SIZE (Min)

A	48" × 48"
B	30" × 30"
C	36" × 18"
D	36" × 42"
E	20" × 7"

LEGEND

- TRAFFIC CONE
- TEMPORARY TRAFFIC CONTROL SIGN
- PORTABLE FLASHING BEACON
- FLAGGER

NOTES:

1. Each advance warning sign in each direction of travel shall be equipped with at least two flags for daytime closure. Each flag shall be at least 16" x 16" in size and shall be orange or fluorescent red-orange in color. Flashing beacons shall be placed at the locations indicated for lane closure during hours of darkness.
2. A G20-2 "END ROAD WORK" sign, as appropriate, shall be placed at the end of the lane control unless the end of work area is obvious, or ends within a larger project's limits.
3. If the W20-1 sign would follow within 2000' of a stationary W20-1 or G20-1 "ROAD WORK NEXT _____ MILES", use a W20-4 sign for the first advance warning sign.
4. All cones used for lane closures during the hours of darkness shall be fitted with retroreflective bands (or sleeves) as specified in the specifications.
5. Portable delineators, placed at one-half the spacing indicated for traffic cones, may be used instead of cones for daytime closures only.
6. Additional advance flaggers may be required. Flagger should stand in a conspicuous place, be visible to approaching traffic as well as approaching vehicles after the first vehicle has stopped. During the hours of darkness, the flagging-station and flagger shall be illuminated and clearly visible to approaching traffic. The illumination footprint of the lighting on the ground shall be at least 20' in diameter. Place a minimum of four cones at 50' intervals in advance of flagger station as shown.
7. Place C30(CA) "LANE CLOSED" sign at 500' to 1000' intervals throughout extended work areas. They are optional if the work area is visible from the flagger station.
8. When a pilot car is used, place a C37(CA) "TRAFFIC CONTROL-WAIT AND FOLLOW PILOT CAR" sign with black legend on white background at all intersections, driveways and alleys without a flagger within traffic control area. Signs shall be clean and visible at all times. Where traffic can not be effectively self-regulated, at least one flagger shall be used at each intersection within traffic control area.
9. An optional C29(CA) sign may be placed below the C9A(CA) sign.
10. Either traffic cones or barricades shall be placed on the taper. Barricades shall be Type I, II, or III.

STATE OF CALIFORNIA
DEPARTMENT OF TRANSPORTATION

TRAFFIC CONTROL SYSTEM FOR LANE CLOSURE ON TWO LANE CONVENTIONAL HIGHWAYS

NO SCALE

RSP T13 DATED APRIL 19, 2013 SUPERSEDES STANDARD PLAN T13 DATED MAY 20, 2011 - PAGE 241 OF THE STANDARD PLANS BOOK DATED 2010.

REVISED STANDARD PLAN RSP T13