DIST	COUNTY	ROUTE	POST MILES TOTAL PROJECT	SHEET No	TOTAL SHEETS
10	SJ	4,5	Var	401	486

REGISTERED CIVIL ENGINEER 11/27/12 DATE

7-22-13
PLANS APPROVAL DATE

REGISTERED PROFESSIONAL ENGINEER SIEW W. CHEE No. C41906 Exp. 03/31/14 CIVIL STATE OF CALIFORNIA

The State of California or its officers or agents shall not be responsible for the accuracy or completeness of electronic copies of this plan sheet.

SAN JOAQUIN COUNCIL OF GOVERNMENTS
555 E. WEBER AVENUE
STOCKTON, CA 95202

T. Y. LIN INTERNATIONAL
CONSULTING ENGINEERS, INC.
TWO HARRISON STREET, SUITE 500
SAN FRANCISCO, CA 94105

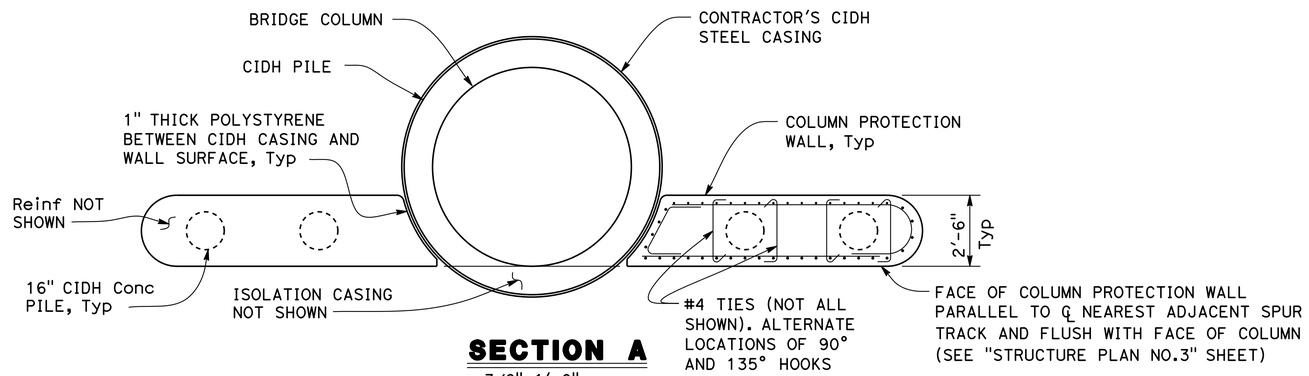

SECTION A
3/8"=1'-0"

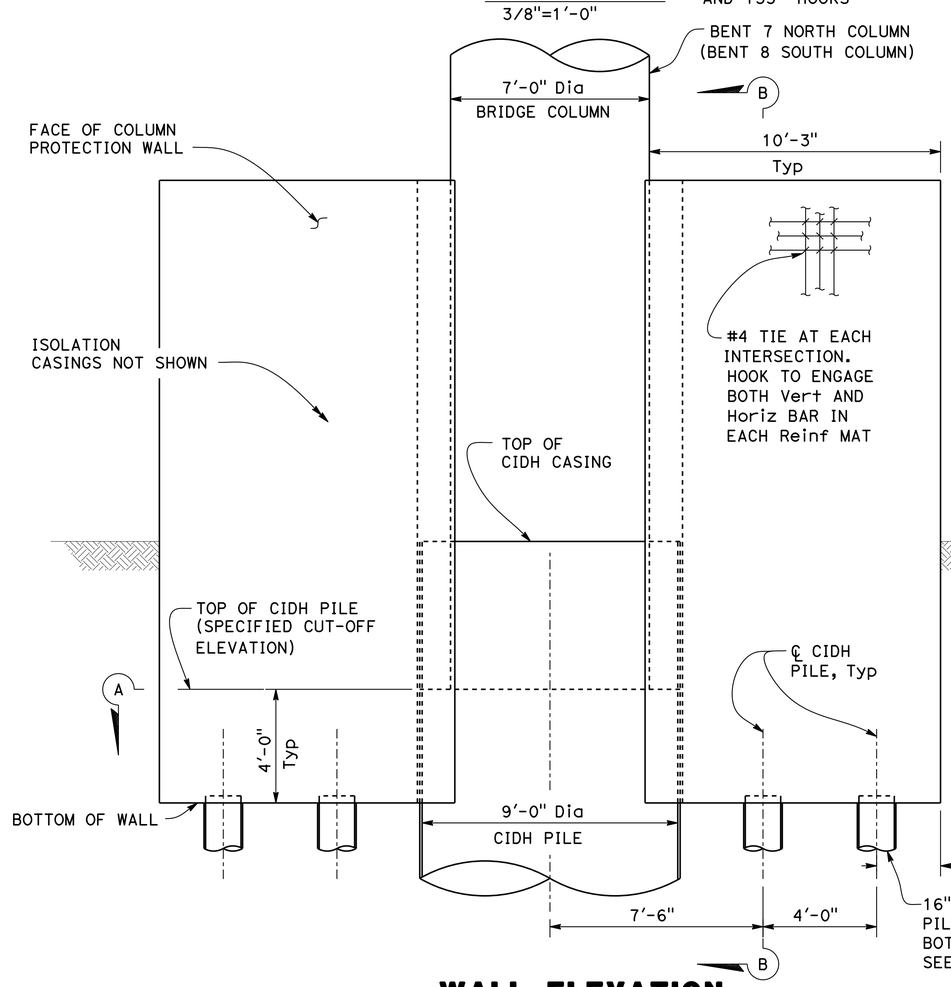

WALL ELEVATION
3/8"=1'-0"

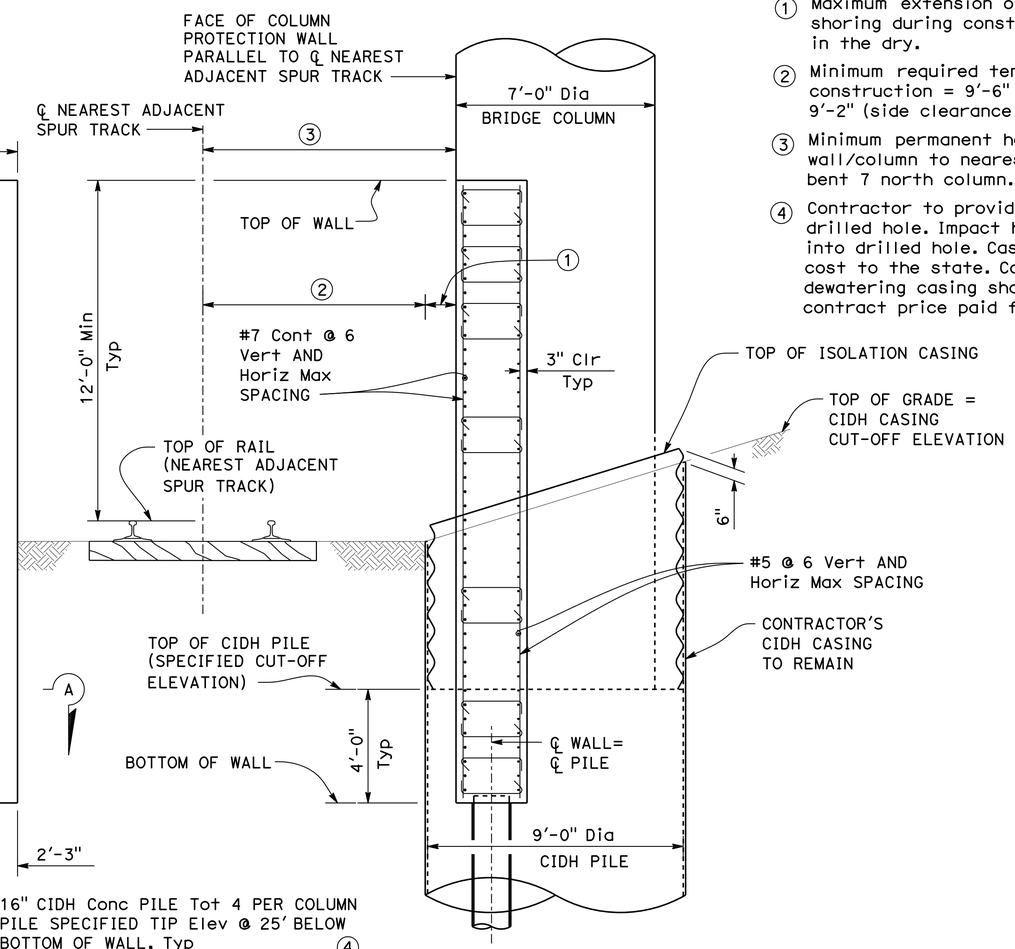

SECTION B
3/8"=1'-0"

1. Maximum extension of contractor's falsework and excavation shoring during construction. Wall construction shall be in the dry.
2. Minimum required temporary horizontal side clearance during construction = 9'-6" (side clearance above top of rail); 9'-2" (side clearance below top of rail)
3. Minimum permanent horizontal side clearance from face of wall/column to nearest ℄ adjacent spur track = 10'-3 5/16" @ bent 7 north column. See "STRUCTURAL PLAN No. 3" sheet.
4. Contractor to provide continuous steel casing to support CIDH drilled hole. Impact hammer shall not be used to install casing into drilled hole. Casing to remain in place at no additional cost to the state. Cost of sealing bottom of drilled hole and dewatering casing shall be considered as included in the contract price paid for 16" CIDH concrete pile.

NOTE:
THE CONTRACTOR SHALL VERIFY ALL CONTROLLING FIELD DIMENSIONS BEFORE ORDERING OR FABRICATING ANY MATERIAL

COLUMN PROTECTION WALL AT BENT 7 NORTH & BENT 8 SOUTH COLUMNS

Reza Erfanian
DESIGN OVERSIGHT Reza Erfanian
12/19/12
SIGN OFF DATE

	BY	CHECKED
DESIGN	M. LEWIS	C. HARRINGTON
DETAILS	T. KOONS	C. HARRINGTON
QUANTITIES	M. LEWIS	C. HARRINGTON

PREPARED FOR THE STATE OF CALIFORNIA DEPARTMENT OF TRANSPORTATION

S. CHEE
PROJECT ENGINEER

BRIDGE NO. 29-0350
POST MILES T14.83

SR4 CROSSTOWN VIADUCT
BENT 7 & 8 RR COLUMN WALL DETAILS

DESIGN DETAIL SHEET (ENGLISH) (REV.7/16/10)

ORIGINAL SCALE IN INCHES FOR REDUCED PLANS 0 1 2 3

UNIT: 1455
PROJECT NUMBER & PHASE: 10000002291 CONTRACT NO.: 10-0S1101

DISREGARD PRINTS BEARING EARLIER REVISION DATES → 8/24/11 8/08/12 9/04/12 11/27/12

SHEET 61 OF 111

FILE => 29-0350-h-brr.dgn

USERNAME => s123631 DATE PLOTTED => 23-JUL-2013 TIME PLOTTED => 10:51

DIST	COUNTY	ROUTE	POST MILES TOTAL PROJECT	SHEET No	TOTAL SHEETS
10	SJ	4,5	Var	402	486

REGISTERED CIVIL ENGINEER 11/27/12 DATE

7-22-13
PLANS APPROVAL DATE

REGISTERED PROFESSIONAL ENGINEER KIANOUSH HARIRSAZ No. C39591 Exp. 12/31/13 CIVIL STATE OF CALIFORNIA

The State of California or its officers or agents shall not be responsible for the accuracy or completeness of electronic copies of this plan sheet.

SAN JOAQUIN COUNCIL OF GOVERNMENTS
555 E. WEBER AVENUE
STOCKTON, CA 95202

RAJAPPAN & MEYER
CONSULTING ENGINEERS, INC.
1038 LEIGH AVE, SUITE 100
SAN JOSE, CA 95126

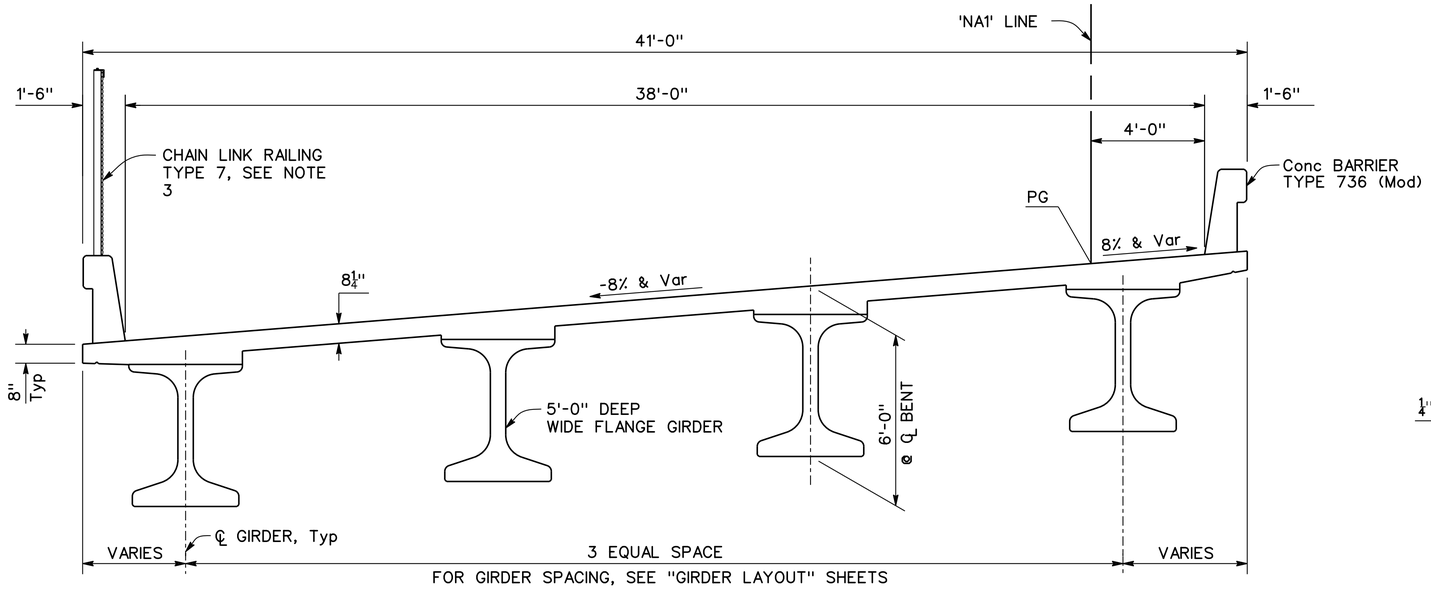

ABUTMENT 1W THRU BENT 6

TYPICAL SECTION

3/8" = 1'-0"

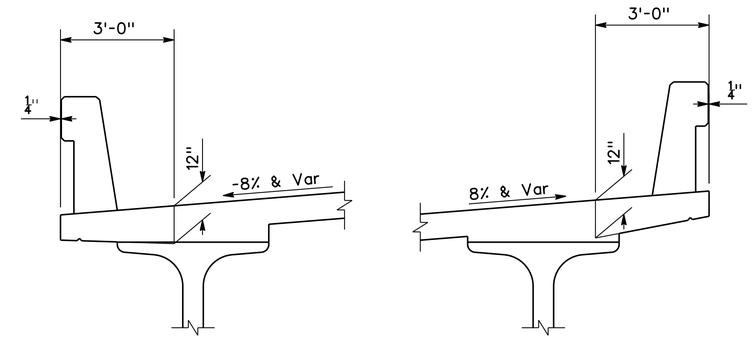

DECK OVERHANG CONFIGURATION

1/2" = 1'-0"

NOTES:

1. Lap splices equal to two times the standard splice length.
2. This reinforcement shall be bundled with each alternating top transverse bar in overhang.
3. For limit of Chain Link Railing Type 7, see "STRUCTURE PLAN No. 3" sheet.

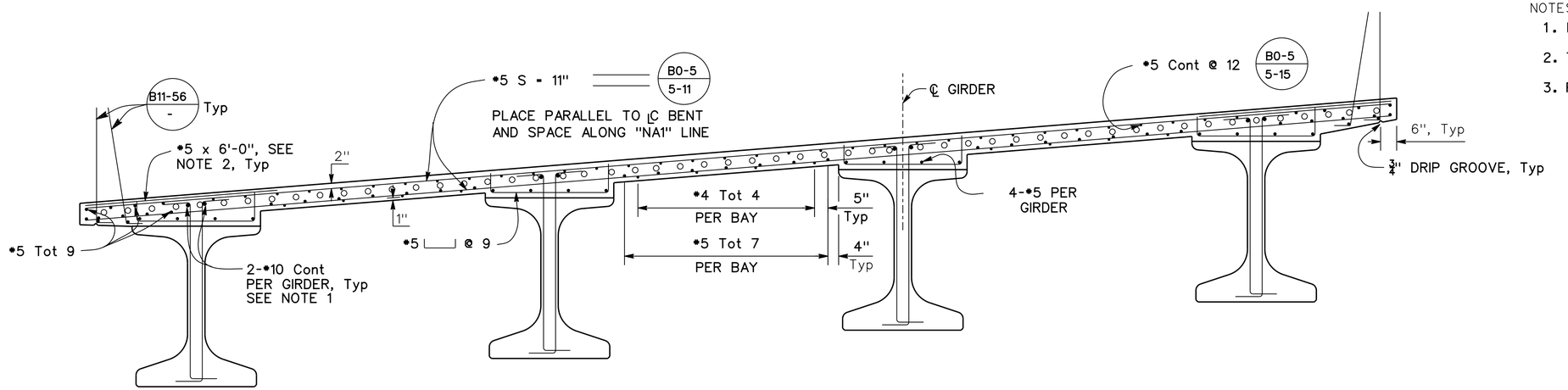

○ Indicates additional reinforcement, see "DECK REINFORCEMENT" sheet

TYPICAL SECTION

B0-5 / 5-11 B11-56 / -

1/2" = 1'-0"

NOTE:
THE CONTRACTOR SHALL VERIFY ALL CONTROLLING FIELD DIMENSIONS BEFORE ORDERING OR FABRICATING ANY MATERIAL

Reza Erfanian
DESIGN OVERSIGHT Reza Erfanian
12/19/12
SIGN OFF DATE

	BY	CHECKED
DESIGN	P. SHINN	N. VO / S. SHI
DETAILS	P. SHINN	N. VO / S. SHI
QUANTITIES	S. DESALEGN	M. PHILIPS

PREPARED FOR THE STATE OF CALIFORNIA DEPARTMENT OF TRANSPORTATION

P. SHINN
PROJECT ENGINEER

BRIDGE NO. 29-0350
POST MILES T14.83

SR4 CROSSTOWN VIADUCT

TYPICAL SECTION No. 1

DESIGN DETAIL SHEET (ENGLISH) (REV.7/16/10)

ORIGINAL SCALE IN INCHES FOR REDUCED PLANS 0 1 2 3

UNIT: 1455
PROJECT NUMBER & PHASE: 10000002291 CONTRACT NO.: 10-0S1101

DISREGARD PRINTS BEARING EARLIER REVISION DATES

REVISION DATES 8/30/11 6/08/12 9/04/12 11/27/12

SHEET 62 OF 111

FILE => 29-0350-k-ts01.dgn

USERNAME => s123631 DATE PLOTTED => 23-JUL-2013 TIME PLOTTED => 10:51

DIST	COUNTY	ROUTE	POST MILES TOTAL PROJECT	SHEET No	TOTAL SHEETS
10	SJ	4,5	Var	403	486

REGISTERED CIVIL ENGINEER — DATE 11/27/12

7-22-13
PLANS APPROVAL DATE

REGISTERED PROFESSIONAL ENGINEER — KIANOUSH HARIRSAZ — No. C39591 — Exp. 12/31/13 — CIVIL — STATE OF CALIFORNIA

The State of California or its officers or agents shall not be responsible for the accuracy or completeness of electronic copies of this plan sheet.

SAN JOAQUIN COUNCIL OF GOVERNMENTS
555 E. WEBER AVENUE
STOCKTON, CA 95202

RAJAPPAN & MEYER
CONSULTING ENGINEERS, INC.
1038 LEIGH AVE, SUITE 100
SAN JOSE, CA 95126

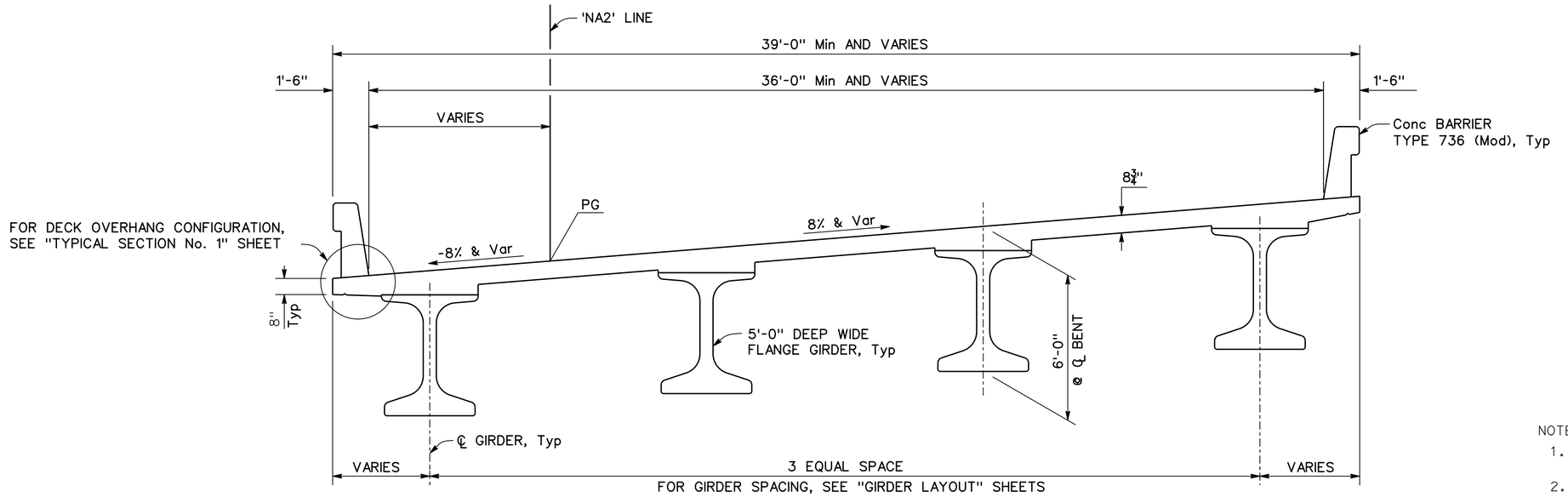

ABUTMENT 1E THRU BENT 6

TYPICAL SECTION

3/8" = 1'-0"

NOTES:

1. Lap splices equal to two times the standard splice length.
2. This reinforcement shall be bundled with each alternating top transverse bar in overhang.

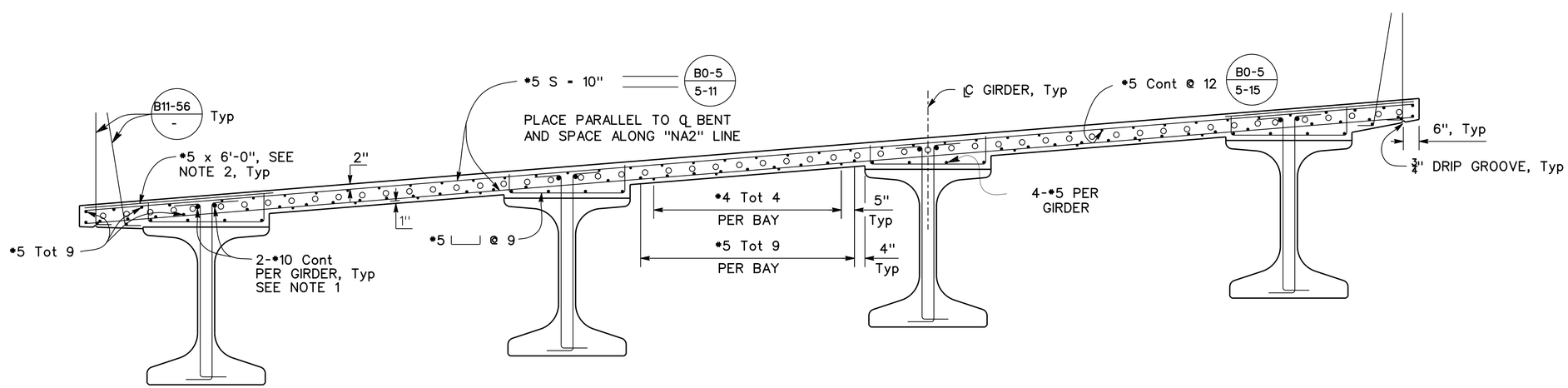

○ Indicates additional reinforcement, see "DECK REINFORCEMENT" sheet

TYPICAL SECTION B0-5 / 5-11 B11-56 / - -

1/2" = 1'-0"

NOTE:
THE CONTRACTOR SHALL VERIFY ALL CONTROLLING FIELD DIMENSIONS BEFORE ORDERING OR FABRICATING ANY MATERIAL

Reza Erfanian
DESIGN OVERSIGHT — Reza Erfanian
12/19/12
SIGN OFF DATE

	BY	CHECKED
DESIGN	P. SHINN	N. SHINN S. SHI
DETAILS	P. SHINN	N. SHINN S. SHI
QUANTITIES	S. DESALEGN	M. PHILIPS

PREPARED FOR THE STATE OF CALIFORNIA DEPARTMENT OF TRANSPORTATION

P. SHINN
PROJECT ENGINEER

BRIDGE NO. 29-0350
POST MILES T14.83

SR4 CROSSTOWN VIADUCT
TYPICAL SECTION No. 2

DESIGN DETAIL SHEET (ENGLISH) (REV.7/16/10)

ORIGINAL SCALE IN INCHES FOR REDUCED PLANS 0 1 2 3

UNIT: 1455
PROJECT NUMBER & PHASE: 10000002291 CONTRACT NO.: 10-0S1101

DISREGARD PRINTS BEARING EARLIER REVISION DATES

REVISION DATES 8/18/11 6/08/12 9/04/12 11/27/12

SHEET 63 OF 111

FILE => 29-0350-k-ts02.dgn

USERNAME => s123631 DATE PLOTTED => 23-JUL-2013 TIME PLOTTED => 10:51

DIST	COUNTY	ROUTE	POST MILES TOTAL PROJECT	SHEET No	TOTAL SHEETS
10	SJ	4,5	Var	404	486

REGISTERED CIVIL ENGINEER — DATE 11/27/12

7-22-13
PLANS APPROVAL DATE

REGISTERED PROFESSIONAL ENGINEER — SIEW W. CHEE — No. C41906 — Exp. 03/31/31 — CIVIL — STATE OF CALIFORNIA

The State of California or its officers or agents shall not be responsible for the accuracy or completeness of electronic copies of this plan sheet.

SAN JOAQUIN COUNCIL OF GOVERNMENTS
555 E. WEBER AVENUE
STOCKTON, CA 95202

T. Y. LIN INTERNATIONAL
CONSULTING ENGINEERS, INC.
TWO HARRISON STREET, SUITE 500
SAN FRANCISCO, CA 94105

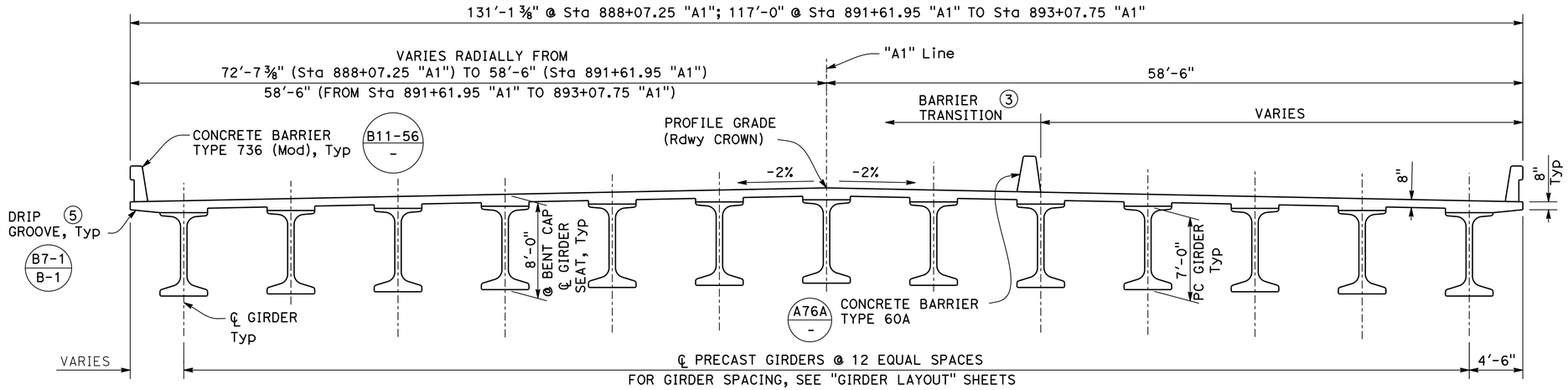

TYPICAL SECTION BENT 6 THRU 9

B0-5 - | B11-56 - | A76A - | B7-1 -

3/16"=1'-0"

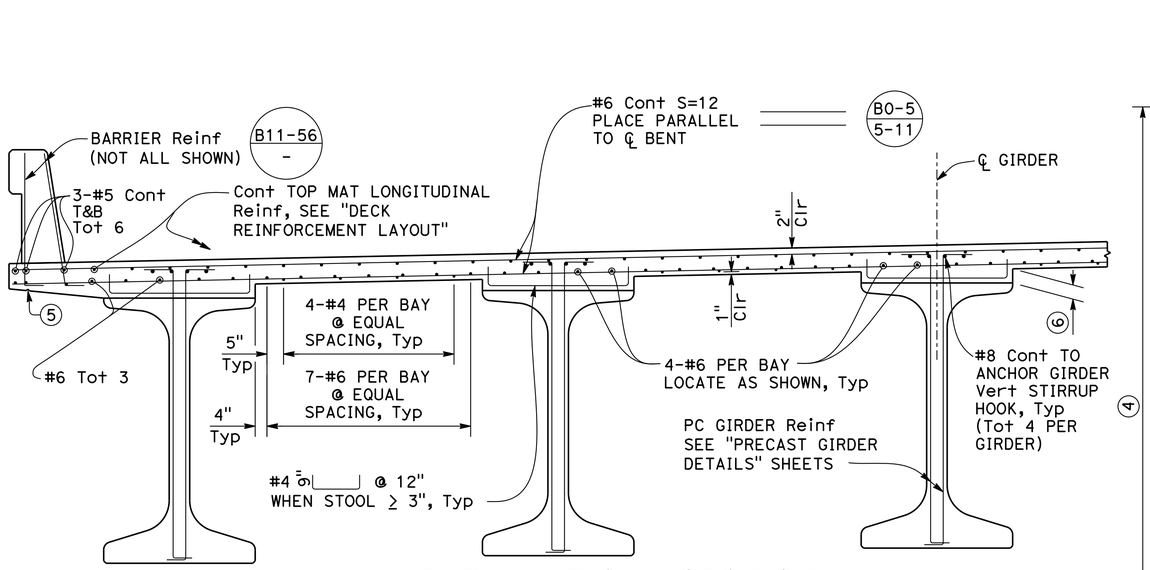

PART TYPICAL SECTION
DECK REINFORCEMENT DETAILS

1/2"=1'-0"

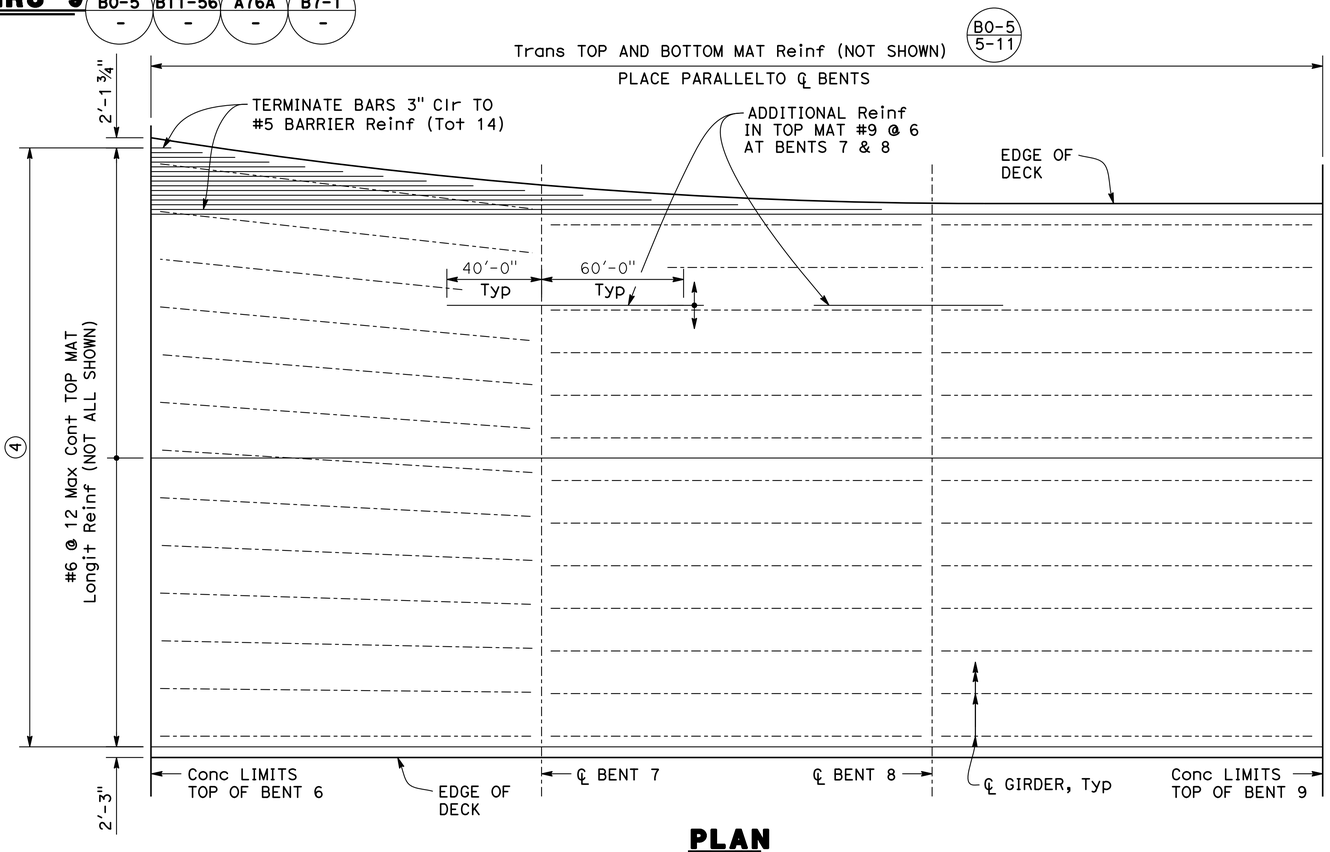

PLAN
DECK REINFORCEMENT LAYOUT (1)(2)

NO SCALE

(1) Not all deck Reinf shown

(2) See "PART TYPICAL SECTION" for Reinf not shown

(3) Location of barrier type 60A shown schematic. For details, see "STRUCTURE PLAN No. 3" sheet

(4) Top mat Longit Reinf placed normal to C_L Bent

(5) Stop drip groove 6" Clr from face of end diaphragm

(6) Stool/fillet height will vary depending on time-dependent upward camber of girder after shop fabrication but prior to casting deck concrete on girders. Design of frame No. 3 has incorporated camber of up to 4" at ℄ girder span. Contractor shall account for time-dependent camber when scheduling girder fabrication and deck pour during construction

NOTE:
THE CONTRACTOR SHALL VERIFY ALL CONTROLLING FIELD DIMENSIONS BEFORE ORDERING OR FABRICATING ANY MATERIAL

GEOTECHNICAL PROFESSIONAL — APPROVAL DATE

Reza Erfanian
DESIGN OVERSIGHT — Reza Erfanian
12/19/12
SIGN OFF DATE

	BY	CHECKED
DESIGN	P. SHINN	C. HARRINGTON
DETAILS	T. KOONS	C. HARRINGTON
QUANTITIES	M. LEWIS	C. HARRINGTON

PREPARED FOR THE STATE OF CALIFORNIA DEPARTMENT OF TRANSPORTATION

S. CHEE
PROJECT ENGINEER

BRIDGE NO. 29-0350
POST MILES T14.83

SR4 CROSSTOWN VIADUCT
TYPICAL SECTION No. 3

DESIGN DETAIL SHEET (ENGLISH) (REV.7/16/10)

ORIGINAL SCALE IN INCHES FOR REDUCED PLANS 0 1 2 3

UNIT: 06241
PROJECT NUMBER & PHASE: 10000002291 CONTRACT NO.: 10-0S1101

DISREGARD PRINTS BEARING EARLIER REVISION DATES

REVISION DATES 8/26/11 6/08/12 9/04/12 11/27/12 — SHEET 64 OF 111

FILE => 29-0350-K-ts03.dgn

USERNAME => s123631 DATE PLOTTED => 23-JUL-2013 TIME PLOTTED => 10:51

DIST	COUNTY	ROUTE	POST MILES TOTAL PROJECT	SHEET No	TOTAL SHEETS
10	SJ	4,5	Var	405	486

REGISTERED CIVIL ENGINEER — DATE 11/27/12

7-22-13
PLANS APPROVAL DATE

REGISTERED PROFESSIONAL ENGINEER — KIANOUSH HARIRSAZ — No. C39591 — Exp. 12/31/13 — CIVIL — STATE OF CALIFORNIA

The State of California or its officers or agents shall not be responsible for the accuracy or completeness of electronic copies of this plan sheet.

SAN JOAQUIN COUNCIL OF GOVERNMENTS
555 E. WEBER AVENUE
STOCKTON, CA 95202

RAJAPPAN & MEYER
CONSULTING ENGINEERS, INC.
1038 LEIGH AVE, SUITE 100
SAN JOSE, CA 95126

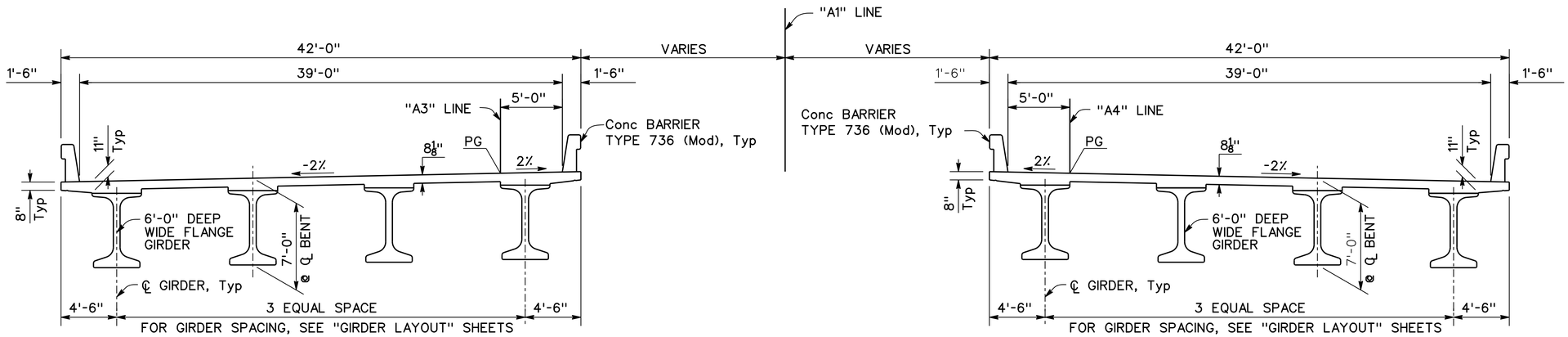

BENT 9 THRU ABUTMENT 22

TYPICAL SECTION

1" = 5'

NOTES:

1. Lap splices equal to two times the standard splice length.
2. This reinforcement shall be bundled with each alternating top transverse bar in overhang.

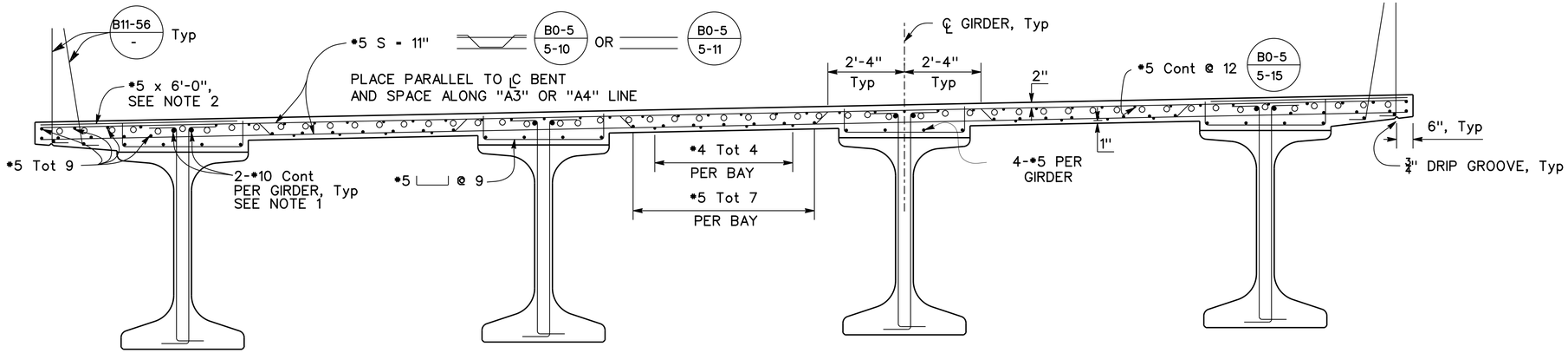

○ Indicates additional reinforcement, see "DECK REINFORCEMENT" sheet

PARTIAL TYPICAL SECTION

B0-5 / 5-11 — B11-56 / -

1/2" = 1'-0"

NOTE:
THE CONTRACTOR SHALL VERIFY ALL CONTROLLING FIELD DIMENSIONS BEFORE ORDERING OR FABRICATING ANY MATERIAL

DESIGN OVERSIGHT — Reza Erfanian
12/19/12
SIGN OFF DATE

	BY	CHECKED
DESIGN	P. SHINN	N. VO / S. SHI
DETAILS	P. SHINN	N. VO / S. SHI
QUANTITIES	S. DESALEGN	M. PHILIPS

PREPARED FOR THE STATE OF CALIFORNIA DEPARTMENT OF TRANSPORTATION

P. SHINN
PROJECT ENGINEER

BRIDGE NO. 29-0350
POST MILES T14.83

SR4 CROSSTOWN VIADUCT
TYPICAL SECTION No. 4

DESIGN DETAIL SHEET (ENGLISH) (REV.7/16/10)

ORIGINAL SCALE IN INCHES FOR REDUCED PLANS 0 1 2 3

UNIT: 1455
PROJECT NUMBER & PHASE: 10000002291 CONTRACT NO.: 10-0S1101

DISREGARD PRINTS BEARING EARLIER REVISION DATES

REVISION DATES: 8/18/11 6/08/12 9/04/12 11/27/12

SHEET 65 OF 111

FILE => 29-0350-k-ts04.dgn

USERNAME => s123631 DATE PLOTTED => 23-JUL-2013 TIME PLOTTED => 10:52

DIST	COUNTY	ROUTE	POST MILES TOTAL PROJECT	SHEET No	TOTAL SHEETS
10	SJ	4,5	Var	406	486

REGISTERED CIVIL ENGINEER — DATE 11/27/12

7-22-13
PLANS APPROVAL DATE

REGISTERED PROFESSIONAL ENGINEER — KIANOUSH HARIRSAZ — No. C39591 — Exp. 12/31/13 — CIVIL — STATE OF CALIFORNIA

The State of California or its officers or agents shall not be responsible for the accuracy or completeness of electronic copies of this plan sheet.

SAN JOAQUIN COUNCIL OF GOVERNMENTS
555 E. WEBER AVENUE
STOCKTON, CA 95202

RAJAPPAN & MEYER
CONSULTING ENGINEERS, INC.
1038 LEIGH AVE, SUITE 100
SAN JOSE, CA 95126

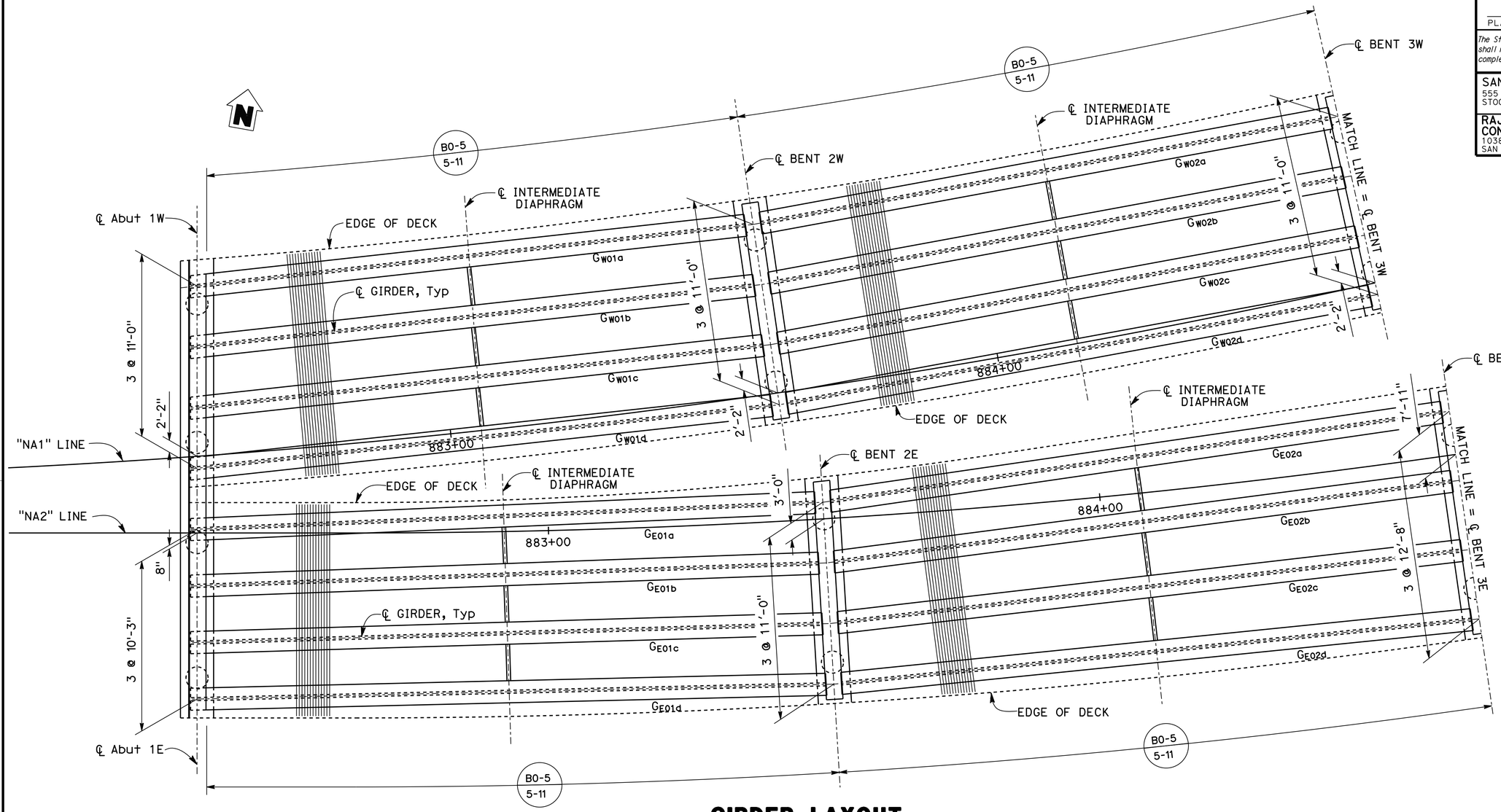

GIRDER LAYOUT

1" = 10'

NOTE:
THE CONTRACTOR SHALL VERIFY ALL CONTROLLING FIELD DIMENSIONS BEFORE ORDERING OR FABRICATING ANY MATERIAL

Reza Erfanian
DESIGN OVERSIGHT — Reza Erfanian
12/19/12
SIGN OFF DATE

	BY	CHECKED
DESIGN	P. SHINN	N. VO / S. SHI
DETAILS	P. SHINN	N. VO / S. SHI
QUANTITIES	S. DESALEGN	M. PHILIPS

PREPARED FOR THE STATE OF CALIFORNIA DEPARTMENT OF TRANSPORTATION

P. SHINN
PROJECT ENGINEER

BRIDGE NO. 29-0350
POST MILES T14.83

SR4 CROSSTOWN VIADUCT
GIRDER LAYOUT No. 1

DESIGN DETAIL SHEET (ENGLISH) (REV.7/16/10)

ORIGINAL SCALE IN INCHES FOR REDUCED PLANS 0 1 2 3

UNIT: 1455
PROJECT NUMBER & PHASE: 10000002291 CONTRACT NO.: 10-0S1101

DISREGARD PRINTS BEARING EARLIER REVISION DATES → 8/10/11 6/08/12 9/04/12 11/27/12

SHEET 66 OF 111

FILE => 29-0350-1-g_1o01.dgn

USERNAME => s123631 DATE PLOTTED => 23-JUL-2013 TIME PLOTTED => 10:52

DIST	COUNTY	ROUTE	POST MILES TOTAL PROJECT	SHEET No	TOTAL SHEETS
10	SJ	4,5	Var	407	486

REGISTERED CIVIL ENGINEER 11/27/12 DATE

7-22-13
PLANS APPROVAL DATE

REGISTERED PROFESSIONAL ENGINEER KIANOUSH HARIRSAZ No. C39591 Exp. 12/31/13 CIVIL STATE OF CALIFORNIA

The State of California or its officers or agents shall not be responsible for the accuracy or completeness of electronic copies of this plan sheet.

SAN JOAQUIN COUNCIL OF GOVERNMENTS
555 E. WEBER AVENUE
STOCKTON, CA 95202

RAJAPPAN & MEYER
CONSULTING ENGINEERS, INC.
1038 LEIGH AVE, SUITE 100
SAN JOSE, CA 95126

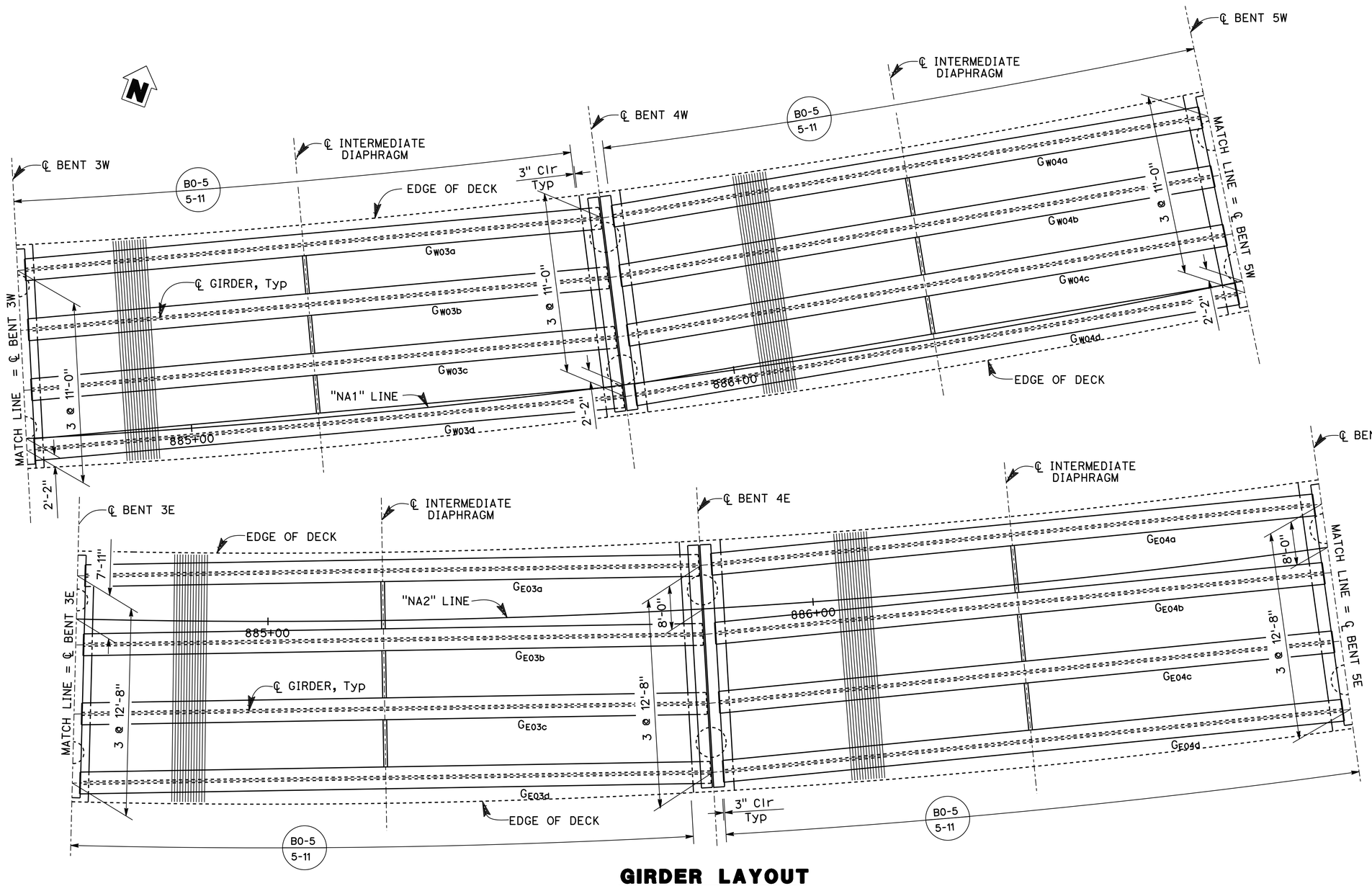

GIRDER LAYOUT

1" = 10'

NOTE:
THE CONTRACTOR SHALL VERIFY ALL CONTROLLING FIELD DIMENSIONS BEFORE ORDERING OR FABRICATING ANY MATERIAL

Reza Erfanian
DESIGN OVERSIGHT Reza Erfanian
12/19/12
SIGN OFF DATE

	BY	CHECKED
DESIGN	P. SHINN	N. VO / S. SHI
DETAILS	P. SHINN	N. VO / S. SHI
QUANTITIES	S. DESALEGN	M. PHILIPS

PREPARED FOR THE STATE OF CALIFORNIA DEPARTMENT OF TRANSPORTATION

P. SHINN
PROJECT ENGINEER

BRIDGE NO. 29-0350
POST MILES T14.83

SR4 CROSSTOWN VIADUCT
GIRDER LAYOUT No. 2

DESIGN DETAIL SHEET (ENGLISH) (REV.7/16/10)

ORIGINAL SCALE IN INCHES FOR REDUCED PLANS 0 1 2 3

UNIT: 1455
PROJECT NUMBER & PHASE: 10000002291 CONTRACT NO.: 10-0S1101

DISREGARD PRINTS BEARING EARLIER REVISION DATES → REVISION DATES 9/10/11 6/08/12 9/04/12 11/27/12

SHEET 67 OF 111

FILE => 29-0350-1-g_1o02.dgn

USERNAME => s123631 DATE PLOTTED => 23-JUL-2013 TIME PLOTTED => 10:52

DIST	COUNTY	ROUTE	POST MILES TOTAL PROJECT	SHEET No	TOTAL SHEETS
10	SJ	4,5	Var	408	486

REGISTERED CIVIL ENGINEER 11/27/12 DATE

7-22-13
PLANS APPROVAL DATE

REGISTERED PROFESSIONAL ENGINEER KIANOUSH HARIRSAZ No. C39591 Exp. 12/31/13 CIVIL STATE OF CALIFORNIA

The State of California or its officers or agents shall not be responsible for the accuracy or completeness of electronic copies of this plan sheet.

SAN JOAQUIN COUNCIL OF GOVERNMENTS
555 E. WEBER AVENUE
STOCKTON, CA 95202

RAJAPPAN & MEYER
CONSULTING ENGINEERS, INC.
1038 LEIGH AVE, SUITE 100
SAN JOSE, CA 95126

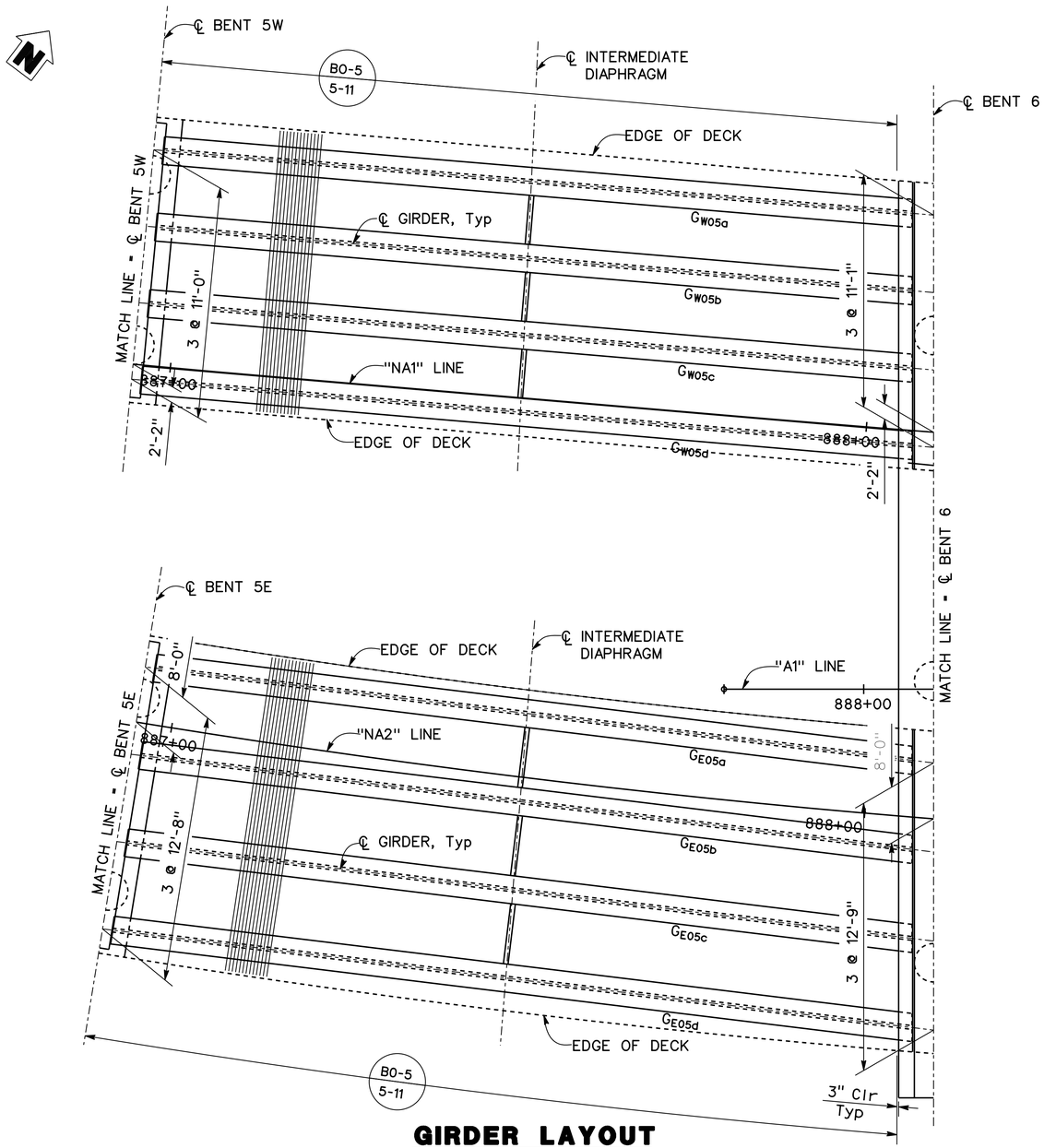

GIRDER LAYOUT

1" = 10'

NOTE:
THE CONTRACTOR SHALL VERIFY ALL CONTROLLING FIELD DIMENSIONS BEFORE ORDERING OR FABRICATING ANY MATERIAL

Reza Erfanian
DESIGN OVERSIGHT Reza Erfanian
12/19/12
SIGN OFF DATE

	BY	CHECKED
DESIGN	P. SHINN	N. VO / S. SHI
DETAILS	P. SHINN	N. VO / S. SHI
QUANTITIES	S. DESALEGN	M. PHILIPS

PREPARED FOR THE STATE OF CALIFORNIA DEPARTMENT OF TRANSPORTATION

P. SHINN
PROJECT ENGINEER

BRIDGE NO. 29-0350
POST MILES T14.83

SR4 CROSSTOWN VIADUCT
GIRDER LAYOUT No. 3

DESIGN DETAIL SHEET (ENGLISH) (REV.7/16/10)

ORIGINAL SCALE IN INCHES FOR REDUCED PLANS 0 1 2 3

UNIT: 1455
PROJECT NUMBER & PHASE: 10000002291 CONTRACT NO.: 10-0S1101

DISREGARD PRINTS BEARING EARLIER REVISION DATES → REVISION DATES 8/10/11 6/08/12 9/04/12 11/27/12

SHEET 68 OF 111

FILE => 29-0350-1-g_1o03.dgn

USERNAME => s123631 DATE PLOTTED => 23-JUL-2013 TIME PLOTTED => 10:52

DIST	COUNTY	ROUTE	POST MILES TOTAL PROJECT	SHEET No	TOTAL SHEETS
10	SJ	4,5	Var	409	486

REGISTERED CIVIL ENGINEER 11/27/12 DATE

7-22-13
PLANS APPROVAL DATE

REGISTERED PROFESSIONAL ENGINEER SIEW W. CHEE No. C41906 Exp. 03/31/14 CIVIL STATE OF CALIFORNIA

The State of California or its officers or agents shall not be responsible for the accuracy or completeness of electronic copies of this plan sheet.

SAN JOAQUIN COUNCIL OF GOVERNMENTS
555 E. WEBER AVENUE
STOCKTON, CA 95202

T. Y. LIN INTERNATIONAL
CONSULTING ENGINEERS, INC.
TWO HARRISON STREET, SUITE 500
SAN FRANCISCO, CA 94105

NOTES:

1. Dimension 'L' denotes furnished out-to-out dimension of precast girder measured along ℄ girder
2. ℄ Girder spacings are measured along ℄ girder seat at respective bent location shown

$G_{0__}$ Indicates girder designation, see "PRECAST GIRDER DETAILS" sheets

GIRDER ERECTION SEQUENCE :

On any given bent, girders located between columns shall be placed prior to erecting girders on overhang cantilever portions of bent cap

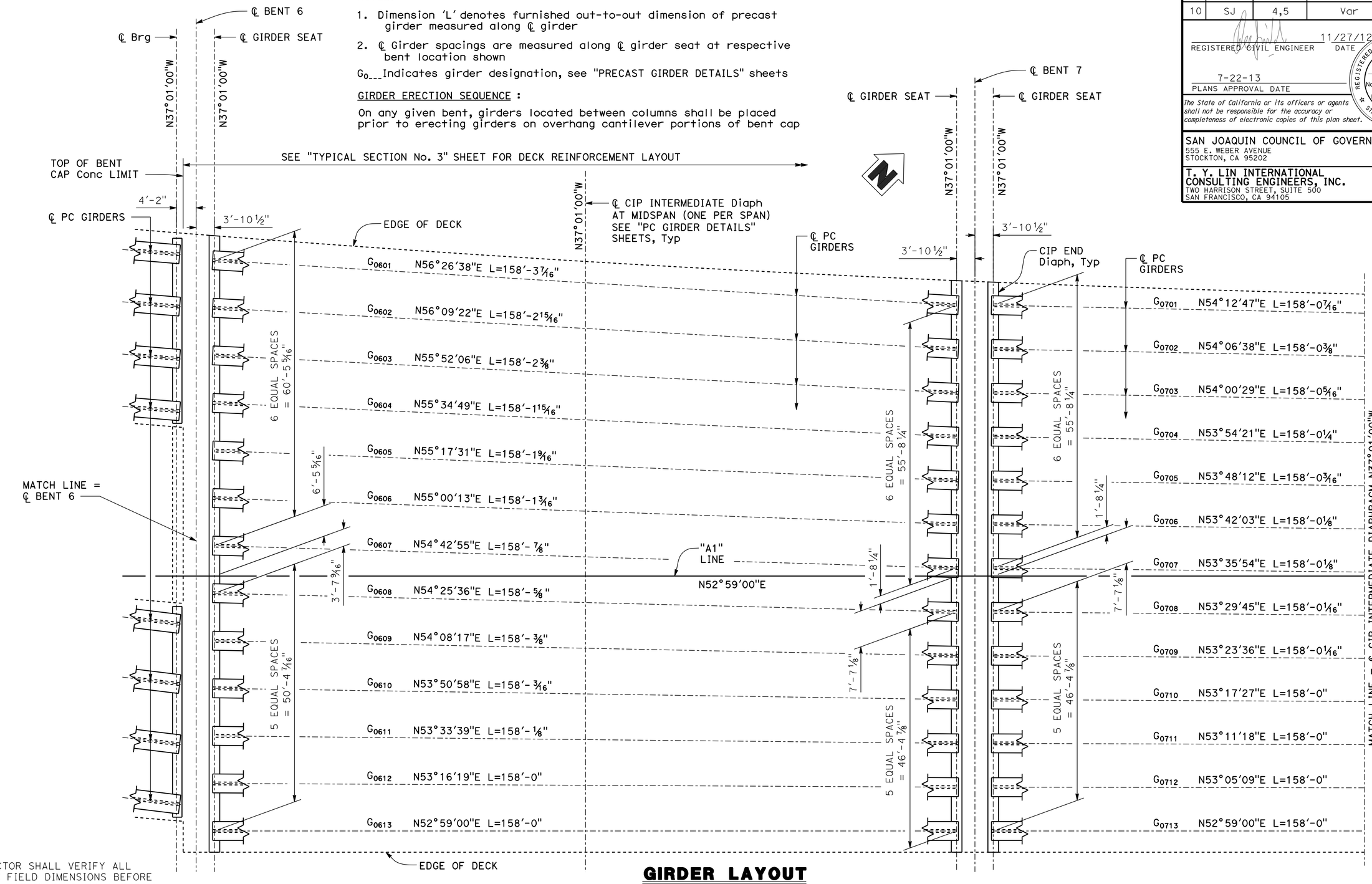

NOTE:
THE CONTRACTOR SHALL VERIFY ALL CONTROLLING FIELD DIMENSIONS BEFORE ORDERING OR FABRICATING ANY MATERIAL

GIRDER LAYOUT

SCALE: 1"=10'

Reza Erfanian
DESIGN OVERSIGHT Reza Erfanian
5-10-13
SIGN OFF DATE

	BY	CHECKED
DESIGN	M. LEWIS	C. HARRINGTON
DETAILS	T. KOONS	C. HARRINGTON
QUANTITIES	M. LEWIS	C. HARRINGTON

PREPARED FOR THE STATE OF CALIFORNIA DEPARTMENT OF TRANSPORTATION

S. CHEE
PROJECT ENGINEER

BRIDGE NO. 29-0350
POST MILES T14.83

SR4 CROSSTOWN VIADUCT
GIRDER LAYOUT No. 4

DESIGN DETAIL SHEET (ENGLISH) (REV.7/16/10)

ORIGINAL SCALE IN INCHES FOR REDUCED PLANS 0 1 2 3

UNIT: 1455
PROJECT NUMBER & PHASE: 10000002291 CONTRACT NO.: 10-0S1101

DISREGARD PRINTS BEARING EARLIER REVISION DATES → REVISION DATES 8/8/11 8/8/12 9/8/12 11/27/12

SHEET 69 OF 111

FILE => 29-0350-1-g_lo04.dgn

USERNAME => s123631 DATE PLOTTED => 23-JUL-2013 TIME PLOTTED => 10:52

DIST	COUNTY	ROUTE	POST MILES TOTAL PROJECT	SHEET No	TOTAL SHEETS
10	SJ	4,5	Var	410	486

REGISTERED CIVIL ENGINEER 11/27/12 DATE

7-22-13
PLANS APPROVAL DATE

REGISTERED PROFESSIONAL ENGINEER SIEW W. CHEE No. C41906 Exp. 03/31/14 CIVIL STATE OF CALIFORNIA

The State of California or its officers or agents shall not be responsible for the accuracy or completeness of electronic copies of this plan sheet.

SAN JOAQUIN COUNCIL OF GOVERNMENTS
555 E. WEBER AVENUE
STOCKTON, CA 95202

T. Y. LIN INTERNATIONAL
CONSULTING ENGINEERS, INC.
TWO HARRISON STREET, SUITE 500
SAN FRANCISCO, CA 94105

NOTES:

1. Dimension 'L' denotes furnished out-to-out dimension of precast girder measured along ℄ girder
2. ℄ Girder spacings are measured along ℄ girder seat at respective bent location shown

$G_{0___}$ Indicates girder designation, see "PRECAST GIRDER DETAILS" sheets

GIRDER ERECTION SEQUENCE :

On any given bent, girders located between columns shall be placed prior to erecting girders on overhang cantilever portions of bent cap

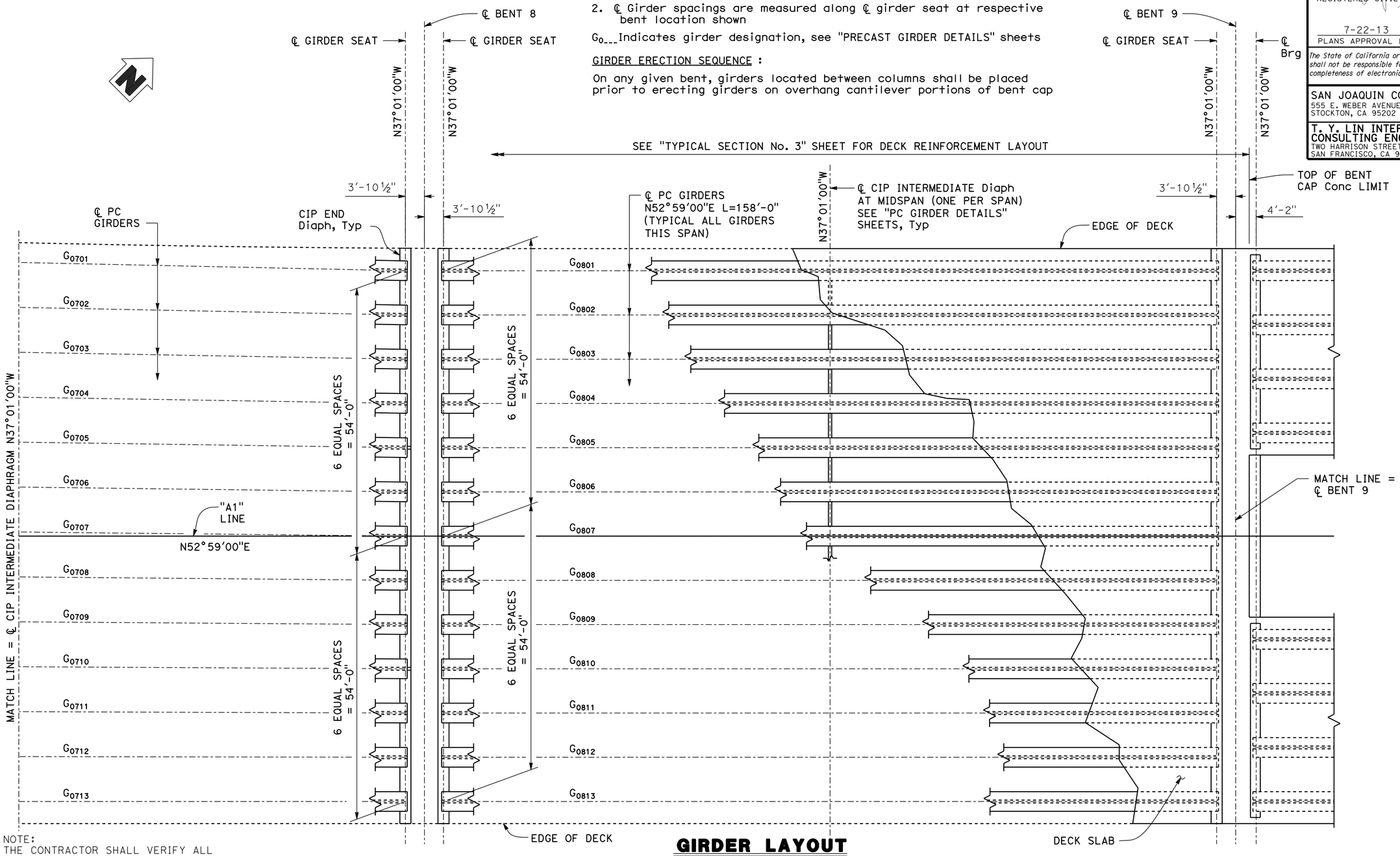

NOTE:
THE CONTRACTOR SHALL VERIFY ALL CONTROLLING FIELD DIMENSIONS BEFORE ORDERING OR FABRICATING ANY MATERIAL

GIRDER LAYOUT

SCALE: 1"=10'

DESIGN	BY M. LEWIS	CHECKED C. HARRINGTON	
DETAILS	BY T. KOONS	CHECKED C. HARRINGTON	
QUANTITIES	BY M. LEWIS	CHECKED C. HARRINGTON	

DESIGN OVERSIGHT Reza Erfanian
12/19/12
SIGN OFF DATE

PREPARED FOR THE STATE OF CALIFORNIA DEPARTMENT OF TRANSPORTATION

S. CHEE
PROJECT ENGINEER

BRIDGE NO. 29-0350
POST MILES T14.83

SR4 CROSSTOWN VIADUCT
GIRDER LAYOUT No. 5

DESIGN DETAIL SHEET (ENGLISH) (REV.7/16/10)

ORIGINAL SCALE IN INCHES FOR REDUCED PLANS 0 1 2 3

UNIT: 1455
PROJECT NUMBER & PHASE: 10000002291 CONTRACT NO.: 10-0S1101

DISREGARD PRINTS BEARING EARLIER REVISION DATES

REVISION DATES 8/16/11 6/08/12 9/04/12 11/27/12

SHEET 70 OF 111

FILE => 29-0350-1-g_1o05.dgn

USERNAME => s123631 DATE PLOTTED => 23-JUL-2013 TIME PLOTTED => 10:52

DIST	COUNTY	ROUTE	POST MILES TOTAL PROJECT	SHEET No	TOTAL SHEETS
10	SJ	4,5	Var	411	486

REGISTERED CIVIL ENGINEER 11/27/12 DATE

7-22-13
PLANS APPROVAL DATE

REGISTERED PROFESSIONAL ENGINEER KIANOUSH HARIRSAZ No. C39591 Exp. 12/31/13 CIVIL STATE OF CALIFORNIA

The State of California or its officers or agents shall not be responsible for the accuracy or completeness of electronic copies of this plan sheet.

SAN JOAQUIN COUNCIL OF GOVERNMENTS
555 E. WEBER AVENUE
STOCKTON, CA 95202

RAJAPPAN & MEYER
CONSULTING ENGINEERS, INC.
1038 LEIGH AVE, SUITE 100
SAN JOSE, CA 95126

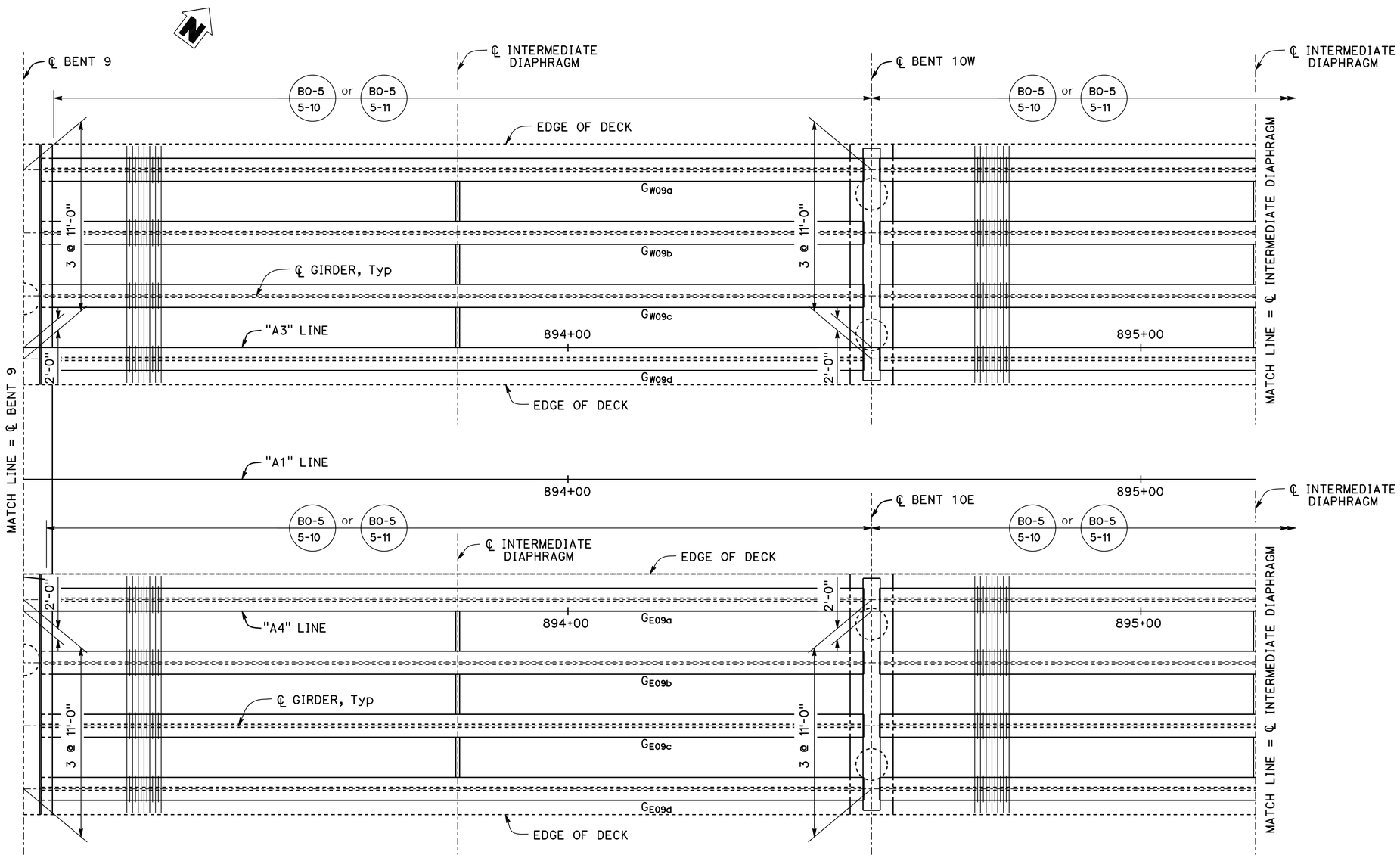

GIRDER LAYOUT

1" = 10'

NOTE:
THE CONTRACTOR SHALL VERIFY ALL CONTROLLING FIELD DIMENSIONS BEFORE ORDERING OR FABRICATING ANY MATERIAL

Reza Erfanian
DESIGN OVERSIGHT Reza Erfanian
12/19/12
SIGN OFF DATE

	BY	CHECKED
DESIGN	P. SHINN	N. SHINN S. SHI
DETAILS	P. SHINN	N. SHINN S. SHI
QUANTITIES	S. DESALEGN	M. PHILIPS

PREPARED FOR THE STATE OF CALIFORNIA DEPARTMENT OF TRANSPORTATION

P. SHINN
PROJECT ENGINEER

BRIDGE NO. 29-0350
POST MILES T14.83

SR4 CROSSTOWN VIADUCT
GIRDER LAYOUT No. 6

DESIGN DETAIL SHEET (ENGLISH) (REV.7/16/10)

ORIGINAL SCALE IN INCHES FOR REDUCED PLANS 0 1 2 3

UNIT: 1455
PROJECT NUMBER & PHASE: 10000002291 CONTRACT NO.: 10-0S1101

DISREGARD PRINTS BEARING EARLIER REVISION DATES → REVISION DATES 9/10/16 08/12/09 04/12/21/27/12

SHEET 71 OF 111

FILE => 29-0350-l-g_lo06.dgn

USERNAME => s128843 DATE PLOTTED => 23-JUL-2013 TIME PLOTTED => 10:03

DIST	COUNTY	ROUTE	POST MILES TOTAL PROJECT	SHEET No	TOTAL SHEETS
10	SJ	4,5	Var	412	486

K Haur
REGISTERED CIVIL ENGINEER 11/27/12 DATE

7-22-13
PLANS APPROVAL DATE

REGISTERED PROFESSIONAL ENGINEER KIANOUSH HARIRSAZ No. C39591 Exp. 12/31/13 CIVIL STATE OF CALIFORNIA

The State of California or its officers or agents shall not be responsible for the accuracy or completeness of electronic copies of this plan sheet.

SAN JOAQUIN COUNCIL OF GOVERNMENTS
555 E. WEBER AVENUE
STOCKTON, CA 95202

RAJAPPAN & MEYER
CONSULTING ENGINEERS, INC.
1038 LEIGH AVE, SUITE 100
SAN JOSE, CA 95126

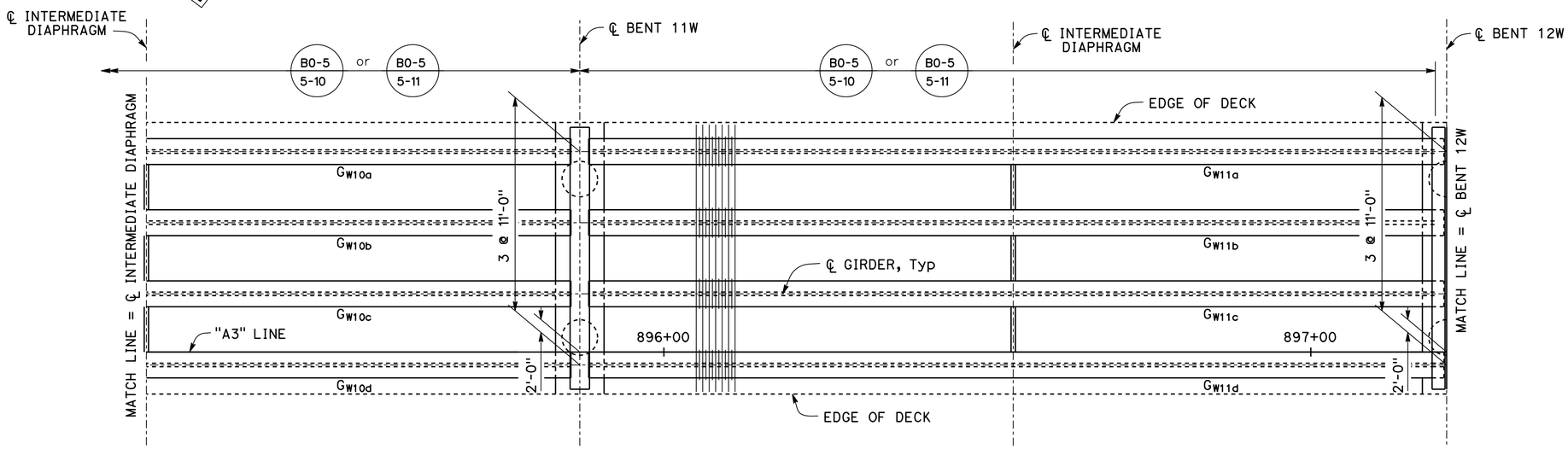

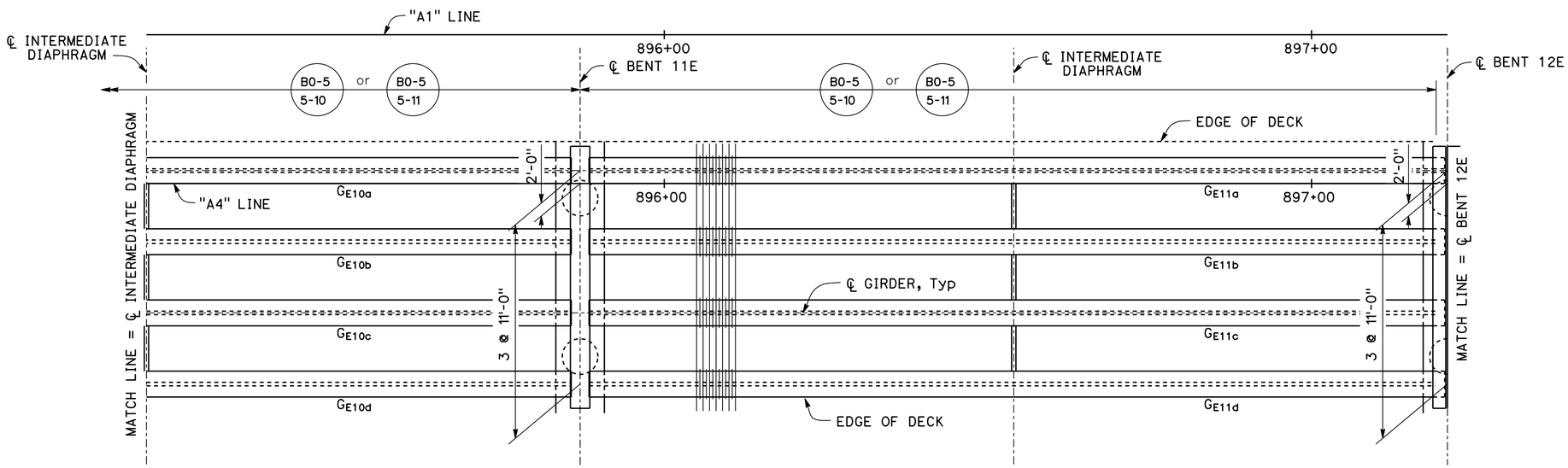

GIRDER LAYOUT

1" = 10'

NOTE:
THE CONTRACTOR SHALL VERIFY ALL CONTROLLING FIELD DIMENSIONS BEFORE ORDERING OR FABRICATING ANY MATERIAL

Reza Erfanian
DESIGN OVERSIGHT Reza Erfanian
12/19/12
SIGN OFF DATE

	BY	CHECKED
DESIGN	P. SHINN	N. VO / S. SHI
DETAILS	P. SHINN	N. VO / S. SHI
QUANTITIES	S. DESALEGN	M. PHILIPS

PREPARED FOR THE STATE OF CALIFORNIA DEPARTMENT OF TRANSPORTATION

P. SHINN
PROJECT ENGINEER

BRIDGE NO. 29-0350
POST MILES T14.83

SR4 CROSSTOWN VIADUCT
GIRDER LAYOUT No. 7

DESIGN DETAIL SHEET (ENGLISH) (REV.7/16/10)

ORIGINAL SCALE IN INCHES FOR REDUCED PLANS 0 1 2 3

UNIT: 1455
PROJECT NUMBER & PHASE: 10000002291 CONTRACT NO.: 10-0S1101

DISREGARD PRINTS BEARING EARLIER REVISION DATES → REVISION DATES 9/10/16 08/12/09 04/12/11 11/27/12

SHEET 72 OF 111

FILE => 29-0350-1-g_1o07.dgn

USERNAME => s128843 DATE PLOTTED => 23-JUL-2013 TIME PLOTTED => 10:03

DIST	COUNTY	ROUTE	POST MILES TOTAL PROJECT	SHEET No	TOTAL SHEETS
10	SJ	4,5	Var	413	486

REGISTERED CIVIL ENGINEER 11/27/12 DATE

7-22-13
PLANS APPROVAL DATE

REGISTERED PROFESSIONAL ENGINEER KIANOUSH HARIRSAZ No. C39591 Exp. 12/31/13 CIVIL STATE OF CALIFORNIA

The State of California or its officers or agents shall not be responsible for the accuracy or completeness of electronic copies of this plan sheet.

SAN JOAQUIN COUNCIL OF GOVERNMENTS
555 E. WEBER AVENUE
STOCKTON, CA 95202

RAJAPPAN & MEYER
CONSULTING ENGINEERS, INC.
1038 LEIGH AVE, SUITE 100
SAN JOSE, CA 95126

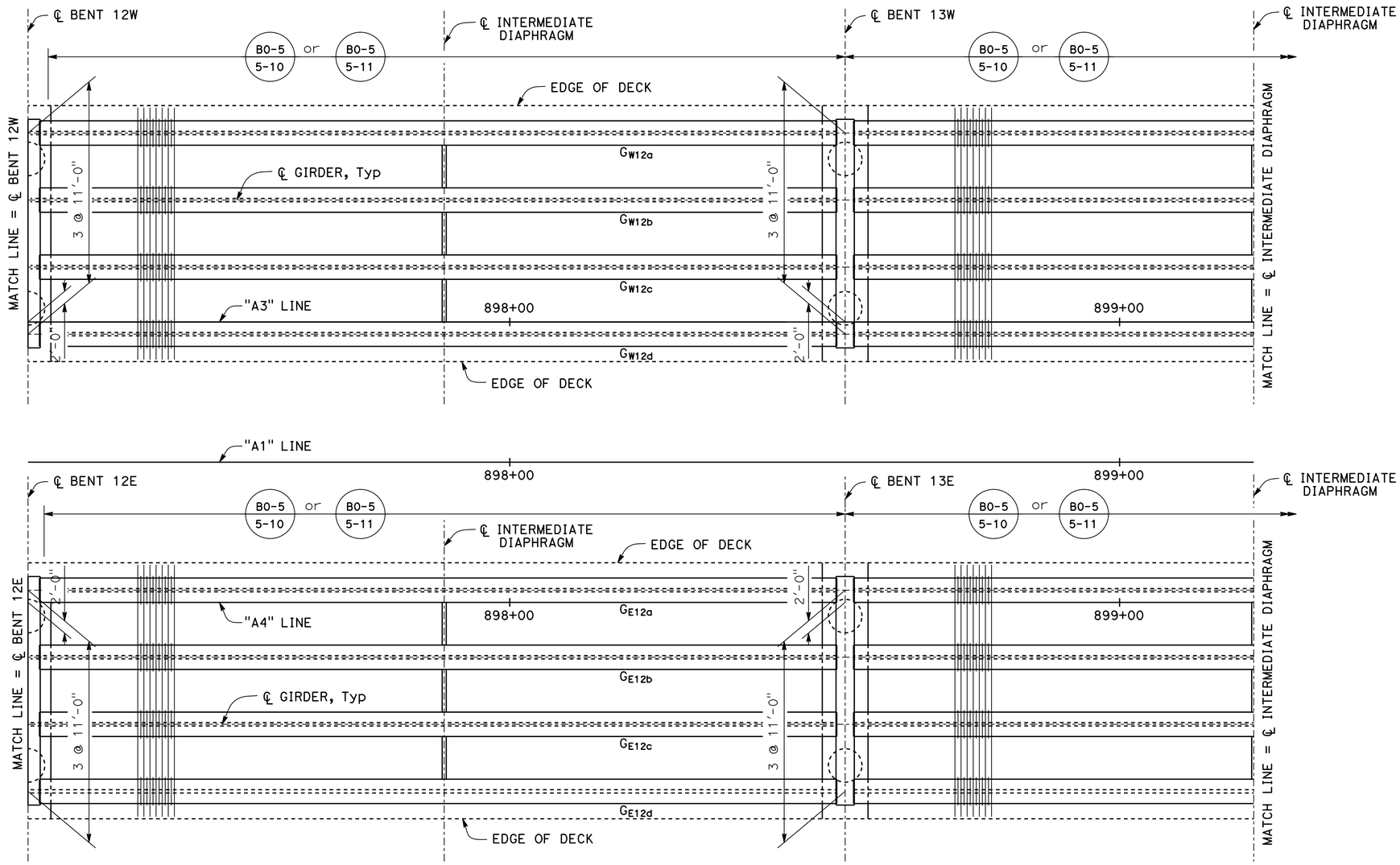

GIRDER LAYOUT

1" = 10'

NOTE:
THE CONTRACTOR SHALL VERIFY ALL CONTROLLING FIELD DIMENSIONS BEFORE ORDERING OR FABRICATING ANY MATERIAL

Reza Erfanian
DESIGN OVERSIGHT Reza Erfanian
12/19/12
SIGN OFF DATE

DESIGN	BY P. SHINN	CHECKED N. VO / S. SHI	
DETAILS	BY P. SHINN	CHECKED N. VO / S. SHI	
QUANTITIES	BY S. DESALEGN	CHECKED M. PHILIPS	

PREPARED FOR THE STATE OF CALIFORNIA DEPARTMENT OF TRANSPORTATION

P. SHINN
PROJECT ENGINEER

BRIDGE NO. 29-0350
POST MILES T14.83

SR4 CROSSTOWN VIADUCT
GIRDER LAYOUT No. 8

DESIGN DETAIL SHEET (ENGLISH) (REV.7/16/10)

ORIGINAL SCALE IN INCHES FOR REDUCED PLANS 0 1 2 3

UNIT: 1455
PROJECT NUMBER & PHASE: 10000002291 CONTRACT NO.: 10-0S1101

DISREGARD PRINTS BEARING EARLIER REVISION DATES → 8/10/11 6/08/12 9/04/12 11/27/12

SHEET 73 OF 111

FILE => 29-0350-1-g_1o08.dgn

USERNAME => s128843 DATE PLOTTED => 23-JUL-2013 TIME PLOTTED => 10:03

DIST	COUNTY	ROUTE	POST MILES TOTAL PROJECT	SHEET No	TOTAL SHEETS
10	SJ	4,5	Var	414	486

REGISTERED CIVIL ENGINEER — DATE 11/27/12

7-22-13
PLANS APPROVAL DATE

REGISTERED PROFESSIONAL ENGINEER — KIANOUSH HARIRSAZ — No. C39591 — Exp. 12/31/13 — CIVIL — STATE OF CALIFORNIA

The State of California or its officers or agents shall not be responsible for the accuracy or completeness of electronic copies of this plan sheet.

SAN JOAQUIN COUNCIL OF GOVERNMENTS
555 E. WEBER AVENUE
STOCKTON, CA 95202

RAJAPPAN & MEYER
CONSULTING ENGINEERS, INC.
1038 LEIGH AVE, SUITE 100
SAN JOSE, CA 95126

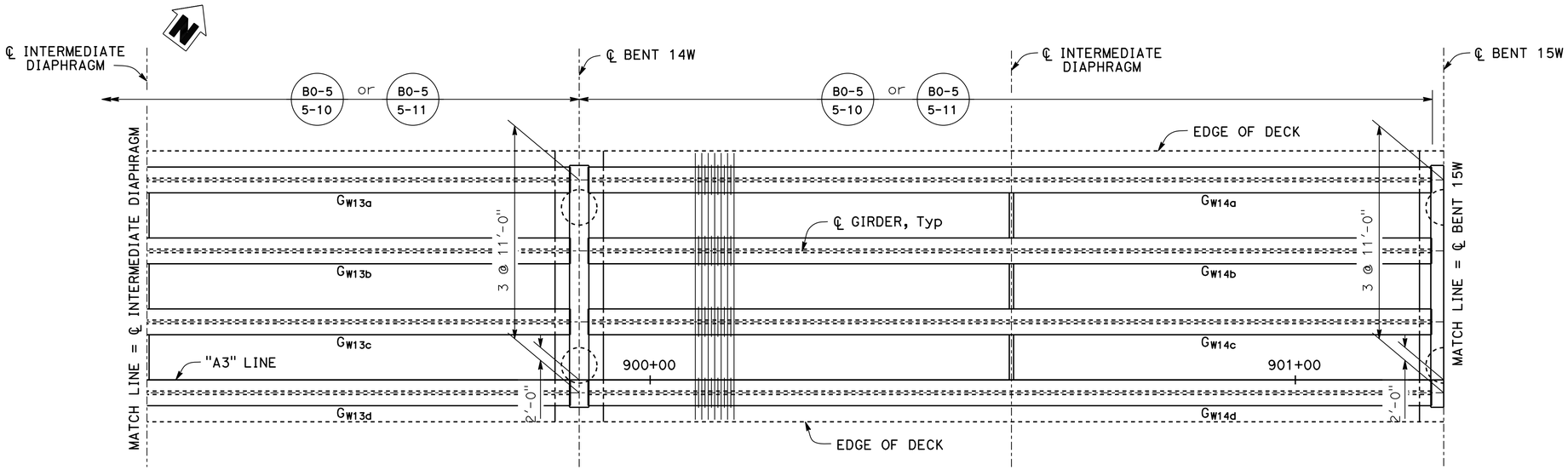

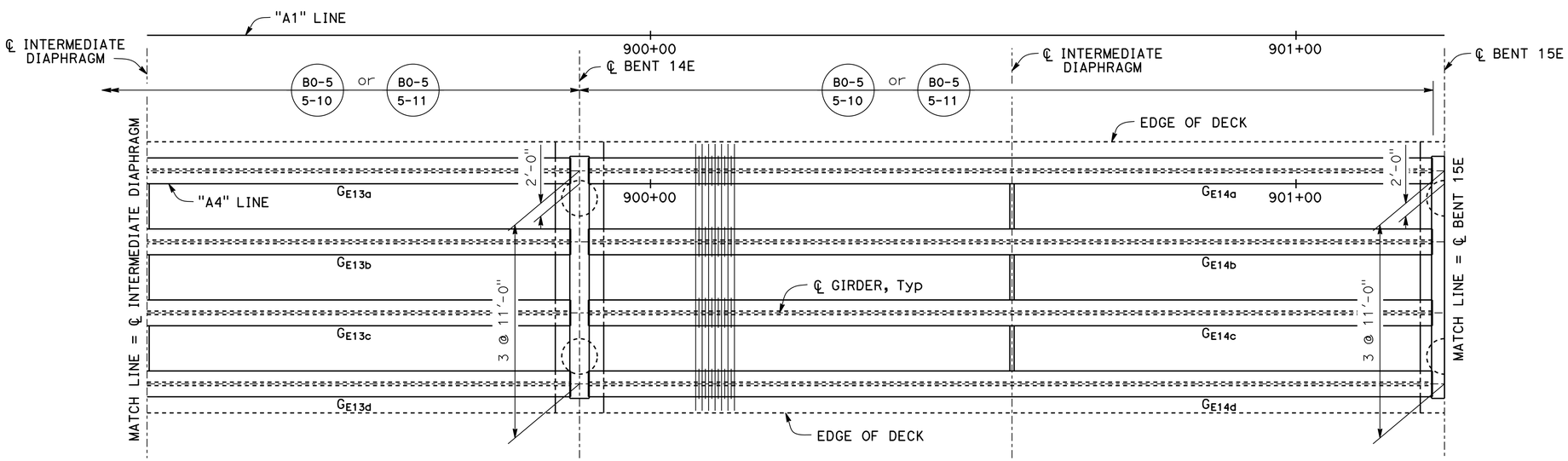

GIRDER LAYOUT

1" = 10'

NOTE:
THE CONTRACTOR SHALL VERIFY ALL CONTROLLING FIELD DIMENSIONS BEFORE ORDERING OR FABRICATING ANY MATERIAL

Reza Erfanian
DESIGN OVERSIGHT — Reza Erfanian
12/19/12
SIGN OFF DATE

	BY	CHECKED
DESIGN	P. SHINN	N. VO / S. SHI
DETAILS	P. SHINN	N. VO / S. SHI
QUANTITIES	S. DESALEGN	M. PHILIPS

PREPARED FOR THE STATE OF CALIFORNIA DEPARTMENT OF TRANSPORTATION

P. SHINN
PROJECT ENGINEER

BRIDGE NO. 29-0350
POST MILES T14.83

SR4 CROSSTOWN VIADUCT
GIRDER LAYOUT No. 9

DESIGN DETAIL SHEET (ENGLISH) (REV.7/16/10)

ORIGINAL SCALE IN INCHES FOR REDUCED PLANS 0 1 2 3

UNIT: 1455
PROJECT NUMBER & PHASE: 10000002291
CONTRACT NO.: 10-0S1101

DISREGARD PRINTS BEARING EARLIER REVISION DATES → 8/10/11 6/08/12 9/04/12 11/27/12

SHEET 74 OF 111

FILE => 29-0350-1-g_1o09.dgn

USERNAME => s128843 DATE PLOTTED => 23-JUL-2013 TIME PLOTTED => 10:03

DIST	COUNTY	ROUTE	POST MILES TOTAL PROJECT	SHEET No	TOTAL SHEETS
10	SJ	4,5	Var	415	486

REGISTERED CIVIL ENGINEER 11/27/12 DATE

7-22-13
PLANS APPROVAL DATE

REGISTERED PROFESSIONAL ENGINEER KIANOUSH HARIRSAZ No. C39591 Exp. 12/31/13 CIVIL STATE OF CALIFORNIA

The State of California or its officers or agents shall not be responsible for the accuracy or completeness of electronic copies of this plan sheet.

SAN JOAQUIN COUNCIL OF GOVERNMENTS
555 E. WEBER AVENUE
STOCKTON, CA 95202

RAJAPPAN & MEYER
CONSULTING ENGINEERS, INC.
1038 LEIGH AVE, SUITE 100
SAN JOSE, CA 95126

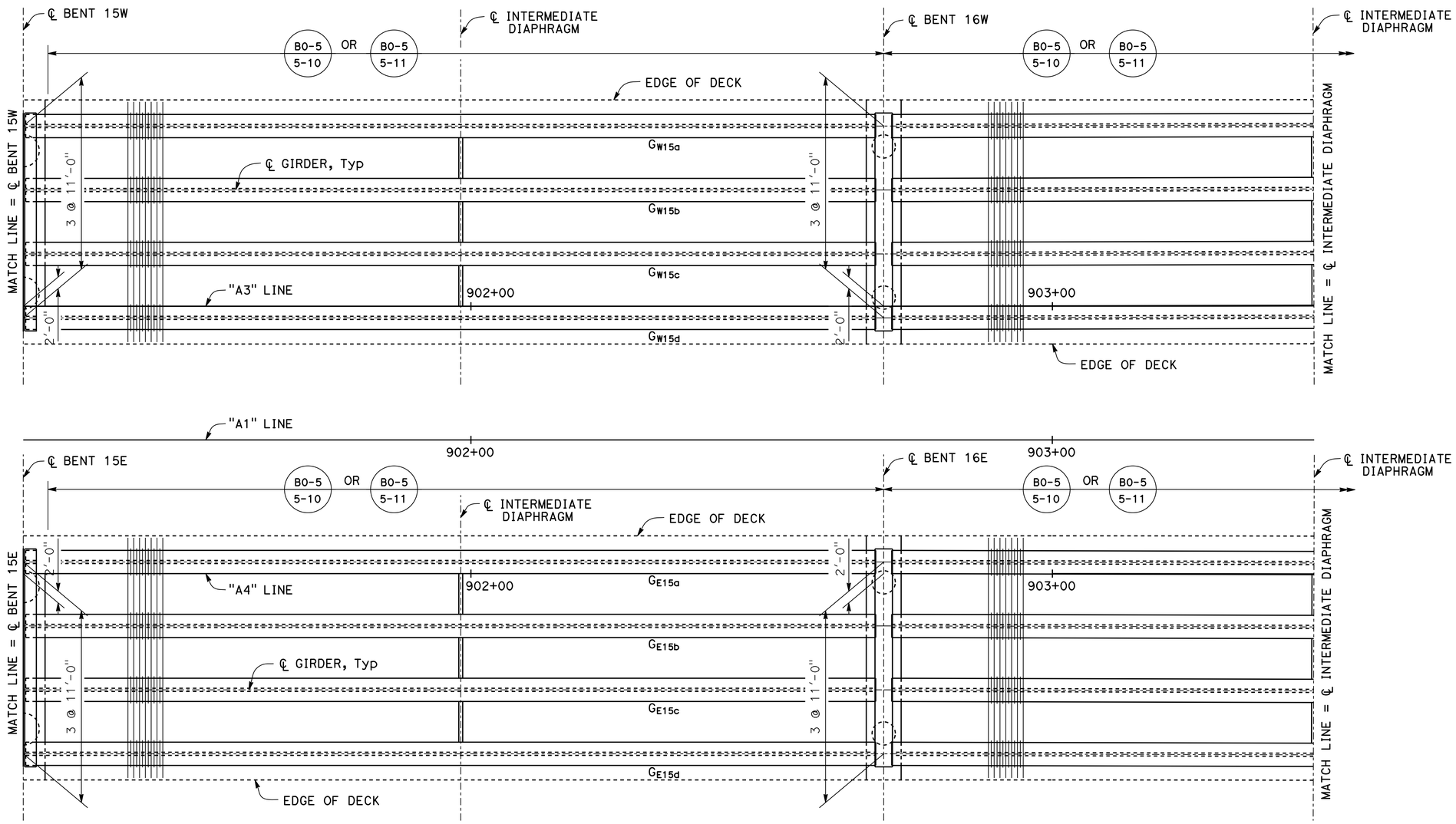

GIRDER LAYOUT

1" = 10'

NOTE:
THE CONTRACTOR SHALL VERIFY ALL CONTROLLING FIELD DIMENSIONS BEFORE ORDERING OR FABRICATING ANY MATERIAL

Reza Erfanian
DESIGN OVERSIGHT Reza Erfanian
12/19/12
SIGN OFF DATE

	BY	CHECKED
DESIGN	P. SHINN	N. VO / S. SHI
DETAILS	P. SHINN	N. VO / S. SHI
QUANTITIES	S. DESALEGN	M. PHILIPS

PREPARED FOR THE STATE OF CALIFORNIA DEPARTMENT OF TRANSPORTATION

P. SHINN
PROJECT ENGINEER

BRIDGE NO. 29-0350
POST MILES T14.83

SR4 CROSSTOWN VIADUCT
GIRDER LAYOUT No. 10

DESIGN DETAIL SHEET (ENGLISH) (REV.7/16/10)

ORIGINAL SCALE IN INCHES FOR REDUCED PLANS 0 1 2 3

UNIT: 1455
PROJECT NUMBER & PHASE: 10000002291 CONTRACT NO.: 10-0S1101

DISREGARD PRINTS BEARING EARLIER REVISION DATES 8/10/11 6/08/12 9/04/12 11/27/12

SHEET 75 OF 111

FILE => 29-0350-1-g_1o10.dgn

USERNAME => s128843 DATE PLOTTED => 23-JUL-2013 TIME PLOTTED => 10:03

DIST	COUNTY	ROUTE	POST MILES TOTAL PROJECT	SHEET No	TOTAL SHEETS
10	SJ	4,5	Var	416	486

REGISTERED CIVIL ENGINEER 11/27/12 DATE

7-22-13
PLANS APPROVAL DATE

REGISTERED PROFESSIONAL ENGINEER KIANOUSH HARIRSAZ No. C39591 Exp. 12/31/13 CIVIL STATE OF CALIFORNIA

The State of California or its officers or agents shall not be responsible for the accuracy or completeness of electronic copies of this plan sheet.

SAN JOAQUIN COUNCIL OF GOVERNMENTS
555 E. WEBER AVENUE
STOCKTON, CA 95202

RAJAPPAN & MEYER
CONSULTING ENGINEERS, INC.
1038 LEIGH AVE, SUITE 100
SAN JOSE, CA 95126

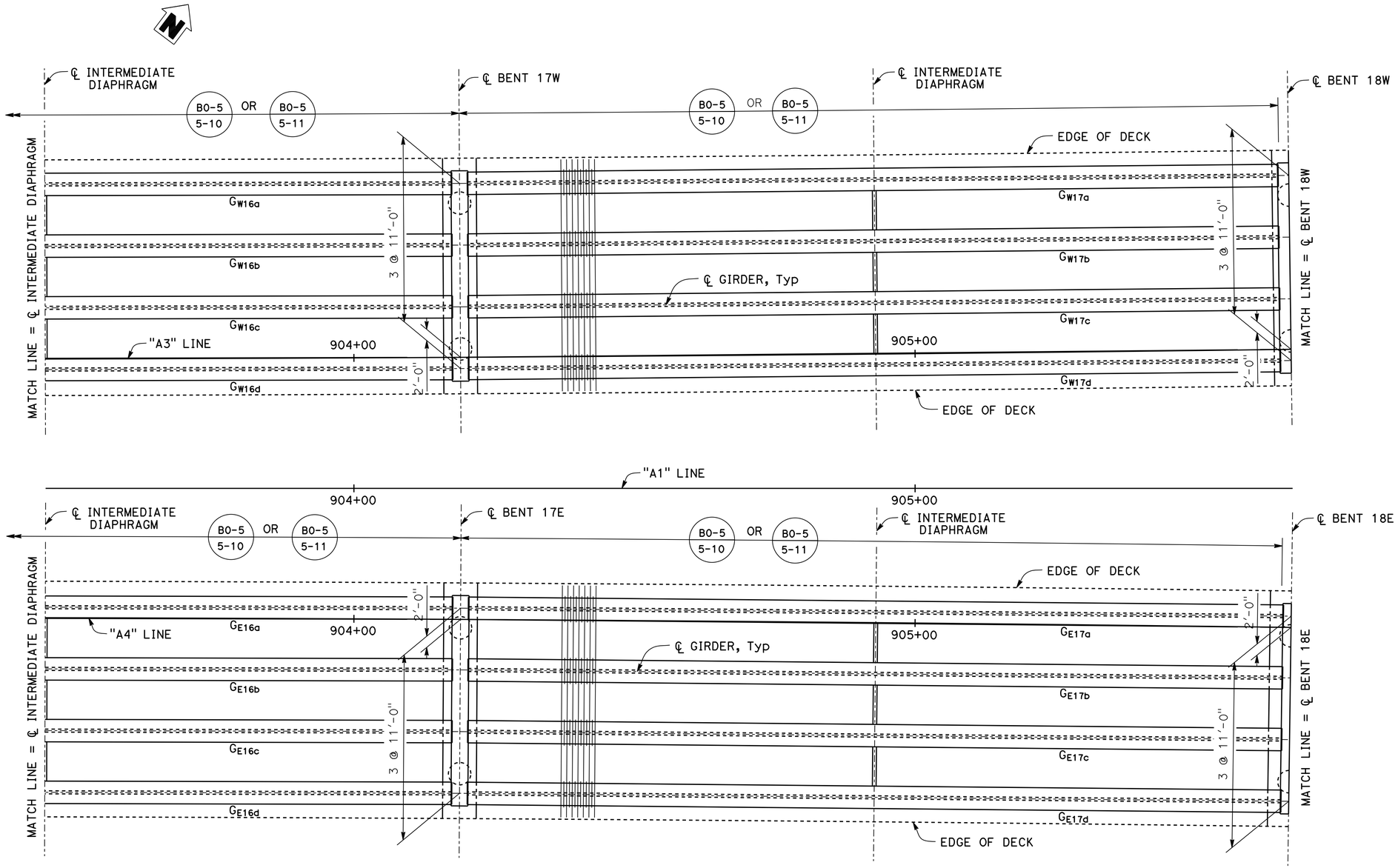

GIRDER LAYOUT

1" = 10'

NOTE:
THE CONTRACTOR SHALL VERIFY ALL CONTROLLING FIELD DIMENSIONS BEFORE ORDERING OR FABRICATING ANY MATERIAL

DESIGN OVERSIGHT Reza Erfanian	DESIGN	BY P. SHINN	CHECKED N. VO / S. SHI
12/19/12 SIGN OFF DATE	DETAILS	BY P. SHINN	CHECKED N. VO / S. SHI
	QUANTITIES	BY S. DESALEGN	CHECKED M. PHILIPS

PREPARED FOR THE STATE OF CALIFORNIA DEPARTMENT OF TRANSPORTATION

P. SHINN
PROJECT ENGINEER

BRIDGE NO. 29-0350
POST MILES T14.83

SR4 CROSSTOWN VIADUCT
GIRDER LAYOUT No. 11

DESIGN DETAIL SHEET (ENGLISH) (REV.7/16/10)

ORIGINAL SCALE IN INCHES FOR REDUCED PLANS 0 1 2 3

UNIT: 1455
PROJECT NUMBER & PHASE: 10000002291 CONTRACT NO.: 10-0S1101

DISREGARD PRINTS BEARING EARLIER REVISION DATES 8/10/11 6/08/12 09/04/12 11/27/12

SHEET 76 OF 111

FILE => 29-0350-1-g_lo11.dgn

USERNAME => s128843 DATE PLOTTED => 23-JUL-2013 TIME PLOTTED => 10:03

DIST	COUNTY	ROUTE	POST MILES TOTAL PROJECT	SHEET No	TOTAL SHEETS
10	SJ	4,5	Var	417	486

REGISTERED CIVIL ENGINEER — DATE 11/27/12

7-22-13
PLANS APPROVAL DATE

REGISTERED PROFESSIONAL ENGINEER — KIANOUSH HARIRSAZ — No. C39591 — Exp. 12/31/13 — CIVIL — STATE OF CALIFORNIA

The State of California or its officers or agents shall not be responsible for the accuracy or completeness of electronic copies of this plan sheet.

SAN JOAQUIN COUNCIL OF GOVERNMENTS
555 E. WEBER AVENUE
STOCKTON, CA 95202

RAJAPPAN & MEYER
CONSULTING ENGINEERS, INC.
1038 LEIGH AVE, SUITE 100
SAN JOSE, CA 95126

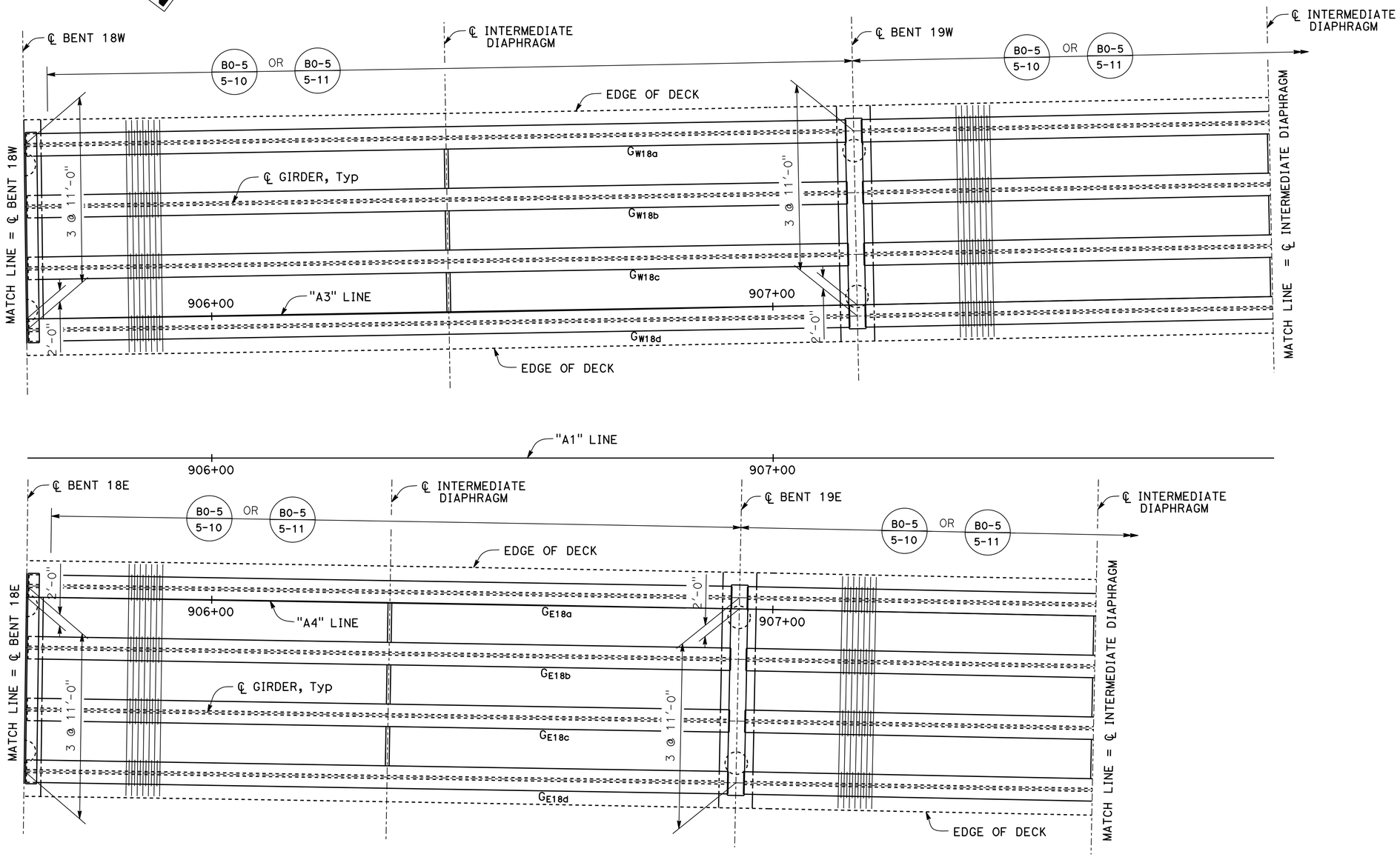

GIRDER LAYOUT

1" = 10'

NOTE:
THE CONTRACTOR SHALL VERIFY ALL CONTROLLING FIELD DIMENSIONS BEFORE ORDERING OR FABRICATING ANY MATERIAL

Reza Erfanian
DESIGN OVERSIGHT — Reza Erfanian
12/19/12
SIGN OFF DATE

	BY	CHECKED
DESIGN	P. SHINN	N. VO / S. SHI
DETAILS	P. SHINN	N. VO / S. SHI
QUANTITIES	S. DESALEGN	M. PHILIPS

PREPARED FOR THE STATE OF CALIFORNIA DEPARTMENT OF TRANSPORTATION

P. SHINN
PROJECT ENGINEER

BRIDGE NO. 29-0350
POST MILES T14.83

SR4 CROSSTOWN VIADUCT
GIRDER LAYOUT No. 12

DESIGN DETAIL SHEET (ENGLISH) (REV.7/16/10)

ORIGINAL SCALE IN INCHES FOR REDUCED PLANS 0 1 2 3

UNIT: 1455
PROJECT NUMBER & PHASE: 10000002291 CONTRACT NO.: 10-0S1101

DISREGARD PRINTS BEARING EARLIER REVISION DATES → 8/10/11 6/08/12 9/04/12 11/27/12

SHEET 77 OF 111

FILE => 29-0350-1-g_1o12.dgn

USERNAME => s128843 DATE PLOTTED => 23-JUL-2013 TIME PLOTTED => 10:04

DIST	COUNTY	ROUTE	POST MILES TOTAL PROJECT	SHEET No	TOTAL SHEETS
10	SJ	4,5	Var	418	486

REGISTERED CIVIL ENGINEER — DATE 11/27/12

7-22-13
PLANS APPROVAL DATE

REGISTERED PROFESSIONAL ENGINEER — KIANOUSH HARIRSAZ — No. C39591 — Exp. 12/31/13 — CIVIL — STATE OF CALIFORNIA

The State of California or its officers or agents shall not be responsible for the accuracy or completeness of electronic copies of this plan sheet.

SAN JOAQUIN COUNCIL OF GOVERNMENTS
555 E. WEBER AVENUE
STOCKTON, CA 95202

RAJAPPAN & MEYER
CONSULTING ENGINEERS, INC.
1038 LEIGH AVE, SUITE 100
SAN JOSE, CA 95126

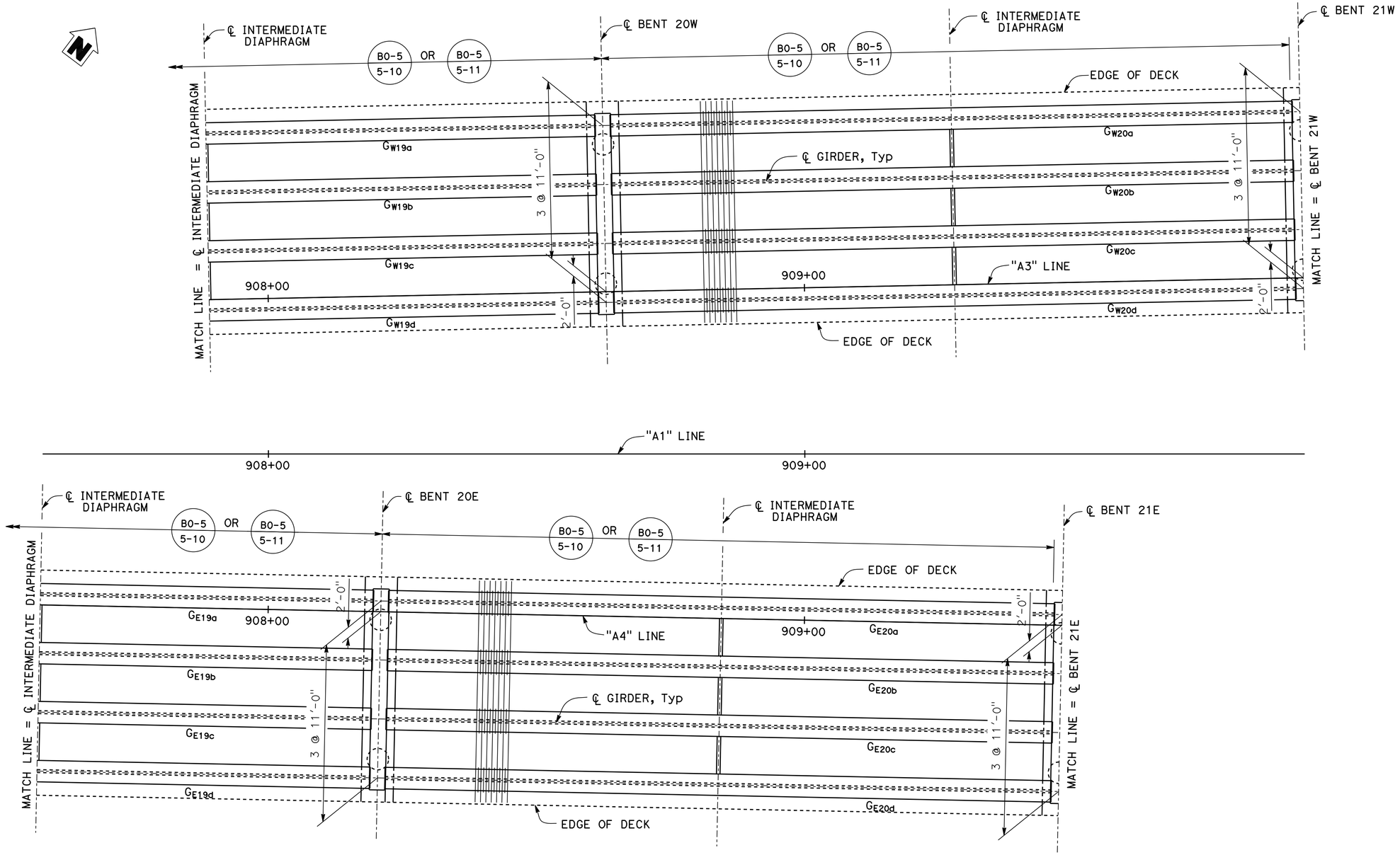

GIRDER LAYOUT

1" = 10'

NOTE:
THE CONTRACTOR SHALL VERIFY ALL CONTROLLING FIELD DIMENSIONS BEFORE ORDERING OR FABRICATING ANY MATERIAL

DESIGN OVERSIGHT Reza Erfanian — 12/19/12 SIGN OFF DATE	DESIGN	BY P. SHINN	CHECKED N. VO / S. SHI
	DETAILS	BY P. SHINN	CHECKED N. VO / S. SHI
	QUANTITIES	BY S. DESALEGN	CHECKED M. PHILIPS

PREPARED FOR THE STATE OF CALIFORNIA DEPARTMENT OF TRANSPORTATION

P. SHINN — PROJECT ENGINEER

BRIDGE NO. 29-0350
POST MILES T14.83

SR4 CROSSTOWN VIADUCT
GIRDER LAYOUT No. 13

DESIGN DETAIL SHEET (ENGLISH) (REV.7/16/10)

ORIGINAL SCALE IN INCHES FOR REDUCED PLANS 0 1 2 3

UNIT: 1455
PROJECT NUMBER & PHASE: 10000002291 CONTRACT NO.: 10-0S1101

DISREGARD PRINTS BEARING EARLIER REVISION DATES → REVISION DATES 8/10/11 8/08/12 9/04/12 11/27/12

SHEET 78 OF 111

FILE => 29-0350-1-g_1o13.dgn

USERNAME => s128843 DATE PLOTTED => 23-JUL-2013 TIME PLOTTED => 10:04

DIST	COUNTY	ROUTE	POST MILES TOTAL PROJECT	SHEET No	TOTAL SHEETS
10	SJ	4,5	Var	419	486

REGISTERED CIVIL ENGINEER — DATE 11/27/12

7-22-13
PLANS APPROVAL DATE

REGISTERED PROFESSIONAL ENGINEER — KIANOUSH HARIRSAZ — No. C39591 — Exp. 12/31/13 — CIVIL — STATE OF CALIFORNIA

The State of California or its officers or agents shall not be responsible for the accuracy or completeness of electronic copies of this plan sheet.

SAN JOAQUIN COUNCIL OF GOVERNMENTS
555 E. WEBER AVENUE
STOCKTON, CA 95202

RAJAPPAN & MEYER
CONSULTING ENGINEERS, INC.
1038 LEIGH AVE, SUITE 100
SAN JOSE, CA 95126

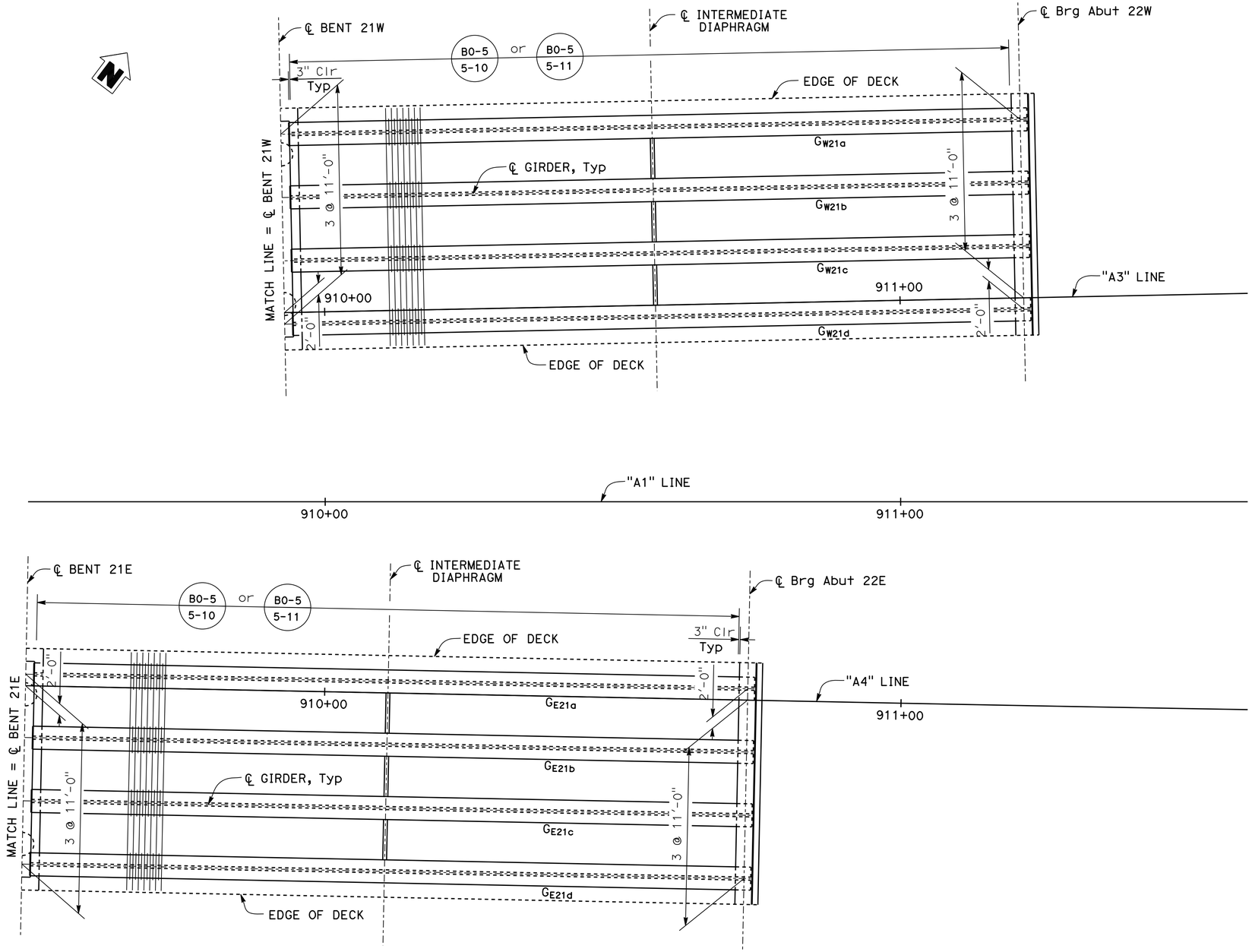

GIRDER LAYOUT

1" = 10'

NOTE:
THE CONTRACTOR SHALL VERIFY ALL CONTROLLING FIELD DIMENSIONS BEFORE ORDERING OR FABRICATING ANY MATERIAL

Reza Erfanian
DESIGN OVERSIGHT — Reza Erfanian
12/19/12
SIGN OFF DATE

	BY	CHECKED
DESIGN	P. SHINN	N. VO / S. SHI
DETAILS	P. SHINN	N. VO / S. SHI
QUANTITIES	S. DESALEGN	M. PHILIPS

PREPARED FOR THE STATE OF CALIFORNIA DEPARTMENT OF TRANSPORTATION

P. SHINN
PROJECT ENGINEER

BRIDGE NO. 29-0350
POST MILES T14.83

SR4 CROSSTOWN VIADUCT
GIRDER LAYOUT No. 14

DESIGN DETAIL SHEET (ENGLISH) (REV.7/16/10)

ORIGINAL SCALE IN INCHES FOR REDUCED PLANS 0 1 2 3

UNIT: 1455
PROJECT NUMBER & PHASE: 10000002291
CONTRACT NO.: 10-0S1101

DISREGARD PRINTS BEARING EARLIER REVISION DATES → REVISION DATES 8/10/16 08/12/09 04/12 11/27/12

SHEET 79 OF 111

FILE => 29-0350-1-g_1o14.dgn

USERNAME => s128843 DATE PLOTTED => 23-JUL-2013 TIME PLOTTED => 10:04

DIST	COUNTY	ROUTE	POST MILES TOTAL PROJECT	SHEET No	TOTAL SHEETS
10	SJ	4,5	Var	420	486

REGISTERED CIVIL ENGINEER 11/27/12 DATE

7-22-13
PLANS APPROVAL DATE

REGISTERED PROFESSIONAL ENGINEER KIANOUSH HARIRSAZ No. C39591 Exp. 12/31/13 CIVIL STATE OF CALIFORNIA

The State of California or its officers or agents shall not be responsible for the accuracy or completeness of electronic copies of this plan sheet.

SAN JOAQUIN COUNCIL OF GOVERNMENTS
555 E. WEBER AVENUE
STOCKTON, CA 95202

RAJAPPAN & MEYER
CONSULTING ENGINEERS, INC.
1038 LEIGH AVE, SUITE 100
SAN JOSE, CA 95126

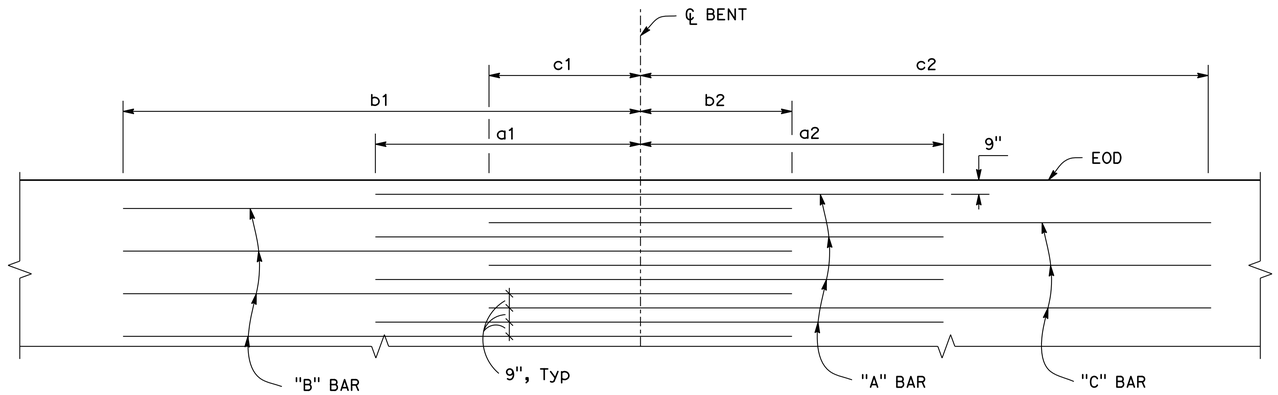

ADDITIONAL DECK REINFORCEMENT

NO SCALE

NOTES:

1. Reinforcement shall be placed parallel with bridge control line.
2. Lap splices not allowed.

TABLE OF REINFORCING STEEL DIMENSIONS - WEST BOUND (Ft)

BENT No.	BAR SIZE	"A" BAR		"B" BAR		"C" BAR	
		a1	a2	b1	b2	c1	c2
2W	#11	10	12	22	4	4	30
3W	#11	12	10	32	4	4	22
5W	#11	14	16	40	8	8	38
10W	#11	18	32	40	10	8	62
11W	#11	20	14	52	6	6	40
13W	#11	14	20	40	6	6	52
14W	#11	20	14	52	6	6	40
16W	#11	20	34	54	10	8	66
17W	#11	34	20	66	8	10	56
19W	#11	26	34	64	10	10	64
20W	#11	14	20	36	4	4	52
21W	#11	16	14	48	4	4	36

TABLE OF REINFORCING STEEL DIMENSIONS - EAST BOUND (Ft)

BENT No.	BAR SIZE	"A" BAR		"B" BAR		"C" BAR	
		a1	a2	b1	b2	c1	c2
2E	#11	14	16	28	8	8	40
3E	#11	14	14	38	8	8	30
5E	#11	14	16	40	8	8	44
10E	#11	18	34	40	10	8	62
11E	#11	20	14	52	6	6	40
13E	#11	14	20	40	6	6	52
14E	#11	20	14	52	6	6	40
16E	#11	20	34	54	10	8	65
17E	#11	34	20	65	8	9	55
19E	#11	14	14	34	4	4	44
20E	#11	10	10	30	2	2	30
21E	#11	14	12	44	4	4	34

NOTE:
THE CONTRACTOR SHALL VERIFY ALL CONTROLLING FIELD DIMENSIONS BEFORE ORDERING OR FABRICATING ANY MATERIAL

DESIGN OVERSIGHT Reza Erfanian
12/19/12
SIGN OFF DATE

	BY	CHECKED
DESIGN	P. SHINN	N. VO / S. SHI
DETAILS	P. SHINN	N. VO / S. SHI
QUANTITIES	S. DESALEGN	M. PHILIPS

PREPARED FOR THE STATE OF CALIFORNIA DEPARTMENT OF TRANSPORTATION

P. SHINN
PROJECT ENGINEER

BRIDGE NO. 29-0350
POST MILES T14.83

SR4 CROSSTOWN VIADUCT
DECK REINFORCEMENT

DESIGN DETAIL SHEET (ENGLISH) (REV.7/16/10)

ORIGINAL SCALE IN INCHES FOR REDUCED PLANS 0 1 2 3

UNIT: 1455
PROJECT NUMBER & PHASE: 10000002291 CONTRACT NO.: 10-0S1101

DISREGARD PRINTS BEARING EARLIER REVISION DATES → REVISION DATES 9/19/11 6/08/12 09/04/12 11/27/12

SHEET 80 OF 111

FILE => 29-0350-o-deckreinf.dgn

USERNAME => s128843 DATE PLOTTED => 23-JUL-2013 TIME PLOTTED => 10:04

DIST	COUNTY	ROUTE	POST MILES TOTAL PROJECT	SHEET No	TOTAL SHEETS
10	SJ	4,5	Var	421	486

REGISTERED CIVIL ENGINEER — DATE 11/27/12

7-22-13
PLANS APPROVAL DATE

REGISTERED PROFESSIONAL ENGINEER — KIANOUSH HARIRSAZ — No. C39591 — Exp. 12/31/13 — CIVIL — STATE OF CALIFORNIA

The State of California or its officers or agents shall not be responsible for the accuracy or completeness of electronic copies of this plan sheet.

SAN JOAQUIN COUNCIL OF GOVERNMENTS
555 E. WEBER AVENUE
STOCKTON, CA 95202

RAJAPPAN & MEYER
CONSULTING ENGINEERS, INC.
1038 LEIGH AVE, SUITE 100
SAN JOSE, CA 95126

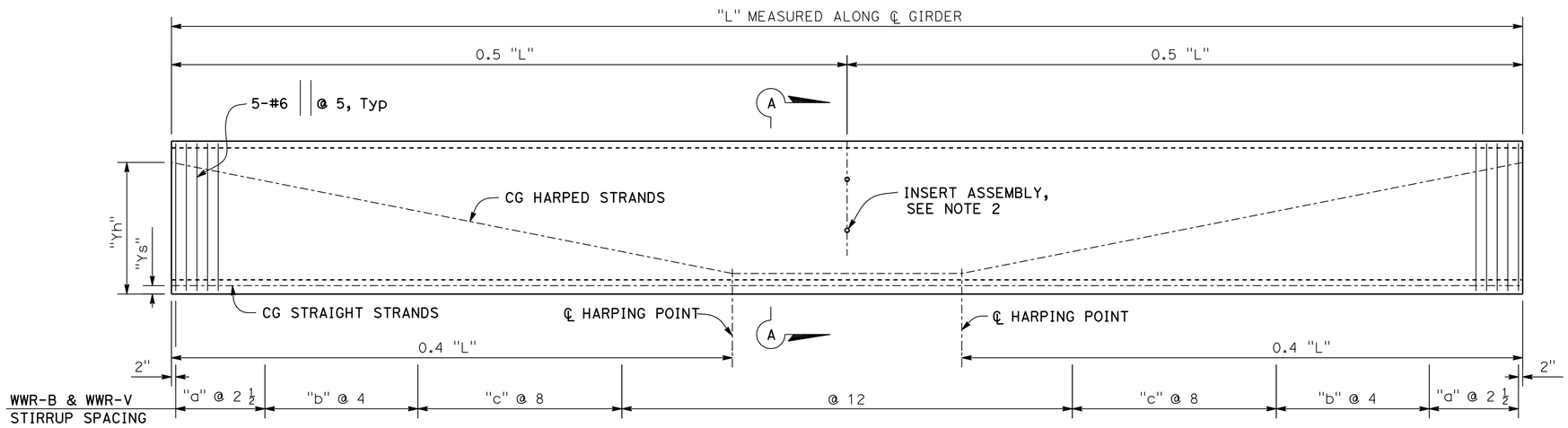

GIRDER ELEVATION

NO SCALE

PRECAST GIRDER PRESTRESSING NOTES:

1. The jacking force (P) is the jacking force required at the point of control along span. The jacking force does not included any fabrication specific losses.
2. The maximum temporary tensile stress (jacking stress) in the prestressing steel shall not exceed 80% of the specified minimum ultimate tensile strength of the prestressing steel.
3. Concrete strength:
   f'ci is at time of initial stressing
   f'c is at 28 days
4. Deflection components are informational and will be used to set screed line elevations
5. Screen line elevations for deck concrete will be determined by the Engineer
6. Prestressing strand shall be 270 ksi low relaxation

NOTES:

1. Girder stirrups shall be field bent after girder erection.
2. Formed holes and insert assemblies shall be parallel to centerline of Intermediate Diaphragm or centerline of abutment.

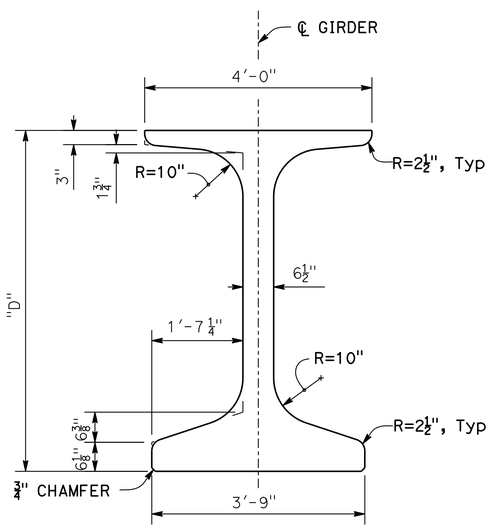

GIRDER TYPICAL SECTION

3/4" = 1'-0"

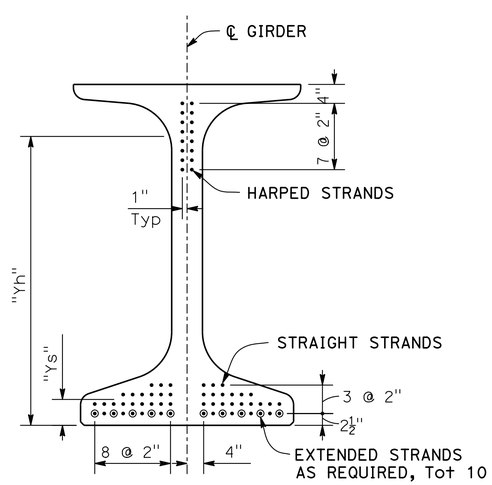

STRAND LAYOUT

3/4" = 1'-0"

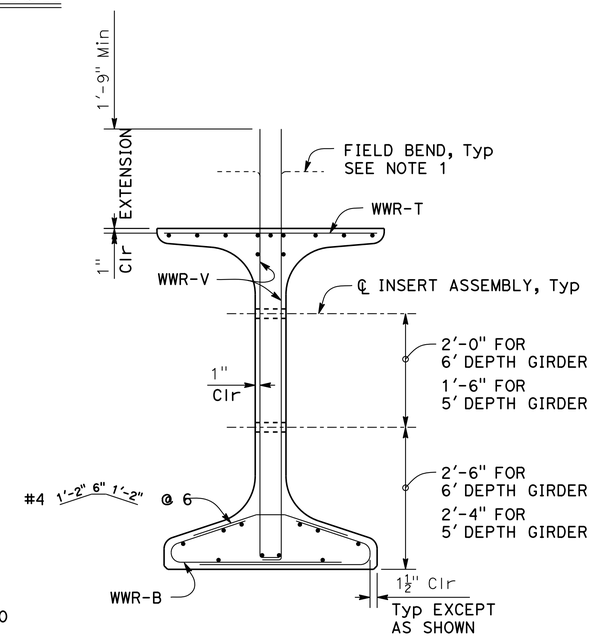

SECTION A-A

NO SCALE

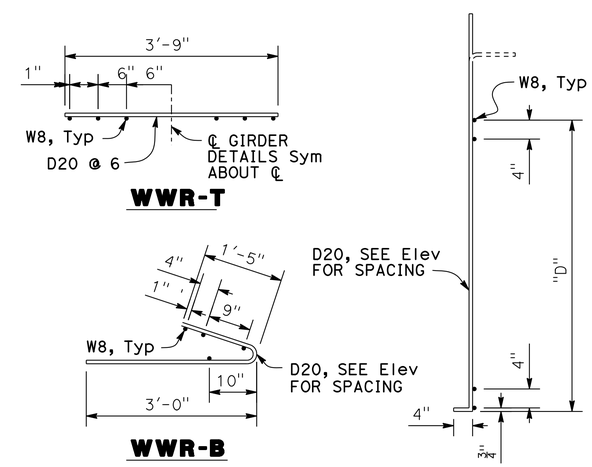

WELDED WIRE REINFORCEMENT DETAILS

3/4" = 1'-0"

NOTE:
THE CONTRACTOR SHALL VERIFY ALL CONTROLLING FIELD DIMENSIONS BEFORE ORDERING OR FABRICATING ANY MATERIAL

DESIGN OVERSIGHT: Reza Erfanian	DESIGN	BY P. SHINN	CHECKED N. VO / S. SHI
12/19/12 SIGN OFF DATE	DETAILS	BY P. SHINN	CHECKED N. VO / S. SHI
	QUANTITIES	BY S. DESALEGN	CHECKED M. PHILIPS

PREPARED FOR THE STATE OF CALIFORNIA DEPARTMENT OF TRANSPORTATION

P. SHINN — PROJECT ENGINEER

BRIDGE NO. 29-0350
POST MILES T14.83

SR4 CROSSTOWN VIADUCT

PC/PS CONCRETE GIRDER DETAILS No. 1

DESIGN DETAIL SHEET (ENGLISH) (REV.7/16/10)

ORIGINAL SCALE IN INCHES FOR REDUCED PLANS 0 1 2 3

UNIT: 1455
PROJECT NUMBER & PHASE: 10000002291 CONTRACT NO.: 10-0S1101

DISREGARD PRINTS BEARING EARLIER REVISION DATES — REVISION DATES 8/10/11 6/08/12 9/04/12 11/27/12

SHEET 81 OF 111

FILE => 29-0350-o-g_dt01.dgn

USERNAME => s128843 DATE PLOTTED => 23-JUL-2013 TIME PLOTTED => 10:04

DIST	COUNTY	ROUTE	POST MILES TOTAL PROJECT	SHEET No	TOTAL SHEETS
10	SJ	4,5	Var	422	486

K Haur
REGISTERED CIVIL ENGINEER 11/27/12 DATE

7-22-13
PLANS APPROVAL DATE

REGISTERED PROFESSIONAL ENGINEER KIANOUSH HARIRSAZ No. C39591 Exp. 12/31/13 CIVIL STATE OF CALIFORNIA

The State of California or its officers or agents shall not be responsible for the accuracy or completeness of electronic copies of this plan sheet.

SAN JOAQUIN COUNCIL OF GOVERNMENTS
555 E. WEBER AVENUE
STOCKTON, CA 95202

RAJAPPAN & MEYER
CONSULTING ENGINEERS, INC.
1038 LEIGH AVE, SUITE 100
SAN JOSE, CA 95126

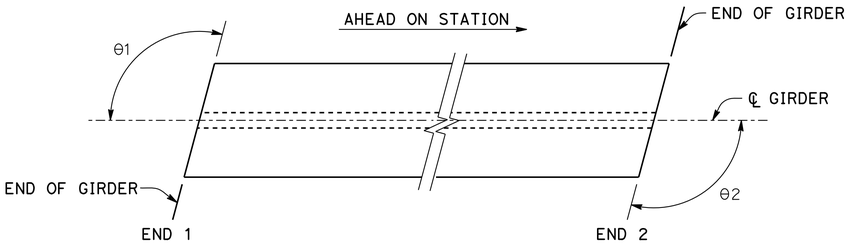

GIRDER END ANGLE

NO SCALE

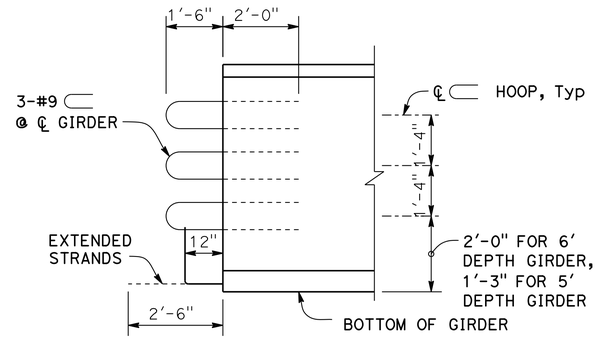

TYPE A

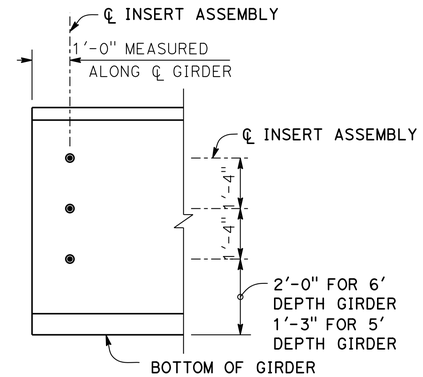

TYPE B

GIRDER END TYPE

NO SCALE

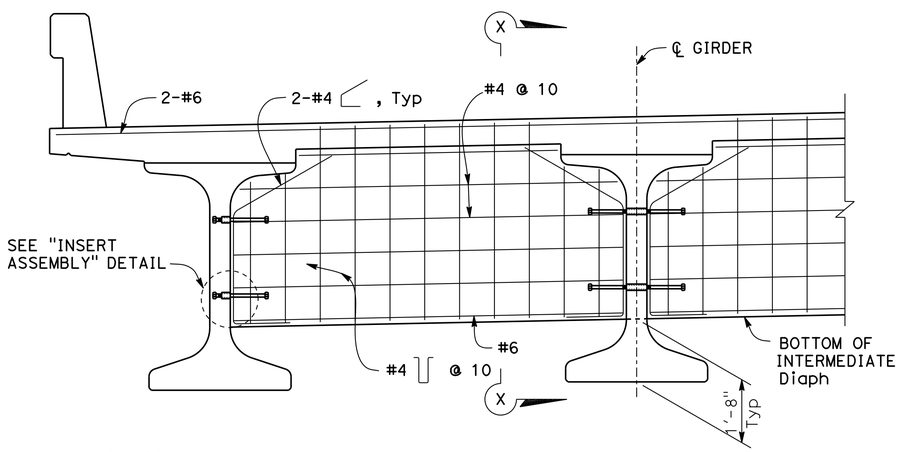

NOTE: Diaphragm for 6' deep girder shown, for 5' deep girder similar

INTERMEDIATE DIAPHRAGM

1/2" = 1'-0"

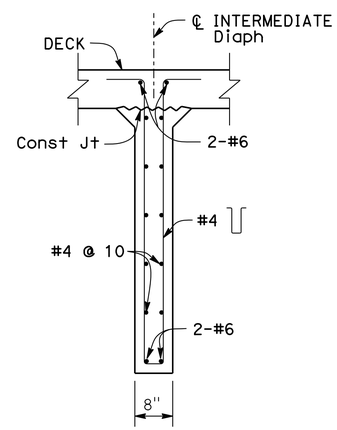

SECTION X-X

3/4" = 1'-0"

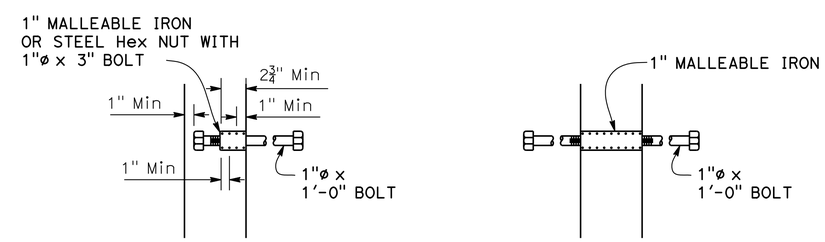

EXTERIOR GIRDER

INTERIOR GIRDER

INSERT ASSEMBLY

NO SCALE

NOTE:
THE CONTRACTOR SHALL VERIFY ALL CONTROLLING FIELD DIMENSIONS BEFORE ORDERING OR FABRICATING ANY MATERIAL

Reza Erfanian
DESIGN OVERSIGHT Reza Erfanian
12/19/12
SIGN OFF DATE

	BY	CHECKED
DESIGN	P. SHINN	N. VO / S. SHI
DETAILS	P. SHINN	N. VO / S. SHI
QUANTITIES	S. DESALEGN	M. PHILIPS

PREPARED FOR THE STATE OF CALIFORNIA DEPARTMENT OF TRANSPORTATION

P. SHINN
PROJECT ENGINEER

BRIDGE NO. 29-0350
POST MILES T14.83

SR4 CROSSTOWN VIADUCT
PC/PS CONCRETE GIRDER DETAILS No. 2

DESIGN DETAIL SHEET (ENGLISH) (REV.7/16/10)

ORIGINAL SCALE IN INCHES FOR REDUCED PLANS 0 1 2 3

UNIT: 1455
PROJECT NUMBER & PHASE: 10000002291 CONTRACT NO.: 10-0S1101

DISREGARD PRINTS BEARING EARLIER REVISION DATES → REVISION DATES 8/10/11 6/08/12 3/04/12 11/27/12 SHEET 82 OF 111

FILE => 29-0350-o-g_dt02.dgn

USERNAME => s128843 DATE PLOTTED => 23-JUL-2013 TIME PLOTTED => 10:04

DIST	COUNTY	ROUTE	POST MILES TOTAL PROJECT	SHEET No	TOTAL SHEETS
10	SJ	4,5	Var	423	486

REGISTERED CIVIL ENGINEER 11/27/12 DATE

7-22-13
PLANS APPROVAL DATE

REGISTERED PROFESSIONAL ENGINEER SIEW W. CHEE No. C41906 Exp. 03/31/31 CIVIL STATE OF CALIFORNIA

The State of California or its officers or agents shall not be responsible for the accuracy or completeness of electronic copies of this plan sheet.

SAN JOAQUIN COUNCIL OF GOVERNMENTS
555 E. WEBER AVENUE
STOCKTON, CA 95202

T. Y. LIN INTERNATIONAL
CONSULTING ENGINEERS, INC.
TWO HARRISON STREET, SUITE 500
SAN FRANCISCO, CA 94105

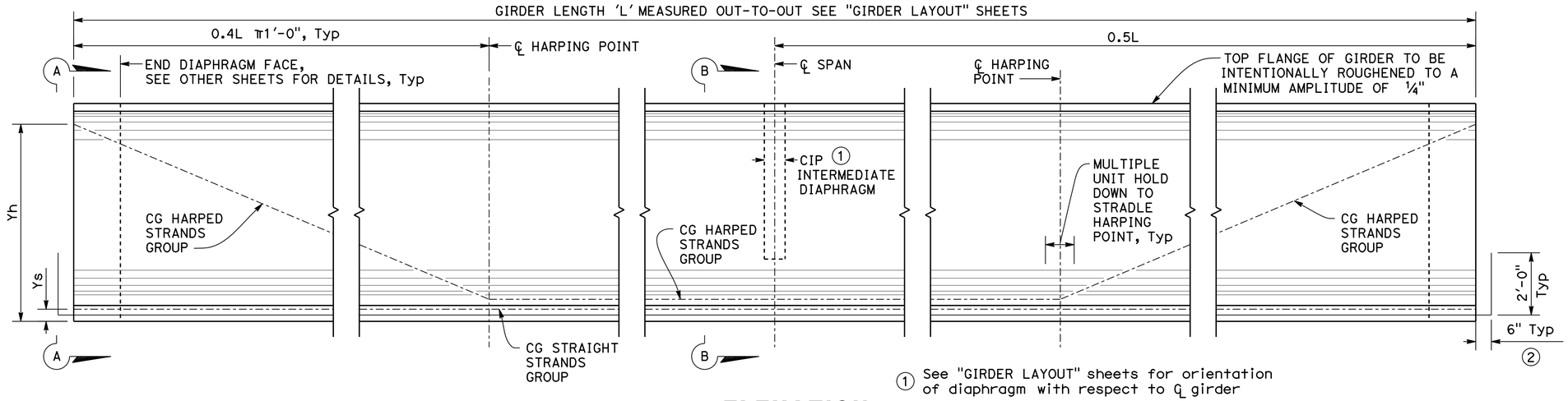

ELEVATION

1/2"=1'-0"

① See "GIRDER LAYOUT" sheets for orientation of diaphragm with respect to ℄ girder

② Extend and hook 10 alternate strands total as shown beyond girder length (strands Sym about ℄ girder, Typ)

GIRDER LOCATION, LENGTH & DESIGNATION	TOTAL No. OF STRANDS REQUIRED PER GIRDER	No. OF STRAIGHT STRANDS	No. OF HARPED STRANDS	CG HARPED STRANDS GROUP Yh		CG STRAIGHT STRANDS GROUP Ys		JACKING FORCE (TOTAL ALL STRANDS) KIPS	CONCRETE STRENGTH (KSI)		DEFLECTION COMPONENTS AT ℄ SPAN (IN.)	
				@ ENDS	@ ℄ SPAN	@ ENDS	@ ℄ SPAN		f'ci	f'c	DECK DL	BARRIER DL
SEE "GIRDER LAYOUT" SHEETS	56	42	14	6'-2"	8½"	3.93"	3.93"	2,461	6.0	9.0	2.5	0.1

NOTE: DEFLECTION COMPONENTS AT ℄ SPAN SHOWN FOR INFORMATIONAL PURPOSE, TO BE USED BY ENGINEER TO DETERMINE SCREED LINE ELEVATIONS FOR DECK CONCRETE

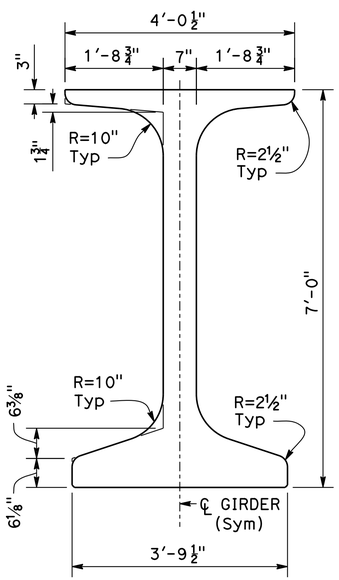

GIRDER CONCRETE DIMENSIONS

3/4"=1'-0"

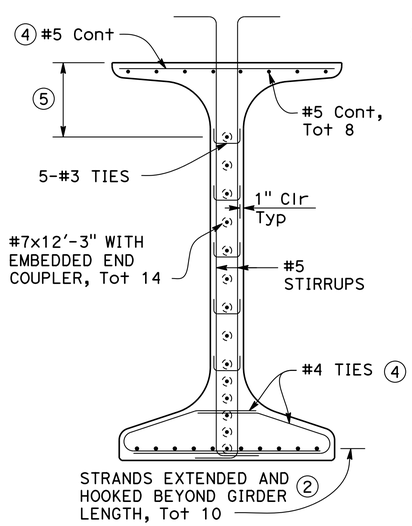

SECTION A-A ③

3/4"=1'-0"

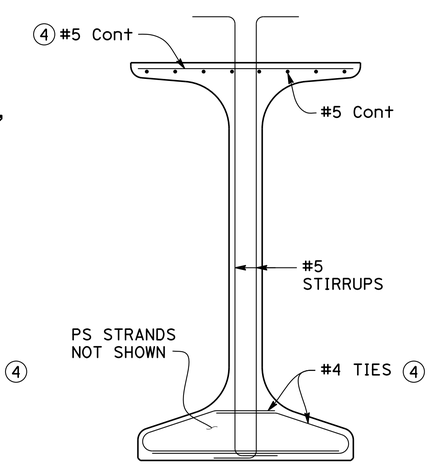

SECTION B-B ③

3/4"=1'-0"

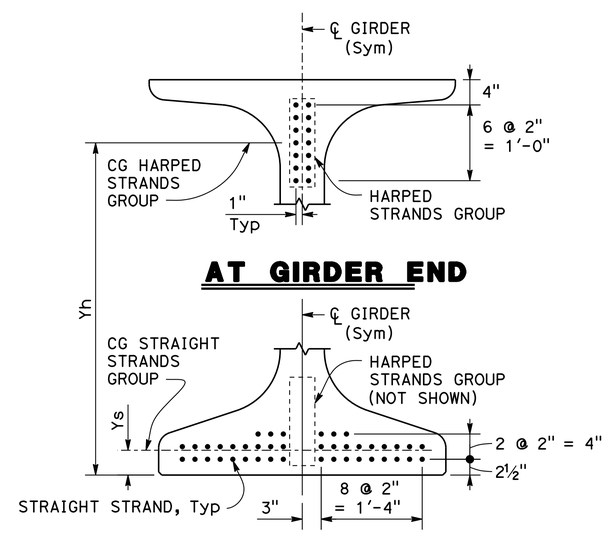

AT GIRDER END

AT ℄ SPAN

PS STRAND LAYOUT

1"=1'-0"

NOTE:
THE CONTRACTOR SHALL VERIFY ALL CONTROLLING FIELD DIMENSIONS BEFORE ORDERING OR FABRICATING ANY MATERIAL

③ See "GIRDER END REINFORCEMENT" & "GIRDER END EMBEDDED COUPLER INSERT ASSEMBLY" for details not shown

④ Space with #5 stirrups

⑤ Adjust as needed to Clr harped strands

PRECAST GIRDER PRESTRESSING NOTES

1. PRESTRESSING STEEL:

GRADE 270 KSI GUARANTEED ULTIMATE TENSILE STRENGTH (G.U.T.S.) 0.6" DIAMETER SEVEN-WIRE LOW RELAXATION STRANDS

2. JACKING FORCE:

PRESTRESSING STEEL SHALL BE JACKED/STRESSED IN SUCH A MANNER THAT EACH STRAND FROM END-TO-END DEVELOPS A UNIFORM TENSILE STRESS OF 75% G.U.T.S. PRIOR TO RELEASE OF JACKING FORCE AFTER GIRDER HAS REACHED (43.94 KIPS PER STRAND) MINIMUM REQUIRED CONCRETE STRENGTH. SEE TABLE FOR PJACK

3. PRESTRESS LOSSES:

INSTANTANEOUS LOSS AT TRANSFER DUE TO ELASTIC SHORTENING = 16.433 KSI
TIME DEPENDENT LOSS DUE TO CREEP, SHRINKAGE AND RELAXATION = 20.784 KSI

HOLD-DOWN HARPING DEVICES SHALL BE SUCH THAT THERE IS NO PRESTRESS LOSS DUE TO FRICTION EFFECTS IN THE HARPED STRANDS I.E. CONSTANT UNIFORM FORCE IS MAINTAINED IN EACH STRAND PRIOR TO TRANSFER OF JACKING FORCE

4. CONCRETE STRENGTHS:

f'ci = Min GIRDER CONCRETE STRENGTH AT TRANSFER OF JACKING FORCE
f'c = Min GIRDER CONCRETE STRENGTH AT 28 DAYS

Reza Erfanian
DESIGN OVERSIGHT Reza Erfanian
12/19/12
SIGN OFF DATE

	BY	CHECKED
DESIGN	P. SHINN	C. HARRINGTON
DETAILS	T. KOONS	C. HARRINGTON
QUANTITIES	M. LEWIS	C. HARRINGTON

PREPARED FOR THE STATE OF CALIFORNIA DEPARTMENT OF TRANSPORTATION

S. CHEE
PROJECT ENGINEER

BRIDGE NO. 29-0350
POST MILES T14.83

SR4 CROSSTOWN VIADUCT

PC/PS CONCRETE GIRDER DETAILS No. 3

DESIGN DETAIL SHEET (ENGLISH) (REV.7/16/10)

ORIGINAL SCALE IN INCHES FOR REDUCED PLANS 0 1 2 3

UNIT: 06241
PROJECT NUMBER & PHASE: 10000002291 CONTRACT NO.: 10-0S1101

DISREGARD PRINTS BEARING EARLIER REVISION DATES

REVISION DATES 8/10/16 08/12/09 04/12/11 11/27/12

SHEET 83 OF 111

FILE => 29-0350-o-g_dt03.dgn

USERNAME => s128843 DATE PLOTTED => 23-JUL-2013 TIME PLOTTED => 10:04

DIST	COUNTY	ROUTE	POST MILES TOTAL PROJECT	SHEET No	TOTAL SHEETS
10	SJ	4,5	Var	424	486

REGISTERED CIVIL ENGINEER 11/27/12 DATE

7-22-13
PLANS APPROVAL DATE

REGISTERED PROFESSIONAL ENGINEER SIEW W. CHEE No. C41906 Exp. 03/31/31 CIVIL STATE OF CALIFORNIA

The State of California or its officers or agents shall not be responsible for the accuracy or completeness of electronic copies of this plan sheet.

SAN JOAQUIN COUNCIL OF GOVERNMENTS
555 E. WEBER AVENUE
STOCKTON, CA 95202

T. Y. LIN INTERNATIONAL
CONSULTING ENGINEERS, INC.
TWO HARRISON STREET, SUITE 500
SAN FRANCISCO, CA 94105

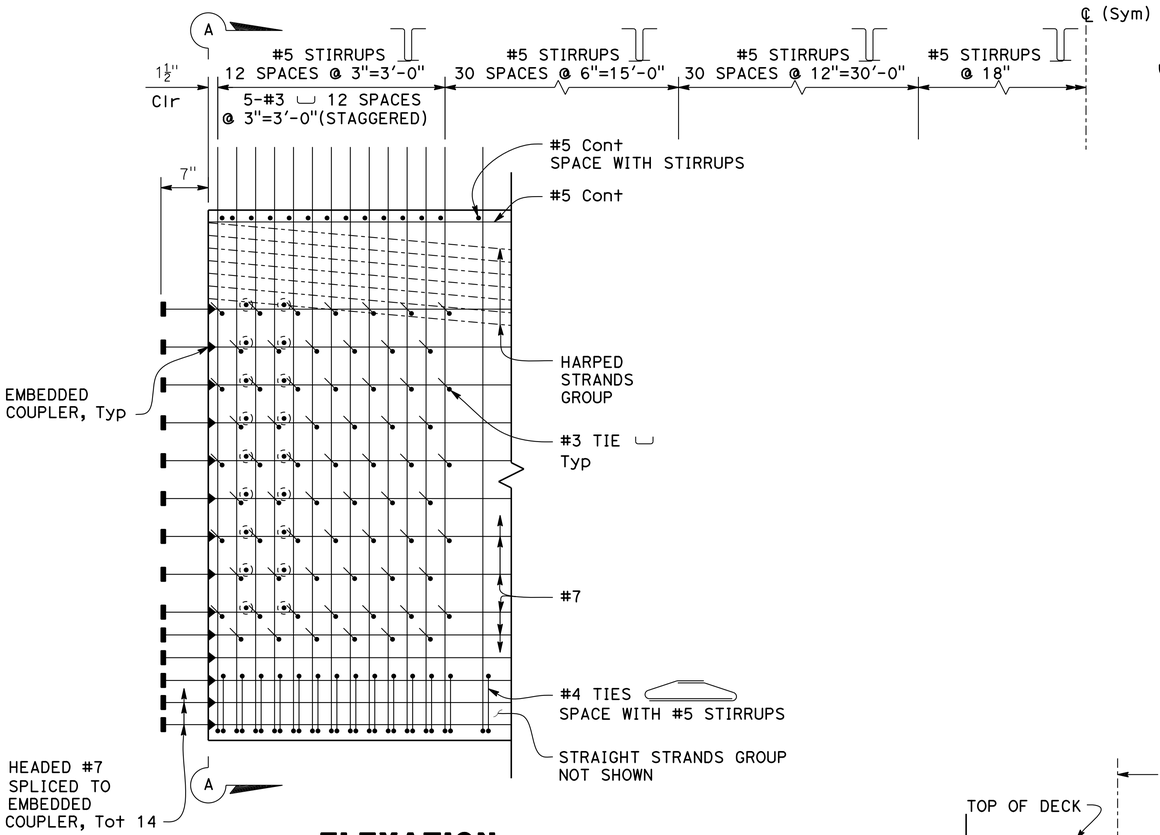

ELEVATION

GIRDER END REINFORCEMENT

1"=1'-0"

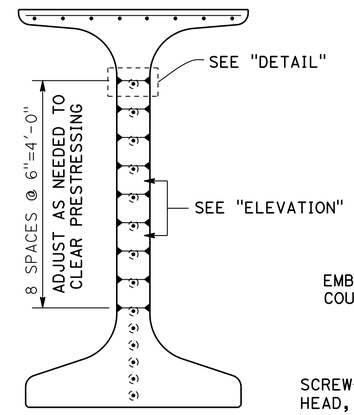

SECTION A-A

3/4"=1'-0"

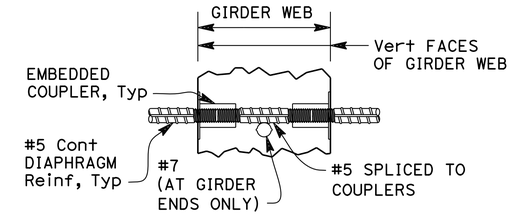

DETAIL

1:4

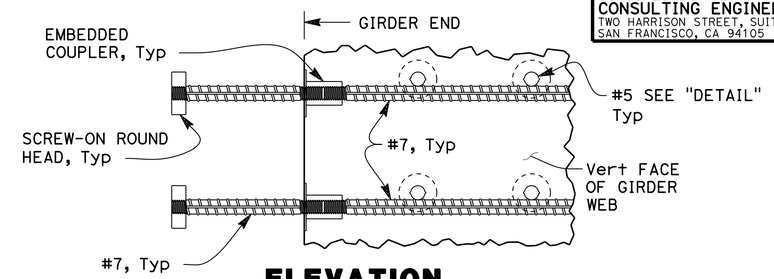

ELEVATION

1:4

NOTE: COUPLERS SHALL BE "SERVICE BUTT SPLICE"

GIRDER END EMBEDDED COUPLER INSERT ASSEMBLY

GIRDER NOTES:

1. CONTRACTOR SHALL EXERCISE CAUTION IN HANDLING, STORING, TRANSPORTING AND ERECTING GIRDERS. GIRDERS SHALL BE MAINTAINED IN AN UPRIGHT POSITION AND SUPPORTED AT POINTS DESIGNED BY THE CONTRACTOR TO ENSURE STABILITY AND PREVENT DAMAGE TO THE GIRDERS AT ALL TIMES DURING CONSTRUCTION.

2. GIRDERS SHALL BE ANALYZED AND CHECKED BY THE CONTRACTOR TO ENSURE THAT THEY ARE BRACED ADEQUATELY AT ALL TIMES DURING CONSTRUCTION TO PREVENT DAMAGE DUE TO LATERAL (WEAK-AXIS) BENDING.

3. CONTRACTOR SHALL BE RESPONSIBLE FOR THE DESIGN OF LIFTING DEVICES AND TEMPORARY BRACINGS. LATERAL STABILITY OF GIRDER DURING LIFTING IS INFLUENCED BY LOCATIONS OF LIFTING DEVICES WITH RESPECT TO GIRDER ENDS, CONCRETE STRENGTH, AND BY TEMPORARY BRACINGS. CONTRACTOR SHALL PROVIDE TEMPORARY P/S STRANDS IN THE GIRDER TOP FLANGE, AS NEEDED TO INCREASE LATERAL STABILITY FACTOR OF SAFETY DURING LIFTING, SUBJECT TO THE APPROVAL OF THE ENGINEER.

NOTE:
THE CONTRACTOR SHALL VERIFY ALL CONTROLLING FIELD DIMENSIONS BEFORE ORDERING OR FABRICATING ANY MATERIAL

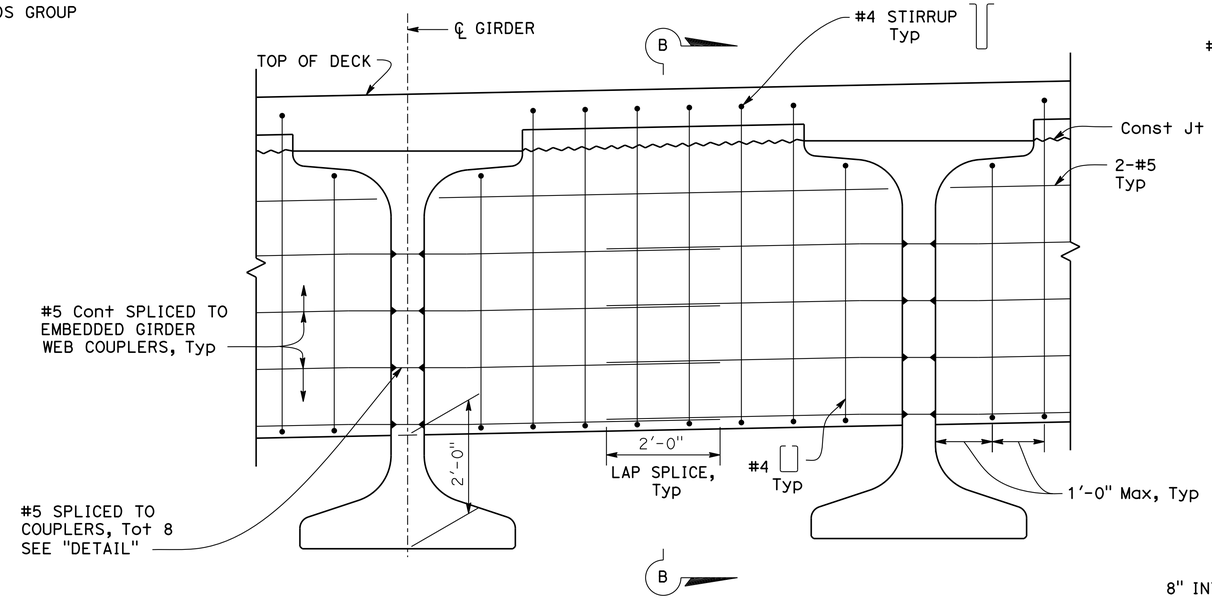

NOTE: COUPLERS SHALL BE "SERVICE BUTT SPLICE"

INTERMEDIATE DIAPHRAGM DETAIL

3/4"=1'-0"

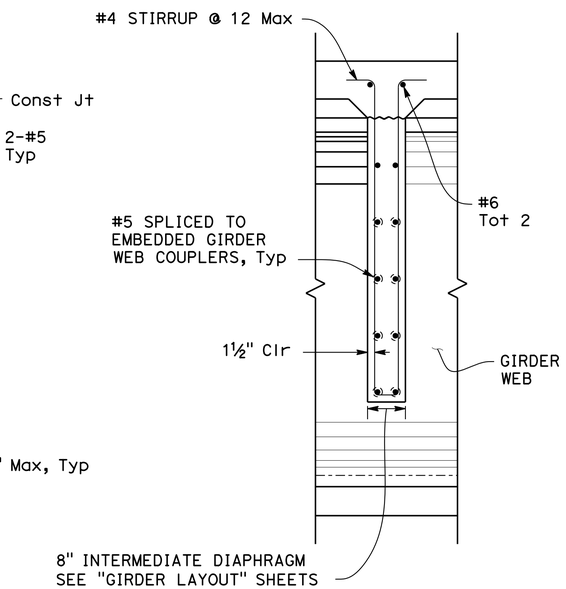

SECTION B-B

3/4"=1'-0"

Reza Erfanian
DESIGN OVERSIGHT Reza Erfanian
12/19/12
SIGN OFF DATE

	BY	CHECKED
DESIGN	P. SHINN	C. HARRINGTON
DETAILS	T. KOONS	C. HARRINGTON
QUANTITIES	M. LEWIS	C. HARRINGTON

PREPARED FOR THE
STATE OF CALIFORNIA
DEPARTMENT OF TRANSPORTATION

S. CHEE
PROJECT ENGINEER

BRIDGE NO. 29-0350
POST MILES T14.83

SR4 CROSSTOWN VIADUCT
PC/PS CONCRETE GIRDER DETAILS No. 4

DESIGN DETAIL SHEET (ENGLISH) (REV.7/16/10)

ORIGINAL SCALE IN INCHES FOR REDUCED PLANS 0 1 2 3

UNIT: 06241
PROJECT NUMBER & PHASE: 10000002291 CONTRACT NO.: 10-0S1101

DISREGARD PRINTS BEARING EARLIER REVISION DATES

REVISION DATES 8/10/11 6/08/12 9/04/12 11/27/12

SHEET 84 OF 111

FILE => 29-0350-o-g_dt04.dgn

USERNAME => s128843 DATE PLOTTED => 23-JUL-2013 TIME PLOTTED => 10:04

DIST	COUNTY	ROUTE	POST MILES TOTAL PROJECT	SHEET No	TOTAL SHEETS
10	SJ	4,5	Var	425	486

REGISTERED CIVIL ENGINEER 11/27/12 DATE

7-22-13
PLANS APPROVAL DATE

REGISTERED PROFESSIONAL ENGINEER KIANOUSH HARIRSAZ No. C39591 Exp. 12/31/13 CIVIL STATE OF CALIFORNIA

The State of California or its officers or agents shall not be responsible for the accuracy or completeness of electronic copies of this plan sheet.

SAN JOAQUIN COUNCIL OF GOVERNMENTS
555 E. WEBER AVENUE
STOCKTON, CA 95202

RAJAPPAN & MEYER CONSULTING ENGINEERS, INC.
1038 LEIGH AVE, SUITE 100
SAN JOSE, CA 95126

GIRDER DESIGNATION	GIRDER DEPTH "D"	LENGTH "L"	GIRDER END TYPE		TOTAL No. OF STRANDS REQUIRED PER GIRDER	No. OF STRAIGHT STRANDS	No. OF HARPED STRANDS	CG STRAIGHT STRANDS GROUP "Ys"	CG HARPED STRANDS GROUP "Yh"		P = JACKING FORCE (KIPS) (TOTAL ALL STRANDS)	CONCRETE STRENGTH (KSI)		No. OF STIRRUP SPACING			GIRDER END ANGLE		DEFLECTION COMPONENT AT MID-SPAN (IN)	
			END 1	END 2					@ ENDS	@ ℄ SPAN		f'ci	f'c	"a"	"b"	"c"	θ1	θ2	① DECK DL	② RAIL DL
G_{W01a}	5'-0"	101.06'	TYPE B	TYPE A	34	28	6	3.21"	4'-6"	4.5"	1,510	6.5	8.0	14	30	30	96°19'29"	88°01'41"	1.00"	0.04"
G_{W01b}	5'-0"	102.66'	TYPE B	TYPE A	34	28	6	3.21"	4'-6"	4.5"	1,510	6.5	8.0	14	30	30	96°17'28"	87°59'40"	1.19"	0.04"
G_{W01c}	5'-0"	104.25'	TYPE B	TYPE A	34	28	6	3.21"	4'-6"	4.5"	1,510	6.5	8.0	14	30	30	96°15'30"	87°57'43"	1.27"	0.05"
G_{W01d}	5'-0"	105.84'	TYPE B	TYPE A	34	28	6	3.21"	4'-6"	4.5"	1,510	6.5	8.0	14	30	30	96°13'36"	87°55'49"	1.26"	0.05"
G_{W02a}	5'-0"	104.91'	TYPE A	TYPE A	32	26	6	3.12"	4'-6"	4.5"	1,420	6.5	8.0	14	30	30	92°08'48"	87°51'12"	1.28"	0.01"
G_{W02b}	5'-0"	105.74'	TYPE A	TYPE A	32	26	6	3.12"	4'-6"	4.5"	1,420	6.5	8.0	14	30	30	92°08'48"	87°51'12"	1.47"	0.01"
G_{W02c}	5'-0"	106.56'	TYPE A	TYPE A	32	26	6	3.12"	4'-6"	4.5"	1,420	6.5	8.0	14	30	30	92°08'48"	87°51'12"	1.52"	0.01"
G_{W02d}	5'-0"	107.39'	TYPE A	TYPE A	32	26	6	3.12"	4'-6"	4.5"	1,420	6.5	8.0	14	30	30	92°08'48"	87°51'12"	1.46"	0.01"
G_{W03a}	5'-0"	105.95'	TYPE A	TYPE B	36	30	6	3.30"	4'-6"	4.5"	1,590	6.5	8.0	14	30	45	92°08'48"	87°51'12"	1.23"	0.05"
G_{W03b}	5'-0"	106.78'	TYPE A	TYPE B	36	30	6	3.30"	4'-6"	4.5"	1,590	6.5	8.0	14	30	45	92°08'48"	87°51'12"	1.40"	0.05"
G_{W03c}	5'-0"	107.60'	TYPE A	TYPE B	36	30	6	3.30"	4'-6"	4.5"	1,590	6.5	8.0	14	30	45	92°08'48"	87°51'12"	1.45"	0.06"
G_{W03d}	5'-0"	108.43'	TYPE A	TYPE B	36	30	6	3.30"	4'-6"	4.5"	1,590	6.5	8.0	14	30	45	92°08'48"	87°51'12"	1.39"	0.06"
G_{W04a}	5'-0"	109.31'	TYPE A	TYPE A	38	32	6	3.38"	4'-6"	4.5"	1,680	6.5	8.0	14	45	55	92°14'39"	87°45'21"	1.20"	0.05"
G_{W04b}	5'-0"	110.17'	TYPE A	TYPE A	38	32	6	3.38"	4'-6"	4.5"	1,680	6.5	8.0	14	45	55	92°14'39"	87°45'21"	1.46"	0.05"
G_{W04c}	5'-0"	111.03'	TYPE A	TYPE A	38	32	6	3.38"	4'-6"	4.5"	1,680	6.5	8.0	14	45	55	92°14'39"	87°45'21"	1.56"	0.05"
G_{W04d}	5'-0"	111.89'	TYPE A	TYPE A	38	32	6	3.38"	4'-6"	4.5"	1,680	6.5	8.0	14	45	55	92°14'39"	87°45'21"	1.58"	0.05"
G_{W05a}	5'-0"	107.57'	TYPE A	TYPE B	36	30	6	3.30"	4'-6"	4.5"	1,590	6.5	8.0	14	45	55	90°41'49"	85°12'37"	1.57"	0.05"
G_{W05b}	5'-0"	108.63'	TYPE A	TYPE B	36	30	6	3.30"	4'-6"	4.5"	1,590	6.5	8.0	14	45	55	90°40'26"	85°11'14"	1.62"	0.05"
G_{W05c}	5'-0"	109.69'	TYPE A	TYPE B	36	30	6	3.30"	4'-6"	4.5"	1,590	6.5	8.0	14	45	55	90°39'04"	85°09'53"	1.64"	0.05"
G_{W05d}	5'-0"	110.75'	TYPE A	TYPE B	36	30	6	3.30"	4'-6"	4.5"	1,590	6.5	8.0	14	45	55	90°37'45"	85°08'33"	1.42"	0.05"
G_{W09a}	6'-0"	143.54'	TYPE B	TYPE A	54	44	10	4.05"	5'-4"	6.5"	2,380	7.2	9.0	14	60	60	90°00'00"	90°00'00"	2.77"	0.13"
G_{W09b}	6'-0"	143.54'	TYPE B	TYPE A	54	44	10	4.05"	5'-4"	6.5"	2,380	7.2	9.0	14	60	60	90°00'00"	90°00'00"	2.86"	0.12"
G_{W09c}	6'-0"	143.54'	TYPE B	TYPE A	54	44	10	4.05"	5'-4"	6.5"	2,380	7.2	9.0	14	60	60	90°00'00"	90°00'00"	2.86"	0.12"
G_{W09d}	6'-0"	143.54'	TYPE B	TYPE A	54	44	10	4.05"	5'-4"	6.5"	2,380	7.2	9.0	14	60	60	90°00'00"	90°00'00"	2.77"	0.13"
G_{W10a}	6'-0"	131.25'	TYPE A	TYPE A	40	34	6	3.44"	5'-6"	4.5"	1,770	6.5	8.0	14	60	45	90°00'00"	90°00'00"	2.03"	0.00"
G_{W10b}	6'-0"	131.25'	TYPE A	TYPE A	40	34	6	3.44"	5'-6"	4.5"	1,770	6.5	8.0	14	60	45	90°00'00"	90°00'00"	2.10"	0.00"
G_{W10c}	6'-0"	131.25'	TYPE A	TYPE A	40	34	6	3.44"	5'-6"	4.5"	1,770	6.5	8.0	14	60	45	90°00'00"	90°00'00"	2.10"	0.00"
G_{W10d}	6'-0"	131.25'	TYPE A	TYPE A	40	34	6	3.44"	5'-6"	4.5"	1,770	6.5	8.0	14	60	45	90°00'00"	90°00'00"	2.03"	0.00"
G_{W11a}	6'-0"	132.29'	TYPE A	TYPE B	46	38	8	3.66"	5'-5"	5.5"	2,030	6.5	8.0	14	45	40	90°00'00"	90°00'00"	1.96"	0.09"
G_{W11b}	6'-0"	132.29'	TYPE A	TYPE B	46	38	8	3.66"	5'-5"	5.5"	2,030	6.5	8.0	14	45	40	90°00'00"	90°00'00"	2.02"	0.09"
G_{W11c}	6'-0"	132.29'	TYPE A	TYPE B	46	38	8	3.66"	5'-5"	5.5"	2,030	6.5	8.0	14	45	40	90°00'00"	90°00'00"	2.02"	0.09"
G_{W11d}	6'-0"	132.29'	TYPE A	TYPE B	46	38	8	3.66"	5'-5"	5.5"	2,030	6.5	8.0	14	45	40	90°00'00"	90°00'00"	1.96"	0.09"
G_{W12a}	6'-0"	130.75'	TYPE A	TYPE A	44	36	8	3.50"	5'-5"	5.5"	1,940	6.5	8.0	14	45	60	90°00'00"	90°00'00"	1.96"	0.08"
G_{W12b}	6'-0"	130.75'	TYPE A	TYPE A	44	36	8	3.50"	5'-5"	5.5"	1,940	6.5	8.0	14	45	60	90°00'00"	90°00'00"	2.02"	0.08"
G_{W12c}	6'-0"	130.75'	TYPE A	TYPE A	44	36	8	3.50"	5'-5"	5.5"	1,940	6.5	8.0	14	45	60	90°00'00"	90°00'00"	2.02"	0.08"
G_{W12d}	6'-0"	130.75'	TYPE A	TYPE A	44	36	8	3.50"	5'-5"	5.5"	1,940	6.5	8.0	14	45	60	90°00'00"	90°00'00"	1.96"	0.08"
G_{W13a}	6'-0"	131.25'	TYPE A	TYPE A	46	38	8	3.66"	5'-5"	5.5"	2,030	6.5	8.0	14	45	40	90°00'00"	90°00'00"	2.03"	0.01"
G_{W13b}	6'-0"	131.25'	TYPE A	TYPE A	46	38	8	3.66"	5'-5"	5.5"	2,030	6.5	8.0	14	45	40	90°00'00"	90°00'00"	2.10"	0.01"
G_{W13c}	6'-0"	131.25'	TYPE A	TYPE A	46	38	8	3.66"	5'-5"	5.5"	2,030	6.5	8.0	14	45	40	90°00'00"	90°00'00"	2.10"	0.01"
G_{W13d}	6'-0"	131.25'	TYPE A	TYPE A	46	38	8	3.66"	5'-5"	5.5"	2,030	6.5	8.0	14	45	40	90°00'00"	90°00'00"	2.03"	0.01"
G_{W14a}	6'-0"	130.75'	TYPE A	TYPE A	46	38	8	3.66"	5'-5"	5.5"	2,030	6.5	8.0	14	45	40	90°00'00"	90°00'00"	1.96"	0.08"
G_{W14b}	6'-0"	130.75'	TYPE A	TYPE A	46	38	8	3.66"	5'-5"	5.5"	2,030	6.5	8.0	14	45	40	90°00'00"	90°00'00"	2.02"	0.08"
G_{W14c}	6'-0"	130.75'	TYPE A	TYPE A	46	38	8	3.66"	5'-5"	5.5"	2,030	6.5	8.0	14	45	40	90°00'00"	90°00'00"	2.02"	0.08"
G_{W14d}	6'-0"	130.75'	TYPE A	TYPE A	46	38	8	3.66"	5'-5"	5.5"	2,030	6.5	8.0	14	45	40	90°00'00"	90°00'00"	1.96"	0.08"

NOTES:

1. For "STRAND LAYOUT"and stirrup layout, see "PC/PS CONCRETE GIRDER DETAILS No. 1" sheet.
2. For "GIRDER END TYPE" and "GIRDER END ANGLE" see "PC/PS CONCRETE GIRDER DETAILS No. 2" sheet.

NOTE:
THE CONTRACTOR SHALL VERIFY ALL CONTROLLING FIELD DIMENSIONS BEFORE ORDERING OR FABRICATING ANY MATERIAL

DESIGN OVERSIGHT Reza Erfanian
12/19/12
SIGN OFF DATE

	BY	CHECKED
DESIGN	P. SHINN	N. VO / S. SHI
DETAILS	P. SHINN	N. VO / S. SHI
QUANTITIES	S. DESALEGN	M. PHILIPS

PREPARED FOR THE STATE OF CALIFORNIA DEPARTMENT OF TRANSPORTATION

P. SHINN
PROJECT ENGINEER

BRIDGE NO. 29-0350
POST MILES T14.83

SR4 CROSSTOWN VIADUCT
GIRDER SCHEDULE No. 1

DESIGN DETAIL SHEET (ENGLISH) (REV.7/16/10)

ORIGINAL SCALE IN INCHES FOR REDUCED PLANS 0 1 2 3

UNIT: 1455
PROJECT NUMBER & PHASE: 10000002291 CONTRACT NO.: 10-0S1101

DISREGARD PRINTS BEARING EARLIER REVISION DATES 8/10/11 6/08/12 9/04/12 11/27/12

SHEET 85 OF 111

FILE => 29-0350-o-g_sch01.dgn

USERNAME => s128843 DATE PLOTTED => 23-JUL-2013 TIME PLOTTED => 10:04

DIST	COUNTY	ROUTE	POST MILES TOTAL PROJECT	SHEET No	TOTAL SHEETS
10	SJ	4,5	Var	426	486

REGISTERED CIVIL ENGINEER — DATE 11/27/12

7-22-13
PLANS APPROVAL DATE

REGISTERED PROFESSIONAL ENGINEER — KIANOUSH HARIRSAZ — No. C39591 — Exp. 12/31/13 — CIVIL — STATE OF CALIFORNIA

The State of California or its officers or agents shall not be responsible for the accuracy or completeness of electronic copies of this plan sheet.

SAN JOAQUIN COUNCIL OF GOVERNMENTS
555 E. WEBER AVENUE
STOCKTON, CA 95202

RAJAPPAN & MEYER CONSULTING ENGINEERS, INC.
1038 LEIGH AVE, SUITE 100
SAN JOSE, CA 95126

GIRDER DESIGNATION	GIRDER DEPTH "D"	LENGTH "L"	GIRDER END TYPE		TOTAL No. OF STRANDS REQUIRED PER GIRDER	No. OF STRAIGHT STRANDS	No. OF HARPED STRANDS	CG STRAIGHT STRANDS GROUP "Ys"	CG HARPED STRANDS GROUP "Yh"		P = JACKING FORCE (KIPS) (TOTAL ALL STRANDS)	CONCRETE STRENGTH (KSI)		No. OF STIRRUP SPACING			GIRDER END ANGLE		DEFLECTION COMPONENT AT MID-SPAN (IN)	
			END 1	END 2					@ ENDS	@ ℄ SPAN		f'ci	f'c	"a"	"b"	"c"	θ1	θ2	① DECK DL	② RAIL DL
G_{W15a}	6'-0"	146.29'	TYPE B	TYPE A	56	40	16	3.80"	5'-1"	9.5"	2,470	7.2	9.0	14	90	45	90°00'00"	90°00'00"	2.77"	0.12"
G_{W15b}	6'-0"	146.29'	TYPE B	TYPE A	56	40	16	3.80"	5'-1"	9.5"	2,470	7.2	9.0	14	90	45	90°00'00"	90°00'00"	2.86"	0.12"
G_{W15c}	6'-0"	146.29'	TYPE B	TYPE A	56	40	16	3.80"	5'-1"	9.5"	2,470	7.2	9.0	14	90	45	90°00'00"	90°00'00"	2.86"	0.12"
G_{W15d}	6'-0"	146.29'	TYPE B	TYPE A	56	40	16	3.80"	5'-1"	9.5"	2,470	7.2	9.0	14	90	45	90°00'00"	90°00'00"	2.77"	0.12"
G_{W16a}	6'-0"	145.07'	TYPE A	TYPE A	48	42	6	3.93"	5'-6"	4.5"	2,120	6.0	8.0	14	60	45	90°08'14"	89°47'46"	2.82"	0.01"
G_{W16b}	6'-0"	145.13'	TYPE A	TYPE A	48	42	6	3.93"	5'-6"	4.5"	2,120	6.0	8.0	14	60	45	90°08'14"	89°47'46"	2.95"	0.01"
G_{W16c}	6'-0"	145.20'	TYPE A	TYPE A	48	42	6	3.93"	5'-6"	4.5"	2,120	6.0	8.0	14	60	45	90°08'14"	89°47'47"	2.95"	0.01"
G_{W16d}	6'-0"	145.26'	TYPE A	TYPE A	48	42	6	3.93"	5'-6"	4.5"	2,120	6.0	8.0	14	60	45	90°08'14"	89°47'47"	2.89"	0.01"
G_{W17a}	6'-0"	144.52'	TYPE A	TYPE A	56	46	10	4.05"	5'-4"	6.5"	2,470	7.2	9.0	14	90	45	90°12'45"	89°47'18"	2.69"	0.12"
G_{W17b}	6'-0"	144.60'	TYPE A	TYPE A	56	46	10	4.05"	5'-4"	6.5"	2,470	7.2	9.0	14	90	45	90°12'45"	89°47'18"	2.82"	0.12"
G_{W17c}	6'-0"	144.68'	TYPE A	TYPE A	56	46	10	4.05"	5'-4"	6.5"	2,470	7.2	9.0	14	90	45	90°12'45"	89°47'18"	2.83"	0.12"
G_{W17d}	6'-0"	144.76'	TYPE A	TYPE A	56	46	10	4.05"	5'-4"	6.5"	2,470	7.2	9.0	14	90	45	90°12'45"	89°47'18"	2.77"	0.12"
G_{W18a}	6'-0"	146.08'	TYPE B	TYPE A	56	40	16	3.80"	5'-1"	9.5"	2,470	7.2	9.0	14	90	60	90°12'38"	89°49'46"	2.67"	0.11"
G_{W18b}	6'-0"	146.16'	TYPE B	TYPE A	56	40	16	3.80"	5'-1"	9.5"	2,470	7.2	9.0	14	90	60	90°12'38"	89°49'46"	2.79"	0.11"
G_{W18c}	6'-0"	146.23'	TYPE B	TYPE A	56	40	16	3.80"	5'-1"	9.5"	2,470	7.2	9.0	14	90	60	90°12'37"	89°49'46"	2.80"	0.11"
G_{W18d}	6'-0"	146.30'	TYPE B	TYPE A	56	40	16	3.80"	5'-1"	9.5"	2,470	7.2	9.0	14	90	60	90°12'37"	89°49'46"	2.74"	0.11"
G_{W19a}	6'-0"	145.25'	TYPE A	TYPE A	50	44	6	4.05"	5'-6"	4.5"	2,210	6.0	8.0	14	60	45	90°00'00"	90°00'00"	2.81"	0.04"
G_{W19b}	6'-0"	145.25'	TYPE A	TYPE A	50	44	6	4.05"	5'-6"	4.5"	2,210	6.0	8.0	14	60	45	90°00'00"	90°00'00"	2.90"	0.04"
G_{W19c}	6'-0"	145.25'	TYPE A	TYPE A	50	44	6	4.05"	5'-6"	4.5"	2,210	6.0	8.0	14	60	45	90°00'00"	90°00'00"	2.90"	0.04"
G_{W19d}	6'-0"	145.25'	TYPE A	TYPE A	50	44	6	4.05"	5'-6"	4.5"	2,210	6.0	8.0	14	60	45	90°00'00"	90°00'00"	2.81"	0.04"
G_{W20a}	6'-0"	127.25'	TYPE A	TYPE A	38	34	4	3.44"	5'-7"	3.5"	1,680	6.5	8.0	14	60	45	90°00'00"	90°00'00"	1.91"	0.02"
G_{W20b}	6'-0"	127.25'	TYPE A	TYPE A	38	34	4	3.44"	5'-7"	3.5"	1,680	6.5	8.0	14	60	45	90°00'00"	90°00'00"	1.97"	0.02"
G_{W20c}	6'-0"	127.25'	TYPE A	TYPE A	38	34	4	3.44"	5'-7"	3.5"	1,680	6.5	8.0	14	60	45	90°00'00"	90°00'00"	1.97"	0.02"
G_{W20d}	6'-0"	127.25'	TYPE A	TYPE A	38	34	4	3.44"	5'-7"	3.5"	1,680	6.5	8.0	14	60	45	90°00'00"	90°00'00"	1.91"	0.02"
G_{W21a}	6'-0"	128.29'	TYPE A	TYPE B	42	34	8	3.44"	5'-5"	5.5"	1,860	6.5	8.0	14	60	45	90°00'00"	90°00'00"	1.83"	0.08"
G_{W21b}	6'-0"	128.29'	TYPE A	TYPE B	42	34	8	3.44"	5'-5"	5.5"	1,860	6.5	8.0	14	60	45	90°00'00"	90°00'00"	1.89"	0.07"
G_{W21c}	6'-0"	128.29'	TYPE A	TYPE B	42	34	8	3.44"	5'-5"	5.5"	1,860	6.5	8.0	14	60	45	90°00'00"	90°00'00"	1.89"	0.07"
G_{W21d}	6'-0"	128.29'	TYPE A	TYPE B	42	34	8	3.44"	5'-5"	5.5"	1,860	6.5	8.0	14	60	45	90°00'00"	90°00'00"	1.83"	0.08"

NOTES:

1. For "STRAND LAYOUT"and stirrup layout, see "PC/PS CONCRETE GIRDER DETAILS No. 1" sheet.
2. For "GIRDER END TYPE" and "GIRDER END ANGLE" see "PC/PS CONCRETE GIRDER DETAILS No. 2" sheet.

NOTE:
THE CONTRACTOR SHALL VERIFY ALL CONTROLLING FIELD DIMENSIONS BEFORE ORDERING OR FABRICATING ANY MATERIAL

DESIGN OVERSIGHT — Reza Erfanian
12/19/12
SIGN OFF DATE

	BY	CHECKED
DESIGN	P. SHINN	N. VO / S. SHI
DETAILS	P. SHINN	N. VO / S. SHI
QUANTITIES	S. DESALEGN	M. PHILIPS

PREPARED FOR THE STATE OF CALIFORNIA DEPARTMENT OF TRANSPORTATION

P. SHINN
PROJECT ENGINEER

BRIDGE NO. 29-0350
POST MILES T14.83

SR4 CROSSTOWN VIADUCT
GIRDER SCHEDULE No. 2

DESIGN DETAIL SHEET (ENGLISH) (REV.7/16/10)

ORIGINAL SCALE IN INCHES FOR REDUCED PLANS 0 1 2 3

UNIT: 1455
PROJECT NUMBER & PHASE: 10000002291
CONTRACT NO.: 10-0S1101

DISREGARD PRINTS BEARING EARLIER REVISION DATES → REVISION DATES 8/10/11 6/08/12 9/04/12 11/27/12

SHEET 86 OF 111

FILE => 29-0350-o-g_sch02.dgn

USERNAME => s128843 DATE PLOTTED => 23-JUL-2013 TIME PLOTTED => 10:04

DIST	COUNTY	ROUTE	POST MILES TOTAL PROJECT	SHEET No	TOTAL SHEETS
10	SJ	4,5	Var	427	486

REGISTERED CIVIL ENGINEER 11/27/12 DATE

7-22-13
PLANS APPROVAL DATE

REGISTERED PROFESSIONAL ENGINEER KIANOUSH HARIRSAZ No. C39591 Exp. 12/31/13 CIVIL STATE OF CALIFORNIA

The State of California or its officers or agents shall not be responsible for the accuracy or completeness of electronic copies of this plan sheet.

SAN JOAQUIN COUNCIL OF GOVERNMENTS
555 E. WEBER AVENUE
STOCKTON, CA 95202

RAJAPPAN & MEYER CONSULTING ENGINEERS, INC.
1038 LEIGH AVE, SUITE 100
SAN JOSE, CA 95126

GIRDER DESIGNATION	GIRDER DEPTH "D"	LENGTH "L"	GIRDER END TYPE		TOTAL No. OF STRANDS REQUIRED PER GIRDER	No. OF STRAIGHT STRANDS	No. OF HARPED STRANDS	CG STRAIGHT STRANDS GROUP "Ys"	CG HARPED STRANDS GROUP "Yh"		P = JACKING FORCE (KIPS) (TOTAL ALL STRANDS)	CONCRETE STRENGTH (KSI)		No. OF STIRRUP SPACING			GIRDER END ANGLE		DEFLECTION COMPONENT AT MID-SPAN (IN)	
			END 1	END 2					@ ENDS	@ ℄ SPAN		f'ci	f'c	"a"	"b"	"c"	θ1	θ2	① DECK DL	② RAIL DL
G_{E01a}	5'-0"	113.16'	TYPE B	TYPE A	46	38	8	3.66"	4'-5"	5.5"	2,030	7.2	9.0	14	45	30	92°28'19"	89°00'17"	1.43"	0.07"
G_{E01b}	5'-0"	113.80'	TYPE B	TYPE A	46	38	8	3.66"	4'-5"	5.5"	2,030	7.2	9.0	14	45	30	92°05'28"	88°37'26"	1.76"	0.06"
G_{E01c}	5'-0"	114.44'	TYPE B	TYPE A	46	38	8	3.66"	4'-5"	5.5"	2,030	7.2	9.0	14	45	30	91°42'52"	88°14'50"	1.82"	0.07"
G_{E01d}	5'-0"	115.08'	TYPE B	TYPE A	46	38	8	3.66"	4'-5"	5.5"	2,030	7.2	9.0	14	45	30	91°20'33"	87°52'31"	1.74"	0.07"
G_{E02a}	5'-0"	111.87'	TYPE A	TYPE A	44	36	8	3.50"	4'-5"	5.5"	1,940	7.2	9.0	14	45	30	94°48'36"	90°06'13"	1.69"	0.01"
G_{E02b}	5'-0"	112.80'	TYPE A	TYPE A	44	36	8	3.50"	4'-5"	5.5"	1,940	7.2	9.0	14	45	30	93°57'51"	89°15'28"	1.96"	0.01"
G_{E02c}	5'-0"	113.72'	TYPE A	TYPE A	44	36	8	3.50"	4'-5"	5.5"	1,940	7.2	9.0	14	45	30	93°07'55"	88°25'32"	2.03"	0.01"
G_{E02d}	5'-0"	114.70'	TYPE A	TYPE A	44	36	8	3.50"	4'-5"	5.5"	1,940	7.2	9.0	14	45	30	92°18'47"	87°36'24"	1.87"	0.01"
G_{E03a}	5'-0"	112.61'	TYPE A	TYPE B	50	42	8	3.93"	4'-5"	5.5"	2,210	7.2	9.0	14	45	30	92°23'43"	87°41'20"	1.46"	0.06"
G_{E03b}	5'-0"	113.64'	TYPE A	TYPE B	50	42	8	3.93"	4'-5"	5.5"	2,210	7.2	9.0	14	45	30	92°23'42"	87°41'19"	1.86"	0.06"
G_{E03c}	5'-0"	114.68'	TYPE A	TYPE B	50	42	8	3.93"	4'-5"	5.5"	2,210	7.2	9.0	14	45	30	92°23'41"	87°41'17"	1.93"	0.06"
G_{E03d}	5'-0"	115.72'	TYPE A	TYPE B	50	42	8	3.93"	4'-5"	5.5"	2,210	7.2	9.0	14	45	30	92°23'39"	87°41'16"	1.74"	0.07"
G_{E04a}	5'-0"	111.06'	TYPE A	TYPE A	58	50	8	4.42"	4'-5"	5.5"	2,560	7.2	9.0	14	45	45	92°21'13"	87°38'50"	1.37"	0.05"
G_{E04b}	5'-0"	112.10'	TYPE A	TYPE A	58	50	8	4.42"	4'-5"	5.5"	2,560	7.2	9.0	14	45	45	92°21'13"	87°38'50"	1.76"	0.04"
G_{E04c}	5'-0"	113.13'	TYPE A	TYPE A	58	50	8	4.42"	4'-5"	5.5"	2,560	7.2	9.0	14	45	45	92°21'13"	87°38'50"	1.91"	0.05"
G_{E04d}	5'-0"	114.18'	TYPE A	TYPE A	58	50	8	4.42"	4'-5"	5.5"	2,560	7.2	9.0	14	45	45	92°21'13"	87°38'50"	1.90"	0.05"
G_{E05a}	5'-0"	109.22'	TYPE A	TYPE B	56	48	8	4.25"	4'-5"	5.5"	2,470	7.2	9.0	14	45	30	92°19'39"	83°03'22"	1.41"	0.05"
G_{E05b}	5'-0"	111.26'	TYPE A	TYPE B	56	48	8	4.25"	4'-5"	5.5"	2,470	7.2	9.0	14	45	30	92°19'39"	83°03'22"	1.79"	0.05"
G_{E05c}	5'-0"	113.33'	TYPE A	TYPE B	56	48	8	4.25"	4'-5"	5.5"	2,470	7.2	9.0	14	45	30	92°19'38"	83°03'21"	1.86"	0.05"
G_{E05d}	5'-0"	115.38'	TYPE A	TYPE B	56	48	8	4.25"	4'-5"	5.5"	2,470	7.2	9.0	14	45	30	92°19'38"	83°03'21"	1.89"	0.05"
G_{E09a}	6'-0"	143.54'	TYPE B	TYPE A	54	44	10	4.05"	5'-4"	6.5"	2,380	7.2	9.0	14	60	60	90°00'00"	90°00'00"	2.77"	0.13"
G_{E09b}	6'-0"	143.54'	TYPE B	TYPE A	54	44	10	4.05"	5'-4"	6.5"	2,380	7.2	9.0	14	60	60	90°00'00"	90°00'00"	2.86"	0.13"
G_{E09c}	6'-0"	143.54'	TYPE B	TYPE A	54	44	10	4.05"	5'-4"	6.5"	2,380	7.2	9.0	14	60	60	90°00'00"	90°00'00"	2.86"	0.13"
G_{E09d}	6'-0"	143.54'	TYPE B	TYPE A	54	44	10	4.05"	5'-4"	6.5"	2,380	7.2	9.0	14	60	60	90°00'00"	90°00'00"	2.77"	0.13"
G_{E10a}	6'-0"	131.25'	TYPE A	TYPE A	40	34	6	3.44"	5'-6"	4.5"	1,770	6.5	8.0	14	60	45	90°00'00"	90°00'00"	2.03"	0.00"
G_{E10b}	6'-0"	131.25'	TYPE A	TYPE A	40	34	6	3.44"	5'-6"	4.5"	1,770	6.5	8.0	14	60	45	90°00'00"	90°00'00"	2.10"	0.00"
G_{E10c}	6'-0"	131.25'	TYPE A	TYPE A	40	34	6	3.44"	5'-6"	4.5"	1,770	6.5	8.0	14	60	45	90°00'00"	90°00'00"	2.10"	0.00"
G_{E10d}	6'-0"	131.25'	TYPE A	TYPE A	40	34	6	3.44"	5'-6"	4.5"	1,770	6.5	8.0	14	60	45	90°00'00"	90°00'00"	2.03"	0.00"
G_{E11a}	6'-0"	132.29'	TYPE A	TYPE B	46	38	8	3.66"	5'-5"	5.5"	2,030	6.5	8.0	14	45	40	90°00'00"	90°00'00"	1.96"	0.09"
G_{E11b}	6'-0"	132.29'	TYPE A	TYPE B	46	38	8	3.66"	5'-5"	5.5"	2,030	6.5	8.0	14	45	40	90°00'00"	90°00'00"	2.02"	0.09"
G_{E11c}	6'-0"	132.29'	TYPE A	TYPE B	46	38	8	3.66"	5'-5"	5.5"	2,030	6.5	8.0	14	45	40	90°00'00"	90°00'00"	2.02"	0.09"
G_{E11d}	6'-0"	132.29'	TYPE A	TYPE B	46	38	8	3.66"	5'-5"	5.5"	2,030	6.5	8.0	14	45	40	90°00'00"	90°00'00"	1.96"	0.09"
G_{E12a}	6'-0"	130.75'	TYPE A	TYPE A	44	36	8	3.50"	5'-5"	5.5"	1,940	6.5	8.0	14	45	40	90°00'00"	90°00'00"	1.96"	0.08"
G_{E12b}	6'-0"	130.75'	TYPE A	TYPE A	44	36	8	3.50"	5'-5"	5.5"	1,940	6.5	8.0	14	45	40	90°00'00"	90°00'00"	2.02"	0.08"
G_{E12c}	6'-0"	130.75'	TYPE A	TYPE A	44	36	8	3.50"	5'-5"	5.5"	1,940	6.5	8.0	14	45	40	90°00'00"	90°00'00"	2.02"	0.08"
G_{E12d}	6'-0"	130.75'	TYPE A	TYPE A	44	36	8	3.50"	5'-5"	5.5"	1,940	6.5	8.0	14	45	40	90°00'00"	90°00'00"	1.96"	0.08"
G_{E13a}	6'-0"	131.25'	TYPE A	TYPE A	46	38	8	3.66"	5'-5"	5.5"	2,030	5.2	7.0	14	45	40	90°00'00"	90°00'00"	2.03"	0.01"
G_{E13b}	6'-0"	131.25'	TYPE A	TYPE A	46	38	8	3.66"	5'-5"	5.5"	2,030	5.2	7.0	14	45	40	90°00'00"	90°00'00"	2.10"	0.01"
G_{E13c}	6'-0"	131.25'	TYPE A	TYPE A	46	38	8	3.66"	5'-5"	5.5"	2,030	5.2	7.0	14	45	40	90°00'00"	90°00'00"	2.10"	0.01"
G_{E13d}	6'-0"	131.25'	TYPE A	TYPE A	46	38	8	3.66"	5'-5"	5.5"	2,030	5.2	7.0	14	45	40	90°00'00"	90°00'00"	2.03"	0.01"
G_{E14a}	6'-0"	130.75'	TYPE A	TYPE A	46	38	8	3.66"	5'-5"	5.5"	2,030	6.5	8.0	14	45	60	90°00'00"	90°00'00"	1.96"	0.08"
G_{E14b}	6'-0"	130.75'	TYPE A	TYPE A	46	38	8	3.66"	5'-5"	5.5"	2,030	6.5	8.0	14	45	60	90°00'00"	90°00'00"	2.02"	0.08"
G_{E14c}	6'-0"	130.75'	TYPE A	TYPE A	46	38	8	3.66"	5'-5"	5.5"	2,030	6.5	8.0	14	45	60	90°00'00"	90°00'00"	2.02"	0.08"
G_{E14d}	6'-0"	130.75'	TYPE A	TYPE A	46	38	8	3.66"	5'-5"	5.5"	2,030	6.5	8.0	14	45	60	90°00'00"	90°00'00"	1.96"	0.08"

NOTES:

1. For "STRAND LAYOUT"and stirrup layout, see "PC/PS CONCRETE GIRDER DETAILS No. 1" sheet.
2. For "GIRDER END TYPE" and "GIRDER END ANGLE" see "PC/PS CONCRETE GIRDER DETAILS No. 2" sheet.

NOTE:
THE CONTRACTOR SHALL VERIFY ALL CONTROLLING FIELD DIMENSIONS BEFORE ORDERING OR FABRICATING ANY MATERIAL

Reza Erfanian
DESIGN OVERSIGHT Reza Erfanian
12/19/12
SIGN OFF DATE

	BY	CHECKED
DESIGN	P. SHINN	N. VO / S. SHI
DETAILS	P. SHINN	N. VO / S. SHI
QUANTITIES	S. DESALEGN	M. PHILIPS

PREPARED FOR THE STATE OF CALIFORNIA DEPARTMENT OF TRANSPORTATION

P. SHINN
PROJECT ENGINEER

BRIDGE NO. 29-0350
POST MILES T14.83

SR4 CROSSTOWN VIADUCT
GIRDER SCHEDULE No. 3

DESIGN DETAIL SHEET (ENGLISH) (REV.7/16/10)

ORIGINAL SCALE IN INCHES FOR REDUCED PLANS 0 1 2 3

UNIT: 1455
PROJECT NUMBER & PHASE: 10000002291 CONTRACT NO.: 10-0S1101

DISREGARD PRINTS BEARING EARLIER REVISION DATES 8/10/11 6/08/12 9/04/12 11/27/12

SHEET 87 OF 111

FILE => 29-0350-o-g_sch03.dgn

USERNAME => s128843 DATE PLOTTED => 23-JUL-2013 TIME PLOTTED => 10:04

DIST	COUNTY	ROUTE	POST MILES TOTAL PROJECT	SHEET No	TOTAL SHEETS
10	SJ	4,5	Var	428	486

REGISTERED CIVIL ENGINEER 11/27/12 DATE

7-22-13
PLANS APPROVAL DATE

REGISTERED PROFESSIONAL ENGINEER KIANOUSH HARIRSAZ No. C39591 Exp. 12/31/13 CIVIL STATE OF CALIFORNIA

The State of California or its officers or agents shall not be responsible for the accuracy or completeness of electronic copies of this plan sheet.

SAN JOAQUIN COUNCIL OF GOVERNMENTS
555 E. WEBER AVENUE
STOCKTON, CA 95202

RAJAPPAN & MEYER CONSULTING ENGINEERS, INC.
1038 LEIGH AVE, SUITE 100
SAN JOSE, CA 95126

GIRDER DESIGNATION	GIRDER DEPTH "D"	LENGTH "L"	GIRDER END TYPE		TOTAL No. OF STRANDS REQUIRED PER GIRDER	No. OF STRAIGHT STRANDS	No. OF HARPED STRANDS	CG STRAIGHT STRANDS GROUP "Ys"	CG HARPED STRANDS GROUP "Yh"		P = JACKING FORCE (KIPS) (TOTAL ALL STRANDS)	CONCRETE STRENGTH (KSI)		No. OF STIRRUP SPACING			GIRDER END ANGLE		DEFLECTION COMPONENT AT MID-SPAN (IN)	
			END 1	END 2					@ ENDS	@ ℄ SPAN		f'ci	f'c	"a"	"b"	"c"	θ1	θ2	① DECK DL	② RAIL DL
G_{E15a}	6'-0"	146.29'	TYPE B	TYPE A	56	40	16	3.80"	5'-1"	9.5"	2,470	7.2	9.0	14	90	45	90°00'00"	90°00'00"	2.77"	0.12"
G_{E15b}	6'-0"	146.29'	TYPE B	TYPE A	56	40	16	3.80"	5'-1"	9.5"	2,470	7.2	9.0	14	90	45	90°00'00"	90°00'00"	2.86"	0.12"
G_{E15c}	6'-0"	146.29'	TYPE B	TYPE A	56	40	16	3.80"	5'-1"	9.5"	2,470	7.2	9.0	14	90	45	90°00'00"	90°00'00"	2.86"	0.12"
G_{E15d}	6'-0"	146.29'	TYPE B	TYPE A	56	40	16	3.80"	5'-1"	9.5"	2,470	7.2	9.0	14	90	45	90°00'00"	90°00'00"	2.77"	0.12"
G_{E16a}	6'-0"	145.26'	TYPE A	TYPE A	48	42	6	3.93"	5'-6"	4.5"	2,120	6.0	8.0	14	90	45	89°51'46"	90°12'13"	2.90"	0.01"
G_{E16b}	6'-0"	145.20'	TYPE A	TYPE A	48	42	6	3.93"	5'-6"	4.5"	2,120	6.0	8.0	14	90	45	89°51'46"	90°12'13"	2.97"	0.01"
G_{E16c}	6'-0"	145.13'	TYPE A	TYPE A	48	42	6	3.93"	5'-6"	4.5"	2,120	6.0	8.0	14	90	45	89°51'46"	90°12'13"	2.96"	0.01"
G_{E16d}	6'-0"	145.07'	TYPE A	TYPE A	48	42	6	3.93"	5'-6"	4.5"	2,120	6.0	8.0	14	90	45	89°51'46"	90°12'14"	2.83"	0.01"
G_{E17a}	6'-0"	144.76'	TYPE A	TYPE A	56	46	10	4.05"	5'-4"	6.5"	2,470	7.2	9.0	14	90	45	89°47'15"	90°12'42"	2.79"	0.12"
G_{E17b}	6'-0"	144.68'	TYPE A	TYPE A	56	46	10	4.05"	5'-4"	6.5"	2,470	7.2	9.0	14	90	45	89°47'15"	90°12'42"	2.85"	0.12"
G_{E17c}	6'-0"	144.60'	TYPE A	TYPE A	56	46	10	4.05"	5'-4"	6.5"	2,470	7.2	9.0	14	90	45	89°47'15"	90°12'42"	2.84"	0.12"
G_{E17d}	6'-0"	144.52'	TYPE A	TYPE A	56	46	10	4.05"	5'-4"	6.5"	2,470	7.2	9.0	14	90	45	89°47'15"	90°12'42"	2.71"	0.12"
G_{E18a}	6'-0"	125.30'	TYPE B	TYPE A	42	34	8	3.44"	5'-5"	5.5"	1,860	6.5	8.0	14	45	45	89°49'03"	90°10'53"	1.46"	0.06"
G_{E18b}	6'-0"	125.23'	TYPE B	TYPE A	42	34	8	3.44"	5'-5"	5.5"	1,860	6.5	8.0	14	45	45	89°49'03"	90°10'53"	1.50"	0.06"
G_{E18c}	6'-0"	125.16'	TYPE B	TYPE A	42	34	8	3.44"	5'-5"	5.5"	1,860	6.5	8.0	14	45	45	89°49'03"	90°10'53"	1.50"	0.06"
G_{E18d}	6'-0"	125.09'	TYPE B	TYPE A	42	34	8	3.44"	5'-5"	5.5"	1,860	6.5	8.0	14	45	45	89°49'03"	90°10'53"	1.43"	0.06"
G_{E19a}	6'-0"	124.25'	TYPE A	TYPE A	36	32	4	3.38"	5'-7"	3.5"	1,590	6.5	8.0	14	45	45	89°59'00"	90°00'01"	1.74"	0.02"
G_{E19b}	6'-0"	124.25'	TYPE A	TYPE A	36	32	4	3.38"	5'-7"	3.5"	1,590	6.5	8.0	14	45	45	89°59'00"	90°00'01"	1.79"	0.02"
G_{E19c}	6'-0"	124.24'	TYPE A	TYPE A	36	32	4	3.38"	5'-7"	3.5"	1,590	6.5	8.0	14	45	45	89°59'00"	90°00'01"	1.79"	0.02"
G_{E19d}	6'-0"	124.24'	TYPE A	TYPE A	36	32	4	3.38"	5'-7"	3.5"	1,590	6.5	8.0	14	45	45	89°59'00"	90°00'01"	1.73"	0.02"
G_{E20a}	6'-0"	124.25'	TYPE A	TYPE A	36	32	4	3.38"	5'-7"	3.5"	1,590	6.5	8.0	14	45	45	90°00'00"	90°00'00"	1.73"	0.02"
G_{E20b}	6'-0"	124.25'	TYPE A	TYPE A	36	32	4	3.38"	5'-7"	3.5"	1,590	6.5	8.0	14	45	45	90°00'00"	90°00'00"	1.79"	0.02"
G_{E20c}	6'-0"	124.25'	TYPE A	TYPE A	36	32	4	3.38"	5'-7"	3.5"	1,590	6.5	8.0	14	45	45	90°00'00"	90°00'00"	1.79"	0.02"
G_{E20d}	6'-0"	124.25'	TYPE A	TYPE A	36	32	4	3.38"	5'-7"	3.5"	1,590	6.5	8.0	14	45	45	90°00'00"	90°00'00"	1.73"	0.02"
G_{E21a}	6'-0"	125.29'	TYPE A	TYPE B	42	34	8	3.44"	5'-5"	5.5"	1,860	6.5	8.0	14	45	45	90°00'00"	90°00'00"	1.44"	0.06"
G_{E21b}	6'-0"	125.29'	TYPE A	TYPE B	42	34	8	3.44"	5'-5"	5.5"	1,860	6.5	8.0	14	45	45	90°00'00"	90°00'00"	1.49"	0.06"
G_{E21c}	6'-0"	125.29'	TYPE A	TYPE B	42	34	8	3.44"	5'-5"	5.5"	1,860	6.5	8.0	14	45	45	90°00'00"	90°00'00"	1.49"	0.06"
G_{E21d}	6'-0"	125.29'	TYPE A	TYPE B	42	34	8	3.44"	5'-5"	5.5"	1,860	6.5	8.0	14	45	45	90°00'00"	90°00'00"	1.44"	0.06"

NOTES:

1. For "STRAND LAYOUT"and stirrup layout, see "PC/PS CONCRETE GIRDER DETAILS No. 1" sheet.
2. For "GIRDER END TYPE" and "GIRDER END ANGLE" see "PC/PS CONCRETE GIRDER DETAILS No. 2" sheet.

NOTE:
THE CONTRACTOR SHALL VERIFY ALL CONTROLLING FIELD DIMENSIONS BEFORE ORDERING OR FABRICATING ANY MATERIAL

DESIGN OVERSIGHT Reza Erfanian
12/19/12
SIGN OFF DATE

	BY	CHECKED
DESIGN	P. SHINN	N. VO / S. SHI
DETAILS	P. SHINN	N. VO / S. SHI
QUANTITIES	S. DESALEGN	M. PHILIPS

PREPARED FOR THE STATE OF CALIFORNIA DEPARTMENT OF TRANSPORTATION

P. SHINN
PROJECT ENGINEER

BRIDGE NO. 29-0350
POST MILES T14.83

SR4 CROSSTOWN VIADUCT
GIRDER SCHEDULE No. 4

DESIGN DETAIL SHEET (ENGLISH) (REV.7/16/10)

ORIGINAL SCALE IN INCHES FOR REDUCED PLANS 0 1 2 3

UNIT: 1455
PROJECT NUMBER & PHASE: 10000002291 CONTRACT NO.: 10-0S1101

DISREGARD PRINTS BEARING EARLIER REVISION DATES → REVISION DATES 8/10/11 6/08/12 9/04/12 11/27/12 SHEET 88 OF 111

FILE => 29-0350-o-g_sch04.dgn

USERNAME => s128843 DATE PLOTTED => 23-JUL-2013 TIME PLOTTED => 10:04

DIST	COUNTY	ROUTE	POST MILES TOTAL PROJECT	SHEET No	TOTAL SHEETS
10	SJ	4,5	Var	429	486

REGISTERED CIVIL ENGINEER — DATE 12/18/12

7-22-13
PLANS APPROVAL DATE

REGISTERED PROFESSIONAL ENGINEER — KIANOUSH HARIRSAZ — No. C39591 — Exp. 12/31/13 — CIVIL — STATE OF CALIFORNIA

The State of California or its officers or agents shall not be responsible for the accuracy or completeness of electronic copies of this plan sheet.

SAN JOAQUIN COUNCIL OF GOVERNMENTS
555 E. WEBER AVENUE
STOCKTON, CA 95202

RAJAPPAN & MEYER
CONSULTING ENGINEERS, INC.
1038 LEIGH AVE, SUITE 100
SAN JOSE, CA 95126

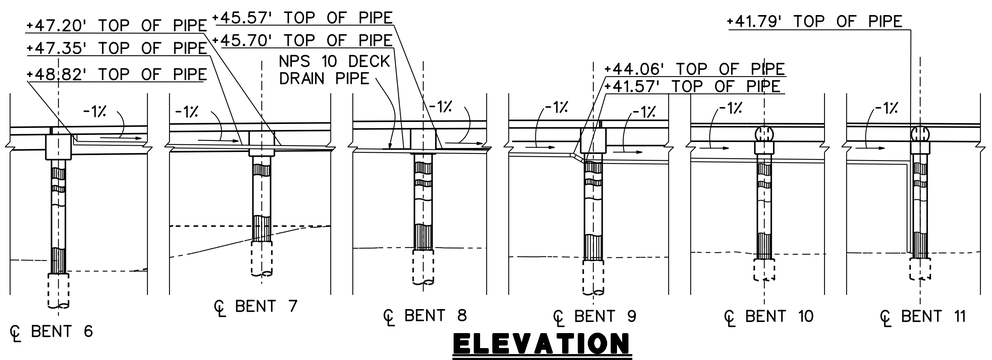

ELEVATION
1" = 30'

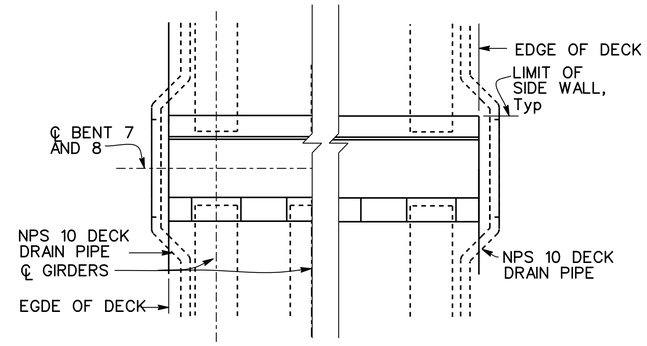

BENT 7 AND 8
PLAN
NO SCALE

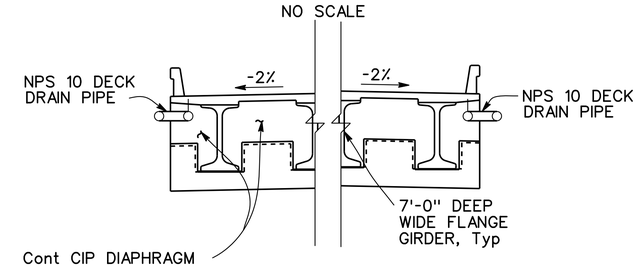

BENT 7 AND 8
TYPICAL SECTION - WITH DRAINAGE
NO SCALE

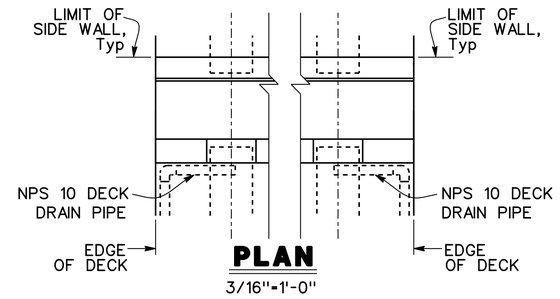

PLAN
3/16"=1'-0"

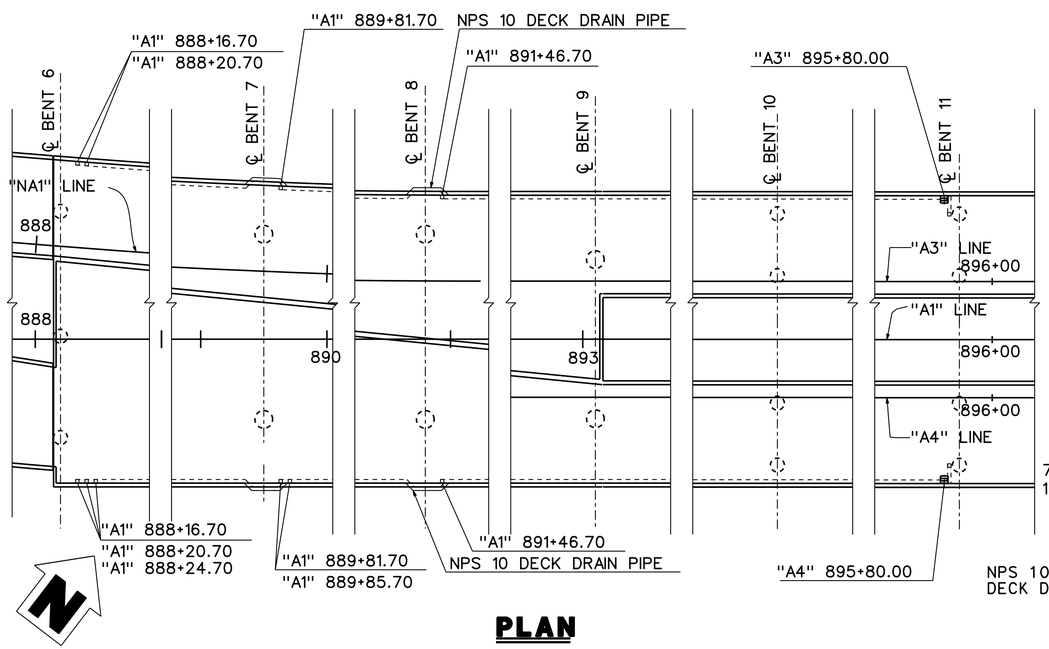

PLAN
1" = 30'

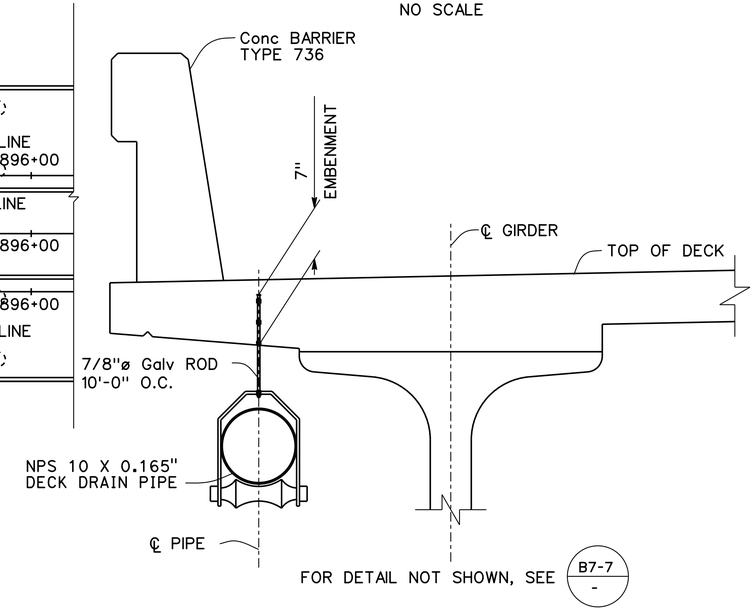

PIPE HANGER BETWEEN BENTS 6, 7, 8 & 9
1" = 1'-0"

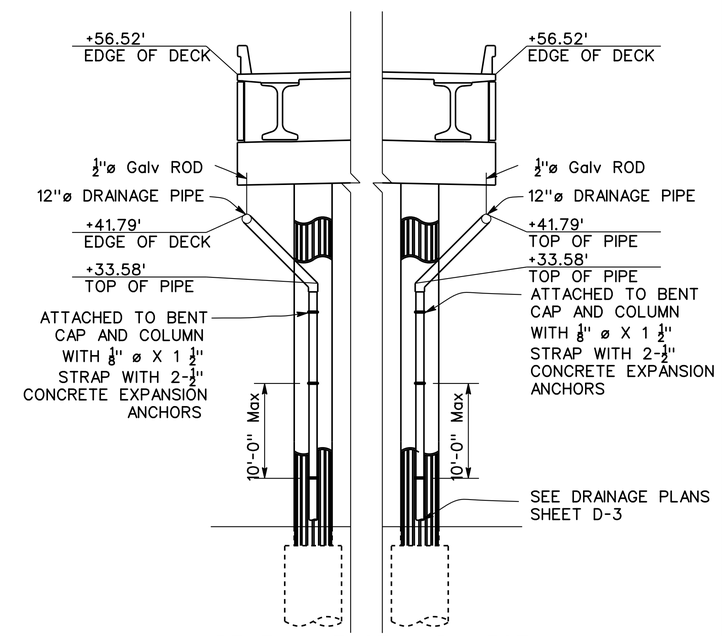

BENT 11 (EAST AND WEST)
TYPICAL SECTION - WITH DRAINAGE
NO SCALE

NOTE:
THE CONTRACTOR SHALL VERIFY ALL CONTROLLING FIELD DIMENSIONS BEFORE ORDERING OR FABRICATING ANY MATERIAL

Reza Erfanian
DESIGN OVERSIGHT — Reza Erfanian
12/19/12
SIGN OFF DATE

	BY	CHECKED
DESIGN	P. SHINN	N. VO / S. SHI
DETAILS	P. SHINN	N. VO / S. SHI
QUANTITIES	S. DESALEGN	M. PHILIPS

PREPARED FOR THE STATE OF CALIFORNIA DEPARTMENT OF TRANSPORTATION

P. SHINN
PROJECT ENGINEER

BRIDGE NO. 29-0350
POST MILES T14.83

SR4 CROSSTOWN VIADUCT
DECK DRAIN DETAILS No. 1

DESIGN DETAIL SHEET (ENGLISH) (REV.7/16/10)

ORIGINAL SCALE IN INCHES FOR REDUCED PLANS 0 1 2 3

UNIT: 1455
PROJECT NUMBER & PHASE: 10000002291
CONTRACT NO.: 10-0S1101

DISREGARD PRINTS BEARING EARLIER REVISION DATES → 6/08/12 9/04/12 11/27/12 12/18/12

SHEET 89 OF 111

FILE => 29-0350-r-dd01.dgn

USERNAME => s128843 DATE PLOTTED => 23-JUL-2013 TIME PLOTTED => 10:04

DIST	COUNTY	ROUTE	POST MILES TOTAL PROJECT	SHEET No	TOTAL SHEETS
10	SJ	4,5	Var	430	486

K Haun
REGISTERED CIVIL ENGINEER 11/27/12 DATE

7-22-13
PLANS APPROVAL DATE

REGISTERED PROFESSIONAL ENGINEER KIANOUSH HARIRSAZ No. C39591 Exp. 12/31/13 CIVIL STATE OF CALIFORNIA

The State of California or its officers or agents shall not be responsible for the accuracy or completeness of electronic copies of this plan sheet.

SAN JOAQUIN COUNCIL OF GOVERNMENTS
555 E. WEBER AVENUE
STOCKTON, CA 95202

RAJAPPAN & MEYER
CONSULTING ENGINEERS, INC.
1038 LEIGH AVE, SUITE 100
SAN JOSE, CA 95126

NOTE:
For details not shown, see "DECK DRAIN DETAILS No. 1" sheet.

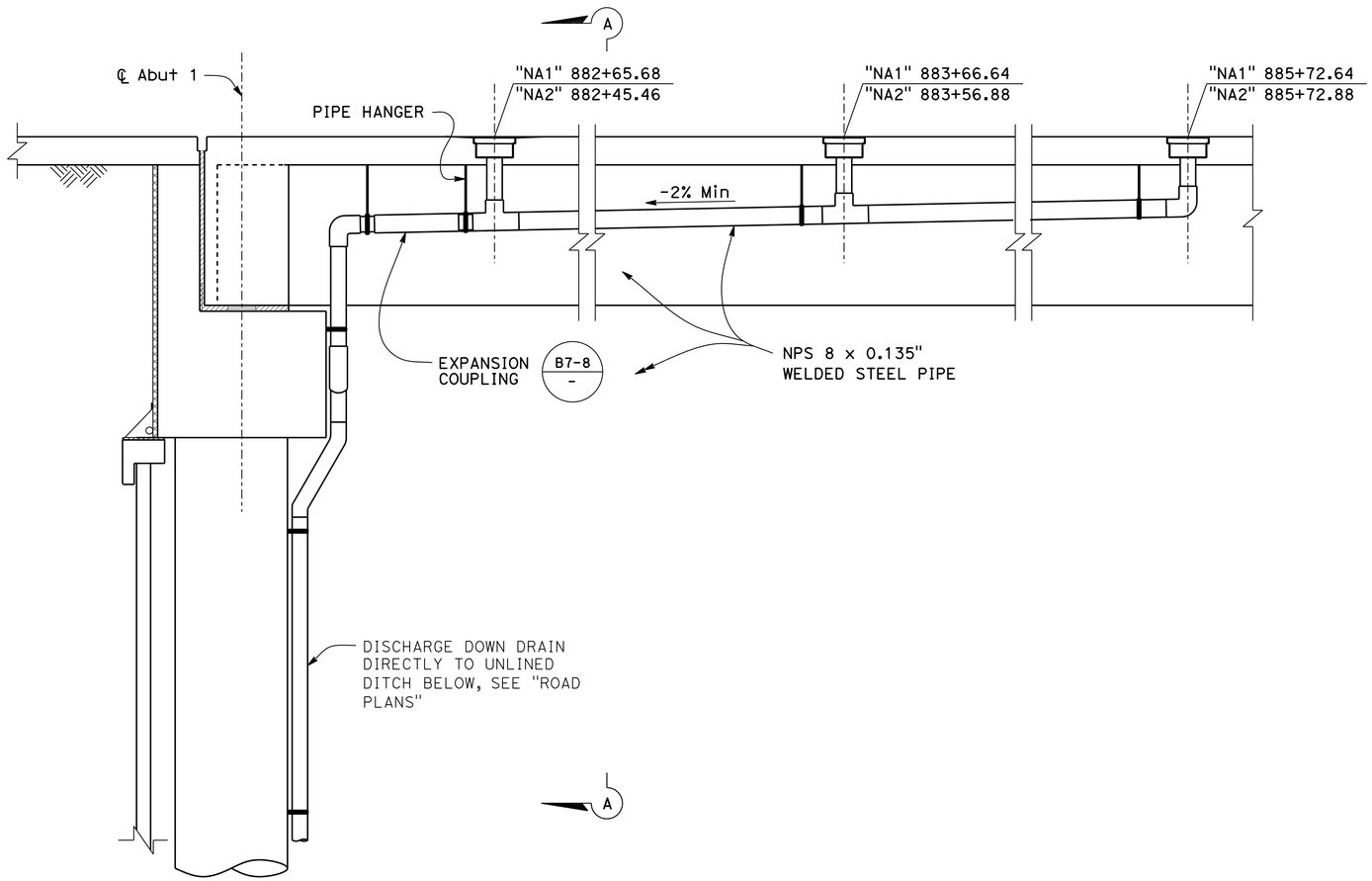

ELEVATION VIEW

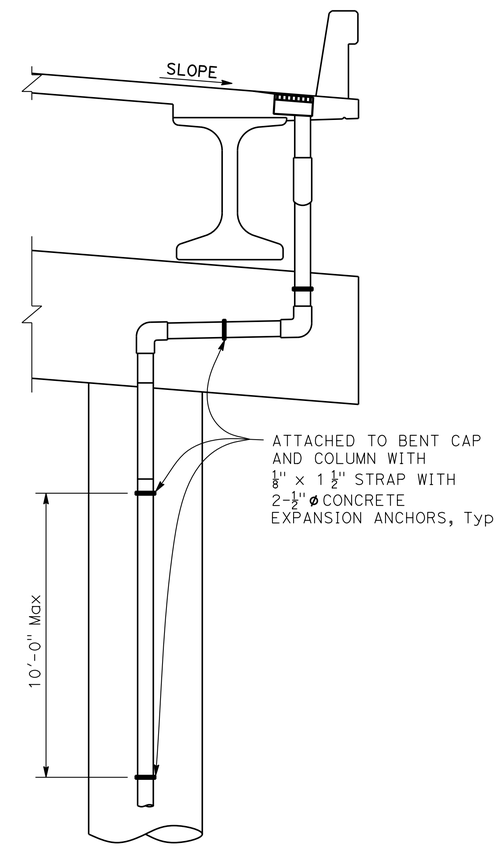

VIEW A-A

ABUTMENT 1 DECK DRAIN DETAILS

3/8" = 1'-0"

NOTE:
THE CONTRACTOR SHALL VERIFY ALL CONTROLLING FIELD DIMENSIONS BEFORE ORDERING OR FABRICATING ANY MATERIAL

Reza Erfanian
DESIGN OVERSIGHT Reza Erfanian
12/19/12
SIGN OFF DATE

	BY	CHECKED
DESIGN	P. SHINN	N. VO / S. SHI
DETAILS	P. SHINN	N. VO / S. SHI
QUANTITIES	S. DESALEGN	M. PHILIPS

PREPARED FOR THE STATE OF CALIFORNIA DEPARTMENT OF TRANSPORTATION

P. SHINN
PROJECT ENGINEER

BRIDGE NO. 29-0350
POST MILES T14.83

SR4 CROSSTOWN VIADUCT
DECK DRAIN DETAILS No. 2

DESIGN DETAIL SHEET (ENGLISH) (REV.7/16/10)

ORIGINAL SCALE IN INCHES FOR REDUCED PLANS 0 1 2 3

UNIT: 1455
PROJECT NUMBER & PHASE: 10000002291 CONTRACT NO.: 10-0S1101

DISREGARD PRINTS BEARING EARLIER REVISION DATES → REVISION DATES 8/10/16 08/12/09 04/12/11 11/27/12

SHEET 90 OF 111

FILE => 29-0350-r-dd02.dgn

USERNAME => s128843 DATE PLOTTED => 23-JUL-2013 TIME PLOTTED => 10:05

DIST	COUNTY	ROUTE	POST MILES TOTAL PROJECT	SHEET No	TOTAL SHEETS
10	SJ	4,5	Var	431	486

K Haus
REGISTERED CIVIL ENGINEER 11/27/12 DATE

7-22-13
PLANS APPROVAL DATE

REGISTERED PROFESSIONAL ENGINEER KIANOUSH HARIRSAZ No. C39591 Exp. 12/31/13 CIVIL STATE OF CALIFORNIA

The State of California or its officers or agents shall not be responsible for the accuracy or completeness of electronic copies of this plan sheet.

SAN JOAQUIN COUNCIL OF GOVERNMENTS
555 E. WEBER AVENUE
STOCKTON, CA 95202

RAJAPPAN & MEYER
CONSULTING ENGINEERS, INC.
1038 LEIGH AVE, SUITE 100
SAN JOSE, CA 95126

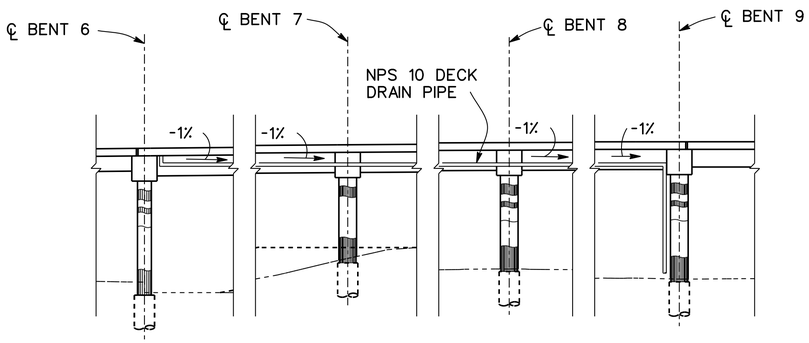

ELEVATION
1" = 30'

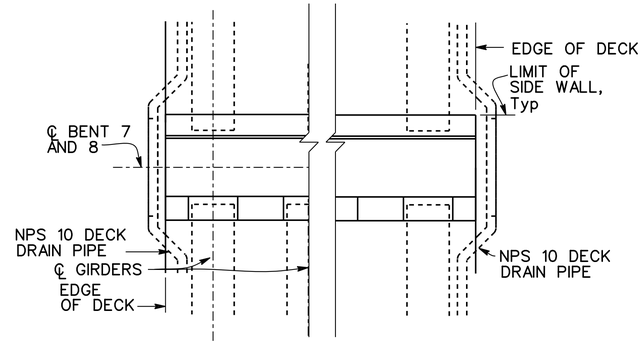

BENT 7 AND 8
PLAN
NO SCALE

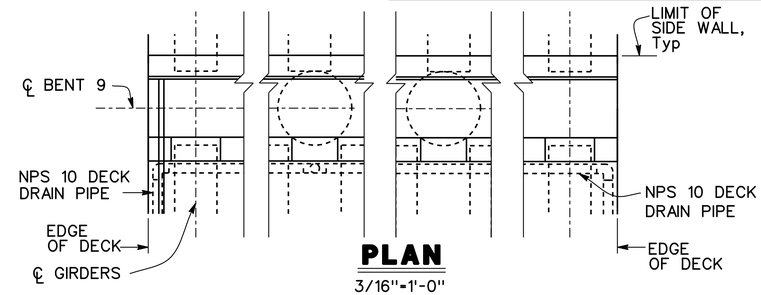

PLAN
3/16"=1'-0"

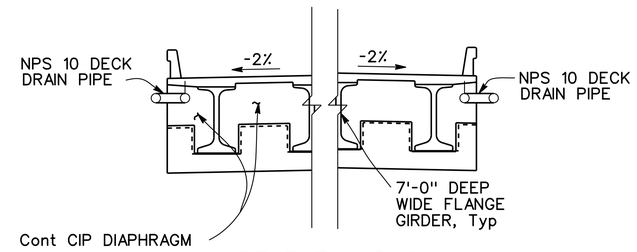

BENT 7 AND 8
TYPICAL SECTION - WITH DRAINAGE
NO SCALE

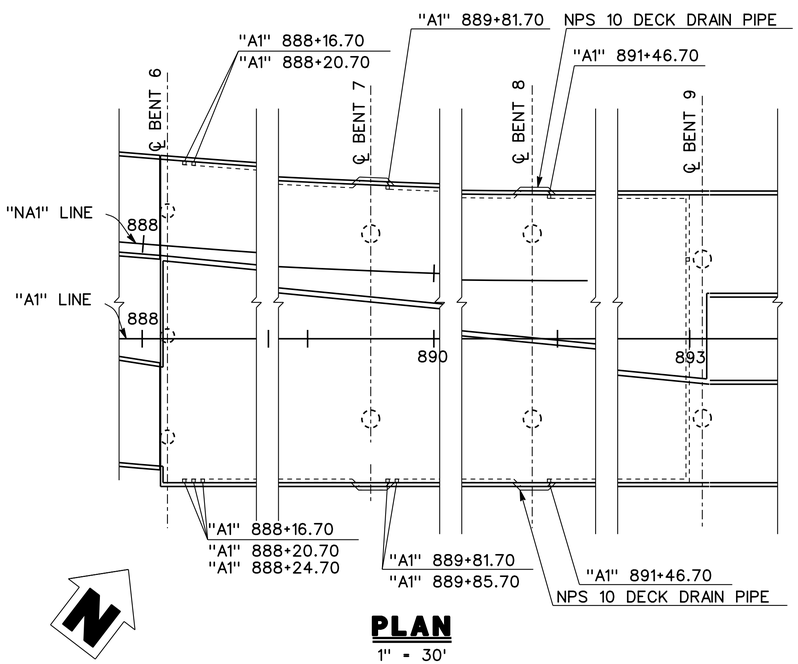

PLAN
1" = 30'

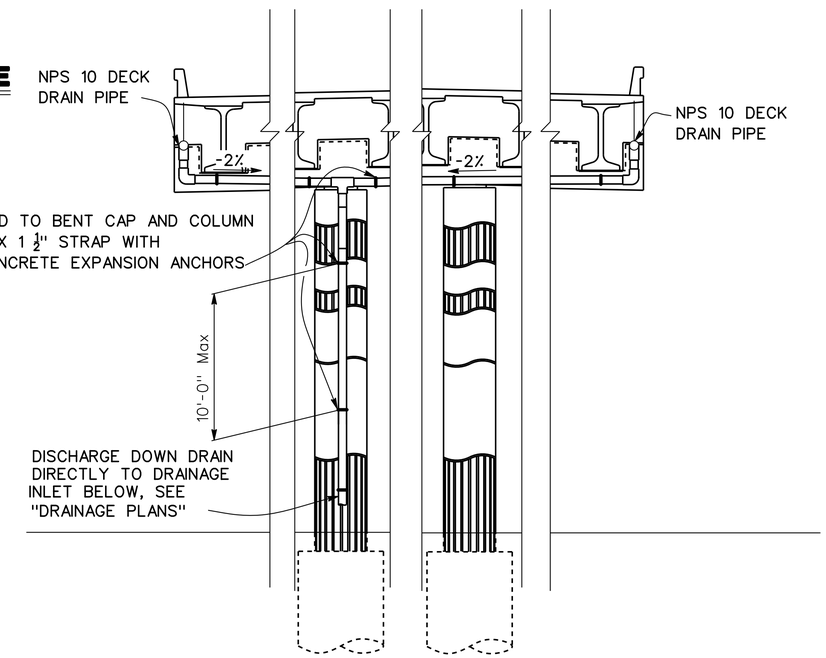

BENT 9
TYPICAL SECTION - WITH DRAINAGE
NO SCALE

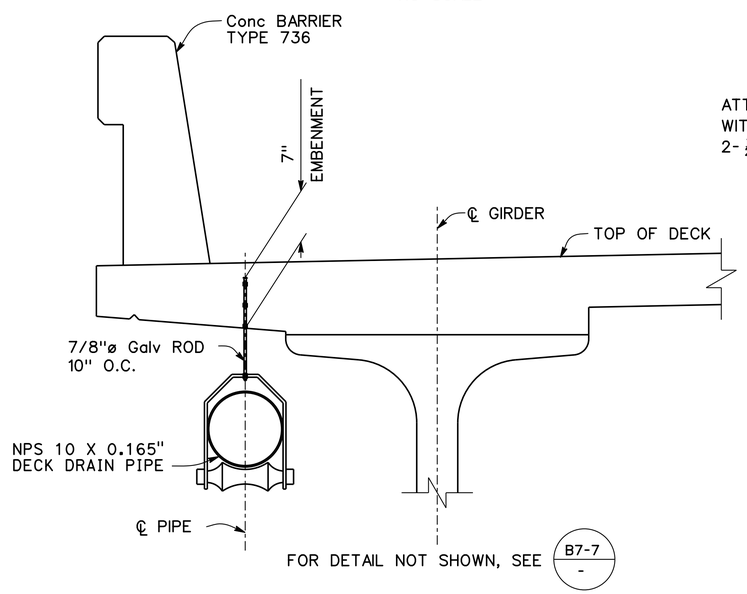

PIPE HANGER BETWEEN BENTS 6, 7, 8 & 9
1" = 1'-0"

NOTE:
THE CONTRACTOR SHALL VERIFY ALL CONTROLLING FIELD DIMENSIONS BEFORE ORDERING OR FABRICATING ANY MATERIAL

Reza Erfanian
DESIGN OVERSIGHT Reza Erfanian
12/19/12
SIGN OFF DATE

	BY	CHECKED
DESIGN	P. SHINN	N. VO / S. SHI
DETAILS	P. SHINN	N. VO / S. SHI
QUANTITIES	S. DESALEGN	M. PHILIPS

PREPARED FOR THE STATE OF CALIFORNIA DEPARTMENT OF TRANSPORTATION

P. SHINN
PROJECT ENGINEER

BRIDGE NO. 29-0350
POST MILES T14.83

SR4 CROSSTOWN VIADUCT
DECK DRAIN DETAILS No. 3

DESIGN DETAIL SHEET (ENGLISH) (REV.7/16/10)

ORIGINAL SCALE IN INCHES FOR REDUCED PLANS 0 1 2 3

UNIT: 1455
PROJECT NUMBER & PHASE: 10000002291 CONTRACT NO.: 10-0S1101

DISREGARD PRINTS BEARING EARLIER REVISION DATES

REVISION DATES 8/10/11 6/08/12 9/04/12 11/27/12

SHEET 91 OF 111

FILE => 29-0350-r-dd03.dgn

USERNAME => S13571 DATE PLOTTED => 23-JUL-2013 TIME PLOTTED => 10:53

DIST	COUNTY	ROUTE	POST MILES TOTAL PROJECT	SHEET No.	TOTAL SHEETS
10	SJ	4,5	Var	432	486

REGISTERED CIVIL ENGINEER 11/27/12 DATE

7-22-13
PLANS APPROVAL DATE

REGISTERED PROFESSIONAL ENGINEER KAMOUSH HARIRSAZ No. C39591 Exp. 12/31/13 CIVIL STATE OF CALIFORNIA

The State of California or its officers or agents shall not be responsible for the accuracy or completeness of electronic copies of this plan sheet.

SAN JOAQUIN COUNCIL OF GOVERNMENTS
555 E. WEBER AVENUE
STOCKTON, CA 95202

RAJAPPAN & MEYER
CONSULTING ENGINEERS, INC.
1038 LEIGH AVE, SUITE 100
SAN JOSE, CA 95126

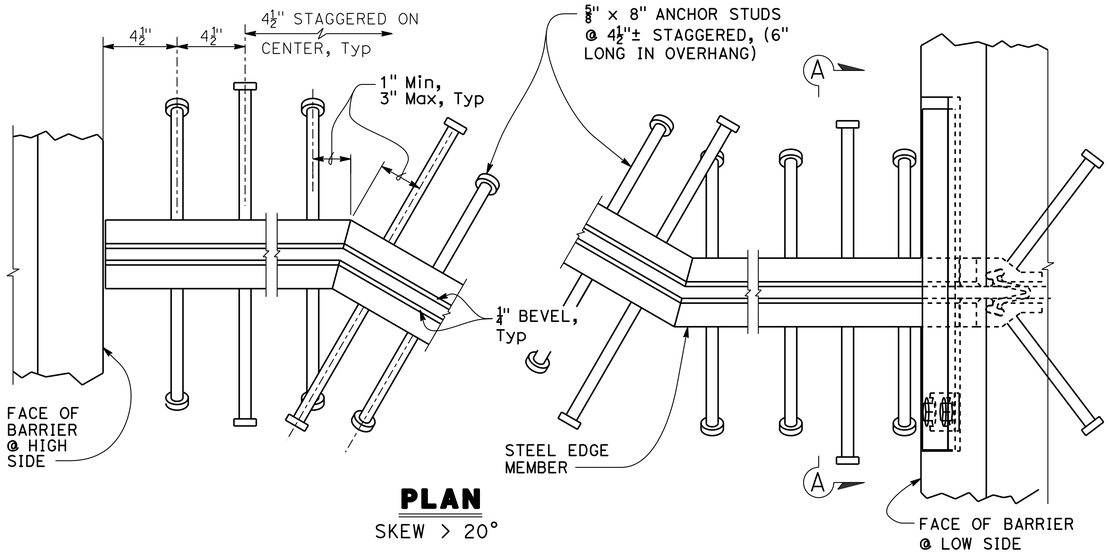

PLAN
SKEW > 20°

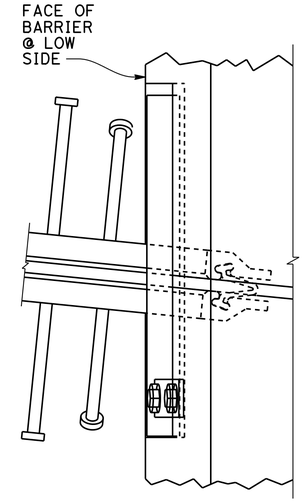

PLAN
SKEW ≤ 20°

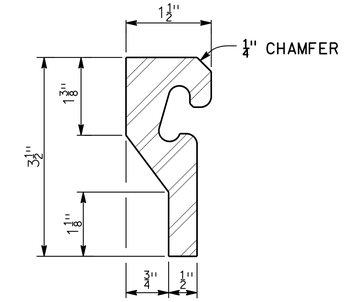

STEEL EDGE MEMBER

NOTES:
1. Full penetration butt welds may be substituted for fillet welds on all anchor studs
2. Alternate types of anchor studs may be permitted subject to the approval by the Engineer
3. Joint seal assembly to be used in conjunction with closure pour. (See other sheets for limits). Closure pour shall not be placed until final deck surface is within the tolerances specified
4. Use joint at crown of roadway, at any change in traverse slope in deck and at changes in horizontal direction. Place other joints at or near lanes. All metal parts to be painted or galvanized after fabrication
5. Sheet Neoprene shall be fabricated in one continuous piece and shall be fabricated to bend around corners
6. Insert assembly or expansion anchorage for ⅝" x 1¾" bolts. Use installation bolts extended ½" minimum past nut and coat with bond breaker, after concrete has cured, remove installation bolts, install A325 bolts and sheet neoprene
7. Sidewalk Detail similar to Barrier Detail on low side at both sides if the roadway is crowned or if the difference in elevation between the ends of the seal is 0.5′ or less

JOINT INFORMATION			"a" DIMENSIONS (in)		
LOCATION	MOVEMENT RATING (in)	SKEW	WINTER	SPRING & FALL	SUMMER
BENT 4E & 4W	2.50	0°	2.25	1.75	1.25
BENT 6E & 6W	3.50	0°	3.00	2.25	1.50
BENT 9E & 9W	4.00	0°	3.50	2.75	1.75
BENT 12E & 12W	3.50	0°	3.00	2.25	1.50
BENT 15E & 15W	4.00	0°	3.50	2.75	1.75
BENT 18E & 18W	3.50	0°	3.25	2.50	1.75

✳ TO SET MINIMUM JOINT OPENING "W"

$$\text{"W"} = \begin{cases} \tfrac{1}{2}\text{"} + [(\text{maximum structure temperature in F°}) - (\text{actual structure temperature in F°})] \\ (0.000006)(1200)(\text{contributory length in feet})(0.01) \\ \tfrac{1}{2}\text{" Minimum} \end{cases}$$

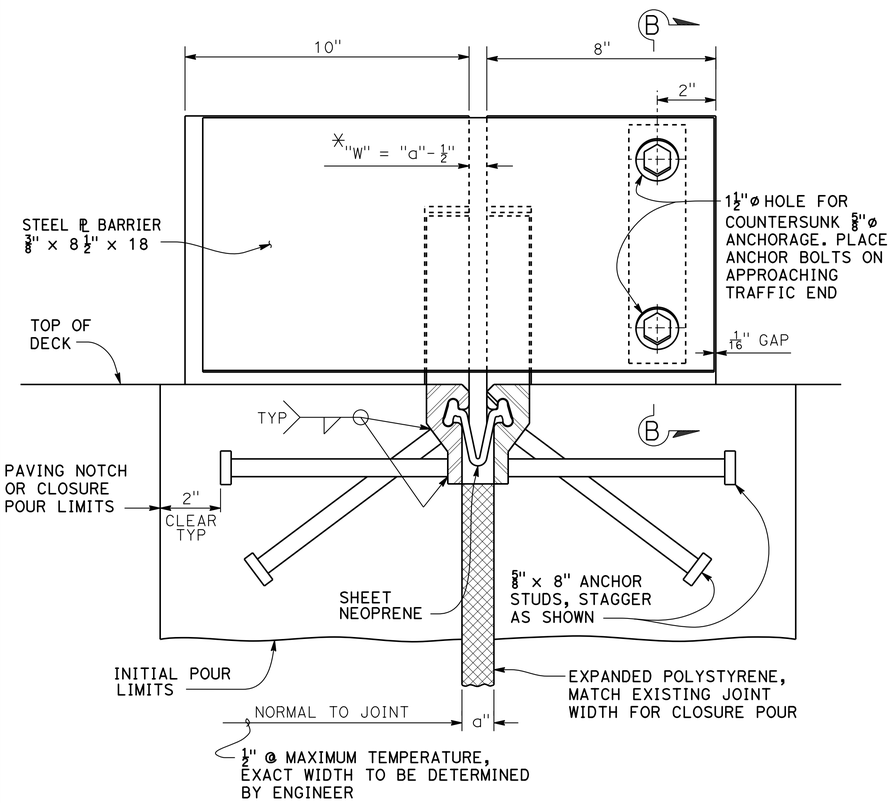

NOTE:
THE CONRACTOR SHALL VERIFY ALL CONTROLLING FIELD DIMENSIONS BEFORE ORDERING OR FABRICATING ANY MATERIAL

SECTION A-A

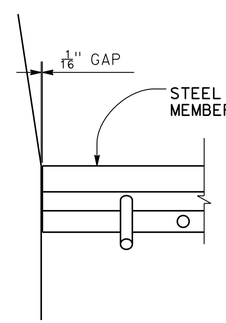

BARRIER DETAIL
HIGH SIDE

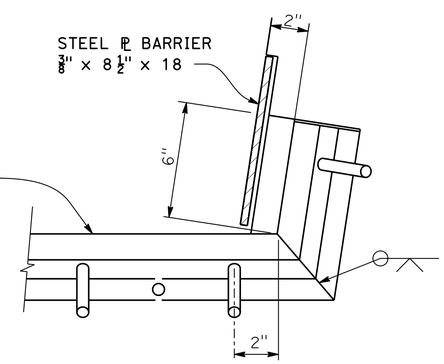

BARRIER DETAIL
LOW SIDE

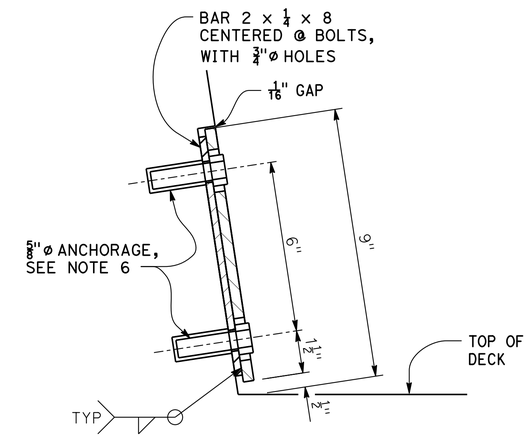

SECTION B-B

NO SCALE

REVISED STANDARD DRAWING

FILE No. xs8-010

APPROVAL DATE July 2011

DS OSD 2147A (ENGLISH STANDARD DRAWING "XS" BORDER REV. (02-02-11)

ORIGINAL SCALE IN INCHES FOR REDUCED PLANS 0 1 2 3

STATE OF CALIFORNIA
DEPARTMENT OF TRANSPORTATION

DIVISION OF ENGINEERING SERVICES

BRIDGE NO. 29-0350
POST MILE T14.83

SR4 CROSSTOWN VIADUCT

JOINT SEAL ASSEMBLY (MAXIMUM MOVEMENT RATING = 4")

UNIT: 1455
PROJECT NUMBER & PHASE: 10000002291

10-0S1101

DISREGARD PRINTS BEARING EARLIER REVISION DATES

REVISION DATES 8/10/16 08/12/09 04/12 11/27/12

SHEET 92 OF 111

DATE PLOTTED => 23-JUL-2013
TIME PLOTTED => 10:53

USERNAME => s119571
DGN FILE => 29-0350-r-jsa.dgn

DIST	COUNTY	ROUTE	POST MILES TOTAL PROJECT	SHEET No.	TOTAL SHEETS
10	SJ	4,5	Var	433	486

REGISTERED CIVIL ENGINEER 11/27/12 DATE

7-22-13
PLANS APPROVAL DATE

REGISTERED PROFESSIONAL ENGINEER KAMOUSH HARIRSAZ No. C39591 Exp. 12/31/13 CIVIL STATE OF CALIFORNIA

The State of California or its officers or agents shall not be responsible for the accuracy or completeness of electronic copies of this plan sheet.

SAN JOAQUIN COUNCIL OF GOVERNMENTS
555 E. WEBER AVENUE
STOCKTON, CA 95202

RAJAPPAN & MEYER
CONSULTING ENGINEERS, INC.
1038 LEIGH AVE, SUITE 100
SAN JOSE, CA 95126

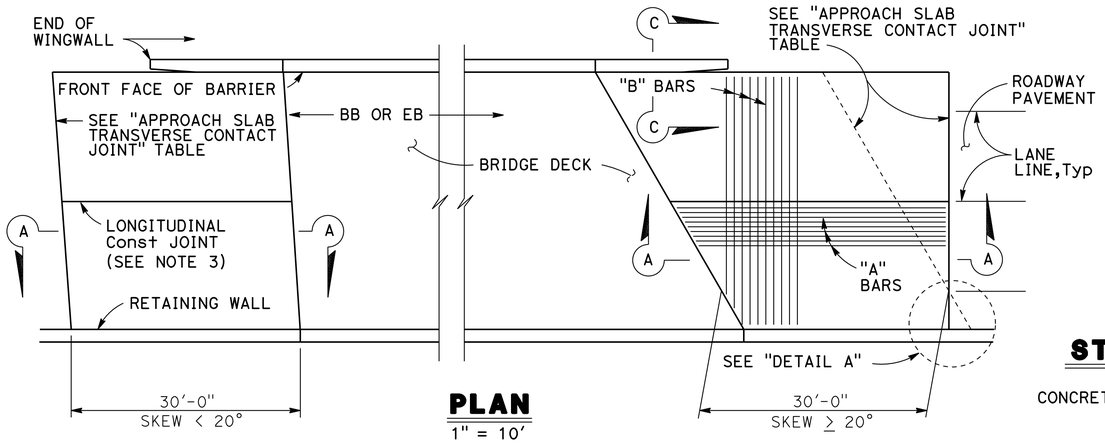

PLAN
1" = 10'

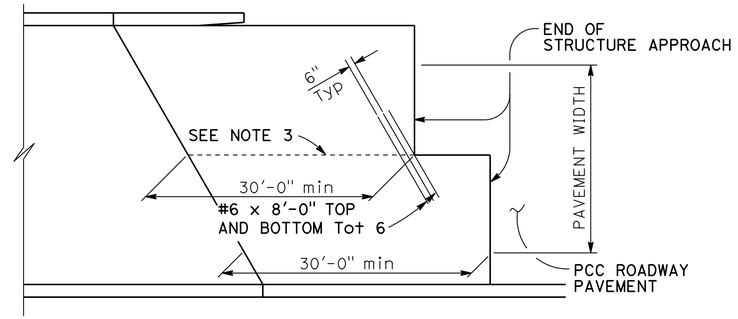

STRUCTURE APPROACH - END STAGGER DETAIL
NO SCALE

APPROACH SLAB TRANSVERSE CONTACT JOINT		
APPROACH SKEW	WITH AC ROADWAY PAVEMENT	WITH PCC ROADWAY PAVEMENT
< 20°	PARALLEL TO FACE OF PN	PARALLEL TO FACE OF PN
20° - 45°	PARALLEL TO FACE OF PN USE "DETAIL A"	STAGGER LINES 24' TO 36' APART
> 45°	PARALLEL TO FACE OF PN USE "DETAIL A"	STAGGER AT EACH LANE LINE

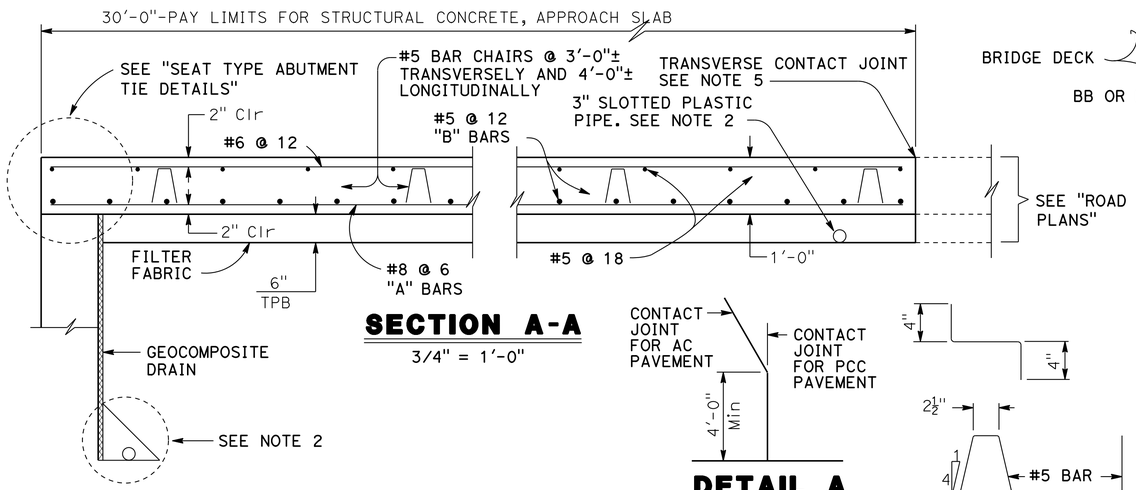

SECTION A-A
3/4" = 1'-0"

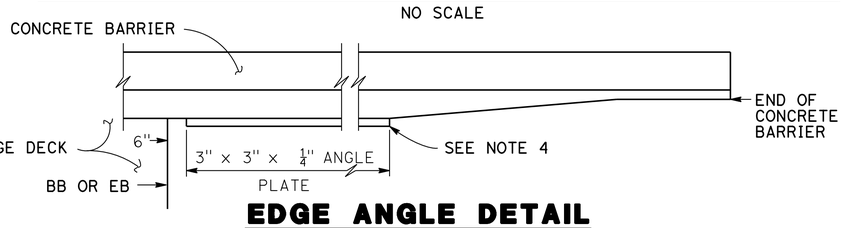

EDGE ANGLE DETAIL
1/2" = 1'-0"

DETAIL A
NO SCALE

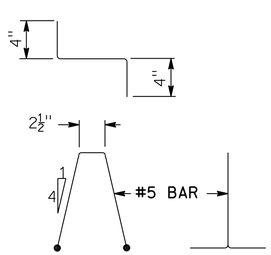

BAR CHAIR DETAIL
1 1/2" = 1'-0"

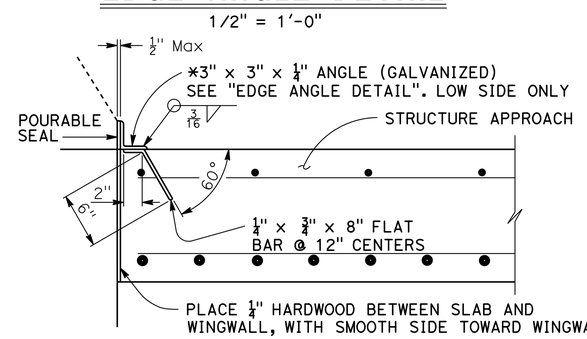

*(TO BE USED WITH CONCRETE BARRIER WITH VERTICAL FACE)

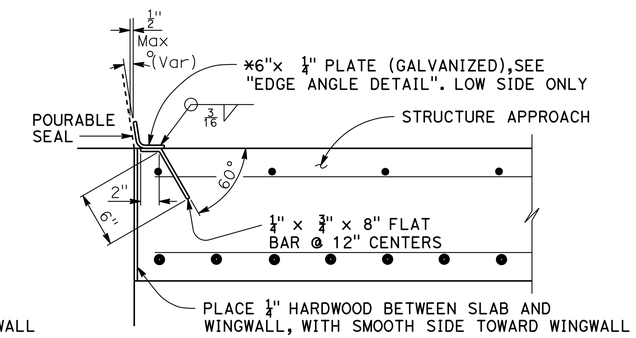

*(TO BE USED WITH CONCRETE BARRIER WITH SLOPING FACE)

DETAIL B
1 1/2" = 1'-0"

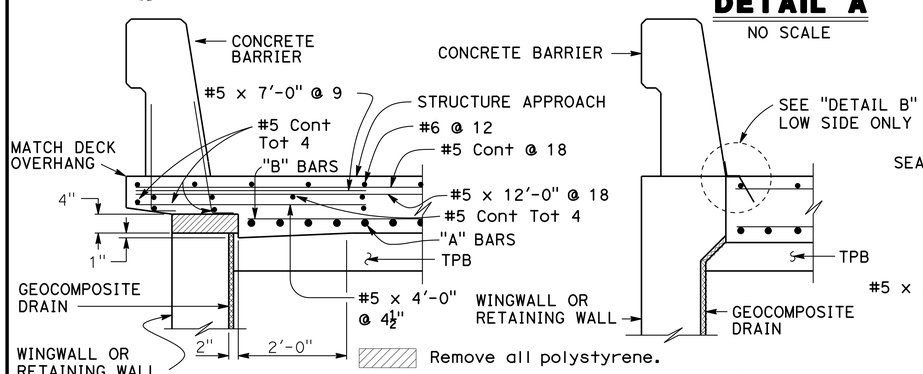

SECTION C-C
3/4" = 1'-0"

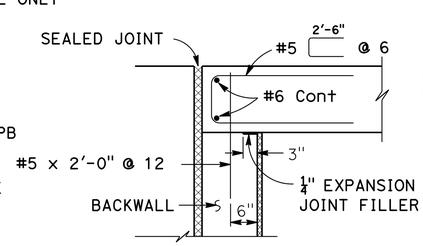

MR≤ 2"

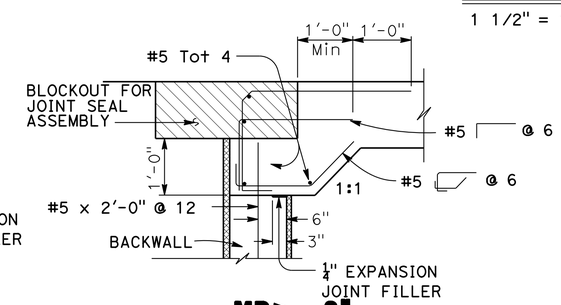

MR> 2"

SEAT TYPE ABUTMENT TIE DETAILS (SEE NOTE 1)
3/4" = 1'-0"

NOTES:

1. For details not shown, see "STRUCTURE PLAN" sheets. For MR ≤ 2", adjust bar reinforcement to clear a sawcut for sealed joint, when required.
2. For drainage details, see "STRUCTURE APPROACH DRAINAGE DETAILS" sheet.
3. Longitudinal construction joints, when permitted by the Engineer, shall be located on lane lines.
4. End angle or plate at beginning of barrier transition, end of wingwall or end of structure approach as applicable.
5. For transverse contact joint with new PCC paving, refer to Standard Plan P10.
6. At the contractor's option, approach slab transverse reinforcement may be placed parallel to paving notch. Spacing of transverse reinforcement is measured along CL roadway.

NOTE: (TYPE E-1 TO BE USED, UNLESS OTHERWISE SHOWN ON PLAN)
THE CONRACTOR SHALL VERIFY ALL CONTROLLING FIELD DIMENSIONS BEFORE ORDERING OR FABRICATING ANY MATERIAL

REVISED STANDARD DRAWING
FILE No. xs3-120
APPROVAL DATE July 2011

STATE OF CALIFORNIA
DEPARTMENT OF TRANSPORTATION

DIVISION OF ENGINEERING SERVICES

BRIDGE NO. 29-0350
POST MILE T14.83

SR4 CROSSTOWN VIADUCT
STRUCTURE APPROACH TYPE N(30S)

DS OSD 2147A (ENGLISH STANDARD DRAWING "XS" BORDER REV. (02-02-11)

ORIGINAL SCALE IN INCHES FOR REDUCED PLANS 0 1 2 3

UNIT: 1455
PROJECT NUMBER & PHASE: 10000002291 10-0S1101

DISREGARD PRINTS BEARING EARLIER REVISION DATES

REVISION DATES 8/10/11 6/08/12 9/04/12 11/27/12 SHEET 93 OF 111

DATE PLOTTED => 23-JUL-2013
TIME PLOTTED => 10:53

USERNAME => s119571
DGN FILE => 29-0350-s-sa_n30s.dgn

DIST	COUNTY	ROUTE	POST MILES TOTAL PROJECT	SHEET No	TOTAL SHEETS
10	SJ	4,5	Var	434	486

REGISTERED CIVIL ENGINEER — DATE 11/27/12

7-22-13
PLANS APPROVAL DATE

REGISTERED PROFESSIONAL ENGINEER — KIANOUSH HARIRSAZ — No. C39591 — Exp. 12/31/13 — CIVIL — STATE OF CALIFORNIA

The State of California or its officers or agents shall not be responsible for the accuracy or completeness of electronic copies of this plan sheet.

SAN JOAQUIN COUNCIL OF GOVERNMENTS
555 E. WEBER AVENUE
STOCKTON, CA 95202

RAJAPPAN & MEYER
CONSULTING ENGINEERS, INC.
1038 LEIGH AVE, SUITE 100
SAN JOSE, CA 95126

NOTES:

1. Low end of subgrade drain shown, at high end install cap at end of 3" slotted pipe
2. Not all barrier reinforcement shown
3. At acute corners of approach slab, bend reinforcement as required to clear expansion joint
4. Specific concrete barrier to be utilized as shown on "TYPICAL SECTION" elsewhere in "STRUCTURE PLANS" sheets

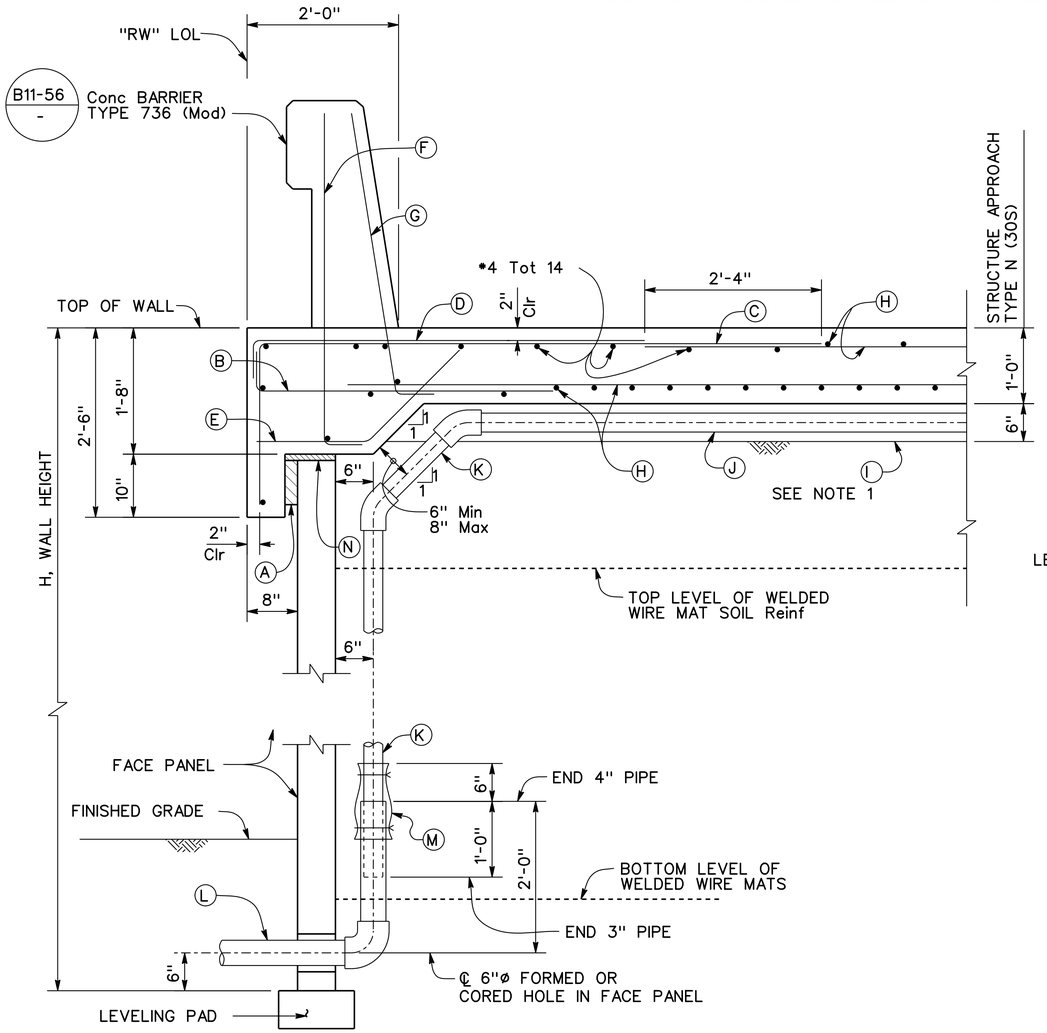

SECTION AT TOP ABUTMENT 1 STRUCTURE APPROACH SLAB

NO SCALE

LEGEND:

- (A) 2" Expanded polystyrene recessed 2" into barrier slab at front of MSE face panel
- (B) *5 5/8" 3'-4" @ 12
- (C) *5 6'-10 5/8" @ 12
- (D) *5 4'-7" @ 12 bundled with (C) bars
- (E) *5 @ 12
- (F) *5 6 1/4" @ 16 (To be in place prior to Approach Slab concrete)
- (G) *5 6 1/4" @ 8 (To be in place prior to Approach Slab concrete)
- (H) Approach Slab reinforcement
- (I) Filter fabric
- (J) 3" Plastic pipe (slotted)
- (K) 3" Plastic pipe and fittings (unslotted)
- (L) 4" Schedule 80 PVC outlet pipe and fittings (unslotted)
- (M) 1'-0" wide x 2'-0" filter fabric wrapped around pipe and secured with nylon ties
- (N) 1" Expanded Polystyrene

NOTE:
THE CONTRACTOR SHALL VERIFY ALL CONTROLLING FIELD DIMENSIONS BEFORE ORDERING OR FABRICATING ANY MATERIAL

Reza Erfanian
DESIGN OVERSIGHT Reza Erfanian
5-10-13
SIGN OFF DATE

	BY	CHECKED
DESIGN	P. SHINN	N. VO / S. SHI
DETAILS	P. SHINN	N. VO / S. SHI
QUANTITIES	S. DESALEGN	M. PHILIPS

PREPARED FOR THE STATE OF CALIFORNIA DEPARTMENT OF TRANSPORTATION

P. SHINN
PROJECT ENGINEER

BRIDGE NO. 29-0350
POST MILES T14.83

SR4 CROSSTOWN VIADUCT
APPROACH SLAB DETAILS

DESIGN DETAIL SHEET (ENGLISH) (REV.7/16/10)

ORIGINAL SCALE IN INCHES FOR REDUCED PLANS 0 1 2 3

UNIT: 1455
PROJECT NUMBER & PHASE: 10000002291
CONTRACT NO.: 10-0S1101

DISREGARD PRINTS BEARING EARLIER REVISION DATES
REVISION DATES 8/10/11 6/08/12 9/04/12 11/27/12
SHEET 94 OF 111

FILE => 29-0350-s-sa_n30sdt.dgn

USERNAME => s119571 DATE PLOTTED => 23-JUL-2013 TIME PLOTTED => 10:53

DIST	COUNTY	ROUTE	POST MILES TOTAL PROJECT	SHEET No.	TOTAL SHEETS
10	SJ	4,5	Var	435	486

REGISTERED CIVIL ENGINEER 11/27/12 DATE

7-22-13
PLANS APPROVAL DATE

REGISTERED PROFESSIONAL ENGINEER KAMOUSH HARIRSAZ No. C39591 Exp. 12/31/13 CIVIL STATE OF CALIFORNIA

The State of California or its officers or agents shall not be responsible for the accuracy or completeness of electronic copies of this plan sheet.

SAN JOAQUIN COUNCIL OF GOVERNMENTS
555 E. WEBER AVENUE
STOCKTON, CA 95202

RAJAPPAN & MEYER
CONSULTING ENGINEERS, INC.
1038 LEIGH AVE, SUITE 100
SAN JOSE, CA 95126

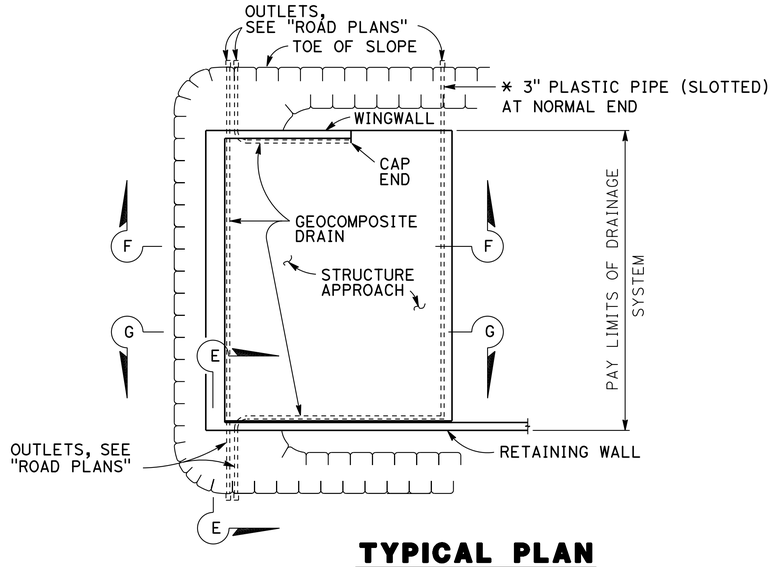

TYPICAL PLAN

1" = 10'

* FOR PIPE LAYOUT AT STAGGERED END, SEE "DETAIL B".

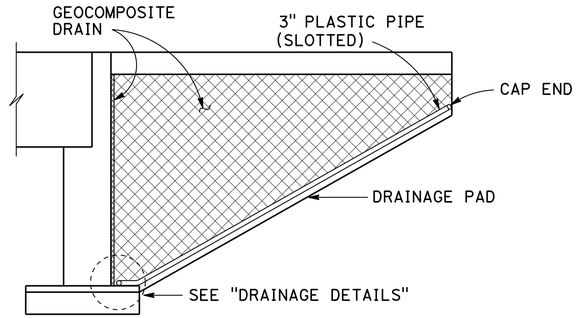

CANTILEVER WINGWALL SECTION F-F

1/4" = 1'-0"

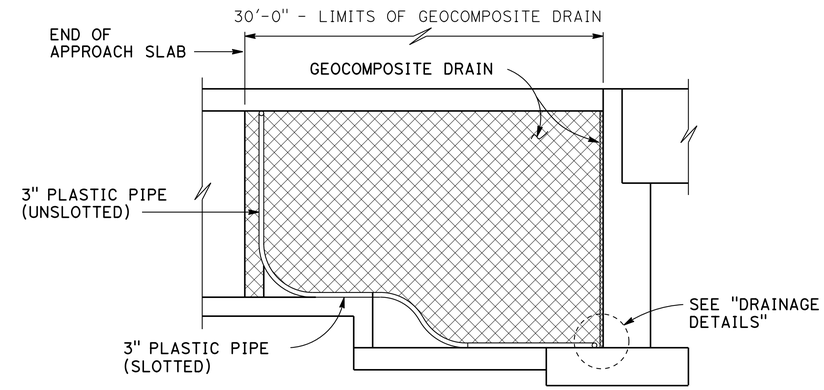

RETAINING WALL WINGWALL DRAINAGE DETAILS

SECTION G-G

1/4" = 1'-0"

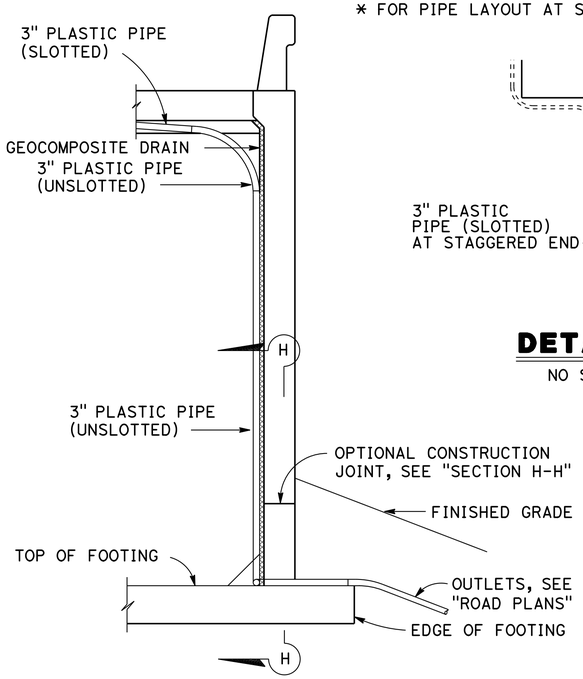

SECTION E-E

1/2" = 1'-0"

NOTE: BENDS AND JUNCTIONS IN 3" PLASTIC PIPE ARE 30" RADIUS MINIMUM

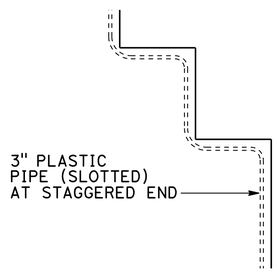

DETAIL B

NO SCALE

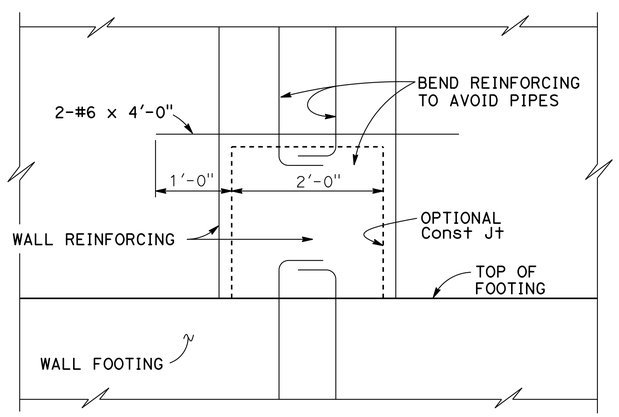

SECTION H-H

1" = 1'-0"

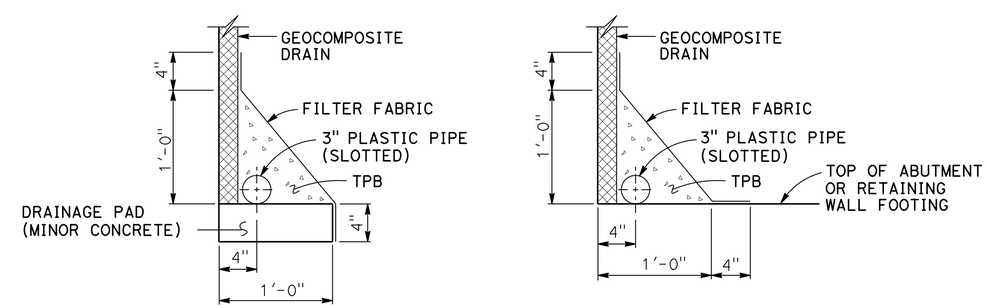

WITHOUT FOOTING

WITH FOOTING

DRAINAGE DETAILS

1 1/2" = 1'-0"

NOTE:
THE CONRACTOR SHALL VERIFY ALL CONTROLLING FIELD DIMENSIONS BEFORE ORDERING OR FABRICATING ANY MATERIAL

REVISED STANDARD DRAWING

FILE No. xs3-110

APPROVAL DATE July 2011

DS OSD 2147A (ENGLISH STANDARD DRAWING "XS" BORDER REV. (02-02-11)

ORIGINAL SCALE IN INCHES FOR REDUCED PLANS 0 1 2 3

STATE OF CALIFORNIA DEPARTMENT OF TRANSPORTATION

DIVISION OF ENGINEERING SERVICES

BRIDGE NO. 29-0350

POST MILE T14.83

SR4 CROSSTOWN VIADUCT

STRUCTURE APPROACH DRAINAGE DETAILS

UNIT: 1455
PROJECT NUMBER & PHASE: 10000002291 10-0S1101

DISREGARD PRINTS BEARING EARLIER REVISION DATES

REVISION DATES 8/10/11 6/08/12 9/04/12 11/27/12

SHEET 95 OF 111

DATE PLOTTED => 23-JUL-2013
TIME PLOTTED => 10:53

USERNAME => s119571
DGN FILE => 29-0350-s-sadd.dgn

DIST	COUNTY	ROUTE	POST MILES TOTAL PROJECT	SHEET No.	TOTAL SHEETS
10	SJ	4,5	Var	436	486

REGISTERED CIVIL ENGINEER 11/27/12 DATE

7-22-13
PLANS APPROVAL DATE

REGISTERED PROFESSIONAL ENGINEER KAMOUSH HARIRSAZ No. C39591 Exp. 12/31/13 CIVIL STATE OF CALIFORNIA

The State of California or its officers or agents shall not be responsible for the accuracy or completeness of electronic copies of this plan sheet.

SAN JOAQUIN COUNCIL OF GOVERNMENTS
555 E. WEBER AVENUE
STOCKTON, CA 95202

RAJAPPAN & MEYER
CONSULTING ENGINEERS, INC.
1038 LEIGH AVE, SUITE 100
SAN JOSE, CA 95126

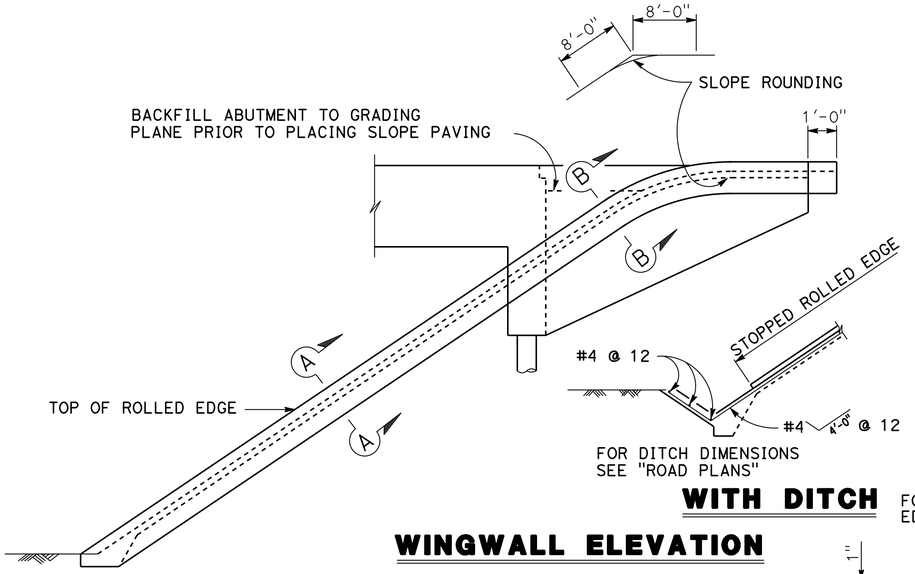

WITH DITCH

WINGWALL ELEVATION

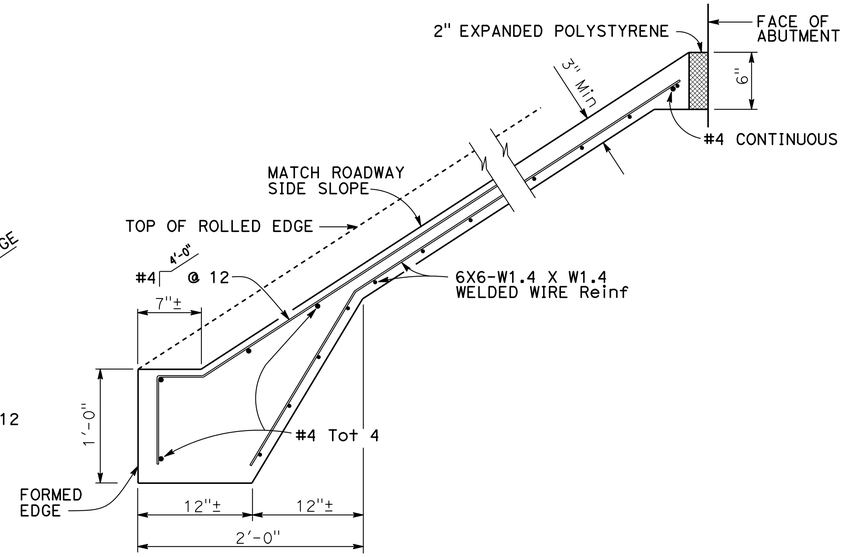

TYPICAL SECTION - CONCRETE PAVING

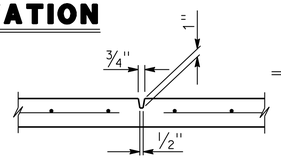

PREFORMED GROOVE

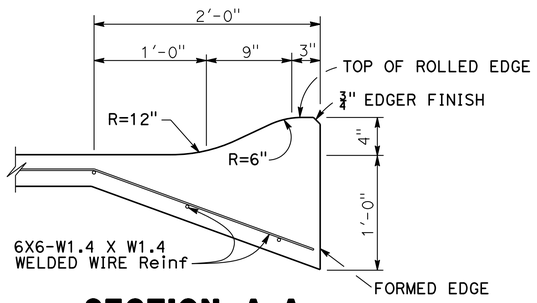

SECTION A-A

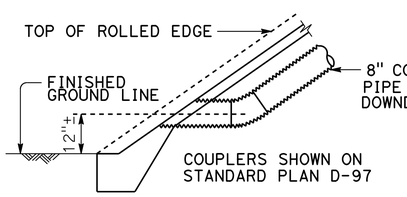

TYPICAL - NO CURB

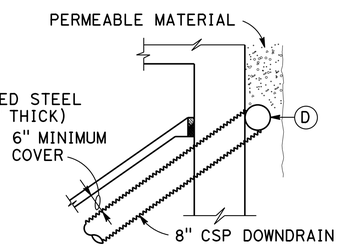

TYPICAL - DRAIN CONNECTION

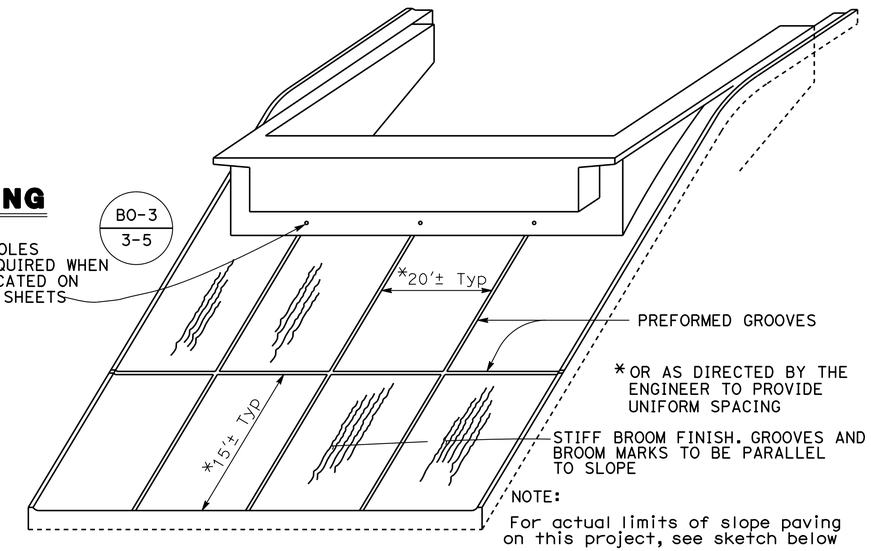

PICTORIAL VIEW OF TYPICAL INSTALLATION

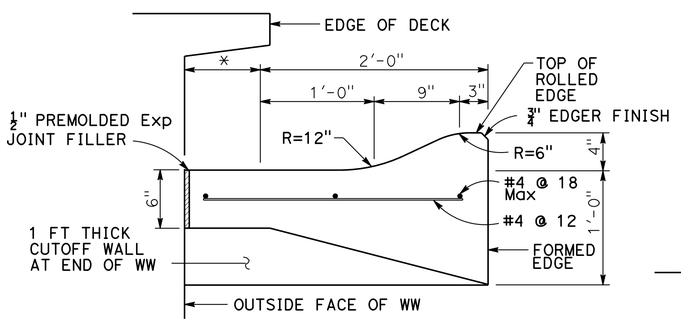

SECTION B-B

* THIS DIMENSION BECOMES ZERO WHEN EDGE OF DECK IS AT OUTSIDE FACE OF WW

NOTE:
THE CONRACTOR SHALL VERIFY ALL CONTROLLING FIELD DIMENSIONS BEFORE ORDERING OR FABRICATING ANY MATERIAL

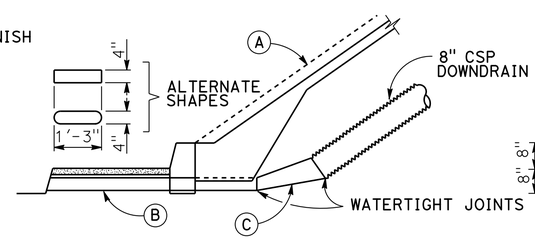

TYPICAL - WITH SIDEWALK

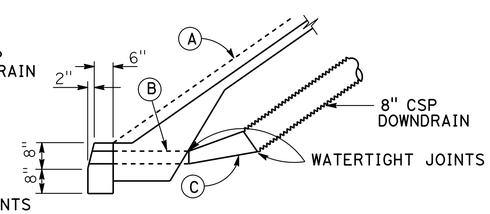

TYPICAL - WITH CURB

DRAINAGE DETAILS

NOTE:
Drainage details are only applicable when is indicated on detail sheets.

BO-3
3-5

LIMITS OF SLOPE PAVING & DRAINAGE LAYOUT

(A) Top of rolled edge

(B) Conduit:
0.064" galv corrugated steel or 0.109" smooth galv steel

(C) Taper: { 0.064" galv corrugated steel or 0.109" smooth galv steel

(D) 8" perforated steel pipe (0.064" thick) underdrain behind abutment. Connect to downdrain as shown on limits of Slope Paving & Drainage layout.

NO SCALE

REVISED STANDARD DRAWING

FILE NO. xs4-210

APPROVAL DATE July 2011

DS OSD 2147A (ENGLISH STANDARD DRAWING "XS" BORDER REV. (02-02-11)

ORIGINAL SCALE IN INCHES FOR REDUCED PLANS 0 1 2 3

STATE OF CALIFORNIA
DEPARTMENT OF TRANSPORTATION

DIVISION OF ENGINEERING SERVICES

BRIDGE NO. 29-0350
POST MILE T14.83

SR4 CROSSTOWN VIADUCT
SLOPE PAVING - FULL SLOPE

UNIT: 1455
PROJECT NUMBER & PHASE: 10000002291
CONTRACT NO.: 10-0S1101

DISREGARD PRINTS BEARING EARLIER REVISION DATES

REVISION DATES 8/10/11 6/08/12 9/04/12 11/27/12 SHEET 96 OF 111

FILE => 29-0350-t-slpdet.dgn

USERNAME => s119571 DATE PLOTTED => 23-JUL-2013 TIME PLOTTED => 10:53

DIST	COUNTY	ROUTE	POST MILES TOTAL PROJECT	SHEET No	TOTAL SHEETS
10	SJ	4,5	Var	437	486

REGISTERED CIVIL ENGINEER — DATE 11/27/12

7-22-13
PLANS APPROVAL DATE

REGISTERED PROFESSIONAL ENGINEER — KIANOUSH HARIRSAZ — No. C39591 — Exp. 12/31/13 — CIVIL — STATE OF CALIFORNIA

The State of California or its officers or agents shall not be responsible for the accuracy or completeness of electronic copies of this plan sheet.

SAN JOAQUIN COUNCIL OF GOVERNMENTS
555 E. WEBER AVENUE
STOCKTON, CA 95202

RAJAPPAN & MEYER
CONSULTING ENGINEERS, INC.
1038 LEIGH AVE, SUITE 100
SAN JOSE, CA 95126

DERIVI CONSTRUCTION & ARCHITECTURE, INC.
924 N. YOSEMITE STREET
STOCKTON, CA 95203

Note:
1. Medallion and Barrier design are repeated on all columns except Bent 6-9 and Abutments.

2. Medallion and barrier design occurs at all locations of columns including inside face of Viaduct

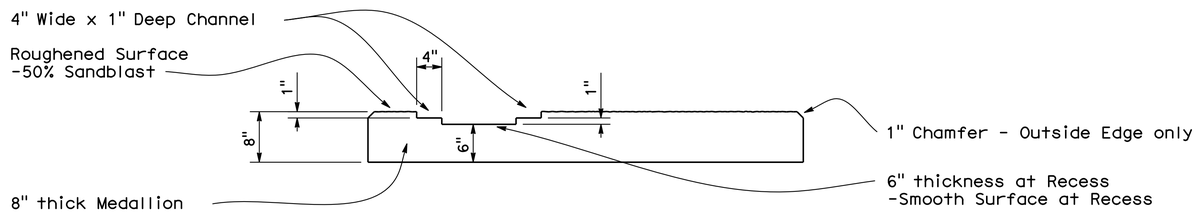

SECTION B-B
SCALE: 1" = 1'

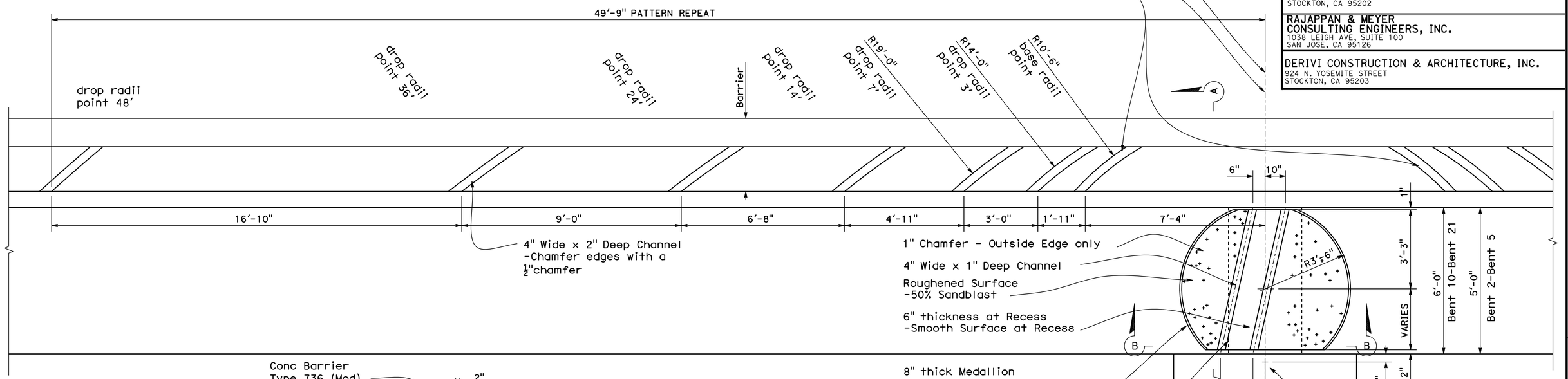

Center of Medallion aligns with center of Column below

Pattern at Barrier mirrors around centerline of column

ARCHITECTURAL TREATMENT
MEDALLION (ABOVE BENT CAP) AND BARRIER ELEVATION
SCALE: 1/2" = 1'

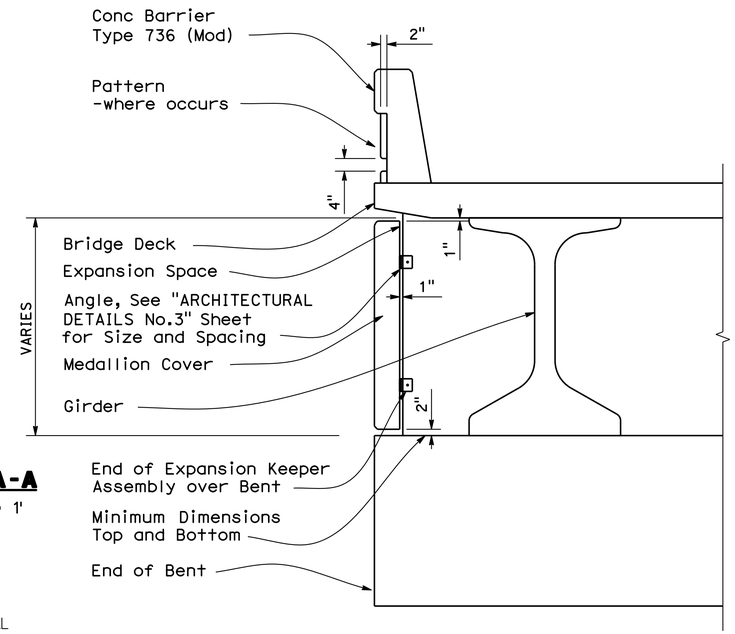

SECTION A-A
SCALE: 1/2" = 1'

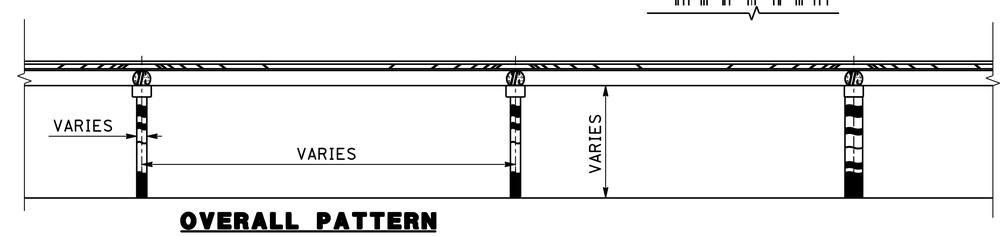

OVERALL PATTERN
SCALE: 1'-30'

NOTE:
THE CONTRACTOR SHALL VERIFY ALL CONTROLLING FIELD DIMENSIONS BEFORE ORDERING OR FABRICATING ANY MATERIAL

DESIGN OVERSIGHT — Reza Erfanian
12/19/12
SIGN OFF DATE

	BY	CHECKED
DESIGN	C.D.B. FRANKEL	P. SHINN
DETAILS	C.D.B. FRANKEL	P. SHINN
QUANTITIES	S. DESALEGN	M. PHILIPS

PREPARED FOR THE STATE OF CALIFORNIA DEPARTMENT OF TRANSPORTATION

P. SHINN
PROJECT ENGINEER

BRIDGE NO. 29-0350
POST MILES T14.83

SR4 CROSSTOWN VIADUCT
ARCHITECTURAL DETAILS No. 1

DESIGN DETAIL SHEET (ENGLISH) (REV.7/16/10)

ORIGINAL SCALE IN INCHES FOR REDUCED PLANS 0 1 2 3

UNIT: 1455
PROJECT NUMBER & PHASE: 10000002291
CONTRACT NO.: 10-0S1101

DISREGARD PRINTS BEARING EARLIER REVISION DATES
REVISION DATES 8/10/11 6/08/12 9/04/12 11/27/12
SHEET 97 OF 111

FILE => 29-0350-u-archdt01.dgn

USERNAME => s119571 DATE PLOTTED => 23-JUL-2013 TIME PLOTTED => 10:53

DIST	COUNTY	ROUTE	POST MILES TOTAL PROJECT	SHEET No	TOTAL SHEETS
10	SJ	4,5	Var	438	486

REGISTERED CIVIL ENGINEER — DATE 11/27/12

7-22-13
PLANS APPROVAL DATE

REGISTERED PROFESSIONAL ENGINEER — KIANOUSH HARIRSAZ — No. C39591 — Exp. 12/31/13 — CIVIL — STATE OF CALIFORNIA

The State of California or its officers or agents shall not be responsible for the accuracy or completeness of electronic copies of this plan sheet.

SAN JOAQUIN COUNCIL OF GOVERNMENTS
555 E. WEBER AVENUE
STOCKTON, CA 95202

RAJAPPAN & MEYER
CONSULTING ENGINEERS, INC.
1038 LEIGH AVE, SUITE 100
SAN JOSE, CA 95126

DERIVI CONSTRUCTION & ARCHITECTURE, INC.
924 N. YOSEMITE STREET
STOCKTON, CA 95203

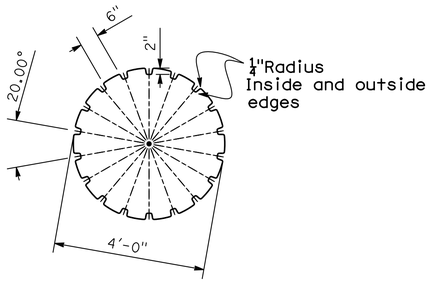

VIEW A-A (4' COLUMN)
SCALE: 1/2" = 1'

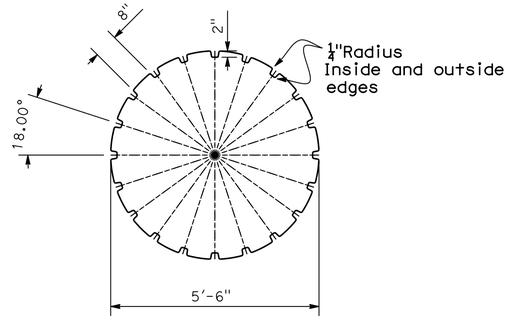

VIEW B-B (5.5' COLUMN)
SCALE: 1/2" = 1'

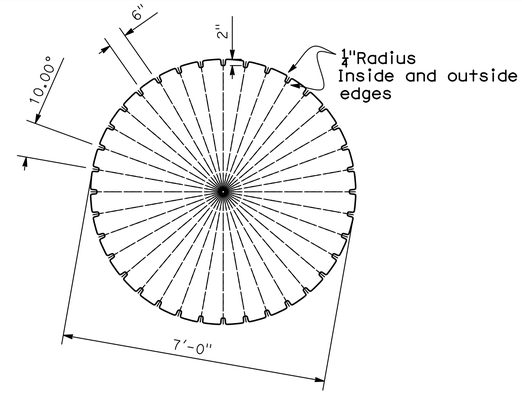

VIEW B-B (7' COLUMN)
SCALE: 1/2" = 1'

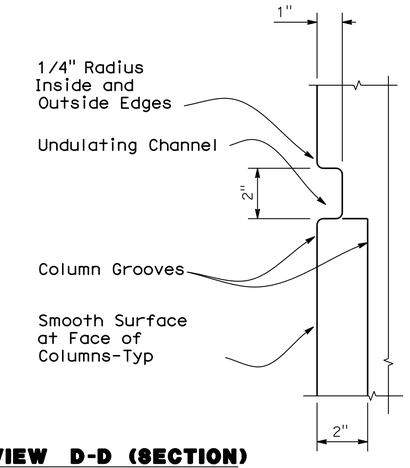

VIEW D-D (SECTION)
SCALE: 4" = 1'

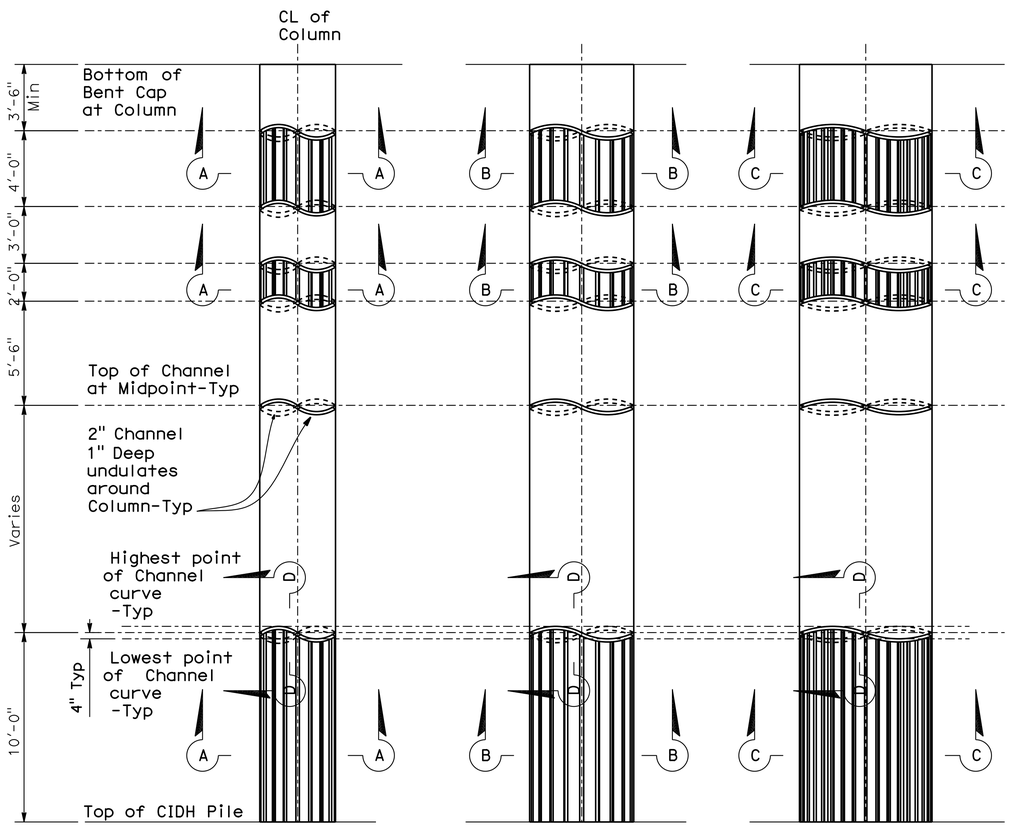

4' COLUMN **5.5' COLUMN** **7' COLUMN**

COLUMN HEIGHT FROM OVER 40' TO 35'
SCALE: 1/4" = 1'

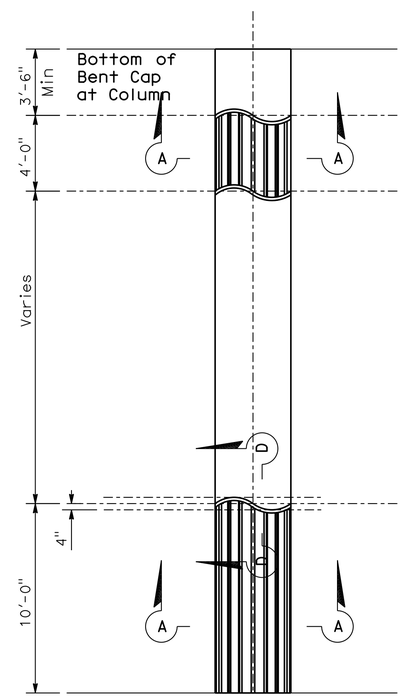

4' COLUMN

COLUMN HEIGHT FROM 34' to 25'

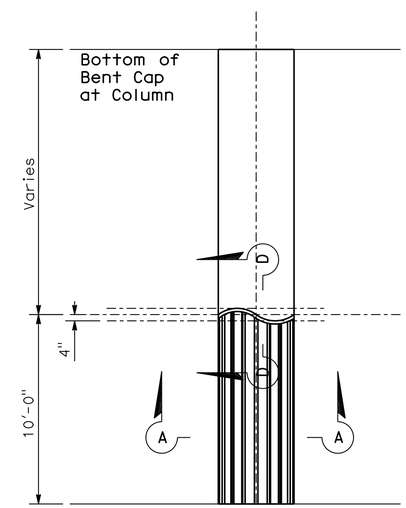

4' COLUMN

COLUMN HEIGHT FROM 24" AND SHORTER

NOTE:
THE CONTRACTOR SHALL VERIFY ALL CONTROLLING FIELD DIMENSIONS BEFORE ORDERING OR FABRICATING ANY MATERIAL

Reza Erfanian
DESIGN OVERSIGHT — Reza Erfanian
12/19/12
SIGN OFF DATE

	BY	CHECKED
DESIGN	C. D. B. FRANKEL	P. SHINN
DETAILS	C. D. B. FRANKEL	P. SHINN
QUANTITIES	S. DESALEGN	M. PHILIPS

PREPARED FOR THE
STATE OF CALIFORNIA
DEPARTMENT OF TRANSPORTATION

P. SHINN
PROJECT ENGINEER

BRIDGE NO. 29-0350
POST MILES T14.83

SR4 CROSSTOWN VIADUCT
ARCHITECTURAL DETAILS No. 2

DESIGN DETAIL SHEET (ENGLISH) (REV.7/16/10)

ORIGINAL SCALE IN INCHES FOR REDUCED PLANS 0 1 2 3

UNIT: 1455
PROJECT NUMBER & PHASE: 10000002291
CONTRACT NO.: 10-0S1101

DISREGARD PRINTS BEARING EARLIER REVISION DATES → 8/10/11 8/08/12 9/04/12 11/27/12

SHEET 98 OF 111

FILE => 29-0350-u-archdt02.dgn

USERNAME => s119571 DATE PLOTTED => 23-JUL-2013 TIME PLOTTED => 10:53

DIST	COUNTY	ROUTE	POST MILES TOTAL PROJECT	SHEET No	TOTAL SHEETS
10	SJ	4,5	Var	439	486

REGISTERED CIVIL ENGINEER 11/27/12 DATE

7-22-13
PLANS APPROVAL DATE

REGISTERED PROFESSIONAL ENGINEER KIANOUSH HARIRSAZ No. C39591 Exp. 12/31/13 CIVIL STATE OF CALIFORNIA

The State of California or its officers or agents shall not be responsible for the accuracy or completeness of electronic copies of this plan sheet.

SAN JOAQUIN COUNCIL OF GOVERNMENTS
555 E. WEBER AVENUE
STOCKTON, CA 95202

RAJAPPAN & MEYER
CONSULTING ENGINEERS, INC.
1038 LEIGH AVE, SUITE 100
SAN JOSE, CA 95126

DERIVI CONSTRUCTION & ARCHITECTURE, INC.
924 N. YOSEMITE STREET
STOCKTON, CA 95203

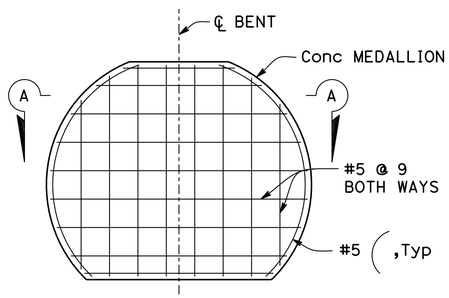

REINFORCEMENT DETAILS

1/2" = 1'-0"

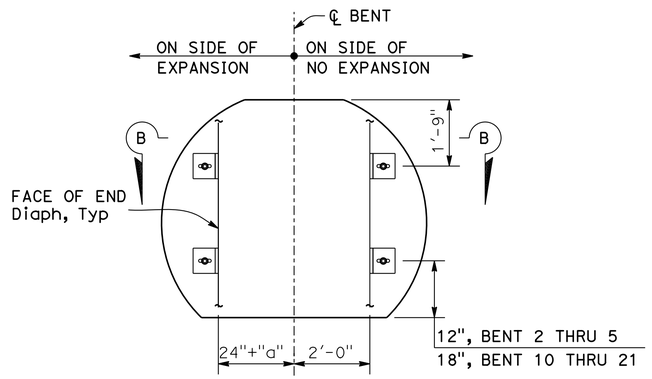

ON EXPANSION DIAPHRAGM

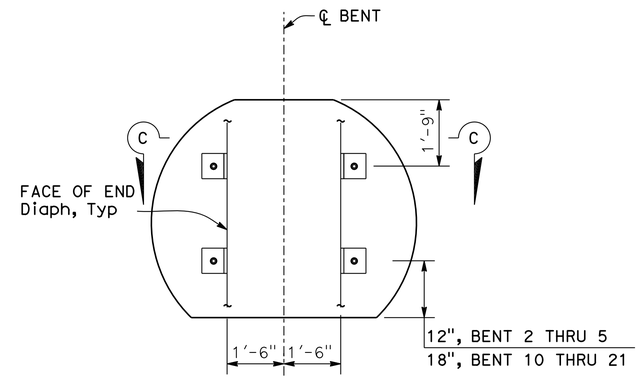

ON NON-EXPANSION DIAPHRAGM

ANCHORAGE DETAILS

1/2" = 1'-0"

NOTES:

1. For dimensions for medallion not shown, see "ARCHITECTURAL DETAILS No.1" sheet.
2. For dimension "a", see "JOINT SEAL ASSEMBLY" sheet.
3. All steel shall be galvanized after fabrication.

SECTION A-A

1/2" = 1'=0"

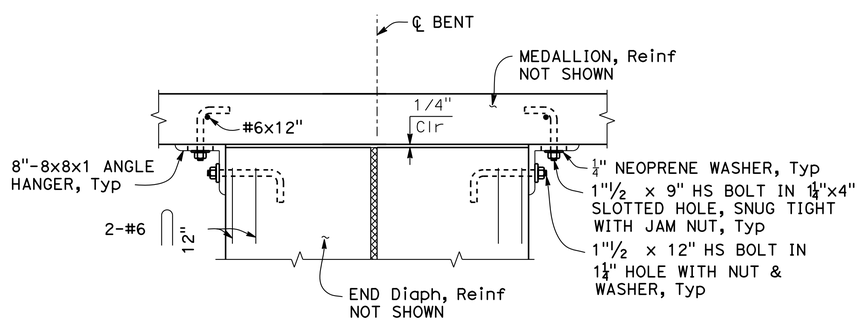

SECTION B-B

1" = 1'

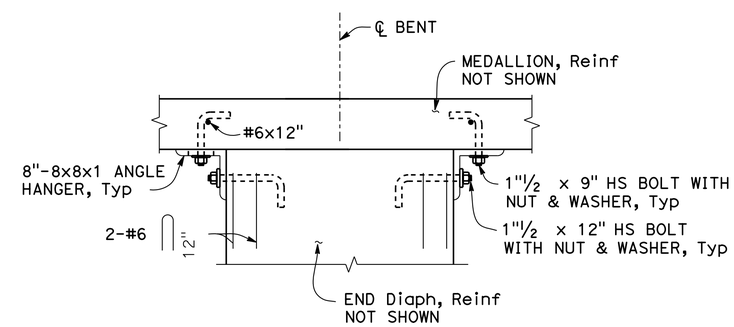

SECTION C-C

1" = 1'

NOTE:
THE CONTRACTOR SHALL VERIFY ALL CONTROLLING FIELD DIMENSIONS BEFORE ORDERING OR FABRICATING ANY MATERIAL

Reza Erfanian
DESIGN OVERSIGHT Reza Erfanian
12/19/12
SIGN OFF DATE

	BY	CHECKED
DESIGN	C. D. B. FRANKEL	N. VO / S. SHI
DETAILS	C. D. B. FRANKEL	N. VO / S. SHI
QUANTITIES	S. DESALEGN	M. PHILIPS

PREPARED FOR THE
STATE OF CALIFORNIA
DEPARTMENT OF TRANSPORTATION

P. SHINN
PROJECT ENGINEER

BRIDGE NO. 29-0350
POST MILES T14.83

SR4 CROSSTOWN VIADUCT
ARCHITECTURAL DETAILS No. 3

DESIGN DETAIL SHEET (ENGLISH) (REV.7/16/10)

ORIGINAL SCALE IN INCHES FOR REDUCED PLANS 0 1 2 3

UNIT: 1455
PROJECT NUMBER & PHASE: 10000002291 CONTRACT NO.: 10-0S1101

DISREGARD PRINTS BEARING EARLIER REVISION DATES
REVISION DATES 8/10/11 6/08/12 9/04/12 11/27/12
SHEET 99 OF 111

FILE => 29-0350-u-archdt03.dgn

USERNAME => s119571 DATE PLOTTED => 23-JUL-2013 TIME PLOTTED => 10:53

DIST	COUNTY	ROUTE	POST MILES TOTAL PROJECT	SHEET No	TOTAL SHEETS
10	SJ	4,5	Var	440	486

REGISTERED CIVIL ENGINEER — DATE 11/27/12

7-22-13
PLANS APPROVAL DATE

REGISTERED PROFESSIONAL ENGINEER — KIANOUSH HARIRSAZ — No. C39591 — Exp. 12/31/13 — CIVIL — STATE OF CALIFORNIA

The State of California or its officers or agents shall not be responsible for the accuracy or completeness of electronic copies of this plan sheet.

SAN JOAQUIN COUNCIL OF GOVERNMENTS
555 E. WEBER AVENUE
STOCKTON, CA 95202

RAJAPPAN & MEYER
CONSULTING ENGINEERS, INC.
1038 LEIGH AVE, SUITE 100
SAN JOSE, CA 95126

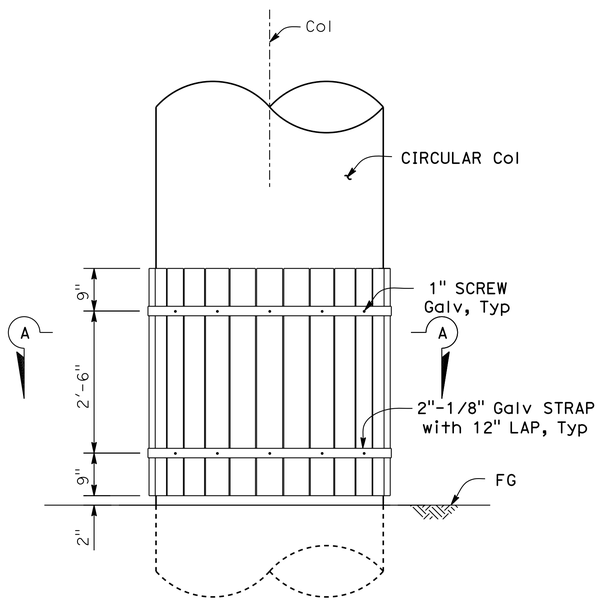

ELEVATION
3/4"=1'-0"

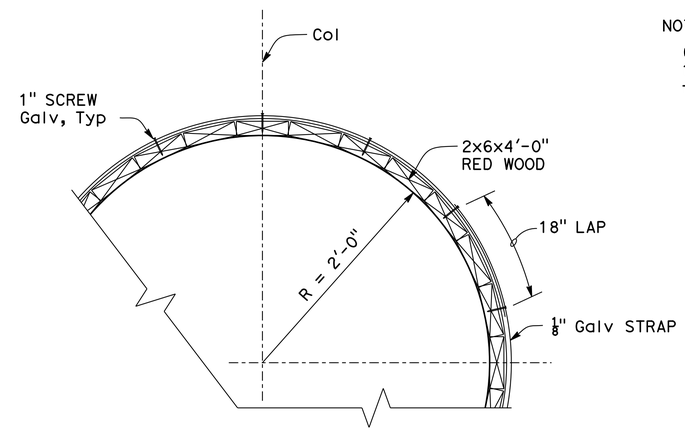

PARTIAL SECTION A-A
NO SCALE

NOTE:
Column protection details apply for Abut 1W & 1E, Bent 2W & 2E, Bent 3W & 3E, total 12 columns.

NOTE:
THE CONTRACTOR SHALL VERIFY ALL CONTROLLING FIELD DIMENSIONS BEFORE ORDERING OR FABRICATING ANY MATERIAL

DESIGN OVERSIGHT — Reza Erfanian
12/19/12
SIGN OFF DATE

	BY	CHECKED
DESIGN	P. SHINN	N. VO / S. SHI
DETAILS	P. SHINN	N. VO / S. SHI
QUANTITIES	S. DESALEGN	M. PHILIPS

PREPARED FOR THE STATE OF CALIFORNIA DEPARTMENT OF TRANSPORTATION

P. SHINN
PROJECT ENGINEER

BRIDGE NO. 29-0350
POST MILES T14.83

SR4 CROSSTOWN VIADUCT
COLUMN PROTECTION DETAILS

DESIGN DETAIL SHEET (ENGLISH) (REV.7/16/10)

ORIGINAL SCALE IN INCHES FOR REDUCED PLANS 0 1 2 3

UNIT: 1455
PROJECT NUMBER & PHASE: 10000002291 CONTRACT NO.: 10-0S1101

DISREGARD PRINTS BEARING EARLIER REVISION DATES — REVISION DATES 8/10/11 6/08/12 9/04/12 11/27/12 — SHEET 100 OF 111

FILE => 29-0350-u-miscdt03.dgn

USERNAME => s119571 DATE PLOTTED => 23-JUL-2013 TIME PLOTTED => 10:53

DIST	COUNTY	ROUTE	POST MILES TOTAL PROJECT	SHEET No	TOTAL SHEETS
10	SJ	4,5	Var	441	486

REGISTERED CIVIL ENGINEER 4/29/13 DATE

7-22-13
PLANS APPROVAL DATE

REGISTERED PROFESSIONAL ENGINEER
Carl Henderson
No. 2886
Exp. 6/30/2013
GEOTECHNICAL
STATE OF CALIFORNIA

The State of California or its officers or agents shall not be responsible for the accuracy or completeness of electronic copies of this plan sheet.

San Joaquin Council of Governments
555 E. Weber Avenue
Stockton, CA. 95202

Kleinfelder, Inc.
2001 Arch-Airport Rd., Suite 100
Stockton, CA. 95206

This LOTB sheet was prepared in accordance with the Caltrans soil and rock logging, classification, and manual (2010) presentation

BENCHMARK:

The horizontal coordinates values are in the California Coordinate System (CCS 83) Zone 3, Epoch Date 2007.00, in U.S. survey feet.

The vertical control values are based on the North American Vertical Datum of 1988 (NAVD88) in in U.S. survey feet, height modernization survey station, (2007.00) and GEOID03 was used for the adjustment.

Reza Erfanian DESIGN OVERSIGHT Reza Erfanian 5-10-13 SIGN OFF DATE	DRAWN BY G. GOMEZ CHECKED BY C. HENDERSON	N. BERNER FIELD INVESTIGATION BY: DATE: JUNE 2011	PREPARED FOR THE STATE OF CALIFORNIA DEPARTMENT OF TRANSPORTATION	H. PARSA PROJECT ENGINEER	BRIDGE NO. 29-0350 POST MILES T14.83

SR4 CROSSTOWN VIADUCT
LOG OF TEST BORINGS 1 OF 11

GS LOTB SOIL LEGEND SHEET 1 (ENGLISH) (REV. 07/16/10)

ORIGINAL SCALE IN INCHES FOR REDUCED PLANS 0 1 2 3

UNIT: 1455
PROJECT NUMBER & PHASE: 10000002291 CONTRACT NO.: 10-0S1101

DISREGARD PRINTS BEARING EARLIER REVISION DATES → 5/24/12 8/16/12 8/23/12 4/29/13

SHEET 101 OF 111

FILE => 29-0350-z-ltb01.dgn

USERNAME => s119571 DATE PLOTTED => 23-JUL-2013 TIME PLOTTED => 10:53

DIST	COUNTY	ROUTE	POST MILES TOTAL PROJECT	SHEET No	TOTAL SHEETS
10	SJ	4,5	Var	442	486

REGISTERED CIVIL ENGINEER — DATE 4/29/13

REGISTERED PROFESSIONAL ENGINEER — Carl Henderson — No. 2886 — Exp. 6/30/2013 — GEOTECHNICAL — STATE OF CALIFORNIA

7-22-13
PLANS APPROVAL DATE

The State of California or its officers or agents shall not be responsible for the accuracy or completeness of electronic copies of this plan sheet.

San Joaquin Council of Governments
555 E. Weber Avenue
Stockton, CA. 95202

Kleinfelder, Inc.
2001 Arch-Airport Rd., Suite 100
Stockton, CA. 95206

This LOTB sheet was prepared in accordance with the Caltrans soil and rock logging, classification, and manual (2010) presentation

FOR PLAN VIEW, SEE "LOG OF TEST BORINGS 1 OF 11"

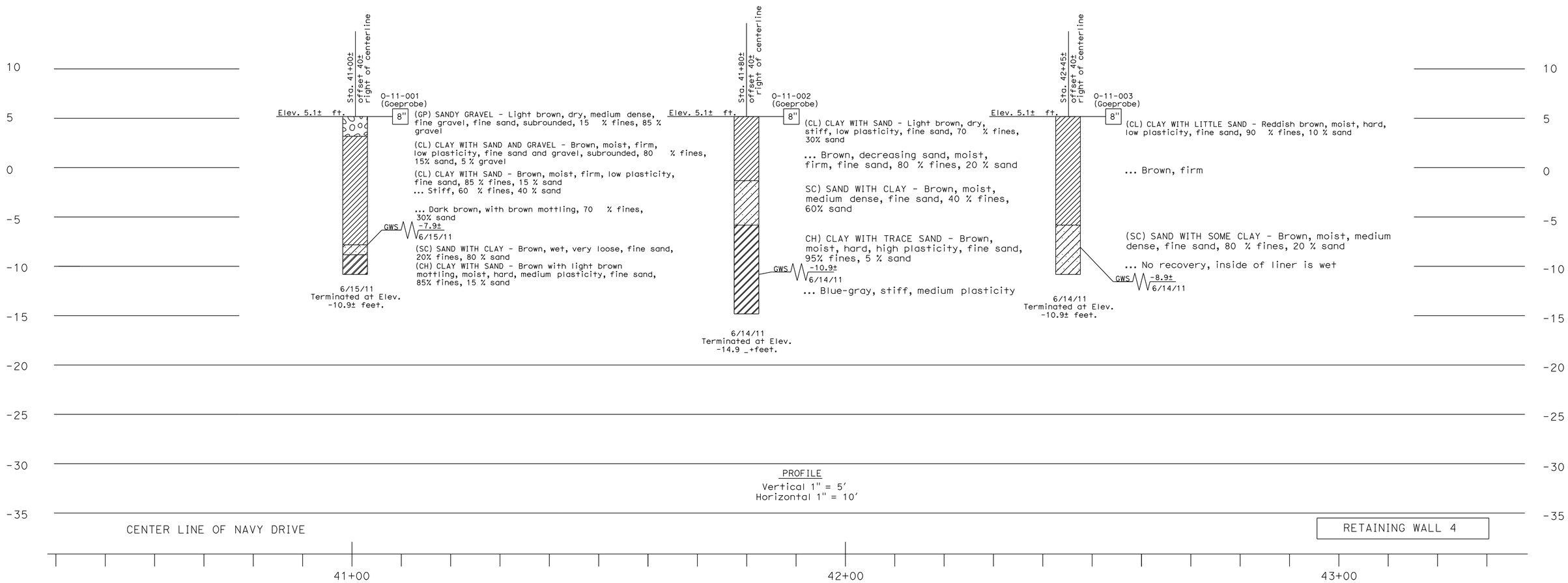

Reza Erfanian — DESIGN OVERSIGHT Reza Erfanian — 5-10-13 — SIGN OFF DATE	DRAWN BY G. GOMEZ	N. BERNER — FIELD INVESTIGATION BY:	PREPARED FOR THE STATE OF CALIFORNIA DEPARTMENT OF TRANSPORTATION	H. PARSA — PROJECT ENGINEER	BRIDGE NO. 29-0350 — POST MILES T14.83
	CHECKED BY C. HENDERSON	DATE: JUNE 2011			

SR4 CROSSTOWN VIADUCT
LOG OF TEST BORINGS 2 OF 11

GS LOTB SOIL LEGEND SHEET 1 (ENGLISH) (REV. 07/16/10)

ORIGINAL SCALE IN INCHES FOR REDUCED PLANS 0 1 2 3

UNIT: 1455
PROJECT NUMBER & PHASE: 10000002291 CONTRACT NO.: 10-0S1101

DISREGARD PRINTS BEARING EARLIER REVISION DATES → REVISION DATES 5/24/12 8/13/12 8/23/12 4/29/13

SHEET 102 OF 111

FILE => 29-0350-z-ltb02.dgn

USERNAME => s119571 DATE PLOTTED => 23-JUL-2013 TIME PLOTTED => 10:54

DIST	COUNTY	ROUTE	POST MILES TOTAL PROJECT	SHEET No	TOTAL SHEETS
10	SJ	4,5	Var	443	486

REGISTERED CIVIL ENGINEER 4/29/13 DATE

7-22-13
PLANS APPROVAL DATE

REGISTERED PROFESSIONAL ENGINEER Carl Henderson No. 2886 Exp. 6/30/2013 GEOTECHNICAL STATE OF CALIFORNIA

The State of California or its officers or agents shall not be responsible for the accuracy or completeness of electronic copies of this plan sheet.

San Joaquin Council of Governments
555 E. Weber Avenue
Stockton, CA. 95202

Kleinfelder, Inc.
2001 Arch-Airport Rd., Suite 100
Stockton, CA. 95206

This LOTB sheet was prepared in accordance with the Caltrans soil and rock logging, classification, and manual (2010) presentation

FOR PLAN VIEW, SEE "LOG OF TEST BORINGS 1 OF 11"

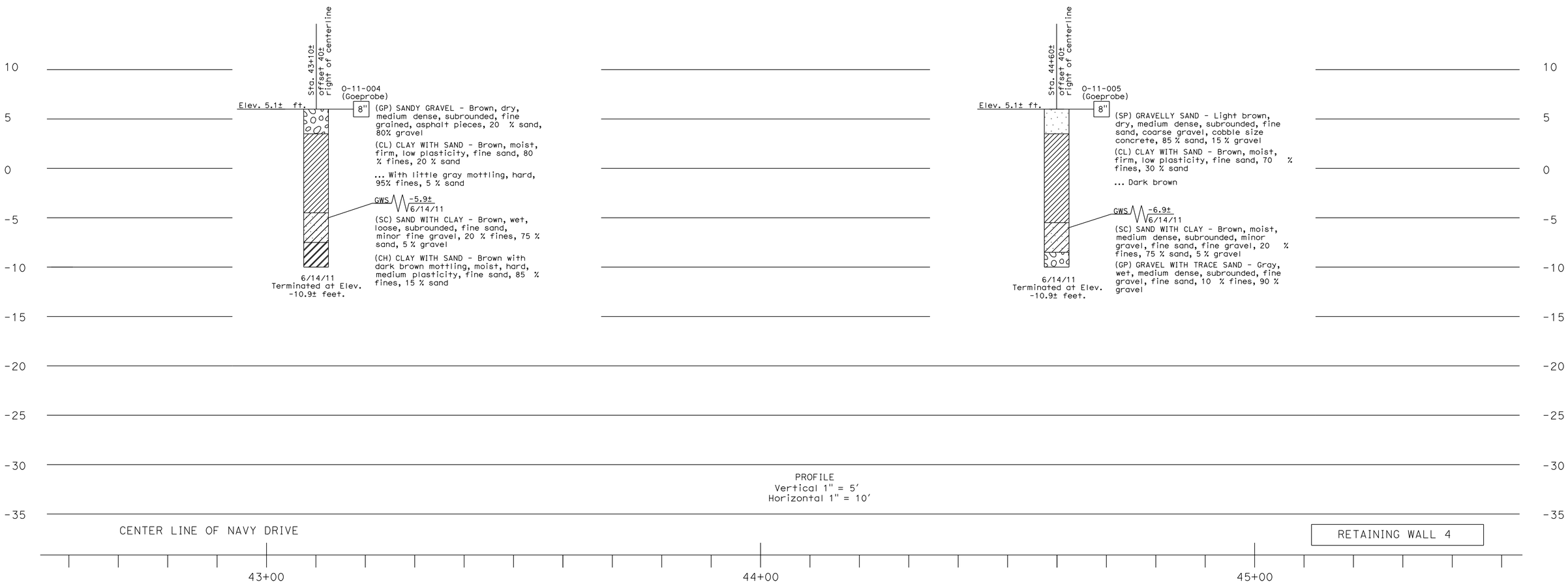

Reza Erfanian
DESIGN OVERSIGHT Reza Erfanian
5-10-13
SIGN OFF DATE

DRAWN BY G. GOMEZ
CHECKED BY C. HENDERSON

N. BERNER
FIELD INVESTIGATION BY:
DATE: JUNE 2011

PREPARED FOR THE STATE OF CALIFORNIA DEPARTMENT OF TRANSPORTATION

H. PARSA
PROJECT ENGINEER

BRIDGE NO. 29-0350
POST MILES T14.83

SR4 CROSSTOWN VIADUCT
LOG OF TEST BORINGS 3 OF 11

GS LOTB SOIL LEGEND SHEET 1 (ENGLISH) (REV. 07/16/10)

ORIGINAL SCALE IN INCHES FOR REDUCED PLANS 0 1 2 3

UNIT: 1455
PROJECT NUMBER & PHASE: 10000002291 CONTRACT NO.: 10-0S1101

DISREGARD PRINTS BEARING EARLIER REVISION DATES

REVISION DATES 5/29/12 8/15/12 8/23/12 4/29/13

SHEET 103 OF 111

FILE => 29-0350-z-ltb03.dgn

USERNAME => s119571 DATE PLOTTED => 23-JUL-2013 TIME PLOTTED => 10:54

DIST	COUNTY	ROUTE	POST MILES TOTAL PROJECT	SHEET No	TOTAL SHEETS
10	SJ	4,5	Var	444	486

REGISTERED CIVIL ENGINEER 4/29/13 DATE

7-22-13
PLANS APPROVAL DATE

REGISTERED PROFESSIONAL ENGINEER
Carl Henderson
No. 2886
Exp. 6/30/2013
GEOTECHNICAL
STATE OF CALIFORNIA

The State of California or its officers or agents shall not be responsible for the accuracy or completeness of electronic copies of this plan sheet.

San Joaquin Council of Governments
555 E. Weber Avenue
Stockton, CA. 95202

Kleinfelder, Inc.
2001 Arch-Airport Rd., Suite 100
Stockton, CA. 95206

This LOTB sheet was prepared in accordance with the Caltrans soil and rock logging, classification, and manual (2010) presentation

FOR PLAN VIEW, SEE "LOG OF TEST BORINGS 1 OF 11"

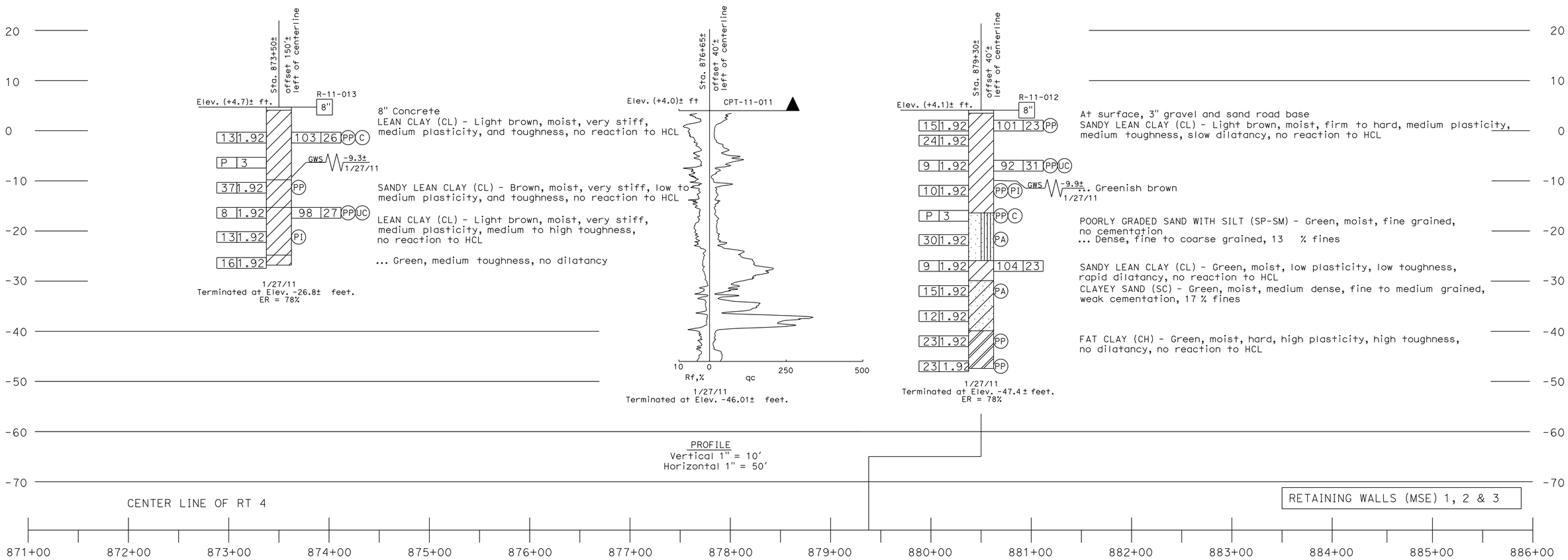

Reza Erfanian
DESIGN OVERSIGHT Reza Erfanian
5-10-13
SIGN OFF DATE

DRAWN BY	G. GOMEZ	N. BERNER
CHECKED BY	C. HENDERSON	FIELD INVESTIGATION BY: DATE: JUNE 2011

PREPARED FOR THE STATE OF CALIFORNIA DEPARTMENT OF TRANSPORTATION

H. PARSA
PROJECT ENGINEER

BRIDGE NO. 29-0350
POST MILES T14.83

SR4 CROSSTOWN VIADUCT
LOG OF TEST BORINGS 4 OF 11

GS LOTB SOIL LEGEND SHEET 1 (ENGLISH) (REV. 07/16/10)

ORIGINAL SCALE IN INCHES FOR REDUCED PLANS 0 1 2 3

UNIT: 1455
PROJECT NUMBER & PHASE: 10000002291 CONTRACT NO.: 10-0S1101

DISREGARD PRINTS BEARING EARLIER REVISION DATES

REVISION DATES 5/24/12 8/15/12 8/23/12 4/29/13

SHEET 104 OF 111

FILE => 29-0350-z-1tb04.dgn

USERNAME => s119571 DATE PLOTTED => 23-JUL-2013 TIME PLOTTED => 10:54

DIST	COUNTY	ROUTE	POST MILES TOTAL PROJECT	SHEET No	TOTAL SHEETS
10	SJ	4,5	Var	445	486

REGISTERED CIVIL ENGINEER 4/29/13 DATE

7-22-13
PLANS APPROVAL DATE

REGISTERED PROFESSIONAL ENGINEER Carl Henderson No. 2886 Exp. 6/30/2013 GEOTECHNICAL STATE OF CALIFORNIA

The State of California or its officers or agents shall not be responsible for the accuracy or completeness of electronic copies of this plan sheet.

San Joaquin Council of Governments
555 E. Weber Avenue
Stockton, CA. 95202

Kleinfelder, Inc.
2001 Arch-Airport Rd., Suite 100
Stockton, CA. 95206

This LOTB sheet was prepared in accordance with the Caltrans soil and rock logging, classification, and manual (2010) presentation

FOR PLAN VIEW, SEE "LOG OF TEST BORINGS 1 OF 11"

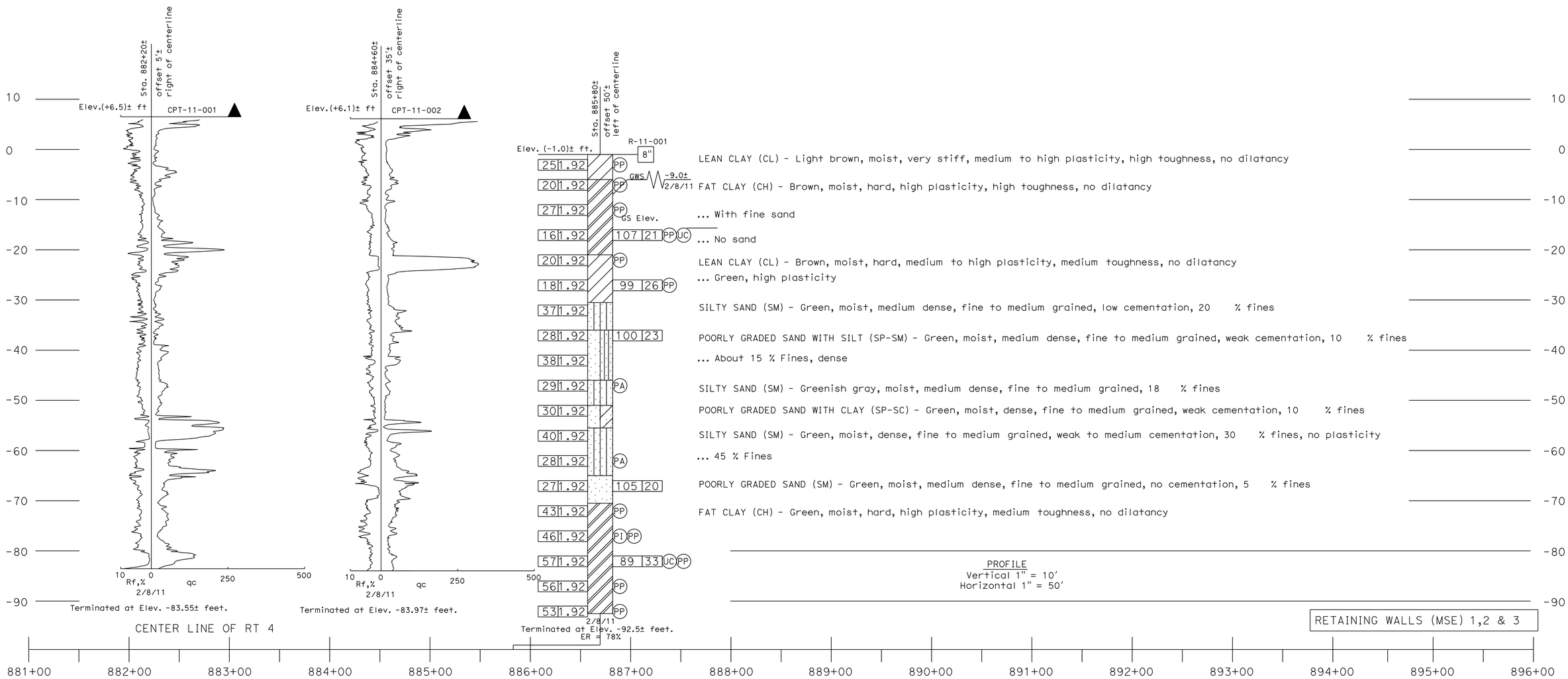

Reza Erfanian DESIGN OVERSIGHT Reza Erfanian 5-10-13 SIGN OFF DATE	DRAWN BY G. GOMEZ	N. BERNER FIELD INVESTIGATION BY:	PREPARED FOR THE STATE OF CALIFORNIA DEPARTMENT OF TRANSPORTATION	H. PARSA PROJECT ENGINEER	BRIDGE NO. 29-0350 POST MILES T14.83
	CHECKED BY C. HENDERSON	DATE: JUNE 2011			

SR4 CROSSTOWN VIADUCT
LOG OF TEST BORINGS 5 OF 11

GS LOTB SOIL LEGEND SHEET 1 (ENGLISH) (REV. 07/16/10)

ORIGINAL SCALE IN INCHES FOR REDUCED PLANS 0 1 2 3

UNIT: 1455
PROJECT NUMBER & PHASE: 10000002291 CONTRACT NO.: 10-0S1101

DISREGARD PRINTS BEARING EARLIER REVISION DATES

REVISION DATES 5/29/12 8/14/12 8/23/12 4/29/13

SHEET 105 OF 111

FILE => 29-0350-z-ltb05.dgn

USERNAME => s119571 DATE PLOTTED => 23-JUL-2013 TIME PLOTTED => 10:54

DIST	COUNTY	ROUTE	POST MILES TOTAL PROJECT	SHEET No	TOTAL SHEETS
10	SJ	4,5	Var	446	486

REGISTERED CIVIL ENGINEER 4/29/13 DATE

7-22-13
PLANS APPROVAL DATE

REGISTERED PROFESSIONAL ENGINEER
Carl Henderson
No. 2886
Exp. 6/30/2013
GEOTECHNICAL
STATE OF CALIFORNIA

The State of California or its officers or agents shall not be responsible for the accuracy or completeness of electronic copies of this plan sheet.

San Joaquin Council of Governments
555 E. Weber Avenue
Stockton, CA. 95202

Kleinfelder, Inc.
2001 Arch-Airport Rd., Suite 100
Stockton, CA. 95206

This LOTB sheet was prepared in accordance with the Caltrans soil and rock logging, classification, and manual (2010) presentation

FOR PLAN VIEW, SEE "LOG OF TEST BORINGS 1 OF 11"

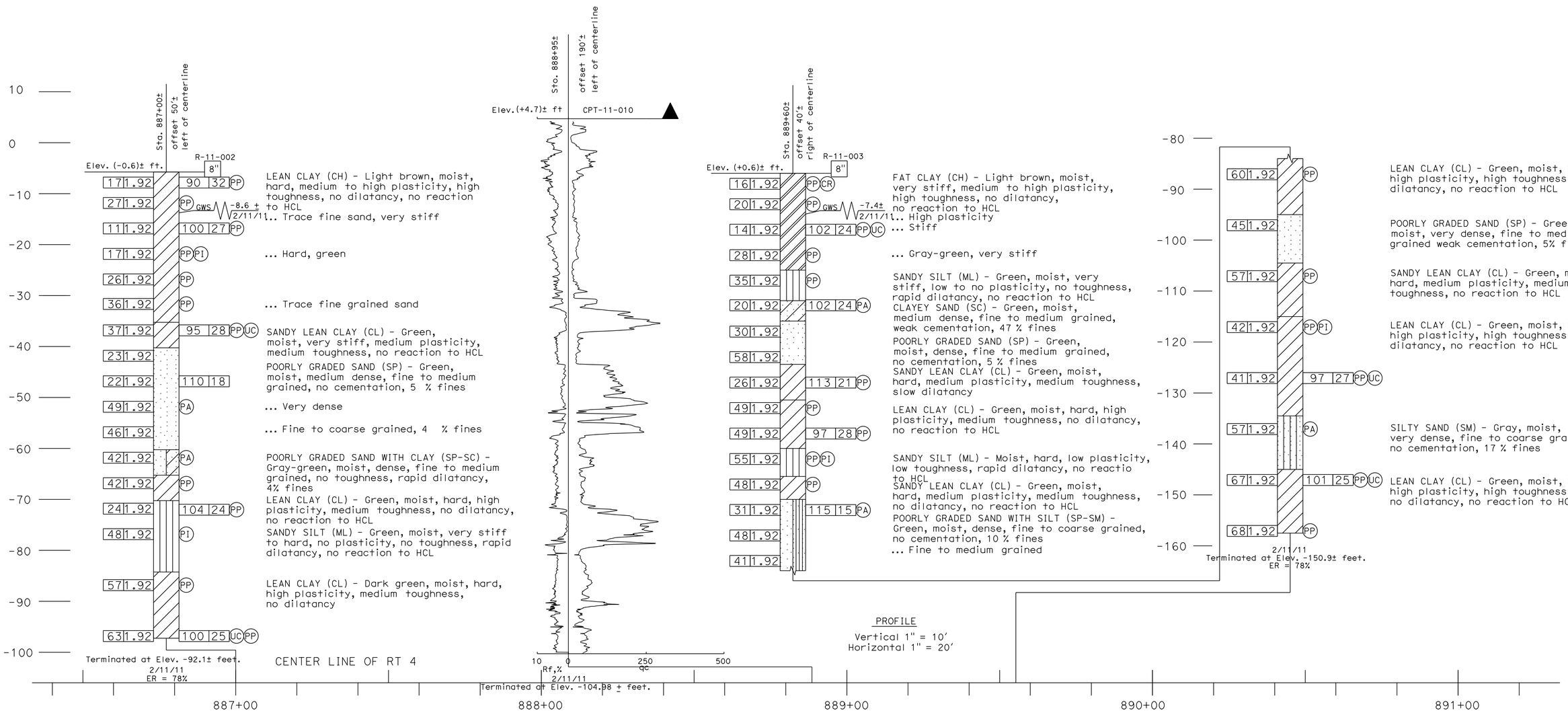

Reza Erfanian DESIGN OVERSIGHT Reza Erfanian 5-10-13 SIGN OFF DATE	DRAWN BY G. GOMEZ	N. BERNER FIELD INVESTIGATION BY:	PREPARED FOR THE STATE OF CALIFORNIA DEPARTMENT OF TRANSPORTATION	H. PARSA PROJECT ENGINEER	BRIDGE NO. 29-0350
	CHECKED BY C. HENDERSON	DATE: JUNE 2011			POST MILES T14.83

SR4 CROSSTOWN VIADUCT
LOG OF TEST BORINGS 6 OF 11

GS LOTB SOIL LEGEND SHEET 1 (ENGLISH) (REV. 07/16/10)

ORIGINAL SCALE IN INCHES FOR REDUCED PLANS 0 1 2 3

UNIT: 1455
PROJECT NUMBER & PHASE: 10000002291 CONTRACT NO.: 10-0S1101

DISREGARD PRINTS BEARING EARLIER REVISION DATES

REVISION DATES 5/24/12 8/15/12 8/23/12 4/29/13

SHEET 106 OF 111

FILE => 29-0350-z-1tb06.dgn

USERNAME => s119571 DATE PLOTTED => 23-JUL-2013 TIME PLOTTED => 10:54

DIST	COUNTY	ROUTE	POST MILES TOTAL PROJECT	SHEET No	TOTAL SHEETS
10	SJ	4,5	Var	447	486

REGISTERED CIVIL ENGINEER — DATE 4/29/13

7-22-13
PLANS APPROVAL DATE

REGISTERED PROFESSIONAL ENGINEER — Carl Henderson — No. 2886 — Exp. 6/30/2013 — GEOTECHNICAL — STATE OF CALIFORNIA

The State of California or its officers or agents shall not be responsible for the accuracy or completeness of electronic copies of this plan sheet.

San Joaquin Council of Governments
555 E. Weber Avenue
Stockton, CA. 95202

Kleinfelder, Inc.
2001 Arch-Airport Rd., Suite 100
Stockton, CA. 95206

This LOTB sheet was prepared in accordance with the Caltrans soil and rock logging, classification, and manual (2010) presentation

FOR PLAN VIEW, SEE "LOG OF TEST BORINGS 1 OF 11"

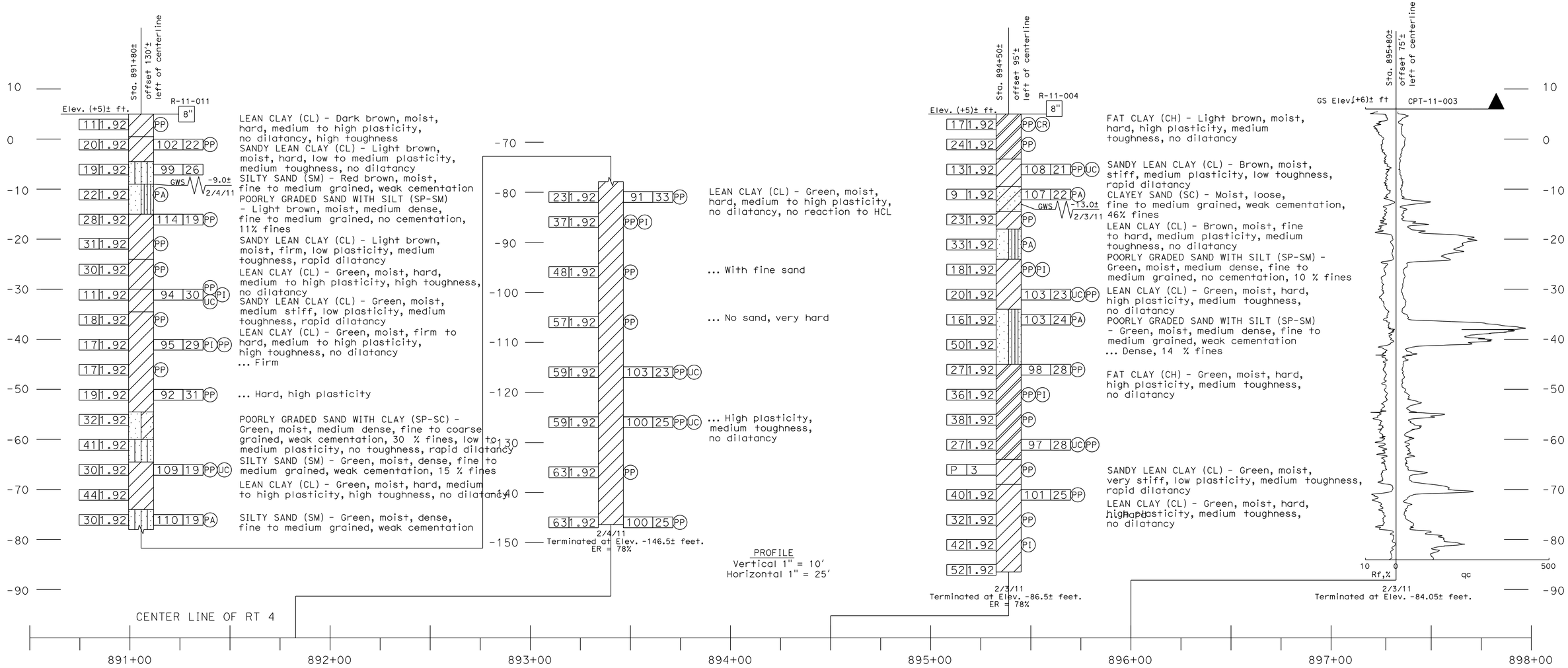

Reza Erfanian — DESIGN OVERSIGHT Reza Erfanian — 5-10-13 — SIGN OFF DATE	DRAWN BY G. GOMEZ	N. BERNER — FIELD INVESTIGATION BY:	PREPARED FOR THE STATE OF CALIFORNIA DEPARTMENT OF TRANSPORTATION	H. PARSA — PROJECT ENGINEER	BRIDGE NO. 29-0350 — POST MILES T14.83	SR4 CROSSTOWN VIADUCT
	CHECKED BY C. HENDERSON	DATE: JUNE 2011				LOG OF TEST BORINGS 7 OF 11

GS LOTB SOIL LEGEND SHEET 1 (ENGLISH) (REV. 07/16/10)

ORIGINAL SCALE IN INCHES FOR REDUCED PLANS 0 1 2 3

UNIT: 1455
PROJECT NUMBER & PHASE: 10000002291 CONTRACT NO.: 10-0S1101

DISREGARD PRINTS BEARING EARLIER REVISION DATES → 5/29/12 8/15/12 8/23/12 4/29/13

SHEET 107 OF 111

FILE => 29-0350-z-ltb07.dgn

USERNAME => s119571 DATE PLOTTED => 23-JUL-2013 TIME PLOTTED => 10:54

DIST	COUNTY	ROUTE	POST MILES TOTAL PROJECT	SHEET No	TOTAL SHEETS
10	SJ	4,5	Var	448	486

REGISTERED CIVIL ENGINEER 4/29/13 DATE

7-22-13
PLANS APPROVAL DATE

REGISTERED PROFESSIONAL ENGINEER Carl Henderson No. 2886 Exp. 6/30/2013 GEOTECHNICAL STATE OF CALIFORNIA

The State of California or its officers or agents shall not be responsible for the accuracy or completeness of electronic copies of this plan sheet.

San Joaquin Council of Governments
555 E. Weber Avenue
Stockton, CA. 95202

Kleinfelder, Inc.
2001 Arch-Airport Rd., Suite 100
Stockton, CA. 95206

This LOTB sheet was prepared in accordance with the Caltrans soil and rock logging, classification, and manual (2010) presentation

FOR PLAN VIEW, SEE "LOG OF TEST BORINGS 1 OF 11"

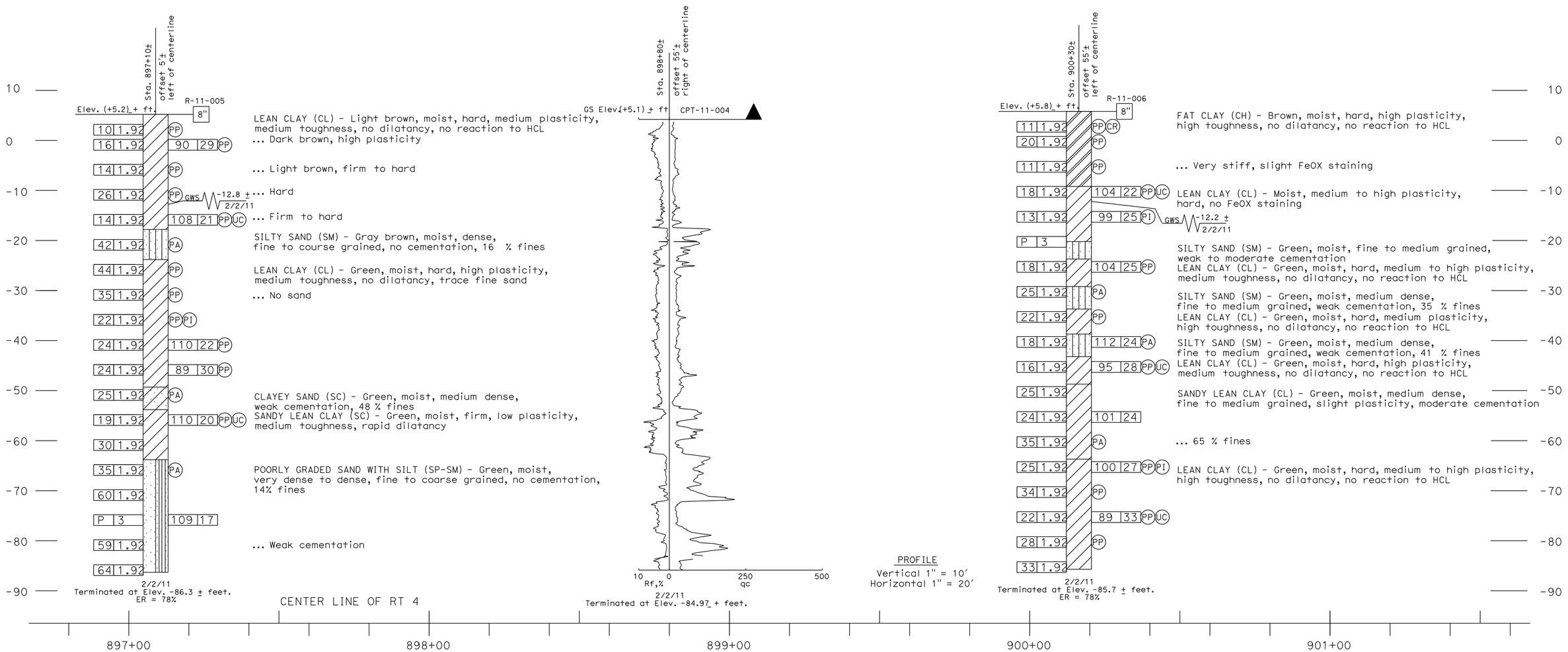

Reza Erfanian
DESIGN OVERSIGHT Reza Erfanian
5-10-13
SIGN OFF DATE

DRAWN BY G. GOMEZ
CHECKED BY C. HENDERSON

N. BERNER
FIELD INVESTIGATION BY:
DATE: JUNE 2011

PREPARED FOR THE STATE OF CALIFORNIA DEPARTMENT OF TRANSPORTATION

H. PARSA
PROJECT ENGINEER

BRIDGE NO. 29-0350
POST MILES T14.83

SR4 CROSSTOWN VIADUCT
LOG OF TEST BORINGS 8 OF 11

GS LOTB SOIL LEGEND SHEET 1 (ENGLISH) (REV. 07/16/10)

ORIGINAL SCALE IN INCHES FOR REDUCED PLANS 0 1 2 3

UNIT: 1455
PROJECT NUMBER & PHASE: 10000002291
CONTRACT NO.: 10-0S1101

DISREGARD PRINTS BEARING EARLIER REVISION DATES

REVISION DATES 5/24/12 8/16/12 8/23/12 4/29/13

SHEET 108 OF 111

FILE => 29-0350-z-ltb08.dgn

USERNAME => s119571 DATE PLOTTED => 23-JUL-2013 TIME PLOTTED => 10:54

DIST	COUNTY	ROUTE	POST MILES TOTAL PROJECT	SHEET No	TOTAL SHEETS
10	SJ	4,5	Var	449	486

REGISTERED CIVIL ENGINEER — DATE 4/29/13

7-22-13
PLANS APPROVAL DATE

REGISTERED PROFESSIONAL ENGINEER — Carl Henderson No. 2886 Exp. 6/30/2013 GEOTECHNICAL — STATE OF CALIFORNIA

The State of California or its officers or agents shall not be responsible for the accuracy or completeness of electronic copies of this plan sheet.

San Joaquin Council of Governments
555 E. Weber Avenue
Stockton, CA. 95202

Kleinfelder, Inc.
2001 Arch-Airport Rd., Suite 100
Stockton, CA. 95206

This LOTB sheet was prepared in accordance with the Caltrans soil and rock logging, classification, and manual (2010) presentation

FOR PLAN VIEW, SEE "LOG OF TEST BORINGS 1 OF 11"

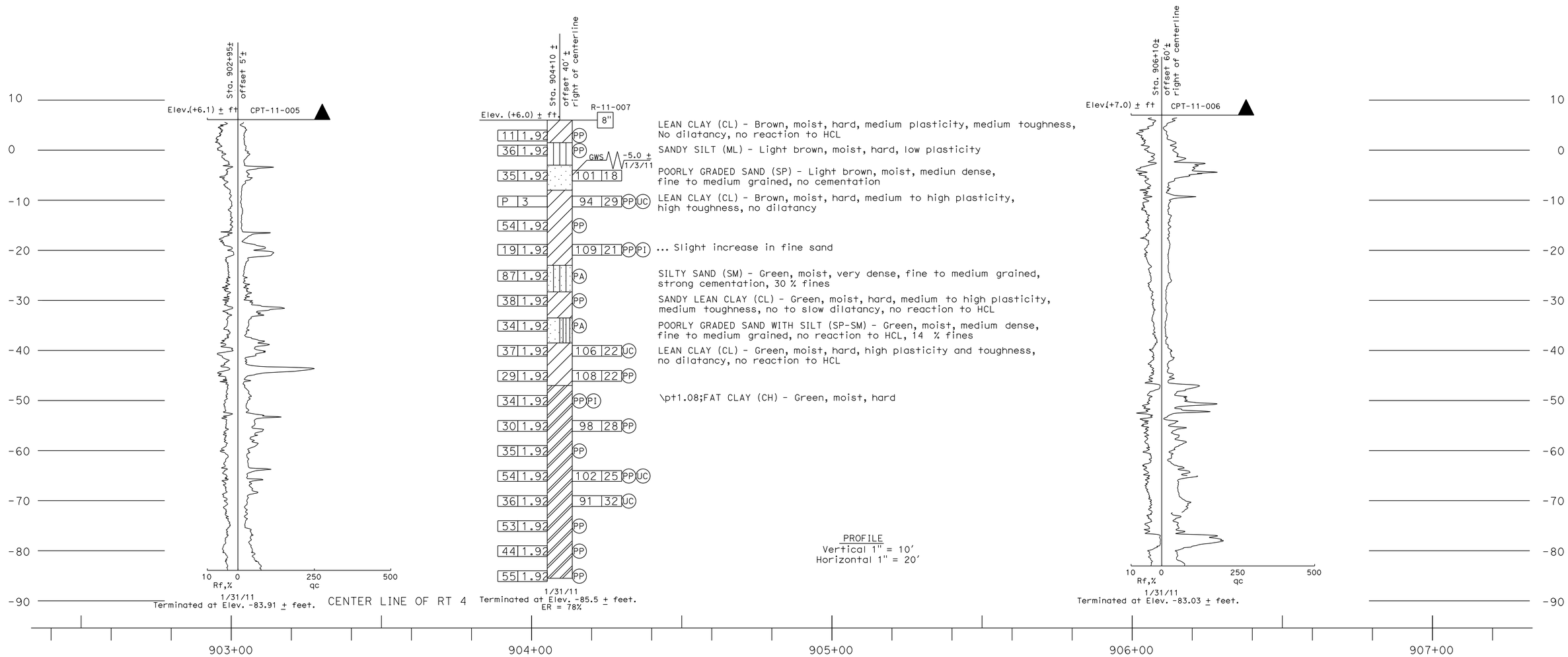

DESIGN OVERSIGHT Reza Erfanian — 5-10-13 SIGN OFF DATE	DRAWN BY G. GOMEZ	N. BERNER FIELD INVESTIGATION BY:	PREPARED FOR THE STATE OF CALIFORNIA DEPARTMENT OF TRANSPORTATION	H. PARSA PROJECT ENGINEER	BRIDGE NO. 29-0350 POST MILES T14.83
	CHECKED BY C. HENDERSON	DATE: JUNE 2011			

SR4 CROSSTOWN VIADUCT
LOG OF TEST BORINGS 9 OF 11

GS LOTB SOIL LEGEND SHEET 1 (ENGLISH) (REV. 07/16/10)

ORIGINAL SCALE IN INCHES FOR REDUCED PLANS 0 1 2 3

UNIT: 1455
PROJECT NUMBER & PHASE: 10000002291 CONTRACT NO.: 10-0S1101

DISREGARD PRINTS BEARING EARLIER REVISION DATES → REVISION DATES 5/23/12 8/16/12 8/23/12 4/29/13 SHEET 109 OF 111

FILE => 29-0350-z-1tb09.dgn

USERNAME => s139571 DATE PLOTTED => 23-JUL-2013 TIME PLOTTED => 10:54

DIST	COUNTY	ROUTE	POST MILES TOTAL PROJECT	SHEET No	TOTAL SHEETS
10	SJ	4,5	Var	450	486

REGISTERED CIVIL ENGINEER 4/29/13 DATE

7-22-13
PLANS APPROVAL DATE

REGISTERED PROFESSIONAL ENGINEER Carl Henderson No. 2886 Exp. 6/30/2013 GEOTECHNICAL STATE OF CALIFORNIA

The State of California or its officers or agents shall not be responsible for the accuracy or completeness of electronic copies of this plan sheet.

San Joaquin Council of Governments
555 E. Weber Avenue
Stockton, CA. 95202

Kleinfelder, Inc.
2001 Arch-Airport Rd., Suite 100
Stockton, CA. 95206

This LOTB sheet was prepared in accordance with the Caltrans soil and rock logging, classification, and manual (2010) presentation

FOR PLAN VIEW, SEE "LOG OF TEST BORINGS 1 OF 11"

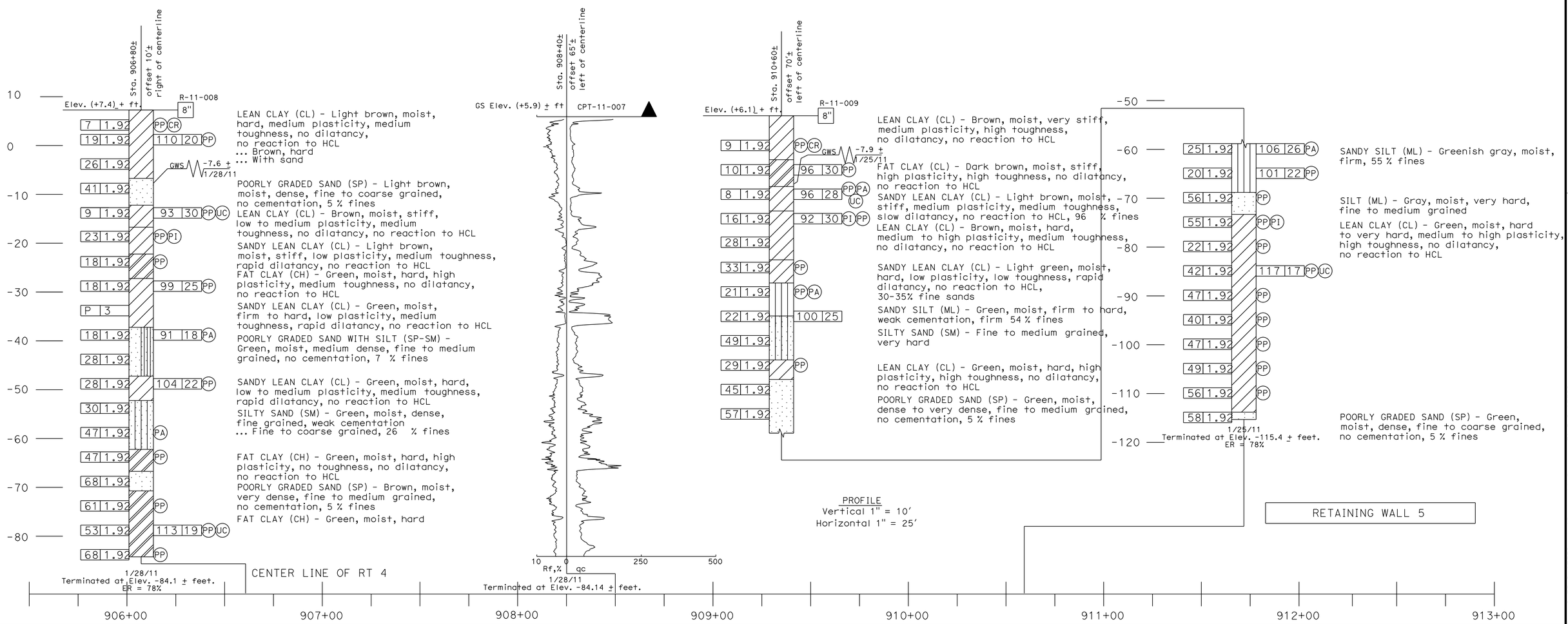

DESIGN OVERSIGHT: Reza Erfanian	DRAWN BY: G. GOMEZ	N. BERNER FIELD INVESTIGATION BY:	PREPARED FOR THE STATE OF CALIFORNIA DEPARTMENT OF TRANSPORTATION
5-10-13 SIGN OFF DATE	CHECKED BY: C. HENDERSON	DATE: JUNE 2011	

H. PARSA
PROJECT ENGINEER

BRIDGE NO. 29-0350
POST MILES T14.83

SR4 CROSSTOWN VIADUCT
LOG OF TEST BORINGS 10 OF 11

GS LOTB SOIL LEGEND SHEET 1 (ENGLISH) (REV. 07/16/10)

ORIGINAL SCALE IN INCHES FOR REDUCED PLANS 0 1 2 3

UNIT: 1455
PROJECT NUMBER & PHASE: 10000002291 CONTRACT NO.: 10-0S1101

DISREGARD PRINTS BEARING EARLIER REVISION DATES

REVISION DATES 5/24/12 8/16/12 8/23/12 4/29/13

SHEET 110 OF 111

FILE => 29-0350-z-1tb10.dgn

USERNAME => s119571 DATE PLOTTED => 23-JUL-2013 TIME PLOTTED => 10:54

DIST	COUNTY	ROUTE	POST MILES TOTAL PROJECT	SHEET No	TOTAL SHEETS
10	SJ	4,5	Var	451	486

REGISTERED CIVIL ENGINEER — DATE 4/29/13

7-22-13
PLANS APPROVAL DATE

REGISTERED PROFESSIONAL ENGINEER — Carl Henderson No. 2886 Exp. 6/30/2013 GEOTECHNICAL — STATE OF CALIFORNIA

The State of California or its officers or agents shall not be responsible for the accuracy or completeness of electronic copies of this plan sheet.

San Joaquin Council of Governments
555 E. Weber Avenue
Stockton, CA. 95202

Kleinfelder, Inc.
2001 Arch-Airport Rd., Suite 100
Stockton, CA. 95206

This LOTB sheet was prepared in accordance with the Caltrans soil and rock logging, classification, and manual (2010) presentation

FOR PLAN VIEW, SEE "LOG OF TEST BORINGS 1 OF 11"

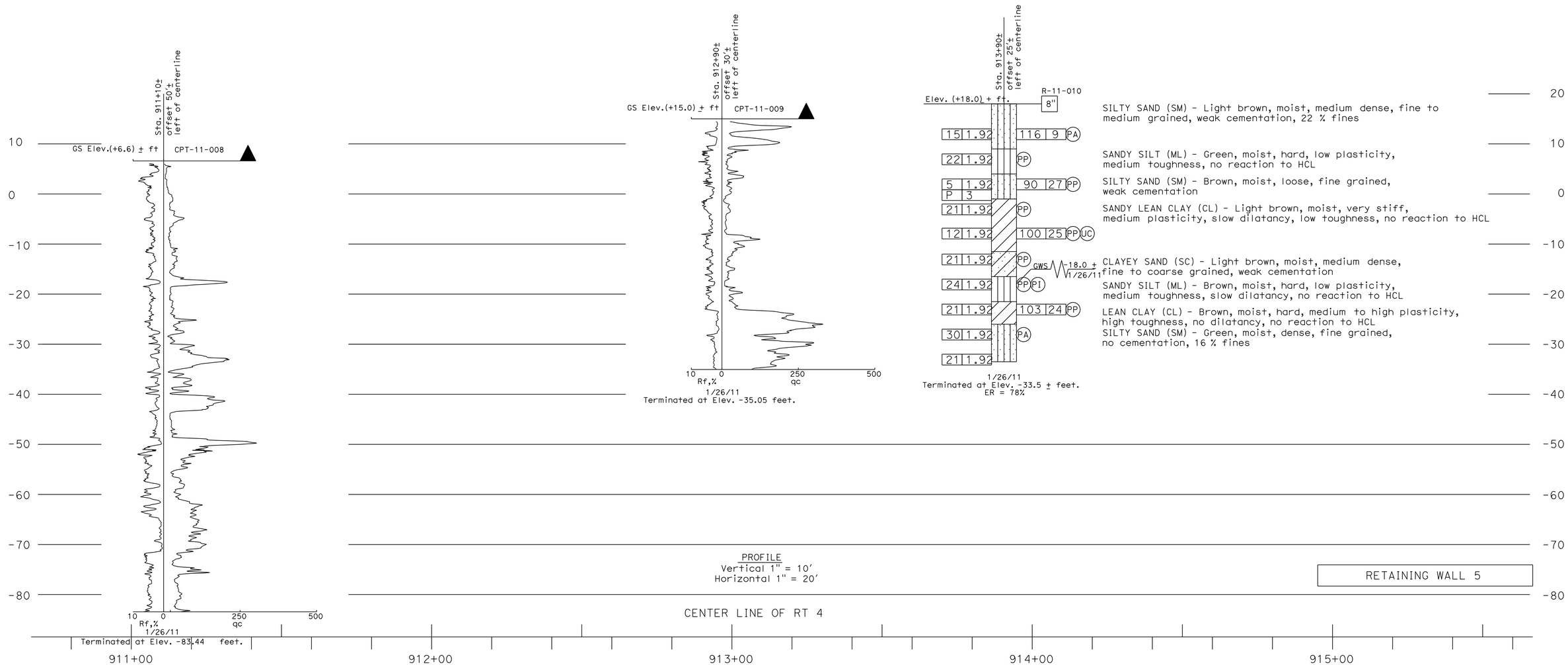

Reza Erfanian — DESIGN OVERSIGHT Reza Erfanian; 5-10-13 SIGN OFF DATE	DRAWN BY G. GOMEZ	N. BERNER — FIELD INVESTIGATION BY:	PREPARED FOR THE STATE OF CALIFORNIA DEPARTMENT OF TRANSPORTATION	H. PARSA — PROJECT ENGINEER	BRIDGE NO. 29-0350; POST MILES T14.83
	CHECKED BY C. HENDERSON	DATE: JUNE 2011			**SR4 CROSSTOWN VIADUCT**
					LOG OF TEST BORINGS 11 OF 11

GS LOTB SOIL LEGEND SHEET 1 (ENGLISH) (REV. 07/16/10)

ORIGINAL SCALE IN INCHES FOR REDUCED PLANS 0 1 2 3

UNIT: 1455
PROJECT NUMBER & PHASE: 10000002291 CONTRACT NO.: 10-0S1101

DISREGARD PRINTS BEARING EARLIER REVISION DATES → REVISION DATES 5/24/12 8/13/12 8/23/12 4/29/13 — SHEET 111 OF 111

FILE => 29-0350-z-ltb11.dgn

USERNAME => s119571 DATE PLOTTED => 23-JUL-2013 TIME PLOTTED => 10:54

DIST	COUNTY	ROUTE	POST MILES TOTAL PROJECT	SHEET No	TOTAL SHEETS
10	SJ	4,5	Var	452	486

REGISTERED CIVIL ENGINEER — DATE 4/10/13

7-22-13
PLANS APPROVAL DATE

REGISTERED PROFESSIONAL ENGINEER KIANOUSH HARRISAZ No. C39591 Exp. 12/31/13 CIVIL STATE OF CALIFORNIA

The State of California or its officers or agents shall not be responsible for the accuracy or completeness of electronic copies of this plan sheet.

SAN JOAQUIN COUNCIL OF GOVERNMENTS
555 E. WEBER AVENUE
STOCKTON, CA 95202

RAJAPPAN & MEYER
CONSULTING ENGINEERS, INC.
1038 LEIGH AVE, SUITE 100
SAN JOSE, CA 95126

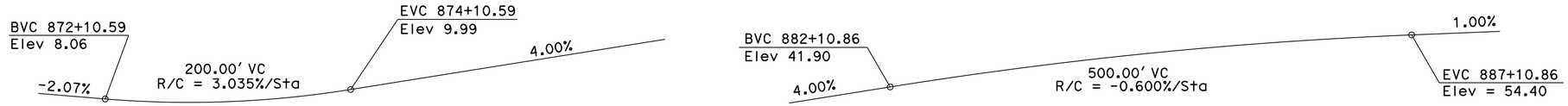

"NA" LINE

"NA2" LINE

PROFILE GRADE

NO SCALE

MSE RETAINING WALL NO.1
QUANTITIES

MECHANICALLY STABILIZED EMBANKMENT, LOCATION A	16,080	SQFT
STRUCTURAL CONCRETE, BARRIER SLAB	265	CY
CONCRETE BARRIER (TYPE 736 MODIFIED)	528	LF

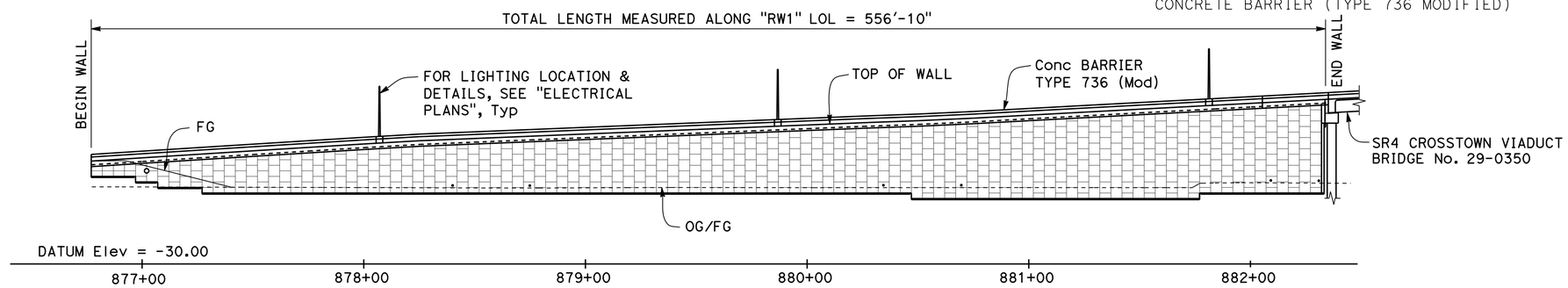

DEVELOPED ELEVATION

1" = 30'

LEGEND:
Indicates MSE Wall
Indicates direction of traffic

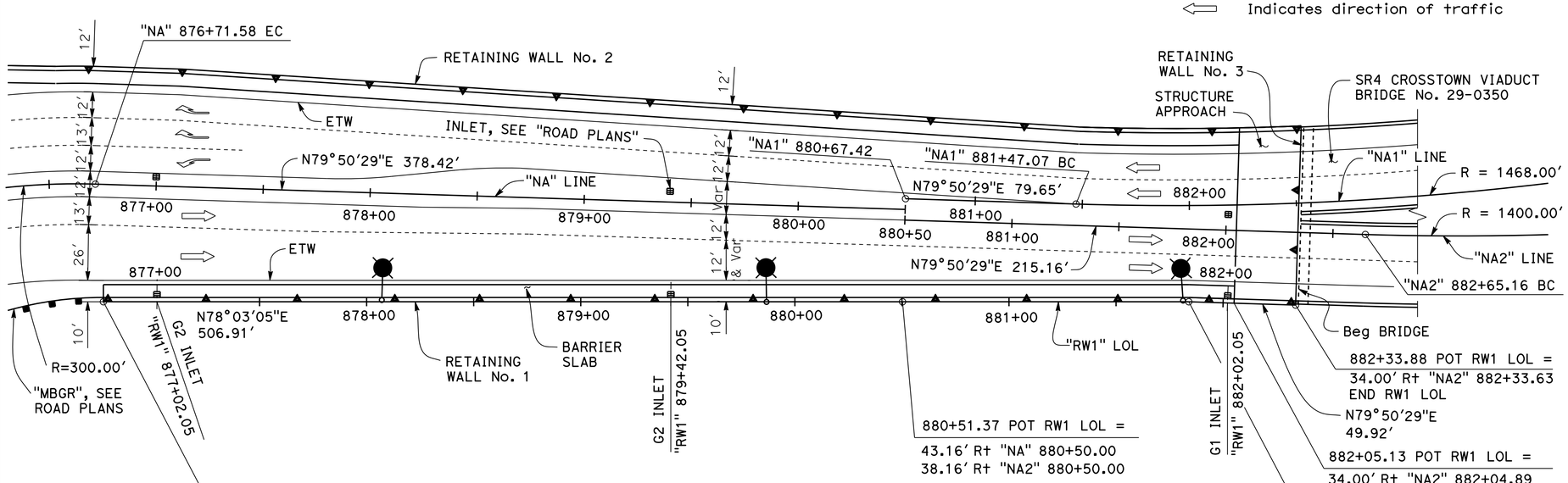

PLAN

1" = 30'

CURVE DATA:

"NA" LINE
R = 300.00'
Δ = 64° 27' 23"
T = 189.13'
L = 337.49'

CURVE DATA:

"NA1" LINE	"NA2" LINE
R = 1468.00'	R = 1400.00'
Δ = 21° 59' 21"	Δ = 26° 51' 29"
T = 285.21'	T = 334.28'
L = 563.39'	L = 656.27'

NOTE:
THE CONTRACTOR SHALL VERIFY ALL CONTROLLING FIELD DIMENSIONS BEFORE ORDERING OR FABRICATING ANY MATERIAL

INDEX TO PLANS

1 RETAINING WALL No. 1 - GENERAL PLAN No. 1
2 RETAINING WALL No. 1 - GENERAL PLAN No. 2
3 RETAINING WALL No. 1 - STRUCTURE PLAN No. 1
4 RETAINING WALL No. 1 - STRUCTURE PLAN No. 2
5 RETAINING WALL No. 1 - STRUCTURE PLAN No. 3
6 RETAINING WALL No. 2 - GENERAL PLAN No. 1
7 RETAINING WALL No. 2 - GENERAL PLAN No. 2
8 RETAINING WALL No. 2 - STRUCTURE PLAN No. 1
9 RETAINING WALL No. 2 - STRUCTURE PLAN No. 2
10 RETAINING WALL No. 2 - STRUCTURE PLAN No. 3
11 RETAINING WALL No. 2 - STRUCTURE PLAN No. 4
12 RETAINING WALL No. 3 - GENERAL PLAN
13 RETAINING WALL No. 3 - STRUCTURE PLAN
14 MSE WALL DETAILS No. 1
15 MSE WALL DETAILS No. 2
16 MSE WALL DETAILS No. 3
17 MSE WALL DETAILS No. 4
18 MSE WALL DETAILS No. 5
19 MSE WALL DETAILS No. 6
20 MSE WALL DETAILS No. 7
21 MSE WALL DETAILS No. 8
22 MSE WALL DETAILS No. 9
23 MSE WALL DETAILS No. 10
24 MSE WALL DETAILS No. 11
25 RETAINING WALL No. 1 - ARCHITECTURAL DETAILS No. 1
26 RETAINING WALL No. 1 - ARCHITECTURAL DETAILS No. 2
27 RETAINING WALL No. 1 - ARCHITECTURAL DETAILS No. 3
28 RETAINING WALL No. 2 - ARCHITECTURAL DETAILS No. 1
29 RETAINING WALL No. 2 - ARCHITECTURAL DETAILS No. 2
30 RETAINING WALL No. 2 - ARCHITECTURAL DETAILS No. 3
31 RETAINING WALL No. 2 - ARCHITECTURAL DETAILS No. 4
32 RETAINING WALL No. 3 - ARCHITECTURAL DETAILS
33 ARCHITECTURAL DETAILS
34 LOG OF TEST BORINGS 1 OF 2
35 LOG OF TEST BORINGS 2 OF 2

STANDARD PLANS DATED 2010

	A10A	ACRONYMS AND ABBREVIATIONS (SHEET 1 OF 2)
	A10B	ACRONYMS AND ABBREVIATIONS (SHEET 2 OF 2)
	A10C	SYMBOLS (SHEET 1 OF 2)
	A10D	SYMBOLS (SHEET 2 OF 2)
	A10F	LEGEND - SOIL (SHEET 1 OF 2)
	A10G	LEGEND - SOIL (SHEET 2 OF 2)
	B3-6	RETAINING WALL DETAILS No. 2
	B11-7	CHAIN LINK RAILING
RSP	B11-47	CABLE RAILING
	B11-56	CONCRETE BARRIER TYPE 736
RSP	D73	DRAINAGE INLETS
	ES-6A	ELECTRICAL SYSTEMS (LIGHTING STANDARD, TYPES 15 AND 21)
	D102	UNDERDRAINS

Reza Erfanian
DESIGN OVERSIGHT — Reza Erfanian
5-10-13
SIGN OFF DATE

	BY	CHECKED
DESIGN	S. Desalegn	A. Wang
DETAILS	S. Desalegn	A. Wang
QUANTITIES	S. Desalegn	A. Wang

LOAD & RESISTANCE FACTOR DESIGN — LIVE LOADING: HL93 W/"LOW-BOY"; PERMIT DESIGN VEHICLE

	BY	CHECKED
LAYOUT	S. Desalegn	A. Wang
SPECIFICATIONS	K. Harirsaz	PLANS AND SPECS COMPARED K. Harirsaz

PREPARED FOR THE STATE OF CALIFORNIA DEPARTMENT OF TRANSPORTATION

K. Harirsaz
PROJECT ENGINEER

BRIDGE NO. 29E0011
POST MILES T14.72

RETAINING WALL No. 1 (MSE)

GENERAL PLAN No. 1

DESIGN GENERAL PLAN SHEET (ENGLISH) (REV.7/16/10)

ORIGINAL SCALE IN INCHES FOR REDUCED PLANS 0 1 2 3

UNIT: 1455
PROJECT NUMBER & PHASE: 10000002291 CONTRACT NO.: 10-0S1101

DISREGARD PRINTS BEARING EARLIER REVISION DATES — REVISION DATES 5/22/12 6/22/12 8/31/12 4/10/13 — SHEET 1 OF 35

FILE => 29E0011-a-gp01.dgn

USERNAME => s119571 DATE PLOTTED => 23-JUL-2013 TIME PLOTTED => 10:55

DIST	COUNTY	ROUTE	POST MILES TOTAL PROJECT	SHEET No	TOTAL SHEETS
10	SJ	4,5	Var	453	486

REGISTERED CIVIL ENGINEER — DATE 4/10/13

7-22-13
PLANS APPROVAL DATE

REGISTERED PROFESSIONAL ENGINEER — KIANOUSH HARIRSAZ — No. C39591 — Exp. 12/31/13 — CIVIL — STATE OF CALIFORNIA

The State of California or its officers or agents shall not be responsible for the accuracy or completeness of electronic copies of this plan sheet.

SAN JOAQUIN COUNCIL OF GOVERNMENTS
555 E. WEBER AVENUE
STOCKTON, CA 95202

RAJAPPAN & MEYER
CONSULTING ENGINEERS, INC.
1038 LEIGH AVE, SUITE 100
SAN JOSE, CA 95126

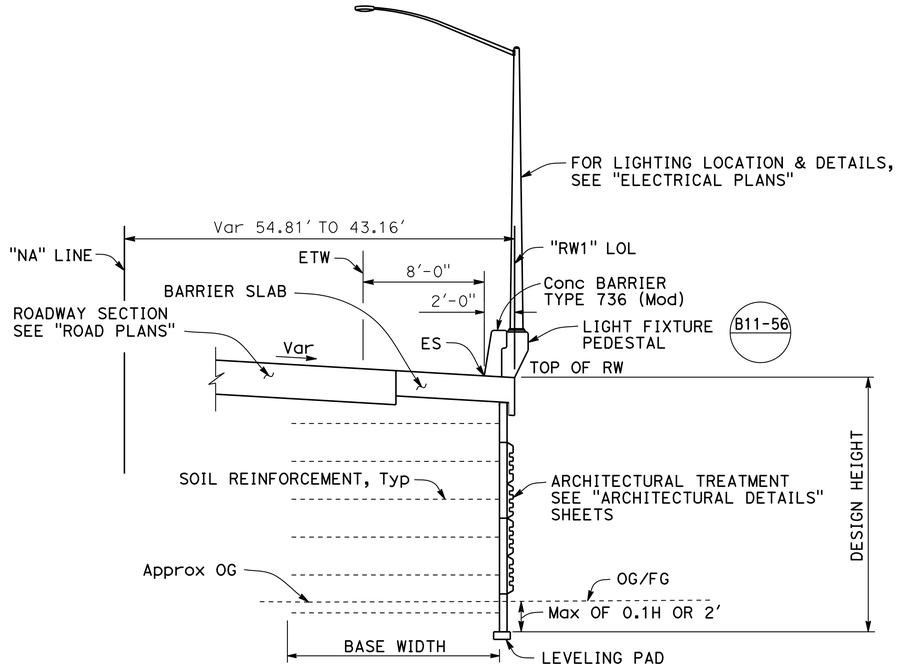

TYPICAL SECTION

1" = 5'

"RW1" LOL 876+77.05 TO "RW1" LOL 880+51.37

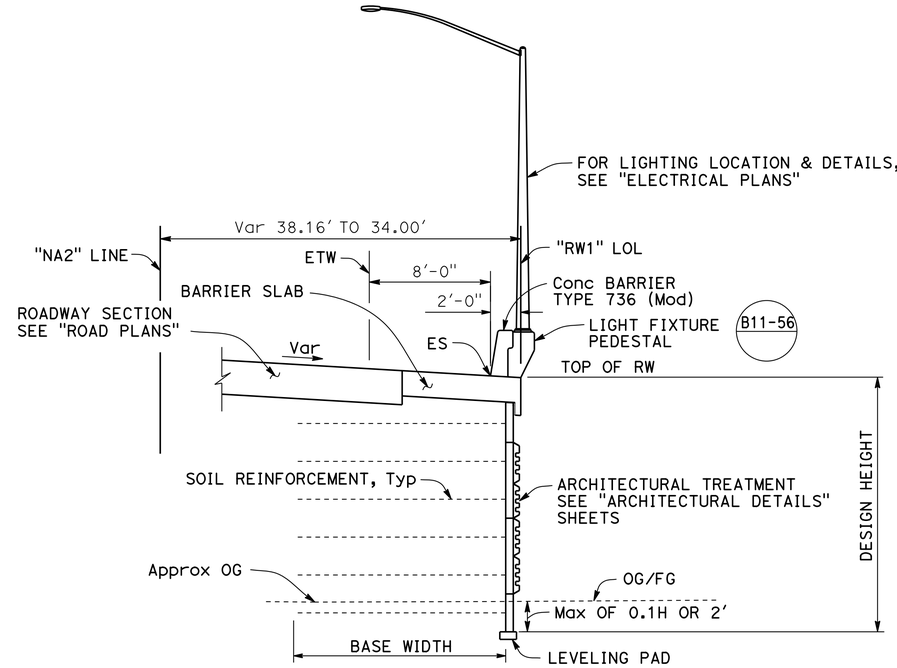

TYPICAL SECTION

1" = 5'

"RW1" LOL 880+51.37 TO "RW1" LOL 882+05.13

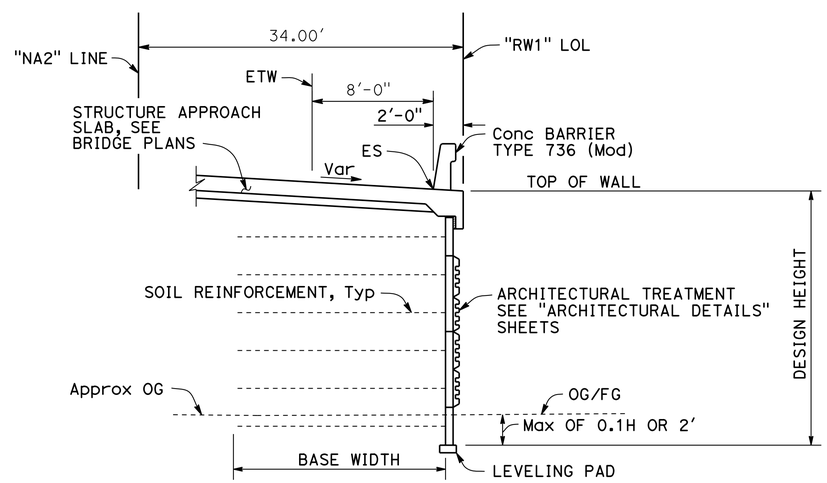

TYPICAL SECTION

1" = 5'

"RW1" LOL 882+05.13 TO "RW1" LOL 882+33.88

NOTE:
THE CONTRACTOR SHALL VERIFY ALL CONTROLLING FIELD DIMENSIONS BEFORE ORDERING OR FABRICATING ANY MATERIAL

Reza Erfanian
DESIGN OVERSIGHT Reza Erfanian
5-10-13
SIGN OFF DATE

	BY	CHECKED			
DESIGN	S. Desalegn	A. Wang	LOAD & RESISTANCE FACTOR DESIGN	LIVE LOADING: HL93 W/"LOW-BOY"; PERMIT DESIGN VEHICLE	
DETAILS	S. Desalegn	A. Wang	LAYOUT	S. Desalegn	A. Wang
QUANTITIES	S. Desalegn	A. Wang	SPECIFICATIONS	K. Harirsaz	PLANS AND SPECS COMPARED K. Harirsaz

PREPARED FOR THE STATE OF CALIFORNIA DEPARTMENT OF TRANSPORTATION

K. Harirsaz
PROJECT ENGINEER

BRIDGE NO. 29E0011
POST MILES T14.72

RETAINING WALL No. 1 (MSE)
GENERAL PLAN No. 2

DESIGN GENERAL PLAN SHEET (ENGLISH) (REV.7/16/10)

ORIGINAL SCALE IN INCHES FOR REDUCED PLANS 0 1 2 3

UNIT: 1455
PROJECT NUMBER & PHASE: 10000002291
CONTRACT NO.: 10-0S1101

DISREGARD PRINTS BEARING EARLIER REVISION DATES → 5/22/12 6/22/12 8/31/12 4/10/13

SHEET 2 OF 35

FILE => 29E0011-a-gp02.dgn

USERNAME => s119571 DATE PLOTTED => 23-JUL-2013 TIME PLOTTED => 10:55

DIST	COUNTY	ROUTE	POST MILES TOTAL PROJECT	SHEET No	TOTAL SHEETS
10	SJ	4,5	Var	454	486

REGISTERED CIVIL ENGINEER — 4/10/13 DATE

7-22-13
PLANS APPROVAL DATE

REGISTERED PROFESSIONAL ENGINEER — KIANOUSH HARIRSAZ — No. C39591 — Exp. 12/31/13 — CIVIL — STATE OF CALIFORNIA

The State of California or its officers or agents shall not be responsible for the accuracy or completeness of electronic copies of this plan sheet.

SAN JOAQUIN COUNCIL OF GOVERNMENTS
555 E. WEBER AVENUE
STOCKTON, CA 95202

RAJAPPAN & MEYER
CONSULTING ENGINEERS, INC.
1038 LEIGH AVE, SUITE 100
SAN JOSE, CA 95126

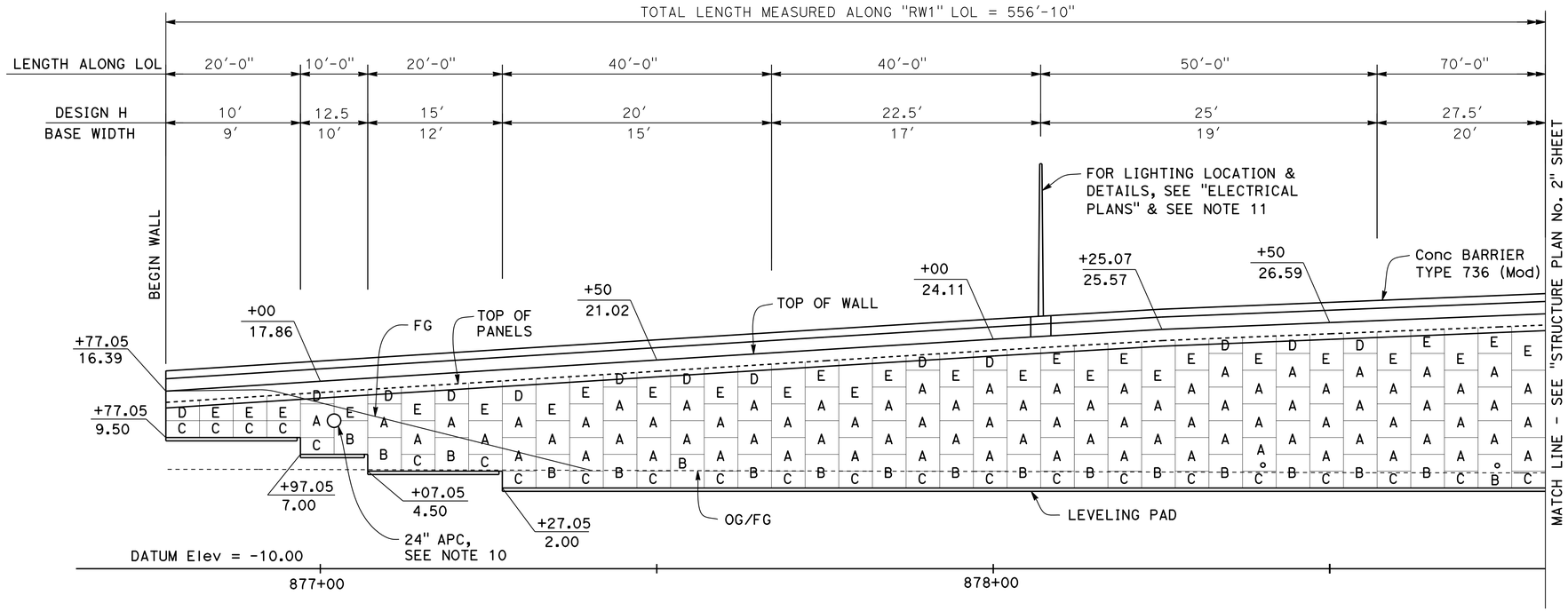

DEVELOPED ELEVATION

1" = 10'

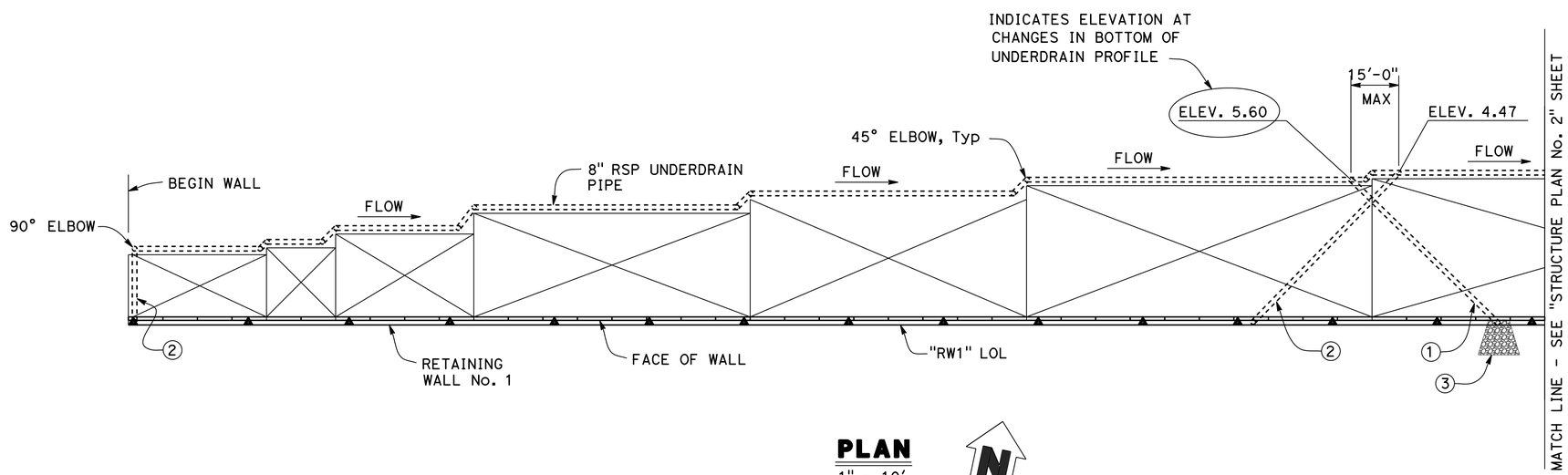

PLAN

1" = 10'

NOTE:
THE CONTRACTOR SHALL VERIFY ALL CONTROLLING FIELD DIMENSIONS BEFORE ORDERING OR FABRICATING ANY MATERIAL

LEGEND:

- Indicates MSE Wall
- Indicates limits of welded wire mats
- (1) Outlet pipe, see "Outlet Pipe Detail" on "MSE WALL DETAILS No. 7" sheet
- (2) Cleanout pipe, see "Cleanout Pipe Detail" on MSE WALL DETAILS No. 7" sheet
- (3) Rock Slope Protection, see "MSE WALL DETAILS NO. 7" sheet

NOTES:

1. For cases without roadway, extend permeable material to level of top welded wire mat unless indicated otherwise elsewhere in Project Plans.
2. Permeable material need not extend higher than 3'-0" below grading plane.
3. Maximum spacing of outlet pipes equals 200 ft.
4. For additional details, see (D-102)
5. At sags in profile of underdrain pipe, install outlet pipe for each direction of flow.
6. For wire schedule A, B, C, D and E, see "MSE WALL DETAILS No. 1" sheet.
7. For other Details not shown, see "MSE WALL DETAILS No. 2" sheet through "MSE WALL DETAILS No. 10" sheet.
8. For panel legend, see "MSE WALL DETAILS No. 1" sheet.
9. Elevations shown are at Top of Wall on Retaining Wall LOL and top of leveling pad.
10. For 24" APC PENETRATION DETAILS, see "MSE WALL DETAILS No. 9" sheet and "ROAD PLANS"
11. For SECTION VIEW AT LIGHT POLE LOCATION, see "MSE WALL DETAILS No. 7" sheet.

Reza Erfanian
DESIGN OVERSIGHT — Reza Erfanian
5-10-13
SIGN OFF DATE

	BY	CHECKED
DESIGN	S. Desalegn	A. Wang
DETAILS	S. Desalegn	A. Wang
QUANTITIES	S. Desalegn	A. Wang

PREPARED FOR THE STATE OF CALIFORNIA DEPARTMENT OF TRANSPORTATION

K. Harirsaz
PROJECT ENGINEER

BRIDGE NO. 29E0011
POST MILES T14.72

RETAINING WALL No. 1 (MSE)
STRUCTURE PLAN No. 1

DESIGN DETAIL SHEET (ENGLISH) (REV.7/16/10)

ORIGINAL SCALE IN INCHES FOR REDUCED PLANS 0 1 2 3

UNIT: 1455
PROJECT NUMBER & PHASE: 10000002291
CONTRACT NO.: 10-0S1101

DISREGARD PRINTS BEARING EARLIER REVISION DATES — REVISION DATES 5/22/12 6/22/12 8/31/12 4/10/13 — SHEET 3 OF 35

FILE => 29E0011-c-sp01.dgn

USERNAME => s119571 DATE PLOTTED => 23-JUL-2013 TIME PLOTTED => 10:55

DIST	COUNTY	ROUTE	POST MILES TOTAL PROJECT	SHEET No	TOTAL SHEETS
10	SJ	4,5	Var	455	486

REGISTERED CIVIL ENGINEER — DATE 4/10/13

7-22-13
PLANS APPROVAL DATE

REGISTERED PROFESSIONAL ENGINEER — KIANOUSH HARIRSAZ — No. C39591 — Exp. 12/31/13 — CIVIL — STATE OF CALIFORNIA

The State of California or its officers or agents shall not be responsible for the accuracy or completeness of electronic copies of this plan sheet.

SAN JOAQUIN COUNCIL OF GOVERNMENTS
555 E. WEBER AVENUE
STOCKTON, CA 95202

RAJAPPAN & MEYER
CONSULTING ENGINEERS, INC.
1038 LEIGH AVE, SUITE 100
SAN JOSE, CA 95126

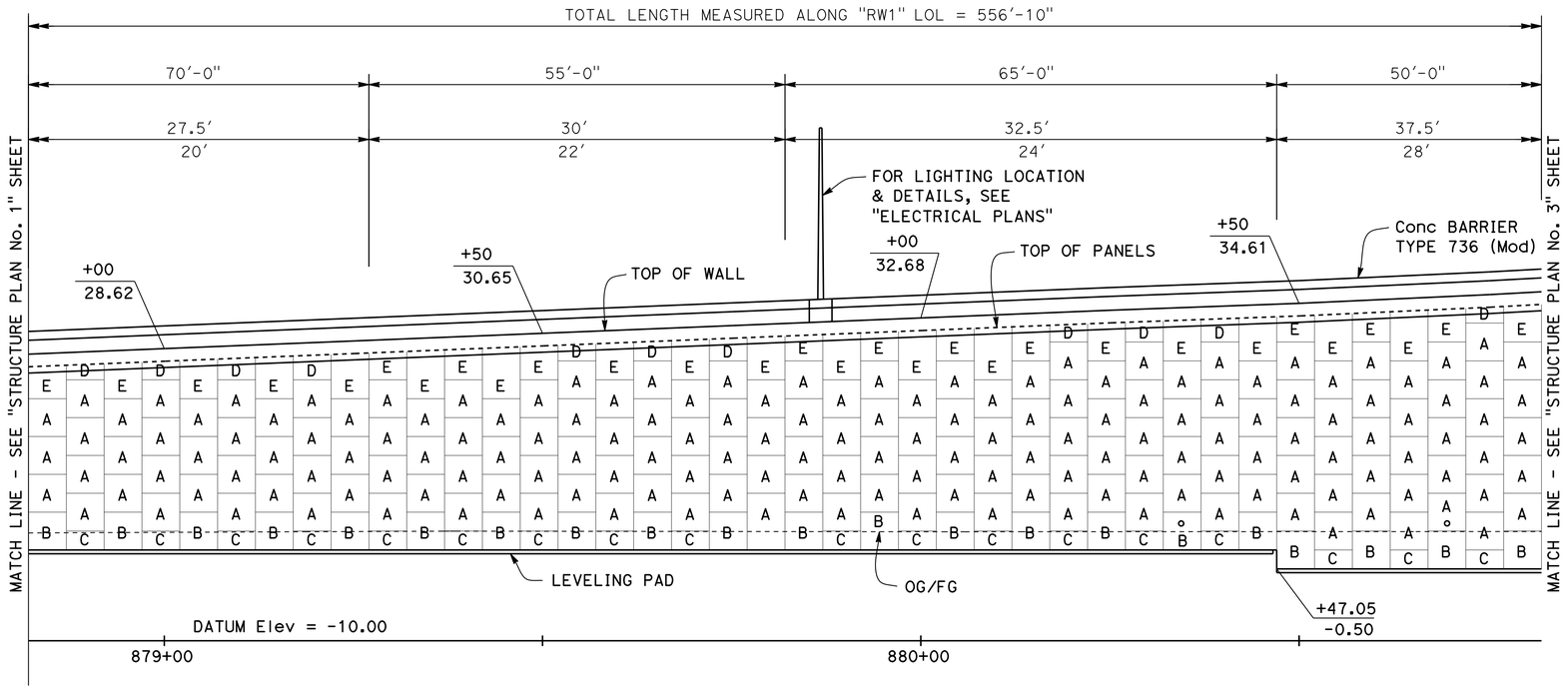

DEVELOPED ELEVATION

1" = 10'

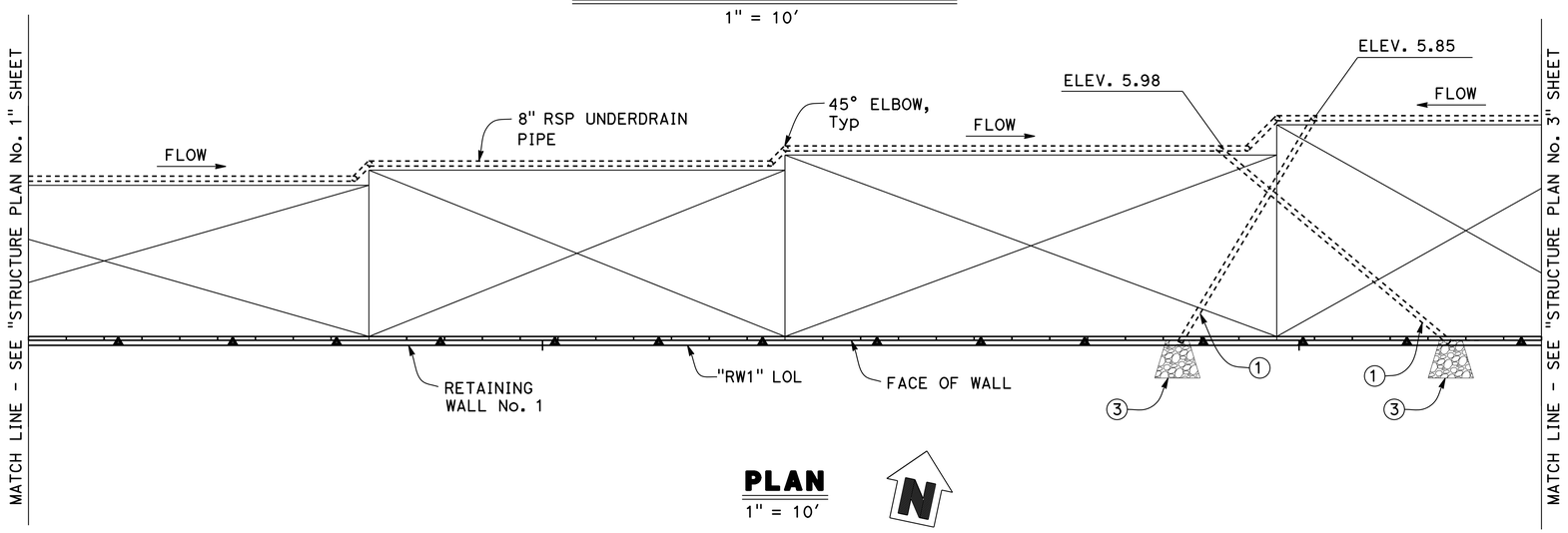

PLAN

1" = 10'

NOTES:
1. For Legend and Notes see "STRUCTURE PLAN No. 1" sheet.

NOTE:
THE CONTRACTOR SHALL VERIFY ALL CONTROLLING FIELD DIMENSIONS BEFORE ORDERING OR FABRICATING ANY MATERIAL

DESIGN OVERSIGHT Reza Erfanian
5-10-13
SIGN OFF DATE

	BY	CHECKED
DESIGN	S. Desalegn	A. Wang
DETAILS	S. Desalegn	A. Wang
QUANTITIES	S. Desalegn	A. Wang

PREPARED FOR THE STATE OF CALIFORNIA DEPARTMENT OF TRANSPORTATION

K. Harirsaz
PROJECT ENGINEER

BRIDGE NO. 29E0011
POST MILES T14.72

RETAINING WALL No. 1 (MSE)
STRUCTURE PLAN No. 2

DESIGN DETAIL SHEET (ENGLISH) (REV.7/16/10)

ORIGINAL SCALE IN INCHES FOR REDUCED PLANS 0 1 2 3

UNIT: 1455
PROJECT NUMBER & PHASE: 10000002291 CONTRACT NO.: 10-0S1101

DISREGARD PRINTS BEARING EARLIER REVISION DATES → 5/22/12 5/22/12 8/31/12 4/10/13

SHEET 4 OF 35

FILE => 29E0011-c-sp02.dgn

USERNAME => s119571 DATE PLOTTED => 23-JUL-2013 TIME PLOTTED => 10:55

DIST	COUNTY	ROUTE	POST MILES TOTAL PROJECT	SHEET No	TOTAL SHEETS
10	SJ	4,5	Var	456	486

REGISTERED CIVIL ENGINEER 4/10/13 DATE

7-22-13
PLANS APPROVAL DATE

REGISTERED PROFESSIONAL ENGINEER KIANOUSH HARIRSAZ No. C39591 Exp. 12/31/13 CIVIL STATE OF CALIFORNIA

The State of California or its officers or agents shall not be responsible for the accuracy or completeness of electronic copies of this plan sheet.

SAN JOAQUIN COUNCIL OF GOVERNMENTS
555 E. WEBER AVENUE
STOCKTON, CA 95202

RAJAPPAN & MEYER
CONSULTING ENGINEERS, INC.
1038 LEIGH AVE, SUITE 100
SAN JOSE, CA 95126

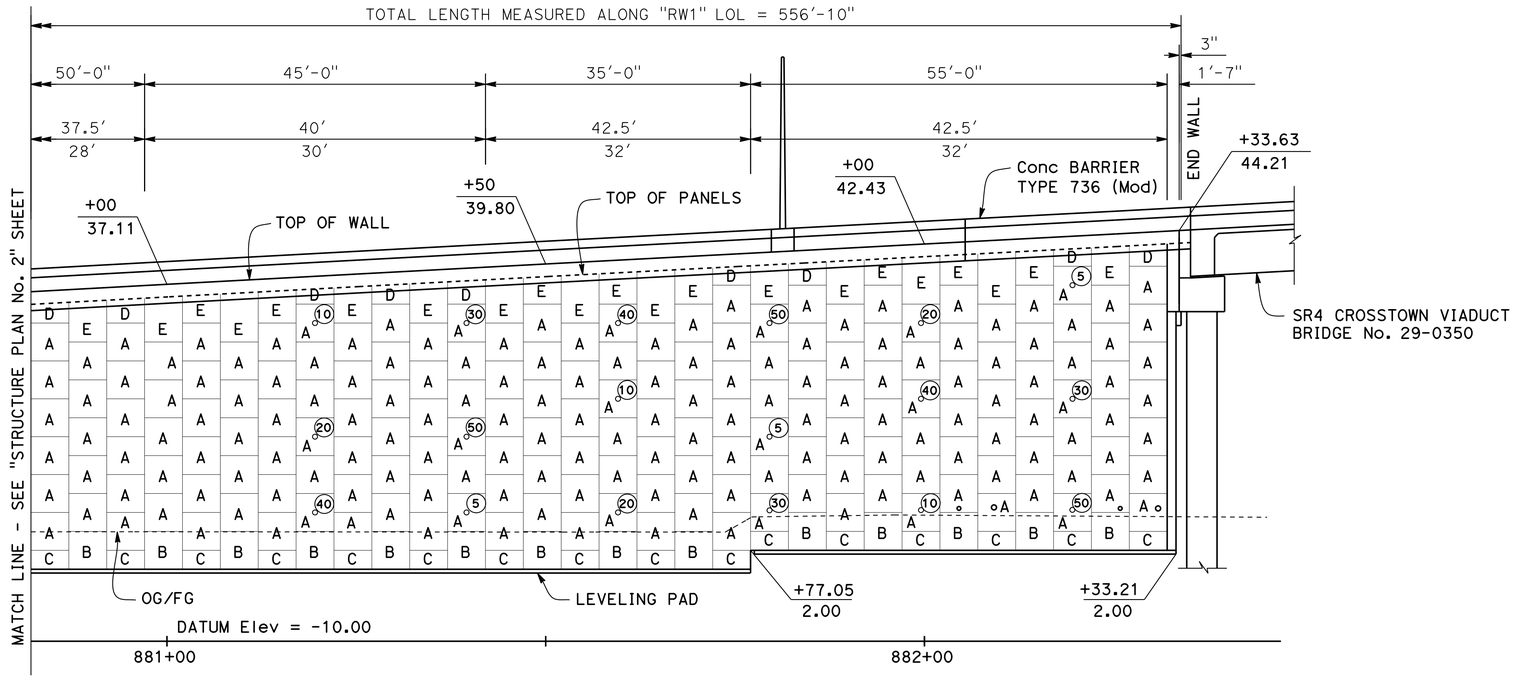

DEVELOPED ELEVATION

1" = 10'

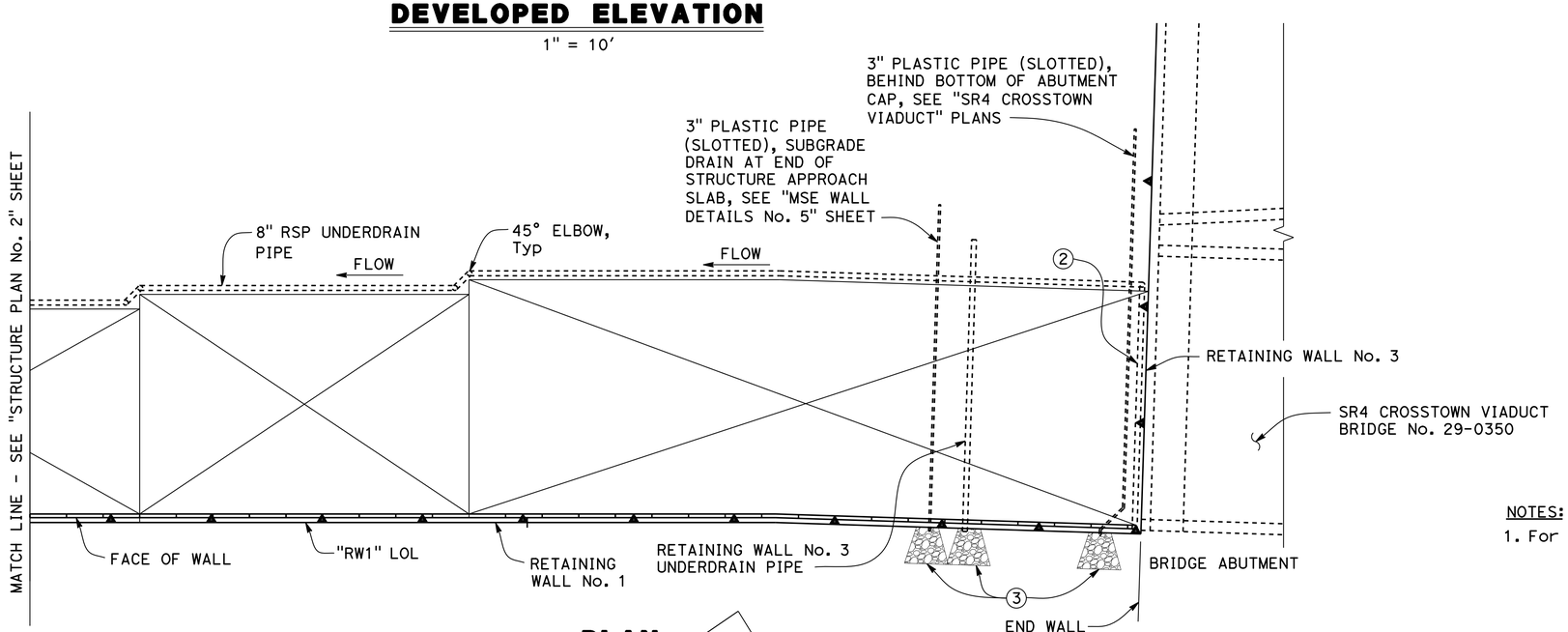

PLAN

1" = 10'

NOTES:

1. For Legend and Notes see "STRUCTURE PLAN No. 1" sheet.

NOTE:
THE CONTRACTOR SHALL VERIFY ALL CONTROLLING FIELD DIMENSIONS BEFORE ORDERING OR FABRICATING ANY MATERIAL

Reza Erfanian
DESIGN OVERSIGHT Reza Erfanian
5-10-13
SIGN OFF DATE

	BY	CHECKED
DESIGN	S. Desalegn	A. Wang
DETAILS	S. Desalegn	A. Wang
QUANTITIES	S. Desalegn	A. Wang

PREPARED FOR THE
STATE OF CALIFORNIA
DEPARTMENT OF TRANSPORTATION

K. Harirsaz
PROJECT ENGINEER

BRIDGE NO. 29E0011
POST MILES T14.72

RETAINING WALL No. 1 (MSE)
STRUCTURE PLAN No. 3

DESIGN DETAIL SHEET (ENGLISH) (REV.7/16/10)

ORIGINAL SCALE IN INCHES FOR REDUCED PLANS 0 1 2 3

UNIT: 1455
PROJECT NUMBER & PHASE: 10000002291 CONTRACT NO.: 10-0S1101

DISREGARD PRINTS BEARING EARLIER REVISION DATES → 5/22/12 5/22/12 8/31/12 4/10/13

SHEET 5 OF 35

FILE => 29E0011-c-sp03.dgn

USERNAME => s119571 DATE PLOTTED => 23-JUL-2013 TIME PLOTTED => 10:55

DIST	COUNTY	ROUTE	POST MILES TOTAL PROJECT	SHEET No	TOTAL SHEETS
10	SJ	4,5	Var	457	486

REGISTERED CIVIL ENGINEER — DATE 4/10/13

7-22-13
PLANS APPROVAL DATE

REGISTERED PROFESSIONAL ENGINEER — KIANOUSH HARIRSAZ — No. C39591 — Exp. 12/31/13 — CIVIL — STATE OF CALIFORNIA

The State of California or its officers or agents shall not be responsible for the accuracy or completeness of electronic copies of this plan sheet.

SAN JOAQUIN COUNCIL OF GOVERNMENTS
555 E. WEBER AVENUE
STOCKTON, CA 95202

RAJAPPAN & MEYER
CONSULTING ENGINEERS, INC.
1038 LEIGH AVE, SUITE 100
SAN JOSE, CA 95126

BVC 872+10.59
Elev 8.06

EVC 874+10.59
Elev 9.99

-2.07%

200.00' VC
R/C = 3.035%/Sta

4.00%

MSE RETAINING WALL NO.2

QUANTITIES

MECHANICALLY STABILIZED EMBANKMENT, LOCATION B	21,860	SQFT
STRUCTURAL CONCRETE, BARRIER SLAB	270	CY
MINOR CONCRETE (GUTTER) (LF)	224	LF
CABLE RAILING	224	LF
CONCRETE BARRIER (TYPE 736 MODIFIED)	534	LF

PROFILE GRADE "NA" LINE

NO SCALE

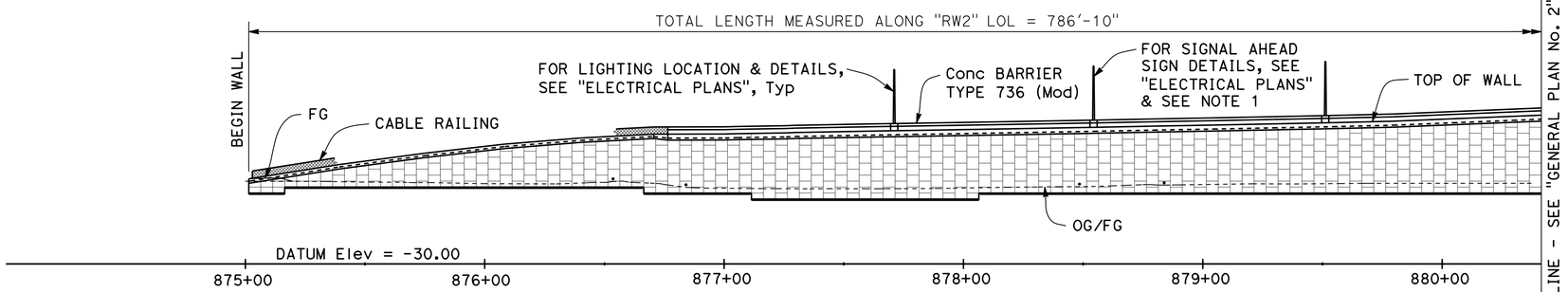

DEVELOPED MIRROR ELEVATION

1" = 30'

MATCH LINE - SEE "GENERAL PLAN No. 2" SHEET

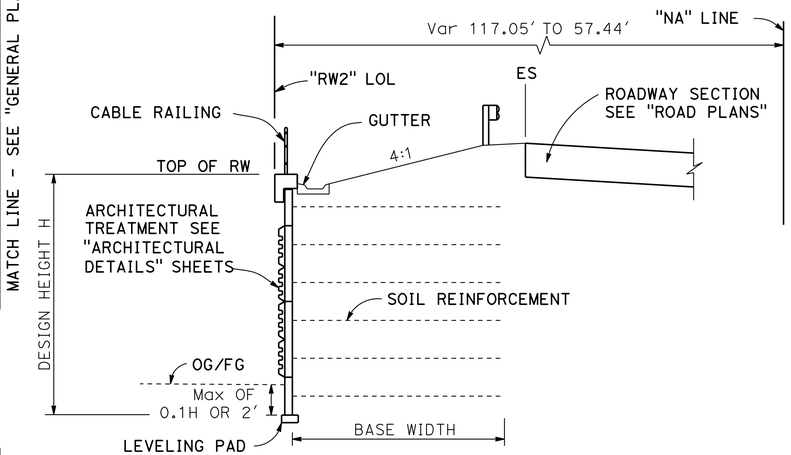

TYPICAL SECTION

1" = 5'

"RW2" LOL 875+01.43 TO "RW2" LOL 876+76.48

STANDARD PLANS DATED 2010

	A10A	ACRONYMS AND ABBREVIATIONS (SHEET 1 OF 2)
	A10B	ACRONYMS AND ABBREVIATIONS (SHEET 2 OF 2)
	A10C	SYMBOLS (SHEET 1 OF 2)
	A10D	SYMBOLS (SHEET 2 OF 2)
	A10F	LEGEND - SOIL (SHEET 1 OF 2)
	A10G	LEGEND - SOIL (SHEET 2 OF 2)
	B3-6	RETAINING WALL DETAILS No. 2
	B11-7	CHAIN LINK RAILING
RSP	B11-47	CABLE RAILING
	B11-56	CONCRETE BARRIER TYPE 736
RSP	D73	DRAINAGE INLETS
	ES-6A	ELECTRICAL SYSTEMS (LIGHTING STANDARD, TYPES 15 AND 21)
	ES-7K	ELECTRICAL SYSTEMS (FLASHING BEACON WITH, TYPE 9, 9A AND 9B SIGN)
	D102	UNDERDRAINS

NOTE:
1. For Signal Pole Mounting Details, see "MSE WALL DETAILS No. 8" sheet.

CURVE DATA:
"NA" LINE
R = 300.00'
Δ = 64° 27' 23"
T = 189.13'
L = 337.49'

876+76.48 POT RW2 LOL =
57.44' Lt "NA" 876+30.00
END COPING TRANSITION
END CABLE RAILING
END GUTTER
Beg Conc BARRIER TYPE 736 (Mod)

877+05.67 BC RW2 LOL =
55.00' Lt "NA" 876+54.50

877+25.88 EC RW2 LOL =
55.00' Lt "NA" 876+71.58 POT

CURVE DATA:
"RW2" LOL
R = 355.00'
Δ = 3° 15' 45"
T = 10.11'
L = 20.21'

877+64.55 POT RW2 LOL =
55.00' Lt "NA" 877+10.26

"RW2" 875+02.93
Beg CABLE RAILING

876+70.56 POT RW2 LOL =
58.22' Lt "NA" 876+25.08
Beg COPING TRANSITION

R=355.00'

N79°50'29"E
38.67'

RETAINING WALL No. 2

BARRIER SLAB

"RW2 LOL"

N81°45'02"E
420.23'

G1 INLET
"RW2" 879+96.43

RSP

N79°01'38"E 204.24'

GUTTER

"MBGR", SEE ROAD PLANS

875+01.43 POT RW2 LOL =
117.05' Lt "NA" 875+01.13
Beg RW2 LOL
Beg GUTTER

"NA" 876+71.58 EC

N79°50'29"E 378.42'

INLET, SEE "ROAD PLANS"

"NA" LINE

ETW

R = 300.00'

RETAINING WALL NO. 1

4:1

12' 13' 12' 12' 13' 26'

12' 12' 12' 12' Var

12' 12' & Var

10'

875+00
876+00
877+00
878+00
879+00
880+00

MATCH LINE - SEE "GENERAL PLAN No. 2" SHEET

PLAN

1" = 30'

LEGEND:
Indicates MSE Wall
Indicates direction of traffic

NOTE:
THE CONTRACTOR SHALL VERIFY ALL CONTROLLING FIELD DIMENSIONS BEFORE ORDERING OR FABRICATING ANY MATERIAL

DESIGN OVERSIGHT Reza Erfanian	DESIGN	BY S. Desalegn	CHECKED A. Wang	LOAD & RESISTANCE FACTOR DESIGN	LIVE LOADING: HL93 W/"LOW-BOY"; PERMIT DESIGN VEHICLE
5-10-13 SIGN OFF DATE	DETAILS	BY S. Desalegn	CHECKED A. Wang	LAYOUT BY S. Desalegn	CHECKED A. Wang
	QUANTITIES	BY S. Desalegn	CHECKED A. Wang	SPECIFICATIONS BY K. Harirsaz	PLANS AND SPECS COMPARED K. Harirsaz

PREPARED FOR THE STATE OF CALIFORNIA DEPARTMENT OF TRANSPORTATION

K. Harirsaz
PROJECT ENGINEER

BRIDGE NO. 29E0012
POST MILES T14.68

RETAINING WALL No. 2 (MSE)

GENERAL PLAN No. 1

DESIGN GENERAL PLAN SHEET (ENGLISH) (REV.7/16/10)

ORIGINAL SCALE IN INCHES FOR REDUCED PLANS 0 1 2 3

UNIT: 1455
PROJECT NUMBER & PHASE: 10000002291 CONTRACT NO.: 10-0S1101

DISREGARD PRINTS BEARING EARLIER REVISION DATES → 5/22/12 6/22/12 8/31/12 4/10/13

SHEET 6 OF 35

FILE => 29E0012-a-gp01.dgn

USERNAME => s119571 DATE PLOTTED => 23-JUL-2013 TIME PLOTTED => 10:55

DIST	COUNTY	ROUTE	POST MILES TOTAL PROJECT	SHEET No	TOTAL SHEETS
10	SJ	4,5	Var	458	486

REGISTERED CIVIL ENGINEER — DATE 4/10/13

7-22-13
PLANS APPROVAL DATE

REGISTERED PROFESSIONAL ENGINEER — KIANOUSH HARRISAZ — No. C39591 — Exp. 12/31/13 — CIVIL — STATE OF CALIFORNIA

The State of California or its officers or agents shall not be responsible for the accuracy or completeness of electronic copies of this plan sheet.

SAN JOAQUIN COUNCIL OF GOVERNMENTS
555 E. WEBER AVENUE
STOCKTON, CA 95202

RAJAPPAN & MEYER
CONSULTING ENGINEERS, INC.
1038 LEIGH AVE, SUITE 100
SAN JOSE, CA 95126

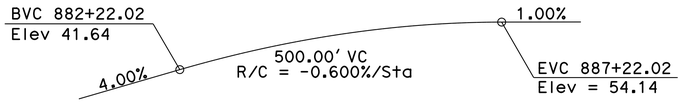

PROFILE GRADE "NA1" LINE

NO SCALE

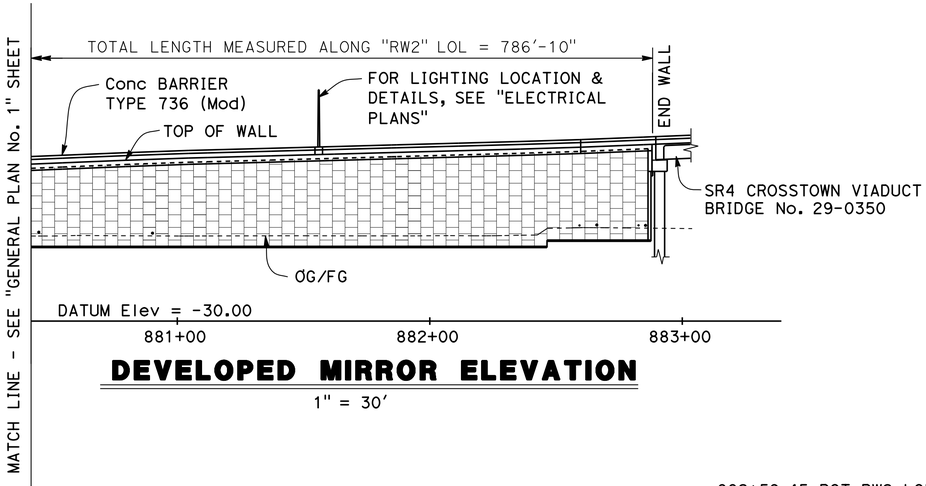

DEVELOPED MIRROR ELEVATION

1" = 30'

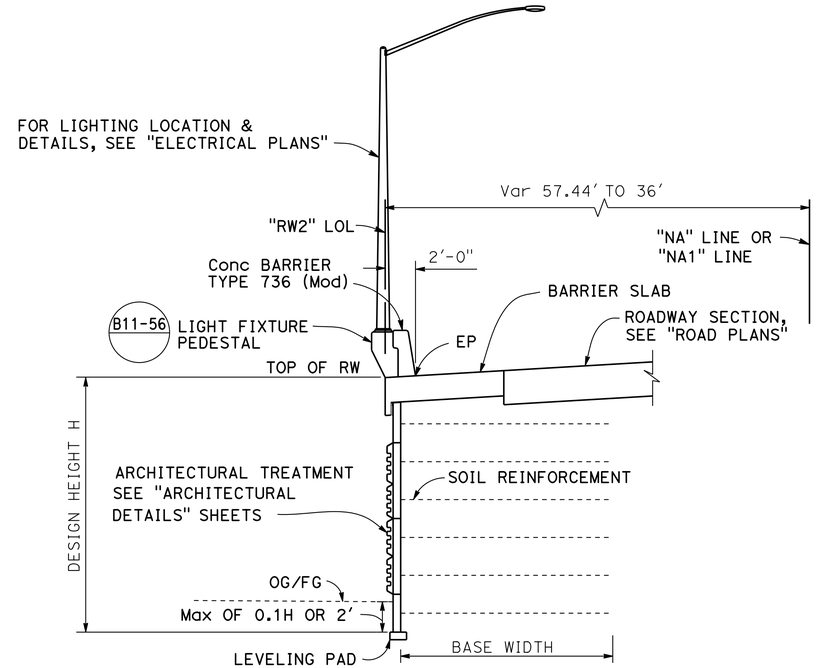

TYPICAL SECTION

1" = 5'

"RW2" LOL 876+76.48 TO "RW2" LOL 882+59.45

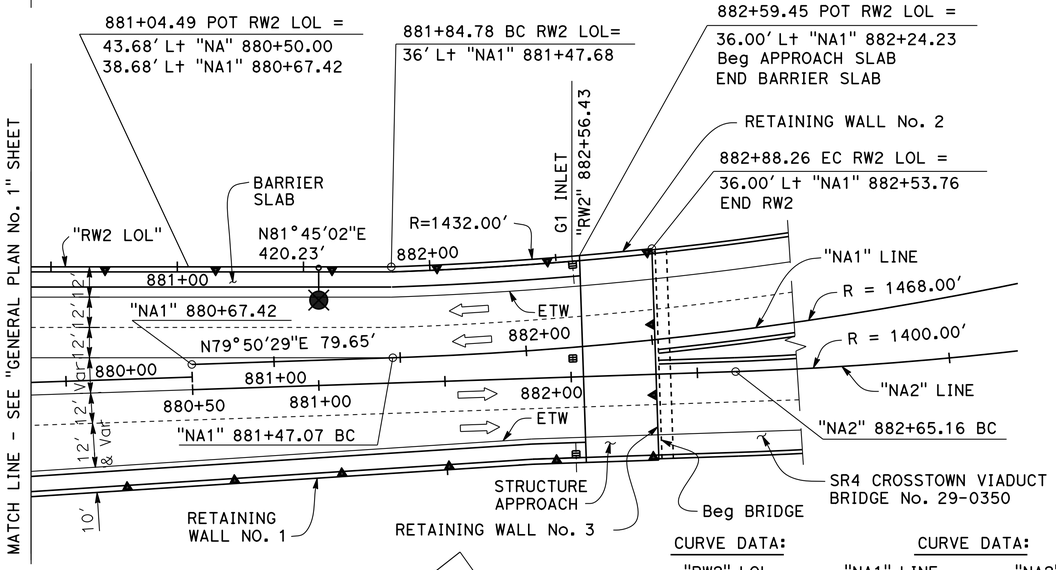

PLAN

1" = 30'

CURVE DATA:

"RW2" LOL
R = 1432.00'
Δ = 4° 8' 24"
T = 51.76'
L = 103.48'

CURVE DATA:

"NA1" LINE	"NA2" LINE
R = 1468.00'	R = 1400.00'
Δ = 21° 59' 21"	Δ = 26° 51' 29"
T = 285.21'	T = 334.28'
L = 563.39'	L = 656.27'

NOTE:
THE CONTRACTOR SHALL VERIFY ALL CONTROLLING FIELD DIMENSIONS BEFORE ORDERING OR FABRICATING ANY MATERIAL

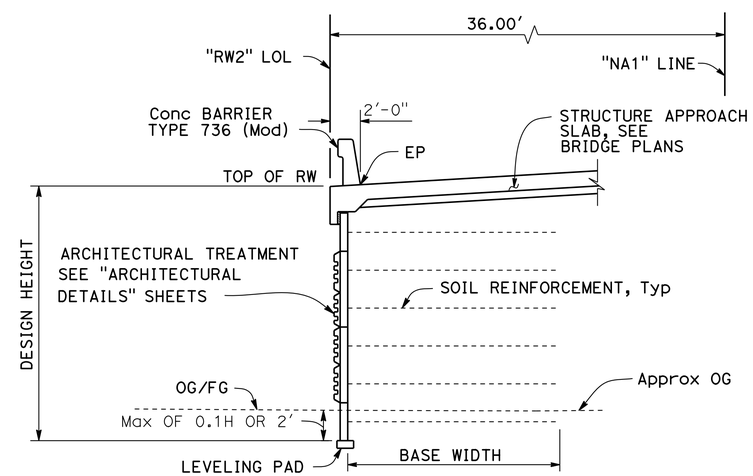

TYPICAL SECTION

1" = 5'

"RW2" LOL 882+59.45 TO "RW2" LOL 882+88.26

LEGEND:

▲▲ Indicates MSE Wall

⇦ Indicates direction of traffic

Reza Erfanian — DESIGN OVERSIGHT — Reza Erfanian — 5-10-13 SIGN OFF DATE	DESIGN	BY S. Desalegn	CHECKED A. Wang	LOAD & RESISTANCE FACTOR DESIGN	LIVE LOADING: HL93 W/"LOW-BOY"; PERMIT DESIGN VEHICLE
	DETAILS	BY S. Desalegn	CHECKED A. Wang	LAYOUT	BY S. Desalegn — CHECKED A. Wang
	QUANTITIES	BY S. Desalegn	CHECKED A. Wang	SPECIFICATIONS	BY K. Harirsaz — PLANS AND SPECS COMPARED K. Harirsaz

PREPARED FOR THE STATE OF CALIFORNIA DEPARTMENT OF TRANSPORTATION

K. Harirsaz — PROJECT ENGINEER

BRIDGE NO. 29E0012 — POST MILES T14.68

RETAINING WALL No. 2 (MSE)

GENERAL PLAN No. 2

DESIGN GENERAL PLAN SHEET (ENGLISH) (REV.7/16/10)

ORIGINAL SCALE IN INCHES FOR REDUCED PLANS 0 1 2 3

UNIT: 1455
PROJECT NUMBER & PHASE: 10000002291 — CONTRACT NO.: 10-0S1101

DISREGARD PRINTS BEARING EARLIER REVISION DATES → REVISION DATES 5/22/12 6/22/12 8/31/12 4/10/13 — SHEET 7 — OF 35

FILE => 29E0012-a-gp02.dgn

USERNAME => s114926 DATE PLOTTED => 23-JUL-2013 TIME PLOTTED => 10:22

DIST	COUNTY	ROUTE	POST MILES TOTAL PROJECT	SHEET No	TOTAL SHEETS
10	SJ	4,5	Var	459	486

REGISTERED CIVIL ENGINEER 4/10/13 DATE

7-22-13
PLANS APPROVAL DATE

REGISTERED PROFESSIONAL ENGINEER KIANOUSH HARIRSAZ No. C39591 Exp. 12/31/13 CIVIL STATE OF CALIFORNIA

The State of California or its officers or agents shall not be responsible for the accuracy or completeness of electronic copies of this plan sheet.

SAN JOAQUIN COUNCIL OF GOVERNMENTS
555 E. WEBER AVENUE
STOCKTON, CA 95202

RAJAPPAN & MEYER
CONSULTING ENGINEERS, INC.
1038 LEIGH AVE, SUITE 100
SAN JOSE, CA 95126

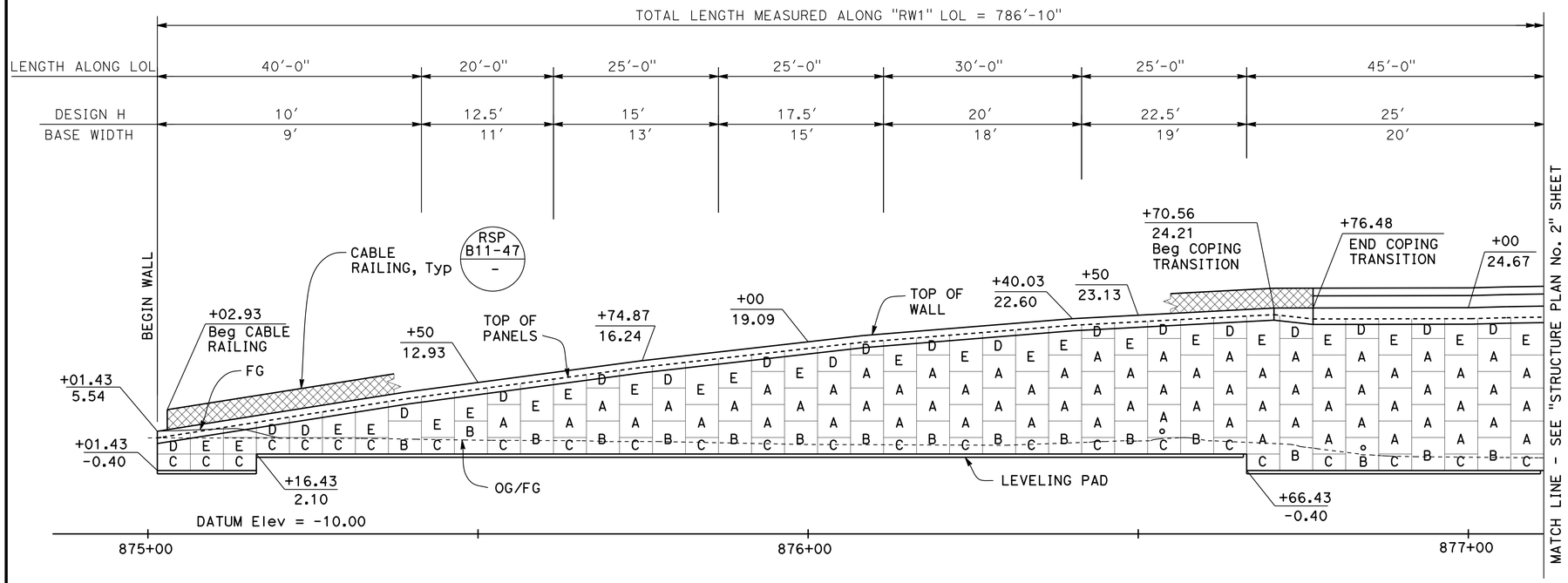

DEVELOPED MIRROR ELEVATION

1" = 10'

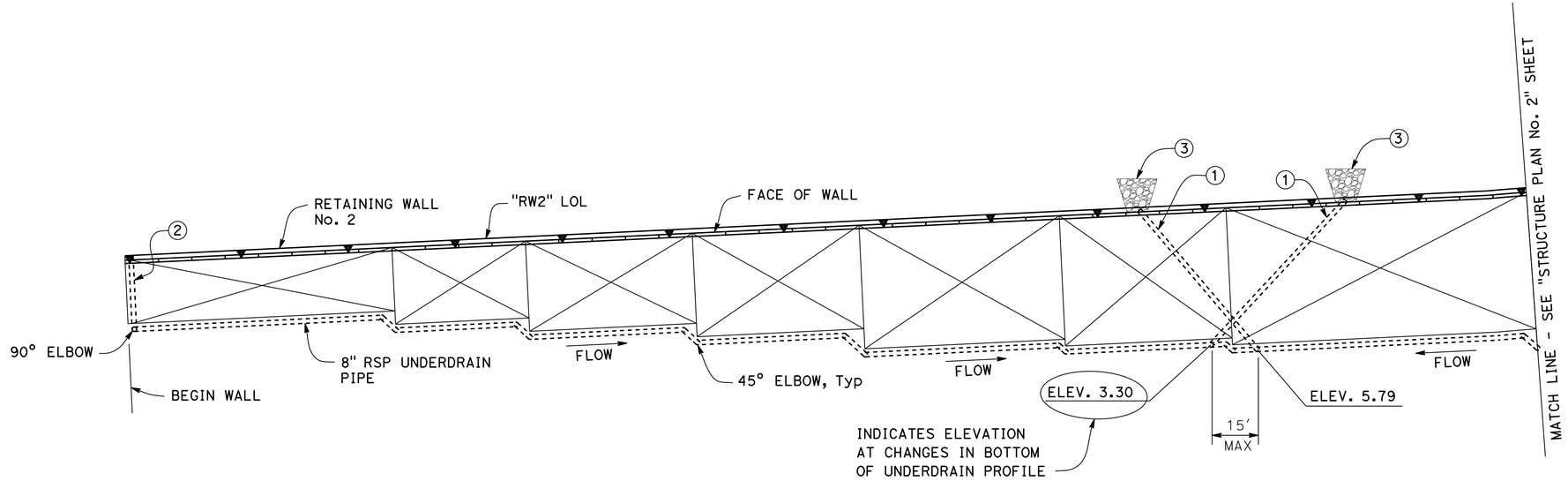

PLAN

1" = 10'

NOTE:
THE CONTRACTOR SHALL VERIFY ALL CONTROLLING FIELD DIMENSIONS BEFORE ORDERING OR FABRICATING ANY MATERIAL

LEGEND:

- Indicates MSE Wall
- Indicates limits of welded wire mats
- (1) Outlet pipe, see "Outlet Pipe Detail" on "MSE WALL DETAILS No. 7" sheet
- (2) Cleanout pipe, see "Cleanout Pipe Detail" on MSE WALL DETAILS No. 7" sheet
- (3) Rock Slope Protection, see "MSE WALL DETAILS No. 7" sheet

NOTES:

1. For cases without roadway, extend permeable material to level of top welded wire mat unless indicated otherwise elsewhere in Project Plans.
2. Permeable material need not extend higher than 3'-0" below grading plane.
3. Maximum spacing of outlet pipes equals 200 ft.
4. For additional details, see D-102
5. At sags in profile of underdrain pipe, install outlet pipe for each direction of flow.
6. For wire schedule A, B, C, D and E, see "MSE WALL DETAILS No. 1" sheet.
7. For other Details not shown, see "MSE WALL DETAILS No. 2" sheet through "MSE WALL DETAILS No. 10" sheet.
8. For panel legend, see "MSE WALL DETAILS No. 1" sheet.
9. Elevations shown are at Top of Wall on Retaining Wall LOL and top of leveling pad.

Reza Erfanian
DESIGN OVERSIGHT Reza Erfanian
5-10-13
SIGN OFF DATE

	BY	CHECKED
DESIGN	S. Desalegn	A. Wang
DETAILS	S. Desalegn	A. Wang
QUANTITIES	S. Desalegn	A. Wang

PREPARED FOR THE STATE OF CALIFORNIA DEPARTMENT OF TRANSPORTATION

K. Harirsaz
PROJECT ENGINEER

BRIDGE NO. 29E0012
POST MILES T14.68

RETAINING WALL No. 2 (MSE)
STRUCTURE PLAN No. 1

DESIGN DETAIL SHEET (ENGLISH) (REV.7/16/10)

ORIGINAL SCALE IN INCHES FOR REDUCED PLANS 0 1 2 3

UNIT: 1455
PROJECT NUMBER & PHASE: 10000002291 CONTRACT NO.: 10-0S1101

DISREGARD PRINTS BEARING EARLIER REVISION DATES

REVISION DATES 5/22/12 6/22/12 8/31/12 4/10/13 SHEET 8 OF 35

FILE => 29E0012-c-sp01.dgn

USERNAME => s114926 DATE PLOTTED => 23-JUL-2013 TIME PLOTTED => 10:22

DIST	COUNTY	ROUTE	POST MILES TOTAL PROJECT	SHEET No	TOTAL SHEETS
10	SJ	4,5	Var	460	486

REGISTERED CIVIL ENGINEER 4/10/13 DATE

7-22-13
PLANS APPROVAL DATE

REGISTERED PROFESSIONAL ENGINEER KIANOUSH HARIRSAZ No. C39591 Exp. 12/31/13 CIVIL STATE OF CALIFORNIA

The State of California or its officers or agents shall not be responsible for the accuracy or completeness of electronic copies of this plan sheet.

SAN JOAQUIN COUNCIL OF GOVERNMENTS
555 E. WEBER AVENUE
STOCKTON, CA 95202

RAJAPPAN & MEYER
CONSULTING ENGINEERS, INC.
1038 LEIGH AVE, SUITE 100
SAN JOSE, CA 95126

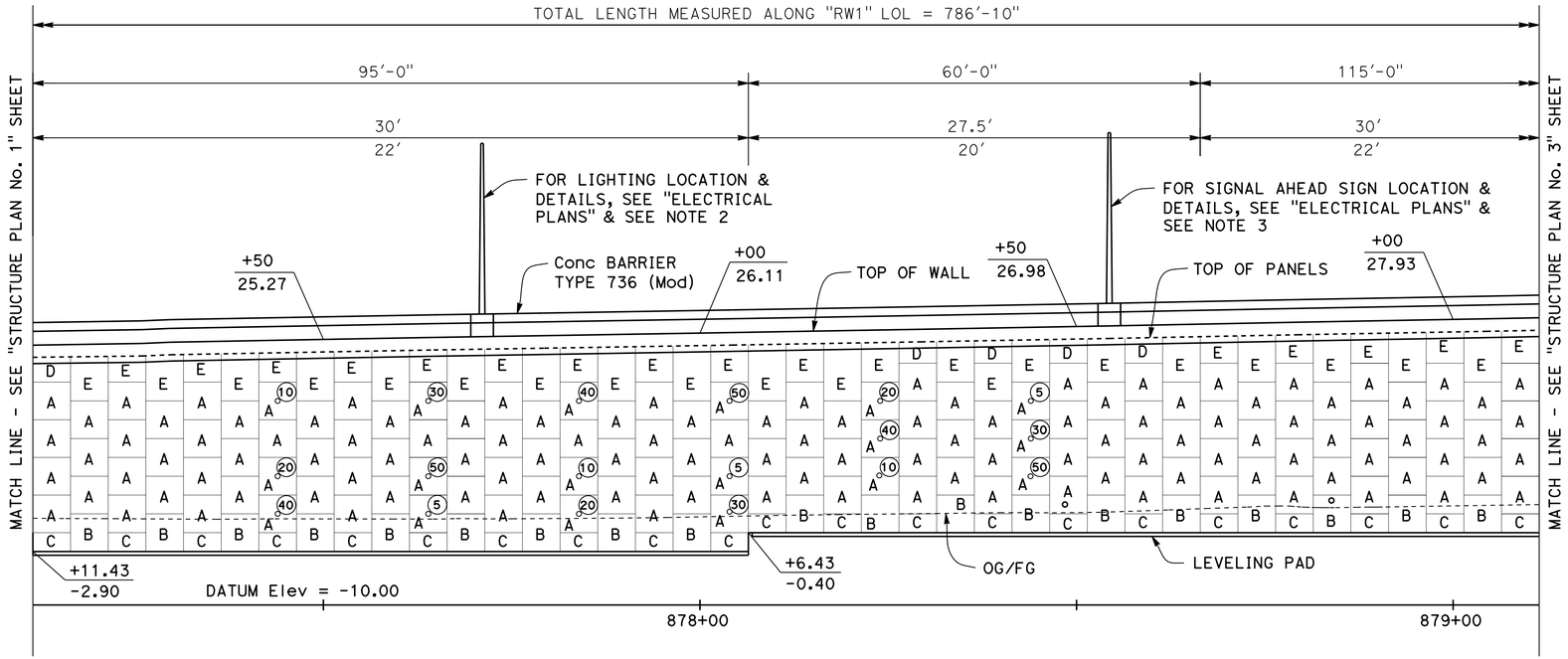

DEVELOPED MIRROR ELEVATION

1" = 10'

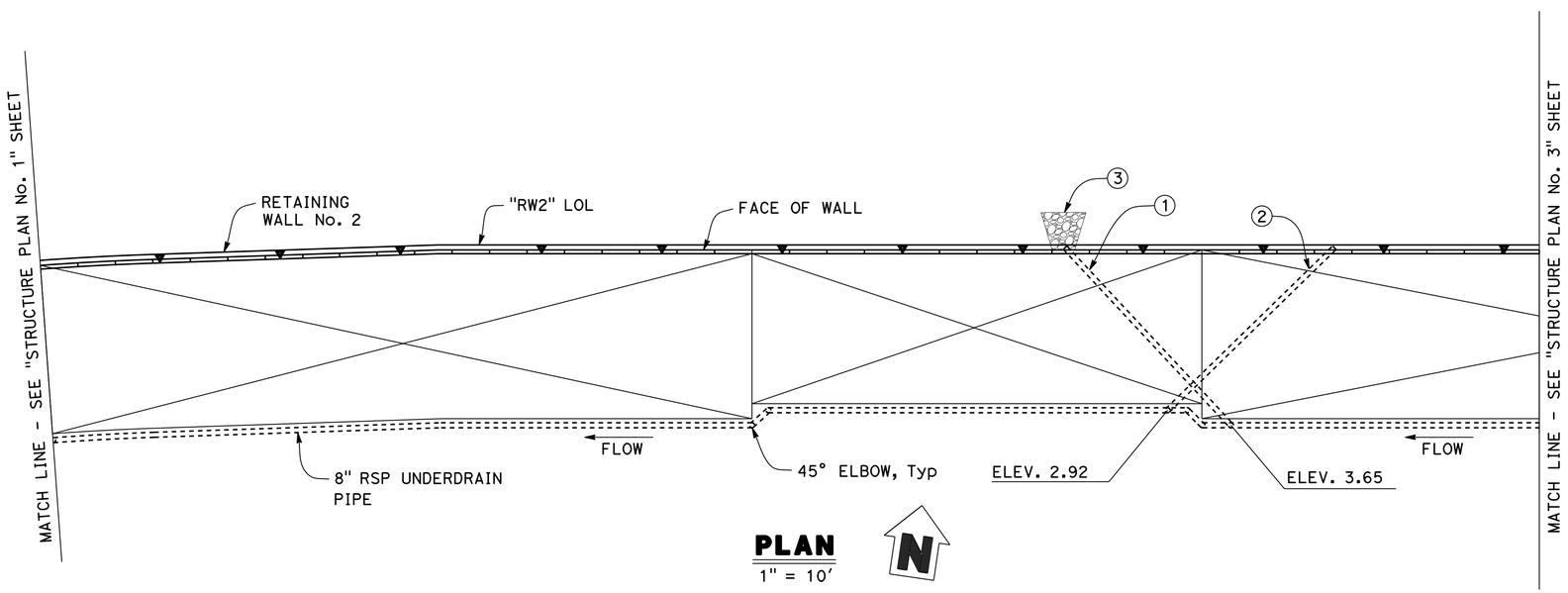

PLAN

1" = 10'

NOTES:

1. For Legend and Notes see "STRUCTURE PLAN No. 1" sheet.
2. For SECTION VIEW AT LIGHT POLE LOCATION, see "MSE WALL DETAILS No. 7" sheet.
3. For SIGNAL POLE MOUNTING DETAILS, see "MSE WALL DETAILS No. 8" sheet.

NOTE:
THE CONTRACTOR SHALL VERIFY ALL CONTROLLING FIELD DIMENSIONS BEFORE ORDERING OR FABRICATING ANY MATERIAL

Reza Erfanian
DESIGN OVERSIGHT Reza Erfanian
5-10-13
SIGN OFF DATE

	BY	CHECKED
DESIGN	S. Desalegn	A. Wang
DETAILS	S. Desalegn	A. Wang
QUANTITIES	S. Desalegn	A. Wang

PREPARED FOR THE STATE OF CALIFORNIA DEPARTMENT OF TRANSPORTATION

K. Harirsaz
PROJECT ENGINEER

BRIDGE NO. 29E0012
POST MILES T14.68

RETAINING WALL No. 2 (MSE)
STRUCTURE PLAN No. 2

DESIGN DETAIL SHEET (ENGLISH) (REV.7/16/10)

ORIGINAL SCALE IN INCHES FOR REDUCED PLANS 0 1 2 3

UNIT: 1455
PROJECT NUMBER & PHASE: 10000002291 CONTRACT NO.: 10-0S1101

DISREGARD PRINTS BEARING EARLIER REVISION DATES → REVISION DATES 5/22/12 6/22/12 8/31/12 4/10/13

SHEET 9 OF 35

FILE => 29E0012-c-sp02.dgn

USERNAME => s114926 DATE PLOTTED => 23-JUL-2013 TIME PLOTTED => 10:22

DIST	COUNTY	ROUTE	POST MILES TOTAL PROJECT	SHEET No	TOTAL SHEETS
10	SJ	4,5	Var	461	486

REGISTERED CIVIL ENGINEER — DATE 4/10/13

7-22-13
PLANS APPROVAL DATE

REGISTERED PROFESSIONAL ENGINEER KIANOUSH HARIRSAZ No. C39591 Exp. 12/31/13 CIVIL STATE OF CALIFORNIA

The State of California or its officers or agents shall not be responsible for the accuracy or completeness of electronic copies of this plan sheet.

SAN JOAQUIN COUNCIL OF GOVERNMENTS
555 E. WEBER AVENUE
STOCKTON, CA 95202

RAJAPPAN & MEYER
CONSULTING ENGINEERS, INC.
1038 LEIGH AVE, SUITE 100
SAN JOSE, CA 95126

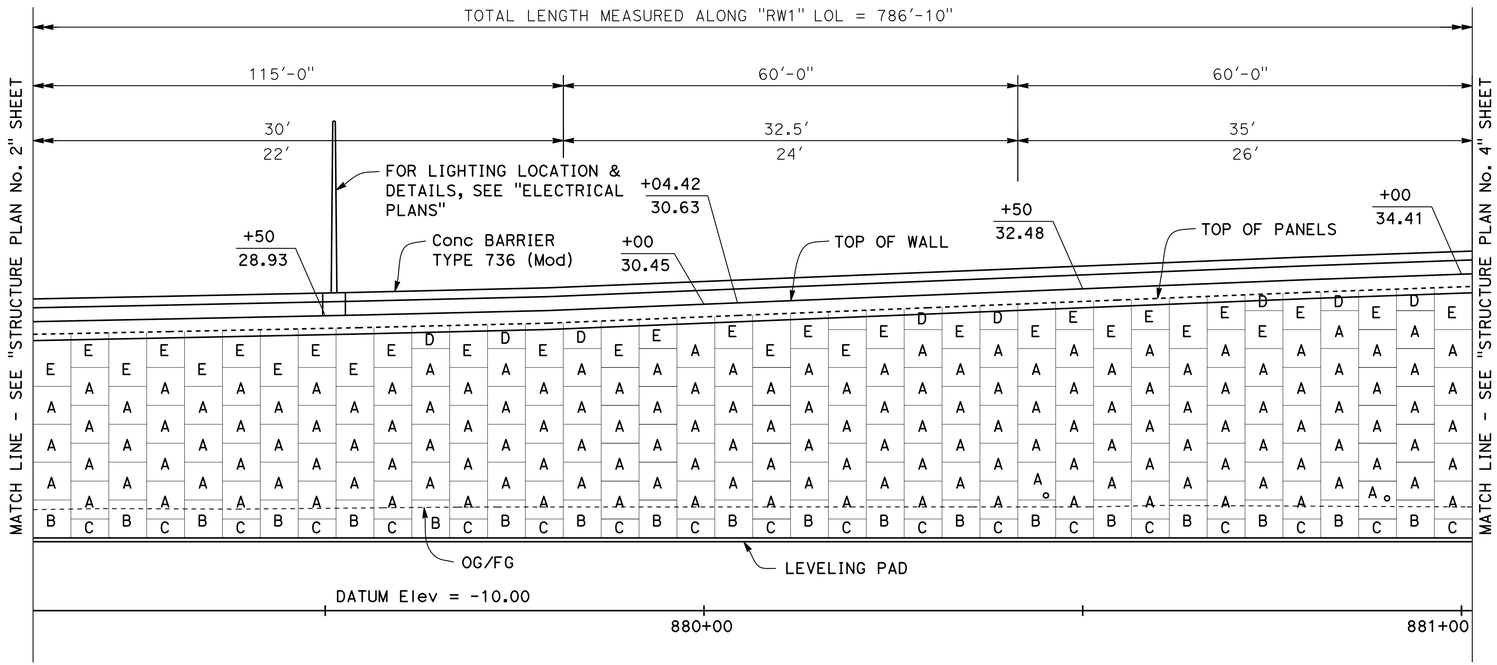

DEVELOPED MIRROR ELEVATION

1" = 10'

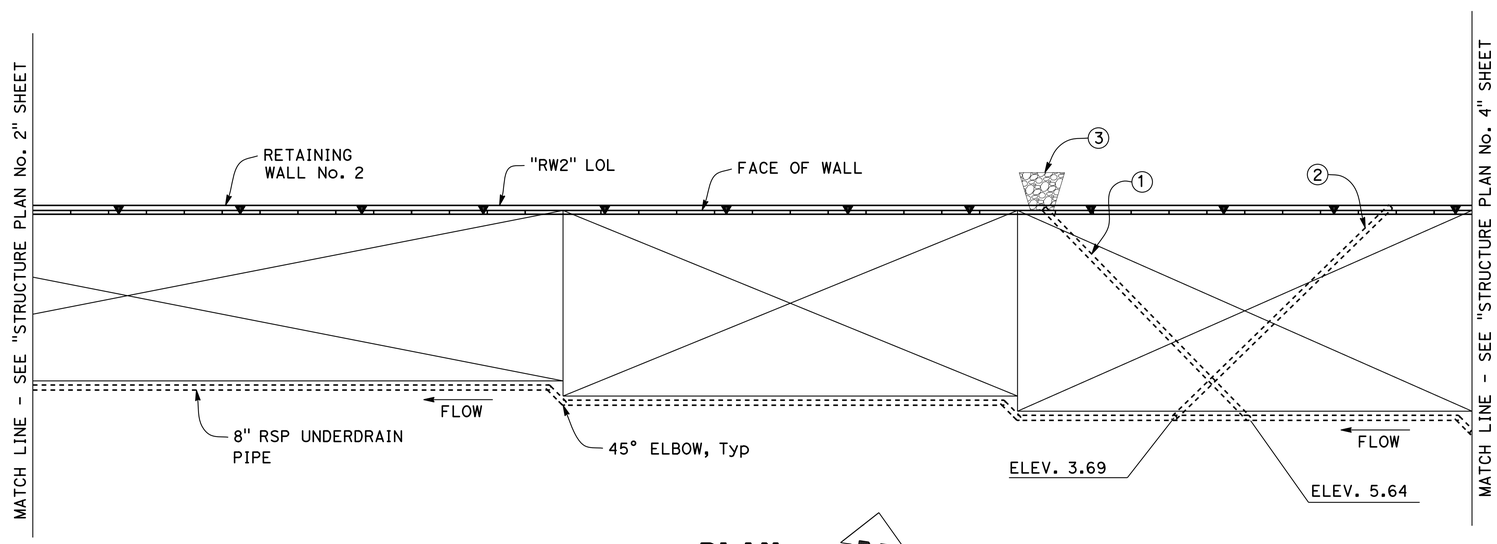

PLAN

1" = 10'

NOTE:
1. For Legend and Notes see "STRUCTURE PLAN No. 1" sheet.

NOTE:
THE CONTRACTOR SHALL VERIFY ALL CONTROLLING FIELD DIMENSIONS BEFORE ORDERING OR FABRICATING ANY MATERIAL

Reza Erfanian
DESIGN OVERSIGHT — Reza Erfanian
5-10-13
SIGN OFF DATE

	BY	CHECKED
DESIGN	S. Desalegn	A. Wang
DETAILS	S. Desalegn	A. Wang
QUANTITIES	S. Desalegn	A. Wang

PREPARED FOR THE STATE OF CALIFORNIA DEPARTMENT OF TRANSPORTATION

K. Harirsaz
PROJECT ENGINEER

BRIDGE NO. 29E0012
POST MILES T14.68

RETAINING WALL No. 2 (MSE)
STRUCTURE PLAN No. 3

DESIGN DETAIL SHEET (ENGLISH) (REV.7/16/10)

ORIGINAL SCALE IN INCHES FOR REDUCED PLANS 0 1 2 3

UNIT: 1455
PROJECT NUMBER & PHASE: 10000002291 CONTRACT NO.: 10-0S1101

DISREGARD PRINTS BEARING EARLIER REVISION DATES → REVISION DATES 5/22/12 6/22/12 8/31/12 4/10/13 SHEET 10 OF 35

FILE => 29E0012-c-sp03.dgn

USERNAME => s114926 DATE PLOTTED => 23-JUL-2013 TIME PLOTTED => 10:22

DIST	COUNTY	ROUTE	POST MILES TOTAL PROJECT	SHEET No	TOTAL SHEETS
10	SJ	4,5	Var	462	486

REGISTERED CIVIL ENGINEER 4/10/13 DATE

7-22-13
PLANS APPROVAL DATE

REGISTERED PROFESSIONAL ENGINEER KIANOUSH HARIRSAZ No. C39591 Exp. 12/31/13 CIVIL STATE OF CALIFORNIA

The State of California or its officers or agents shall not be responsible for the accuracy or completeness of electronic copies of this plan sheet.

SAN JOAQUIN COUNCIL OF GOVERNMENTS
555 E. WEBER AVENUE
STOCKTON, CA 95202

RAJAPPAN & MEYER
CONSULTING ENGINEERS, INC.
1038 LEIGH AVE, SUITE 100
SAN JOSE, CA 95126

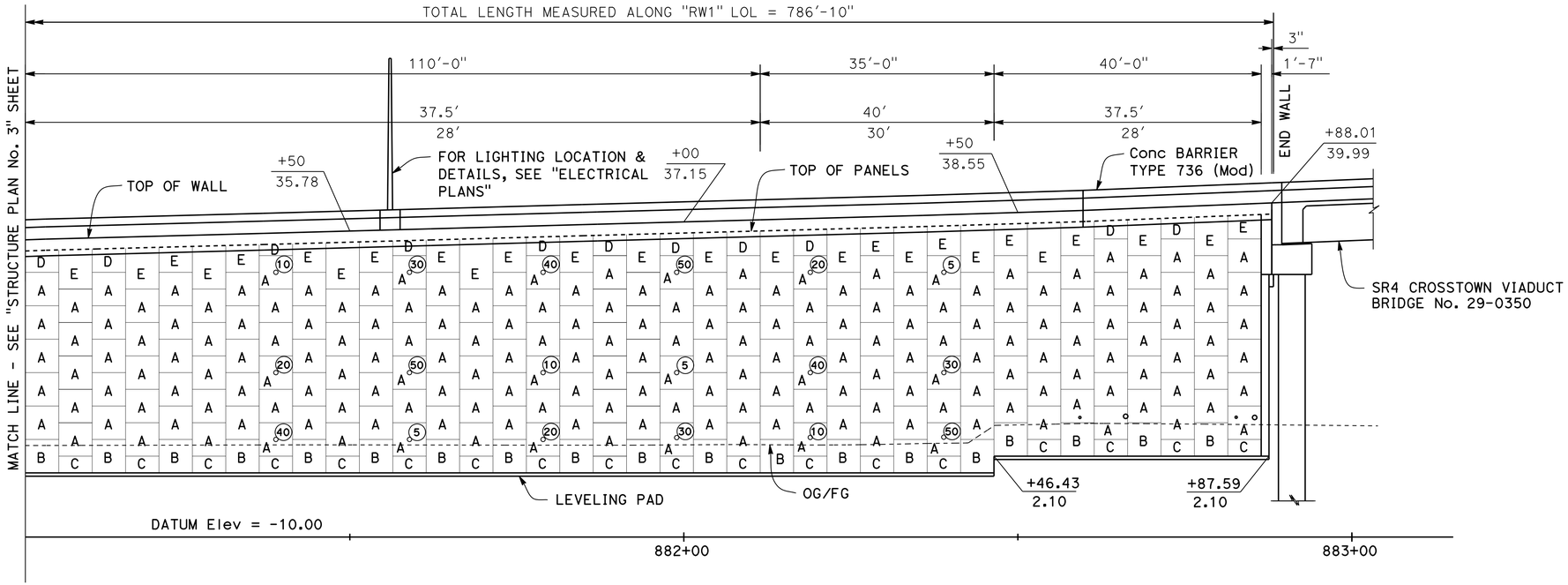

DEVELOPED MIRROR ELEVATION

1" = 10'

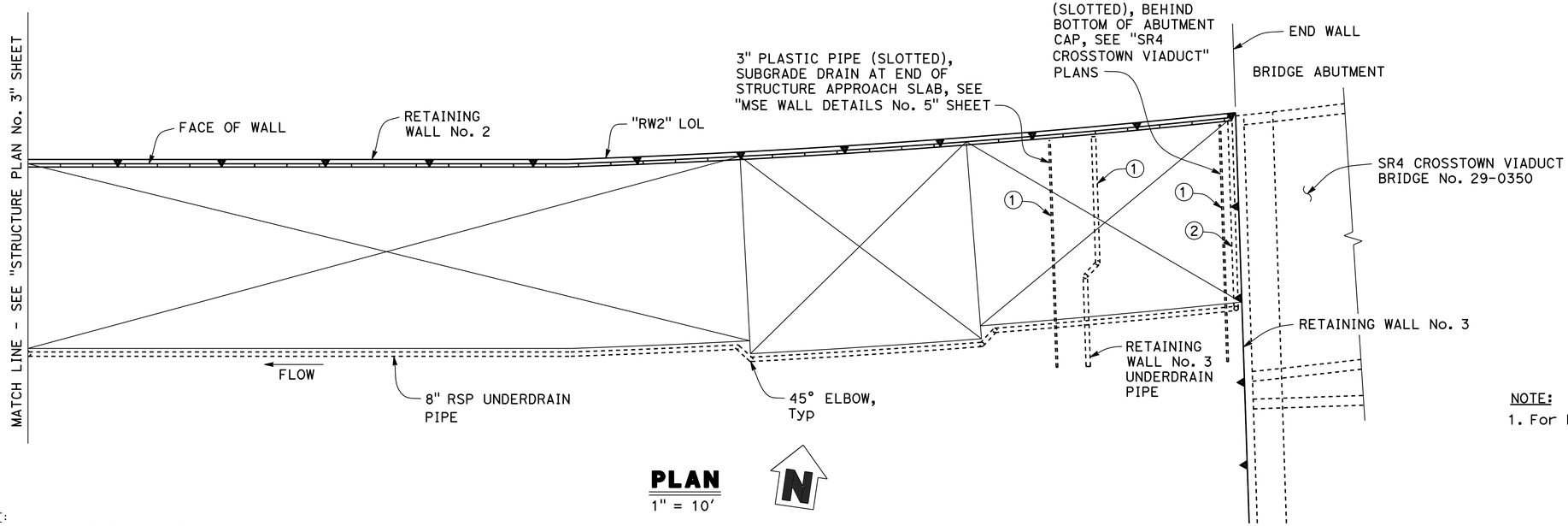

PLAN

1" = 10'

NOTE:
1. For Legend and Notes see "STRUCTURE PLAN No. 1" sheet.

NOTE:
THE CONTRACTOR SHALL VERIFY ALL CONTROLLING FIELD DIMENSIONS BEFORE ORDERING OR FABRICATING ANY MATERIAL

Reza Erfanian
DESIGN OVERSIGHT Reza Erfanian
5-10-13
SIGN OFF DATE

	BY	CHECKED
DESIGN	S. Desalegn	A. Wang
DETAILS	S. Desalegn	A. Wang
QUANTITIES	S. Desalegn	A. Wang

PREPARED FOR THE STATE OF CALIFORNIA DEPARTMENT OF TRANSPORTATION

K. Harirsaz
PROJECT ENGINEER

BRIDGE NO. 29E0012
POST MILES T14.68

RETAINING WALL No. 2 (MSE)
STRUCTURE PLAN No. 4

DESIGN DETAIL SHEET (ENGLISH) (REV.7/16/10)

ORIGINAL SCALE IN INCHES FOR REDUCED PLANS 0 1 2 3

UNIT: 1455
PROJECT NUMBER & PHASE: 10000002291 CONTRACT NO.: 10-0S1101

DISREGARD PRINTS BEARING EARLIER REVISION DATES

REVISION DATES: 5/22/12 6/22/12 8/31/12 4/10/13

SHEET 11 OF 35

FILE => 29E0012-c-sp04.dgn

USERNAME => s114926 DATE PLOTTED => 23-JUL-2013 TIME PLOTTED => 10:22

DIST	COUNTY	ROUTE	POST MILES TOTAL PROJECT	SHEET No	TOTAL SHEETS
10	SJ	4,5	Var	463	486

REGISTERED CIVIL ENGINEER — DATE 4/10/13

7-22-13
PLANS APPROVAL DATE

REGISTERED PROFESSIONAL ENGINEER — KIANOUSH HARIRSAZ — No. C39591 — Exp. 12/31/13 — CIVIL — STATE OF CALIFORNIA

The State of California or its officers or agents shall not be responsible for the accuracy or completeness of electronic copies of this plan sheet.

SAN JOAQUIN COUNCIL OF GOVERNMENTS
555 E. WEBER AVENUE
STOCKTON, CA 95202

RAJAPPAN & MEYER
CONSULTING ENGINEERS, INC.
1038 LEIGH AVE, SUITE 100
SAN JOSE, CA 95126

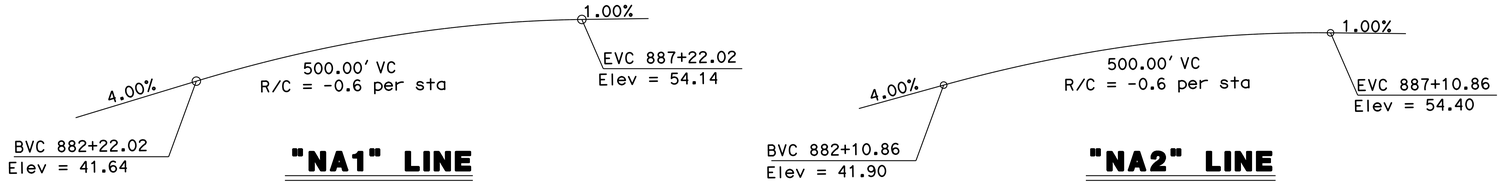

PROFILE GRADE

NO SCALE

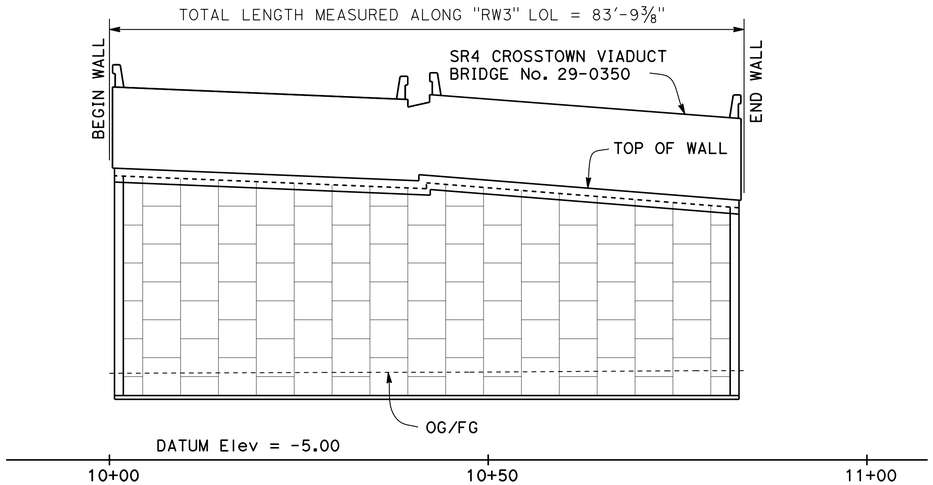

DEVELOPED ELEVATION

1" = 10'

MSE RETAINING WALL NO.3

QUANTITIES

MECHANICALLY STABILIZED EMBANKMENT, LOCATION C	2,370	SQFT

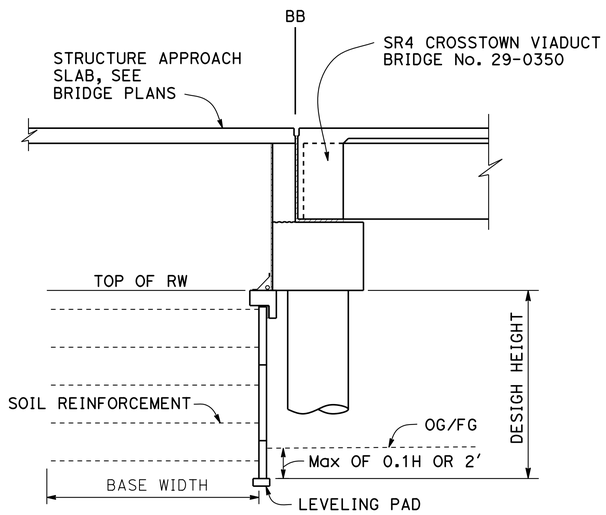

TYPICAL SECTION

1" = 5'

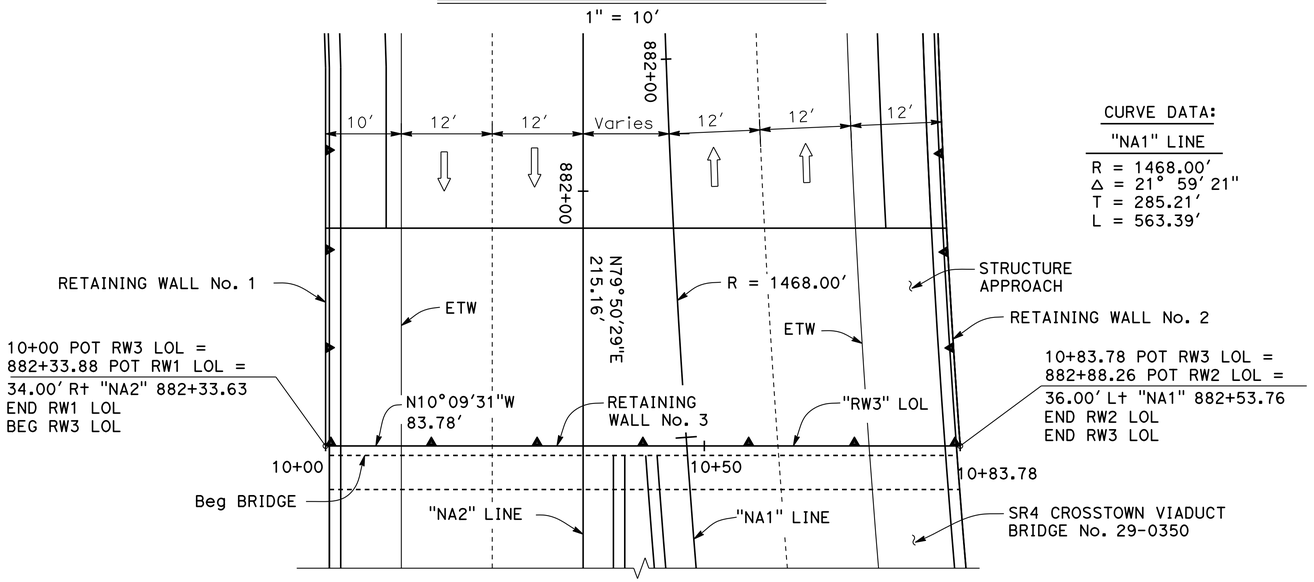

CURVE DATA:

"NA1" LINE

R = 1468.00'
Δ = 21° 59' 21"
T = 285.21'
L = 563.39'

PLAN

1" = 10'

STANDARD PLANS DATED 2010

A10A	ACRONYMS AND ABBREVIATIONS (SHEET 1 OF 2)
A10B	ACRONYMS AND ABBREVIATIONS (SHEET 2 OF 2)
A10C	SYMBOLS (SHEET 1 OF 2)
A10D	SYMBOLS (SHEET 2 OF 2)
A10F	LEGEND - SOIL (SHEET 1 OF 2)
A10G	LEGEND - SOIL (SHEET 2 OF 2)

LEGEND:

▲▲ Indicates MSE Wall

NOTE:
THE CONTRACTOR SHALL VERIFY ALL CONTROLLING FIELD DIMENSIONS BEFORE ORDERING OR FABRICATING ANY MATERIAL

Reza Erfanian
DESIGN OVERSIGHT Reza Erfanian
5-10-13
SIGN OFF DATE

	BY	CHECKED			
DESIGN	S. Desalegn	A. Wang	LOAD & RESISTANCE FACTOR DESIGN	LIVE LOADING: HL93 W/"LOW-BOY"; PERMIT DESIGN VEHICLE	
DETAILS	S. Desalegn	A. Wang	LAYOUT	S. Desalegn	A. Wang
QUANTITIES	S. Desalegn	A. Wang	SPECIFICATIONS	K. Harirsaz	PLANS AND SPECS COMPARED K. Harirsaz

PREPARED FOR THE STATE OF CALIFORNIA DEPARTMENT OF TRANSPORTATION

K. Harirsaz
PROJECT ENGINEER

BRIDGE NO. 29E0013
POST MILES T14.82

RETAINING WALL No. 3 (MSE)
GENERAL PLAN

DESIGN GENERAL PLAN SHEET (ENGLISH) (REV.7/16/10)

ORIGINAL SCALE IN INCHES FOR REDUCED PLANS 0 1 2 3

UNIT: 1455
PROJECT NUMBER & PHASE: 10000002291 CONTRACT NO.: 10-0S1101

DISREGARD PRINTS BEARING EARLIER REVISION DATES → REVISION DATES 5/22/12 6/22/12 8/31/12 4/10/13 SHEET 12 OF 35

FILE => 29E0013-a-gp.dgn

USERNAME => s114926 DATE PLOTTED => 23-JUL-2013 TIME PLOTTED => 10:22

DIST	COUNTY	ROUTE	POST MILES TOTAL PROJECT	SHEET No	TOTAL SHEETS
10	SJ	4,5	Var	464	486

REGISTERED CIVIL ENGINEER — DATE 4/10/13

7-22-13
PLANS APPROVAL DATE

REGISTERED PROFESSIONAL ENGINEER — KIANOUSH HARIRSAZ — No. C39591 — Exp. 12/31/13 — CIVIL — STATE OF CALIFORNIA

The State of California or its officers or agents shall not be responsible for the accuracy or completeness of electronic copies of this plan sheet.

SAN JOAQUIN COUNCIL OF GOVERNMENTS
555 E. WEBER AVENUE
STOCKTON, CA 95202

RAJAPPAN & MEYER
CONSULTING ENGINEERS, INC.
1038 LEIGH AVE, SUITE 100
SAN JOSE, CA 95126

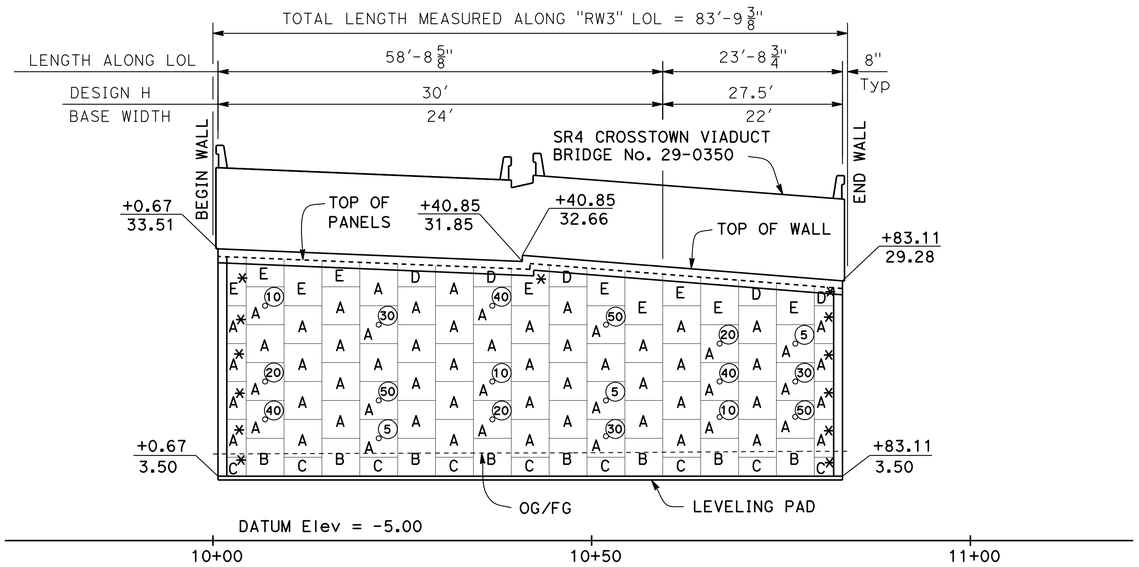

DEVELOPED ELEVATION

1" = 10'

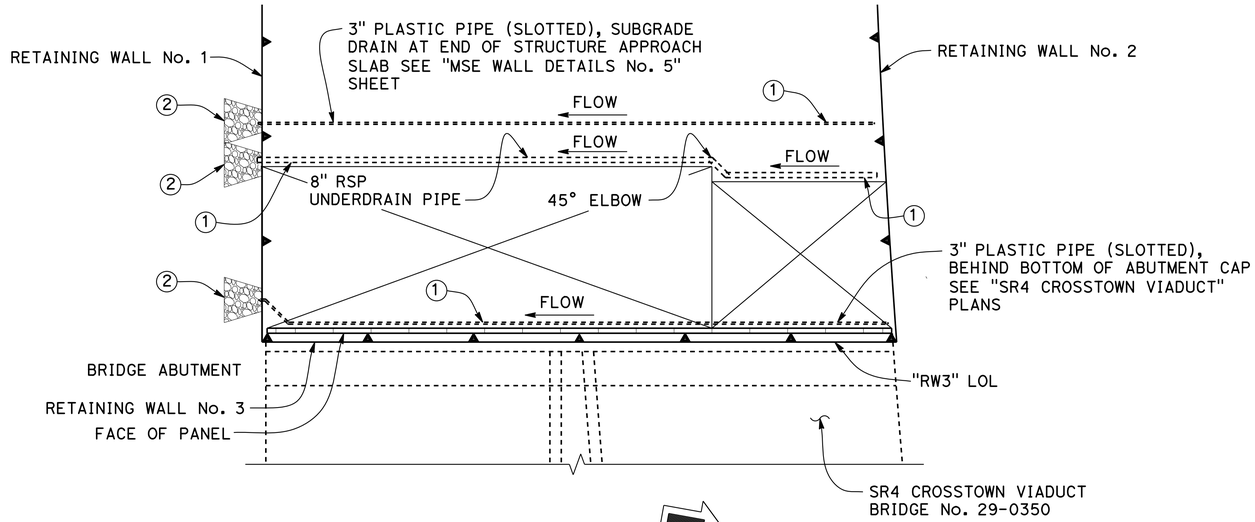

PLAN

1" = 10'

NOTE:
THE CONTRACTOR SHALL VERIFY ALL CONTROLLING FIELD DIMENSIONS BEFORE ORDERING OR FABRICATING ANY MATERIAL

LEGEND:

Indicates MSE Wall

Indicates limits of welded wire mats

(1) Outlet pipe, see "Outlet Pipe Detail" on "MSE WALL DETAILS No. 7" sheet

(2) Rock Slope Protection, see "MSE WALL DETAILS No. 7" sheet

NOTES:

1. For wire schedule A, B, C, D and E, see "MSE DETAILS No. 1" and "MSE WALL DETAILS No, 8" sheet.
2. For other Details not shown, see "MSE WALL DETAILS No. 2" sheet through "MSE WALL DETAILS No. 10" sheet.
3. For panel legend, see "MSE WALL DETAILS No. 1" sheet.
4. Elevations shown are at Top of Wall on Retaining Wall LOL and top of leveling pad.

Reza Erfanian
DESIGN OVERSIGHT — Reza Erfanian
5-10-13
SIGN OFF DATE

	BY	CHECKED
DESIGN	S. Desalegn	A. Wang
DETAILS	S. Desalegn	A. Wang
QUANTITIES	S. Desalegn	A. Wang

PREPARED FOR THE STATE OF CALIFORNIA DEPARTMENT OF TRANSPORTATION

K. Harirsaz
PROJECT ENGINEER

BRIDGE NO. 29E0013
POST MILES T14.82

RETAINING WALL No. 3 (MSE)
STRUCTURE PLAN

DESIGN DETAIL SHEET (ENGLISH) (REV.7/16/10)

ORIGINAL SCALE IN INCHES FOR REDUCED PLANS 0 1 2 3

UNIT: 1455
PROJECT NUMBER & PHASE: 10000002291
CONTRACT NO.: 10-0S1101

DISREGARD PRINTS BEARING EARLIER REVISION DATES → REVISION DATES 5/22/12 6/22/12 8/31/12 4/10/13

SHEET 13 OF 35

FILE => 29E0013-c-sp.dgn

USERNAME => s114926 DATE PLOTTED => 23-JUL-2013 TIME PLOTTED => 10:23

DIST	COUNTY	ROUTE	POST MILES TOTAL PROJECT	SHEET No	TOTAL SHEETS
10	SJ	4,5	Var	465	486

REGISTERED CIVIL ENGINEER — DATE 4/10/13

7-22-13
PLANS APPROVAL DATE

The State of California or its officers or agents shall not be responsible for the accuracy or completeness of electronic copies of this plan sheet.

REGISTERED PROFESSIONAL ENGINEER — KIANOUSH HARIRSAZ — No. C39591 — Exp. 12/31/13 — CIVIL — STATE OF CALIFORNIA

SAN JOAQUIN COUNCIL OF GOVERNMENTS
555 E. WEBER AVENUE
STOCKTON, CA 95202

RAJAPPAN & MEYER
CONSULTING ENGINEERS, INC.
1038 LEIGH AVE, SUITE 100
SAN JOSE, CA 95126

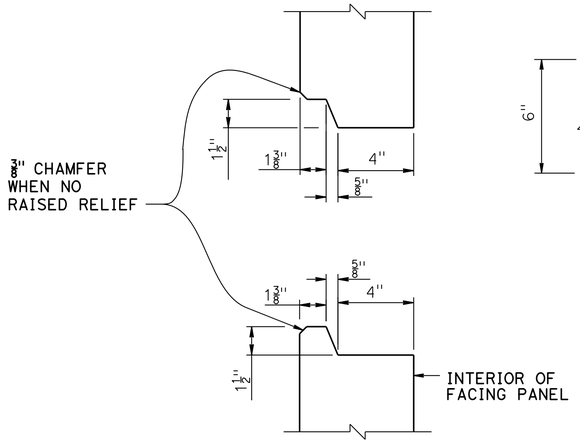

HORIZONTAL JOINT DETAIL
3" = 1'-0"

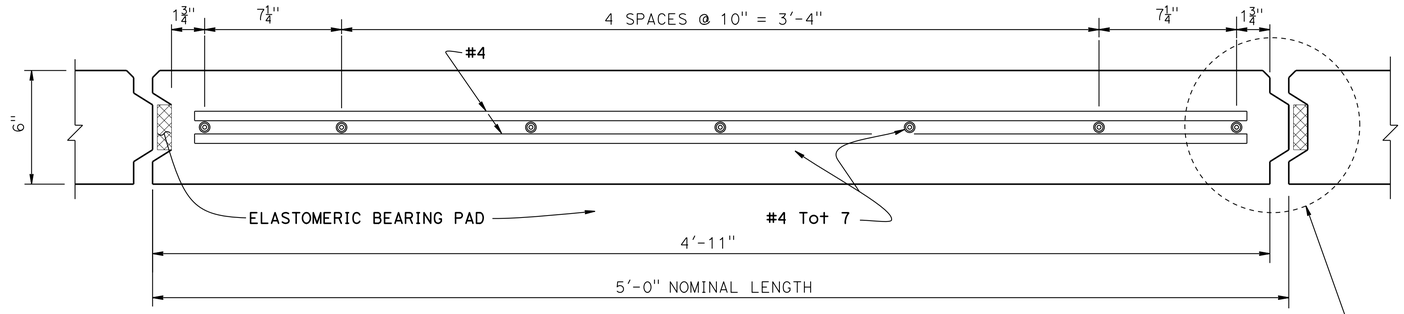

PLAN - FACING PANEL
3" = 1'-0"

SEE "VERTICAL JOINT DETAIL"

NOTES:
1. Architectural treatment not shown
2. Place reinforced elastomeric bearing pads in all of the panel joints between the panels. Place one in each vertical joint where the horizontal joints intersect. Place two per panel in each horizontal joint:
   3/4" x 2 3/8" x 6" for vertical joints
   3/4" x 4" x 6" for horizontal joints
3. Bond a strip of filter fabric, 1'-0" wide, over the full length of all panel joints
4. Top layer of welded wire mats attached parallel to top of panel when top of wall is angled or curved as shown elsewhere in "STRUCTURE PLANS"
5. Eliminate mid level mat when closer than 6" to top mat, continue variable dimension between remaining mats

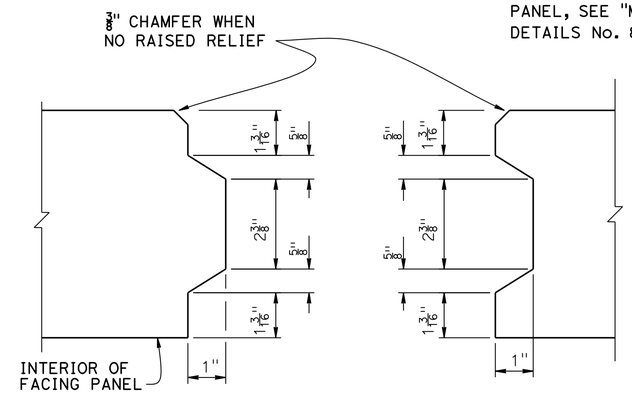

VERTICAL JOINT DETAIL
6" = 1'-0"

INDICATES NON-STANDARD PANEL, SEE "MSE WALL DETAILS No. 8" SHEET

INDICATES INTERVAL IN YEARS FROM TIME OF CONSTRUCTION TO TIME OF REMOVAL OF INSPECTION WIRE

30
A

INDICATES PANEL TYPE DESIGNATION

2 PANEL LEGEND
NO SCALE

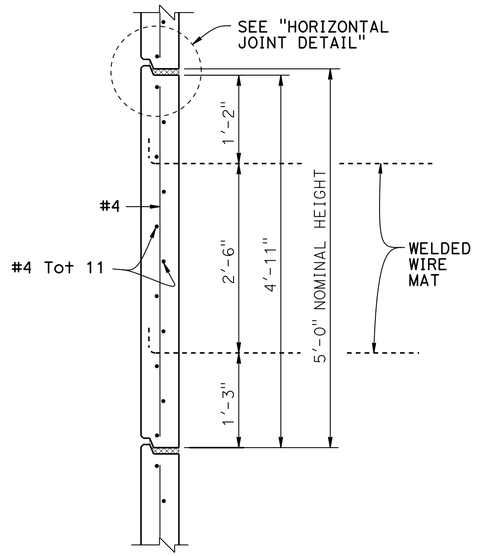

INTERMEDIATE PANEL (TYPE "A") 1
1" = 1'-0"

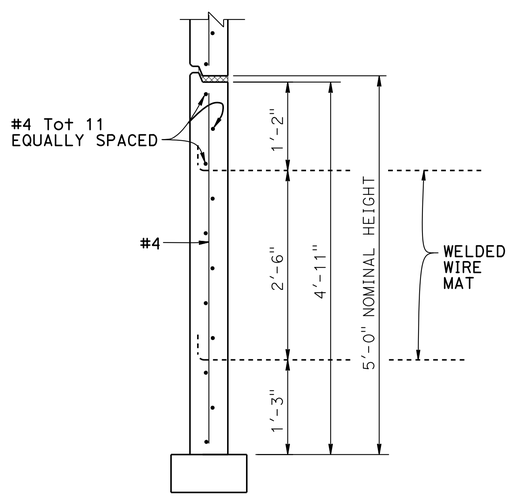

BOTTOM PANEL (TYPE "B") 1
1" = 1'-0"

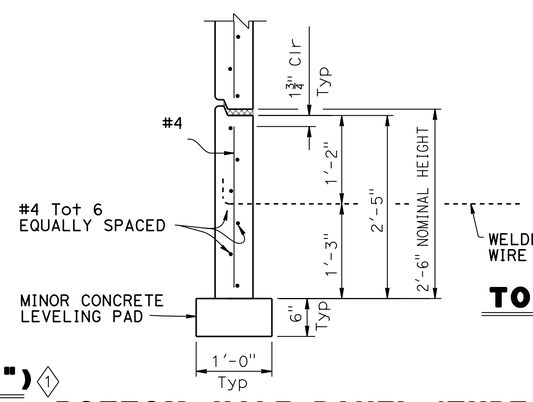

BOTTOM HALF PANEL (TYPE "C") 1
1" = 1'-0"

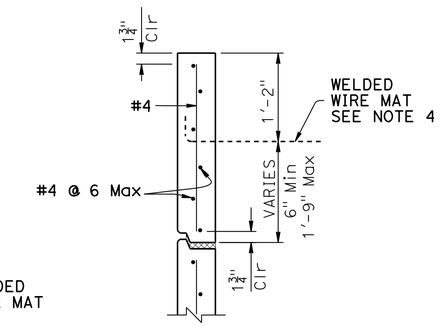

TOP HALF PANEL (TYPE "D") 1
1" = 1'-0"

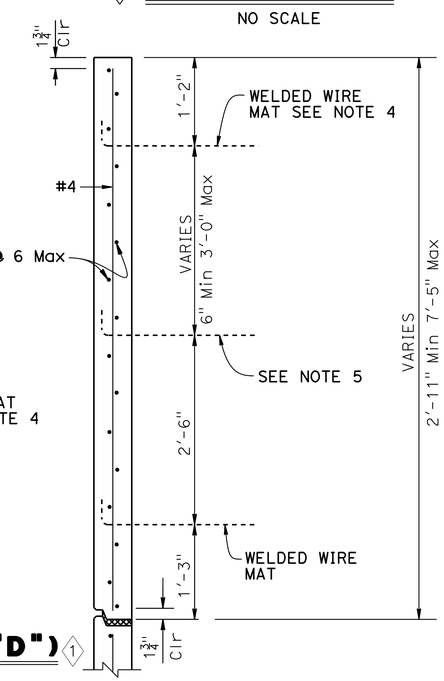

TOP PANEL WITH MULTIPLE MATS (TYPE "E") 1
1" = 1'-0"

NOTE:
THE CONTRACTOR SHALL VERIFY ALL CONTROLLING FIELD DIMENSIONS BEFORE ORDERING OR FABRICATING ANY MATERIAL

REVISED STANDARD DRAWING
FILE NO. xs13-020-1
APPROVAL DATE 5-10-13

1 REVISED TITLE
2 DETAIL ADDED

PREPARED FOR THE STATE OF CALIFORNIA DEPARTMENT OF TRANSPORTATION

K. Harirsaz
PROJECT ENGINEER

BRIDGE NO. 29E0011 29E0012 29E0013
POST MILES T14.72 T14.68 T14.82

RETAINING WALL No. 1, 2 & 3
MECHANICALLY STABILIZED EMBANKMENT
DETAILS No. 1

DS OSD 2147A (ENGLISH STANDARD DRAWING "XS" BORDER REV. (02-02-11)

ORIGINAL SCALE IN INCHES FOR REDUCED PLANS 0 1 2 3

UNIT: 1455
PROJECT NUMBER & PHASE: 10000002291 CONTRACT NO.: 10-0S1101

DISREGARD PRINTS BEARING EARLIER REVISION DATES
REVISION DATES 5/22/12 6/22/12 8/31/12 4/10/13
SHEET 14 OF 35

FILE -> 29E0013-g-rwdt01.dgn

USERNAME -> s114926 DATE PLOTTED -> 23-JUL-2013 TIME PLOTTED -> 10:23

DIST	COUNTY	ROUTE	POST MILES TOTAL PROJECT	SHEET No	TOTAL SHEETS
10	SJ	4,5	Var	466	486

REGISTERED CIVIL ENGINEER — DATE 8/31/12

7-22-13
PLANS APPROVAL DATE

REGISTERED PROFESSIONAL ENGINEER — KIANOUSH HARIRSAZ — No. C39591 — Exp. 12/31/13 — CIVIL — STATE OF CALIFORNIA

The State of California or its officers or agents shall not be responsible for the accuracy or completeness of electronic copies of this plan sheet.

SAN JOAQUIN COUNCIL OF GOVERNMENTS
555 E. WEBER AVENUE
STOCKTON, CA 95202

RAJAPPAN & MEYER
CONSULTING ENGINEERS, INC.
1038 LEIGH AVE, SUITE 100
SAN JOSE, CA 95126

GENERAL NOTES
LOAD & RESISTANCE FACTOR DESIGN

DESIGN: AASHTO LRFD Bridge Design Specifications, 4th Edition with California Amendments

LIVE LOAD: Surcharge = 240 lb/ft^2

SOIL PARAMETERS:

Internal design $\phi = 34°$, $\gamma = 120\ lb/ft^3$

External design ϕ (Retained Backfill) = 30°, $\gamma = 120\ lb/ft^3$

ϕ (Foundation) = 30°

$K_h = 0.2$

PRECAST CONCRETE PANELS:

f'c = 4,000 psi (Concrete compressive strength at 28 days)

fy = 60,000 psi (Yield strength of reinforcement)

SOIL REINFORCEMENT:

Welded wire mats: fy = 65,000 psi (Yield strength)

Coupler: fy = 36,000 psi (Yield strength)

Corrosion rate = 1.1 mils/year

REINFORCED CONCRETE:

f'c = 3,600 psi, except as noted

(Concrete compressive strength at 28 days)

fy = 60,000 psi (Yield strength of reinforcement)

MSE = Mechanically Stabilized Embankment

NOTES:

(A) Distance as required to permit coupler to be swaged

(B) Place #4 x 3'-2", centered on connector mat, but not welded to it

(C) All transverse wires size W15 at various spacing as shown elsewhere in plans

(D) Size of longitudinal wires shown elsewhere in plans

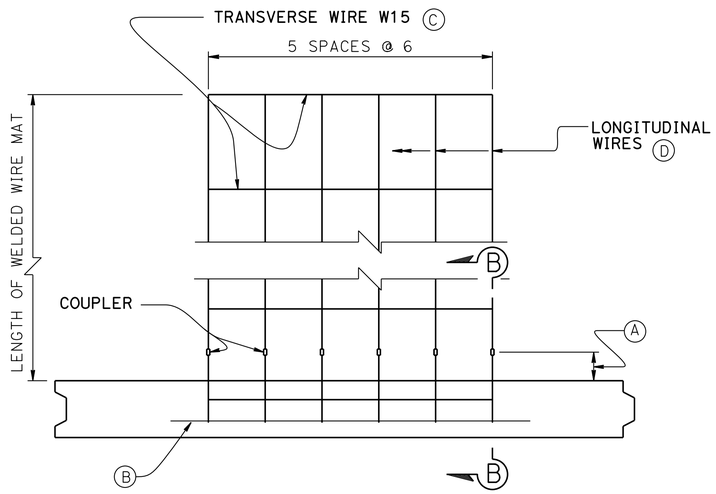

PLAN OF PANEL WITH SIX WIRE MAT

$1\frac{1}{2}$" = 1'-0"

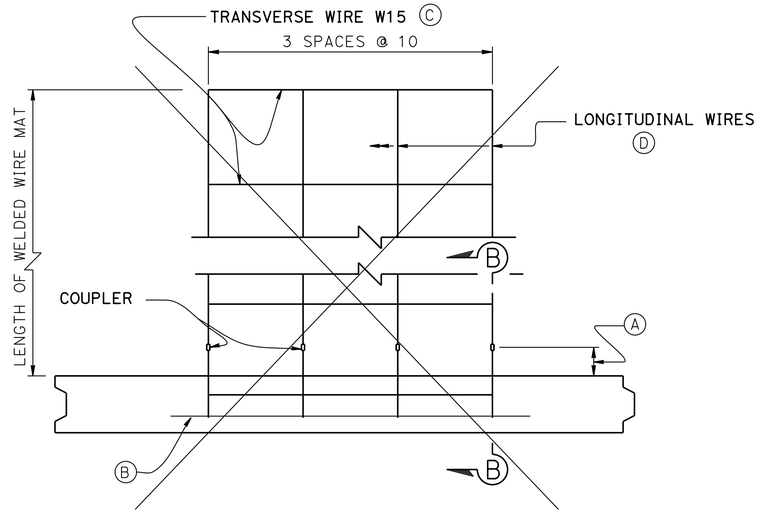

(1) PLAN OF PANEL WITH FOUR WIRE MAT

$1\frac{1}{2}$" = 1'-0"

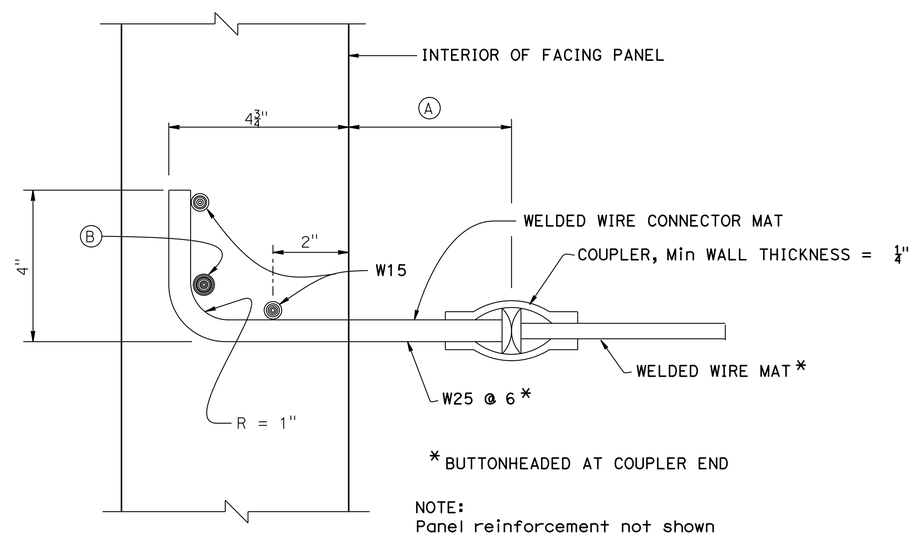

* BUTTONHEADED AT COUPLER END

NOTE:
Panel reinforcement not shown

SECTION B-B

6" = 1'-0"

NOTE:
THE CONTRACTOR SHALL VERIFY ALL CONTROLLING FIELD DIMENSIONS BEFORE ORDERING OR FABRICATING ANY MATERIAL

REVISED STANDARD DRAWING

FILE NO. xs13-020-2

APPROVAL DATE 12-19-12

(1) DETAIL DELETED

PREPARED FOR THE STATE OF CALIFORNIA DEPARTMENT OF TRANSPORTATION

K. Harirsaz
PROJECT ENGINEER

BRIDGE NO. 29E0011 29E0012 29E0013

POST MILES T14.72 T14.68 T14.82

RETAINING WALL No. 1, 2 & 3
MECHANICALLY STABILIZED EMBANKMENT
DETAILS No. 2

DS OSD 2147A (ENGLISH STANDARD DRAWING "XS" BORDER REV. (02-02-11)

ORIGINAL SCALE IN INCHES FOR REDUCED PLANS 0 1 2 3

UNIT: 1455
PROJECT NUMBER & PHASE: 10000002291 CONTRACT NO.: 10-0S1101

DISREGARD PRINTS BEARING EARLIER REVISION DATES

REVISION DATES 8/01/11 5/22/12 6/22/12 8/31/12

SHEET 15 OF 35

FILE -> 29E0013-g-rwdt02.dgn

USERNAME -> s114326 DATE PLOTTED -> 23-JUL-2013 TIME PLOTTED -> 10:23

DIST	COUNTY	ROUTE	POST MILES TOTAL PROJECT	SHEET No	TOTAL SHEETS
10	SJ	4,5	Var	467	486

REGISTERED CIVIL ENGINEER — DATE 8/31/12

PLANS APPROVAL DATE 7-22-13

REGISTERED PROFESSIONAL ENGINEER — KIANOUSH HARIRSAZ — No. C39591 — Exp. 12/31/13 — CIVIL — STATE OF CALIFORNIA

The State of California or its officers or agents shall not be responsible for the accuracy or completeness of electronic copies of this plan sheet.

SAN JOAQUIN COUNCIL OF GOVERNMENTS
555 E. WEBER AVENUE
STOCKTON, CA 95202

RAJAPPAN & MEYER
CONSULTING ENGINEERS, INC.
1038 LEIGH AVE, SUITE 100
SAN JOSE, CA 95126

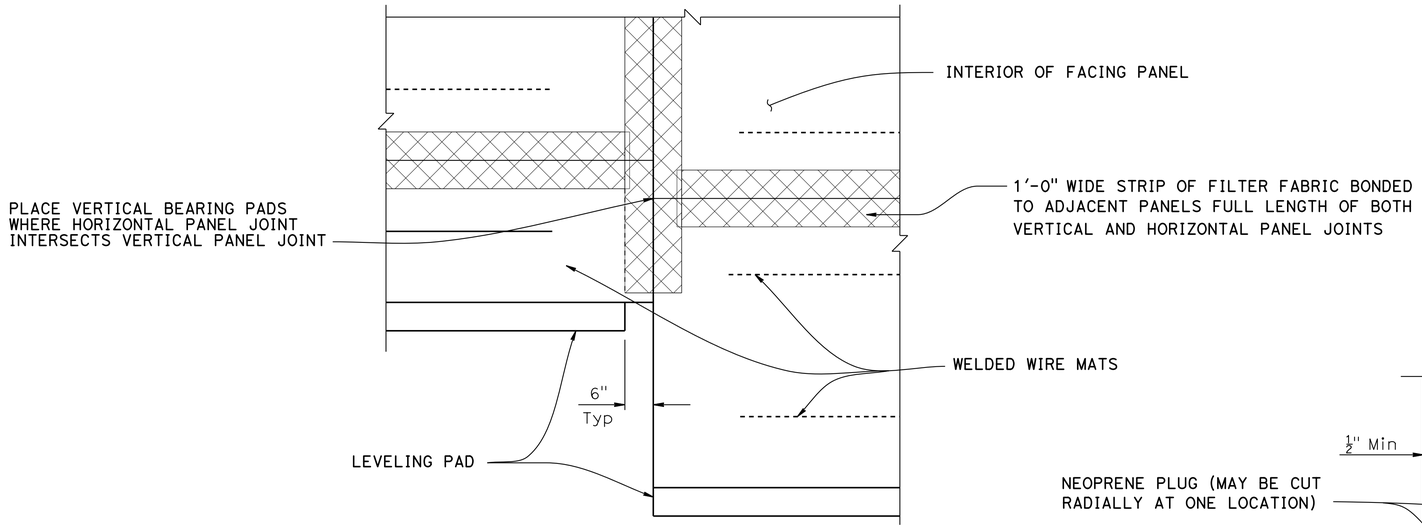

PART ELEVATION

$\frac{3}{4}$" = 1'-0"

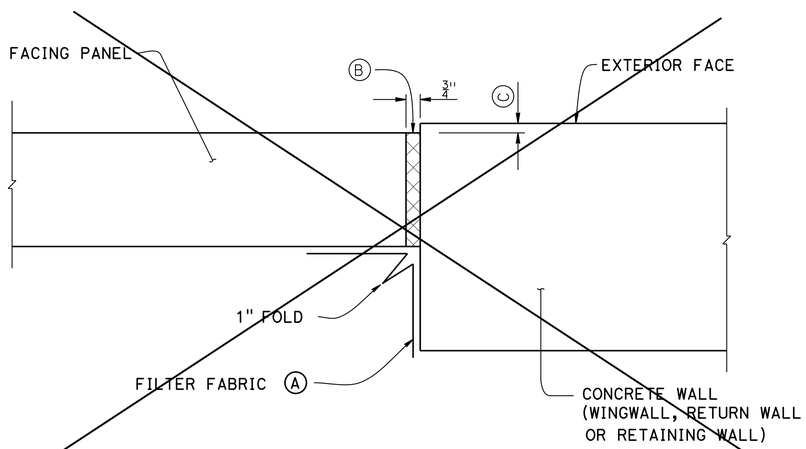

1 MSE FACING PANEL-TO-CONCRETE WALL JOINT DETAIL

3" = 1'-0"

NOTES:

(A) Bond a strip of filter fabric, 1'-6" wide, to back of MSE panels and the adjacent concrete wall for entire length of vertical joint

(B) Bond expansion joint material to the concrete wall

(C) Offset between face of MSE facing panel and face of the concrete wall as dictated by location of layout lines shown elsewhere in "STRUCTURE PLANS"

NOTE:
THE CONTRACTOR SHALL VERIFY ALL CONTROLLING FIELD DIMENSIONS BEFORE ORDERING OR FABRICATING ANY MATERIAL

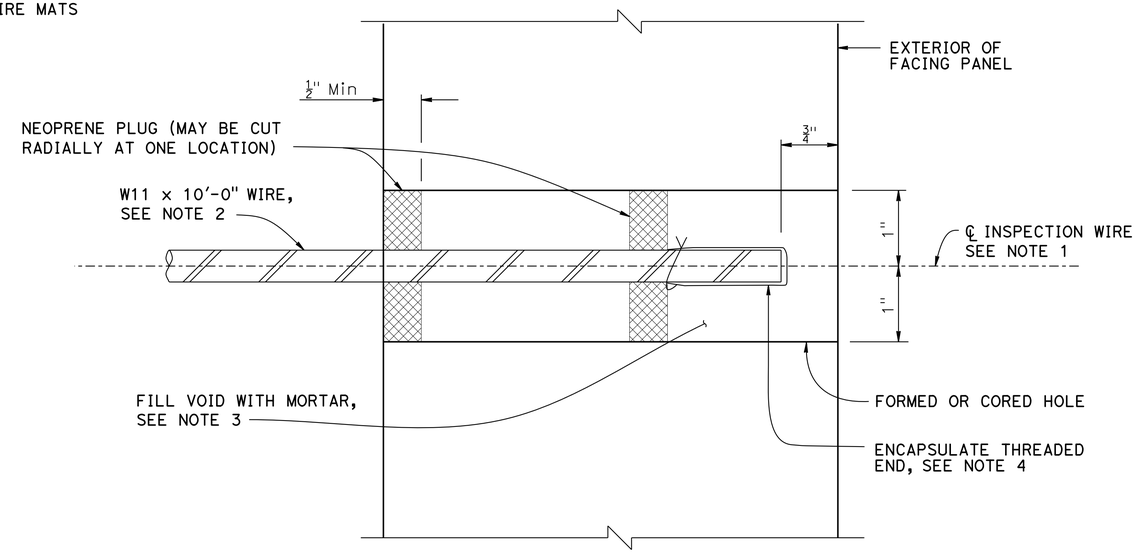

SECTION THRU INSPECTION WIRE

NO SCALE

NOTES:

1. Center inspection wire in facing panel.
2. Fabricated inspection wire from W11 wire representative of the welded wire mats, with $\frac{3}{8}$" ø 16 UNC threads for at least $1\frac{1}{2}$" of one end.
3. Place inspection wire horizontal and perpendicular to the wall panel prior to backfilling.
4. Encapsulate threaded end with corrosion inhibiting mastic, vinyl covering, and secure with plastic tie.

UNC = Unified Coarse Threads

REVISED STANDARD DRAWING

FILE NO. xs13-020-3 — APPROVAL DATE 12-19-12

1 DETAIL DELETED

PREPARED FOR THE STATE OF CALIFORNIA DEPARTMENT OF TRANSPORTATION

K. Harirsaz
PROJECT ENGINEER

BRIDGE NO. 29E0011 29E0012 29E0013
POST MILES T14.72 T14.68 T14.82

RETAINING WALL No. 1, 2 & 3
MECHANICALLY STABILIZED EMBANKMENT
DETAILS No. 3

DS OSD 2147A (ENGLISH STANDARD DRAWING "XS" BORDER REV. (02-02-11)

ORIGINAL SCALE IN INCHES FOR REDUCED PLANS 0 1 2 3

UNIT: 1455
PROJECT NUMBER & PHASE: 10000002291 CONTRACT NO.: 10-0S1101

DISREGARD PRINTS BEARING EARLIER REVISION DATES → REVISION DATES 8/01/11 5/22/12 6/22/12 8/31/12

SHEET 16 OF 35

FILE => 29E0013-g-rwdt03.dgn

USERNAME => s114926 DATE PLOTTED => 23-JUL-2013 TIME PLOTTED => 10:23

DIST	COUNTY	ROUTE	POST MILES TOTAL PROJECT	SHEET No	TOTAL SHEETS
10	SJ	4,5	Var	468	486

REGISTERED CIVIL ENGINEER — DATE 4/10/13

7-22-13
PLANS APPROVAL DATE

REGISTERED PROFESSIONAL ENGINEER — KIANOUSH HARIRSAZ — No. C39591 — Exp. 12/31/13 — CIVIL — STATE OF CALIFORNIA

The State of California or its officers or agents shall not be responsible for the accuracy or completeness of electronic copies of this plan sheet.

SAN JOAQUIN COUNCIL OF GOVERNMENTS
555 E. WEBER AVENUE
STOCKTON, CA 95202

RAJAPPAN & MEYER
CONSULTING ENGINEERS, INC.
1038 LEIGH AVE, SUITE 100
SAN JOSE, CA 95126

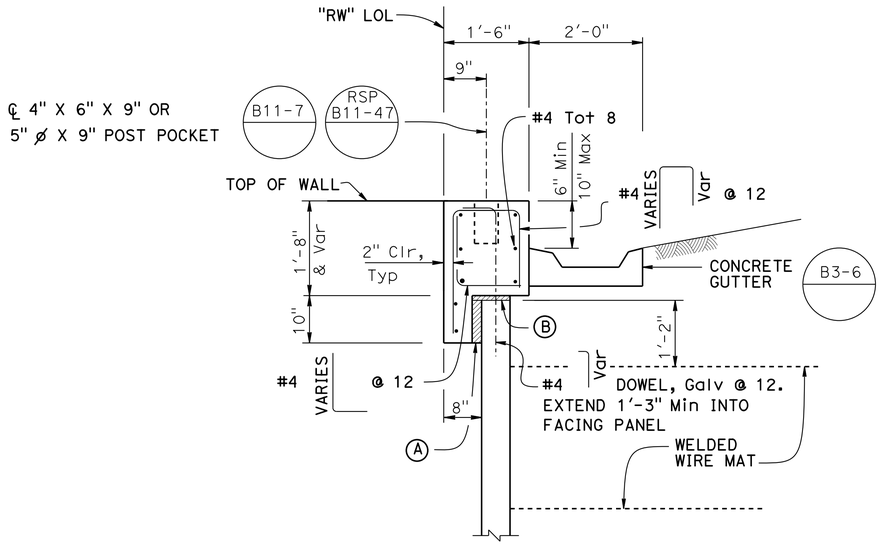

SECTION A-A
BEGINNING OF COPING TRANSITION
2
$\frac{3}{4}$" = 1'-0"

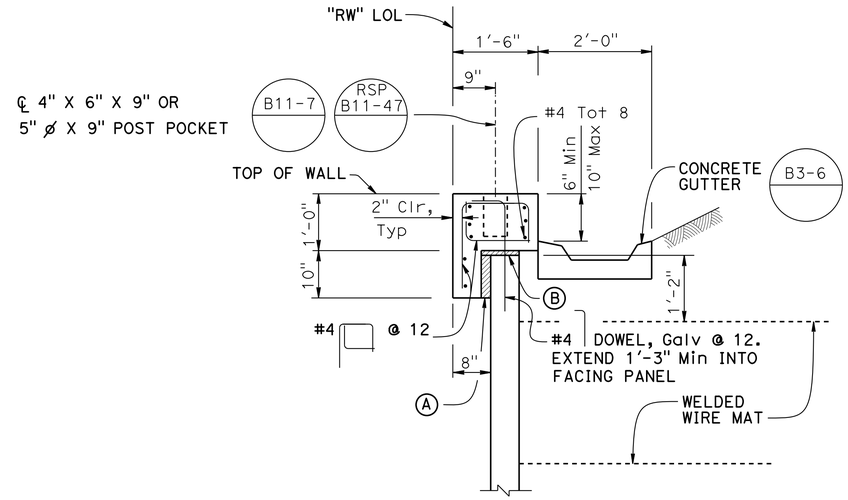

STANDARD COPING
2
$\frac{3}{4}$" = 1'-0"

NOTES:
1. For Barrier slab details see "CONCRETE BARRIER SLAB DETAILS" xs12-090
2. Concrete gutter optional as needed
3. Install cable railing or chain link railing when indicated

(A) 2" Expanded Polystyrene

(B) 1" Expanded Polystyrene

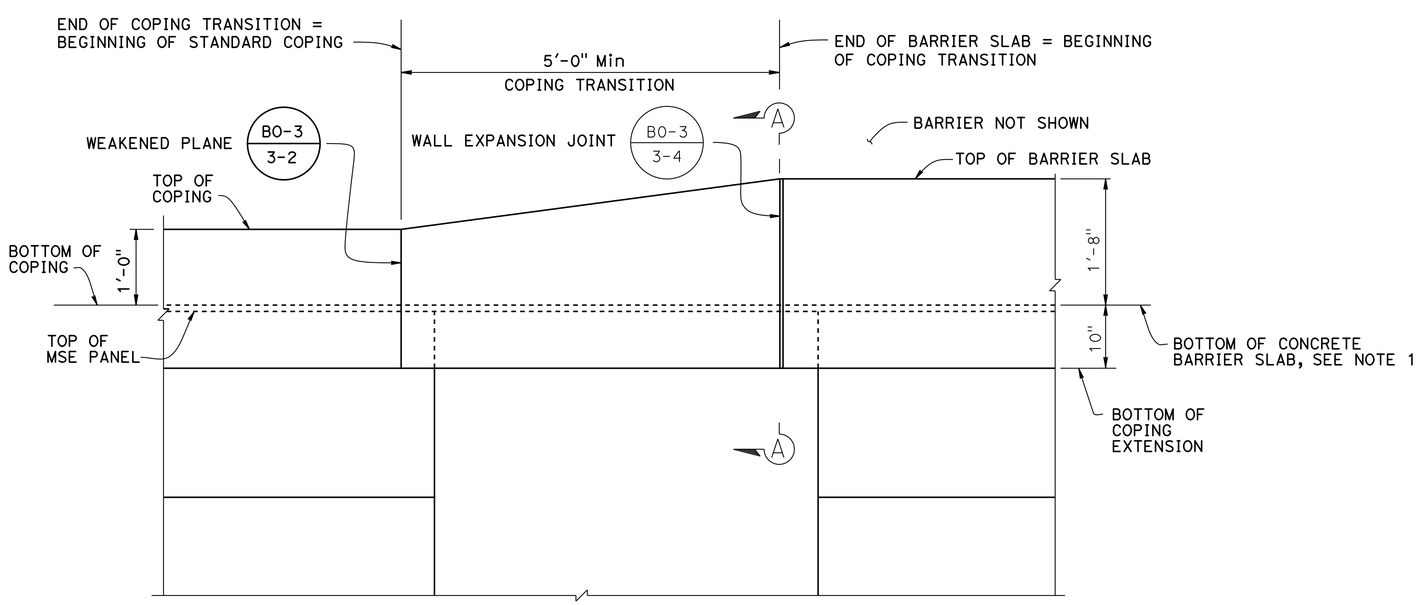

TRANSITION FROM COPING TO BARRIER SLAB
1" = 1'-0"

NOTE:
THE CONTRACTOR SHALL VERIFY ALL CONTROLLING FIELD DIMENSIONS BEFORE ORDERING OR FABRICATING ANY MATERIAL

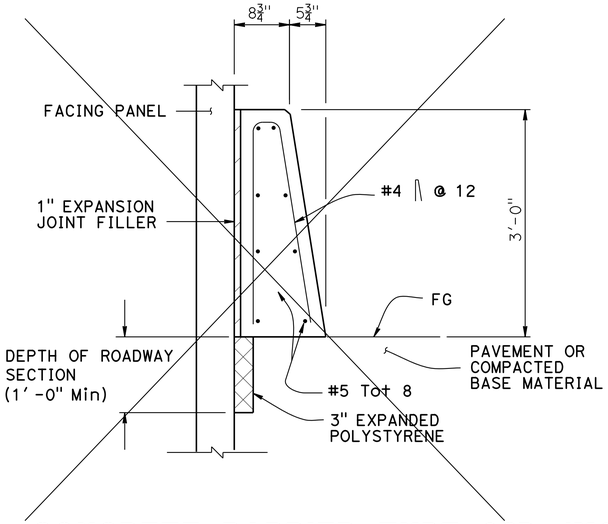

CONCRETE BARRIER TYPE 60D (MOD) AT FACE OF MSE
1
1" = 1'-0"

REVISED STANDARD DRAWING

FILE NO. **xs13-020-4**

APPROVAL DATE 5-10-13

1 DETAIL DELETED
2 DETAIL REVISED

PREPARED FOR THE STATE OF CALIFORNIA DEPARTMENT OF TRANSPORTATION

K. Harirsaz
PROJECT ENGINEER

BRIDGE NO. 29E0011 29E0012 29E0013
POST MILES T14.72 T14.68 T14.82

RETAINING WALL No. 1, 2 & 3
MECHANICALLY STABILIZED EMBANKMENT
DETAILS No. 4

DS OSD 2147A (ENGLISH STANDARD DRAWING "XS" BORDER REV. (02-02-11)

ORIGINAL SCALE IN INCHES FOR REDUCED PLANS 0 1 2 3

UNIT: 1455
PROJECT NUMBER & PHASE: 10000002291
CONTRACT NO.: 10-0S1101

DISREGARD PRINTS BEARING EARLIER REVISION DATES → REVISION DATES 5/22/12 6/22/12 8/31/12 4/10/13

SHEET 17 OF 35

FILE => 29E0013-g-rwdt04.dgn

USERNAME => s128843 DATE PLOTTED => 23-JUL-2013 TIME PLOTTED => 10:24

DIST	COUNTY	ROUTE	POST MILES TOTAL PROJECT	SHEET No	TOTAL SHEETS
10	SJ	4,5	Var	469	486

REGISTERED CIVIL ENGINEER — DATE 4/10/13

7-22-13
PLANS APPROVAL DATE

REGISTERED PROFESSIONAL ENGINEER — KIANOUSH HARIRSAZ — No. C39591 — Exp. 12/31/13 — CIVIL — STATE OF CALIFORNIA

The State of California or its officers or agents shall not be responsible for the accuracy or completeness of electronic copies of this plan sheet.

SAN JOAQUIN COUNCIL OF GOVERNMENTS
555 E. WEBER AVENUE
STOCKTON, CA 95202

RAJAPPAN & MEYER
CONSULTING ENGINEERS, INC.
1038 LEIGH AVE, SUITE 100
SAN JOSE, CA 95126

4 NOTES:

1. Low end of subgrade drain shown, at high end install cap at end of 3" slotted pipe. Subgrade drain located at end of Structure Approach slab.
2. Not all barrier reinforcement shown
3. For RSP and pipe penetration details, see "MSE WALL DETAILS No. 7" sheet.
4. At acute corners of approach slab, bend reinforcement as required to clear expansion joint
5. Clearance to reinforcing steel in concrete barrier to be 1".
6. No expansion joints in concrete barrier or barrier slab within wall limits.
7. Minimum slab length: 40 ft

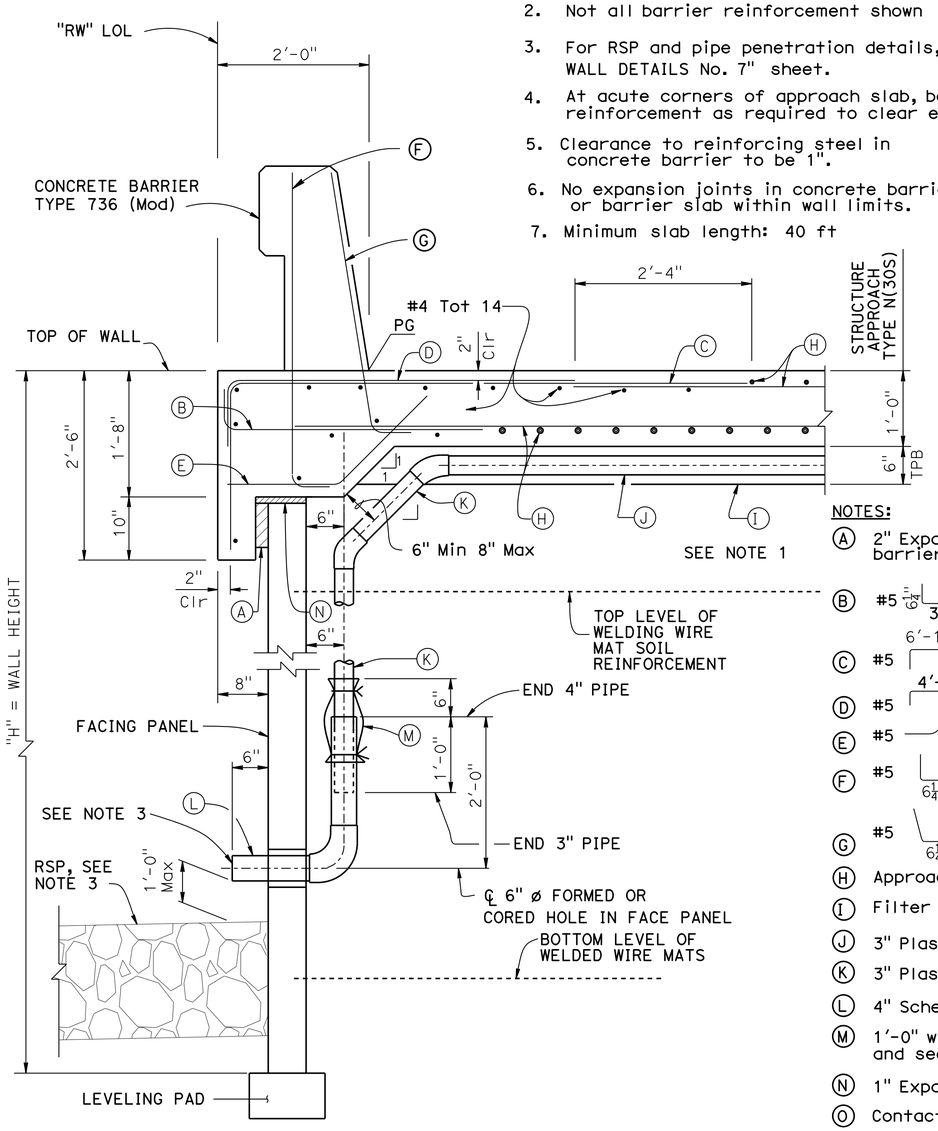

SECTION AT TOP OF MSE WITH STRUCTURE APPROACH SLAB AND CONCRETE BARRIER 1

1" = 1'-0"

NOTES:

- (A) 2" Expanded Polystyrene recessed 2" into barrier slab at front of MSE facing panel
- (B) #5 6¼" 3'-4" @ 12
- (C) #5 6'-10⅝" @ 12
- (D) #5 4'-7" @ 12 bundled with (C) bars
- (E) #5 @ 12
- (F) #5 6¼" @ 16 (To be in place prior to Approach Slab concrete)
- (G) #5 6¼" @ 8 (To be in place prior to Approach Slab concrete)
- (H) Approach Slab reinforcement
- (I) Filter fabric
- (J) 3" Plastic pipe (slotted)
- (K) 3" Plastic pipe and fitting (unslotted)
- (L) 4" Schedule 80 PVC outlet pipe and fittings (unslotted)
- (M) 1'-0" wide x 2'-0" filter fabric wrapped around pipe and secured with nylon ties
- (N) 1" Expanded Polystyrene
- (O) Contact Joint
- ∝ Indicates bundled bars

5 DESIGN DATA

DESIGN: AASHTO LRFD Bridge Design Specifications, 4th Edition with California Amendments.

F_t : 54 kips on barrier

EQE: $k_h = 0.2$
$k_v = 0.0$

REINFORCED CONCRETE: f'c = 3600 psi
fy = 60 ksi
n = 8

Where:
EQE: Seismic Earth Pressure

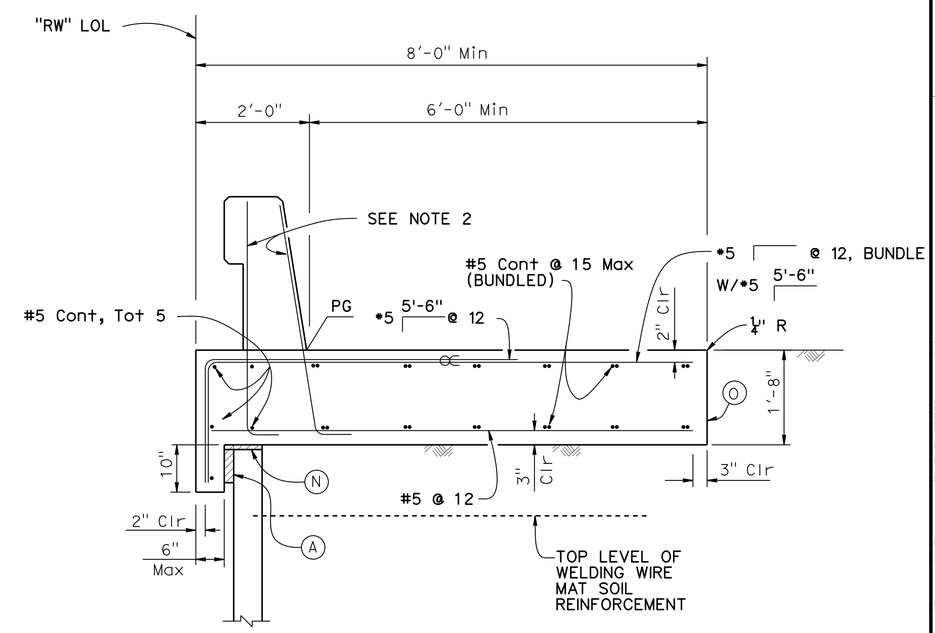

2 3 CONCRETE BARRIER SLAB

¾" = 1'-0"

NOTE:
THE CONTRACTOR SHALL VERIFY ALL CONTROLLING FIELD DIMENSIONS BEFORE ORDERING OR FABRICATING ANY MATERIAL

REVISED STANDARD DRAWING

FILE NO. xs13-020-5 — APPROVAL DATE 5-10-13

1 REVISED DETAIL — 2 DETAIL DELETED — 3 DETAIL ADDED — 4 REVISED NOTES — 5 DESIGN DATA ADDED

PREPARED FOR THE STATE OF CALIFORNIA DEPARTMENT OF TRANSPORTATION

K. Harirsaz
PROJECT ENGINEER

BRIDGE NO. 29E0011 29E0012 29E0013
POST MILES T14.72 T14.68 T14.82

RETAINING WALL No. 1, 2 & 3
MECHANICALLY STABILIZED EMBANKMENT
DETAILS No. 5

DS OSD 2147A (ENGLISH STANDARD DRAWING "XS" BORDER REV. (02-02-11)

ORIGINAL SCALE IN INCHES FOR REDUCED PLANS 0 1 2 3

UNIT: 1455
PROJECT NUMBER & PHASE: 10000002291 CONTRACT NO.: 10-0S1101

DISREGARD PRINTS BEARING EARLIER REVISION DATES — REVISION DATES 5/22/12 6/22/12 8/31/12 4/10/13 — SHEET 18 OF 35

FILE -> 29E0013-g-rwdt05.dgn

USERNAME -> s128843 DATE PLOTTED -> 23-JUL-2013 TIME PLOTTED -> 10:24

DIST	COUNTY	ROUTE	POST MILES TOTAL PROJECT	SHEET No	TOTAL SHEETS
10	SJ	4,5	Var	470	486

REGISTERED CIVIL ENGINEER — DATE 8/31/12

7-22-13
PLANS APPROVAL DATE

REGISTERED PROFESSIONAL ENGINEER — KIANOUSH HARIRSAZ — No. C39591 — Exp. 12/31/13 — CIVIL — STATE OF CALIFORNIA

The State of California or its officers or agents shall not be responsible for the accuracy or completeness of electronic copies of this plan sheet.

SAN JOAQUIN COUNCIL OF GOVERNMENTS
555 E. WEBER AVENUE
STOCKTON, CA 95202

RAJAPPAN & MEYER
CONSULTING ENGINEERS, INC.
1038 LEIGH AVE, SUITE 100
SAN JOSE, CA 95126

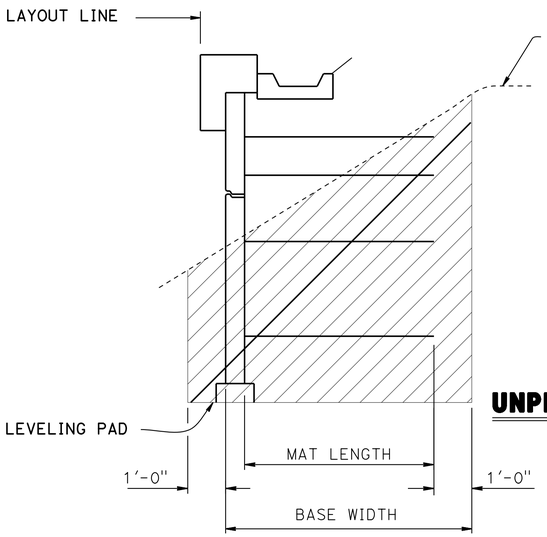

LIMITS OF EXCAVATION

½" = 1'-0"

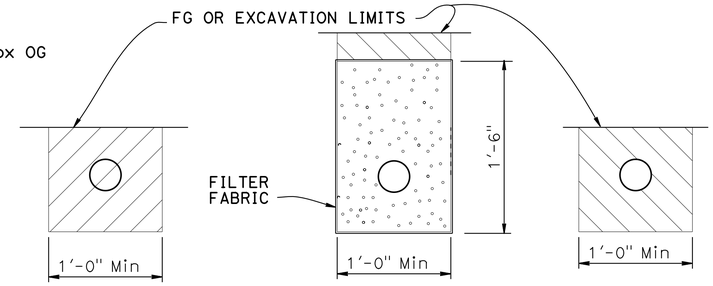

OUTLET PIPE **CLEANOUT PIPE**

EXCAVATION **BACKFILL**

UNPERFORATED OUTLET OR CLEAN OUT PIPE FOR UNDERDRAIN

NO SCALE

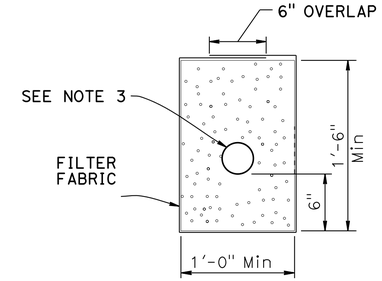

◇1 UNDERDRAIN DETAIL

◇1 LEGEND:

- Limits of Structure Excavation
- Limits of Structure Backfill
- Limits of Permeable Material

NOTES:

1. Limits to FG except to GP when in roadway section
2. ◇4 Locate underdrain such that it drains to FG at face of wall as shown on "MSE WALL DETAILS No. 7" sheet
3. Place perforated pipe underdrain of diameter shown elsewhere on plans or minimum 4" ø smoothed wall PVC or minimum 8" ø corrugated HDPE
4. Maximum spacing of outlet pipe is 200 feet
5. At sags in profile of underdrain, install outlet pipe for each direction of flow

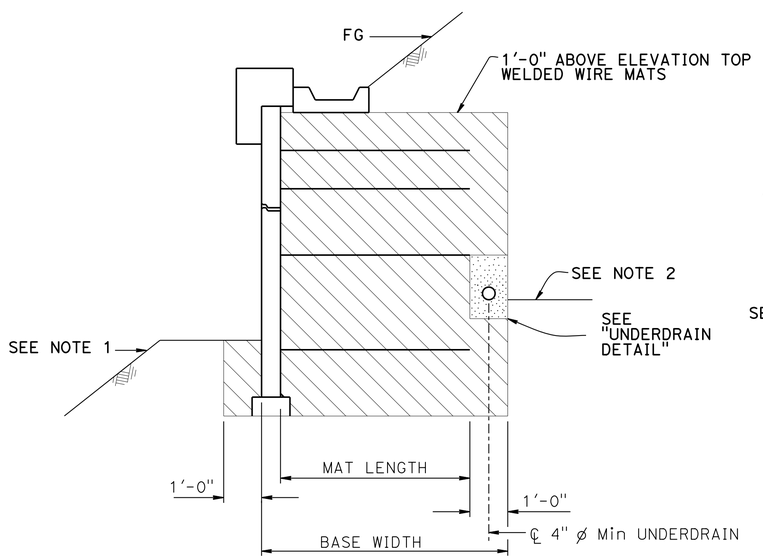

◇2 SLOPING FINISHED SURFACE

½" = 1'-0"

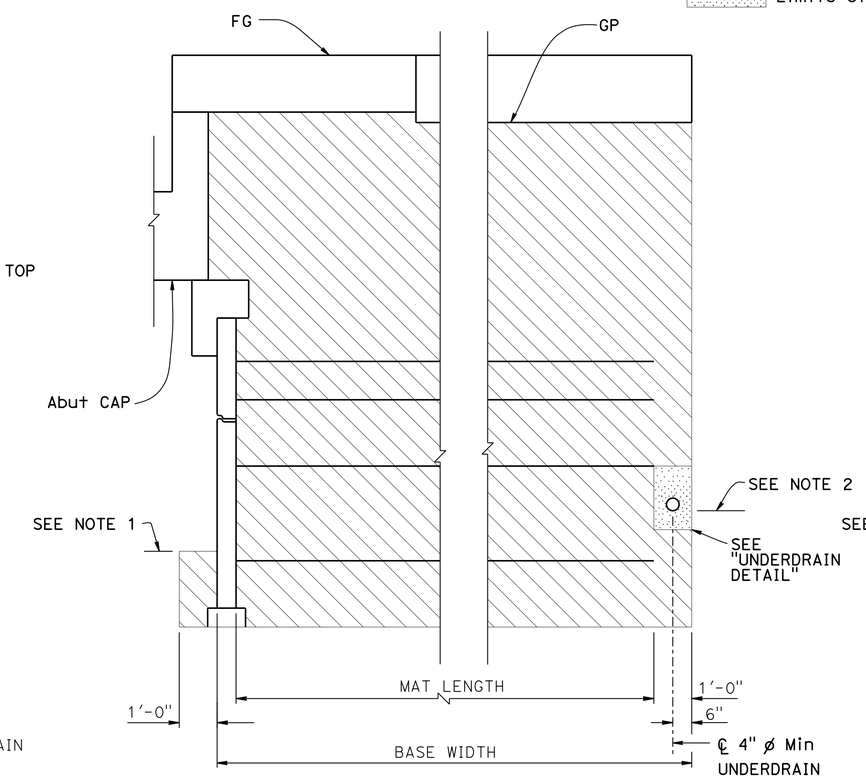

◇3 ROADWAY SECTION AT RETAINING WALL No. 1 & No. 2

NO SCALE

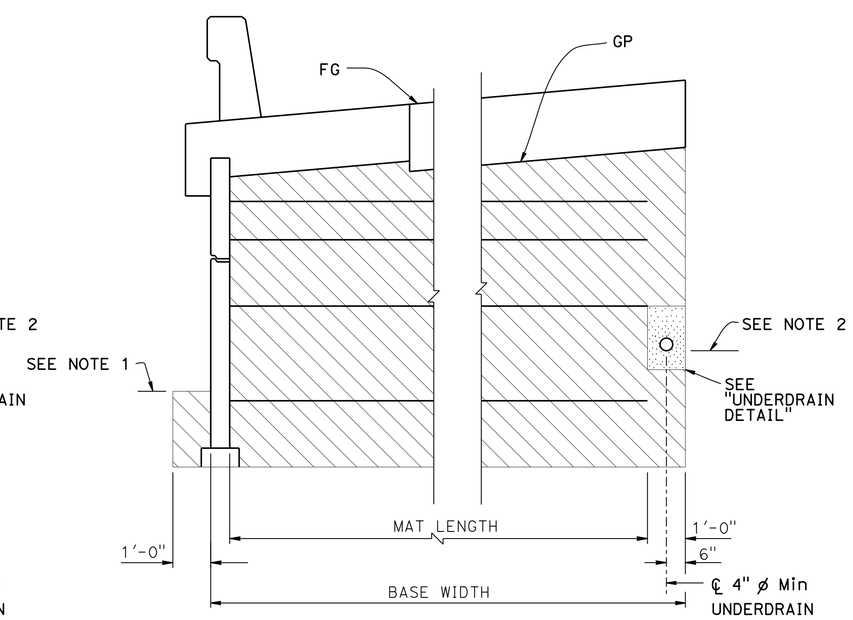

◇2 ROADWAY SECTION AT RETAINING WALL No. 1 & No. 2

½" = 1'-0"

NOTE:
THE CONTRACTOR SHALL VERIFY ALL CONTROLLING FIELD DIMENSIONS BEFORE ORDERING OR FABRICATING ANY MATERIAL

LIMITS OF BACKFILL

REVISED STANDARD DRAWING

FILE NO. xs13-020-6

APPROVAL DATE 12-19-12

◇1 DETAIL OR LEGEND RELOCATED
◇2 DETAIL REVISED
◇3 DETAIL ADDED
◇4 NOTE REVISED

PREPARED FOR THE STATE OF CALIFORNIA DEPARTMENT OF TRANSPORTATION

K. Harirsaz
PROJECT ENGINEER

BRIDGE NO. 29E0011 29E0012 29E0013
POST MILES T14.72 T14.68 T14.82

RETAINING WALL No. 1, 2 & 3
MECHANICALLY STABILIZED EMBANKMENT
DETAILS No. 6

DS OSD 2147A (ENGLISH STANDARD DRAWING "XS" BORDER REV. (02-02-11)

ORIGINAL SCALE IN INCHES FOR REDUCED PLANS 0 1 2 3

UNIT: 1455
PROJECT NUMBER & PHASE: 10000002291
CONTRACT NO.: 10-0S1101

DISREGARD PRINTS BEARING EARLIER REVISION DATES

REVISION DATES: 8/01/11 5/22/12 6/22/12 8/31/12

SHEET 19 OF 35

FILE => 29E0013-g-rwdt06.dgn

USERNAME => s128843 DATE PLOTTED => 23-JUL-2013 TIME PLOTTED => 10:24

DIST	COUNTY	ROUTE	POST MILES TOTAL PROJECT	SHEET No	TOTAL SHEETS
10	SJ	4,5	Var	471	486

REGISTERED CIVIL ENGINEER — 4/10/13 DATE

7-22-13
PLANS APPROVAL DATE

REGISTERED PROFESSIONAL ENGINEER — KIANOUSH HARIRSAZ — No. C39591 — Exp. 12/31/13 — CIVIL — STATE OF CALIFORNIA

The State of California or its officers or agents shall not be responsible for the accuracy or completeness of electronic copies of this plan sheet.

SAN JOAQUIN COUNCIL OF GOVERNMENTS
555 E. WEBER AVENUE
STOCKTON, CA 95202

RAJAPPAN & MEYER
CONSULTING ENGINEERS, INC.
1038 LEIGH AVE, SUITE 100
SAN JOSE, CA 95126

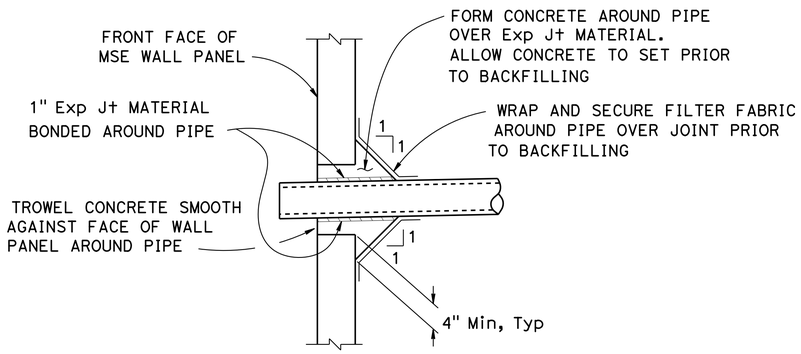

PIPE PENETRATION DETAIL

NO SCALE

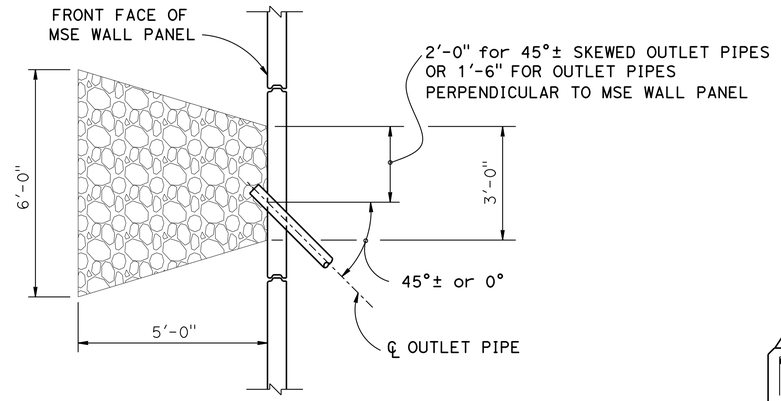

VIEW A-A

½" = 1'-0"

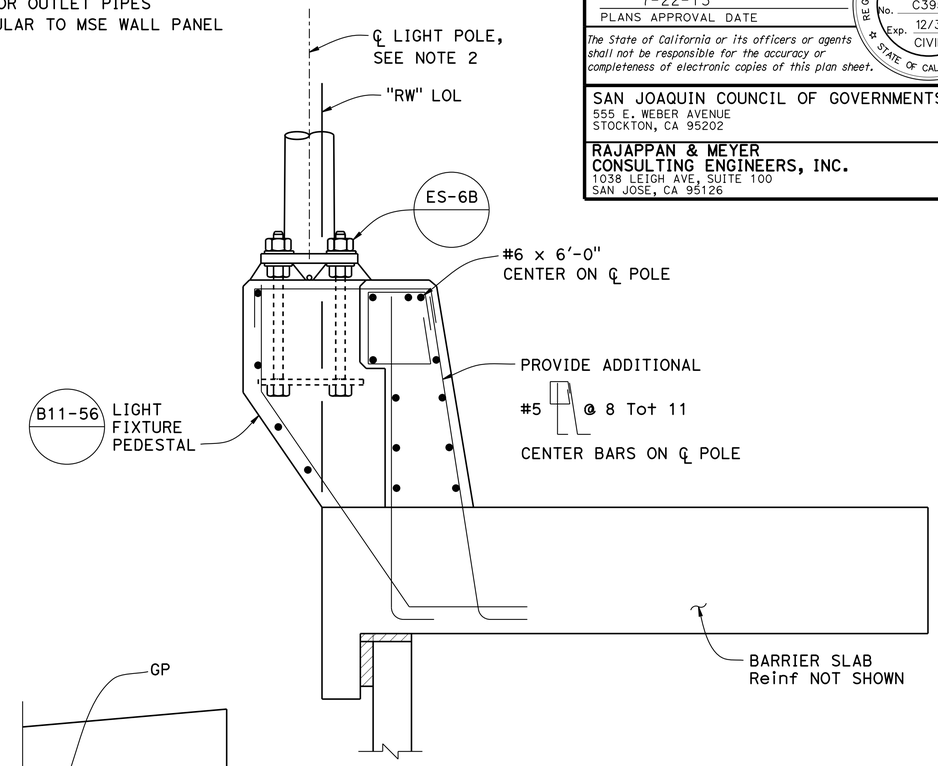

SECTION VIEW AT LIGHT POLE LOCATION

1" = 1'-0"

NOTE: 1. For location and elevations of outlet pipe and cleanout pipe, see "STRUCTURE PLANS" of each retaining wall.
2. For information not shown, see B11-56, ES-6A & ES-6B.

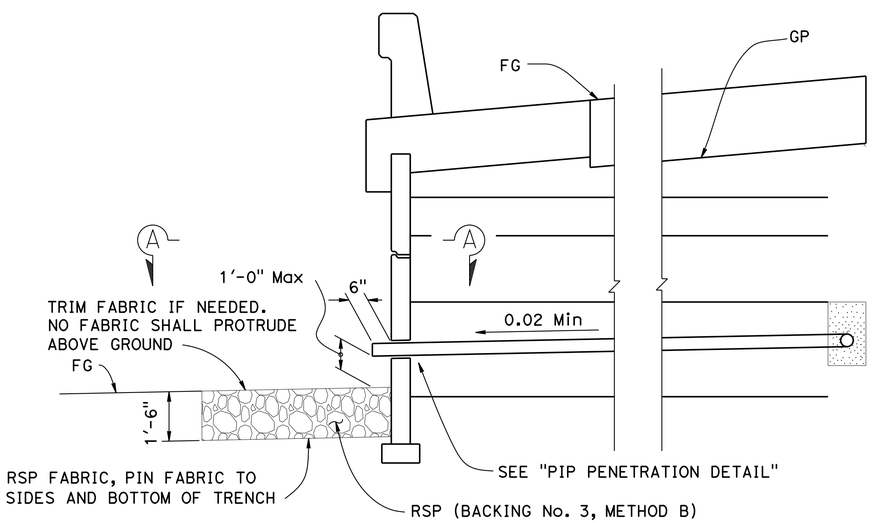

OUTLET PIPE DETAIL

½" = 1'-0"

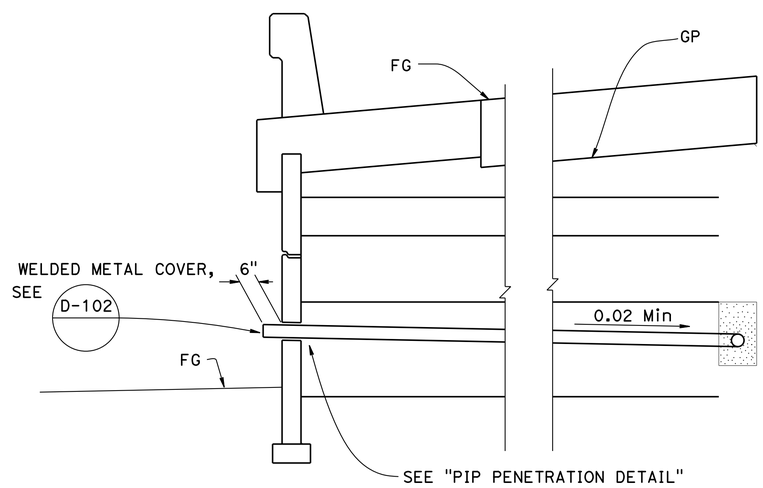

CLEANOUT PIPE DETAIL

½" = 1'-0"

NOTE:
THE CONTRACTOR SHALL VERIFY ALL CONTROLLING FIELD DIMENSIONS BEFORE ORDERING OR FABRICATING ANY MATERIAL

DESIGN OVERSIGHT: Reza Erfanian	DESIGN	BY S. Desalegn	CHECKED A. Wang
5-10-13 SIGN OFF DATE	DETAILS	BY S. Desalegn	CHECKED A. Wang
	QUANTITIES	BY S. Desalegn	CHECKED A. Wang

PREPARED FOR THE STATE OF CALIFORNIA DEPARTMENT OF TRANSPORTATION

K. Harirsaz
PROJECT ENGINEER

BRIDGE NO. 29E0011 29E0012 29E0013
POST MILES T14.72 T14.68 T14.82

RETAINING WALL No. 1, 2 & 3 (MSE)
DETAILS No. 7

DESIGN DETAIL SHEET (ENGLISH) (REV.7/16/10)

ORIGINAL SCALE IN INCHES FOR REDUCED PLANS 0 1 2 3

UNIT: 1455
PROJECT NUMBER & PHASE: 10000002291 CONTRACT NO.: 10-0S1101

DISREGARD PRINTS BEARING EARLIER REVISION DATES → 5/22/12 6/22/12 8/31/12 4/10/13

SHEET 20 OF 35

FILE => 29E0013-g-rwdt07.dgn

USERNAME => s128843 DATE PLOTTED => 23-JUL-2013 TIME PLOTTED => 10:24

DIST	COUNTY	ROUTE	POST MILES TOTAL PROJECT	SHEET No	TOTAL SHEETS
10	SJ	4,5	Var	472	486

REGISTERED CIVIL ENGINEER — 4/10/13 DATE

7-22-13
PLANS APPROVAL DATE

REGISTERED PROFESSIONAL ENGINEER — KIANOUSH HARIRSAZ — No. C39591 — Exp. 12/31/13 — CIVIL — STATE OF CALIFORNIA

The State of California or its officers or agents shall not be responsible for the accuracy or completeness of electronic copies of this plan sheet.

SAN JOAQUIN COUNCIL OF GOVERNMENTS
555 E. WEBER AVENUE
STOCKTON, CA 95202

RAJAPPAN & MEYER
CONSULTING ENGINEERS, INC.
1038 LEIGH AVE, SUITE 100
SAN JOSE, CA 95126

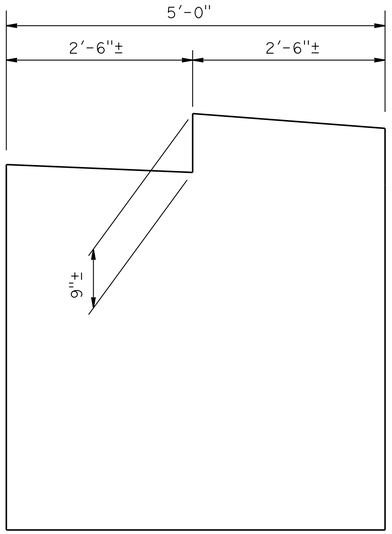

ELEVATION VIEW
1" = 1'-0"

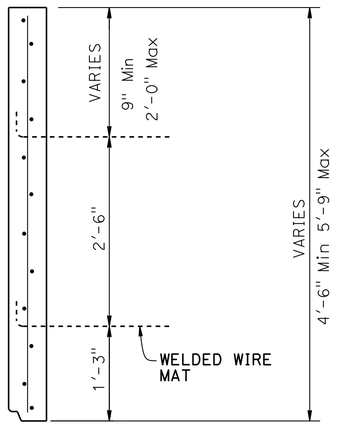

SECTION VIEW
1" = 1'-0"

ELEVATION CHANGE AT TOP PANEL DETAIL

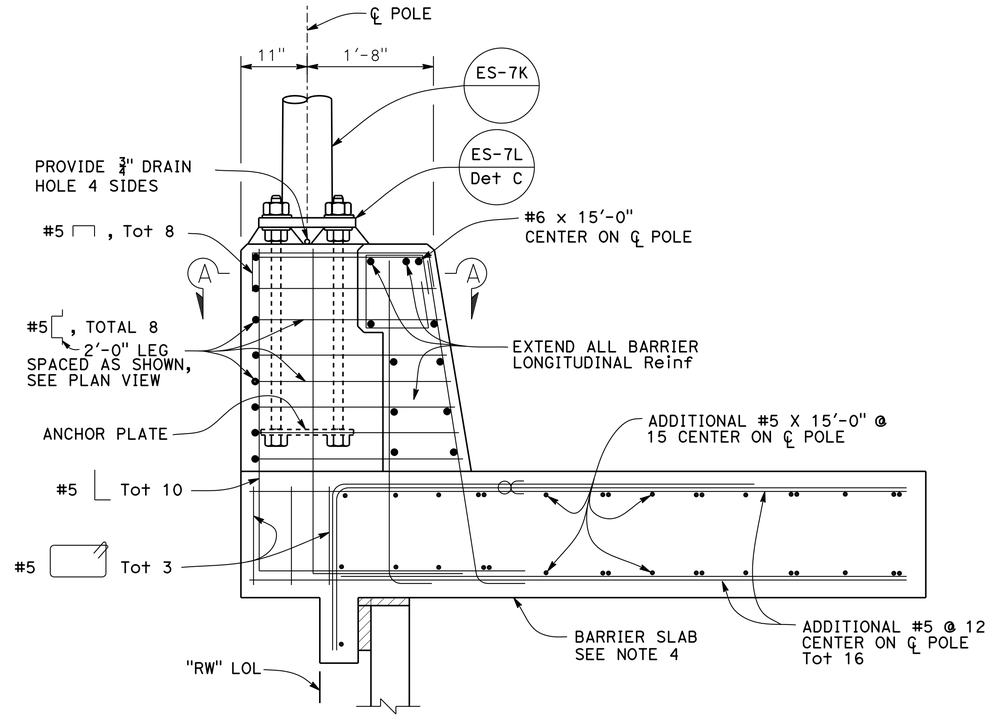

SECTION VIEW AT SIGNAL POLE LOCATION
1" = 1'-0"

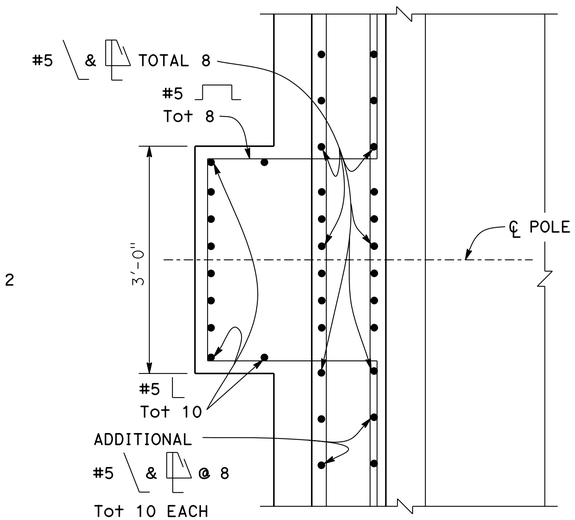

SECTION A-A
1" = 1'-0"

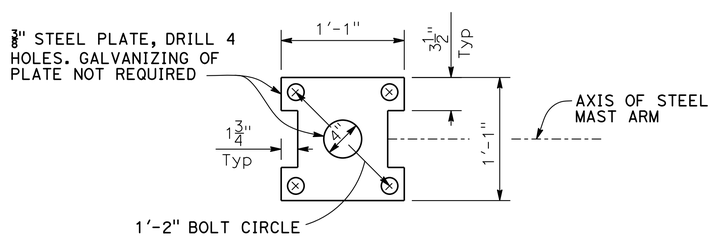

ANCHOR PLATE
1½" = 1'-0"

SIGNAL POLE MOUNTING DETAILS

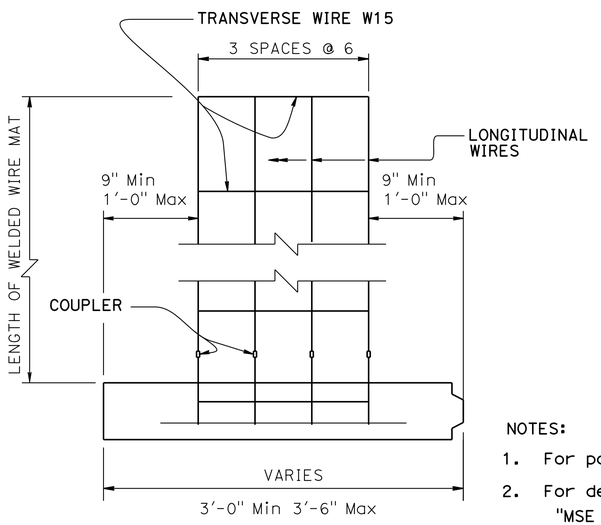

PLAN OF END PANEL
1½" = 1'-0"

NOTES:

1. For panel legend, see "MSE WALL DETAILS No. 1" sheet
2. For details not shown, see "MSE WALL DETAILS No. 1" and "MSE WALL DETAILS No. 2" sheet.

* on panel indicates non-standard panel placed at ends of wall as shown on "PLAN OF END PANEL"

** on panel indicates non-standard panel with elevation change at top of panel as shown on "ELEVATION CHANGE AT TOP PANEL DETAIL"

3. Signal Pole anchor bolts shall be held in position for pouring by means of anchor plates and suitable templates. Deviation from the true position, vertical and height shall not exceed $\frac{1}{16}$".
4. For Barrier Slab Reinforcement, see "MSE DETAILS No. 5" sheet.
5. For information not shown, see B11-56, ES-7K & ES-7L.

NOTE:
THE CONTRACTOR SHALL VERIFY ALL CONTROLLING FIELD DIMENSIONS BEFORE ORDERING OR FABRICATING ANY MATERIAL

Reza Erfanian
DESIGN OVERSIGHT — Reza Erfanian
5-10-13
SIGN OFF DATE

	BY	CHECKED
DESIGN	S. Desalegn	A. Wang
DETAILS	S. Desalegn	A. Wang
QUANTITIES	S. Desalegn	A. Wang

PREPARED FOR THE STATE OF CALIFORNIA DEPARTMENT OF TRANSPORTATION

K. Harirsaz
PROJECT ENGINEER

BRIDGE NO. 29E0011 29E0012 29E0013
POST MILES T14.72 T14.68 T14.82

RETAINING WALL No. 1, 2 & 3 (MSE)
DETAILS No. 8

DESIGN DETAIL SHEET (ENGLISH) (REV.7/16/10)

ORIGINAL SCALE IN INCHES FOR REDUCED PLANS 0 1 2 3

UNIT: 1455
PROJECT NUMBER & PHASE: 10000002291 CONTRACT NO.: 10-0S1101

DISREGARD PRINTS BEARING EARLIER REVISION DATES → 5/22/12 6/22/12 8/31/12 4/10/13

SHEET 21 OF 35

FILE => 29E0013-g-rwdt08.dgn

USERNAME => s128643 DATE PLOTTED => 23-JUL-2013 TIME PLOTTED => 10:24

DIST	COUNTY	ROUTE	POST MILES TOTAL PROJECT	SHEET No	TOTAL SHEETS
10	SJ	4,5	Var	473	486

REGISTERED CIVIL ENGINEER — DATE 4/10/13

7-22-13
PLANS APPROVAL DATE

REGISTERED PROFESSIONAL ENGINEER — KIANOUSH HARIRSAZ — No. C39591 — Exp. 12/31/13 — CIVIL — STATE OF CALIFORNIA

The State of California or its officers or agents shall not be responsible for the accuracy or completeness of electronic copies of this plan sheet.

SAN JOAQUIN COUNCIL OF GOVERNMENTS
555 E. WEBER AVENUE
STOCKTON, CA 95202

RAJAPPAN & MEYER
CONSULTING ENGINEERS, INC.
1038 LEIGH AVE, SUITE 100
SAN JOSE, CA 95126

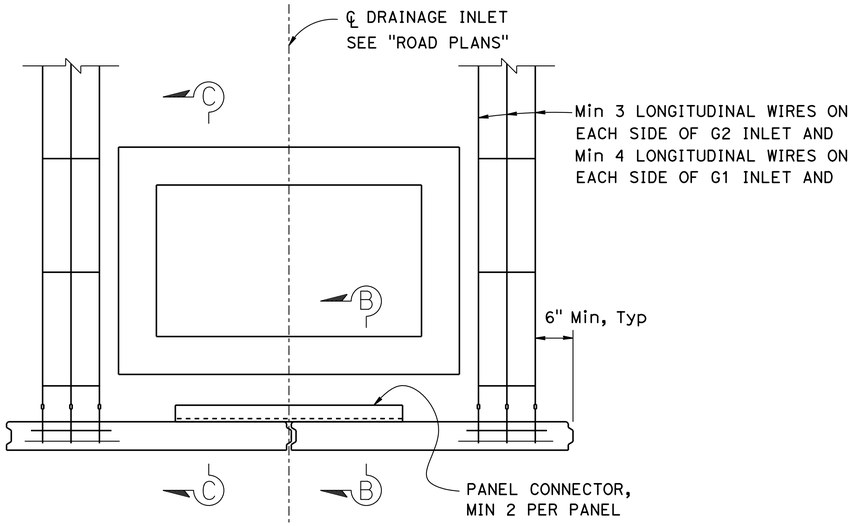

PANEL CONNECTOR - PLAN

NO SCALE

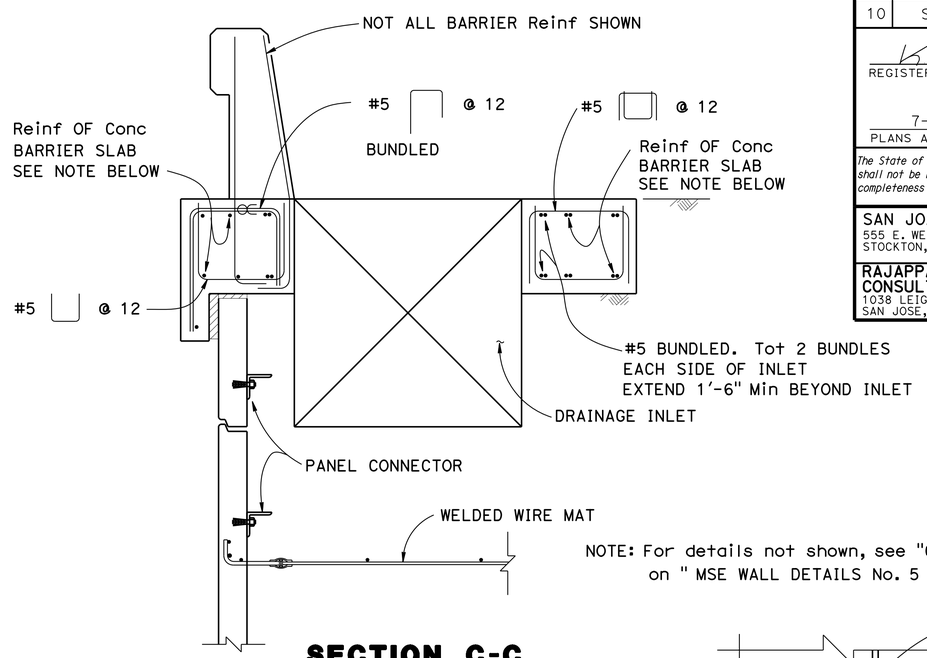

SECTION C-C

NO SCALE

NOTE: For details not shown, see "CONCRETE BARRIER SLAB" on " MSE WALL DETAILS No. 5 " sheet

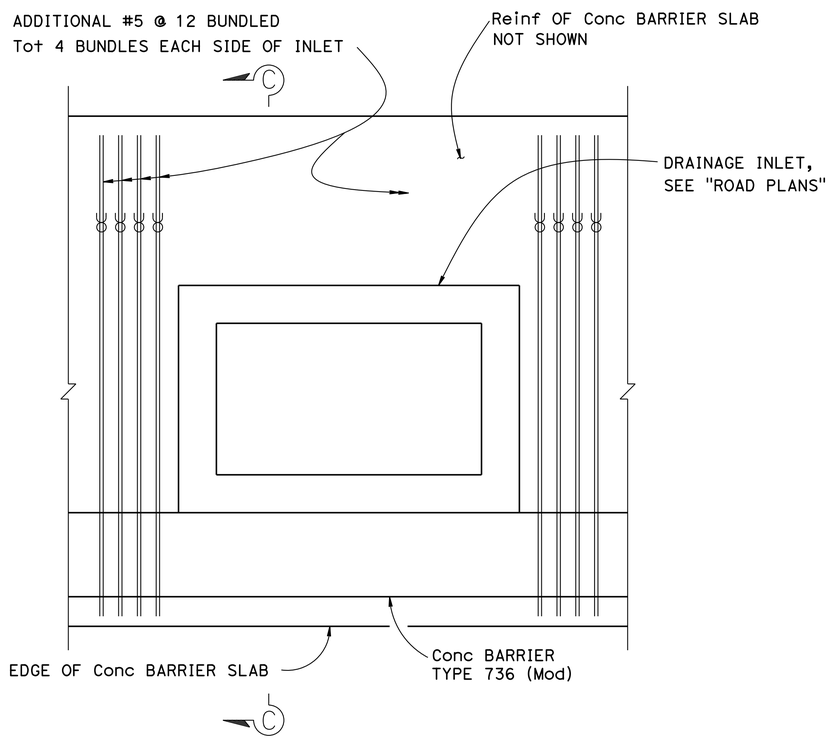

NOTE:
THE CONTRACTOR SHALL VERIFY ALL CONTROLLING FIELD DIMENSIONS BEFORE ORDERING OR FABRICATING ANY MATERIAL

DRAINAGE INLET - PLAN

NO SCALE

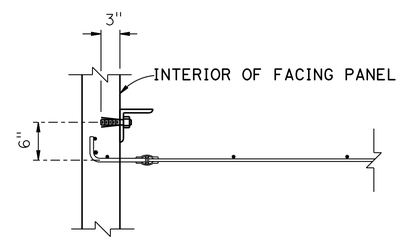

SECTION B-B

NO SCALE

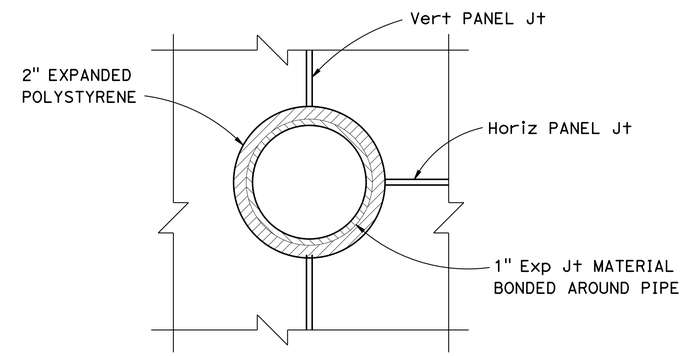

SECTION D-D

NO SCALE

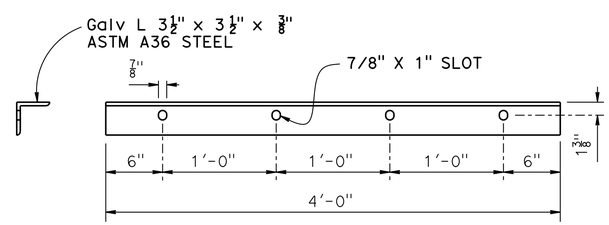

PANEL CONNECTOR DETAIL

NO SCALE

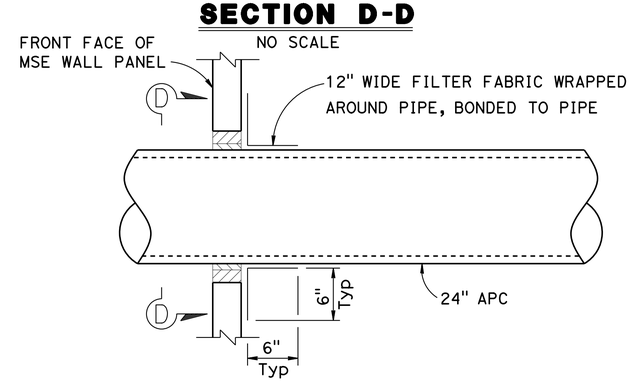

24" APC PENETRATION DETAIL

NO SCALE

Reza Erfanian
DESIGN OVERSIGHT — Reza Erfanian
5-10-13
SIGN OFF DATE

	BY	CHECKED
DESIGN	S. Desalegn	A. Wang
DETAILS	S. Desalegn	A. Wang
QUANTITIES	S. Desalegn	A. Wang

PREPARED FOR THE
STATE OF CALIFORNIA
DEPARTMENT OF TRANSPORTATION

K. Harirsaz
PROJECT ENGINEER

BRIDGE NO. 29E0011 29E0012 29E0013
POST MILES T14.72 T14.68 T14.82

RETAINING WALL No. 1, 2 & 3 (MSE)
DETAILS No. 9

DESIGN DETAIL SHEET (ENGLISH) (REV.7/16/10)

ORIGINAL SCALE IN INCHES FOR REDUCED PLANS 0 1 2 3

UNIT: 1455
PROJECT NUMBER & PHASE: 10000002291 CONTRACT NO.: 10-0S1101

DISREGARD PRINTS BEARING EARLIER REVISION DATES → 5/22/12 6/22/12 8/31/12 4/10/13

SHEET 22 OF 35

FILE => 29E0013-g-rwdt09.dgn

USERNAME => s128843 DATE PLOTTED => 23-JUL-2013 TIME PLOTTED => 10:24

DIST	COUNTY	ROUTE	POST MILES TOTAL PROJECT	SHEET No	TOTAL SHEETS
10	SJ	4,5	Var	474	486

K Hanu 8/31/12
REGISTERED CIVIL ENGINEER DATE

7-22-13
PLANS APPROVAL DATE

REGISTERED PROFESSIONAL ENGINEER KIANOUSH HARIRSAZ No. C39591 Exp. 12/31/13 CIVIL STATE OF CALIFORNIA

The State of California or its officers or agents shall not be responsible for the accuracy or completeness of electronic copies of this plan sheet.

SAN JOAQUIN COUNCIL OF GOVERNMENTS
555 E. WEBER AVENUE
STOCKTON, CA 95202

RAJAPPAN & MEYER
CONSULTING ENGINEERS, INC.
1038 LEIGH AVE, SUITE 100
SAN JOSE, CA 95126

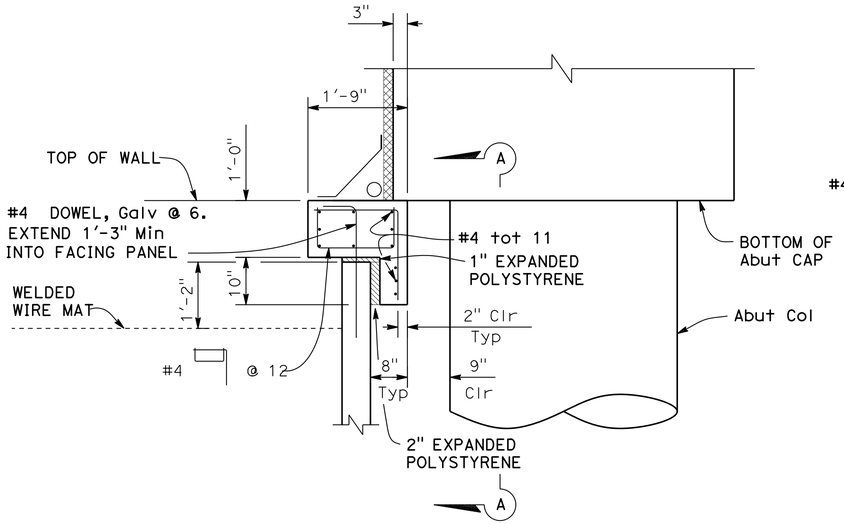

COPING AT RETAINING WALL No. 3

$\frac{3}{4}$" = 1'-0"

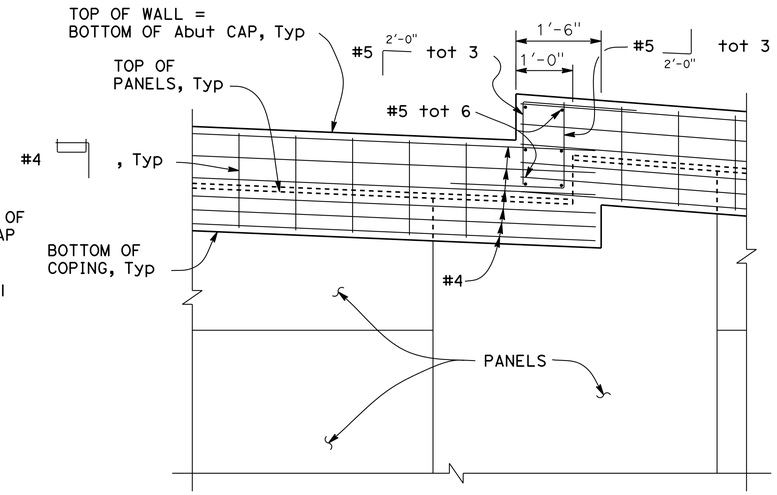

VIEW A-A AT COPING ELEVATION CHANGE

$\frac{3}{4}$" = 1'-0"

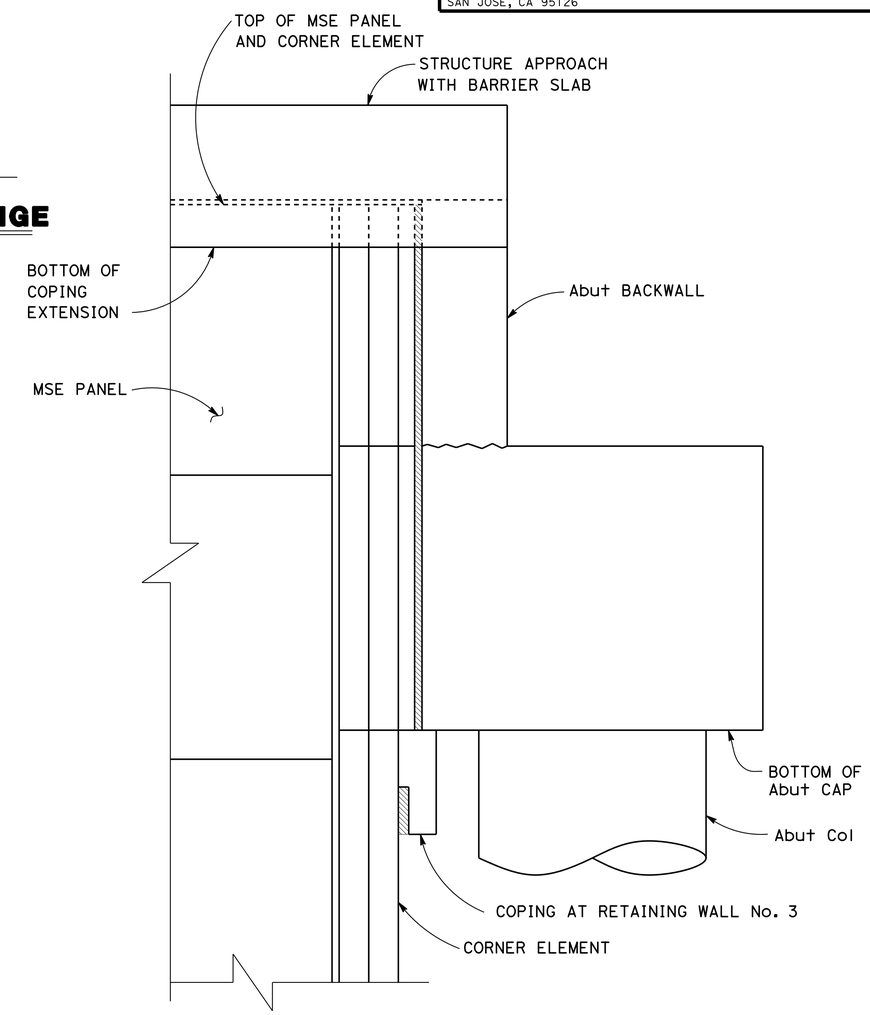

VIEW B-B AT CORNER ELEMENT

$\frac{3}{4}$" = 1'-0"

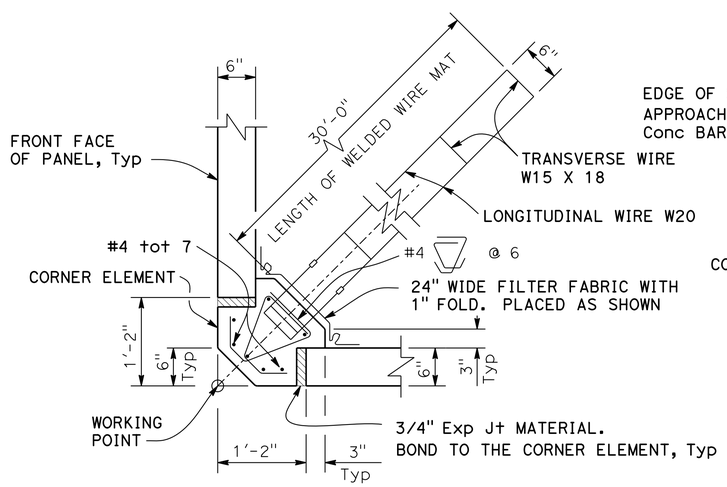

BELOW ABUTMENT CAP

1" =1'-0"

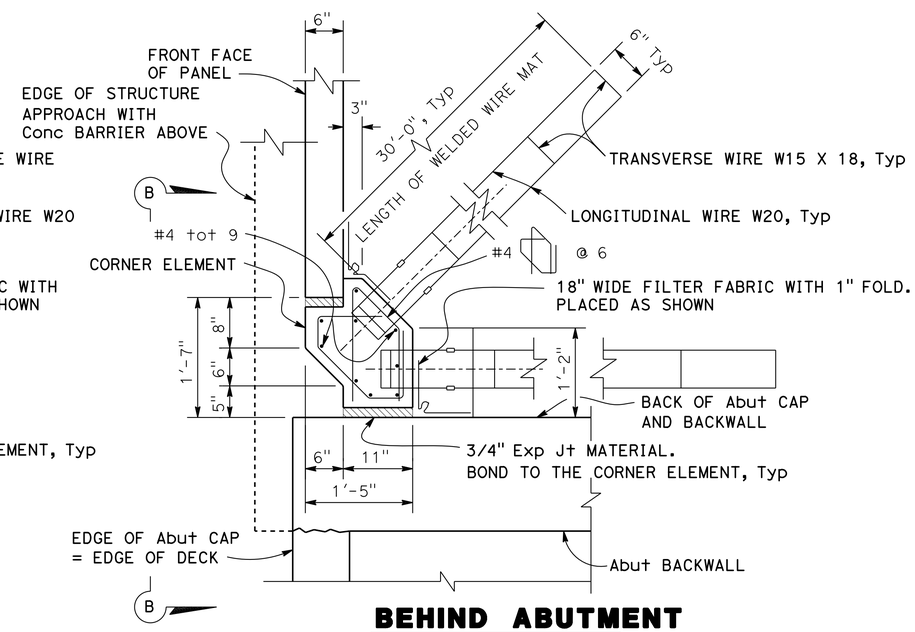

BEHIND ABUTMENT

1" =1'-0"

CORNER ELEMENT DETAIL

NOTE:
THE CONTRACTOR SHALL VERIFY ALL CONTROLLING FIELD DIMENSIONS BEFORE ORDERING OR FABRICATING ANY MATERIAL

Reza Erfanian
DESIGN OVERSIGHT Reza Erfanian
5-10-13
SIGN OFF DATE

	BY	CHECKED
DESIGN	S. Desalegn	A. Wang
DETAILS	S. Desalegn	A. Wang
QUANTITIES	S. Desalegn	A. Wang

PREPARED FOR THE
STATE OF CALIFORNIA
DEPARTMENT OF TRANSPORTATION

K. Harirsaz
PROJECT ENGINEER

BRIDGE NO. 29E0011 29E0012 29E0013
POST MILES T14.72 T14.68 T14.82

RETAINING WALL No. 1, 2 & 3 (MSE)
DETAILS No. 10

DESIGN DETAIL SHEET (ENGLISH) (REV.7/16/10)

ORIGINAL SCALE IN INCHES FOR REDUCED PLANS 0 1 2 3

UNIT: 1455
PROJECT NUMBER & PHASE: 10000002291 CONTRACT NO.: 10-0S1101

DISREGARD PRINTS BEARING EARLIER REVISION DATES
REVISION DATES 8/01/11 5/22/12 6/22/12 8/31/12
SHEET 23 OF 35

FILE => 29E0013-g-rwdt10.dgn

USERNAME => s128843 DATE PLOTTED => 23-JUL-2013 TIME PLOTTED => 10:24

DIST	COUNTY	ROUTE	POST MILES TOTAL PROJECT	SHEET No	TOTAL SHEETS
10	SJ	4,5	Var	475	486

K Harirsaz 8/31/12
REGISTERED CIVIL ENGINEER DATE

7-22-13
PLANS APPROVAL DATE

REGISTERED PROFESSIONAL ENGINEER KIANOUSH HARIRSAZ No. C39591 Exp. 12/31/13 CIVIL STATE OF CALIFORNIA

The State of California or its officers or agents shall not be responsible for the accuracy or completeness of electronic copies of this plan sheet.

SAN JOAQUIN COUNCIL OF GOVERNMENTS
555 E. WEBER AVENUE
STOCKTON, CA 95202

RAJAPPAN & MEYER
CONSULTING ENGINEERS, INC.
1038 LEIGH AVE, SUITE 100
SAN JOSE, CA 95126

WIRE MESH SCHEDULE FOR RW No. 1

Max Ht.,Ft	10*	12.5	15	20
Top Levels of Mesh Over	2 @ W11 x W15 + 6" x 9" 2 @ W15 x W15 + 6" x 12"	2 @ W11 x W15 + 6" x 12" 3 @ W15 x W15 + 6" x 12"	2 @ W11 x W15 + 6" x 12" 2 @ W15 x W15 + 6" x 12" 2 @ W15 x W15 + 6" x 18"	2 @ W11 x W15 + 6" x 12" 2 @ W15 x W15 + 6" x 12" 3 @ W15 x W15 + 6" x 18" 1 @ W15 x W15 + 6" x 24"

Max Ht.,Ft	22.5	25	27.5	30
Top Levels of Mesh Over	2 @ W11 x W15 + 6" x 18" 5 @ W15 x W15 + 6" x 18" 2 @ W15 x W15 + 6" x 24"	2 @ W11 x W15 + 6" x 18" 4 @ W15 x W15 + 6" x 18" 3 @ W15 x W15 + 6" x 24" 1 @ W20 x W15 + 6" x 24"	2 @ W11 x W15 + 6" x 18" 5 @ W15 x W15 + 6" x 18" 2 @ W15 x W15 + 6" x 24" 2 @ W20 x W15 + 6" x 24"	2 @ W11 x W15 + 6" x 18" 5 @ W15 x W15 + 6" x 18" 2 @ W15 x W15 + 6" x 24" 2 @ W20 x W15 + 6" x 24" 1 @ W20 x W15 + 6" x 30"

Max Ht.,Ft	32.5	37.5	40	42.5
Top Levels of Mesh Over	2 @ W11 x W15 + 6" x 18" 5 @ W15 x W15 + 6" x 18" 2 @ W15 x W15 + 6" x 24" 2 @ W20 x W15 + 6" x 24" 2 @ W20 x W15 + 6" x 30"	2 @ W11 x W15 + 6" x 24" 7 @ W15 x W15 + 6" x 24" 6 @ W20 x W15 + 6" x 30"	2 @ W11 x W15 + 6" x 24" 7 @ W15 x W15 + 6" x 24" 6 @ W20 x W15 + 6" x 30" 1 @ W25 x W15 + 6" x 30"	2 @ W11 x W15 + 6" x 24" 7 @ W15 x W15 + 6" x 24" 6 @ W20 x W15 + 6" x 30" 2 @ W25 x W15 + 6" x 30"

WIRE MESH SCHEDULE FOR RW No. 2

Max Ht.,Ft	10*	12.5	15	17.5
Top Levels of Mesh Over	2 @ W11 x W15 + 6" x 6" 2 @ W11 x W15 + 6" x 12"	2 @ W11 x W15 + 6" x 6" 2 @ W11 x W15 + 6" x 12" 1 @ W15 x W15 + 6" x 18"	2 @ W11 x W15 + 6" x 9" 2 @ W11 x W15 + 6" x 12" 2 @ W15 x W15 + 6" x 18"	1 @ W11 x W15 + 6" x 9" 2 @ W11 x W15 + 6" x 12" 4 @ W15 x W15 + 6" x 18"

Max Ht.,Ft	20	22.5	25	27.5
Top Levels of Mesh Over	1 @ W15 x W15 + 6" x 12" 5 @ W15 x W15 + 6" x 18" 2 @ W15 x W15 + 6" x 24"	1 @ W15 x W15 + 6" x 12" 4 @ W15 x W15 + 6" x 18" 4 @ W15 x W15 + 6" x 24"	1 @ W15 x W15 + 6" x 9" 6 @ W15 x W15 + 6" x 18" 2 @ W15 x W15 + 6" x 24" 1 @ W20 x W15 + 6" x 24"	2 @ W11 x W15 + 6" x 18" 5 @ W15 x W15 + 6" x 18" 2 @ W15 x W15 + 6" x 24" 2 @ W20 x W15 + 6" x 24"

Max Ht.,Ft	30	32.5	35	37.5
Top Levels of Mesh Over	2 @ W11 x W15 + 6" x 18" 5 @ W15 x W15 + 6" x 18" 2 @ W15 x W15 + 6" x 24" 2 @ W20 x W15 + 6" x 24" 1 @ W20 x W15 + 6" x 30"	2 @ W11 x W15 + 6" x 18" 5 @ W15 x W15 + 6" x 18" 2 @ W15 x W15 + 6" x 24" 2 @ W20 x W15 + 6" x 24" 2 @ W20 x W15 + 6" x 30"	2 @ W11 x W15 + 6" x 18" 7 @ W15 x W15 + 6" x 24" 2 @ W20 x W15 + 6" x 24" 3 @ W20 x W15 + 6" x 30"	2 @ W11 x W15 + 6" x 24" 7 @ W15 x W15 + 6" x 24" 6 @ W20 x W15 + 6" x 30"

Max Ht.,Ft	40
Top Levels of Mesh Over	2 @ W11 x W15 + 6" x 24" 7 @ W15 x W15 + 6" x 24" 6 @ W20 x W15 + 6" x 30" 1 @ W25 x W15 + 6" x 30"

* For heights less than 10'-0", use Mesh from top level down to lower level
Mesh Configuration = Longitudinal Wire size x Transverse Wire size
+ Longitudinal Wire spacing x Transverse Wire spacing.

WIRE MESH SCHEDULE FOR RW No. 3

Max Ht.,Ft	30	27.5
Top Levels of Mesh Over	9 @ W20 x W15 + 6" x 24" 2 @ W20 x W15 + 6" x 30" 1 @ W25 x W15 + 6" x 30"	2 @ W20 x W15 + 6" x 18" 7 @ W20 x W15 + 6" x 24" 2 @ W20 x W15 + 6" x 30"

NOTE:
THE CONTRACTOR SHALL VERIFY ALL CONTROLLING FIELD DIMENSIONS BEFORE ORDERING OR FABRICATING ANY MATERIAL

Reza Erfanian
DESIGN OVERSIGHT Reza Erfanian
12/19/12
SIGN OFF DATE

	BY	CHECKED
DESIGN	S. Desalegn	A. Wang
DETAILS	S. Desalegn	A. Wang
QUANTITIES	S. Desalegn	A. Wang

PREPARED FOR THE STATE OF CALIFORNIA DEPARTMENT OF TRANSPORTATION

K. Harirsaz
PROJECT ENGINEER

BRIDGE NO. 29E0011 29E0012 29E0013
POST MILES T14.72 T14.68 T14.82

RETAINING WALL No. 1, 2 & 3 (MSE)
MSE WALL DETAILS No. 11

DESIGN DETAIL SHEET (ENGLISH) (REV.7/16/10)

ORIGINAL SCALE IN INCHES FOR REDUCED PLANS 0 1 2 3

UNIT: 1455
PROJECT NUMBER & PHASE: 10000002291 CONTRACT NO.: 10-0S1101

DISREGARD PRINTS BEARING EARLIER REVISION DATES → REVISION DATES 8/01/11 5/22/12 6/22/12 8/31/12 SHEET 24 OF 35

FILE => 29E0013-g-rwdt11.dgn

USERNAME => s128843 DATE PLOTTED => 23-JUL-2013 TIME PLOTTED => 10:24

DIST	COUNTY	ROUTE	POST MILES TOTAL PROJECT	SHEET No	TOTAL SHEETS
10	SJ	4,5	Var	476	486

K. Harirsaz
REGISTERED CIVIL ENGINEER 8/31/12
DATE

7-22-13
PLANS APPROVAL DATE

REGISTERED PROFESSIONAL ENGINEER
KIANOUSH HARIRSAZ
No. C39591
Exp. 12/31/13
CIVIL
STATE OF CALIFORNIA

The State of California or its officers or agents shall not be responsible for the accuracy or completeness of electronic copies of this plan sheet.

SAN JOAQUIN COUNCIL OF GOVERNMENTS
555 E. WEBER AVENUE
STOCKTON, CA 95202

RAJAPPAN & MEYER CONSULTING ENGINEERS, INC.
1038 LEIGH AVE, SUITE 100
SAN JOSE, CA 95126

DERIVI CONSTRUCTION & ARCHITECTURE, INC.
924 N. YOSEMITE STREET
STOCKTON, CA 95203

PANEL LEGEND

PANEL A1:
'LARGE WAVE-HORIZ'

PANEL A2:
'LARGE WAVE-VERT'

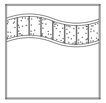
PANEL B1:
'SMALL WAVE-HORIZ'

PANEL B2:
'SMALL WAVE-VERT'

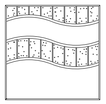
PANEL C1:
'TOP WAVE-HORIZ'

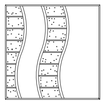
PANEL C2:
'TOP WAVE-VERT'

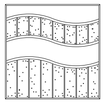
PANEL D1:
'BOTTOM WAVE-HORIZ'

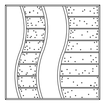
PANEL D2:
'BOTTOM WAVE-VERT'

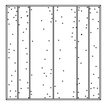
PANEL E1:
'VERT GROOVE-FULL'
TRANSITION AND BASE

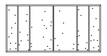
PANEL E2:
'VERT GROOVE-HALF'
BASE ONLY

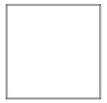
NO PATTERN
ABOVE PATTERN
AND ENDS OF WALL

GENERAL NOTES

1. EACH RETAINING WALL ELEVATION IS ELEVATED INDEPENDENTLY. SEE RETAINING WALL GENERAL PLANS FOR MORE INFORMATION.
2. WHERE NO PATTERN SHOWN ASSUME NO TREATMENT.

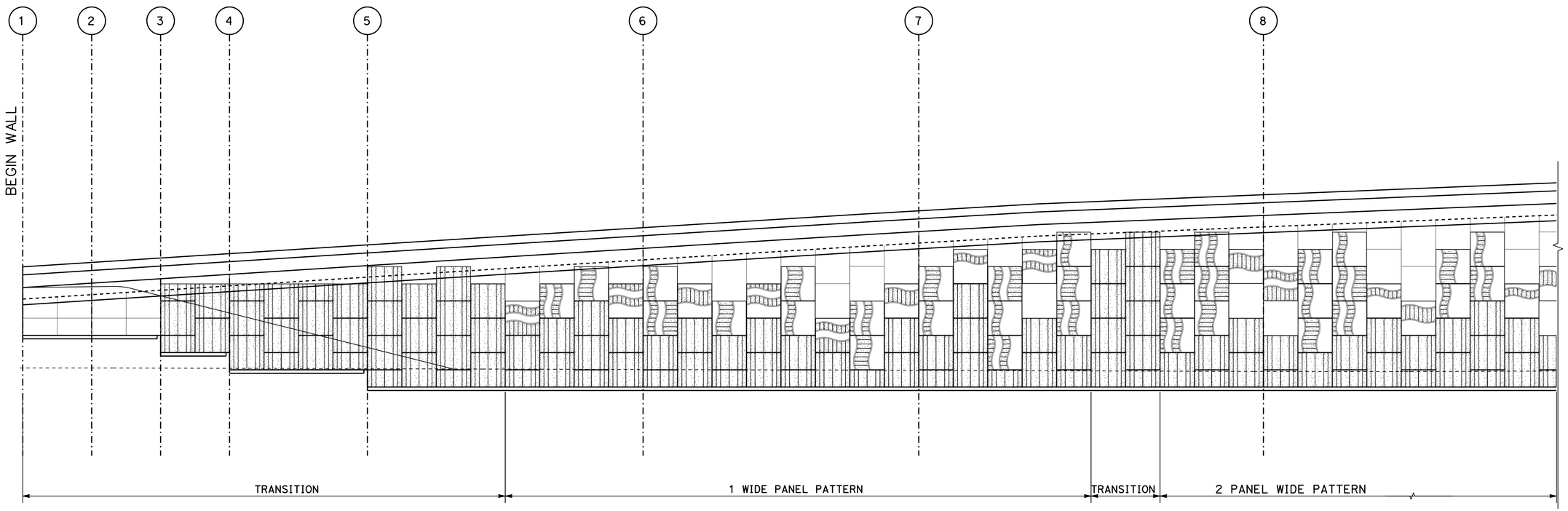

NOTE:
THE CONTRACTOR SHALL VERIFY ALL CONTROLLING FIELD DIMENSIONS BEFORE ORDERING OR FABRICATING ANY MATERIAL

THIS PLAN ACCURATE FOR MSE WALL AESTHETIC TREATMENTS ONLY

Reza Erfanian
DESIGN OVERSIGHT Reza Erfanian
12/19/12
SIGN OFF DATE

	BY	CHECKED
DESIGN	S. Desalegn	A. Wong
DETAILS	S. Desalegn	A. Wong
QUANTITIES	S. Desalegn	A. Wong

PREPARED FOR THE STATE OF CALIFORNIA DEPARTMENT OF TRANSPORTATION

K. Harirsaz
PROJECT ENGINEER

BRIDGE NO. 29E0011 29E0012 29E0013
POST MILES T14.72 T14.68 T14.82

RETAINING WALL No. 1 (MSE)
ARCHITECTURAL DETAILS No. 1

DESIGN DETAIL SHEET (ENGLISH) (REV.7/16/10)

ORIGINAL SCALE IN INCHES FOR REDUCED PLANS 0 1 2 3

UNIT: 1455
PROJECT NUMBER & PHASE: 10000002291 CONTRACT NO.: 10-0S1101

DISREGARD PRINTS BEARING EARLIER REVISION DATES
REVISION DATES 8/01/11 5/22/12 6/22/12 8/31/12
SHEET 25 OF 35

FILE => 29E0013-u-archdt01.dgn

USERNAME => s128843 DATE PLOTTED => 23-JUL-2013 TIME PLOTTED => 10:25

DIST	COUNTY	ROUTE	POST MILES TOTAL PROJECT	SHEET No	TOTAL SHEETS
10	SJ	4,5	Var	477	486

REGISTERED CIVIL ENGINEER — DATE 8/31/12

7-22-13
PLANS APPROVAL DATE

REGISTERED PROFESSIONAL ENGINEER — KIANOUSH HARIRSAZ — No. C39591 — Exp. 12/31/13 — CIVIL — STATE OF CALIFORNIA

The State of California or its officers or agents shall not be responsible for the accuracy or completeness of electronic copies of this plan sheet.

SAN JOAQUIN COUNCIL OF GOVERNMENTS
555 E. WEBER AVENUE
STOCKTON, CA 95202

RAJAPPAN & MEYER CONSULTING ENGINEERS, INC.
1038 LEIGH AVE, SUITE 100
SAN JOSE, CA 95126

DERIVI CONSTRUCTION & ARCHITECTURE, INC.
924 N. YOSEMITE STREET
STOCKTON, CA 95203

PANEL LEGEND

PANEL A1:
'LARGE WAVE-HORIZ'

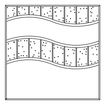
PANEL C1:
'TOP WAVE-HORIZ'

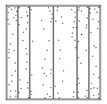
PANEL E1:
'VERT GROOVE-FULL'
TRANSITION AND BASE

PANEL A2:
'LARGE WAVE-VERT'

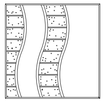
PANEL C2:
'TOP WAVE-VERT'

PANEL E2:
'VERT GROOVE-HALF'
BASE ONLY

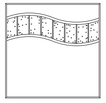
PANEL B1:
'SMALL WAVE-HORIZ'

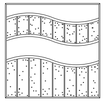
PANEL D1:
'BOTTOM WAVE-HORIZ'

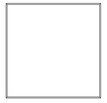
NO PATTERN
ABOVE PATTERN
AND ENDS OF WALL

PANEL B2:
'SMALL WAVE-VERT'

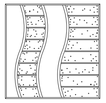
PANEL D2:
'BOTTOM WAVE-VERT'

GENERAL NOTES

1. EACH RETAINING WALL ELEVATION IS ELEVATED INDEPENDENTLY. SEE RETAINING WALL GENERAL PLANS FOR MORE INFORMATION.
2. WHERE NO PATTERN SHOWN ASSUME NO TREATMENT.

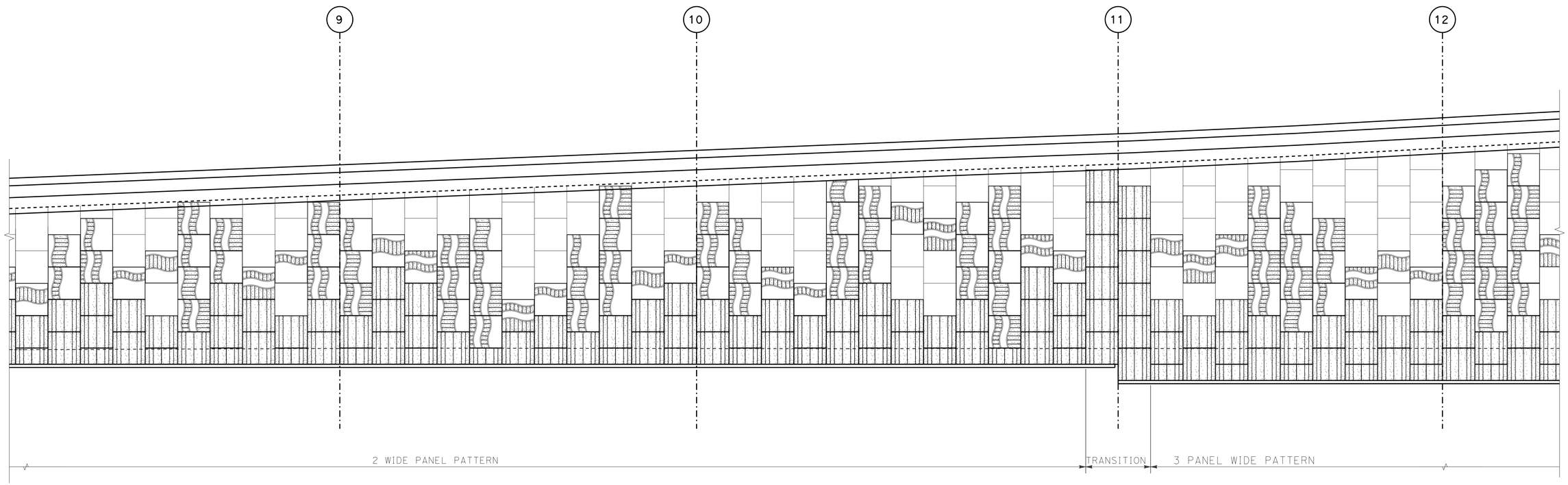

NOTE:
THE CONTRACTOR SHALL VERIFY ALL CONTROLLING FIELD DIMENSIONS BEFORE ORDERING OR FABRICATING ANY MATERIAL

THIS PLAN ACCURATE FOR MSE WALL AESTHETIC TREATMENTS ONLY

DESIGN OVERSIGHT — Reza Erfanian
12/19/12
SIGN OFF DATE

	BY		CHECKED	
DESIGN	BY	S. Desalegn	CHECKED	A. Wong
DETAILS	BY	S. Desalegn	CHECKED	A. Wong
QUANTITIES	BY	S. Desalegn	CHECKED	A. Wong

PREPARED FOR THE STATE OF CALIFORNIA DEPARTMENT OF TRANSPORTATION

K. Harirsaz
PROJECT ENGINEER

BRIDGE NO. 29E0011 29E0012 29E0013
POST MILES T14.72 T14.68 T14.82

RETAINING WALL No. 1 (MSE)
ARCHITECTURAL DETAILS No. 2

DESIGN DETAIL SHEET (ENGLISH) (REV.7/16/10)

ORIGINAL SCALE IN INCHES FOR REDUCED PLANS 0 1 2 3

UNIT: 1455
PROJECT NUMBER & PHASE: 10000002291 CONTRACT NO.: 10-0S1101

DISREGARD PRINTS BEARING EARLIER REVISION DATES → REVISION DATES 8/01/11 5/22/12 6/22/12 8/31/12

SHEET 26 OF 35

FILE => 29E0013-u-archdt02.dgn

USERNAME => s128843 DATE PLOTTED => 23-JUL-2013 TIME PLOTTED => 10:25

DIST	COUNTY	ROUTE	POST MILES TOTAL PROJECT	SHEET No	TOTAL SHEETS
10	SJ	4,5	Var	478	486

REGISTERED CIVIL ENGINEER — DATE 8/31/12

7-22-13
PLANS APPROVAL DATE

REGISTERED PROFESSIONAL ENGINEER — KIANOUSH HARIRSAZ — No. C39591 — Exp. 12/31/13 — CIVIL — STATE OF CALIFORNIA

The State of California or its officers or agents shall not be responsible for the accuracy or completeness of electronic copies of this plan sheet.

SAN JOAQUIN COUNCIL OF GOVERNMENTS
555 E. WEBER AVENUE
STOCKTON, CA 95202

RAJAPPAN & MEYER CONSULTING ENGINEERS, INC.
1038 LEIGH AVE, SUITE 100
SAN JOSE, CA 95126

DERIVI CONSTRUCTION & ARCHITECTURE, INC.
924 N. YOSEMITE STREET
STOCKTON, CA 95203

PANEL LEGEND

PANEL A1:
'LARGE WAVE-HORIZ'

PANEL A2:
'LARGE WAVE-VERT'

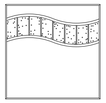
PANEL B1:
'SMALL WAVE-HORIZ'

PANEL B2:
'SMALL WAVE-VERT'

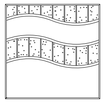
PANEL C1:
'TOP WAVE-HORIZ'

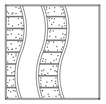
PANEL C2:
'TOP WAVE-VERT'

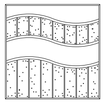
PANEL D1:
'BOTTOM WAVE-HORIZ'

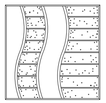
PANEL D2:
'BOTTOM WAVE-VERT'

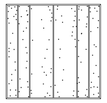
PANEL E1:
'VERT GROOVE-FULL'
TRANSITION AND BASE

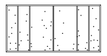
PANEL E2:
'VERT GROOVE-HALF'
BASE ONLY

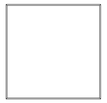
NO PATTERN
ABOVE PATTERN
AND ENDS OF WALL

GENERAL NOTES

1. EACH RETAINING WALL ELEVATION IS ELEVATED INDEPENDENTLY. SEE RETAINING WALL GENERAL PLANS FOR MORE INFORMATION.
2. WHERE NO PATTERN SHOWN ASSUME NO TREATMENT.

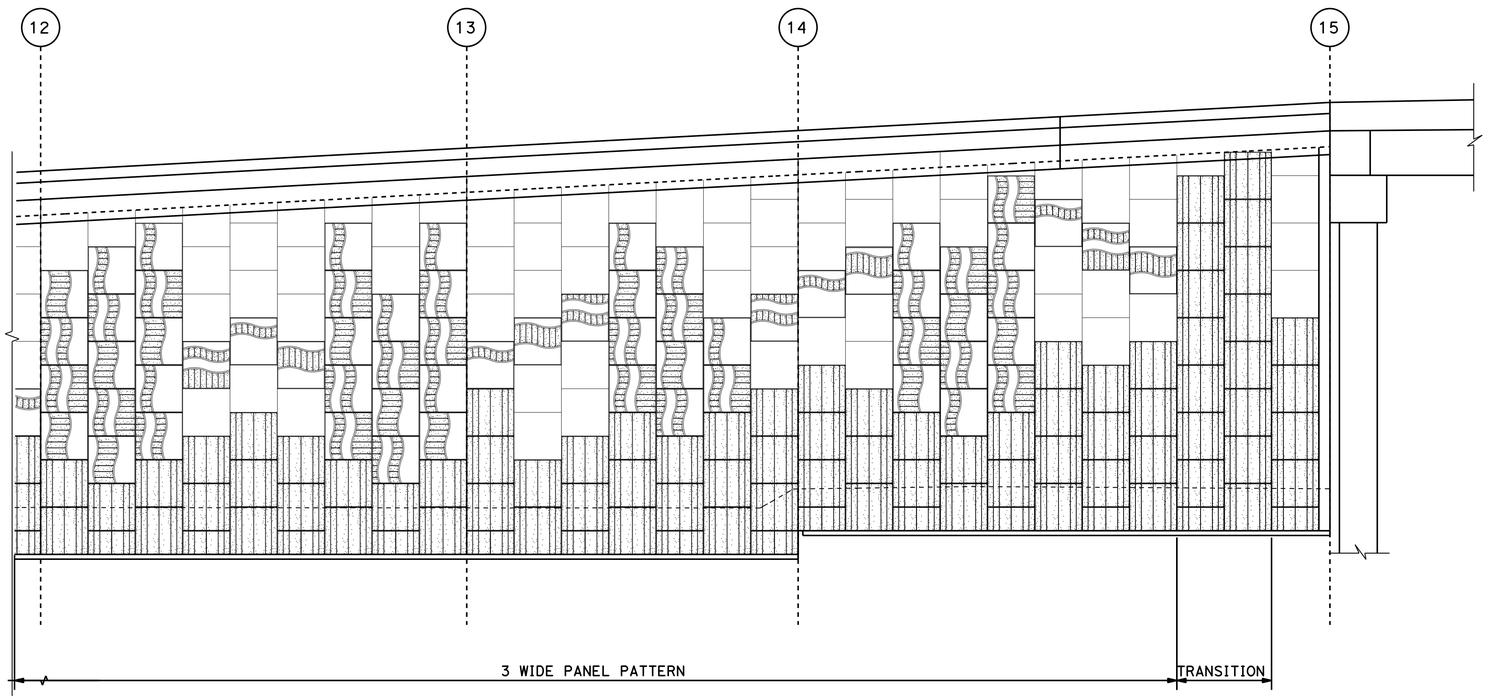

NOTE:
THE CONTRACTOR SHALL VERIFY ALL CONTROLLING FIELD DIMENSIONS BEFORE ORDERING OR FABRICATING ANY MATERIAL

THIS PLAN ACCURATE FOR MSE WALL AESTHETIC TREATMENTS ONLY

Reza Erfanian
DESIGN OVERSIGHT — Reza Erfanian
12/19/12
SIGN OFF DATE

	BY	CHECKED
DESIGN	S. Desalegn	A. Wong
DETAILS	S. Desalegn	A. Wong
QUANTITIES	S. Desalegn	A. Wong

PREPARED FOR THE STATE OF CALIFORNIA DEPARTMENT OF TRANSPORTATION

PROJECT ENGINEER

BRIDGE NO.
POST MILES

RETAINING WALL No. 1 (MSE)

DESIGN DETAIL SHEET (ENGLISH) (REV.7/16/10)

ORIGINAL SCALE IN INCHES FOR REDUCED PLANS 0 1 2 3

UNIT:
PROJECT NUMBER & PHASE: 10000002291 CONTRACT NO.: 10-0S1101

DISREGARD PRINTS BEARING EARLIER REVISION DATES

REVISION DATES: 8/01/11 5/22/12 6/22/12 8/31/12

SHEET 27 OF 35

FILE => 29E0013-u-archdt03.dgn

USERNAME => s128843 DATE PLOTTED => 23-JUL-2013 TIME PLOTTED => 10:25

DIST	COUNTY	ROUTE	POST MILES TOTAL PROJECT	SHEET No	TOTAL SHEETS
10	SJ	4,5	Var	479	486

REGISTERED CIVIL ENGINEER — DATE 8/31/12

7-22-13
PLANS APPROVAL DATE

REGISTERED PROFESSIONAL ENGINEER — KIANOUSH HARIRSAZ — No. C39591 — Exp. 12/31/13 — CIVIL — STATE OF CALIFORNIA

The State of California or its officers or agents shall not be responsible for the accuracy or completeness of electronic copies of this plan sheet.

SAN JOAQUIN COUNCIL OF GOVERNMENTS
555 E. WEBER AVENUE
STOCKTON, CA 95202

RAJAPPAN & MEYER CONSULTING ENGINEERS, INC.
1038 LEIGH AVE, SUITE 100
SAN JOSE, CA 95126

DERIVI CONSTRUCTION & ARCHITECTURE, INC.
924 N. YOSEMITE STREET
STOCKTON, CA 95203

PANEL LEGEND

PANEL A1:
'LARGE WAVE-HORIZ'

PANEL A2:
'LARGE WAVE-VERT'

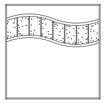
PANEL B1:
'SMALL WAVE-HORIZ'

PANEL B2:
'SMALL WAVE-VERT'

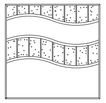
PANEL C1:
'TOP WAVE-HORIZ'

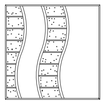
PANEL C2:
'TOP WAVE-VERT'

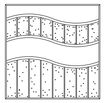
PANEL D1:
'BOTTOM WAVE-HORIZ'

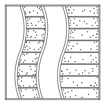
PANEL D2:
'BOTTOM WAVE-VERT'

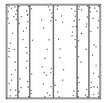
PANEL E1:
'VERT GROOVE-FULL'
TRANSITION AND BASE

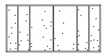
PANEL E2:
'VERT GROOVE-HALF'
BASE ONLY

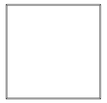
NO PATTERN
ABOVE PATTERN
AND ENDS OF WALL

GENERAL NOTES

1. EACH RETAINING WALL ELEVATION IS ELEVATED INDEPENDENTLY. SEE RETAINING WALL GENERAL PLANS FOR MORE INFORMATION.
2. WHERE NO PATTERN SHOWN ASSUME NO TREATMENT.

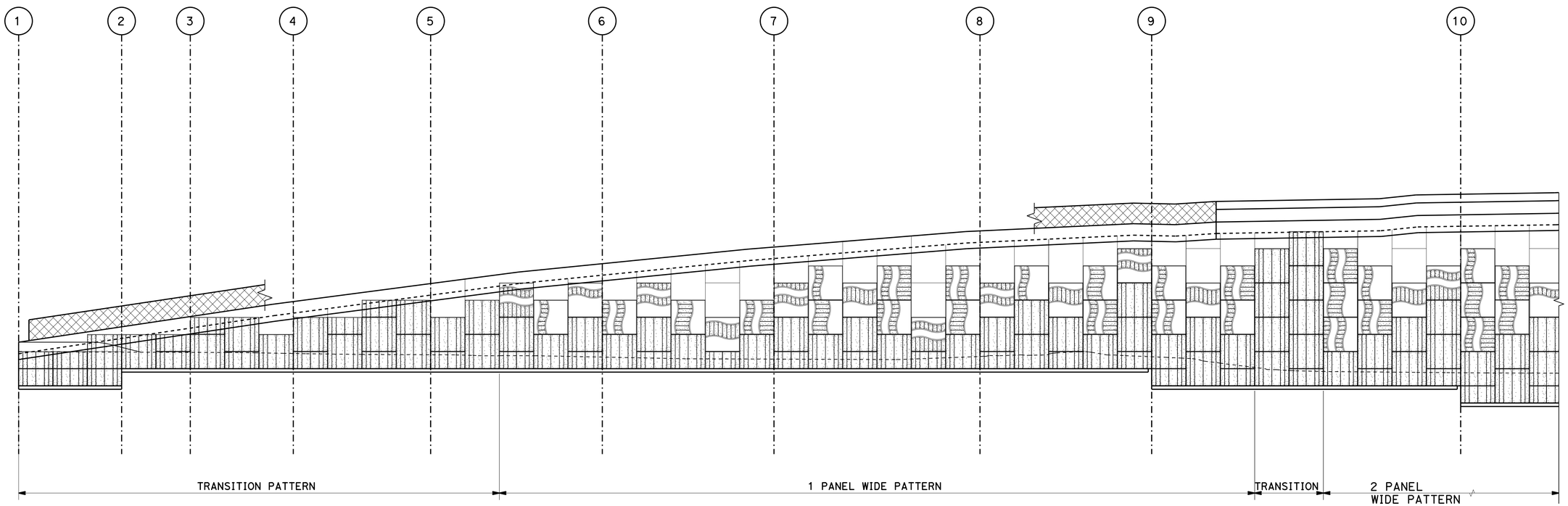

NOTE:
THE CONTRACTOR SHALL VERIFY ALL CONTROLLING FIELD DIMENSIONS BEFORE ORDERING OR FABRICATING ANY MATERIAL

THIS PLAN ACCURATE FOR MSE WALL AESTHETIC TREATMENTS ONLY

DESIGN OVERSIGHT — Reza Erfanian
12/19/12
SIGN OFF DATE

	BY	CHECKED
DESIGN	S. Desalegn	A. Wong
DETAILS	S. Desalegn	A. Wong
QUANTITIES	S. Desalegn	A. Wong

PREPARED FOR THE STATE OF CALIFORNIA DEPARTMENT OF TRANSPORTATION

K. Harirsaz
PROJECT ENGINEER

BRIDGE NO. 29E0011 29E0012 29E0013
POST MILES T14.72 T14.68 T14.82

RETAINING WALL No. 2 (MSE)
ARCHITECTURAL DETAILS No. 1

DESIGN DETAIL SHEET (ENGLISH) (REV.7/16/10)

ORIGINAL SCALE IN INCHES FOR REDUCED PLANS 0 1 2 3

UNIT: 1455
PROJECT NUMBER & PHASE: 10000002291
CONTRACT NO.: 10-0S1101

DISREGARD PRINTS BEARING EARLIER REVISION DATES → 8/04/11 5/22/12 6/22/12 8/31/12

SHEET 28 OF 35

FILE => 29E0013-u-archdt04.dgn

USERNAME => s128843 DATE PLOTTED => 23-JUL-2013 TIME PLOTTED => 10:25

DIST	COUNTY	ROUTE	POST MILES TOTAL PROJECT	SHEET No	TOTAL SHEETS
10	SJ	4,5	Var	480	486

K. Harirsaz
REGISTERED CIVIL ENGINEER — DATE 4/10/13

7-22-13
PLANS APPROVAL DATE

REGISTERED PROFESSIONAL ENGINEER — KIANOUSH HARIRSAZ — No. C39591 — Exp. 12/31/13 — CIVIL — STATE OF CALIFORNIA

The State of California or its officers or agents shall not be responsible for the accuracy or completeness of electronic copies of this plan sheet.

SAN JOAQUIN COUNCIL OF GOVERNMENTS
555 E. WEBER AVENUE
STOCKTON, CA 95202

RAJAPPAN & MEYER
CONSULTING ENGINEERS, INC.
1038 LEIGH AVE, SUITE 100
SAN JOSE, CA 95126

DERIVI CONSTRUCTION & ARCHITECTURE, INC.
924 N. YOSEMITE STREET
STOCKTON, CA 95203

PANEL LEGEND

PANEL A1: 'LARGE WAVE-HORIZ'

PANEL A2: 'LARGE WAVE-VERT'

PANEL B1: 'SMALL WAVE-HORIZ'

PANEL B2: 'SMALL WAVE-VERT'

PANEL C1: 'TOP WAVE-HORIZ'

PANEL C2: 'TOP WAVE-VERT'

PANEL D1: 'BOTTOM WAVE-HORIZ'

PANEL D2: 'BOTTOM WAVE-VERT'

PANEL E1: 'VERT GROOVE-FULL' TRANSITION AND BASE

PANEL E2: 'VERT GROOVE-HALF' BASE ONLY

NO PATTERN ABOVE PATTERN AND ENDS OF WALL

GENERAL NOTES

1. EACH RETAINING WALL ELEVATION IS ELEVATED INDEPENDENTLY. SEE RETAINING WALL GENERAL PLANS FOR MORE INFORMATION.
2. WHERE NO PATTERN SHOWN ASSUME NO TREATMENT.

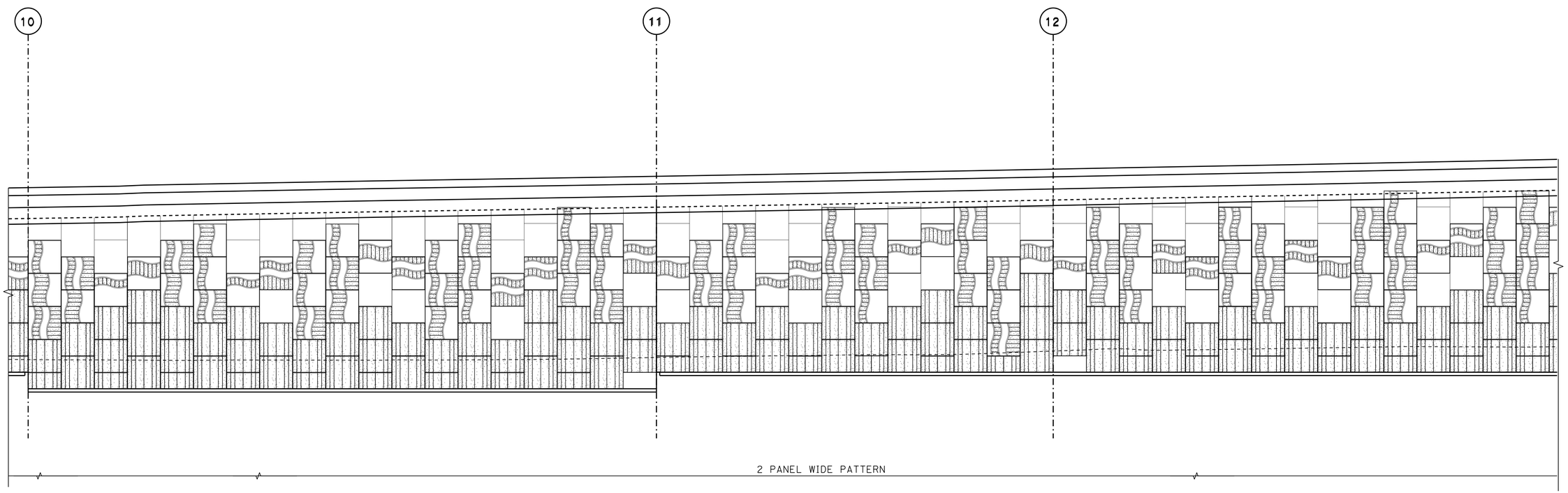

NOTE:
THE CONTRACTOR SHALL VERIFY ALL CONTROLLING FIELD DIMENSIONS BEFORE ORDERING OR FABRICATING ANY MATERIAL

THIS PLAN ACCURATE FOR MSE WALL AESTHETIC TREATMENTS ONLY

Reza Erfanian
DESIGN OVERSIGHT — Reza Erfanian
5-10-13
SIGN OFF DATE

	BY		CHECKED	
DESIGN	BY	S. Desalegn	CHECKED	A. Wong
DETAILS	BY	S. Desalegn	CHECKED	A. Wong
QUANTITIES	BY	S. Desalegn	CHECKED	A. Wong

PREPARED FOR THE STATE OF CALIFORNIA DEPARTMENT OF TRANSPORTATION

K. Harirsaz
PROJECT ENGINEER

BRIDGE NO. 29E0011 29E0012 29E0013
POST MILES T14.72 T14.68 T14.82

RETAINING WALL No. 2 (MSE)
ARCHITECTURAL DETAILS No. 2

DESIGN DETAIL SHEET (ENGLISH) (REV.7/16/10)

ORIGINAL SCALE IN INCHES FOR REDUCED PLANS 0 1 2 3

UNIT: 1455
PROJECT NUMBER & PHASE: 10000002291 CONTRACT NO.: 10-0S1101

DISREGARD PRINTS BEARING EARLIER REVISION DATES → 8/31/11 5/22/12 6/22/12 8/31/12

SHEET 29 OF 35

FILE => 29E0013-u-archdt05.dgn

USERNAME => s128843 DATE PLOTTED => 23-JUL-2013 TIME PLOTTED => 10:25

DIST	COUNTY	ROUTE	POST MILES TOTAL PROJECT	SHEET No	TOTAL SHEETS
10	SJ	4,5	Var	481	486

K. Harirsaz
REGISTERED CIVIL ENGINEER — DATE 8/31/12

7-22-13
PLANS APPROVAL DATE

REGISTERED PROFESSIONAL ENGINEER — KIANOUSH HARIRSAZ — No. C39591 — Exp. 12/31/13 — CIVIL — STATE OF CALIFORNIA

The State of California or its officers or agents shall not be responsible for the accuracy or completeness of electronic copies of this plan sheet.

SAN JOAQUIN COUNCIL OF GOVERNMENTS
555 E. WEBER AVENUE
STOCKTON, CA 95202

RAJAPPAN & MEYER CONSULTING ENGINEERS, INC.
1038 LEIGH AVE, SUITE 100
SAN JOSE, CA 95126

DERIVI CONSTRUCTION & ARCHITECTURE, INC.
924 N. YOSEMITE STREET
STOCKTON, CA 95203

PANEL LEGEND

PANEL A1:
'LARGE WAVE-HORIZ'

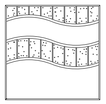
PANEL C1:
'TOP WAVE-HORIZ'

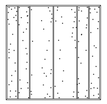
PANEL E1:
'VERT GROOVE-FULL'
TRANSITION AND BASE

PANEL A2:
'LARGE WAVE-VERT'

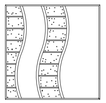
PANEL C2:
'TOP WAVE-VERT'

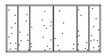
PANEL E2:
'VERT GROOVE-HALF'
BASE ONLY

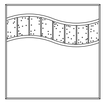
PANEL B1:
'SMALL WAVE-HORIZ'

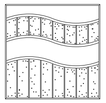
PANEL D1:
'BOTTOM WAVE-HORIZ'

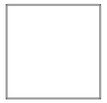
NO PATTERN
ABOVE PATTERN
AND ENDS OF WALL

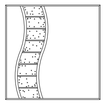
PANEL B2:
'SMALL WAVE-VERT'

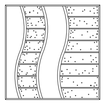
PANEL D2:
'BOTTOM WAVE-VERT'

GENERAL NOTES

1. EACH RETAINING WALL ELEVATION IS ELEVATED INDEPENDENTLY. SEE RETAINING WALL GENERAL PLANS FOR MORE INFORMATION.
2. WHERE NO PATTERN SHOWN ASSUME NO TREATMENT.

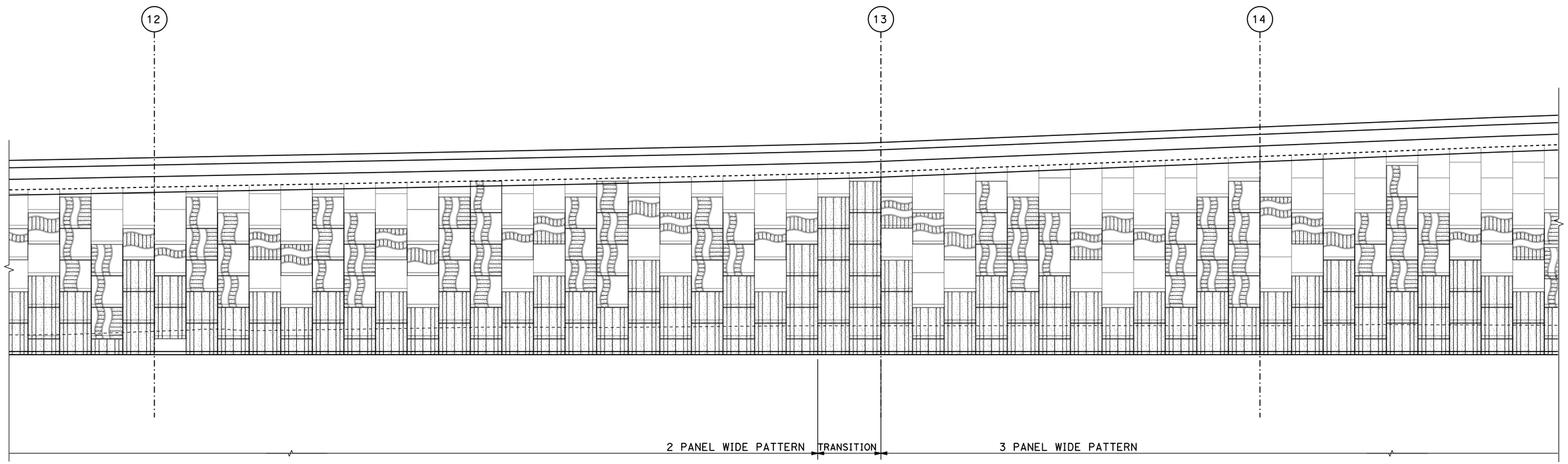

NOTE:
THE CONTRACTOR SHALL VERIFY ALL CONTROLLING FIELD DIMENSIONS BEFORE ORDERING OR FABRICATING ANY MATERIAL

THIS PLAN ACCURATE FOR MSE WALL AESTHETIC TREATMENTS ONLY

Reza Erfanian
DESIGN OVERSIGHT — Reza Erfanian
12/19/12
SIGN OFF DATE

	BY	CHECKED
DESIGN	S. Desalegn	A. Wong
DETAILS	S. Desalegn	A. Wong
QUANTITIES	S. Desalegn	A. Wong

PREPARED FOR THE STATE OF CALIFORNIA DEPARTMENT OF TRANSPORTATION

K. Harirsaz
PROJECT ENGINEER

BRIDGE NO. 29E0011 29E0012 29E0013
POST MILES T14.72 T14.68 T14.82

RETAINING WALL No. 2 (MSE)
ARCHITECTURAL DETAILS No. 3

DESIGN DETAIL SHEET (ENGLISH) (REV.7/16/10)

ORIGINAL SCALE IN INCHES FOR REDUCED PLANS 0 1 2 3

UNIT: 1455
PROJECT NUMBER & PHASE: 10000002291 CONTRACT NO.: 10-0S1101

DISREGARD PRINTS BEARING EARLIER REVISION DATES → REVISION DATES 8/01/11 5/22/12 6/22/12 8/31/12

SHEET 30 OF 35

FILE => 29E0013-u-archdt06.dgn

USERNAME => s128843 DATE PLOTTED => 23-JUL-2013 TIME PLOTTED => 10:25

DIST	COUNTY	ROUTE	POST MILES TOTAL PROJECT	SHEET No	TOTAL SHEETS
10	SJ	4,5	Var	482	486

REGISTERED CIVIL ENGINEER — DATE 8/31/12

7-22-13
PLANS APPROVAL DATE

REGISTERED PROFESSIONAL ENGINEER — KIANOUSH HARIRSAZ — No. C39591 — Exp. 12/31/13 — CIVIL — STATE OF CALIFORNIA

The State of California or its officers or agents shall not be responsible for the accuracy or completeness of electronic copies of this plan sheet.

SAN JOAQUIN COUNCIL OF GOVERNMENTS
555 E. WEBER AVENUE
STOCKTON, CA 95202

RAJAPPAN & MEYER CONSULTING ENGINEERS, INC.
1038 LEIGH AVE, SUITE 100
SAN JOSE, CA 95126

DERIVI CONSTRUCTION & ARCHITECTURE, INC.
924 N. YOSEMITE STREET
STOCKTON, CA 95203

PANEL LEGEND

PANEL A1:
'LARGE WAVE-HORIZ'

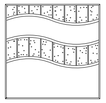
PANEL C1:
'TOP WAVE-HORIZ'

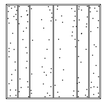
PANEL E1:
'VERT GROOVE-FULL'
TRANSITION AND BASE

PANEL A2:
'LARGE WAVE-VERT'

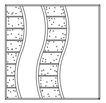
PANEL C2:
'TOP WAVE-VERT'

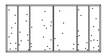
PANEL E2:
'VERT GROOVE-HALF'
BASE ONLY

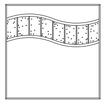
PANEL B1:
'SMALL WAVE-HORIZ'

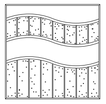
PANEL D1:
'BOTTOM WAVE-HORIZ'

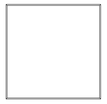
NO PATTERN
ABOVE PATTERN
AND ENDS OF WALL

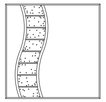
PANEL B2:
'SMALL WAVE-VERT'

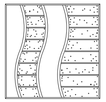
PANEL D2:
'BOTTOM WAVE-VERT'

GENERAL NOTES

1. EACH RETAINING WALL ELEVATION IS ELEVATED INDEPENDENTLY. SEE RETAINING WALL GENERAL PLANS FOR MORE INFORMATION.
2. WHERE NO PATTERN SHOWN ASSUME NO TREATMENT.

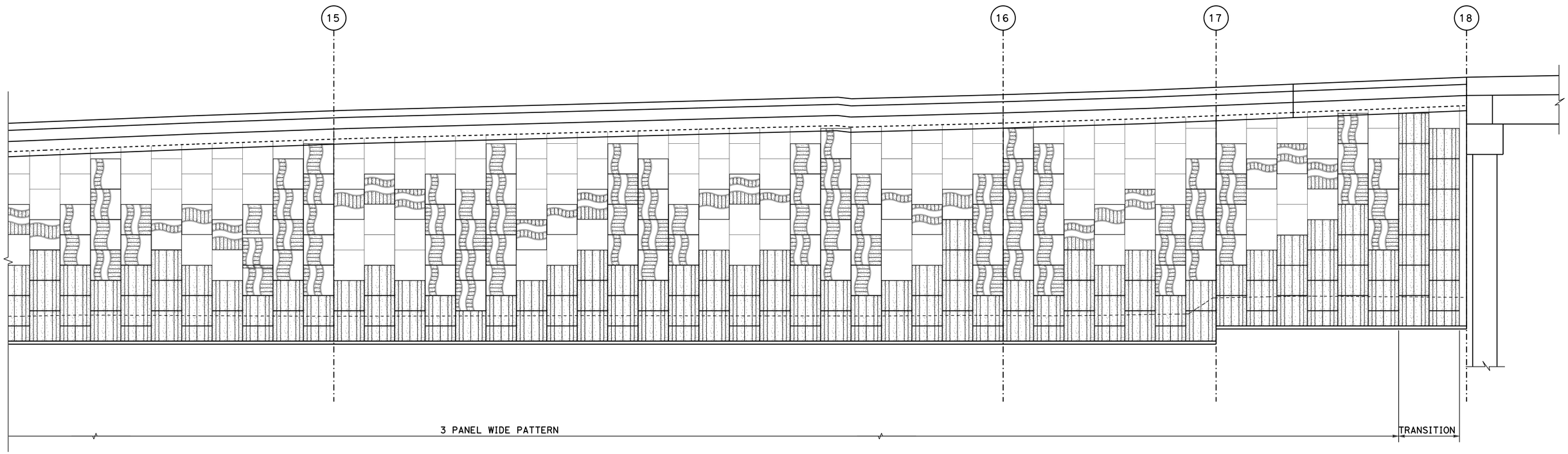

NOTE:
THE CONTRACTOR SHALL VERIFY ALL CONTROLLING FIELD DIMENSIONS BEFORE ORDERING OR FABRICATING ANY MATERIAL

THIS PLAN ACCURATE FOR MSE WALL AESTHETIC TREATMENTS ONLY

Reza Erfanian
DESIGN OVERSIGHT — Reza Erfanian
12/19/12
SIGN OFF DATE

	BY	CHECKED
DESIGN	S. Desalegn	A. Wang
DETAILS	S. Desalegn	A. Wang
QUANTITIES	S. Desalegn	A. Wang

PREPARED FOR THE STATE OF CALIFORNIA DEPARTMENT OF TRANSPORTATION

K. Harirsaz
PROJECT ENGINEER

BRIDGE NO. 29E0011 29E0012 29E0013
POST MILES T14.72 T14.68 T14.82

RETAINING WALL No. 2 (MSE)
ARCHITECTURAL DETAILS No. 4

DESIGN DETAIL SHEET (ENGLISH) (REV.7/16/10)

ORIGINAL SCALE IN INCHES FOR REDUCED PLANS 0 1 2 3

UNIT: 1455
PROJECT NUMBER & PHASE: 10000002291
CONTRACT NO.: 10-0S1101

DISREGARD PRINTS BEARING EARLIER REVISION DATES → 8/04/11 5/22/12 6/22/12 8/31/12

SHEET 31 OF 35

FILE => 29E0013-u-archdt07.dgn

USERNAME => s128843 DATE PLOTTED => 23-JUL-2013 TIME PLOTTED => 10:25

DIST	COUNTY	ROUTE	POST MILES TOTAL PROJECT	SHEET No	TOTAL SHEETS
10	SJ	4,5	Var	483	486

K. Harirsaz
REGISTERED CIVIL ENGINEER — DATE 8/31/12

7-22-13
PLANS APPROVAL DATE

REGISTERED PROFESSIONAL ENGINEER — KIANOUSH HARIRSAZ — No. C39591 — Exp. 12/31/13 — CIVIL — STATE OF CALIFORNIA

The State of California or its officers or agents shall not be responsible for the accuracy or completeness of electronic copies of this plan sheet.

SAN JOAQUIN COUNCIL OF GOVERNMENTS
555 E. WEBER AVENUE
STOCKTON, CA 95202

RAJAPPAN & MEYER CONSULTING ENGINEERS, INC.
1038 LEIGH AVE, SUITE 100
SAN JOSE, CA 95126

DERIVI CONSTRUCTION & ARCHITECTURE, INC.
924 N. YOSEMITE STREET
STOCKTON, CA 95203

PANEL LEGEND

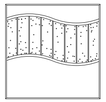
PANEL A1:
'LARGE WAVE-HORIZ'

PANEL A2:
'LARGE WAVE-VERT'

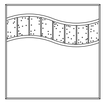
PANEL B1:
'SMALL WAVE-HORIZ'

PANEL B2:
'SMALL WAVE-VERT'

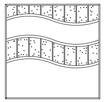
PANEL C1:
'TOP WAVE-HORIZ'

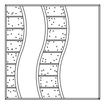
PANEL C2:
'TOP WAVE-VERT'

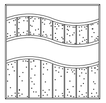
PANEL D1:
'BOTTOM WAVE-HORIZ'

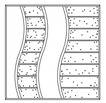
PANEL D2:
'BOTTOM WAVE-VERT'

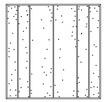
PANEL E1:
'VERT GROOVE-FULL'
TRANSITION AND BASE

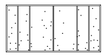
PANEL E2:
'VERT GROOVE-HALF'
BASE ONLY

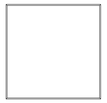
NO PATTERN
ABOVE PATTERN
AND ENDS OF WALL

GENERAL NOTES

1. EACH RETAINING WALL ELEVATION IS ELEVATED INDEPENDENTLY. SEE RETAINING WALL GENERAL PLANS FOR MORE INFORMATION.
2. WHERE NO PATTERN SHOWN ASSUME NO TREATMENT.

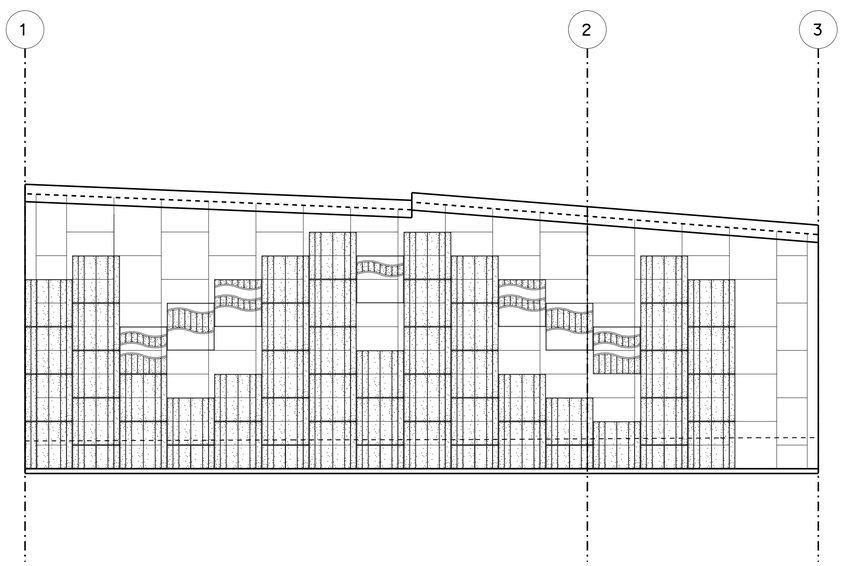

NOTE:
THE CONTRACTOR SHALL VERIFY ALL CONTROLLING FIELD DIMENSIONS BEFORE ORDERING OR FABRICATING ANY MATERIAL

THIS PLAN ACCURATE FOR MSE WALL AESTHETIC TREATMENTS ONLY

Reza Erfanian
DESIGN OVERSIGHT — Reza Erfanian
12/19/12
SIGN OFF DATE

	BY	CHECKED
DESIGN	S. Desalegn	A. Wang
DETAILS	S. Desalegn	A. Wang
QUANTITIES	S. Desalegn	A. Wang

PREPARED FOR THE STATE OF CALIFORNIA DEPARTMENT OF TRANSPORTATION

K. Harirsaz
PROJECT ENGINEER

BRIDGE NO. 29E0011 29E0012 29E0013
POST MILES T14.72 T14.68 T14.82

RETAINING WALL No. 3 (MSE)
ARCHITECTURAL DETAILS No. 1

DESIGN DETAIL SHEET (ENGLISH) (REV.7/16/10)

ORIGINAL SCALE IN INCHES FOR REDUCED PLANS 0 1 2 3

UNIT: 1455
PROJECT NUMBER & PHASE: 10000002291
CONTRACT NO.: 10-0S1101

DISREGARD PRINTS BEARING EARLIER REVISION DATES → REVISION DATES 8/04/11 5/22/12 6/22/12 8/31/12

SHEET 32 OF 35

FILE => 29E0013-u-archdt08.dgn

USERNAME => s128843 DATE PLOTTED => 23-JUL-2013 TIME PLOTTED => 10:25

DIST	COUNTY	ROUTE	POST MILES TOTAL PROJECT	SHEET No	TOTAL SHEETS
10	SJ	4,5	Var	484	486

REGISTERED CIVIL ENGINEER — DATE 6/22/12

7-22-13
PLANS APPROVAL DATE

REGISTERED PROFESSIONAL ENGINEER — KIANOUSH HARIRSAZ — No. C39591 — Exp. 12/31/13 — CIVIL — STATE OF CALIFORNIA

The State of California or its officers or agents shall not be responsible for the accuracy or completeness of electronic copies of this plan sheet.

SAN JOAQUIN COUNCIL OF GOVERNMENTS
555 E. WEBER AVENUE
STOCKTON, CA 95202

RAJAPPAN & MEYER
CONSULTING ENGINEERS, INC.
1038 LEIGH AVE, SUITE 100
SAN JOSE, CA 95126

DERIVI CONSTRUCTION & ARCHITECTURE, INC.
924 N. YOSEMITE STREET
STOCKTON, CA 95203

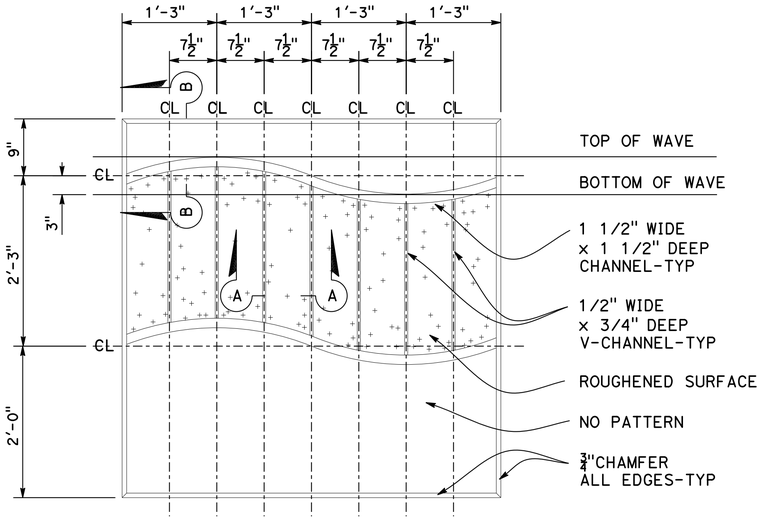

PANEL A1: 'LARGE WAVE-HORIZ'

PANEL A2 SIM: 'LARGE WAVE-VERT'
ROTATE PATTERN 90 DEGREES
COUNTERCLOCKWISE

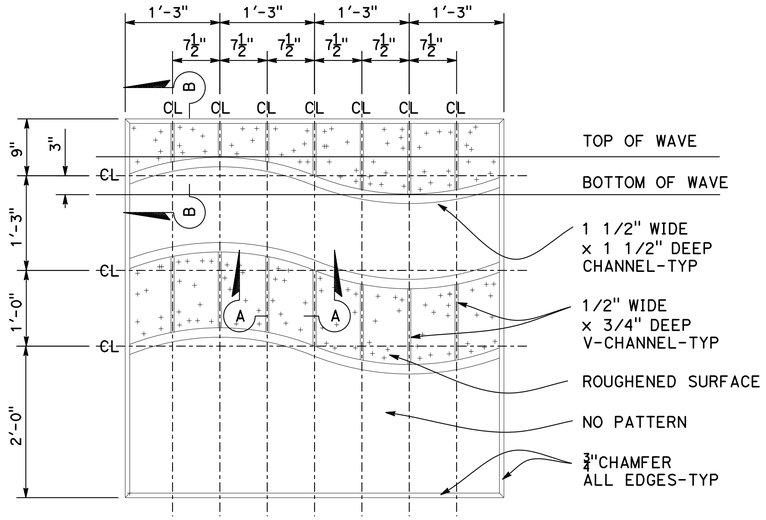

PANEL C1: 'TOP WAVE-HORIZ'

PANEL C2 SIM: 'TOP WAVE-VERT'
ROTATE PATTERN 90 DEGREES
COUNTERCLOCKWISE

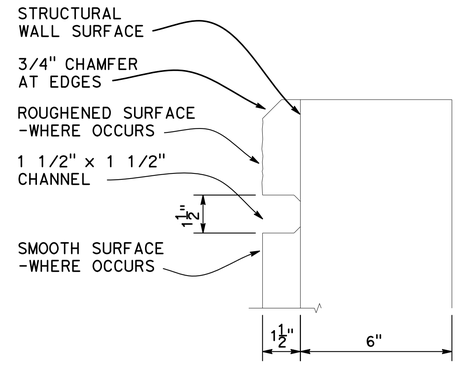

VIEW B-B (SECTION)

SCALE: 4" = 1'

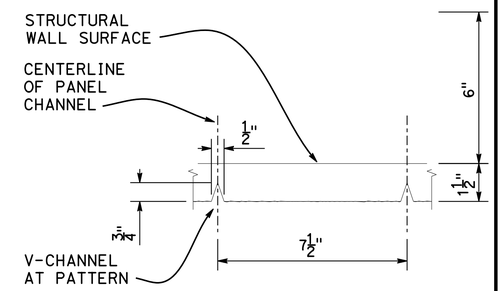

VIEW A-A (PANEL PATTERN)

SCALE: 4" = 1'

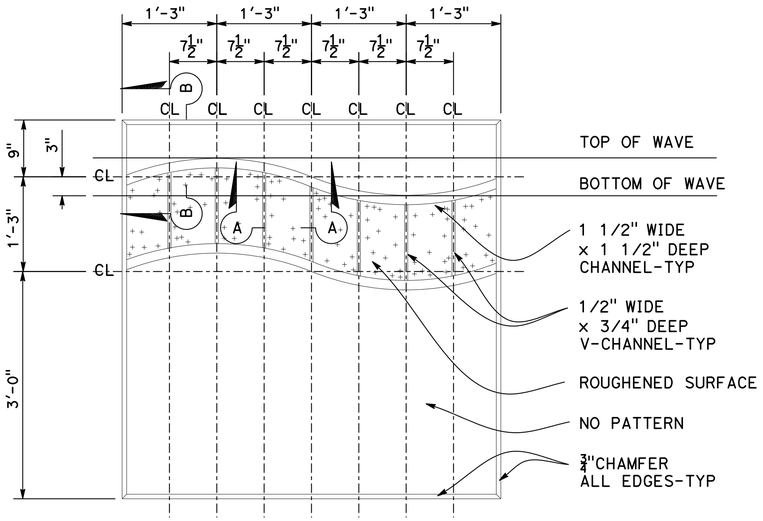

PANEL B1: 'SMALL WAVE-HORIZ'

PANEL B2 SIM: 'SMALL WAVE-VERT'
ROTATE PATTERN 90 DEGREES
COUNTERCLOCKWISE

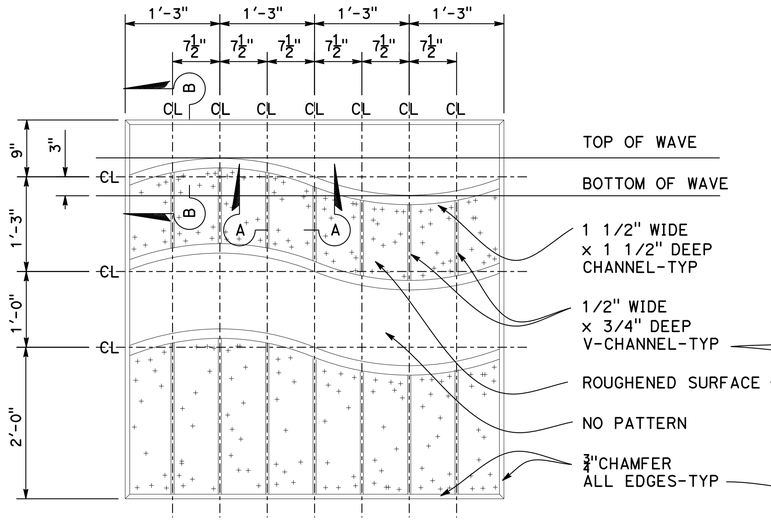

PANEL D1: 'BOTTOM WAVE-HORIZ'

PANEL D2 SIM: 'BOTTOM WAVE-VERT'
ROTATE PATTERN 90 DEGREES
COUNTERCLOCKWISE

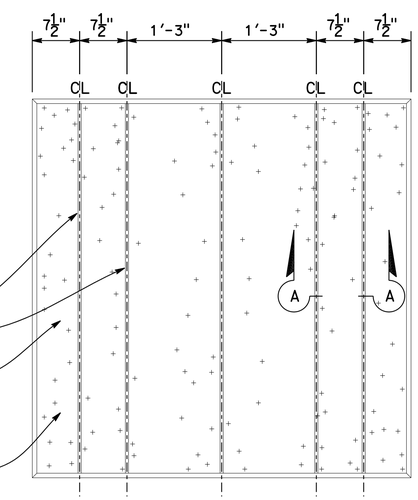

PANEL E1: 'VERT GROOVE-FULL'

PANEL E2 SIM: 'VERT GROOVE-HALF'
PANEL HALF HEIGHT OF FULL PANEL

GENERAL NOTES

1. EACH RETAINING WALL ELEVATION IS ELEVATED INDEPENDENTLY. SEE RETAINING WALL GENERAL PLANS FOR MORE INFORMATION.
2. WHERE NO PATTERN SHOWN ASSUME NO TREATMENT.

NOTE:
THE CONTRACTOR SHALL VERIFY ALL CONTROLLING FIELD DIMENSIONS BEFORE ORDERING OR FABRICATING ANY MATERIAL

THIS PLAN ACCURATE FOR MSE WALL AESTHETIC TREATMENTS ONLY

Reza Erfanian
DESIGN OVERSIGHT — Reza Erfanian
12/19/12
SIGN OFF DATE

	BY	CHECKED
DESIGN	S. Desalegn	A. Wang
DETAILS	S. Desalegn	A. Wang
QUANTITIES	S. Desalegn	A. Wang

PREPARED FOR THE
STATE OF CALIFORNIA
DEPARTMENT OF TRANSPORTATION

K. Harirsaz
PROJECT ENGINEER

BRIDGE NO. 29E0011 29E0012 29E0013
POST MILES T14.72 T14.68 T14.82

RETAINING WALL No. 1, 2 & 3 (MSE)
ARCHITECTURAL DETAILS

DESIGN DETAIL SHEET (ENGLISH) (REV.7/16/10)

ORIGINAL SCALE IN INCHES FOR REDUCED PLANS 0 1 2 3

UNIT: 1455
PROJECT NUMBER & PHASE: 10000002291
CONTRACT NO.: 10-0S1101

DISREGARD PRINTS BEARING EARLIER REVISION DATES

REVISION DATES: ~~8/01/11~~ 5/22/12 6/22/12

SHEET 33 OF 35

FILE => 29E0013-u-archdt09.dgn

USERNAME => s128643 DATE PLOTTED => 23-JUL-2013 TIME PLOTTED => 10:26

DIST	COUNTY	ROUTE	POST MILES TOTAL PROJECT	SHEET No	TOTAL SHEETS
10	SJ	4,5	Var	485	486

REGISTERED CIVIL ENGINEER 4/29/13 DATE

7-22-13
PLANS APPROVAL DATE

REGISTERED PROFESSIONAL ENGINEER Carl Henderson No. 2886 Exp. 6/30/2013 GEOTECHNICAL STATE OF CALIFORNIA

The State of California or its officers or agents shall not be responsible for the accuracy or completeness of electronic copies of this plan sheet.

Kleinfelder, Inc.
2001 Arch-Airport Rd., Suite 100
Stockton, CA. 95206

San Joaquin Council of Governments
555 E. Weber Avenue
Stockton, CA. 95202

This LOTB sheet was prepared in accordance with the Caltrans soil and rock logging, classification, and manual (2010) presentation

The horizontal coordinates values are in the California Coordinate System (CCS 83) Zone 3, Epoch Date 2007.00, in U.S. survey feet.

The vertical control values are based on the North American Vertical Datum of 1988 (NAVD88) in in U.S. survey feet, height modernization survey station, (2007.00) and GEOID03 was used for the adjustment.

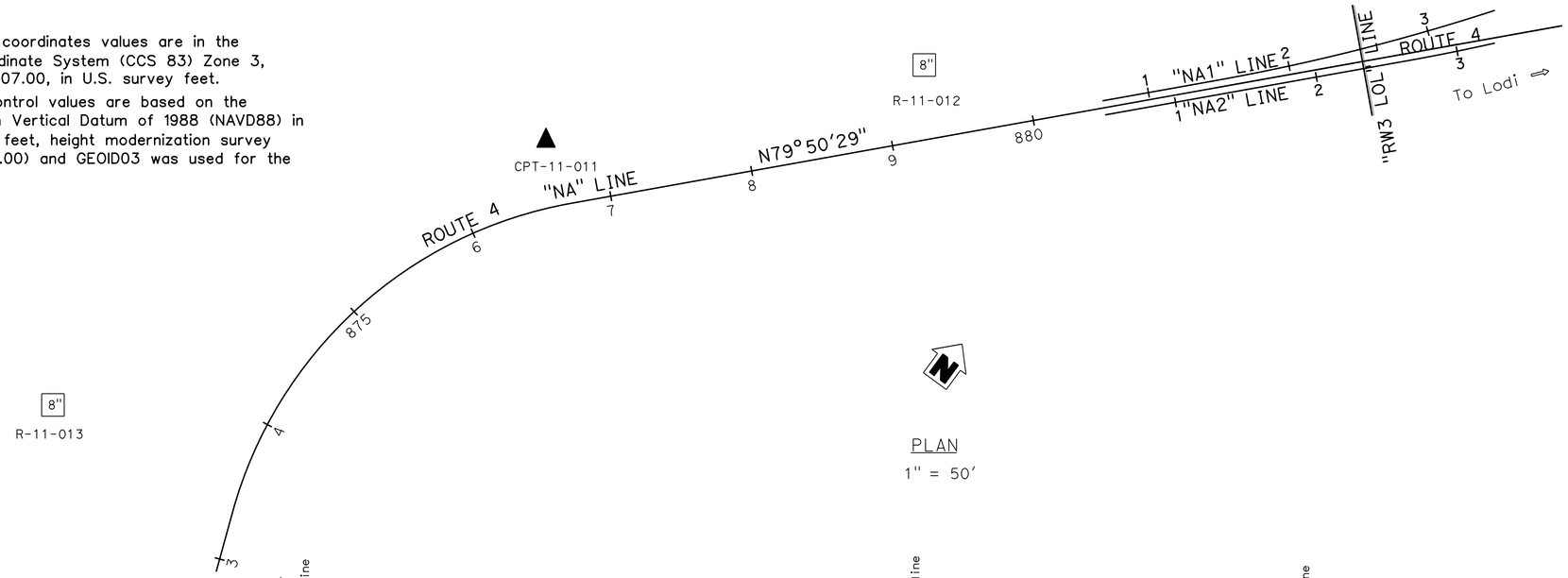

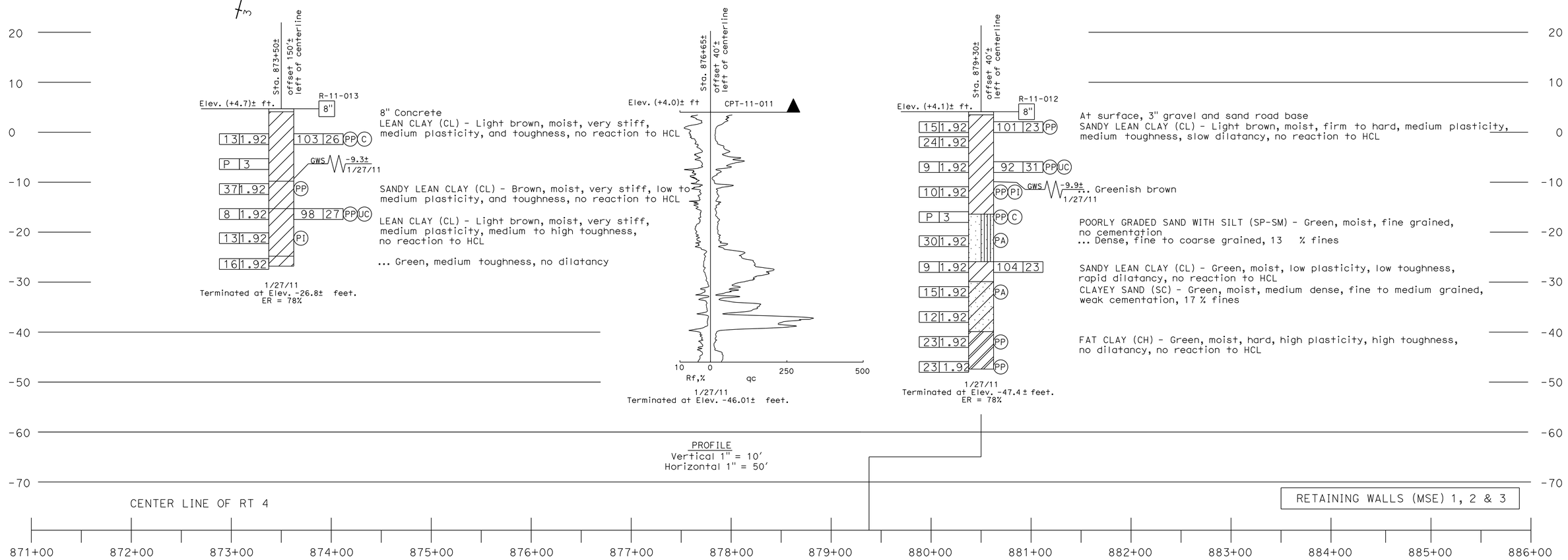

Reza Erfanian
DESIGN OVERSIGHT Reza Erfanian
5-10-13
SIGN OFF DATE

DRAWN BY G. GOMEZ
CHECKED BY C. HENDERSON

M. Shubert
FIELD INVESTIGATION BY:
DATE: January, 2011

PREPARED FOR THE STATE OF CALIFORNIA DEPARTMENT OF TRANSPORTATION

H. PARSA
PROJECT ENGINEER

BRIDGE NO.
POST MILES

RETAINING WALLS No. 1, 2 ,AND 3 (MSE)
LOG OF TEST BORINGS 1 OF 2

ORIGINAL SCALE IN INCHES FOR REDUCED PLANS 0 1 2 3

UNIT: 1454
PROJECT NUMBER & PHASE: 1000020414 CONTRACT NO.: X

DISREGARD PRINTS BEARING EARLIER REVISION DATES

REVISION DATES 5/24/12 8/15/12 8/23/12 4/29/13

SHEET 34 OF 35

FILE => 29E0013-z-1tb01.dgn

USERNAME => S12884 3 DATE PLOTTED => 23-JUL-2013 TIME PLOTTED => 10:26

DIST	COUNTY	ROUTE	POST MILES TOTAL PROJECT	SHEET No	TOTAL SHEETS
10	SJ	4,5	Var	486	486

REGISTERED CIVIL ENGINEER 4/29/13 DATE

7-22-13
PLANS APPROVAL DATE

REGISTERED PROFESSIONAL ENGINEER Carl Henderson No. 2886 Exp. 6/30/2013 GEOTECHNICAL STATE OF CALIFORNIA

The State of California or its officers or agents shall not be responsible for the accuracy or completeness of electronic copies of this plan sheet.

Kleinfelder, Inc.
2001 Arch-Airport Rd., Suite 100
Stockton, CA. 95206

San Joaquin Council of Governments
555 E. Weber Avenue
Stockton, CA. 95202

This LOTB sheet was prepared in accordance with the Caltrans soil and rock logging, classification, and manual (2010) presentation

The horizontal coordinates values are in the California Coordinate System (CCS 83) Zone 3, Epoch Date 2007.00, in U.S. survey feet.

The vertical control values are based on the North American Vertical Datum of 1988 (NAVD88) in in U.S. survey feet, height modernization survey station, (2007.00) and GEOID03 was used for the adjustment.

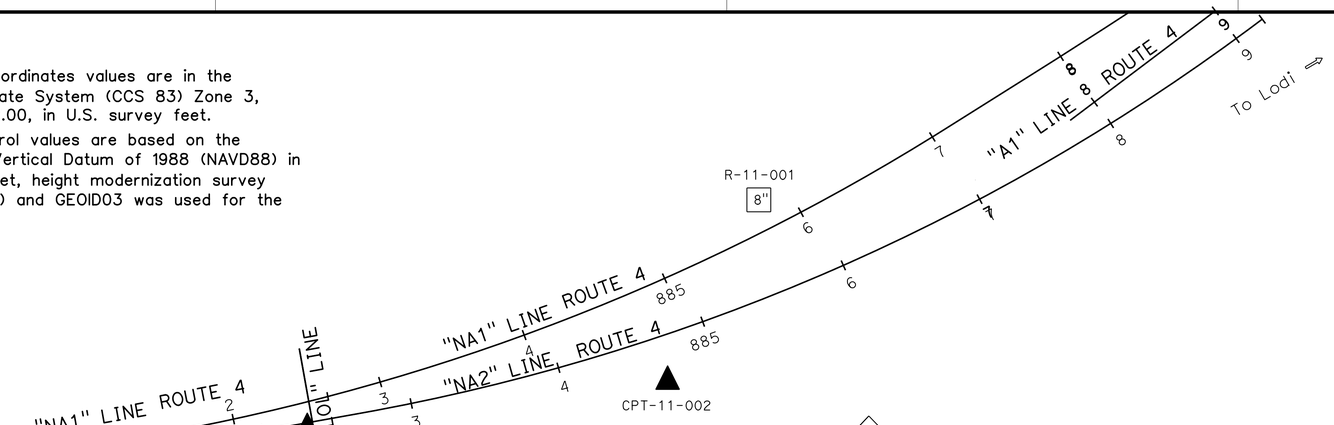

PLAN
1" = 50'

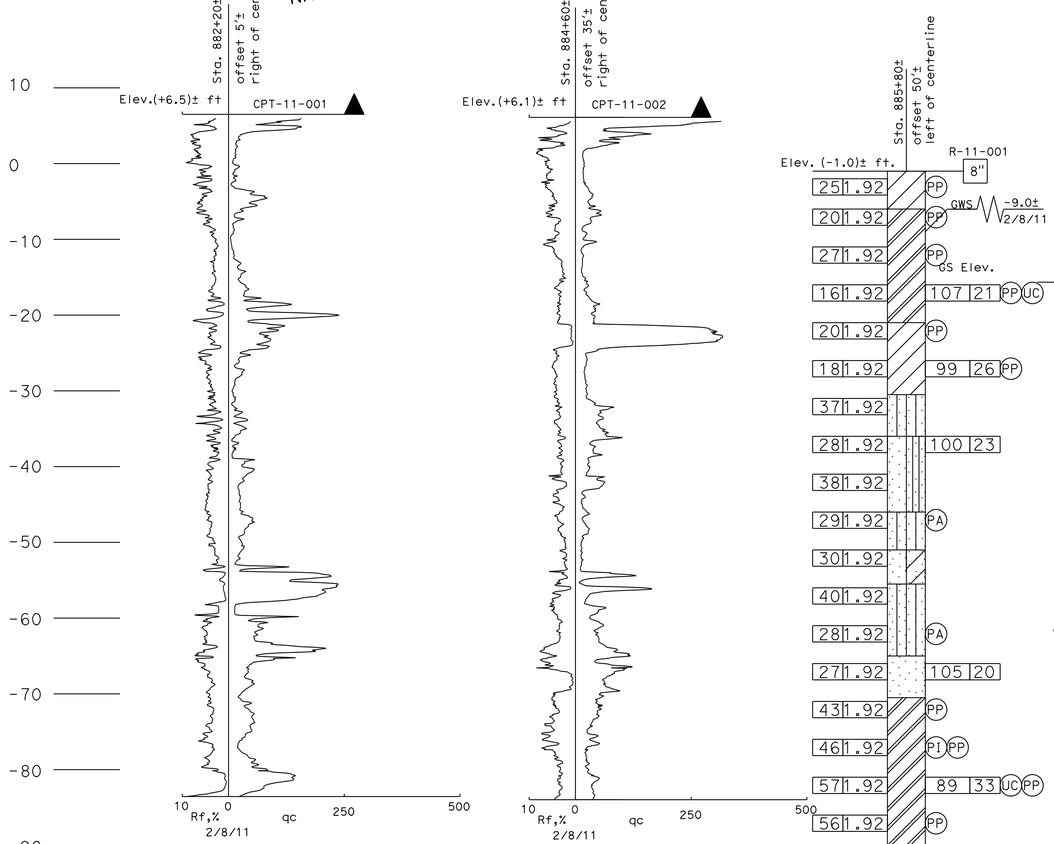

LEAN CLAY (CL) - Light brown, moist, very stiff, medium to high plasticity, high toughness, no dilatancy

FAT CLAY (CH) - Brown, moist, hard, high plasticity, high toughness, no dilatancy

... With fine sand

... No sand

LEAN CLAY (CL) - Brown, moist, hard, medium to high plasticity, medium toughness, no dilatancy

... Green, high plasticity

SILTY SAND (SM) - Green, moist, medium dense, fine to medium grained, low cementation, 20 % fines

POORLY GRADED SAND WITH SILT (SP-SM) - Green, moist, medium dense, fine to medium grained, weak cementation, 10 % fines

... About 15 % Fines, dense

SILTY SAND (SM) - Greenish gray, moist, medium dense, fine to medium grained, 18 % fines

POORLY GRADED SAND WITH CLAY (SP-SC) - Green, moist, dense, fine to medium grained, weak cementation, 10 % fines

SILTY SAND (SM) - Green, moist, dense, fine to medium grained, weak to medium cementation, 30 % fines, no plasticity

... 45 % Fines

POORLY GRADED SAND (SM) - Green, moist, medium dense, fine to medium grained, no cementation, 5 % fines

FAT CLAY (CH) - Green, moist, hard, high plasticity, medium toughness, no dilatancy

PROFILE
Vertical 1" = 10'
Horizontal 1" = 50'

RETAINING WALLS (MSE) 1,2 & 3

DESIGN OVERSIGHT Reza Erfanian 5-10-13 SIGN OFF DATE	DRAWN BY G. GOMEZ	M. Shubert FIELD INVESTIGATION BY:	PREPARED FOR THE STATE OF CALIFORNIA DEPARTMENT OF TRANSPORTATION
	CHECKED BY C. HENDERSON	DATE: February, 2011	H. PARSA PROJECT ENGINEER

BRIDGE NO.
POST MILES

RETAINING WALLS No. 1, 2, AND 3 (MSE)
LOG OF TEST BORINGS 2 OF 2

ORIGINAL SCALE IN INCHES FOR REDUCED PLANS 0 1 2 3

UNIT: 1454
PROJECT NUMBER & PHASE: 1000020414 CONTRACT NO.: X

DISREGARD PRINTS BEARING EARLIER REVISION DATES

REVISION DATES 5/24/12 8/16/12 8/23/12 4/29/13

SHEET 35 OF 35

FILE => 29E0013-z-lltb02.dgn

USERNAME => s128843 DATE PLOTTED => 23-JUL-2013 TIME PLOTTED => 10:26