NOTE: FOR ACCURATE RIGHT OF WAY AND ACCESS DATA, CONTACT RIGHT OF WAY ENGINEERING AT THE DISTRICT OFFICE.

Dist	COUNTY	ROUTE	POST MILES TOTAL PROJECT	SHEET No.	TOTAL SHEETS
10	SJ	205	1.9/R7.9	38	248

REGISTERED CIVIL ENGINEER 08-04-09 DATE

1-4-10
PLANS APPROVAL DATE

REGISTERED PROFESSIONAL ENGINEER MARTHA M DADALA No. C66275 Exp. 06/30/10 CIVIL STATE OF CALIFORNIA

THE STATE OF CALIFORNIA OR ITS OFFICERS OR AGENTS SHALL NOT BE RESPONSIBLE FOR THE ACCURACY OR COMPLETENESS OF SCANNED COPIES OF THIS PLAN SHEET.

RAJAPPAN & MEYER
CONSULTING ENGINEERS INC.
1038 LEIGH AVE, SUITE 100
SAN JOSE, CA 95126

SJCOG
555 E. WEBER AVE.
STOCKTON, CA 95202-2804

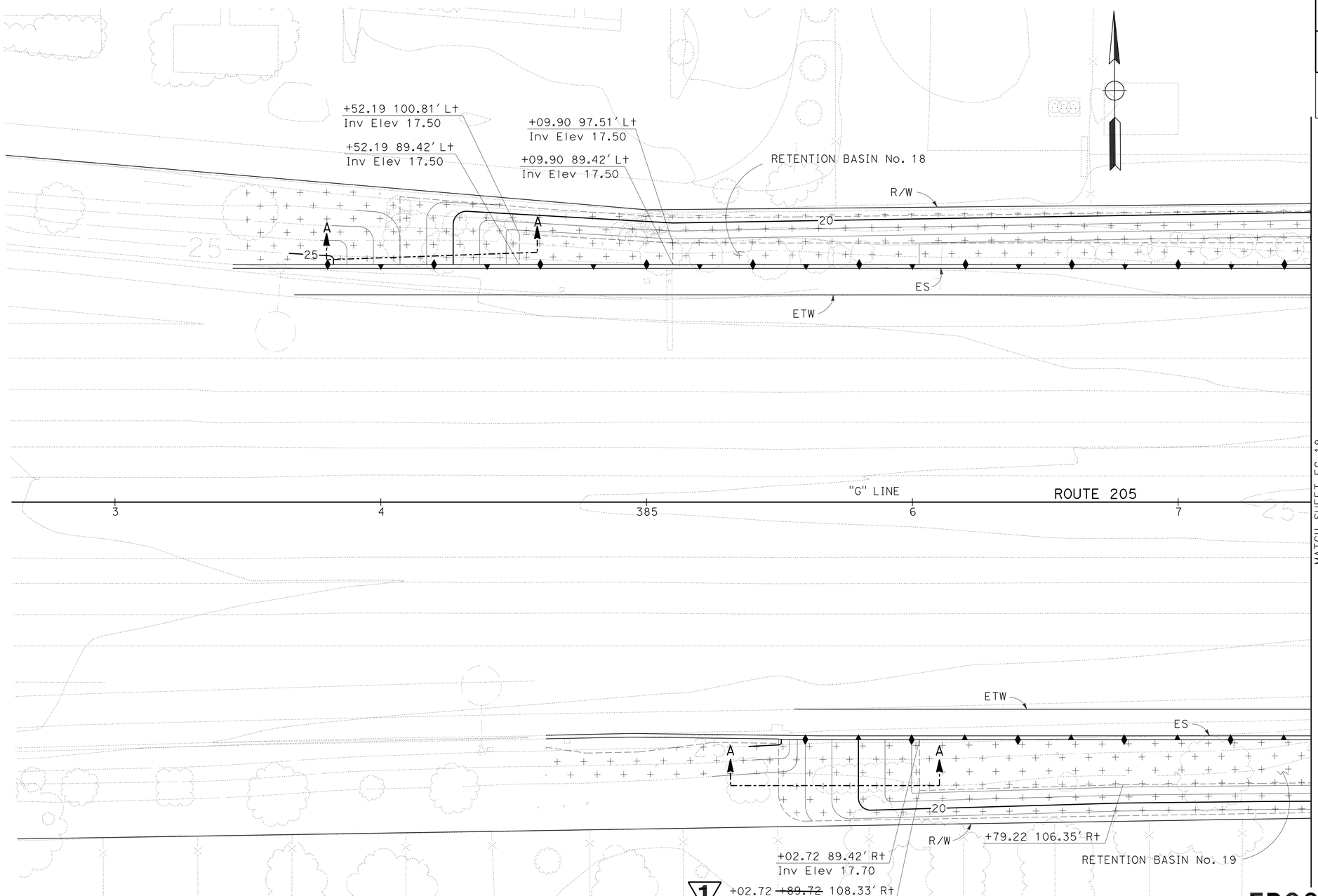

EROSION CONTROL AND CONTOUR GRADING PLAN
(LOCATION 4)

SCALE: 1" = 20'

EC-17

1 **REVISED PER ADDENDUM No. 1 DATED MAY 26, 2010**

THIS PLAN ACCURATE FOR EROSION CONTROL AND CONTOUR GRADING WORK ONLY

REVISED BY	DATE REVISED

CALCULATED-DESIGNED BY	PRAVEEN CHILAKAPATI
CHECKED BY	ZIAD DWEIRI
CONSULTANT FUNCTIONAL SUPERVISOR	JIRI VITEK

STATE OF CALIFORNIA - DEPARTMENT OF TRANSPORTATION
Caltrans

LAST REVISION 09-08-09 | DATE PLOTTED => 24-MAY-2010 | TIME PLOTTED => 09:26

Dist	COUNTY	ROUTE	POST MILES TOTAL PROJECT	SHEET No.	TOTAL SHEETS
10	SJ	205	1.9/R7.9	167	248

REGISTERED CIVIL ENGINEER 08-04-09 DATE

1-4-10
PLANS APPROVAL DATE

REGISTERED PROFESSIONAL ENGINEER MARTHA M DADALA No. C66275 Exp. 06/30/10 CIVIL STATE OF CALIFORNIA

THE STATE OF CALIFORNIA OR ITS OFFICERS OR AGENTS SHALL NOT BE RESPONSIBLE FOR THE ACCURACY OR COMPLETENESS OF SCANNED COPIES OF THIS PLAN SHEET.

RAJAPPAN & MEYER CONSULTING ENGINEERS INC.
1038 LEIGH AVE., SUITE 100
SAN JOSE, CA 95126

SJCOG
555 E. WEBER AVE.
STOCKTON, CA 95202-2804

NOTE:
SEE R-43 TO R-45 FOR TYPICAL SECTION @ DIFFERENT DESIGN HEIGHT (H)

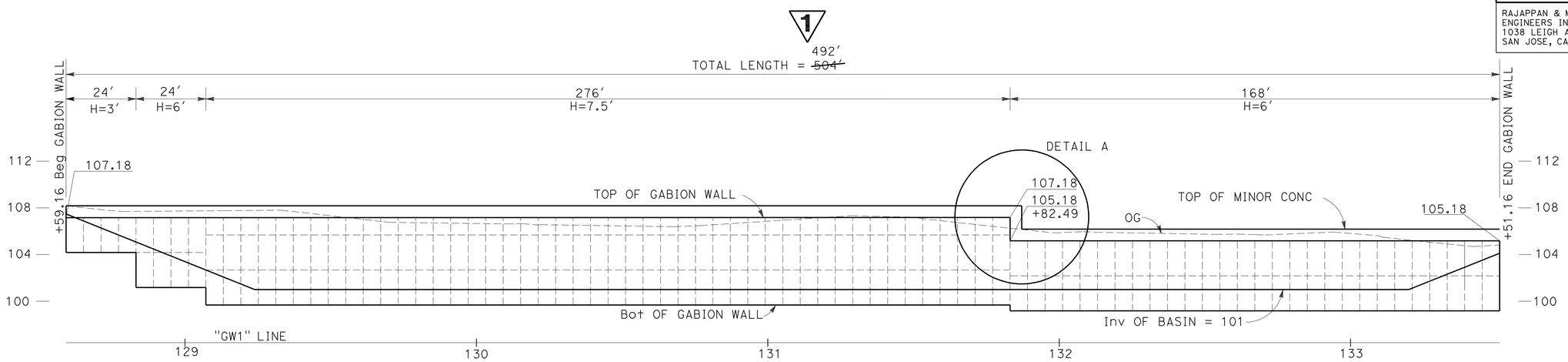

ELEVATION
SCALE: Horiz 1" = 20'
Vert 1" = 5'

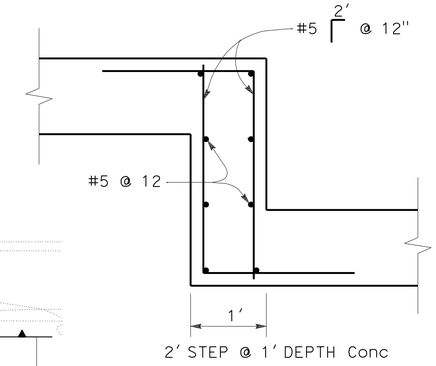

DETAIL A
NO SCALE

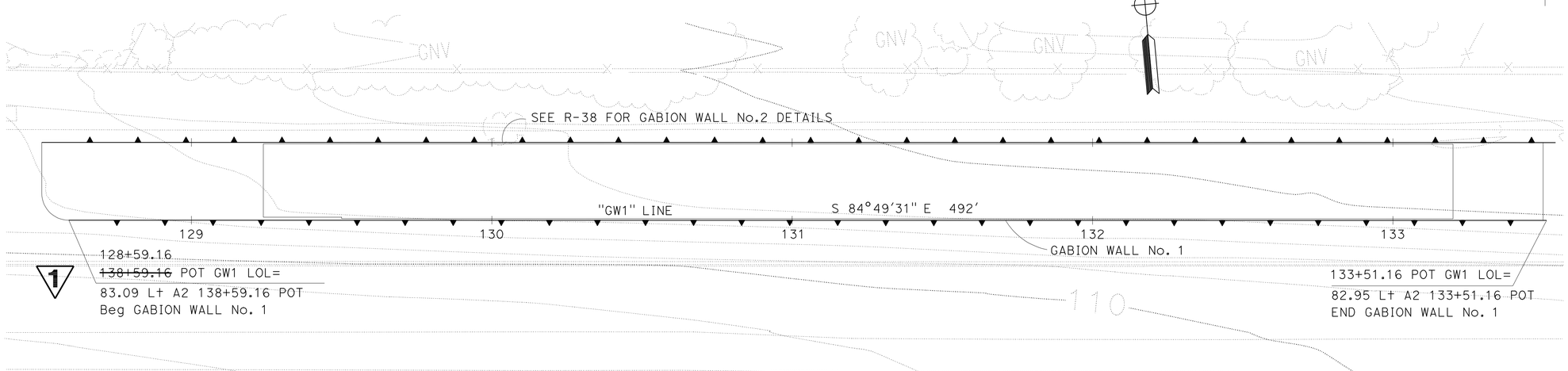

PLAN
SCALE: 1" = 20'

THIS PLAN ACCURATE FOR GABION WALL WORK ONLY

RETAINING WALL PLAN
(GABION WALL No. 1)
(LOCATION 1)

SCALE AS SHOWN

R-37

1 **REVISED PER ADDENDUM No. 1 DATED MAY 26, 2010**

REVISED BY | DATE REVISED
JOHN STANLEY | CHI WAI NG
CALCULATED-DESIGNED BY | CHECKED BY
CONSULTANT FUNCTIONAL SUPERVISOR: MARTHA DADALA
STATE OF CALIFORNIA - DEPARTMENT OF TRANSPORTATION
Caltrans

LAST REVISION 07-31-09 | DATE PLOTTED => 24-MAY-2010 | TIME PLOTTED => 09:26

Dist	COUNTY	ROUTE	POST MILES TOTAL PROJECT	SHEET No.	TOTAL SHEETS
10	SJ	205	1.9/R7.9	168	248

08-04-09
REGISTERED CIVIL ENGINEER DATE

1-4-10
PLANS APPROVAL DATE

REGISTERED PROFESSIONAL ENGINEER
MARTHA M DADALA
No. C66275
Exp. 06/30/10
CIVIL
STATE OF CALIFORNIA

THE STATE OF CALIFORNIA OR ITS OFFICERS OR AGENTS SHALL NOT BE RESPONSIBLE FOR THE ACCURACY OR COMPLETENESS OF SCANNED COPIES OF THIS PLAN SHEET.

RAJAPPAN & MEYER
CONSULTING ENGINEERS INC.
1038 LEIGH AVE, SUITE 100
SAN JOSE, CA 95126

SJCOG
555 E. WEBER AVE.
STOCKTON, CA 95202-2804

NOTE: SEE R-43 TO R-45 FOR THE TYPICAL SECTION @ DIFFERENT DESIGN HEIGHT (H)

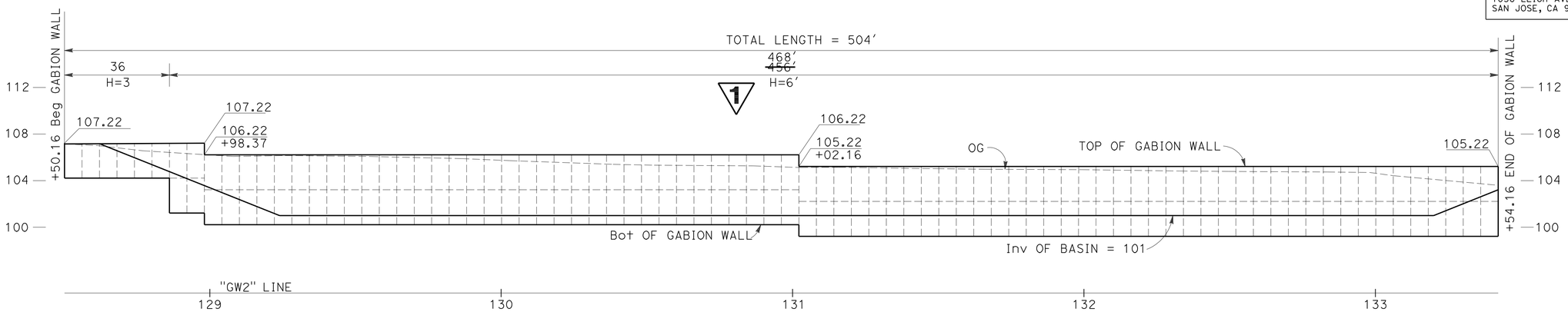

ELEVATION
SCALE: Horiz 1" = 20'
Vert 1" = 5'

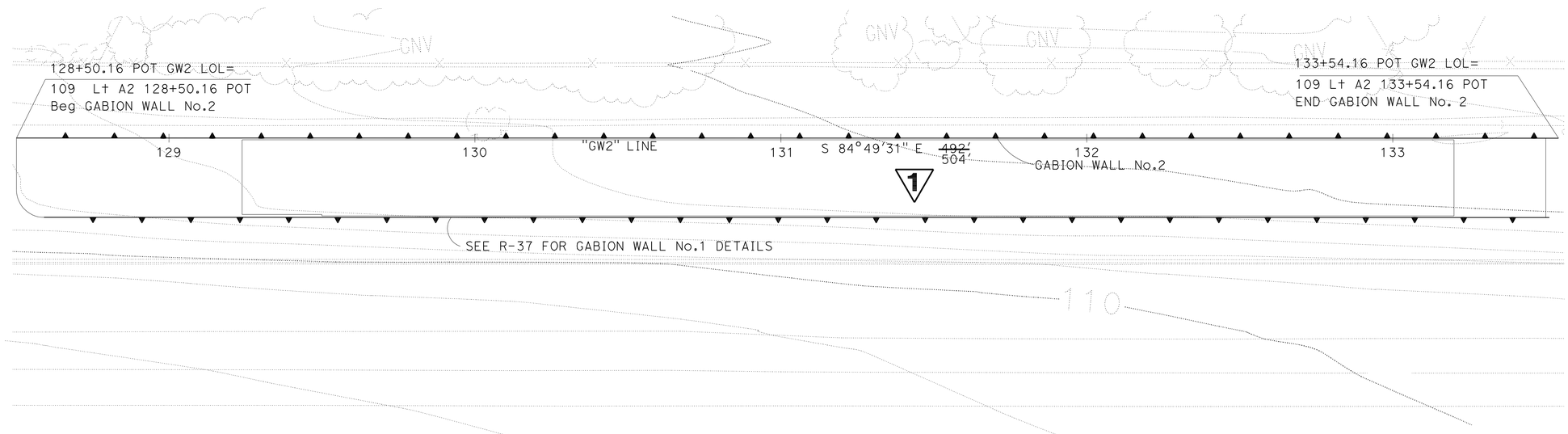

RETAINING WALL PLAN
(GABION WALL No. 2)
(LOCATION 1)

SCALE AS SHOWN

R-38

THIS PLAN ACCURATE FOR GABION WALL WORK ONLY

PLAN
SCALE: 1" = 20'

1 **REVISED PER ADDENDUM No. 1 DATED MAY 26, 2010**

REVISED BY | DATE REVISED
JOHN STANLEY | CHI WAI NG
CALCULATED-DESIGNED BY | CHECKED BY
CONSULTANT FUNCTIONAL SUPERVISOR: MARTHA DADALA
STATE OF CALIFORNIA - DEPARTMENT OF TRANSPORTATION
Caltrans

LAST REVISION 09-03-09 | DATE PLOTTED => 24-MAY-2010 | TIME PLOTTED => 09:55

Dist	COUNTY	ROUTE	POST MILES TOTAL PROJECT	SHEET No.	TOTAL SHEETS
10	SJ	205	1.9/R7.9	169	248

REGISTERED CIVIL ENGINEER 08-04-09 DATE

1-4-10
PLANS APPROVAL DATE

REGISTERED PROFESSIONAL ENGINEER MARTHA M DADALA No. C66275 Exp. 06/30/10 CIVIL STATE OF CALIFORNIA

THE STATE OF CALIFORNIA OR ITS OFFICERS OR AGENTS SHALL NOT BE RESPONSIBLE FOR THE ACCURACY OR COMPLETENESS OF SCANNED COPIES OF THIS PLAN SHEET.

RAJAPPAN & MEYER CONSULTING ENGINEERS INC.
1038 LEIGH AVE., SUITE 100
SAN JOSE, CA 95126

SJCOG
555 E. WEBER AVE.
STOCKTON, CA 95202-2804

NOTE: SEE R-43 to R-45 FOR THE TYPICAL SECTION @ DIFFERENT DESIGN HEIGHT (H)

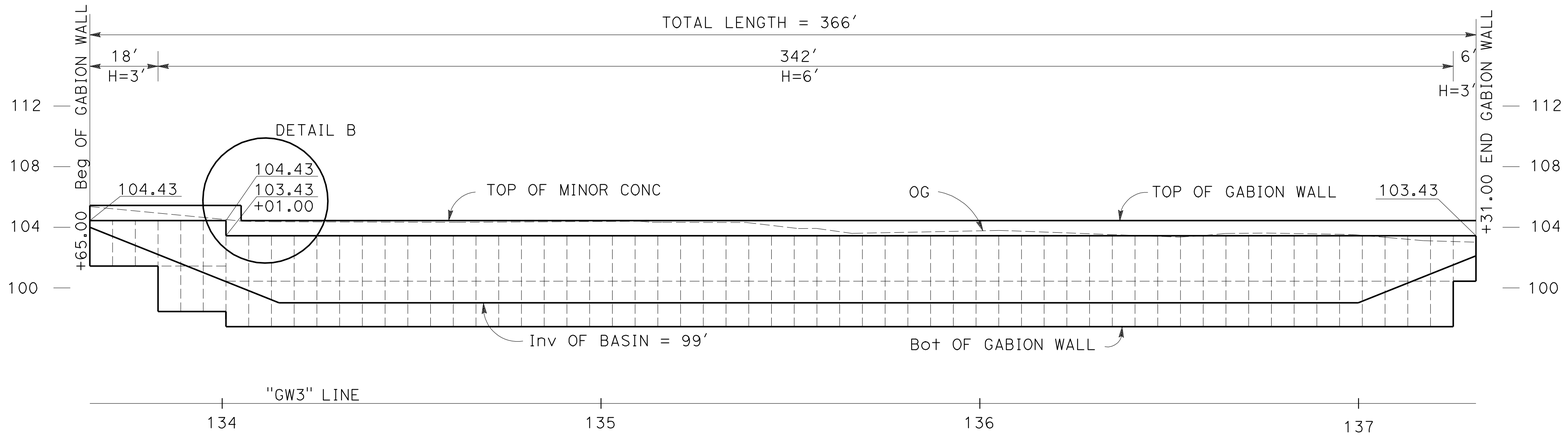

ELEVATION
SCALE: Horiz 1" = 20′
Vert 1" = 5′

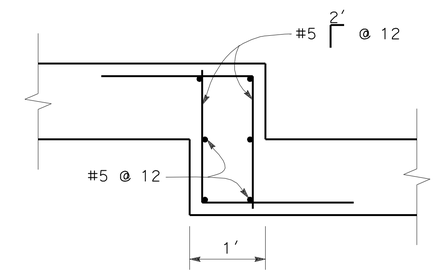

1′ STEP @ 1′ DEPTH Conc

DETAIL B
NO SCALE

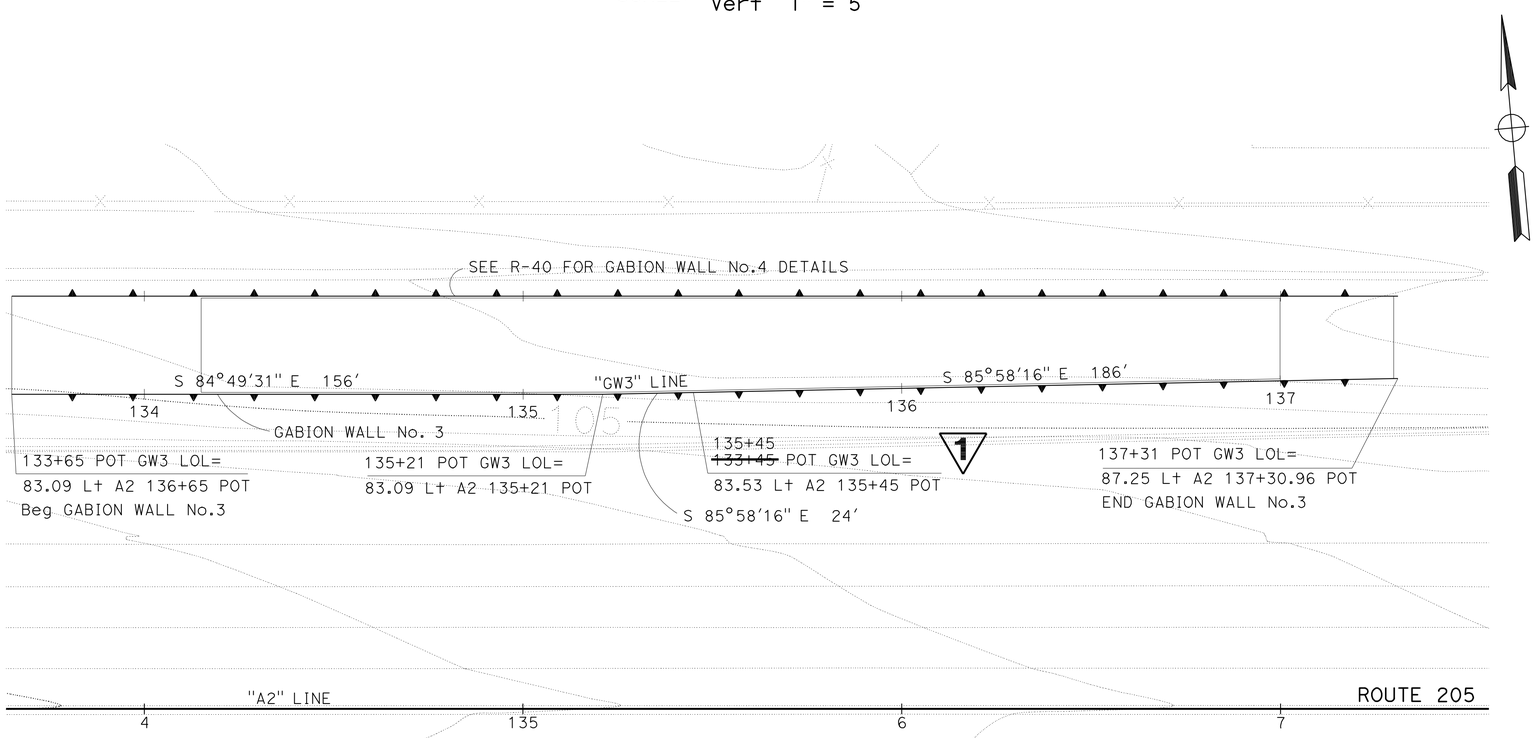

PLAN
SCALE: 1" = 20′

THIS PLAN ACCURATE FOR GABION WALL WORK ONLY

1 **REVISED PER ADDENDUM No. 1 DATED MAY 26, 2010**

RETAINING WALL PLAN (GABION WALL No. 3)
(LOCATION 1)
SCALE AS SHOWN

R-39

REVISED BY	DATE REVISED

JOHN STANLEY — CALCULATED-DESIGNED BY
CHI WAI NG — CHECKED BY
MARTHA DADALA — CONSULTANT FUNCTIONAL SUPERVISOR

STATE OF CALIFORNIA - DEPARTMENT OF TRANSPORTATION
Caltrans

LAST REVISION 07-31-09
DATE PLOTTED => 24-MAY-2010
TIME PLOTTED => 09:51

Dist	COUNTY	ROUTE	POST MILES TOTAL PROJECT	SHEET No.	TOTAL SHEETS
10	SJ	205	1.9/R7.9	170	248

REGISTERED CIVIL ENGINEER 08-04-09 DATE

1-4-10
PLANS APPROVAL DATE

REGISTERED PROFESSIONAL ENGINEER MARTHA M DADALA No. C66275 Exp. 06/30/10 CIVIL STATE OF CALIFORNIA

THE STATE OF CALIFORNIA OR ITS OFFICERS OR AGENTS SHALL NOT BE RESPONSIBLE FOR THE ACCURACY OR COMPLETENESS OF SCANNED COPIES OF THIS PLAN SHEET.

RAJAPPAN & MEYER CONSULTING ENGINEERS INC.
1038 LEIGH AVE., SUITE 100
SAN JOSE, CA 95126

SJCOG
555 E. WEBER AVE.
STOCKTON, CA 95202-2804

NOTE: SEE R-43 TO R-45 FOR THE TYPICAL SECTION @ DIFFERENT DESIGN HEIGHT (H)

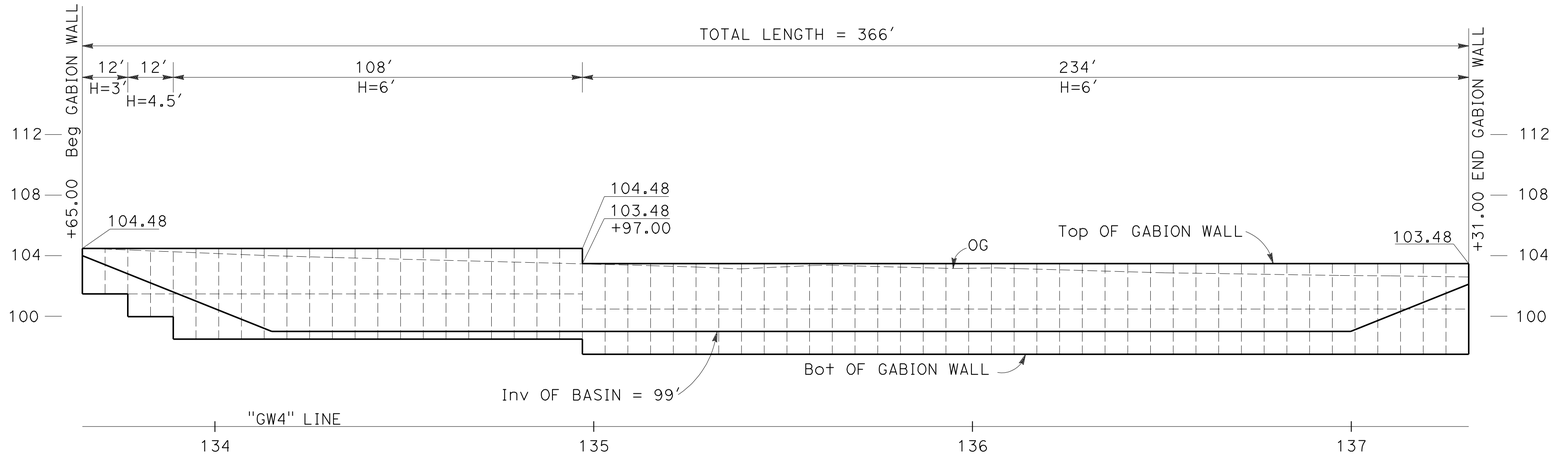

ELEVATION
SCALE: Horiz 1" = 20′
Vert 1" = 5′

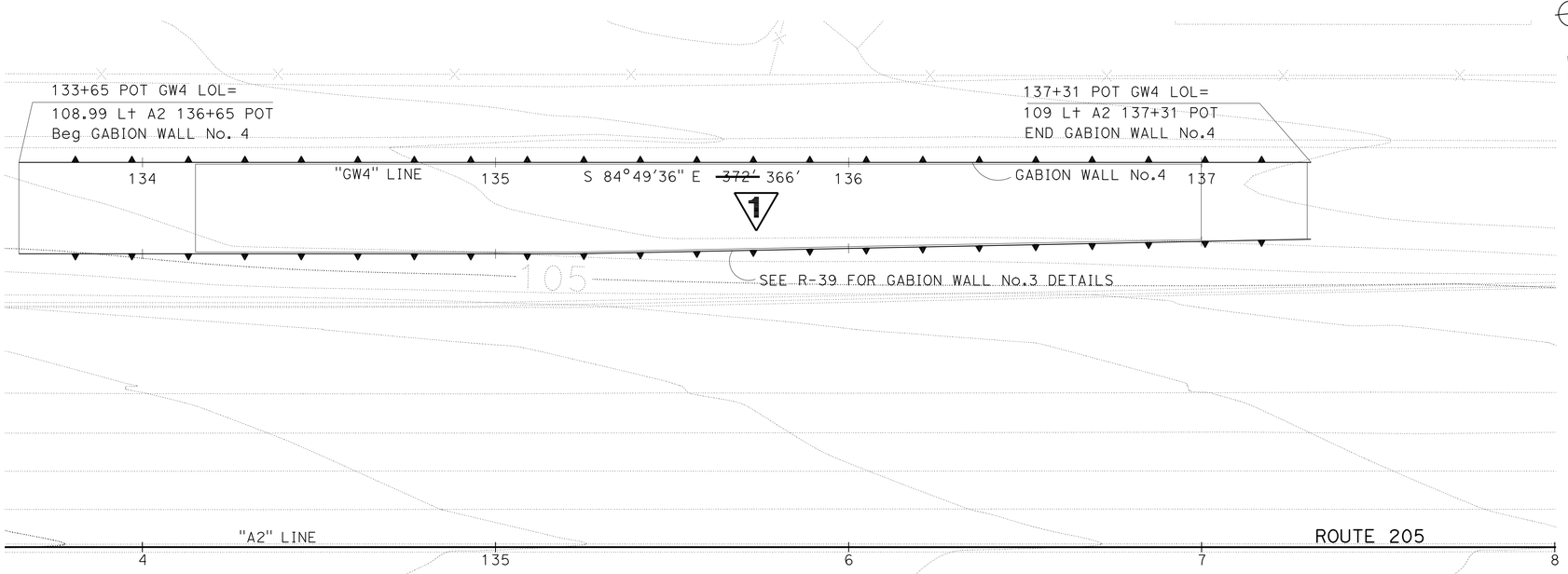

PLAN
SCALE: 1" = 20′

THIS PLAN ACCURATE FOR GABION WALL WORK ONLY

1 **REVISED PER ADDENDUM No. 1 DATED MAY 26, 2010**

RETAINING WALL PLAN
(GABION WALL No. 4)
(LOCATION 1)
SCALE AS SHOWN

R-40

REVISED BY	DATE REVISED
JOHN STANLEY	CHI WAI NG

CALCULATED-DESIGNED BY / CHECKED BY

CONSULTANT FUNCTIONAL SUPERVISOR: MARTHA DADALA

STATE OF CALIFORNIA - DEPARTMENT OF TRANSPORTATION
Caltrans

LAST REVISION 07-31-09
DATE PLOTTED => 24-MAY-2010
TIME PLOTTED => 09:52