Dist	COUNTY	ROUTE	POST MILES TOTAL PROJECT	SHEET No.	TOTAL SHEETS
10	Ama	88	46.9/R54.7	1	35

ACNHP-P088(066)E

STATE OF CALIFORNIA
DEPARTMENT OF TRANSPORTATION

PROJECT PLANS FOR CONSTRUCTION ON
STATE HIGHWAY

IN AMADOR COUNTY NEAR HAMS STATION FROM 0.9 MILE EAST OF CAT CREEK ROAD TO 0.1 MILE WEST OF FOSTER MEADOW ROAD

TO BE SUPPLEMENTED BY STANDARD PLANS DATED JULY 2010

INDEX OF PLANS

SHEET No.	DESCRIPTION
1	TITLE AND LOCATION MAP
2	TYPICAL CROSS SECTIONS
3	CONSTRUCTION DETAILS
4	DRAINAGE DETAILS AND QUANTITIES
5	UTILITY PLAN
6	CONSTRUCTION AREA SIGNS
7	PAVEMENT DELINEATION DETAILS
8-9	PAVEMENT DELINEATION QUANTITIES
10	SIGN DETAILS
11-14	SIGN QUANTITIES
15-17	SUMMARY OF QUANTITIES
18-35	REVISED STANDARD PLANS

THE STANDARD PLANS LIST APPLICABLE TO THIS CONTRACT IS INCLUDED IN THE NOTICE TO BIDDERS AND SPECIAL PROVISIONS BOOK.

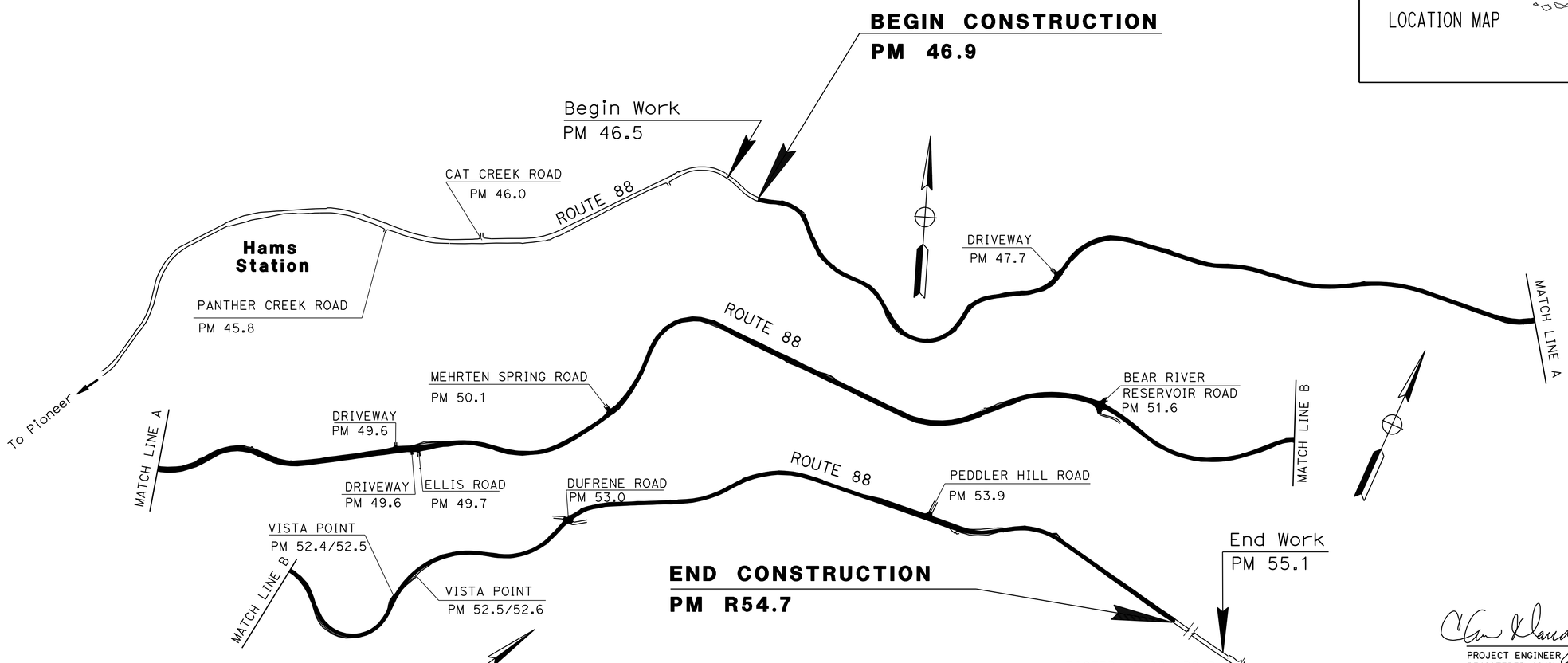

NO SCALE

PROJECT MANAGER: JES PADDA
DESIGN ENGINEER: CAROLINE REYES

PROJECT ENGINEER / REGISTERED CIVIL ENGINEER — DATE 1/16/15

REGISTERED PROFESSIONAL ENGINEER — Chin Dang — No. 77340 — Exp. 6/30/15 — CIVIL — STATE OF CALIFORNIA

January 20, 2015
PLANS APPROVAL DATE

THE STATE OF CALIFORNIA OR ITS OFFICERS OR AGENTS SHALL NOT BE RESPONSIBLE FOR THE ACCURACY OR COMPLETENESS OF SCANNED COPIES OF THIS PLAN SHEET.

THE CONTRACTOR SHALL POSSESS THE CLASS (OR CLASSES) OF LICENSE AS SPECIFIED IN THE "NOTICE TO BIDDERS."

CONTRACT No.	10-0Q2204
PROJECT ID	1000020647

LAST REVISION 01-20-15 — DATE PLOTTED => 12-MAR-2015 — TIME PLOTTED => 11:01

Dist	COUNTY	ROUTE	POST MILES TOTAL PROJECT	SHEET No.	TOTAL SHEETS
10	Ama	88	46.9/R54.7	2	35

REGISTERED CIVIL ENGINEER 1/16/15 DATE

1-20-15
PLANS APPROVAL DATE

REGISTERED PROFESSIONAL ENGINEER Chin Dang No. 77340 Exp. 6/30/15 CIVIL STATE OF CALIFORNIA

THE STATE OF CALIFORNIA OR ITS OFFICERS OR AGENTS SHALL NOT BE RESPONSIBLE FOR THE ACCURACY OR COMPLETENESS OF SCANNED COPIES OF THIS PLAN SHEET.

NOTES:

1. DIMENSIONS OF THE PAVEMENT STRUCTURES (STRUCTURAL SECTIONS) ARE SUBJECT TO TOLERANCES SPECIFIED IN THE STANDARD SPECIFICATIONS.
2. NO WORK WILL BE ALLOWED BEYOND THE EXISTING HINGE POINT (HP) UNLESS OTHERWISE SHOWN ON THE PLANS OR AS DIRECTED BY THE ENGINEER.
3. FOR DIKE REMOVAL AND PLACE HMA DIKE LOCATIONS, SEE SUMMARY OF QUANTITIES.
4. SEE CONSTRUCTION DETAIL SHEETS FOR COLD PLANE AND PAVING LIMITS.
5. FOR REPAIR FAILED AREA LOCATIONS AND DIMENSIONS, SEE SUMMARY OF QUANTITIES.
6. EXACT LIMITS OF REPAIR FAILED AREA LOCATIONS SHALL BE DETERMINED IN THE FIELD BY THE ENGINEER.
7. FOR REMOVAL OF GUARDRAIL AND MGS LIMITS, SEE SUMMARY OF QUANTITIES.

ABBREVIATIONS:

RHMA-G (BWC)	RUBBERIZED HOT MIX ASPHALT-GAP GRADED (BONDED WEARING COURSE)
HMA-A	HOT MIX ASPHALT (TYPE A)
SAMI-R	STRESS ABSORBING MEMBRANE INTERLAYER - RUBBERIZED (ASPHALT-RUBBER BINDER, PRECOATED SCREENINGS)
BWC	BONDED WEARING COURSE

PAVEMENT CLIMATE REGION

HIGH MOUNTAIN

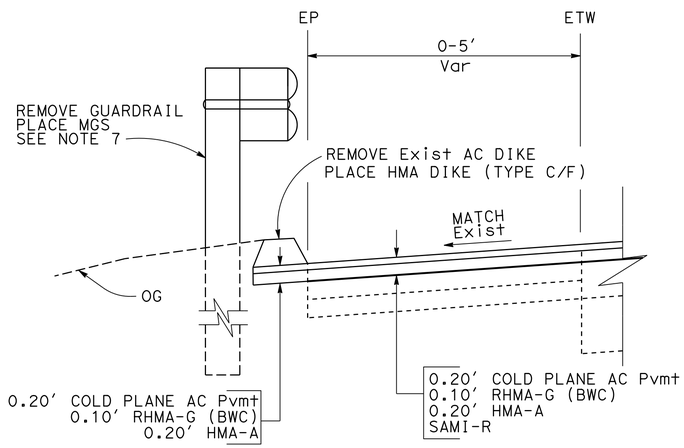

HMA DIKE AND MGS DETAIL

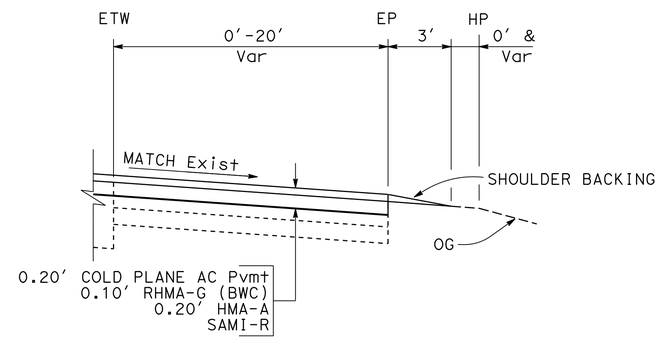

TURNOUT DETAIL

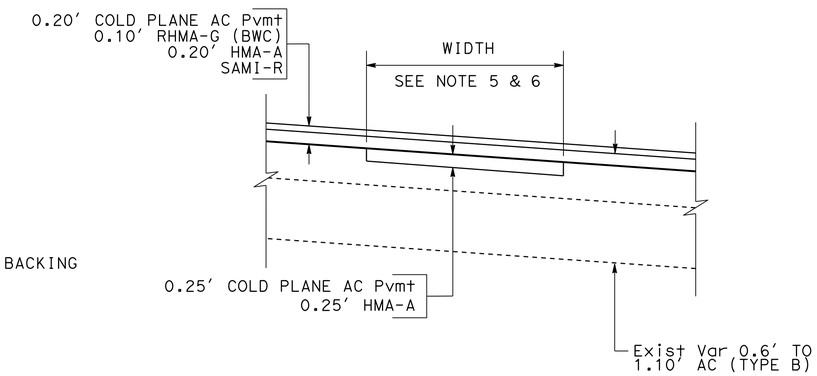

REPAIR FAILED AREA DETAIL

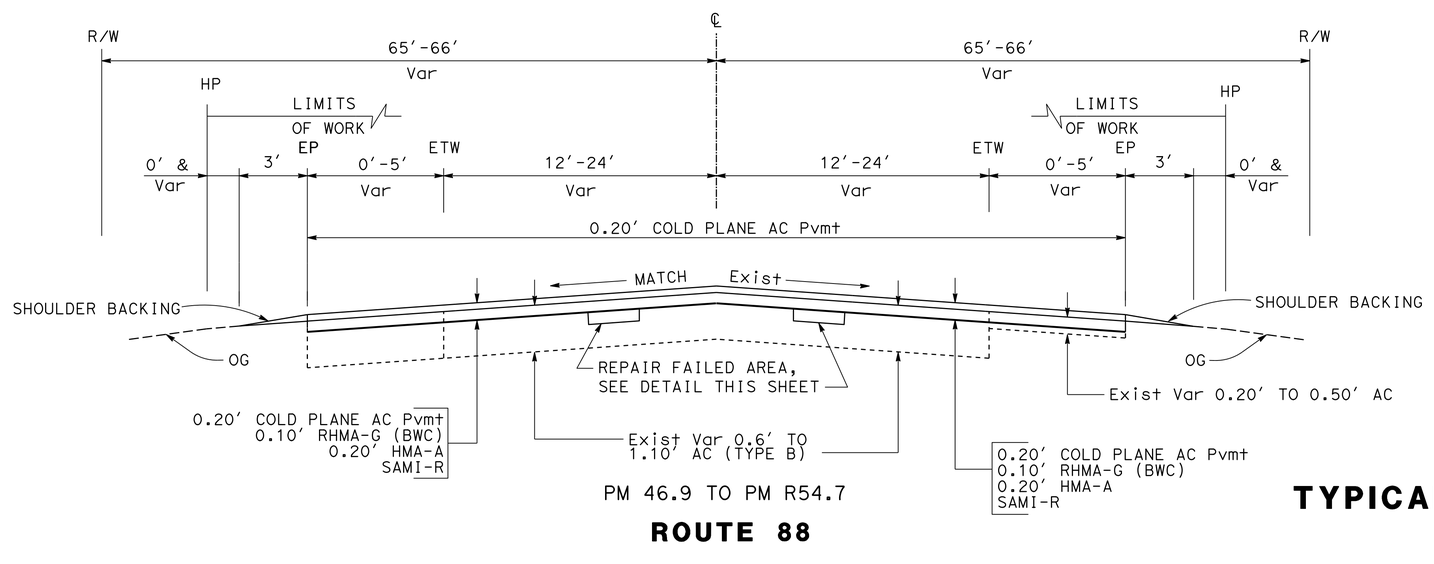

PM 46.9 TO PM R54.7

ROUTE 88

TYPICAL CROSS SECTIONS

NO SCALE

X-1

STATE OF CALIFORNIA - DEPARTMENT OF TRANSPORTATION

Caltrans® **DESIGN**

FUNCTIONAL SUPERVISOR: CAROLINE REYES

CALCULATED-DESIGNED BY: INGRID STEWART

CHECKED BY: CHIN DANG

REVISED BY: CD

DATE REVISED: 1/20/15

LAST REVISION 01-20-15

DATE PLOTTED => 27-JAN-2015
TIME PLOTTED => 11:52

Dist	COUNTY	ROUTE	POST MILES TOTAL PROJECT	SHEET No.	TOTAL SHEETS
10	Ama	88	46.9/R54.7	3	35

REGISTERED CIVIL ENGINEER 1/16/15 DATE

1-20-15
PLANS APPROVAL DATE

REGISTERED PROFESSIONAL ENGINEER Chin Dang No. 77340 Exp. 6/30/15 CIVIL STATE OF CALIFORNIA

THE STATE OF CALIFORNIA OR ITS OFFICERS OR AGENTS SHALL NOT BE RESPONSIBLE FOR THE ACCURACY OR COMPLETENESS OF SCANNED COPIES OF THIS PLAN SHEET.

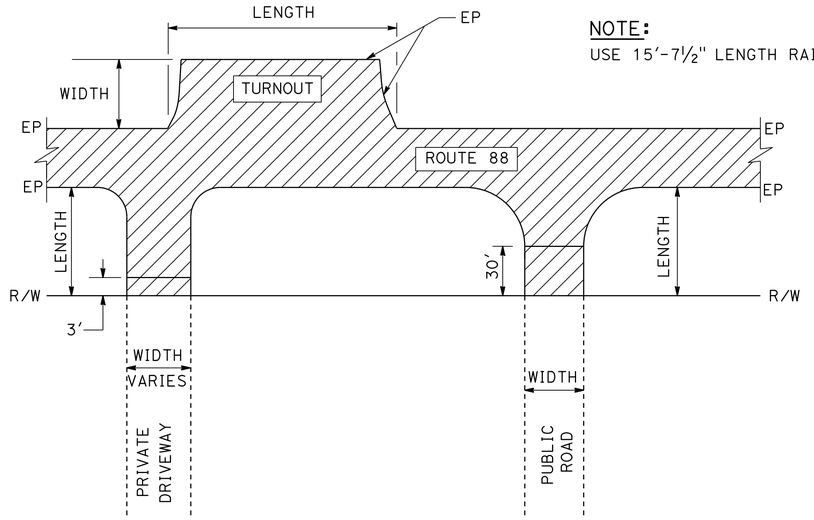

COLD PLANE AND PAVING LIMITS

NOTE:
USE 15'-7½" LENGTH RAIL.

ABBREVIATIONS:

RHMA-G (BWC)	RUBBERIZED HOT MIX ASPHALT-GAP GRADED (BONDED WEARING COURSE)
HMA-A	HOT MIX ASPHALT (TYPE A)
SAMI-R	STRESS ABSORBING MEMBRANE INTERLAYER - RUBBERIZED (ASPHALT-RUBBER BINDER, PRECOATED SCREENINGS)
BWC	BONDED WEARING COURSE

LEGEND:

- COLD PLANE AC PAVEMENT

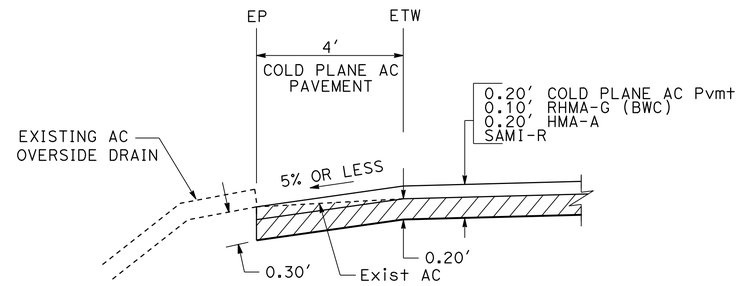

EXISTING OVERSIDE DRAIN CONFORM TAPER

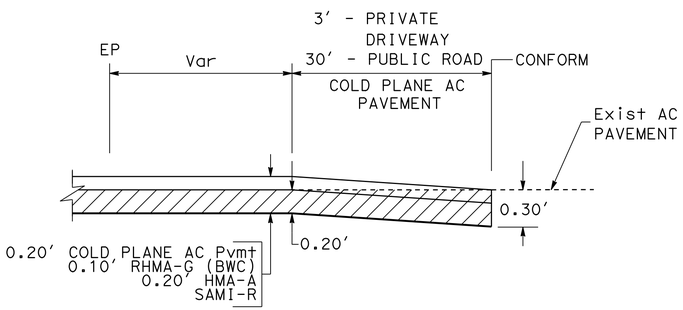

PUBLIC ROAD AND PRIVATE DRIVEWAY CONFORM TAPER

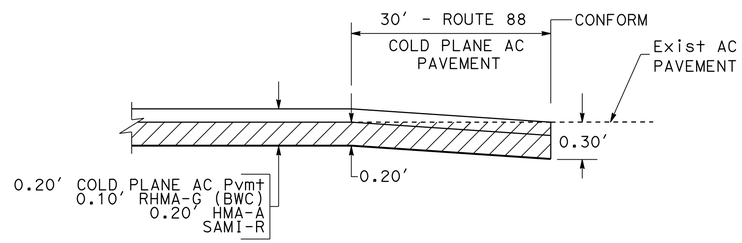

LONGITUDINAL CONFORM TAPER FOR EXISTING PAVEMENT AT BEGIN AND END CONSTRUCTION

COLD PLANE AND OVERLAY AT TURNOUTS, PUBLIC ROADS AND PRIVATE DRIVEWAYS

LOCATION	PM	SIDE	LENGTH	WIDTH
TURNOUTS	47.14/47.23	R+	492'	11'
	47.51/47.55	L+	230'	10'
	47.60/47.70	R+	545'	10'
	49.59/49.67	L+	417'	23'
	50.11/50.20	R+	509'	15'
	50.53/50.64	R+	567'	12'
	50.79/50.83	L+	213'	18'
	51.22/51.33	R+	566'	9'
	51.96/52.03	R+	328'	11'
	52.18/52.32	R+	690'	20'
	VISTA POINT 52.42/52.48	L+	295'	28'
	VISTA POINT 52.50/52.59	R+	479'	32'
ELLIS ROAD	49.60	R+	38'	33'
MEHRTEN SPRING ROAD	50.11	L+	54'	39'
BEAR RIVER RESERVOIR ROAD	51.54	L+	77'	33'
BEAR RIVER RESERVOIR ROAD	51.54	R+	56'	53'
DUFRENE ROAD	52.97	L+	53'	59'
DUFRENE ROAD	52.98	R+	54'	59'
PEDDLER HILL ROAD	53.92	L+	45'	28'
PRIVATE DRIVEWAYS	47.66	L+	46'	27'
	49.54	L+	51'	38'
	49.58	R+	39'	30'
OVERSIDE DRAIN	51.55	R+	20'	4'
	53.82	R+	13'	4'

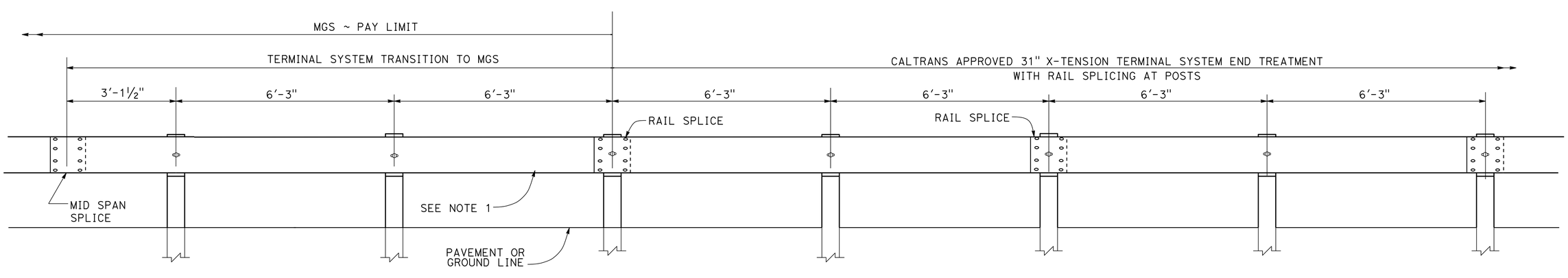

TRANSITION DETAIL FOR 31" X-TENSION TERMINAL SYSTEM END TREATMENT WITH RAIL SPLICING AT POSTS TO MIDWEST GUARDRAIL SYSTEM

CONSTRUCTION DETAILS

NO SCALE

C-1

STATE OF CALIFORNIA - DEPARTMENT OF TRANSPORTATION
Caltrans DESIGN

FUNCTIONAL SUPERVISOR: CAROLINE REYES
CALCULATED-DESIGNED BY: INGRID STEWART
CHECKED BY: CHIN DANG
REVISED BY: CD
DATE REVISED: 8/29/14

LAST REVISION 01-20-15
DATE PLOTTED => 27-JAN-2015
TIME PLOTTED => 11:52

Dist	COUNTY	ROUTE	POST MILES TOTAL PROJECT	SHEET No.	TOTAL SHEETS
10	Ama	88	46.9/R54.7	4	35

REGISTERED CIVIL ENGINEER 1/16/15 DATE

1-20-15
PLANS APPROVAL DATE

REGISTERED PROFESSIONAL ENGINEER Chin Dang No. 77340 Exp. 6/30/15 CIVIL STATE OF CALIFORNIA

THE STATE OF CALIFORNIA OR ITS OFFICERS OR AGENTS SHALL NOT BE RESPONSIBLE FOR THE ACCURACY OR COMPLETENESS OF SCANNED COPIES OF THIS PLAN SHEET.

NOTE:

LOCATION OF INLETS ARE APPROXIMATE. EXACT LOCATIONS WILL BE DETERMINED IN THE FIELD BY THE ENGINEER.

DRAINAGE ITEMS

DRAINAGE SYSTEM No. ⬡	REMOVE INLET	REMOVE HEADWALL	36" CORRUGATED STEEL PIPE INLET (.168" THICK)	MISCELLANEOUS IRON AND STEEL	HEIGHT OF INLET (N)	DESCRIPTION	STATION	DRAINAGE SYSTEM No. ⬡
	EA	EA	LF	LB	LF			
1		1	4.0	237.5	3.5	TYPE OMPI PIPE INLET, 36R GRATE, H=3.5	ROUTE 88 WB, PM 47.37	1
2	1		3.7	237.5	3.2	TYPE OMPI PIPE INLET, 36R GRATE, H=3.2	ROUTE 88 WB, PM 50.58	2
3	1		3.7	237.5	3.2	TYPE OMPI PIPE INLET, 36R GRATE, H=3.2	ROUTE 88 WB, PM 51.20	3
4	1		3.7	237.5	3.2	TYPE OMPI PIPE INLET, 36R GRATE, H=3.2	ROUTE 88 WB, PM 52.35	4
TOTAL	3	1	15.1	950				

(N) - NOT A SEPARATE PAY ITEM, FOR INFORMATION ONLY.

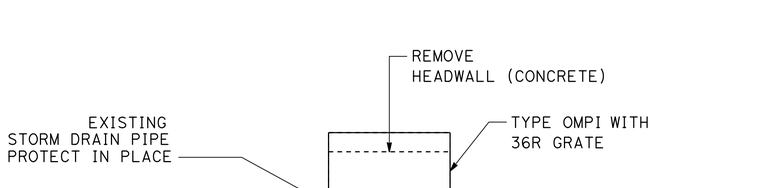

DRAINAGE SYSTEM No. 1 DETAIL

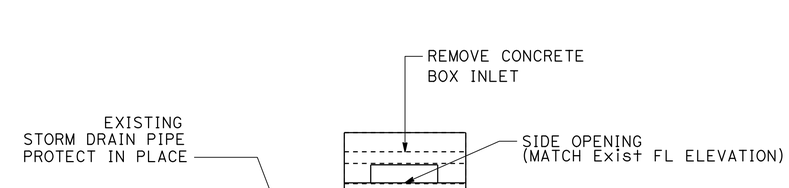

DRAINAGE SYSTEM Nos. 2, 3, AND 4 DETAIL

DRAINAGE DETAILS AND QUANTITIES

NO SCALE

DD-1

STATE OF CALIFORNIA - DEPARTMENT OF TRANSPORTATION
Caltrans® DESIGN

FUNCTIONAL SUPERVISOR: CAROLINE REYES
CALCULATED-DESIGNED BY: INGRID STEWART
CHECKED BY: CHIN DANG
REVISED BY: CD
DATE REVISED: 1/16/15

LAST REVISION 01-20-15 | DATE PLOTTED => 27-JAN-2015 | TIME PLOTTED => 11:52

Dist	COUNTY	ROUTE	POST MILES TOTAL PROJECT	SHEET No.	TOTAL SHEETS
10	Ama	88	46.9/R54.7	5	35

REGISTERED CIVIL ENGINEER 1/16/15 DATE

1-20-15
PLANS APPROVAL DATE

REGISTERED PROFESSIONAL ENGINEER
Chin Dang
No. 77340
Exp. 6/30/15
CIVIL
STATE OF CALIFORNIA

THE STATE OF CALIFORNIA OR ITS OFFICERS OR AGENTS SHALL NOT BE RESPONSIBLE FOR THE ACCURACY OR COMPLETENESS OF SCANNED COPIES OF THIS PLAN SHEET.

NOTES:

1. FOR ACCURATE RIGHT OF WAY DATA, CONTACT RIGHT OF WAY ENGINEERING AT THE DISTRICT OFFICE.
2. UTILITY OWNERSHIP ON THIS PROJECT IS AS FOLLOWS
   ELECTRIC - KIRKWOOD MEADOWS PUD
   TELECOMMUNITCATION - VOLCANO
3. DEPTH EXCEEDS 42" BELOW PLANNED WORK

ABBREVIATIONS:

PUD - POWER UTILITY DISTRICT
VOLCANO - VOLCANO TELECOMMUNICATION

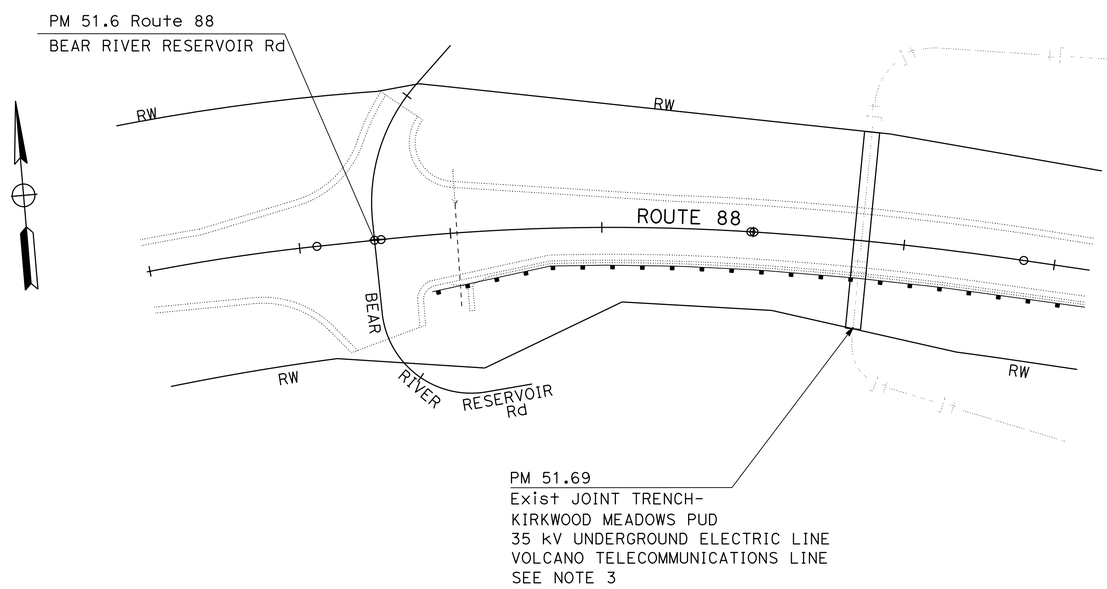

UTILITY PLAN

SCALE: 1"=50'

U-1

APPROVED FOR UTILITY INFORMATION ONLY

STATE OF CALIFORNIA - DEPARTMENT OF TRANSPORTATION
Caltrans®
DESIGN

FUNCTIONAL SUPERVISOR: CAROLINE REYES
CALCULATED-DESIGNED BY: CHIN DANG
CHECKED BY:
REVISED BY: CD
DATE REVISED: 1/16/15

LAST REVISION 01-20-15
DATE PLOTTED => 27-JAN-2015
TIME PLOTTED => 11:52

Dist	COUNTY	ROUTE	POST MILES TOTAL PROJECT	SHEET No.	TOTAL SHEETS
10	Ama	88	46.9/R54.7	6	35

REGISTERED CIVIL ENGINEER 1/16/15 DATE

1-20-15
PLANS APPROVAL DATE

REGISTERED PROFESSIONAL ENGINEER HUE NGUYEN No. 74484 Exp. 12/31/15 CIVIL STATE OF CALIFORNIA

THE STATE OF CALIFORNIA OR ITS OFFICERS OR AGENTS SHALL NOT BE RESPONSIBLE FOR THE ACCURACY OR COMPLETENESS OF SCANNED COPIES OF THIS PLAN SHEET.

STATIONARY MOUNTED CONSTRUCTION AREA SIGNS

SIGN No.	SIGN CODE FEDERAL	SIGN CODE CALIFORNIA	QUANTITY	PANEL SIZE	No. OF POST AND SIZE	SIGN MESSAGE
A	W20-1		9	36" x 36"	1 - 4" x 6"	ROAD WORK AHEAD
B	G20-2		9	36" x 18"	1 - 4" x 4"	END ROAD WORK
C	G20-1		2	60" x 36"	2 - 4" x 6"	ROAD WORK NEXT 8 MILES
D		C40 (CA)	2	108" x 42"	2 - 6" x 6"	TRAFFIC FINES DOUBLED IN CONSTRUCTION ZONES
F	CPFIS		2	90" x 60"	2- 6" x 6"	CONSTRUCTION PROJECT FUNDING INFORMATION SIGN

NOTE:

EXACT SIGN LOCATIONS WILL BE DETERMINED BY THE ENGINEER.

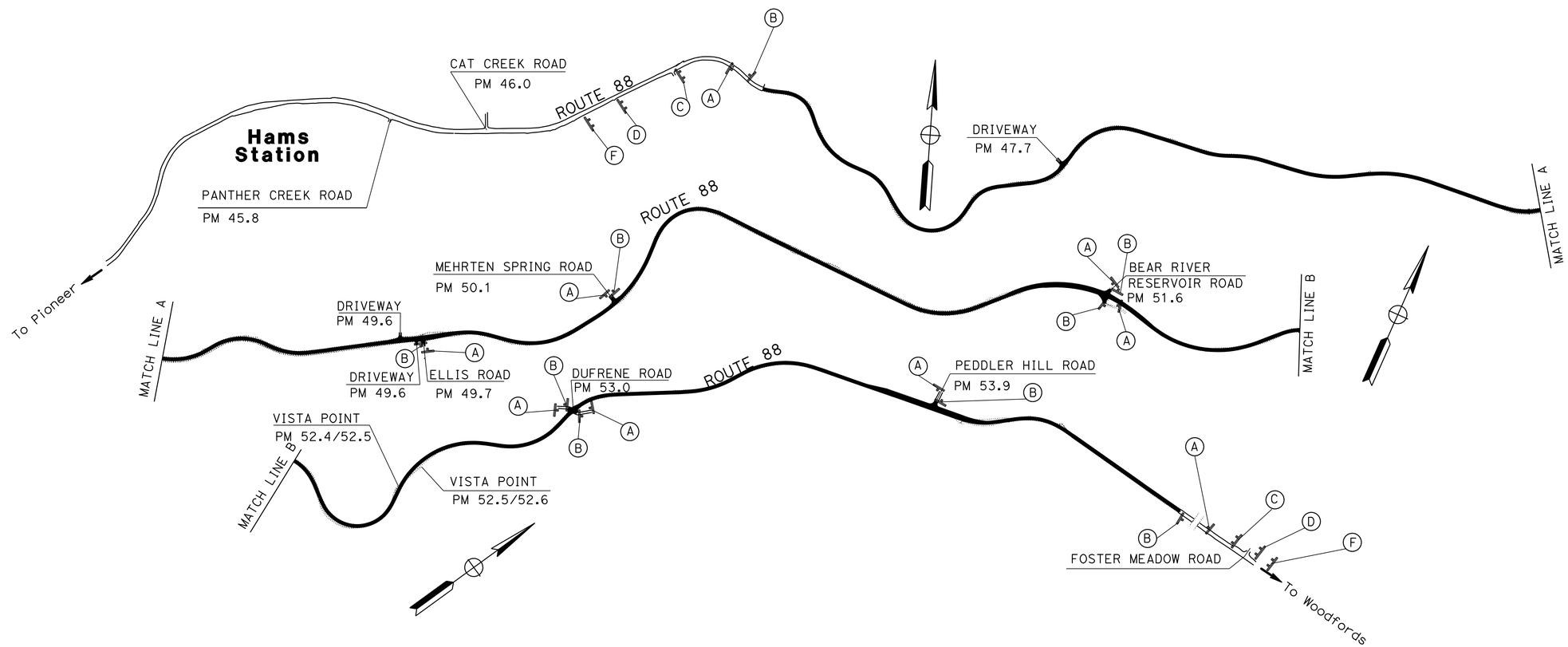

APPROVED FOR CONSTRUCTION AREA SIGN WORK ONLY

CONSTRUCTION AREA SIGNS

NO SCALE

CS-1

STATE OF CALIFORNIA - DEPARTMENT OF TRANSPORTATION
Caltrans® **TRAFFIC DESIGN**

FUNCTIONAL SUPERVISOR: MOHAMMED QATAMI
CALCULATED-DESIGNED BY: CECILE NGUYEN
CHECKED BY: HUE NGUYEN
REVISED BY: HN
DATE REVISED: 11/18/14

LAST REVISION 11-18-14
DATE PLOTTED => 27-JAN-2015
TIME PLOTTED => 11:52

Dist	COUNTY	ROUTE	POST MILES TOTAL PROJECT	SHEET No.	TOTAL SHEETS
10	Ama	88	46.9/54.7	7	35

REGISTERED CIVIL ENGINEER 1/16/15 DATE

1-20-15
PLANS APPROVAL DATE

REGISTERED PROFESSIONAL ENGINEER HUE NGUYEN No. 74484 Exp. 12/31/15 CIVIL STATE OF CALIFORNIA

THE STATE OF CALIFORNIA OR ITS OFFICERS OR AGENTS SHALL NOT BE RESPONSIBLE FOR THE ACCURACY OR COMPLETENESS OF SCANNED COPIES OF THIS PLAN SHEET.

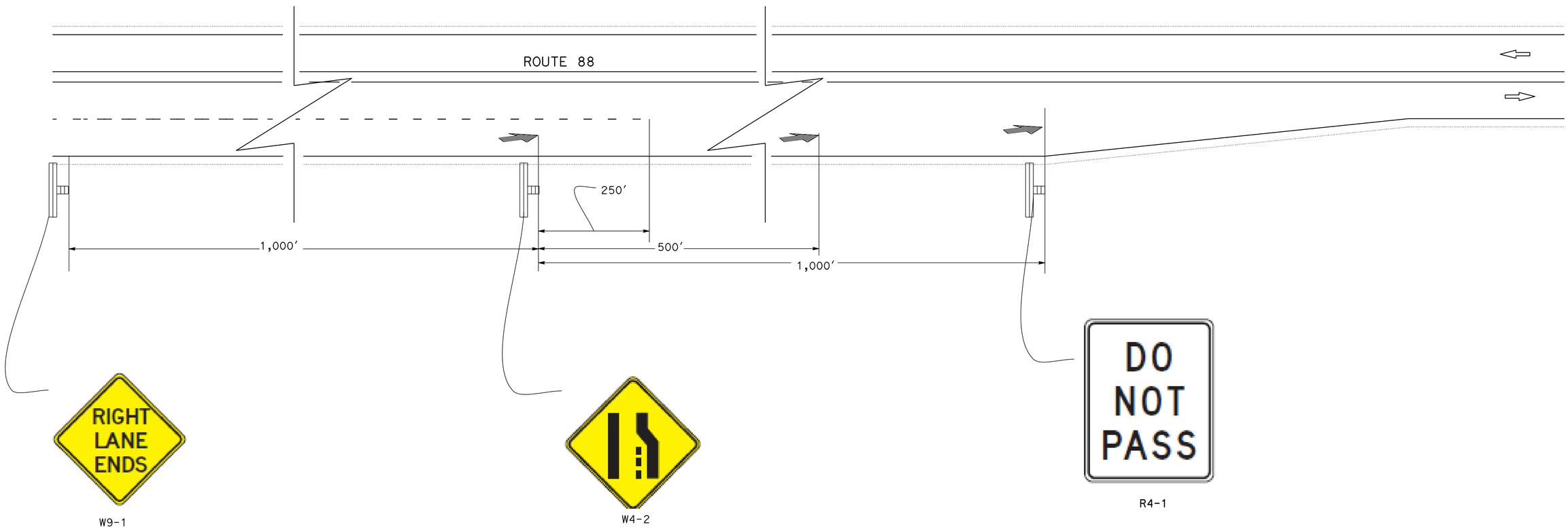

LANE REDUCTION DETAIL FOR SPEED 55 MPH

PAVEMENT DELINEATION DETAILS

NO SCALE

PDD-1

REVISED BY	HN
DATE REVISED	11/18/14
CALCULATED-DESIGNED BY	CECILE NGUYEN
CHECKED BY	HUE NGUYEN
FUNCTIONAL SUPERVISOR	MOHAMMED QATAMI

STATE OF CALIFORNIA - DEPARTMENT OF TRANSPORTATION
Caltrans® **TRAFFIC DESIGN**

LAST REVISION 11-18-14
DATE PLOTTED => 27-JAN-2015
TIME PLOTTED => 11:52

Dist	COUNTY	ROUTE	POST MILES TOTAL PROJECT	SHEET No.	TOTAL SHEETS
10	Ama	88	46.9/54.7	8	35

REGISTERED CIVIL ENGINEER 1/16/15 DATE

1-20-15
PLANS APPROVAL DATE

REGISTERED PROFESSIONAL ENGINEER HUE NGUYEN No. 74484 Exp. 12/31/15 CIVIL STATE OF CALIFORNIA

THE STATE OF CALIFORNIA OR ITS OFFICERS OR AGENTS SHALL NOT BE RESPONSIBLE FOR THE ACCURACY OR COMPLETENESS OF SCANNED COPIES OF THIS PLAN SHEET.

NOTES:

1. METAL BEAM GUARD RAILING DELINEATORS TO BE SPACED 25' APART.
2. * AND ** FOR INFORMATION ONLY.

PAVEMENT DELINEATION ITEMS

LOCATION PM/PM	METAL BEAM GUARD-RAILING (*)	GUARD RAILING DELINEATOR TYPE F	OBJECT MARKER (TYPE L)	REMOVE GUARDRAIL (**)	REMOVE MARKER
	LF	EA	EA	LF	EA
46.80/46.98	888	36	1	963	1
46.87/46.89	78	3	1	115	1
46.99/47.20	997	40	1	1,072	1
47.25/47.38	619	25	1	694	1
47.44/47.49	155	6	1	230	1
47.52/47.64	527	21	1	602	1
47.98/48.08	458	18	1	533	1
48.15/48.27	534	21	1	609	1
48.30/48.52	1,048	42	1	1,123	1
49.17/49.27	449	18	1	524	1
49.34/49.48	653	26	1	728	1
49.86/50.02	757	30	1	832	1
50.34/50.51	862	34	1	937	1
51.33/51.45	559	22	1	634	1
51.65/51.85	902	36	1	939	1
52.23/52.34	408	16	1	483	1
52.49/52.64	807	32	1	882	1
52.78/52.91	600	24	1	675	1
52.79/52.86	291	11	1	366	1
53.00/53.07	303	12	1	378	1
53.51/53.60	411	16	1	486	1
53.88/54.02	599	24	1	699	1
SHEET TOTAL	12,905	513	22	14,504	22

PAVEMENT DELINEATION QUANTITIES

PDQ-1

STATE OF CALIFORNIA - DEPARTMENT OF TRANSPORTATION
Caltrans® TRAFFIC DESIGN

FUNCTIONAL SUPERVISOR: MOHAMMED QATAMI
CALCULATED-DESIGNED BY: CECILE NGUYEN
CHECKED BY: HUE NGUYEN
REVISED BY: HN
DATE REVISED: 11/18/14

LAST REVISION 07-18-14
DATE PLOTTED => 27-JAN-2015
TIME PLOTTED => 11:52

Dist	COUNTY	ROUTE	POST MILES TOTAL PROJECT	SHEET No.	TOTAL SHEETS
10	Ama	88	46.9/54.7	9	35

REGISTERED CIVIL ENGINEER 1/16/15 DATE

1-20-15
PLANS APPROVAL DATE

REGISTERED PROFESSIONAL ENGINEER HUE NGUYEN No. 74484 Exp. 12/31/15 CIVIL STATE OF CALIFORNIA

THE STATE OF CALIFORNIA OR ITS OFFICERS OR AGENTS SHALL NOT BE RESPONSIBLE FOR THE ACCURACY OR COMPLETENESS OF SCANNED COPIES OF THIS PLAN SHEET.

PAVEMENT DELINEATION ITEMS

POST MILE LIMITS	DIRECTION	LOCATION	DETAIL No.	PAINT TRAFFIC STRIPE (2-COAT) DETAIL 18 4" BROKEN (36-12) YELLOW	DETAIL 21 4" DOUBLE YELLOW	DETAIL 28 4" DOUBLE YELLOW	DETAIL 31 4" SOLID BROKEN YELLOW	DETAIL 11 4" BROKEN (36-12) WHITE	DETAIL 38A 8" SOLID WHITE	DETAIL 27B 4" SOLID WHITE	PAINT PAVEMENT MARKING (2-COAT) TYPE III (L) ARROW	TYPE VI ARROW	LIMIT LINE	STOP	SALVAGE SNOW POLE MARKER	SNOW POLE MARKER
				LF							SQFT				EA	EA
46.90 - 49.56		℄	21		14,045											
49.56 - 49.61		℄	28			528										
49.61 - 49.74		℄	31				1,375				42					
49.74 - 51.45		℄	21		9,029											
51.45 - 51.54		℄	28			950										
51.54 - 51.62		℄	21		422											
51.64 - 51.72		℄	21		422											
51.72 - 51.81		℄	28			950										
51.81 - 53.66		℄	21		9,768											
53.66 - 53.95		℄	18	1,531												
53.95 - 54.70		℄	21		3,960											
47.14 - 47.23	EB		38A						950							
47.60 - 47.70	EB		38A						1,056							
48.96 - 49.50	EB		11					5,702				126			694	694
50.11 - 50.20	EB		38A						950							
50.53 - 50.64	EB		38A						1,162							
51.22 - 51.33	EB		38A						1,162							
51.56 - 51.63	EB		38A						740		84					
51.64 - 51.71	WB		38A						740		84					
51.96 - 52.03	EB		38A						740							
52.18 - 52.32	EB		38A						1,480							
47.51 - 47.55	WB		38A						422							
49.59 - 49.67	WB		38A						844							
50.80 - 51.31	WB		11					6,495				126				
50.79 - 50.83	WB		38A						844							
VISTA POINT 52.42 - 52.48	WB		38A						634							
VISTA POINT 52.50 - 52.59	EB		38A						950							
46.90 - 54.70	EB		27B							40,339						
	WB									39,864						
ELLIS Rd	SB		27B,21		22					220			30	22		
BEAR RIVER RESEVOIR Rd	NB		27B,21		66					426			38	22		
	SB		27B,21		38					313			31	22		
PEDDLER HILL Rd	NB		27B,21		166					767			75	22		
SUBTOTAL				1,531	37,938	2,428	1,375	12,197	12,674	81,929	210	252	174	88	694	694
TOTAL PDQ-1																
TOTAL THIS SHEET				150,072							724				694	694

PAVEMENT DELINEATION QUANTITIES

PDQ-2

REVISED BY	DATE REVISED
HN	11/18/14

CECILE NGUYEN — HUE NGUYEN

CALCULATED-DESIGNED BY — CHECKED BY

FUNCTIONAL SUPERVISOR: MOHAMMED QATAMI

STATE OF CALIFORNIA - DEPARTMENT OF TRANSPORTATION

Caltrans® TRAFFIC DESIGN

LAST REVISION 11-18-14 | DATE PLOTTED => 27-JAN-2015 | TIME PLOTTED => 11:52

Dist	COUNTY	ROUTE	POST MILES TOTAL PROJECT	SHEET No.	TOTAL SHEETS
10	Ama	88	46.9/54.7	10	35

REGISTERED CIVIL ENGINEER 1/16/15 DATE

1-20-15
PLANS APPROVAL DATE

REGISTERED PROFESSIONAL ENGINEER HUE NGUYEN No. 74484 Exp. 12/31/15 CIVIL STATE OF CALIFORNIA

THE STATE OF CALIFORNIA OR ITS OFFICERS OR AGENTS SHALL NOT BE RESPONSIBLE FOR THE ACCURACY OR COMPLETENESS OF SCANNED COPIES OF THIS PLAN SHEET.

PM 52.99 - EB

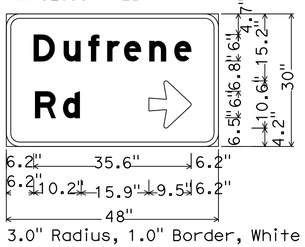

3.0" Radius, 1.0" Border, White on Green;
[Dufrene] E Mod;
[Rd] E Mod;
Arrow 6UC-2LH - 9.6" 0°;

G8-22(CA)
SIGN No.59

PM 53.31 - WB

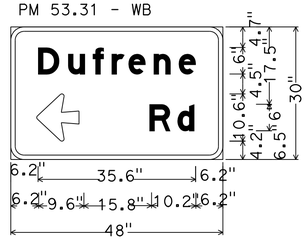

3.0" Radius, 1.0" Border, White on Green;
[Dufrene] E Mod;
Arrow 6UC-2LH - 9.6" 180°;
[Rd] E Mod;

G8-22(CA)
SIGN No.62

PM 51.66 - WB

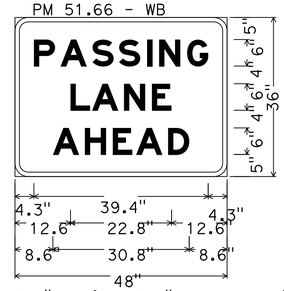

3.0" Radius, 1.0" Border, White on Green;
[PASSING] E Mod;
[LANE] E Mod;
[AHEAD] E Mod;

G69(CA)
SIGN No.68

PM 48.75 - EB

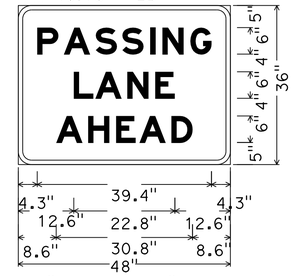

3.0" Radius, 1.0" Border, White on Green;
[PASSING] E Mod;
[LANE] E Mod;
[AHEAD] E Mod;

G69(CA)
SIGN No.15

PM 50.14 - EB

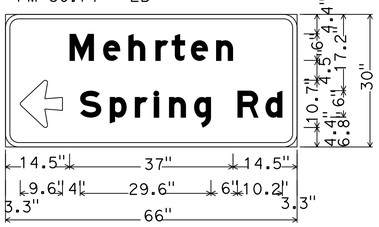

3.0" Radius, 1.0" Border, White on Green;
[Mehrten] E Mod;
Arrow 6UC-2LH - 9.6" 180°;
[Spring Rd] E Mod;

G8-22(CA)
SIGN No.37

PM 50.23 - WB

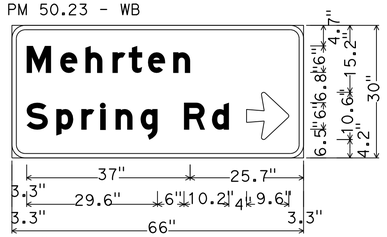

3.0" Radius, 1.0" Border, White on Green;
[Mehrten] E Mod; [Spring Rd] E Mod;
Arrow 6UC-2LH - 9.6" 0°;

G8-22(CA)
SIGN No.74

PM 54.02 - EB

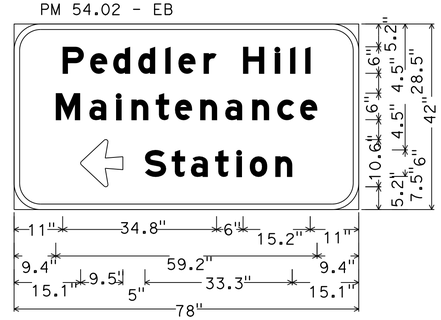

6.0" Radius, 1.3" Border, White on Green;
[Peddler Hill] E Mod; [Maintenance] E Mod;
Arrow 6UC-2LH - 9.6" 180{; [Station] E Mod;

G8-22(CA)Spec
SIGN No.55

PM 52.84 - WB

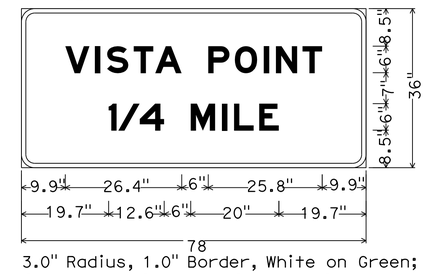

3.0" Radius, 1.0" Border, White on Green;
[VISTA POINT] E Mod; [1/4 MILE] E Mod;

G83(CA)Spec
SIGN No.65

PM 51.43 - EB

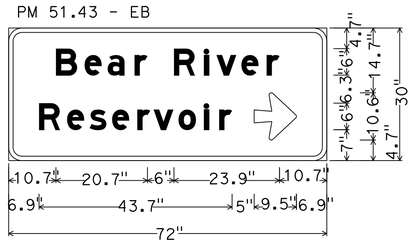

3.0" Radius, 1.0" Border, White on Green;
[Bear River] E Mod; [Reservoir] E Mod;
Arrow 6UC-2LH - 9.6" 0{;

G8-4(CA)Spec
SIGN No.50

PM 51.77 - WB

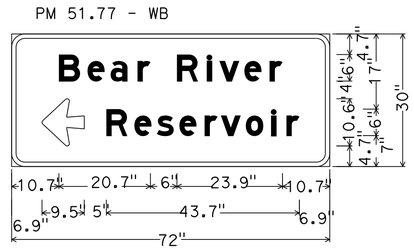

3.0" Radius, 1.0" Border, White on Green;
[Bear River] E Mod;
Arrow 6UC-2LH - 9.6" 180{;
[Reservoir] E Mod;

G8-4(CA)Spec
SIGN No.67

PM 49.57 - EB

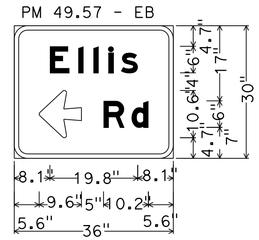

3.0" Radius, 1.0" Border, White on Green;
[Ellis] E Mod;
Arrow 6UC-2LH - 9.6" 180{;
[Rd] E Mod;

G8-22(CA)
SIGN No.79

PM 49.86 - WB

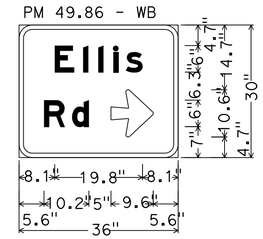

3.0" Radius, 1.0" Border, White on Green;
[Ellis] E Mod;
[Rd] E Mod;
Arrow 6UC-2LH - 9.6" 0{;

G8-22(CA)
SIGN No.31

SIGN DETAILS
SD-1

REVISED BY	HN
DATE REVISED	11/18/14
CALCULATED-DESIGNED BY	RAJINI TEKALKOTE
CHECKED BY	HUE NGUYEN
FUNCTIONAL SUPERVISOR	MOHAMMED QATAMI

STATE OF CALIFORNIA - DEPARTMENT OF TRANSPORTATION
Caltrans® TRAFFIC DESIGN

LAST REVISION 11-18-14 | DATE PLOTTED => 27-JAN-2015 | TIME PLOTTED => 11:52

Dist	COUNTY	ROUTE	POST MILES TOTAL PROJECT	SHEET No.	TOTAL SHEETS
10	Ama	88	46.9/54.7	11	35

REGISTERED CIVIL ENGINEER 1/16/15 DATE

1-20-15
PLANS APPROVAL DATE

REGISTERED PROFESSIONAL ENGINEER HUE NGUYEN No. 74484 Exp. 12/31/15 CIVIL STATE OF CALIFORNIA

THE STATE OF CALIFORNIA OR ITS OFFICERS OR AGENTS SHALL NOT BE RESPONSIBLE FOR THE ACCURACY OR COMPLETENESS OF SCANNED COPIES OF THIS PLAN SHEET.

ROADSIDE SIGN ITEMS

SIGN No.	POST MILE	DIRECTION	SIGN CODE FEDERAL	SIGN CODE CALIFORNIA	SIGN MESSAGE	PANEL SIZE	SINGLE FACED	No. OF POST AND SIZE	BACKGROUND SHEETING COLOR	BACKGROUND RETROREFLECTIVITY ASTM TYPE	LEGEND SHEETING COLOR	LEGEND RETROREFLECTIVITY ASTM TYPE	GRAFFITI FLOW PREMIUM	FURNISH SINGLE SHEET ALUMINIUM SIGN UNFRAMED 0.063" SQFT	FOR RETROREFLECTIVE SHEETING (TYPE XI) UNFRAMED 0.080" SQFT	FOR RETROREFLECTIVE SHEETING (TYPE XI) UNFRAMED 0.063" SQFT	FOR RETROREFLECTIVE SHEETING (TYPE XI) FRAMED 0.063" SQFT	RETROREFLECTIVE SHEETING TYPE XI SQFT	ROADSIDE SIGN-ONE POST EA	ROADSIDE SIGN-TWO POST EA	INSTALL SIGN (STRAP AND SADDLE BRACKET METHOD) EA	REMOVE ROADSIDE SIGN EA	REMOVE ROADSIDE SIGN (STRAP AND SADDLE BRACKET METHOD) EA	TREATED WOOD WASTE LB	REMARKS
1	46.85	FEBT		R50(CA)	TURN OUT 1/4 MILE																	1		45	
			R4-13		SLOW VEHICLE MUST USE TURN OUT AHEAD	42"x24"	X	1-4"x6"	WHITE	IX	BLACK		X	7.00					1						
2	46.97	FEBT	W1-2(L+)		CURVE	36"x36"	X	1-4"x6"	YELLOW	XI	BLACK		X			9.00		9.00	1						
			W13-1(35)		ADVISORY SPEED PLAQUE	18"x18"			YELLOW	XI	BLACK		X			2.25		2.25							
3			W1-2(L+)		CURVE																	1		77	
			W13-1(35)		ADVISORY SPEED PLAQUE																				
4	47.05	FEBT	R4-12		SLOW VEHICLE WITH 5 OR MORE FOLLOWING VEHICLE MUST USE TURN-OUT	42"x24"	X	1-4"x6"	WHITE	IX	BLACK		X	7.00					1						
5	47.22	FEBT		R51(CA)	TURN OUT																	1		45	
			R4-14		SLOW VEHICLE MUST TURN OUT ↗	30"x42"	X	1-4"x6"	WHITE	IX	BLACK		X	8.75					1						
6	47.48	FEBT		R50(CA)	TURN OUT 1/4 MILE																	1		45	
			R4-13		SLOW VEHICLE MUST USE TURN OUT AHEAD	42"x24"	X	1-4"x6"	WHITE	IX	BLACK		X	7.00					1						
7	47.57	FEBT	R4-12		SLOW VEHICLE WITH 5 OR MORE FOLLOWING VEHICLE MUST USE TURN-OUT	42"x24"	X	1-4"x6"	WHITE	IX	BLACK		X	7.00					1						
8	47.67	FEBT		R51(CA)	TURN OUT																	1		45	
			R4-14		SLOW VEHICLE MUST TURN OUT ↗	30"x42"	X	1-4"x6"	WHITE	IX	BLACK		X	8.75					1						
9	47.78	FEBT		G69(CA)	PASSING LANE 1 MILE	48"x36"	X	1-4"x6"	GREEN	XI	WHITE	XI	X		12.00			12.00	1						
10				G69(CA)	PASSING LANE 1 MILE																	1		77	
11	47.90	FEBT		G17(CA)	ELEVATION 6000'	36"x18"	X	1-4"x4"	GREEN	XI	WHITE	XI	X			4.50		4.50	1						
12				G17(CA)	ELEVATION 6000'																	1		45	
13	47.94	FWBT		G17(CA)	ELEVATION 6000'	36"x18"	X	1-4"x4"	GREEN	XI	WHITE	XI	X			4.50		4.50	1						
14				G17(CA)	ELEVATION 6000'																	1		45	
15	48.75	FEBT		G69(CA)	PASSING LANE AHEAD	48"x36"	X	1-4"x6"	GREEN	XI	WHITE	XI	X		12.00			12.00	1						
16				G69(CA)	PASSING LANE AHEAD																	1		77	
17	48.92	FEBT	R4-3		SLOWER TRAFFIC KEEP RIGHT	24"x30"	X	1-4"x4"	WHITE	IX	BLACK		X	5.00					1						
18			R4-3		SLOWER TRAFFIC KEEP RIGHT																	1		45	
19	49.34	FEBT	W9-2		LANE END MERGE RIGHT																	1		150	
20			W9-2		LANE END MERGE RIGHT																	1		150	
21	49.34	FEBT	W9-1(L+)		LEFT LANE ENDS	48"x48"	X	1-6"x6"	YELLOW	XI	BLACK		X		16.00			16.00	1						
22			W9-1(L+)		LEFT LANE ENDS	48"x48"	X	1-6"x6"	YELLOW	XI	BLACK		X		16.00			16.00	1						
23	49.44	FEBT	W4-2(L+)		LEFT LANE ENDS SYMBOL																	1		75	
			R4-1		DO NOT PASS																				
24			W4-2(L+)		LEFT LANE ENDS SYMBOL																	1		75	
			R4-1		DO NOT PASS																				
25	49.35	FEBT	W4-2(L+)		LEFT LANE ENDS SYMBOL	36"x36"	X	1-4"x6"	YELLOW	XI	BLACK		X			9.00		9.00	1						
26	49.50	FEBT	R4-1		DO NOT PASS	24"x30"	X	1-4"x4"	WHITE	IX	BLACK		X	5.00					1						
27	49.35	FEBT	W4-2(L+)		LEFT LANE ENDS SYMBOL	36"x36"	X	1-4"x6"	YELLOW	XI	BLACK		X			9.00		9.00	1						
28	49.50	FEBT	R4-1		DO NOT PASS	24"x30"	X	1-4"x4"	WHITE	IX	BLACK		X	5.00					1						
29	49.54	FEBT		S32(CA)	ADOPT-A-HIGHWAY																				REMAIN IN PLACE
				S32-1(CA)	LITTER REMOVAL																				
30	49.57	FEBT		G8-22(CA)	ELLIS Rd →																	1		45	
31				G8-22(CA)	ELLIS Rd →	36"x30"	X	1-4"x4"	GREEN	XI	WHITE	XI	X	7.50				7.50	1						
32	49.77	FEBT		G28-2(CA)	STATE ROUTE 88 MARKER																				REMAIN IN PLACE
				G30A(CA)	SCENIC ROUTE																				
33	51.10	FWBT	W9-2		LANE END MERGE LEFT																	1		150	
34	51.10	FWBT	W9-2		LANE END MERGE LEFT																	1		150	
													SHEET TOTAL	68.00	56.00	38.25		101.75	19			17		1341	

SIGN QUANTITIES
SQ-1

REVISED BY	DATE REVISED
RT	12/23/14

CALCULATED-DESIGNED BY: CECILE NGUYEN
CHECKED BY: HUE NGUYEN
FUNCTIONAL SUPERVISOR: MOHAMMED QATAMI

STATE OF CALIFORNIA - DEPARTMENT OF TRANSPORTATION
Caltrans® TRAFFIC DESIGN

LAST REVISION 11-18-14
DATE PLOTTED => 27-JAN-2015
TIME PLOTTED => 11:52

Dist	COUNTY	ROUTE	POST MILES TOTAL PROJECT	SHEET No.	TOTAL SHEETS
10	Ama	88	46.9/54.7	12	35

REGISTERED CIVIL ENGINEER 1/16/15 DATE

1-20-15
PLANS APPROVAL DATE

REGISTERED PROFESSIONAL ENGINEER HUE NGUYEN No. 74484 Exp. 12/31/15 CIVIL STATE OF CALIFORNIA

THE STATE OF CALIFORNIA OR ITS OFFICERS OR AGENTS SHALL NOT BE RESPONSIBLE FOR THE ACCURACY OR COMPLETENESS OF SCANNED COPIES OF THIS PLAN SHEET.

ROADSIDE SIGN ITEMS

SIGN No.	POST MILE	DIRECTION	SIGN CODE FEDERAL	SIGN CODE CALIFORNIA	SIGN MESSAGE	PANEL SIZE	SINGLE FACED	No. OF POST AND SIZE	BACKGROUND SHEETING COLOR	BACKGROUND RETROREFLECTIVITY ASTM TYPE	LEGEND SHEETING COLOR	LEGEND RETROREFLECTIVITY ASTM TYPE	GRAFFITI FLOW PREMIUM	FURNISH SINGLE SHEET ALUMINIUM SIGN UNFRAMED 0.063" SQFT	FOR RETROREFLECTIVE SHEETING (TYPE XI) UNFRAMED 0.080" SQFT	FOR RETROREFLECTIVE SHEETING (TYPE XI) UNFRAMED 0.063" SQFT	FOR RETROREFLECTIVE SHEETING (TYPE XI) FRAMED 0.063" SQFT	RETROREFLECTIVE SHEETING TYPE XI SQFT	ROADSIDE SIGN-ONE POST EA	ROADSIDE SIGN-TWO POST EA	INSTALL ROADSIDE SIGN (STRAP AND SADDLE BRACKET METHOD) EA	REMOVE ROADSIDE SIGN EA	REMOVE ROADSIDE SIGN (STRAP AND SADDLE BRACKET METHOD) EA	TREATED WOOD WASTE LB	REMARKS
35	50.09	FEBT		R50(CA)	TURN OUT 1/4 MILE																	1		45	
36			R4-13		SLOW VEHICLE MUST USE TURN OUT AHEAD	42"x24"	X	1-4"x6"	WHITE	IX	BLACK		X	7.00					1						
37	50.14	FEBT		G8-22(CA)	← MEHRTEN SPRING Rd	66"x30"	X	2-4"x6"	GREEN	XI	WHITE	XI	X				13.75	13.75		1					
38	50.20	FEBT		R51(CA)	TURN OUT																	1		45	
39			R4-14		SLOW VEHICLE MUST TURN OUT ↗	30"x42"	X	1-4"x6"	WHITE	IX	BLACK		X	8.75					1						
40	50.38	FEBT	W1-2(R+)		CURVE	36"x36"	X	1-4"x6"	YELLOW	XI	BLACK		X			9.00		9.00	1						
			W13-1(45)		ADVISORY SPEED PLAQUE	18"x18"	X		YELLOW	XI	BLACK		X			2.25		2.25							
41			W1-2(R+)		CURVE																	1		77	
			W13-1(45)		ADVISORY SPEED PLAQUE																				
42	50.88	FWBT	W4-2(R+)		RIGHT LANE ENDS SYMBOL																	1		77	
			R4-1		DO NOT PASS																				
43	50.88	FWBT	W4-2(R+)		RIGHT LANE ENDS SYMBOL																	1		77	
			R4-1		DO NOT PASS																				
44	50.80	FWBT	R4-1		DO NOT PASS	24"x30"	X	1-4"x4"	WHITE	IX	BLACK		X	5.00					1						
45	50.95	FWBT	W4-2(R+)		RIGHT LANE ENDS SYMBOL	36"x36"	X	1-4"x6"	YELLOW	XI	BLACK		X			9.00		9.00	1						
46	50.80	FWBT	R4-1		DO NOT PASS	24"x30"	X	1-4"x4"	WHITE	IX	BLACK		X	5.00					1						
47	50.95	FWBT	W4-2(R+)		RIGHT LANE ENDS SYMBOL	36"x36"		1-4"x6"	YELLOW	XI	BLACK		X			9.00		9.00	1						
48	51.10	FWBT	W9-1		RIGHT LANE ENDS	48"x48"	X	1-6"x6"	YELLOW	XI	BLACK		X		16.00			16.00	1						
49	51.10	FWBT	W9-1		RIGHT LANE ENDS	48"x48"	X	1-6"x6"	YELLOW	XI	BLACK		X		16.00			16.00	1						
50	51.43	FEBT		G8-4(CA) Spec	BEAR RIVER RESERVOIR →	72"x30"	X	2-4"x4"	GREEN	XI	WHITE	XI	X				15.00	15.00		1					
			D9-1		TELEPHONE SYMBOL	24"x30"			BLUE	XI	WHITE	XI				5.00		5.00							
			D9-3a		TRAILER CAMPING SYMBOL	24"x24"			BLUE	XI	WHITE	XI				4.00		4.00							
			D9-8		FOOD SYMBOL	24"x24"			BLUE	XI	WHITE	XI				4.00		4.00							
			RW-080		RAMP (LAUNCH)	24"x24"			BROWN	XI	WHITE	XI				4.00		4.00							
51				G8-4(CA) Spec	BEAR RIVER RESERVOIR →																	1		150	
			D9-1,D9-3a		TELEPHONE,TRAILER CAMPING																				
52	51.81	FEBT		R50(CA)	TURN OUT 1/4 MILE																	1		45	
53			R4-13		SLOW VEHICLE MUST USE TURN OUT AHEAD	42"x24"	X	1-4"x6"	WHITE	IX	BLACK		X	7.00					1						
54	51.91	FEBT	R4-12		SLOW VEHICLE WITH 5 OR MORE FOLLOWING VEHICLE MUST USE TURN-OUT	42"x24"	X	1-4"x6"	WHITE	IX	BLACK		X	7.00					1						
55	52.06	FEBT		R51(CA)	TURN OUT																	1		45	
56			R4-14		SLOW VEHICLE MUST TURN OUT ↗	30"x42"	X	1-4"x6"	WHITE	IX	BLACK		X	8.75					1						
57	52.26	FEBT		R51(CA)	TURN OUT																	1		45	
58			R4-14		SLOW VEHICLE MUST TURN OUT ↗	30"x42"	X	1-4"x6"	WHITE	IX	BLACK		X	8.75					1						
59	52.99	FEBT		G8-22(CA)	DUFRENE Rd →	48"x30"	X	1-4"x6"	GREEN	XI	WHITE	XI	X		10.00			10.00	1						
60	53.08	FWBT	R1-1		STOP																	1		45	
61			R1-1		STOP	36"x36"	X	1-4"x6"	RED	IX	WHITE	IX	X		9.00				1						
											SHEET TOTAL			57.25	51.00	46.25	28.75	117.00	15	2		10		606	

SIGN QUANTITIES
SQ-2

STATE OF CALIFORNIA - DEPARTMENT OF TRANSPORTATION
Caltrans® TRAFFIC DESIGN

FUNCTIONAL SUPERVISOR: MOHAMMED QATAMI
CALCULATED-DESIGNED BY: CECILE NGUYEN
CHECKED BY: HUE NGUYEN
REVISED BY: RT
DATE REVISED: 12/22/14

LAST REVISION 11-18-14
DATE PLOTTED => 27-JAN-2015
TIME PLOTTED => 11:52

Dist	COUNTY	ROUTE	POST MILES TOTAL PROJECT	SHEET No.	TOTAL SHEETS
10	Ama	88	46.9/54.7	13	35

REGISTERED CIVIL ENGINEER 1/16/15 DATE

1-20-15
PLANS APPROVAL DATE

REGISTERED PROFESSIONAL ENGINEER HUE NGUYEN No. 74484 Exp. 12/31/15 CIVIL STATE OF CALIFORNIA

THE STATE OF CALIFORNIA OR ITS OFFICERS OR AGENTS SHALL NOT BE RESPONSIBLE FOR THE ACCURACY OR COMPLETENESS OF SCANNED COPIES OF THIS PLAN SHEET.

ROADSIDE SIGN ITEMS

SIGN No.	POST MILE	DIRECTION	SIGN CODE FEDERAL	SIGN CODE CALIFORNIA	SIGN MESSAGE	PANEL SIZE	SINGLE FACED	No. OF POST AND SIZE	BACKGROUND SHEETING COLOR	BACKGROUND RETROREFLECTIVITY ASTM TYPE	LEGEND SHEETING COLOR	LEGEND RETROREFLECTIVITY ASTM TYPE	GRAFFITI FLOW PREMIUM	FURNISH SINGLE SHEET ALUMINIUM SIGN UNFRAMED 0.063" SQFT	FOR RETROREFLECTIVE SHEETING (TYPE XI) UNFRAMED 0.080" SQFT	FOR RETROREFLECTIVE SHEETING (TYPE XI) UNFRAMED 0.063" SQFT	FOR RETROREFLECTIVE SHEETING (TYPE XI) FRAMED 0.063" SQFT	RETROREFLECTIVE SHEETING TYPE XI SQFT	ROADSIDE SIGN-ONE POST EA	ROADSIDE SIGN-TWO POST EA	INSTALL ROADSIDE SIGN (STRAP AND SADDLE BRACKET METHOD) EA	REMOVE ROADSIDE SIGN EA	REMOVE ROADSIDE SIGN (STRAP AND SADDLE BRACKET METHOD) EA	TREATED WOOD WASTE LB	REMARKS
54	54.02	FEBT		G8-22(CA)Spec	PEDDLER HILL MAINTENANCE STATION																	1		150	
				G17(CA)	ELEVATION 7000′																				
55				G8-22(CA)Spec	← PEDDLER HILL MAINTENANCE STATION	78"x42"	X	2-4"x6"	GREEN	XI	WHITE	XI	X				22.75	22.75		1					
				G17(CA)	ELEVATION 7000′	36"x18"			GREEN	XI	WHITE	XI	X			4.50		4.50							
56	54.35	FWBT		R50(CA)	TURN OUT 1/4 MILE																	1		45	
57			R4-13		SLOW VEHICLE MUST USE TURN OUT AHEAD	42"x24"	X	1-4"x6"	WHITE	IX	BLACK		X	7.00					1						
58	54.25	FWBT	R4-12		SLOW VEHICLE WITH 5 OR MORE FOLLOWING VEHICLE MUST USE TURN-OUT	42"x24"	X	1-4"x6"	WHITE	IX	BLACK		X	7.00					1						
59	54.23	FWBT	W2-2		SIDE ROAD (PERPENDICULAR)	30"x30"	X		YELLOW	XI	BLACK		X			6.25		6.25			1		1		ON FLASHING BEACON
60	54.01	FWBT		R51(CA)	TURN OUT																	1		45	
61			R4-14		SLOW VEHICLE MUST TURN OUT ↗	30"x42"	X	1-4"x6"	WHITE	IX	BLACK		X	8.75					1						
62	53.31	FWBT		G8-22(CA)	← DUFRENE Rd	48"x30"	X	1-4"x6"	GREEN	XI	WHITE	XI	X		10.00			10.00	1						
63	53.09	FWBT		S32(CA)	ADOPT-A-HIGHWAY																				REMAIN IN PLACE
				S32-1(CA)	LITTER REMOVAL																				
64	52.84	FWBT		G83(CA) spec	VISTA POINT 1/4 MILE																	1		150	
65				G83(CA) spec	VISTA POINT 1/4 MILE	78"x36"	X	2-4"x6"	GREEN	XI	WHITE	XI	X				19.50	19.50		1					
66	51.77	FWBT		G8-4(CA) spec	←BEAR RIVER RESERVOIR																	1		150	
			D9-1,D9-3a																						
67				G8-4(CA) Spec	← BEAR RIVER RESERVOIR	72"x30"	X	2-4"x4"	GREEN	XI	WHITE	XI	X				15.00	15.00		1					
			D9-1		TELEPHONE SYMBOL	24"x30"			BLUE	XI	WHITE	XI				5.00		5.00							
			D9-3a		TRAILER CAMPING SYMBOL	24"x24"			BLUE	XI	WHITE	XI				4.00		4.00							
			D9-8		FOOD SYMBOL	24"x24"			BLUE	XI	WHITE	XI				4.00		4.00							
			RW-080		RAMP (LAUNCH)	24"x24"			BROWN	XI	WHITE	XI				4.00		4.00							
68	51.66	FWBT		G69(CA)	PASSING LANE AHEAD	48"x36"	X	1-4"x6"	GREEN	XI	WHITE	XI	X		12.00			12.00	1						
69				G69(CA)	PASSING LANE AHEAD																	1		77	
70	51.44	FWBT	R4-3		SLOW TRAFFIC KEEP RIGHT	24"x30"	X	1-4"x4"	WHITE	IX	BLACK		X	5.00					1						
71			R4-3		SLOW TRAFFIC KEEP RIGHT																	1		45	
72	50.63	FWBT	W1-2(Lt)		CURVE	36"x36"	X	1-4"x6"	YELLOW	XI	BLACK		X			9.00		9.00	1						
			W13-1(45)		ADVISORY SPEED PLAQUE	18"x18"			YELLOW	XI	BLACK					2.25		2.25							
73			W1-2(Lt)		CURVE																	1		77	
			W13-1(45)		ADVISORY SPEED PLAQUE																				
74	50.23	FWBT		G8-22(CA)	MEHRTEN SPRING Rd →	66"x30"	X	2-4"x6"	GREEN	XI	WHITE	XI	X				13.75	13.75		1					
75	50.03	FWBT		R50(CA)	TURN OUT 1/4 MILE																	1		45	
76			R4-13		SLOW VEHICLE MUST USE TURN OUT AHEAD	42"x24"	X	1-4"x6"	WHITE	IX	BLACK		X	7.00					1						
77	49.93	FWBT	R4-12		SLOW VEHICLE WITH 5 OR MORE FOLLOWING VEHICLE MUST USE TURN-OUT	42"x24"	X	1-4"x6"	WHITE	IX	BLACK		X	7.00					1						
													SHEET TOTAL	41.75	22.00	39.00	71.00	132.00	9	4	1	9	1	788	

SIGN QUANTITIES
SQ-3

REVISED BY	DATE REVISED
RT	12/22/14

CECILE NGUYEN — CALCULATED-DESIGNED BY
HUE NGUYEN — CHECKED BY
MOHAMMED QATAMI — FUNCTIONAL SUPERVISOR

STATE OF CALIFORNIA - DEPARTMENT OF TRANSPORTATION
Caltrans® TRAFFIC DESIGN

LAST REVISION 11-18-14
DATE PLOTTED => 27-JAN-2015
TIME PLOTTED => 11:52

Dist	COUNTY	ROUTE	POST MILES TOTAL PROJECT	SHEET No.	TOTAL SHEETS
10	Ama	88	46.9/54.7	14	35

REGISTERED CIVIL ENGINEER 1/16/15 DATE

1-20-15
PLANS APPROVAL DATE

REGISTERED PROFESSIONAL ENGINEER HUE NGUYEN No. 74484 Exp. 12/31/15 CIVIL STATE OF CALIFORNIA

THE STATE OF CALIFORNIA OR ITS OFFICERS OR AGENTS SHALL NOT BE RESPONSIBLE FOR THE ACCURACY OR COMPLETENESS OF SCANNED COPIES OF THIS PLAN SHEET.

ROADSIDE SIGN ITEMS

SIGN No.	POST MILE	DIRECTION	SIGN CODE FEDERAL	SIGN CODE CALIFORNIA	SIGN MESSAGE	PANEL SIZE	SINGLE FACED	No. OF POST AND SIZE	BACKGROUND SHEETING COLOR	BACKGROUND RETROREFLECTIVITY ASTM TYPE	LEGEND SHEETING COLOR	LEGEND RETROREFLECTIVITY ASTM TYPE	GRAFFITI FLOW PREMIUM	FURNISH SINGLE SHEET ALUMINIUM SIGN UNFRAMED 0.063" SQFT	FOR RETROREFLECTIVE SHEETING (TYPE XI) UNFRAMED 0.080" SQFT	FOR RETROREFLECTIVE SHEETING (TYPE XI) UNFRAMED 0.063" SQFT	FOR RETROREFLECTIVE SHEETING (TYPE XI) FRAMED 0.063" SQFT	RETROREFLECTIVE SHEETING TYPE XI SQFT	ROADSIDE SIGN-ONE POST EA	ROADSIDE SIGN-TWO POST EA	INSTALL SIGN (STRAP AND SADDLE BRACKET METHOD) EA	REMOVE ROADSIDE SIGN EA	REMOVE ROADSIDE SIGN (STRAP AND SADDLE BRACKET METHOD) EA	TREATED WOOD WASTE LB	REMARKS
78	49.86	FWBT		G8-22(CA)	← ELLIS Rd																	1		45	
79				G8-22(CA)	← ELLIS Rd	36"x30"	X	1-4"x4"	GREEN	XI	WHITE	XI	X	7.50				7.50	1						
80	49.77	FWBT		R51(CA)	TURN OUT																	1		45	
81			R4-14		SLOW VEHICLE MUST TURN OUT	30"x42"		1-4"x6"	WHITE	IX	BLACK		X	8.75					1						
82	48.72	FWBT		G69(CA)	PASSING LANE 2 MILE																	1		77	
83				G69(CA)	PASSING LANE 2 MILE	48"x36"	X	1-4"x6"	GREEN	XI	WHITE	XI	X		12.00			12.00	1						
84	47.65	FWBT	W1-2(Rt)		CURVE																	1		77	
			W13-1(35)		ADVISORY SPEED PLAQUE																				
85			W1-2(Rt)		CURVE	36"x36"	X	1-4"x6"	YELLOW	XI	BLACK		X			9.00		9.00	1						
			W13-1(35)		ADVISORY SPEED PLAQUE	18"x18"			YELLOW	XI	BLACK					2.25		2.25							
86	47.56	FWBT	W1-6		LARGE ARROW (1-DIRECTION)																	1		45	
87			W1-6		LARGE ARROW (1-DIRECTION)	48"x24"	X	1-4"x4"	YELLOW	XI	BLACK		X	8.00				8.00	1						
88	47.20	FWBT		G69(CA)	PASSING LANE AHEAD																	1		77	
89				G69(CA)	PASSING LANE AHEAD	48"x36"	X	1-4"x6"	GREEN	XI	WHITE	XI	X		12.00			12.00	1						
90	46.99	FWBT	R4-3		SLOW TRAFFIC KEEP RIGHT																	1		45	
91			R4-3		SLOW TRAFFIC KEEP RIGHT	24"x30"	X	1-4"x4"	WHITE	IX	BLACK		X	5.00					1						
92	50.14	FEBT		G8-22(CA)	← MEHRTEN SPRING Rd																	1		150	
93	50.23	FWBT		G8-22(CA)	MEHRTEN SPRING Rd →																	1		150	
94	52.99	FEBT		G8-22(CA)	DUFRENE Rd →																	1		75	
95	53.31	FWBT		G8-22(CA)	← DUFRENE Rd																	1		75	
													TOTAL THIS SHEET	29.25	24.00	11.25		50.75	7			11		861	
													TOTAL SQ-1	68.00	56.00	38.25		101.75	19			17		1341	
													TOTAL SQ-2	57.25	51.00	46.25	28.75	117.00	15	2		10		606	
													TOTAL SQ-3	41.75	22.00	39.00	71.00	132.00	9	4	1	9	1	788	
													TOTAL	196.25	153.00	134.75	99.75	401.15	50	6	1	47	1	** 3,596	

** QUANTITIES INCLUDED IN ROADWAY ITEMS TABLE SHEET Q-1

REVISED BY	DATE REVISED
RT	12/22/14

CALCULATED-DESIGNED BY: CECILE NGUYEN
CHECKED BY: HUE NGUYEN
FUNCTIONAL SUPERVISOR: MOHAMMED QATAMI

STATE OF CALIFORNIA - DEPARTMENT OF TRANSPORTATION
Caltrans
TRAFFIC DESIGN

LAST REVISION 11-18-14
DATE PLOTTED => 27-JAN-2015
TIME PLOTTED => 11:52

SIGN QUANTITIES
SQ-4

Dist	COUNTY	ROUTE	POST MILES TOTAL PROJECT	SHEET No.	TOTAL SHEETS
10	Ama	88	46.9/R54.7	15	35

REGISTERED CIVIL ENGINEER 1/16/15 DATE

1-20-15
PLANS APPROVAL DATE

REGISTERED PROFESSIONAL ENGINEER Chin Dang No. 77340 Exp. 6/30/15 CIVIL STATE OF CALIFORNIA

THE STATE OF CALIFORNIA OR ITS OFFICERS OR AGENTS SHALL NOT BE RESPONSIBLE FOR THE ACCURACY OR COMPLETENESS OF SCANNED COPIES OF THIS PLAN SHEET.

HMA DIKE

LOCATION PM/PM	SIDE	REMOVE AC DIKE	PLACE HMA DIKE (TYPE F)	PLACE HMA DIKE (TYPE C)	HMA (TYPE A)	TACK COAT
		LF	LF	LF	TON	TON
46.80/46.95	R†	790	876	125	13	0.02
51.65/51.85	R†	1,051	944	63	13	0.02
TOTAL		1,841	1,820	188	26 **	0.04**

** QUANTITIES INCLUDED IN ROADWAY ITEMS TABLE

ABBREVIATIONS:

RHMA-G (BWC)	RUBBERIZED HOT MIX ASPHALT-GAP GRADED (BONDED WEARING COURSE)
HMA-A	HOT MIX ASPHALT (TYPE A)
SAMI-R	STRESS ABSORBING MEMBRANE INTERLAYER - RUBBERIZED (ASPHALT-RUBBER BINDER, PRECOATED SCREENINGS)
BWC	BONDED WEARING COURSE

NOTE:

(N) - NOT A SEPARATE PAY ITEM, FOR INFORMATION ONLY.

ROADWAY ITEMS

LOCATION PM	HMA (TYPE A)	RHMA-G (BWC)	ASPHALTIC EMULSION MEMBRANE (BWC)	SAMI-R		TACK COAT	TREATED WOOD WASTE
				ASPHALT-RUBBER BINDER	PRECOATED SCREENINGS		
	TON	TON	TON	TON	TON	TON	LB
ROADWAY OVERLAY - PM 46.9/R54.7	20,006	9,993	125	424	2,997		
REPAIR FAILED AREA - PM 46.9/R54.7	6,169					10.78	
HMA DIKE - PM 46.9/R54.7	26	10				0.04	
TREATED WOOD WASTE - PM 46.9/R54.7							158,096
TREATED WOOD WASTE FROM SQ-4							3,596
TOTAL	26,201	10,003	125	424	2,997	10.82	161,692

METAL BEAM GUARD RAILING

LOCATION PM/PM	SIDE	REMOVE GUARDRAIL	(N) REMOVE TERMINAL SYSTEM	MIDWEST GUARDRAIL SYSTEM (WOOD POST)	ALTERNATIVE FLARED TERMINAL SYSTEM	ALTERNATIVE IN-LINE TERMINAL SYSTEM	END ANCHOR ASSEMBLY (TYPE CA)	LAYOUT TYPE	TREATED WOOD WASTE
		LF	EA	LF	EA	EA	EA	(N)	LB
46.80/46.98	R†	963	2	888	2			11E	10,497
46.87/46.89	L†	115	1	78	1		1	11G	1,254
46.99/47.20	R†	1,072	2	997	2			11E	11,685
47.25/47.38	R†	694	2	619	2			11E	7,565
47.44/47.49	R†	230	2	155	2			11E	2,507
47.52/47.64	R†	602	2	527	2			11E	6,562
47.98/48.08	R†	533	2	458	2			11E	5,810
48.15/48.27	R†	609	2	534	2			11E	6,638
48.30/48.52	R†	1,123	2	1,048	2			11E	12,241
49.17/49.27	R†	524	2	449	2			11E	5,712
49.34/49.48	R†	728	2	653	2			11E	7,935
49.86/50.02	L†	832	2	757	2			11E	9,069
50.34/50.51	R†	937	2	862	2			11E	10,213
51.33/51.45	L†	634	2	559	2			11E	6,911
51.65/51.85	R†	939	1	902	1		1	11G	10,235
52.23/52.34	R†	483	2	408	2			11E	5,265
52.49/52.64	R†	882	2	807	2			11E	9,614
52.78/52.91	R†	675	2	600	2			11E	7,358
52.79/52.86	L†	366	2	291	2			11E	3,989
53.00/53.07	R†	378	2	303	2			11E	4,120
53.51/53.60	R†	486	2	399	1	1		11J	5,297
53.88/54.02	R†	699	2	599		2		11D	7,619
TOTAL		14,504	42 ***	12,893	39	3	2		158,096**

** QUANTITIES INCLUDED IN ROADWAY ITEMS TABLE *** QUANTITIES INCLUDED IN REMOVE GUARDRAIL

COLD PLANE AC PAVEMENT

LOCATION	PM	SIDE	COLD PLANE AC Pvm†
			SQYD
ROUTE 88	46.9/R54.7	R†/L†	139,331
TURNOUTS	47.14/47.23	R†	413
	47.51/47.55	L†	170
	47.60/47.70	R†	510
	49.59/49.67	L†	723
	50.11/50.20	R†	550
	50.53/50.64	R†	284
	50.79/50.83	L†	285
	51.22/51.33	R†	292
	51.96/52.03	R†	331
	52.18/52.32	R†	1,574
	VISTA POINT 52.42/52.48	L†	759
	VISTA POINT 52.50/52.59	R†	1,066
ELLIS ROAD	49.60	R†	300
MEHRTEN SPRING ROAD	50.11	L†	154
BEAR RIVER RESERVOIR ROAD	51.54	L†	550
BEAR RIVER RESERVOIR ROAD	51.54	R†	58
DUFRENE ROAD	52.97	L†	346
DUFRENE ROAD	52.98	R†	338
PEDDLER HILL ROAD	53.92	L†	1,031
PRIVATE DRIVEWAYS	47.66	L†	180
	49.54	L†	494
	49.58	R†	142
OVERSIDE DRAIN	51.55	R†	9
	53.82	R†	6
REPAIR FAILED AREA - PM 46.9/R54.7	46.9/R54.7	R†/L†	36,968
TOTAL			186,864

SHOULDER BACKING

LOCATION PM/PM	SIDE	SHOULDER BACKING
		TON
46.98/46.99	R†	1
46.89/49.86	L†	174
47.20/47.25	R†	3
47.38/47.44	R†	4
47.49/47.52	R†	2
47.64/47.98	R†	20
48.08/48.15	R†	4
48.27/48.30	R†	2
48.52/49.17	R†	38
49.27/49.34	R†	4
49.48/50.34	R†	50
50.02/51.33	L†	77
50.51/51.65	R†	67
51.45/52.79	L†	79
51.85/52.23	R†	22
52.34/52.49	R†	9
52.64/52.78	R†	8
52.86/54.70	L†	108
52.91/53.00	R†	5
53.07/53.51	R†	26
53.60/53.88	RT	16
54.02/54.70	RT	40
TOTAL		759

SUMMARY OF QUANTITIES

Q-1

REVISED BY	INGRID STEWART
DATE REVISED	8/29/14
CD	
CALCULATED-DESIGNED BY	CHIN DANG
CHECKED BY	
FUNCTIONAL SUPERVISOR	CAROLINE REYES

STATE OF CALIFORNIA - DEPARTMENT OF TRANSPORTATION
Caltrans DESIGN

LAST REVISION 01-20-15 | DATE PLOTTED => 28-JAN-2015 | TIME PLOTTED => 10:12

Dist	COUNTY	ROUTE	POST MILES TOTAL PROJECT	SHEET No.	TOTAL SHEETS
10	Ama	88	46.9/R54.7	16	35

REGISTERED CIVIL ENGINEER 1/16/15 DATE

1-20-15
PLANS APPROVAL DATE

REGISTERED PROFESSIONAL ENGINEER Chin Dang No. 77340 Exp. 6/30/15 CIVIL STATE OF CALIFORNIA

THE STATE OF CALIFORNIA OR ITS OFFICERS OR AGENTS SHALL NOT BE RESPONSIBLE FOR THE ACCURACY OR COMPLETENESS OF SCANNED COPIES OF THIS PLAN SHEET.

EASTBOUND REPAIR FAILED AREA

LOCATION PM/PM	LENGTH (N)	WIDTH (N)	DEPTH (N)	HMA (TYPE A)	COLD PLANE AC Pvmt
	Ft	Ft	Ft	TON	SQYD
46.9/47.5	170	4	0.25	13	76
	75	4	0.25	6	33
47.5/48.0	140	4	0.25	10	62
	75	4	0.25	6	33
	140	4	0.25	10	62
	50	4	0.25	4	22
	215	4	0.25	16	96
48.0/48.5	270	4	0.25	20	120
	40	12	0.25	9	53
	70	12	0.25	16	93
	100	4	0.25	7	44
	250	4	0.25	19	111
48.5/49.0	75	4	0.25	6	33
	300	4	0.25	22	133
	120	12	0.25	27	160
	180	12	0.25	40	240
	120	4	0.25	9	53
	5	4	0.25	0	2
	260	12	0.25	58	347
49.0/49.5	215	4	0.25	16	96
	45	4	0.25	3	20
	930	24	0.25	413	2480
	60	4	0.25	4	27
	210	12	0.25	47	280
49.5/50.0	225	28	0.25	117	700
	280	12	0.25	62	373
	225	12	0.25	50	300
	100	4	0.25	7	44
	70	12	0.25	16	93
	115	12	0.25	26	153
	390	12	0.25	87	520
	115	4	0.25	9	51
	65	4	0.25	5	29
	170	4	0.25	13	76
50.0/50.5	215	12	0.25	48	287
	80	4	0.25	6	36
	380	12	0.25	84	507
	370	4	0.25	27	164
50.5/51.0	850	12	0.25	189	1133
	675	12	0.25	150	900
	150	4	0.25	11	67
	385	4	0.25	29	171
	75	4	0.25	6	33
	140	12	0.25	31	187
51.0/51.5	25	12	0.25	6	33
	50	4	0.25	4	22
	185	4	0.25	14	82
	135	4	0.25	10	60
51.5/52.0	680	12	0.25	151	907
	1540	12	0.25	342	2053
	100	12	0.25	22	133
52.0/52.5	170	4	0.25	13	76
	30	4	0.25	2	13
	45	4	0.25	3	20
	45	4	0.25	3	20
	215	4	0.25	16	96
52.5/53.0	140	4	0.25	10	62
	70	4	0.25	5	31
	140	4	0.25	10	62
	55	4	0.25	4	24
	60	4	0.25	4	27
SUBTOTAL EASTBOUND 1				2,373	14,224

EASTBOUND REPAIR FAILED AREA

LOCATION PM/PM	LENGTH (N)	WIDTH (N)	DEPTH (N)	HMA (TYPE A)	COLD PLANE AC Pvmt
	Ft	Ft	Ft	TON	SQYD
	120	12	0.25	27	160
	90	4	0.25	7	40
	380	12	0.25	84	507
	80	12	0.25	18	107
	115	4	0.25	9	51
	55	12	0.25	12	73
	50	12	0.25	11	67
	70	12	0.25	16	93
	70	12	0.25	16	93
53.0/53.5	220	4	0.25	16	98
	65	12	0.25	14	87
	50	12	0.25	11	67
	170	4	0.25	13	76
	235	12	0.25	52	313
	210	4	0.25	16	93
	50	12	0.25	11	67
	100	12	0.25	22	133
	180	12	0.25	40	240
	145	4	0.25	11	65
	180	12	0.25	40	240
53.5/54.0	130	4	0.25	10	58
	70	12	0.25	16	93
	280	4	0.25	21	124
	325	12	0.25	72	433
	135	12	0.25	30	180
	65	12	0.25	14	87
54.0/54.5	430	12	0.25	96	573
	415	12	0.25	92	553
	325	12	0.25	72	433
	50	12	0.25	11	67
	300	4	0.25	22	133
	200	4	0.25	15	89
	125	4	0.25	9	56
54.0/54.7	175	12	0.25	39	233
	70	4	0.25	5	31
	145	4	0.25	11	64
	320	4	0.25	24	142
	100	4	0.25	7	44
SUBTOTAL EASTBOUND 2				1,012	6,065

NOTE:
(N) - NOT A SEPARATE PAY ITEM, FOR INFORMATION ONLY.

WESTBOUND REPAIR FAILED AREA

LOCATION PM/PM	LENGTH (N)	WIDTH (N)	DEPTH (N)	HMA (TYPE A)	COLD PLANE AC Pvmt
	Ft	Ft	Ft	TON	SQYD
46.9/49.0	170	4	0.25	13	76
	100	4	0.25	7	44
	75	4	0.25	6	33
	12	4	0.25	1	5
	300	4	0.25	22	133
	110	4	0.25	8	49
	40	4	0.25	3	18
	40	4	0.25	3	18
	135	4	0.25	10	60
	60	4	0.25	4	27
	110	4	0.25	8	49
	65	4	0.25	5	29
	55	4	0.25	4	24
	160	4	0.25	12	71
	95	4	0.25	7	42
	120	4	0.25	9	53
	75	4	0.25	6	33
	280	12	0.25	62	373
	45	4	0.25	3	20
	85	4	0.25	6	38
	50	4	0.25	4	22
	30	4	0.25	2	13
	110	12	0.25	24	147
	120	4	0.25	9	53
	50	4	0.25	4	22
	30	4	0.25	2	13
49.0/49.5	65	4	0.25	5	29
	215	12	0.25	48	287
	92	4	0.25	7	41
	170	12	0.25	38	227
	670	12	0.25	149	893
	386	12	0.25	86	515
	170	4	0.25	13	76
49.5/50.0	35	12	0.25	8	47
	75	12	0.25	17	100
	80	12	0.25	18	107
	190	4	0.25	14	84
	215	4	0.25	16	96
	65	4	0.25	5	29
	225	12	0.25	50	300
	80	4	0.25	6	36
	65	4	0.25	5	29
	40	12	0.25	9	53
	45	12	0.25	10	60
	235	4	0.25	17	104
	45	4	0.25	3	20
	240	4	0.25	18	107
SUBTOTAL WESTBOUND 1				786	4,705

SUMMARY OF QUANTITIES

Q-2

CD	8/29/14	REVISED BY	DATE REVISED
INGRID STEWART	CHIN DANG	CALCULATED-DESIGNED BY	CHECKED BY
FUNCTIONAL SUPERVISOR	CAROLINE REYES		

STATE OF CALIFORNIA - DEPARTMENT OF TRANSPORTATION
Caltrans DESIGN

LAST REVISION 01-20-15 | DATE PLOTTED => 27-JAN-2015 | TIME PLOTTED => 11:52

Dist	COUNTY	ROUTE	POST MILES TOTAL PROJECT	SHEET No.	TOTAL SHEETS
10	Ama	88	46.9/R54.7	17	35

REGISTERED CIVIL ENGINEER 1/16/15 DATE

1-20-15
PLANS APPROVAL DATE

REGISTERED PROFESSIONAL ENGINEER Chin Dang No. 77340 Exp. 6/30/15 CIVIL STATE OF CALIFORNIA

THE STATE OF CALIFORNIA OR ITS OFFICERS OR AGENTS SHALL NOT BE RESPONSIBLE FOR THE ACCURACY OR COMPLETENESS OF SCANNED COPIES OF THIS PLAN SHEET.

WESTBOUND REPAIR FAILED AREA

LOCATION PM/PM	LENGTH (N)	WIDTH (N)	DEPTH (N)	HMA (TYPE A)	COLD PLANE AC Pvmt
	Ft	Ft	Ft	TON	SQYD
50.0/51.5	45	12	0.25	10	60
	115	4	0.25	9	51
	80	12	0.25	18	107
	120	4	0.25	9	53
	715	4	0.25	53	318
	90	4	0.25	7	40
	270	12	0.25	60	360
	30	4	0.25	2	13
	50	4	0.25	4	22
	70	4	0.25	5	31
	460	4	0.25	34	204
	300	4	0.25	22	133
	110	4	0.25	8	49
	45	4	0.25	3	20
	300	4	0.25	22	133
	110	4	0.25	8	49
	45	4	0.25	3	20
	30	12	0.25	7	40
	170	4	0.25	13	76
	120	4	0.25	9	53
	160	4	0.25	12	71
	175	4	0.25	13	78
	45	4	0.25	3	20
	110	4	0.25	8	49
	145	4	0.25	11	64
	180	4	0.25	13	80
	115	12	0.25	26	153
	200	4	0.25	15	89
	120	4	0.25	9	53
	80	4	0.25	6	36
	70	4	0.25	5	31
	220	4	0.25	16	98
	240	4	0.25	18	107
	90	12	0.25	20	120
	360	12	0.25	80	480
51.5/52.0	1275	25	0.25	590	3542
	590	18	0.25	197	1180
	135	12	0.25	30	180
	20	4	0.25	1	9
	75	4	0.25	6	33
	40	4	0.25	3	18
	55	4	0.25	4	24
	30	4	0.25	2	13
	85	4	0.25	6	38
	100	4	0.25	7	44
	80	4	0.25	6	36
	80	4	0.25	6	36
	95	4	0.25	7	42
	50	12	0.25	11	67
	80	4	0.25	6	36
52.5/53.0	36	4	0.25	3	16
	60	4	0.25	4	27
	70	4	0.25	5	31
	55	4	0.25	4	24
	45	4	0.25	3	20
	220	4	0.25	16	98
	35	4	0.25	3	16
	250	4	0.25	19	111
	60	4	0.25	4	27
SUBTOTAL WESTBOUND 2				1,504	9,029

WESTBOUND REPAIR FAILED AREA

LOCATION PM/PM	LENGTH (N)	WIDTH (N)	DEPTH (N)	HMA (TYPE A)	COLD PLANE AC Pvmt
	Ft	Ft	Ft	TON	SQYD
	65	4	0.25	5	29
	30	4	0.25	2	13
	75	4	0.25	6	33
	60	4	0.25	4	27
	65	4	0.25	5	29
	30	4	0.25	2	13
	70	4	0.25	5	31
	60	4	0.25	4	27
	90	4	0.25	7	40
53.0/53.5	90	4	0.25	7	40
	25	4	0.25	2	11
	50	4	0.25	4	22
	40	4	0.25	3	18
	146	4	0.25	11	65
	40	4	0.25	3	18
	115	4	0.25	9	51
	80	4	0.25	6	36
	60	4	0.25	4	27
	150	4	0.25	11	67
	50	4	0.25	4	22
	270	4	0.25	20	120
	75	4	0.25	6	33
	230	4	0.25	17	102
53.5/54.0	40	4	0.25	3	18
	180	4	0.25	13	80
	120	4	0.25	9	53
	150	4	0.25	11	67
	60	4	0.25	4	27
	65	4	0.25	5	29
	35	4	0.25	3	16
	80	4	0.25	6	36
	160	4	0.25	12	71
	110	4	0.25	8	49
	50	4	0.25	4	22
	36	4	0.25	3	16
	1400	2	0.25	52	311
54.0/54.5	1600	2	0.25	59	356
	200	4	0.25	15	89
	35	4	0.25	3	16
	40	4	0.25	3	18
	55	4	0.25	4	24
	50	4	0.25	4	22
	80	4	0.25	6	36
	300	4	0.25	22	133
	120	4	0.25	9	53
	55	4	0.25	4	24
54.5/54.7	480	4	0.25	36	213
	40	4	0.25	3	18
	60	4	0.25	4	27
	510	4	0.25	38	227
	50	4	0.25	4	22
SUBTOTAL WESTBOUND 3				494	2,945
SUBTOTAL WESTBOUND 2				1,504	9,029
SUBTOTAL WESTBOUND 1				786	4,705
SUBTOTAL EASTBOUND 2				1,012	6,065
SUBTOTAL EASTBOUND 1				2,373	14,224
TOTAL				6,169**	36,968*

* QUANTITIES INCLUDED IN THE COLD PLANE AC PAVEMENT TABLE
** QUANTITIES INCLUDED ROADWAY ITEMS TABLE

NOTE:
(N) - NOT A SEPARATE PAY ITEM, FOR INFORMATION ONLY.

SUMMARY OF QUANTITIES
Q-3

CD	1/20/15
REVISED BY	DATE REVISED
INGRID STEWART	CHIN DANG
CALCULATED-DESIGNED BY	CHECKED BY
FUNCTIONAL SUPERVISOR	CAROLINE REYES

STATE OF CALIFORNIA - DEPARTMENT OF TRANSPORTATION
Caltrans® DESIGN

LAST REVISION 01-20-15 | DATE PLOTTED => 27-JAN-2015 | TIME PLOTTED => 11:52

M

Maint	MAINTENANCE
Max	MAXIMUM
MB	METAL BEAM
MBB	METAL BEAM BARRIER
MBGR	METAL BEAM GUARD RAILING
Med	MEDIAN
MGS	MIDWEST GUARDRAIL SYSTEM
MH	MANHOLE
Min	MINIMUM
Misc	MISCELLANEOUS
Misc I & S	MISCELLANEOUS IRON AND STEEL
Mkr	MARKER
Mod	MODIFIED,
	MODIFY
Mon	MONUMENT
MP	METAL PLATE
MPGR	METAL PLATE GUARD RAILING
MR	MOVEMENT RATING
MSE	MECHANICALLY STABILIZED EMBANKMENT
Mt	MOUNTAIN, MOUNT
Mtl	MATERIAL
MVP	MAINTENANCE VEHICLE PULLOUT

N

N	NORTH
NB	NORTHBOUND
No.	NUMBER (MUST HAVE PERIOD)
Nos.	NUMBERS (MUST HAVE PERIOD)
NPS	NOMINAL PIPE SIZE
NS	NEAR SIDE
NSP	NEW STANDARD PLAN
NTS	NOT TO SCALE

O

Oblr	OBLITERATE
OC	OVERCROSSING
OD	OUTSIDE DIAMETER
OF	OUTSIDE FACE
OG	ORIGINAL GROUND
OGAC	OPEN GRADED ASPHALT CONCRETE
OGFC	OPEN GRADED FRICTION COURSE
OH	OVERHEAD
OHWM	ORDINARY HIGH WATER MARK
O-O	OUT TO OUT
Opp	OPPOSITE
OSD	OVERSIDE DRAIN

P

P	PAGE
PAP	PERFORATED ALUMINUM PIPE
PB	PULL BOX
PC	POINT OF CURVATURE,
	PRECAST
PCC	POINT OF COMPOUND CURVE,
	PORTLAND CEMENT CONCRETE
PCMS	PORTABLE CHANGEABLE MESSAGE SIGN
PCP	PERFORATED CONCRETE PIPE,
	PRESTRESSED CONCRETE PIPE
PCVC	POINT OF COMPOUND VERTICAL CURVE
PEC	PERMIT TO ENTER AND CONSTRUCT
Ped	PEDESTRIAN
Ped OC	PEDESTRIAN OVERCROSSING
Ped UC	PEDESTRIAN UNDERCROSSING
Perm Mtl	PERMEABLE MATERIAL

P continued

PG	PROFILE GRADE
PI	POINT OF INTERSECTION
PJP	PARTIAL JOINT PENETRATION
Pkwy	PARKWAY
ℙ,PL	PLATE
P/L	PROPERTY LINE
PM	POST MILE,
	TIME FROM NOON TO MIDNIGHT
PN	PAVING NOTCH
POC	POINT OF HORIZONTAL CURVE
POT	POINT OF TANGENT
POVC	POINT OF VERTICAL CURVE
PP	PIPE PILE,
	PLASTIC PIPE,
	POWER POLE
PPL	PREFORMED PERMEABLE LINER
PPP	PERFORATED PLASTIC PIPE
PRC	POINT OF REVERSE CURVE
PRF	PAVEMENT REINFORCING FABRIC
PRVC	POINT OF REVERSE VERTICAL CURVE
PS&E	PLANS, SPECIFICATIONS AND ESTIMATES
PS, P/S	PRESTRESSED
PSP	PERFORATED STEEL PIPE
PT	POINT OF TANGENCY
PVC	POLYVINYL CHLORIDE
Pvmt	PAVEMENT

Q

Qty	QUANTITY

R

R	RADIUS
R & D	REMOVE AND DISPOSE
R & S	REMOVE AND SALVAGE
R/C	RATE OF CHANGE
RCA	REINFORCED CONCRETE ARCH
RCB	REINFORCED CONCRETE BOX
RCP	REINFORCED CONCRETE PIPE
RCPA	REINFORCED CONCRETE PIPE ARCH
Rd	ROAD
Reinf	REINFORCED,
	REINFORCEMENT,
	REINFORCING
Rel	RELOCATE
Repl	REPLACEMENT
Ret	RETAINING
Rev	REVISED, REVISION
Rdwy	ROADWAY
RHMA	RUBBERIZED HOT MIX ASPHALT
Riv	RIVER
RM	ROAD-MIXED
RP	RADIUS POINT,
	REFERENCE POINT
RR	RAILROAD
RSP	ROCK SLOPE PROTECTION,
	REVISED STANDARD PLAN
Rt	RIGHT
Rte	ROUTE
RW	REDWOOD,
	RETAINING WALL
R/W	RIGHT OF WAY
Rwy	RAILWAY

S

S	SOUTH,
	SUPPLEMENT
SAE	STRUCTURE APPROACH EMBANKMENT
Salv	SALVAGE
SAPP	STRUCTURAL ALUMINUM PLATE PIPE
SB	SOUTHBOUND
SC	SAND CUSHION
SCSP	SLOTTED CORRUGATED STEEL PIPE
SD	STORM DRAIN
Sec	SECOND,
	SECTION
Sep	SEPARATION
SG	SUBGRADE
Shld	SHOULDER
Sht	SHEET
Sim	SIMILAR
℄	STATION LINE
SM	SELECTED MATERIAL
Spec	SPECIAL,
	SPECIFICATIONS
SPP	SLOTTED PLASTIC PIPE
SS	SLOPE STAKE
SSBM	STRAP AND SADDLE BRACKET METHOD
SSD	STRUCTURAL SECTION DRAIN
SSPA	STRUCTURAL STEEL PLATE ARCH
SSPP	STRUCTURAL STEEL PLATE PIPE
SSPPA	STRUCTURAL STEEL PLATE PIPE ARCH
SSRP	STEEL SPIRAL RIB PIPE
St	STREET
Sta	STATION
STBB	SINGLE THRIE BEAM BARRIER
Std	STANDARD
Str	STRUCTURE
Surf	SURFACING
SW	SIDEWALK,
	SOUND WALL
Swr	SEWER
Sym	SYMMETRICAL
S4S	SURFACE 4 SIDES

T

T	SEMI-TANGENT
Tan	TANGENT
TBB	THRIE BEAM BARRIER
Tbr	TIMBER
TC	TOP OF CURB
TCB	TRAFFIC CONTROL BOX
TCE	TEMPORARY CONSTRUCTION EASEMENT
Tel	TELEPHONE
Temp	TEMPORARY
TG	TOP OF GRADE
Tot	TOTAL
TP	TELEPHONE POLE
TPB	TREATED PERMEABLE BASE
TPM	TREATED PERMEABLE MATERIAL
Trans	TRANSITION

T continued

TS	TRANSVERSE,
	TRAFFIC SIGNAL,
	TUBULAR STEEL
Typ	TYPICAL

U

UC	UNDERCROSSING
UD	UNDERDRAIN
UG	UNDERGROUND
UON	UNLESS OTHERWISE NOTED
UP	UNDERPASS

V

V	VALVE,
	DESIGN SPEED
Var	VARIABLE,
	VARIES
VC	VERTICAL CURVE
VCP	VITRIFIED CLAY PIPE
Vert	VERTICAL
Via	VIADUCT
Vol	VOLUME

W

W	WEST,
	WIDTH
WB	WESTBOUND
WH	WEEP HOLE
WM	WIRE MESH
WS	WATER SURFACE
WSP	WELDED STEEL PIPE
Wt	WEIGHT
WV	WATER VALVE
WW	WINGWALL
WWLOL	WINGWALL LAYOUT LINE

X

X Sec	CROSS SECTION
Xing	CROSSING

Y

Yr	YEAR
Yrs	YEARS

Dist	COUNTY	ROUTE	POST MILES TOTAL PROJECT	SHEET No.	TOTAL SHEETS
10	Ama	88	46.9/R54.7	18	35

Grace M. Tsushima
REGISTERED CIVIL ENGINEER

July 19, 2013
PLANS APPROVAL DATE

REGISTERED PROFESSIONAL ENGINEER
Grace M. Tsushima
No. C49814
Exp. 9-30-14
CIVIL
STATE OF CALIFORNIA

THE STATE OF CALIFORNIA OR ITS OFFICERS OR AGENTS SHALL NOT BE RESPONSIBLE FOR THE ACCURACY OR COMPLETENESS OF SCANNED COPIES OF THIS PLAN SHEET.

TO ACCOMPANY PLANS DATED 1-20-15

UNIT OF MEASUREMENT SYMBOLS:

Some of the symbols used in the project plan quantity tables and in the Bid Item List are:

TABLE A

SYMBOL USED	DEFINITIONS
ACRE	ACRE
CF	CUBIC FOOT
CY	CUBIC YARD
EA	EACH
GAL	GALLON
LB	POUND
LF	LINEAR FOOT
SQFT	SQUARE FOOT
SQYD	SQUARE YARD
STA	100 FEET
TAB	TABLET
TON	2,000 POUNDS

Some of the symbols used in the plans other than in the project plan quantity tables are:

TABLE B

SYMBOL USED	DEFINITIONS
ksi	KIPS PER SQUARE INCH
ksf	KIPS PER SQUARE FOOT
psi	POUNDS PER SQUARE INCH
psf	POUNDS PER SQUARE FOOT
lb/ft^3, pcf	POUNDS PER CUBIC FOOT
tsf	TONS PER SQUARE FOOT
mph, MPH *	MILES PER HOUR
ø	NOMINAL DIAMETER
oz	OUNCE
lb	POUND
kip	1,000 POUNDS
cal	CALORIE
ft	FOOT OR FEET
gal	GALLON

* For use on a sign panel only

STATE OF CALIFORNIA
DEPARTMENT OF TRANSPORTATION

ABBREVIATIONS (SHEET 2 OF 2)

NO SCALE

RSP A10B DATED JULY 19, 2013 SUPERSEDES STANDARD PLAN A10B DATED MAY 20, 2011 - PAGE 2 OF THE STANDARD PLANS BOOK DATED 2010.

REVISED STANDARD PLAN RSP A10B

2010 REVISED STANDARD PLAN RSP A10B

6-7-13

Dist	COUNTY	ROUTE	POST MILES TOTAL PROJECT	SHEET No.	TOTAL SHEETS
10	Ama	88	46.9/R54.7	19	35

REGISTERED CIVIL ENGINEER

April 20, 2012
PLANS APPROVAL DATE

REGISTERED PROFESSIONAL ENGINEER
Roberta L. McLaughlin
No. C40375
Exp. 3-31-13
CIVIL
STATE OF CALIFORNIA

THE STATE OF CALIFORNIA OR ITS OFFICERS OR AGENTS SHALL NOT BE RESPONSIBLE FOR THE ACCURACY OR COMPLETENESS OF SCANNED COPIES OF THIS PLAN SHEET.

TO ACCOMPANY PLANS DATED 1-20-15

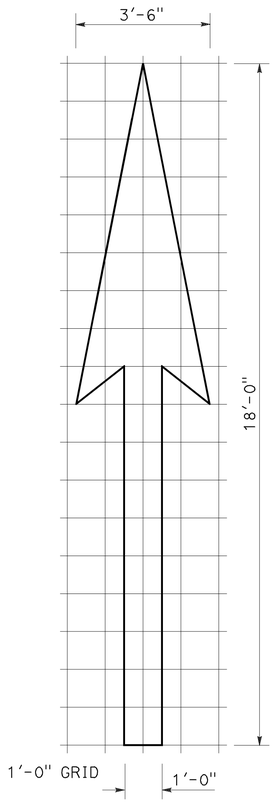

A=25 ft^2

TYPE I 18'-0" ARROW

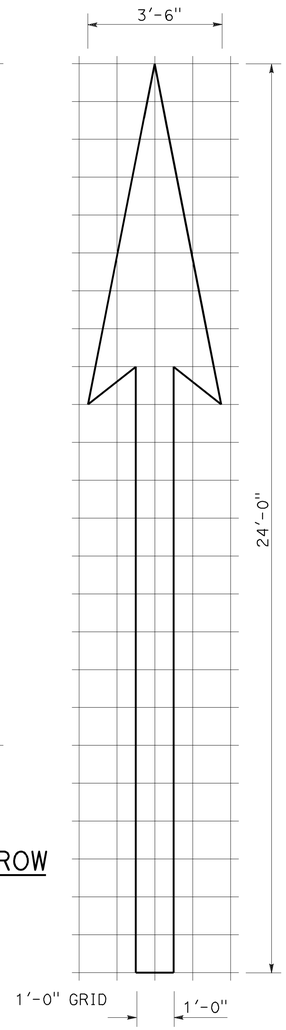

A=31 ft^2

TYPE I 24'-0" ARROW

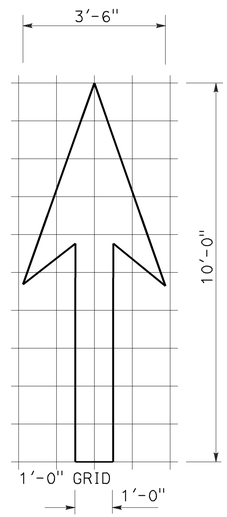

A=14 ft^2

TYPE I 10'-0" ARROW

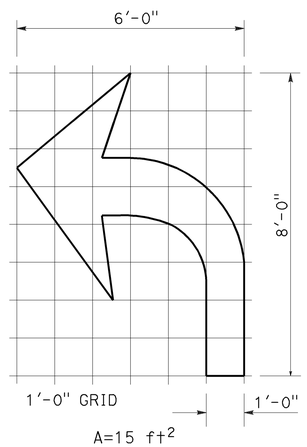

A=15 ft^2

TYPE IV (L) ARROW

(For Type IV (R) arrow, use mirror image)

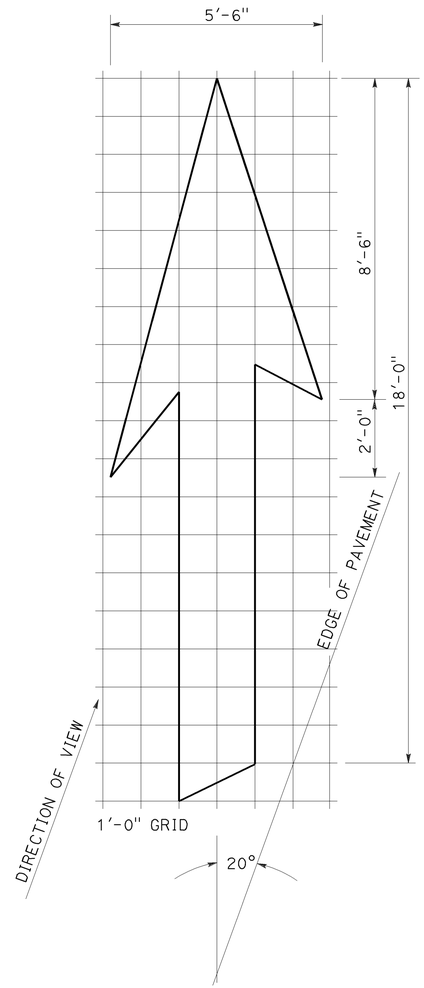

A=42 ft^2

TYPE VI ARROW

Right lane drop arrow
(For left lane, use mirror image)

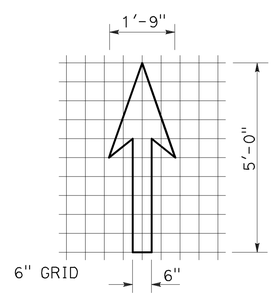

A=3.5 ft^2

BIKE LANE ARROW

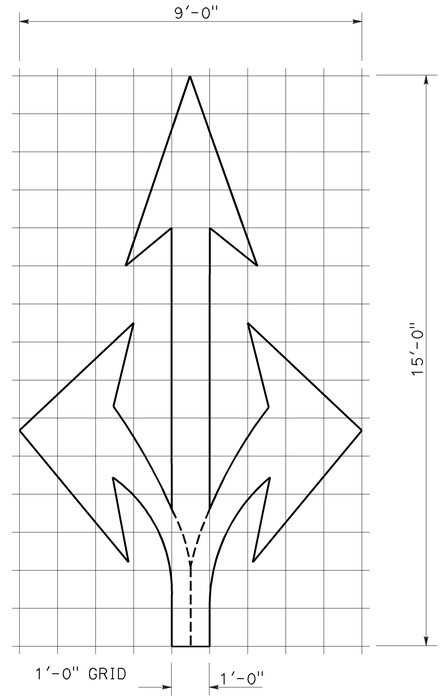

A=36 ft^2

TYPE VIII ARROW

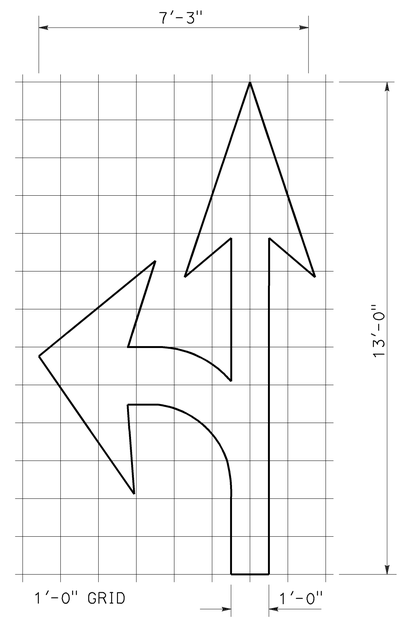

A=27 ft^2

TYPE VII (L) ARROW

(For Type VII (R) arrow, use mirror image)

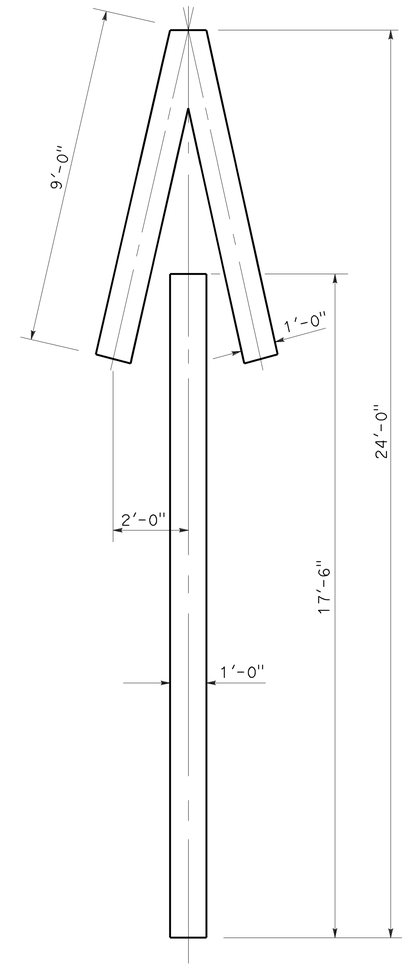

A=33 ft^2

TYPE V ARROW

NOTE:
Minor variations in dimensions may be accepted by the Engineer.

STATE OF CALIFORNIA
DEPARTMENT OF TRANSPORTATION

PAVEMENT MARKINGS ARROWS

NO SCALE

RSP A24A DATED APRIL 20, 2012 SUPERSEDES STANDARD PLAN A24A DATED MAY 20, 2011 - PAGE 13 OF THE STANDARD PLANS BOOK DATED 2010.

REVISED STANDARD PLAN RSP A24A

2010 REVISED STANDARD PLAN RSP A24A

3-14-12

Dist	COUNTY	ROUTE	POST MILES TOTAL PROJECT	SHEET No.	TOTAL SHEETS
10	Ama	88	46.9/R54.7	20	35

REGISTERED CIVIL ENGINEER

July 20, 2012
PLANS APPROVAL DATE

REGISTERED PROFESSIONAL ENGINEER
Roberta L. McLaughlin
No. C40375
Exp. 3-31-13
CIVIL
STATE OF CALIFORNIA

THE STATE OF CALIFORNIA OR ITS OFFICERS OR AGENTS SHALL NOT BE RESPONSIBLE FOR THE ACCURACY OR COMPLETENESS OF SCANNED COPIES OF THIS PLAN SHEET.

TO ACCOMPANY PLANS DATED 1-20-15

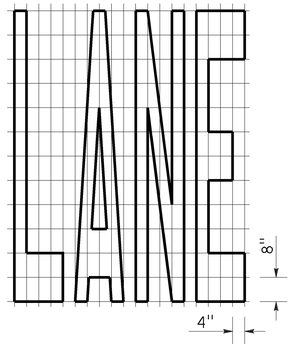

A=24 ft^2

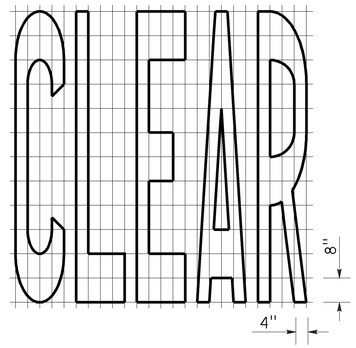

A=27 ft^2

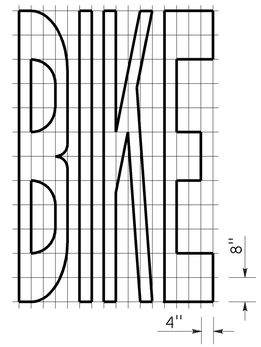

A=21 ft^2

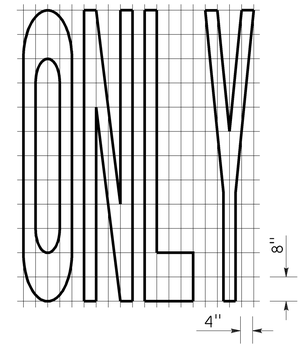

A=22 ft^2

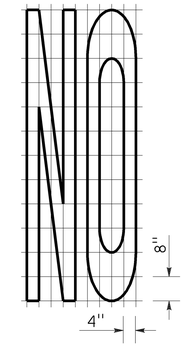

A=14 ft^2

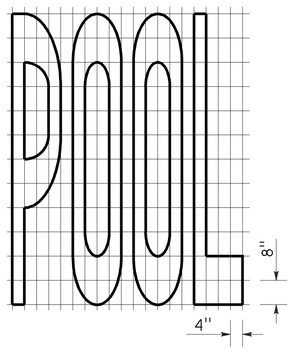

A=23 ft^2

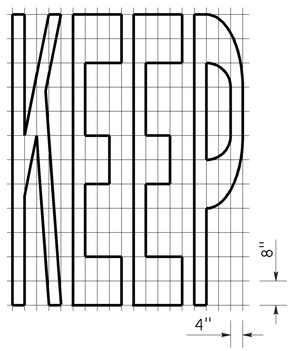

A=24 ft^2

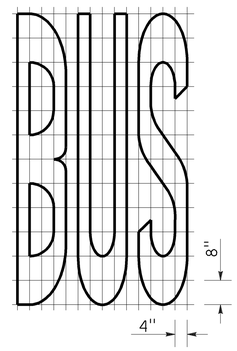

A=20 ft^2

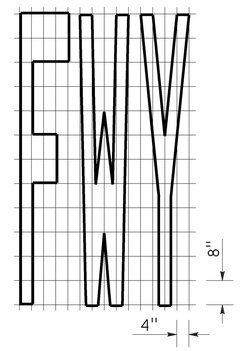

A=16 ft^2

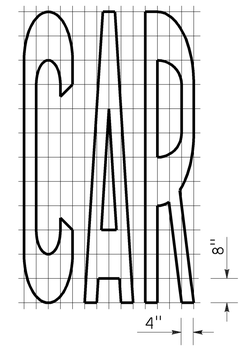

A=17 ft^2

WORD MARKINGS			
ITEM	ft^2	ITEM	ft^2
LANE	24	NO	14
POOL	23	BIKE	21
CAR	17	BUS	20
CLEAR	27	ONLY	22
KEEP	24	FWY	16

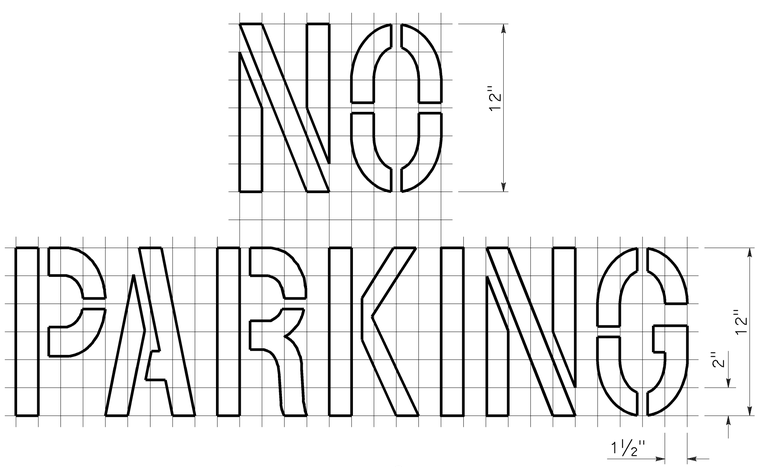

A=2 ft^2
See Notes 6 and 7

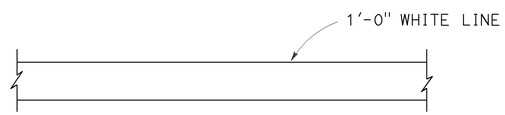

LIMIT LINE (STOP LINE)

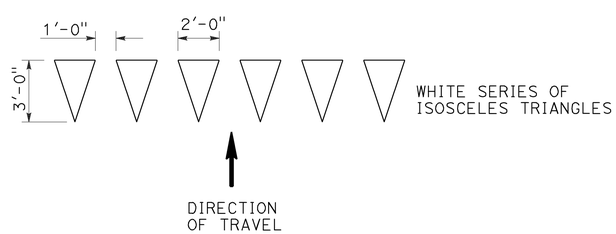

YIELD LINE

NOTES:

1. If a message consists of more than one word, it should read "UP", i.e., the first word should be nearest the driver.
2. The space between words should be at least four times the height of the characters for low speed roads, but not more than ten times the height of the characters. The space may be reduced appropriately where there is limited space because of local conditions.
3. Minor variations in dimensions may be accepted by the Engineer.
4. Portions of a letter, number or symbol may be separated by connecting segments not to exceed 2" in width.
5. The words "NO PARKING" pavement marking is to be used for parking facilities. For typical locations of markings, see Standard Plans A90A and A90B.
6. The words "NO PARKING", shall be painted in white letters no less than 1'-0" high on a contrasting background and located so that it is visible to traffic enforcement officials.

STATE OF CALIFORNIA
DEPARTMENT OF TRANSPORTATION

PAVEMENT MARKINGS WORDS, LIMIT AND YIELD LINES

NO SCALE

RSP A24E DATED JULY 20, 2012 SUPERSEDES STANDARD PLAN A24E
DATED MAY 20, 2011 - PAGE 17 OF THE STANDARD PLANS BOOK DATED 2010.

REVISED STANDARD PLAN RSP A24E

2010 REVISED STANDARD PLAN RSP A24E

6-12-12

Dist	COUNTY	ROUTE	POST MILES TOTAL PROJECT	SHEET No.	TOTAL SHEETS
10	Ama	88	46.9/R54.7	21	35

Randell D. Hiatt
REGISTERED CIVIL ENGINEER

July 19, 2013
PLANS APPROVAL DATE

REGISTERED PROFESSIONAL ENGINEER
Randell D. Hiatt
No. C50200
Exp. 6-30-15
CIVIL
STATE OF CALIFORNIA

THE STATE OF CALIFORNIA OR ITS OFFICERS OR AGENTS SHALL NOT BE RESPONSIBLE FOR THE ACCURACY OR COMPLETENESS OF SCANNED COPIES OF THIS PLAN SHEET.

TO ACCOMPANY PLANS DATED 1-20-15

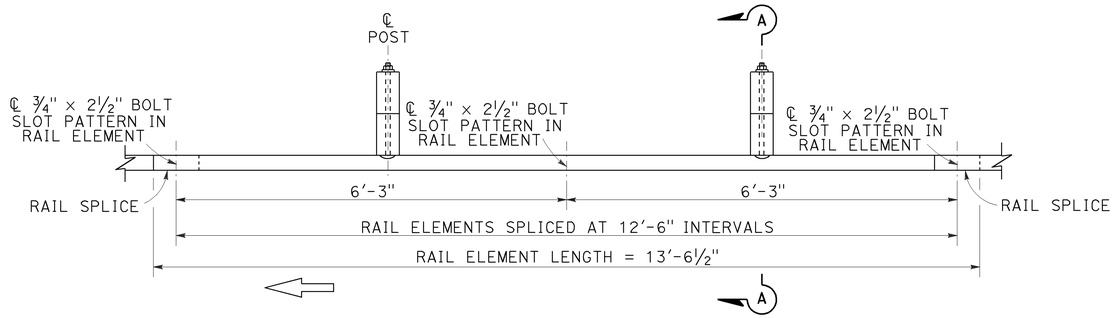

PLAN

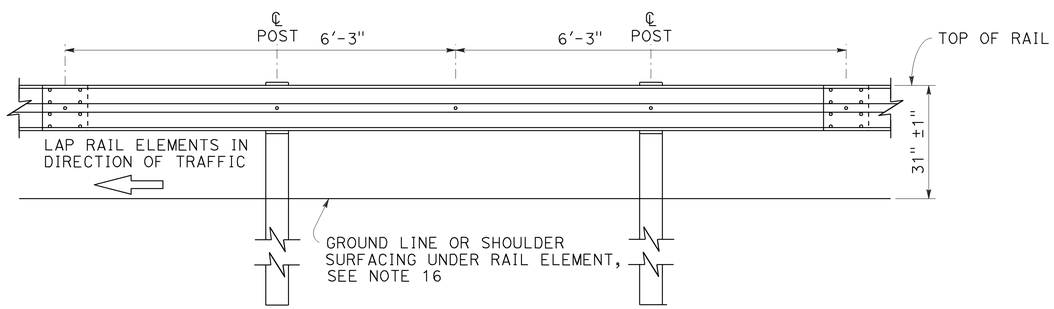

ELEVATION

MIDWEST GUARDRAIL SYSTEM WITH WOOD POST AND BLOCKS

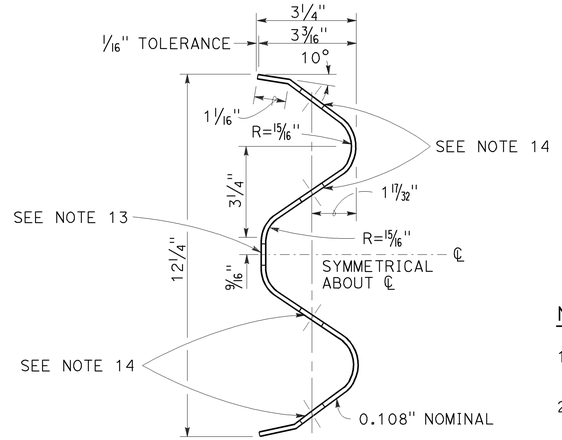

SECTION THRU RAIL ELEMENT

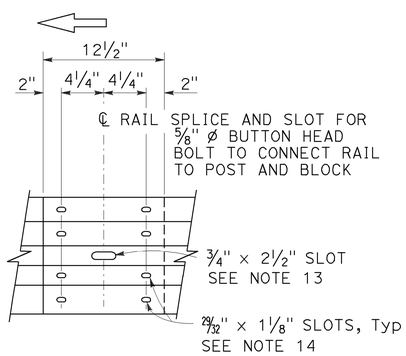

ELEVATION

RAIL ELEMENT SPLICE DETAIL

a) Connect the over lapped end of the rail elements with ⅝" ø × 1⅜" button head oval shoulder splice bolts inserted into the 29⁄32" × 1⅛" slots and bolted together with ⅝" ø recessed hex nuts. Recess of hex nut points toward rail element. A total of 8 bolts and nuts are to be used at each rail splice connection.

b) The ends of the rail elements are to be overlapped in the direction of traffic (see details).

c) Where end cap is to be attached to the end of a rail element, a total of 4 of the above described splice bolts and nuts are to be used.

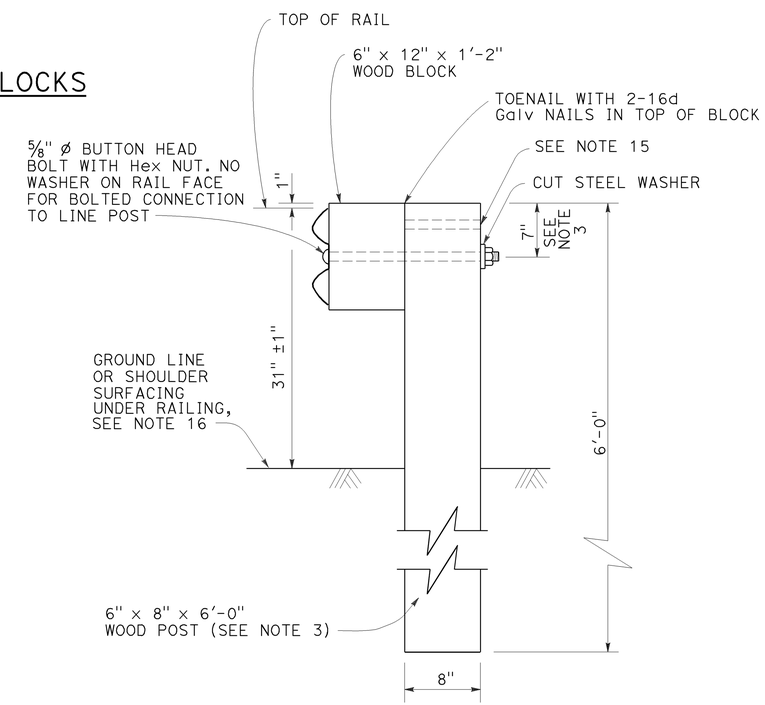

SECTION A-A

TYPICAL WOOD LINE POST INSTALLATION

See Note 4

NOTES:

1. For details of steel post installations, see Revised Standard Plan RSP A77L2.
2. For details of standard hardware used to construct MGS, see Revised Standard Plan RSP A77M1.
3. For details of wood posts and wood blocks used to construct MGS, see Revised Standard Plan RSP A77N1.
4. For additional installation details, see Revised Standard Plan RSP A77N3.
5. MGS post spacing to be 6'-3" center to center, except as otherwise noted.
6. For MGS typical layouts, see the A77P, A77Q and A77R Series of Standard Plans.
7. If railing is connected to terminal system end treatment, use 31" height terminal system end treatment.
8. For MGS end anchor details, see Revised Standard Plans RSP A77S1 and RSP A77T2.
9. For details of MGS transition to bridge railing, see Revised Standard Plan RSP A77U4.
10. For additional details of MSG connection to bridge railing, see Revised Standard Plans RSP A77U1, RSP A77U2 and RSP A77V1.
11. For MGS connection details to abutments and walls, see Revised Standard Plan RSP A77U3.
12. For typical MGS delineation and dike positioning details, see Revised Standard Plan RSP A77N4.
13. Slotted hole for bolted connection of rail element to block and post. See "Section Thru Rail Element".
14. Slotted holes for splice bolts to overlap ends of rail element. See "Section Thru Rail Element".
15. Additional hole in uppermost portion of line post is for potential future adjustments of railing height. See Revised Standard Plan RSP A77N1.
16. Install posts in soil.

STATE OF CALIFORNIA
DEPARTMENT OF TRANSPORTATION

MIDWEST GUARDRAIL SYSTEM STANDARD RAILING SECTION (WOOD POST WITH WOOD BLOCK)

NO SCALE

RSP A77L1 DATED JULY 19, 2013 SUPPLEMENTS STANDARD PLANS BOOK DATED 2010.

REVISED STANDARD PLAN RSP A77L1

2010 REVISED STANDARD PLAN RSP A77L1

7-3-13

Dist	COUNTY	ROUTE	POST MILES TOTAL PROJECT	SHEET No.	TOTAL SHEETS
10	Ama	88	46.9/R54.7	22	35

Randell D. Hiatt
REGISTERED CIVIL ENGINEER

July 19, 2013
PLANS APPROVAL DATE

REGISTERED PROFESSIONAL ENGINEER
Randell D. Hiatt
No. C50200
Exp. 6-30-15
CIVIL
STATE OF CALIFORNIA

THE STATE OF CALIFORNIA OR ITS OFFICERS OR AGENTS SHALL NOT BE RESPONSIBLE FOR THE ACCURACY OR COMPLETENESS OF SCANNED COPIES OF THIS PLAN SHEET.

TO ACCOMPANY PLANS DATED 1-20-15

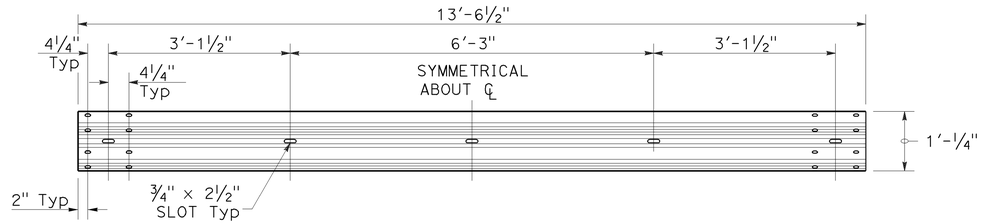

TYPICAL RAIL ELEMENT

NOTE:

1. Slotted holes for splice bolts to overlap ends of rail element.

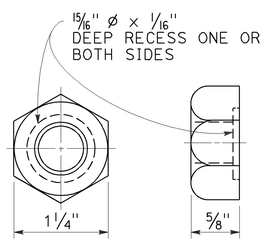

⅝" ø RECESS NUT

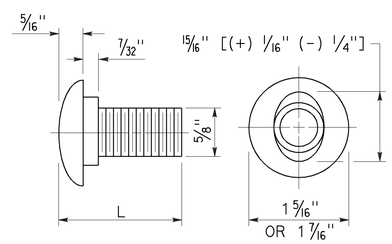

⅝" ø BUTTON HEAD BOLT

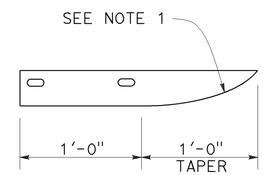

PLAN

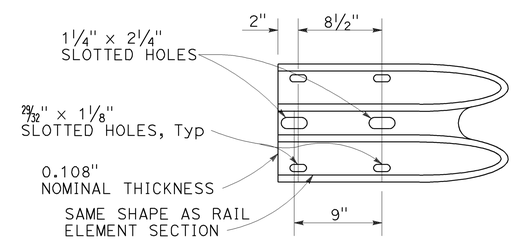

ELEVATION

END CAP
(TYPE A)

BUTTON HEAD BOLT

L	THREAD LENGTH
1⅜"	FULL THREAD LENGTH
2"	FULL THREAD LENGTH
10"	4" Min THREAD LENGTH
18"	4" Min THREAD LENGTH
20"	4" Min THREAD LENGTH
22"	4" Min THREAD LENGTH
26"	4" Min THREAD LENGTH
36"	4" Min THREAD LENGTH
** 2¾"	2" Min THREAD LENGTH
** 19"	4" Min THREAD LENGTH

** For nested rail applications.

STATE OF CALIFORNIA
DEPARTMENT OF TRANSPORTATION

MIDWEST GUARDRAIL SYSTEM STANDARD HARDWARE

NO SCALE

RSP A77M1 DATED JULY 19, 2013 SUPPLEMENTS THE STANDARD PLANS BOOK DATED 2010.

REVISED STANDARD PLAN RSP A77M1

2010 REVISED STANDARD PLAN RSP A77M1

7-3-13

Dist	COUNTY	ROUTE	POST MILES TOTAL PROJECT	SHEET No.	TOTAL SHEETS
10	Ama	88	46.9/R54.7	23	35

Randell D. Hiatt
REGISTERED CIVIL ENGINEER

July 19, 2013
PLANS APPROVAL DATE

REGISTERED PROFESSIONAL ENGINEER
Randell D. Hiatt
No. C50200
Exp. 6-30-15
CIVIL
STATE OF CALIFORNIA

THE STATE OF CALIFORNIA OR ITS OFFICERS OR AGENTS SHALL NOT BE RESPONSIBLE FOR THE ACCURACY OR COMPLETENESS OF SCANNED COPIES OF THIS PLAN SHEET.

TO ACCOMPANY PLANS DATED 1-20-15

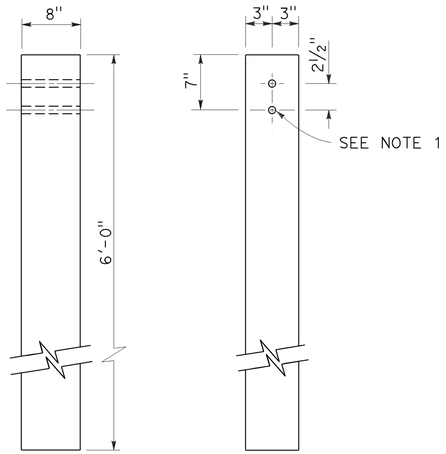

SIDE FRONT

6" x 8" WOOD POST
See Note 3

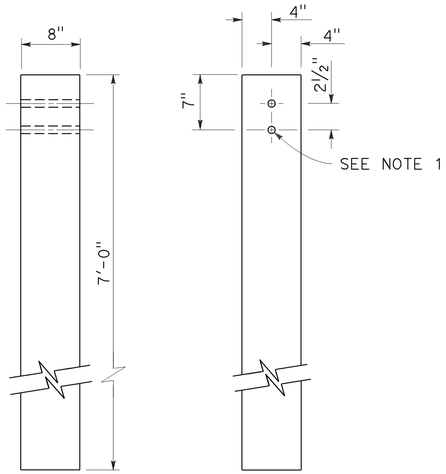

SIDE FRONT

8" x 8" WOOD POST
See Note 4

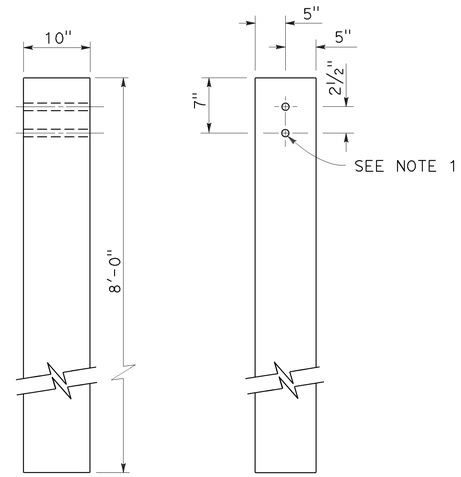

SIDE FRONT

10" x 10" WOOD POST
See Note 5

NOTES:

1. All holes in wood posts and blocks shall be ¾" Dia ± 1/16".
2. Dimensions shown for wood post are nominal.
3. This post and block combination used for standard line post sections of MGS.
4. This post and 8" x 12" block combination used for line post sections of MGS on narrow roadways.
5. This post and 8" x 12" block combination is typically used where strengthened line post sections of MGS are warranted to shield fixed objects.
6. See Revised Standard Plan RSP A77L3 for use of 6" x 8" and 8" x 8" wood blocks.

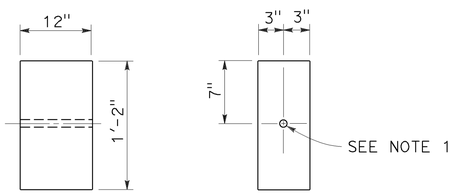

SIDE FRONT

6" x 12" WOOD BLOCK
See Note 3

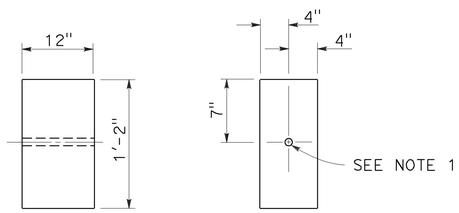

SIDE FRONT

8" x 12" WOOD BLOCK

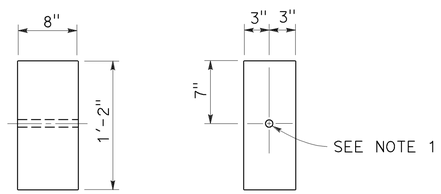

SIDE FRONT

6" x 8" WOOD BLOCK
Only for use with metal beam guard rail see Note 6

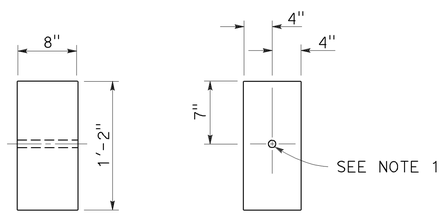

SIDE FRONT

8" x 8" WOOD BLOCK
Only for use with metal beam guard rail see Note 6

STATE OF CALIFORNIA
DEPARTMENT OF TRANSPORTATION

MIDWEST GUARDRAIL SYSTEM WOOD POST AND WOOD BLOCK DETAILS

NO SCALE

RSP A77N1 DATED JULY 19, 2013 SUPPLEMENTS THE STANDARD PLANS BOOK DATED 2010.

REVISED STANDARD PLAN RSP A77N1

2010 REVISED STANDARD PLAN RSP A77N1

7-3-13

Dist	COUNTY	ROUTE	POST MILES TOTAL PROJECT	SHEET No.	TOTAL SHEETS
10	Ama	88	46.9/R54.7	24	35

Randell D. Hiatt
REGISTERED CIVIL ENGINEER

July 19, 2013
PLANS APPROVAL DATE

REGISTERED PROFESSIONAL ENGINEER
Randell D. Hiatt
No. C50200
Exp. 6-30-15
CIVIL
STATE OF CALIFORNIA

THE STATE OF CALIFORNIA OR ITS OFFICERS OR AGENTS SHALL NOT BE RESPONSIBLE FOR THE ACCURACY OR COMPLETENESS OF SCANNED COPIES OF THIS PLAN SHEET.

TO ACCOMPANY PLANS DATED 1-20-15

NOTES:

1. When necessary to place dike more than 7" in front of face of MGS, only Type C dike may be used. For dike details, see Revised Standard Plan RSP A87B.
2. For standard railing post embedment, see Revised Standard Plan RSP A77N3.
3. MGS delineation to be used where shown on the Project Plans.
4. When dike or curb is placed under MGS, the maximum height of the dike or curb shall be 6". Mountable dike should not be used. For dike and curb details, see Revised Standard Plans RSP A87A and RSP A87B.
5. For details of typical distance between the face of rail and hinge point, see Revised Standard Plan RSP A77N3.
6. For steel line posts, use 1/4 - 20 self-tapping screws in 0.22" diameter holes or 1/4" bolts in 9/32" diameter holes.

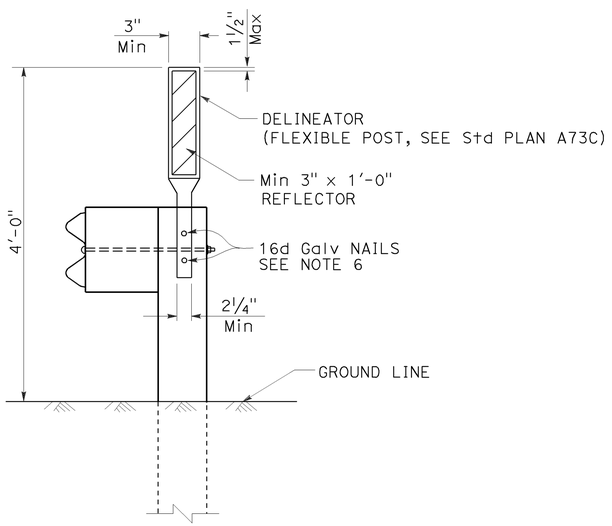

MGS DELINEATION

See Note 3

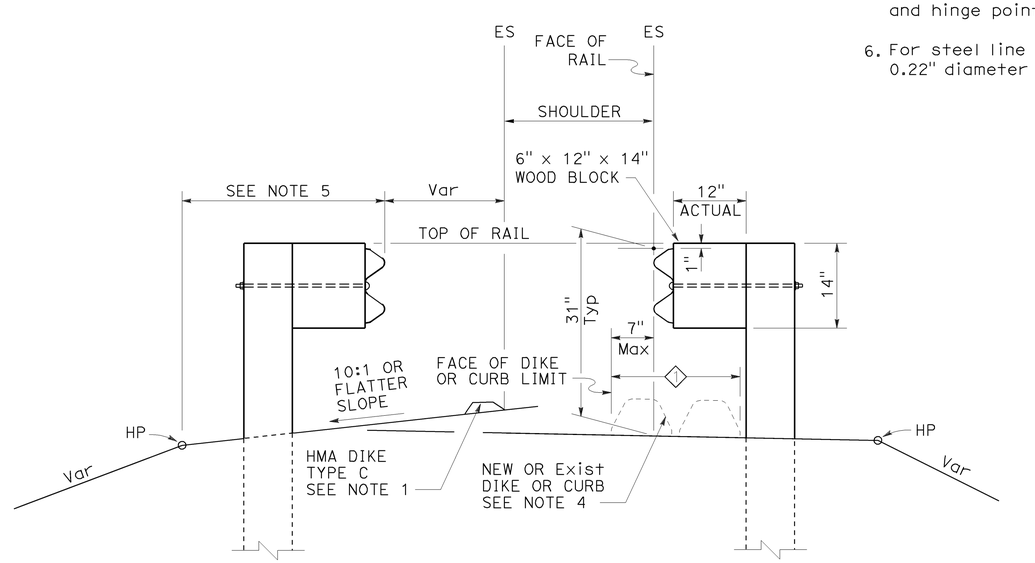

DIKE POSITIONING

See Note 1

1 PERMISSIBLE DIKE OR CURB PLACEMENT AREA

STATE OF CALIFORNIA
DEPARTMENT OF TRANSPORTATION

MIDWEST GUARDRAIL SYSTEM TYPICAL RAILING DELINEATION AND DIKE POSITIONING DETAILS

NO SCALE

RSP A77N4 DATED JULY 19, 2013 SUPPLEMENTS THE STANDARD PLANS BOOK DATED 2010.

REVISED STANDARD PLAN RSP A77N4

2010 REVISED STANDARD PLAN RSP A77N4

7-10-13

Dist	COUNTY	ROUTE	POST MILES TOTAL PROJECT	SHEET No.	TOTAL SHEETS
10	Ama	88	46.9/R54.7	25	35

Randell D. Hiatt
REGISTERED CIVIL ENGINEER

July 19, 2013
PLANS APPROVAL DATE

REGISTERED PROFESSIONAL ENGINEER
Randell D. Hiatt
No. C50200
Exp. 6-30-15
CIVIL
STATE OF CALIFORNIA

THE STATE OF CALIFORNIA OR ITS OFFICERS OR AGENTS SHALL NOT BE RESPONSIBLE FOR THE ACCURACY OR COMPLETENESS OF SCANNED COPIES OF THIS PLAN SHEET.

TO ACCOMPANY PLANS DATED 1-20-15

2010 REVISED STANDARD PLAN RSP A77P2

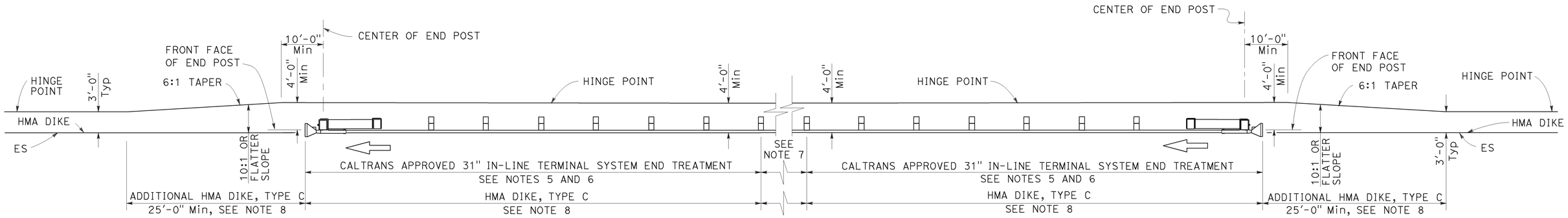

TYPE 11D LAYOUT

(Embankment MGS installation with
31" in-line end treatment at each end of railing)
See Note 4

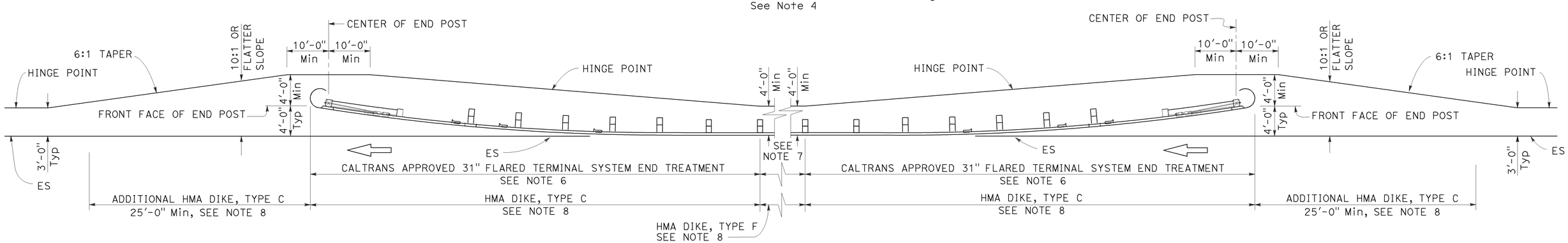

TYPE 11E LAYOUT

(Embankment MGS installation with
31" flared end treatment at each end of railing)
See Note 4

NOTES:

1. Line post, blocks and hardware to be used are shown on Revised Standard Plans RSP A77L1, RSP A77L2, RSP A77M1, RSP A77N1 and RSP A77N2.
2. MGS post spacing to be 6'-3" center to center, except as otherwise noted.
3. Except as noted, line posts are 6" x 8" x 6'-0" wood with 6" x 12" x 1'-2" wood blocks. W6 x 8.5 or W6 x 9 steel posts, 6'-0" in length, with 6" x 12" x 1'-2" notched wood blocks or plastic blocks may be used for 6" x 8" x 6'-0" wood post with 6" x 12" x 1'-2" wood blocks where applicable and when specified.
4. Layout Types 11D through 11L, shown on the A77P Series of Standard Plans, are typically used where MGS is recommended to shield embankment slopes and a crashworthy 31" end treatment is required for both directions of traffic.
5. 31" in-line terminal system end treatments are used where site conditions will not accommodate a flared end treatment.
6. The type of 31" terminal system end treatment to be used will be shown on the Project Plans.
7. Dependent on site conditions (embankment height and side slope), construction of additional MGS (length equal to multiples of 12'-6" with 6'-3" post spacing) may be advisable.
8. Where placement of dike is required with MGS installations, see Revised Standard Plan RSP A77N4 for dike positioning details.

STATE OF CALIFORNIA
DEPARTMENT OF TRANSPORTATION

MIDWEST GUARDRAIL SYSTEM TYPICAL LAYOUTS FOR EMBANKMENTS

NO SCALE

RSP A77P2 DATED JULY 19, 2013 SUPPLEMENTS THE STANDARD PLANS BOOK DATED 2010.

REVISED STANDARD PLAN RSP A77P2

Dist	COUNTY	ROUTE	POST MILES TOTAL PROJECT	SHEET No.	TOTAL SHEETS
10	Ama	88	46.9/R54.7	26	35

Randell D. Hiatt
REGISTERED CIVIL ENGINEER

July 19, 2013
PLANS APPROVAL DATE

REGISTERED PROFESSIONAL ENGINEER
Randell D. Hiatt
No. C50200
Exp. 6-30-15
CIVIL
STATE OF CALIFORNIA

THE STATE OF CALIFORNIA OR ITS OFFICERS OR AGENTS SHALL NOT BE RESPONSIBLE FOR THE ACCURACY OR COMPLETENESS OF SCANNED COPIES OF THIS PLAN SHEET.

TO ACCOMPANY PLANS DATED 1-20-15

2010 REVISED STANDARD PLAN RSP A77P3

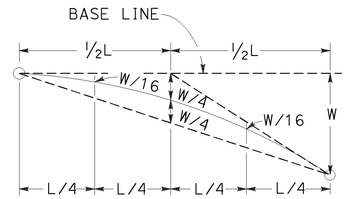

TYPICAL PARABOLIC LAYOUT

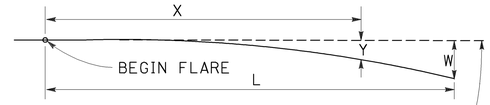

BASE LINE (EDGE OF PAVED SHOULDER OR OFFSET LINE OF EDGE OF TRAVELED WAY)

$$Y = \frac{WX^2}{L^2}$$

Y = OFFSET FROM BASE LINE
W = MAXIMUM OFFSET
X = DISTANCE ALONG BASE LINE
L = LENGTH OF FLARE

PARABOLIC FLARE OFFSETS

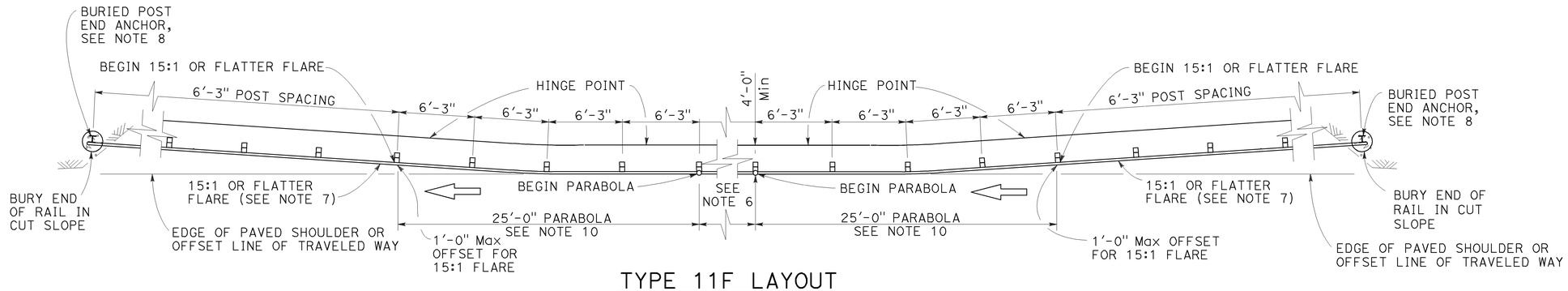

TYPE 11F LAYOUT

(Embankment MGS installation with a buried end anchor treatment at each end of railing)
See Notes 4 and 9

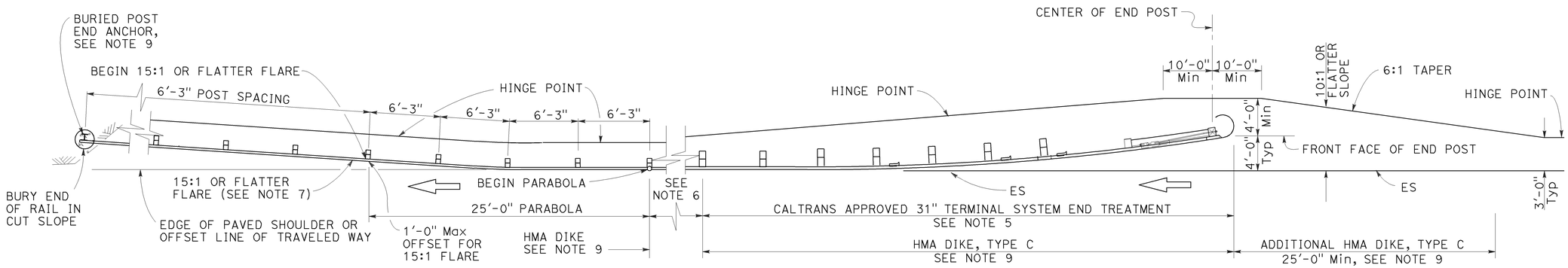

TYPE 11G LAYOUT

(Embankment MGS installation with 31" flared end treatment and a buried end anchor treatment at the ends of railing)
See Notes 4 and 9

NOTES:

1. Line post, blocks and hardware to be used are shown on Revised Standard Plans RSP A77L1, RSP A77L2, RSP A77M1, RSP A77N1 and RSP A77N2.
2. MGS post spacing to be 6'-3" center to center, except as otherwise noted.
3. Except as noted, line posts are 6" x 8" x 6'-0" wood with 6" x 12" x 1'-2" wood blocks. W6 x 8.5 or W6 x 9 steel posts, 6'-0" in length, with 6" x 12" x 1'-2" notched wood blocks or plastic blocks may be used for 6" x 8" x 6'-0" wood post with 6" x 12" x 1'-2" wood blocks where applicable and when specified.
4. Layout Types 11D through 11L, shown on the A77P Series of Standard Plans, are typically used where MGS is recommended to shield embankment slopes and a crashworthy 31" end treatment is required for both directions of traffic.
5. The type of 31" terminal system end treatment to be used will be shown on the Project Plans.
6. Dependent on site conditions (embankment height and side slope), construction of additional MGS (length equal to multiples of 12'-6" with 6'-3" post spacing) may be advisable.
7. The 15:1 or flatter flare used with buried end anchors is based on the edge of the paved shoulder or offset line of edge of the traveled way. The length of MGS within the 15:1 or flatter flare is based on site conditions and should be a length equal to multiples of 12'-6".
8. For details of the buried post end anchor used with Type 11F and 11G Layouts, see Revised Standard Plan RSP A77T2.
9. Where placement of dike is required with MGS installations, see Revised Standard Plan RSP A77N4 for dike positioning details.
10. For typical flare offsets for 25'-0" length parabola with maximum offset of 1'-0", see Revised Standard Plan RSP A77P1.

STATE OF CALIFORNIA
DEPARTMENT OF TRANSPORTATION

MIDWEST GUARDRAIL SYSTEM TYPICAL LAYOUTS FOR EMBANKMENTS

NO SCALE

RSP A77P3 DATED JULY 19, 2013 SUPPLEMENTS THE STANDARD PLANS BOOK DATED 2010.

REVISED STANDARD PLAN RSP A77P3

6-19-13

Dist	COUNTY	ROUTE	POST MILES TOTAL PROJECT	SHEET No.	TOTAL SHEETS
10	Ama	88	46.9/R54.7	27	35

Randell D. Hiatt
REGISTERED CIVIL ENGINEER

July 19, 2013
PLANS APPROVAL DATE

REGISTERED PROFESSIONAL ENGINEER
Randell D. Hiatt
No. C50200
Exp. 6-30-15
CIVIL
STATE OF CALIFORNIA

THE STATE OF CALIFORNIA OR ITS OFFICERS OR AGENTS SHALL NOT BE RESPONSIBLE FOR THE ACCURACY OR COMPLETENESS OF SCANNED COPIES OF THIS PLAN SHEET.

TO ACCOMPANY PLANS DATED 1-20-15

2010 REVISED STANDARD PLAN RSP A77P5

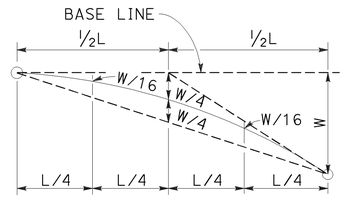

TYPICAL PARABOLIC LAYOUT

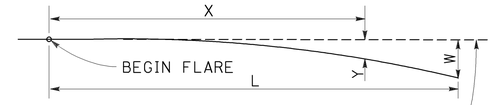

BASE LINE (EDGE OF PAVED SHOULDER OR OFFSET LINE OF EDGE OF TRAVELED WAY)

$$Y = \frac{WX^2}{L^2}$$

Y = OFFSET FROM BASE LINE
W = MAXIMUM OFFSET
X = DISTANCE ALONG BASE LINE
L = LENGTH OF FLARE

PARABOLIC FLARE OFFSETS

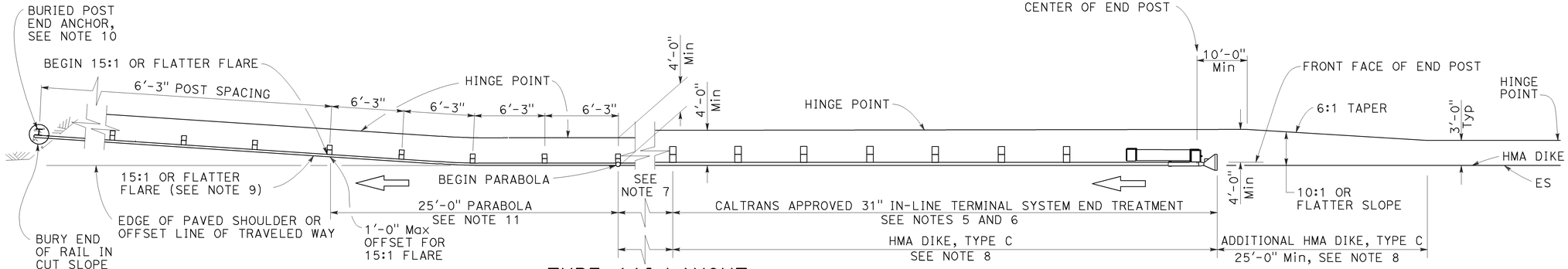

TYPE 11I LAYOUT

(Embankment MGS installation with 31" in-line end treatment and a buried end anchor treatment at the ends of railing)
See Note 4

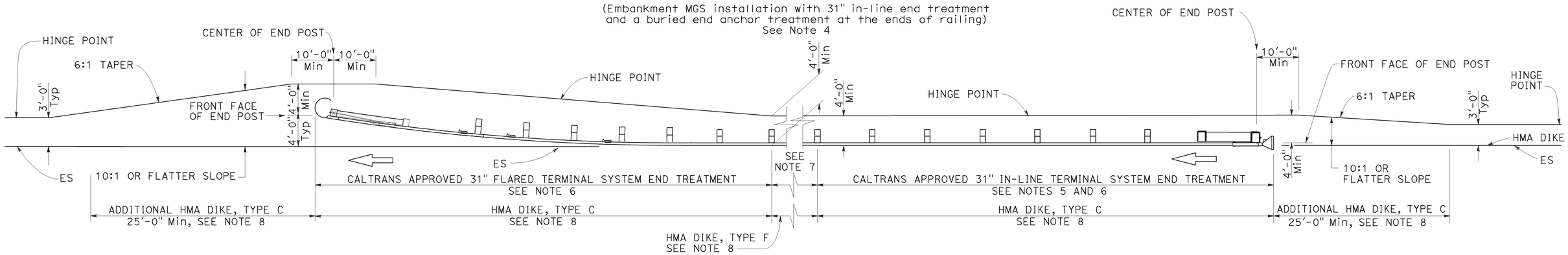

TYPE 11J LAYOUT

(Embankment MGS installation with 31" in-line end treatment and 31" flared end treatment at the ends of railing)
See Note 4

NOTES:

1. Line post, blocks and hardware to be used are shown on Revised Standard Plans RSP A77L1, RSP A77L2, RSP A77M1, RSP A77N1 and RSP A77N2.
2. MGS post spacing to be 6'-3" center to center, except as otherwise noted.
3. Except as noted, line posts are 6" x 8" x 6'-0" wood with 6" x 12" x 1'-2" wood blocks. W6 x 8.5 or W6 x 9 steel posts, 6'-0" in length, with 6" x 12" x 1'-2" notched wood blocks or plastic blocks may be used for 6" x 8" x 6'-0" wood post with 6" x 12" x 1'-2" wood blocks where applicable and when specified.
4. Layout Types 11D through 11L, shown on the A77P Series of Standard Plans, are typically used where MGS is recommended to shield embamkment slopes and a crashworthy 31" end treatment is required for both directions of traffic.
5. 31" in-line terminal system end treatments are used where site conditions will not accommodate a 31" flared end treatment.
6. The type of 31" terminal system end treatment to be used will be shown on the Project Plans.
7. Dependent on site conditions (embankment height and side slope), construction of additional MGS (length equal to multiples of 12'-6" with 6'-3" post spacing) may be advisable.
8. Where placement of dike is required with MGS installations, see Revised Standard Plan RSP A77N4 for dike positioning details.
9. The 15:1 or flatter flare used with buried end anchors is based on the edge of the paved shoulder or offset line of edge of the traveled way. The length of MGS within the 15:1 or flatter flare is based on site conditions and should be a length equal to multiples of 12'-6".
10. For details of the buried post end anchor used with Type 11I Layout, see Revised Standard Plan RSP A77T2.
11. For typical flare offsets for 25'-0" length parabola with maximum offset of 1'-0", see Revised Standard Plan RSP A77P1.

STATE OF CALIFORNIA
DEPARTMENT OF TRANSPORTATION

MIDWEST GUARDRAIL SYSTEM TYPICAL LAYOUTS FOR EMBANKMENTS

NO SCALE

RSP A77P5 DATED JULY 19, 2013 SUPPLEMENTS THE STANDARD PLANS BOOK DATED 2010.

REVISED STANDARD PLAN RSP A77P5

6-19-13

Dist	COUNTY	ROUTE	POST MILES TOTAL PROJECT	SHEET No.	TOTAL SHEETS
10	Ama	88	46.9/R54.7	28	35

Randell D. Hiatt
REGISTERED CIVIL ENGINEER

November 15, 2013
PLANS APPROVAL DATE

REGISTERED PROFESSIONAL ENGINEER
Randell D. Hiatt
No. C50200
Exp. 6-30-15
CIVIL
STATE OF CALIFORNIA

THE STATE OF CALIFORNIA OR ITS OFFICERS OR AGENTS SHALL NOT BE RESPONSIBLE FOR THE ACCURACY OR COMPLETENESS OF SCANNED COPIES OF THIS PLAN SHEET.

TO ACCOMPANY PLANS DATED 1-20-15

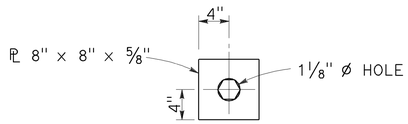

DETAIL "A"
CABLE CONNECTION
END PLATE

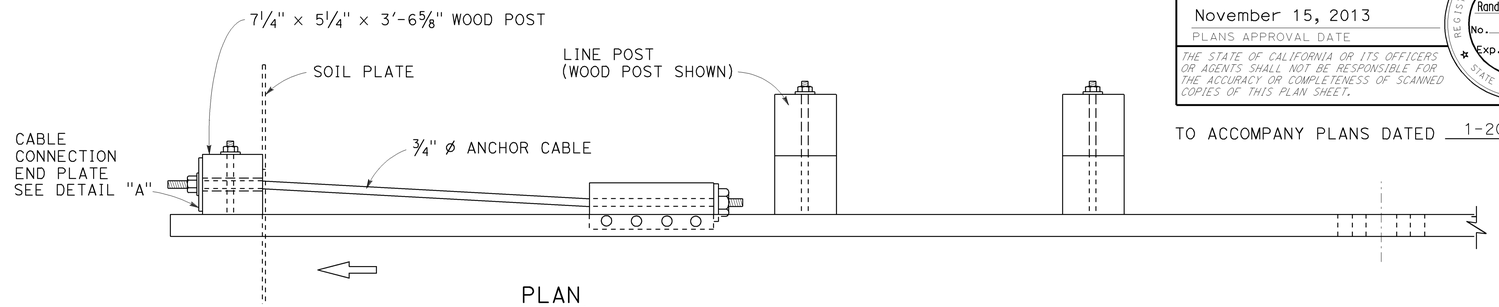

PLAN

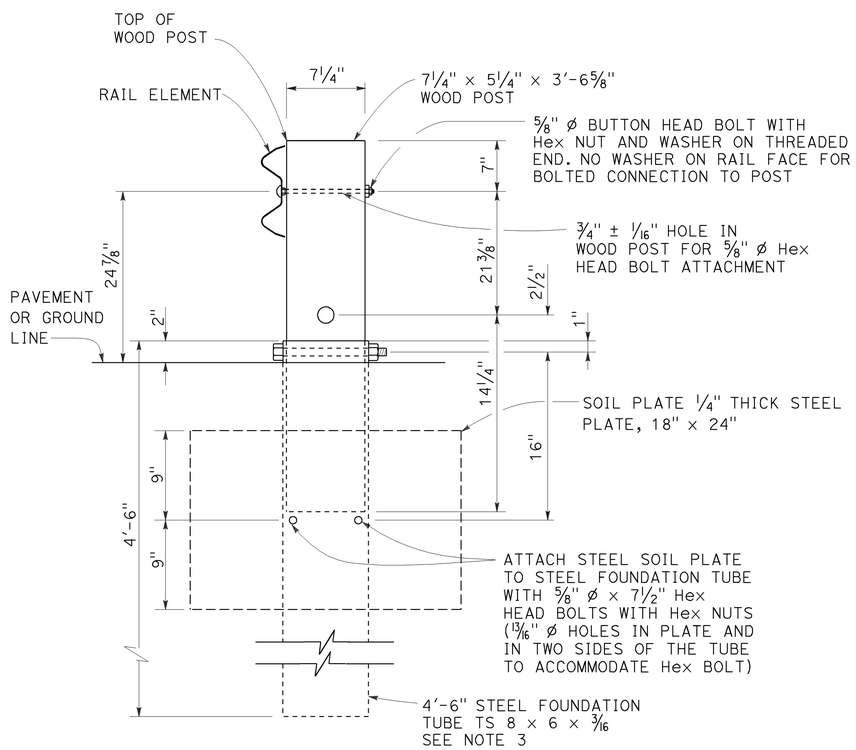

SECTION A-A

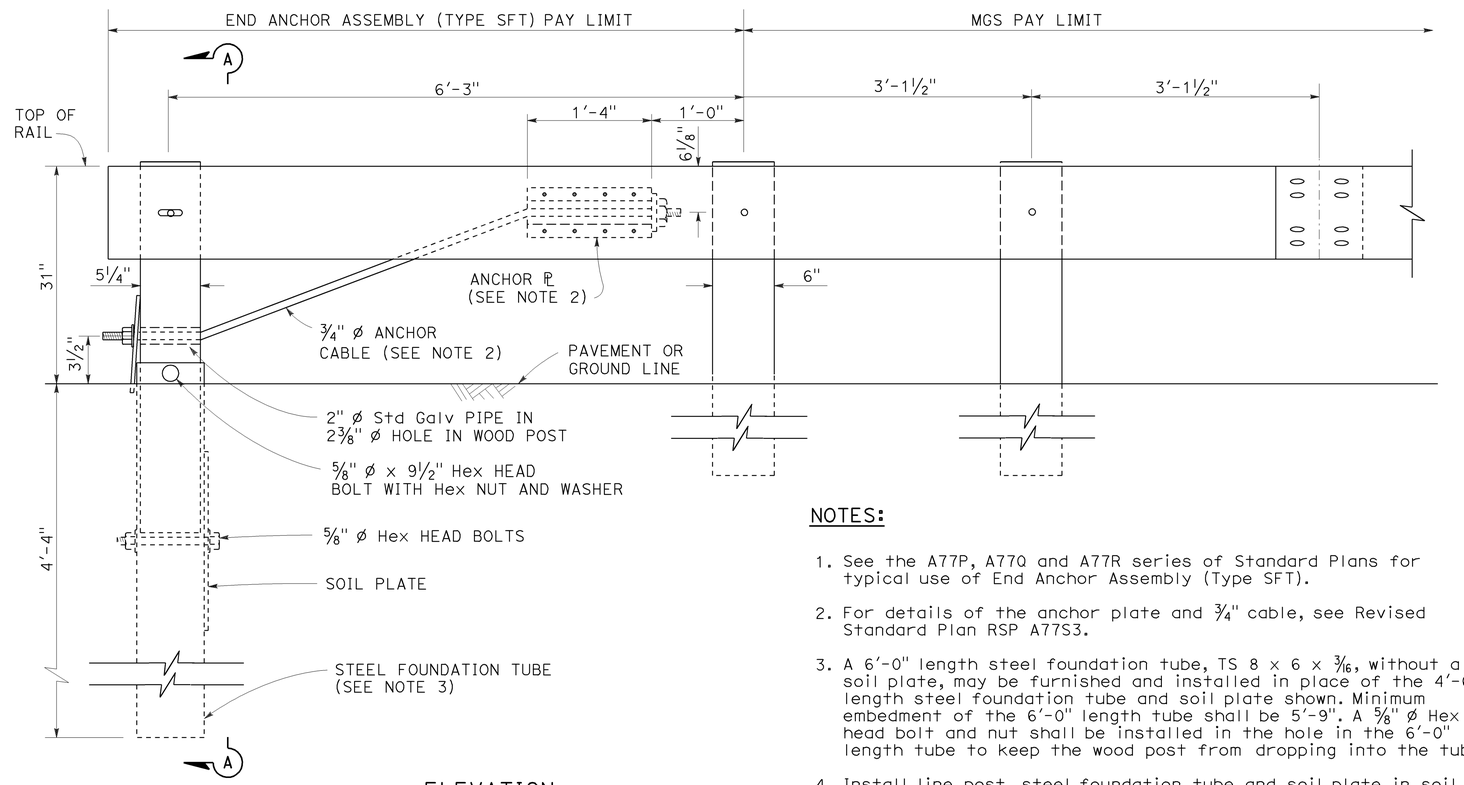

ELEVATION

END ANCHOR
ASSEMBLY (TYPE SFT)
See Note 1

NOTES:

1. See the A77P, A77Q and A77R series of Standard Plans for typical use of End Anchor Assembly (Type SFT).
2. For details of the anchor plate and 3/4" cable, see Revised Standard Plan RSP A77S3.
3. A 6'-0" length steel foundation tube, TS 8 x 6 x 3/16, without a soil plate, may be furnished and installed in place of the 4'-6" length steel foundation tube and soil plate shown. Minimum embedment of the 6'-0" length tube shall be 5'-9". A 5/8" ø Hex head bolt and nut shall be installed in the hole in the 6'-0" length tube to keep the wood post from dropping into the tube.
4. Install line post, steel foundation tube and soil plate in soil.

STATE OF CALIFORNIA
DEPARTMENT OF TRANSPORTATION

MIDWEST GUARDRAIL SYSTEM END ANCHOR ASSEMBLY (TYPE SFT)

NO SCALE

RSP A77S1 DATED NOVEMBER 15, 2013 SUPERSEDES RSP A77S1
DATED JULY 19, 2013 THAT SUPPLEMENTS THE STANDARD PLANS BOOK DATED 2010.

REVISED STANDARD PLAN RSP A77S1

2010 REVISED STANDARD PLAN RSP A77S1

10-4-13

Dist	COUNTY	ROUTE	POST MILES TOTAL PROJECT	SHEET No.	TOTAL SHEETS
10	Ama	88	46.9/R54.7	29	35

Randell D. Hiatt
REGISTERED CIVIL ENGINEER

November 15, 2013
PLANS APPROVAL DATE

REGISTERED PROFESSIONAL ENGINEER
Randell D. Hiatt
No. C50200
Exp. 6-30-15
CIVIL
STATE OF CALIFORNIA

THE STATE OF CALIFORNIA OR ITS OFFICERS OR AGENTS SHALL NOT BE RESPONSIBLE FOR THE ACCURACY OR COMPLETENESS OF SCANNED COPIES OF THIS PLAN SHEET.

TO ACCOMPANY PLANS DATED 1-20-15

2010 REVISED STANDARD PLAN RSP A77S3

NOTE:

See Revised Standard Plans RSP A77S1, RSP A77S2 and RSP A77T1 for typical use of anchor cable and anchor plate.

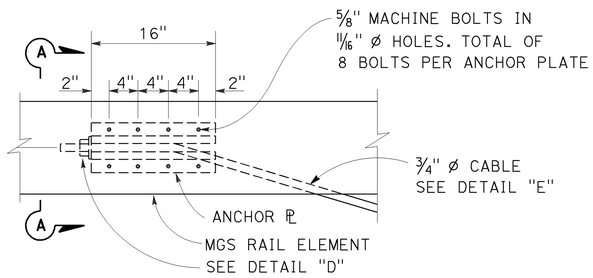

ANCHOR PLATE DETAIL
(MGS shown, TBB similar)

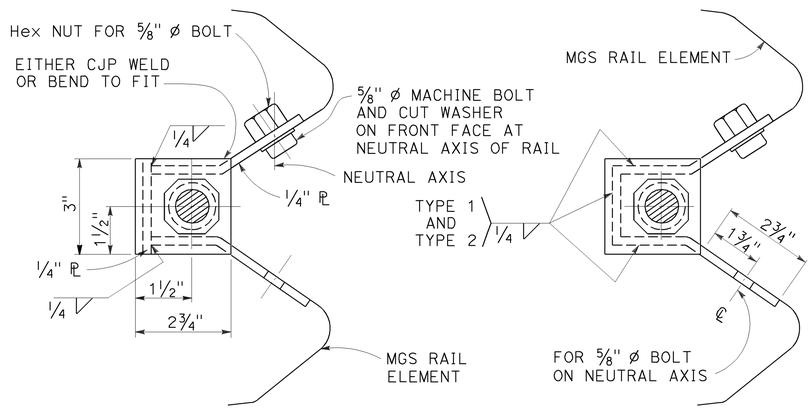

NOTE:
Dimensioning applies to both types.

SECTION A-A
(ALTERNATIVE TYPE 1)

SECTION A-A
(ALTERNATIVE TYPE 2)

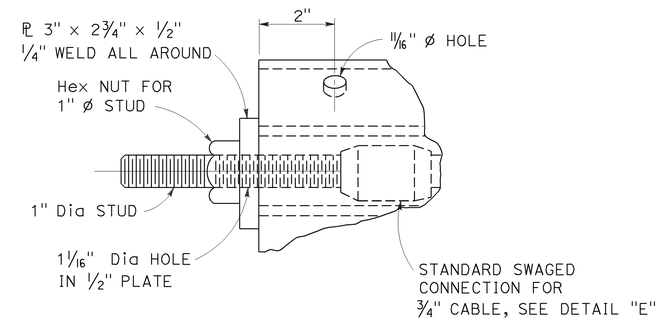

DETAIL "D"

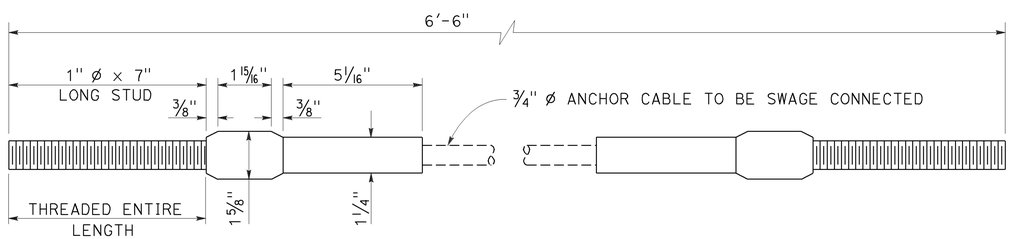

ANCHOR CABLE WITH
SWAGED FITTING AND STUD
DETAIL "E"

STATE OF CALIFORNIA
DEPARTMENT OF TRANSPORTATION

METAL RAILING ANCHOR CABLE AND ANCHOR PLATE DETAILS

NO SCALE

RSP A77S3 DATED NOVEMBER 15, 2013 SUPERSEDES RSP A77S3
DATED JULY 19, 2013 THAT SUPPLEMENTS THE STANDARD PLANS BOOK DATED 2010.

REVISED STANDARD PLAN RSP A77S3

10-4-13

Dist	COUNTY	ROUTE	POST MILES TOTAL PROJECT	SHEET No.	TOTAL SHEETS
10	Ama	88	46.9/R54.7	30	35

Randell D. Hiatt
REGISTERED CIVIL ENGINEER

November 15, 2013
PLANS APPROVAL DATE

REGISTERED PROFESSIONAL ENGINEER
Randell D. Hiatt
No. C50200
Exp. 6-30-15
CIVIL
STATE OF CALIFORNIA

THE STATE OF CALIFORNIA OR ITS OFFICERS OR AGENTS SHALL NOT BE RESPONSIBLE FOR THE ACCURACY OR COMPLETENESS OF SCANNED COPIES OF THIS PLAN SHEET.

TO ACCOMPANY PLANS DATED 1-20-15

2010 REVISED STANDARD PLAN RSP A77T2

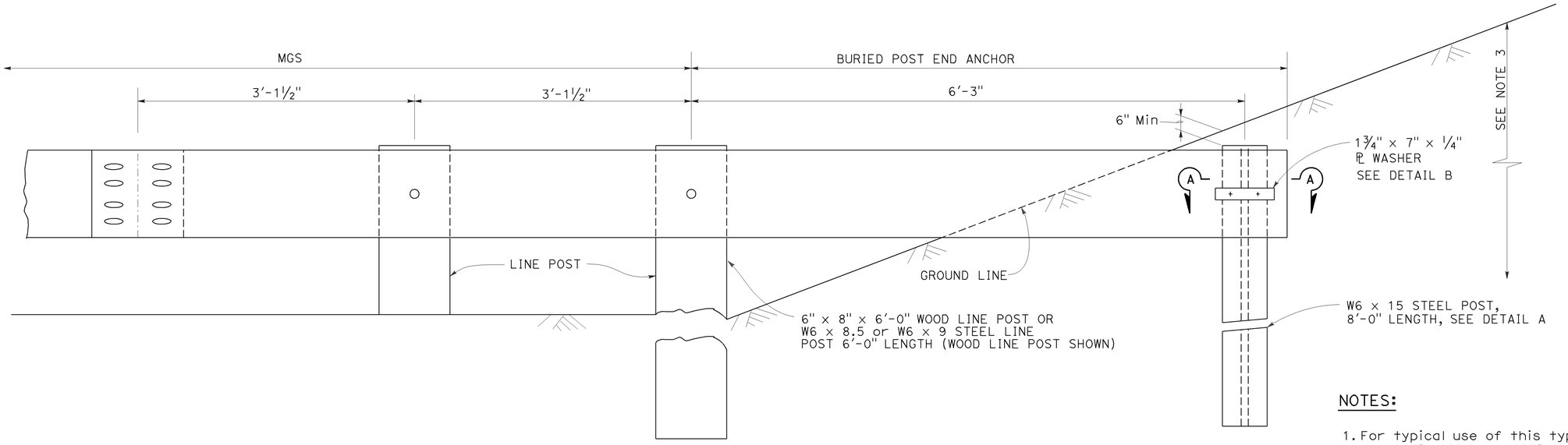

BURIED POST END ANCHOR

See Note 3

NOTES:

1. For typical use of this type of end anchor with MGS see the A77P, A77Q and A77R Series of the Standard Plans.
2. Holes excavation in the slope to construct the buried post end anchor shall be backfilled with selected earth, placed in layers approximately 1'-0" thick. Each layer shall be moistened and thoroughly compacted.
3. The buried post end anchor shall only be constructed at those locations where the slope perpendicular to the roadway is non-traversable.

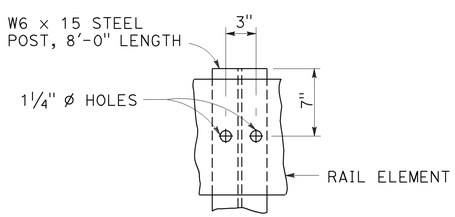

DETAIL A

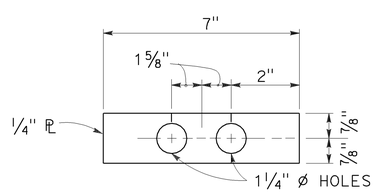

DETAIL B

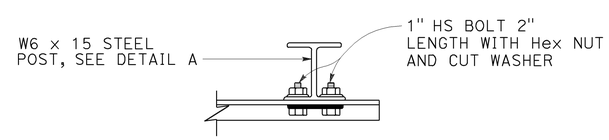

SECTION A-A

STATE OF CALIFORNIA
DEPARTMENT OF TRANSPORTATION

MIDWEST GUARDRAIL SYSTEM BURIED POST END ANCHOR

NO SCALE

RSP A77T2 DATED NOVEMBER 15, 2013 SUPERSEDES RSP A77T2
DATED JULY 19, 2013 THAT SUPPLEMENTS THE STANDARD PLANS BOOK DATED 2010.

REVISED STANDARD PLAN RSP A77T2

10-4-13

Dist	COUNTY	ROUTE	POST MILES TOTAL PROJECT	SHEET No.	TOTAL SHEETS
10	Ama	88	46.9/R54.7	31	35

REGISTERED CIVIL ENGINEER

July 19, 2013
PLANS APPROVAL DATE

REGISTERED PROFESSIONAL ENGINEER
Michael Janzen
No. 44788
Exp. 03-31-14
CIVIL
STATE OF CALIFORNIA

THE STATE OF CALIFORNIA OR ITS OFFICERS OR AGENTS SHALL NOT BE RESPONSIBLE FOR THE ACCURACY OR COMPLETENESS OF SCANNED COPIES OF THIS PLAN SHEET.

TO ACCOMPANY PLANS DATED 1-20-15

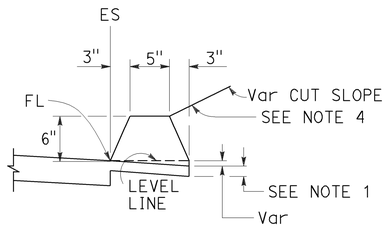

TYPE A
See Note 3

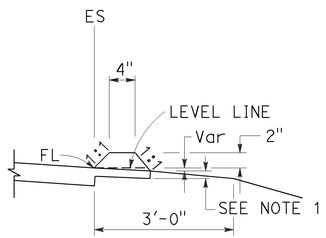

TYPE C

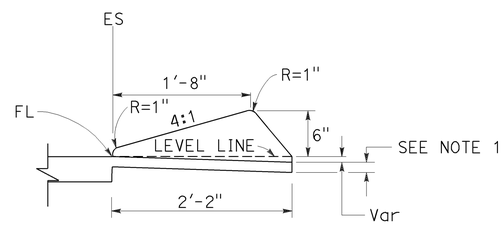

TYPE D

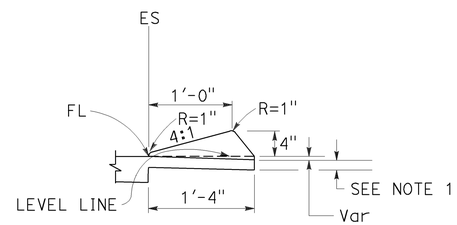

TYPE E

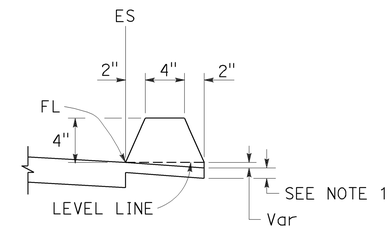

TYPE F
See Note 5

DIKES

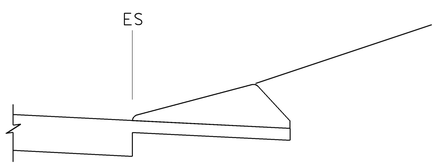

CASE C-1
Cut Slope

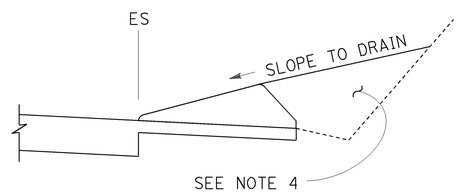

CASE C-2
Cut Slope

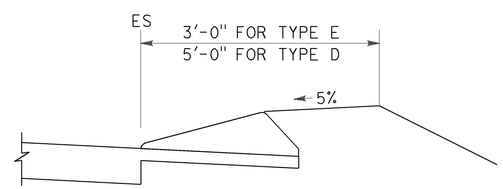

CASE F

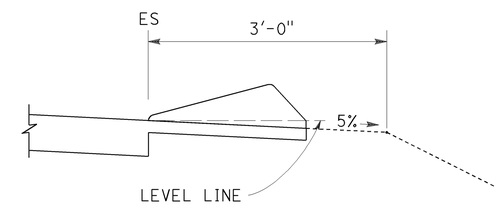

CASE R
See Note 2

TYPE D AND E BACKFILL DETAILS

NOTES:

1. For HMA shoulders only, extend top layer of HMA placed on the shoulder under dike with no joint at the ES. For projects with OGFC shoulders, do not extend OGFC under dike. See project plans for modified dike detail.
2. Case R applies to retrofit only projects where restrictive conditions do not provide enough width for Case F backfill.
3. Type A dike only to be used where restrictive slope conditions do not provide enough width to use Type D or Type E dike.
4. Fill and compact with excavated material to top of dike.
5. Use Type F dike, where dike is required with guard railing installations. See Revised Standard Plan RSP A77N4 for dike positioning details.

DIKE QUANTITIES

TYPE	CUBIC YARDS PER LINEAR FOOT
A	0.0135
C	0.0038
D	0.0293
E	0.0130
F	0.0066

Quantities based on 5% cross slope.

STATE OF CALIFORNIA
DEPARTMENT OF TRANSPORTATION

HOT MIX ASPHALT DIKES

NO SCALE

RSP A87B DATED JULY 19, 2013 SUPERSEDES STANDARD PLAN A87B DATED MAY 20, 2011 - PAGE 120 OF THE STANDARD PLANS BOOK DATED 2010.

REVISED STANDARD PLAN RSP A87B

2010 REVISED STANDARD PLAN RSP A87B

6-27-13

Dist	COUNTY	ROUTE	POST MILES TOTAL PROJECT	SHEET No.	TOTAL SHEETS
10	Ama	88	46.9/R54.7	32	35

Raymond Don Tsztoo
REGISTERED CIVIL ENGINEER

April 19, 2013
PLANS APPROVAL DATE

REGISTERED PROFESSIONAL ENGINEER Raymond Don Tsztoo No. C37332 Exp. 6-30-14 CIVIL STATE OF CALIFORNIA

THE STATE OF CALIFORNIA OR ITS OFFICERS OR AGENTS SHALL NOT BE RESPONSIBLE FOR THE ACCURACY OR COMPLETENESS OF SCANNED COPIES OF THIS PLAN SHEET.

TO ACCOMPANY PLANS DATED 1-20-15

2010 REVISED STANDARD PLAN RSP D77B

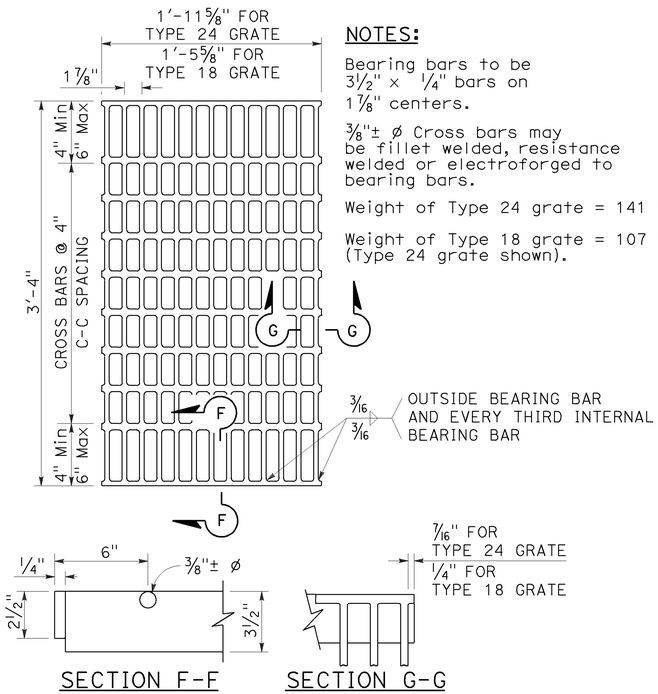

SECTION F-F SECTION G-G

TYPE 18-10 AND 24-13 GRATE

(Welded Steel)

NOTES:

Bearing bars to be 3½" × ¼" bars on 1⅞" centers.

⅜"± ø Cross bars may be fillet welded, resistance welded or electroforged to bearing bars.

Weight of Type 24 grate = 141 LBS.

Weight of Type 18 grate = 107 LBS. (Type 24 grate shown).

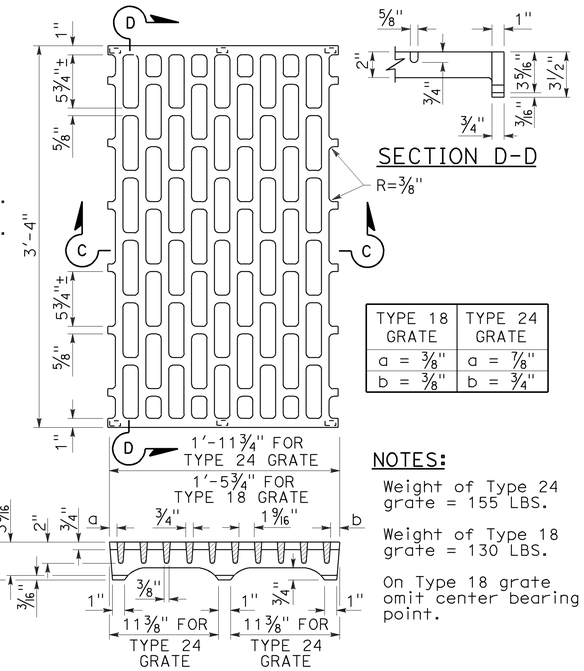

SECTION D-D

TYPE 18 GRATE	TYPE 24 GRATE
a = ⅜"	a = ⅞"
b = ⅜"	b = ¾"

SECTION C-C

NOTES:

Weight of Type 24 grate = 155 LBS.

Weight of Type 18 grate = 130 LBS.

On Type 18 grate omit center bearing point.

TYPE 18-8C AND 24-10C GRATE

(Cast ductile iron)

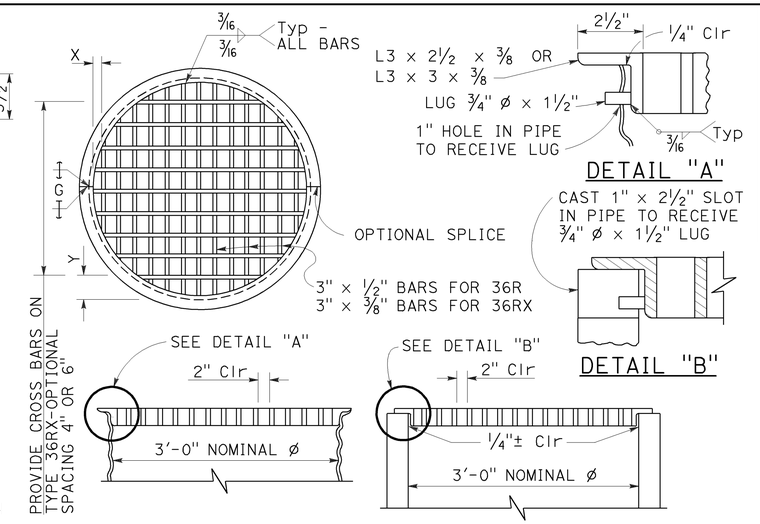

DETAIL "A" DETAIL "B"

TYPE 36R AND 36RX GRATE DETAILS

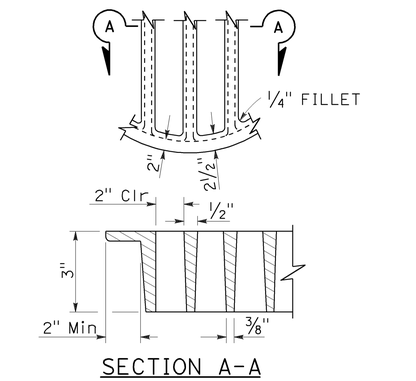

SECTION A-A

ALTERNATIVE CAST DUCTILE IRON GRATE OR CAST CARBON STEEL GRATE TYPE 36R AND 36RX

BASIS FOR Misc IRON AND STEEL FINAL PAY WEIGHTS FOR DRAINAGE INLETS

INLET TYPE	GRATE TYPE	No. OF GRATES	WEIGHT LB
GDO (SEE NOTE 4)	24-10C	2	391
	24-10S	2	456
	24-12X	2	473
	24-13	2	374
GO,GOL,G1,G2, G3,G4 (TYPE 24)	24-10C	1	202
	24-10S	1	229
	24-12X	1	239
	24-13	1	188
G4 (TYPE 18) G5,G6	18-8S	1	187
	18-9X	1	187
	18-10	1	149
GT1,GT2	18-8S	2	374
	18-9X	2	374
	18-10	2	298
GT3,GT4	24-10C	2	404
	24-10S	2	458
	24-12X	2	478
	24-13	2	376
ODI	36RX (Mod)	1	196
GMP,GCP,GCPI	36RX	1	215
ODI	36R (Mod)	1	220
GMP,GCP,GCPI	36R	1	236
TRASH RACK			22
GRATE CHAIN			3

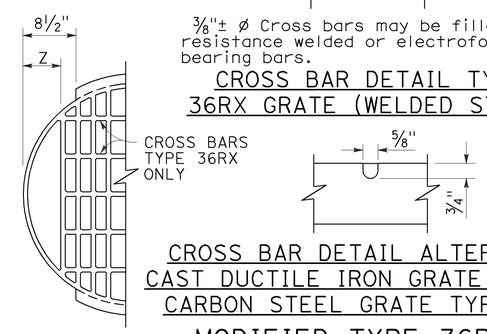

CROSS BAR DETAIL TYPE 36RX GRATE (WELDED STEEL)

CROSS BAR DETAIL ALTERNATIVE CAST DUCTILE IRON GRATE OR CAST CARBON STEEL GRATE TYPE 36RX

MODIFIED TYPE 36R AND 36RX GRATE FOR ODI INLET

NOTES:

1. When alternative grates are allowed - Final pay based on alternative with the lesser weight.
2. Use frame shown on Standard Plan D74A, D74B or RSP D77A as appropriate.
3. When Type 24-10S, 24-12X or 24-13 grates are used with GDO Inlets, a ¼" × 3½" × 3'-4⅞" steel bar shall be welded across the center of inlet frame to separate the individual grates.
4. See Revised Standard Plan RSP D77A for connecting chain to welded grate and frame. When chain is required, do not use cast ductile iron grate.

GRATE BAR SPACING TABLE

TYPE	No. OF BARS	CLEAR BAR SPACING	X	Y 4" SPACING	Y 6" SPACING	Z
36R	13	2"	2⅛"	-	-	-
36RX (STEEL)	15	2"	9/16"	3¾"	5¾"	-
36RX (CAST)	13	2"	2⅛"	3¾"	5¾"	-
36R Mod	12	2"	2⅛"	-	-	5"
36RX Mod (STEEL)	13	2"	9/16"	3¾"	5¾"	5 11/16"
36RX Mod (CAST)	12	2"	2⅛"	3¾"	5¾"	5"

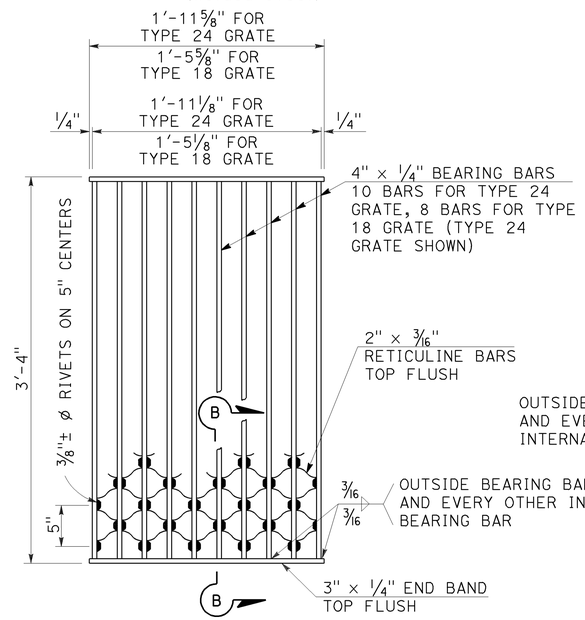

SECTION B-B

NOTES:

Weight of Type 24 grate = 182 LBS.
Weight of Type 18 grate = 145 LBS.

TYPE 18-8S AND 24-10S GRATE

(Welded Steel) Reticuline type

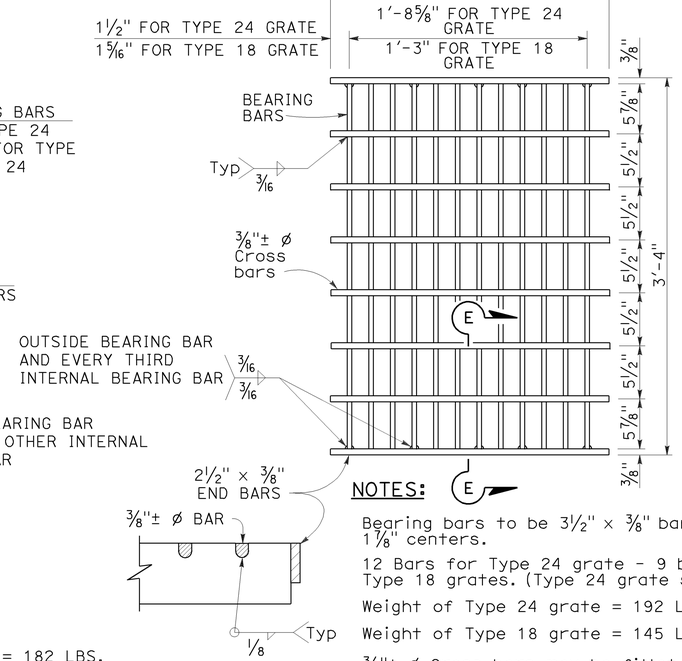

SECTION E-E

NOTES:

Bearing bars to be 3½" × ⅜" bars on 1⅞" centers.

12 Bars for Type 24 grate - 9 bars for Type 18 grates. (Type 24 grate shown).

Weight of Type 24 grate = 192 LBS.

Weight of Type 18 grate = 145 LBS.

⅜"± ø Cross bars may be fillet welded, resistance welded or electroforged to bearing bars.

TYPE 18-9X AND 24-12X GRATE

(Welded Steel)

STATE OF CALIFORNIA
DEPARTMENT OF TRANSPORTATION

GRATE DETAILS No. 2

NO SCALE

RSP D77B DATED APRIL 19, 2013 SUPERSEDES RSP D77B DATED JULY 20, 2012 AND STANDARD PLAN D77B DATED MAY 20, 2011 - PAGE 165 OF THE STANDARD PLANS BOOK DATED 2010.

REVISED STANDARD PLAN RSP D77B

4-4-13

Dist	COUNTY	ROUTE	POST MILES TOTAL PROJECT	SHEET No.	TOTAL SHEETS
10	Ama	88	46.9/R54.7	33	35

REGISTERED CIVIL ENGINEER

July 19, 2013
PLANS APPROVAL DATE

REGISTERED PROFESSIONAL ENGINEER
Gurinderpal Bhullar
No. C48815
Exp. 9-30-14
CIVIL
STATE OF CALIFORNIA

THE STATE OF CALIFORNIA OR ITS OFFICERS OR AGENTS SHALL NOT BE RESPONSIBLE FOR THE ACCURACY OR COMPLETENESS OF SCANNED COPIES OF THIS PLAN SHEET.

TO ACCOMPANY PLANS DATED 1-20-15

2010 REVISED STANDARD PLAN RSP T9

TABLE 1

TAPER LENGTH CRITERIA AND CHANNELIZING DEVICE SPACING

SPEED (S)	MINIMUM TAPER LENGTH * FOR WIDTH OF OFFSET 12 FEET (W)				MAXIMUM CHANNELIZING DEVICE SPACING		
					X	Y	Z **
	TANGENT 2L	MERGING L	SHIFTING L/2	SHOULDER L/3	TAPER	TANGENT	CONFLICT
mph	ft	ft	ft	ft	ft	ft	ft
20	160	80	40	27	20	40	10
25	250	125	63	42	25	50	12
30	360	180	90	60	30	60	15
35	490	245	123	82	35	70	17
40	640	320	160	107	40	80	20
45	1080	540	270	180	45	90	22
50	1200	600	300	200	50	100	25
55	1320	660	330	220	55	110	27
60	1440	720	360	240	60	120	30
65	1560	780	390	260	65	130	32
70	1680	840	420	280	70	140	35

* - For other offsets, use the following merging taper length formula for L:
For speed of 40 mph or less, $L = WS^2/60$
For speed of 45 mph or more, $L = WS$

Where: L = Taper length in feet
W = Width of offset in feet
S = Posted speed limit, off-peak 85th-percentile speed prior to work starting, or the anticipated operating speed in mph

** - Use for taper and tangent sections where there are no pavement markings or where there is a conflict between existing pavement markings and channelizers (CA).

TABLE 2

LONGITUDINAL BUFFER SPACE AND FLAGGER STATION SPACING

SPEED *	Min D **	DOWNGRADE Min D ***		
		-3%	-6%	-9%
mph	ft	ft	ft	ft
20	115	116	120	126
25	155	158	165	173
30	200	205	215	227
35	250	257	271	287
40	305	315	333	354
45	360	378	400	427
50	425	446	474	507
55	495	520	553	593
60	570	598	638	686
65	645	682	728	785
70	730	771	825	891

* - Speed is posted speed limit, off-peak 85th-percentile speed prior to work starting, or the anticipated operating speed in mph

** - Longitudinal buffer space or flagger station spacing

*** - Use on sustained downgrade steeper than -3 percent and longer than 1 mile.

TABLE 3

ADVANCE WARNING SIGN SPACING

ROAD TYPE	DISTANCE BETWEEN SIGNS *		
	A	B	C
	ft	ft	ft
URBAN - 25 mph OR LESS	100	100	100
URBAN - MORE THAN 25 mph TO 40 mph	250	250	250
URBAN - MORE THAN 40 mph	350	350	350
RURAL	500	500	500
EXPRESSWAY / FREEWAY	1000	1500	2640

* - The distances are approximate, are intended for guidance purposes only, and should be applied with engineering judgment. These distances should be adjusted by the Engineer for field conditions, if necessary, by increasing or decreasing the recommmended distances.

STATE OF CALIFORNIA
DEPARTMENT OF TRANSPORTATION

TRAFFIC CONTROL SYSTEM TABLES FOR LANE AND RAMP CLOSURES

NO SCALE

RSP T9 DATED JULY 19, 2013 SUPERSEDES RSP T9 DATED APRIL 19, 2013 THAT SUPPLEMENTS THE STANDARD PLANS BOOK DATED 2010.

REVISED STANDARD PLAN RSP T9

Dist	COUNTY	ROUTE	POST MILES TOTAL PROJECT	SHEET No.	TOTAL SHEETS
10	Ama	88	46.9/R54.7	34	35

Devinder Singh
REGISTERED CIVIL ENGINEER

October 17, 2014
PLANS APPROVAL DATE

REGISTERED PROFESSIONAL ENGINEER
Devinder Singh
No. C50470
Exp. 6-30-15
CIVIL
STATE OF CALIFORNIA

THE STATE OF CALIFORNIA OR ITS OFFICERS OR AGENTS SHALL NOT BE RESPONSIBLE FOR THE ACCURACY OR COMPLETENESS OF SCANNED COPIES OF THIS PLAN SHEET.

TO ACCOMPANY PLANS DATED 1-20-15

NOTES:

See Revised Standard Plan RSP T9 for tables.

Use cone spacing X for taper segment, Y for tangent segment or Z for conflict situations, as approriate, per Table 1, unless X, Y, or Z cone spacing is shown on this sheet.

Unless otherwise specified in the special provisions, all temporary warning signs shall have black legend on fluorescent orange background.

California codes are designated by (CA). Otherwise, Federal (MUTCD) codes are shown.

TYPICAL LANE CLOSURE WITH REVERSIBLE CONTROL

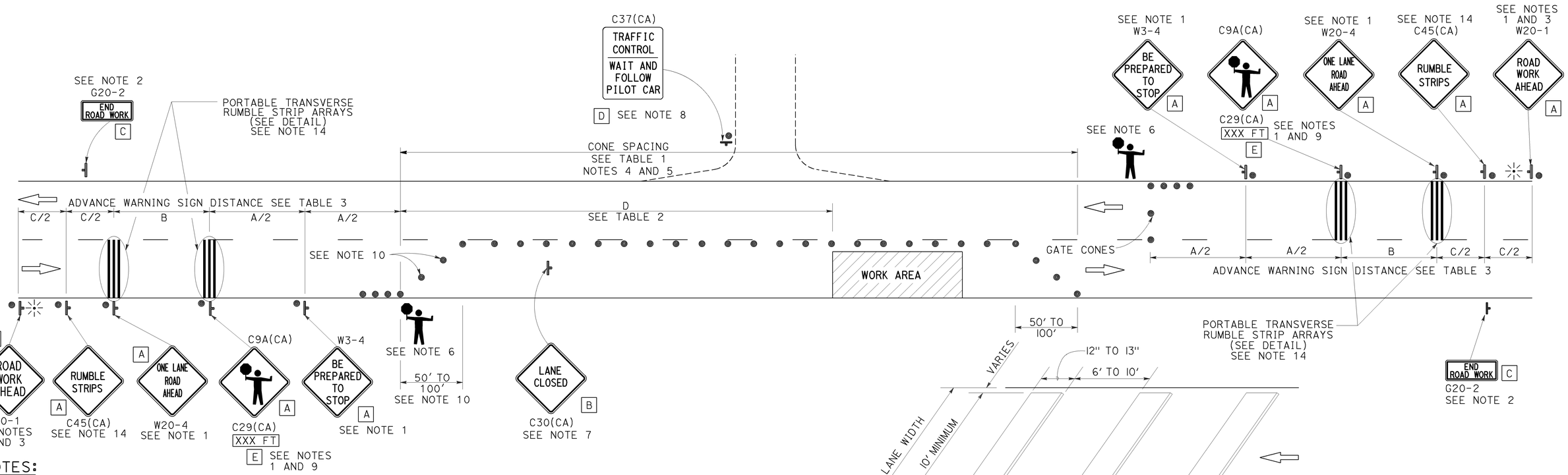

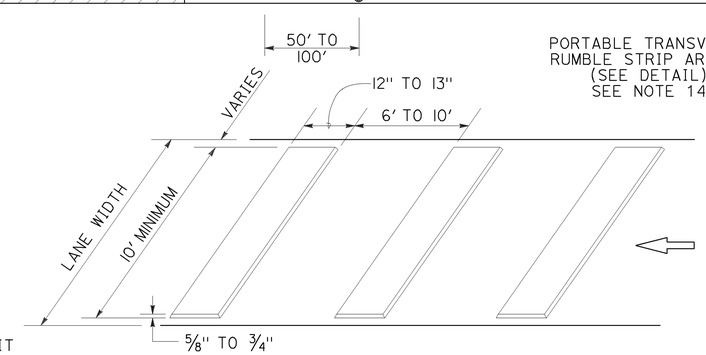

PORTABLE TRANSVERSE RUMBLE STRIP ARRAY DETAIL

NOTES:

1. Each advance warning sign in each direction of travel shall be equipped with at least two flags for daytime closure. Each flag shall be at least 16" x 16" in size and shall be orange or fluorescent red-orange in color. Flashing beacons shall be placed at the locations indicated for lane closure during hours of darkness.
2. A G20-2 "END ROAD WORK" sign, as appropriate, shall be placed at the end of the lane control unless the end of work area is obvious, or ends within a larger project's limits.
3. If the W20-1 sign would follow within 2000' of a stationary W20-1 or G20-1 "ROAD WORK NEXT _____ MILES", use a W20-4 sign for the first advance warning sign.
4. All cones used for lane closures during the hours of darkness shall be fitted with retroreflective bands (or sleeves) as specified in the specifications.
5. Portable delineators, placed at one-half the spacing indicated for traffic cones, may be used instead of cones for daytime closures only.
6. Additional advance flaggers may be required. Flagger should stand in a conspicuous place, be visible to approaching traffic as well as approaching vehicles after the first vehicle has stopped. During the hours of darkness, the flagging-station and flagger shall be illuminated and clearly visible to approaching traffic. The illumination footprint of the lighting on the ground shall be at least 20' in diameter. Place a minimum of four cones at 50' intervals in advance of flagger station as shown.
7. Place C30(CA) "LANE CLOSED" sign at 500' to 1000' intervals throughout extended work areas. They are optional if the work area is visible from the flagger station.
8. When a pilot car is used, place a C37(CA) "TRAFFIC CONTROL-WAIT AND FOLLOW PILOT CAR" sign with black legend on white background at all intersections, driveways and alleys without a flagger within traffic control area. Signs shall be clean and visible at all times. Where traffic can not be effectively self-regulated, at least one flagger shall be used at each intersection within traffic control area.
9. An optional C29(CA) sign may be placed below the C9A(CA) sign.
10. Either traffic cones or barricades shall be placed on the taper. Barricades shall be Type I, II, or III.
11. The color of the portable transverse rumble strips shall be black or orange. Use 2 arrays, each array shall consist of 3 rumble strips.
12. Portable transverse rumble strips shall not be placed on sharp horizontal or vertical curves nor shall they be placed through pedestrian crossings.
13. If the portable transverse rumble strips become out of alignment (skewed) by more than 6 inches, measured from one end to the other, they shall be readjusted to bring the placement back to the original location.
14. Portable transverse rumble strips are not required if any one of the following conditions is satisfied:
    A. Work duration occupies a location for four hours or less
    B. Posted speed limit is below 45 MPH
    C. Work is of emergency nature
    D. Work zone is in snow or icy weather conditions

LEGEND

- TRAFFIC CONE
- TEMPORARY TRAFFIC CONTROL SIGN
- PORTABLE FLASHING BEACON
- FLAGGER

SIGN PANEL SIZE (Min)

A	48" x 48"
B	30" x 30"
C	36" x 18"
D	36" x 42"
E	20" x 7"

STATE OF CALIFORNIA
DEPARTMENT OF TRANSPORTATION

TRAFFIC CONTROL SYSTEM FOR LANE CLOSURE ON TWO LANE CONVENTIONAL HIGHWAYS

NO SCALE

RSP T13 DATED OCTOBER 17, 2014 SUPERSEDES RSP T13 DATED JULY 18, 2014 AND RSP T13 DATED APRIL 19, 2013 AND STANDARD PLAN T13 DATED MAY 20, 2011 - PAGE 241 OF THE STANDARD PLANS BOOK DATED 2010.

REVISED STANDARD PLAN RSP T13

2010 REVISED STANDARD PLAN RSP T13

9-26-14

Dist	COUNTY	ROUTE	POST MILES TOTAL PROJECT	SHEET No.	TOTAL SHEETS
10	Ama	88	46.9/R54.7	35	35

REGISTERED CIVIL ENGINEER

April 19, 2013
PLANS APPROVAL DATE

REGISTERED PROFESSIONAL ENGINEER Gurinderpal Bhullar No. C48815 Exp. 9-30-14 CIVIL STATE OF CALIFORNIA

THE STATE OF CALIFORNIA OR ITS OFFICERS OR AGENTS SHALL NOT BE RESPONSIBLE FOR THE ACCURACY OR COMPLETENESS OF SCANNED COPIES OF THIS PLAN SHEET.

TO ACCOMPANY PLANS DATED 1-20-15

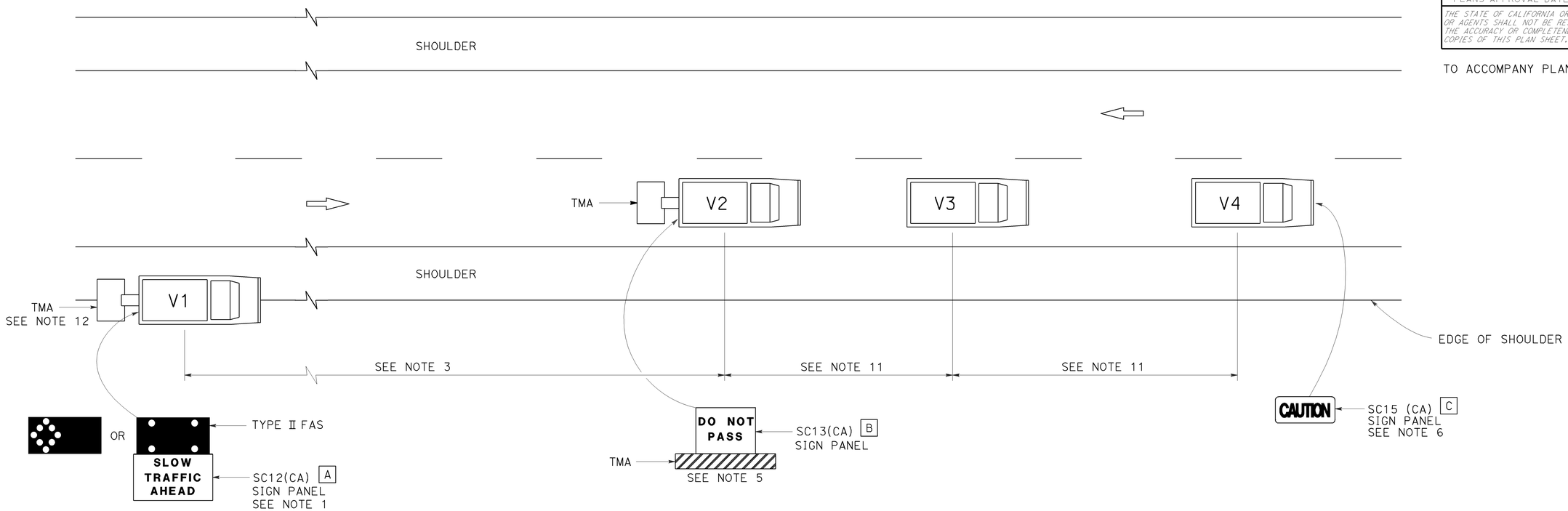

LEGEND

V1	SIGN VEHICLE
V2	SHADOW VEHICLE
V3	WORK/APPLICATION VEHICLE
V4	SIGN VEHICLE
TMA	TRUCK-MOUNTED ATTENUATOR
	FLASHING ARROW SIGN (FAS) IN FLASHING CAUTION MODE
	FLASHING ARROW SIGN (FAS) IN ALTERNATING DIAMOND CAUTION

SIGN PANEL SIZE (Min)

A	72" x 42"
B	54" x 42"
C	54" x 24"

NOTES:

1. Either a changeable message sign or a SC12(CA) "SLOW TRAFFIC AHEAD" sign shall be mounted on the rear of sign vehicle V1. The changeable message sign shall be sequenced to show the "CAUTION" message first, follow by the "SLOW TRAFFIC AHEAD" message. A Type II flashing arrow sign may be used with the SC12(CA) sign panel.
2. Sign vehicle V1 should be positioned where highly visible when shoulders are not available.
3. If traffic queues develop, sign vehicle V1 should be positioned upstream from the end of queue.
4. Vehicle-mounted sign panels shall have Type III or above retroreflective sheeting, black on white, or black on fluorescent orange, with 6" minimum series D letters per Caltrans sign specifications.
5. Shadow vehicle shall be equipped with a truck-mounted attenuator. The sign panel shown shall be mounted on the rear of shadow vehicle V2. The message "LANE CLOSED" may be used in place of the "DO NOT PASS" message.
6. The sign panel shown shall be mounted on the front of sign vehicle V4, facing opposing traffic.
7. All vehicles shall be equipped with flashing or rotating amber lights.
8. Sign vehicle V4 will not be required when the work and vehicles V2 and V3 are 2′ or more from the centerline of the highway during the work or application operations.
9. All vehicles used for lane closures shall be equipped with two-way radios and the vehicle operators shall maintain communication during the work or application operation.
10. This plan shall not be used where workers would be on foot in the work area. Use a stationary type lane closure (Revised Standard Plan T13) for this condition.
11. Minimize spacing between vehicles V2 and V3 and vehicles V3 and V4 to deter road users from driving in between them.
12. If sign vehicle V1 encroaches into the traffic lane due to insufficient shoulder width, sign vehicle V1 shall be equipped with a truck-mounted attenuator. Sign vehicle V1 shall stay as close to the edge of shoulder as practicable.

STATE OF CALIFORNIA
DEPARTMENT OF TRANSPORTATION

TRAFFIC CONTROL SYSTEM FOR MOVING LANE CLOSURE ON TWO LANE HIGHWAYS

NO SCALE

RSP T17 DATED APRIL 19, 2013 SUPERSEDES STANDARD PLAN T17
DATED MAY 20, 2011 - PAGE 245 OF THE STANDARD PLANS BOOK DATED 2010.

REVISED STANDARD PLAN RSP T17

2010 REVISED STANDARD PLAN RSP T17

12-18-12