Dist	COUNTY	ROUTE	POST MILES TOTAL PROJECT	SHEET No.	TOTAL SHEETS
10	SJ	132,580	0.2, L0.0/15.3	2	265

REGISTERED CIVIL ENGINEER 5/29/15 DATE

6-1-15
PLANS APPROVAL DATE

REGISTERED PROFESSIONAL ENGINEER Snehalatha Pavuluri No. 78187 Exp 09/30/15 CIVIL STATE OF CALIFORNIA

THE STATE OF CALIFORNIA OR ITS OFFICERS OR AGENTS SHALL NOT BE RESPONSIBLE FOR THE ACCURACY OR COMPLETENESS OF SCANNED COPIES OF THIS PLAN SHEET.

T.Y.LIN INTERNATIONAL
2010 CROW CANYON PLACE,
SUITE 350
SAN RAMON, CA 94583

NOTES:

1. DIMENSIONS OF THE PAVEMENT STRUCTURES (STRUCTURAL SECTIONS) ARE SUBJECT TO TOLERANCES SPECIFIED IN THE Std SPECIFICATIONS.
2. LOCATION OF SLAB REPLACEMENTS ARE NOT CONTINUOUS AND MUST BE FIELD VERIFIED BY THE CONTRACTOR. SEE SUMMARY OF QUANTITIES FOR APPROXIMATE LOCATIONS OF SLAB REPLACEMENT AND BASE FAILURE.
3. FOR LOCATION OF HMA DIKE AND MIDWEST GUARD RAIL SYSTEM, SEE LAYOUTS AND SUMMARY OF QUANTITIES.
4. FOR COLD PLANE AND OVERLAY CONFORM DETAILS SEE CONSTRUCTION DETAILS.
5. FOR LOCATION AND LIMITS OF COLD PLANE AC Pvmt, SEE LAYOUTS AND SUMMARY OF QUANTITIES.
6. FOR LOCATION, LIMITS AND DETAILS OF MVP, SEE LAYOUTS, CONSTRUCTION DETAILS AND SUMMARY OF QUANTITIES.
7. FOR ACCURATE RIGHT OF WAY DATA, CONTACT RIGHT OF WAY ENGINEERING AT THE DISTRICT OFFICE.
8. FOR LOCATION AND LIMITS OF STRUCTURAL SECTION REPLACEMENT ON SHEET X-4 SEE SUMMARY OF QUANTITY SHEETS.
9. FOR LOCATIONS OF FULL DEPTH HMA, MATCH EXISTING GRADES.
10. RHMA-G SHALL BE PLACED AS A FINAL LIFT.

ABBREVIATIONS:

RHMA-G	RUBBERIZED HOT MIX ASPHALT - (GAP GRADED)
RSC	RAPID STRENGTH CONCRETE
SAMI-R	STRESS ABSORBING MEMBRANE INTERLAYER-RUBBERIZED

PAVEMENT STRUCTURAL SECTIONS:

1. 0.20' RHMA-G
   0.15' HMA (TYPE A)
   SAMI-R
   0.0-0.12' Var HMA (TYPE A)
   (CROSS SLOPE CORRECTION)
   0.10' HMA (LEVELING)
2. 0.20' RHMA-G
   0.25' HMA (TYPE A)
3. 0.20' RHMA-G
   0.75' HMA (TYPE A)
4. 0.20' RHMA-G
5. 0.25' VEGETATION CONTROL
   (MINOR CONCRETE)
6. 0.20' RHMA-G
   0.25' HMA (TYPE A)
   0.0-0.12' Var HMA (TYPE A)
   (CROSS SLOPE CORRECTION)
   MATCH Exist SLOPE
   1.35'-1.80' Var HMA (TYPE A)
7. 0.20' RHMA-G
   0.25' HMA (TYPE A)
   0.0-0.12' Var HMA (TYPE A)
   (CROSS SLOPE CORRECTION)
   MATCH Exist SLOPE
   1.35' HMA (TYPE A)
8. 0.50' HMA (TYPE A)
   1.50' CLASS 2 AB
9. 0.20' RHMA-G
   0.25' HMA (TYPE A)
   MATCH Exist SLOPE
   1.35'-1.80' Var HMA (TYPE A)
10. 0.20' HMA (TYPE A)
11. NOT USED
12. 0.20' RHMA-G
    0.25' HMA (TYPE A)
    MATCH Exist SLOPE
    1.35' HMA (TYPE A)

DESIGN DESIGNATION (ROUTE 580):

2015 ADT 29,000	D=85%
2035 ADT 43,000	T=14%
DHV 4,550	V=65 MPH
ESAL 31,514,374	20 YEAR TI 13.5 MAIN LINE
	20 YEAR TI 8.5 SHOULDERS
	20 YEAR TI 10.0 RAMPS

PAVEMENT CLIMATE REGION

INLAND VALLEY

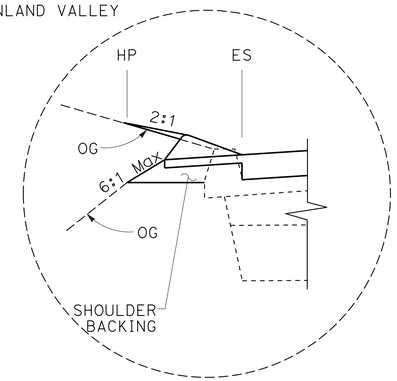

DETAIL-A

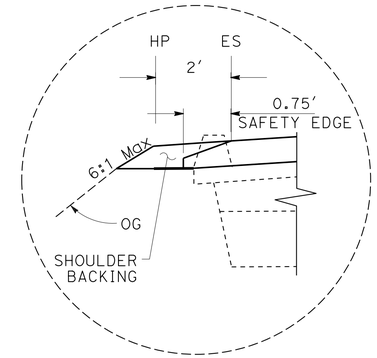

DETAIL-B

NOT USED

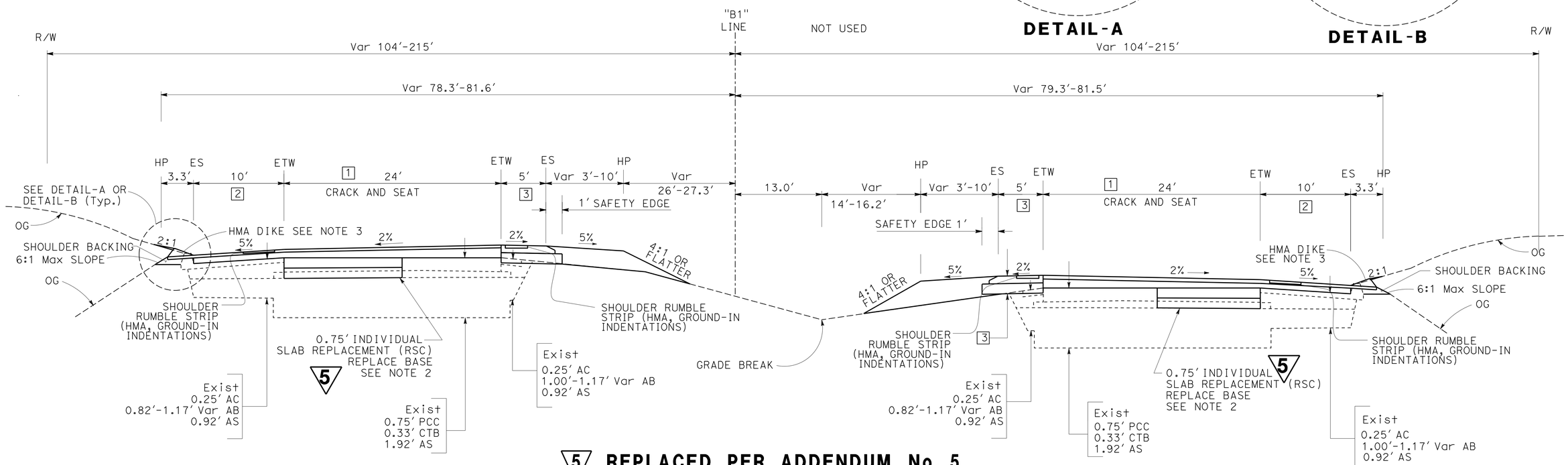

EASTBOUND

Sta 529+91.22 TO 538+52.31
Sta 542+50.30 TO 584+58.58
Sta 589+20.52 TO 631+80.40
Sta 636+25.78 TO 648+41.52
Sta 652+74.47 TO 667+02.72
Sta 695+14.59 TO 749+90.00
Sta 754+22.00 TO 823+02.00 *

5 **REPLACED PER ADDENDUM No. 5 DATED DECEMBER 4, 2015**

ROUTE 580

"B1" LINE

WESTBOUND

Sta 542+18.37 TO 583+62.05
Sta 588+25.62 TO 632+85.00
Sta 637+36.78 TO 647+46.19
Sta 651+79.10 TO 667+02.72
Sta 695+14.59 To 747+44.00
Sta 751+70.00 TO 795+65.46

TYPICAL CROSS SECTIONS

NO SCALE

* Sta 823+02 = PM 5.0

1 **REPLACED PER ADDENDUM No. 1 DATED NOVEMBER 6, 2015**

X-1

STATE OF CALIFORNIA - DEPARTMENT OF TRANSPORTATION
Caltrans
CONSULTANT FUNCTIONAL SUPERVISOR: KEITH RHODES
CALCULATED-DESIGNED BY: SNEHA PAVULURI
CHECKED BY: KEITH RHODES
REVISED BY
DATE REVISED

LAST REVISION 05-29-15
DATE PLOTTED => 03-DEC-2015
TIME PLOTTED => 13:56

Dist	COUNTY	ROUTE	POST MILES TOTAL PROJECT	SHEET No.	TOTAL SHEETS
10	SJ	132,580	0.2, L0.0/15.3	3	265

REGISTERED CIVIL ENGINEER 5/29/15 DATE

6-1-15
PLANS APPROVAL DATE

REGISTERED PROFESSIONAL ENGINEER Snehalatha Pavuluri No. 78187 Exp 09/30/15 CIVIL STATE OF CALIFORNIA

THE STATE OF CALIFORNIA OR ITS OFFICERS OR AGENTS SHALL NOT BE RESPONSIBLE FOR THE ACCURACY OR COMPLETENESS OF SCANNED COPIES OF THIS PLAN SHEET.

T.Y.LIN INTERNATIONAL
2010 CROW CANYON PLACE,
SUITE 350
SAN RAMON, CA 94583

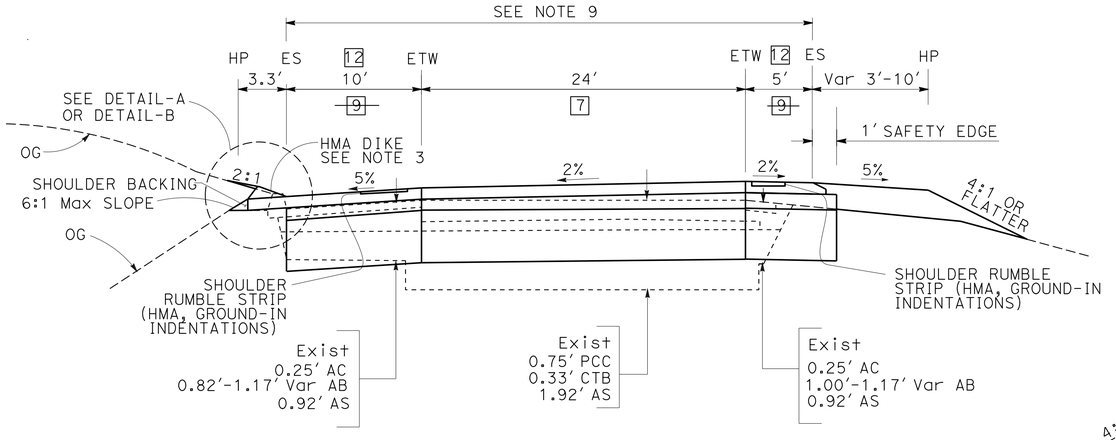

EASTBOUND

Sta 632+95.40 TO 635+10.78

5 **REPLACED PER ADDENDUM No. 5 DATED DECEMBER 4, 2015**

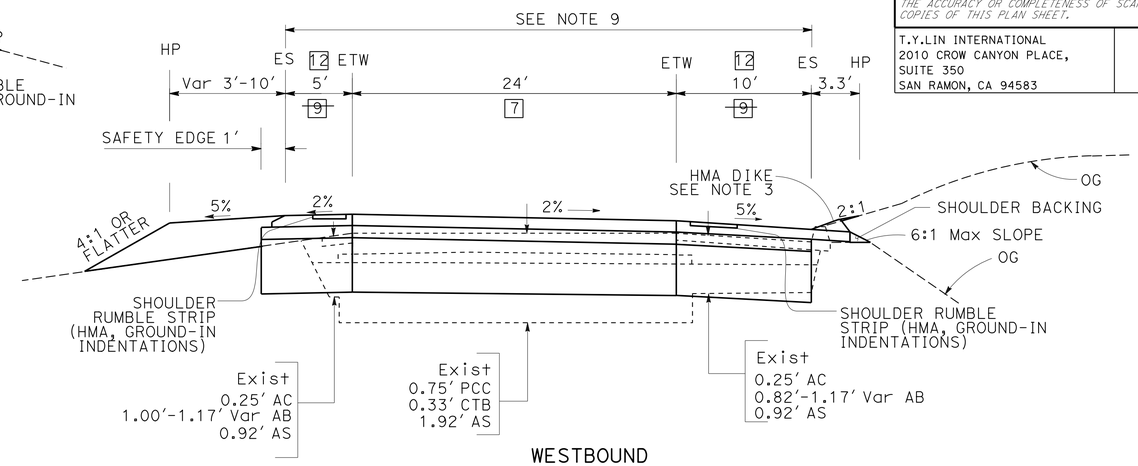

WESTBOUND

Sta 634+00.00 TO 636+21.78

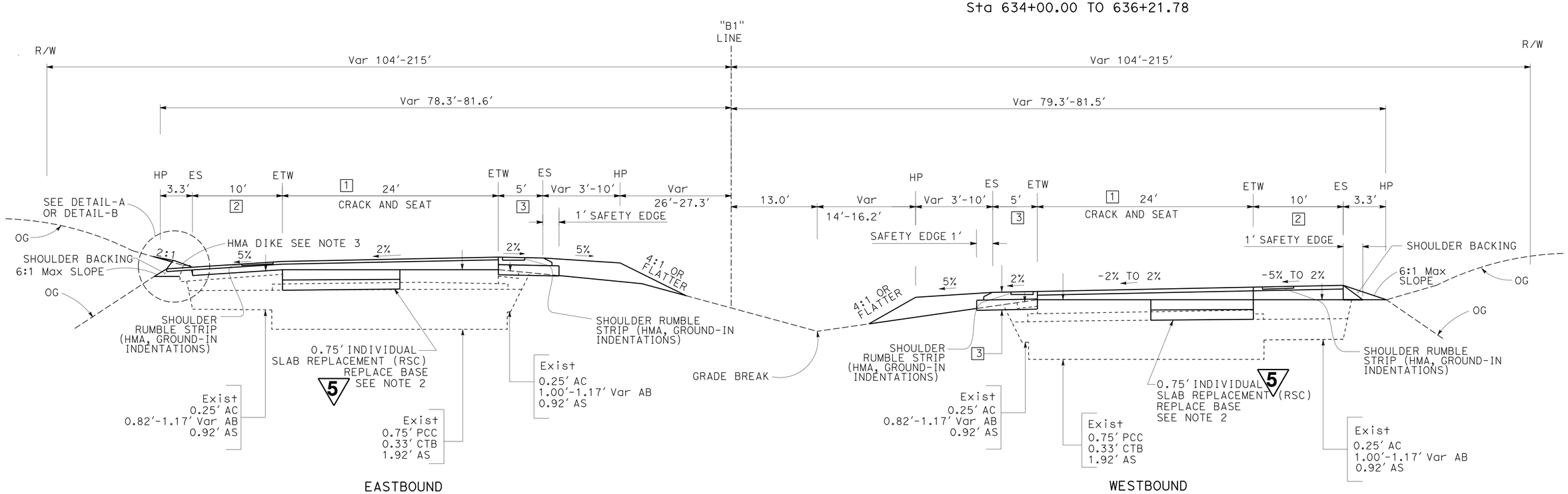

EASTBOUND

WESTBOUND

Sta 667+02.72 TO 695+14.59

ROUTE 580

"B1" LINE

TYPICAL CROSS SECTIONS

NO SCALE

1 **REPLACED PER ADDENDUM No. 1 DATED NOVEMBER 6, 2015**

X-2

STATE OF CALIFORNIA - DEPARTMENT OF TRANSPORTATION

Caltrans

CONSULTANT FUNCTIONAL SUPERVISOR: KEITH RHODES

CALCULATED-DESIGNED BY: SNEHA PAVULURI | CHECKED BY: KEITH RHODES

REVISED BY | DATE REVISED

LAST REVISION 05-29-15 | DATE PLOTTED => 03-DEC-2015 | TIME PLOTTED => 13:56

Dist	COUNTY	ROUTE	POST MILES TOTAL PROJECT	SHEET No.	TOTAL SHEETS
10	SJ	132,580	0.2, L0.0/15.3	120	265

REGISTERED CIVIL ENGINEER 5/29/15 DATE

6-1-15
PLANS APPROVAL DATE

REGISTERED PROFESSIONAL ENGINEER Snehalatha Pavuluri No. 78187 Exp 09/30/15 CIVIL STATE OF CALIFORNIA

THE STATE OF CALIFORNIA OR ITS OFFICERS OR AGENTS SHALL NOT BE RESPONSIBLE FOR THE ACCURACY OR COMPLETENESS OF SCANNED COPIES OF THIS PLAN SHEET.

T.Y.LIN INTERNATIONAL
2010 CROW CANYON PLACE,
SUITE 350
SAN RAMON, CA 94583

ROADWAY QUANTITIES

STATION	LOCATION	HMA (TYPE A)	Var HMA (TYPE A) (CROSS SLOPE CORRECTION)	HMA (LEVELING)	RHMA-G	~~JPCP~~	~~DRILL AND BOND (TIE BAR)~~	TACK COAT	ASPHALT RUBBER-BINDER	PRECOATED SCREENINGS	~~LCB~~	CLASS 2 AB	CLASS 2 AS	PRIME COAT	SAFETY EDGE (N) *
		TON	TON	TON	TON	~~CY~~	~~EA~~	TON	TON	TON	~~CY~~	CY	CY	TON	TON
B1 525+00 TO 539+80	EB	1,392	185	155	980			5	7	46		~~464~~		~~1~~	56
B1 541+21 TO 585+99	EB	4,436	638	758	2,663			14	32	225		~~857~~		~~2~~	176
B1 588+05 TO 649+83	EB	7,546	978	986	3,667	~~456~~	~~192~~	21	41	292	~~139~~	~~870~~	~~370~~	~~2~~	246
B1 651+59 TO 823+02	EB	15,963	1,933	2,988	10,459	~~435~~	~~186~~	48	123	886	~~133~~	~~470~~	~~265~~	~~4~~	676
132 RAMPS	EB	137						1				202		1	
B1 525+00 TO 539+79	WB				1,370			3							8
B1 540+91 TO 584+77	WB	4,391	632	746	2,627			14	31	222		~~860~~		~~2~~	172
B1 586+82 TO 648+61	WB	7,597	978	985	3,692	~~462~~	~~194~~	21	41	292	~~141~~	~~871~~	~~373~~	~~2~~	242
B1 650+36 TO 823+02 **	WB	14,763	1,647	2,513	9,048	~~442~~	~~183~~	46	103	745	~~134~~	200	~~269~~	2	571
PM 4.48 TO PM 7.87	EB & WB				19,902			44							93
PM 7.90 TO PM 9.71 **	EB & WB	2,183			11,691			31				2,506		7	50
PM 9.73 TO PM 11.29	EB & WB				9,715			22							43
PM 11.31 TO PM 11.50	EB & WB				1,203			3							5
PM 11.54 TO PM 12.03	EB & WB				3,012			7							13
PM 12.05 TO PM 12.73	EB & WB				4,246			10							19
PM 12.78 TO PM 15.3 **	EB & WB	2,541			16,077			36				3,155		9	69
PLACE HMA DIKE	EB & WB	2,612													
~~BASE FAILURE REPLACEMENT~~	~~EB & WB~~										~~256~~				
STRUCTURAL SECTION REPLACEMENT	EB & WB	840													
DRAINAGE QUANTITIES	EB & WB	203													
SUB TOTAL		64,604	6,991	9,131	100,351	~~1,795~~	~~755~~	326	378	2,708	~~256~~	6,063	~~1,277~~	19	
TOTAL		71,595		9,131	100,351	~~1,795~~	~~755~~	326	378	2,708	~~256~~	6,063	~~1,277~~	19	

(N) = NOT A SEPARATE PAY ITEM. * INCLUDED IN THE HMA (TYPE A) AND RHMA-G QUANTITIES.
** INCLUDES HMA (TYPE A), CLASS 2 AB, PRIME COAT AND TACK COAT QUANTITIES FOR MAINTENANCE VEHICLE PULLOUTS.

ABBREVIATIONS

RHMA-G RUBBERIZED HOT MIX ASPHALT - (GAP GRADED)
RSC RAPID STRENGTH CONCRETE

5 **REPLACED PER ADDENDUM No. 5 DATED DECEMBER 4, 2015**

EARTHWORK QUANTITIES

STATION	LOCATION	ROADWAY EXCAVATION	EMBANKMENT (N)	IMPORTED BORROW
		CY	CY	CY
B1 525+00 TO 539+67	EB	429	146	146
B1 541+04 TO 585+09	WB	1,111	1,219	1,219
B1 541+21 TO 585+74	EB	1,143	1,220	1,220
B1 587+11 TO 648+93	WB	1,956	1,818	1,818
B1 587+68 TO 649+57	EB	1,952	2,058	2,058
B1 650+64 TO 823+02	WB	3,721	4,070	4,070
B1 651+30 TO 823+02	EB	3,711	6,235	6,235
C 56+43 TO C4 276+00	EB	214	46	46
C1 75+75 TO C1 58+02	EB	61	24	24
MVPS	EB & WB	63		1,146
CORRAL HOLLOW Rd OFF-RAMP	WB	1,712		
CORRAL HOLLOW Rd ON-RAMP	WB	1,508		
PATTERON Rd ON-RAMP	EB	1,017		
PATTERSON Rd OFF-RAMP	WB	1,661		
PATTERSON Rd ON-RAMP	WB	1,407		
TOTAL		21,667		17,982

(N) = NOT A SEPARATE PAY ITEM.

CRACK AND SEAT (EXISTING CONCRETE PAVEMENT)

STATION	LOCATION	SQYD
B1 529+91 TO 538+52	EB	2,296
B1 542+50 TO 584+59	EB	11,224
B1 589+20 TO 631+80	EB	11,360
B1 636+26 TO 648+41	EB	3,240
B1 652+74 TO 749+90	EB	25,909
B1 754+22 TO 823+02	EB	18,347
B1 542+18 TO 583+62	WB	11,051
B1 588+26 TO 632+85	WB	11,891
B1 637+37 TO 647+46	WB	2,691
B1 651+79 TO 747+44	WB	25,507
B1 751+70 TO 795+57	WB	11,699
TOTAL		135,215

COLD PLANE AC PAVEMENT

STATION	DESCRIPTION	LOCATION	SQYD
B1 525+00 TO 525+50	CONFORM TAPER AT END OF PROJECT	EB	359
B1 525+00 TO 525+50	CONFORM TAPER AT END OF PROJECT	WB	344
B1 527+72 TO 528+22	CONFORM TAPER I-5 SOUTHBOUND RAMP	EB	190
B1 539+08 TO 539+70	TRANSITION TAPER AT GAFFERY ROAD UC	WB	411
B1 762+71 TO 763+21	CONFORM TAPER	WB	124
B1 765+63 TO 766+13	CONFORM TAPER	EB	111
V1 222+50 TO 223+00	CONFORM TAPER AT 132 CONNECTOR	EB	184
PM 4.51 WB 132 OFF-RAMP	TRANSITION TAPER ALONG WESTBOUND OFF-RAMP	WB	181
PM 6.33 TO PM 6.48	TRANSITION TAPER AT WIM STATION	WB&EB	1,127
PM 6.57	TRANSITION TAPER AT TRACY BLVD OC	WB&EB	2,733
PM 7.86 TO PM 7.92	TRANSITION TAPER AT CORRAL HOLLOW CREEK BRIDGE	WB&EB	1,127
PM 8.16	CONFORM TAPER AT CORRAL HOLLOW ROAD EB ON-RAMP	EB	222
PM 8.17	CONFORM TAPER AT CORRAL HOLLOW ROAD EB OFF-RAMP	EB	2815
PM 8.12 TO PM 8.19	TRANSITION TAPER UNDER CORRAL HOLLOW ROAD OC	WB&EB	1,127
PM 8.18 TO PM 8.25	TRANSITION TAPER AT WIM STATION	WB&EB	1,127
PM 9.70 TO PM 9.75	TRANSITION TAPER AT VALPICO UC	WB&EB	1,127
PM 11.30 TO PM 11.33	TRANSITION TAPER AT VALLEY VIEW UC	WB&EB	1,127
PM 11.49 TO PM 11.57	TRANSITION TAPER AT WEST VALPICO OH	WB&EB	1,126
PM 12.02 TO PM 12.07	TRANSITION TAPER AT HANSEN ROAD UC	WB&EB	1,127
PM 12.71 TO PM 12.84	TRANSITION TAPER AT EAST MIDWAY OH	WB&EB	1,124
PM 13.36 TO PM 13.55	TRANSITION TAPER ALONG EASTBOUND ON-RAMP	EB	457
PM 13.51 TO PM 13.58	TRANSITION TAPER UNDER PATTERSON PASS ROAD OC	WB&EB	2999
PM 13.55	CONFORM TAPER PATTERSON PASS ROAD EB OFF RAMP	EB	318
PM 15.30	CONFORM TAPER AT END OF PROJECT	WB&EB	475
TOTAL			22,060

1 **REPLACED PER ADDENDUM No. 1 DATED NOVEMBER 6, 2015**

3 **REPLACED PER ADDENDUM No. 3 DATED NOVEMBER 23, 2015**

STRUCTURAL SECTION REPLACEMENT

STATION	DESCRIPTION	LOCATION	LENGTH	WIDTH	AREA	REMOVE PAVEMENT		HMA (TYPE A)
						CONCRETE ##	AC	#
			FT	FT	SQFT	CY	CY	TON
PM 7.87	No.2 LANE AND R+ SHOULDER	EB	12	22	264	4	8	23
PM 7.87	No. 2 LANE AND SHOULDER	WB	25	10	250		11	22
PM 8.87	No. 2 LANE	WB	100	12	1200	33	19	106
PM 8.93	No. 2 LANE	WB	40	12	480	13	8	42
PM 8.94	R+ SHOULDER	WB	190	10	1900		83	168
PM 9.10	R+ SHOULDER	WB	350	10	3500		153	310
PM 12.34	No.2 LANE	EB	10	12	120	3	2	11
PM 12.49	No.2 LANE	WB	30	12	360	10	6	32
PM 14.75	No.2 LANE AND R+ SHOULDER	WB	32	22	704	11	20	62
PM 15.13	No.2 LANE	WB	60	12	720	20	11	64
TOTAL						94	321	840

SEE ROADWAY QUANTITIES FOR GRAND TOTAL
SEE REMOVE CONCRETE PAVEMENT QUANTITIES FOR GRAND TOTAL

NOTE: ACTUAL LOCATIONS AND DIMENSIONS OF STRUCTURAL SECTION REPLACEMENT MAY VARY IN THE FIELD AND WILL BE DETERMINED BY THE ENGINEER.

SUMMARY OF QUANTITIES

Q-1

STATE OF CALIFORNIA - DEPARTMENT OF TRANSPORTATION
Caltrans
CONSULTANT FUNCTIONAL SUPERVISOR: KEITH RHODES
CALCULATED-DESIGNED BY: SNEHA PAVULURI
CHECKED BY: KEITH RHODES
REVISED BY / DATE REVISED

LAST REVISION 05-29-15 | DATE PLOTTED => 03-DEC-2015 | TIME PLOTTED => 13:56

Dist	COUNTY	ROUTE	POST MILES TOTAL PROJECT	SHEET No.	TOTAL SHEETS
10	SJ	132,580	0.2, L0.0/15.3	123	265

REGISTERED CIVIL ENGINEER 5/29/15 DATE

6-1-15
PLANS APPROVAL DATE

REGISTERED PROFESSIONAL ENGINEER Snehalatha Pavuluri No. 78187 Exp 09/30/15 CIVIL STATE OF CALIFORNIA

THE STATE OF CALIFORNIA OR ITS OFFICERS OR AGENTS SHALL NOT BE RESPONSIBLE FOR THE ACCURACY OR COMPLETENESS OF SCANNED COPIES OF THIS PLAN SHEET.

T.Y.LIN INTERNATIONAL
2010 CROW CANYON PLACE,
SUITE 350
SAN RAMON, CA 94583

HMA DIKE (CONTINUED)

WESTBOUND						EASTBOUND					
STATION	TYPE C	TYPE E	TYPE F	CY (N)	TONS *	STATION	TYPE C	TYPE E	TYPE F	CY (N)	TONS *
	LF	LF	LF				LF	LF	LF		
PM 13.18 TO PM 13.33		795.00		10.33	20.93	PM 13.46 TO PM 13.71	62.50	1,305.00	43.75	17.49	35.42
PM 13.53 TO PM 13.69	62.50	835.00	43.75	11.38	23.05	PM 13.76 TO PM 13.78		130.00		1.69	3.42
CORRAL HOLLOW OFF- RAMP		801.00		10.41	21.09	PM 13.78 TO PM 13.87		470.00		6.11	12.37
CORRAL HOLLOW ON- RAMP		151.00		1.96	3.98	PM 13.87 TO PM 14.29		2,200.00		28.60	57.92
PATTERSON Rd OFF-RAMP		1,000.00		13.00	26.33	PM 14.35 TO PM 14.50		770.00		10.01	20.27
PATTERSON RD ON-RAMP		630.00		8.19	16.58	PM 14.50 TO PM 14.74		1,270.00		16.51	33.43
PM 13.80 TO PM 13.89		485.00		6.31	12.77	PM 14.74 TO PM 15.08		1,805.00		23.47	47.52
PM 13.89 TO PM 14.50		3,225.00		41.93	84.90	PM 15.08 TO PM 15.30		1,384.00		17.99	36.43
PM 14.53 TO PM 14.75		1,160.00		15.08	30.54	CORRAL HOLLOW OFF-RAMP		226.00		2.94	5.95
PM 14.88 TO PM 14.69		990.00		12.87	26.06	CORRAL HOLLOW ON-RAMP		801.00		10.41	21.09
PM 15.13 TO PM 15.07		695.00		9.04	18.30	PATTERSON Rd OFF-RAMP		1,120.00		14.56	29.48
PM 15.21 TO PM 15.30		786.00		10.22	20.69						
SUBTOTAL (3)	62.50	11,553.00	43.75		305.20	SUBTOTAL (4)	62.50	11,481.00	43.75		303.30
						SUBTOTAL (3)	62.50	11,553.00	43.75		305.20
						SUBTOTAL (2)	708.38	33,992.43	487.50		906.82
						SUBTOTAL (1)	736.95	41,261.01	325.00		1,096.21
						TOTAL	1,570.33	98,287.44	900.00		2,611.53

(N) = NOT A SEPERATE PAY ITEM
* SEE ROADWAY QUANTITIES FOR GRAND TOTAL

REMOVE CONCRETE PAVEMENT

STATION	LOCATION	CY
B1 538+52.31 TO 539+67.24	EB	76.67
B1 541+35.30 TO 542+50.30	EB	76.67
B1 541+03.37 TO 542+18.37	WB	76.67
B1 583+62.05 TO 584+77.05	WB	76.67
B1 584+58.58 TO 585+73.58	EB	76.67
B1 587+10.62 TO 588+25.62	WB	76.67
B1 588+05.53 TO 589+20.52	EB	76.67
B1 631+80.40 TO 636+25.78	EB	297.33
B1 632+85.00 TO 637+36.78	WB	302.00
B1 647+46.19 TO 648+61.19	WB	76.67
B1 648+41.52 TO 649+56.53	EB	76.67
B1 650+64.10 TO 651+79.10	WB	76.67
B1 651+41.56 TO 652+74.47	EB	76.67
B1 747+44.00 TO 751+70.00	WB	284.00
B1 749+90.00 TO 754+22.00	EB	288.00
STRUCTURAL SECTION REPLACEMENT		94.67
TOTAL		2109.37

REMOVE CONCRETE CURB

STATION/DESCRITPION	LOCATION	LF
B1 762+53 TO 763+01	EB	90.00
CHRISMAN Rd OFF-RAMP	EB	140.00
CORRAL HOLLOW Rd OFF-RAMP	EB	625.00
CORRAL HOLLOW Rd ON-RAMP	EB	747.00
CORRAL HOLLOW Rd OFF-RAMP	WB	700.00
CORRAL HOLLOW Rd ON-RAMP	WB	630.00
PATTERSON ROAD OFF-RAMP	WB	676.00
PATTERSON ROAD ON-RAMP	WB	538.00
PATTERSON ROAD OFF-RAMP	EB	780.00
PATTERSON ROAD ON-RAMP	EB	790.00
TOTAL		5,716.00

5 REPLACED PER ADDENDUM No. 5 DATED DECEMBER 4, 2015

BASE FAILURE REPLACEMENT

STATION	NUMBER OF SLABS (N)				AREA (SQFT) (N)				REPLACE BASE (0.35')
	WESTBOUND		EASTBOUND		WESTBOUND		EASTBOUND		
	No.1 LANE	No.2 LANE	No.1 LANE	No.2 LANE	No.1 LANE	No.2 LANE	No.1 LANE	No.2 LANE	CY
PM 0.0-0.5									
PM 0.5-1.0		7		8		756		1,128	24
PM 1.0-1.5		2		3		228		192	5
PM 1.5-2.0		3		6		432		612	14
PM 2.0-2.5		20		14		2,316		1,836	54
PM 2.5-3.0		12		6		2,304		1,020	43
PM 3.0-3.5		6		15		1,152			35
PM 3.5-4.0		4		8		720		1,068	23
PM 4.0-4.5				10				1,044	14
PM 4.5-5.0				26				3,360	44
TOTAL									256*

~~* INCLUDED IN THE TOTAL ROADWAY QUANTITIES~~

1 REPLACED PER ADDENDUM No. 1 DATED NOVEMBER 6, 2015

REMOVE GUARDRAIL

STATION	LOCATION	LAYOUT	REMOVE GUARD RAIL	TREATED WOOD WASTE
			LF	LB
B1 541+07.28 TO 541+69.08	EB	12B	61.80	876.67
B1 558+71.43 TO 559+71.43	EB	12B	100.00	1,418.56
B1 560+77.14 to 561+77.14	WB	12B	100.00	1,418.56
B1 587+81.09 TO 588+61.07	EB	12B	79.17	1,123.07
B1 584+18.96 TO 584+97.97	WB	12B	79.01	1,120.80
B1 633+57.03 TO 634+57.03	EB	16B	100.00	1,418.56
B1 634+58.04 TO 635+45.56	WB	16B	87.50	1,241.24
B1 651+37.41 TO 652+16.56	EB	12B	79.15	1,122.79
B1 647+93.51 TO 648+82.68	WB	12B	89.17	1,264.93
B1 764+00.41 TO 764+87.98	WB	16B	87.50	1,241.24
B1 771+63.76 TO 772+63.76	EB	16B	100.00	1,418.56
B1 786+29.75 TO 786+92.25	WB	16B	62.50	886.60
B1 789+73.14 TO 790+73.14	EB	16B	100.00	1,418.56
PM 5.21 WEST OF EB 132 CONNECTOR	EB	16B	75.00	1,063.92
PM 6.65 TRACY Blvd OC	EB	16B	75.00	1,063.92
PM 6.65 TRACY Blvd OC	WB	16B	100.00	1,418.56
PM 7.92 CORRAL HOLLOW CREEK BRIDGE	WB	12B	62.00	879.51
PM 7.91 CORRAL HOLLOW CREEK BRIDGE	EB	12B	62.00	879.51
PM 8.14 CORRAL HOLLOW Rd OC	WB	16B	81.00	1,149.03
PM 8.14 CORRAL HOLLOW Rd OC	EB	16B	81.00	1,149.03
PM 9.74 VALPICO Rd UC	WB	12B	62.00	879.51
PM 9.75 VALPICO Rd UC	EB	12B	62.00	879.51
PM 11.34 VALLEY VIEW UC	WB	12B	62.00	879.51
PM 11.36 VALLEY VIEW UC	EB	12B	100.00	1,418.56
PM 11.55 WEST VALPICO OH	WB	12B	100.00	1,418.56
PM 11.60 WEST VALPICO OH	EB	12B	100.00	1,418.56
PM 12.09 HANSEN Rd UC	WB	12C	185.00	2,624.34
PM 12.10 HANSEN Rd UC	EB	12B	100.00	1,418.56
PM 12.89 EAST MIDWAY OH	EB	12B	100.00	1,418.56
PM 13.62 PATTERSON PASS Rd OC	WB	16B	82.00	1,163.22
PM 13.61 PATTERSON PASS Rd OC	EB	16B	82.00	1,163.22
TOTAL			2,696.80	38,255.73

SUMMARY OF QUANTITIES

Q-4

STATE OF CALIFORNIA - DEPARTMENT OF TRANSPORTATION
Caltrans
CONSULTANT FUNCTIONAL SUPERVISOR: KEITH RHODES
CALCULATED-DESIGNED BY: SNEHA PAVULURI
CHECKED BY: KEITH RHODES
REVISED BY
DATE REVISED

LAST REVISION 05-29-15 | DATE PLOTTED => 03-DEC-2015 | TIME PLOTTED => 13:56