Dist	COUNTY	ROUTE	POST MILES TOTAL PROJECT	SHEET No.	TOTAL SHEETS
10	SJ	132,580	0.2, L0.0/15.3	1	265

STATE OF CALIFORNIA

DEPARTMENT OF TRANSPORTATION

ACNHP-X077(023)E

PROJECT PLANS FOR CONSTRUCTION ON

STATE HIGHWAY

IN SAN JOAQUIN COUNTY
NEAR TRACY
FROM STANISLAUS COUNTY LINE TO ALAMEDA COUNTY LINE

TO BE SUPPLEMENTED BY STANDARD PLANS DATED 2010

INDEX OF PLANS

SHEET No.	DESCRIPTION
1	TITLE AND LOCATION MAP
2-6	TYPICAL CROSS SECTIONS
7	KEY MAP AND LINE INDEX
8	PROJECT CONTROL
9-25	LAYOUTS
26-51	CONSTRUCTION DETAILS
52-68	TEMPORARY WATER POLLUTION CONTROL PLANS AND QUANTITIES
69-87	DRAINAGE PLANS, DETAILS AND QUANTITIES
88	UTILITY PLAN
89-90	CONSTRUCTION AREA SIGNS
91-97	MOTORIST INFORMATION PLANS
98-99	TRAFFIC HANDLING PLAN AND QUANTITIES
100-119	PAVEMENT DELINEATION & SIGN PLANS, DETAILS AND QUANTITIES
120-125	SUMMARY OF QUANTITIES
126-144	EROSION CONTROL LEGEND, PLANS, DETAILS AND QUANTITIES
145-206	ELECTRICAL PLANS, DETAILS AND QUANTITIES
207-261	REVISED STANDARD PLANS
262-265	STRUCTURAL PLANS

THE STANDARD PLANS LIST APPLICABLE TO THIS CONTRACT IS INCLUDED IN THE NOTICE TO BIDDERS AND SPECIAL PROVISIONS BOOK.

LOCATION MAP

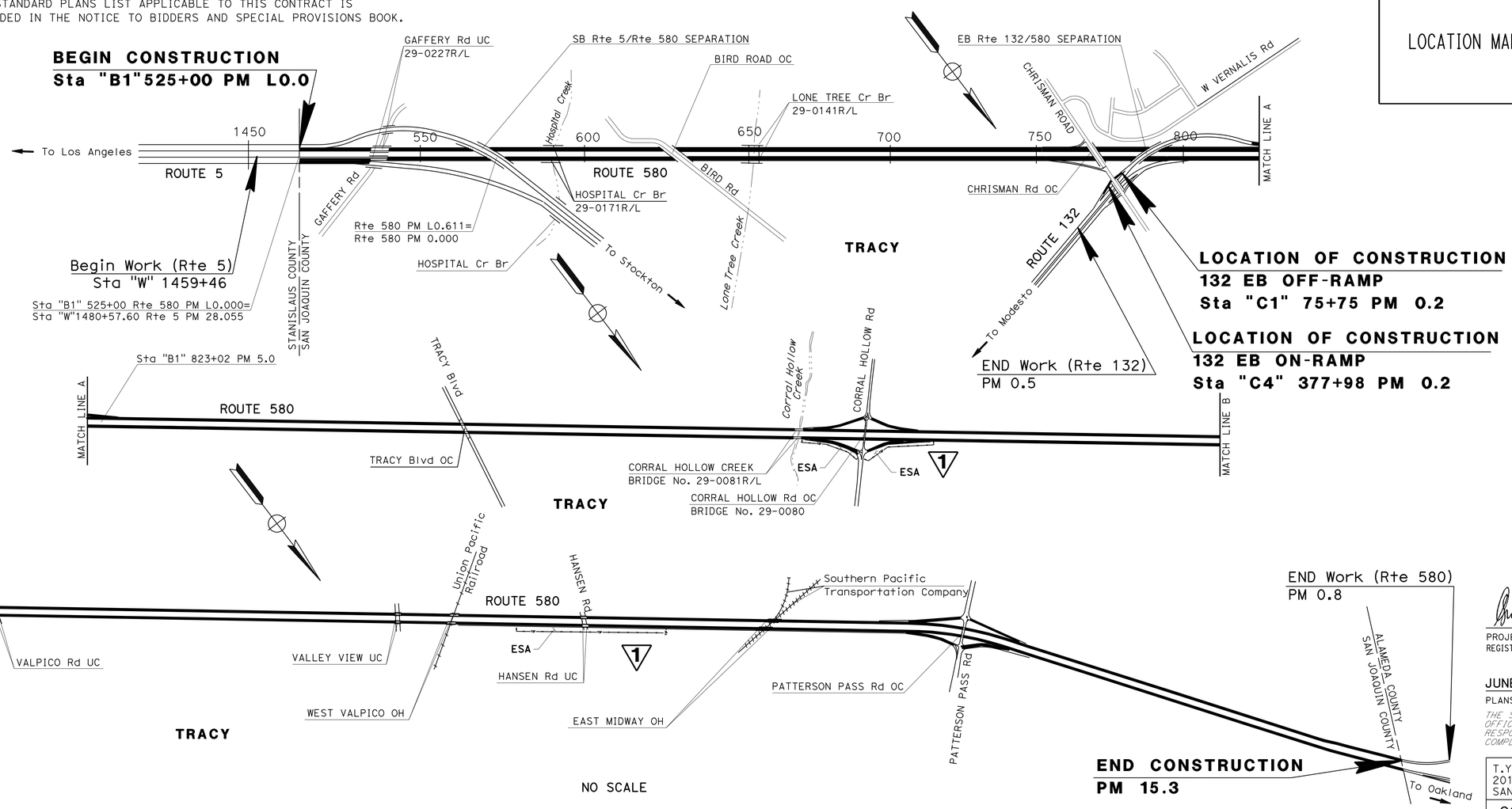

1 REPLACED PER ADDENDUM No. 1 DATED NOVEMBER 6, 2015

THE CONTRACTOR SHALL POSSESS THE CLASS (OR CLASSES) OF LICENSE AS SPECIFIED IN THE "NOTICE TO BIDDERS."

APPROVED AS TO IMPACT ON STATE FACILITIES AND CONFORMANCE WITH APPLICABLE STATE STANDARDS AND PRACTICES AND THAT TECHNICAL OVERSIGHT WAS PERFORMED.

CONSULTANT DESIGN ENGINEER: KEITH RHODES
REGISTRATION No.: C46718
LICENSE Exp DATE: 06/30/15
DATE SIGNED:
CALTRANS DESIGN OVERSIGHT APPROVAL: MICHAEL K. LIM

PROJECT ENGINEER
REGISTERED CIVIL ENGINEER
5/29/15
DATE

REGISTERED PROFESSIONAL ENGINEER
SNEHALATHA PAVULURI
No. 78187
Exp. 09/30/15
CIVIL
STATE OF CALIFORNIA

JUNE 1, 2015
PLANS APPROVAL DATE

THE STATE OF CALIFORNIA OR ITS OFFICERS OR AGENTS SHALL NOT BE RESPONSIBLE FOR THE ACCURACY OR COMPLETENESS OF SCANNED COPIES OF THIS PLAN SHEET.

T.Y.LIN INTERNATIONAL
2010 CROW CANYON PLACE, SUITE 350
SAN RAMON, CA 94583

CONTRACT No.	10-0Q17U4
PROJECT ID	1014000170

LAST REVISION: 05-29-15
DATE PLOTTED => 05-NOV-2015
TIME PLOTTED => 09:01

Dist	COUNTY	ROUTE	POST MILES TOTAL PROJECT	SHEET No.	TOTAL SHEETS
10	SJ	132,580	0.2, L0.0/15.3	2	265

REGISTERED CIVIL ENGINEER 5/29/15 DATE

6-1-15
PLANS APPROVAL DATE

REGISTERED PROFESSIONAL ENGINEER Snehalatha Pavuluri No. 78187 Exp 09/30/15 CIVIL STATE OF CALIFORNIA

THE STATE OF CALIFORNIA OR ITS OFFICERS OR AGENTS SHALL NOT BE RESPONSIBLE FOR THE ACCURACY OR COMPLETENESS OF SCANNED COPIES OF THIS PLAN SHEET.

T.Y.LIN INTERNATIONAL
2010 CROW CANYON PLACE,
SUITE 350
SAN RAMON, CA 94583

NOTES:

1. DIMENSIONS OF THE PAVEMENT STRUCTURES (STRUCTURAL SECTIONS) ARE SUBJECT TO TOLERANCES SPECIFIED IN THE Std SPECIFICATIONS.
2. LOCATION OF SLAB REPLACEMENTS ARE NOT CONTINUOUS AND MUST BE FIELD VERIFIED BY THE CONTRACTOR. SEE SUMMARY OF QUANTITIES FOR APPROXIMATE LOCATIONS OF SLAB REPLACEMENT AND BASE FAILURE.
3. FOR LOCATION OF HMA DIKE AND MIDWEST GUARD RAIL SYSTEM, SEE LAYOUTS AND SUMMARY OF QUANTITIES.
4. FOR COLD PLANE AND OVERLAY CONFORM DETAILS SEE CONSTRUCTION DETAILS.
5. FOR LOCATION AND LIMITS OF COLD PLANE AC Pvmt, SEE LAYOUTS AND SUMMARY OF QUANTITIES.
6. FOR LOCATION, LIMITS AND DETAILS OF MVP, SEE LAYOUTS, CONSTRUCTION DETAILS AND SUMMARY OF QUANTITIES.
7. FOR ACCURATE RIGHT OF WAY DATA, CONTACT RIGHT OF WAY ENGINEERING AT THE DISTRICT OFFICE.
8. FOR LOCATION AND LIMITS OF STRUCTURAL SECTION REPLACEMENT ON SHEET X-4 SEE SUMMARY OF QUANTITY SHEETS.
9. FOR LOCATIONS OF FULL DEPTH HMA, MATCH EXISTING GRADES.
10. RHMA-G SHALL BE PLACED AS A FINAL LIFT.

ABBREVIATIONS:

RHMA-G	RUBBERIZED HOT MIX ASPHALT - (GAP GRADED)
RSC	RAPID STRENGTH CONCRETE
SAMI-R	STRESS ABSORBING MEMBRANE INTERLAYER-RUBBERIZED

PAVEMENT STRUCTURAL SECTIONS:

1. 0.20' RHMA-G
   0.15' HMA (TYPE A)
   SAMI-R
   0.0-0.12' Var HMA (TYPE A)
   (CROSS SLOPE CORRECTION)
   0.10' HMA (LEVELING)
2. 0.20' RHMA-G
   0.25' HMA (TYPE A)
3. 0.20' RHMA-G
   0.75' HMA (TYPE A)
4. 0.20' RHMA-G
5. 0.25' VEGETATION CONTROL
   (MINOR CONCRETE)
6. 0.20' RHMA-G
   0.25' HMA (TYPE A)
   0.0-0.12' Var HMA (TYPE A)
   (CROSS SLOPE CORRECTION)
   MATCH Exist SLOPE
   1.35'-1.80' Var HMA (TYPE A)
7. 0.20' RHMA-G
   0.25' HMA (TYPE A)
   0.0-0.12' Var HMA (TYPE A)
   (CROSS SLOPE CORRECTION)
   MATCH Exist SLOPE
   1.35' HMA (TYPE A)
8. 0.50' HMA (TYPE A)
   1.50' CLASS 2 AB
9. 0.20' RHMA-G
   0.25' HMA (TYPE A)
   MATCH Exist SLOPE
   1.35'-1.80' Var HMA (TYPE A)
10. 0.20' HMA (TYPE A)
11. NOT USED
12. 0.20' RHMA-G
    0.25' HMA (TYPE A)
    MATCH Exist SLOPE
    1.35' HMA (TYPE A)

DESIGN DESIGNATION (ROUTE 580):

2015 ADT 29,000	D=85%
2035 ADT 43,000	T=14%
DHV 4,550	V=65 MPH
ESAL 31,514,374	20 YEAR TI 13.5 MAIN LINE
	20 YEAR TI 8.5 SHOULDERS
	20 YEAR TI 10.0 RAMPS

PAVEMENT CLIMATE REGION

INLAND VALLEY

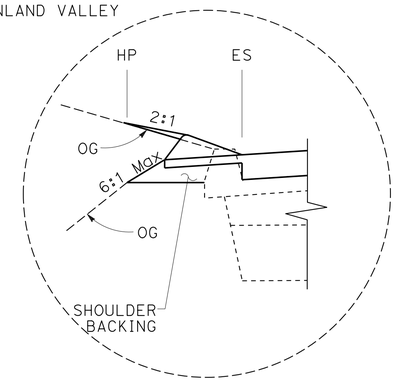

DETAIL-A

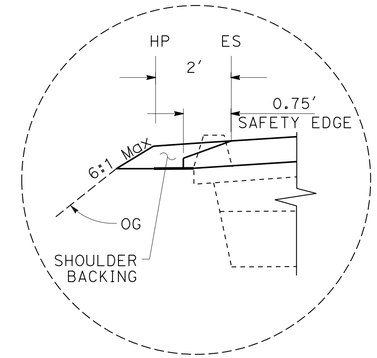

DETAIL-B

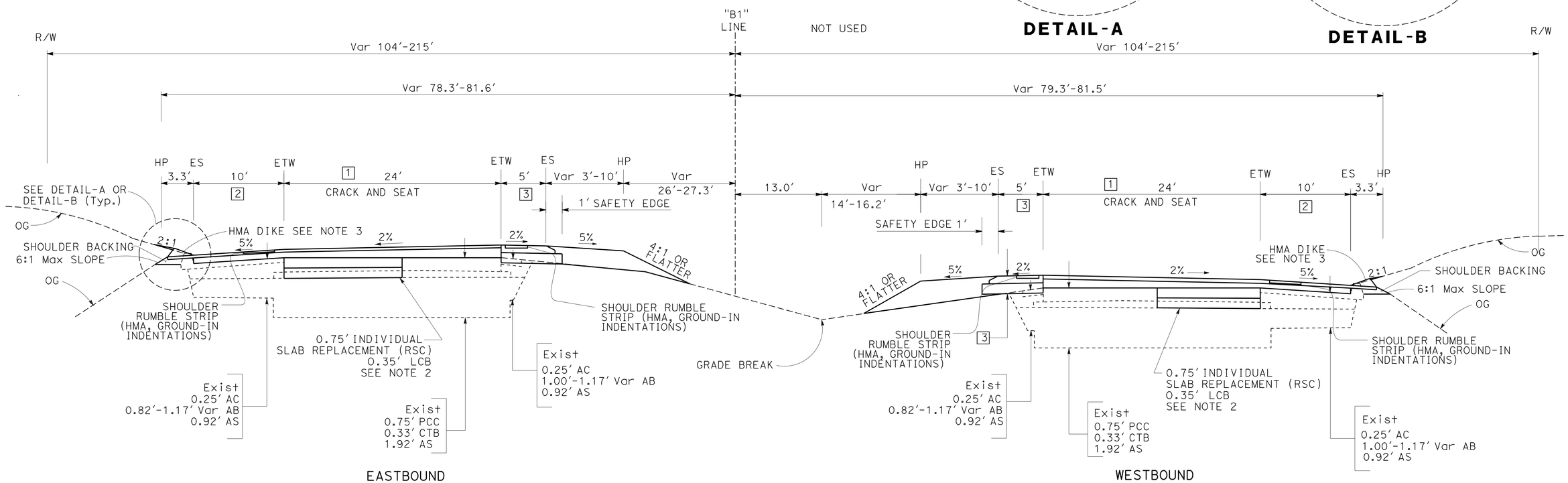

EASTBOUND

Sta 529+91.22 TO 538+52.31
Sta 542+50.30 TO 584+58.58
Sta 589+20.52 TO 631+80.40
Sta 636+25.78 TO 648+41.52
Sta 652+74.47 TO 667+02.72
Sta 695+14.59 TO 749+90.00
Sta 754+22.00 TO 823+02.00 *

WESTBOUND

Sta 542+18.37 TO 583+62.05
Sta 588+25.62 TO 632+85.00
Sta 637+36.78 TO 647+46.19
Sta 651+79.10 TO 667+02.72
Sta 695+14.59 To 747+44.00
Sta 751+70.00 TO 795+65.46

ROUTE 580
"B1" LINE

* Sta 823+02 = PM 5.0

TYPICAL CROSS SECTIONS
NO SCALE

1 **REPLACED PER ADDENDUM No. 1 DATED NOVEMBER 6, 2015**

X-1

STATE OF CALIFORNIA - DEPARTMENT OF TRANSPORTATION
Caltrans
CONSULTANT FUNCTIONAL SUPERVISOR: KEITH RHODES
CALCULATED-DESIGNED BY: SNEHA PAVULURI
CHECKED BY: KEITH RHODES
REVISED BY
DATE REVISED

LAST REVISION 05-29-15
DATE PLOTTED => 05-NOV-2015
TIME PLOTTED => 09:01

Dist	COUNTY	ROUTE	POST MILES TOTAL PROJECT	SHEET No.	TOTAL SHEETS
10	SJ	132,580	0.2, L0.0/15.3	3	265

REGISTERED CIVIL ENGINEER 5/29/15 DATE

6-1-15
PLANS APPROVAL DATE

REGISTERED PROFESSIONAL ENGINEER Snehalatha Pavuluri No. 78187 Exp 09/30/15 CIVIL STATE OF CALIFORNIA

THE STATE OF CALIFORNIA OR ITS OFFICERS OR AGENTS SHALL NOT BE RESPONSIBLE FOR THE ACCURACY OR COMPLETENESS OF SCANNED COPIES OF THIS PLAN SHEET.

T.Y.LIN INTERNATIONAL
2010 CROW CANYON PLACE,
SUITE 350
SAN RAMON, CA 94583

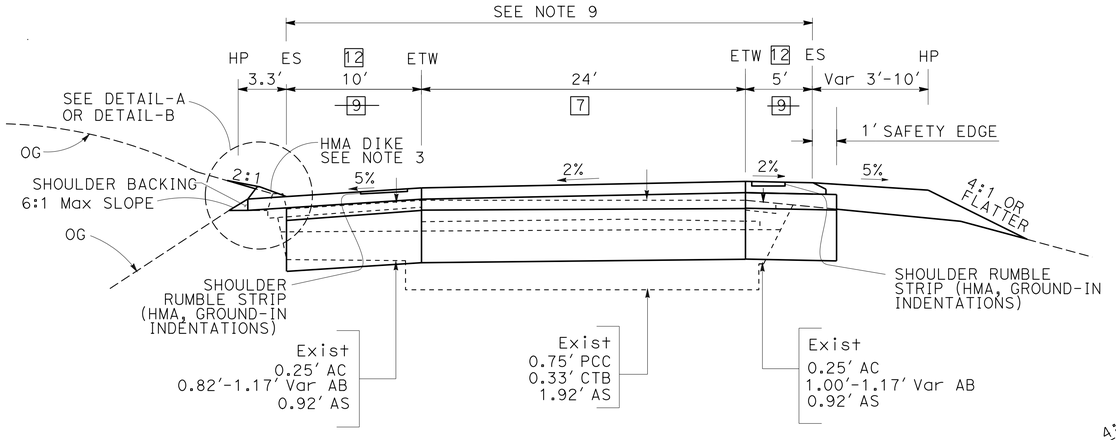

EASTBOUND

Sta 632+95.40 TO 635+10.78

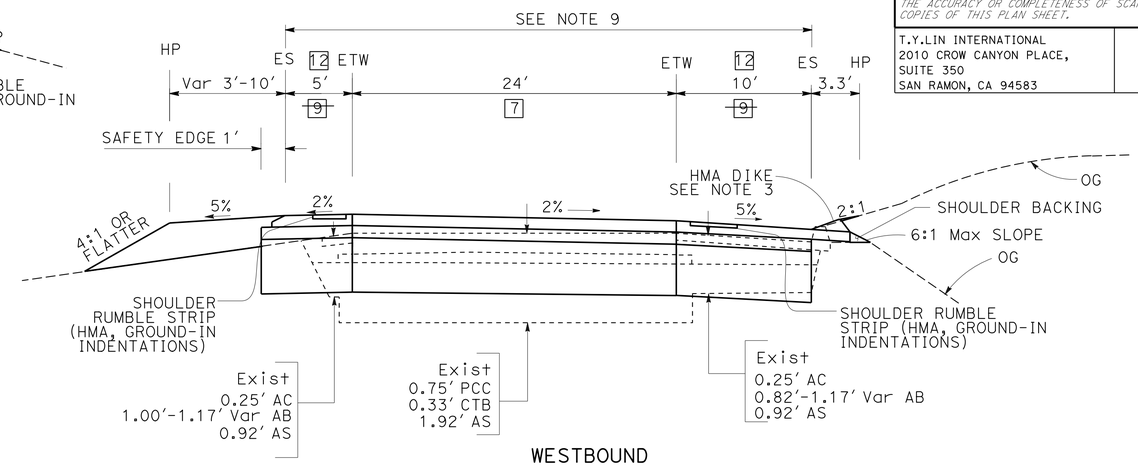

WESTBOUND

Sta 634+00.00 TO 636+21.78

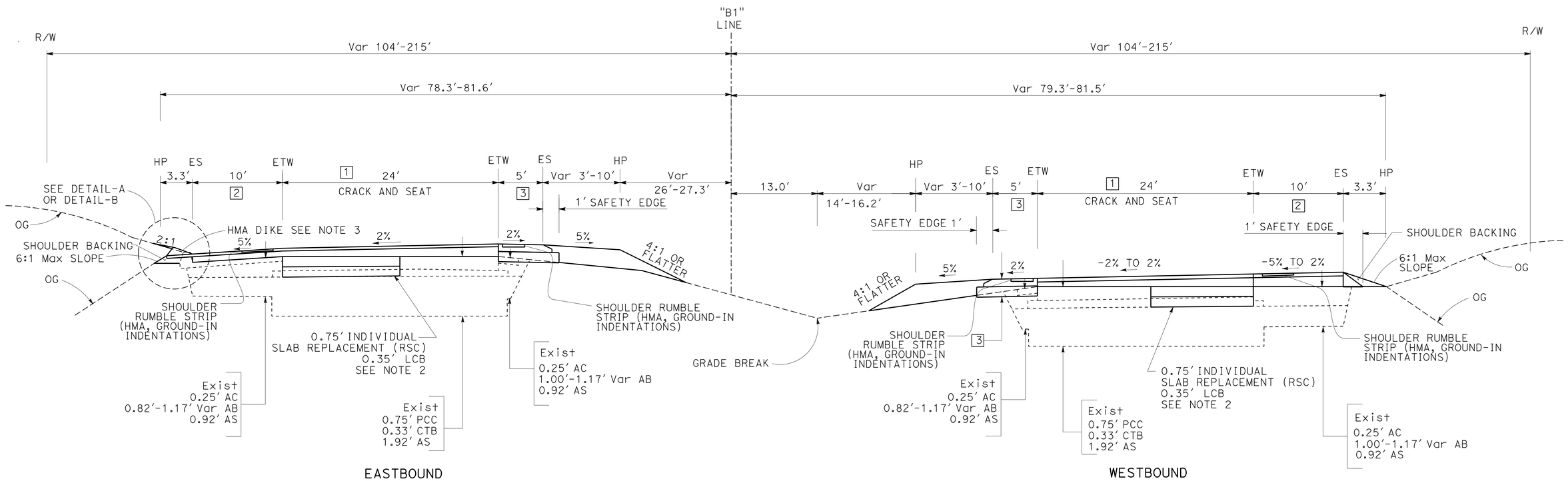

EASTBOUND

WESTBOUND

Sta 667+02.72 TO 695+14.59

ROUTE 580

"B1" LINE

TYPICAL CROSS SECTIONS

NO SCALE

1 REPLACED PER ADDENDUM No. 1 DATED NOVEMBER 6, 2015

X-2

STATE OF CALIFORNIA - DEPARTMENT OF TRANSPORTATION

Caltrans

CONSULTANT FUNCTIONAL SUPERVISOR: KEITH RHODES

CALCULATED-DESIGNED BY: SNEHA PAVULURI | CHECKED BY: KEITH RHODES

REVISED BY | DATE REVISED

LAST REVISION 05-29-15 | DATE PLOTTED => 05-NOV-2015 | TIME PLOTTED => 09:01

Dist	COUNTY	ROUTE	POST MILES TOTAL PROJECT	SHEET No.	TOTAL SHEETS
10	SJ	132,580	0.2, L0.0/15.3	4	265

REGISTERED CIVIL ENGINEER 5/29/15 DATE

6-1-15
PLANS APPROVAL DATE

REGISTERED PROFESSIONAL ENGINEER Snehalatha Pavuluri No. 78187 Exp 09/30/15 CIVIL STATE OF CALIFORNIA

THE STATE OF CALIFORNIA OR ITS OFFICERS OR AGENTS SHALL NOT BE RESPONSIBLE FOR THE ACCURACY OR COMPLETENESS OF SCANNED COPIES OF THIS PLAN SHEET.

T.Y.LIN INTERNATIONAL
2010 CROW CANYON PLACE,
SUITE 350
SAN RAMON, CA 94583

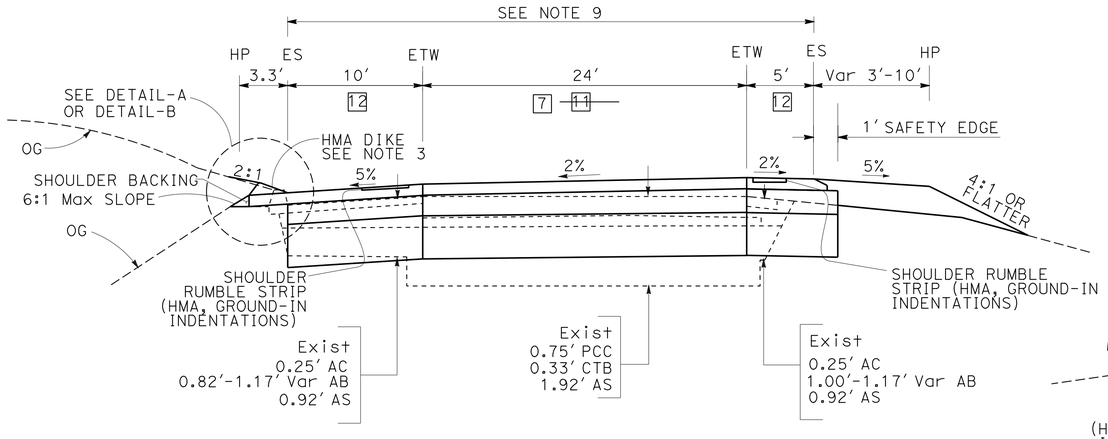

EASTBOUND

Sta 749+90.00 TO 754+22.00

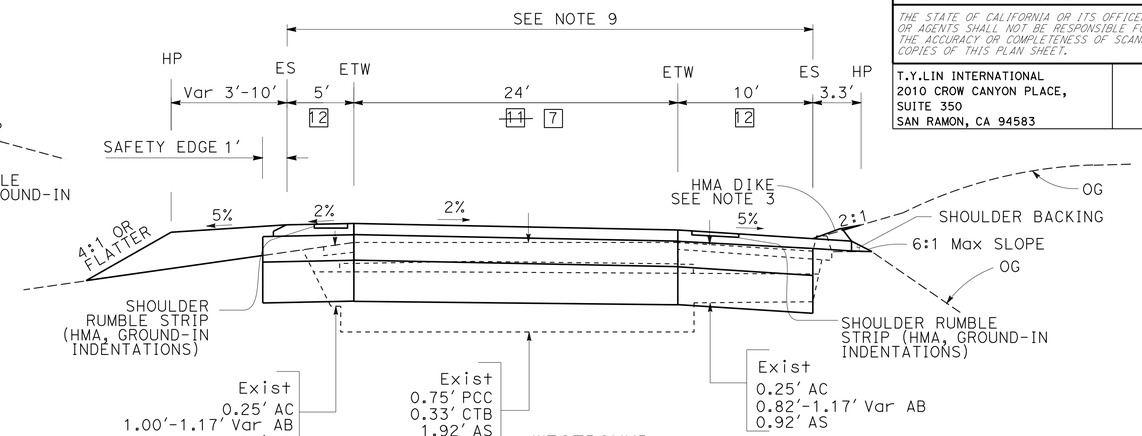

WESTBOUND

Sta 747+44.00 TO 751+70.00

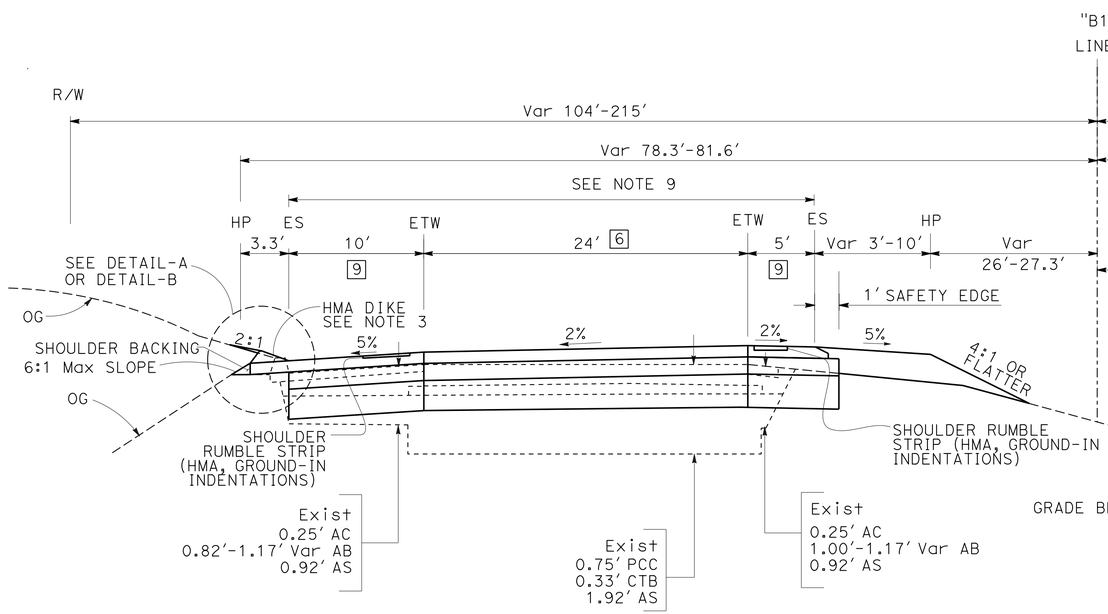

EASTBOUND

Sta 538+52.31 TO 539+79.91
Sta 541+21.26 TO 542+50.30
Sta 584+58.58 TO 585+99.49
Sta 587+67.81 TO 589+20.52
Sta 631+80.40 TO 632+95.40
Sta 635+10.78 TO 636+25.78
Sta 648+41.52 TO 649+83.42
Sta 651+29.87 TO 652+74.47

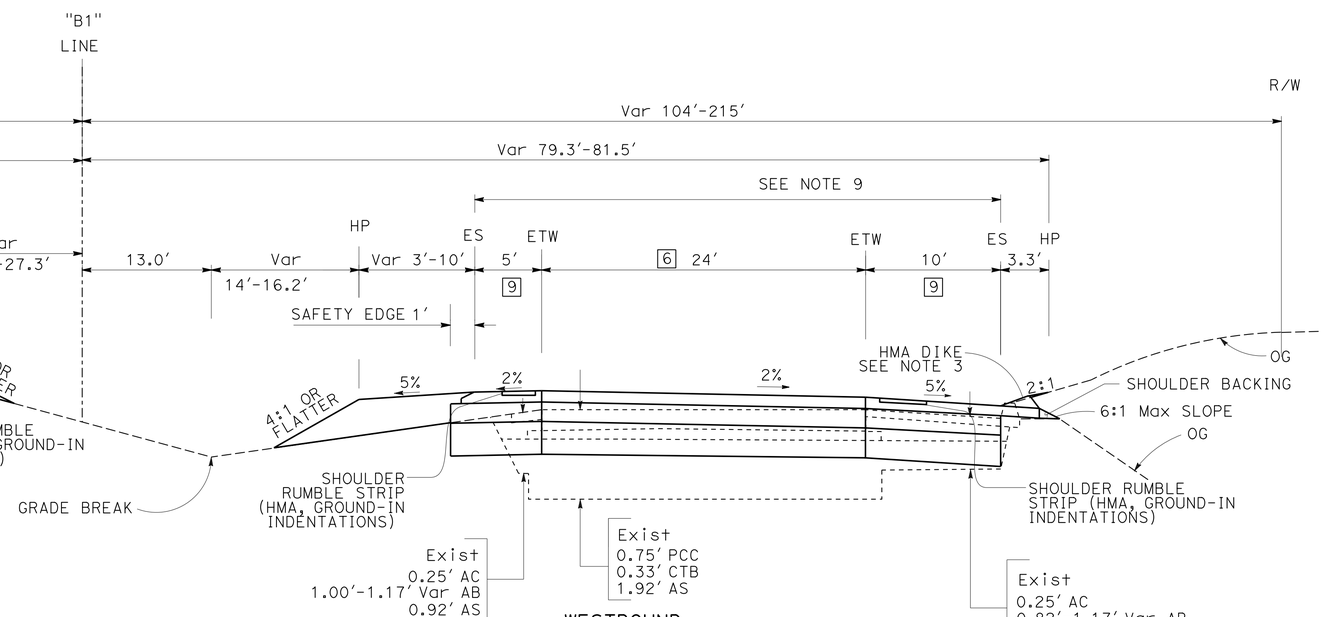

WESTBOUND

Sta 540+91.12 TO 542+18.37
Sta 583+62.05 TO 585+09.50
Sta 586+81.63 TO 588+25.62
Sta 632+85.00 TO 634+00.00
STA 636+21.78 TO 637+36.78
Sta 647+46.19 TO 648+93.23
Sta 650+36.09 TO 651+79.10

ROUTE 580

"B1" LINE

TYPICAL CROSS SECTIONS

NO SCALE

1 **REPLACED PER ADDENDUM No. 1 DATED NOVEMBER 6, 2015**

X-3

STATE OF CALIFORNIA - DEPARTMENT OF TRANSPORTATION
Caltrans

CONSULTANT FUNCTIONAL SUPERVISOR: KEITH RHODES
CALCULATED-DESIGNED BY: SNEHA PAVULURI
CHECKED BY: KEITH RHODES
REVISED BY
DATE REVISED

LAST REVISION 05-29-15
DATE PLOTTED => 05-NOV-2015
TIME PLOTTED => 09:01

Dist	COUNTY	ROUTE	POST MILES TOTAL PROJECT	SHEET No.	TOTAL SHEETS
10	SJ	132,580	0.2, L0.0/15.3	9	265

REGISTERED CIVIL ENGINEER 5/29/15 DATE

6-1-15
PLANS APPROVAL DATE

REGISTERED PROFESSIONAL ENGINEER Snehalatha Pavuluri No. 78187 Exp 09/30/15 CIVIL STATE OF CALIFORNIA

THE STATE OF CALIFORNIA OR ITS OFFICERS OR AGENTS SHALL NOT BE RESPONSIBLE FOR THE ACCURACY OR COMPLETENESS OF SCANNED COPIES OF THIS PLAN SHEET.

T.Y.LIN INTERNATIONAL
2010 CROW CANYON PLACE,
SUITE 350
SAN RAMON, CA 94583

NOTES:

1. FOR ACCURATE RIGHT OF WAY DATA, CONTACT RIGHT OF WAY ENGINEERING AT THE DISTRICT OFFICE.
2. SEE DRAINAGE QUANTITIES FOR OVERSIDE DRAIN LOCATIONS.
3. SEE QUANTITY SHEETS FOR INDIVIDUAL SLAB REPLACEMENT LOCATIONS.
4. SEE CONSTRUCTION DETAILS FOR MVP DETAILS.
5. SEE STRUCTURAL PLANS FOR APPROACH SLAB REPLACEMENT LOCATIONS AND DETAILS.
6. SEE CONSTRUCTION DETAILS FOR TRANSITION TAPER AND COLD PLANE DETAILS.
7. FOR TEMPORARY SILT FENCE LOCATIONS NOT SHOWN SEE SUMMARY OF QUANTITIES.
8. INSTALL TEMPORARY SILT FENCE 10′ AWAY FROM THE EDGE OF THE RIGHT SHOULDER.
9. ALL STATIONS ARE REFERENCED TO "B1" LINE UNLESS OTHER WISE SHOWN.

LEGEND:

- WIDEN SHOULDER
- CONCRETE PAVEMENT REHABILITATION & RIGHT SHOULER OVERLAY
- RHMA RESURFACING
- COLD PLANE & RHMA-G
- TRANSITION AT BRIDGE APPOACH/ UNDER CROSSING
- APPROACH SLAB REPLACEMENT
- NEW Pvmt UNDER OC AND AT HETCH HETCHY WATER LINE AREAS
- POTHOLE LOCATION
- POTHOLE NUMBER
- PAVEMENT STRUCTURAL SECTION No.

PAVEMENT STRUCTURAL SECTIONS:

1. 0.20′ RHMA-G
   0.15′ HMA (TYPE A)
   SAMI-R
   0.0-0.12′ Var HMA (TYPE A)
   (CROSS SLOPE CORRECTION)
   0.10′ HMA (LEVELING)
2. 0.20′ RHMA-G
   0.25′ HMA (TYPE A)
3. 0.20′ RHMA-G
   0.75′ HMA (TYPE A)
4. 0.20′ RHMA-G
5. 0.25′ VEGETATION CONTROL (MINOR CONCRETE)
6. 0.20′ RHMA-G
   0.25′ HMA (TYPE A)
   0.0-0.12′ Var HMA (TYPE A)
   (CROSS SLOPE CORRECTION)
   MATCH Exist SLOPE
   1.35′-1.80′ Var HMA (TYPE A)
7. 0.20′ RHMA-G
   0.25′ HMA (TYPE A)
   0.0-0.12′ Var HMA (TYPE A)
   (CROSS SLOPE CORRECTION)
   MATCH Exist SLOPE
   1.35′ HMA (TYPE A)
8. 0.50′ HMA (TYPE A)
   1.50′ CLASS 2 AB
9. 0.20′ RHMA-G
   0.25′ HMA (TYPE A)
   MATCH Exist SLOPE
   1.35′-1.80′ Var HMA (TYPE A)
10. 0.20′ HMA (TYPE A)
11. NOT USED
12. 0.20′ RHMA-G
    0.25′ HMA (TYPE A)
    MATCH Exist SLOPE
    1.35′ HMA (TYPE A)

ABBREVIATIONS:

RHMA-G	RUBBERIZED HOT MIX ASPHALT - (GAP GRADED)
RSC	RAPID STRENGTH CONCRETE
SAMI-R	STRESS ABSORBING MEMBRANE INTERLAYER-RUBBERIZED

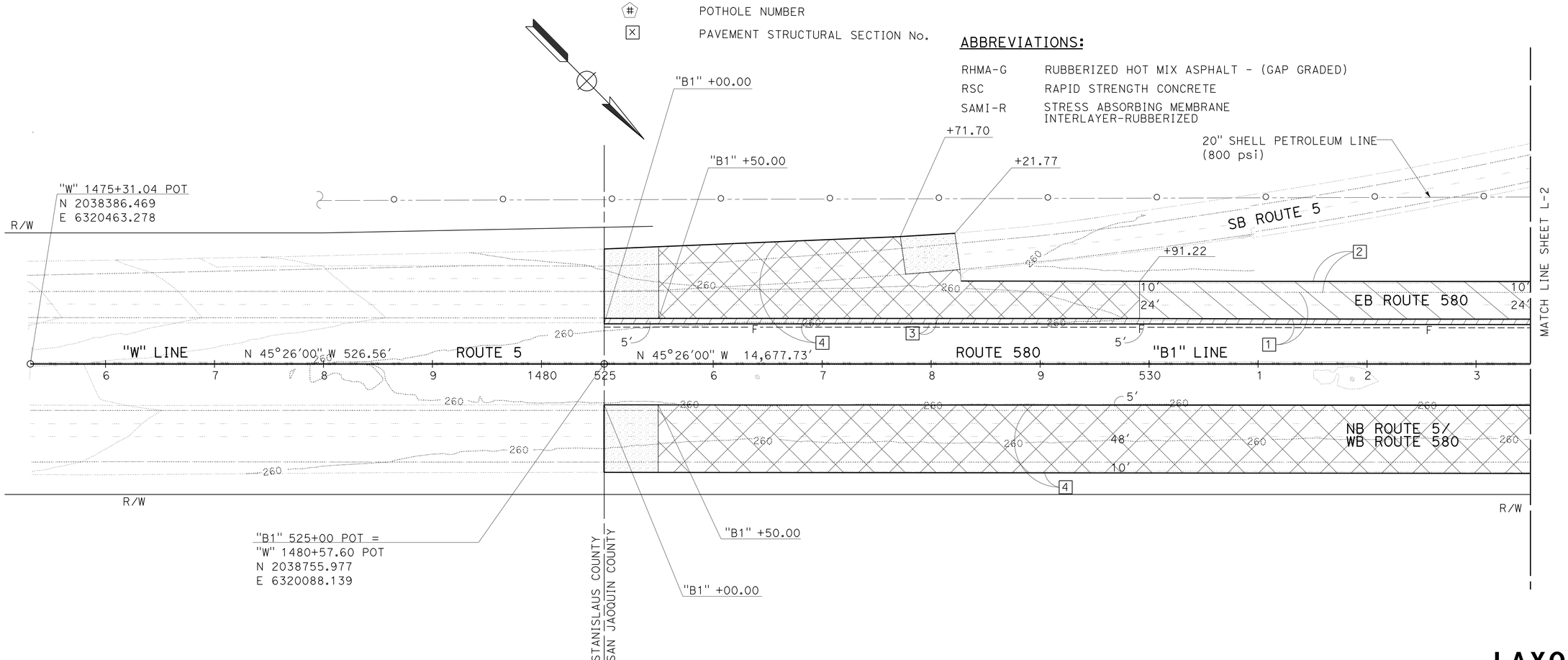

1 REPLACED PER ADDENDUM No. 1 DATED NOVEMBER 6, 2015

LAYOUT
SCALE: 1" = 50′

L-1

STATE OF CALIFORNIA - DEPARTMENT OF TRANSPORTATION
Caltrans

CONSULTANT FUNCTIONAL SUPERVISOR: KEITH RHODES
CALCULATED-DESIGNED BY: SNEHA PAVULURI
CHECKED BY: KEITH RHODES
REVISED BY
DATE REVISED

LAST REVISION 05-29-15
DATE PLOTTED => 05-NOV-2015
TIME PLOTTED => 09:01

Dist	COUNTY	ROUTE	POST MILES TOTAL PROJECT	SHEET No.	TOTAL SHEETS
10	SJ	132,580	0.2, L0.0/15.3	15	265

REGISTERED CIVIL ENGINEER 5/29/15 DATE

6-1-15
PLANS APPROVAL DATE

REGISTERED PROFESSIONAL ENGINEER Snehalatha Pavuluri No. 78187 Exp 09/30/15 CIVIL STATE OF CALIFORNIA

THE STATE OF CALIFORNIA OR ITS OFFICERS OR AGENTS SHALL NOT BE RESPONSIBLE FOR THE ACCURACY OR COMPLETENESS OF SCANNED COPIES OF THIS PLAN SHEET.

T.Y.LIN INTERNATIONAL
2010 CROW CANYON PLACE,
SUITE 350
SAN RAMON, CA 94583

NOTE:

FOR ACCURATE RIGHT OF WAY DATA, CONTACT RIGHT OF WAY ENGINEERING AT THE DISTRICT OFFICE.

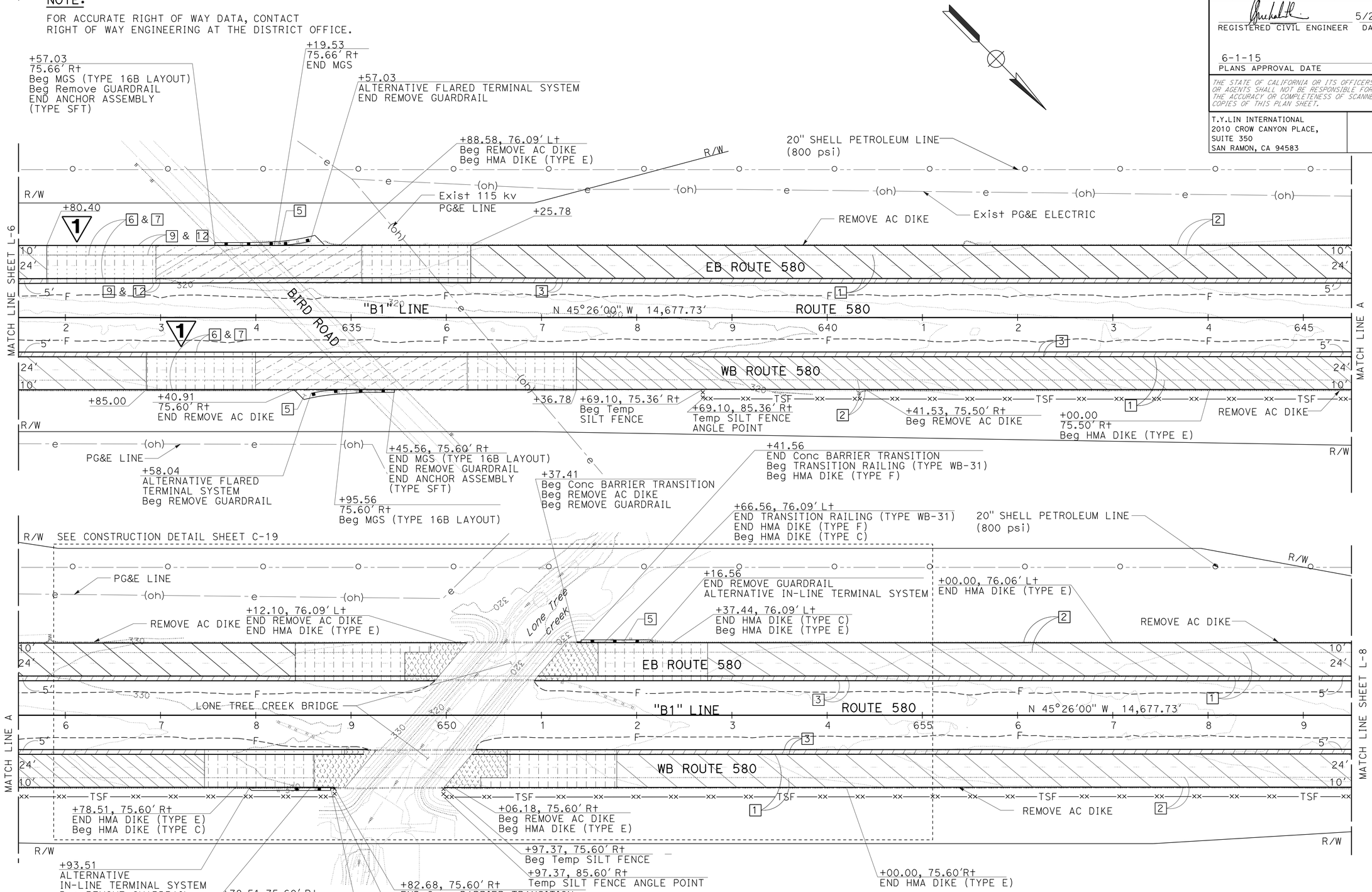

1 REPLACED PER ADDENDUM No. 1 DATED NOVEMBER 6, 2015

LAYOUT

SCALE: 1" = 50' **L-7**

REVISED BY | DATE REVISED
SNEHA PAVULURI | KEITH RHODES
CALCULATED-DESIGNED BY | CHECKED BY
CONSULTANT FUNCTIONAL SUPERVISOR
KEITH RHODES

STATE OF CALIFORNIA - DEPARTMENT OF TRANSPORTATION
Caltrans

LAST REVISION 05-29-15
DATE PLOTTED => 05-NOV-2015
TIME PLOTTED => 09:01

Dist	COUNTY	ROUTE	POST MILES TOTAL PROJECT	SHEET No.	TOTAL SHEETS
10	SJ	132,580	0.2, L0.0/15.3	19	265

REGISTERED CIVIL ENGINEER 5/29/15 DATE

6-1-15
PLANS APPROVAL DATE

REGISTERED PROFESSIONAL ENGINEER Snehalatha Pavuluri No. 78187 Exp 09/30/15 CIVIL STATE OF CALIFORNIA

THE STATE OF CALIFORNIA OR ITS OFFICERS OR AGENTS SHALL NOT BE RESPONSIBLE FOR THE ACCURACY OR COMPLETENESS OF SCANNED COPIES OF THIS PLAN SHEET.

T.Y.LIN INTERNATIONAL
2010 CROW CANYON PLACE,
SUITE 350
SAN RAMON, CA 94583

NOTE:

FOR ACCURATE RIGHT OF WAY DATA, CONTACT RIGHT OF WAY ENGINEERING AT THE DISTRICT OFFICE.

EXISTING UTILITY POTHOLE DATA

#	UTILITY OWNER	DESCRIPTION	N	E	ELEVATION *	DEPTH	COMMENT
9	HETCH HETCHY	WATER LINE	2053949.383	6303540.442	286.77	3.67′	
10	HETCH HETCHY	WATER LINE	2053972.927	6303512.035	287.08	4.33′	
11	HETCH HETCHY	WATER LINE	2053994.198	6303487.125	287.39	3.75′	
12	HETCH HETCHY	WATER LINE	2054020.049	6303449.913	287.68	13.0′	EXCAVATED POTHOLE TO 13′. POSSIBLE PIPE AT 13′

* ELEVATIONS SHOWN REFER TO POTHOLE GRADE ELEVATIONS UNLESS OTHERWISE INDICATED. DEPTH IS FROM GRADE TO TOP OF PIPE.

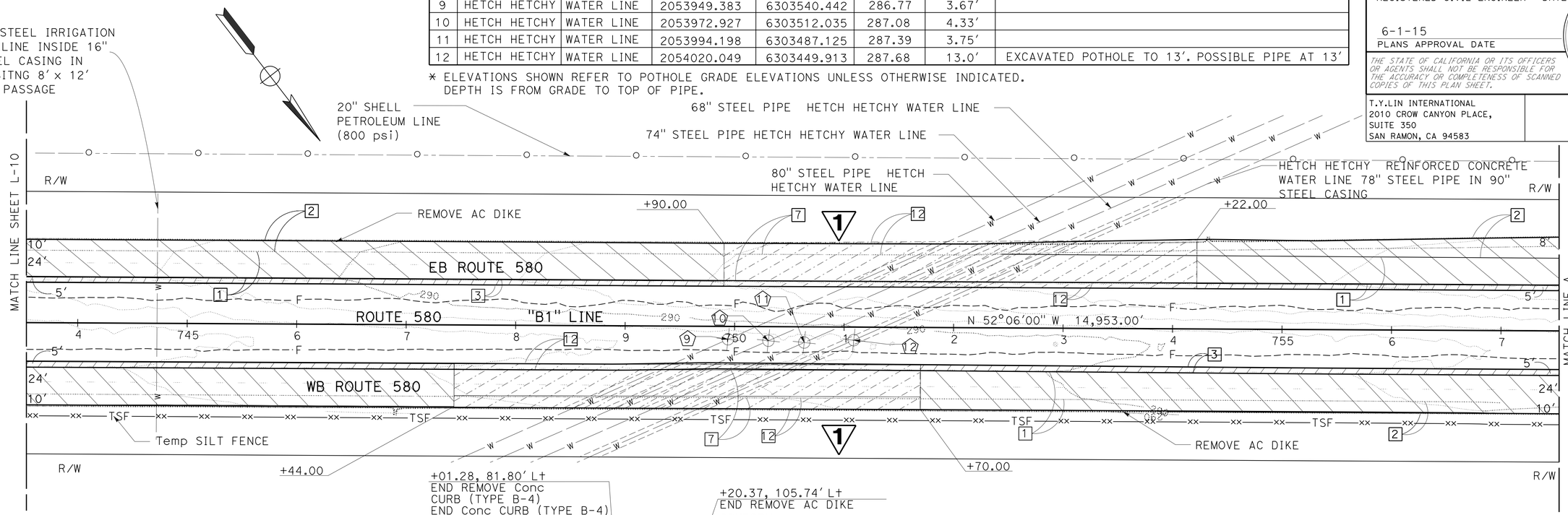

1 REPLACED PER ADDENDUM No. 1 DATED NOVEMBER 6, 2015

LAYOUT

SCALE: 1" = 50′

L-11

REVISED BY | DATE REVISED
SNEHA PAVULURI | KEITH RHODES
CALCULATED-DESIGNED BY | CHECKED BY
CONSULTANT FUNCTIONAL SUPERVISOR | KEITH RHODES
STATE OF CALIFORNIA - DEPARTMENT OF TRANSPORTATION
Caltrans

LAST REVISION 05-29-15 | DATE PLOTTED => 05-NOV-2015 | TIME PLOTTED => 09:01

Dist	COUNTY	ROUTE	POST MILES TOTAL PROJECT	SHEET No.	TOTAL SHEETS
10	SJ	132,580	0.2, L0.0/15.3	26	265

REGISTERED CIVIL ENGINEER 5/29/15 DATE

6-1-15
PLANS APPROVAL DATE

REGISTERED PROFESSIONAL ENGINEER Snehalatha Pavuluri No. 78187 Exp 09/30/15 CIVIL STATE OF CALIFORNIA

THE STATE OF CALIFORNIA OR ITS OFFICERS OR AGENTS SHALL NOT BE RESPONSIBLE FOR THE ACCURACY OR COMPLETENESS OF SCANNED COPIES OF THIS PLAN SHEET.

T.Y.LIN INTERNATIONAL
2010 CROW CANYON PLACE,
SUITE 350
SAN RAMON, CA 94583

NOTES:

1. PAVEMENT ELEVATIONS ARE AT EVEN 50 FEET STATION INTERVALS ALONG THE CONTROL LINE, UNLESS OTHERWISE NOTED.
2. DIMENSIONS OF THE PAVEMENT STRUCTURES (STRUCTURAL SECTIONS) ARE SUBJECT TO TOLERANCES SPECIFIED IN THE Std SPECIFICATIONS.
3. LOCATION OF SLAB REPLACEMENTS ARE NOT CONTINUOUS AND MUST BE FIELD VERIFIED BY THE CONTRACTOR. SEE SUMMARY OF QUANTITIES FOR APPROXIMATE LOCATIONS OF SLAB REPLACEMENT AND BASE FAILURE.
4. FOR LOCATION OF HMA DIKE AND MIDWEST GUARD RAIL SYSTEM, SEE LAYOUTS AND SUMMARY OF QUANTITIES.
5. FOR LOCATION AND LIMITS OF MVP, SEE LAYOUTS AND SUMMARY OF QUANTITIES.
6. FOR ACCURATE RIGHT OF WAY DATA, CONTACT RIGHT OF WAY ENGINEERING AT THE DISTRICT OFFICE.

ABBREVIATIONS:

CAPM	CAPITAL PREVENTIVE MAINTENANCE
GB	GRADE BREAK
RHMA-G	RUBBERIZED HOT MIX ASPHALT - GAP GRADED
SAMI-R	STRESS ABSORBING MEMBRANE INTERLAYER-RUBBERIZED

LEGEND:

- TRANSITION AT BRIDGE APPOACH/ UNDER CROSSING
- COLD PLANE AND RHMA-G
- RHMA RESURFACING
- RAMP RECONSTRUCTION
- APPROACH SLAB REPLACEMENT
- NEW Pvmt UNDER OC AND AT HETCH HETCHY WATER LINE AREAS
- CONCRETE PAVEMENT REHABILITATION & RIGHT SHOULER OVERLAY
- HMA RESURFACING
- WIDEN SHOULDER
- CRACK EXISTING CONCRETE PAVEMENT
- # PAVEMENT STRUCTURAL SECTION NUMBER

PAVEMENT STRUCTURAL SECTIONS:

1. 0.20' RHMA-G
   0.15' HMA (TYPE A)
   SAMI-R
   0.0-0.12' Var HMA (TYPE A)
   (CROSS SLOPE CORRECTION)
   0.10' HMA (LEVELING)
2. 0.20' RHMA-G
   0.25' HMA (TYPE A)
3. 0.20' RHMA-G
   0.75' HMA (TYPE A)
4. 0.20' RHMA-G
5. 0.25' VEGETATION CONTROL
   (MINOR CONCRETE)
6. 0.20' RHMA-G
   0.25' HMA (TYPE A)
   0.0-0.12' Var HMA (TYPE A)
   (CROSS SLOPE CORRECTION)
   MATCH Exist SLOPE
   1.35'-1.80' Var HMA (TYPE A)
7. 0.20' RHMA-G
   0.25' HMA (TYPE A)
   0.0-0.12' Var HMA (TYPE A)
   (CROSS SLOPE CORRECTION)
   MATCH Exist SLOPE
   1.35' HMA (TYPE A)
8. 0.50' HMA (TYPE A)
   1.50' CLASS 2 AB
9. 0.20' RHMA-G
   0.25' HMA (TYPE A)
   MATCH Exist SLOPE
   1.35'-1.80' Var HMA (TYPE A)
10. 0.20' HMA (TYPE A)
11. NOT USED
12. 0.20' RHMA-G
    0.25' HMA (TYPE A)
    MATCH Exist SLOPE
    1.35' HMA (TYPE A)

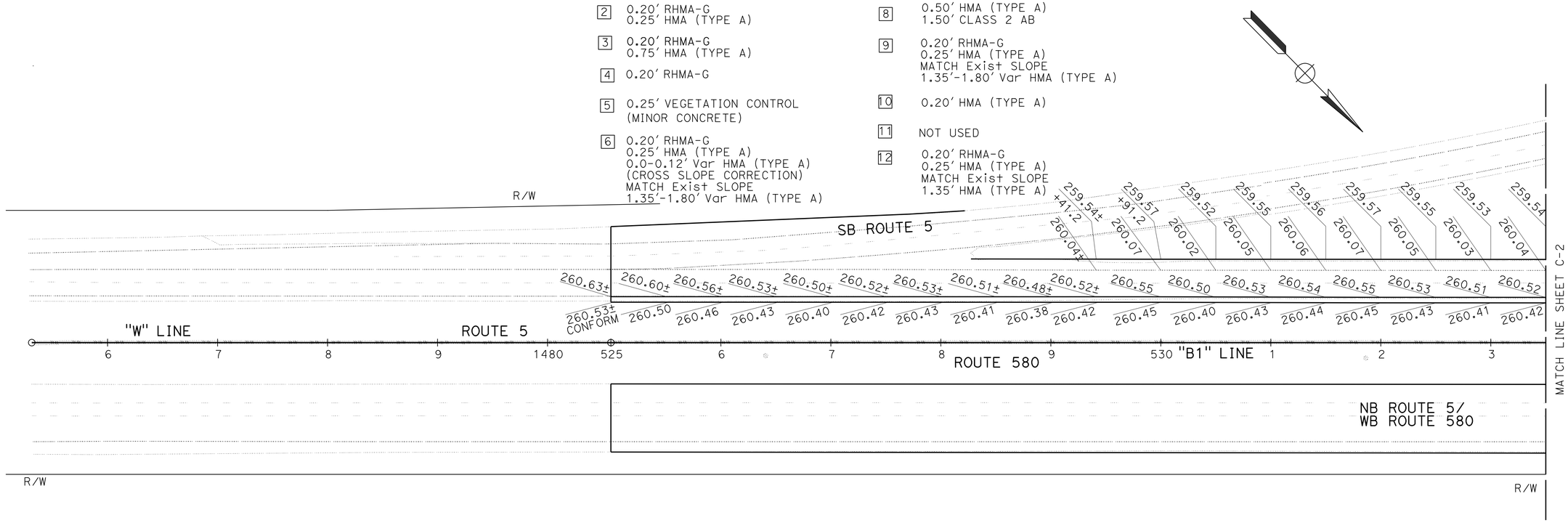

CONSTRUCTION DETAILS

SCALE: 1" = 50'

C-1

1 REPLACED PER ADDENDUM No. 1 DATED NOVEMBER 6, 2015

STATE OF CALIFORNIA - DEPARTMENT OF TRANSPORTATION

Caltrans

CONSULTANT FUNCTIONAL SUPERVISOR: KEITH RHODES

CALCULATED-DESIGNED BY: SNEHA PAVULURI

CHECKED BY: KEITH RHODES

REVISED BY

DATE REVISED

LAST REVISION 05-29-15

DATE PLOTTED => 05-NOV-2015
TIME PLOTTED => 09:01

Dist	COUNTY	ROUTE	POST MILES TOTAL PROJECT	SHEET No.	TOTAL SHEETS
10	SJ	132,580	0.2, L0.0/15.3	47	265

REGISTERED CIVIL ENGINEER 5/29/15 DATE

6-1-15
PLANS APPROVAL DATE

REGISTERED PROFESSIONAL ENGINEER Snehalatha Pavuluri No. 78187 Exp 09/30/15 CIVIL STATE OF CALIFORNIA

THE STATE OF CALIFORNIA OR ITS OFFICERS OR AGENTS SHALL NOT BE RESPONSIBLE FOR THE ACCURACY OR COMPLETENESS OF SCANNED COPIES OF THIS PLAN SHEET.

T.Y.LIN INTERNATIONAL
2010 CROW CANYON PLACE,
SUITE 350
SAN RAMON, CA 94583

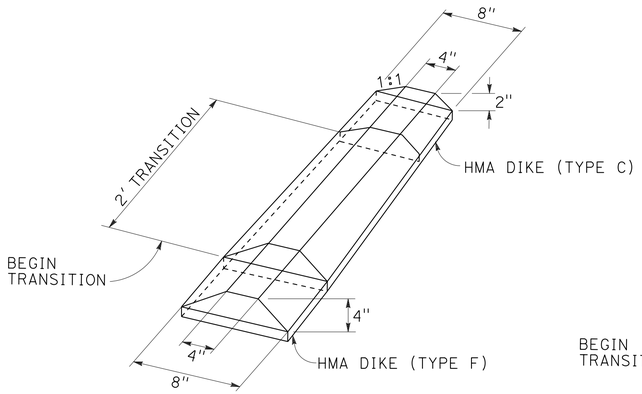

DIKE TRANSITION
FROM TYPE F TO TYPE C

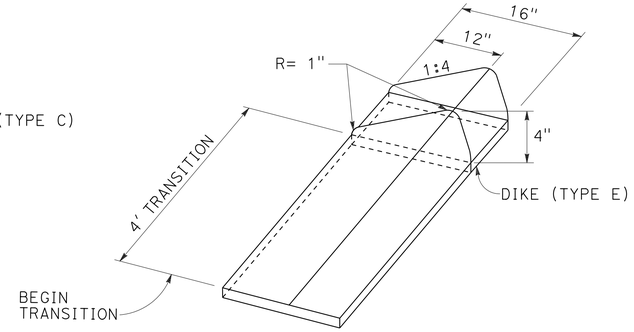

DIKE TRANSITION
FROM LEVEL TO DIKE E

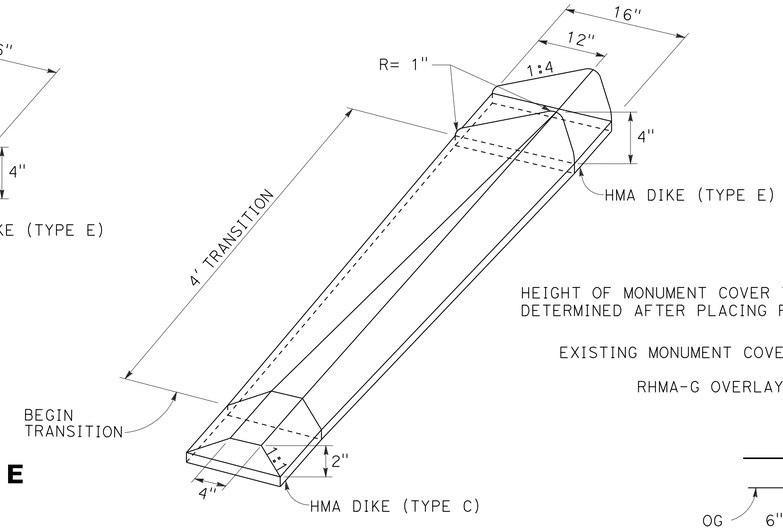

DIKE TRANSITION
FROM TYPE C TO TYPE E

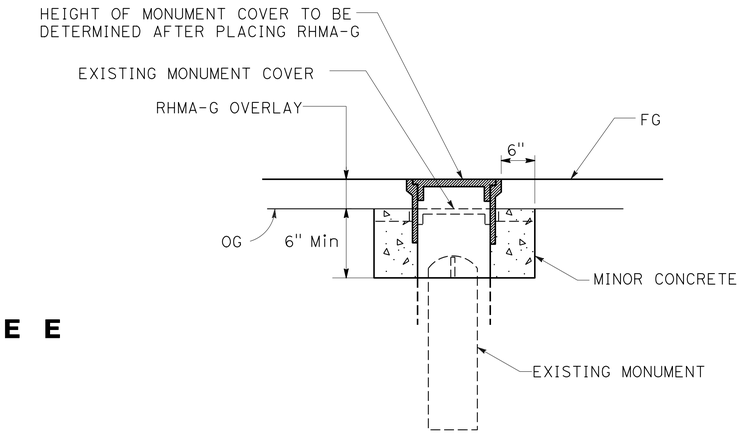

SEE SUMMARY OF QUANTITIES FOR LOCATIONS

SURVEY MONUMENT

ADJUST MONUMENT TO GRADE

1 REPLACED PER ADDENDUM No. 1 DATED NOVEMBER 6, 2015

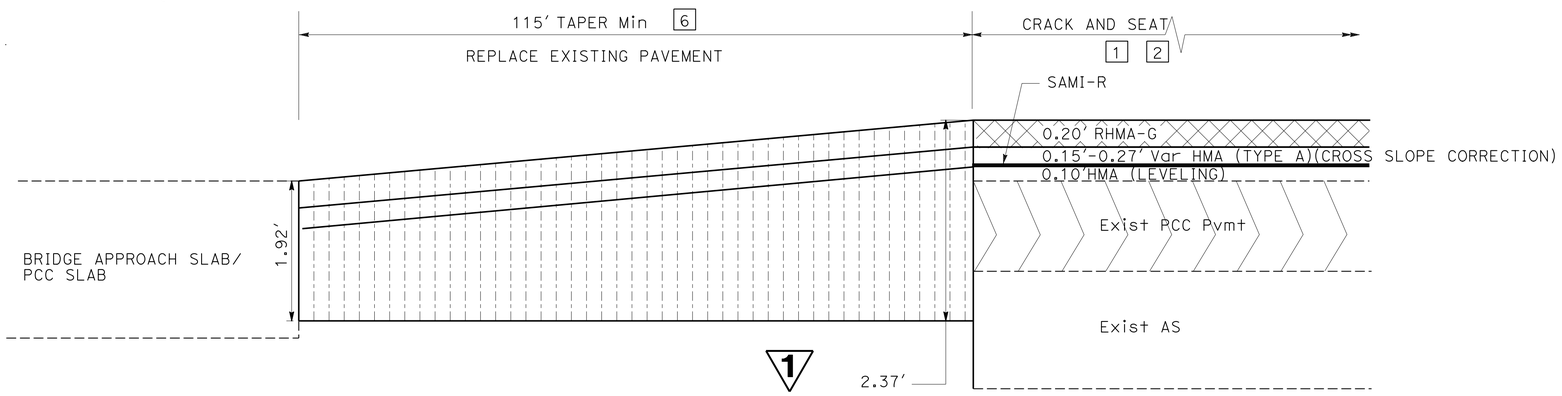

TRANSITION TAPER AT BRIDGE STRUCTURES (MAINLINE)

GAFFERY ROAD UC (L/R)
HOSPITAL CREEK Br (L/R)
LONE TREE CREEK Br (L/R)

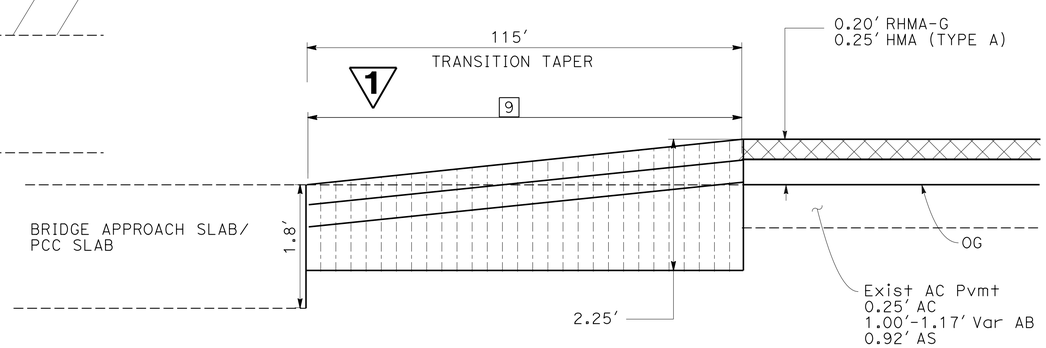

TRANSITION TAPER AT BRIDGE STRUCTURES (SHOULDERS)

1

GAFFERY ROAD UC (L/R)
HOSPITAL CREEK Br (L/R)
LONE TREE CREEK Br (L/R)

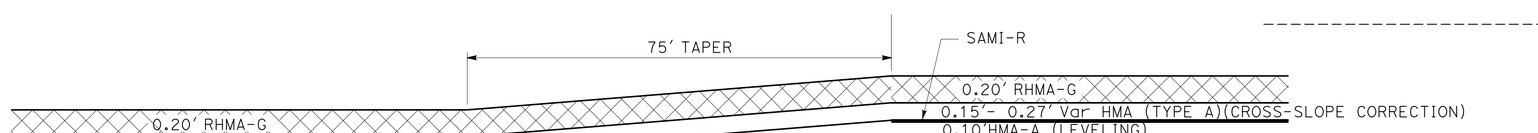

TRANSITION TAPER BETWEEN OVERLAY AND CRACK SEAT OVERLAY

"B1" Sta 795+65.46 (WB)
"B1" Sta 823+02.00 (EB)

1

CONSTRUCTION DETAILS

NO SCALE

C-22

STATE OF CALIFORNIA - DEPARTMENT OF TRANSPORTATION
Caltrans

CONSULTANT FUNCTIONAL SUPERVISOR: KEITH RHODES
CALCULATED-DESIGNED BY: SNEHA PAVULURI
CHECKED BY: KEITH RHODES
REVISED BY
DATE REVISED

LAST REVISION 05-29-15
DATE PLOTTED => 05-NOV-2015
TIME PLOTTED => 09:02

Dist	COUNTY	ROUTE	POST MILES TOTAL PROJECT	SHEET No.	TOTAL SHEETS
10	SJ	132,580	0.2, L0.0/15.3	48	265

REGISTERED CIVIL ENGINEER 5/29/15 DATE

6-1-15
PLANS APPROVAL DATE

REGISTERED PROFESSIONAL ENGINEER Snehalatha Pavuluri No. 78187 Exp 09/30/15 CIVIL STATE OF CALIFORNIA

THE STATE OF CALIFORNIA OR ITS OFFICERS OR AGENTS SHALL NOT BE RESPONSIBLE FOR THE ACCURACY OR COMPLETENESS OF SCANNED COPIES OF THIS PLAN SHEET.

T.Y.LIN INTERNATIONAL
2010 CROW CANYON PLACE,
SUITE 350
SAN RAMON, CA 94583

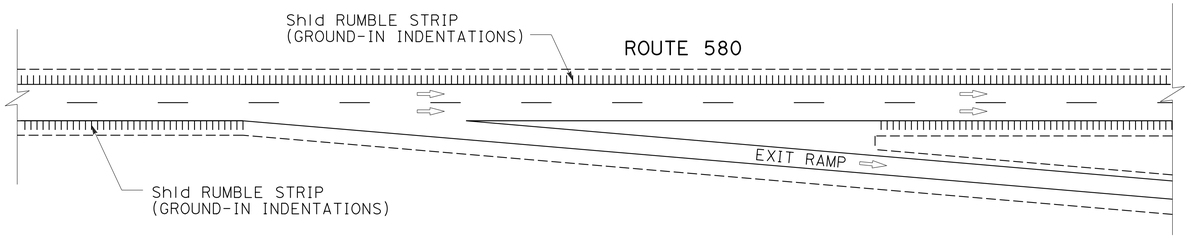

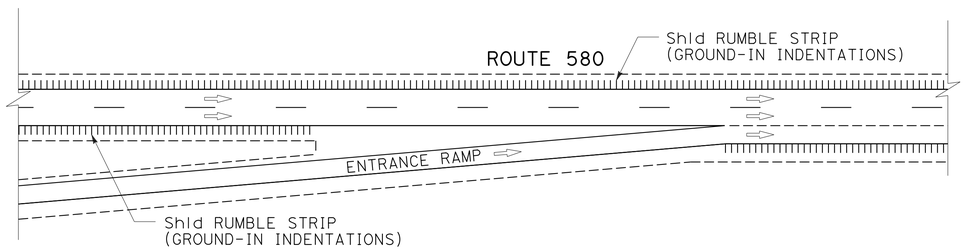

SHOULDER RUMBLE STRIP DETAIL AT RAMPS

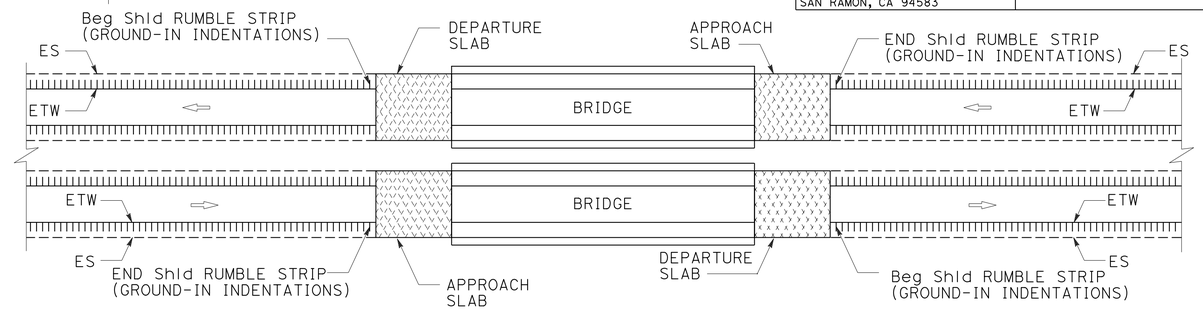

TYPICAL BRIDGE RUMBLE STRIP DETAIL

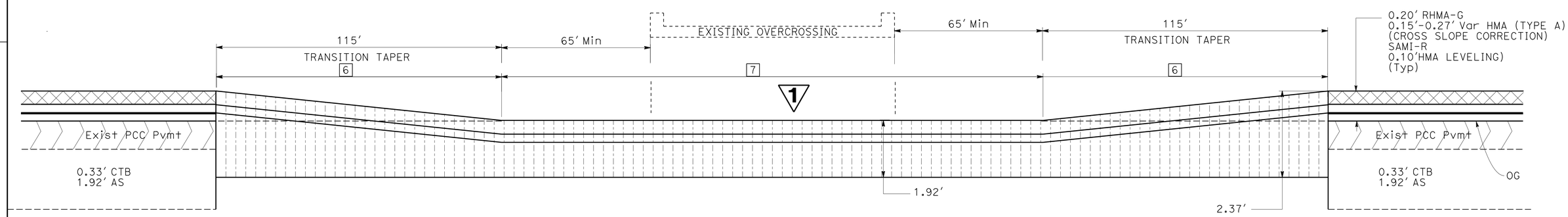

TYPICAL MAIN LINE REPLACEMENT AT OVERCROSSING STRUCTURE

PM 1.41 - BIRD ROAD UC

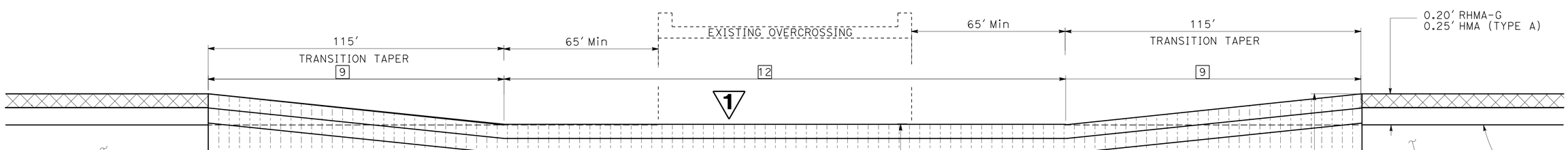

TYPICAL SHOULDER REPLACEMENT AT OVERCROSSING STRUCTURES

PM 1.41 - BIRD ROAD UC

CONSTRUCTION DETAILS

NO SCALE

1 REPLACED PER ADDENDUM No. 1 DATED NOVEMBER 6, 2015

C-23

STATE OF CALIFORNIA - DEPARTMENT OF TRANSPORTATION
Caltrans

CONSULTANT FUNCTIONAL SUPERVISOR: KEITH RHODES
CALCULATED-DESIGNED BY: SNEHA PAVULURI
CHECKED BY: KEITH RHODES
REVISED BY
DATE REVISED

LAST REVISION 05-29-15
DATE PLOTTED => 05-NOV-2015
TIME PLOTTED => 09:02

Dist	COUNTY	ROUTE	POST MILES TOTAL PROJECT	SHEET No.	TOTAL SHEETS
10	SJ	132,580	0.2, L0.0/15.3	120	265

REGISTERED CIVIL ENGINEER 5/29/15 DATE

6-1-15
PLANS APPROVAL DATE

REGISTERED PROFESSIONAL ENGINEER Snehalatha Pavuluri No. 78187 Exp 09/30/15 CIVIL STATE OF CALIFORNIA

THE STATE OF CALIFORNIA OR ITS OFFICERS OR AGENTS SHALL NOT BE RESPONSIBLE FOR THE ACCURACY OR COMPLETENESS OF SCANNED COPIES OF THIS PLAN SHEET.

T.Y.LIN INTERNATIONAL
2010 CROW CANYON PLACE,
SUITE 350
SAN RAMON, CA 94583

1

ROADWAY QUANTITIES

STATION	LOCATION	HMA (TYPE A)	Var HMA (TYPE A) (CROSS SLOPE CORRECTION)	HMA (LEVELING)	RHMA-G	~~JPCP~~	~~DRILL AND BOND (TIE BAR)~~	TACK COAT	ASPHALT RUBBER-BINDER	PRECOATED SCREENINGS	LCB	CLASS 2 AB	CLASS 2 AS	PRIME COAT	SAFETY EDGE (N) *
		TON	TON	TON	TON	~~CY~~	~~EA~~	TON	TON	TON	CY	CY	CY	TON	TON
B1 525+00 TO 539+80	EB	1,392	185	155	980			5	7	46		~~464~~		~~1~~	56
B1 541+21 TO 585+99	EB	4,436	638	758	2,663			14	32	225		~~857~~		~~2~~	176
B1 588+05 TO 649+83	EB	7,546	978	986	3,667	~~456~~	~~192~~	21	41	292	~~139~~	~~870~~	~~370~~	~~2~~	246
B1 651+59 TO 823+02	EB	15,963	1,933	2,988	10,459	~~435~~	~~186~~	48	123	886	~~133~~	~~470~~	~~265~~	~~4~~	676
132 RAMPS	EB	137						1				202		1	
B1 525+00 TO 539+79	WB				1,370			3							8
B1 540+91 TO 584+77	WB	4,391	632	746	2,627			14	31	222		~~860~~		~~2~~	172
B1 586+82 TO 648+61	WB	7,597	978	985	3,692	~~462~~	~~194~~	21	41	292	~~141~~	~~871~~	~~373~~	~~2~~	242
B1 650+36 TO 823+02 **	WB	14,763	1,647	2,513	9,048	~~442~~	~~183~~	46	103	745	~~134~~	200	~~269~~	2	571
PM 4.48 TO PM 7.87	EB & WB				19,902			44							93
PM 7.90 TO PM 9.71 **	EB & WB	2,183			11,691			31				2,506		7	50
PM 9.73 TO PM 11.29	EB & WB				9,715			22							43
PM 11.31 TO PM 11.50	EB & WB				1,203			3							5
PM 11.54 TO PM 12.03	EB & WB				3,012			7							13
PM 12.05 TO PM 12.73	EB & WB				4,246			10							19
PM 12.78 TO PM 15.3 **	EB & WB	2,541			16,077			36				3,155		9	69
PLACE HMA DIKE	EB & WB	2,612													
BASE FAILURE REPLACEMENT	EB & WB										256				
STRUCTURAL SECTION REPLACEMENT	EB & WB	840													
DRAINAGE QUANTITIES	EB & WB	203													
SUB TOTAL		64,604	6,991	9,131	100,351	~~1,795~~	~~755~~	326	378	2,708	256	6,063	~~1,277~~	19	
TOTAL		71,595		9,131	100,351	~~1,795~~	~~755~~	326	378	2,708	256	6,063	~~1,277~~	19	

(N) = NOT A SEPARATE PAY ITEM.
* INCLUDED IN THE HMA (TYPE A) AND RHMA-G QUANTITIES.
** INCLUDES HMA (TYPE A), CLASS 2 AB, PRIME COAT AND TACK COAT QUANTITIES FOR MAINTENANCE VEHICLE PULLOUTS.

ABBREVIATIONS

RHMA-G RUBBERIZED HOT MIX ASPHALT - (GAP GRADED)
RSC RAPID STRENGTH CONCRETE

EARTHWORK QUANTITIES

STATION	LOCATION	ROADWAY EXCAVATION	EMBANKMENT (N)	IMPORTED BORROW
		CY	CY	CY
B1 525+00 TO 539+67	EB	338	146	146
B1 541+04 TO 585+09	WB	930	1,219	1,219
B1 541+21 TO 585+74	EB	962	1,220	1,220
B1 587+11 TO 648+93	WB	1,531	1,818	1,818
B1 587+68 TO 649+57	EB	1,531	2,058	2,058
B1 650+64 TO 823+02	WB	3,358	4,070	4,070
B1 651+30 TO 823+02	EB	3,344	6,235	6,235
MVPS	EB & WB	63		1,146
CORRAL HOLLOW Rd OFF-RAMP	WB	1,712		
CORRAL HOLLOW Rd ON-RAMP	WB	1,508		
PATTERON Rd ON-RAMP	EB	1,017		
PATTERSON Rd OFF-RAMP	WB	1,661		
PATTERSON Rd ON-RAMP	WB	1,407		
TOTAL		19,362		17,912

(N) = NOT A SEPARATE PAY ITEM.

CRACK AND SEAT (EXISTING CONCRETE PAVEMENT)

STATION	LOCATION	SQYD
B1 529+91 TO 538+52	EB	2,296
B1 542+50 TO 584+59	EB	11,224
B1 589+20 TO 631+80	EB	11,360
B1 636+26 TO 648+41	EB	3,240
B1 652+74 TO 749+90	EB	25,909
B1 754+22 TO 823+02	EB	18,347
B1 542+18 TO 583+62	WB	11,051
B1 588+26 TO 632+85	WB	11,891
B1 637+37 TO 647+46	WB	2,691
B1 651+79 TO 747+44	WB	25,507
B1 751+70 TO 795+57	WB	11,699
TOTAL		135,215

COLD PLANE AC PAVEMENT

STATION	DESCRIPTION	LOCATION	SQYD
B1 525+00 TO 525+50	CONFORM TAPER AT END OF PROJECT	EB	359
B1 525+00 TO 525+50	CONFORM TAPER AT END OF PROJECT	WB	344
B1 527+72 TO 528+22	CONFORM TAPER I-5 SOUTHBOUND RAMP	EB	190
B1 539+08 TO 539+70	TRANSITION TAPER AT GAFFERY ROAD UC	WB	411
B1 762+71 TO 763+21	CONFORM TAPER	WB	124
B1 765+63 TO 766+13	CONFORM TAPER	EB	111
V1 222+50 TO 223+00	CONFORM TAPER AT 132 CONNECTOR	EB	184
PM 4.51 WB 132 OFF-RAMP	TRANSITION TAPER ALONG WESTBOUND OFF-RAMP	WB	181
PM 6.33 TO PM 6.48	TRANSITION TAPER AT WIM STATION	WB&EB	1,127
PM 7.86 TO PM 7.92	TRANSITION TAPER AT CORRAL HOLLOW CREEK BRIDGE	WB&EB	1,127
PM 8.16	CONFORM TAPER AT CORRAL HOLLOW ROAD EB ON-RAMP	EB	222
PM 8.17	CONFORM TAPER AT CORRAL HOLLOW ROAD EB OFF-RAMP	EB	2815
PM 8.12 TO PM 8.19	TRANSITION TAPER UNDER CORRAL HOLLOW ROAD OC	WB&EB	1,127
PM 8.18 TO PM 8.25	TRANSITION TAPER AT WIM STATION	WB&EB	1,127
PM 9.70 TO PM 9.75	TRANSITION TAPER AT VALPICO UC	WB&EB	1,127
PM 11.30 TO PM 11.33	TRANSITION TAPER AT VALLEY VIEW UC	WB&EB	1,127
PM 11.49 TO PM 11.57	TRANSITION TAPER AT WEST VALPICO OH	WB&EB	1,126
PM 12.02 TO PM 12.07	TRANSITION TAPER AT HANSEN ROAD UC	WB&EB	1,127
PM 12.71 TO PM 12.84	TRANSITION TAPER AT EAST MIDWAY OH	WB&EB	1,124
PM 13.36 TO PM 13.55	TRANSITION TAPER ALONG EASTBOUND ON-RAMP	EB	457
PM 13.51 TO PM 13.58	TRANSITION TAPER UNDER PATTERSON PASS ROAD OC	WB&EB	2999
PM 13.55	CONFORM TAPER PATTERSON PASS ROAD EB OFF RAMP	EB	318
PM 15.30	CONFORM TAPER AT END OF PROJECT	WB&EB	475
TOTAL			19,329

STRUCTURAL SECTION REPLACEMENT

STATION	DESCRIPTION	LOCATION	LENGTH	WIDTH	AREA	REMOVE PAVEMENT		HMA (TYPE A)
						CONCRETE ##	AC	#
			FT	FT	SQFT	CY	CY	TON
PM 7.87	No.2 LANE AND R+ SHOULDER	EB	12	22	264	4	8	23
PM 7.87	No. 2 LANE AND SHOULDER	WB	25	10	250		11	22
PM 8.87	No. 2 LANE	WB	100	12	1200	33	19	106
PM 8.93	No. 2 LANE	WB	40	12	480	13	8	42
PM 8.94	R+ SHOULDER	WB	190	10	1900		83	168
PM 9.10	R+ SHOULDER	WB	350	10	3500		153	310
PM 12.34	No.2 LANE	EB	10	12	120	3	2	11
PM 12.49	No.2 LANE	WB	30	12	360	10	6	32
PM 14.75	No.2 LANE AND R+ SHOULDER	WB	32	22	704	11	20	62
PM 15.13	No.2 LANE	WB	60	12	720	20	11	64
TOTAL						94	321	840

SEE ROADWAY QUANTITIES FOR GRAND TOTAL
SEE REMOVE CONCRETE PAVEMENT QUANTITIES FOR GRAND TOTAL

NOTE: ACTUAL LOCATIONS AND DIMENSIONS OF STRUCTURAL SECTION REPLACEMENT MAY VARY IN THE FIELD AND WILL BE DETERMINED BY THE ENGINEER.

1 **REPLACED PER ADDENDUM No. 1 DATED NOVEMBER 6, 2015**

SUMMARY OF QUANTITIES

Q-1

STATE OF CALIFORNIA - DEPARTMENT OF TRANSPORTATION
Caltrans
CONSULTANT FUNCTIONAL SUPERVISOR: KEITH RHODES
CALCULATED-DESIGNED BY: SNEHA PAVULURI
CHECKED BY: KEITH RHODES
REVISED BY
DATE REVISED

LAST REVISION 05-29-15 | DATE PLOTTED => 05-NOV-2015 | TIME PLOTTED => 09:02

Dist	COUNTY	ROUTE	POST MILES TOTAL PROJECT	SHEET No.	TOTAL SHEETS
10	SJ	132,580	0.2, L0.0/15.3	123	265

REGISTERED CIVIL ENGINEER 5/29/15 DATE

6-1-15
PLANS APPROVAL DATE

REGISTERED PROFESSIONAL ENGINEER Snehalatha Pavuluri No. 78187 Exp 09/30/15 CIVIL STATE OF CALIFORNIA

THE STATE OF CALIFORNIA OR ITS OFFICERS OR AGENTS SHALL NOT BE RESPONSIBLE FOR THE ACCURACY OR COMPLETENESS OF SCANNED COPIES OF THIS PLAN SHEET.

T.Y.LIN INTERNATIONAL
2010 CROW CANYON PLACE,
SUITE 350
SAN RAMON, CA 94583

HMA DIKE (CONTINUED)

WESTBOUND						EASTBOUND					
STATION	TYPE C	TYPE E	TYPE F	CY (N)	TONS *	STATION	TYPE C	TYPE E	TYPE F	CY (N)	TONS *
	LF	LF	LF				LF	LF	LF		
PM 13.18 TO PM 13.33		795.00		10.33	20.93	PM 13.46 TO PM 13.71	62.50	1,305.00	43.75	17.49	35.42
PM 13.53 TO PM 13.69	62.50	835.00	43.75	11.38	23.05	PM 13.76 TO PM 13.78		130.00		1.69	3.42
CORRAL HOLLOW OFF- RAMP		801.00		10.41	21.09	PM 13.78 TO PM 13.87		470.00		6.11	12.37
CORRAL HOLLOW ON- RAMP		151.00		1.96	3.98	PM 13.87 TO PM 14.29		2,200.00		28.60	57.92
PATTERSON Rd OFF-RAMP		1,000.00		13.00	26.33	PM 14.35 TO PM 14.50		770.00		10.01	20.27
PATTERSON RD ON-RAMP		630.00		8.19	16.58	PM 14.50 TO PM 14.74		1,270.00		16.51	33.43
PM 13.80 TO PM 13.89		485.00		6.31	12.77	PM 14.74 TO PM 15.08		1,805.00		23.47	47.52
PM 13.89 TO PM 14.50		3,225.00		41.93	84.90	PM 15.08 TO PM 15.30		1,384.00		17.99	36.43
PM 14.53 TO PM 14.75		1,160.00		15.08	30.54	CORRAL HOLLOW OFF-RAMP		226.00		2.94	5.95
PM 14.88 TO PM 14.69		990.00		12.87	26.06	CORRAL HOLLOW ON-RAMP		801.00		10.41	21.09
PM 15.13 TO PM 15.07		695.00		9.04	18.30	PATTERSON Rd OFF-RAMP		1,120.00		14.56	29.48
PM 15.21 TO PM 15.30		786.00		10.22	20.69						
SUBTOTAL (3)	62.50	11,553.00	43.75		305.20	SUBTOTAL (4)	62.50	11,481.00	43.75		303.30
						SUBTOTAL (3)	62.50	11,553.00	43.75		305.20
						SUBTOTAL (2)	708.38	33,992.43	487.50		906.82
						SUBTOTAL (1)	736.95	41,261.01	325.00		1,096.21
						TOTAL	1,570.33	98,287.44	900.00		2,611.53

(N) = NOT A SEPERATE PAY ITEM
* SEE ROADWAY QUANTITIES FOR GRAND TOTAL

REMOVE CONCRETE PAVEMENT

STATION	LOCATION	CY
B1 538+52.31 TO 539+67.24	EB	167.13
B1 541+35.30 TO 542+50.30	EB	167.13
B1 541+03.37 TO 542+18.37	WB	167.13
B1 583+62.05 TO 584+77.05	WB	167.13
B1 584+58.58 TO 585+73.58	EB	167.13
B1 587+10.62 TO 588+25.62	WB	167.13
B1 588+05.53 TO 589+20.52	EB	167.13
B1 631+80.40 TO 636+25.78	EB	537.63
B1 632+85.00 TO 637+36.78	WB	546.03
B1 647+46.19 TO 648+61.19	WB	167.13
B1 648+41.52 TO 649+56.53	EB	167.13
B1 650+64.10 TO 651+79.10	WB	167.13
B1 651+41.56 TO 652+74.47	EB	167.13
B1 747+44.00 TO 751+70.00	WB	556.64
B1 749+90.00 TO 754+22.00	EB	564.48
STRUCTURAL SECTION REPLACEMENT		94.67
TOTAL		4137.91

1

REMOVE CONCRETE CURB

STATION/DESCRITPION	LOCATION	LF
B1 762+53 TO 763+01	EB	90.00
CHRISMAN Rd OFF-RAMP	EB	140.00
CORRAL HOLLOW Rd OFF-RAMP	EB	625.00
CORRAL HOLLOW Rd ON-RAMP	EB	747.00
CORRAL HOLLOW Rd OFF-RAMP	WB	700.00
CORRAL HOLLOW Rd ON-RAMP	WB	630.00
PATTERSON ROAD OFF-RAMP	WB	676.00
PATTERSON ROAD ON-RAMP	WB	538.00
PATTERSON ROAD OFF-RAMP	EB	780.00
PATTERSON ROAD ON-RAMP	EB	790.00
TOTAL		5,716.00

REMOVE GUARDRAIL

STATION	LOCATION	LAYOUT	REMOVE GUARD RAIL	TREATED WOOD WASTE
			LF	LB
B1 541+07.28 TO 541+69.08	EB	12B	61.80	876.67
B1 558+71.43 TO 559+71.43	EB	12B	100.00	1,418.56
B1 560+77.14 to 561+77.14	WB	12B	100.00	1,418.56
B1 587+81.09 TO 588+61.07	EB	12B	79.17	1,123.07
B1 584+18.96 TO 584+97.97	WB	12B	79.01	1,120.80
B1 633+57.03 TO 634+57.03	EB	16B	100.00	1,418.56
B1 634+58.04 TO 635+45.56	WB	16B	87.50	1,241.24
B1 651+37.41 TO 652+16.56	EB	12B	79.15	1,122.79
B1 647+93.51 TO 648+82.68	WB	12B	89.17	1,264.93
B1 764+00.41 TO 764+87.98	WB	16B	87.50	1,241.24
B1 771+63.76 TO 772+63.76	EB	16B	100.00	1,418.56
B1 786+29.75 TO 786+92.25	WB	16B	62.50	886.60
B1 789+73.14 TO 790+73.14	EB	16B	100.00	1,418.56
PM 5.21 WEST OF EB 132 CONNECTOR	EB	16B	75.00	1,063.92
PM 6.65 TRACY Blvd OC	EB	16B	75.00	1,063.92
PM 6.65 TRACY Blvd OC	WB	16B	100.00	1,418.56
PM 7.92 CORRAL HOLLOW CREEK BRIDGE	WB	12B	62.00	879.51
PM 7.91 CORRAL HOLLOW CREEK BRIDGE	EB	12B	62.00	879.51
PM 8.14 CORRAL HOLLOW Rd OC	WB	16B	81.00	1,149.03
PM 8.14 CORRAL HOLLOW Rd OC	EB	16B	81.00	1,149.03
PM 9.74 VALPICO Rd UC	WB	12B	62.00	879.51
PM 9.75 VALPICO Rd UC	EB	12B	62.00	879.51
PM 11.34 VALLEY VIEW UC	WB	12B	62.00	879.51
PM 11.36 VALLEY VIEW UC	EB	12B	100.00	1,418.56
PM 11.55 WEST VALPICO OH	WB	12B	100.00	1,418.56
PM 11.60 WEST VALPICO OH	EB	12B	100.00	1,418.56
PM 12.09 HANSEN Rd UC	WB	12C	185.00	2,624.34
PM 12.10 HANSEN Rd UC	EB	12B	100.00	1,418.56
PM 12.89 EAST MIDWAY OH	EB	12B	100.00	1,418.56
PM 13.62 PATTERSON PASS Rd OC	WB	16B	82.00	1,163.22
PM 13.61 PATTERSON PASS Rd OC	EB	16B	82.00	1,163.22
TOTAL			2,696.80	38,255.73

BASE FAILURE REPLACEMENT

STATION	NUMBER OF SLABS (N)				AREA (SQFT) (N)				LEAN CONCRETE BASE (0.35')
	WESTBOUND		EASTBOUND		WESTBOUND		EASTBOUND		
	No.1 LANE	No.2 LANE	No.1 LANE	No.2 LANE	No.1 LANE	No.2 LANE	No.1 LANE	No.2 LANE	CY
PM 0.0-0.5									
PM 0.5-1.0		7		8		756		1,128	24
PM 1.0-1.5		2		3		228		192	5
PM 1.5-2.0		3		6		432		612	14
PM 2.0-2.5		20		14		2,316		1,836	54
PM 2.5-3.0		12		6		2,304		1,020	43
PM 3.0-3.5		6		15		1,152			35
PM 3.5-4.0		4		8		720		1,068	23
PM 4.0-4.5				10				1,044	14
PM 4.5-5.0				26				3,360	44
TOTAL									256*

* INCLUDED IN THE TOTAL ROADWAY QUANTITIES

1 **REPLACED PER ADDENDUM No. 1 DATED NOVEMBER 6, 2015**

SUMMARY OF QUANTITIES

Q-4

STATE OF CALIFORNIA - DEPARTMENT OF TRANSPORTATION
Caltrans

CONSULTANT FUNCTIONAL SUPERVISOR: KEITH RHODES
CALCULATED-DESIGNED BY: SNEHA PAVULURI
CHECKED BY: KEITH RHODES
REVISED BY
DATE REVISED

LAST REVISION 05-29-15
DATE PLOTTED => 05-NOV-2015
TIME PLOTTED => 09:02

Dist	COUNTY	ROUTE	POST MILES TOTAL PROJECT	SHEET No.	TOTAL SHEETS
10	SJ	132,580	0.2, L0.0/15.3	146	265

REGISTERED ELECTRICAL ENGINEER 5/29/15 DATE

6-1-15
PLANS APPROVAL DATE

REGISTERED PROFESSIONAL ENGINEER ALLAN RAY MORRIS No. 16958 Exp. 06/30/15 ELECTRICAL STATE OF CALIFORNIA

THE STATE OF CALIFORNIA OR ITS OFFICERS OR AGENTS SHALL NOT BE RESPONSIBLE FOR THE ACCURACY OR COMPLETENESS OF SCANNED COPIES OF THIS PLAN SHEET.

T.Y.LIN INTERNATIONAL
2010 CROW CANYON PLACE,
SUITE 350
SAN RAMON, CA 94583

LEGEND:

50 2"C, 2#6 (240 V TMS SERVICE).

51 2"C, 2#6 (240V CCTV, CMS AND TMS SERVICE).

52 2"C, 2#2/0 (480 V CMS AND CCTV SERVICE), 2#8 (480 V TMS SERVICE).

53 3"C, 2#2/0 (480 V CMS AND CCTV SERVICE), 2#8 (480 V TMS SERVICE).

54 2"C, 2#1/0 (480 V CMS AND CCTV SERVICE).

55 2"C, 2#8 (480 V RWIS AND CCTV SERVICE).

56 2"C, 2#8 (480 V TMS SERVICE).

57 2"C, 2#8 (480 V TMS SERVICE), 2#1/0 (480 V CMS, CCTV AND TMS SERVICE).

58 INSTALL 2#6 (120 V CCTV CONTROLLER) IN EXISTING CONDUIT.

59 2"C, 2#6 (240 V RWIS AND TMS SERVICE).

60 2"C, 2#6 (240 V CCTV, CMS, AND TMS SERVICE).

61 INSTALL DEPARTMENT-FURNISHED FIBER OPTIC NETWORK INTERFACE EQUIPMENT AND CABLING IN EXISTING CABINET.

62 INSTALL DEPARTMENT-FURNISHED NETWORK INTERFACE EQUIPMENT AND CABLING.

63 2"C, 2#6 (120 V CCTV CONTROLLER), 2#6 (240 V TMS SERVICE).

64 120/240 V, 1Ø, 3 WIRE, TYPE III-AF SERVICE EQUIPMENT ENCLOSURE (TOU) WITH THE FOLLOWING CIRCUIT BREAKERS.

AMPERES	VOLTS	POLES	NAMEPLATE	METER
100	240	2	MAIN	YES
60	240	2	RWIS & 2 TMS	YES
30	240	2	SPARE	YES

65 INSTALL 144 SMFO IN Exist 4"C-PT. TERMINATE IN Exist MODEL 344LX CABINET AT ALAMEDA COUNTY PM 0.89. COORDINATE WITH ENGINEER IN CONNECTING T1 TELEPHONE SERVICE AT ALAMEDA COUNTY PM 0.89.

66 1-6"C, 4-2"C, 144 SMFO. SEE SHEET E-44 FOR INSTALLATION DETAILS.

67 NOT USED

68 3"C, DEPARTMENT-FURNISHED HARNESSES, No 4 & No 5.

69 INSTALL 1-12 SMFO IN EXISTING CONDUIT.

70 INSTALL 2#1/0 (480 V CCTV AND CMS SERVICE) IN EXISTING CONDUIT.

71 INSTALL 2#6 (240 V CCTV, CMS, AND TMS SERVICE), 2#6 (120 V CCTV CONTROLLER) IN EXISTING CONDUIT.

72 INSTALL 2#6 (240 V CCTV, CMS, AND TMS SERVICE) IN EXISTING CONDUIT.

73 BEFORE SCHEDULING THE PLACEMENT OF THESE ITEMS, CONTRACTOR TO COORDINATE WITH THE ENGINEER TO FINALIZE THE ORDER OF THE WORK.

74 120/240 V, 1Ø, 3 WIRE, TYPE III-AF/ SERVICE EQUIPMENT ENCLOSURE (TOU) WITH THE FOLLOWING CIRCUIT BREAKERS.

AMPERES	VOLTS	POLES	NAMEPLATE	METER
100	240	2	MAIN	YES
60	240	2	RWIS & CCTV	YES
30	240	2	SPARE	YES

75 NOT USED

76 Exist 1 1/2"C, 2 tc. INSTALL 2 TC IN EXISTING CONDUIT

77 2"C, 2 TC

78 COORDINATE EXISTING TELEPHONE CABLING AND SERVICE WITH NEW EQUIPMENT INSTALLATION.

79 INSTALL 2#6 (120 V TDC SERVICE), 2#6 (120 V COMMUNICATION SERVICE) IN EXISTING CONDUIT

80 2"C, 2#6 (120 V TDC SERVICE)

81 2"C, 2#6 (120 V COMMUNICATION SERVICE)

82 Exist 4"C, HDPE, 1-144 SMFO

83 POWER CONDUIT AND CONDUCTORS INSTALLED WITHIN 66 CROSSING STRUCTURE

84 Exist 3"C, 1-12 SFMO, 69

85 Exist 2"C, RC 2#10 (120 V MVDS SERVICE), INSTALL 2#6 (120 V MVDS SERVICE)

86 Exist 2"C, PT, 69

87 Exist 2"C, 2#10 (120 V MVDS SERVICE), ADD 1-CAT 5E CABLE

88 2"C, 1-12 SMFO, 1-CAT 5E CABLE, 2#6 (120 V MVDS SERVICE)

89 2-3"C, 1-12 SMFO, 1-CAT 5E CABLE, 2#6 (120 V MVDS SERVICE)

90 FURNISH AND INSTALL MODEL 334L CABINET. INSTALL DEPARTMENT-FURNISHED FIBER OPTIC NETWORK INTERFACE EQUIPMENT AND CABLING.

91 Exist 2"C, RC 2#10 (120 V MVDS SERVICE), INSTALL 2#6 (120 V MVDS SERVICE), 69

92 Exist 2"C, 1-12 SFMO

93 Exist 2"C, 2#6 (120 V MVDS SERVICE)

94 2-3"C, 2-12 SMFO

95 2-2"C, 1-12 SMFO

96 1-3"C, 2-12 SMFO

97 INSTALL 2-12 SMFO IN EXISTING CONDUIT 1

1 REPLACED PER ADDENDUM No. 1 DATED NOVEMBER 6, 2015

INDEX OF ELECTRICAL PLANS, GENERAL NOTES, LEGEND, SYMBOLS, AND ABBREVIATIONS

E-2

STATE OF CALIFORNIA - DEPARTMENT OF TRANSPORTATION
Caltrans

CONSULTANT FUNCTIONAL SUPERVISOR: KEITH RHODES
CALCULATED-DESIGNED BY: SNEHA PAVULURI
CHECKED BY: ALLAN MORRIS
REVISED BY
DATE REVISED

LAST REVISION 05-29-15
DATE PLOTTED => 05-NOV-2015
TIME PLOTTED => 09:02

Dist	COUNTY	ROUTE	POST MILES TOTAL PROJECT	SHEET No.	TOTAL SHEETS
10	SJ	132,580	0.2, L0.0/15.3	168	265

REGISTERED ELECTRICAL ENGINEER 5/29/15 DATE

6-1-15
PLANS APPROVAL DATE

REGISTERED PROFESSIONAL ENGINEER ALLAN RAY MORRIS No. 16958 Exp. 06/30/15 ELECTRICAL STATE OF CALIFORNIA

THE STATE OF CALIFORNIA OR ITS OFFICERS OR AGENTS SHALL NOT BE RESPONSIBLE FOR THE ACCURACY OR COMPLETENESS OF SCANNED COPIES OF THIS PLAN SHEET.

T.Y.LIN INTERNATIONAL
2010 CROW CANYON PLACE,
SUITE 350
SAN RAMON, CA 94583

NOTES:

1. FOR ACCURATE RIGHT OF WAY DATA, CONTACT RIGHT OF WAY ENGINEERING AT THE DISTRICT OFFICE.
2. INSTALL FIBER OPTIC PULL BOXES AT PM 13.8.

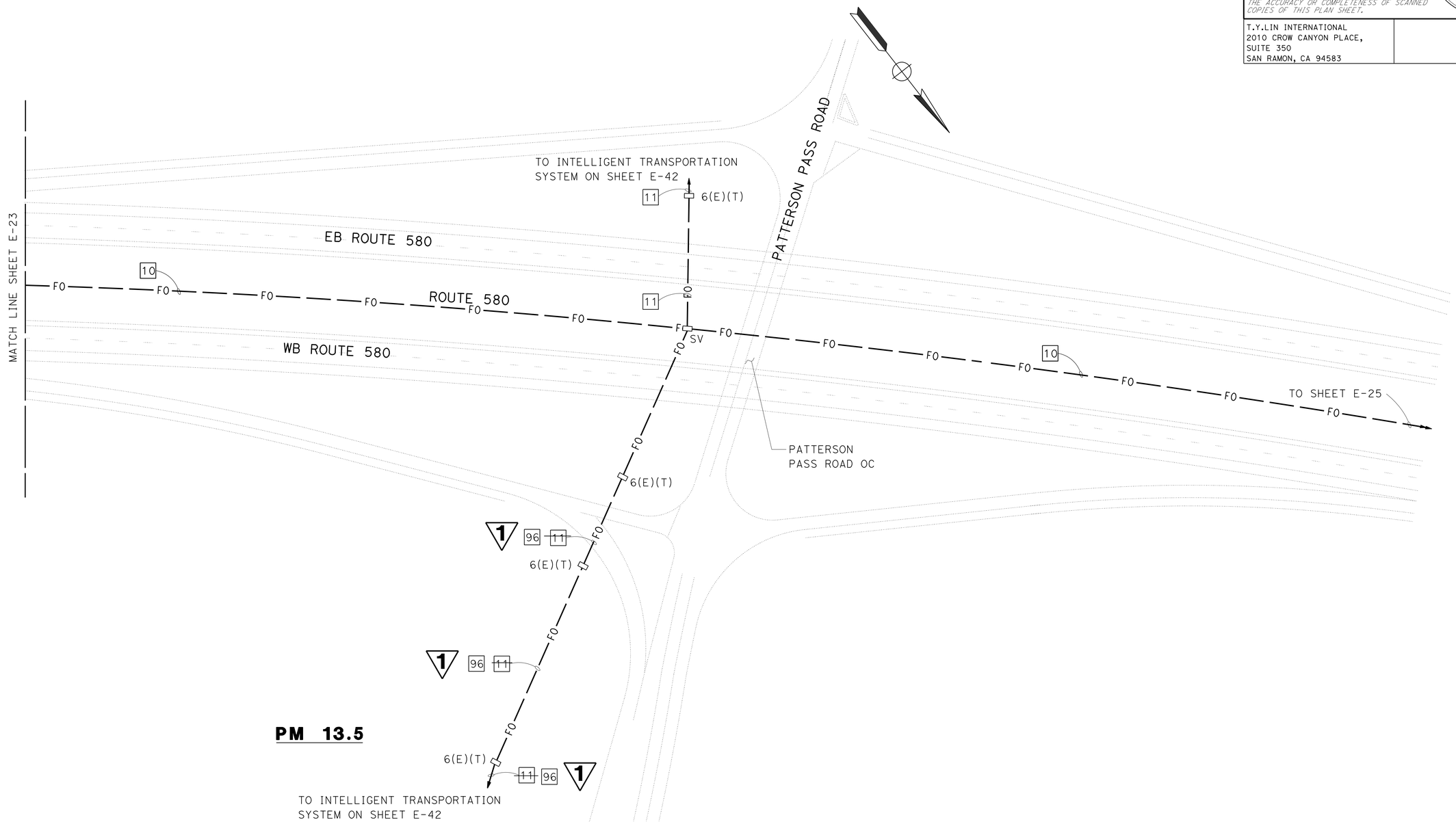

1 REPLACED PER ADDENDUM No. 1 DATED NOVEMBER 6, 2015

APPROVED FOR ELECTRICAL WORK ONLY

FIBER OPTIC SYSTEM

NO SCALE

E-24

STATE OF CALIFORNIA - DEPARTMENT OF TRANSPORTATION
Caltrans

CONSULTANT FUNCTIONAL SUPERVISOR: KEITH RHODES
CALCULATED-DESIGNED BY: SNEHA PAVULURI
CHECKED BY: ALLAN MORRIS
REVISED BY
DATE REVISED

LAST REVISION 05-29-15
DATE PLOTTED => 05-NOV-2015
TIME PLOTTED => 09:02

Dist	COUNTY	ROUTE	POST MILES TOTAL PROJECT	SHEET No.	TOTAL SHEETS
10	SJ	132,580	0.2, L0.0/15.3	186	265

REGISTERED ELECTRICAL ENGINEER 5/29/15 DATE

6-1-15
PLANS APPROVAL DATE

REGISTERED PROFESSIONAL ENGINEER ALLAN RAY MORRIS No. 16958 Exp. 06/30/15 ELECTRICAL STATE OF CALIFORNIA

THE STATE OF CALIFORNIA OR ITS OFFICERS OR AGENTS SHALL NOT BE RESPONSIBLE FOR THE ACCURACY OR COMPLETENESS OF SCANNED COPIES OF THIS PLAN SHEET.

T.Y.LIN INTERNATIONAL
2010 CROW CANYON PLACE,
SUITE 350
SAN RAMON, CA 94583

NOTES:

1. FOR ACCURATE RIGHT OF WAY DATA, CONTACT RIGHT OF WAY ENGINEERING AT THE DISTRICT OFFICE.
2. INSTALL 11 ADDITIONAL PULL BOXES BETWEEN PM 13.5 AND PM 14.1.

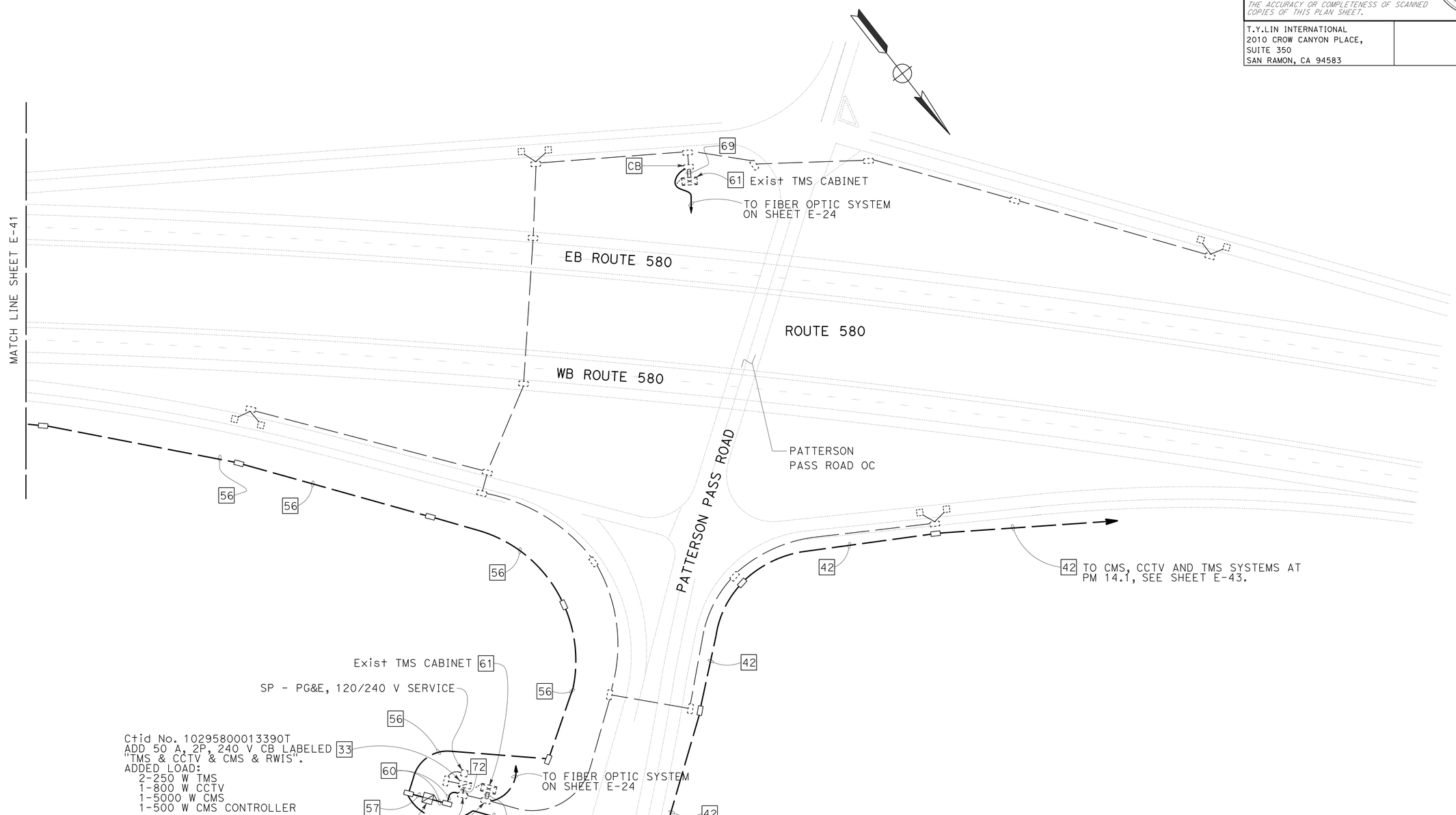

1 REPLACED PER ADDENDUM No. 1 DATED NOVEMBER 6, 2015

APPROVED FOR ELECTRICAL WORK ONLY

INTELLIGENT TRANSPORTATION SYSTEM

NO SCALE

E-42

STATE OF CALIFORNIA - DEPARTMENT OF TRANSPORTATION

Caltrans

CONSULTANT FUNCTIONAL SUPERVISOR: KEITH RHODES

CALCULATED-DESIGNED BY: SNEHA PAVULURI

CHECKED BY: ALLAN MORRIS

REVISED BY / DATE REVISED

LAST REVISION 05-29-15 | DATE PLOTTED => 05-NOV-2015 | TIME PLOTTED => 09:02

Dist	COUNTY	ROUTE	POST MILES TOTAL PROJECT	SHEET No.	TOTAL SHEETS
10	SJ	132,580	0.2, L0.0/15.3	189	265

REGISTERED ELECTRICAL ENGINEER 5/29/15 DATE

6-1-15
PLANS APPROVAL DATE

REGISTERED PROFESSIONAL ENGINEER ALLAN RAY MORRIS No. 16958 Exp. 06/30/15 ELECTRICAL STATE OF CALIFORNIA

THE STATE OF CALIFORNIA OR ITS OFFICERS OR AGENTS SHALL NOT BE RESPONSIBLE FOR THE ACCURACY OR COMPLETENESS OF SCANNED COPIES OF THIS PLAN SHEET.

T.Y.LIN INTERNATIONAL
2010 CROW CANYON PLACE,
SUITE 350
SAN RAMON, CA 94583

GENERAL NOTES:

1. ~~6.~~ VAULT DESIGNED IN ACCORDANCE WITH AASHTO H-20-44 TRAFFIC BRIDGE LOADING USING 25.9 MPa COMPRESSIVE STRENGTH CONCRETE AND 413.7 MPa YIELD STRENGTH ASTM A-706 STEEL REINFORCEMENT PER CALCULATIONS.
2. ~~7.~~ VAULT MUST BE PLACED ON A 12" BASE OF CRUSHED ROCK
3. ~~8.~~ EACH VAULT MUST BE PROVIDED WITH TWO SETS OF BOLT/LID REMOVERS
4. ~~9.~~ ALL MOUNTING HARDWARE MUST BE GALVANIZED OR STAINLESS STEEL.

1

~~NOTES:~~ LEGEND:

1

1. GALVANIZED CAST-IN ANGLE FRAME.
2. TWO PIECE TRAFFIC RATED TORSION ASSISTED COVER, WITH PICK SLOTS AND BOLT DOWN HOLES. GALVANIZE AFTER FABRICATION.
3. 12" DIAMETER DRAIN HOLE. LOCATE AT CENTER.
4. 7/8" DIAMETER PULL IRONS (4 EA)
5. 16" x 4" KNOCK-OUTS. (8 EA)

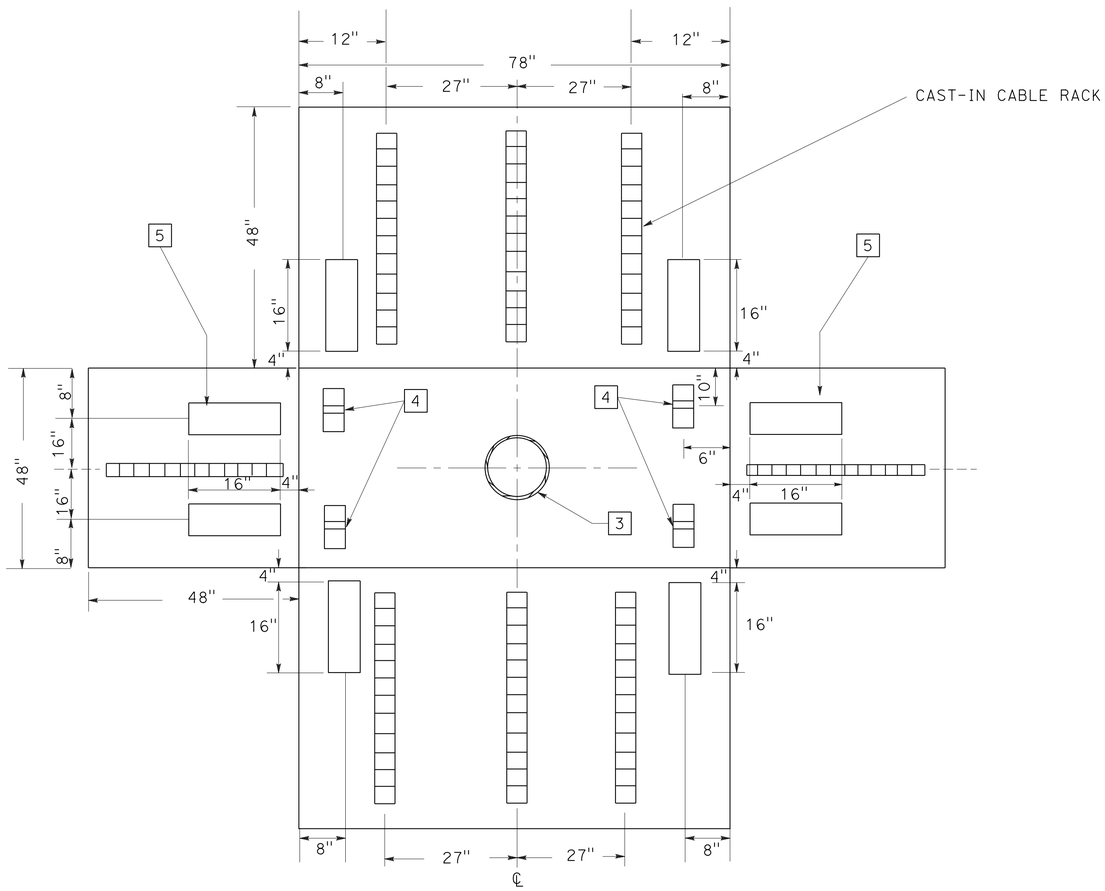

PLAN

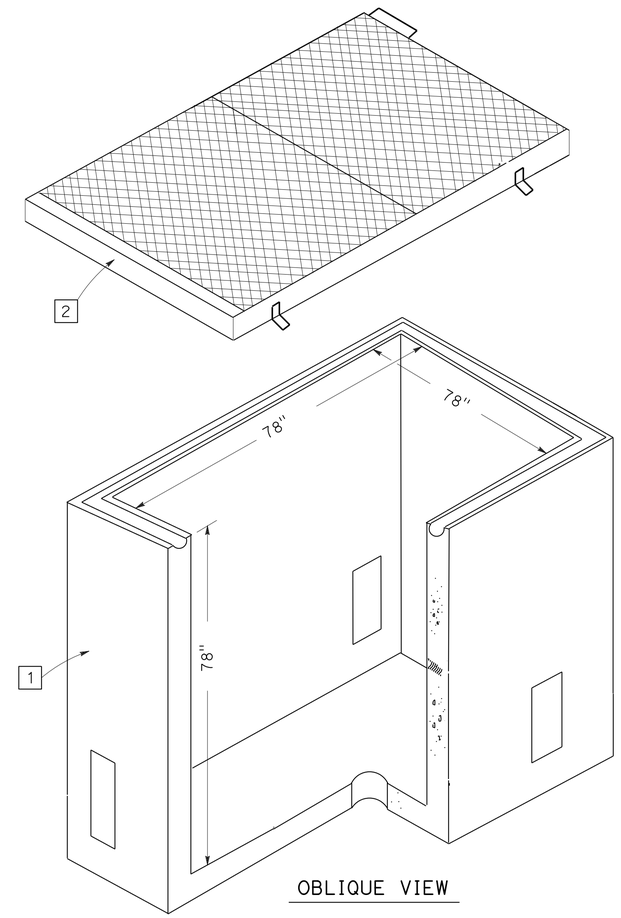

OBLIQUE VIEW

SPLICE VAULT DETAILS

1 REPLACED PER ADDENDUM No. 1 DATED NOVEMBER 6, 2015

ELECTRICAL DETAILS

NO SCALE

E-45

STATE OF CALIFORNIA - DEPARTMENT OF TRANSPORTATION
Caltrans

CONSULTANT FUNCTIONAL SUPERVISOR: KEITH RHODES
CALCULATED-DESIGNED BY: SNEHA PAVULURI
CHECKED BY: ALLAN MORRIS
REVISED BY
DATE REVISED

LAST REVISION 05-29-15
DATE PLOTTED => 05-NOV-2015
TIME PLOTTED => 09:02

Dist	COUNTY	ROUTE	POST MILES TOTAL PROJECT	SHEET No.	TOTAL SHEETS
10	SJ	132,580	0.2, L0.0/15.3	192	265

REGISTERED ELECTRICAL ENGINEER 5/29/15 DATE

6-1-15
PLANS APPROVAL DATE

REGISTERED PROFESSIONAL ENGINEER ALLAN RAY MORRIS No. 16958 Exp. 06/30/15 ELECTRICAL STATE OF CALIFORNIA

THE STATE OF CALIFORNIA OR ITS OFFICERS OR AGENTS SHALL NOT BE RESPONSIBLE FOR THE ACCURACY OR COMPLETENESS OF SCANNED COPIES OF THIS PLAN SHEET.

T.Y.LIN INTERNATIONAL
2010 CROW CANYON PLACE,
SUITE 350
SAN RAMON, CA 94583

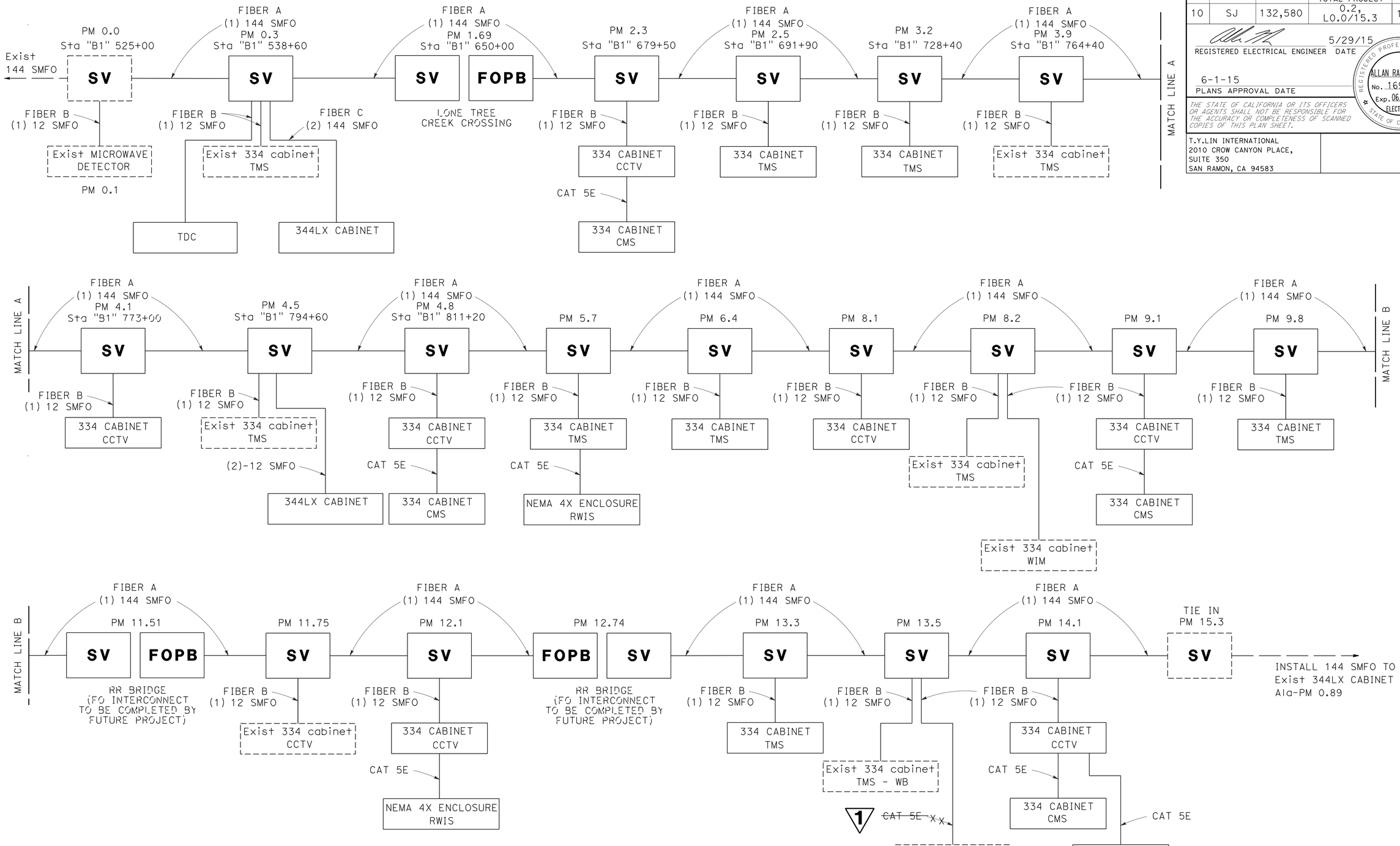

FIBER OPTIC BLOCK DIAGRAM

ELECTRICAL DETAILS

NO SCALE

1 REPLACED PER ADDENDUM No. 1 DATED NOVEMBER 6, 2015

E-48

STATE OF CALIFORNIA - DEPARTMENT OF TRANSPORTATION

CONSULTANT FUNCTIONAL SUPERVISOR: KEITH RHODES

CALCULATED-DESIGNED BY: SNEHA PAVULURI

CHECKED BY: ALLAN MORRIS

REVISED BY / DATE REVISED

LAST REVISION 05-29-15 | DATE PLOTTED => 05-NOV-2015 | TIME PLOTTED => 09:02

Dist	COUNTY	ROUTE	POST MILES TOTAL PROJECT	SHEET No.	TOTAL SHEETS
10	SJ	132,580	0.2, L0.0/15.3	200	265

REGISTERED ELECTRICAL ENGINEER 5/29/15 DATE

6-1-15
PLANS APPROVAL DATE

REGISTERED PROFESSIONAL ENGINEER ALLAN RAY MORRIS No. 16958 Exp. 06/30/15 ELECTRICAL STATE OF CALIFORNIA

THE STATE OF CALIFORNIA OR ITS OFFICERS OR AGENTS SHALL NOT BE RESPONSIBLE FOR THE ACCURACY OR COMPLETENESS OF SCANNED COPIES OF THIS PLAN SHEET.

T.Y.LIN INTERNATIONAL
2010 CROW CANYON PLACE,
SUITE 350
SAN RAMON, CA 94583

FIBER OPTIC CONNECTION LEGEND:

- ● SPLICE
- ▫ SC CONNECTOR

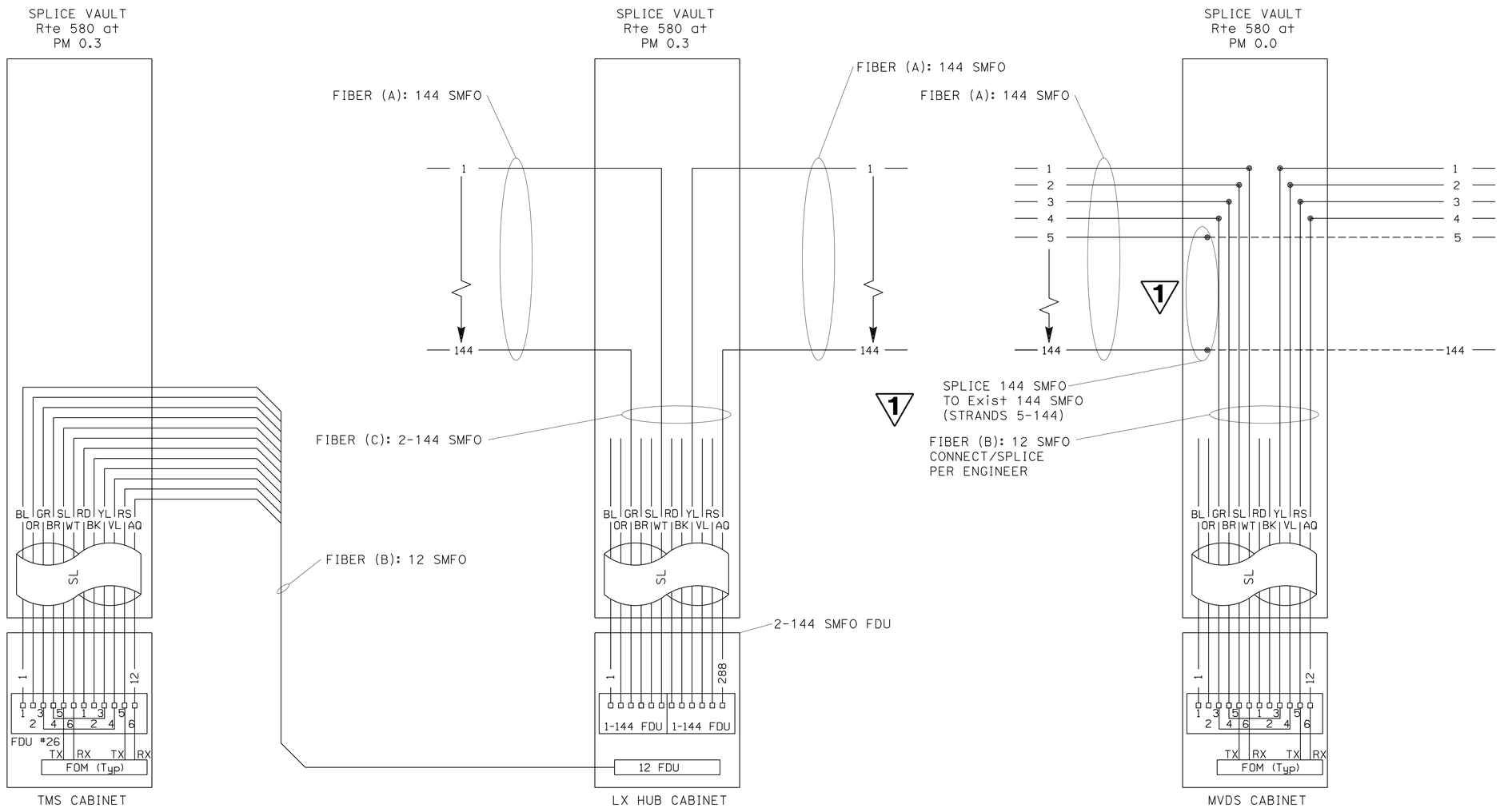

FIBER OPTIC BLOCK BREAKOUT

ELECTRICAL DETAILS

NO SCALE

1 REPLACED PER ADDENDUM No. 1 DATED NOVEMBER 6, 2015

E-56

REVISED BY	DATE REVISED

CALCULATED-DESIGNED BY	CHECKED BY
SNEHA PAVULURI	ALLAN MORRIS

CONSULTANT FUNCTIONAL SUPERVISOR: KEITH RHODES

STATE OF CALIFORNIA - DEPARTMENT OF TRANSPORTATION

Caltrans

LAST REVISION 05-29-15 | DATE PLOTTED => 05-NOV-2015 | TIME PLOTTED => 09:02

Dist	COUNTY	ROUTE	POST MILES TOTAL PROJECT	SHEET No.	TOTAL SHEETS
10	SJ	132,580	0.2, L0.0/15.3	206	265

REGISTERED ELECTRICAL ENGINEER 5/29/15 DATE

6-1-15
PLANS APPROVAL DATE

REGISTERED PROFESSIONAL ENGINEER ALLAN RAY MORRIS No. 16958 Exp. 06/30/15 ELECTRICAL STATE OF CALIFORNIA

THE STATE OF CALIFORNIA OR ITS OFFICERS OR AGENTS SHALL NOT BE RESPONSIBLE FOR THE ACCURACY OR COMPLETENESS OF SCANNED COPIES OF THIS PLAN SHEET.

T.Y.LIN INTERNATIONAL
2010 CROW CANYON PLACE,
SUITE 350
SAN RAMON, CA 94583

INTELLIGENT TRANSPORTATION SYSTEM

1

SHEET No.	DETECTOR LOOP (TYPE A)	DETECTOR STUB SHOULDER	No. 5 (T) PULL BOX	PG&E PULL BOX	No. 6(E)(T) PULL BOX	STEP DOWN TRANSFORMER	STEP DOWN TRANSFORMER FOUNDATION	STEP UP TRANSFORMER	STEP UP TRANSFORMER FOUNDATION	334L CONTROLLER CABINET	334L CONTROLLER CABINET FOUNDATION	170E CONTROLLER CABINET FOUNDATION	2070E CONTROLLER CABINET FOUNDATION	WIRELESS MODEM	TYPE CCTV 40 POLE	TYPE CCTV 40 POLE FOUNDATION	CAMERA ASSEMBLY	CAMERA CONTROL UNIT	TYPE III-AF SERVICE EQUIPMENT ENCLOSURE	TYPE III-AF SERVICE EQUIPMENT FOUNDATION	REMOTE PROCESSING UNIT	WIND SPEED/ DIRECTIONAL SENSOR	PRESENT WEATHER/ VISIBILITY SENSOR	FIXED COLOR VIDEO CAMERA	TOWER	AIR TEMPERATURE/ RELATIVE HUMIDITY SENSOR	2" CONDUIT (TYPE 3)	3" CONDUIT (TYPE 3)	No. 1/0 CONDUCTOR (AL)	No. 2/0 CONDUCTOR (AL)	No. 2 CONDUCTOR (AL)	No. 6 CONDUCTOR (AL)	No. 8 CONDUCTOR (CU)	HYBRID CAMERA CABLE	CAT 5 CABLE	DLC	12 STRAND SMFO
	EA																									LF										
E-27																										40					160					20
E-28			14	1				1	1										1	1						2,450	40	4,860		80	40					
E-29			9		3	1	1			1	1	1		2	1	1	1	1								1,960	260	3,800			820		40	72		
E-30	8	2	13		1	1	1						1	1												2,340	170				140	4,580			680	
E-31	8	2	17		1	1	1						1	1												2,910	340				160	9,280			680	
E-32			15					1	1																	2,660					840	8,920				20
E-33			3		1					1	1			1	1	1	1	1								490	90				1,020		70			
E-34			6																							1,400		2,800								
E-35			8																							1,480		2,960								
E-36			3		3	1	1			1	1	1		2	1	1	1	1								610	270	1,020			800		70	72		
E-37			4																							350		720								20
E-38	16	4	~~26~~27		3 ~~4~~	2	2	1	1				2	3					1	1	1	1	1	1	1	5,420	400				680	12,440			1,360	
E-39			28		1			1	1	1	1			1	1	1	1	1								5,800	290		11,580		1,240	11,580	70			40
E-40	8	2	~~25~~27		3 ~~4~~	2	2			1	1	1	1	3	1	1	1	1								5,010	460	100			860	9,600	70	72	680	
E-41	8	2	16	1	3	2	2	1	1	1	1		1	3	1	1	1	1	1	1	1	1	1	1	1	3,160	420			120	580	5,900	70	72	680	
E-42			23					1	1																	5,268		8,616			160	1,880				40
E-43	8	2	5		4	1	1			1	1	1	1	3	1	1	1	1								1,020	450	1,600			1140		70	144	680	

FIBER OPTIC SYSTEM

SHEET No.	FIBER OPTIC PULL BOX	FIBER OPTIC SPLICE VAULT	No. 6(E)(T) PULL BOX	No. 5 (T) PULL BOX	TYPE B TDC	TYPE B TDC FOUNDATION	MODEL 344LX CABINET FOUNDATION	MODEL 334L CABINET	MODEL 334L CABINET FOUNDATION	2"C (HDPE SCH 40)	3"C (HDPE SCH 40)	6"C (TYPE 1)	12 STRAND SMFO	144 STRAND SMFO	No. 6 CONDUCTOR (AL)	CAT 5 CABLE	TC
	EA									LF							
E-3			1	2				1	1	3,440	190		800	860	1,100	115	
E-4	2	1	2		1	1	1			5,542	60	118	60	1,457			270
E-5	1									5,600				1,403			
E-6	1									5,600				1,403			
E-7	3									11,121		159		2,790			
E-8	2									11,200				2,806			
E-9	1	1								10,800				2,968			
E-10	1	1	1							11,200	150		153	2,868			
E-11	1	1	1							11,200	120		123	2,868			
E-12		1	1							11,200	120		123	2,865			
E-13	1	1	1							10,000	150		153	2,568			
E-14		1	1							4,400	120		123	1,165			
E-15	1									7,260			1,210	1,213			
E-16		1	1				1			6,400	40		403	1,465			
E-17		1	1							5,600	150		153	1,465			
E-18	1									5,600				1,403			
E-19			2							400	140		346				
E-20	7	2	2							25,376	240		246	6,495			
E-21	2	2	4							37,864	410	152	422	9,602			
E-22	~~1~~ 10	2 ~~3~~	2							33,692	240	100	246	9,251			
E-23	~~6~~ 5	3 ~~4~~	2							73,718	300	202	326	19,208			
E-24	1	1	4							4,224	620		1,107 ~~632~~	1,121			
E-25	3	1	1							12,672	120		123	3,242			
E-26										25,344				6,336			

NOTE:

THE QUANTITIES SHOWN IN TABLES ARE NOT SEPARATE PAY ITEMS, FOR INFORMATION ONLY. FOR COMPLETE ELECTRICAL WORK, SEE ELECTRICAL PLAN SHEETS.

1 **REPLACED PER ADDENDUM No. 1 DATED NOVEMBER 6, 2015**

ELECTRICAL QUANTITIES

E-62

REVISED BY | DATE REVISED
SNEHA PAVULURI | ALLAN MORRIS
CALCULATED-DESIGNED BY | CHECKED BY
CONSULTANT FUNCTIONAL SUPERVISOR: KEITH RHODES
STATE OF CALIFORNIA - DEPARTMENT OF TRANSPORTATION
Caltrans

LAST REVISION 05-29-15 | DATE PLOTTED => 05-NOV-2015 | TIME PLOTTED => 09:02

Dist	COUNTY	ROUTE	POST MILES TOTAL PROJECT	SHEET No.	TOTAL SHEETS
10	SJ	132,580	0.2, L0.0/15.3	241	265

REGISTERED CIVIL ENGINEER

July 19, 2013
PLANS APPROVAL DATE

REGISTERED PROFESSIONAL ENGINEER William K. Farnbach No. C49042 Exp. 9-30-14 CIVIL STATE OF CALIFORNIA

THE STATE OF CALIFORNIA OR ITS OFFICERS OR AGENTS SHALL NOT BE RESPONSIBLE FOR THE ACCURACY OR COMPLETENESS OF SCANNED COPIES OF THIS PLAN SHEET.

TO ACCOMPANY PLANS DATED 6-1-15

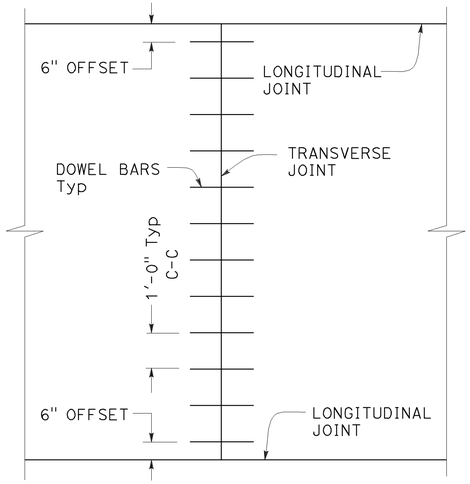

TRANSVERSE JOINT DOWEL BAR LAYOUT

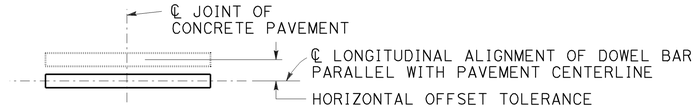

PLAN

HORIZONTAL OFFSET TOLERANCE

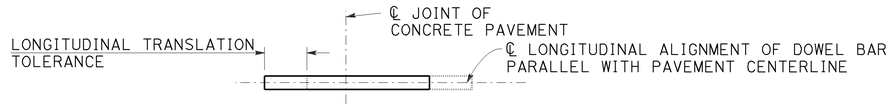

PLAN

LONGITUDINAL TRANSLATION TOLERANCE

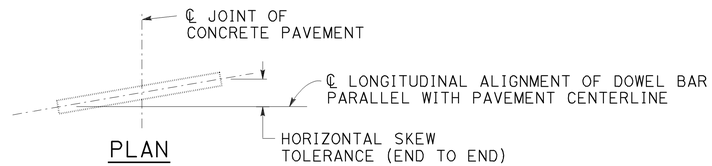

PLAN

HORIZONTAL SKEW TOLERANCE

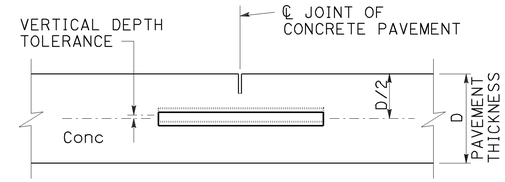

ELEVATION

VERTICAL DEPTH TOLERANCE

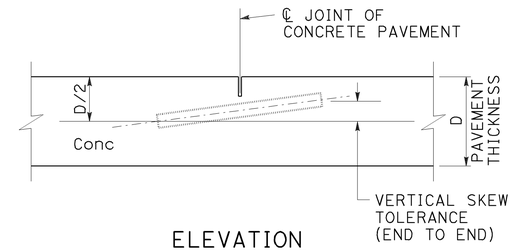

ELEVATION

VERTICAL SKEW TOLERANCE

NOTES:

1. See Revised Standard Plan RSP P1 for typical dowel bar placement and locations.
2. Where fresh concrete pavement is placed against new concrete or existing concrete pavement, rounding the corner of the existing concrete pavement is not required.
3. May also use ¾" Dia dowel bars 2'-4" ± ¼" in length. Center the length of dowel bars at the centerline of longitudinal joint.

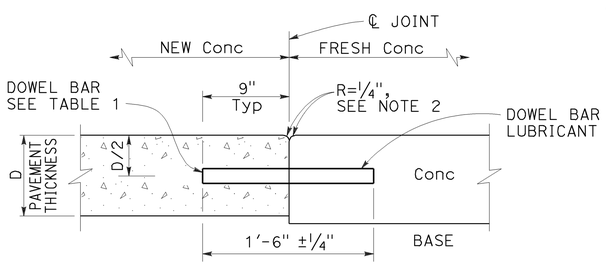

TRANSVERSE CONSTRUCTION JOINT DETAIL

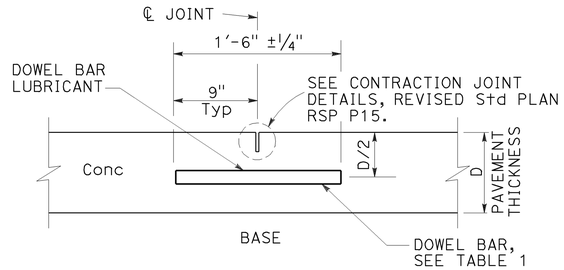

TRANSVERSE CONTRACTION JOINT

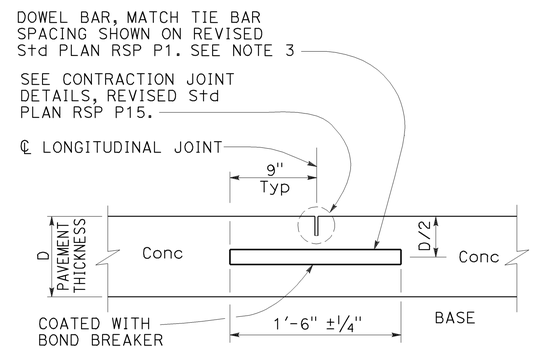

LONGITUDINAL CONTRACTION JOINT WITH DOWEL BARS

See Revised Std Plan RSP P18

TABLE 1

DOWEL BAR DIAMETER TABLE			
PAVEMENT THICKNESS	0.65'	> 0.65' - 0.85'	> 0.85'
MINIMUM DOWEL * BAR DIAMETER	1"	1¼"	1½"

* The drilled hole diameter must be ⅛" to 3/16" larger than the bar diameter.

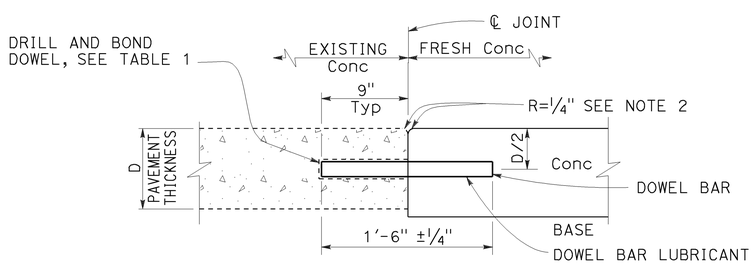

TRANSVERSE CONSTRUCTION JOINT FOR EXISTING CONCRETE PAVEMENT

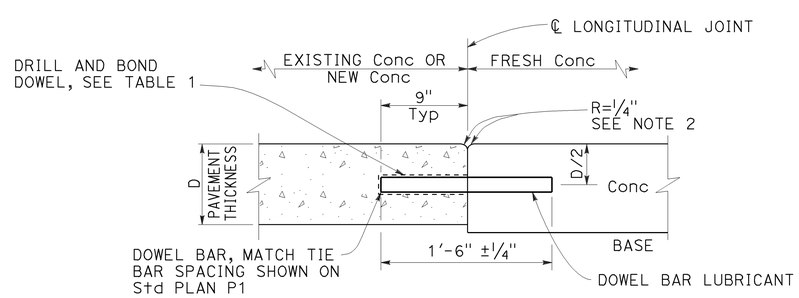

LONGITUDINAL CONSTRUCTION JOINT WITH DOWEL BARS

See Revised Std Plan RSP P18

STATE OF CALIFORNIA
DEPARTMENT OF TRANSPORTATION

CONCRETE PAVEMENT DOWEL BAR DETAILS

NO SCALE

1 DELETED PER ADDENDUM No. 1 DATED NOVEMBER 6, 2015

RSP P10 DATED JULY 19, 2013 SUPERSEDES RSP P10 DATED APRIL 20, 2012 AND STANDARD PLAN P10 DATED MAY 20, 2011 - PAGE 131 OF THE STANDARD PLANS BOOK DATED 2010.

REVISED STANDARD PLAN RSP P10

2010 REVISED STANDARD PLAN RSP P10

5-31-13