ACSTP-P088(057)E

Dist	COUNTY	ROUTE	POST MILES TOTAL PROJECT	SHEET No.	TOTAL SHEETS
10	SJ	88	5.0/L12.2	1	21

STATE OF CALIFORNIA
DEPARTMENT OF TRANSPORTATION

PROJECT PLANS FOR CONSTRUCTION ON
STATE HIGHWAY

IN SAN JOAQUIN COUNTY
NEAR WATERLOO
FROM 0.1 MILE EAST OF COMSTOCK ROAD
TO 0.1 MILE WEST OF ROUTE 12

TO BE SUPPLEMENTED BY STANDARD PLANS DATED MAY 2006

INDEX OF PLANS

SHEET No.	DESCRIPTION
1	TITLE AND LOCATION MAP
2	TYPICAL CROSS SECTIONS
3-5	CONSTRUCTION DETAILS
6	CONSTRUCTION AREA SIGNS
7-8	PAVEMENT DELINEATION QUANTITIES
9	SUMMARY OF QUANTITIES
10-13	ELECTRICAL PLANS
14-21	REVISED STANDARD PLANS

THE STANDARD PLANS LIST APPLICABLE TO THIS CONTRACT IS INCLUDED IN THE NOTICE TO BIDDERS AND SPECIAL PROVISIONS BOOK.

LOCATION MAP

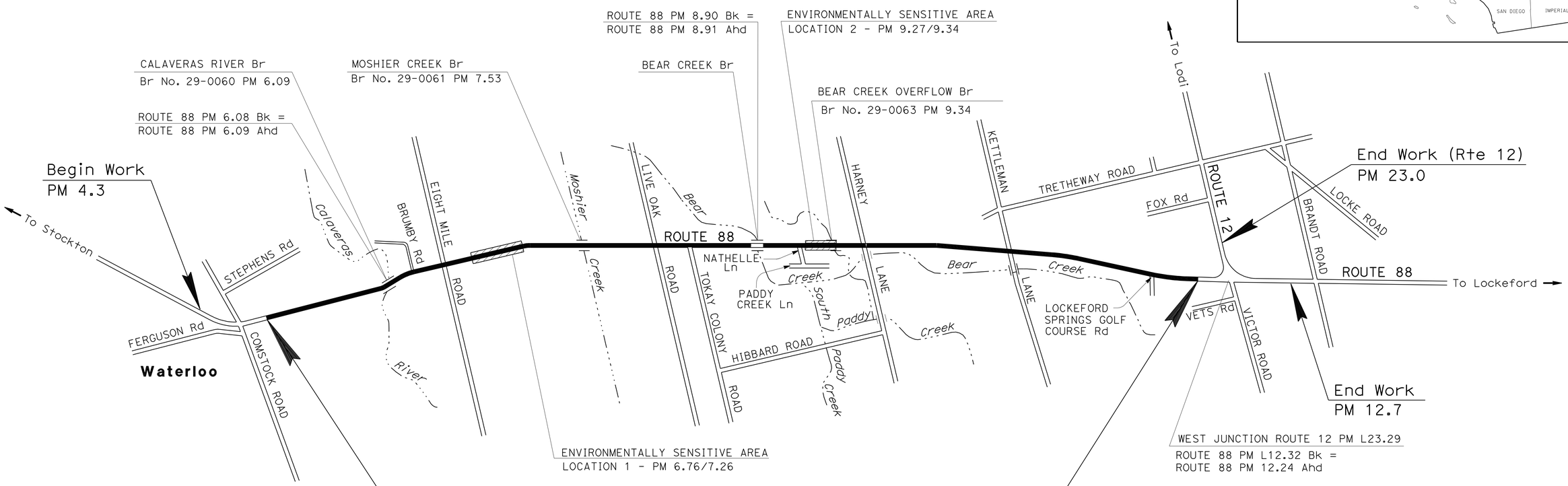

PROJECT MANAGER IORZUA AKUVA

DESIGN ENGINEER MICHAEL HUTCHISON

6/3/11
PROJECT ENGINEER REGISTERED CIVIL ENGINEER — DATE

June 6, 2011
PLANS APPROVAL DATE

REGISTERED PROFESSIONAL ENGINEER — MASON L. LEUNG — No. 71709 — Exp. 12-31-11 — CIVIL — STATE OF CALIFORNIA

THE STATE OF CALIFORNIA OR ITS OFFICERS OR AGENTS SHALL NOT BE RESPONSIBLE FOR THE ACCURACY OR COMPLETENESS OF SCANNED COPIES OF THIS PLAN SHEET.

THE CONTRACTOR SHALL POSSESS THE CLASS (OR CLASSES) OF LICENSE AS SPECIFIED IN THE "NOTICE TO BIDDERS."

NO SCALE

CONTRACT No.	10-0P6004
PROJECT ID	1000020212

LAST REVISION 00-00-00 — DATE PLOTTED => 22-JUN-2011 — TIME PLOTTED => 14:16

Dist	COUNTY	ROUTE	POST MILES TOTAL PROJECT	SHEET No.	TOTAL SHEETS
10	SJ	88	5.0/L12.2	2	21

REGISTERED CIVIL ENGINEER 6/3/11 DATE

6/6/11
PLANS APPROVAL DATE

REGISTERED PROFESSIONAL ENGINEER MASON L. LEUNG No. 71709 Exp. 12-31-11 CIVIL STATE OF CALIFORNIA

THE STATE OF CALIFORNIA OR ITS OFFICERS OR AGENTS SHALL NOT BE RESPONSIBLE FOR THE ACCURACY OR COMPLETENESS OF SCANNED COPIES OF THIS PLAN SHEET.

NOTES:
1. DIMENSIONS OF THE PAVEMENT STRUCTURES (STRUCTURAL SECTIONS) ARE SUBJECT TO TOLERANCES SPECIFIED IN THE STANDARD SPECIFICATIONS.
2. FOR ACCURATE RIGHT OF WAY DATA, CONTACT RIGHT OF WAY ENGINEERING AT THE DISTRICT OFFICE.
3. EXISTING UTILITY FACILITIES HAVE NOT BEEN PLOTTED ON THESE PLANS.
4. FOR REPLACE AC SURFACING AND COLD PLANE AC PAVEMENT LOCATIONS AND DIMENSIONS, SEE SUMMARY OF QUANTITIES.

ABBREVIATION:

RHMA-G - RUBBERIZED HOT MIX ASPHALT (GAP GRADED)

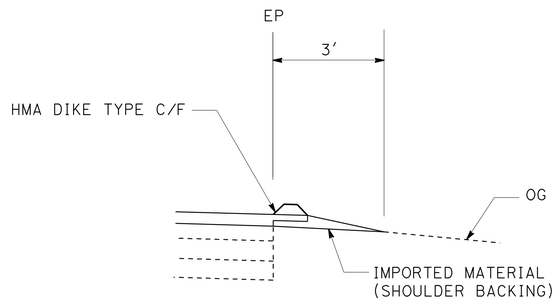

HMA DIKE LOCATIONS

PM 8.80/9.00 (Lt/Rt)

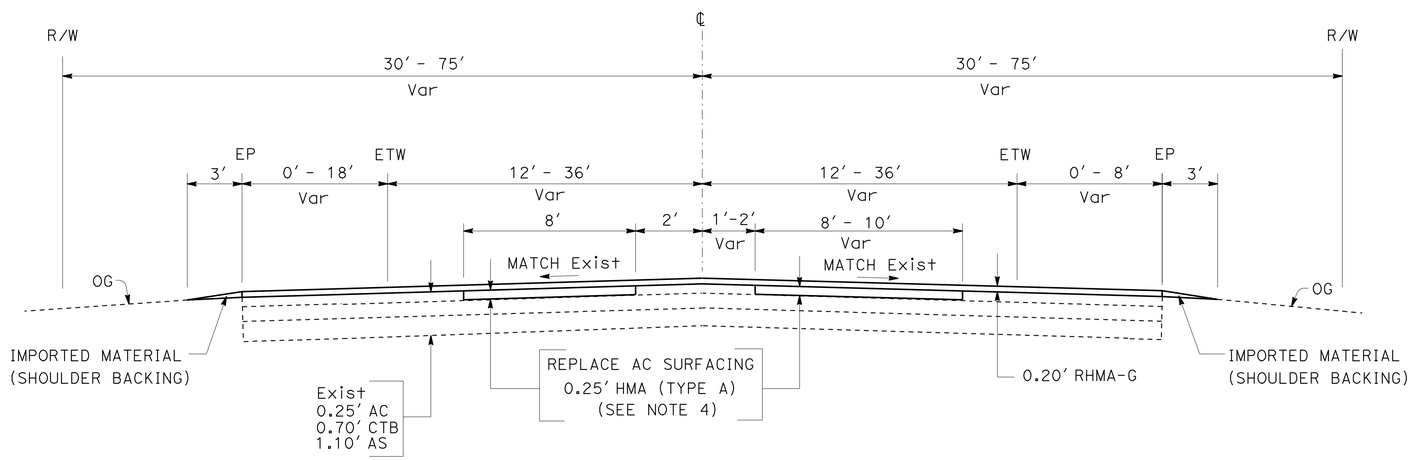

PM 5.00/6.09
PM 6.11/7.52
PM 7.54/8.90
PM 8.93/9.33
PM 9.35/12.00

ROUTE 88

TYPICAL CROSS SECTIONS

NO SCALE

X-1

STATE OF CALIFORNIA - DEPARTMENT OF TRANSPORTATION
Caltrans
DESIGN

FUNCTIONAL SUPERVISOR: MICHAEL HUTCHISON
CALCULATED-DESIGNED BY: HERNANDO RAPOSAS
CHECKED BY: MASON LEUNG
REVISED BY: MCP
DATE REVISED: 04-6-11

LAST REVISION 00-00-00
DATE PLOTTED => 22-JUN-2011
TIME PLOTTED => 14:16

Dist	COUNTY	ROUTE	POST MILES TOTAL PROJECT	SHEET No.	TOTAL SHEETS
10	SJ	88	5.0/L12.2	3	21

REGISTERED CIVIL ENGINEER 6/3/11 DATE

6/6/11
PLANS APPROVAL DATE

REGISTERED PROFESSIONAL ENGINEER MASON L. LEUNG No. 71709 Exp. 12-31-11 CIVIL STATE OF CALIFORNIA

THE STATE OF CALIFORNIA OR ITS OFFICERS OR AGENTS SHALL NOT BE RESPONSIBLE FOR THE ACCURACY OR COMPLETENESS OF SCANNED COPIES OF THIS PLAN SHEET.

LEGEND

- COLD PLANE AC PAVEMENT RHMA-G
- HMA (TYPE A)
- COLD PLANE AC PAVEMENT HMA (TYPE A)
- ENVIRONMENTALLY SENSITIVE AREA (ESA)
- DELINEATOR

ABBREVIATION:

ESA - ENVIRONMENTALLY SENSITIVE AREA
AMA - ARCHEOLOGICAL MONITORING AREA
RHMA-G - RUBBERIZED HOT MIX ASPHALT (GAP GRADED)

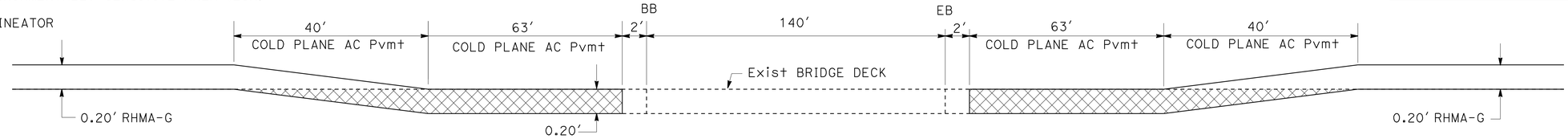

BRIDGE COLD PLANE AC PAVEMENT DETAIL

BEAR CREEK Br

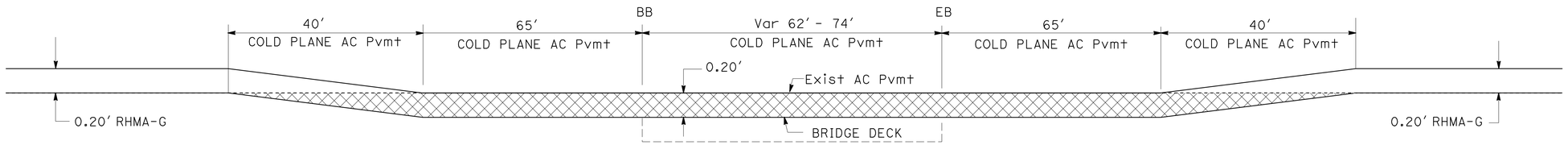

BRIDGE COLD PLANE AC PAVEMENT DETAIL

CALAVERAS Br
MOSHIER CREEK Br
BEAR CREEK OVERFLOW Br

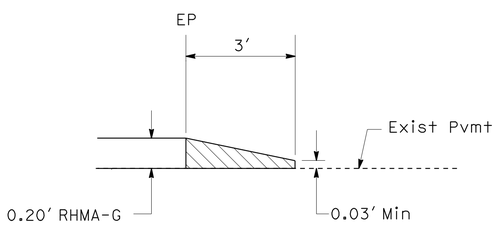

PRIVATE DRIVEWAY CONFORM TAPER

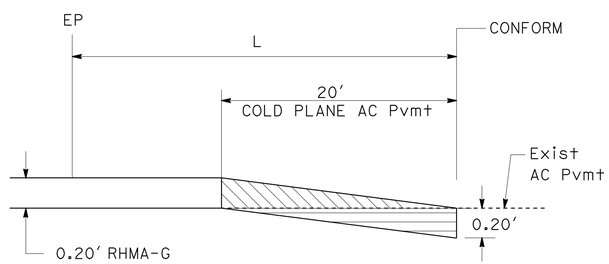

PUBLIC ROAD CONFORM TAPER

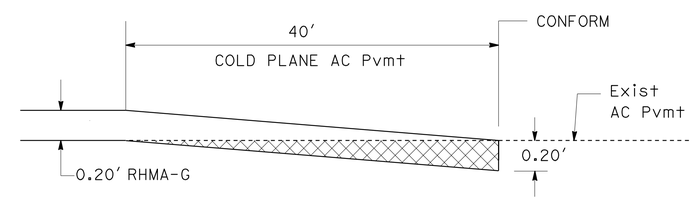

LONGITUDINAL CONFORM TAPER

(AT BEGIN AND END OF PROJECT)

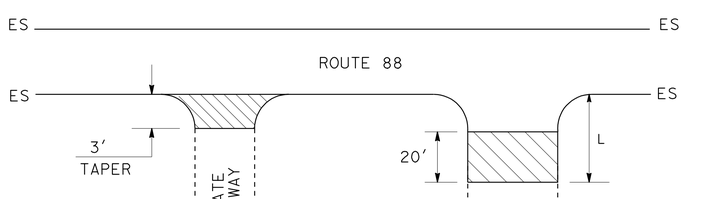

PAVING LIMITS AT PRIVATE DRIVEWAYS AND PUBLIC ROAD INTERSECTIONS

PUBLIC ROAD INTERSECTIONS

PM	SIDE	NAME	L	W
6.28	Lt	BRUMBY Rd	25′	16′
6.52	Lt	EIGHT MILE Rd	50′	72′
6.52	Rt	EIGHT MILE Rd	50′	72′
8.05	Lt	LIVE OAK Rd	35′	33′
8.05	Rt	LIVE OAK Rd	35′	22′
8.31	Rt	TOKAY COLONY Rd	20′	35′
9.25	Rt	NATHELLE Ln	25′	55′
9.61	Lt	HARNEY Ln	20′	43′
9.61	Rt	HARNEY Ln	20′	67′
10.65	Lt	KETTLEMAN Ln	50′	39′
10.65	Rt	KETTLEMAN Ln	50′	27′
11.56	Rt	LOCKEFORD SPRINGS GOLF COURSE Rd	20′	45′

CONSTRUCTION DETAILS

NO SCALE

C-1

REVISED BY MCP | DATE REVISED 06-06-11
HERNANDO RAPOSAS | MASON LEUNG
CALCULATED-DESIGNED BY | CHECKED BY
FUNCTIONAL SUPERVISOR MICHAEL HUTCHISON

STATE OF CALIFORNIA - DEPARTMENT OF TRANSPORTATION
Caltrans® DESIGN

LAST REVISION 00-00-00 | DATE PLOTTED => 22-JUN-2011 | TIME PLOTTED => 14:16

Dist	COUNTY	ROUTE	POST MILES TOTAL PROJECT	SHEET No.	TOTAL SHEETS
10	SJ	88	5.0/L12.2	4	21

REGISTERED CIVIL ENGINEER 6/3/11 DATE

6/6/11
PLANS APPROVAL DATE

REGISTERED PROFESSIONAL ENGINEER MASON L. LEUNG No. 71709 Exp. 12-31-11 CIVIL STATE OF CALIFORNIA

THE STATE OF CALIFORNIA OR ITS OFFICERS OR AGENTS SHALL NOT BE RESPONSIBLE FOR THE ACCURACY OR COMPLETENESS OF SCANNED COPIES OF THIS PLAN SHEET.

PRIVATE ROAD INTERSECTIONS

PM	SIDE	PM	SIDE
5.17	R†	8.92	L† & R†
5.21	L†	9.02	R†
5.36	R†	9.07	L†
5.49		9.15	
5.71	L† & R†	9.22	
5.72	R†	9.36	R†
5.78	L†	9.39	
5.84	R†	9.42	
5.85		9.44	
5.87	L†	9.45	
5.99	R†	9.46	
6.04	L† & R†	9.49	
6.12	L†	9.55	
6.13	R†	9.70	L†
6.28	L†	9.71	
6.40		9.72	
6.72		9.73	
6.76		9.74	
7.00	R†	9.76	
7.03	L†	10.04	
7.04	R†	10.15	
7.12		10.17	
7.17	L†	10.26	R†
7.18	R†	10.47	L†
7.50		10.57	
7.51	L†	10.60	
7.53	R†	10.72	R†
7.54	L†	10.75	L†
7.87	R†	10.78	R†
7.90	L†	10.84	
8.10	R†	10.92	
8.15		10.93	
8.22		10.99	
8.26		11.04	
8.34		11.07	L†
8.43		11.10	R†
8.51	L†	11.11	L†
8.52	R†	11.33	
8.71		11.54	
8.72		11.72	R†
8.80		11.73	L†
8.84	L†	11.90	
8.88		11.95	

NOTE: PRIVATE ROAD INTERSECTION LOCATIONS ARE APPROXIMATE AND ARE TO BE DETERMINED BY THE ENGINEER.

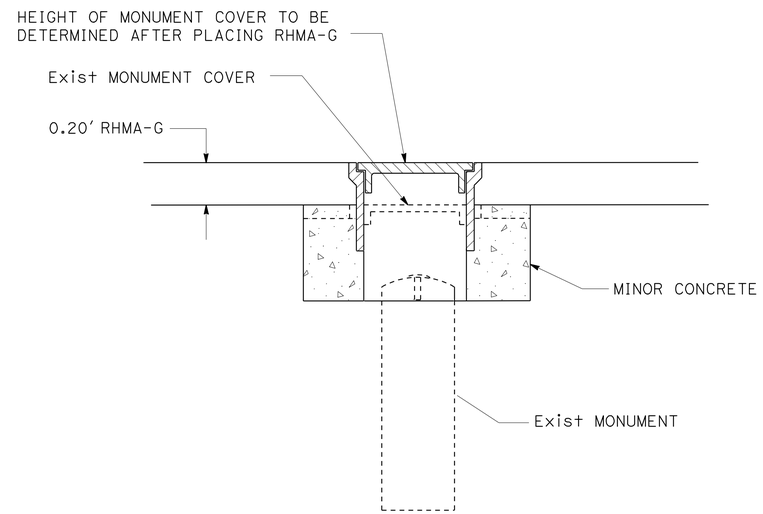

ADJUST FRAME AND COVER TO GRADE (SURVEY MONUMENT)

(FOR ADDITIONAL INFORMATION SEE STANDARD PLAN A74)

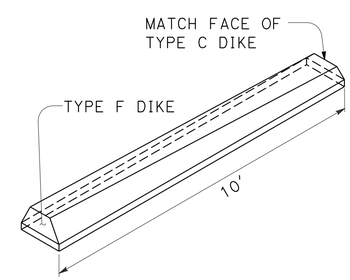

HMA DIKE TRANSITION DETAIL

CONSTRUCTION DETAILS

NO SCALE

C-2

STATE OF CALIFORNIA - DEPARTMENT OF TRANSPORTATION
DESIGN
FUNCTIONAL SUPERVISOR: MICHAEL HUTCHISON
CALCULATED-DESIGNED BY: HERNANDO RAPOSAS
CHECKED BY: MASON LEUNG
REVISED BY: MCP
DATE REVISED: 03/16/11

LAST REVISION 00-00-00 | DATE PLOTTED => 22-JUN-2011 | TIME PLOTTED => 14:16

Dist	COUNTY	ROUTE	POST MILES TOTAL PROJECT	SHEET No.	TOTAL SHEETS
10	SJ	88	5.0/L12.2	5	21

REGISTERED CIVIL ENGINEER 6/3/11 DATE

6/6/11
PLANS APPROVAL DATE

REGISTERED PROFESSIONAL ENGINEER MASON L. LEUNG No. 71709 Exp. 12-31-11 CIVIL STATE OF CALIFORNIA

THE STATE OF CALIFORNIA OR ITS OFFICERS OR AGENTS SHALL NOT BE RESPONSIBLE FOR THE ACCURACY OR COMPLETENESS OF SCANNED COPIES OF THIS PLAN SHEET.

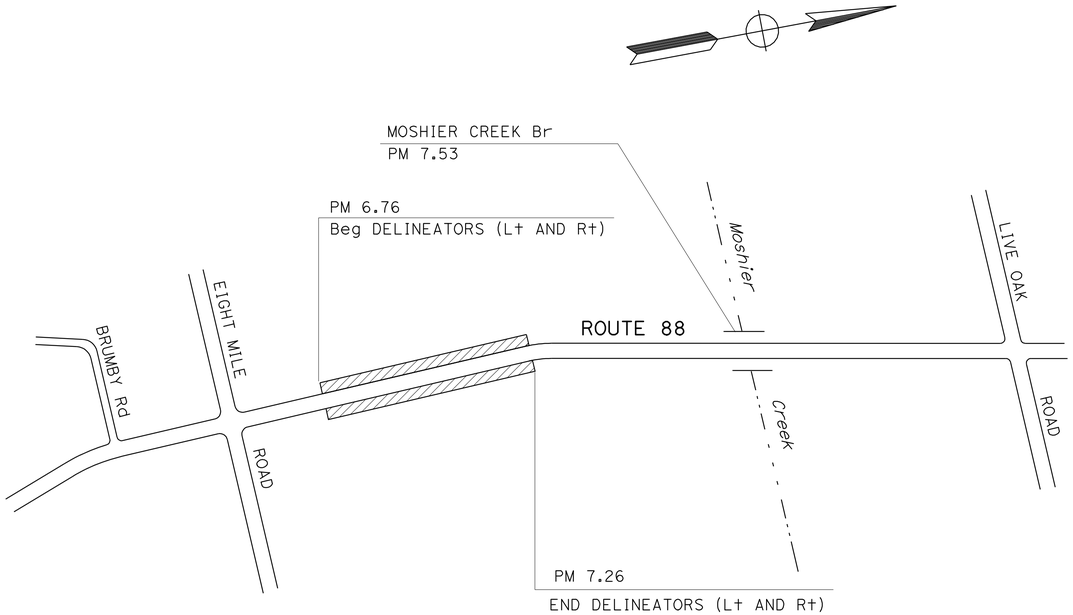

PM 6.76 TO PM 7.26

LOCATION 1

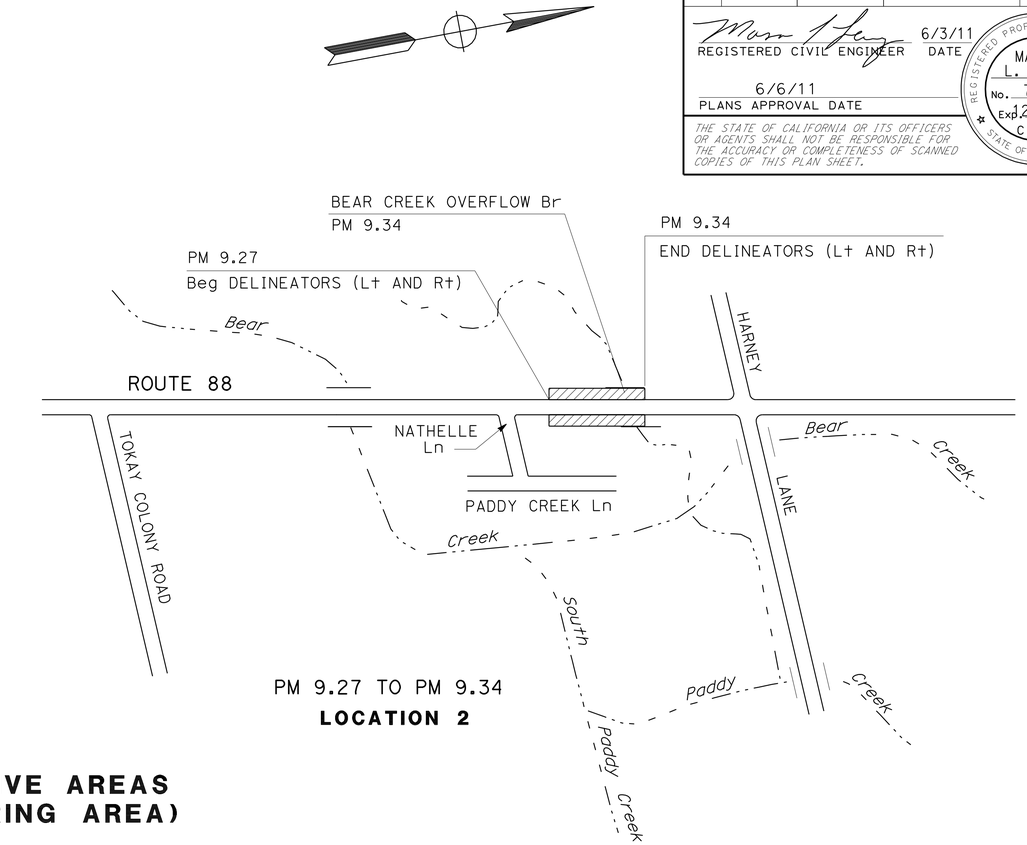

PM 9.27 TO PM 9.34

LOCATION 2

ENVIRONMENTALLY SENSITIVE AREAS (ARCHAEOLOGICAL MONITORING AREA)

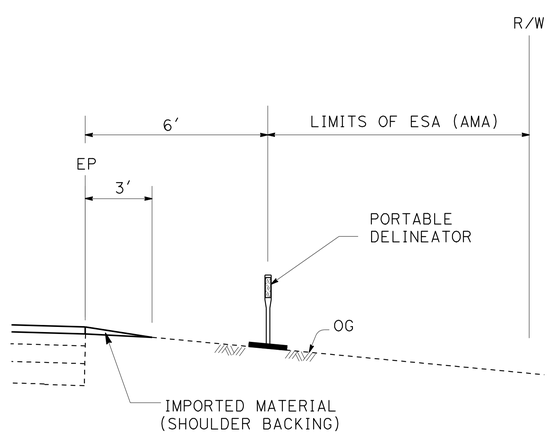

SECTION A-A

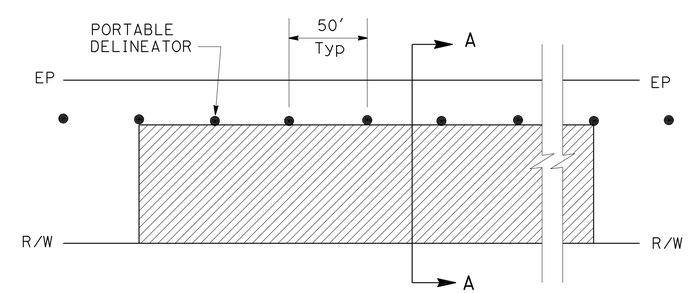

PLAN

PORTABLE DELINEATOR DETAIL FOR ESA

(DELINEATORS SPACED AT 50')

CONSTRUCTION DETAILS

NO SCALE

C-3

STATE OF CALIFORNIA - DEPARTMENT OF TRANSPORTATION
Caltrans DESIGN

FUNCTIONAL SUPERVISOR: MICHAEL HUTCHISON
CALCULATED-DESIGNED BY: HERNANDO RAPOSAS
CHECKED BY: MASON LEUNG
REVISED BY: MCP
DATE REVISED: 06/06/11

LAST REVISION 00-00-00
DATE PLOTTED => 22-JUN-2011
TIME PLOTTED => 14:16

Dist	COUNTY	ROUTE	POST MILES TOTAL PROJECT	SHEET No.	TOTAL SHEETS
10	SJ	88	5.0/L12.2	6	21

REGISTERED CIVIL ENGINEER 6/3/11 DATE

6/6/11
PLANS APPROVAL DATE

REGISTERED PROFESSIONAL ENGINEER
QUAN TRINH
No. 75493
Exp. 06/30/12
CIVIL
STATE OF CALIFORNIA

THE STATE OF CALIFORNIA OR ITS OFFICERS OR AGENTS SHALL NOT BE RESPONSIBLE FOR THE ACCURACY OR COMPLETENESS OF SCANNED COPIES OF THIS PLAN SHEET.

STATIONARY MOUNTED CONSTRUCTION AREA SIGNS

SIGN	SIGN CODE	PANEL SIZE	No. OF POSTS AND SIZE	SIGN MESSAGE	No. OF SIGNS
A	W20-1	36" x 36"	1 - 4" x 6"	ROAD WORK AHEAD	7
B	G20-2	36" x 18"	1 - 4" x 4"	END ROAD WORK	10
C	W20-1	30" x 30"	1 - 4" x 6"	ROAD WORK AHEAD	8
D	G20-1	36" x 18"	1 - 4" x 4"	ROAD WORK NEXT 7 MILES	2

NOTE: EXACT SIGN LOCATIONS TO BE DETERMINED BY THE ENGINEER.

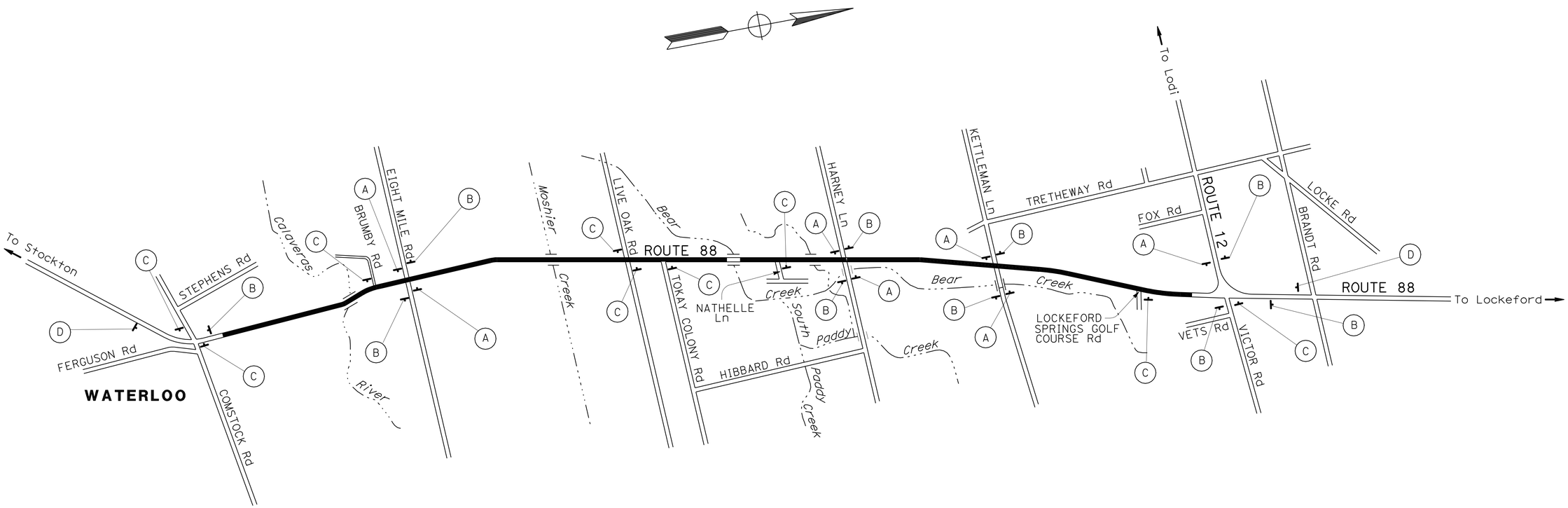

THIS PLAN ACCURATE FOR CONSTRUCTION AREA SIGN WORK ONLY.

CONSTRUCTION AREA SIGNS

NO SCALE

CS-1

STATE OF CALIFORNIA - DEPARTMENT OF TRANSPORTATION
Caltrans
TRAFFIC DESIGN

FUNCTIONAL SUPERVISOR: MOHAMMED QATAMI
CALCULATED-DESIGNED BY: QUAN H. TRINH
CHECKED BY: CECILE NGUYEN
REVISED BY: CN
DATE REVISED: 4/29/11

LAST REVISION 00-00-00
DATE PLOTTED => 22-JUN-2011
TIME PLOTTED => 14:17

Dist	COUNTY	ROUTE	POST MILES TOTAL PROJECT	SHEET No.	TOTAL SHEETS
10	SJ	88	5.0/L12.2	7	21

REGISTERED CIVIL ENGINEER 6/3/11 DATE

6/6/11
PLANS APPROVAL DATE

REGISTERED PROFESSIONAL ENGINEER QUAN TRINH No. 75493 Exp 06/30/12 CIVIL STATE OF CALIFORNIA

THE STATE OF CALIFORNIA OR ITS OFFICERS OR AGENTS SHALL NOT BE RESPONSIBLE FOR THE ACCURACY OR COMPLETENESS OF SCANNED COPIES OF THIS PLAN SHEET.

PAVEMENT DELINEATION ITEMS

LOCATION	REMOVE THERMOPLASTIC TRAFFIC STRIPE	THERMOPLASTIC TRAFFIC STRIPE (SPRAYABLE)								REMOVE THERMOPLASTIC PAVEMENT MARKING	THERMOPLASTIC PAVEMENT MARKING								REMOVE PAVEMENT MARKER (N)	PAVEMENT MARKER (RETROREFLECTIVE)		
		4" YELLOW				4" WHITE			8" WHITE		TYPE II(R) ARROW	TYPE III (L)/(R) ARROW	TYPE VI ARROW	STOP	LIMIT LINE	SIGNAL	AHEAD	CROSS WALK		TYPE D	TYPE G	TYPE H
		Det 6	Det 19	Det 22	Det 29	Det 12	Det 27B	Det 27C	Det 38													
PM/PM	LF	LF								SQFT	SQFT								EA	EA		
5.00/5.30		950.4		633.6			3168												75	75		
5.30/5.80		2640					5280												112	56		
5.80/5.87			369.6				739.2												50	9		16
5.87/6.31				2323.2			4646.4			63						32	31		392	196		
6.31/6.40					960		950.4												84	42		
6.38/6.52	906			463		1166	1161.6		453	451	135	126	126		64				172	40	46	
6.52/6.64	1600			470		1170	1267.2		800	378		252	126						202	40	61	
6.62/6.77				316.8	944		1584			63						32	31		140	70		
6.77/6.93		844.8					1689.6												38	19		
6.93/7.07			739.2				1478.4												96	16		32
7.07/7.12				264			528												48	24		
7.12/7.27			792				1584												104	18		34
7.27/7.38		580.8					1161.6												26	13		
7.38/7.45			369.6				739.2												50	9		16
7.45/7.55				528			1056												92	46		
7.55/7.67			580.8				1267.2												76	13		25
7.67/7.95		1531.2					2956.8												66	33		
7.95/8.03			422.4				844.8												58	10		19
8.04/8.11			369.6				596.2	143											50	9		16
8.11/8.22		580.8					1161.6												26	13		
8.22/8.30			369.6				675.2	64											50	9		16
8.30/8.37			369.6				739.2												50	9		16
8.37/8.77		2112					4224												90	45		
SUBTOTAL	2506	9240	4382.4	4998.6	1904	2336	39,498.6	207	1253	955	135	378	252		64	64	62		2147	814	107	190
TOTAL 1	2506	63,819.6								955	955									1111		

NOTE: (N) - NOT A SEPARATE PAY ITEM, FOR INFORMATION ONLY.

PAVEMENT DELINEATION QUANTITIES
PDQ-1

REVISED BY	DATE REVISED	QUAN H. TRINH	CECILE NGUYEN	CALCULATED-DESIGNED BY	CHECKED BY	FUNCTIONAL SUPERVISOR	MOHAMMED QATAMI
QT	06/06/11						

STATE OF CALIFORNIA - DEPARTMENT OF TRANSPORTATION
Caltrans® TRAFFIC DESIGN

LAST REVISION 00-00-00 | DATE PLOTTED => 22-JUN-2011 | TIME PLOTTED => 14:17

Dist	COUNTY	ROUTE	POST MILES TOTAL PROJECT	SHEET No.	TOTAL SHEETS
10	SJ	88	5.0/L12.2	8	21

REGISTERED CIVIL ENGINEER 6/3/11 DATE

6/6/11
PLANS APPROVAL DATE

REGISTERED PROFESSIONAL ENGINEER QUAN TRINH No. 75493 Exp. 06/30/12 CIVIL STATE OF CALIFORNIA

THE STATE OF CALIFORNIA OR ITS OFFICERS OR AGENTS SHALL NOT BE RESPONSIBLE FOR THE ACCURACY OR COMPLETENESS OF SCANNED COPIES OF THIS PLAN SHEET.

PAVEMENT DELINEATION ITEMS

LOCATION	REMOVE THERMOPLASTIC TRAFFIC STRIPE	THERMOPLASTIC TRAFFIC STRIPE (SPRAYABLE)								REMOVE THERMOPLASTIC PAVEMENT MARKING	THERMOPLASTIC PAVEMENT MARKING								REMOVE PAVEMENT MARKER (N)	PAVEMENT MARKER (RETROREFLECTIVE)		
		4" YELLOW				4" WHITE			8" WHITE		TYPE II(R) ARROW	TYPE III (L)/(R) ARROW	TYPE VI ARROW	STOP	LIMIT LINE	SIGNAL	AHEAD	CROSS WALK		TYPE D	TYPE G	TYPE H
		Det 6	Det 19	Det 22	Det 29	Det 12	Det 27B	Det 27C	Det 38													
PM/PM	LF	LF								SQFT	SQFT								EA	EA		
8.77/8.86			475.2				950.4												64	11		21
8.86/9.61	160			3751.6			7593.6	326.4	80	130		42			25	32	31		636	314	4	
9.61/9.68	162			369.6			739.2		81	67		42			25				72	32	4	
9.68/9.76			422.4				844.8			63						32	31		58	10		19
9.76/10.43		3537.6					7075.2												150	75		
10.43/10.48			264				528												38	7		12
10.48/10.65	306.4			792			1695.9		153.2	130		84			46				150	68	7	
10.65/10.76	80			580.8			1161.6		40	177.6		42						135.6	106	50	3	
10.76/10.85			475.2				950.4												64	11		21
10.85/11.09		1267.2					2534.4			63						32	31		54	27		
11.09/11.36			1425.6				2851.2												182	31		60
11.36/11.55	844.8			1003.2			2006.4		422.4	126		126							210	86	19	
11.55/11.78	844.8			1161.6			2328.8	100	422.4	126		126							226	94	19	
11.78/12.00			1161.6				2323.2												148	25		49
12.00/12.10		528					1056												24	12		
12.10/12.20				528			1056			63						32	31		46	46		
BRUMBY ROAD										48				22	26							
8-MILE ROAD	200			100			200		100	172		84			88				16	12	4	
LIVE OAK ROAD				59			37			109				44	65				8	8		
TOKAY COLONY RD				14			15			47				22	25							
NATHELLE LANE				18						60				22	38							
HARNEY LANE				40			80			38					38				4	4		
KETTLEMAN LANE				58			100			179								179	8	8		
SPRING GOLF COURSE RD	76			20					38	78				44	34						3	
SUBTOTAL	2674	5332.8	4224	8495.8			36,127.1	426.4	1337	1676.6		546		154	410	128	124	314.6	2264	931	63	182
TOTAL 2	2674	55,943.1								1676.6	1676.6								2264	1176		
TOTAL 1	2506	63,819.6								955	955								2147	1111		
TOTAL	5180	119,762.7								2631.6	2631.6									2287		

NOTE: (N) - NOT A SEPARATE PAY ITEM, FOR INFORMATION ONLY.

DELINEATORS (CLASS 1)

LOCATION PM/PM	DELINEATOR	
	TYPE E	TYPE F
	EA	EA
5.96/5.98		2
6.46/6.54	4	6
8.01/8.06	4	6
8.27/8.31	2	3
9.20/9.25	2	3
9.57/9.62	2	
10.6/10.66	4	6
11.52/11.57	2	
SUBTOTAL	20	26
TOTAL	46	

PAVEMENT DELINEATION QUANTITIES
PDQ-2

REVISED BY	DATE REVISED	QUAN H. TRINH	CECILE NGUYEN	CALCULATED-DESIGNED BY	CHECKED BY	FUNCTIONAL SUPERVISOR	MOHAMMED QATAMI	QT	06/06/11

STATE OF CALIFORNIA - DEPARTMENT OF TRANSPORTATION
Caltrans
TRAFFIC DESIGN

LAST REVISION 00-00-00 | DATE PLOTTED => 22-JUN-2011 | TIME PLOTTED => 14:17

Dist	COUNTY	ROUTE	POST MILES TOTAL PROJECT	SHEET No.	TOTAL SHEETS
10	SJ	88	5.0/L12.2	9	21

REGISTERED CIVIL ENGINEER 6/3/11 DATE

6/6/11
PLANS APPROVAL DATE

REGISTERED PROFESSIONAL ENGINEER MASON L. LEUNG No. 71709 Exp. 12-31-11 CIVIL STATE OF CALIFORNIA

THE STATE OF CALIFORNIA OR ITS OFFICERS OR AGENTS SHALL NOT BE RESPONSIBLE FOR THE ACCURACY OR COMPLETENESS OF SCANNED COPIES OF THIS PLAN SHEET.

COLD PLANE AC PAVEMENT (MAIN LINE)

LOCATION PM / PM	(N) LENGTH	(N) WIDTH	COLD PLANE AC PAVEMENT SQYD	DESCRIPTION
5.00/5.01	40′	52′	231.1	Beg PROJECT
6.08/6.09	40′	26′	115.6	BEFORE MBGR
6.09/6.10	65′	26′	187.8	MBGR LOCATION
6.10/6.11	74′	26′	213.8	CALAVERAS RIVER - BRIDGE DECK
6.11/6.12	65′	26′	187.8	MBGR LOCATION
6.12/6.13	40′	26′	115.6	AFTER MBGR
7.51/7.52	40′	28′	124.4	BEFORE MBGR
7.52/7.53	65′	28′	202.2	MBGR LOCATION
7.53/7.54	62′	26′	179.1	MOSHIER CREEK - BRIDGE DECK
7.54/7.55	65′	28′	202.2	MBGR LOCATION
7.55/7.56	40′	28′	124.4	AFTER MBGR
8.89/8.90	40′	32′	142.2	BEFORE MBGR
8.90/8.91	65′	32′	231.1	MBGR LOCATION - BEAR CREEK Br
8.94/8.95	65′	28′	202.2	MBGR LOCATION - BEAR CREEK Br
8.95/8.96	40′	28′	124.4	AFTER MBGR
9.33/9.34	40′	28′	124.4	BEAR CREEK OVERFLOW - Beg BRIDGE
9.34/9.35	68′	28′	211.6	BEAR CREEK OVERFLOW - BRIDGE DECK
9.35/9.36	40′	28′	124.4	BEAR CREEK OVERFLOW - END BRIDGE
12.19/L12.20	40′	44′	195.6	END PROJECT
		TOTAL	3239.9*	

COLD PLANE AC PAVEMENT (PUBLIC ROADS)

LOCATION	PM	RIGHT (N) LENGTH	RIGHT (N) WIDTH	LEFT (N) LENGTH	LEFT (N) WIDTH	COLD PLANE AC PAVEMENT SQYD
BRUMBY Rd	6.28			20′	16′	35.6
EIGHT MILE Rd	6.52	20′	72′	20′	72′	320
LIVE OAK Rd	8.05	20′	22′	20′	33′	122.2
TOKAY COLONY Rd	8.31	20′	35′			77.8
NATHELLE Ln	9.25	20′	55′			122.2
HARNEY Ln	9.61	20′	67′	20′	43′	244.4
KETTLEMAN Ln	10.65	20′	27′	20′	39′	146.7
LOCKEFORD SPRINGS GOLF COURSE Rd	11.56	20′	45′			100
					TOTAL	1168.9 *

ROADWAY ITEMS

LOCATION PM / PM	RUBBERIZED HOT MIX ASPHALT (GAP GRADED)	HOT MIX ASPHALT (TYPE A)	IMPORTED MATERIAL (SHOULDER BACKING)	TACK COAT	COLD PLANE AC PAVEMENT
	TON				SQYD
5.0 / 6.52 (EIGHT MILE Rd)	4433.4		485.2	10.7	3239.9
6.52 / 8.05 (LIVE OAK Rd)	4475.4		489.7	10.8	
8.05 / 9.61 (HARNEY Ln)	4559.5		498.9	10.9	
9.61 / 10.65 (KETTLEMAN Ln)	3025.6		331.1	7.3	
10.65 / L12.2	4517.4		494.3	10.9	
PUBLIC ROADS		518.7		1.2	1168.9
PRIVATE DRIVEWAYS		61.2		0.2	
HMA DIKE		28			
TOTAL	21,011.3	607.9	2299.2	52.0	4408.8

NOTES: 1. (N) - NOT A SEPARATE PAY ITEM, FOR INFORMATION ONLY.
2. * - TOTAL INCLUDED IN ROADWAY ITEMS TABLE.

REPLACE AC SURFACING

LOCATION PM / PM	SIDE	(N) LENGTH	(N) WIDTH	(N) AC DEPTH	REPLACE AC SURFACING CY
5.40/5.50	EB	517′	8′	0.25′	38.3
5.51/5.56	EB	280′			20.7
5.58/5.72	EB	739′			54.7
5.75/5.86	EB	560′			41.5
6.03/6.26	EB	1225′			90.7
6.50/6.51	EB	32′	10′		2.9
6.78/7.00	EB	1188′	8′		88.0
7.09/7.25	EB	845′			62.6
7.42/7.53	EB	628′			46.5
7.88/7.94	EB	343′			25.4
7.99/8.07	EB	396′			29.3
8.50/8.89	EB	2096′			155.3
9.00/9.18	EB	924′			68.4
9.25/9.34	EB	475′			35.2
9.44/9.60	EB	871′			64.5
9.65/10.01	EB	1938′			143.5
10.04/10.14	EB	486′			36.0
10.16/10.27	EB	597′			44.2
10.27/10.72	EB	2355′			174.4
11.15/11.99	EB	2107′			156.1
5.31/5.55	WB	1267′			93.9
5.73/5.98	WB	1294′			95.9
6.01/6.28	WB	1431′			106.0
6.49/6.93	WB	2307′			170.9
6.99/7.37	WB	2006′			148.6
7.45/8.00	WB	2904′			215.1
8.16/8.78	WB	3279′			242.9
8.90/9.22	WB	1690′			125.2
9.37/9.50	WB	655′			48.5
9.54/9.95	WB	2160′			160.0
9.96/10.20	WB	1262′			93.5
10.23/10.44	WB	1093′			81.0
10.44/11.04	WB	3168′			234.7
11.23/11.26	WB	169′			12.5
11.32/11.47	WB	824′			61.0
11.58/11.72	WB	713′			52.8
11.80/11.90	WB	528′			39.1
11.96/12.00	WB	211′			15.6
12.13/L12.20	WB	359′			26.6
				TOTAL	3402

ADJUST FRAME AND COVER TO GRADE

PM	SIDE	EA
6.52	R+	1
8.05	L+	1
10.65	L+	1
	TOTAL	3

DIKE ITEMS

LOCATION PM / PM	SIDE	REMOVE AC DIKE LF	PLACE HMA DIKE (TYPE F) LF	PLACE HMA DIKE (TYPE C) LF	HOT MIX ASPHALT (TYPE A) TON
8.00/9.00	R+		1020	65	28
8.80/9.00	L+	1085	1035	50	
	R+	1085			
	TOTAL	2170	2055	115	28*

PORTABLE DELINEATORS (FOR ESA)

LOCATION	PM / PM	SIDE	PORTABLE DELINEATOR EA
1	6.76/7.26	L+	55
		R+	55
2	9.27/9.34	L+	10
		R+	10
TOTAL			130

SUMMARY OF QUANTITIES
Q-1

REVISED BY	DATE REVISED	CALCULATED-DESIGNED BY	CHECKED BY	FUNCTIONAL SUPERVISOR
MCP	06/06/11	HERNANDO RAPOSAS	MASON LEUNG	MICHAEL HUTCHISON

STATE OF CALIFORNIA - DEPARTMENT OF TRANSPORTATION
Caltrans DESIGN

LAST REVISION 00-00-00 | DATE PLOTTED => 22-JUN-2011 | TIME PLOTTED => 14:17

Dist	COUNTY	ROUTE	POST MILES TOTAL PROJECT	SHEET No.	TOTAL SHEETS
10	SJ	88	5.0/L12.0	10	21

REGISTERED ELECTRICAL ENGINEER 6/6/11 DATE

6/6/11
PLANS APPROVAL DATE

REGISTERED PROFESSIONAL ENGINEER Jaspal Singh No. E16657 Exp. 6/30/12 ELECTRICAL STATE OF CALIFORNIA

THE STATE OF CALIFORNIA OR ITS OFFICERS OR AGENTS SHALL NOT BE RESPONSIBLE FOR THE ACCURACY OR COMPLETENESS OF SCANNED COPIES OF THIS PLAN SHEET.

LEGEND: (FOR SHEETS E-1 THROUGH E-3)

1. PIEZO AXLE SENSORS AND LOOP DETECTORS AT 280′ FROM LIMIT LINE, SEE INSTALLATION DETAILS ON SHEET E-4.

2. Exist 120/240 V, 1Ø, 3-WIRE, TYPE III-CF SERVICE EQUIPMENT ENCLOSURE WITH THE FOLLOWING CIRCUIT BREAKERS:

CTID No. 10290880009594T

AMPERES	VOLTS	POLES	NAMEPLATE	METER	PEC TYPE
100	240	2	MAIN BREAKER	YES	-
50	120	1	TRAFFIC SIGNALS	YES	-
15	120	1	TDC	YES	-
15	120	1	FLASHING BEACON	YES	-
15	120	1	FLASHING BEACON	YES	-
30	120	1	VCS 4	YES	-

CTID No. 10290880009594L

AMPERES	VOLTS	POLES	NAMEPLATE	METER	PEC TYPE
100	240	2	MAIN BREAKER	YES	-
30	240	2	HIGHWAY LIGHTING	YES	-
15	120	1	LIGHTING CONTROL	YES	V
15	120	1	SPARE	YES	-

3. MODEL 334 CABINET WITH WIRELESS MODEM AND ATC FOR VCS.

4. INSTALL 30 AMPERE, 120 V, 1P CIRCUIT BREAKER AND LABEL AS VCS

NOTES:

1. Exist SIGNAL AND LIGHTING DETAILS NOT SHOWN.
2. AB Exist LOOP DETECTORS AND INSTALL LOOP DETECTORS AS SHOWN.
3. LOOP DETECTORS IN THRU LANE SHALL BE SPLICED IN PB AS SHOWN IN DETAIL A ON THIS SHEET. TYPE D LOOP SHALL HAVE FIVE TURNS.
4. FOR ACCURATE RIGHT OF WAY DATA, CONTACT RIGHT OF WAY ENGINEERING AT THE DISTRICT OFFICE.

ABBREVIATIONS:

PAS - PIEZO AXLE SENSOR
STC - SCREENED TRANSMISSION CABLE
PG&E - PACIFIC GAS AND ELECTRIC COMPANY
VCS - VEHICLE CLASSIFICATION STATION
ATC - AUTOMATED TRAFFIC COUNTER

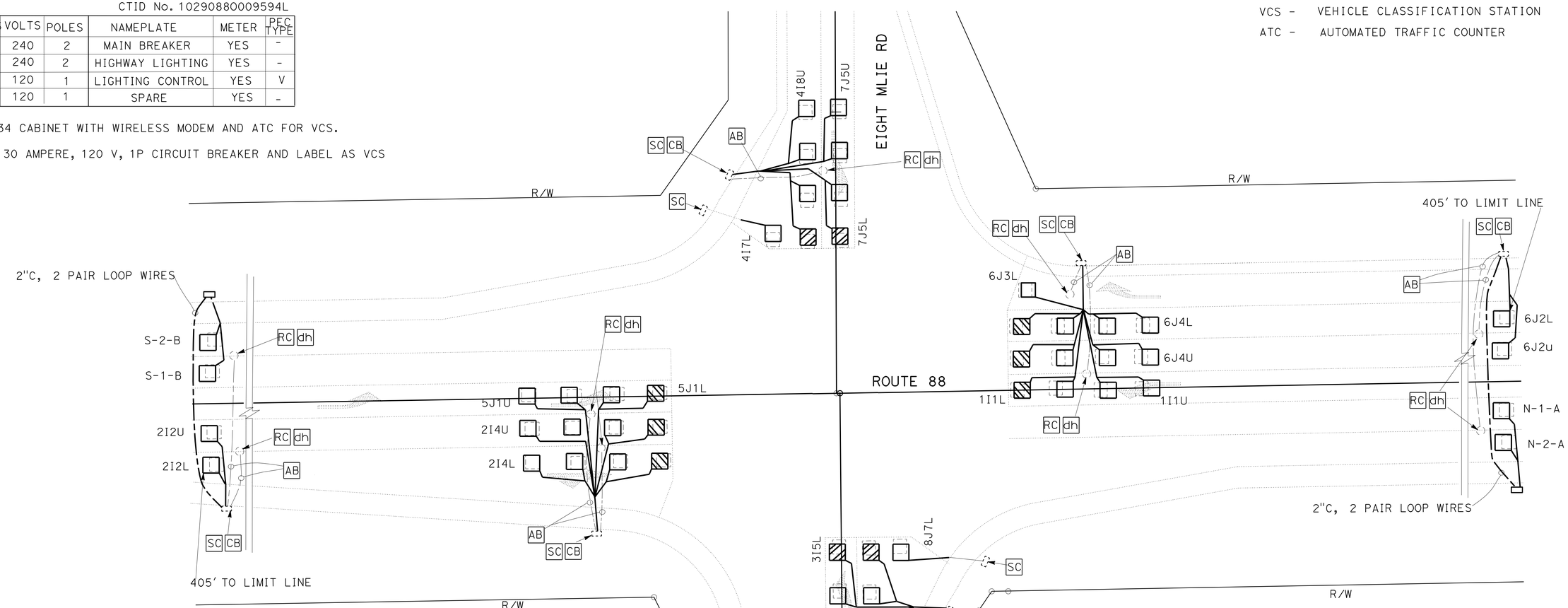

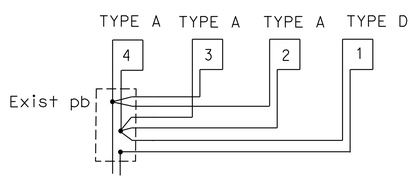

TYPICAL LOOP CONNECTIONS

DETAIL A

THIS PLAN IS ACCURATE FOR ELECTRICAL WORK ONLY.

MODIFY SIGNAL
(LOCATION 1)

NO SCALE

E-1

STATE OF CALIFORNIA - DEPARTMENT OF TRANSPORTATION
Caltrans
ELECTRICAL DESIGN

FUNCTIONAL SUPERVISOR: ALI BAKHDOUD
CALCULATED-DESIGNED BY: JASPAL SINGH
CHECKED BY: FRED IYASERE
REVISED BY: JS
DATE REVISED: 06-06-11

LAST REVISION 05-23-11
DATE PLOTTED => 22-JUN-2011
TIME PLOTTED => 14:17

Dist	COUNTY	ROUTE	POST MILES TOTAL PROJECT	SHEET No.	TOTAL SHEETS
10	SJ	88	5.0/L12.0	11	21

REGISTERED ELECTRICAL ENGINEER — DATE 6/6/11

PLANS APPROVAL DATE 6/6/11

REGISTERED PROFESSIONAL ENGINEER Jaspal Singh No. E16657 Exp. 6/30/12 ELECTRICAL STATE OF CALIFORNIA

THE STATE OF CALIFORNIA OR ITS OFFICERS OR AGENTS SHALL NOT BE RESPONSIBLE FOR THE ACCURACY OR COMPLETENESS OF SCANNED COPIES OF THIS PLAN SHEET.

NOTES:

1. FOR LEGEND AND SCHEDULE, SEE SHEET E-1.
2. FOR ACCURATE RIGHT OF WAY DATA, CONTACT RIGHT OF WAY ENGINEERING AT THE DISTRICT OFFICE.

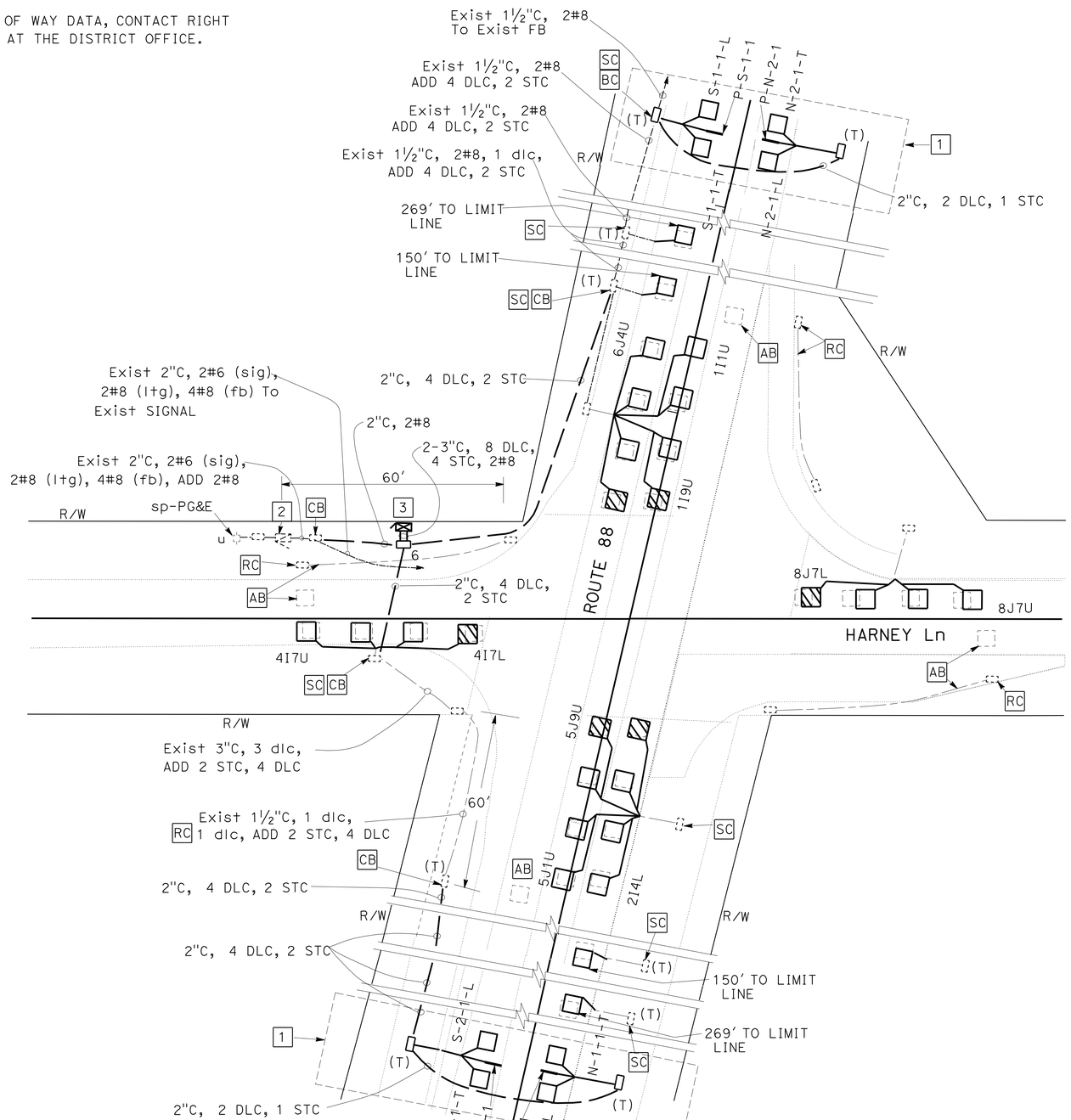

THIS PLAN IS ACCURATE FOR ELECTRICAL WORK ONLY.

VEHICLE CLASSIFICATION STATION MODIFY SIGNAL

(LOCATION 2)

NO SCALE

E-2

STATE OF CALIFORNIA - DEPARTMENT OF TRANSPORTATION

Caltrans® **ELECTRICAL DESIGN**

FUNCTIONAL SUPERVISOR: ALI BAKHDOUD

CALCULATED-DESIGNED BY: JASPAL SINGH

CHECKED BY: FRED IYASERE

REVISED BY: JS

DATE REVISED: 06-06-11

LAST REVISION 05-23-11

DATE PLOTTED => 22-JUN-2011

TIME PLOTTED => 14:17

Dist	COUNTY	ROUTE	POST MILES TOTAL PROJECT	SHEET No.	TOTAL SHEETS
10	SJ	88	5.0/L12.0	12	21

REGISTERED ELECTRICAL ENGINEER 6/6/11 DATE

6/6/11
PLANS APPROVAL DATE

REGISTERED PROFESSIONAL ENGINEER
Jaspal Singh
No. E16657
Exp. 6/30/12
ELECTRICAL
STATE OF CALIFORNIA

THE STATE OF CALIFORNIA OR ITS OFFICERS OR AGENTS SHALL NOT BE RESPONSIBLE FOR THE ACCURACY OR COMPLETENESS OF SCANNED COPIES OF THIS PLAN SHEET.

NOTES:

1. FOR LEGEND AND SCHEDULE, SEE SHEET E-1.

2. FOR ACCURATE RIGHT OF WAY DATA, CONTACT RIGHT OF WAY ENGINEERING AT THE DISTRICT OFFICE.

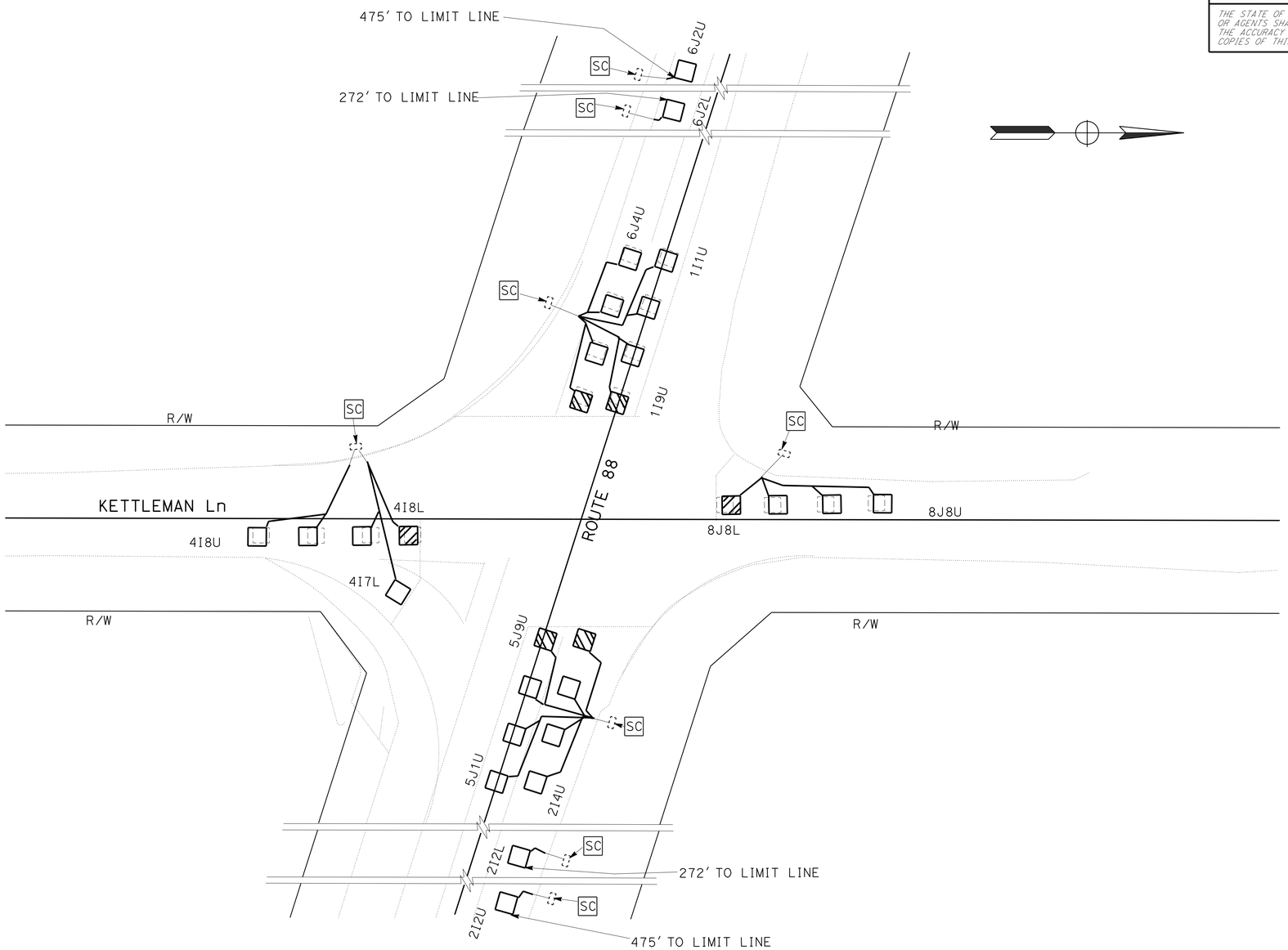

THIS PLAN IS ACCURATE FOR ELECTRICAL WORK ONLY.

MODIFY SIGNAL
(LOCATION 3)

NO SCALE

E-3

REVISED BY	DATE REVISED
JS	06-06-11

JASPAL SINGH — CALCULATED-DESIGNED BY
FRED IYASERE — CHECKED BY
ALI BAKHDOUD — FUNCTIONAL SUPERVISOR

STATE OF CALIFORNIA - DEPARTMENT OF TRANSPORTATION
Caltrans
ELECTRICAL DESIGN

LAST REVISION 05-23-11 | DATE PLOTTED => 22-JUN-2011 | TIME PLOTTED => 14:17

Dist	COUNTY	ROUTE	POST MILES TOTAL PROJECT	SHEET No.	TOTAL SHEETS
10	SJ	88	5.0/12.0	13	21

REGISTERED ELECTRICAL ENGINEER — DATE 6/6/11

PLANS APPROVAL DATE 6/6/11

REGISTERED PROFESSIONAL ENGINEER Jaspal Singh No. E16657 Exp 6/30/12 ELECTRICAL STATE OF CALIFORNIA

THE STATE OF CALIFORNIA OR ITS OFFICERS OR AGENTS SHALL NOT BE RESPONSIBLE FOR THE ACCURACY OR COMPLETENESS OF SCANNED COPIES OF THIS PLAN SHEET.

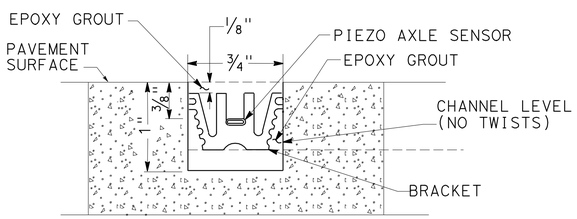

SECTION A-A

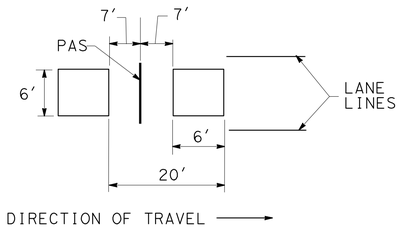

TYPICAL LANE LAYOUT FOR PAS AND LOOP DETECTOR

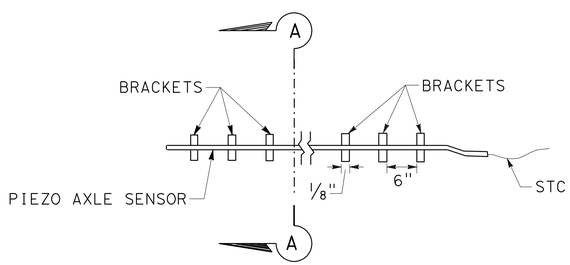

PIEZO AXLE SENSOR INSTALLATION

PAS DESIGNATION

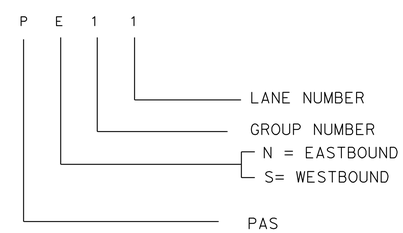

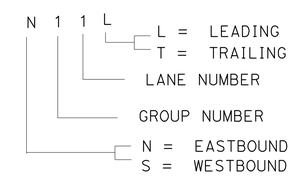

LOOP DETECTOR IDENTIFICATION

VEHICLE CLASSIFICATION STATION
(INSTALLATION DETAILS)

NO SCALE

E-4

REVISED BY	DATE REVISED
JS	06-06-11

JASPAL SINGH — FRED IYASERE — CALCULATED-DESIGNED BY — CHECKED BY

FUNCTIONAL SUPERVISOR: ALI BAKHDOUD

STATE OF CALIFORNIA - DEPARTMENT OF TRANSPORTATION — Caltrans — ELECTRICAL DESIGN

LAST REVISION 05-23-11 — DATE PLOTTED => 22-JUN-2011 — TIME PLOTTED => 14:17

DIST	COUNTY	ROUTE	POST MILES TOTAL PROJECT	SHEET NO.	TOTAL SHEETS
10	SJ	88	5.0/L12.2	14	21

Mark S. Turner
PROFESSIONAL LAND SURVEYOR

June 30, 2006
PLANS APPROVAL DATE

LICENSED LAND SURVEYOR Mark S. Turner No. 6228 Exp. 3-31-08 STATE OF CALIFORNIA

The State of California or its officers or agents shall not be responsible for the accuracy or completeness of electronic copies of this plan sheet.

To accompany plans dated 6/6/11

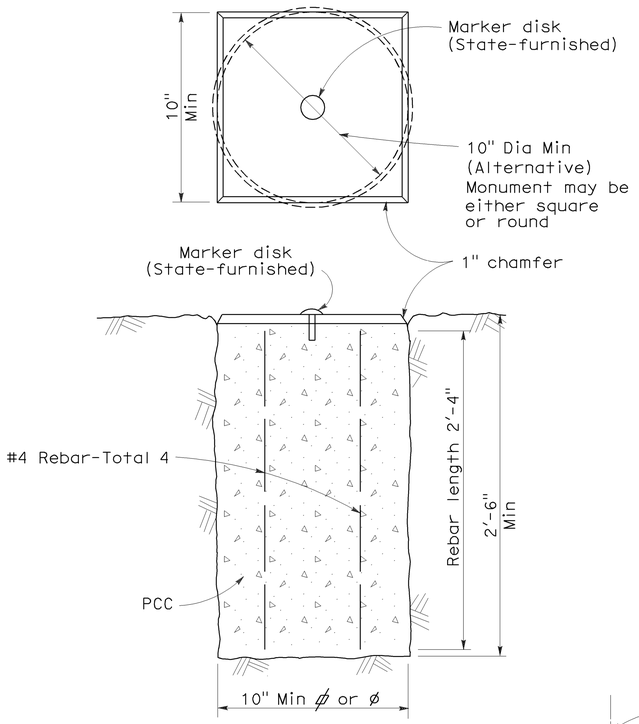

TYPE A

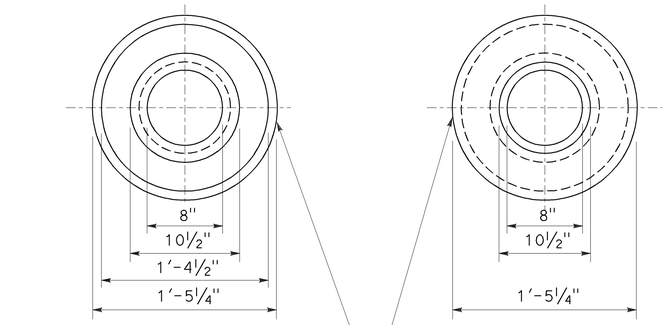

TOP VIEW OF MONUMENT OF WELL RING

BOTTOM VIEW OF MONUMENT OF WELL RING

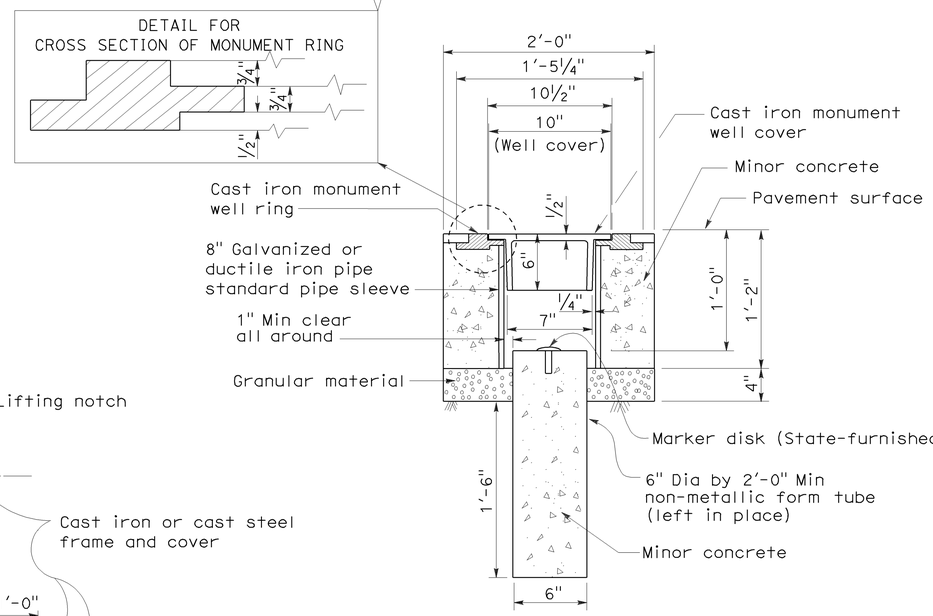

TYPE B

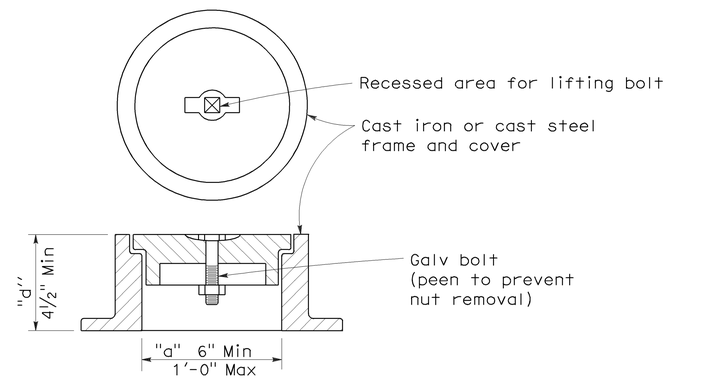

NOTES:

1. The configuration of the cast iron or cast steel frame and cover may vary from that shown.
2. Frame shall be embedded in the concrete a minimum of 3".
3. Type D monument shall be either Alternative No. 1 or Alternative No. 2 at the contractor's option.
4. All portland cement concrete shall be Class 2 or minor concrete with 1" maximum aggregate.

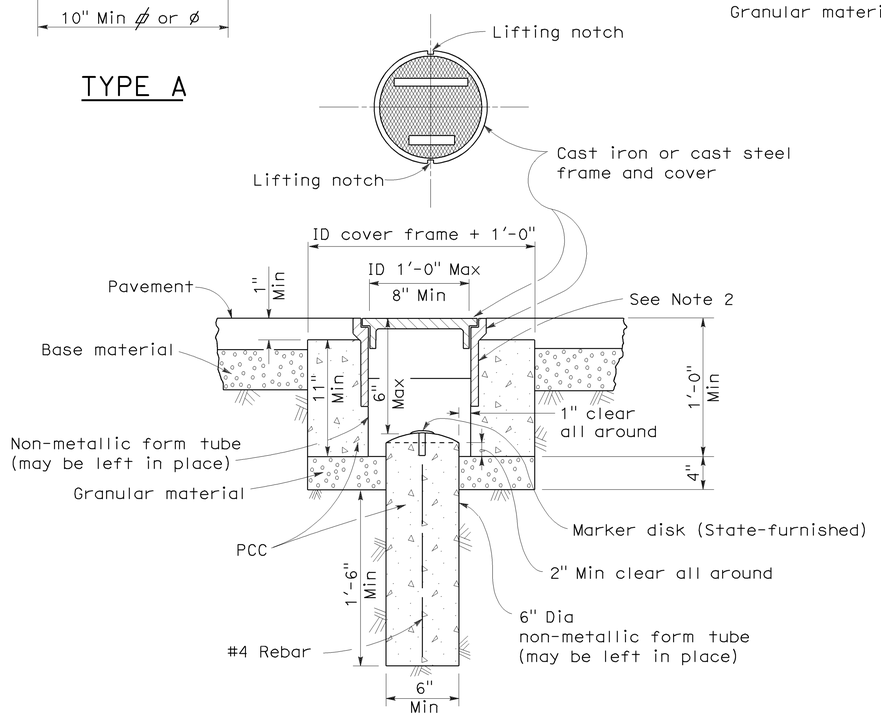

TYPE D
Alternative No. 1

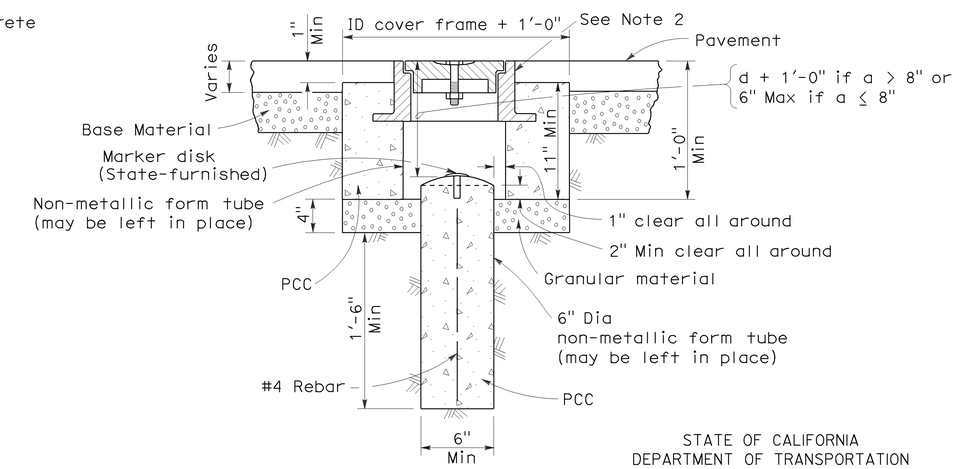

TYPE D
Alternative No. 2

STATE OF CALIFORNIA
DEPARTMENT OF TRANSPORTATION

SURVEY MONUMENTS

NO SCALE

RSP A74 DATED JUNE 30, 2006 SUPERSEDES STANDARD PLAN DATED MAY 1, 2006 - PAGE 28 OF THE STANDARD PLANS BOOK DATED MAY 2006.

REVISED STANDARD PLAN RSP A74

2006 REVISED STANDARD PLAN RSP A74

5-24-06

DIST	COUNTY	ROUTE	POST MILES TOTAL PROJECT	SHEET NO.	TOTAL SHEETS
10	SJ	88	5.0/L12.2	15	21

Randell D. Hiatt
REGISTERED CIVIL ENGINEER

June 6, 2008
PLANS APPROVAL DATE

REGISTERED PROFESSIONAL ENGINEER
Randell D. Hiatt
No. C50200
Exp. 6-30-09
CIVIL
STATE OF CALIFORNIA

The State of California or its officers or agents shall not be responsible for the accuracy or completeness of electronic copies of this plan sheet.

To accompany plans dated 6/6/11

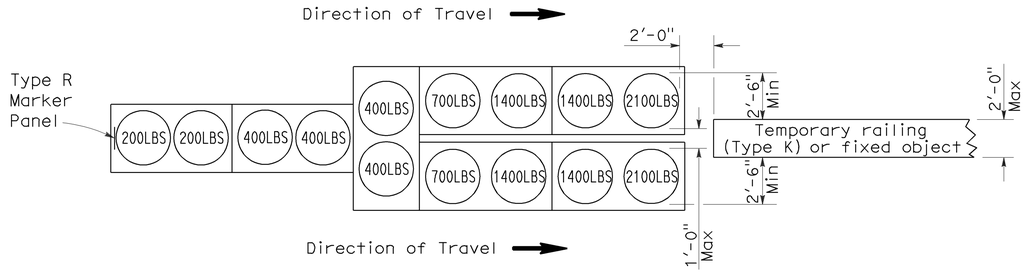

ARRAY 'TU14'

Approach speed 45 mph or more

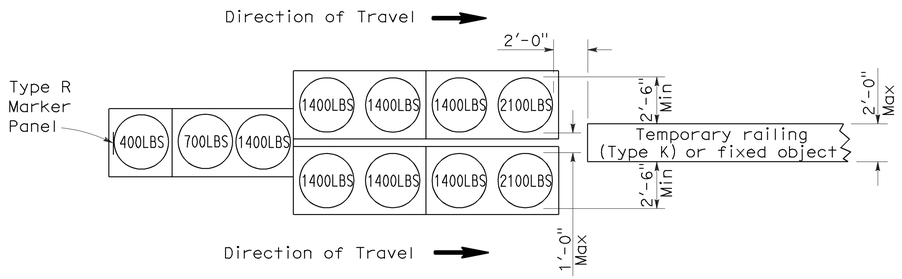

ARRAY 'TU11'

Approach speed less than 45 mph

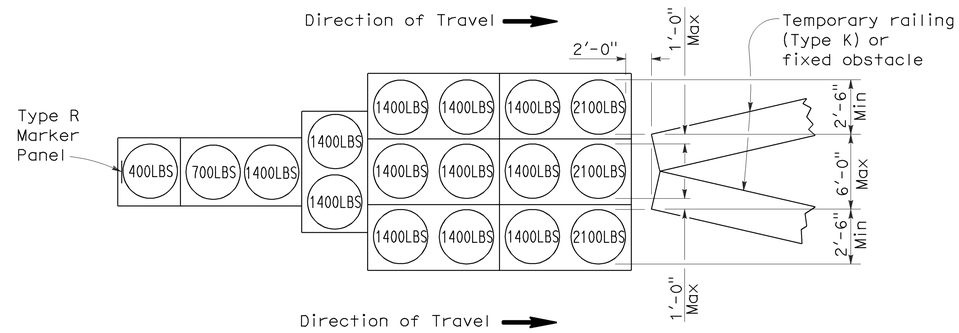

ARRAY 'TU17'

Approach speed less than 45 mph

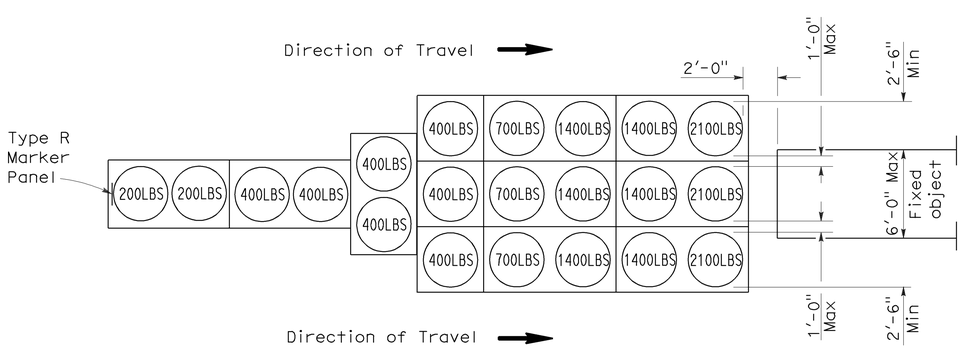

ARRAY 'TU21'

Approach speed 45 mph or more

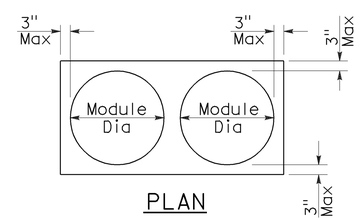

PLAN

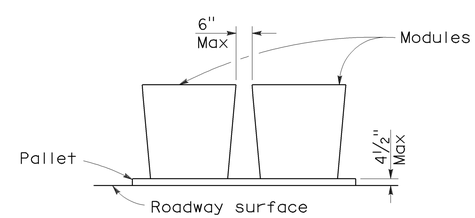

ELEVATION

CRASH CUSHION PALLET DETAIL

See Note 7

NOTES:

1. (XXX) Indicates sand filled module location and weight of sand in pounds for each module. Module spacing is based on the greater diameter of the module.
2. All sand weights are nominal.
3. Temporary crash cushion arrays shall not encroach on the traveled way.
4. Place the top of Type R marker panel 1" below the module lid.
5. Refer to Standard Plan A73B for marker details.
6. Approach speeds indicated conform to NCHRP 350 Report criteria.
7. Use of pallets is optional.

STATE OF CALIFORNIA
DEPARTMENT OF TRANSPORTATION

TEMPORARY CRASH CUSHION, SAND FILLED (UNIDIRECTIONAL)

NO SCALE

RSP T1A DATED JUNE 6, 2008 SUPERSEDES STANDARD PLAN T1A
DATED MAY 1, 2006 - PAGE 211 OF THE STANDARD PLANS BOOK DATED MAY 2006.

REVISED STANDARD PLAN RSP T1A

2006 REVISED STANDARD PLAN RSP T1A

DIST	COUNTY	ROUTE	POST MILES TOTAL PROJECT	SHEET NO.	TOTAL SHEETS
10	SJ	88	5.0/L12.2	16	21

Randell D. Hiatt
REGISTERED CIVIL ENGINEER

June 6, 2008
PLANS APPROVAL DATE

REGISTERED PROFESSIONAL ENGINEER
Randell D. Hiatt
No. C50200
Exp. 6-30-09
CIVIL
STATE OF CALIFORNIA

The State of California or its officers or agents shall not be responsible for the accuracy or completeness of electronic copies of this plan sheet.

To accompany plans dated 6/6/11

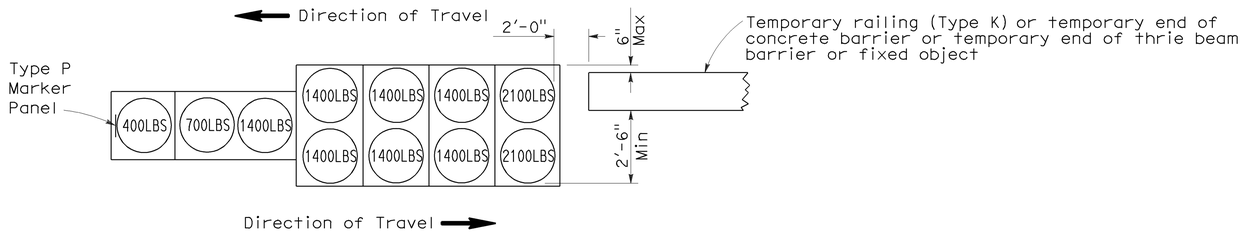

ARRAY 'TB11'

Approach speed less than 45 mph

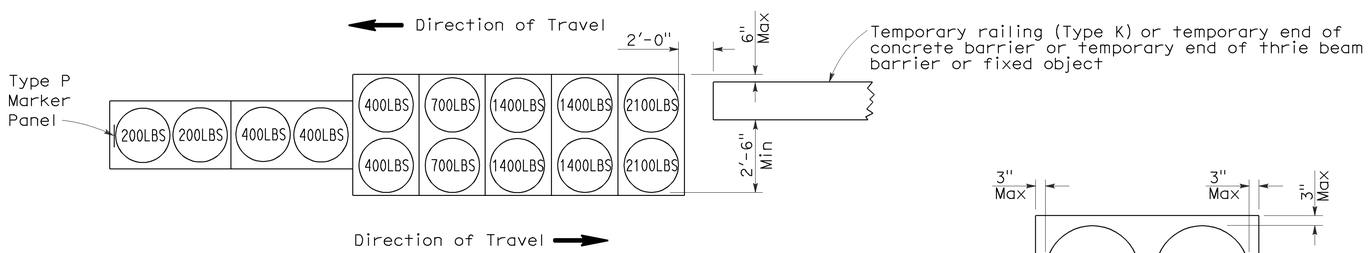

ARRAY 'TB14'

Approach speed 45 mph or more

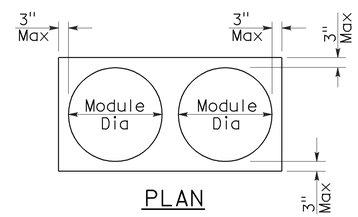

PLAN

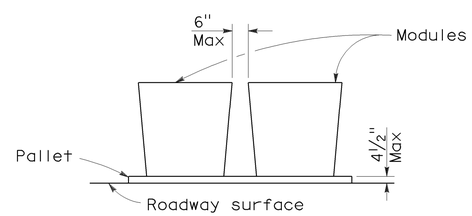

ELEVATION

CRASH CUSHION PALLET DETAIL

See Note 7

NOTES:

1. (XXX) Indicates sand filled module location and weight of sand in pounds for each module. Module spacing is based on the greater diameter of the module.
2. All sand weights are nominal.
3. Temporary crash cushion arrays shall not encroach on the traveled way.
4. Place the Type P marker panel so that the bottom of the panel rests upon the pallet.
5. Refer to Standard Plan A73B for marker details.
6. Approach speeds indicated conform to NCHRP 350 Report criteria.
7. Use of pallets is optional.

STATE OF CALIFORNIA
DEPARTMENT OF TRANSPORTATION

TEMPORARY CRASH CUSHION, SAND FILLED (BIDIRECTIONAL)

NO SCALE

RSP T1B DATED JUNE 6, 2008 SUPERSEDES STANDARD PLAN T1B
DATED MAY 1, 2006 - PAGE 212 OF THE STANDARD PLANS BOOK DATED MAY 2006.

REVISED STANDARD PLAN RSP T1B

2006 REVISED STANDARD PLAN RSP T1B

5-15-08

DIST	COUNTY	ROUTE	POST MILES TOTAL PROJECT	SHEET NO.	TOTAL SHEETS
10	SJ	88	5.0/L12.2	17	21

Randell D. Hiatt
REGISTERED CIVIL ENGINEER

June 6, 2008
PLANS APPROVAL DATE

REGISTERED PROFESSIONAL ENGINEER
Randell D. Hiatt
No. C50200
Exp. 6-30-09
CIVIL
STATE OF CALIFORNIA

The State of California or its officers or agents shall not be responsible for the accuracy or completeness of electronic copies of this plan sheet.

To accompany plans dated 6/6/11

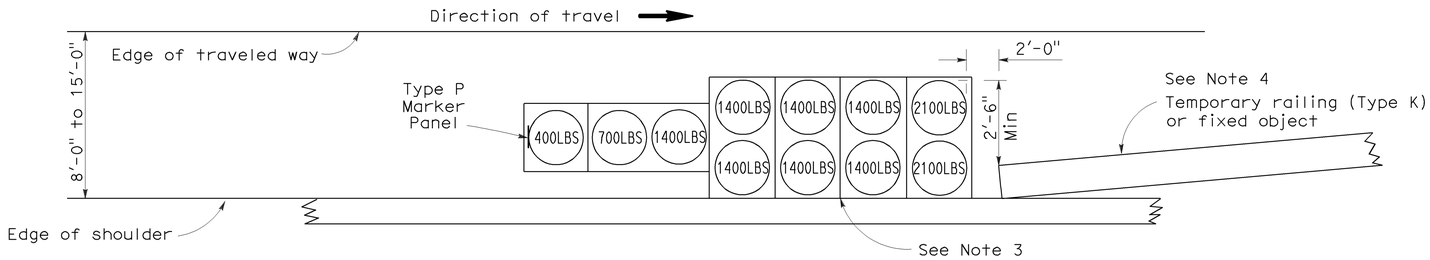

ARRAY 'TS11'

Approach speed less than 45 mph
See Note 9

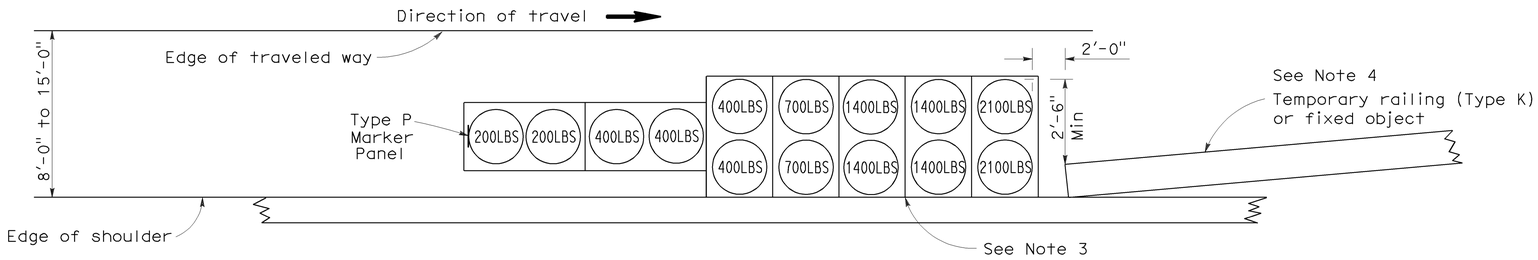

ARRAY 'TS14'

Approach speed 45 mph or more
See Note 9

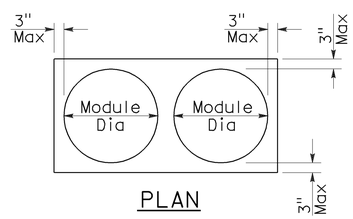

PLAN

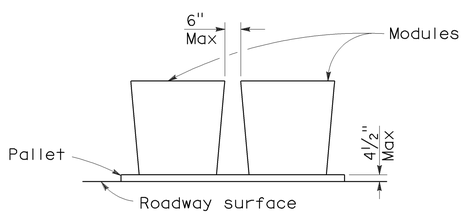

ELEVATION

CRASH CUSHION PALLET DETAIL

See Note 11

NOTES:

1. (XXX) Indicates sand filled module location and weight of sand in pounds for each module. Module spacing is based on the greater diameter of the module.
2. All sand weights are nominal.
3. The temporary crash cushion arrays shown on this plan shall be used only in locations where there will be traffic on one side of the temporary crash cushion array.
4. If the fixed object or approach end of the temporary railing is less than 15'-0" from the edge of traveled way, a temporary crash cushion is required in a construction or work zone.
5. Temporary crash cushion arrays shall not encroach on the traveled way.
6. Arrays for median shoulders shall conform to details shown on this plan for outside shoulders.
7. Place the Type P marker panel so that the bottom of the panel rests upon the pallet and faces traffic.
8. Refer to Standard Plan A73B for marker details.
9. For shoulder widths less than 8'-0", appropriate approved crash cushion protection, other than sand filled modules, shall be provided at fixed objects and at approach ends of temporary railing. The specific type of crash cushion shall be as shown on the project plans or as specified in the Special Provisions, or if not shown on the project plans or specified in the Special Provisions, shall be as approved by the Engineer.
10. Approach speeds indicated conform to NCHRP 350 Report criteria.
11. Use of pallets is optional.

STATE OF CALIFORNIA
DEPARTMENT OF TRANSPORTATION

TEMPORARY CRASH CUSHION, SAND FILLED (SHOULDER INSTALLATIONS)

NO SCALE

RSP T2 DATED JUNE 6, 2008 SUPERSEDES STANDARD PLAN T2
DATED MAY 1, 2006 - PAGE 213 OF THE STANDARD PLANS BOOK DATED MAY 2006.

REVISED STANDARD PLAN RSP T2

2006 REVISED STANDARD PLAN RSP T2

5-15-08

DIST	COUNTY	ROUTE	POST MILES TOTAL PROJECT	SHEET NO.	TOTAL SHEETS
10	SJ	88	5.0/L12.2	18	21

REGISTERED ELECTRICAL ENGINEER

October 5, 2007
PLANS APPROVAL DATE

REGISTERED PROFESSIONAL ENGINEER Jeffery G. McRae No. E14512 Exp. 6-30-08 ELECTRICAL STATE OF CALIFORNIA

The State of California or its officers or agents shall not be responsible for the accuracy or completeness of electronic copies of this plan sheet.

To accompany plans dated 6/6/11

ELECTROLIERS

STANDARD TYPES
15, 15D
15 STRUCTURE
21, 21D STRUCTURE
30
31
32
35
36-20A

High mast light pole

Double Arm lighting standard

Existing electrolier

Electrolier foundation (Future installation)

NOTES:

1. Luminaires shall be 310 W HPS when installed on Type 21, 21D, 30, 31, 32, 35 and 36-20A Standards, unless otherwise specified. Luminaires shall be 200 W HPS when installed on other type standards or poles, unless otherwise specified.
2. Luminaires shall be the cutoff type, ANSI Type Ⅲ medium cutoff lighting distribution, unless otherwise specified.
3. Variations noted adjacent to symbol on project plans.

Electrolier (see project notes or project plans)

Luminaire on wood pole

STANDARD NOTES:

- AB — Abandon. If applied to conduit, remove conductors.
- BC — Install pull box in existing conduit run.
- BP — Pedestrian barricade, type as indicated on plan.
- CB — Install conduit into existing pull box.
- CC — Connect new and existing conduit. Remove existing conductors and install conductors as indicated.
- CF — Conduit to remain for future use. Remove conductors. Install pull wire or rope.
- DH — Detector handhole.
- FA — Foundation to be abandoned.
- IS — Install sign on signal mast arm.
- NS — No slip base on standard.
- PEC — Photoelectric control.
- PEU — Photoelectric unit.
- RC — Equipment or material to be removed and become the property of the Contractor.
- RE — Remove electrolier, fuses and ballast. Tape ends of conductors.
- RL — Relocate equipment.
- RR — Remove and reuse equipment.
- RS — Remove and salvage equipment.
- SC — Splice new to existing conductors.
- SD — Service disconnect.
- SF — Standard to remain for future use. Remove luminaire, pole conductors, fuses and ballast.
- TSP — Telephone service point.

ABBREVIATIONS AND EQUIPMENT DESIGNATIONS

PROPOSED	EXISTING	
BBS	bbs	Battery backup system
BC	bc	Bolt circle
C	C	Conduit
CCTV	cctv	Closed circuit television
CKT	ckt	Circuit
CMS	cms	Changeable message sign
DLC	dlc	Loop detector lead-in cable
EMS	ems	Extinguishable message sign
EVC	evc	Emergency vehicle cable
EVD	evd	Emergency vehicle detector
FB	fb	Flashing beacon
FBCA	fbca	Flashing beacon control assembly
FBS	fbs	Flashing beacon with slip base
FO	fo	Fiber optic
G	G	Ground (Equipment Grounding Conductor)
GFCI	GFCI	Ground fault circuit interrupt
HAR	har	Highway advisory radio
HEX	hex	Hexagonal
HPS	hps	High pressure sodium
IISNS	iisns	Internally illuminated street name sign
ISL	isl	Induction sign lighting
LED	led	Light emitting diode
LMA	lma	Luminaire mast arm
LPS	lps	Low pressure sodium
LTG	ltg	Lighting
LUM	lum	Luminaire
MAT	mat	Mast arm mounting vehicle signal faces, top attachment
MAS	mas	Mast arm mounting vehicle signal faces, side attachment
MAS-4A	mas-4A	Mast arm mounting vehicle signal faces, side attachment - 4 signal section
MAS-4B	mas-4B	
MAS-4C	mas-4C	
MAS-5A	mas-5A	Mast arm mounting vehicle signal faces, side attachment - 5 signal section
MAS-5B	mas-5B	
MC	mc	Mercury contactor
M/M	m/m	Multiple to multiple transformer
MT	mt	Conduit with pull wire or rope only
MTG	mtg	Mounting
	mv	Mercury vapor lighting fixture
N	N	Neutral (Grounded Conductor)
NC	NC	Normally closed
NO	NO	Normally open
PB	pb	Pull box
PEC	pec	Photoelectric control (Type Ⅰ, Ⅱ, Ⅲ, Ⅳ or Ⅴ as shown)
PED	ped	Pedestrian
PEU	peu	Photoelectric unit
PPB	ppb	Pedestrian push button
RL		Relocated equipment
RM	rm	Ramp metering
SB	sb	Slip base
SIC	sic	Signal interconnect cable
SIG	sig	Signal
SMA	sma	Signal mast arm
SNS	sns	Street name sign
SP	sp	Service point
TDC	tdc	Telephone demarcation cabinet
TMS	tms	Traffic monitoring station
TOS	tos	Traffic Operations System
VEH	veh	Vehicle
XFMR	xfmr	Transformer
COMM	comm	Communication
RWIS	rwis	Roadway weather information system

SOFFIT AND WALL MOUNTED LUMINAIRES

Pendant, 70 W HPS unless otherwise specified.

Flush, 70 W HPS unless otherwise specified.

Wall surface, 70 W HPS unless otherwise specified.

Existing soffit or wall luminaire to remain unmodified.

Existing soffit or wall luminaire to be modified as specified.

NOTE:

Arrow indicates "street side" of luminaire.

STATE OF CALIFORNIA
DEPARTMENT OF TRANSPORTATION

ELECTRICAL SYSTEMS (SYMBOLS AND ABBREVIATIONS)

NO SCALE

RSP ES-1A DATED OCTOBER 5, 2007 SUPERSEDES STANDARD PLAN ES-1A DATED MAY 1, 2006 - PAGE 400 OF THE STANDARD PLANS BOOK DATED MAY 2006.

REVISED STANDARD PLAN RSP ES-1A

2006 REVISED STANDARD PLAN RSP ES-1A

DIST	COUNTY	ROUTE	POST MILES TOTAL PROJECT	SHEET NO.	TOTAL SHEETS
10	SJ	88	5.0/L12.2	19	21

REGISTERED ELECTRICAL ENGINEER

October 5, 2007
PLANS APPROVAL DATE

REGISTERED PROFESSIONAL ENGINEER Jeffery G. McRae No. E14512 Exp. 6-30-08 ELECTRICAL STATE OF CALIFORNIA

The State of California or its officers or agents shall not be responsible for the accuracy or completeness of electronic copies of this plan sheet.

To accompany plans dated 6/6/11

CONDUIT

PROPOSED	EXISTING	
		Lighting Conduit, unless otherwise indicated or noted
		Traffic signal conduit
C	c	Communication conduit
T	t	Telephone conduit
F	f	Fire alarm conduit
FO	fo	Fiber optic conduit
		Conduit termination (RSP ES-9A C)
R	r	Conduit riser in/on structure or service pole

SERVICE EQUIPMENT

PROPOSED	EXISTING	
OH	oh	Overhead lines
U	U	Wood pole "U" indicates utility owned
		Pole guy with anchor
		Utility transformer - ground mounted
III		Service equipment enclosure type
		Service equipment enclosure door indicates front of enclosure
T	t	Telephone demarcation cabinet

POLE-MOUNTED SERVICE DESIGNATION

Type of installation

TYPE H SERVICE - 28'-10" ← Pole height above grade

ILLUMINATED OVERHEAD SIGN

PROPOSED	EXISTING	
		Overhead sign - Single post
		Overhead sign - Two post
		Overhead sign - Mounted on structure
		Overhead sign with electrolier

SIGNAL EQUIPMENT

PROPOSED	EXISTING	
		Pedestrian signal face
		Pedestrian push button post
		Pedestrian barricade
		Vehicle signal face (with backplate, 3-Section: red, yellow and green)
		Vehicle signal face with angle visors
PV	PV	Modifications of basic symbols: "L" indicates all non-arrow sections louvered "LG" indicates louvered green section only "PV" indicates 12" programmed visibility sections "8" indicates all 8" sections (only when specified)
		Type 15TS and Vehicle signal face
		Vehicle signal face with red, yellow and green left arrow sections
		Vehicle signal face with red and yellow sections and up green arrow
		Vehicle signal face (5 Section) with red, yellow and green sections and yellow and green right arrows
		Type 1 Standard and attached vehicle signal faces
		Standard with signal mast arm only and attached vehicle signal faces and internally illuminated street name sign
		Type 33 Standard, Left-turn vehicle signal face and sign
		Standard with luminaire and signal mast arms and attached vehicle signal faces
		Cantilever flashing beacon Type 9 Frame, with a sign unless otherwise specified or indicated
		Type 15-FBS Standard with two vehicle signal face sections with lens, backplate and visor with a sign
R	Y	Flashing beacon. One vehicle signal face section with lens, backplate and visor. "R" indicates red indication, "Y" indicates yellow indication
		Controller assembly. Door indicates front of cabinet

SIGNAL EQUIPMENT Cont

PROPOSED	EXISTING	
		Guard post
		Type 1 Standard with "Meter On" sign
		Emergency Vehicle detector

NOTES:

1. All signal sections shall be 12" unless shown otherwise.
2. Signal heads shall be provided with backplates unless shown otherwise.
3. Signal indication shall be LED.

STATE OF CALIFORNIA
DEPARTMENT OF TRANSPORTATION

ELECTRICAL SYSTEMS (SYMBOLS AND ABBREVIATIONS)

NO SCALE

RSP ES-1B DATED OCTOBER 5, 2007 SUPERCEDES STANDARD PLAN ES-1B DATED MAY 1, 2006 - PAGE 401 OF THE STANDARD PLANS BOOK DATED MAY 2006.

REVISED STANDARD PLAN RSP ES-1B

2006 REVISED STANDARD PLAN RSP ES-1B

7-10-07

DIST	COUNTY	ROUTE	POST MILES TOTAL PROJECT	SHEET NO.	TOTAL SHEETS
10	SJ	88	5.0/L12.2	20	21

Jeffery G. McRae
REGISTERED ELECTRICAL ENGINEER

October 5, 2007
PLANS APPROVAL DATE

REGISTERED PROFESSIONAL ENGINEER
Jeffery G. McRae
No. E14512
Exp. 6-30-08
ELECTRICAL
STATE OF CALIFORNIA

The State of California or its officers or agents shall not be responsible for the accuracy or completeness of electronic copies of this plan sheet.

To accompany plans dated 6/6/11

EQUIPMENT IDENTIFICATION

ILLUMINATED SIGN IDENTIFICATION NUMBER:

Sign No. 12345

10 ISL SCI 1.0

- Sign number - Place on post or structure
- Transformer rating (kVA)
- Lighting control type
- Number and type of fixtures

Do NOT place on standard or structure

ELECTROLIER OR EQUIPMENT IDENTIFICATION NUMBER:

12345 - 15'-0"

- Mast arm length, if shown. Do not place on standard or structure.
- Equipment number - Place on standard or structure. Existing equipment numbers are shown in parenthesis

CONDUIT AND CONDUCTOR IDENTIFICATION:

1½"C, 2#10, 15#14, 2 DLC

- Number and size of conductors and cables
- Size of conduit in inches

Ø1, Ø2, Ø2P, etc.	Traffic phase identification for signal faces, detectors and phase diagrams
1 2 3	Project note numbers
A B C	Equipment description, installation or item numbers
1 2 3	Conduit run numbers

SIGNAL AND LIGHTING STANDARD (TYPICAL DESIGNATION):

19A - 3 - 100

- Wind velocity = 100 mph
- Case 3 arm loading
- Standard type
- Standard Plan sheet number
- Detail number or letter

MISCELLANEOUS EQUIPMENT

PROPOSED	EXISTING	
CMS	cms	Changeable message sign
		Closed circuit television camera
		Highway advisory radio pole and antenna
EMS	ems	Extinguishable message sign
M V	m v	Detection device M = Microwave sensor V = Video image sensor

WIRING DIAGRAM LEGEND

P	Pole
CB	Circuit breaker
A	Ampere
V	Volt
M	Metered
UM	Unmetered
NB	Neutral bus
GB	Ground bus
G	Equipment grounding conductor
N	Grounded conductor (Neutral)

- External conductor
- Conductor or bus
- Tie point
- Contactor coil
- Contactor, Contact NO
- Terminal blocks
- Contactor, Contact NC
- Enclosure bond
- Grounding electrode
- Circuit breaker
- Receptacle

PULL BOXES

PROPOSED EXISTING

Pull box-No. 5 unless otherwise indicated or noted.

3 9A(21)

Pull box-Additional designations or descriptions

3 = No. 3½ pull box
5 = No. 5 pull box
6 = No. 6 pull box
7 = No. 7 (Ceiling pull box)
8 = No. 8 (Pendant soffit pull box)
9 = No. 9 pull box
9A = No. 9A pull box

(C) = Communications pull box
(E) = Pull box with extension
(S) = Sprinkler control pull box
(21) = Anchor bolts and conduit for future installation of Type 21 Standard
(T) = Traffic pull box

VEHICLE DETECTORS

5 J 9 U

- U = Upper
- L = Lower
- Slot number in input file
- Input file (I or J)
- Phase

PROPOSED	EXISTING	
		Type A detector loop. Outline of sawcut shown.
		Type B detector loop. Outline of sawcut shown.
		Type C detector loop. Outline of sawcut shown.
		Type D detector loop. Outline of sawcut shown.
		Type E detector loop. Outline of sawcut shown.
		Type Q detector loop. Outline of sawcut shown.
		Magnetic detector
DH	dh	Detector handhole
		Microwave or video detection zone

STATE OF CALIFORNIA
DEPARTMENT OF TRANSPORTATION

ELECTRICAL SYSTEMS (SYMBOLS AND ABBREVIATIONS)

NO SCALE

RSP ES-1C DATED OCTOBER 5, 2007 SUPERCEDES STANDARD PLAN ES-1C DATED MAY 1, 2006 - PAGE 402 OF THE STANDARD PLANS BOOK DATED MAY 2006.

REVISED STANDARD PLAN RSP ES-1C

2006 REVISED STANDARD PLAN RSP ES-1C

7-10-07

DIST	COUNTY	ROUTE	POST MILES TOTAL PROJECT	SHEET NO.	TOTAL SHEETS
10	SJ	88	5.0/L12.2	21	21

REGISTERED ELECTRICAL ENGINEER

October 5, 2007
PLANS APPROVAL DATE

REGISTERED PROFESSIONAL ENGINEER Jeffery G. McRae No. E14512 Exp. 6-30-08 ELECTRICAL STATE OF CALIFORNIA

The State of California or its officers or agents shall not be responsible for the accuracy or completeness of electronic copies of this plan sheet.

To accompany plans dated 6/6/11

2006 REVISED STANDARD PLAN RSP ES-5A

LOOP INSTALLATION PROCEDURE

1. Loops shall be centered in lanes.
2. Saw slots in pavement for loop conductors as shown in details.
3. Distance between side of loop and a lead-in saw cut from adjacent detectors shall be 2'-0" minimum. Distance between lead-in saw cuts shall be 6" minimum.
4. Bottom of saw slot shall be smooth with no sharp edges.
5. Slots shall be washed until clean, blown out and thoroughly dried before installing loop conductors.
6. Adjacent loops on the same sensor unit channel shall be wound in opposite directions.
7. Identify and tag loop circuit pairs in the pull box with loop number, start (S) and finish (F) of conductor. Identify and tag lead-in-cable with sensor number and phase.
8. Install loop conductor in slot using a 3/16" to 1/4" thick wood paddle. Hold loop conductors with wood paddles (at the bottom of the sawed slot) during sealant placement.
9. No more than 2 twisted pairs shall be installed in one sawed slot.
10. Allow additional 5'-0" of slack length of conductor for the lead-in run to pull box.
11. The additional length of each conductor for each loop shall be twisted together into a pair (6 turns per 3'-4" minimum) before being placed in the slot and conduit leading to pull box.
12. Test each loop circuit for continuity, circuit resistance and insulation resistance at the pull box before filling slots.
13. Fill slots as shown in details.
14. Splice loop conductors to lead-in-cable. Splices shall be soldered.
15. End of lead-in-cable and Type 2 loop conductor shall be waterproofed prior to installing in conduit to prevent moisture from entering the cable.
16. Lead-in-cable shall not be spliced between the pull box and the controller cabinet terminals.
17. Test each loop circuit for continuity, circuit resistance and insulation resistance at the controller cabinet location.
18. Where loop conductors are not to be spliced to a lead-in-cable, the ends of the conductors shall be taped and waterproofed with electrical insulating coating.

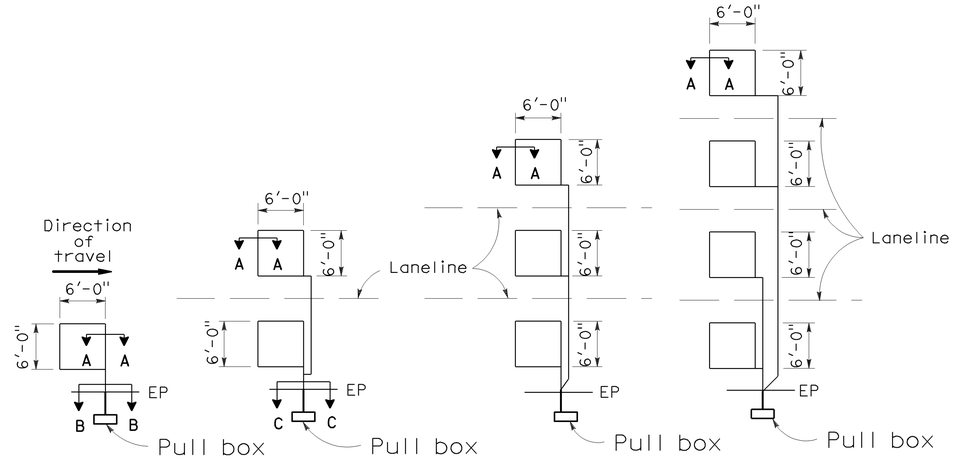

TYPE 1A INSTALLATION | TYPE 2A INSTALLATION | TYPE 3A INSTALLATION | TYPE 4A INSTALLATION

SAWCUT DETAILS

(Type A loop detector configurations illustrated)

1. 1A thru 4A = 1 Type A loop configuration in each lane.
2. 1B thru 4B = 1 Type B loop configuration in each lane.
3. 1C = 1 Type C loop configuration entering lanes as required.
4. 1D thru 4D = 1 Type D loop configuration in each lane.
5. 1E thru 4E = 1 Type E loop configuration in each lane.
6. 1Q thru 4Q = 1 Type Q loop configuration in each lane. (Use Type A, B, C, D, E or Q loop detector configurations only when specified or shown on plans)

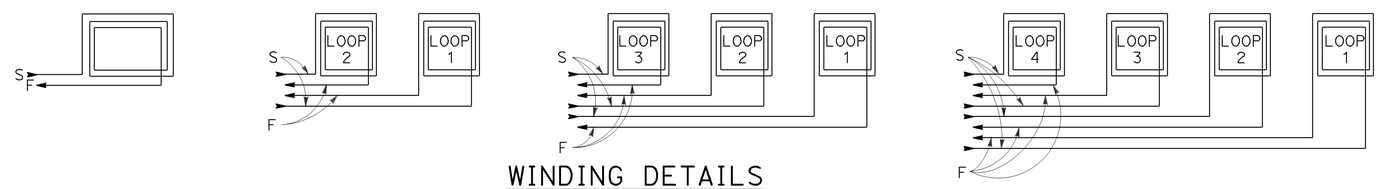

WINDING DETAILS

See Notes 6 and 7

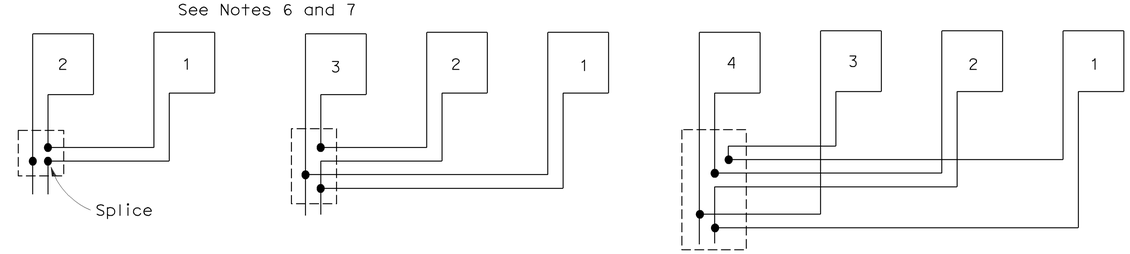

TYPICAL LOOP CONNECTIONS

(Dashed lines represent the pull box)

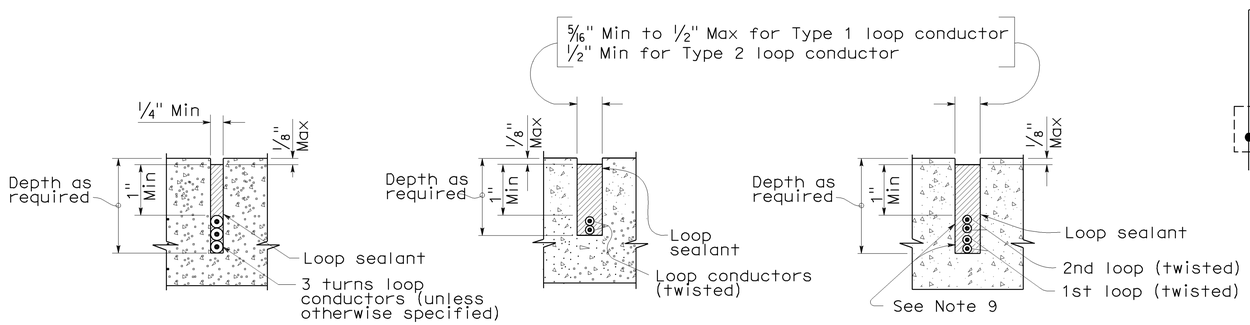

SECTION A-A | SECTION B-B | SECTION C-C

SLOT DETAILS - TYPE 1 AND TYPE 2 LOOP CONDUCTOR

STATE OF CALIFORNIA
DEPARTMENT OF TRANSPORTATION

ELECTRICAL SYSTEMS (DETECTORS)

NO SCALE

RSP ES-5A DATED OCTOBER 5, 2007 SUPERCEDES STANDARD PLAN ES-5A DATED MAY 1, 2006 - PAGE 423 OF THE STANDARD PLANS BOOK DATED MAY 2006.

REVISED STANDARD PLAN RSP ES-5A