Dist	COUNTY	ROUTE	POST MILES TOTAL PROJECT	SHEET No.	TOTAL SHEETS
10	Tuo	49	R12.2/12.0	1	34

STATE OF CALIFORNIA

DEPARTMENT OF TRANSPORTATION

PROJECT PLANS FOR CONSTRUCTION ON

STATE HIGHWAY

IN TOULUMNE COUNTY
NEAR JAMESTOWN
FROM 0.1 MILE SOUTH OF ROUTE 49/108 INTERSECTION TO 0.1 MILE SOUTH OF MACKEY RANCH ROAD

TO BE SUPPLEMENTED BY STANDARD PLANS DATED MAY 2006

INDEX OF PLANS

SHEET No.	DESCRIPTION
1	TITLE AND LOCATION MAP
2	TYPICAL CROSS SECTIONS
3-4	LAYOUTS
5	SUPERELEVATION DIAGRAM
6	CONSTRUCTION DETAILS
7-8	TEMPORARY WATER POLLUTION CONTROL PLANS AND QUANTITIES
9-10	EROSION CONTROL PLANS AND QUANTITIES
11-16	DRAINAGE PLANS, PROFILES, DETAILS AND QUANTITIES
17	CONSTRUCTION AREA SIGNS
18-19	PAVEMENT DELINEATION AND SIGN PLAN
20	PAVEMENT DELINEATION QUANTITIES
21	SIGN QUANTITIES
22	SUMMARY OF QUANTITIES
23	ELECTRICAL PLAN
24-32	REVISED STANDARD PLANS
33	NEW STANDARD PLAN
34	REVISED NEW STANDARD PLAN

THE STANDARD PLANS LIST APPLICABLE TO THIS CONTRACT IS INCLUDED IN THE NOTICE TO BIDDERS AND SPECIAL PROVISIONS BOOK.

LOCATION MAP

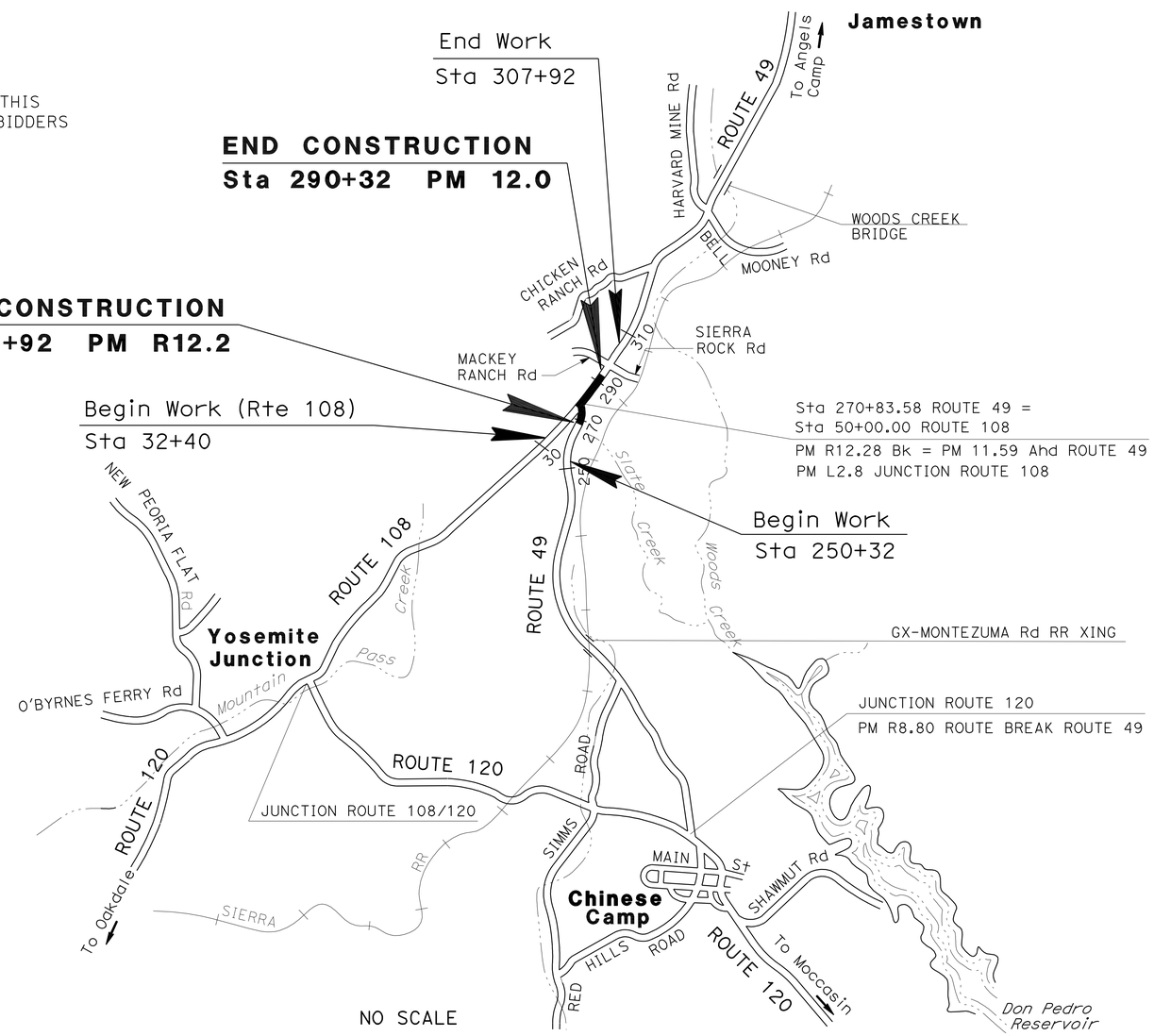

NO SCALE

THE CONTRACTOR SHALL POSSESS THE CLASS (OR CLASSES) OF LICENSE AS SPECIFIED IN THE "NOTICE TO BIDDERS."

PROJECT MANAGER: AJAIB BRAR

DESIGN ENGINEER: CAROLINE REYES

2/1/11
PROJECT ENGINEER REGISTERED CIVIL ENGINEER — DATE

March 7, 2011
PLANS APPROVAL DATE

REGISTERED PROFESSIONAL ENGINEER — NHAN C. CAO — No. 76454 — Exp. 12/31/12 — CIVIL — STATE OF CALIFORNIA

THE STATE OF CALIFORNIA OR ITS OFFICERS OR AGENTS SHALL NOT BE RESPONSIBLE FOR THE ACCURACY OR COMPLETENESS OF SCANNED COPIES OF THIS PLAN SHEET.

CONTRACT No.	10-0P2604
PROJECT ID	1000000185

LAST REVISION 00-00-00 — DATE PLOTTED => 10-MAR-2011 TIME PLOTTED => 13:46

Dist	COUNTY	ROUTE	POST MILES TOTAL PROJECT	SHEET No.	TOTAL SHEETS
10	Tuo	49	R12.2/12.0	2	34

REGISTERED CIVIL ENGINEER 2/1/11 DATE

3/7/11
PLANS APPROVAL DATE

REGISTERED PROFESSIONAL ENGINEER NHAN C. CAO No. 76454 Exp. 12/31/12 CIVIL STATE OF CALIFORNIA

THE STATE OF CALIFORNIA OR ITS OFFICERS OR AGENTS SHALL NOT BE RESPONSIBLE FOR THE ACCURACY OR COMPLETENESS OF SCANNED COPIES OF THIS PLAN SHEET.

NOTES:

1. DIMENSIONS OF THE PAVEMENT STRUCTURES (STRUCTURAL SECTIONS) ARE SUBJECT TO TOLERANCES SPECIFIED IN THE STANDARD SPECIFICATIONS.
2. SUPERELEVATIONS ARE SHOWN ON THE SUPERELEVATION DIAGRAMS.

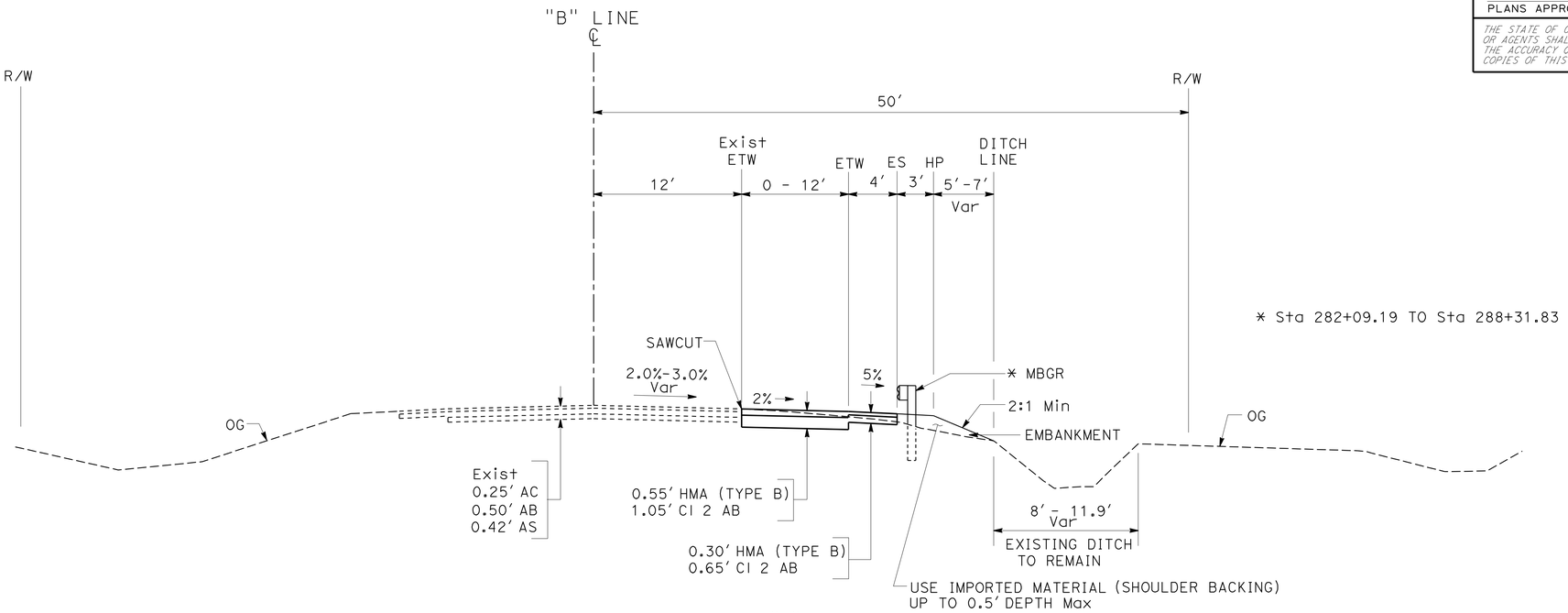

Sta 271+61.57 TO Sta 289+29.19 "B" LINE

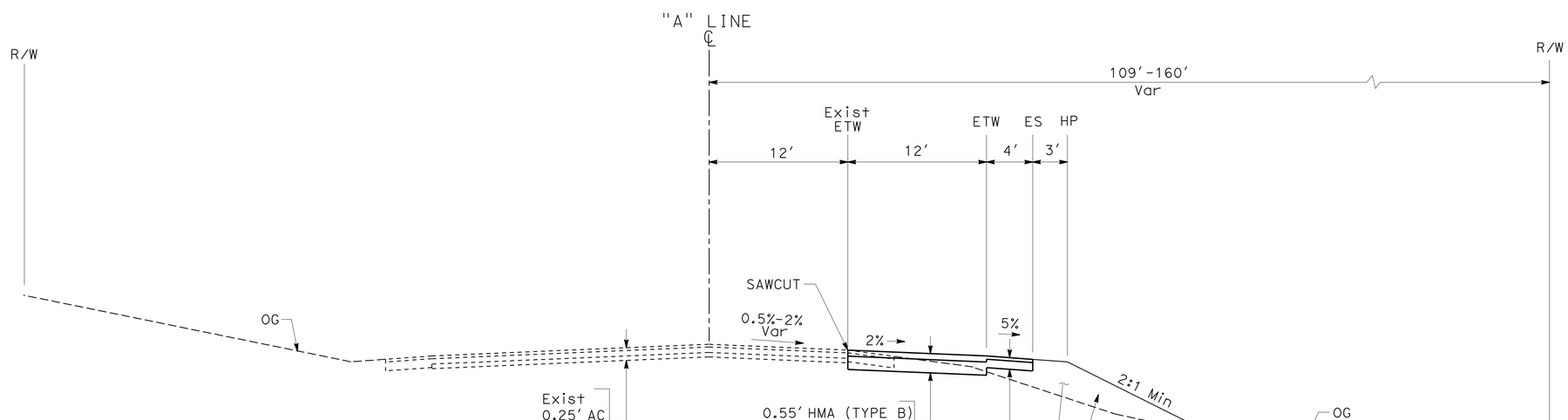

Sta 268+53.41 TO Sta 270+35.14 " A" LINE

ROUTE 49 NB

TYPICAL CROSS SECTIONS

NO SCALE

X-1

REVISED BY	DATE REVISED
NC	1/28/11

HUONG LE — NHAN CAO

CALCULATED-DESIGNED BY — CHECKED BY

FUNCTIONAL SUPERVISOR: CAROLINE REYES

STATE OF CALIFORNIA - DEPARTMENT OF TRANSPORTATION

Caltrans

DESIGN

LAST REVISION 00-00-00 | DATE PLOTTED => 10-MAR-2011 | TIME PLOTTED => 13:46

Dist	COUNTY	ROUTE	POST MILES TOTAL PROJECT	SHEET No.	TOTAL SHEETS
10	Tuo	49	R12.2/12.0	3	34

REGISTERED CIVIL ENGINEER 2/1/11 DATE

3/7/11
PLANS APPROVAL DATE

REGISTERED PROFESSIONAL ENGINEER NHAN C. CAO No. 76454 Exp. 12/31/12 CIVIL STATE OF CALIFORNIA

THE STATE OF CALIFORNIA OR ITS OFFICERS OR AGENTS SHALL NOT BE RESPONSIBLE FOR THE ACCURACY OR COMPLETENESS OF SCANNED COPIES OF THIS PLAN SHEET.

LEGEND

TRAVELED WAY
0.55′ HMA (TYPE B)
1.05′ CI 2 AB
SHOULDER
0.30′ HMA (TYPE B)
0.65′ CI 2 AB

METAL BEAM GUARD RAILING

Temp FENCE (TYPE ESA)

Exist OVERHEAD TELEPHONE LINE (AT&T)

NOTE:

FOR ACCURATE RIGHT OF WAY DATA, CONTACT RIGHT OF WAY ENGINEERING AT THE DISTRICT OFFICE.

ABBREVIATION

ESA - ENVIRONMENTALLY SENSITIVE AREA
AT&T - AMERICAN TELEPHONE AND TELEGRAPH

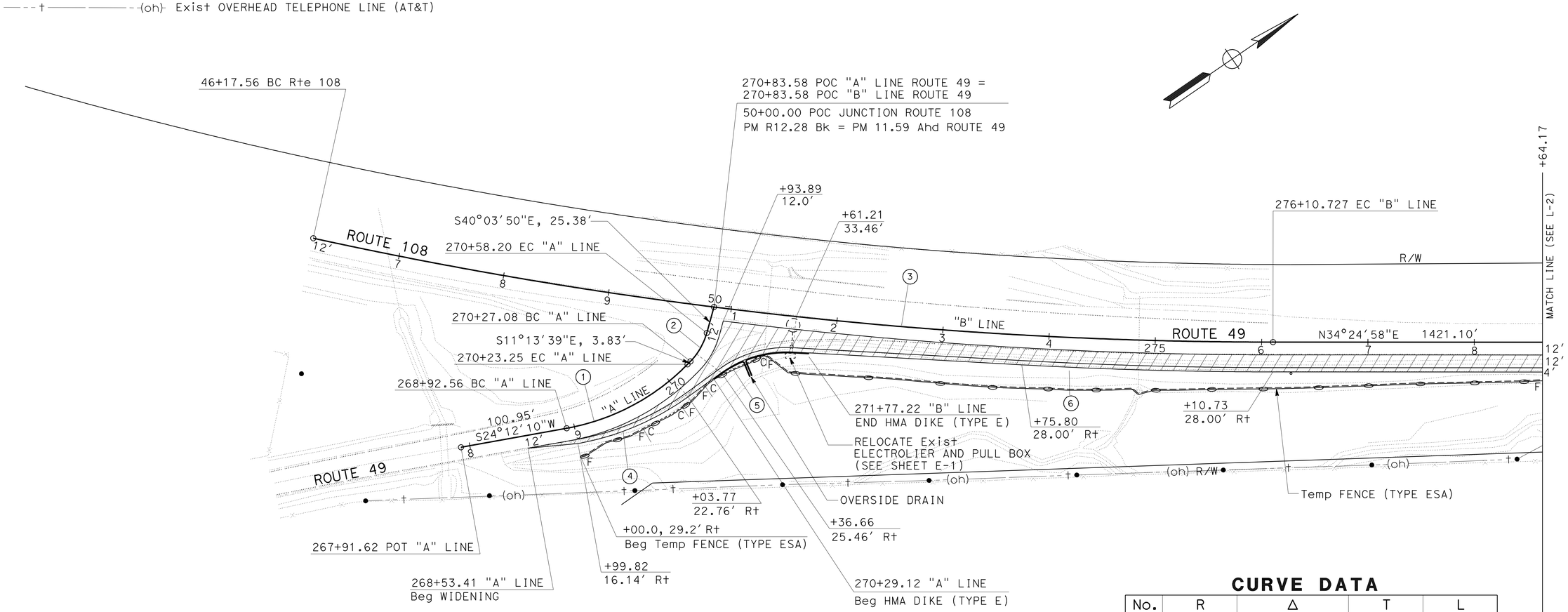

CURVE DATA

No.	R	Δ	T	L
1	211.35′	35°25′48"	67.51′	130.69′
2	61.83′	28°50′12"	15.90′	31.12′
3	4237.06′	12°18′00"	456.55′	909.59′
4	253.83′	25°38′57"	57.78′	113.63′
5	104.00′	39°02′24"	36.87′	70.86′
6	4265.05′	03°10′29"	118.19′	236.31′

LAYOUT

SCALE: 1" = 50′ **L-1**

STATE OF CALIFORNIA - DEPARTMENT OF TRANSPORTATION
Caltrans
DESIGN

FUNCTIONAL SUPERVISOR: CAROLINE REYES
CALCULATED-DESIGNED BY: HUONG LE
CHECKED BY: NHAN CAO
REVISED BY: HL
DATE REVISED: 1/18/11

LAST REVISION 00-00-00
DATE PLOTTED => 10-MAR-2011
TIME PLOTTED => 13:46

Dist	COUNTY	ROUTE	POST MILES TOTAL PROJECT	SHEET No.	TOTAL SHEETS
10	Tuo	49	R12.2/12.0	4	34

REGISTERED CIVIL ENGINEER 2/1/11 DATE

3/7/11
PLANS APPROVAL DATE

REGISTERED PROFESSIONAL ENGINEER NHAN C. CAO No. 76454 Exp. 12/31/12 CIVIL STATE OF CALIFORNIA

THE STATE OF CALIFORNIA OR ITS OFFICERS OR AGENTS SHALL NOT BE RESPONSIBLE FOR THE ACCURACY OR COMPLETENESS OF SCANNED COPIES OF THIS PLAN SHEET.

NOTE:

FOR ACCURATE RIGHT OF WAY DATA, CONTACT
RIGHT OF WAY ENGINEERING AT THE DISTRICT OFFICE.

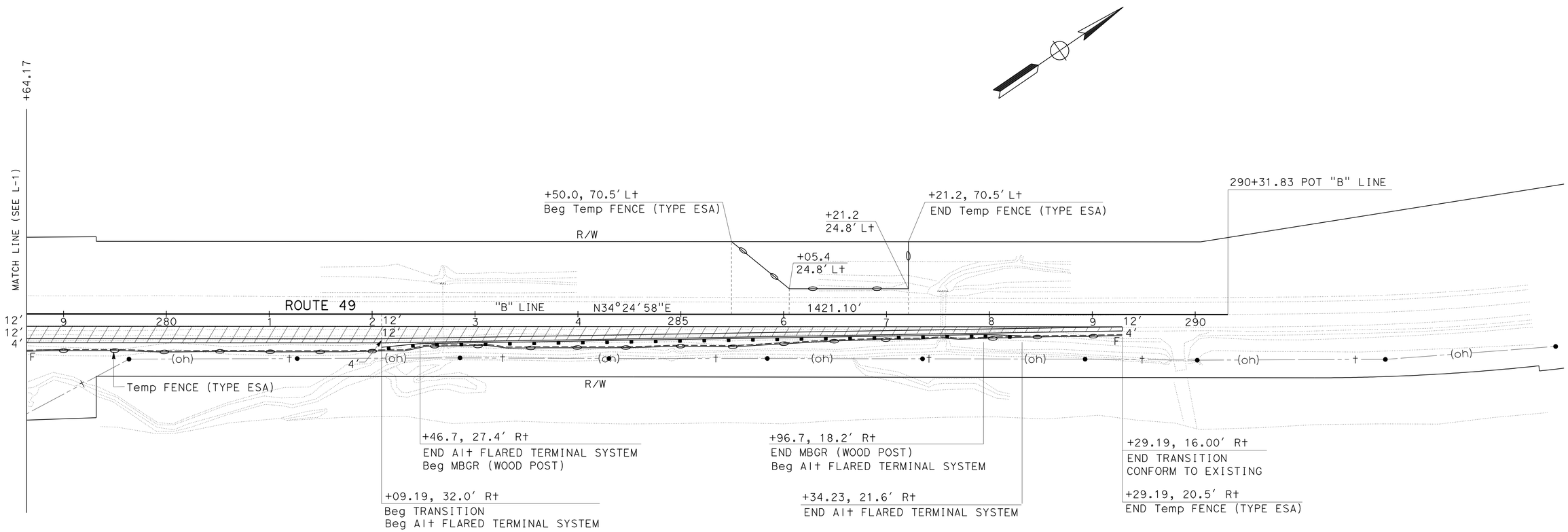

LAYOUT
SCALE: 1" = 50′

L-2

REVISED BY	DATE REVISED
HL	1/28/11

CALCULATED-DESIGNED BY: HUONG LE
CHECKED BY: NHAN CAO
FUNCTIONAL SUPERVISOR: CAROLINE REYES

STATE OF CALIFORNIA - DEPARTMENT OF TRANSPORTATION
Caltrans
DESIGN

LAST REVISION 00-00-00 | DATE PLOTTED => 10-MAR-2011 | TIME PLOTTED => 13:46

Dist	COUNTY	ROUTE	POST MILES TOTAL PROJECT	SHEET No.	TOTAL SHEETS
10	Tuo	49	R12.2/12.0	5	34

REGISTERED CIVIL ENGINEER 2/1/11 DATE

3/7/11
PLANS APPROVAL DATE

REGISTERED PROFESSIONAL ENGINEER NHAN C. CAO No. 76454 Exp. 12/31/12 CIVIL STATE OF CALIFORNIA

THE STATE OF CALIFORNIA OR ITS OFFICERS OR AGENTS SHALL NOT BE RESPONSIBLE FOR THE ACCURACY OR COMPLETENESS OF SCANNED COPIES OF THIS PLAN SHEET.

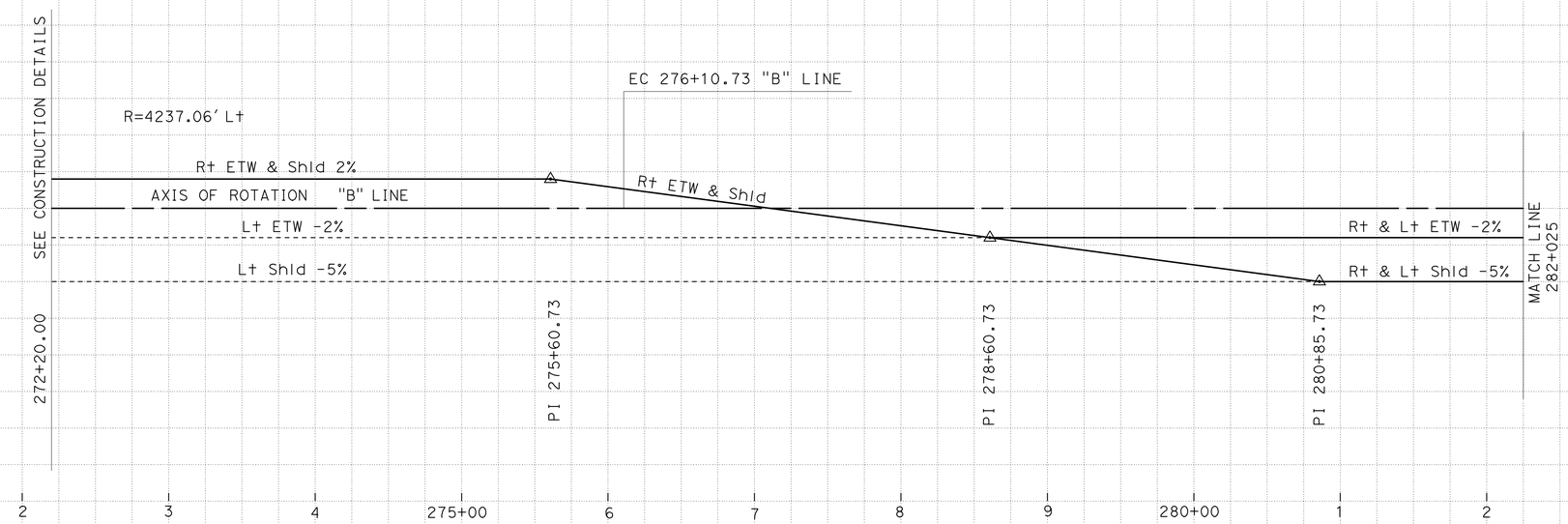

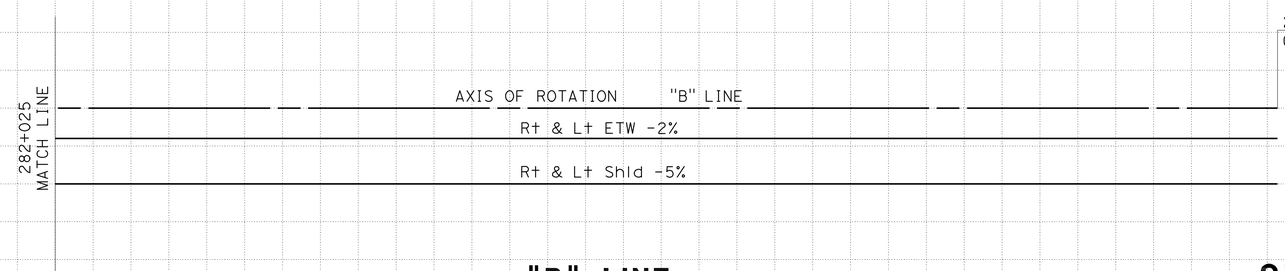

"B" LINE

SUPERELEVATION DIAGRAM

SCALE: Horiz 1" = 50'
Vert 1" = 5'

SE-1

STATION	1	2	3	4	285+00	6	7	8	9	290+00	TOTAL
CY Exc											
CY Emb											

REVISED BY	DATE REVISED
HL	1/28/11

CALCULATED-DESIGNED BY: HUONG LE
CHECKED BY: NHAN CAO
FUNCTIONAL SUPERVISOR: CAROLINE REYES

STATE OF CALIFORNIA - DEPARTMENT OF TRANSPORTATION
Caltrans
DESIGN

LAST REVISION 00-00-00
DATE PLOTTED => 10-MAR-2011
TIME PLOTTED => 13:46

Dist	COUNTY	ROUTE	POST MILES TOTAL PROJECT	SHEET No.	TOTAL SHEETS
10	Tuo	49	R12.2/12.0	6	34

REGISTERED CIVIL ENGINEER 2/1/11 DATE

3/7/11
PLANS APPROVAL DATE

REGISTERED PROFESSIONAL ENGINEER NHAN C. CAO No. 76454 Exp. 12/31/12 CIVIL STATE OF CALIFORNIA

THE STATE OF CALIFORNIA OR ITS OFFICERS OR AGENTS SHALL NOT BE RESPONSIBLE FOR THE ACCURACY OR COMPLETENESS OF SCANNED COPIES OF THIS PLAN SHEET.

NOTE:

FOR ACCURATE RIGHT OF WAY DATA, CONTACT RIGHT OF WAY ENGINEERING AT THE DISTRICT OFFICE.

CURVE DATA

No.	R	Δ	T	L
1	211.35′	35°25′48"	67.51′	130.69′
2	61.83′	28°50′12"	15.90′	31.12′
3	4237.06′	12°18′00"	456.55′	909.59′
4	253.83′	25°38′57"	57.78′	113.63′
5	104.00′	39°02′24"	36.87′	70.86′
6	108.00′	39°02′24"	38.29′	73.59′
7	4265.05′	03°10′29"	118.19′	236.31′

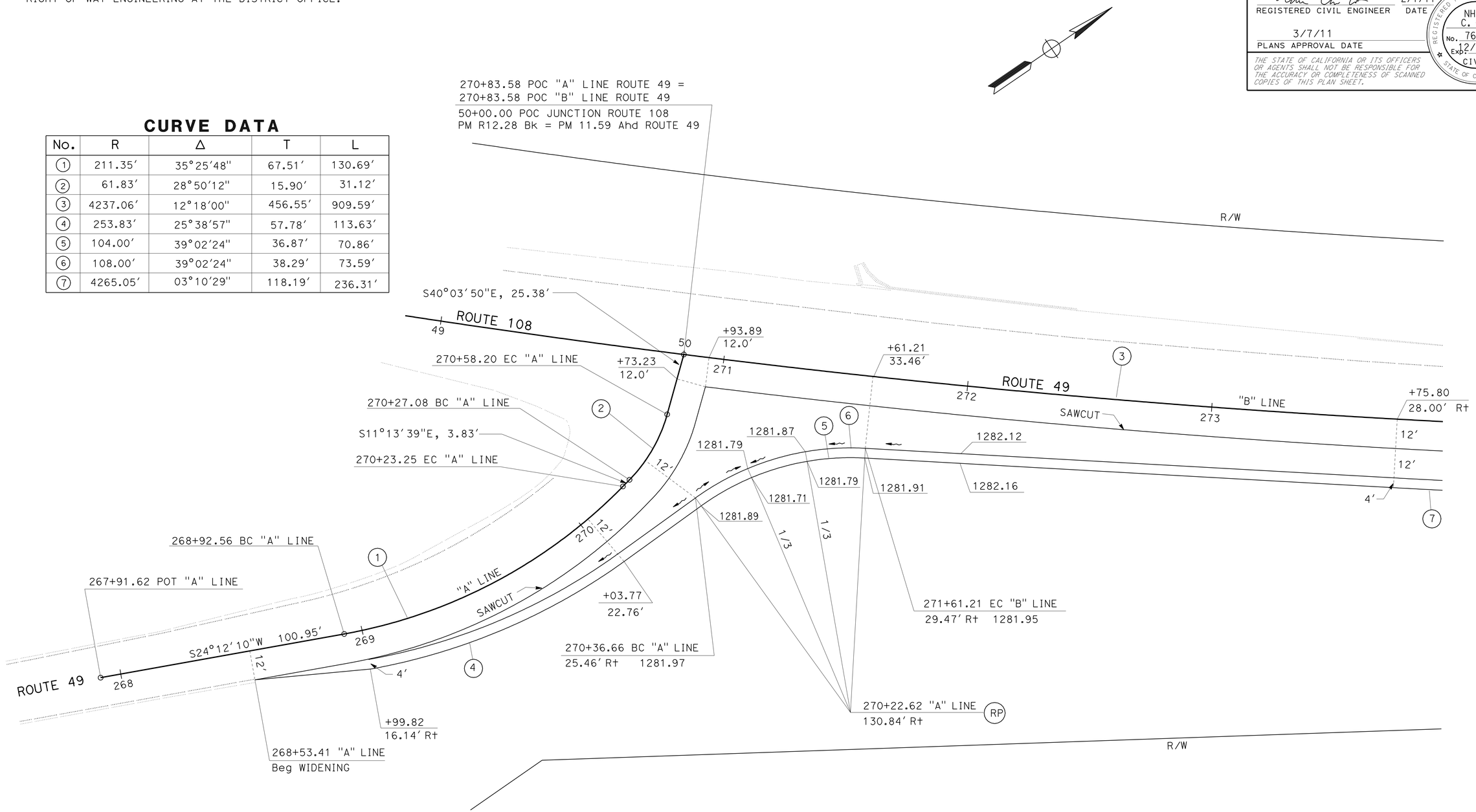

CONSTRUCTION DETAILS

SCALE: 1" = 20′

C-1

REVISED BY	DATE REVISED
HL	1/127/11

CALCULATED-DESIGNED BY	CHECKED BY
HUONG LE	NHAN CAO

FUNCTIONAL SUPERVISOR: CAROLINE REYES

STATE OF CALIFORNIA - DEPARTMENT OF TRANSPORTATION

Caltrans® DESIGN

LAST REVISION 00-00-00 | DATE PLOTTED => 10-MAR-2011 | TIME PLOTTED => 13:46

Dist	COUNTY	ROUTE	POST MILES TOTAL PROJECT	SHEET No.	TOTAL SHEETS
10	Tuo	49	R12.2/12.0	7	34

LICENSED LANDSCAPE ARCHITECT

3/7/11

PLANS APPROVAL DATE

LICENSED LANDSCAPE ARCHITECT William Duttera No. 3242 Expiration Date 9/30/12 Renewal Date 2/3/11 Date STATE OF CALIFORNIA

THE STATE OF CALIFORNIA OR ITS OFFICERS OR AGENTS SHALL NOT BE RESPONSIBLE FOR THE ACCURACY OR COMPLETENESS OF SCANNED COPIES OF THIS PLAN SHEET.

NOTE:

1. FOR ACCURATE RIGHT OF WAY, CONTACT RIGHT OF WAY ENGINEERING AT THE DISTRICT OFFICE.
2. FIBER ROLLS TO BE LEFT IN PLACE AT COMPLETION OF CONSTRUCTION.

LEGEND

—⊖—	Temp FENCE (ESA)
—xx—TSF—	TEMPORARY SILT FENCE
‖ TCD ‖	TEMPORARY CHECK DAMS

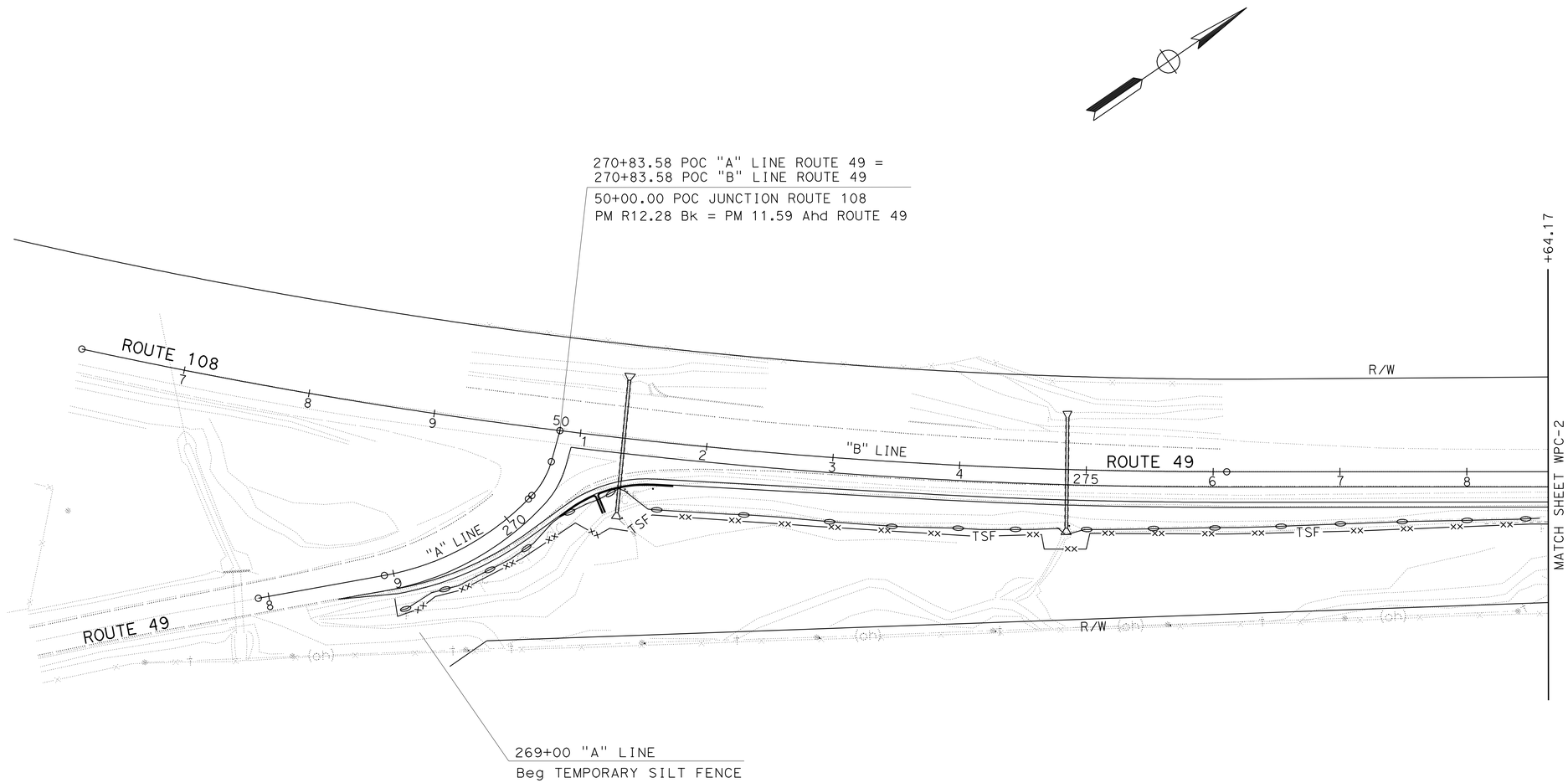

TEMPORARY WATER POLLUTION CONTROL PLAN

SCALE: 1" = 50'

WPC-1

THIS PLAN ACCURATE FOR TEMPORARY WATER POLLUTION CONTROL WORK ONLY.

STATE OF CALIFORNIA - DEPARTMENT OF TRANSPORTATION

Caltrans® LANDSCAPE ARCHITECTURE

SENIOR LANDSCAPE ARCHITECT: ELBERT COX

CALCULATED-DESIGNED BY: Bill Duttera

CHECKED BY: Gus Escutia

REVISED BY: B.D.

DATE REVISED: 1-31-11

LAST REVISION 1-31-11

DATE PLOTTED => 10-MAR-2011

TIME PLOTTED => 13:46

Dist	COUNTY	ROUTE	POST MILES TOTAL PROJECT	SHEET No.	TOTAL SHEETS
10	Tuo	49	R12.2/12.0	8	34

LICENSED LANDSCAPE ARCHITECT

3/7/11

PLANS APPROVAL DATE

LICENSED LANDSCAPE ARCHITECT William Duttera No. 3242 Expiration 9/30/12 Renewal date 2/3/11 Date STATE OF CALIFORNIA

THE STATE OF CALIFORNIA OR ITS OFFICERS OR AGENTS SHALL NOT BE RESPONSIBLE FOR THE ACCURACY OR COMPLETENESS OF SCANNED COPIES OF THIS PLAN SHEET.

NOTE:

FOR ACCURATE RIGHT OF WAY DATA, CONTACT RIGHT OF WAY ENGINEERING AT THE DISTRICT OFFICE.

TEMPORARY SILT FENCE

LOCATION SHEET NUMBER	SIDE		TEMPORARY SILT FENCE
	Rt	Lt	LF
WPC-1	X		975
WPC-2	X		1070
WPC-2		X	145
TOTAL			2190

TEMPORARY CHECK DAM

LOCATION (SHEET WPC-2)	TEMPORARY CHECK DAMS
	LF
Sta 279 + 00 "B" LINE Rt	35
Sta 283 + 52 "B" LINE Rt	22
Sta 285 + 16 "B" LINE Rt	22
Sta 286 + 79 "B" LINE Rt	25
Sta 288 + 59 "B" LINE Rt	28
TOTAL	132

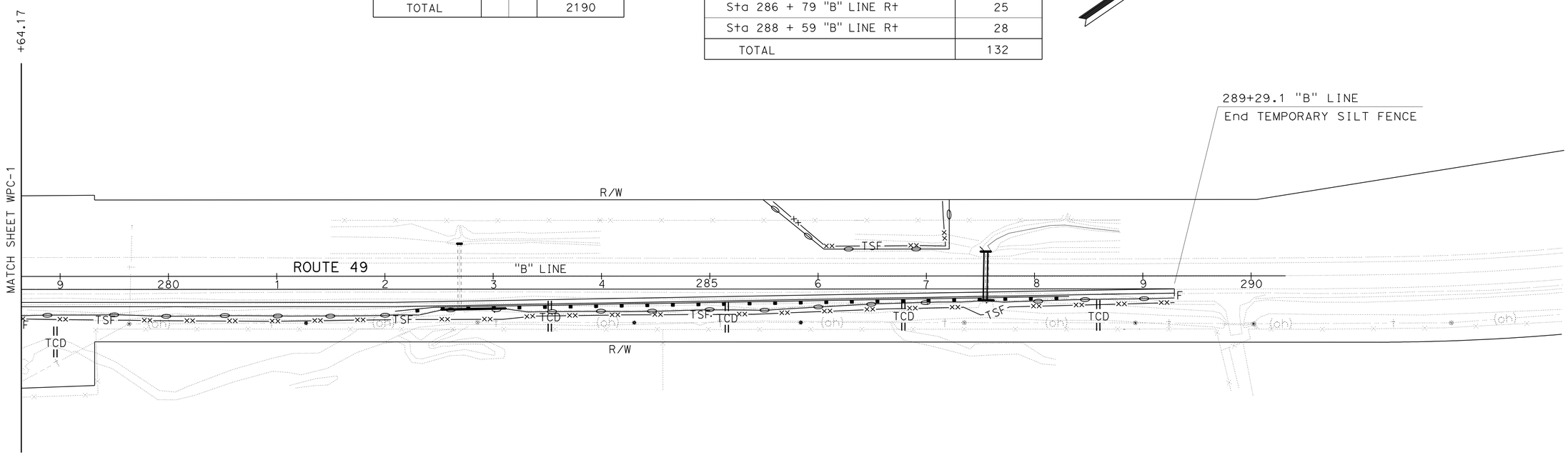

TEMPORARY WATER POLUUTION CONTROL PLAN AND QUANTITIES

SCALE: 1" = 50'

WPC-2

THIS PLAN ACCURATE FOR TEMPORARY WATER POLLUTION CONTROL WORK ONLY.

STATE OF CALIFORNIA - DEPARTMENT OF TRANSPORTATION

Caltrans LANDSCAPE ARCHITECTURE

SENIOR LANDSCAPE ARCHITECT: ELBERT COX

CALCULATED-DESIGNED BY: Bill Duttera

CHECKED BY: Gus Escutia

REVISED BY: B.D.

DATE REVISED: 1-31-11

LAST REVISION: 1-31-11

DATE PLOTTED => 10-MAR-2011

TIME PLOTTED => 13:46

Dist	COUNTY	ROUTE	POST MILES TOTAL PROJECT	SHEET No.	TOTAL SHEETS
10	Tuo	49	R12.2/12.0	9	34

LICENSED LANDSCAPE ARCHITECT

3/7/11
PLANS APPROVAL DATE

LICENSED LANDSCAPE ARCHITECT
William Duttera No. 3242
Expiration
9/30/12
Renewal Date
2/3/11
Date
STATE OF CALIFORNIA

THE STATE OF CALIFORNIA OR ITS OFFICERS OR AGENTS SHALL NOT BE RESPONSIBLE FOR THE ACCURACY OR COMPLETENESS OF SCANNED COPIES OF THIS PLAN SHEET.

NOTE:

1. FOR ACCURATE RIGHT OF WAY, CONTACT RIGHT OF WAY ENGINEERING AT THE DISTRICT OFFICE.
2. FIBER ROLLS TO BE LEFT IN PLACE AT COMPLETION OF CONSTRUCTION.

LEGEND

EROSION CONTROL (TYPE 1):
EROSION CONTROL (HYDROSEED)
EROSION CONTROL (COMPOST BLANKET)

\\\\\\ FR \\\\\\\ FIBER ROLL

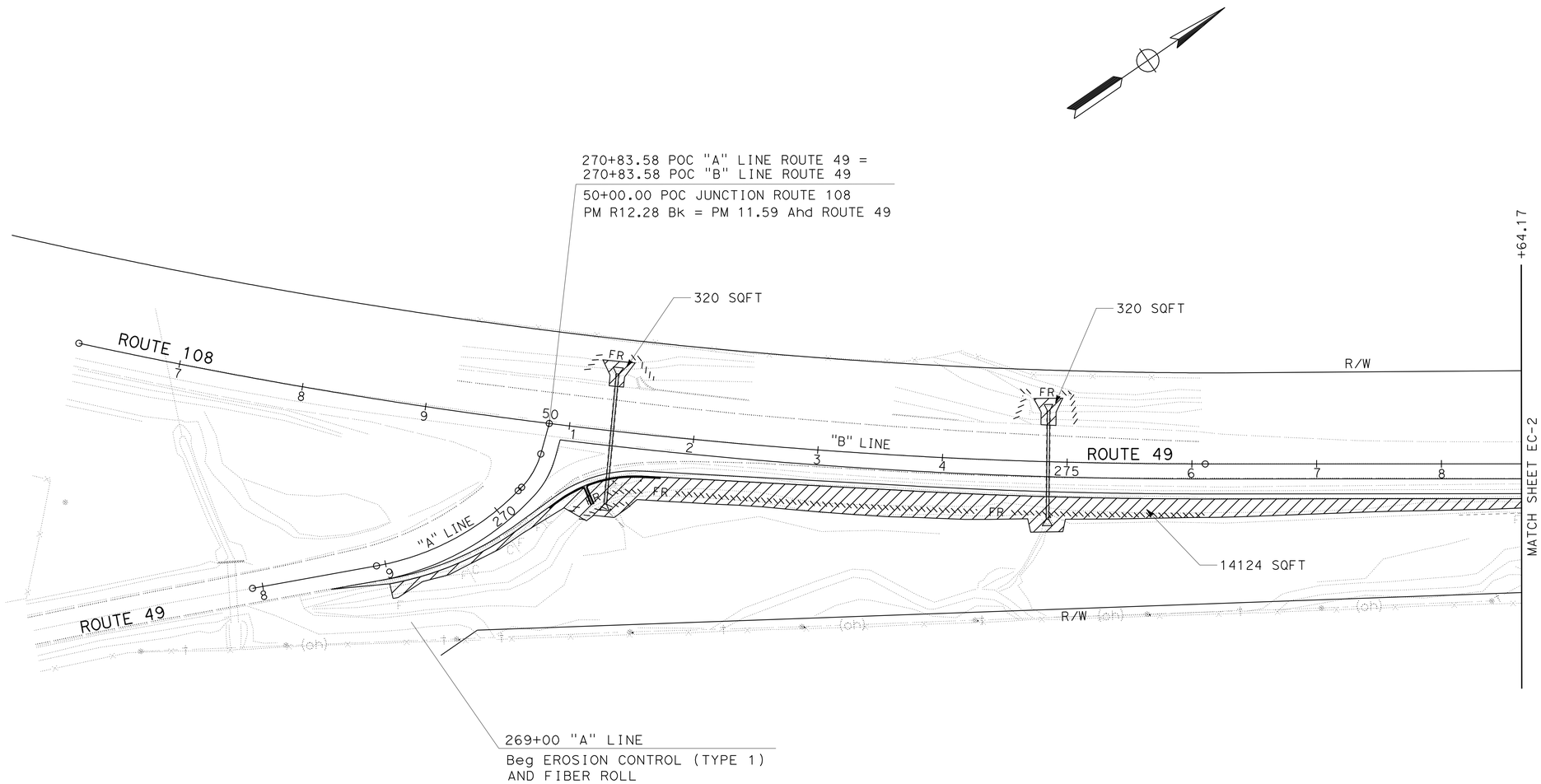

THIS PLAN ACCURATE FOR EROSION CONTROL WORK ONLY.

EROSION CONTROL PLAN
SCALE: 1" = 50'
EC-1

STATE OF CALIFORNIA - DEPARTMENT OF TRANSPORTATION
Caltrans LANDSCAPE ARCHITECTURE

SENIOR LANDSCAPE ARCHITECT: ELBERT COX
CALCULATED-DESIGNED BY: Bill Duttera
CHECKED BY: Gus Escutia
REVISED BY: B.D.
DATE REVISED: 1-31-11

LAST REVISION 1-31-11
DATE PLOTTED => 10-MAR-2011
TIME PLOTTED => 13:46

Dist	COUNTY	ROUTE	POST MILES TOTAL PROJECT	SHEET No.	TOTAL SHEETS
10	Tuo	49	R12.2/12.0	10	34

LICENSED LANDSCAPE ARCHITECT

3/7/11
PLANS APPROVAL DATE

LICENSED LANDSCAPE ARCHITECT
William Duttera No. 3242
Expiration Date
9/30/12
Renewal Date
2/3/11
Date
STATE OF CALIFORNIA

THE STATE OF CALIFORNIA OR ITS OFFICERS OR AGENTS SHALL NOT BE RESPONSIBLE FOR THE ACCURACY OR COMPLETENESS OF SCANNED COPIES OF THIS PLAN SHEET.

NOTE:

FOR ACCURATE RIGHT OF WAY DATA, CONTACT
RIGHT OF WAY ENGINEERING AT THE DISTRICT OFFICE.

EROSION CONTROL (HYDROSEED)

LOCATION STATION TO STATION	SIDE		AREA	STRAW (N)	FIBER (N)	PURE LIVE SEED (N)	ORGANIC FERTILIZER (N)	TACKIFIER (N)
	R†	L†	SQFT	TON	LB	LB	LB	LB
269+00 "A" LINE TO 278+64.17 "B" LINE	X		14124	0.65	350.2	16.2	58.4	56.7
271+34.4		X	320	.015	7.9	0.37	1.3	1.3
274+84.9		X	320	.015	7.9	0.37	1.3	1.3
278+64.17 TO 289+29.1	X		6868	0.32	170.3	7.9	28.4	27.6
282+69.1		X	226	0.01	5.6	0.26	0.93	0.91
287+54.8		X	336	.015	8.3	0.39	1.39	1.35
TOTAL			22194					

(N) - NOT A SEPARATE PAY ITEM, FOR INFORMATION ONLY.

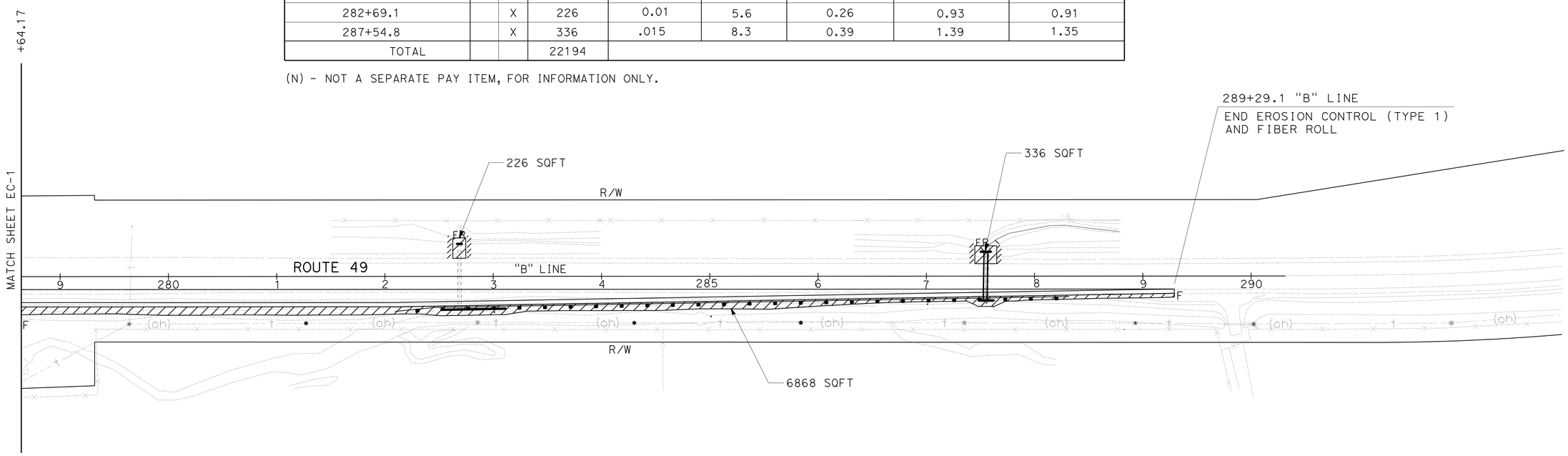

EROSION CONTROL (COMPOST BLANKET)

LOCATION SHEET NUMBER	SIDE		EROSION CONTROL COMPOST BLANKET
	R†	L†	CY
EC-1	X		32.7
EC-1		X	1.5
EC-2	X		15.9
EC-2		X	1.3
TOTAL			51.4

FIBER ROLL

LOCATION SHEET NUMBER	SIDE		FIBER ROLL
	R†	L†	LF
EC-1	X		585
EC-1		X	188
EC-2		X	124
TOTAL			897

THIS PLAN ACCURATE FOR EROSION CONTROL WORK ONLY.

EROSION CONTROL PLAN AND QUANTITIES

SCALE: 1" = 50'

EC-2

B.D.	1-31-11	Bill Duttera	Gus Escutia
REVISED BY	DATE REVISED	CALCULATED-DESIGNED BY	CHECKED BY

SENIOR LANDSCAPE ARCHITECT
ELBERT COX

STATE OF CALIFORNIA - DEPARTMENT OF TRANSPORTATION
Caltrans® LANDSCAPE ARCHITECTURE

LAST REVISION 1-31-11
DATE PLOTTED => 10-MAR-2011
TIME PLOTTED => 13:46

Dist	COUNTY	ROUTE	POST MILES TOTAL PROJECT	SHEET No.	TOTAL SHEETS
10	Tuo	49	R12.2/12.0	11	34

REGISTERED CIVIL ENGINEER 2/1/11 DATE

3/7/11
PLANS APPROVAL DATE

REGISTERED PROFESSIONAL ENGINEER NHAN C. CAO No. 76454 Exp. 12/31/12 CIVIL STATE OF CALIFORNIA

THE STATE OF CALIFORNIA OR ITS OFFICERS OR AGENTS SHALL NOT BE RESPONSIBLE FOR THE ACCURACY OR COMPLETENESS OF SCANNED COPIES OF THIS PLAN SHEET.

NOTES:

1. EXISTING DRAINAGE LOCATIONS ARE APPROXIMATE ONLY. VERIFY LOCATION AND ELEVATION BEFORE MODIFYING EXISTING DRAINAGE FACILITIES.
2. UNDERGROUND UTILITIES MUST BE FIELD VERIFIED PRIOR TO DIGGING.
3. STATIONS AND OFFSET DISTANCES FOR DRAINAGE GUTTERS/DITCHES ARE REFERENCED TO THE CENTER OF DRAINAGE GUTTER/DITCH BASE.
4. FOR HMA DIKE LOCATIONS, SEE LAYOUT PLANS.
5. FOR ACCURATE RIGHT OF WAY DATA, CONTACT RIGHT OF WAY ENGINEERING AT THE DISTRICT OFFICE.

LEGEND

- (X) DRAINAGE SYSTEM No.
- (x) DRAINAGE UNIT No.
- HEADWALL
- GRADE TO DRAIN
- DIRECTION OF FLOW
- ESA FENCE

ABBREVIATION

CFES - CONCRETE FLARED END SECTION
CIPP - CURED IN PLACE PIPE LINER
ESA - ENVIRONMENTALLY SENSITIVE AREA

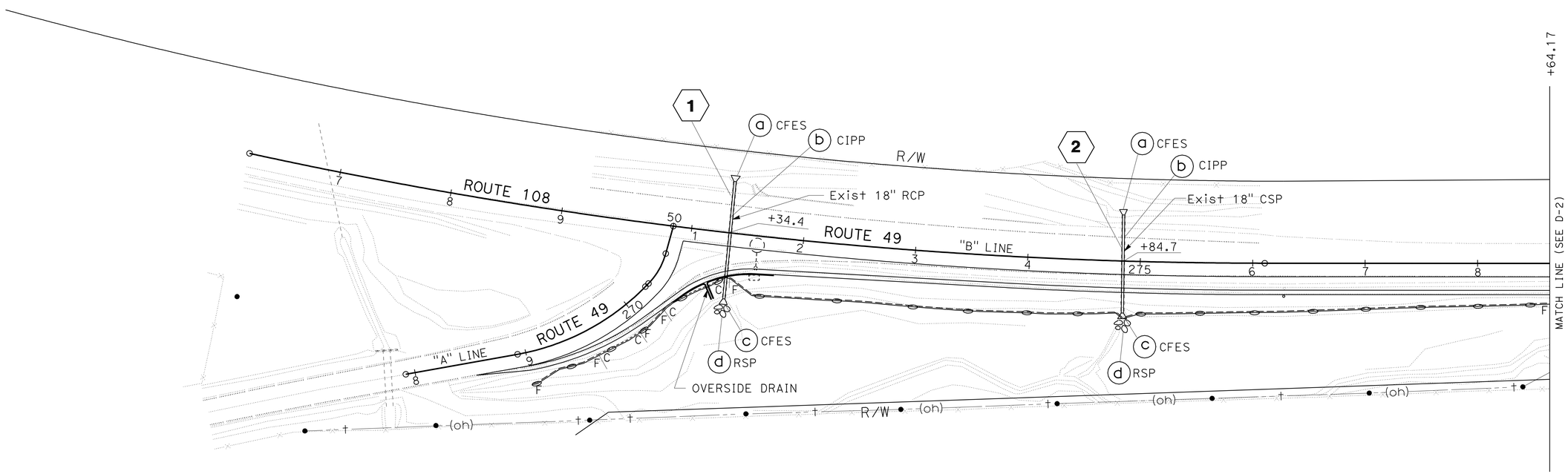

THIS PLAN ACCURATE FOR DRAINAGE WORK ONLY.

DRAINAGE PLAN

SCALE: 1" = 50'

D-1

STATE OF CALIFORNIA - DEPARTMENT OF TRANSPORTATION
Caltrans
DESIGN

FUNCTIONAL SUPERVISOR: CAROLINE REYES
CALCULATED-DESIGNED BY: HUONG LE
CHECKED BY: NHAN CAO
REVISED BY: NC
DATE REVISED: 11/17/10

LAST REVISION 00-00-00
DATE PLOTTED => 10-MAR-2011
TIME PLOTTED => 13:46

Dist	COUNTY	ROUTE	POST MILES TOTAL PROJECT	SHEET No.	TOTAL SHEETS
10	Tuo	49	R12.2/12.0	12	34

REGISTERED CIVIL ENGINEER 2/1/11 DATE

3/7/11
PLANS APPROVAL DATE

REGISTERED PROFESSIONAL ENGINEER NHAN C. CAO No. 76454 Exp. 12/31/12 CIVIL STATE OF CALIFORNIA

THE STATE OF CALIFORNIA OR ITS OFFICERS OR AGENTS SHALL NOT BE RESPONSIBLE FOR THE ACCURACY OR COMPLETENESS OF SCANNED COPIES OF THIS PLAN SHEET.

NOTE:

FOR ACCURATE RIGHT OF WAY DATA, CONTACT RIGHT OF WAY ENGINEERING AT THE DISTRICT OFFICE.

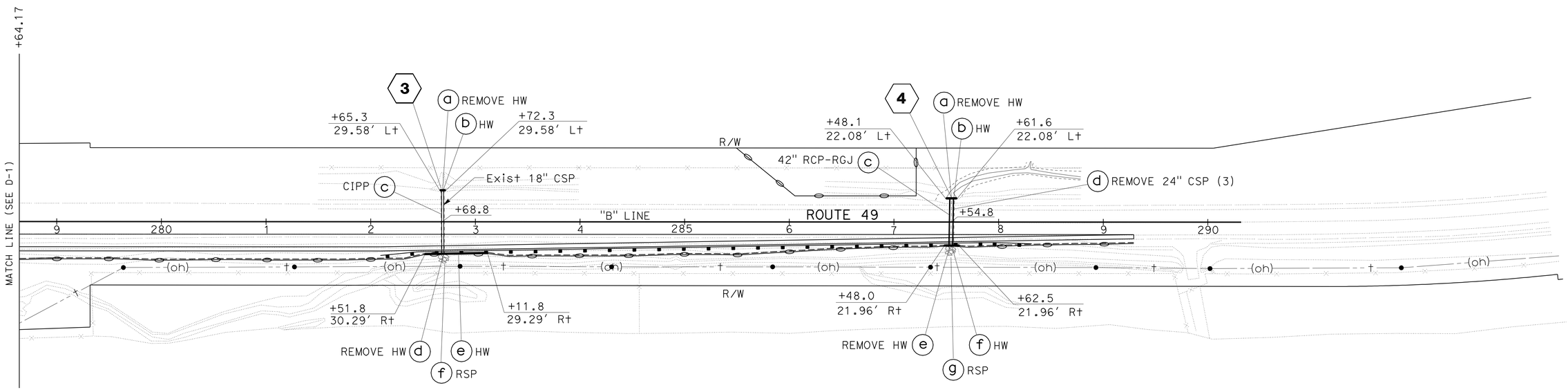

THIS PLAN ACCURATE FOR DRAINAGE WORK ONLY.

DRAINAGE PLAN

SCALE: 1" = 50'

D-2

CALCULATED-DESIGNED BY	HUONG LE	REVISED BY	NC
CHECKED BY	NHAN CAO	DATE REVISED	11/17/10

FUNCTIONAL SUPERVISOR: CAROLINE REYES

STATE OF CALIFORNIA - DEPARTMENT OF TRANSPORTATION

Caltrans

DESIGN

LAST REVISION 00-00-00 | DATE PLOTTED => 10-MAR-2011 | TIME PLOTTED => 13:46

Dist	COUNTY	ROUTE	POST MILES TOTAL PROJECT	SHEET No.	TOTAL SHEETS
10	Tuo	49	R12.2/12.0	13	34

REGISTERED CIVIL ENGINEER 2/1/11 DATE

3/7/11
PLANS APPROVAL DATE

REGISTERED PROFESSIONAL ENGINEER NHAN C. CAO No. 76454 Exp. 12/31/12 CIVIL STATE OF CALIFORNIA

THE STATE OF CALIFORNIA OR ITS OFFICERS OR AGENTS SHALL NOT BE RESPONSIBLE FOR THE ACCURACY OR COMPLETENESS OF SCANNED COPIES OF THIS PLAN SHEET.

ABBREVIATION

(RGJ) - RUBBER GASKETED JOINT

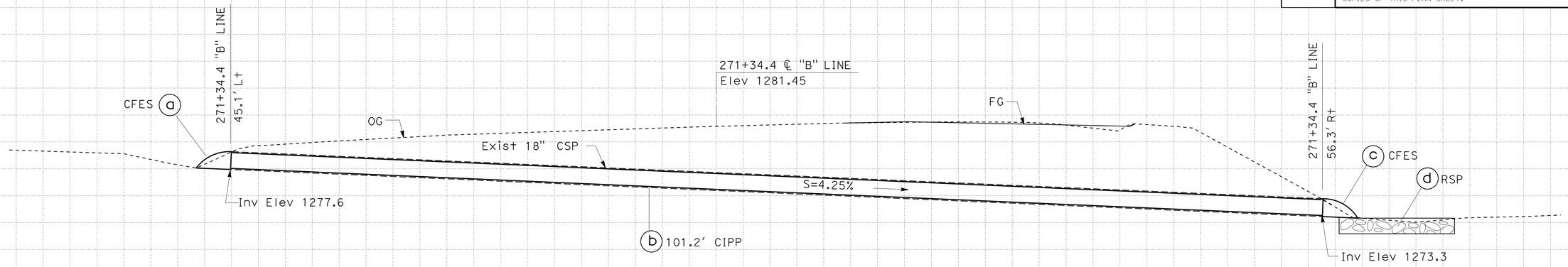

DRAINAGE SYSTEM No. 1

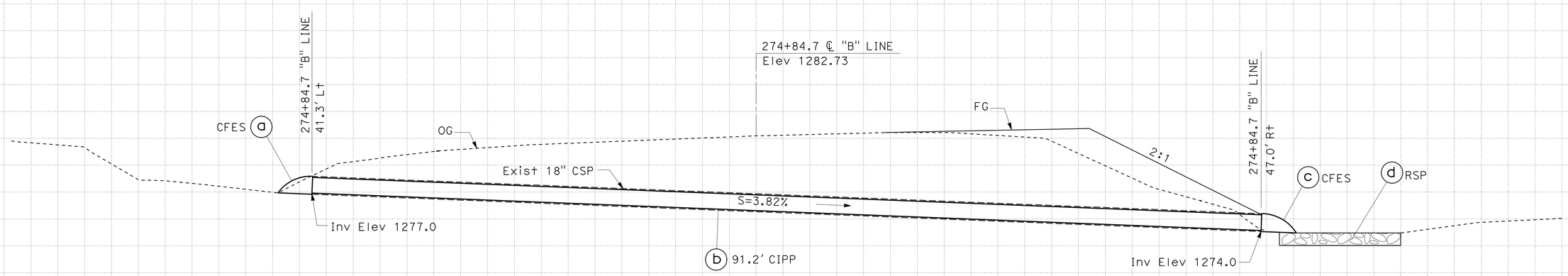

DRAINAGE SYSTEM No. 2

DRAINAGE PROFILES

SCALE: Horiz 1" = 5'
Vert 1" = 5'

DP-1

STATION		TOTAL
CY	Exc	
	Emb	

STATE OF CALIFORNIA - DEPARTMENT OF TRANSPORTATION
Caltrans® DESIGN

FUNCTIONAL SUPERVISOR: CAROLINE REYES
CALCULATED-DESIGNED BY: HUONG LE
CHECKED BY: NHAN CAO
REVISED BY: NC
DATE REVISED: 11/17/10

LAST REVISION 00-00-00
DATE PLOTTED => 10-MAR-2011
TIME PLOTTED => 13:46

Dist	COUNTY	ROUTE	POST MILES TOTAL PROJECT	SHEET No.	TOTAL SHEETS
10	Tuo	49	R12.2/12.0	14	34

REGISTERED CIVIL ENGINEER 2/1/11 DATE

3/7/11
PLANS APPROVAL DATE

REGISTERED PROFESSIONAL ENGINEER NHAN C. CAO No. 76454 Exp. 12/31/12 CIVIL STATE OF CALIFORNIA

THE STATE OF CALIFORNIA OR ITS OFFICERS OR AGENTS SHALL NOT BE RESPONSIBLE FOR THE ACCURACY OR COMPLETENESS OF SCANNED COPIES OF THIS PLAN SHEET.

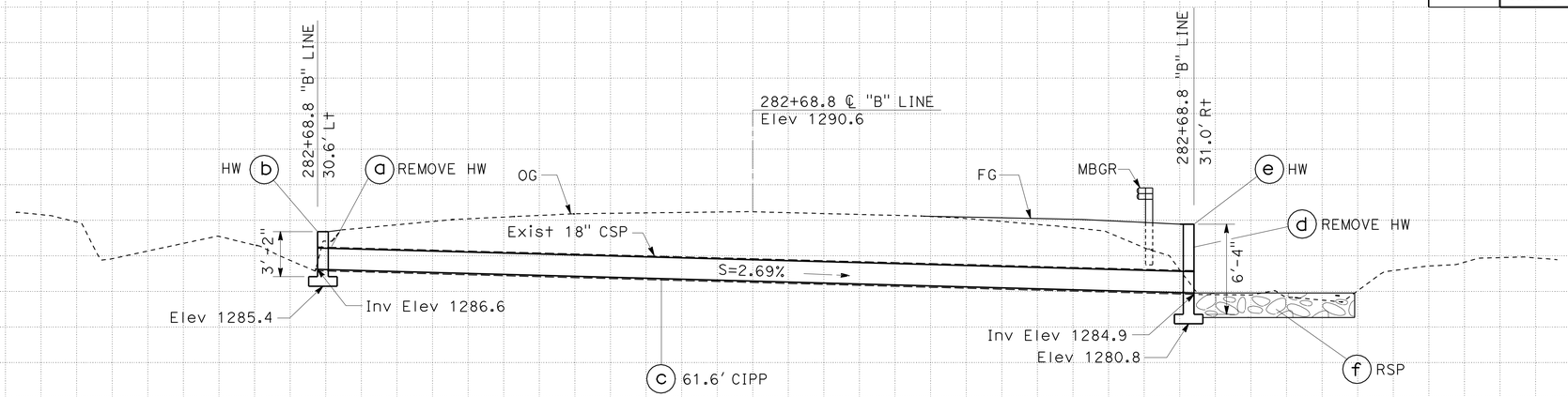

DRAINAGE SYSTEM No. 3

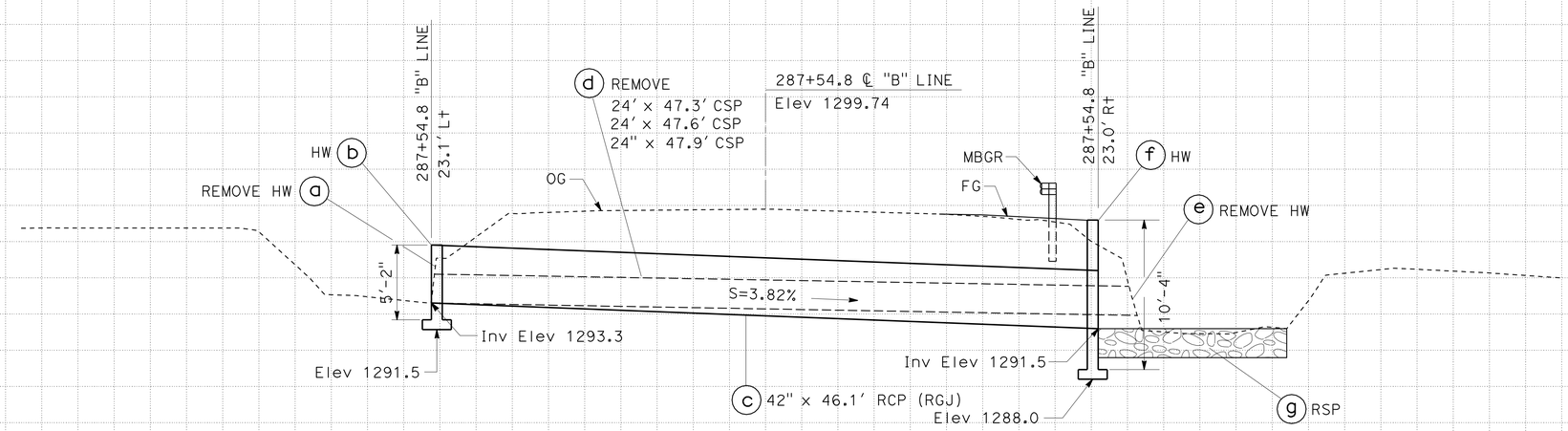

DRAINAGE SYSTEM No. 4

DRAINAGE PLAN

SCALE: Horiz 1" = 5'
Vert 1" = 5'

DP-2

STATION		TOTAL
CY	Exc	
	Emb	

STATE OF CALIFORNIA - DEPARTMENT OF TRANSPORTATION
Caltrans® DESIGN

FUNCTIONAL SUPERVISOR: CAROLINE REYES
CALCULATED-DESIGNED BY: HUONG LE
CHECKED BY: NHAN CAO
REVISED BY: NC
DATE REVISED: 1/28/11

LAST REVISION 00-00-00
DATE PLOTTED => 10-MAR-2011
TIME PLOTTED => 13:46

Dist	COUNTY	ROUTE	POST MILES TOTAL PROJECT	SHEET No.	TOTAL SHEETS
10	Tuo	49	R12.2/12.0	15	34

REGISTERED CIVIL ENGINEER 2/1/11 DATE

3/7/11
PLANS APPROVAL DATE

REGISTERED PROFESSIONAL ENGINEER NHAN C. CAO No. 76454 Exp. 12/31/12 CIVIL STATE OF CALIFORNIA

THE STATE OF CALIFORNIA OR ITS OFFICERS OR AGENTS SHALL NOT BE RESPONSIBLE FOR THE ACCURACY OR COMPLETENESS OF SCANNED COPIES OF THIS PLAN SHEET.

NOTE:

"d" REPRESENTS THE OUTSIDE DIAMETER OF THE PIPE CONNECTED TO THE FLARED-END SECTION.

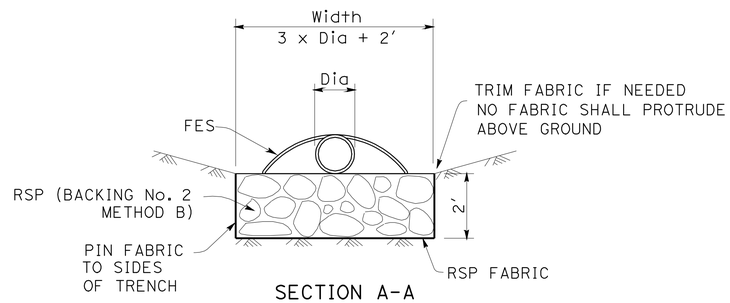

SECTION A-A

DRAINAGE SYSTEM No.	LENGTH Ft
D1	11
D2	11
D3	11
D4	13

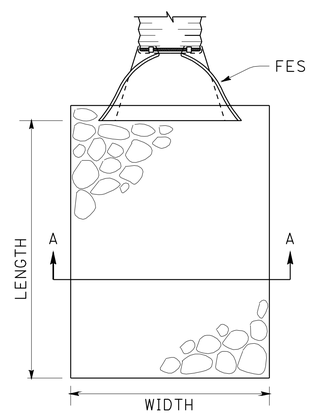

PLAN

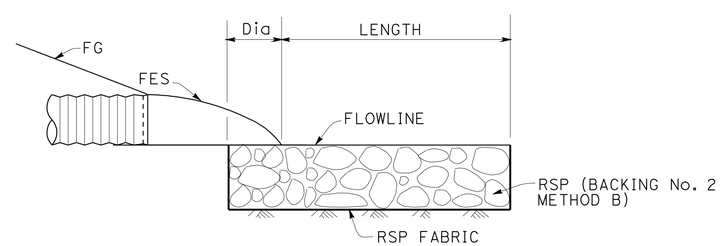

PROFILE

ROCK SLOPE PROTECTION AT CULVERT OUTLET

THIS PLAN ACCURATE FOR EROSION CONTROL WORK ONLY.

DRAINAGE DETAILS

NO SCALE

DD-1

REVISED BY	NC	CALCULATED-DESIGNED BY	HUONG LE
DATE REVISED	1/19/11	CHECKED BY	NHAN CAO

FUNCTIONAL SUPERVISOR: CAROLINE REYES

STATE OF CALIFORNIA - DEPARTMENT OF TRANSPORTATION

Caltrans®

DESIGN

LAST REVISION 00-00-00 | DATE PLOTTED => 10-MAR-2011 | TIME PLOTTED => 13:47

Dist	COUNTY	ROUTE	POST MILES TOTAL PROJECT	SHEET No.	TOTAL SHEETS
10	Tuo	49	R12.2/12.0	16	34

REGISTERED CIVIL ENGINEER 2/1/11 DATE

3/7/11
PLANS APPROVAL DATE

REGISTERED PROFESSIONAL ENGINEER NHAN C. CAO No. 76454 Exp. 12/31/12 CIVIL STATE OF CALIFORNIA

THE STATE OF CALIFORNIA OR ITS OFFICERS OR AGENTS SHALL NOT BE RESPONSIBLE FOR THE ACCURACY OR COMPLETENESS OF SCANNED COPIES OF THIS PLAN SHEET.

ABBREVIATIONS:

(N) - NOT A SEPARATE PAY ITEM, FOR INFORMATION ONLY
(S) - STANDARD JOINT TYPE
(RGJ) - RUBBER GASKETED JOINT

DRAINAGE QUANTITIES

DRAINAGE PLAN SHEET No.	DRAINAGE SYSTEM No. ⬡	DRAINAGE UNIT ○	REMOVE HEADWALL EA	REMOVE CULVERT LF	42" RCP LF	18" CFES EA	MINOR CONCRETE (MINOR STRUCTURE) CY	RSP (BACKING NO. 2, METHOD B) CY	RSP FABRIC SQYD	HEIGHT OF HEADWALL (N) F+	LENGTH OF HEADWALL (N) F+	MAXIMUM COVER (N) F+	18" CURED-IN-PLACE PIPELINER LF	DESCRIPTION	STATION	DRAINAGE SYSTEM No. ⬡	DRAINAGE UNIT ○
D-1	1	a				1								18" CONCRETE FLARED END SECTION	45.1′ L+ 271+34.4 "B" LINE	1	a
		b										5.5	101.2	CURED IN PLACE PIPE LINER	271+34.4 ℄ "B" LINE		b
		c				1								18" CONCRETE FLARED END SECTION	56.3′ R+ 271+34.4 "B" LINE		c
		d						3.1	7.9					RSP			d
D-1	2	a				1								18" CONCRETE FLARED END SECTION	41.3′ L+ 274+84.7 "B" LINE	2	a
		b										6.8	91.2	CURED IN PLACE PIPE LINER	274+84.7 ℄ "B" LINE		b
		c				1								18" CONCRETE FLARED END SECTION	47.0′ R+ 274+84.7 "B" LINE		c
		d						3.1	7.9					RSP			d
D-2	3	a	1											REMOVE HEADWALL	30.6′ L+ 282+68.8 "B" LINE	3	a
		b					0.91			3.17	7.0			HEADWALL	30.6′ L+ 282+68.8 "B" LINE		b
		c										3.3	61.6	CURED IN PLACE PIPE LINER	282+68.8 ℄ "B" LINE		c
		d	1											REMOVE HEADWALL	31.0′ R+ 282+68.8 "B" LINE		d
		e					16.4			6.33	60.0			HEADWALL	31.0′ R+ 282+68.8 "B" LINE		e
		f						3.1	7.9					RSP			f
D-2	4	a	1											REMOVE HEADWALL	23.1′ L+ 287+54.8 "B" LINE	4	a
		b					2.34			5.17	13.5			HEADWALL	23.1′ L+ 287+54.8 "B" LINE		b
		c			46.1							3.3		42" RCP	287+54.8 ℄ "B" LINE		c
		d		143										REMOVE 24" CSP (3)	287+54.8 ℄ "B" LINE		d
		e	1											REMOVE HEADWALL	23.0′ R+ 287+54.8 "B" LINE		e
		f					4.8			10.33	14.5			HEADWALL	23.0′ R+ 287+54.8 "B" LINE		f
		g						7.1	18.0					RSP			g
			4	143	46.1	4	24.45	16.4	41.7				254.0	TOTAL			

REVISED BY: NC — DATE REVISED: 10/5/10
HUONG LE — NHAN CAO
CALCULATED-DESIGNED BY — CHECKED BY
FUNCTIONAL SUPERVISOR: CAROLINE REYES

STATE OF CALIFORNIA - DEPARTMENT OF TRANSPORTATION
Caltrans
DESIGN

DRAINAGE QUANTITIES
DQ-1

LAST REVISION 00-00-00 | DATE PLOTTED => 10-MAR-2011 | TIME PLOTTED => 13:47

Dist	COUNTY	ROUTE	POST MILES TOTAL PROJECT	SHEET No.	TOTAL SHEETS
10	Tuo	49	R12.2/12.0	17	34

REGISTERED CIVIL ENGINEER 2/7/11 DATE

3/7/11
PLANS APPROVAL DATE

REGISTERED PROFESSIONAL ENGINEER QUAN TRINH No. 75493 Exp.6/30/12 CIVIL STATE OF CALIFORNIA

THE STATE OF CALIFORNIA OR ITS OFFICERS OR AGENTS SHALL NOT BE RESPONSIBLE FOR THE ACCURACY OR COMPLETENESS OF SCANNED COPIES OF THIS PLAN SHEET.

STATIONARY MOUNTED CONSTRUCTION AREA SIGNS

SIGN No.	SIGN CODE	PANEL SIZE	No. OF POST AND SIZE	No. OF SIGNS	SIGN MESSAGE
A	W20-1	48" x 48"	1- 4" x 6"	3	ROAD WORK AHEAD
B	G20-2	36" x 18"	1- 4" x 4"	3	END ROAD WORK

EXACT SIGN LOCATIONS TO BE DETERMINED BY THE ENGINEER.

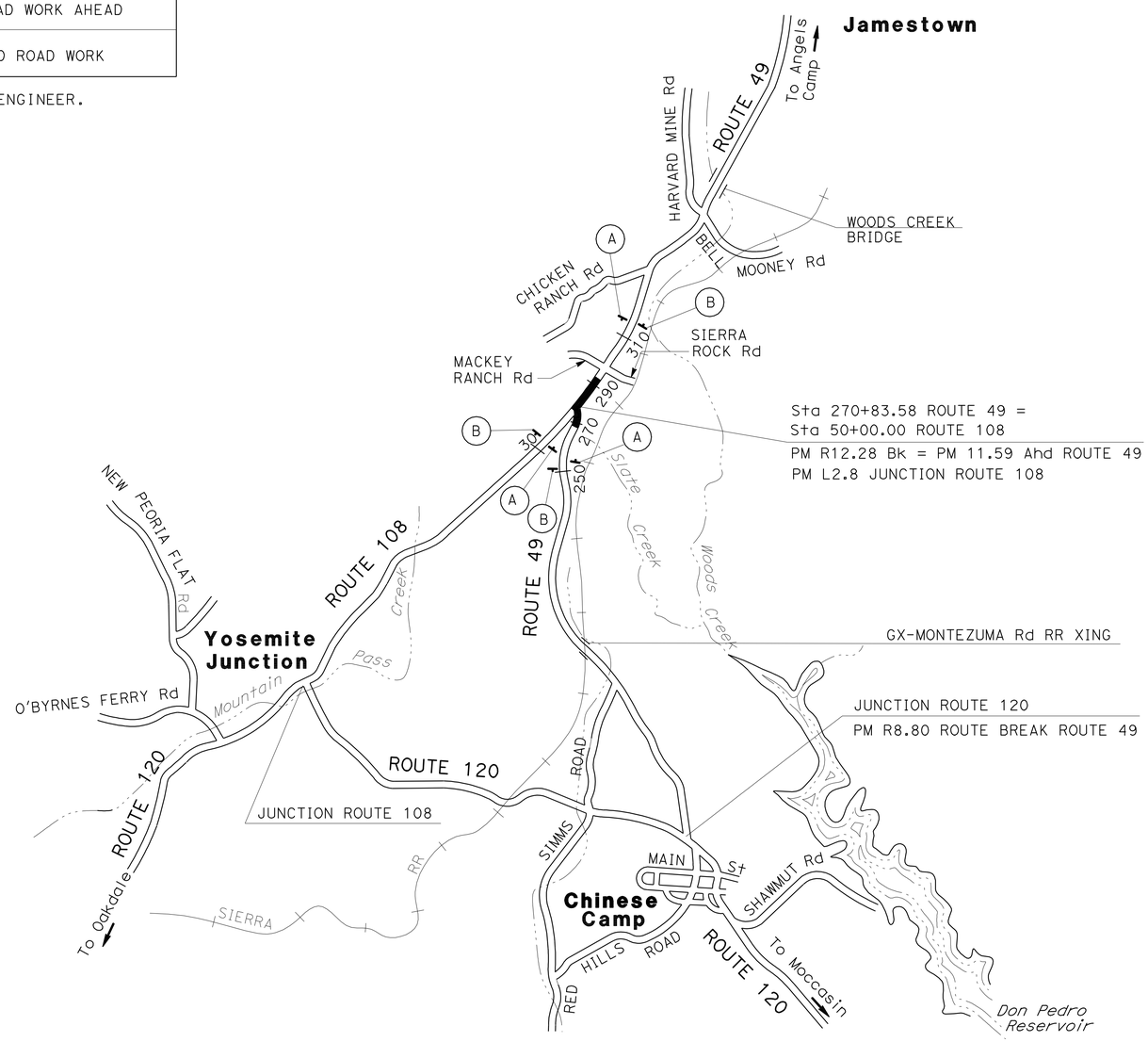

THIS PLAN ACCURATE FOR CONSTRUCTION AREA SIGN WORK ONLY.

CONSTRUCTION AREA SIGN PLAN

NO SCALE

CS-1

QUAN TRINH	CN
CECILE NGUYEN	10/11/10
CALCULATED-DESIGNED BY	REVISED BY
CHECKED BY	DATE REVISED
FUNCTIONAL SUPERVISOR	
MOHAMMED QATAMI	

STATE OF CALIFORNIA - DEPARTMENT OF TRANSPORTATION
Caltrans® TRAFFIC DESIGN

LAST REVISION 09-29-10
DATE PLOTTED => 10-MAR-2011
TIME PLOTTED => 13:47

Dist	COUNTY	ROUTE	POST MILES TOTAL PROJECT	SHEET No.	TOTAL SHEETS
10	Tuo	49	R12.2/12.0	18	34

REGISTERED CIVIL ENGINEER 2/7/11 DATE

3/7/11
PLANS APPROVAL DATE

REGISTERED PROFESSIONAL ENGINEER QUAN TRINH No. 75493 Exp. 6/30/12 CIVIL STATE OF CALIFORNIA

THE STATE OF CALIFORNIA OR ITS OFFICERS OR AGENTS SHALL NOT BE RESPONSIBLE FOR THE ACCURACY OR COMPLETENESS OF SCANNED COPIES OF THIS PLAN SHEET.

NOTE:

FOR ACCURATE RIGHT OF WAY DATA, CONTACT RIGHT OF WAY ENGINEERING AT THE DISTRICT OFFICE.

LEGEND:

- THERMOPLASTIC TRAFFIC STRIPE (SPRAYABLE) DETAIL No.
- REMOVE THERMOPLASTIC STRIPE
- THERMOPLASTIC TRAFFIC STRIPE DETAIL No.
- THERMOPLASTIC PAVEMENT MARKING
- REMOVE THERMOPLASTIC PAVEMENT MARKING
- TYPE III ARROW, THERMOPLASTIC PAVEMENT MARKING
- TYPE V ARROW, THERMOPLASTIC PAVEMENT MARKING
- TYPE V ARROW, THERMOPLASTIC PAVEMENT MARKING
- ROADSIDE SIGN - ONE POST
- REMOVE ROADSIDE SIGN
- RELOCATE ROADSIDE SIGN
- No. ROADSIDE SIGN No.
- CHANGE OF PAVEMENT DELINEATION
- GF GUARD RAILING DELINEATOR (TYPE F)
- F,G DELINEATOR (CLASS 1)
- L, K OBJECT MARKER (TYPE P, TYPE L OR TYPE K)
- REMOVE MILEPOST MARKER (PM)
- MILEPOST MARKER (PM)
- ENVIRONMENTALLY SENSITIVE AREA (ESA) POST TO REMAIN IN PLACE
- ROADSIDE SIGN TO REMAIN IN PLACE
- S DELINEATION SPACING

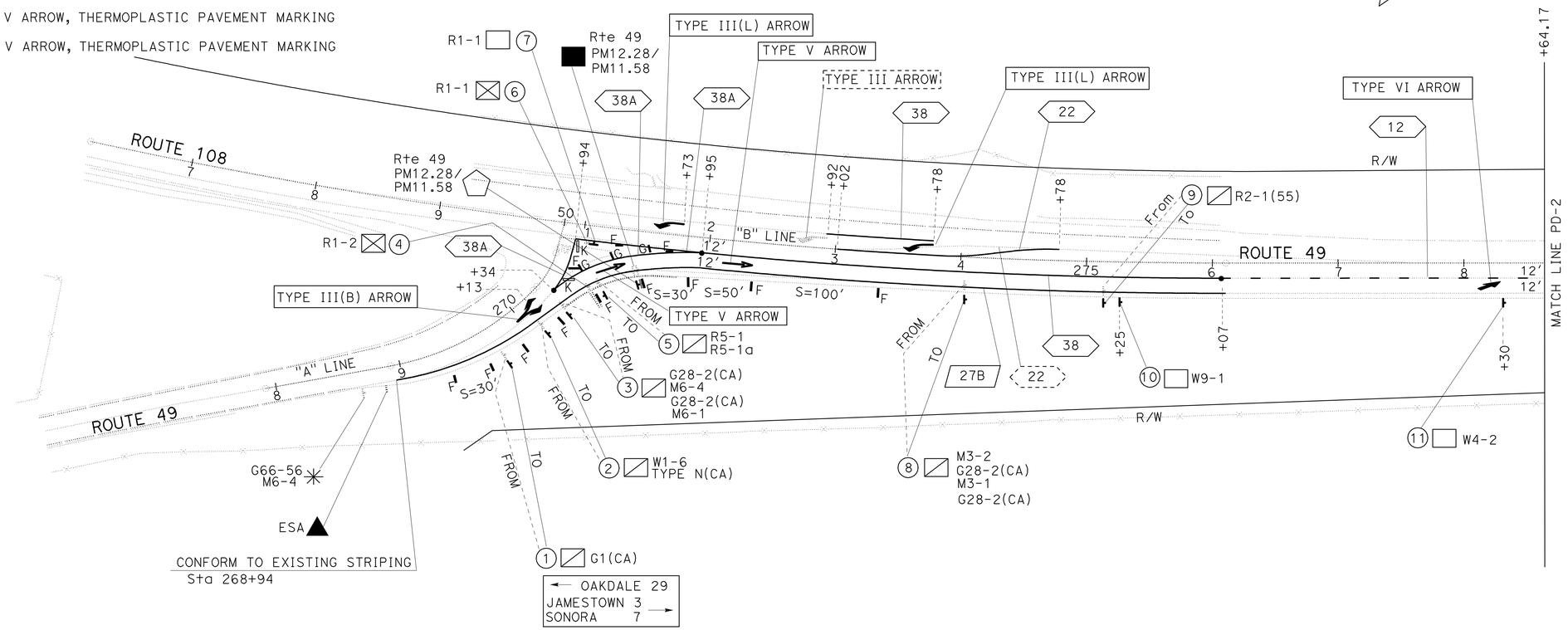

THIS PLAN ACCURATE FOR PAVEMENT DELINEATION AND SIGN WORK ONLY.

PAVEMENT DELINATION AND SIGN PLAN

SCALE: 1" = 50"

PD-1

REVISED BY	DATE REVISED
CN	1/19/11

CALCULATED-DESIGNED BY: QUAN TRINH
CHECKED BY: CECILE NGUYEN
FUNCTIONAL SUPERVISOR: MOHAMMED QATAMI

STATE OF CALIFORNIA - DEPARTMENT OF TRANSPORTATION
Caltrans
TRAFFIC DESIGN

LAST REVISION 09-29-10
DATE PLOTTED => 10-MAR-2011
TIME PLOTTED => 13:47

Dist	COUNTY	ROUTE	POST MILES TOTAL PROJECT	SHEET No.	TOTAL SHEETS
10	Tuo	49	R12.2/12.0	19	34

REGISTERED CIVIL ENGINEER 2/7/11 DATE

3/7/11
PLANS APPROVAL DATE

REGISTERED PROFESSIONAL ENGINEER
QUAN TRINH
No. 75493
Exp. 6/30/12
CIVIL
STATE OF CALIFORNIA

THE STATE OF CALIFORNIA OR ITS OFFICERS OR AGENTS SHALL NOT BE RESPONSIBLE FOR THE ACCURACY OR COMPLETENESS OF SCANNED COPIES OF THIS PLAN SHEET.

NOTE:

FOR ACCURATE RIGHT OF WAY DATA, CONTACT
RIGHT OF WAY ENGINEERING AT THE DISTRICT OFFICE.

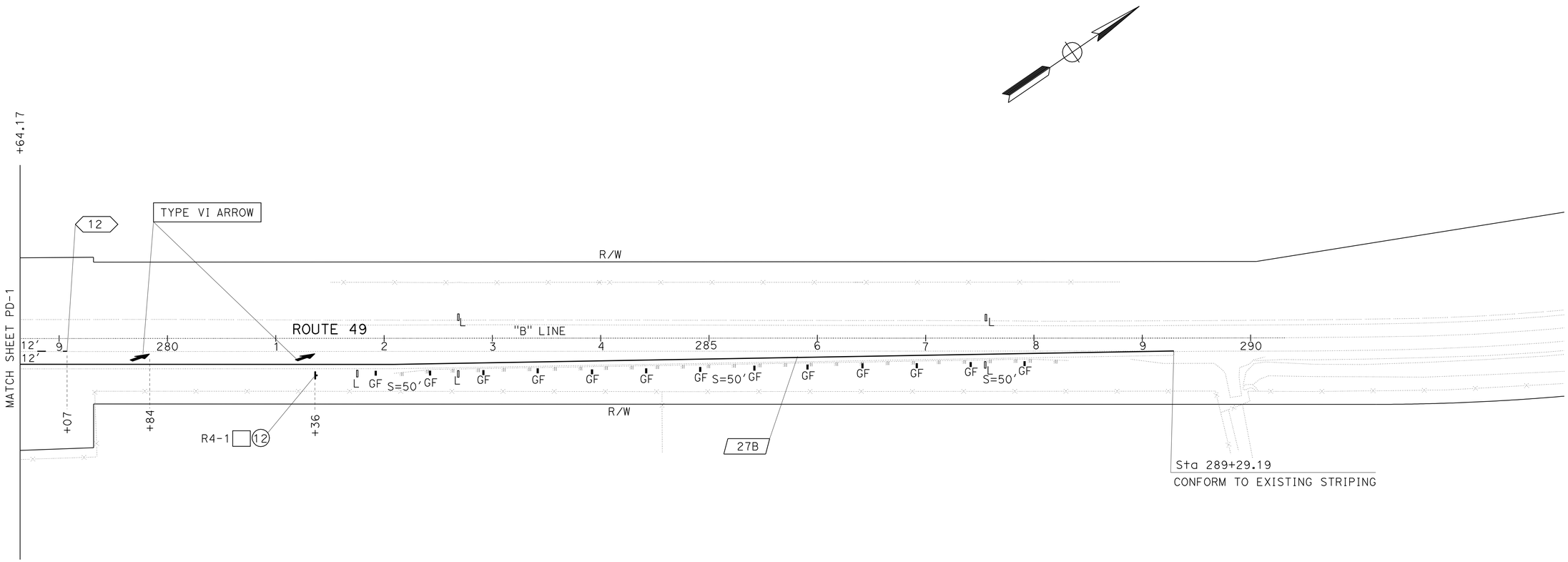

PAVEMENT DELINATION AND SIGN PLAN

SCALE: 1" = 50"

PD-2

THIS PLAN ACCURATE FOR PAVEMENT DELINEATION AND SIGN WORK ONLY.

QUAN TRINH	CN	1/19/11
CECILE NGUYEN		
CALCULATED-DESIGNED BY	REVISED BY	DATE REVISED
CHECKED BY		
FUNCTIONAL SUPERVISOR		
MOHAMMED QATAMI		

STATE OF CALIFORNIA - DEPARTMENT OF TRANSPORTATION
Caltrans
TRAFFIC DESIGN

LAST REVISION 09-29-10 | DATE PLOTTED => 10-MAR-2011 TIME PLOTTED => 13:47

Dist	COUNTY	ROUTE	POST MILES TOTAL PROJECT	SHEET No.	TOTAL SHEETS
10	Tuo	49	R12.2/12.0	20	34

REGISTERED CIVIL ENGINEER 2/7/11 DATE

3/7/11
PLANS APPROVAL DATE

REGISTERED PROFESSIONAL ENGINEER QUAN TRINH No. 75493 Exp. 6/30/12 CIVIL STATE OF CALIFORNIA

THE STATE OF CALIFORNIA OR ITS OFFICERS OR AGENTS SHALL NOT BE RESPONSIBLE FOR THE ACCURACY OR COMPLETENESS OF SCANNED COPIES OF THIS PLAN SHEET.

REMOVE THERMOPLASTIC TRAFFIC STRIPES AND PAVEMENT MARKINGS

SHEET No.	STATION LIMIT	REMOVE YELLOW THERMOPLASTIC TRAFFIC STRIPE (HAZARDOUS WASTE)	REMOVE PAVEMENT MARKER	REMOVE THERMOPLASTIC PAVEMENT MARKING	
		DETAIL 22	TYPE D	TYPE III ARROW(L)	TYPE V ARROW
		LF	EA	SQFT	
PD-1	273+02 "B" LINE - 274+78 "B" LINE	356	17	42	33
TOTAL		356	17	75	

PAVEMENT DELINEATION QUANTITIES

SHEET No.	STATION LIMIT	THERMOPLASTIC TRAFFIC STRIPE (SPRAYABLE)				4" THERMOPLASTIC TRAFFIC STRIPE	PAVEMENT MARKER (RETROREFLECTIVE)		THERMOPLASTIC PAVEMENT MARKING		
		Det 12	Det 22	Det 38	Det 38A	Det 27B	TYPE D	TYPE G	TYPE III ARROW	TYPE V ARROW	TYPE VI ARROW
		WHITE 4" BROKEN 36-12	YELLOW 4" DOUBLE	WHITE 8" SOLID	WHITE 8" SOLID	WHITE 4" SOLID					
		LF				LF	EA		SQFT		
PD-1	268+94 "A" LINE - 271+95 "B" LINE			21	314	264		2	73	66	
	270+95 "B" LINE - 278+64 "B" LINE	258	101	413		672	10	24	84		42
PD-2	278+64 "B" LINE - 279+84 "B" LINE	41				1064		1			84
SUBTOTAL		299	101	434	314	2000	10	27	157	66	126
TOTAL		1148				2000	37		349		

DELINEATORS AND OBJECT MARKERS

SHEET No.	DELINEATOR (CLASS 1)		GUARD RAILING DELINEATOR	OBJECT MARKER		REMOVE MILEPOST MARKER	MILEPOST MARKER
	TYPE F	TYPE G	TYPE F	TYPE K	TYPE L		
	EA		EA	EA		EA	EA
PD-1	12	3		2		2	2
PD-2			13		5		
SUBTOTAL	12	3	13	2	5	2	2
TOTAL	15		13	2	5	2	2

PAVEMENT DELINEATION QUANTITIES
PDQ-1

REVISED BY	DATE REVISED
CN	10/12/10

CALCULATED-DESIGNED BY: QUAN TRINH
CHECKED BY: CECILE NGUYEN
FUNCTIONAL SUPERVISOR: MOHAMMED QATAMI

STATE OF CALIFORNIA - DEPARTMENT OF TRANSPORTATION
Caltrans
TRAFFIC DESIGN

LAST REVISION 09-29-10
DATE PLOTTED => 10-MAR-2011
TIME PLOTTED => 13:47

Dist	COUNTY	ROUTE	POST MILES TOTAL PROJECT	SHEET No.	TOTAL SHEETS
10	Tuo	49	R12.2/12.0	21	34

REGISTERED CIVIL ENGINEER 2/7/11 DATE

3/7/11
PLANS APPROVAL DATE

REGISTERED PROFESSIONAL ENGINEER QUAN TRINH No. 75493 Exp. 6/30/12 CIVIL STATE OF CALIFORNIA

THE STATE OF CALIFORNIA OR ITS OFFICERS OR AGENTS SHALL NOT BE RESPONSIBLE FOR THE ACCURACY OR COMPLETENESS OF SCANNED COPIES OF THIS PLAN SHEET.

ROADSIDE SIGN QUANTITIES

SHEET No.	SIGN No.	SIGN CODE	PANEL SIZE	SIGN MESSAGE	RELOCATE ROADSIDE SIGN	REMOVE ROADSIDE SIGN	ROADSIDE SIGN-ONE POST	FURNISH SINGLE SINGLE ALUMINUM SIGN (0.063" - UNFRAMED)	SINGLE FACED	SIGN MATERIAL					
										BACKGROUND		LEGEND		GRAFFITI FILM	
										SHEETING COLOR	RETRO-REFLECTIVE ASTM TYPE	SHEETING COLOR	RETRO-REFLECTIVE ASTM TYPE	STANDARD	PREMIUM
					EA			SQFT							
PD-1	1	G1(CA)		← OAKDALE 29 JAMESTOWN 3 SONORA 7 →	1										
	2	W1-6/TYPE N(CA)		LARGE ARROW (1- DIRECTION)/ OBJECT MARKER	1										
	3	G28-2(CA)/M6-4/ G28-2(CA)/M6-1		STATE ROUTE 108/ DIRECTIONAL ARROW/ STATE ROUTE 49/ ADVANCE TURN ARROW	1										
	4	R1-2		YIELD		1									
	5	R5-1/R5-1a		DO NOT ENTER/ WRONG WAY	1										
	6	R1-1		STOP		1									
	7	R1-1	30" x 30"	STOP			1	6.25	X	RED	TYPE IV	WHITE	TYPE IV		x
	8	M3-2/G28-2(CA)/ M3-1/G28-2(CA)		EAST/ROUTE 108/ NORTH/ROUTE 49	1										
	9	R2-1(55)		SPEED LIMIT 55	1										
	10	W9-1	36" x 36"	RIGHT LANE ENDS			1	9	X	YELLOW	TYPE IV	BLACK	TYPE IV		x
	11	W4-2	48" x 48"	LANE ENDS SYMBOL			1	16	X	YELLOW	TYPE IV	BLACK	TYPE IV		x
PD-2	12	R4-1	36" x 48"	DO NOT PASS			1	12	X	WHITE	TYPE III	BLACK	TYPE IV		x
TOTAL					6	2	4	43.25							

SIGN QUANTITIES
SQ-1

CALCULATED-DESIGNED BY	QUAN TRINH	REVISED BY	CN
CHECKED BY	CECILE NGUYEN	DATE REVISED	10/12/10

FUNCTIONAL SUPERVISOR: MOHAMMED QATAMI

STATE OF CALIFORNIA - DEPARTMENT OF TRANSPORTATION
Caltrans® TRAFFIC DESIGN

LAST REVISION 09-29-10 | DATE PLOTTED => 10-MAR-2011 | TIME PLOTTED => 13:47

Dist	COUNTY	ROUTE	POST MILES TOTAL PROJECT	SHEET No.	TOTAL SHEETS
10	Tuo	49	R12.2/12.0	22	34

REGISTERED CIVIL ENGINEER 2/1/11 DATE

3/7/11
PLANS APPROVAL DATE

REGISTERED PROFESSIONAL ENGINEER NHAN C. CAO No. 76454 Exp. 12/31/12 CIVIL STATE OF CALIFORNIA

THE STATE OF CALIFORNIA OR ITS OFFICERS OR AGENTS SHALL NOT BE RESPONSIBLE FOR THE ACCURACY OR COMPLETENESS OF SCANNED COPIES OF THIS PLAN SHEET.

HMA DIKE AND OVERSIDE DRAIN

LOCATION	SIDE	DESCRIPTION	PLACE HMA DIKE (TYPE E)	HMA (TYPE B)	PLACE HMA (Misc AREA)
			LF	TON	SQYD
270+29.12 "A" LINE TO 271+77.22 "B" LINE	R+	HMA DIKE	87.4	2.3	
270+43.39 "A" LINE TO 271+11.75 "B" LINE	R+	OVERSIDE DRAIN		1.1	5.5
TOTAL			87.4	3.4 *	5.5

* - QUANTITY INCLUDED IN ROADWAY ITEMS TABLE.

TEMPORARY FENCE (TYPE ESA)

LOCATION	SIDE	LF
269+00 "A" LINE TO 289+29 "B" LINE	R+	1810
285+50 "B" LINE TO 287+21 "B" LINE	L+	233
TOTAL		2043

METAL BEAM GUARD RAILING

LOCATION	SIDE	ALTERNATIVE FLARED TERMINAL SYSTEM	MBGR (WOOD POST)	REMARKS
		EA	LF	
282+09.19 TO 288+31.83 "B" LINE	R+	2	550	TYPE 16E LAYOUT

ROADWAY ITEMS

LOCATION	HMA (TYPE B)	CLASS 2 AB	IMPORTED MATERIAL (SHOULDER BACKING)	ROADWAY EXCAVATION	(N) EMBANKMENT
	TON	CY	CY	CY	CY
HMA DIKE AND OVERSIDE DRAIN	3.4				
ROUTE 49	1190.0	1124.0	124.4	1424	910
TOTAL	1193.4	1124.0	124.4	1424	

(N) - NOT A SEPARATE PAY ITEM, FOR INFORMATION ONLY.

SUMMARY OF QUANTITIES
Q-1

REVISED BY: NC — DATE REVISED: 1/28/11
CALCULATED-DESIGNED BY: HUONG LE — CHECKED BY: NHAN CAO
FUNCTIONAL SUPERVISOR: CAROLINE REYES
STATE OF CALIFORNIA - DEPARTMENT OF TRANSPORTATION — DESIGN — Caltrans

LAST REVISION 00-00-00 — DATE PLOTTED => 10-MAR-2011 — TIME PLOTTED => 13:47

Dist	COUNTY	ROUTE	POST MILES TOTAL PROJECT	SHEET No.	TOTAL SHEETS
10	Tuo	49	R12.2/12.0	23	34

REGISTERED ELECTRICAL ENGINEER — DATE 2/3/11

3/7/11
PLANS APPROVAL DATE

REGISTERED PROFESSIONAL ENGINEER — Jaspal Singh — No. 16657 — Exp. 6/30/12 — ELECTRICAL — STATE OF CALIFORNIA

THE STATE OF CALIFORNIA OR ITS OFFICERS OR AGENTS SHALL NOT BE RESPONSIBLE FOR THE ACCURACY OR COMPLETENESS OF SCANNED COPIES OF THIS PLAN SHEET.

LEGEND:

1 Exist 120/240 V, 1Ø, 3-WIRE, TYPE III-AF SERVICE EQUIPMENT ENCLOSURE WITH THE FOLLOWING CIRCUIT BREAKERS:

AMPERES	VOLTS	POLES	NAMEPLATE	METER	PHOTOELECTRIC CONTROL TYPE
100	240	2	MAIN BREAKER	NO	-
40	240	2	LTG	NO	2
15	120	1	LIGHTING CONTROL	NO	III
15	120	1	SPARE	NO	-

2 RS Exist 40 AMPERE, 2 POLES, CIRCUIT BREAKER AND INSTALL 15 AMPERE, 240 VOLT, 2 POLE CIRCUIT BREAKER.

3 RC Exist TYPE 15-SBI ELECTROLIER.

4 INSTALL TYPE III PHOTOELECTRIC CONTROL ON LIGHTING Std.

5 BYPASS Exist CONTACTOR AND LIGHTING CONTROL CIRCUIT BREAKER FOR LIGHTING IN THE SERVICE EQUIPMENT ENCLOSURE.

ABBREVIATION:

PG&E - PACIFIC GAS AND ELECTRIC

NOTE:

1. FOR ACCURATE RIGHT OF WAY DATA, CONTACT RIGHT OF WAY ENGINEERING AT THE DISTRICT OFFICE.

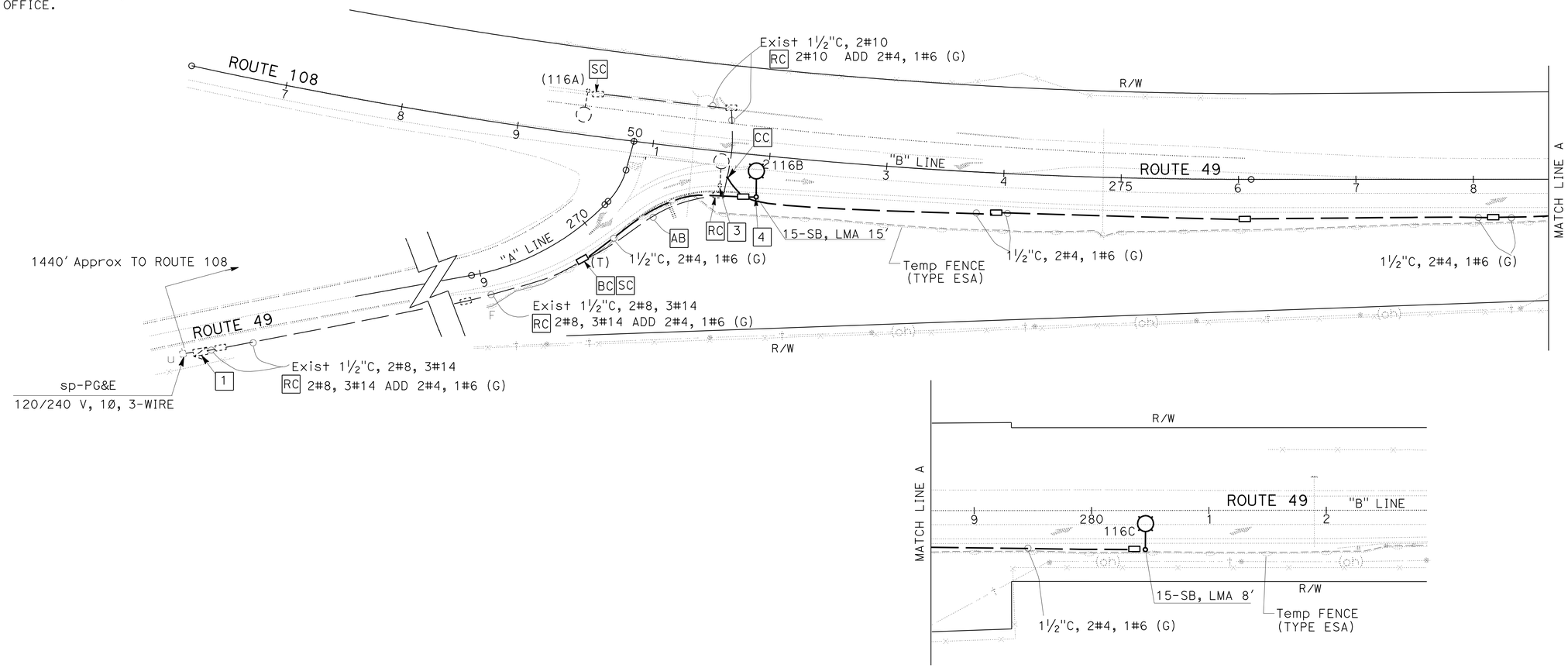

THIS PLAN IS ACCURATE FOR ELECTRICAL WORK ONLY.

MODIFY LIGHTING

SCALE: 1" = 50'

E-1

REVISED BY	DATE REVISED
JS	1/13/11

JASPAL SINGH — CALCULATED-DESIGNED BY
PAUL MATOS — CHECKED BY
ALI BAKHDOUD — FUNCTIONAL SUPERVISOR

STATE OF CALIFORNIA - DEPARTMENT OF TRANSPORTATION
Caltrans ELECTRICAL DESIGN

LAST REVISION 01-18-11 — DATE PLOTTED => 10-MAR-2011 — TIME PLOTTED => 13:47

DIST	COUNTY	ROUTE	POST MILES TOTAL PROJECT	SHEET NO.	TOTAL SHEETS
10	Tuo	49	R12.2/12.0	24	34

REGISTERED CIVIL ENGINEER

November 17, 2006
PLANS APPROVAL DATE

REGISTERED PROFESSIONAL ENGINEER Dallas Forester No. C37765 Exp. 12-31-06 CIVIL STATE OF CALIFORNIA

The State of California or its officers or agents shall not be responsible for the accuracy or completeness of electronic copies of this plan sheet.

To accompany plans dated 3/7/11

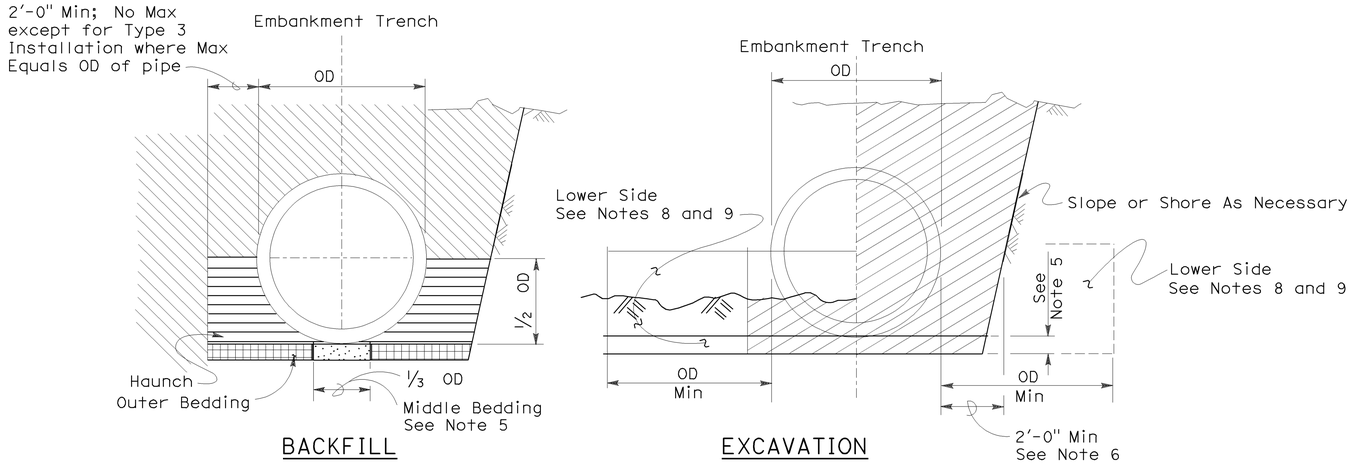

Roadway Embankment

Structure Backfill (Culvert) See Note 6

Structure Backfill (Culvert) See Note 6

Loose Backfill

Excavation Structure (Culvert)

TYPE 1 INSTALLATION:

The haunch and outer bedding shall be compacted to a minimum 90 percent relative compaction. In addition, the minimum sand equivalent in these areas shall be 30 and the maximum percentage passing the 75 μm sieve size shall be 12.

TYPE 2 INSTALLATION:

The haunch and outer bedding shall be compacted to a minimum 90 percent relative compaction. In addition, the minimum sand equivalent in these areas shall be 25.

TYPE 3 INSTALLATION:

The haunch and outer bedding shall be compacted to a minimum 85 percent relative compaction. 90 percent relative compaction will be required where the fill over the pipe is less than 4'-0" or 1/2 OD.

NOTES:

1. Unless otherwise shown on the plans or specified in the special provision, the Contractor shall have the option of selecting the class of RCP and the type of installation to be used, provided the height of cover does not exceed the value shown for the RCP selected.
   Example: 24" RCP culvert with maximum cover of 19'-0" the options are:
   a) Class II or stronger with Installation Type 1.
   b) Class III Special or stronger with Installation Type 2.
   c) Class IV Special or stronger with Installation Type 3.
   Cover is defined as the maximum vertical distance from top of the pipe to finished grade within the length of any given culvert.
2. The class of RCP and Installation Type selected shall be the same throughout the length of any given culvert.
3. The "length of any culvert" is defined as the culvert between:
   a) Successive drainage structure (inlets, junction boxes, headwalls, etc.).
   b) A drainage structure and the inlet or outlet end of the culvert.
   c) The inlet and outlet end of the culvert when there are no intervening drainage structures.
4. Oval and arch shaped RCP shall not be used.
5. 1/25 OD Min, not less than 3".
6. Slurry cement backfill may be substituted for backfill in the outer bedding and haunch areas. If slurry is used the outer and middle beddings shall be omitted. Prior to installation the soil under the middle 1/3 of the outside diameter of the pipe shall be softened by scarifying or other means to a minimum depth of 1/25 OD, but not less than 3". Where slurry cement backfill is used clear distance to trench wall may be reduced as set forth in Section 19-3.062 of the Standard Specifications.
7. Backfill shall be placed full width of excavation except where dimensions are shown for backfill width or thickness. Dimensions shown are minimums.
8. Lower side shall be suitable material as determined by the Engineer. Otherwise it shall be considered unsuitable as set forth in Section 19-2.02 of the Standard Specifications. See Note 9.
9. Where the pipe is placed in a trench, if the trench walls are sloped at 5 vertical to 1 horizontal or steeper for at least 90 percent of the trench height or up to not less than 12" from the grading plane, the firmness of the soil in the lower side need not be considered.
10. Non-reinforced precast concrete pipe sizes 3'-0" or smaller may be placed under installation Types 1, 2 or 3.

INSTALLATION TYPE 1

MINIMUM CLASS AND D-LOAD	COVER	
	108" Dia AND SMALLER	OVER 108" Dia
Class II 1000D	14.9'	12.9'
Class III 1350D	15.0' - 20.9'	13.0' - 18.9'
Class III Special 1700D	21.0' - 26.9'	19.0' - 24.9'
Class IV 2000D	27.0' - 31.9'	25.0' - 29.9'
Class IV Special 2500D	32.0' - 40.9'	30.0' - 38.9'
Class V 3000D	41.0' - 49.9'	39.0' - 46.9'
Class V Special 3600D	50.0' - 59.0'	47.0' - 58.0'

INSTALLATION TYPE 2

MINIMUM CLASS AND D-LOAD	COVER
Class II 1000D	9.9'
Class III 1350D	10.0'- 14.9'
Class III Special 1700D	15.0' - 19.9'
Class IV 2000D	20.0' - 24.9'
Class IV Special 2500D	25.0' - 31.9'
Class V 3000D	32.0' - 38.9'
Class V Special 3600D	39.0' - 47.0'

INSTALLATION TYPE 3

MINIMUM CLASS AND D-LOAD	COVER	
	48" Dia AND SMALLER	OVER 48" Dia
Class II 1000D	7.9'	5.9'
Class III 1350D	8.0' - 10.9'	6.0' - 8.9'
Class III Special 1700D	11.0' - 14.9'	9.0' - 12.9'
Class IV 2000D	15.0' - 17.9'	13.0' - 15.9'
Class IV Special 2500D	18.0' - 21.9'	16.0' - 19.9'
Class V 3000D	22.0' - 26.9'	20.0' - 24.9'
Class V Special 3600D	30.0' - 33.0'	25.0' - 31.0'

STATE OF CALIFORNIA
DEPARTMENT OF TRANSPORTATION

EXCAVATION AND BACKFILL CONCRETE PIPE CULVERTS

NO SCALE

RSP A62DA DATED NOVEMBER 17, 2006 SUPERSEDES STANDARD PLAN A62DA DATED MAY 1, 2006 - PAGE 20 OF THE STANDARD PLANS BOOK DATED MAY 2006.

REVISED STANDARD PLAN RSP A62DA

2006 REVISED STANDARD PLAN RSP A62DA

10-26-06

DIST	COUNTY	ROUTE	POST MILES TOTAL PROJECT	SHEET NO.	TOTAL SHEETS
10	Tuo	49	R12.2/12.0	25	34

Randell D. Hiatt
REGISTERED CIVIL ENGINEER

June 6, 2008
PLANS APPROVAL DATE

REGISTERED PROFESSIONAL ENGINEER
Randell D. Hiatt
No. C50200
Exp. 6-30-09
CIVIL
STATE OF CALIFORNIA

The State of California or its officers or agents shall not be responsible for the accuracy or completeness of electronic copies of this plan sheet.

To accompany plans dated 3/7/11

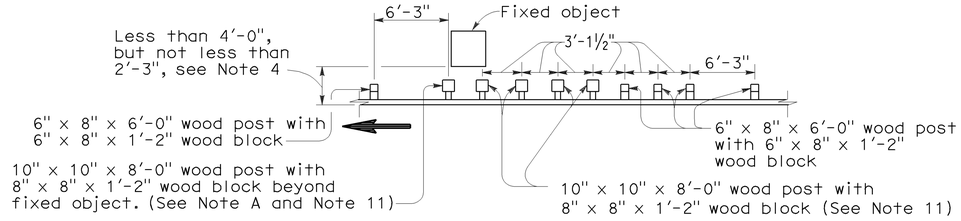

NOTE A: For a series of fixed objects (bridge columns, overhead sign supports, etc.) additional 10" x 10" x 8'-0" wood post with 8" x 8" x 1'-2" wood blocks at 3'-1½" center to center spacing are to be used between fixed object(s).

STRENGTHENED RAILING SECTIONS FOR FIXED OBJECT

Use strengthened railing sections with Layout Types 16D or 16E where minimum clearance between the guard railing and fixed object(s) is less than 4'-0", but not less than 2'-3". See Note 4.

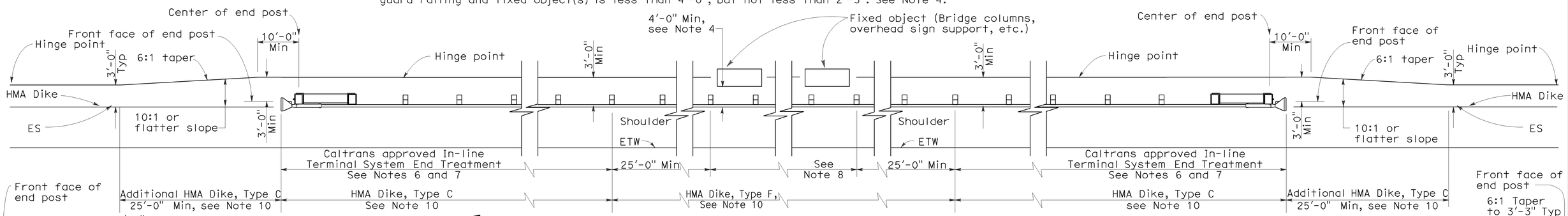

TYPE 16D LAYOUT

(GUARD RAILING INSTALLATION AT ROADSIDE FIXED OBJECT OR OBJECTS WITH AN IN-LINE END TREATMENT AT EACH END OF RAILING)
See Note 9

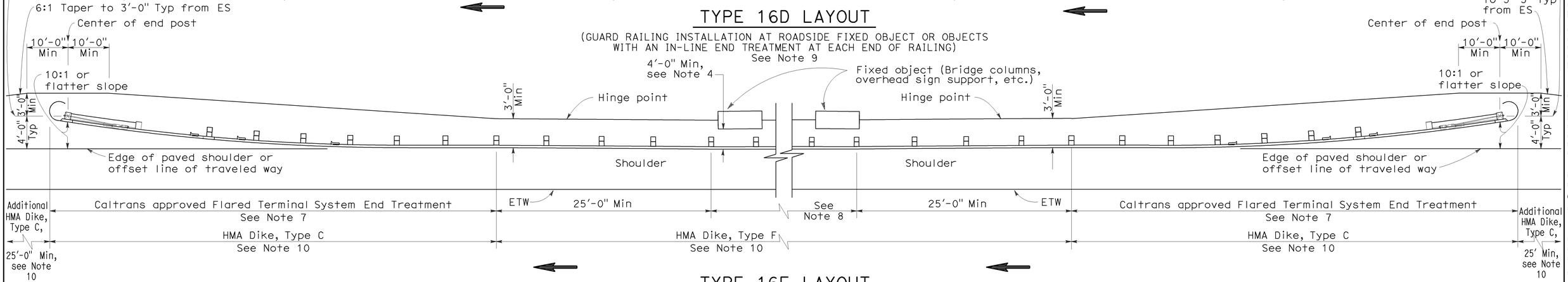

TYPE 16E LAYOUT

(GUARD RAILING INSTALLATION AT ROADSIDE FIXED OBJECT OR OBJECTS WITH A FLARED END TREATMENT AT EACH END OF RAILING)
See Note 9

NOTES:

1. Line post, blocks and hardware to be used are shown on Standard Plans A77A1, A77A2, A77B1, A77C1 and A77C2.
2. Guard railing post spacing to be 6'-3" center to center, except as otherwise noted.
3. Except as noted, line posts are 6" x 8" x 6'-0" wood with 6" x 8" x 1'-2" wood blocks. W6 x 9 steel posts, 6'-0" in length, with 6" x 8" x 1'-2" notched wood blocks or notched recycled plastic blocks may be used for 6" x 8" x 6'-0" wood line posts with 6" x 8" x 1'-2" wood blocks where applicable and when specified.
4. A 4'-0" minimum clearance is required between the face of the railing and the face of a fixed object located directly behind standard guard railing sections with post spacing at 6'-3". Construct guard railing as shown in the detail "Strengthened Railing Sections for Fixed Objects" on this plan, where the clearance between the face of the railing and the face of a fixed object is less than 4'-0", but not less than 2'-3". Where the clearance is less than 2'-3", a concrete wall or barrier should be constructed to shield the fixed object(s).
5. Direction of adjacent traffic indicated by ⟶ .
6. In-line Terminal System End Treatments are used where site conditions will not accommodate a flared end treatment.
7. The type of terminal system to be used will be shown on the Project Plans.
8. As site conditions dictate, construct additional guard railing to shield fixed object(s). Additional guard railing length equal to multiples of 12'-6". Post spacing at 6'-3", except as specified in Note 4.
9. Layout Types 16D through 16L, shown on the A77G Series of Revised Standard Plans, are typically used where guard railing is recommended to shield roadside fixed object(s) and a crashworthy end treatment is required for both directions of traffic.
10. Where placement of dike is required with guard railing, see Revised Standard Plan RSP A77C4 for dike positioning details.
11. W6 x 15 steel post, 8'-0" in length, with 8" x 8" x 1'-2" notched wood block or notched recycled plastic block may be used in place of the 10" x 10" x 8'-0" wood post with 8" x 8" x 1'-2" wood block shown in the "Strengthened Railing Sections Detail."

STATE OF CALIFORNIA
DEPARTMENT OF TRANSPORTATION

METAL BEAM GUARD RAILING TYPICAL LAYOUTS FOR ROADSIDE FIXED OBJECTS

NO SCALE

RSP A77G4 DATED JUNE 6, 2008 SUPERSEDES STANDARD PLAN A77G4
DATED MAY 1, 2006 - PAGE 62 OF THE STANDARD PLANS BOOK DATED MAY 2006.

REVISED STANDARD PLAN RSP A77G4

2006 REVISED STANDARD PLAN RSP A77G4

12-10-07

DIST	COUNTY	ROUTE	POST MILES TOTAL PROJECT	SHEET NO.	TOTAL SHEETS
10	Tuo	49	R12.2/12.0	26	34

Randell D. Hiatt
REGISTERED CIVIL ENGINEER

June 6, 2008
PLANS APPROVAL DATE

REGISTERED PROFESSIONAL ENGINEER
Randell D. Hiatt
No. C50200
Exp. 6-30-09
CIVIL
STATE OF CALIFORNIA

The State of California or its officers or agents shall not be responsible for the accuracy or completeness of electronic copies of this plan sheet.

To accompany plans dated 3/7/11

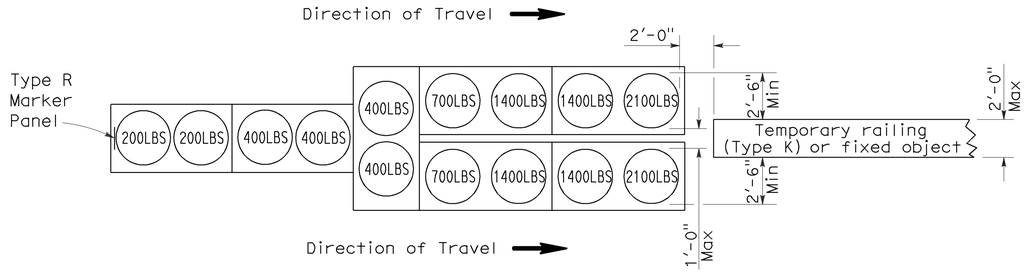

ARRAY 'TU14'

Approach speed 45 mph or more

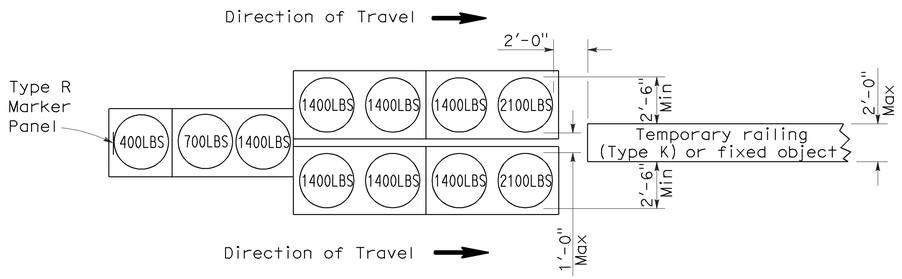

ARRAY 'TU11'

Approach speed less than 45 mph

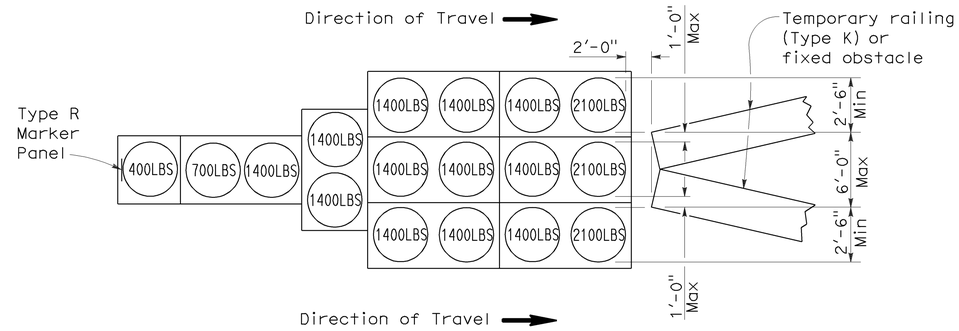

ARRAY 'TU17'

Approach speed less than 45 mph

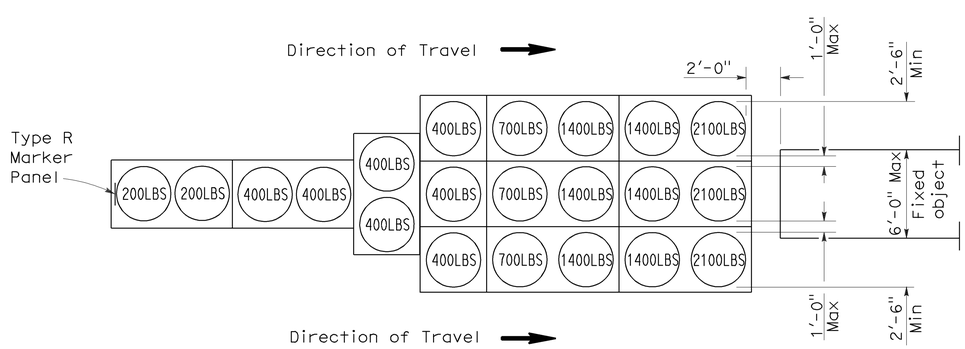

ARRAY 'TU21'

Approach speed 45 mph or more

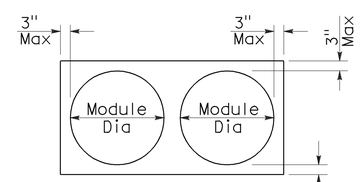

PLAN

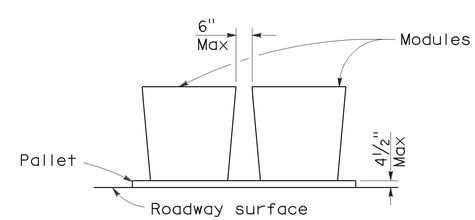

ELEVATION

CRASH CUSHION PALLET DETAIL

See Note 7

NOTES:

1. (XXX) Indicates sand filled module location and weight of sand in pounds for each module. Module spacing is based on the greater diameter of the module.
2. All sand weights are nominal.
3. Temporary crash cushion arrays shall not encroach on the traveled way.
4. Place the top of Type R marker panel 1" below the module lid.
5. Refer to Standard Plan A73B for marker details.
6. Approach speeds indicated conform to NCHRP 350 Report criteria.
7. Use of pallets is optional.

STATE OF CALIFORNIA
DEPARTMENT OF TRANSPORTATION

TEMPORARY CRASH CUSHION, SAND FILLED (UNIDIRECTIONAL)

NO SCALE

RSP T1A DATED JUNE 6, 2008 SUPERSEDES STANDARD PLAN T1A
DATED MAY 1, 2006 - PAGE 211 OF THE STANDARD PLANS BOOK DATED MAY 2006.

REVISED STANDARD PLAN RSP T1A

2006 REVISED STANDARD PLAN RSP T1A

DIST	COUNTY	ROUTE	POST MILES TOTAL PROJECT	SHEET NO.	TOTAL SHEETS
10	Tuo	49	R12.2/12.0	27	34

Randell D. Hiatt
REGISTERED CIVIL ENGINEER

June 6, 2008
PLANS APPROVAL DATE

REGISTERED PROFESSIONAL ENGINEER
Randell D. Hiatt
No. C50200
Exp. 6-30-09
CIVIL
STATE OF CALIFORNIA

The State of California or its officers or agents shall not be responsible for the accuracy or completeness of electronic copies of this plan sheet.

To accompany plans dated 3/7/11

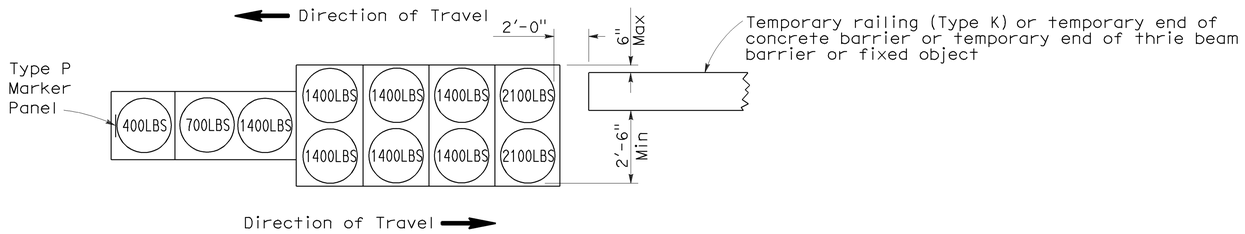

ARRAY 'TB11'

Approach speed less than 45 mph

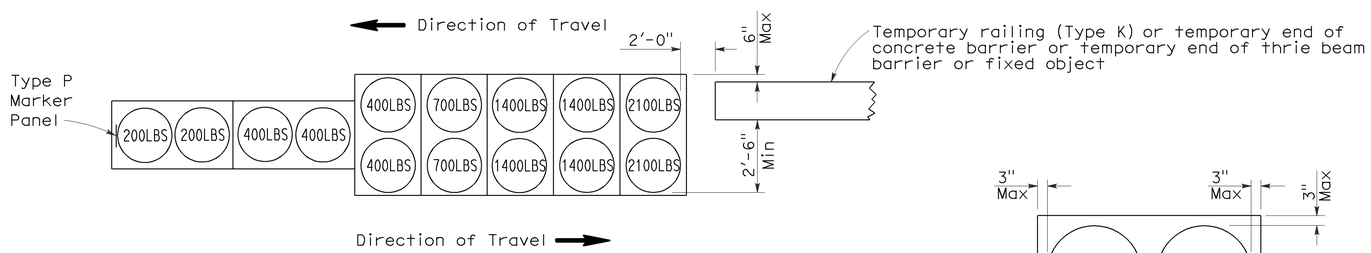

ARRAY 'TB14'

Approach speed 45 mph or more

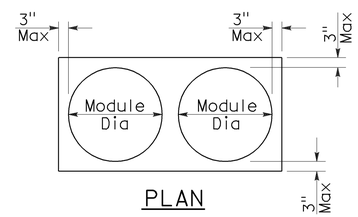

PLAN

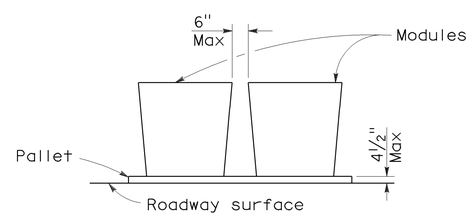

ELEVATION

CRASH CUSHION PALLET DETAIL

See Note 7

NOTES:

1. (XXX) Indicates sand filled module location and weight of sand in pounds for each module. Module spacing is based on the greater diameter of the module.
2. All sand weights are nominal.
3. Temporary crash cushion arrays shall not encroach on the traveled way.
4. Place the Type P marker panel so that the bottom of the panel rests upon the pallet.
5. Refer to Standard Plan A73B for marker details.
6. Approach speeds indicated conform to NCHRP 350 Report criteria.
7. Use of pallets is optional.

STATE OF CALIFORNIA
DEPARTMENT OF TRANSPORTATION

TEMPORARY CRASH CUSHION, SAND FILLED (BIDIRECTIONAL)

NO SCALE

RSP T1B DATED JUNE 6, 2008 SUPERSEDES STANDARD PLAN T1B
DATED MAY 1, 2006 - PAGE 212 OF THE STANDARD PLANS BOOK DATED MAY 2006.

REVISED STANDARD PLAN RSP T1B

2006 REVISED STANDARD PLAN RSP T1B

5-15-08

DIST	COUNTY	ROUTE	POST MILES TOTAL PROJECT	SHEET NO.	TOTAL SHEETS
10	Tuo	49	R12.2/12.0	28	34

Randell D. Hiatt
REGISTERED CIVIL ENGINEER

June 6, 2008
PLANS APPROVAL DATE

REGISTERED PROFESSIONAL ENGINEER
Randell D. Hiatt
No. C50200
Exp. 6-30-09
CIVIL
STATE OF CALIFORNIA

The State of California or its officers or agents shall not be responsible for the accuracy or completeness of electronic copies of this plan sheet.

To accompany plans dated 3/7/11

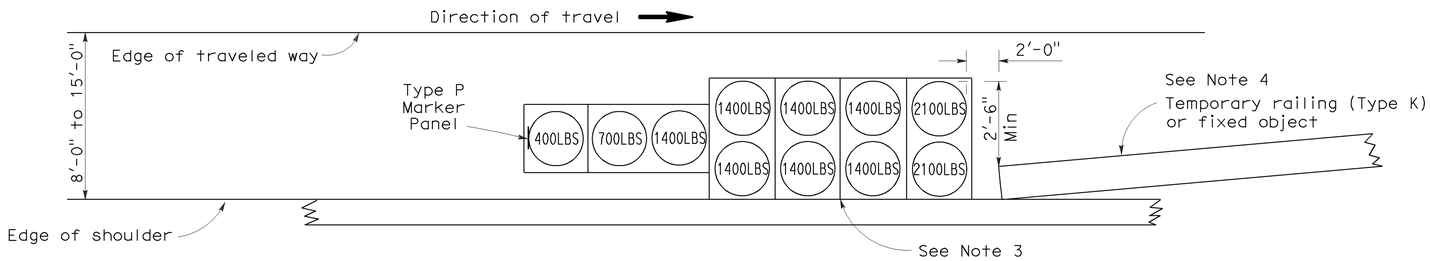

ARRAY 'TS11'

Approach speed less than 45 mph
See Note 9

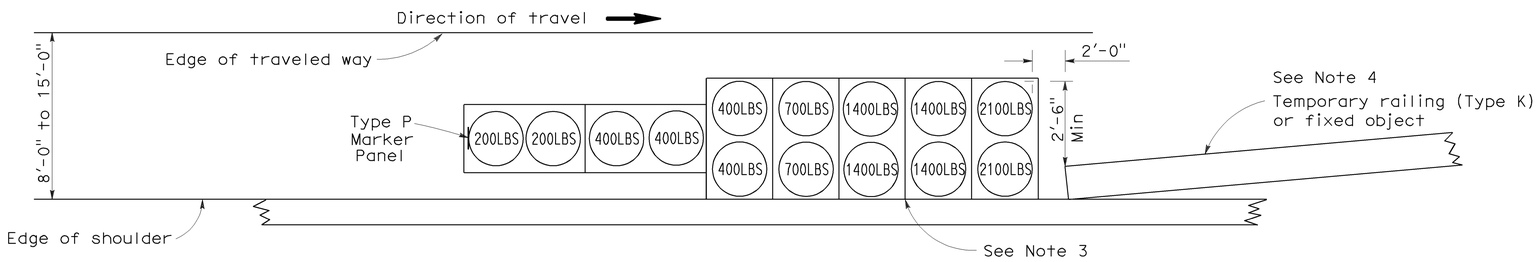

ARRAY 'TS14'

Approach speed 45 mph or more
See Note 9

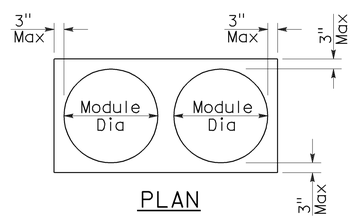

PLAN

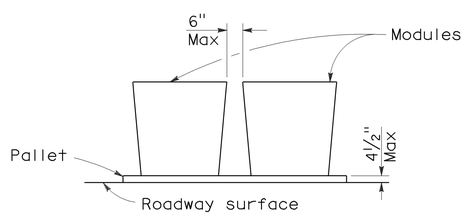

ELEVATION

CRASH CUSHION PALLET DETAIL

See Note 11

NOTES:

1. (XXX) Indicates sand filled module location and weight of sand in pounds for each module. Module spacing is based on the greater diameter of the module.
2. All sand weights are nominal.
3. The temporary crash cushion arrays shown on this plan shall be used only in locations where there will be traffic on one side of the temporary crash cushion array.
4. If the fixed object or approach end of the temporary railing is less than 15'-0" from the edge of traveled way, a temporary crash cushion is required in a construction or work zone.
5. Temporary crash cushion arrays shall not encroach on the traveled way.
6. Arrays for median shoulders shall conform to details shown on this plan for outside shoulders.
7. Place the Type P marker panel so that the bottom of the panel rests upon the pallet and faces traffic.
8. Refer to Standard Plan A73B for marker details.
9. For shoulder widths less than 8'-0", appropriate approved crash cushion protection, other than sand filled modules, shall be provided at fixed objects and at approach ends of temporary railing. The specific type of crash cushion shall be as shown on the project plans or as specified in the Special Provisions, or if not shown on the project plans or specified in the Special Provisions, shall be as approved by the Engineer.
10. Approach speeds indicated conform to NCHRP 350 Report criteria.
11. Use of pallets is optional.

STATE OF CALIFORNIA
DEPARTMENT OF TRANSPORTATION

TEMPORARY CRASH CUSHION, SAND FILLED (SHOULDER INSTALLATIONS)

NO SCALE

RSP T2 DATED JUNE 6, 2008 SUPERSEDES STANDARD PLAN T2
DATED MAY 1, 2006 - PAGE 213 OF THE STANDARD PLANS BOOK DATED MAY 2006.

REVISED STANDARD PLAN RSP T2

2006 REVISED STANDARD PLAN RSP T2

5-15-08

DIST	COUNTY	ROUTE	POST MILES TOTAL PROJECT	SHEET NO.	TOTAL SHEETS
10	Tuo	49	R12.2/12.0	29	34

REGISTERED ELECTRICAL ENGINEER

October 5, 2007
PLANS APPROVAL DATE

REGISTERED PROFESSIONAL ENGINEER Jeffery G. McRae No. E14512 Exp. 6-30-08 ELECTRICAL STATE OF CALIFORNIA

The State of California or its officers or agents shall not be responsible for the accuracy or completeness of electronic copies of this plan sheet.

To accompany plans dated 3/7/11

ELECTROLIERS

STANDARD TYPES
15, 15D
15 STRUCTURE
21, 21D STRUCTURE
30
31
32
35
36-20A

High mast light pole

Double Arm lighting standard

Existing electrolier

Electrolier foundation (Future installation)

NOTES:

1. Luminaires shall be 310 W HPS when installed on Type 21, 21D, 30, 31, 32, 35 and 36-20A Standards, unless otherwise specified. Luminaires shall be 200 W HPS when installed on other type standards or poles, unless otherwise specified.
2. Luminaires shall be the cutoff type, ANSI Type Ⅲ medium cutoff lighting distribution, unless otherwise specified.
3. Variations noted adjacent to symbol on project plans.

Electrolier (see project notes or project plans)

Luminaire on wood pole

STANDARD NOTES:

- AB Abandon. If applied to conduit, remove conductors.
- BC Install pull box in existing conduit run.
- BP Pedestrian barricade, type as indicated on plan.
- CB Install conduit into existing pull box.
- CC Connect new and existing conduit. Remove existing conductors and install conductors as indicated.
- CF Conduit to remain for future use. Remove conductors. Install pull wire or rope.
- DH Detector handhole.
- FA Foundation to be abandoned.
- IS Install sign on signal mast arm.
- NS No slip base on standard.
- PEC Photoelectric control.
- PEU Photoelectric unit.
- RC Equipment or material to be removed and become the property of the Contractor.
- RE Remove electrolier, fuses and ballast. Tape ends of conductors.
- RL Relocate equipment.
- RR Remove and reuse equipment.
- RS Remove and salvage equipment.
- SC Splice new to existing conductors.
- SD Service disconnect.
- SF Standard to remain for future use. Remove luminaire, pole conductors, fuses and ballast.
- TSP Telephone service point.

ABBREVIATIONS AND EQUIPMENT DESIGNATIONS

PROPOSED	EXISTING	
BBS	bbs	Battery backup system
BC	bc	Bolt circle
C	C	Conduit
CCTV	cctv	Closed circuit television
CKT	ckt	Circuit
CMS	cms	Changeable message sign
DLC	dlc	Loop detector lead-in cable
EMS	ems	Extinguishable message sign
EVC	evc	Emergency vehicle cable
EVD	evd	Emergency vehicle detector
FB	fb	Flashing beacon
FBCA	fbca	Flashing beacon control assembly
FBS	fbs	Flashing beacon with slip base
FO	fo	Fiber optic
G	G	Ground (Equipment Grounding Conductor)
GFCI	GFCI	Ground fault circuit interrupt
HAR	har	Highway advisory radio
HEX	hex	Hexagonal
HPS	hps	High pressure sodium
IISNS	iisns	Internally illuminated street name sign
ISL	isl	Induction sign lighting
LED	led	Light emitting diode
LMA	lma	Luminaire mast arm
LPS	lps	Low pressure sodium
LTG	ltg	Lighting
LUM	lum	Luminaire
MAT	mat	Mast arm mounting vehicle signal faces, top attachment
MAS	mas	Mast arm mounting vehicle signal faces, side attachment
MAS-4A	mas-4A	Mast arm mounting vehicle signal faces, side attachment - 4 signal section
MAS-4B	mas-4B	
MAS-4C	mas-4C	
MAS-5A	mas-5A	Mast arm mounting vehicle signal faces, side attachment - 5 signal section
MAS-5B	mas-5B	
MC	mc	Mercury contactor
M/M	m/m	Multiple to multiple transformer
MT	mt	Conduit with pull wire or rope only
MTG	mtg	Mounting
	mv	Mercury vapor lighting fixture
N	N	Neutral (Grounded Conductor)
NC	NC	Normally closed
NO	NO	Normally open
PB	pb	Pull box
PEC	pec	Photoelectric control (Type Ⅰ, Ⅱ, Ⅲ, Ⅳ or Ⅴ as shown)
PED	ped	Pedestrian
PEU	peu	Photoelectric unit
PPB	ppb	Pedestrian push button
RL		Relocated equipment
RM	rm	Ramp metering
SB	sb	Slip base
SIC	sic	Signal interconnect cable
SIG	sig	Signal
SMA	sma	Signal mast arm
SNS	sns	Street name sign
SP	sp	Service point
TDC	tdc	Telephone demarcation cabinet
TMS	tms	Traffic monitoring station
TOS	tos	Traffic Operations System
VEH	veh	Vehicle
XFMR	xfmr	Transformer
COMM	comm	Communication
RWIS	rwis	Roadway weather information system

SOFFIT AND WALL MOUNTED LUMINAIRES

Pendant, 70 W HPS unless otherwise specified.

Flush, 70 W HPS unless otherwise specified.

Wall surface, 70 W HPS unless otherwise specified.

Existing soffit or wall luminaire to remain unmodified.

Existing soffit or wall luminaire to be modified as specified.

NOTE:

Arrow indicates "street side" of luminaire.

STATE OF CALIFORNIA
DEPARTMENT OF TRANSPORTATION

ELECTRICAL SYSTEMS (SYMBOLS AND ABBREVIATIONS)

NO SCALE

RSP ES-1A DATED OCTOBER 5, 2007 SUPERSEDES STANDARD PLAN ES-1A DATED MAY 1, 2006 - PAGE 400 OF THE STANDARD PLANS BOOK DATED MAY 2006.

REVISED STANDARD PLAN RSP ES-1A

2006 REVISED STANDARD PLAN RSP ES-1A

DIST	COUNTY	ROUTE	POST MILES TOTAL PROJECT	SHEET NO.	TOTAL SHEETS
10	Tuo	49	R12.2/12.0	30	34

REGISTERED ELECTRICAL ENGINEER

October 5, 2007
PLANS APPROVAL DATE

REGISTERED PROFESSIONAL ENGINEER Jeffery G. McRae No. E14512 Exp. 6-30-08 ELECTRICAL STATE OF CALIFORNIA

The State of California or its officers or agents shall not be responsible for the accuracy or completeness of electronic copies of this plan sheet.

To accompany plans dated 3/7/11

CONDUIT

PROPOSED	EXISTING	
		Lighting Conduit, unless otherwise indicated or noted
		Traffic signal conduit
C	c	Communication conduit
T	t	Telephone conduit
F	f	Fire alarm conduit
FO	fo	Fiber optic conduit
		Conduit termination (RSP ES-9A C)
R	r	Conduit riser in/on structure or service pole

SERVICE EQUIPMENT

PROPOSED	EXISTING	
OH	oh	Overhead lines
U	U	Wood pole "U" indicates utility owned
		Pole guy with anchor
		Utility transformer - ground mounted
III		Service equipment enclosure type
		Service equipment enclosure door indicates front of enclosure
T	t	Telephone demarcation cabinet

POLE-MOUNTED SERVICE DESIGNATION

Type of installation

TYPE H SERVICE - 28'-10" ← Pole height above grade

ILLUMINATED OVERHEAD SIGN

PROPOSED	EXISTING	
		Overhead sign - Single post
		Overhead sign - Two post
		Overhead sign - Mounted on structure
		Overhead sign with electrolier

SIGNAL EQUIPMENT

PROPOSED	EXISTING	
		Pedestrian signal face
		Pedestrian push button post
		Pedestrian barricade
		Vehicle signal face (with backplate, 3-Section: red, yellow and green)
		Vehicle signal face with angle visors
PV	PV	Modifications of basic symbols: "L" indicates all non-arrow sections louvered "LG" indicates louvered green section only "PV" indicates 12" programmed visibility sections "8" indicates all 8" sections (only when specified)
		Type 15TS and Vehicle signal face
		Vehicle signal face with red, yellow and green left arrow sections
		Vehicle signal face with red and yellow sections and up green arrow
		Vehicle signal face (5 Section) with red, yellow and green sections and yellow and green right arrows
		Type 1 Standard and attached vehicle signal faces
		Standard with signal mast arm only and attached vehicle signal faces and internally illuminated street name sign
		Type 33 Standard, Left-turn vehicle signal face and sign
		Standard with luminaire and signal mast arms and attached vehicle signal faces
		Cantilever flashing beacon Type 9 Frame, with a sign unless otherwise specified or indicated
		Type 15-FBS Standard with two vehicle signal face sections with lens, backplate and visor with a sign
R	Y	Flashing beacon. One vehicle signal face section with lens, backplate and visor. "R" indicates red indication, "Y" indicates yellow indication
		Controller assembly. Door indicates front of cabinet

SIGNAL EQUIPMENT Cont

PROPOSED	EXISTING	
		Guard post
		Type 1 Standard with "Meter On" sign
		Emergency Vehicle detector

NOTES:

1. All signal sections shall be 12" unless shown otherwise.
2. Signal heads shall be provided with backplates unless shown otherwise.
3. Signal indication shall be LED.

STATE OF CALIFORNIA
DEPARTMENT OF TRANSPORTATION

ELECTRICAL SYSTEMS (SYMBOLS AND ABBREVIATIONS)

NO SCALE

RSP ES-1B DATED OCTOBER 5, 2007 SUPERCEDES STANDARD PLAN ES-1B DATED MAY 1, 2006 - PAGE 401 OF THE STANDARD PLANS BOOK DATED MAY 2006.

REVISED STANDARD PLAN RSP ES-1B

2006 REVISED STANDARD PLAN RSP ES-1B

7-10-07

DIST	COUNTY	ROUTE	POST MILES TOTAL PROJECT	SHEET NO.	TOTAL SHEETS
10	Tuo	49	R12.2/12.0	31	34

REGISTERED ELECTRICAL ENGINEER

October 5, 2007
PLANS APPROVAL DATE

REGISTERED PROFESSIONAL ENGINEER Jeffery G. McRae No. E14512 Exp. 6-30-08 ELECTRICAL STATE OF CALIFORNIA

The State of California or its officers or agents shall not be responsible for the accuracy or completeness of electronic copies of this plan sheet.

To accompany plans dated 3/7/11

EQUIPMENT IDENTIFICATION

ILLUMINATED SIGN IDENTIFICATION NUMBER:

Sign No. 12345

10 ISL SCI 1.0

- Sign number - Place on post or structure
- Transformer rating (kVA)
- Lighting control type
- Number and type of fixtures

Do NOT place on standard or structure

ELECTROLIER OR EQUIPMENT IDENTIFICATION NUMBER:

12345 - 15'-0"

- Mast arm length, if shown. Do not place on standard or structure.
- Equipment number - Place on standard or structure. Existing equipment numbers are shown in parenthesis

CONDUIT AND CONDUCTOR IDENTIFICATION:

1½"C, 2#10, 15#14, 2 DLC

- Number and size of conductors and cables
- Size of conduit in inches

Ø1, Ø2, Ø2P, etc.	Traffic phase identification for signal faces, detectors and phase diagrams
1 2 3	Project note numbers
A B C	Equipment description, installation or item numbers
1 2 3	Conduit run numbers

SIGNAL AND LIGHTING STANDARD (TYPICAL DESIGNATION):

19A - 3 - 100

- Wind velocity = 100 mph
- Case 3 arm loading
- Standard type
- Standard Plan sheet number
- Detail number or letter

MISCELLANEOUS EQUIPMENT

PROPOSED	EXISTING	
CMS	cms	Changeable message sign
		Closed circuit television camera
		Highway advisory radio pole and antenna
EMS	ems	Extinguishable message sign
M V	m v	Detection device M = Microwave sensor V = Video image sensor

WIRING DIAGRAM LEGEND

P	Pole
CB	Circuit breaker
A	Ampere
V	Volt
M	Metered
UM	Unmetered
NB	Neutral bus
GB	Ground bus
G	Equipment grounding conductor
N	Grounded conductor (Neutral)

- External conductor
- Conductor or bus
- Tie point
- Contactor coil
- Contactor, Contact NO
- Terminal blocks
- Contactor, Contact NC
- Enclosure bond
- Grounding electrode
- Circuit breaker
- Receptacle

PULL BOXES

PROPOSED EXISTING

Pull box-No. 5 unless otherwise indicated or noted.

3 9A(21)

Pull box-Additional designations or descriptions

3	= No. 3½ pull box
5	= No. 5 pull box
6	= No. 6 pull box
7	= No. 7 (Ceiling pull box)
8	= No. 8 (Pendant soffit pull box)
9	= No. 9 pull box
9A	= No. 9A pull box

(C) = Communications pull box
(E) = Pull box with extension
(S) = Sprinkler control pull box
(21) = Anchor bolts and conduit for future installation of Type 21 Standard
(T) = Traffic pull box

VEHICLE DETECTORS

5 J 9 U

- U = Upper
- L = Lower
- Slot number in input file
- Input file (I or J)
- Phase

PROPOSED EXISTING

- Type A detector loop. Outline of sawcut shown.
- Type B detector loop. Outline of sawcut shown.
- Type C detector loop. Outline of sawcut shown.
- Type D detector loop. Outline of sawcut shown.
- Type E detector loop. Outline of sawcut shown.
- Type Q detector loop. Outline of sawcut shown.
- Magnetic detector
- Detector handhole (DH / dh)
- Microwave or video detection zone

STATE OF CALIFORNIA
DEPARTMENT OF TRANSPORTATION

ELECTRICAL SYSTEMS (SYMBOLS AND ABBREVIATIONS)

NO SCALE

RSP ES-1C DATED OCTOBER 5, 2007 SUPERCEDES STANDARD PLAN ES-1C DATED MAY 1, 2006 - PAGE 402 OF THE STANDARD PLANS BOOK DATED MAY 2006.

REVISED STANDARD PLAN RSP ES-1C

2006 REVISED STANDARD PLAN RSP ES-1C

7-10-07

DIST	COUNTY	ROUTE	POST MILES TOTAL PROJECT	SHEET NO.	TOTAL SHEETS
10	Tuo	49	R12.2/12.0	32	34

REGISTERED CIVIL ENGINEER

October 5, 2007
PLANS APPROVAL DATE

REGISTERED PROFESSIONAL ENGINEER
Stanley P. Johnson
No. C57793
Exp. 3-31-08
CIVIL
STATE OF CALIFORNIA

The State of California or its officers or agents shall not be responsible for the accuracy or completeness of electronic copies of this plan sheet.

To accompany plans dated 3/7/11

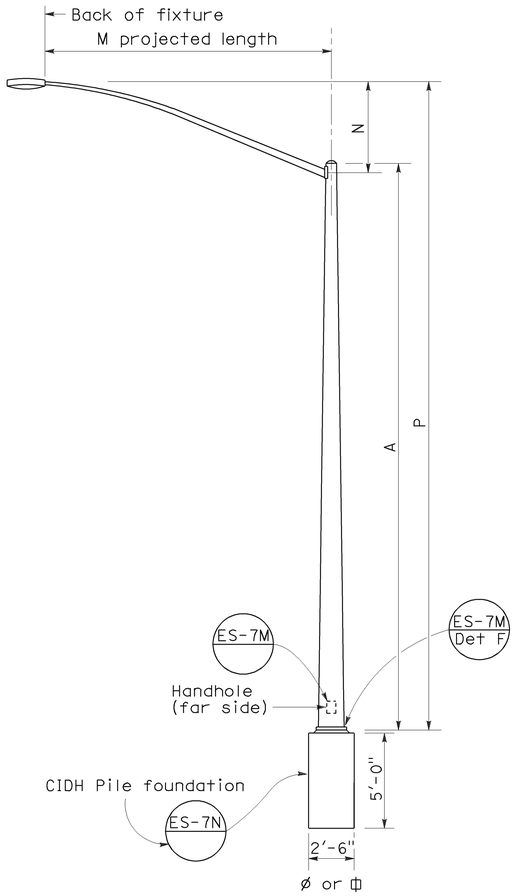

ELEVATION
TYPE 15 AND TYPE 21

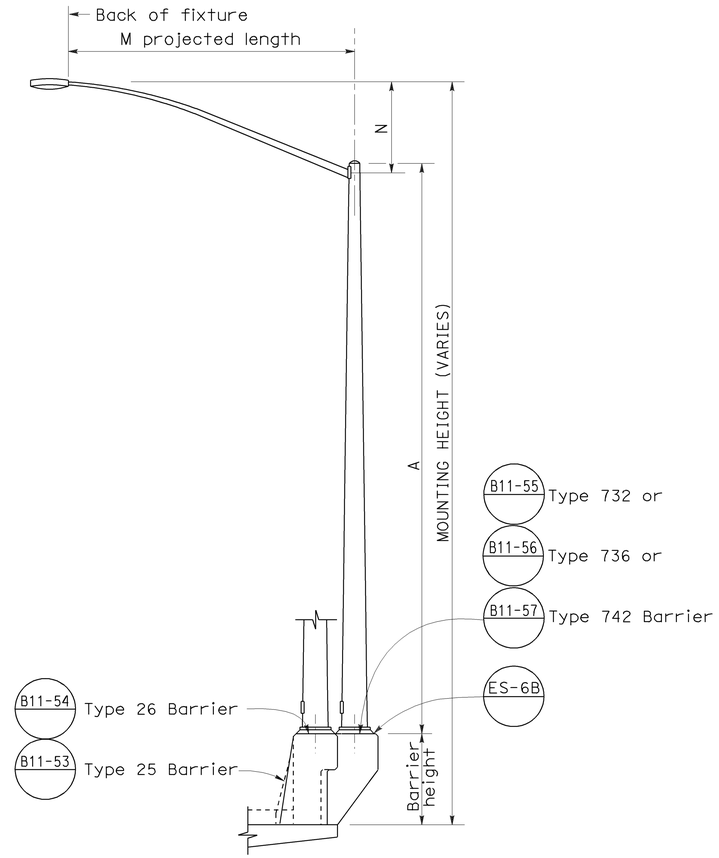

ELEVATION
TYPE 15 AND TYPE 21 BARRIER RAIL MOUNTED

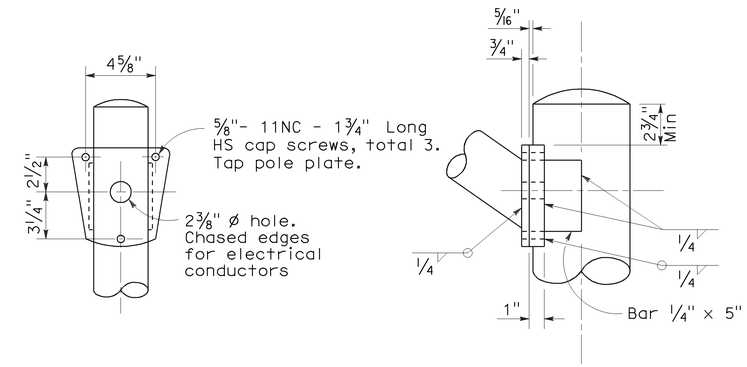

DETAIL R
LUMINAIRE ARM CONNECTION

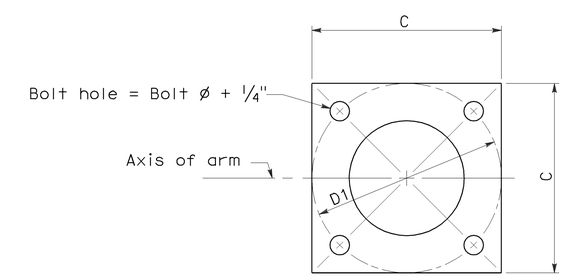

BASE PLATE

POLE TYPE	POLE DATA				BASE PLATE DATA				LUMINAIRE ARM
	A Height	Min OD Base	Min OD Top	Wall Thickness	C	D1 Bolt Circle	Thickness	Anchor Bolts Size	
15	30′	8"	3⅞"	0.1196"	1′-0"	1′-0"	1"	1" ø x 3′-0" x 4"*	6′ - 15′ [12′]
21	35′	8⅝"	3⅞"	0.1196"	1′-0"	1′-0"	1"	1¼"ø x 3′-0" x 4"*	6′ - 15′ [12′]

* For barrier rail bolts, see Standard Plan ES-6B.

LUMINAIRE ARM DATA					
M Projected Length	N Rise	Min OD At Pole	Nominal Thickness	P Type 15	P Type 21
6′-0"	2′-0"±	3¼"	0.1196"	31′-6"±	36′-6"±
8′-0"	2′-6"±	3½"	0.1196"	32′-0"±	37′-0"±
10′-0"	3′-3"±	3⅞"	0.1196"	32′-9"±	37′-9"±
12′-0"	4′-3"±	3⅞"	0.1196"	33′-9"±	38′-9"±
15′-0"	4′-9"±	4¼"	0.1196"	34′-3"±	39′-3"±

NOTES:

1. ☐ Indicates arm length to be used unless otherwise noted on the plans.
2. For Type 15-SB, use Type 15 standard with Type 30 slip base plate details, see Standard Plan ES-6F.
3. For additional notes, see Standard Plan ES-7M and ES-7N.

STATE OF CALIFORNIA
DEPARTMENT OF TRANSPORTATION

ELECTRICAL SYSTEMS (LIGHTING STANDARD TYPES 15 AND 21)

NO SCALE

RSP ES-6A DATED OCTOBER 5, 2007 SUPERCEDES STANDARD PLAN ES-6A DATED MAY 1, 2006 - PAGE 427 OF THE STANDARD PLANS BOOK DATED MAY 2006.

REVISED STANDARD PLAN RSP ES-6A

2006 REVISED STANDARD PLAN RSP ES-6A

7-10-07

DIST	COUNTY	ROUTE	POST MILES TOTAL PROJECT	SHEET NO.	TOTAL SHEETS
10	Tuo	49	R12.2/12.0	33	34

LICENSED LANDSCAPE ARCHITECT

April 3, 2009
PLANS APPROVAL DATE

LICENSED LANDSCAPE ARCHITECT
Robert B. Schott 3635
Signature
11-30-10
Renewal Date
2-25-09
Date
STATE OF CALIFORNIA

The State of California or its officers or agents shall not be responsible for the accuracy or completeness of electronic copies of this plan sheet.

To accompany plans dated 3/7/11

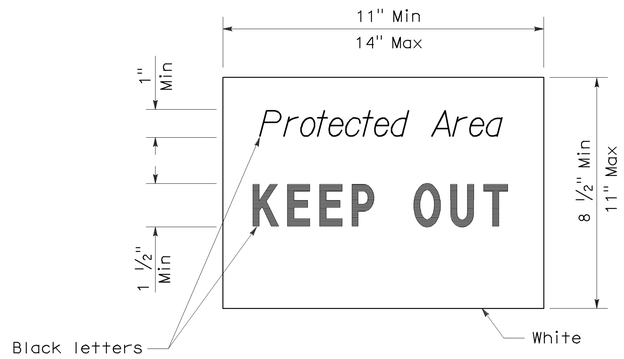

SIGN DETAIL

NOTE:

1. Temporary silt fence and temporary straw bale barrier shown for reference purposes only.

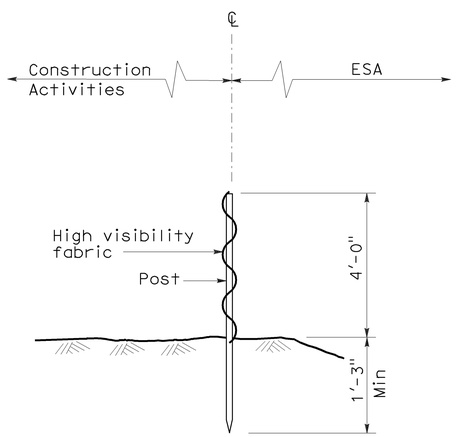

SECTION
TEMPORARY FENCE (TYPE ESA)

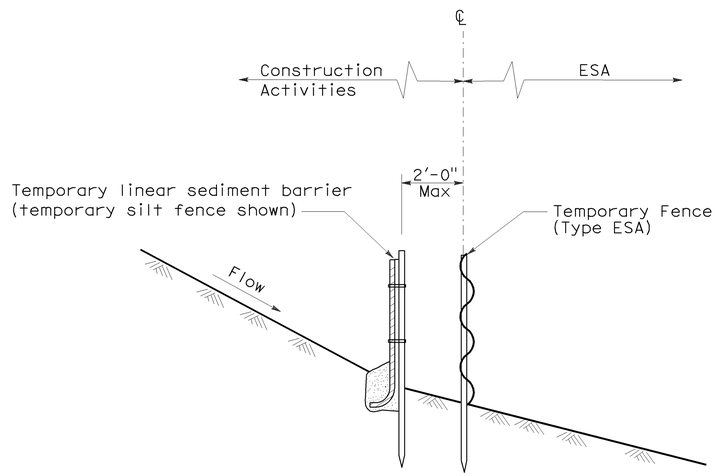

SECTION
PLACEMENT DETAIL
FOR TEMPORARY LINEAR SEDIMENT BARRIER
USED WITH TEMPORARY
FENCE (TYPE ESA)
(See Note 1)

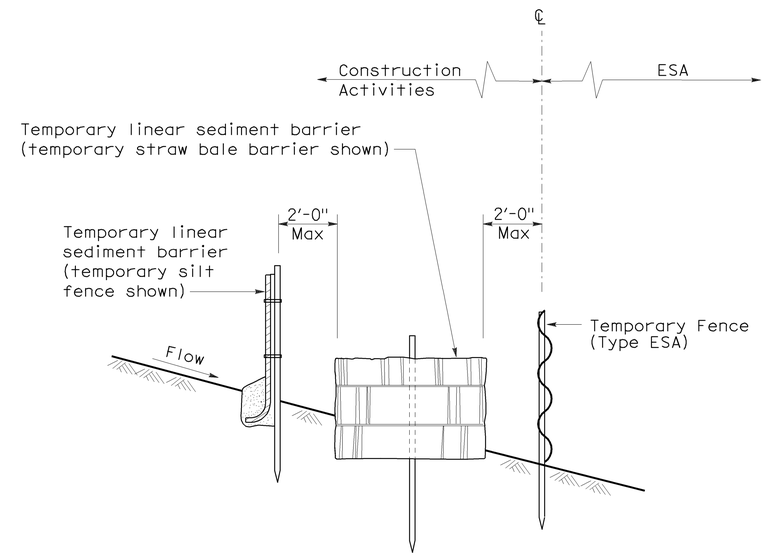

SECTION
PLACEMENT DETAIL
FOR TEMPORARY SILT FENCE
AND TEMPORARY STRAW BALE BARRIER
USED WITH TEMPORARY FENCE (TYPE ESA)
(See Note 1)

STATE OF CALIFORNIA
DEPARTMENT OF TRANSPORTATION

TEMPORARY WATER POLLUTION CONTROL DETAILS [TEMPORARY FENCE (TYPE ESA)]

NO SCALE

NSP T65 DATED APRIL 3, 2009 SUPPLEMENTS
THE STANDARD PLANS BOOK DATED MAY 2006.

NEW STANDARD PLAN NSP T65

2006 NEW STANDARD PLAN NSP T65

DIST	COUNTY	ROUTE	POST MILES TOTAL PROJECT	SHEET NO.	TOTAL SHEETS
10	Tuo	49	R12.2/12.0	34	34

LICENSED LANDSCAPE ARCHITECT

April 3, 2009
PLANS APPROVAL DATE

The State of California or its officers or agents shall not be responsible for the accuracy or completeness of electronic copies of this plan sheet.

LICENSED LANDSCAPE ARCHITECT — Gregory A. Balzer — 02-28-11 Renewal Date — 03-04-09 Date — STATE OF CALIFORNIA

To accompany plans dated 3/7/11

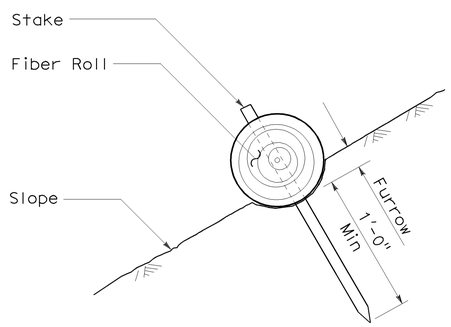

SECTION

FIBER ROLL (TYPE 1)

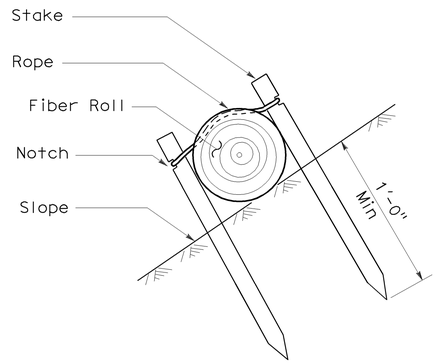

SECTION

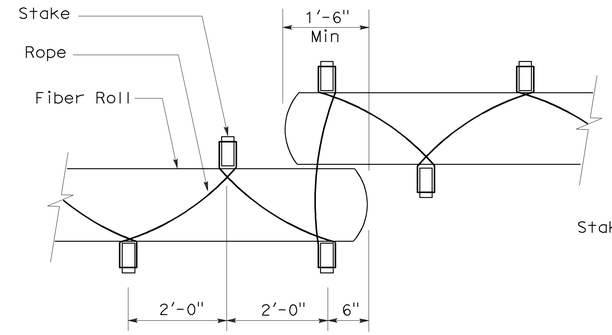

PLAN

FIBER ROLL (TYPE 2)

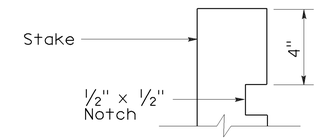

ELEVATION

STAKE NOTCH DETAIL

NOTES:

1. Fiber roll spacing varies depending upon slope inclination.
2. Installations shown in the perspectives are for slope inclination of 10:1 and steeper.

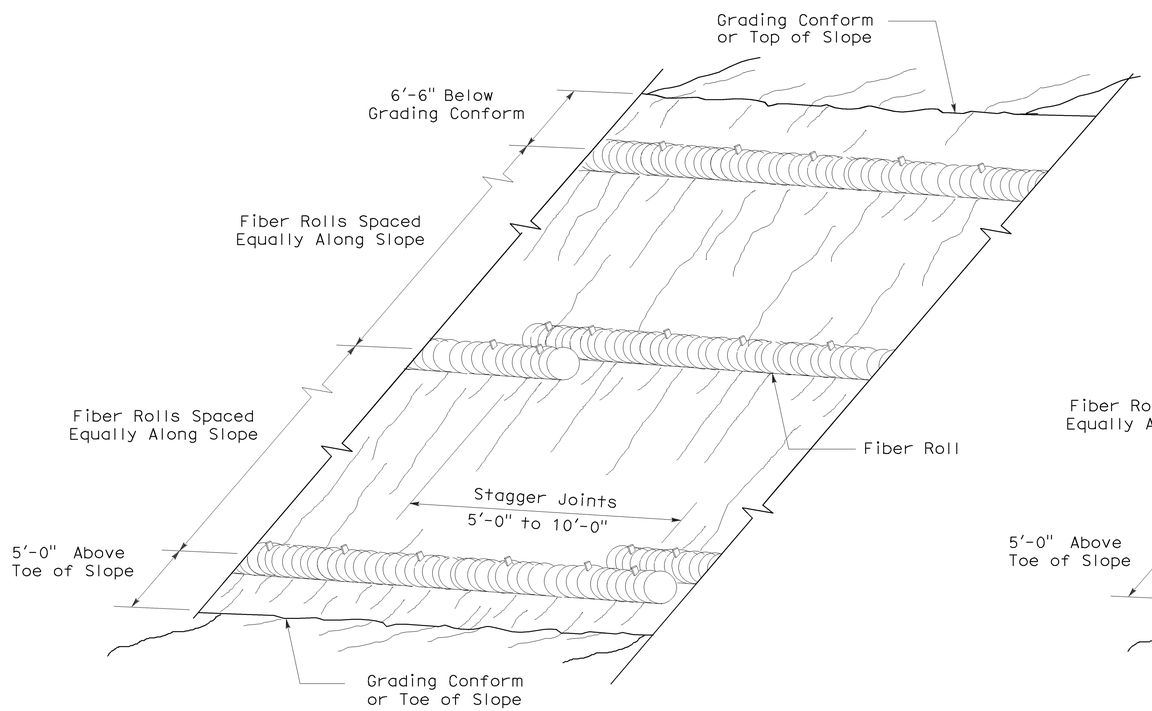

PERSPECTIVE

FIBER ROLL (TYPE 1)

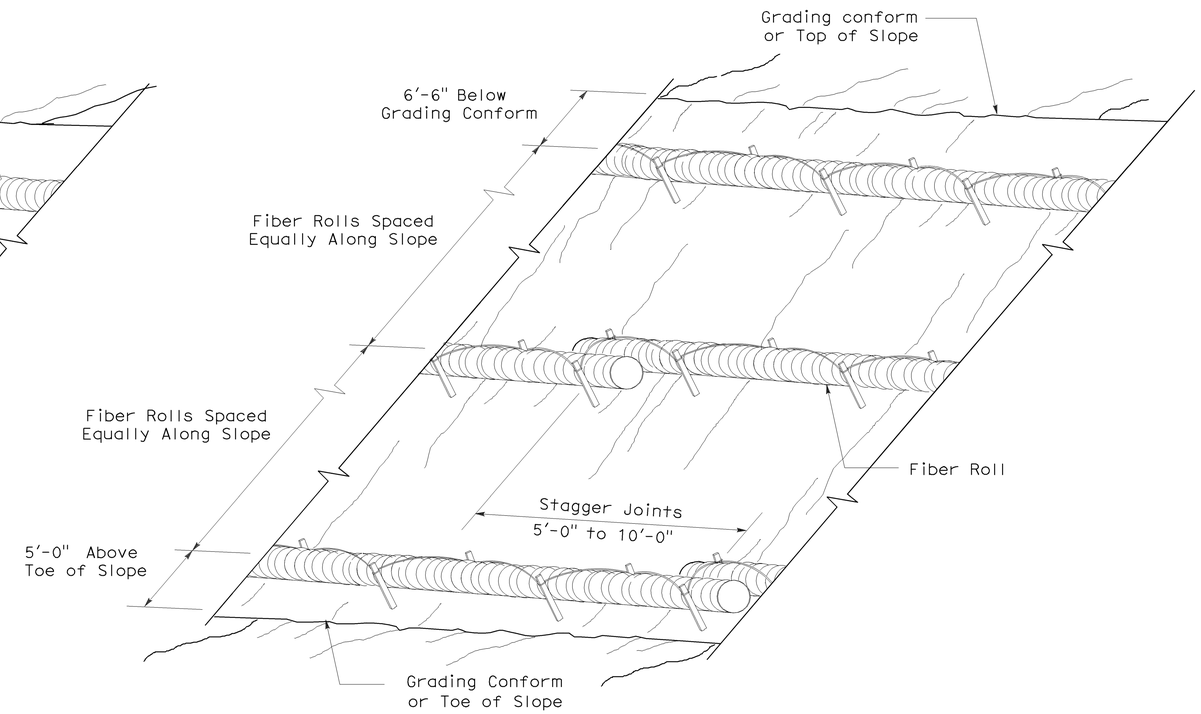

PERSPECTIVE

FIBER ROLL (TYPE 2)

STATE OF CALIFORNIA
DEPARTMENT OF TRANSPORTATION

EROSION CONTROL DETAILS (FIBER ROLL)

NO SCALE

RNSP H51 DATED APRIL 3, 2009 SUPERSEDES NSP H51 DATED DECEMBER 1, 2006 THAT SUPPLEMENTS THE STANDARD PLANS BOOK DATED MAY 2006.

REVISED NEW STANDARD PLAN RNSP H51

2006 REVISED NEW STANDARD PLAN RNSP H51

3-4-09